BOHANNON DAM AUTOMATION PROJECT

Initial Study/Proposed Mitigated Negative Declaration

Prepared for
Reclamation District Number 1500

May 2023

BOHANNON DAM AUTOMATION PROJECT

Initial Study/Proposed Mitigated Negative Declaration

Prepared for
Reclamation District Number 1500
15094 Cranmore Rd
Robbins, CA 95676
(530) 738-4423 direct

May 2023

2600 Capitol Ave
Suite 200
Sacramento, CA 95816
916.564.4500
esassoc.com

ESA

Atlanta	Palm Beach County	San Diego
Bend	Pasadena	San Francisco
Irvine	Pensacola	San Jose
Los Angeles	Petaluma	Sarasota
Mobile	Portland	Seattle
Oakland	Rancho Cucamonga	Tampa
Orlando	Sacramento	Thousand Oaks

D202201121.00

OUR COMMITMENT TO SUSTAINABILITY | ESA helps a variety of public and private sector clients plan and prepare for climate change and emerging regulations that limit GHG emissions. ESA is a registered assessor with the California Climate Action Registry, a Climate Leader, and founding reporter for the Climate Registry. ESA is also a corporate member of the U.S. Green Building Council and the Business Council on Climate Change (BC3). Internally, ESA has adopted a Sustainability Vision and Policy Statement and a plan to reduce waste and energy within our operations. This document was produced using recycled paper.

TABLE OF CONTENTS

Bohannon Dam Automation Project Initial Study/Proposed Mitigated Negative Declaration

Acronyms and Other Abbreviations iv

Chapter 1, Introduction 1-1
- 1.1 Document Organization 1-1
- 1.2 Purpose of the Initial Study 1-3
- 1.3 Resources Not Considered in Detail 1-3
  - 1.3.1 Agriculture and Forestry Resources 1-3
  - 1.3.2 Land Use and Planning 1-3
  - 1.3.3 Mineral Resources 1-4
  - 1.3.4 Population and Housing 1-4
  - 1.3.5 Public Services 1-4
  - 1.3.6 Recreation 1-4
  - 1.3.7 Utilities and Service Systems 1-4
  - 1.3.8 Wildfire 1-5
- 1.4 Responsible Agencies, Permits, and Approvals 1-5

Chapter 2, Project Description 2-1
- 2.1 Introduction 2-1
- 2.2 Background 2-1
- 2.3 Proposed Project 2-4
  - 2.3.1 Project Objectives 2-6
  - 2.3.2 Project Construction Overview 2-6
  - 2.3.3 Project Construction Methodology 2-9
  - 2.3.4 Project Construction Schedule 2-12
  - 2.3.5 Project Operations and Maintenance 2-13
  - 2.3.6 References 2-13

Chapter 3, Initial Study Environmental Checklist 3-1
- 3.1 Aesthetics 3-3
  - 3.1.1 Environmental Setting 3-3
  - 3.1.2 Discussion 3-3
  - 3.1.3 References 3-4
- 3.2 Air Quality 3-5
  - 3.2.1 Environmental Setting 3-5
  - 3.2.2 Discussion 3-9
  - 3.2.3 References 3-12
- 3.3 Biological Resources 3-13
  - 3.3.1 Environmental Setting 3-13
  - 3.3.2 Discussion 3-14
  - 3.3.3 References 3-24

Page

3.4 Cultural Resources 3-26
3.4.1 Environmental Setting 3-26
3.4.2 Discussion 3-29
3.4.3 References 3-32
3.5 Energy 3-33
3.5.1 Discussion 3-33
3.5.2 References 3-34
3.6 Geology and Soils 3-35
3.6.1 Environmental Setting 3-35
3.6.2 Discussion 3-37
3.6.3 References 3-39
3.7 Greenhouse Gas Emissions 3-40
3.7.1 Discussion 3-40
3.7.2 References 3-40
3.8 Hazards and Hazardous Materials 3-41
3.8.1 Environmental Setting 3-41
3.8.2 Discussion 3-42
3.8.3 References 3-44
3.9 Hydrology and Water Quality 3-45
3.9.1 Environmental Setting 3-45
3.9.2 Discussion 3-48
3.9.3 References 3-49
3.10 Noise 3-50
3.10.1 Environmental Setting 3-50
3.10.2 Discussion 3-52
3.10.3 References 3-54
3.11 Traffic and Transportation 3-55
3.11.1 Environmental Setting 3-55
3.11.2 Discussion 3-55
3.11.3 References 3-56
3.12 Tribal Cultural Resources 3-57
3.12.1 Environmental Setting 3-58
3.12.2 Discussion 3-59
3.12.3 References 3-59
3.13 Mandatory Findings of Significance 3-60
3.13.1 Discussion 3-60

List of Figures

Figure 1-1 Regional Location 1-2
Figure 2-1 Project Location 2-2
Figure 2-2 Check Structures on the Existing Bohannon Dam 2-5
Figure 2-3 Proposed Project 2-7
Figure 2-4 Typical Modernized Slip Gates and Check Structure 2-8

Page

List of Tables

Table 1-1 Regulatory Requirements, Permits, and Authorizations for Project Facilities . 1-5
Table 2-1 SMWC 2021 Crops (April – October)..... 2-3
Table 2-2 Problems with Existing Operations and Modernization Status..... 2-4
Table 3.3-1 Potential for Special-Status Species to Occur in the Bohannon Dam Proposed Project Area 3-15

List of Appendices

A. 100 Percent Design Drawings
B. Federally-Listed Biological Resource Assessment Report
C. Federal and State Special Status Species Known to Occur in Project/Action Area and Vicinity

Acronyms and Other Abbreviations

Acronym or Abbreviation	Definition
afy	acre feet per year
Basin Plan	State Water Resources Control Board's Water Quality Control Plan
BMP	best management practice
C-APE	CEQA Area of Potential Effects
CAAQS	California ambient air quality standards
CAL FIRE	California Department of Forestry and Fire Protection
CARB	California Air Resources Board
CDFG	California Department of Fish and Game
CDFW	California Department of Fish and Wildlife
CEC	California Energy Commission
CEQA	California Environmental Quality Act
cfs	cubic feet per second
CHRIS	California Historical Resources Information System
CNDDB	California Natural Diversity Database
CO	carbon monoxide
Cortese List	California Department of Toxic Substances Control's Hazardous Waste and Substances Site List
CVP	Central Valley Project
dB	decibel
dBA	A-weighted decibel
DOC	California Department of Conservation
DPM	diesel particulate matter
DTSC	California Department of Toxic Substances Control
DWR	California Department of Water Resources
FE	listed as endangered under the Federal Endangered Species Act
FRAQMD	Feather River Air Quality Management District
FT	listed as threatened under the Federal Endangered Species Act
HRA	health risk assessment
in/sec	inches per second
IPaC	Information for Planning and Consultation
MBTA	Migratory Bird Treaty Act
MND	Mitigated Negative Declaration
MBTA	Migratory Bird Treaty Act
MND	Mitigated Negative Declaration

Acronym or Abbreviation	Definition
NAHC	California Native American Heritage Commission
NEIC	Northeast Information Center
NEPA	National Environmental Policy Act
NO_2	nitrogen dioxide
NO_x	oxides of nitrogen
NRCS	Natural Resources Conservation Service
NSVPA	Northern Sacramento Valley Planning Area
OEHHA	Office of Environmental Health Hazard Assessment
PPV	peak particle velocity
Proposed Project	Bohannon Dam Automation Project
RD	Reclamation District
RMS	root mean square
ROG	reactive organic gases
SBC	Sutter Basin Company
SE	listed as endangered under the California Endangered Species Act
SGMA	Sustainable Groundwater Management Act
SLF	Sacred Lands File
SMB	SMB Environmental
SMWC	Sutter Mutual Water Company
SO_2	sulfur dioxide
SSC	CDFW Species of Special Concern
ST	listed as threatened under the California Endangered Species Act
SVAB	Sacramento Valley Air Basin
SVP	Society of Vertebrate Paleontology
SWPPP	storm water pollution prevention plan
SWRCB	State Water Resources Control Board
TAC	toxic air contaminant
TMDL	Total Maximum Daily Load
USFWS	U.S. Fish and Wildlife Service
VdB	vibration decibels
VMT	vehicle miles traveled
WEAP	Worker Environmental Awareness Protections Training

This page intentionally left blank

CHAPTER 1
Introduction

As lead agency under the California Environmental Quality Act (CEQA), Reclamation District No. 1500 (RD 1500 or District) has prepared this Initial Study to address the environmental consequences of the proposed Bohannon Dam Automation Project (Proposed Project).

The primary purpose of the Proposed Project is to improve irrigation and flood control and enhance water sustainability in the Sacramento River Basin. On average of 20,000 acre-feet of water is lost from the Main Drain each year and installation of the Proposed Project would allow RD 1500 and Sutter Mutual Water Company (SMWC) to efficiently operate the irrigation system to reduce spills past Bohannon Dam.

As shown on **Figure 1-1**, the RD 1500 and SMWC are in Sutter County, approximately 45-miles northwest of Sacramento, California and are both headquartered in the same offices in the town of Robbin, California sharing the same staff and management. RD 1500 would serve as the CEQA Lead Agency as SMWC is a private company and cannot be the official CEQA Lead Agency for this Proposed Project.

It is anticipated that RD 1500's sister company, SMWC, will receive federal funding under United States Department of Interior, Bureau of Reclamation's (Reclamation) WaterSMART: Water and Energy Efficiency Grants Program. As a result, Reclamation would be the lead agency under the National Environmental Policy Act (NEPA).

1.1 Document Organization

This document is organized into the following chapters:

- **Chapter 1, *Introduction,*** describes the organization of this document and the purpose of the Initial Study and presents a summary of findings.
- **Chapter 2, *Project Description,*** describes the proposed project, including the proposed project location, proposed project objectives, activities to be conducted under the proposed project, and permits and/or approvals that may be required before implementation of the proposed project.
- **Chapter 3, *Initial Study Environmental Checklist,*** presents an analysis of potential impacts of the proposed project for the resource topics included in the CEQA Environmental Checklist (Appendix G of the State CEQA Guidelines). For each resource topic question, the following information is provided: (1) environmental setting; (2) a discussion of the potential effects of implementing the proposed project; (3) a significance finding; and (4) any

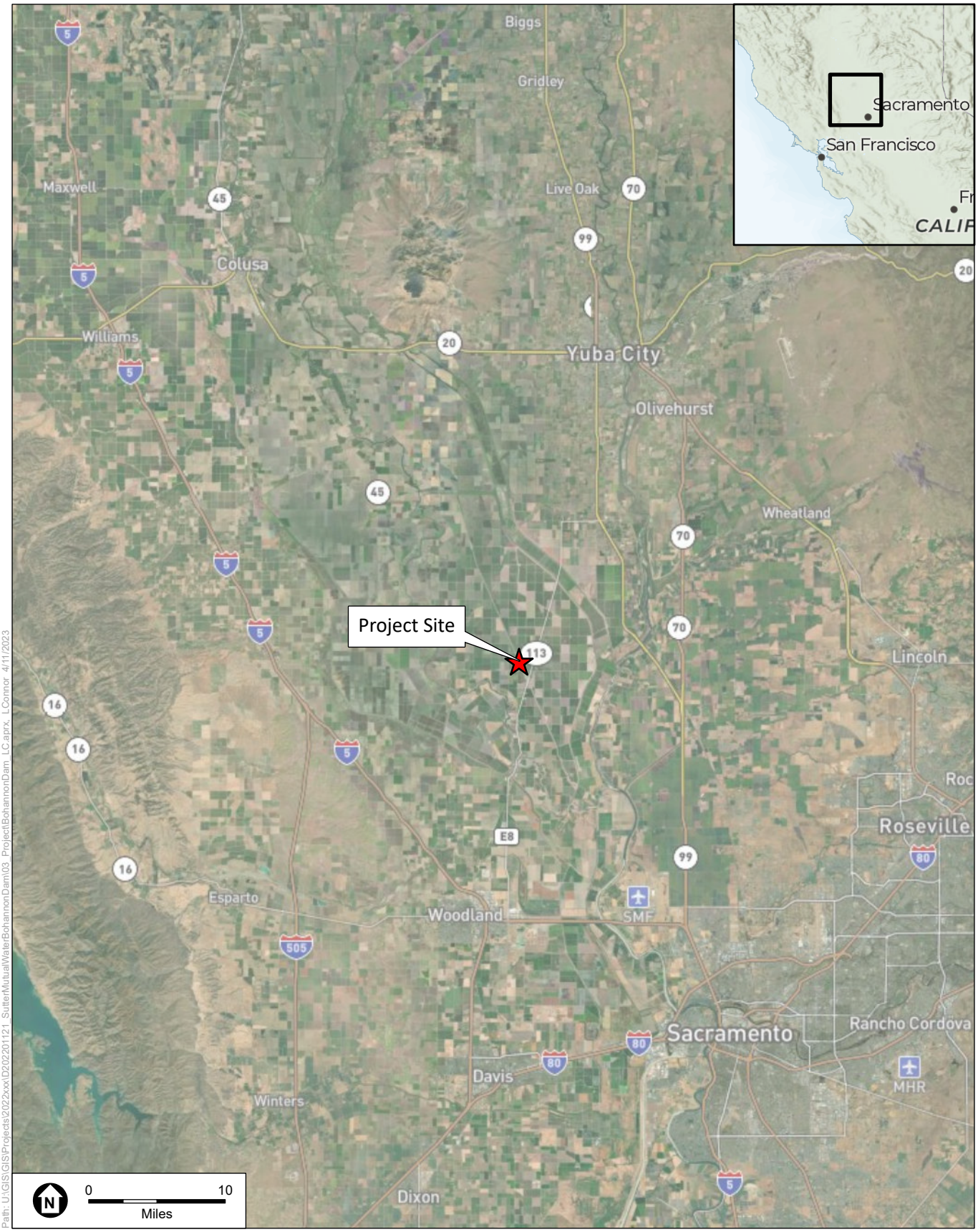

SOURCE: Mapbox, 2021; ESA, 2023

Bohannon Dam Automation Project

Figure 1-1
Regional Location

ESA

mitigation measures recommended for incorporation into the proposed project to reduce identified significant impacts to a less-than-significant level. This chapter lists the references used in preparation of this Initial Study for each resource topic.

After completion of the required 30-day public comment period, and before approving the Proposed Project, RD 1500 will consider the Mitigated Negative Declaration (MND) together with any comments provided during the public comment period. RD 1500 will adopt the MND if, based on the whole of the record, (1) there is no substantial evidence that the proposed project will have a significant effect on the environment; and (2) it represents RD 1500's independent judgment and analysis.

As part of the approval process, RD 1500 will also prepare and adopt a mitigation monitoring and reporting program for mitigation measures identified in the MND, as required under Public Resources Code Section 21081.6(c).

1.2 Purpose of the Initial Study

This Initial Study was prepared in accordance with Public Resources Code Section 21000 et seq. (CEQA) and Title 14, Section 15000 et seq. of the California Code of Regulations (the State CEQA Guidelines). The purpose of this Initial Study is to: (1) determine whether implementing the proposed project would result in potentially significant or significant effects on the environment; and (2) incorporate mitigation measures into the proposed project's design, as necessary, to eliminate the project's potentially significant or significant effects or reduce them to a less-than-significant level.

1.3 Resources Not Considered in Detail

The following resource topics were not considered in detail because no impact would occur under any of these categories.

1.3.1 Agriculture and Forestry Resources

The Proposed Project would be constructed and operated entirely within the Main Canal and would not be located on any existing agricultural fields, farmlands, or forest lands. The staging area would be on the top bank on the east side of the canal and would not infringe upon the adjacent agricultural lands. Therefore, construction and operation of the Proposed Project would not result in the conversion of farmland or forest land to other uses and would not conflict with a Williamson Act contract. Therefore, no impacts related to agriculture and forestry resources would occur.

1.3.2 Land Use and Planning

The Proposed Project would be constructed and operated entirely within the Main Canal. The Proposed Project site is zoned agricultural and would not result in disruption, physical division, or isolation of existing residential or open space areas. The proposed Project is not located in a city or community and would be consistent with existing land uses, plans, policies, and regulations. Therefore, no impacts related to land use and planning would occur.

1.3.3 Mineral Resources

The Proposed Project would be constructed and operated entirely within the Main Canal which is zoned agricultural. The Proposed Project is not located in an area identified as containing mineral resources classified MRZ-2 by the State Geologist that would be of value to the region and the residents of the state. The Proposed Project would not result in the loss of availability of a known mineral resource and would not affect a locally important mineral resource recovery site delineated on a local general plan, specific plan, or other land use plan. No impacts on mineral resources would occur.

1.3.4 Population and Housing

The Proposed Project would improve irrigation and flood control by installing check structures, a trash rack and a central SCADA system that precisely controls the flows in the Main Canal past the new Bohannon Dam. The Proposed Project would not include new homes. Construction would be short-term and would not require additional workers outside of the existing workforce. The Proposed Project site is located entirely within the Main Canal which is zoned agricultural and would not displace any housing or people. Therefore, no impacts related to population and housing would occur.

1.3.5 Public Services

The Proposed Project would improve irrigation and flood control by installing check structures, a trash rack and a central SCADA system that precisely controls the flows in the Main Canal past the new Bohannon Dam. The Proposed Project would not result in the construction of any new facilities or population that would generate a need for new or physically altered government facilities. Therefore, demand for police and fire protection and for community amenities such as schools and parks would not change relative to existing conditions, and no impacts would occur.

1.3.6 Recreation

The Proposed Project would not increase demand for recreation facilities, as the Proposed Project would improve irrigation and flood control by installing check structures, a trash rack and a central SCADA system that precisely controls the flows in the Main Canal past the new Bohannon Dam. The Proposed Project would not include recreational facilities or require the construction or expansion of recreational facilities. Therefore, no impacts on recreation would occur.

1.3.7 Utilities and Service Systems

The Proposed Project would improve irrigation and flood control by installing check structures, a trash rack and a central SCADA system that precisely controls the flows in the Main Canal past the new Bohannon Dam. The Proposed Project would not produce wastewater or exceed wastewater treatment requirements of the Central Valley Water Quality Control Board. The Proposed Project would not result in the construction of new water or wastewater treatment facilities or expansion of existing facilities. The Proposed Project would not require or result in the construction of additional off-site storm water drainage facilities. No new or expanded water supplies or entitlements are needed or required under or as a result of the Proposed Project. The

Proposed Project would not increase the demand for wastewater treatment. Construction and operation of the Proposed Project would not generate significant amounts of solid wastes and no impacts are anticipated as relating to landfill capacity. The Proposed Project will comply with all relevant federal, state, and local statutes and regulations related to solid waste.

1.3.8 Wildfire

The Proposed Project would be constructed and operated entirely within the Main Canal and the equipment would be staged on the top of bank on the east side of the canal. As such, the Proposed Project would not impair an adopted emergency response plan or emergency evacuation plan. The Proposed Project would not require the installation or maintenance of infrastructure that may exacerbate fire risks or that may result in temporary or ongoing impacts to the environment. The Proposed Project is located in an area with flat terrain would not expose people or structures to significant risks, including downslope or downstream flooding or landslides, as a result of runoff, post fire slope instability, or drainage changes. Therefore, no impacts would occur.

1.4 Responsible Agencies, Permits, and Approvals

Table 1-1 summarizes the potential permits and/or approvals that may be required prior to construction of the Proposed Project.

TABLE 1-1
REGULATORY REQUIREMENTS, PERMITS, AND AUTHORIZATIONS FOR PROJECT FACILITIES

Agency	Type of Approval
Federal Agencies	
United States Army Corps of Engineers	Clean Water Act Section 404(f) Exemption
United States Fish and Wildlife Service/ National Marine Fisheries Service	Federal Endangered Species Act Section 7 Consultation
State Agencies	
California Department of Fish and Game	Section 1600 Streambed Alteration Agreement and Incidental Take Permit
Central Valley Regional Water Quality Control Board	Clean Water Act Section 401 Water Quality Certification; NPDES General Permit for Stormwater Discharge Associated with Construction; General Order for Dewatering and Other Low Threat Discharges to Surface Waters Permit
Local Agencies	
N/A	N/A

This page intentionally left blank

CHAPTER 2
Project Description

2.1 Introduction

The following discussion summarizes the background of the Bohannon Dam Automation Project (Proposed Project) and provides relevant construction information for the Proposed Project.

2.2 Background

RD 1500 was formed by a special act of the California State Legislature in 1913, to provide drainage and reclamation of lands within its boundaries. RD 1500's service area encompasses nearly 68,000 acres. Levees were constructed to reduce flooding and drainage ditches were constructed to convey drain water so that crops could be grown. The first pumping plant was completed in 1914, to convey drain water out of Sutter Basin.

SMWC was formed in February 1919. Its primary purpose is the operate, manage, and control water system, water appropriations, and water rights for supplying good quality irrigation water at cost among stockholders/landowners. The primary water source comes from appropriate water rights and Reclamation settlement contracts (Sacramento River, Shasta Dam). SMWC serves approximately 47,000 acres of irrigated land through 200 miles of canals and 500 turnouts.

SMWC operates the Tisdale Pump Plants, which diverts water from the Sacramento River to distribution canals that irrigate the Sutter Basin. The Tisdale intake consists of two Pump Plants. The total capacity of the Tisdale Pump Plants is 960 cubic feet per second (cfs). Most of the Tisdale Pump Station water is directed down the Main Canal to the Bohannon Water Control Facility (or Bohannon Dam structure). The SMWC also operates the State Ranch Bend Pumping Plant (128 cfs), and Portuguese Bend Pumping Plant (106 cfs). SMWC has nine booster pump sites and one internal recirculation system with a total combined capacity of 290 cfs per day. These facilities are used for drainage water reuse and are in the central and northeast portions of SMWC. Additionally, SMWC uses four portable booster pumps for flexibility and maximizing its ability to recapture/recycle drain water. SMWC has high water demands during the rice flood up period (April/May) and during the re flood period (June) and is correlated with low river levels.

As shown on **Figure 2-1**, RD 1500 is confined by surface water features and engineered channels (Sacramento River, Tisdale Bypass, and Sutter Bypass). Also, as shown in Figure 2-1, SMWC is also located within the Sutter Sub-basin, and is bordered by three levee systems totaling 55-miles.

Sutter Bypass is located along the eastern boundary of SMWC, Sutter Bypass/Feather River is located along the southeast boundary of SMWC, Tisdale Bypass Levee is located near the north boundary, and the Sacramento River is located to the west boundary of SMWC.

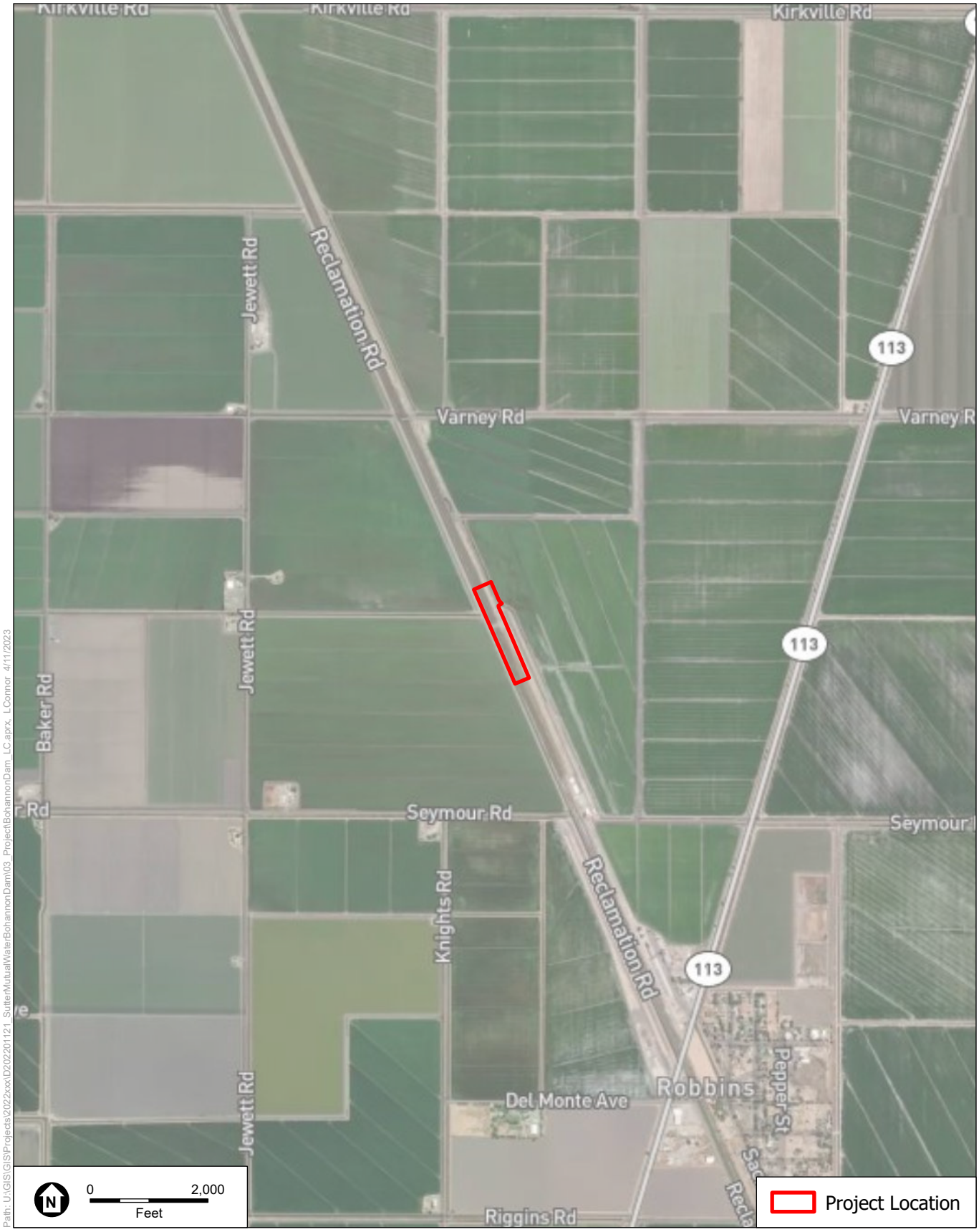

Path: U:\GIS\GIS\Projects\2022xxx\D202201121_SutterMutualWaterBohannonDam\03_Project\BohannonDam_LC.aprx, LConnor 4/11/2023

SOURCE: Mapbox, 2021; ESA, 2023

Bohannon Dam Automation Project

Figure 2-1
Project Location

ESA

As shown on Figure 2-1, the Bohannon Water Control Facility (or Bohannon Dam structure) is located on SMWC's Main Canal and is an irrigation and storm water facility, shared with RD 1500. The Main Canal wheels water to SMWC during the summer and is used by RD 1500 for drainage during the winter. The Bohannon Dam is a water control facility that can also detain water flowing through the system during the flood season but is also critical to the irrigation of the RD 1500 and SMWC service area. Therefore, the Bohannon Water Control Facility is a joint use facility. The Main Canal is used for irrigation water from April 1 through the end of January. From approximately October 15 through end of January, the system (Main Canal and Bohannon Water Control Facility) are a joint use facility handling both irrigation and runoff. From February through April 15, the system is primarily a storm water facility.

Operations are coordinated with RD 1500 and SMWC. RD 1500 manages drainage in the service area, while SMWC delivers water to most water users in the basin area.

SMWC entered into a negotiated agreement with Reclamation in 1964, quantifying the amount of water SMWC could divert from the Sacramento River. The resulting negotiated agreement recognized SMWC as a Sacramento River Settlement Contractor with an annual entitlement of a Base Supply of 169,500-acre feet per year (afy) of flows from the Sacramento River and provided for a 56,500 afy allocation of Central Valley Project (CVP) supply, resulting in a total contract entitlement of 226,000 afy. SMWC typically pumps its water annually for crop irrigation from four plants making it the second largest diverter on the Sacramento River. The average combined diversion rate during the peak irrigation season (May through August) is approximately 1,300 acre-feet per day.

In addition to the contract water, SMWC has entitlements to pump water during the non-irrigation season for wetlands and rice straw decomposition given appropriative rights during the winter months of approximately 250 cfs.

Table 2-1 represents the SMWC crops from April through October.

TABLE 2-1
SMWC 2021 CROPS (APRIL – OCTOBER)

Crop Type	Crop Acres	% Crop Acres
Beans	1,200	2.6%
Corn	2,880	6.2%
Melons	234	0.5%
Rice	13,565	29.3%
Safflowers	372	0.8%
Sunflowers	11,023	23.8%
Tomatoes	11,346	24.5%
Vineseed	1,962	4.2%
Walnuts	132	0.3%
Wheat	3,582	7.7%
Crop Acres	46,296	100.00%

SOURCE: SMWC 2021

2.3 Proposed Project

The primary purpose of an open canal irrigation system is to accurately deliver on-demand water to farmers at consistent requested flow rates. Even with a highly skilled and trained workforce, efficient on-demand operation of canals is a big challenge when manually operated. Unpredictable water levels and potential shortages of water can occur. To ensure that the requested flow rates are delivered to farmers, canals are generally operated by supplying excess water from the head-works to ensure supply to farmers. This approach often results in operational spills which limit the availability of water for crop production or other beneficial use. With an increasing focus on system operations efficiency, there is a growing awareness of the importance of eliminating or capturing canal and farm spills for reuse, while at the same time improving service levels to farmers.

Currently the Bohannon Dam structure requires constant monitoring by staff and manually adapting the system to maintain operational water levels resulting in lost water, varying water levels and varying flow rates. This results in lowering water efficiency and service levels. Existing problems in operation for water management and modernization solutions are summarized in **Table 2-2** below. **Figure 2-2** shows the existing Bohannon Dam Structure with its existing inefficiencies.

TABLE 2-2
PROBLEMS WITH EXISTING OPERATIONS AND MODERNIZATION STATUS

Existing Problem	Modernization Solutions
Canal level varies by feet, varying farm flows	Canal level will be maintained within inches, thereby providing steady flows
Spill is not well controlled, resulting in significant losses to system	Spill will be minimized through precise control and frequent adjustment
Lack of flow adjustability in flood events results in canal overtopping	Gates are sized for both normal operation and flood flows, minimizing/eliminating overtopping
Access to site during flood events is very unsafe	Remote control of gates minimizes the need to be onsite
Ditch operators are spread thin to maintain their system of SMWC's canals	Remote monitoring/control allows smart phone access to site at all times, thereby allowing for better operator coverage and remote feedback

Preventing lost water past the Bohannon Dam structure would allow the utilization of the water to contribute to multiple beneficial uses throughout the year, including flood control, sustained crop production, stream augmentation, preservation of wildlife habitat and food for migratory birds and native fish species, improved river health, Sutter Basin flood control, and assisting with river compact compliance.

D202201121.00 - Bohannon Water Control Replacement Project\05 Graphics-GIS-Modeling-USE AZURE\Illustrator

SOURCE: SMB Environmental, Inc., 2021

Bohannon Water Control Replacement Project

Figure 2-2
Check Structures on the Existing Bohannon Dam

ESA

As shown on **Figure 2-3**, **Figure 2-4**, and detailed in the 100 percent design located in **Appendix A**, a new Bohannon Dam structure would be fitted with six Rubicon SlipGates (or check structures). These check structures are 100% watertight when the SlipGates are in their closed position, allowing the check structure to pass zero flow downstream when there is no flow demand scheduled. The SlipGates have been selected to meet the required discharge capacity per SMWC guidelines for the head work check structure. In addition, one trash rack would be added to the Bohannon Dam structure.

The new Bohannon Dam or Water Control Facility would be managed by a central SCADA system, *Rubicon SCADAConnect Live* that precisely controls the flows in the Main Canal past the new Bohannon Dam. Rubicon's cloud-based software would provide remote and precise management of water by writing gate position set points to each check structure to precisely match all water extractions including farmer water deliveries upstream and maintain required water level for operational efficiencies.

2.3.1 Project Objectives

The objectives of the Proposed Project are:

- Improve flood control and enhance water sustainability in the Sacramento River Basin.
- Increased flood control benefits downstream of the Bohannon Dam structure.
- Improve operational efficiency within RD 1500 and SMWC service areas.

2.3.2 Project Construction Overview

Principal construction activities would be:

- Installation of two cofferdams and water bypass system.
- Excavation and grading of and embankment placed in the Main Canal.
- Construction of a new Bohannon Dam structure, including the construction/installation of:
  - Concrete slab and footing;
  - land bridge, access walkway, and handrails;
  - Rubicon SlipGates; and
  - "boom" (or floating barrier) upstream and trash rack downstream.
- Placement of shotcrete surrounding new Bohannon Dam Structure.
- Placement of fencing surrounding the Proposed Project site.
- Removal of existing Bohannon Dam check structures, access walkway, and hardware.

SOURCE: MAXAR, 2020; ESA, 2023

Bohannon Dam Automation Project

Figure 2-3
Proposed Project

ESA

D202201121.00 - Bohannon Water Control Replacement Project\05 Graphics-GIS-Modeling-USE AZURE\Illustrator

SOURCE: SMB Environmental, Inc., 2021

Bohannon Water Control Replacement Project

Figure 2-4
Typical Modernized Slip Gates and Check Structure

ESA

2.3.3 Project Construction Methodology

Mobilization, Construction Access and Staging Areas

All equipment needed for the Proposed Project would be delivered to the site. The equipment would be staged on the top of bank on the east side of the canal. As shown on Figure 2-3, construction access would be provided on Reclamation Road coming through and just north of Robbins, California. The construction staging area is also identified on Figure 2-3. The total anticipated construction footprint and area of potential affect would be approximately 1-acre and actual disturbance would be closer to 0.6 acres.

Dewatering

Dewatering of the Main Canal would first be accomplished by not pumping water through SMWC's existing "screened" Tisdale Pumping Station on the Sacramento River and/or by re-routing the irrigation water around the construction site via other irrigation facilities or temporary bypass. Then, two cofferdams (i.e., water bladders, gravel bags, earthen embankment), one approximately 50 feet downstream of the existing Bohannon Dam structure and one approximately 100 feet downstream of the proposed new Bohannon Dam structure, would be placed into the Main Canal to restrict flow of water both in and between the location of the new Bohannon Dam structure. In addition, because the existing gates leak at the existing Bohannon Dam structure, plastic sheets and stop logs would also be installed on the upstream side of the existing Bohannon Dam structure to help further prevent flows from entering the Proposed Project workspace.

Once the cofferdams are in place, all surface water and/or shallow groundwater percolating into the construction area/zone would be pumped out and be placed into the Main Canal downstream of the construction site and/or used as dust suppressant if and as required.

Dewatering would require excavating a sump area that is 2 to 4 feet lower than the bottom of the Main Canal. Sump pumps would be placed in the sump area to pump water over the downstream cofferdam. The initial dewatering would consist of larger submersible pumps until water is about 1 to 2 feet and starts sucking air. The small earth sump would then be constructed at this time. It is estimated that it would take approximately 1 week to dewater the Proposed Project Area and then a 15-day dry out period of the Main Canal in the Proposed Project Area where there is less than 2 to 4 inches of standing water. However, pumping would likely be required through the 5-day dry-out period and throughout construction. Therefore, it is anticipated that pumping would occur 24 hours a day 7 days a week, throughout the construction period.

As the existing Tisdale Pumping Plant is screened, no anadromous and/or special status fisheries from the Sacramento River would be affected or would need to be relocated.

Clearing and Grubbing

As shown in Figure 2-2, the existing irrigation canal is almost devoid of vegetation. Therefore, minimal vegetation, if any, is expected. The existing rip rap along the canal banks located at the existing Bohannon Dam structure would be left in place. The riprap on the face of the land bridge would be removed.

Excavation and Embankment Placement in Main Canal

Once the construction site has been dewatered, approximately 800-cubic yards of excavation would occur in the Main Canal, including excavation of "mud" that is unsuitable for construction foundations and for the Bohannon Dam concrete structure. Excavated materials would be used on-site or stockpiled for future use.

Portions of the existing Main Canal may be scoured and would require embankment placed in the bottom of the Main Canal, so there are no dead pools. The area directly downstream of the existing structure is lower than the main canal and would require embankment. The Main Canal bottom would be graded (up to 10 feet in depth). It is assumed approximately 300-cubic yards of imported soil and shotcrete would be needed for the Proposed Project.

Construction of the New Dam Check Structures

A concrete footing and headwall would be placed in the Main Canal. The Rubicon Slipgates and automated/SCADA systems would be placed on the concrete footing. The total structure would be approximately the same size as the existing facility (i.e., approximately 15 feet high, 50 feet wide, and 100 feet long). Each Slipgate is about 60 inches wide and 17 feet tall. A new land bridge, access walkway, and handrail would be constructed attached to the concrete headwall that would provide access to structure and Slipgates. SCADA attachments to new pillars would be accomplished via welded or bolted bracket connections. Shotcrete would be placed in a 15-foot wide by 48-foot-long area just downstream of the new Bohannon Dam structure for slope protection.

Specific steps would include:

- Installation of Concrete Structure – this work would consist of placement of 600 cubic yards of concrete. The concrete would have about 24,000 pounds of rebar. There would be lumber used for framing. The work should take about 4 to 6 weeks. There would be at least four pours to complete the structure. There would be about 7 to 14 days between pours.
- Installation of Rubicon Gates and Control Assemblies
- Installation of Land Bridge – this work shall consist of placement of about 800 to 1500 cubic yards of embankment to construct the land bridge
- Installation of Shotcrete bank protection. The bank protection would be shotcrete.
- Installation of Trash Rack
- Installation of Debris Boom
- Installation of Walkway to new structure
- Removal of Dewatering Systems
- Removal of Bypass Systems
- Removal of Coffer Dams

- Placement of Aggregate Base
- Placement of Asphalt
- Placement of Fencing
- Removal of all BMP and environmental protection
- Existing facility would be fully opened and rely on the new facility for water control.
- Cleanup

After construction, the site would be restored to existing conditions.

Total truck trips would be less than 5-10 trips per day totaling approximately 125 total truck trips during the 3-to-4-month construction period.

Existing Dam Gate Structure Demolition and Removal

Once the new Bohannon Dam structure is in place and operating, the existing Bohannon Dam structure, land bridge, check structures, access walkway, and hardware, would be removed with the use of excavators, backhoes, and dozers. The rip-rap that is placed along the banks of the existing canal will remain in place. All metals and materials would be reused/recycled by SMWC for other operational uses within their jurisdictional boundaries. Any materials not being recycled/reused would be disposed of at an appropriate landfill. The existing pillars would be cut at grade and removed. There would be minimal, if any, need for any grading and/or importation and export of material. If any unanticipated grading work is required, it would be limited to approximately 40 feet wide by 50 feet long by 10 feet deep and would be completed via backhoe or bobcat/small tractor. Dewatering is not anticipated for the removal of the existing structure. Removal of the structure will occur when water levels are at their lowest and the new structure will prevent turbidity from flowing downstream. However, if dewatering is required it would use the same methods as described above in the dewatering section.

Construction Equipment

Construction activities for the Proposed Project would use the following equipment:

- Excavators
- Backhoe
- Loaders
- Bulldozers
- Portable generators
- Portable pumps
- Water wells
- Well drilling equipment
- Forklift

- Crane
- Compactor (sheet foot)
- Pile driver
- Skid steer
- Pickup trucks
- Cars
- Dump trucks
- Concrete truck
- Fuel trucks
- Maintenance trucks

2.3.4 Project Construction Schedule

Construction of the new Bohannon Dam is expected to take approximately 3 to 4 months and is anticipated to begin in the summer of 2024 and finish in the fall of 2024.

Construction work would typically be done within normal working hours, weekdays between the hours of 6 a.m. and 6 p.m., including work on Saturdays between the hours of 6 a.m. and 6 p.m. Sunday work could also occur between the hours of 6 a.m. and 6 p.m. to complete work during the construction period stated above. The dewatering and bypass pumping would occur 24 hours a day, seven days a week to maintain the water within the construction site. There may also be periods during the summer where concrete pours would commence as early as 4:00 a.m. because of the extreme heat conditions that most likely would be encountered during the construction period. The Proposed Project would be constructed entirely within RD 1500 and SMWC's existing property. During construction, approximately 10- to 12-people plus inspectors and environmental consultants would be working on the Proposed Project. At peak periods of work there could be as many as 20 workers on the site. The construction activities would take place within the areas designated in Figure 2-3 and entirely within the boundaries of the RD 1500 and SMWC's existing and new Bohannon Dam sites. RD 1500 and SMWC would employ appropriate construction best management practices (BMPs).

As a final step of construction activities, the construction site would be cleaned up and restored to previous conditions. Construction trash and debris would be collected and disposed of properly. Once constructed, SMWC would resume existing day-to-day operations and maintenance procedures. No new permanent SMWC employees are anticipated to be required for the Proposed Project. Detailed below is a discussion of the construction methods and techniques.

Removal of the existing Bohannon Dam structure is anticipated to occur under a similar timeframe and schedule and would occur in summer of 2026 or 2027.

2.3.5 Project Operations and Maintenance

Once constructed, RD 1500 and SMWC's operations and maintenance procedures would be essentially the same as existing operations, but may require less service trips as the new structure would be more efficient and automated. No new staff or machinery would be required.

2.3.6 References

Sutter Mutual Water Company (SMWC). 2021. Sutter Mutual Water Company Crop records 2021.

This page intentionally left blank

CHAPTER 3

Initial Study Environmental Checklist

1. **Project Title:** Bohannon Dam Automation Project

2. **Lead Agency Name and Address:** Reclamation District No. 1500
   15094 Cranmore Road Robbins, CA 95676

3. **Contact Person and Phone Number:** Roger Cornwell
   530-738-4423

4. **Project Location:** Sutter County

5. **Project Sponsor's Name and Address:** Same as above

6. **General Plan Designation(s):** AG-80 Agriculture (80 acre minimum)

7. **Zoning:** Agriculture

8. **Description of Project:** See Project Description

9. **Surrounding Land Uses and Setting:** See Project Description

10. **Other public agencies whose approval is required:** See Table 1-1

11. **Have California Native American tribes traditionally and culturally affiliated with the project area requested consultation pursuant to Public Resources Code section 21080.3.1? If so, is there a plan for consultation that includes, for example, the determination of significance of impacts to tribal cultural resources, procedures regarding confidentiality, etc.?** No

    Note: Conducting consultation early in the CEQA process allows tribal governments, lead agencies, and project proponents to discuss the level of environmental review, identify and address potential adverse impacts to tribal cultural resources, and reduce the potential for delay and conflict in the environmental review process. (See Public Resources Code section 21080.3.2.) Information may also be available from the California Native American Heritage Commission's Sacred Lands File per Public Resources Code section 5097.96 and the California Historical Resources Information System administered by the California Office of Historic Preservation. Please also note that Public Resources Code section 21082.3(c) contains provisions specific to confidentiality.

3.1 Environmental Factors Potentially Affected

The environmental factors checked below would be potentially affected by this project, involving at least one impact that is a "Potentially Significant Impact" as indicated by the checklist on the following pages.

☐ Aesthetics	☐ Agriculture and Forestry Resources	☒ Air Quality
☒ Biological Resources	☒ Cultural Resources	☐ Energy
☒ Geology/Soils	☒ Greenhouse Gas Emissions	☐ Hazards & Hazardous Materials
☒ Hydrology/Water Quality	☐ Land Use/Planning	☐ Mineral Resources
☐ Noise	☐ Population/Housing	☐ Public Services
☐ Recreation	☐ Transportation	☒ Tribal Cultural Resources
☐ Utilities/Service Systems	☐ Wildfire	☒ Mandatory Findings of Significance

DETERMINATION: (To be completed by the Lead Agency)
On the basis of this initial study:

☐ I find that the proposed project COULD NOT have a significant effect on the environment, and a NEGATIVE DECLARATION will be prepared.

☒ I find that although the proposed project could have a significant effect on the environment, there will not be a significant effect in this case because revisions in the project have been made by or agreed to by the project proponent. A MITIGATED NEGATIVE DECLARATION will be prepared.

☐ I find that the proposed project MAY have a significant effect on the environment, and an ENVIRONMENTAL IMPACT REPORT is required.

☐ I find that the proposed project MAY have a "potentially significant impact" or "potentially significant unless mitigated" impact on the environment, but at least one effect 1) has been adequately analyzed in an earlier document pursuant to applicable legal standards, and 2) has been addressed by mitigation measures based on the earlier analysis as described on attached sheets. An ENVIRONMENTAL IMPACT REPORT is required, but it must analyze only the effects that remain to be addressed.

☐ I find that although the proposed project could have a significant effect on the environment, because all potentially significant effects (a) have been analyzed adequately in an earlier EIR or NEGATIVE DECLARATION pursuant to applicable standards, and (b) have been avoided or mitigated pursuant to that earlier EIR or NEGATIVE DECLARATION, including revisions or mitigation measures that are imposed upon the proposed project, nothing further is required.

B Tannell — 5-17-2023

Signature — Date

Signature — Date

3.2 Aesthetics

Except as provided in Public Resources Code Section 21099, would the project:	Significant or Potentially Significant Impact	Less Than Significant Impact with Mitigation Incorporated	Less than Significant	No Impact
a) Have a substantial adverse effect on a scenic vista?	☐	☐	☐	☒
b) Substantially damage scenic resources, including, but not limited to, trees, rock outcroppings, and historic buildings within a state scenic highway?	☐	☐	☐	☒
c) Substantially degrade the existing visual character or quality of the site and its surroundings?	☐	☐	☒	☐
d) Create a new source of substantial light or glare which would adversely affect day or nighttime views in the area?	☐	☐	☐	☒

3.2.1 Environmental Setting

Aesthetic or visual resources include the "scenic character" of a particular region and site. Scenic features can be either natural (e.g., vegetation and topography) or man-made (e.g., historic structures). Areas that are more sensitive to potential effects are usually readily observable, such as land found adjacent to major roadways and hilltops.

Visual Environment

The Proposed Project site is located in unincorporated Sutter County. The area is generally flat and used primarily for agriculture. There are no officially designated scenic highway in Sutter County (Caltrans 2023). The Proposed Project site is adjacent to irrigated agricultural fields to the east and Reclamation Road immediately to the west. Additional irrigated agricultural fields are to the west of Reclamation Road. The Bohannon Dam spans the Main Canal.

3.2.2 Discussion

a) **No Impact.** The Proposed Project is not located in or near any designated scenic vistas and therefore would not have a substantial impact on a scenic vista. Specifically, the Proposed Project would be located entirely within SMWC's existing Bohannon Dam footprint where there are no designated scenic vistas nearby. The construction and operation activities of the Proposed Project would not interfere with views of any scenic vistas or scenic resources. As a result, no impact on a scenic vista would occur.

b) **No Impact.** The Proposed Project is not located near or within a designated state scenic highway and therefore would not damage scenic resources, including but not limited to trees, outcroppings, and historic buildings within a state scenic highway. Specifically, the Proposed Project would be located entirely within the existing Main Canal and is not located near or within a designated state scenic highway. The Proposed Project's construction and operation activities would not be located within any area that has been

designated as a scenic vista or scenic resource. Therefore, no impact on scenic resources would occur.

c) **Less than Significant.** Construction of the Proposed Project's facilities would be visible and could involve temporary negative aesthetic effects, including the presence of construction equipment and materials. However, construction impacts would be located entirely within the existing Main Canal and there are no sensitive receptors within the Proposed Project area or surrounding vicinity. The Proposed Project would not degrade the existing visual character or quality of the site and/or its surroundings and would not have any significant visual impacts. Operation of the Proposed Project would not affect any visual resources over existing conditions. Therefore, the impact would be less than significant.

d) **No Impact.** The Proposed Project would not create a new source of substantial light or glare that would adversely affect day or nighttime views in the area. The Proposed Project would not be constructed during nighttime hours and once constructed there would be no lights or other sources of light, glare, or reflective surfaces over existing conditions. Therefore, no impacts would occur.

3.2.3 References

California Department of Transportation (Caltrans). 2023. *California State Scenic Highway System Map.* Available: https://caltrans.maps.arcgis.com/apps/webappviewer/index.html?id=465dfd3d807c46cc8e8057116f1aacaa. Accessed March 24, 2023.

3.3 Air Quality

Would the project:	Significant or Potentially Significant Impact	Less Than Significant Impact with Mitigation Incorporated	Less than Significant	No Impact
a) Conflict with or obstruct implementation of the applicable air quality plan?	☐	☐	☒	☐
b) Result in a cumulatively considerable net increase of any criteria pollutant for which the project region is non-attainment under an applicable federal or state ambient air quality standard?	☐	☒	☐	☐
c) Expose sensitive receptors to substantial pollutant concentrations?	☐	☐	☒	☐
d) Result in other emissions (such as those leading to odors) adversely affecting a substantial number of people?	☐	☐	☒	☐

3.3.1 Environmental Setting

General Climate and Meteorology

The Proposed Project site is located in unincorporated Sutter County within the Sacramento Valley Air Basin (SVAB). The SVAB is bounded on the west by the Coast Range, on the north by the Cascade Range, on the east by the Sierra Nevada, and on the south by the San Joaquin Valley Air Basin. The intervening terrain is flat, and approximately 25 feet above sea level. The SVAB consists of the counties of Butte, Colusa, Glenn, Sacramento, Shasta, Sutter, Tehama, Yolo, and Yuba and portions of Placer and Solano Counties.

Hot dry summers and mild rainy winters characterize the Mediterranean climate of the Sacramento Valley. The climate of the SVAB is dominated by the strength and position of the semi-permanent high-pressure cell over the Pacific Ocean north of Hawaii. In summer, when the high-pressure cell is strongest and farthest north, temperatures are high and humidity is low, although the incursion of the sea breeze into the Central Valley helps moderate the summer heat. In winter, when the high-pressure cell is weakest and farthest south, conditions are characterized by occasional rainstorms interspersed with stagnant and sometimes foggy weather. Throughout the year, daily temperatures may range from summer highs usually exceeding 100 degrees Fahrenheit and winter lows occasionally below freezing. Average annual rainfall is about 20 inches with snowfall being very rare. The prevailing winds are moderate in strength and vary from moist clean breezes from the south to dry land flows from the north.

The climate of Sutter County is subject to hot dry summers and mild rainy winters which characterize the Mediterranean climate of the SVAB. Summer temperatures average approximately 90 degrees Fahrenheit during the day and 50 degrees Fahrenheit at night. Winter daytime temperatures average in the low 50s and nighttime temperatures are mainly in the upper 30s.

During summer, prevailing winds are from the south. This is primarily because of the north-south orientation of the valley and the location of the Carquinez Strait, a sea-level gap in the coast range that is southwest of Sutter County. During winter, atmospheric conditions cause north winds to become more frequent, but winds from the south still predominate.

Criteria Air Pollutants

Concentrations of criteria air pollutants are used as indicators of ambient air quality conditions. Source types, health effects, and future trends associated with each air pollutant are described below along with the most current attainment area designations and monitoring data for the Proposed Project site and vicinity.

Ozone

Short-term exposure to ozone can irritate the eyes and cause constriction of the airways. Besides causing shortness of breath, ozone can aggravate existing respiratory diseases such as asthma, bronchitis, and emphysema. Ozone is not emitted directly into the atmosphere, but is a secondary air pollutant produced in the atmosphere through a complex series of photochemical reactions involving reactive organic gases (ROG) and oxides of nitrogen (NO_X). ROG and NO_X are known as precursor compounds for ozone.

Significant ozone production generally requires ozone precursors to be present in a stable atmosphere with strong sunlight for approximately three hours. Ozone is considered both a secondary and regional air pollutant because it is not emitted directly by sources, but is formed downwind of sources of ROG and NO_X under the influence of wind and sunlight. Ozone concentrations tend to be higher in the late spring, summer, and fall, when the long sunny days combine with regional subsidence inversions to create conditions conducive to the formation and accumulation of secondary photochemical compounds, like ozone.

Carbon Monoxide

Ambient carbon monoxide (CO) concentrations normally are considered a local effect and typically correspond closely to the spatial and temporal distributions of vehicular traffic. Wind speed and atmospheric mixing also influence CO concentrations. Under inversion conditions, CO concentrations may be distributed more uniformly over an area that may extend some distance from vehicular sources. When inhaled at high concentrations, CO combines with hemoglobin in the blood and reduces the blood's oxygen-carrying capacity. This reduces the amount of oxygen that can reach the brain, heart, and other body tissues. This condition is especially critical for people with cardiovascular diseases, chronic lung disease, or anemia, and for fetuses.

CO concentrations have declined dramatically in California as a result of existing controls and programs. Most areas of the state, including the region surrounding the proposed Project site, have no problem meeting the state and federal standards for CO. Measurements and modeling for CO were important in the early 1980s when CO levels were regularly exceeded throughout California. In more recent years, CO measurements and modeling results have not been a priority in most California air districts, given the retirement of older polluting vehicles, lower emissions from new vehicles, and improvements in fuels.

Nitrogen Dioxide

Nitrogen dioxide (NO_2) is a reddish brown gas that is a byproduct of combustion processes. NO_2 may be visible as a coloring component of a brown cloud on high-pollution days, especially in conjunction with high ozone levels.

Vehicle internal combustion engines and industrial operations are the main sources of NO_2, which is an air quality concern because it acts a respiratory irritant and is a precursor of ozone. NO_2 is a major component of the group of gaseous nitrogen compounds commonly referred to as NO_X, which are produced by fuel combustion in motor vehicles, industrial stationary sources, ships, aircraft, and rail transit. Typically, NO_X emitted from fuel combustion are in the form of nitric oxide and NO_2. Nitric oxide is often converted to NO_2 when it reacts with ozone or undergoes photochemical reactions in the atmosphere. Therefore, NO_2 emissions from combustion sources are typically evaluated based on the amount of NO_X emitted from the source.

Sulfur Dioxide

Sulfur dioxide (SO_2) is a combustion product of sulfur or sulfur-containing fuels such as coal and diesel. SO_2 is also a precursor to the formation of atmospheric sulfate and particulate matter and contributes to the potential atmospheric formation of sulfuric acid that could precipitate downwind as acid rain. The concentration of SO_2, rather than the duration of exposure, is an important determinant of respiratory effects. Exposure to high SO_2 concentrations may result in edema of the lungs or the glottis and respiratory paralysis.

Particulate Matter

PM_{10} and $PM_{2.5}$ are particulate matter measuring 10 microns or less in diameter and 2.5 microns or less in diameter, respectively. (A micron is one-millionth of a meter.) PM_{10} and $PM_{2.5}$ represent fractions of particulate matter that can be inhaled into the air passages and the lungs and can cause adverse health effects. Some sources of particulate matter, such as wood burning in fireplaces, demolition, and construction activities, are more local, while others, such as vehicular traffic, have a more regional effect. Very small particles of certain substances (e.g., sulfates and nitrates) can cause lung damage directly, or can contain adsorbed gases (e.g., chlorides or ammonium) that may be injurious to health. Particulates also can damage materials and reduce visibility.

Large dust particles (those with a diameter greater than 10 microns) settle out rapidly and are easily filtered by the human breathing passages. This large dust is of more concern as a soiling nuisance than as a health hazard. The remaining fraction, PM_{10} and $PM_{2.5}$, are a health concern, particularly when present at levels exceeding the federal and state ambient air quality standards. $PM_{2.5}$ (including diesel exhaust particles) is thought to have greater effects on health, because these particles are so small and thus can penetrate to the deepest parts of the lungs. Scientific studies have suggested links between fine particulate matter and numerous health problems including asthma, bronchitis, and acute and chronic respiratory symptoms such as shortness of breath and painful breathing. Diesel particulate is carcinogenic and considered a toxic as discussed below. Recent studies have shown an association between morbidity (suffering from a disease or medical condition) and mortality (premature deaths) and daily concentrations of particulate matter in the air. Children are more

susceptible to the health risks of PM_{10} and $PM_{2.5}$ because their immune and respiratory systems are still developing.

Mortality studies conducted since the 1990s have shown a statistically significant direct association between mortality and daily concentrations of particulate matter in the air. Despite important gaps in scientific knowledge and continued reasons for some skepticism, a comprehensive evaluation of the research findings provides persuasive evidence that exposure to fine particulate air pollution has adverse effects on cardiopulmonary health (Pope and Dockery 2006). The California Air Resources Board (CARB) has estimated that achieving the ambient air quality standards for PM_{10} could reduce premature mortality rates by 6,500 cases per year (CARB 2002).

Lead

Ambient lead concentrations meet both the federal and state standards in the proposed Project area. Lead has a range of adverse neurotoxin health effects, and was formerly released into the atmosphere primarily via leaded gasoline products. The phase-out of leaded gasoline in California caused atmospheric lead levels to decrease.

The Proposed Project would not introduce any new sources of lead emissions; consequently, quantification of lead emissions is not required, and such emissions are not evaluated further in this analysis.

Toxic Air Contaminants

Non-criteria air pollutants, or toxic air contaminants (TACs), are airborne substances that are capable of causing short-term (acute) and/or long-term (chronic or carcinogenic, i.e., cancer-causing) adverse effects on human health. TACs include both organic and inorganic chemical substances. They may be emitted by a variety of common sources including gasoline stations, automobiles, diesel engines, dry cleaners, industrial operations, and painting operations. TACs are regulated differently than criteria air pollutants at both the federal and state levels. At the federal level, these airborne substances are referred to as hazardous air pollutants. The state list of TACs identifies 243 substances and the federal list of hazardous air pollutants identifies 189 substances.

CARB identified diesel particulate matter (DPM) as a TAC in 1998, based primarily on evidence demonstrating cancer effects in humans. Exhaust from diesel engines includes hundreds of different gaseous and particulate components, many of which are toxic. Mobile sources such as trucks and buses are among the primary sources of diesel emissions, and DPM concentrations are higher near heavily traveled highways and rail lines with diesel locomotive operations. The risk from DPM, as determined by CARB, declined from 750 in 1 million in 1990 to 570 in 1 million in 1995; by 2000, CARB estimated the average statewide cancer risk from DPM to be 540 in 1 million (CARB 2009). These calculated cancer risk values from ambient air exposure can be compared against the lifetime probability of being diagnosed with cancer in the United States, from all causes, which is more than 40 percent (based on a sampling of 17 regions nationwide), or greater than 400,000 in 1 million, according to the National Cancer Institute (NCI 2012).

Odorous Emissions

Odors are generally regarded as an annoyance rather than a health hazard. Manifestations of a person's reaction to odors can range from psychological (e.g., irritation, anger, or anxiety) to physiological (e.g., circulatory and respiratory effects, nausea, vomiting, and headache). The ability to detect odors varies considerably among the population and is quite subjective. People may have different reactions to the same odor. An odor that is offensive to one person may be perfectly acceptable to another (e.g., coffee roaster). An unfamiliar odor is more easily detected and is more likely to cause complaints than a familiar one. In a phenomenon known as odor fatigue, a person can become desensitized to almost any odor and recognition occurs only with an alteration in the intensity.

The occurrence and severity of odor impacts depend on the nature, frequency, and intensity of the source; wind speed and direction; and the sensitivity of receptors. Odor impacts should be considered for any proposed new odor sources located near existing receptors, and for any new sensitive receptors located near existing odor sources. Generally, increasing the distance between the receptor and the odor source will mitigate odor impacts.

Sensitive Receptors

Some receptors are considered more sensitive than others to air pollutants. The reasons for this greater sensitivity include preexisting health problems, proximity to an emissions source, or duration of exposure to air pollutants. Schools, hospitals, and convalescent homes are considered relatively sensitive to poor air quality because children, elderly people, and the infirm are more susceptible to respiratory infections and other air quality–related health problems than the general public. Residential areas are also sensitive to poor air quality because people usually stay home for extended periods of time. The closest sensitive receptors to the Proposed Project site are rural residences approximately 0.50 miles to the west and south.

3.3.2 Discussion

a) **Less than Significant.** The Proposed Project is located within the jurisdiction of the Feather River Air Quality Management District (FRAQMD). FRAQMD is a bi-county District that was formed in 1991 to administer local, state, and federal air quality management programs for Yuba and Sutter counties. The District and the Proposed Project site is located in the Northern California in the Sacramento Valley Air Basin. The Air Pollution Control Districts and Air Quality Management Districts (Districts) for the counties located in the northern portion of the Sacramento Valley together establish the Northern Sacramento Valley Planning Area (NSVPA). The NSVPA Districts were designated as nonattainment for the ozone California ambient air quality standards (CAAQS) and agreed to jointly prepare an Air Quality Attainment Plan. Since the preparation of the 2012 and 2015 Plans, the NSVPA has observed improvements in the monitoring levels of ozone, especially in Glenn County and Colusa County, which were designated as attainment for the ozone CAAQS effective July 1, 2014. Sutter and Yuba

Counties were designated as nonattainment-transitional[1] effective September 25, 2010 and remain so. The remaining counties (Butte, Tehama, and Shasta) remain nonattainment. A significant impact would occur if a project conflicted with the 2015 Plan by not mirroring assumptions of the plan regarding population growth and vehicle-miles-traveled.

As described below under checklist item b), the Proposed Project's emissions of NO_X (an ozone precursor) would not be expected to exceed FRAQMD's significance threshold during construction activities. Construction of the Proposed Project would be short-term and temporary and the increase in criteria pollutant emissions from off- and on-road equipment exhaust would not conflict with the applicable air quality plans. Because construction emissions are not expected to exceed the FRAQMD or General Conformity *de minimis* thresholds for NO_X, this construction impact would be less than significant.

The Proposed Project would result in an increase in criteria pollutant emissions, generated by employee trips during operation and maintenance activities. However, operation and maintenance would be essentially the same as existing operations, but may require less service trips as the new structure would be more efficient and automated; therefore, no stationary-source emissions would occur at the Proposed Project site. The Proposed Project would not conflict with the 2015 Plan. This operational impact would be less than significant.

b) **Less than Significant Impact with Mitigation Incorporated.** Construction activities are short term and typically result in combustion exhaust emissions (e.g., vehicle and equipment tailpipe emissions), including ozone precursors (ROG and NOx), and PM from combustion and in the form of dust (fugitive dust). Emissions of ozone precursors and PM are primarily a result of the combustion of fuel from on-road vehicles and off-road equipment.

Pollutant emissions associated with construction of the Proposed Project would be generated from the following general construction activities: (1) ground disturbance from grading, excavation, etc.; (2) vehicle trips from workers traveling to and from the Proposed Project site; (3) trips associated with delivery of construction supplies to, and hauling debris from, the Proposed Project site; and (4) fuel combustion by on-site construction equipment. These construction activities would temporarily generate air pollutant emissions, including dust and fumes. The amount of emissions that would be generated on a daily basis would vary, depending on the intensity and types of construction activities that would occur simultaneously. Overall, construction activities associated with the Proposed Project would occur over a period of approximately 3 to 4 months, starting in the summer of 2024.

FRAQMD's approach to analyses of construction impacts as noted in their FRAQMD CEQA Guidelines is to emphasize implementation of effective and comprehensive Standard Construction Mitigation measures rather than detailed quantification of

[1] HSC §40925.5 Nonattainment-transitional district is one that does not exceed the state standard more than three times at any monitoring location in a single calendar year.

emissions. With implementation of **Mitigation Measure AQ-1**, the Proposed Project's construction-related impacts would be further reduced to less-than-significant levels.

Mitigation Measures

Mitigation Measure AQ-1: Implement Standard Air Quality Construction Mitigation Measures.

During all phases of construction, the following procedures shall be implemented;

- Prepare and Implement a Fugitive Dust Control Plan.
- Construction equipment exhaust emissions shall not exceed FRAQMD Regulation Ill, Rule 3.0, Visible Emissions limitations (40 percent opacity or Ringelmann 2.0).
- The contractor shall be responsible to ensure that all construction equipment is properly tuned and maintained prior to and for the duration of onsite operation.
- Limiting idling time to 5 minutes – saves fuel and reduces emissions. (State idling rule: commercial diesel vehicles – 13 CCR Chapter 10 Section 2485 effective 02/01/2005; off-road diesel vehicles – 13 CCR Chapter 9 Article 4.8 Section 2449 effective 05/01/2008).
- Portable engines and portable engine-driven equipment units used at the project work site, with the exception of on-road and off-road motor vehicles, may require California Air Resources Board (CARB) Portable Equipment Registration with the State or a local district permit. The owner/operator shall be responsible for arranging appropriate consultations with the ARB or the District to determine registration and permitting requirements prior to equipment operation at the site.

Once operational, emission sources resulting from project operations would be associated with primarily regular maintenance and inspection work. Operation and maintenance would be essentially the same as existing operations, but may require less service trips as the new structure would be more efficient and automated. Operational impacts would be considered less-than-significant. With respect to project conformity with the federal Clean Air Act, the Proposed Project's potential emissions would be below minimum thresholds and are below the area's inventory specified for each criteria pollutant designated non-attainment or maintenance for the Basin. As such, further general conformity analysis is not required. Therefore, this impact would be less than significant.

c) **Less than Significant.** Construction of the Proposed Project would result in the short-term generation of DPM emissions from the use of off-road diesel equipment and from construction material deliveries and debris removal using on-road heavy-duty trucks. As discussed above, DPM is a complex mixture of chemicals and particulate matter that has been identified by the State of California as a TAC with potential cancer and chronic non-cancer effects. The dose to which receptors are exposed is the primary factor affecting health risk from TACs. Dose is a function of the concentration of a substance in the environment and the duration of exposure to the substance. According to the Office of

Environmental Health Hazard Assessment (OEHHA), health risk assessments (HRAs), which determine the exposure of sensitive receptors to TAC emissions, should be based on a 30-year exposure period when assessing TACs (such as DPM) that have only cancer or chronic non-cancer health effects (OEHHA 2015)

As identified above there are two residences located approximately 0.50 miles to the west and south of the Proposed Project site. The increase in lifetime cancer risk and non-cancer hazard index from exposure to construction DPM emissions from the Proposed Project at the nearest receptor is anticipated to be less than the respective FRAQMD thresholds because of the short-term nature of the Proposed Project and the distance from the Proposed Project. This impact would be less than significant.

Operation and maintenance would be essentially the same as existing operations; however, less service trips may be required as the new structure would be more efficient and automated. As a result, the impact related to exposure of sensitive receptors to substantial TAC emissions from the Proposed Project operations would be less than significant.

d) **Less than Significant.** Construction of the Proposed Project would last for approximately 3 to 4 months total, up to approximately 12 hours per day. The use of on-site diesel-powered equipment can produce odorous exhaust; however, equipment use at the Proposed Project site would be temporary, and potential odors would not affect a substantial number of people in the vicinity, given the rural nature of the Proposed Project site. Therefore, construction of the Proposed Project would not create objectionable odors that would affect a substantial number of people, and odor impacts would be less than significant.

As a general matter, the types of land use development that pose potential odor problems include wastewater treatment plants, refineries, landfills, composting facilities, and transfer stations. Because the Proposed Project would involve improving irrigation and flood control by installing check structures, a trash rack and a central SCADA system that precisely controls the flows in the Main Canal past the new Bohannon Dam and no uses known to pose potential odor problems would occupy the Proposed Project site, operation of the Proposed Project would not create objectionable odors that would affect a substantial number of people. This impact would be less than significant.

3.3.3 References

3.4 Biological Resources

Would the project:	Significant or Potentially Significant Impact	Less Than Significant Impact with Mitigation Incorporated	Less than Significant	No Impact
a) Have a substantial adverse effect, either directly or through habitat modifications, on any species identified as a candidate, sensitive, or special- status species in local or regional plans, policies, or regulations, or by the California Department of Fish and Wildlife (CDFW) or U.S. Fish and Wildlife Service (USFWS)?	☐	☒	☐	☐
b) Have a substantial adverse effect on any riparian habitat or other sensitive natural community identified in local or regional plans, policies, regulations or by the CDFW or USFWS?	☐	☐	☐	☒
c) Interfere substantially with the movement of any native resident or migratory fish or wildlife corridors, or impede the use of native wildlife, or other means?	☐	☐	☐	☒
d) Interfere substantially with the movement of any native resident or migratory fish or wildlife species or with established native resident or migratory wildlife corridors, or impede the use of native wildlife nursery sites?	☐	☒	☐	☐
e) Conflict with any local policies or ordinances protecting biological resources, such as a tree preservation policy or ordinance?	☐	☐	☐	☒
f) Conflict with the provisions of an adopted Habitat Conservation Plan, Natural Conservation Community Plan, or other approved local, regional, or state habitat conservation plan?	☐	☐	☐	☒

3.4.1 Environmental Setting

The Proposed Project site is located on SMWC's Main Canal and is an irrigation and storm water facility, shared with Reclamation District No. 1500 (RD 1500). The Proposed Project site is located just north of the town of Robbins off Highway 113 adjacent to Reclamation Road. The Proposed Project site is surrounded by agriculture on all sides, which is planted in rice most years. Reclamation Road parallels the Main Canal on the west and a runway parallels the Proposed Project site and the levee on the east side.

ESA botanist, Amanda Segura-Moon, and biologist, Christy Dawson, conducted reconnaissance-level surveys of the Proposed Project area on January 24, 2023. The surveys were conducted (1) to confirm there were no changes to previously documented sensitive species and wildlife and plant habitat observed in and adjacent to the Proposed Project area during surveys conducted by

SMB Environmental on October 6, 2021 as documented in the Federally-Listed Biological Resource Assessment Report (**Appendix B**; SMB 2022a) and to conduct an aquatic resources delineation in the Proposed Project area.

All biological resource field surveys were informed by a desktop review of historic and current aerial imagery, subscription-based biological resource databases, publicly available citizen science data, and the previously prepared report (SMB 2022). This section describes the terrestrial and aquatic biological resources that are known or that have the potential to occur in the Proposed Project area. Biological resources are common vegetation, wildlife, and fisheries resources; sensitive habitats; plant communities; and special-status plant, wildlife, and fish species. **Appendix C** contains a table prepared by SMB that identifies all state and federally listed special-status species that could potentially occur in the Proposed Project area, their legal status, their habitat or flowering period, and their potential to occur in the Proposed Project area (SMB 2022b).

The impact analysis presented in this section focuses on those biological resources identified as potentially significant in the Environmental Checklist. The Proposed Project's potential impacts on biological resources are analyzed below. All potential impacts would be mitigated to less than significant levels.

Existing Habitat

The Main Canal is regularly maintained with chemical controls and mowing to control vegetation along the banks and lacks emergent and floating vegetation along the banks and is highly turbid. What little vegetation that does occur consists of ruderal non-native grass and forb species such as prickly lettuce (*Lactuca serriola*) and mustard (*Hirschfeldia incana*), with some native willow herb (*Epilobium brachycarpum*). There is no riparian or aquatic vegetation within the Proposed Project site. An agricultural ditch occurs just outside of the proposed staging area on the west side and consists mostly of emergent cattail (*Typha* spp.). The proposed staging areas and levee roads are mostly barren and contain small amounts of non-native field bindweed (*Convolvulus arvensis*) and yellow starthistle (*Centaurea solstitialis*).

3.4.2 Discussion

a) **Less than Significant Impact with Mitigation Incorporated.** No, the Proposed Project would not have a substantial adverse effect, either directly or through habitat modifications, on any species identified as a candidate, sensitive, or special-status species in local or regional plans, policies, or regulations, or by the CDFW or USFWS with incorporation of mitigation measures.

California Natural Diversity Database (CNDDB), USFWS Official Species List and the California Native Plant Society list were obtained for the USGS 7.5-minute topographic map nine quad search of the Proposed Project (CDFW 2021, USFWS 2021). The lists identified species with a potential to occur based on known occurrences in the vicinity of the Proposed Project. Habitats within the Proposed Project area were assessed for their potential to support special-status species using information about local species

occurrences and species' habitat requirements, in combination with the site visits described above.

Special-Status Plants

No special-status plant habitat was observed within the Proposed Project area during reconnaissance level surveys. The Proposed Project area is heavily disturbed by active operations and maintenance of agricultural ditches and the levee roads. The area is regularly treated with chemical treatments and mowing to prevent vegetation from growing. There is little to no vegetation along the banks. No mitigation is recommended.

Special-Status Wildlife

The Proposed Project is heavily disturbed and offers limited habitat for special-status wildlife species. Of the wildlife species identified in the lists described above, 5 special-status wildlife species have moderate to high potential to occur within or adjacent to the Proposed Project area (**Table 3.3-1**) or were observed within the Proposed Project area. The western pond turtle (*Emmys marmorata*), a California species of special concern and the state and federally threatened giant garter snake (*Thamnophis gigas*) both have the potential to occur within the Proposed Project area and have been observed in the Proposed Project area (Table 3.3-1). Special-status birds, such as tricolored blackbird (*Agelaius tricolor*), Swainson's hawk (*Buteo swainsoni*), and bank swallow (*Riparia riparia*), may use the site for foraging, but there is no nesting habitat within the Proposed Project area. There is submarginal nesting habitat for tricolored blackbirds in the adjacent agricultural fields and ditches.

TABLE 3.3-1
POTENTIAL FOR SPECIAL-STATUS SPECIES TO OCCUR IN THE BOHANNON DAM PROPOSED PROJECT AREA

Scientific Name **Common Name**	**Listing Status USFWS/CDFW**	**General Habitat**	**Potential to Occur in the Modified Project Area**
Birds			
Agelaius tricolor Tricolored blackbird	ST/--	Freshwater marsh, swamp, wetland, and riparian scrub such as blackberry; highly colonial; requires open water, protected nesting substrate, and foraging area with insect prey within a few km of the colony.	**Moderate.** Marginal emergent wetland nesting habitat occurs adjacent to the Proposed Project in the agricultural ditch west of the staging area. Historic CNDDB records of tricolored blackbird occur in the project area, but were not observed during recent visits in 2000, 2011, and 2014.
Buteo swainsoni Swainson's hawk	ST/--	Breeds in grasslands with scattered trees, juniper-sage flats, riparian areas, savannahs, and agricultural lands with groves or lines of trees. Often nests near riparian systems.	Suitable nesting habitat is not present in the Proposed Project area and is very limited within 0.5 miles of the area. Suitable grassland agricultural foraging habitat is present in the Proposed Project area.
Riparia riparia Bank swallow	ST/--	These birds' nest along the Sacramento River and its tributaries, excavating burrows in vertical banks created by natural river processes. Forages over water and river systems in California.	**Moderate.** Suitable open water foraging habitat is present in the Proposed Project Area; however, there is limited documented active occurrences within 5 miles of the area.

Scientific Name **Common Name**	**Listing Status USFWS/CDFW**	**General Habitat**	**Potential to Occur in the Modified Project Area**
Other birds protected by the Migratory Bird Treaty Act (MBTA).	MBTA	Various habitats.	Several native bird species were observed during the site visits, such as great egret, pied-billed grebe, black phoebe, and Brewer's blackbird. However, there is very limited nesting habitat and nesting in the Proposed Project area is unlikely. Nesting may occur adjacent to the Project.
Thamnophis gigas Giant gartersnake	FT/ST	Permanent or semipermanent water and dense emergent vegetation; freshwater marshes, streams, and canals with permanent water.	**Present.** Observed within in the canal during dewatering activities in 2022.
Emys marmorata Western pond turtle	SSC/--	Occurs in perennial ponds, lakes, rivers and streams with suitable basking habitat (mud banks, mats of floating vegetation, partially submerged logs) and submerged shelter.	**Present.** Observed in the Proposed Project area during a site visit on October 6, 2021.

NOTES: MBTA: Migratory Bird Treaty Act

Federal

FE = listed as endangered under the Federal Endangered Species Act; FT = listed as threatened under the Federal Endangered Species Act.

State

SE = listed as endangered under the California Endangered Species Act; ST = listed as threatened under the California Endangered Species Act.

SOURCE: U.S. Fish and Wildlife Service. 2021. Information for Planning and Consultation (IPaC). List of threatened and endangered species that may occur in the Bohannon Dam Automation Project Area. September 16, 2021. Consultation Code: 08ESMF00-2021-SLI-2783. Event Code: 08ESMF00-2021-E-08098.

Tricolored Blackbird

Ninety percent of all breeding adults are found in the Central Valley (Hamilton 2000). Breeding occurs from mid-March through early August (Meese et al. 2014), and autumnal breeding (September through November) has been documented at several sites in the Central Valley (Orians 1960). The species is highly colonial in its nesting habits and forms dense breeding colonies in a variety of substrates. Historically, most colonies were established in freshwater marshes, but in the absence of these habitats, tricolored blackbirds will nest in riparian scrublands and forests, patches of Himalayan blackberry, arundo, grain and silage fields, and a variety of other similarly structured vegetation (Meese et al. 2014). Dense stands of Himalayan blackberry support the largest proportion of tricolored blackbird nesting throughout California (Meese 2014). During the nonbreeding season, tricolored blackbirds form large, often multispecies flocks and range more widely than during the breeding season (Beedy 2008).

Although tricolored blackbirds could potentially use the site for foraging, there is no potential for tricolored blackbird to nest in the Proposed Project area. However, there is a low potential that they could nest in the adjacent agricultural fields and ditches within the emergent vegetation adjacent to the Proposed Project site. Historical colonies were documented in CNNDB; however, most were thought to have been extirpated due to agricultural practices.

Construction of the new facilities and removal of the existing facilities could temporarily impact foraging and submarginal nesting habitat for tricolored black bird within the Proposed Project footprint and adjacent habitats. However, the Proposed Project would not create a significant increase in activities than those already associated with the adjacent farming and runway activities, will be temporary and contained to a small construction and demolition footprint, and appropriate buffers will be established therefore this impact is anticipated to be less than significant with mitigation.

Swainson's Hawk

Swainson's hawk is State listed as threatened. It once occupied large grassland and shrub steppe habitats, as well as canyons, foothills, and smaller interior valleys in otherwise mountainous regions. Currently, the species is most common in the Central Valley and Great Basin. Nesting habitat for Swainson's hawk includes mature trees with relatively dense canopies such as oaks or cottonwoods in or near riparian habitat, agricultural fields, or suburban neighborhoods near suitable foraging habitat. They forage in grasslands, irrigated pastures, and grain fields. In California, Swainson's hawks begin nesting in late March, and the young usually leave the nest (fledge) by August.

There are several CNDDB records of Swainson's hawk within five miles of the survey area which mostly occur along the river corridors to the east and west of the Proposed Project area. There are limited trees within 0.5 miles of the Proposed Project that would support nesting Swainson's hawk. Most of the trees are associated with rural residents or agricultural facilities. There are no trees in the Proposed Project area.

Construction of the new facilities and removal of the existing facilities could temporarily impact foraging habitat for Swainson's hawk within the Proposed Project footprint and adjacent habitats. However, the Proposed Project would not create a significant increase in activities than those already associated with the adjacent farming and runway activities, will be temporary and contained to a small construction and demolition footprint, and appropriate buffers will be established therefore this impact is anticipated to be less than significant with mitigation.

Bank Swallow

The bank swallow is a neotropical migrant that arrives in California in May and breeds before returning to South America in late July or August. Swallows primarily inhabit riparian and lowland habitats with vertical banks, bluffs, and cliffs where they dig holes for nesting in sandy or fine-textured soil (CDFG 1999). The species' range in California is estimated to have been reduced by 50 percent since 1900 (CDFG 1999). Bank swallow was formerly more common as a breeder in California. Now, only approximately 110–120 colonies remain in the state. Perhaps 75 percent of the current breeding population in California occurs along the banks of the Sacramento and Feather Rivers in the northern Central Valley (CDFG 1999).

There are historic populations of nesting bank swallows, documented by CNDDB, along the Feather and Sacramento Rivers to the east and west of the Proposed Project. However,

they are greater than 5-miles and thought to have been extirpated from the area. Although nesting habitat is submarginal there is foraging habitat that bank swallows may use.

Construction of the new facilities and removal of the existing facilities could temporarily impact foraging habitat for bank swallows. However, due to the limited amount number of construction days and small construction and demolition footprint, this impact is less than significant.

Western Pond Turtle

The western pond turtle is a moderately-sized aquatic turtle commonly found in ponds, lakes, marshes, rivers, streams, and agricultural ditches with rocky or muddy substrates. Western pond turtle habitat often includes shoreline basking areas that may or may not be bordered by aquatic vegetation. Aquatic sites are often within woodlands, grasslands, and open forests, between sea level and 6,000 feet in elevation. Western pond turtles bask on logs or other objects when water temperatures are lower than air temperatures. Their nests are created in upland areas with friable soils, often up to 0.25 miles from an aquatic site (Jennings and Hayes 1994; Stebbins 2003; Zeiner et al. 1988).

Western pond turtles are discontinuously distributed throughout California west of the Cascade-Sierran crest (Jennings and Hayes 1994). There are no western pond turtle occurrences documented in the CNDDB within 5 miles of the Proposed Project area. However, the Main Canal and nearby agricultural ditches could provide habitat for the western pond turtle. A western pond turtle was observed approximately 100 feet southwest of Bohannon Dam during the October 2021 biological field surveys.

Giant Garter Snake

Giant garter snakes inhabit agricultural wetlands including irrigation and drainage canals, sloughs, ponds, small lakes, low-gradient streams, and adjacent uplands in the Central Valley. Giant garter snake are often found within these aquatic features especially when emergent vegetation including cattails and bulrushes are present. Because most of its natural habitat has been lost, giant garter snake also live in rice fields (USFWS 2017). Rice fields provide surface water during the summer when the snakes are active and marsh-like conditions provide the cover, habitat, and prey required for giant garter snake to survive (Halstead et al. 2010). The active season extends from April 1 to October 1. Giant garter snakes inhabit small mammal burrows and other soil crevices above flood elevations during this inactive period (USFWS 2017).

There are numerous giant garter snake occurrences documented within 5 miles of the Proposed Project. The adjacent rice fields and agricultural ditches provide potential aquatic habitat and upland areas, such as the upper banks of the levees, that do not flood provide potential upland habitat. Soil has previously been compacted and provides very few suitable burrows for giant garter snake overwintering. Additionally, during dewatering activities in the Main Canal in May 2022, giant garter snakes were observed opportunistically foraging in areas of low water where fish were concentrated. However,

the canal does not provide ideal habitat due to the lack of vegetative cover and would normally not be ideal for foraging.

Construction and operation and maintenance activities could have direct and indirect adverse impacts on giant garter snake and western pond turtle. All maintenance activities that involve the use of heavy equipment; or produce disturbances such as noise, dust, smoke, vibrations, and visual disturbance; or that could accidentally release hazardous materials could have impacts. This section describes an assessment of those potential effects and describes mitigation measures for those impacts.

The use of vehicles and heavy equipment could result in mortality of giant garter snakes or western pond turtles through vehicle strikes when these animals are aboveground, basking on or crossing roads. These species, along with other species using burrows may also be crushed or entombed by vehicles and heavy equipment, resulting in direct mortality. In addition, the potential exists for contaminants, including fuel, oil, other petroleum products, and other chemicals used in maintenance activities, to be accidentally introduced into waterways. In sufficient concentrations, these contaminants would be toxic to special-status aquatic wildlife (i.e., giant garter snake, western pond turtle) and their prey species.

Noise, dust, vibrations, and visual disturbance related to the use of vehicles and heavy equipment during construction and maintenance activities, as well as disturbances associated with the presence of persons conducting maintenance activities, could indirectly affect giant garter snake, western pond turtle, and all species of special-status birds by negatively altering behaviors such as foraging, thermoregulation, brumation, and feeding. It is also possible that such disturbances could modify predator-prey relationships (e.g., by increasing predator populations through habitat alterations that benefit predators or through disposal of refuse that attracts predators).

Maintenance of Water Control Structures

Water control structures require regular maintenance to remove built-up debris and sediments around inlet and outlet structures and screens. However, operation and maintenance would be essentially the same as existing operations; but would require less service trips than may be required by the old system as the new structure would be more efficient and automated. This would result in less disturbance of wildlife.

Summary

Adverse effects on special-status wildlife could occur as a result of construction and maintenance activities. As described previously, these adverse effects include mortality, injury, and harassment of individuals, along with the permanent or temporary loss or modification of habitat.

The most substantial impact would result from excavating the levee banks that may potentially support giant garter snake. Because special-status wildlife species supported by the affected habitats are considered to be declining, rare, threatened, or endangered by

California or federal fish and wildlife agencies, the loss or modification of habitat for these species or harassment or mortality of individuals is considered a potentially significant impact.

Mitigation Measures

Implementation of the following mitigation measures, including WEAP training, special-status species surveys, and compensatory mitigation would reduce this impact to a less than significant level. This list includes general measures that apply to all maintenance activities as well as resource-specific measures.

Mitigation Measure BIO-1: Worker Environmental Awareness Protections Training.

A qualified biologist will conduct a pre-construction Worker Environmental Awareness Protections Training (WEAP) for both construction and demolition projects and operations and maintenance activities. WEAP trainings are project-specific and cover potential environmental concerns or considerations, including, but not limited to, awareness of biological resources, special-status species near project sites, jurisdictional waters, cultural resources, environmentally sensitive areas, and/or avoidance areas.

Mitigation Measure BIO-2: Special-Status Wildlife Species Surveys.

Prior to the start of construction, a qualified biologist shall conduct general pre-construction wildlife surveys as well as measures described in BIO-6–8. Pre-construction surveys for special-status species with moderate to high potential to occur shall be conducted where suitable habitat is present not more than 72 hours prior to the start of construction activities or maintenance activities that require vegetation removal during the nesting or giant garter snake active season. The pre-construction survey area shall include the Proposed Project area and all ingress/egress routes, plus a 200-foot buffer. If the results of the site-specific pre-activity surveys determine a candidate, sensitive, or special-status species identified in local or regional plans, policies, or regulations is present within a 200-foot buffer of the Project area, implementation of appropriate avoidance measures shall be required in accordance with Mitigation Measure BIO-3.

Mitigation Measure BIO-3: Special-Status Wildlife Species Avoidance and Minimization.

If the results of the pre-activity surveys conducted pursuant to Mitigation Measure BIO-2 determine a candidate, sensitive, or special-status species identified in local or regional plans, policies, or regulations is present within a 200-foot buffer of the Proposed Project area, SMWC shall develop and implement appropriate avoidance measures listed below and in BIO 4-6. Avoidance measures may include but are not limited to:

- Installation of Environmentally Sensitive Area/avoidance fencing.
- Flagging or fencing of any special-status species burrows by a monitoring biologist to ensure avoidance during reclamation activities.

- Monitoring by a monitoring biologist during all initial ground disturbing activities. Once initial ground disturbing activities have been completed, the biologist shall conduct daily pre-activity clearance surveys, as necessary.

- If at any time during Project construction or maintenance activities, a special-status species enters the Project area or otherwise may be impacted by the Project, all activities at the area where the find occurred shall cease. At that point, a monitoring biologist shall be consulted and recommend an appropriate course of action.

Mitigation Measure BIO-4: Giant Garter Snake Avoidance and Minimization.

The Proposed Project area provides marginal habitat for giant garter snake. However, suitable habitat occurs within 200 feet of the Proposed Project area. Thus, SMWC proposes to implement standard avoidance and minimization measures during construction activities. The following measures shall be implemented to avoid impacts to giant garter snake:

Avoidance and Minimization Measures:

- Confine movement of heavy equipment to existing roadways to minimize habitat disturbance. Maintain a speed limit of 10 mph on all roadways within the construction area.

- Check under all equipment and materials prior to moving them. When feasible, do not store construction materials or stockpiles within 200 feet of giant garter snake habitat. If materials need to be stored within 200 feet of giant garter snake habitat exclusion fencing shall be installed to prevent snakes from accessing the stockpiled materials.

- All construction activities that occur within 200 feet of giant garter snake habitat shall occur between May 1 and October 1. This is the active period for giant garter snakes and direct mortality is lessened, because snakes are expected to actively move and avoid danger.

- SMWC shall dewater construction areas potentially providing aquatic habitat for giant garter snakes to the extent feasible. Any dewatered aquatic habitat shall remain absent of aquatic prey for at least 5 consecutive days before conducting construction activities. If 5 consecutive days is not feasible then SMWC shall consult with the USFWS and CDFW to apply appropriate measures. If dewatering cannot remove all water, potential giant garter snake prey (i.e., fish and tadpoles) would be removed so that giant garter snakes and other wildlife are not attracted to the construction area.

- Confine clearing to the minimal area necessary to facilitate construction activities. Flag and designate avoided giant garter snake habitat within or adjacent to the Proposed Project area as Environmentally Sensitive Areas where feasible.

- Construction personnel shall receive worker environmental awareness training. This training shall instruct workers to recognize giant garter snakes and their habitat(s) (see BIO-1).

- 24-hours prior to construction activities, the Proposed Project area shall be surveyed for giant garter snakes. Survey of the Proposed Project area shall be repeated if a lapse in construction activity of 2 weeks or greater has occurred.

- If a giant garter snake is observed in the construction area, work will stop in the vicinity of the snake and allow the snake to leave on its own. Alternatively, individuals who can handle and relocate giant garter snake—i.e., individuals who possess appropriate federal and California permits for these activities—may capture and relocate the snake. USFWS and CDFW will be notified by telephone or email within 24 hours of a giant garter snake observation in the construction area. If the snake does not voluntarily leave the construction area and cannot be effectively captured and relocated unharmed (e.g., if the snake retreats into an underground burrow or below the water surface), activities in the immediate vicinity of the snake will stop as needed to prevent harm to the snake and USFWS and CDFW will be consulted. After completion of construction activities, all temporary construction debris and materials shall be removed, and habitat would be restored to pre-Project conditions.

- To prevent giant garter snakes from becoming entangled, trapped, or injured, erosion control materials that use plastic or synthetic monofilament netting will not be used in the Project area. Acceptable materials include natural fibers such as jute, coconut, twine, or other similar fibers.

Compensatory Mitigation:

To compensate for the loss of giant garter snake habitat associated with the installation of the new facilities, SMWC will remove the existing facilities. Removal will include removing the existing structure, land bridge, and associated infrastructure. The rip-rap that is placed along the banks of the canal will remain in place.

Mitigation Measure BIO-5: Western Pond Turtle Avoidance and Minimization.

SMWC shall implement the following measures to avoid and minimize effects on western pond turtle:

- A qualified biologist shall conduct a pre-construction survey within 7 days before the start of Project activities. If no western pond turtles are observed, SMWC would document that information for the file, and no additional measures shall be required, except as described below for dewatering activities.

- Should any western pond turtles be detected on land during the pre-construction survey, the qualified biologist would identify the location using GPS coordinates. The qualified biologist may relocate any western pond turtles found on land or in aquatic habitat within the construction footprint to suitable aquatic habitat at least 200 feet away from the construction footprint.

- If western pond turtles are observed on land within the construction footprint during construction activities, SMWC would stop work within approximately 200 feet of the turtle, and a qualified biologist would be notified immediately. If possible, the turtle would be allowed to leave on its own and the qualified biologist would remain in the area until the biologist deems his or her presence no longer necessary to ensure that the turtle is not harmed. Alternatively, the

qualified biologist may capture and relocate the turtle unharmed to suitable habitat at least 200 feet outside the construction footprint. If a western pond turtle nest is unintentionally uncovered during construction activities, work would stop in the vicinity of the nest until a qualified biologist could evaluate the situation and notify the appropriate agencies.

Mitigation Measure BIO-6: Nesting Birds Avoidance and Minimization.

To avoid and minimize effects on nesting birds and achieve compliance with the Migratory Bird Treaty Act and California Fish and Game Code Sections 3503, 3503.5, and 3513, SMWC shall implement the following measures:

- If construction occurs during the nesting season, typically February 1 to September 15 a qualified biologist shall inform all construction personnel about the life history of Swainson's hawk, tricolored blackbird, bank swallow, and other relevant species, as well as the importance of nest sites and foraging habitat.

- Where feasible, construction and maintenance activities that have the potential to affect special-status nesting birds and common nesting birds shall occur at times of the year when adverse effects on those species would be avoided. If activities are conducted outside the nesting seasons no additional measures are required to mitigate adverse effects on nesting birds.

- If construction is scheduled to occur during the nesting season, a breeding season survey for nesting birds shall be conducted by a qualified biologist for all habitat within 200 feet of construction activities. One Swainson's hawk survey shall be completed in an area with a radius of 0.5 miles from construction activities for Swainson's hawk nests.

- If nesting birds have been identified within or adjacent to the construction footprint, SMWC would establish appropriate avoidance buffers (50 feet for passerines and 300 feet for raptors except Swainson's hawk). Reduced buffers may be implemented if recommended by the monitoring biologist. Buffers would be marked in the field by a qualified biologist using temporary fencing, high-visibility flagging, or other means that are equally effective in clearly delineating the buffers. The specific buffer distance for Swainson's hawk is 0.25 miles. Reduced buffers for Swainson's hawk may be implemented if recommended by the monitoring biologist, due to the nature of the activity.

Mitigation Measure BIO-7: Staging Areas and Access Routes.

When working on habitats that support state and/or federally listed species, disturbance to existing grades and vegetation will be limited to the actual site of the Proposed Project and necessary access routes. Placement of all roads, staging areas, and other facilities will avoid and limit disturbance-sensitive habitats (e.g., wetland habitat, suitable habitats) as much as possible. All staging and material storage areas, including the locations where equipment and vehicles are parked overnight, will be placed outside of the flood zone of a watercourse, away from wetland habitat, and away from any other sensitive habitats. When possible, staging and access areas will be situated in areas that are previously disturbed, such as developed areas, paved areas, parking lots, areas with bare ground or gravel, and areas clear of vegetation.

b) **No Impact.** There is no riparian habitat or sensitive natural communities identified within the Proposed Project area. Therefore, the Proposed Project would not have a substantial adverse effect on riparian habitat or other sensitive natural community identified in local or regional plans, policies, regulations, or by the CDFW or USFWS. As a result, no impact would occur.

c) **No Impact.** There are no state or federally protected wetlands identified within the Proposed Project area. The Main Canal is considered to be an Other Waters that would be jurisdictional under both the Clean Water Act Sections 401 and 404; however, there are no wetlands within the canal. The potential wetlands adjacent to the Proposed Project would not be filled, removed, or hydrologically interrupted as part of the project. Therefore, the Proposed Project would not have a substantial adverse effect on state or federal wetlands. As a result, no impact would occur.

d) **Less-than-Significant Impact with Mitigation Incorporated.** The Main Canal may act as a migratory corridor for giant garter snake and western pond turtle. Construction and demolition associated with the Proposed Project may temporarily interfere with the movement of these species during dewatering. However, the installation of the new facilities will be compensated by removing of the existing facilities and will not further hinder wildlife movement more than the existing feature. Construction and demolition of the Proposed Project could temporarily result in a significant impact to these species if they utilize the Project area. However, with implementation of **Mitigation Measures BIO-1** through **BIO-5** including pre-construction surveys, fencing, and WEAP training, potential impacts would be reduced to less-than-significant levels.

e) **No Impact.** The Proposed Project is not expected to conflict with any local policies or ordinances protecting biological resources, such as a tree preservation policy or ordinance. As a result, no impact would occur.

f) **No Impact.** The Proposed Project would not conflict with the provisions of an adopted Habitat Conservation Plan, Natural Conservation Community Plan, or other approved local, regional, or state habitat conservation plan. Therefore, no impact would occur.

3.4.3 References

Beedy, E. C. 2008. Tricolored Blackbird (*Agelaius tricolor*). In W. D. Shuford and T. Gardali (editors), California Bird Species of Special Concern: A Ranked Assessment of Species, Subspecies, and Distinct Populations of Birds of Immediate Conservation Concern in California. Studies of Western Birds 1. Western Field Ornithologists, Camarillo, California, and California Department of Fish and Game, Sacramento, California.

California Department of Fish and Game. 1999. California Wildlife Habitat Relationships System California Interagency Wildlife Task Group: Bank Swallow.

Halstead, B. J., G. D. Wylie, and M. L. Casazza. 2010. Habitat Suitability and Conservation of the Giant Gartersnake (*Thamnophis gigas*) in the Sacramento Valley of California. Copeia 4:591–599.

Hamilton, W. J., III. 2000. Tricolored Blackbird 2000 Breeding Season Census and Survey—Observations and Recommendations. Report prepared for U.S. Fish and Wildlife Service, Portland Oregon.

Jennings, M. R., and M. P. Hayes. 1994. Amphibian and Reptile Species of Special Concern in California. California Department of Fish and Game, Inland Fisheries Division, Rancho Cordova, California.

Meese, R. J., E. C. Beedy, and W. J. Hamilton, III. 2014. Tricolored Blackbird (Agelaius tricolor). No. 423 in A. Poole (editor), The Birds of North America Online. Cornell Lab of Ornithology, Ithaca, New York. Available: http://bna.birds.cornell.edu/bna/species/423/articles/introduction. Accessed May 15, 2015.

Meese, R. J. 2014. Results of the 2014 Tricolored Blackbird Statewide Survey. Department of Environmental Science and Policy, University of California, Davis, California.

Orians, G. H. 1960. Autumnal Breeding in the Tricolored Blackbird. Auk 77:379–398.

SMB Environmental. 2022a. Federally-Listed Biological Resources Assessment Report; Sutter Mutual Water Company Bohannon Dam Automation Project. May 2022.

SMB Environmental. 2022b. RD 1500 Bohannon Dam Automation Project Administrative Draft IS/MND and EA/FONSI. December 2022.

Stebbins, R. C. 2003. A Field Guide to Western Reptiles and Amphibians. Third edition, revised. Houghton Mifflin Company, Boston, Massachusetts.

U.S. Fish and Wildlife Service (USFWS). 2017. Recovery Plan for the Giant Garter Snake (Thamnophis gigas). U.S. Fish and Wildlife Service, Pacific Southwest Region, Sacramento, California. vii + 71 pp.

Zeiner, D. C., W. F. Laudenslayer, K. E. Mayer, and M. White. 1990. California's Wildlife, Volume III: Mammals. California Department of Fish and Game, Sacramento, California.

3.5 Cultural Resources

Would the project:	Significant or Potentially Significant Impact	Less Than Significant Impact with Mitigation Incorporated	Less than Significant	No Impact
a) Cause a substantial adverse change in the significance of a historical resource pursuant to § 15064.5?	☐	☐	☒	☐
b) Cause a substantial adverse change in the significance of an archaeological resource pursuant to § 15064.5?	☐	☒	☐	☐
c) Disturb any human remains, including those interred outside of formal cemeteries?	☐	☒	☐	☐

This section examines the potential impacts of the Proposed Project on cultural resources. Tribal cultural resources are described separately in chapter 3.18 of this IS/MND. For purposes of this analysis, the term *cultural resource* is defined as follows:

> *Pre-contact and historic-era sites, structures, districts, and landscapes, or other evidence associated with human activity considered important to a culture, a subculture, or a community for scientific, traditional, religious, or other reason. These resources include the following types of CEQA-defined resources: historical resources, archaeological resources, and human remains.*

The term *pre-contact* is used as a chronological adjective to refer to the period prior to Euroamerican arrival in the Proposed Project Area.

This section relies on the information and findings presented in the Proposed Project's confidential cultural resources technical reports:

- *Addendum Archaeological and Architectural Resources Inventory Report for the Bohannon Dam Automation Project, Sutter County, California* (Hoffman 2023).
- *AB52 and Section 106 Cultural Resources Investigation Report: Sutter Mutual Water Company Bohannon Dam Automation Project* (SMB 2022)

Those reports included overviews of the environmental, ethnographic, and historic background of the Proposed Project Area, with an emphasis on aspects related to human occupation. Please contact SMWC to inquire about reviewing the reports.

3.5.1 Environmental Setting

CEQA Area of Potential Effects

For purposes of this analysis, the CEQA Area of Potential Effects (C-APE) is defined as both the horizontal and vertical maximum extents of potential direct impacts of the Proposed Project on cultural resources. This area encompasses the footprint of Proposed Project actions, including staging and access areas. The C-APE comprises approximately 6.68 acres, and extends vertically

to the maximum depth of the Proposed Project's ground-disturbing activities, varying according to specific location: existing dam removal—10.0 feet, new dam construction—8.0 feet, excavation in Main Canal—2.0 feet, dewatering—4.0 feet, and access routes and staging areas—0.5 feet. Because of the nature of the Proposed Project and its minimal potential for indirect impacts, a single C-APE has been defined to account for impacts on archaeological and architectural resources. The same C-APE applies to human remains.

Records Search

In 2023, ESA conducted a records search of the California Historical Resources Information System (CHRIS), at the Northeast Information Center (NEIC) at Chico State University, that included the C-APE with a 0.25-mile buffer. The NEIC maintains the CHRIS records relevant to the C-APE and vicinity.

The NEIC has no record of any previously recorded cultural resources mapped within the 0.25-mile search area or any previous cultural resources studies conducted in this area.

Native American Correspondence

In September 2021, SMB contacted the California Native American Heritage Commission (NAHC) in request of a search of the NAHC's Sacred Lands File (SLF) and a list of Native American representatives who may have interest in the Proposed Project. The NAHC replied in September 2021, stating that the SLF has no record of any sacred sites in the C-APE, and also provided a list of six contacts representing six California Native American Tribes (Tribes) who may have interest in the Proposed Project. On September 24, 2021, SMWC sent letter to the six Tribes whose contact information was provided by the NAHC; the letters provided information on the Proposed Project and requested that the Tribes notify SMWC if they have any concerns regarding Proposed Project impacts on cultural resources or tribal cultural resources. To date, SMWC has not received any replies from these letters.

ESA contacted the NAHC in January 2023, in request of an additional search of the NAHC's SLF and an updated list of Native American representatives who may have interest in the Proposed Project. The NAHC replied on February 28, 2023, stating that the SLF has no record of any sacred sites in the C-APE, and also providing a list of nine contacts representing seven Tribes who may have interest in the Proposed Project.

Note, no Tribes have formally requested to be notified of SMWC projects, pursuant to PRC § 21080.3 (Assembly Bill 52); therefore, no Tribal consultation pursuant to PRC § 21080.3 was required for the Proposed Project.

Field Survey

On February 6, 2023, ESA conducted a cultural resources pedestrian surface survey of the C-APE. Intensive pedestrian methods were used during the survey, consisting of walking the ground surface in parallel transects no greater than 20 meters apart and inspecting the ground surface for evidence of cultural material (archaeological or architectural).

Beyond the paved components of the C-APE, recent flooding and maintenance of the SMWC Main Canal, likely related to recent severe storm events, afforded overall ground visibility of 90% along the canal embankments and bank cuts. Additional maintenance of the canal was evidenced by mowed vegetation along the Reclamation Road embankment, though sparse remaining vegetation contributed negligibly to reduced ground visibility. Other factors that contributed to minor limitation of ground visibility included flow within the canal and riprap placed on the upstream and downstream slopes of the dam currently situated in the approximate center of the APE. Visible soil was gray-brown mixed sandy and silty alluvium with 50% concentration of rounded cobbles and gravels. During the field survey, two cultural resources, the SMWC Main Canal and the Bohannon Dam, both architectural resources, were identified in the C-APE. The resources are discussed in detail below.

Summary of Resources Identified

Through background research, Native American correspondence, and a field survey conducted for the Proposed Project, two cultural resources, both architectural resources, were identified in the C-APE, the SMWC Main Canal and the Bohannon Dam.

SMWC Main Canal

An approximately 0.25-mile-long segment of the SMWC Main Canal runs north-northwest/south-southeast through the C-APE. The earthen trapezoidal canal measures approximately 100 feet wide and 10 feet deep in the portion within the C-APE, though its overall length is approximately 18 miles. The canal was built circa 1914 by the Sutter Basin Company (SBC), connecting Tisdale Bypass in the north to Sacramento Slough, 18 miles to the south. The SBC was formed in 1911 to provide irrigation and drainage to the 45,000 acres in and around the community of Robbins. Funded by Chicago meatpacker Ogden Armour, the company constructed canals, levees, and irrigation channels, and then sold the improved land to farmers beginning in 1920 through 1946. The company also lobbied to establish RD 1500, which was formed in April 1913 to provide drainage and flood control to 70,000 acres within 55 miles of levees between the Sacramento River and Sutter Bypass. Historic maps of RD 1500 show the appearance of the SMWC Main Canal by 1916, with it bisecting the center of RD 1500, connecting hundreds of miles of lateral canals to the main drainage pumping system.

The SMWC Main Canal was evaluated for significance in 2022 by SMB, who recommended that it be treated as eligible for the National Register of Historic Places (National Register) under Criterion A for its association with early 20th-century farming and agricultural-related activities that encouraged the economic growth of Sutter County, for purposes of the Proposed Project only. ESA evaluated its eligibility for listing in the California Register of Historical Resources (California Register), recommending that the resource be treated as California Register-eligible (under Criterion 1), under the same reasoning as for its treatment as National Register-eligible, for the purposes of the Proposed Project only (Hoffman, 2023). Therefore, the SMWC Main Canal qualifies as an historical resource, for CEQA purposes, for the purposes of the Proposed Project.

Bohannon Dam

This architectural resource is a concrete irrigation dam originally constructed in the late 1960s by SMWC, with the entire structure within the current C-APE. The dam is oriented across the SMWC Main Canal, which drains essentially north-northwest to south-southwest, and primarily functions to control canal water levels and regulate water diverted for irrigation. The dam has three principal components, the dam itself, sluice gates, and a gate control structure; the latter two components are oriented on the north (upstream) side of the dam. The dam portion consists of a concrete structure oriented perpendicular to the canal, with a gravel-covered road/berm immediately south of the concrete, and a rip-rap-covered slope south of the road/berm. The dam measures approximately 100 feet long (perpendicular to the canal) by 16 feet wide (at the top), and approximately 18 feet tall (includes approximately 10 feet within the canal and 8-foot-tall superstructure above canal). Water conveyance is provided through the dam via six 6-foot-diameter horizontally oriented corrugated steel pipes that extend for approximately 60 feet through the concrete portion of the dam to the south at its outfall; on the north (concrete) portion of the dam, each pipe is oriented vertically and cut in half, with five having attached sluice/slide gates. The sluice/slide gates are wooden panels that slide on a metal track welded to the edges of each pipe. The single pipe with no sluice/gate appears to be an emergency overflow pipe, as it is set vertically higher than the other five pipes. The dam has a sluice gate control structure, consisting of a two-level, L-shaped metal walkway measuring approximately 50 feet (perpendicular to canal) by 30 feet, with an upper deck where the control equipment is situated. The upper deck is covered in textured steel plate with surrounding metal hand railings, and five Waterman Type 3EP-12:1 geared operators are bolted to the deck. Each geared operator is attached to a sluice/ slide gate directly below by a 2.5-inch-diameter steel rod attached to the wooden gate plates, manually controlled by a hand wheel or handle crank. The lower walkway, on the north side of the control structure, allows for sluice gate access, and is constructed of wooden planks (floor) with steel hand railings. Both walkways are supported by footings made of steel I-beams with X-shaped cross bracings, with one footing between each pipe.

ESA evaluated the significance of the Bohannon Dam, recommending it not eligible for the California Register. Therefore, the Bohannon Dam does not appear to qualify as an historical resource, for CEQA purposes.

3.5.2 Discussion

Architectural resources that may qualify as historical resources, according to *CEQA Guidelines* § 15064.5 are addressed under impact discussion a, below, while archaeological resources, including archaeological resources that are potentially historical resources according to *CEQA Guidelines* § 15064.5, are addressed under impact discussion b.

a) **Less than Significant.** Two architectural resources, the SMWC Main Canal and the Bohannon Dam, were identified in the C-APE through background research and field surveys for the Proposed Project. The Bohannon Dam was evaluated as not eligible for the California Register and, therefore, does not qualify as an historical resource, as defined in *CEQA Guidelines* § 15064.5. The SMWC Main Canal is being treated as

California Register-eligible for the purposes of the Proposed Project and, therefore, qualifies as an historical resource, for CEQA purposes.

The Proposed Project, which includes demolition of the existing Bohannon Dam and construction of a new dam 200 feet downstream from the existing dam, has the potential to result in the physical damage to the SMWC Main Canal through excavation into the canal structure as part of demolition and construction. This impact would be minor, however, in comparison to the approximately 18-mile length of the canal. The canal has also been subject to routine maintenance, including dredging, throughout its entire existence, and maintains its function as a canal. Following completion of the demolition and construction of the new dam, the canal would retain its current shape, appearance, and functionality, and the areas subject to demolition and construction would be reconstructed to the same appearance as the extant canal. The canal would not be removed from its historic location, nor would there be any change to the canal's historic use. There would be no introduction of visual, atmospheric, or audible elements that diminish the integrity of the canal. The proposed new dam construction would replace the existing dam and would not introduce a new visual element beyond those already present along the canal. The Proposed Project would not result in the neglect of the canal, nor would it result in the transfer, lease, or sale of the canal. The Proposed Project would not impede the ability of the SMWC Main Canal to convey its potential significance under California Register Criterion 1 and, therefore, would result in a less than significant impact on the SMWC Main Canal (the one historical resource in the C-APE).

In summary, the Proposed Project would not cause a substantial adverse change in the significance of an historical resource pursuant to *CEQA Guidelines* § 15064.5, and would result in a **less than significant impact** on historical resources, and no mitigation is required.

b) **Less than Significant with Mitigation Incorporated.** No archaeological resources have been identified in the C-APE. Therefore, no known archaeological resources that may qualify as historical resources (as defined in *CEQA Guidelines* § 15064.5) or unique archaeological resources (as defined in PRC § 21083.2[g]) are present in the C-APE. As a result, there is no substantial evidence of the presence in the C-APE of any archaeological resources, as defined in *CEQA Guidelines* § 15064.5. Therefore, the Proposed Project is not expected to impact any archaeological resource, pursuant to *CEQA Guidelines* § 15064.5.

Although there is no substantial evidence that archaeological resources are present in the C-APE, the Proposed Project would involve ground-disturbing activities that may extend into undisturbed soil. Such activities could unearth, expose, or disturb subsurface archaeological resources that have not been identified on the surface. If such resources were found to qualify as archaeological resources, pursuant to *CEQA Guidelines* § 15064.5, impacts of the Proposed Project on archaeological resources would be potentially significant. Such potentially significant impacts would be reduced to less-than-significant by implementing **Mitigation Measure CUL-1**.

Mitigation Measures

Mitigation Measure CUL-1: Implement Unanticipated Discovery Protocol for Archaeological Resources, including Potential Tribal Cultural Resources.

If pre-contact or historic-era archaeological resources are encountered by construction personnel during Proposed Project construction, all construction activities within 100 feet shall halt until a qualified archaeologist, defined as one meeting the U.S. Secretary of the Interior's Professional Qualifications Standards for Archeology and with expertise in California archaeology, can assess the significance of the find. Pre-contact archaeological materials might include: obsidian and chert flaked-stone tools (e.g., projectile points, knives, scrapers) or toolmaking debris; culturally darkened soil (midden) containing fire-affected rock, artifacts, or shellfish remains; groundstone artifacts (e.g., mortars, pestles, handstones); and battered stone tools, such as hammer stones and pitted stones. Historic-era materials might include: stone, concrete, or adobe footings and walls; filled wells or privies; and deposits of metal, glass, and/or ceramic refuse. If the qualified archaeologist determines that the resource is or is potentially Native American in origin, culturally affiliated California Native American Tribes shall be contacted to assess the find and determine whether it is potentially a tribal cultural resource.

If SMWC determines, based on recommendations from the qualified archaeologist and culturally affiliated California Native American Tribes, if the resource is Native American, that the resource may qualify as a historical resource or unique archaeological resource (as defined in *CEQA Guidelines* § 15064.5), or a tribal cultural resource (as defined in PRC § 21074), the resource shall be avoided if feasible. Avoidance means that no activities associated with the Proposed Project that may impact cultural resources or tribal cultural resources shall occur within the boundaries of the resource or any defined buffer zones. SMWC shall determine whether avoidance is feasible considering factors such as the nature of the find, Proposed Project design, costs, and other considerations.

If avoidance is not feasible, SMWC shall consult with its qualified archaeologist, culturally and geographically affiliated California Native American Tribes, if the resource is Native American, and other appropriate interested parties to determine treatment measures to minimize or mitigate any potential impacts on the resource pursuant to PRC § 21083.2 and *CEQA Guidelines* § 15126.4.

Any treatment measures implemented shall be documented in a professional-level technical report (e.g., Archaeological Testing Results Report, Archaeological Data Recovery Report, Ethnographic Report), authored by a qualified archaeologist, to be filed with the CHRIS. Proposed Project construction work at the location of the find may commence upon completion of the approved treatment and authorization by SMWC. Work may proceed in other parts of the Proposed Project area while the mitigation is being carried out.

If, during Proposed Project implementation, SMWC determines that portions of the Proposed Project area may be sensitive for archaeological resources or tribal cultural resources, SMWC may authorize construction monitoring of these locations by an archaeologist and Tribal Monitor. Any monitoring by a Tribal Monitor shall be done under

agreements between SMWC and culturally and geographically affiliated California Native American Tribes.

c) **Less than Significant with Mitigation Incorporated.** No human remains have been identified in the C-APE through archival research, field surveys, or Native American consultation. Also, the land use designations for the C-APE do not include cemetery uses, and no known human remains exist within the C-APE. Therefore, the Proposed Project is not anticipated to disturb any human remains.

However, because the Proposed Project would involve ground-disturbing activities, it is possible that such actions could unearth, expose, or disturb previously unknown human remains. In the event that human remains were discovered during Proposed Project construction activities, impacts on the human remains resulting from the Proposed Project would be significant if those remains were disturbed or damaged. Such potentially significant impacts would be reduced to a less-than-significant level by implementing **Mitigation Measure CUL-2**.

Mitigation Measures

Mitigation Measure CUL-2: Implement Unanticipated-Discovery Protocol for Human Remains.

If human remains are uncovered during construction, all work shall immediately halt within 100 feet of the find and the Sutter County Coroner shall be contacted to evaluate the remains and follow the procedures and protocols set forth in *CEQA Guidelines* § 15064.5(e)(1). If the County Coroner determines that the remains are Native American, the Coroner shall contact the NAHC, in accordance with California Health and Safety Code § 7050.5(c) and PRC § 5097.98. As required by PRC § 5097.98, SMWC shall ensure that further development activity avoids damage or disturbance in the immediate vicinity of the Native American human remains, according to generally accepted cultural or archaeological standards or practices, until SMWC has conferred with the most likely descendants regarding their recommendations, if applicable, taking into account the possibility of multiple human remains.

3.5.3 References

Hoffman, Robin. 2023. *Addendum Archaeological and Architectural Resources Inventory Report for the Bohannon Dam Automation Project, Sutter County, California*. Prepared by Environmental Science Associates, Petaluma, CA. Prepared for the Sutter Mutual Water Company.

SMB (SMB Environmental, Inc.). 2022. *AB52 and Section 106 Cultural Resources Investigation Report: Sutter Mutual Water Company Bohannon Dam Automation Project*. Prepared for the Sutter Mutual Water Company.

3.6 Energy

Would the project:	Significant or Potentially Significant Impact	Less Than Significant Impact with Mitigation Incorporated	Less than Significant	No Impact
a) Result in potentially significant environmental impact due to wasteful, inefficient, or unnecessary consumption of energy resources, during project construction or operation?	☐	☐	☒	☐
b) Conflict with or obstruct a state or local plan for renewable energy or energy efficiency?	☐	☐	☒	☐

3.6.1 Discussion

Consistent with Public Resources Code Section 21100(b)(3), this impact analysis evaluates the potential for construction, operation, and maintenance of the Proposed Project to result in a substantial increase in energy demand and wasteful use of energy. The impact analysis is informed by Appendix G of the State CEQA Guidelines. The potential impacts are analyzed based on an evaluation of whether construction energy use estimates for the Proposed Project would be considered excessive, wasteful, or inefficient.

a) **Less than Significant.** During construction of the Proposed Project, fuel consumption would result from the use of construction tools and equipment, truck trips to haul material, and construction workers' commutes to and from the Proposed Project site. Construction of the Proposed Project is anticipated to last for 3 to 4 months.

Construction activities and corresponding fuel energy consumption would be temporary and localized, as the use of diesel fuel and heavy-duty equipment would not be a long-term condition of the Proposed Project. In addition, the Proposed Project has no unusual characteristics that would require using construction equipment or haul vehicles that would be less energy efficient than equipment and vehicles used at similar construction sites elsewhere in California. In conclusion, construction-related fuel consumption by the Proposed Project would not result in inefficient, wasteful, or unnecessary energy use compared with other construction sites in the region. This impact would be less than significant.

Once construction is complete, operational emissions would be minimal and related to periodic operations and maintenance activities. Because the Proposed Project's operational impacts on energy resources would be driven primarily by limited maintenance activities, energy use would be negligible. This impact would be less than significant.

b) **Less than Significant.** The transportation sector is a major end user of energy in California, accounting for approximately 34 percent of the state's total energy consumption in 2020 (U.S. Energy Information Administration 2023). Energy is also consumed in connection with construction and maintenance of transportation

infrastructure, such as streets, highways, freeways, rail lines, and airport runways. In 2021, California's 30 million vehicles consumed more than 13.8 billion gallons of gasoline and more than 3.1 billion gallons of diesel, making California the second largest consumer of gasoline in the nation (CEC 2022).

Existing standards for transportation energy are promulgated through the regulation of fuel refineries and products, such as the Low Carbon Fuel Standard, which mandated a 10 percent reduction in the non-biogenic carbon content of vehicle fuels by 2020. In 2018, the Board approved amendments to the regulation, which included strengthening and smoothing the carbon intensity benchmarks through 2030 in-line with California's 2030 GHG emission reduction target enacted through SB 32, adding new crediting opportunities to promote zero emission vehicle adoption, alternative jet fuel, carbon capture and sequestration, and advanced technologies to achieve deep decarbonization in the transportation sector. Other regulatory programs with emissions and fuel efficiency standards have been established by the U.S. Environmental Protection Agency and CARB, such as Pavley II/Low Emission Vehicle III from California's Advanced Clean Cars Program and the Heavy-Duty (Tractor-Trailer) Greenhouse Gas Regulation. CARB has set a goal for new vehicles to reach 100% zero-emission and clean plug-in hybrid-electric in California by the 2035 model year (CARB 2023). Further, construction sites need to comply with state requirements designed to minimize idling and associated emissions, which also minimizes fuel use. Specifically, idling of commercial vehicles and off-road equipment is limited to five minutes in accordance with the Commercial Motor Vehicle Idling Regulation and the Off-Road Regulation (California Code of Regulations Title 13, Section 2485).

Sutter County has not implemented energy action plans. The Proposed Project is consistent with the state goals and would not impede progress toward achieving these goals.

The Proposed Project would not conflict with or obstruct a state or local plan for renewable energy or energy efficiency or impede progress toward achieving any goals and targets. This impact would be less than significant.

3.6.2 References

California Air Resources Board (CARB). 2023. *Zero-Emission Vehicle Program*. Available: https://ww2.arb.ca.gov/our-work/programs/zero-emission-vehicle-program/about. Accessed March 29, 2023.

California Energy Commission (CEC). 2022. California Gasoline Data, Facts, and Statistics. Available: https://www.energy.ca.gov/data-reports/energy-almanac/transportation-energy/california-gasoline-data-facts-and-statistics. Accessed March 29, 2023.

U.S. Energy Information Administration. 2023. California State Profile and Energy Estimates: Consumption by Sector. Available: https://www.eia.gov/state/?sid=CA#tabs-2. Accessed March 29, 2023.

3.7 Geology and Soils

Would the project:	Significant or Potentially Significant Impact	Less Than Significant Impact with Mitigation Incorporated	Less than Significant	No Impact
a) Expose people or structures to potential substantial adverse effects, including the risk of loss, injury, or death involving:				
i) Rupture of a known earthquake fault, as delineated on the most recent Alquist-Priolo Earthquake Fault Zoning Map issued by the State Geologist for the area or based on other substantial evidence of a known fault? Refer to Division of Mines and Geology Special Publication 42.	☐	☐	☒	☐
ii) Strong seismic ground shaking?	☐	☐	☒	☐
iii) Seismic-related ground failure, including liquefaction?	☐	☐	☒	☐
iv) Landslides?	☐	☐	☒	☐
b) Result in substantial soil erosion or the loss of topsoil?	☐	☒	☐	☐
c) Be located on geologic unit or soil that is unstable, or that would become unstable as a result of the project, and potentially result in on- or off-site landslide, lateral spreading, subsidence, liquefaction, or collapse?	☐	☐	☒	☐
d) Be located on expansive soil, as defined in Table 18-1-B of the Uniform Building Code (1994), creating substantial direct or indirect risks to life or property?	☐	☐	☒	☐
e) Have soils incapable of adequately supporting the use of septic tanks or alternative wastewater disposal systems where sewers are not available for the disposal of wastewater?	☐	☐	☐	☒
f) Directly or indirectly destroy a unique paleontological resource or site or unique geologic feature?	☐	☒	☐	☐

3.7.1 Environmental Setting

The Proposed Project site is located within the Great Valley Geomorphic province. The province includes the area known as the Great Central Valley of California, which extends approximately 400 miles north to south and 50 miles east to west. The Great Central Valley is encompassed by the Coast Ranges (metamorphic), the Klamath Ranges (metamorphic), the Cascade Range (volcanic), and the Sierra Nevada (granitic and metamorphic). The majority of rocks and deposits found within the province are sedimentary. According to the U.S. Geological Survey, sedimentary rocks are formed from preexisting rocks or pieces of once-living organisms. They

form from deposits that accumulate on the earth's surface. Sedimentary rocks often have distinctive layering or bedding.

Sutter County does not contain any active faults (Holocene age within the last 11,000 years; the USGS uses 15,000 years). Two areas within the County have been identified as having faults: a series of small Quaternary faults (Quaternary age or within the last 1.6 million years) located near the Sutter Buttes, and the Pre-Quaternary fault located in the southeastern corner of the County (Sutter County 2010). No portion of Sutter County is within a delineated Alquist-Priolo Earthquake Fault Zone (Sutter County 2010).

Unlike surface rupture, ground shaking is not confined to the trace of a fault, but rather propagates into the surrounding areas during an earthquake. The intensity of ground shaking typically diminishes with distance from the fault, but ground shaking may be locally amplified and/or prolonged by some types of substrate materials.

The Proposed Project site is located in an area distant from known, active faults and experiences lower levels of shaking less frequently. In most earthquakes, only weaker masonry buildings would be damaged. However, very infrequent earthquakes could cause strong shaking (DOC 2016). Based on historic data and known active or potentially active faults in the region, Sutter County has the potential to experience low to moderate ground shaking. Although the County has felt ground shaking from earthquakes with epicenters located elsewhere, no major earthquakes or earthquake related damage has been recorded within the County (Sutter County 2008).

The soil on the Proposed Project site is composed of Clear Lake clay, 0 to 1 percent slopes (NRCS 2023). Clear Lake clay soils are poorly drained, very low runoff, and low to moderate erosion potential.

Slope failures, commonly referred to as landslides, include many phenomena that involve the downslope displacement and movement of material, triggered by either static forces (i.e., gravity) or dynamic forces (i.e., earthquakes). Exposed rock slopes undergo rockfalls, rockslides, or rock avalanches, while soil slopes experience shallow soil slides, rapid debris flows, and deep-seated rotational slides. With the exception of the Sutter Buttes, considered to be in a low landslide hazard zone, Sutter County is located in a landslide-free zone due to the flat topography. (Sutter County 2008).

Liquefaction is the process in which the soil is transformed to a fluid form during intense and prolonged ground shaking. The areas most prone to liquefaction are those that are water saturated and consist of relatively uniform sands that are of loose to medium density. Liquefaction during an earthquake requires strong shaking and is not likely to occur in the County due to the relatively low occurrence of seismic activity in the area; however, the clean sandy layers paralleling the Sacramento River, Feather River, and Bear River have lower soil densities and high overall water table are potentially a higher risk area if major seismic activity were to occur. (Sutter County 2008).

Expansive soils can undergo significant volume change (shrink and swell) as their soil moisture content varies. Soil moisture content can change as a result of many factors, including perched

groundwater, landscape irrigation, rainfall, and utility leakage. The soils on the Proposed Project site have a moderate shrink-swell potential.

Subsidence occurs when a large land area settles as a result of oversaturation or extensive withdrawal of groundwater, oil, or natural gas. Sutter County is not subject to high subsidence, as a number of the previously described factors needed to cause subsidence do not exist. (Sutter County 2010).

3.7.2 Discussion

a) **Less than Significant.** The Proposed Project would not expose people to substantial adverse risks of loss, injury, or death since the Proposed Project does not include construction of habitable structures and is located in a remote location where there are no residents or habitable structures in the vicinity. Landslides would not be anticipated because there are no steep banks or slopes on or near the Proposed Project site. In addition, the Proposed Project would be subject to compliance with the California Building Code and American Society of Civil Engineers standards. The Proposed Project would not expose people or structures to substantial adverse effects, including the risk of loss and injury due to a seismic event. Therefore, this impact is less than significant.

b) **Less than Significant with Mitigation Incorporated.** Soils in the Project area have low to moderate potential for erosion; however, earthmoving, excavation, filling and stockpiling and grading activities during construction of the Proposed Project have the potential to cause erosion. Routine operations and maintenance activities of the Proposed Project would be essentially the same as existing operations, but may require less service trips and are not anticipated to result in substantial soil erosion or loss of topsoil. Therefore, this impact would be potentially significant. Implementation of **Mitigation Measure GEO-1** would reduce the impact to a less-than-significant level.

Mitigation Measures

Mitigation Measure GEO-1: Erosion and Sedimentation Prevention Procedures.

SMWC shall prepare an Erosion Control Plan. The Erosion Control Plan will detail the erosion and sedimentation prevention measures to be implemented. As part of this plan, the Subrecipient will ensure that sediment-control devices are installed and maintained correctly. For example, sediment will be removed from engineering controls once the sediment has reached one-third of the exposed height of the control. The devices will be inspected frequently (i.e., daily or weekly, as necessary) to ensure that they are functioning properly; controls will be immediately repaired or replaced, or additional controls will be installed as necessary. Sediment that is captured in these controls may be disposed of on site in an appropriate, safe, approved area; or off site at an approved disposal site. Areas of soil disturbance, including temporarily disturbed areas, will be seeded with a regionally appropriate erosion control seed mixture. On soil slopes with an angle greater than 30 percent, erosion control blankets will be installed or a suitable and approved binding agent will be applied. Runoff will be diverted away from steep or denuded slopes. Where habitat for federally listed species is identified in, or adjacent to, the project footprint,

all disturbed soils at the site will undergo erosion control treatment before the rainy season starts and after construction is terminated. Treatment may include temporary seeding and sterile straw mulch.

c) **Less than Significant.** As discussed previously, liquefaction is not likely to occur in the County due to the relatively low occurrence of seismic activity in the area. However, the soil at the Proposed Project site has the potential for liquefaction. Lateral spreading, often associated with liquefaction, is less likely because there are no steep banks or hard ground bordering the Proposed Project area. The Proposed Project would be subject to compliance with the California Building Code and American Society of Civil Engineers standards. In addition, no new buildings or habitable structures would be constructed as part of the Proposed Project. Therefore, this impact is less than significant.

d) **Less than Significant.** The soils on the Proposed Project site have a moderate shrink-swell potential. The Proposed Project is located in a remote location where there are no residents or habitable structures in the vicinity. No new buildings or habitable structures would be constructed as part of the proposed Project. Therefore, this impact is less than significant.

e) **No Impact.** The Proposed Project would not include the use of septic tanks or alternative wastewater disposal systems. Therefore, no impact would occur.

f) **Less than Significant with Mitigation Incorporated.** Paleontological resources are the fossilized evidence of past life found in the geologic record. Despite the tremendous volume of sedimentary rock deposits preserved worldwide, and the enormous number of organisms that have lived through time, the preservation of plant or animal remains as fossils is extremely rare. Because of the infrequency of fossil preservation, fossils—particularly vertebrate fossils—are considered nonrenewable resources. Because of their rarity and the scientific information they can provide, fossils are highly significant records of ancient life.

Rock formations that are considered paleontologically sensitive are those rock units that have yielded significant vertebrate or invertebrate fossil remains (SVP 2010). Stanislaus County has high potential for containing paleontological resources (Stanislaus County 2016a). If any previously unrecorded paleontological resources were encountered during project construction and any were found to be a unique paleontological resource, any impact of the proposed Project on the resource could be potentially significant. Any such potentially significant impacts would be reduced to a less-than-significant level by implementing **Mitigation Measure GEO-2**.

Mitigation Measures

Mitigation Measure GEO-2: Implement Appropriate Treatment Measures in Case of a Potential Fossil Discovery.

If construction or other Project personnel discover any potential fossils during construction, regardless of the depth of work or location, work at the discovery

location shall cease within a 50-foot radius of the discovery until a qualified paleontologist has assessed the discovery and recommended the appropriate treatment. If the find is deemed significant, it shall be salvaged following the standards of the SVP (SVP 2010) and curated with a certified repository.

3.7.3 References

California Department of Conservation (DOC). 2016. Earthquake Shaking Potential for California.

Natural Resources Conservation Service (NRCS). 2023. Web Soil Survey. Available: https://websoilsurvey.nrcs.usda.gov/app/WebSoilSurvey.aspx. Accessed March 28, 2023.

Society of Vertebrate Paleontology (SVP). 2010. *Assessment and Mitigation of Adverse Impacts to Nonrenewable Paleontologic Resources: Standard Guidelines*. Society of Vertebrate Paleontology News Bulletin, 2010.

Sutter County. 2008. *Sutter County General Plan Update Technical Background Report*. February 2008.

Sutter County. 2010. *Sutter County General Plan Draft Environmental Impact Report*. September 2010.

3.8 Greenhouse Gas Emissions

Would the project:	Significant or Potentially Significant Impact	Less Than Significant Impact with Mitigation Incorporated	Less than Significant	No Impact
a) Generate greenhouse gas emissions, either directly or indirectly, that may have a significant impact on the environment?	☐	☒	☐	☐
b) Conflict with an applicable plan, policy or regulation adopted for the purpose of reducing the emissions of greenhouse gases?	☐	☐	☐	☒

3.8.1 Discussion

a) **Less than Significant with Mitigation.** During construction of the Proposed Project, the various diesel-powered vehicles and equipment in use on-site could generate greenhouse gas emissions. Specifically, while FRAQMD does not have an adopted threshold of significance for construction-related GHG emissions, the Proposed Project could exceed the daily threshold for NOx that would help generate greenhouse gas emissions that could be considered significant. However, with implementation of Mitigation Measure AIR-1 any potential to generate greenhouse gas emissions would be reduced to less-than-significant levels. No additional mitigation measures are required.

b) **No Impact.** The Proposed Project would not conflict with an application plan, policy or regulation adopted for the purpose of reducing the emissions of greenhouse gases. No mitigation is necessary or required.

3.8.2 References

3.9 Hazards and Hazardous Materials

Would the project:	Significant or Potentially Significant Impact	Less Than Significant Impact with Mitigation Incorporated	Less than Significant	No Impact
a) Create a significant hazard to the public or the environment through the routine transport, use, or disposal of hazardous materials?	☐	☐	☒	☐
b) Create a significant hazard to the public or the environment through reasonably foreseeable upset and accident conditions involving the release of hazardous materials into the environment?	☐	☐	☒	☐
c) Emit hazardous emissions or handle hazardous or acutely hazardous materials, substances, or waste within one-quarter mile of an existing or proposed school?	☐	☐	☐	☒
d) Be located on a site which is included on a list of hazardous materials sites compiled pursuant to Government Code Section 65962.5 and, as a result, would it create a significant hazard to the public or the environment?	☐	☐	☐	☒
e) For a project located within an airport land use plan or, where such a plan has not been adopted, within two miles of a public airport or public use airport, would the project result in a safety hazard or excessive noise for people residing or working in the project area?	☐	☐	☒	☐
f) For a Project within the vicinity of a private airstrip, would the Project result in a safety hazard for people residing or working in the Project area?	☐	☐	☒	☐
g) Impair implementation of or physically interfere with an adopted emergency response plan or emergency evacuation plan?	☐	☐	☐	☒
h) Expose people or structures to a significant risk of loss, injury or death involving wildland fires, including where wildlands are adjacent to urbanized areas or where residences are intermixed with wildlands	☐	☐	☒	☐

3.9.1 Environmental Setting

The Proposed Project would be constructed and operated entirely within the Main Canal which is zoned agricultural. No schools are located within 1 mile of the Proposed Project site. The Proposed Project site is in an area with dispersed rural residences.

Hazardous Materials

Materials and waste may be considered hazardous if they are poisonous (toxic), can be ignited by open flame (ignitable), corrode other materials (corrosive), or react violently, explode, or generate vapors when mixed with water (reactive). The term *hazardous material* is defined in law as any material that, because of its quantity, concentration, or physical or chemical characteristics, poses a significant present or potential hazard to human health and safety or to the environment (California Health and Safety Code, Section 25501[o]). In some cases, past uses can result in spills or leaks of hazardous materials to the ground, resulting in soil and groundwater contamination. The use, storage, transportation, and disposal of hazardous materials are subject to numerous federal, state, and local laws and regulations.

Information about hazardous materials sites on the Proposed Project site was collected by reviewing the California Environmental Protection Agency's Cortese List data resources and the State Water Resources Control Board's (SWRCB) GeoTracker list. The Cortese List data resources provide information regarding facilities or sites identified as meeting the requirements for inclusion on the Cortese List. The Cortese List is updated at least annually, in compliance with California regulations (California Government Code Section 65964.6[a][4]), and includes federal Superfund sites, state response sites, non-operating hazardous waste sites, voluntary cleanup sites, and school cleanup sites. The GeoTracker list shows underground storage tanks. Based on a review of the Cortese List conducted in March 2023, no listed sites are located within 1 mile of the proposed Project site (DTSC 2023).

Fire Suppression

The proposed Project site is located within a Local Responsibility Area where Sutter County is responsible for fire suppression. The site is also in an Unzoned Fire Hazard Severity Zone (CAL FIRE 2007).

3.9.2 Discussion

a,b) **Less than Significant.** The Proposed Project's construction equipment and materials would include fuels, oils and lubricants, and concrete, which are all commonly used in construction. The routine use or an accidental spill of hazardous materials used in construction could result in inadvertent releases, which could adversely affect construction workers, the public, and the environment.

Proposed Project construction activities would be required to comply with numerous regulations to ensure that construction-related fuels and other hazardous materials are transported, used, stored, and disposed of safely to protect worker safety, and to reduce the potential for such fuels or other hazardous materials to be released into the environment, including stormwater and downstream receiving water bodies.

The transportation of hazardous materials would be regulated by the U.S. Department of Transportation, the California Department of Transportation, and the California Highway Patrol. Together, federal and state agencies determine driver-training requirements, load-

labeling procedures, and container specifications designed to minimize the risk of an accidental release.

Operations and maintenance procedures would be essentially the same as existing operations, but may require less service trips as the new structure would be more efficient and automated. The Proposed Project would be required to comply with the numerous laws and regulations discussed above that govern transportation, use, handling, and disposal of hazardous materials, which would limit the potential for creation of hazardous conditions due to the use or accidental release of hazardous materials. As a result, this impact would be less than significant.

c) **No Impact.** The Proposed Project is not located within a quarter-mile of an existing or proposed school and therefore would not emit hazardous emissions or handle hazardous or acutely hazardous material, substances, or waste within a quarter-mile of an existing or proposed school. Therefore, no impact on schools would occur.

d) **No Impact.** As discussed previously, based on a review of the Cortese List conducted in March 2023, the Proposed Project is not located on a site that is known to be included on a list of hazardous materials sites compiled pursuant to Government Code Section 65962.5. Therefore, the Proposed Project would not create a significant hazard to the public or the environment. Therefore, no impact related to being located on a listed hazardous materials site would occur.

e,f) **Less than Significant.** A private airport is located adjacent to the Proposed Project site. However, the Proposed Project does not include any structures of significant height or include any activities that would impair operations of the airport or any other airport use. Construction of the Proposed Project would be temporary and would last approximately 3 to 4 months. In addition, the Proposed Project would result in a similar structure to the existing Bohannon Dam. Operation and maintenance would be essentially the same as existing operations, but may require less service trips as the new structure would be more efficient and automated. The Proposed Project would not adversely affect an airport or airport operations, including, noise, take-offs, landings, flight patterns, safety, light, navigation, or communications between aircraft and the control tower within the Project area. Therefore, this impact would be less than significant.

g) **No Impact.** The Proposed Project would be constructed and operated entirely within SMWC's existing Bohannon Dam footprint within the Main Canal and the equipment would be staged on the top of bank on the east side of the canal. As such, the Proposed Project would not impair implementation of or physically interfere with an adopted emergency response plan or emergency evacuation plan. Therefore, no impact on emergency response and evacuation plans would occur.

h) **Less than Significant.** The Proposed Project would be constructed and operated entirely within SMWC's existing Bohannon Dam footprint within the Main Canal and the equipment would be staged on the top of bank on the east side of the canal. The Proposed Project site is located in a Local Responsibility Area and an Unzoned Fire Hazard Severity

Zone (CAL FIRE 2007). The area surrounding the Proposed Project site is used for irrigated agriculture, reducing fire risk. The Proposed Project would not require the installation or maintenance of infrastructure that may exacerbate fire risks or that may result in temporary or ongoing impacts to the environment and is not located near urbanized areas or residences. Therefore, the impact related to wildland fires would be less than significant.

3.9.3 References

California Department of Forestry and Fire Protection (CAL FIRE). 2007. Fire Hazard Severity Zones in SRA, Sutter County. October 2007.

California Department of Toxic Substances Control (DTSC). 2023. DTSC's Hazardous Waste and Substances Site List—Site Cleanup (Cortese List). Available: https://calepa.ca.gov/sitecleanup/corteselist/. Accessed March 23, 2023.

3.10 Hydrology and Water Quality

Would the project:	Significant or Potentially Significant Impact	Less Than Significant Impact with Mitigation Incorporated	Less than Significant	No Impact
a) Violate any water quality standards or waste discharge requirements or otherwise substantially degrade surface or ground water quality?	☐	☒	☐	☐
b) Substantially decrease groundwater supplies or interfere substantially with groundwater recharge such that the project may impede sustainable groundwater management of the basin?	☐	☐	☒	☐
c) Substantially alter the existing drainage pattern of the site or area, including through the alteration of the course of a stream or river or through the addition of impervious surfaces, in a manner which would:				
i) result in substantial erosion or siltation on- or off-site;	☐	☐	☒	☐
ii) substantially increase the rate or amount of surface runoff in a manner which would result in flooding on- or offsite;	☐	☐	☒	☐
iii) Create or contribute runoff water which would exceed the capacity of existing or planned stormwater drainage systems or provide substantial additional sources of polluted runoff; or	☐	☐	☒	☐
iv) impede or redirect flood flows?	☐	☐	☒	☐
d) In flood hazard, tsunami, or seiche zones, risk release of pollutants due to project inundation?	☐	☐	☐	☒
e) Conflict with or obstruct implementation of a water quality control plan or sustainable groundwater management plan?	☐	☒	☐	☐

3.10.1 Environmental Setting

Surface Water Hydrology

Sutter County lies entirely within the Sacramento River watershed, which includes the Feather and Bear Rivers. Other notable regional hydrology features are Coon and Pleasant Grove Creeks and Markham and Auburn Ravines in the southeastern portion of the County and the Snake River on the east side of the Sutter Buttes.

Similar to Mediterranean climates, Sutter County's climate is generally characterized by hot, dry summers, with relatively moderate, wet winters. Precipitation rates are greatest during late fall to early spring followed by the dry season from later spring to early fall. Because there are no

significant water storage reservoirs in Sutter County, rainfall percolates into the soil, runs off into local streams and rivers, and evaporates. By late summer, most small creeks and streams are generally dry and the rivers are at their lowest levels. Some small creeks have water during the dry season due to agricultural irrigation and drainage and/or from drainage in upstream urban areas.

Sacramento River

The Sacramento River is the largest river (in terms of volume of water and length) in the State and drains approximately 27,210 square miles of watershed, including Sutter County. It forms a major portion of the western County boundary as it enters from Colusa County and extends south down to the Sacramento County boundary. The river is not used for municipal or domestic water supplies in the county.

Feather River

The Feather River forms a major portion of Sutter County's eastern boundary. The City of Yuba City obtains a large portion of its annual water supplies for municipal and domestic use from the river.

Bear River

The Bear River enters Sutter County from Placer County near the City of Wheatland in Yuba County. It generally flows in a south-southwest direction until it meets the Feather River about one mile upstream from the rural community of Nicolaus.

Water Quality

Sacramento River

The Sacramento River supports various beneficial uses, including recreational, agricultural, and wildlife. The river is not used for municipal or domestic water supplies in the county. Water quality in the Sacramento River is generally of good quality and is treated and used for municipal and industrial water supplies up and downstream of Sutter County. The SWRCB publishes updates to the Water Quality Control Plan (Basin Plan) for the Sacramento River and San Joaquin River Basins to improve water quality and maintain beneficial uses in the Sacramento and San Joaquin Rivers. The Basin Plan describes water quality concerns for the Sacramento River that includes agriculture, forestry, urban land uses, and stormwater runoff. Further, the Sacramento River is listed in the SWRCB's Total Maximum Daily Load (TMDL) program for DDT (Dichlorodiphenyltrichloroethane), dieldrin, mercury, dissolved oxygen, PCBs (Polychlorinated biphenyls), and unknown toxicity (State Water Board 2022).

Feather River

Like the Sacramento River, the Feather River provides beneficial uses, including recreational, agricultural, and wildlife. Water quality in the Feather River is generally good, but is listed in the SWRCB's TMDL program for aluminum, chlorpyrifos, group A pesticides, mercury, dissolved oxygen, PCBs (Polychlorinated biphenyls), and unknown toxicity (State Water Board 2022).

Bear River

Although smaller than the Sacramento and Feather Rivers, the Bear River also provides beneficial uses that include recreational, agricultural, and wildlife. Water quality in the Bear River is generally good, but is listed in the SWRCB's TMDL program for aluminum, chlorpyrifos, iron, and mercury (State Water Board 2022).

Groundwater Hydrology and Water Quality

The Proposed Project site is located within the Sacramento Valley Groundwater Basin and the Sutter Subbasin (DWR 2006).

The California Department of Water Resources (DWR) described the characteristics of the Sutter Subbasin in *California's Groundwater,* Bulletin 118: Sacramento Valley Groundwater Basin, Sutter Subbasin (DWR 2006):

> *The Sutter Subbasin (Basin Number 5-21.62) has a total surface area of 234,400 acres (366 square miles). The Sutter Subbasin lies in the eastern central portion of the Sacramento Valley Groundwater Basin. It is bounded on the north by the confluence of Butte Creek and the Sacramento River and Sutter Buttes, on the west by the Sacramento River, on the south by the confluence of the Sacramento River and the Sutter Bypass, and on the east by the Feather River. The subbasin lies entirely within the Sacramento River watershed with the most notable hydrological features being the Sacramento and Feather Rivers. Other notable features are Tisdale Bypass and Sutter Bypass. The manmade Sutter Bypass acts as a flood control overflow for the Sacramento River.*
>
> *The geologic formations of the Sutter Subbasin include pre-Cretaceous metamorphic and igneous rocks of the Sierra Nevada block, which extends beneath the valley fill overlain principally by Tertiary sedimentary formations derived from these and other rocks which are exposed in the Sierra Nevada to the east. The sedimentary rocks are of both marine and continental origin and are frequently interbedded with tuff-breccias. Volcanic rocks are also represented in the area in and around Sutter Buttes, which are erosional remnants of an extinct Pliocene volcano. Only the sedimentary rocks can be considered as being water bearing to any appreciable degree.*
>
> *DWR maintains data for 38 water quality wells in the Sutter Subbasin. Data collected from these wells indicate a TDS range of 133 to 1,660 mg/l. The primary groundwater chemistry in the subbasin is calcium, magnesium, sodium, chloride, sulfate and bicarbonate, which may occur in any combination. Groundwater containing calcium magnesium bicarbonate or magnesium calcium bicarbonate can be found in the northwest portion of the subbasin. Recent groundwater quality data collected indicates some wells drilled to various depths contain chemical elements and compounds in amounts that exceed drinking water quality safety and aesthetic standards.*

Groundwater levels have generally remained constant in the Sutter Subbasin. Measured groundwater depth at the Proposed Project site is approximately 20 feet below the existing ground surface (DWR 2023).

Flood Control and Flood Management Facilities

The County is susceptible to four types of floods: levee failure/overtopping, localized flooding, riverine (slow rise) flooding, and dam failure inundation.

Major storm events can produce high flows throughout the Sacramento, Feather, and Bear river systems. The primary method of flood protection provided in the County is via a system of levees or earthen embankments along the Sacramento and Feather rivers that contain high river flows within these constructed channels. When the capacity of the river levee system is exceeded, the bypass system accommodates the additional flows to take the load off the primary levee system during critical peak flow periods.

There are currently approximately 280 miles of levees protecting Sutter County lands from flooding. These levees provide the County with protection against flooding from the Sacramento River, Feather River, Sutter Bypass, Tisdale Bypass, Wadsworth Canal, Bear River, Yankee Slough, Natomas Cross Canal, East Side Canal, and the Pleasant Grove Canal.

The Proposed Project is within an area designated as Zone X. Moderate flood hazard areas, labeled Zone B or Zone X (shaded) are the areas between the limits of the base flood and the 0.2-percent-annual-chance (or 500-year) flood.

3.10.2 Discussion

a) **Less than Significant with Mitigation Incorporated.** Construction of the Proposed Project would involve the use of heavy equipment during activities such as earthmoving, excavation, filling and stockpiling and grading. Even though soil erosion potential on the Proposed Project site is low to moderate, construction activities have the potential to increase rates of erosion, which could increase turbidity in downstream receiving waters. In addition, the use of heavy machinery during construction would have the potential to result in an accidental release of fuels, oils, solvents, hydraulic fluid, and other construction-related fluids to the environment, thereby degrading water quality. With the implementation of **Mitigation Measure GEO-1**, above, any potential impacts would be reduced to less than significant levels. Once constructed, the Proposed Project would not violate any water quality or wastewater discharge requirements.

b) **Less than Significant.** Construction of the Proposed Project would involve dewatering throughout construction activities. Dewatering would require excavating a sump area that is 2 to 4 feet lower than the bottom of the Main Canal. All surface water and/or shallow groundwater percolating into the construction area/zone would be pumped out and be placed into the Main Canal downstream of the construction site and/or used as dust suppressant if and as required. Given the shallow depth of dewatering and the relatively short period of construction, the Proposed Project would not substantially decrease groundwater supplies or interfere with groundwater recharge such that there would be a net deficit in aquifer volume or a lowering of the local groundwater table level. Therefore, this impact would be less than significant.

ci-civ) **Less than Significant.** The Proposed Project would improve irrigation and flood control by installing check structures, a trash rack and a central SCADA system that precisely controls the flows in the Main Canal past the new Bohannon Dam. The canal would remain concrete-lined and would not result in erosion and siltation. The Proposed Project would not increase the amount of water in the canal system, but would improve irrigation and flood control. Therefore, this impact would be less than significant.

d) **No Impact.** The Proposed Project site is not located within a designated FEMA flood hazard zone or 100-year flood zone. The Proposed Project site is not located near the ocean, and as such would not be susceptible to inundation from a tsunami. The Proposed Project site is not located near a large, enclosed body of water and as such would not be susceptible to inundation from a seiche. Therefore, no impact from project inundation would occur.

e) **Less than Significant with Mitigation Incorporated.** As described previously under checklist items a) and b), the Proposed Project construction activities have the potential to increase rates of erosion, which could increase turbidity in downstream receiving waters. With the implementation of **Mitigation Measure GEO-1**, above, any potential impacts would be reduced to less than significant levels. Given the shallow depth of dewatering and the relatively short period of construction, the Proposed Project would not substantially decrease groundwater supplies or interfere with groundwater recharge and would therefore not conflict with a sustainable groundwater management plan.

3.10.3 References

Department of Water Resources (DWR). 2006. California's Groundwater Bulletin 118, Sacramento Valley Groundwater Basin, Sutter Subbasin. January 2006.

———. 2023. Sustainable Groundwater Management Act (SGMA) Data Viewer. Available: https://sgma.water.ca.gov/webgis/?appid=SGMADataViewer#gwlevels. Accessed March 29, 2023.

State Water Board. 2022. Web Map Application for the 2020-2022 California Integrated Report. July 2022.

3.11 Noise

Would the project result in:	Significant or Potentially Significant Impact	Less Than Significant Impact with Mitigation Incorporated	Less than Significant	No Impact
a) Generation of a substantial temporary or permanent increase in ambient noise levels in the vicinity of the project in excess of standards established in the local general plan or noise ordinance, or applicable standards of other agencies?	☐	☐	☒	☐
b) Generation of excessive groundborne vibration or groundborne noise levels?	☐	☐	☒	☐
c) For a project located within the vicinity of a private airstrip or an airport land use plan or, where such a plan has not been adopted, within two miles of a public airport or public use airport, would the project expose people residing or working in the project area to excessive noise levels?	☐	☐	☐	☒

3.11.1 Environmental Setting

Sound is mechanical energy transmitted by pressure waves through a medium such as air, while noise is defined as unwanted sound. Sound pressure level is measured in decibels (dB), with 0 dB corresponding roughly to the threshold of human hearing and 120–140 dB corresponding to the threshold of pain.

The typical human ear is not equally sensitive to all frequencies of the audible sound spectrum. As a consequence, during assessments of potential noise impacts, sound is measured using an electronic filter that deemphasizes the frequencies below 1,000 Hertz[2] and above 5,000 Hertz in a manner corresponding to the human ear's decreased sensitivity to low and extremely high frequencies instead of the frequency mid-range. This method of frequency weighting is referred to as *A-weighting* and is expressed in units of A-weighted decibels (dBA).[3]

Effects of Noise on People

The effects of noise on people fall into three categories:

- Subjective effects of annoyance, nuisance, and dissatisfaction.
- Interference with activities such as speech, sleep, and learning.
- Physiological effects such as hearing loss or sudden startling.

Environmental noise typically produces effects in the first two categories. Workers in industrial plants generally experience noise in the last category. There is no completely satisfactory way to measure the subjective effects of noise, or the corresponding reactions of annoyance and

[2] Hertz is a unit of frequency equivalent to one cycle per second.

[3] All noise levels reported herein reflect A-weighted decibels unless otherwise stated.

dissatisfaction. A wide variation exists in individual thresholds of annoyance; different tolerances to noise tend to develop based on individuals' past experiences with noise.

Thus, an important way to predict a human reaction to a new noise environment is the way it compares to the existing environment to which one has adapted: the so-called "ambient noise" level. In general, the more a new noise exceeds the previously existing ambient noise level, the less acceptable the new noise will be judged by those hearing it. With regard to increases in A-weighted noise levels, the following relationships occur:

- In carefully controlled laboratory experiments, a change of 1 dBA cannot be perceived.
- Outside of the laboratory, a 3-dBA change is considered a just-perceivable difference when the change in noise is perceived but does not cause a human response.
- A change in level of at least 5 dBA is required before any noticeable change in human response would be expected.
- A 10-dBA change is subjectively heard as approximately a doubling in loudness, and can cause adverse response.

The human ear perceives sound in a nonlinear fashion; hence, the decibel scale was developed. Because the decibel scale is nonlinear, two noise sources do not combine in a simple additive fashion, rather logarithmically. For example, if two identical noise sources produce noise levels of 50 dBA, the combined sound level would be 53 dBA, not 100 dBA.

Noise Attenuation

Stationary "point" sources of noise, including stationary mobile sources such as idling vehicles, attenuate (lessen) at a rate of 6 to 7.5 dBA per doubling of distance from the source, depending on environmental conditions (e.g., atmospheric conditions and noise barriers, either vegetative or manufactured). Widely distributed noises, such as a large industrial facility spread over many acres or a street with moving vehicles (a "line" source), would typically attenuate at a lower rate, approximately 3 to 4.5 dBA per doubling of distance from the source (also depending on environmental conditions) (Caltrans 2013). Noise from large construction sites would have characteristics of both point and line sources, so attenuation would generally range between 4.5 and 7.5 dBA per doubling of distance.

Vibration

Vibration is an oscillatory motion through a solid medium in which the motion's amplitude can be described in terms of displacement, velocity, or acceleration. Several different methods are used to quantify vibration (FTA 2018):

- *Peak particle velocity* (PPV) is defined as the maximum instantaneous peak of the vibration signal. The PPV is most frequently used to describe vibration impacts to buildings.
- The *root mean square* (RMS) amplitude is most frequently used to describe the effect of vibration on the human body. The RMS amplitude is defined as the average of the squared amplitude of the signal.

- Decibel notation, expressed as *vibration decibels* (VdB), is commonly used to measure RMS. The decibel notation acts to compress the range of numbers required to describe vibration.

Typically, groundborne vibration generated by man-made activities attenuates rapidly with distance from the source of the vibration.

Existing Ambient Noise Environment

The noise environment in the area surrounding the proposed Project site is characterized by rural roadways, rural agricultural noise, and scattered residences. It includes low-volume traffic noise from tractors, large trucks, and other farm equipment, and both on- and off-road passenger vehicles. The ambient noise environment in the vicinity of the proposed Project site was estimated using a relationship between population density and ambient noise that was determined during a research program by the U.S. Environmental Protection Agency. The agency estimated that residents of rural or other non-urban areas are exposed to outdoor ambient noise levels ranging from 35 to 50 dBA L_{dn}[4] (EPA 1974). Because the area surrounding the proposed Project site can be categorized as a rural or other non-urban area, it is assumed that ambient noise levels would range between 35 and 50 dBA L_{dn}.

Sensitive Receptors

Human response to noise varies considerably from one individual to another. Effects of noise at various levels can include interference with sleep, concentration, and communication; physiological and psychological stress; and hearing loss. Given these effects, some land uses are considered more sensitive to ambient noise levels than others. In general, residences, schools, hotels, hospitals, and nursing homes are considered to be the most sensitive to noise. Commercial and industrial uses are considered the least noise-sensitive. Sensitive receptor land uses in the vicinity of the proposed Project site include residences; the closest sensitive receptor is a residence located approximately 870 feet north of the site.

3.11.2 Discussion

a) **Less than Significant.** For the assessment of temporary construction noise impacts, construction activities that would occur outside of Sutter County's construction-exempt hours would result in a significant impact. Article 21.5 of the Sutter County Code of Ordinances limits construction noise to 70 dBA at any receiving property line between 7 a.m. and 10 p.m. and 63 dBA between 10p.m. and 7a.m.

Exceptions to the noise standards include construction for noise sources with construction, repair, remodeling, demolition, paving or grading of any real property or public works project located within 1,000 feet of noise-sensitive uses (i.e., residential

[4] Also abbreviated "DNL," L_{dn} is a 24-hour day and night A-weighted noise exposure level that accounts for the greater sensitivity of most people to nighttime noise by weighting noise levels at night ("penalizing" nighttime noises). Noise between 10 p.m. and 7 a.m. is weighted (penalized) by adding 10 dB to take into account the greater annoyance of nighttime noises.

uses, daycares, schools, convalescent homes, and medical care facilities), provided such activities take place between:

1. 7:00 a.m. to 6:00 p.m. on weekdays
2. 8:00 a.m. to 5:00 p.m. on Saturdays

Compliance with this code requirement would limit the Proposed Project's construction noise to a level determined to be acceptable by Sutter County. Construction work would typically be done within normal working hours, weekdays between the hours of 6 a.m. and 6 p.m., including work on Saturdays between the hours of 6 a.m. and 6 p.m. Sunday work could also occur between the hours of 6 a.m. and 6 p.m. Construction is prohibited on Sundays and legal holidays unless permission has been applied for and granted by the County.

On-site construction activities would occur in accordance with Sutter County's noise requirements as sensitive receptor is over 0.50 miles away and construction noise would not exceed the threshold at any receiving property line. Any construction work on Sundays would occur after receiving permission from the County. No nighttime hours as defined by the Sutter County Code would occur, and the activities would be limited in duration. This impact would be less than significant.

The Proposed Project site is located in a rural area adjacent to land that is in agricultural use. In the vicinity of the Proposed Project site, low-volume traffic noise from tractors, large trucks, and other farm equipment, and from both on- and off-road passenger vehicles, is normal.

Normal operation of the new Bohannon Dam would consist of periodic visits for operations and maintenance. The Proposed Project would improve irrigation and flood control by installing check structures, a trash rack and a central SCADA system that precisely controls the flows in the Main Canal past the new Bohannon Dam.

In the Project area, existing conditions include ambient noise from rural agricultural operations and scattered residences. Operation of the Proposed Project would not involve noise that would differ from what is currently experienced under existing conditions. Consequently, the Proposed Project is not expected to result in any permanent substantial noise increases relative to existing conditions, nor would noise levels generated by Proposed Project operations and maintenance activities exceed Sutter County's exterior noise standards at the nearest sensitive receptor. Therefore, this impact would be less than significant.

b) **Less than Significant.** For adverse human reaction, the analysis applies the "strongly perceptible" threshold of 0.9 inch per second (in/sec) PPV for transient sources. For risk of architectural damage to historic buildings and structures, the analysis applies a threshold of 0.12 in/sec PPV (Caltrans 2013). A threshold of 0.3 in/sec PPV is used to assess damage risk for all other buildings. There are no historic structures in the vicinity

of the Proposed Project site that could be adversely affected by vibration related to Proposed Project construction.

Construction of the Proposed Project would involve the use of excavators, bulldozers, backhoes, dump trucks, loaders, concrete trucks, fuel trucks, compactors, portable pumps, and portable generators. The use of bulldozers would be expected to generate the highest vibration levels during construction. Vibration levels of bulldozers are typically 0.089 in/sec PPV at 25 feet, which is typical for a wide range of soils. Under typical propagation conditions, vibration levels at 175 feet would be approximately 0.0048 in/sec PPV, which is well below the Federal Transit Administration's threshold of 0.20 in/sec PPV for building damage and 72 VdB for human annoyance. Therefore, this impact would be less than significant.

Operation of the Proposed Project would not include any activities that would generate significant levels of vibration. Therefore, it is not anticipated that Proposed Project operation would expose the nearest sensitive receptor or structure to vibration levels that would result in annoyance. Therefore, this impact would be less than significant.

c) **No Impact.** The Proposed Project is not located within two-miles of any public or private airports. Therefore, the proposed Project would not expose people working in the Project area to excessive noise levels.

3.11.3 References

3.12 Traffic and Transportation

Would the project:	Significant or Potentially Significant Impact	Less Than Significant Impact with Mitigation Incorporated	Less than Significant	No Impact
a) Conflict with a program plan, ordinance or policy addressing the circulation system, including transit, roadway, bicycle and pedestrian facilities?	☐	☐	☒	☐
b) Would the project conflict or be inconsistent with CEQA Guidelines section 15064.3, subdivision (b)?	☐	☐	☒	☐
c) Substantially increase hazards due to a geometric design feature (e.g., sharp curves or dangerous intersections) or incompatible uses (e.g., farm equipment)?	☐	☐	☒	☐
d) Result in inadequate emergency access?	☐	☐	☒	☐

3.12.1 Environmental Setting

Highways

The Proposed Project site is located approximately 1.15 miles north of State Route 113.

County Roadways/Traffic Types

As described previously, the Proposed Project site is located in a rural area. On the east side of the Main Canal is a dirt road. To the west side of the Main Canal is Reclamation Road, a paved road. Reclamation Road is a two-lane rural roadway that extends from Karnak Road in a northwestern direction through the community of Robbins, crossing SR 113 before terminating at Progress Road near Tisdale.

Airports

The nearest airport to the Proposed Project site is the Lauppes Strip Airport, approximately 12.7 miles to the southeast.

3.12.2 Discussion

a) **Less than Significant.** Construction of the Proposed Project would temporarily generate increases in vehicle trips by workers and vehicles on area roadways. There could be a minimal increase in truck trips for construction; however, given the scale of the Proposed Project and the length of the construction period, the capacity of local roads used to access the Proposed Project site would not likely be substantially reduced. Proposed Project operation and maintenance would require periodic visits and the new Bohannon Dam may require less service trips as the new structure would be more efficient and automated. Because the increase in traffic during construction would be minimal, there would be no decreased levels of service. Therefore, this impact would be less than significant.

b) **Less than Significant.** Section 15064.3 of the State CEQA Guidelines establishes specific considerations for evaluating a project's transportation impacts. The State CEQA Guidelines identify vehicle miles traveled (VMT)—the amount and distance of automobile travel attributable to a project—as the most appropriate measure of transportation impacts. Other relevant considerations may include the effects of the project on transit and nonmotorized travel. Construction of the Proposed Project would last approximately 3 to 4 months and would use existing construction crews. Operation of the Proposed Project would not add a substantial amount of VMT in the area of the Proposed Project and the new Bohannon Dam may require less service trips as the new structure would be more efficient and automated. Therefore, this impact would be less than significant.

c) **Less than Significant.** Trucks accessing the Proposed Project site would use local rural roadways. Based on the low number of anticipated construction trips relative to traffic volumes on local roadways and their limited duration, this impact of Proposed Project construction would be less than significant.

Construction of the Proposed Project would not result in new design features on roads in the area. Further, the Proposed Project would not result in in potential traffic safety hazards for vehicles, bicyclists, and pedestrians on public roadways, given the intermittent and temporary nature of construction activities. Therefore, this impact would be less than significant.

b) **Less than Significant.** Temporary construction staging would not block or interfere with emergency response vehicles as the equipment would be staged on the top of bank on the east side of the canal. Increases in traffic volumes on local roadways providing access to the Proposed Project site could cause intermittent and temporary slowdowns in traffic flow during construction, although truck trips associated with Proposed Project operation are not expected to cause access on local roadways to deteriorate and could see less traffic as a result of the Proposed Project. For these reasons, the Proposed Project would not result in inadequate emergency access, and this impact would be less than significant.

3.12.3 References

3.13 Tribal Cultural Resources

Would the project:	Significant or Potentially Significant Impact	Less Than Significant Impact with Mitigation Incorporated	Less than Significant	No Impact
a) Cause a substantial adverse change in the significance of a tribal cultural resource, defined in Public Resources Code Section 21074 as either a site, feature, place, cultural landscape that is geographically defined in terms of the size and scope of the landscape, sacred place, or object with cultural value to a California Native American tribe, and that is:	☐	☒	☐	☐
i) Listed or eligible for listing in the California Register of Historical Resources, or in a local register of historical resources as defined in Public Resources Code Section 5020.1(k)?				
ii) A resource determined by the lead agency, in its discretion and supported by substantial evidence, to be significant pursuant to criteria set forth in subdivision (c) of Public Resources Code Section 5024.1. In applying the criteria set forth in subdivision (c) of Public Resources Code Section 5024.1, the lead agency shall consider the significance of the resource to a California Native American tribe.				

This section examines the potential impacts of the Proposed Project on tribal cultural resources. Cultural resources are described separately section 3.5 of this IS/MND. For purposes of this analysis, the term *tribal cultural resource* is defined as follows:

> *Sites, features, places, cultural landscapes, sacred places, and objects with cultural value to a California Native American Tribe that are listed, or determined to be eligible for listing, in the National Register of Historic Places (National Register), California Register of Historical Resources (California Register), or a local register of historical resources.*

This section relies on the information and findings presented in the Proposed Project's confidential cultural resources technical reports:

- *Addendum Archaeological and Architectural Resources Inventory Report for the Bohannon Dam Automation Project, Sutter County, California* (Hoffman 2023).
- *AB52 and Section 106 Cultural Resources Investigation Report: Sutter Mutual Water Company Bohannon Dam Automation Project* (SMB 2022)

Those reports included overviews of the environmental, ethnographic, and historic background of the Proposed Project Area, with an emphasis on aspects related to human occupation. Please contact SMWC to inquire about reviewing the reports.

3.13.1 Environmental Setting

Records Search

In 2023, ESA conducted a records search of CHRIS, at the NEIC at Chico State University, that included the Proposed Project Area with a 0.25-mile buffer. The NEIC maintains the CHRIS records relevant to the Proposed Project Area and vicinity.

The NEIC has no record of any previously recorded cultural resources mapped within the 0.25-mile search area or any previous cultural resources studies conducted in this area.

Native American Correspondence

In September 2021, SMB contacted the NAHC in request of a search of the NAHC's Sacred Lands File (SLF) and a list of Native American representatives who may have interest in the Proposed Project. The NAHC replied in September 2021, stating that the SLF has no record of any sacred sites in the Proposed Project Area, and also provided a list of six contacts representing six California Native American Tribes (Tribes) who may have interest in the Proposed Project. On September 24, 2021, SMWC sent letter to the six Tribes whose contact information was provided by the NAHC; the letters provided information on the Proposed Project and requested that the Tribes notify SMWC if they have any concerns regarding Proposed Project impacts on cultural resources or tribal cultural resources. To date, SMWC has not received any replies from these letters.

ESA contacted the NAHC in January 2023, in request of an additional search of the NAHC's SLF and an updated list of Native American representatives who may have interest in the Proposed Project. The NAHC replied on February 28, 2023, stating that the SLF has no record of any sacred sites in the C-APE, and also providing a list of nine contacts representing seven Tribes who may have interest in the Proposed Project.

Note, no Tribes have formally requested to be notified of SMWC projects, pursuant to PRC § 21080.3 (Assembly Bill 52); therefore, no Tribal consultation pursuant to PRC § 21080.3 was required for the Proposed Project.

Field Survey

On February 6, 2023, ESA conducted a cultural resources pedestrian surface survey of the Proposed Project Area. Intensive pedestrian methods were used during the survey, consisting of walking the ground surface in parallel transects no greater than 20 meters apart and inspecting the ground surface for evidence of cultural material (archaeological or architectural).

No archaeological resources were identified in the Proposed Project Area during the survey.

Summary of Resources Identified

Through background research, Native American correspondence, and a field survey conducted for the Proposed Project, no tribal cultural resources, or archaeological resources that could be tribal cultural resources were identified in the Proposed Project Area.

3.13.2 Discussion

a.i,a.ii) **Less than Significant with Mitigation Incorporated.** No tribal cultural resources, as defined in PRC § 21074, have been identified in the Proposed Project Area through archival research, field survey, or Native American consultation. Therefore, the Proposed Project is not anticipated to impact any tribal cultural resources.

However, because the Proposed Project would involve ground-disturbing activities that may extend into undisturbed soil, it is possible that such actions could unearth, expose, or disturb subsurface archaeological resources that were not identified on the surface. If previously unrecorded archaeological deposits are present in the Proposed Project Area, and if they are found to qualify as tribal cultural resources, pursuant to PRC § 21074, any impacts of the Proposed Project on the resources would be potentially significant. Such potentially significant impacts would be reduced to a less-than-significant level by implementing **Mitigation Measures CUL-1** and **CUL-2**, as described in Section 3.5.

3.13.3 References

Hoffman, Robin. 2023. *Addendum Archaeological and Architectural Resources Inventory Report for the Bohannon Dam Automation Project, Sutter County, California*. Prepared by Environmental Science Associates, Petaluma, CA. Prepared for the Sutter Mutual Water Company.

SMB (SMB Environmental, Inc.). 2022. *AB52 and Section 106 Cultural Resources Investigation Report: Sutter Mutual Water Company Bohannon Dam Automation Project*. Prepared for the Sutter Mutual Water Company.

3.14 Mandatory Findings of Significance

Pursuant to Section 15065 of the State EIR Guidelines, a project shall be found to have a significant effect on the environment if any of the following are true:

Would the Proposed Project:	Potentially Significant Impact	Less Than Significant Impact with Mitigation Incorporation	Less Than Significant Impact	No Impact
a) Have the potential to substantially degrade the quality of the environment, substantially reduce the habitat of a fish or wildlife species, cause a fish or wildlife population to drop below self-sustaining levels, threaten to eliminate a plant or animal community, substantially reduce the number or restrict the range of a rare or endangered plant or animal or eliminate important examples of the major periods of California history or prehistory?	☐	☒	☐	☐
b) Have impacts that are individually limited, but cumulatively considerable? ("Cumulatively considerable" means that the incremental effects of a project are considerable when viewed in connection with the effects of past projects, the effects of other current projects, and the effects of probable future projects)?	☐	☒	☐	☐
c) Have environmental effects which will cause substantial adverse effects on human beings, either directly or indirectly?	☐	☒	☐	☐

3.14.1 Discussion

a) **Less than Significant Impact with Mitigation Incorporated.** As described in the preceding impact discussions, the impacts related to the potential of the proposed Project to substantially degrade the environment would be less than significant with incorporated mitigation measures. As described in this initial study, the proposed Project has the potential for impacts related to biological resources, cultural resources, geology and soils, and greenhouse gas emissions. However, these impacts would be avoided or reduced to a less-than-significant level with the incorporation of avoidance and mitigation measures discussed in each section.

b) **Less than Significant with Mitigation Incorporated.** This section provides a description of other actions in the area and a discussion of the cumulative impacts of those projects, in combination with the previously identified effects of the Proposed Project. State CEQA Guidelines Section 15355 states that "cumulative impacts refer to two or more individual effects which, when considered together, are considerable or which compound or increase other environmental impacts":

(a) The individual effects may be changes resulting from a single project or a number of separate projects.

(b) The cumulative impact from several projects is the change in the environment which results from the incremental impact of the project when added to other closely related past, present, and reasonably foreseeable probable future projects. Cumulative impacts can result from individually minor but collectively significant projects taking place over a period of time.

The past, present, and reasonably foreseeable future conditions of the Proposed Project site and vicinity were considered for the cumulative analysis.

Aesthetics. Completion of the Proposed Project would result in a similar structure as the existing Bohannon Dam. The new Bohannon Dam would include minimal aesthetic differences by installing check structures, a trash rack and a central SCADA system that precisely controls the flows in the Main Canal past the new Bohannon Dam. The Proposed Project would be consistent with the rural agricultural nature of the existing setting. Therefore, cumulative impacts on aesthetics would be less than significant.

Agriculture and Forestry Resources. The Proposed Project would have no impact on agriculture and forestry resources; therefore, it would not contribute to cumulative agriculture and forestry resources issues.

Air Quality and Greenhouse Gas Emissions. A number of individual projects in the vicinity of the Proposed Project may be under construction simultaneously with the Proposed Project. Depending on construction schedules and actual implementation of projects in and around Sutter County, generation of fugitive dust and pollutant emissions during construction may result in short-term air pollutants, which would contribute to short-term cumulative impacts on air quality. However, each individual project would be subject to FRAQMD rules, regulations, and other mitigation requirements during construction. For cumulative impacts on air quality and greenhouse gas emissions, see Section 5.2, *Air Quality*, and Section 5.7, *Greenhouse Gas Emissions*. The thresholds used consider the contributions of other projects in the air basin. Additionally, greenhouse gas emissions are considered cumulative in nature because it is unlikely that a single project would contribute significantly to climate change.

Biological Resources, Cultural Resources, Tribal Cultural Resources, Geology and Soils, and Hazards and Hazardous Materials. The Proposed Project's impacts for these environmental issues would be limited to the Proposed Project site, and any significant impacts would be reduced to a less-than-significant level by implementing proposed mitigation measures. Thus, the Proposed Project would not contribute to cumulative impacts for these topics.

Energy. Construction of the Proposed Project would result in fuel consumption from the use of construction tools and equipment, truck trips to haul materials, and vehicle trips by construction workers commuting to and from the Proposed Project site. This impact would be temporary and localized. Operational energy impacts are not anticipated.

Construction-related fuel consumption by the Proposed Project would not result in inefficient, wasteful, or unnecessary energy use compared with other construction sites in the region.

Hydrology and Water Quality. Implementing the Proposed Project would result in the use of heavy equipment during activities such as earthmoving, excavation, filling and stockpiling and grading. Even though soil erosion potential on the Proposed Project site is low to moderate, construction activities have the potential to increase rates of erosion, which could increase turbidity in downstream receiving waters. In addition, the use of heavy machinery during construction would have the potential to result in an accidental release of fuels, oils, solvents, hydraulic fluid, and other construction-related fluids to the environment, thereby degrading water quality. With the implementation of **Mitigation Measure GEO-1**, above, any potential impacts would be reduced to less than significant levels. Construction contractors would be required to acquire coverage under the National Pollutant Discharge Elimination System General Stormwater Permit, which requires the preparation and implementation of a storm water pollution prevention plan (SWPPP) for construction activities for projects with over 1 acre of ground disturbance. The SWPPP would list the hazardous materials (including petroleum products) proposed for use during construction; describe spill prevention measures, equipment inspections, and equipment and fuel storage; describe protocols for responding immediately to spills; and describe best management practices for controlling site run-on and runoff. Therefore, cumulative impacts would be less than significant.

Land Use and Land Use Planning. The Proposed Project would have no impact on land use and land use planning; therefore, it would not contribute to cumulative land use issues.

Mineral Resources. The Proposed Project would have no impact on mineral resources and thus would not contribute to cumulative impacts.

Noise. The proposed Project's noise impacts are anticipated to be minor and the Proposed Project would comply with the noise standards in the Noise Element of the Sutter County General Plan and Sutter Sutter County Code of Ordinances. Operation of the Proposed Project would not result in a substantial permanent increase in ambient noise levels in the Project vicinity above levels existing without the Proposed Project. Thus, cumulative noise impacts would be less than significant.

Population and Housing. The Proposed Project would have no impact on population and housing resources and thus would not contribute to cumulative impacts.

Public Services. The Proposed Project would have no impact on public services and thus would not contribute to cumulative impacts.

Recreation. The Proposed Project would have no impact on recreation and thus would not contribute to cumulative impacts.

Transportation. For cumulative impacts, see Section 2.12, *Transportation*.

Utilities and Service Systems. The Proposed Project would have no impact on utilities and service systems and thus would not contribute to cumulative impacts.

c) **Less than Significant with Mitigation Incorporated.** The Proposed Project would not result in any substantial adverse effects on human beings, either directly or indirectly, because each potentially significant impact can be reduced to a less-than-significant level with the implementation of the mitigation measures provided in this document. No other substantial adverse effects on human beings are anticipated as a result of the Proposed Project, resulting in a less-than-significant impact with mitigation incorporated.

This page intentionally left blank

Appendix A

100 Percent Design Drawings

SUTTER MUTUAL WATER COMPANY
ROBBINS, CA. EST. FEB. 5, 1919

M·H·M
ENGINEERS & SURVEYORS SINCE 1892
ENGINEERING-SURVEYING
1204 "E" STREET
MARYSVILLE, CALIF. 95901-0053
Ph: (530)742-6485

R&F ENGINEERING

SUTTER COUNTY, CALIFORNIA
SUTTER MUTUAL WATER COMPANY
BOHANNON WATER CONTROL REPLACEMENT PROJECT
VOLUME 2

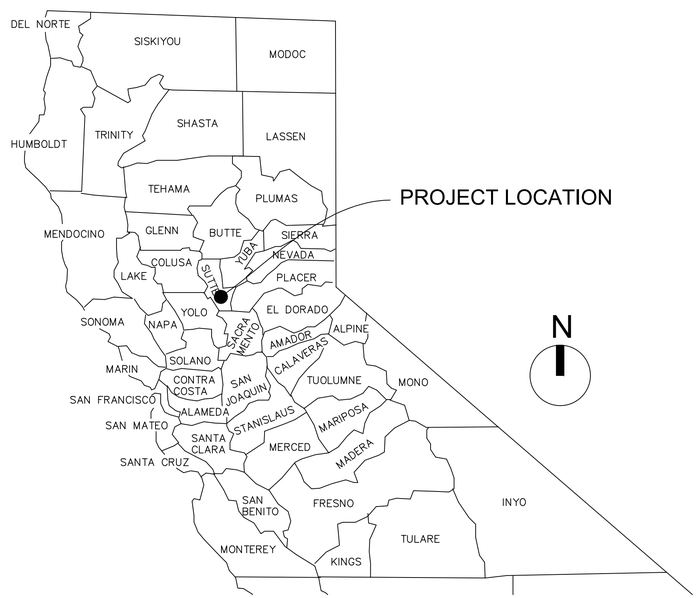

VICINTY MAP
NOT TO SCALE

SHEET INDEX

SHEET NUMBER	DRAWINGS NUMBER	DRAWING TITLE
		GENERAL
1	G-001	COVER SHEET AND DRAWING INDEX
2	G-002	LOCATION MAP
3	G-003	ABBREVIATIONS
4	G-004	CIVIL LEGEND AND NOTES
5	G-005	STRUCTURAL NOTES 1
6	G-006	SURVEY CONTROL AND SITE MAP
7A	PP-01A	LAYOUT - SLIP GATE STRUCTURE
7B	PP-01B	LAYOUT - SLIP GATE STRUCTURE
8	PP-02	PLAN AND PROFILE
9	PP-03	PLAN
10	PP-04	SECTION - 1
11	PP-05	SECTION - 2
12	PP-06	LAYOUT - BOOM AND TRASH RACK
13	SD-01	STANDARD DETAILS - FENCING
14	SD-02	STANDARD DETAILS - TRASH RACK
15	SD-03	STANDARD DETAILS - GUARD RAIL AND OUTFALL

SMWC SIGNATURE BLOCK
PREPARED UNDER THE DIRECTION OF:

/s/ Bill Henle
President, SMWC

APPROVED BY:

/s/ Roger Cornwell.
General Manager, SMWC

APPROVED FUNCTIONAL ADEQUACY

/s/ Sean Minard, P.E.
Consulting Engineer, MHM

/s/ Chris Fritz, P.E.
Consulting Engineer, R&F

811 Know what's below. Call before you dig.

PROJECT NO.: 2022-120
CONTRACT NO.: SM-BD-2022-R
ISSUE DATE: OCTOBER 2022 REVISED APRIL 2023
VOLUME 2

REGISTERED PROFESSIONAL ENGINEER SEAN M. MINARD No. C52599 Exp. 12/31/24 CIVIL STATE OF CALIFORNIA

NO.	DATE	REVISION	BY	APVD
1	9-19-22	NEW SHEETS FOR STRUCTURE RELOCATION (105.0')		
2	4-06-23	REVISED - STRUCTURE RELOCATED DOWNSTREAM		

DSGN DR CHK APVD

M·H·M ENGINEERS & SURVEYORS SINCE 1892
SUTTER MUTUAL WATER COMPANY
BOHANNON WATER CONTROL PROJECT
SUTTER COUNTY, CALIFORNIA, U.S.A.

SUTTER MUTUAL WATER COMPANY
GENERAL
COVER SHEET AND VICINITY MAP

VERIFY SCALE
BAR IS ONE INCH ON ORIGINAL DRAWING.
0 1"

DATE	4/06/23
PROJ	22-120
DWG	G-001
SHEET	1 of 15

REVISED - ISSUED FOR CONSTRUCTION

REUSE OF DOCUMENTS: THIS DOCUMENT, AND THE IDEAS AND DESIGNS INCORPORATED HEREIN, AS AN INSTRUMENT OF PROFESSIONAL SERVICE, IS THE PROPERTY OF MHM INC. AND IS NOT TO BE USED, IN WHOLE OR IN PART, FOR ANY OTHER PROJECT WITHOUT THE WRITTEN AUTHORIZATION OF MHM INC.
©MHM INC 2022. ALL RIGHTS RESERVED.

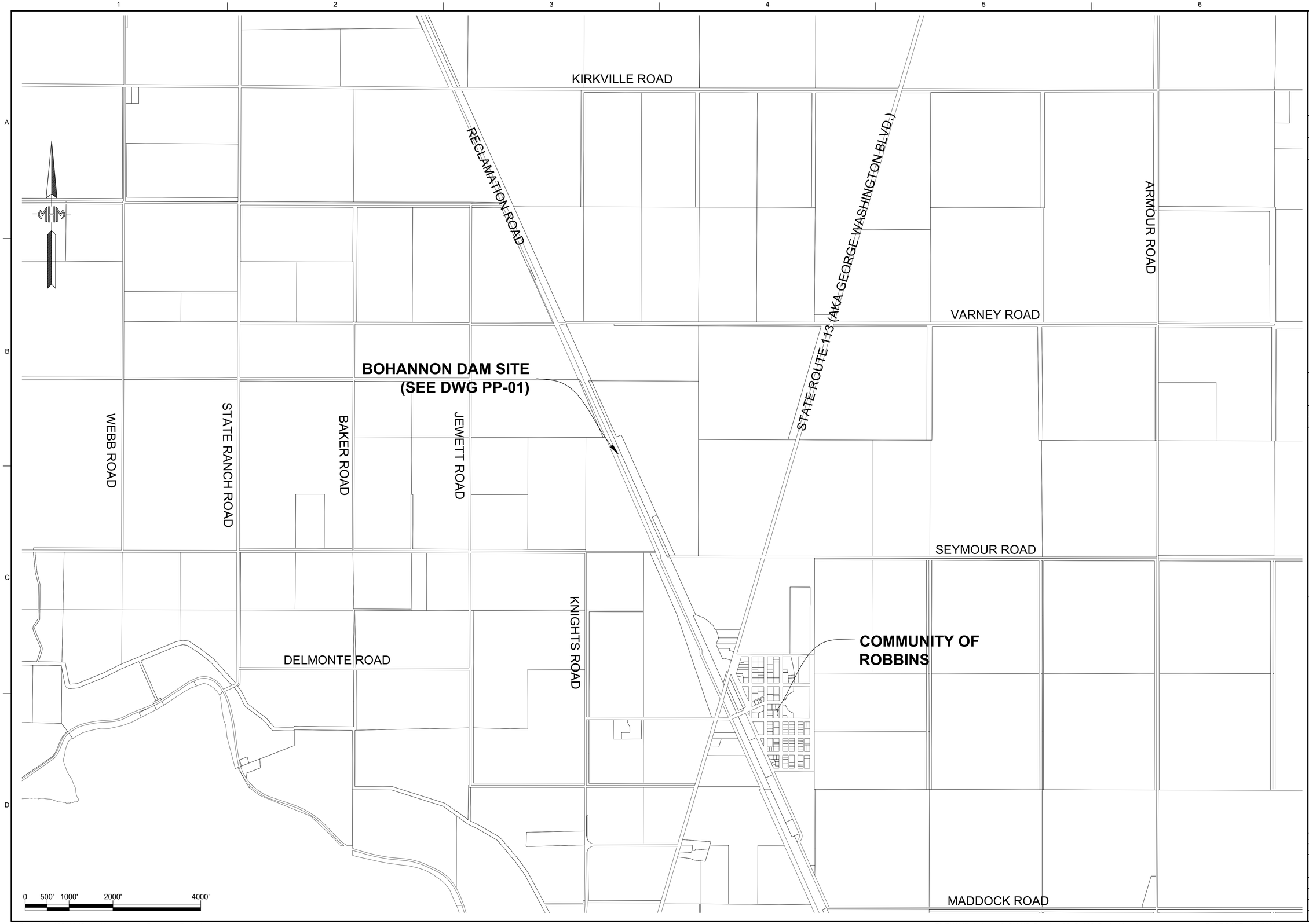

REGISTERED PROFESSIONAL ENGINEER
BRIAN M. MINTO
No. C52595
Exp. 12-31-24
CIVIL
STATE OF CALIFORNIA

NO.	DATE	REVISION	BY	APVD
1	4-06-23	REVISED - STRUCTURE RELOCATED DOWNSTREAM		

DSGN | DR | CHK | APVD

M·H·M
PIONEERS & SURVIVORS SINCE 1892

SUTTER MUTUAL WATER COMPANY
BOHANNON WATER CONTROL PROJECT
SUTTER COUNTY, CALIFORNIA, U.S.A.

SUTTER MUTUAL WATER COMPANY

GENERAL
LOCATION MAP

VERIFY SCALE
BAR IS ONE INCH ON ORIGINAL DRAWING.
0 1"

DATE	4/06/23
PROJ	22-120
DWG	G-002
SHEET	2 of 15

REVISED - ISSUED FOR CONSTRUCTION

REUSE OF DOCUMENTS: THIS DOCUMENT, AND THE IDEAS AND DESIGNS INCORPORATED HEREIN, AS AN INSTRUMENT OF PROFESSIONAL SERVICE, IS THE PROPERTY OF MHM INCORPORATED AND IS NOT TO BE USED, IN WHOLE OR IN PART, FOR ANY OTHER PROJECT WITHOUT THE WRITTEN AUTHORIZATION OF MHM INC.
©MHM INC 2022. ALL RIGHTS RESERVED.

ABBREVIATIONS

@	AT
AB	ANCHOR BOLT, AGGREGATE BASE
ABS	ACRYLONITRILE-BUTADIENE-STYRENE
AC	ASBESTOS CEMENT, ASPHALTIC CONCRETE
ACI	AMERICAN CONCRETE INSTITUTE
ACT	ACCOUSTIC TILE
ADD	ADDITIONAL
ADH	ADHESIVE
ADJ	ADJACENT, ADJUSTABLE
AFF	ABOVE FINISH FLOOR
AFG	ABOVE FINISH GRADE
AHP	AIR: HIGH PRESSURE
AHR	ANCHOR
AISC	AMERICAN INSTITUTE OF STEEL CONSTR
AL	ALUMINUM, ALUM
ALP	AIR LOW PRESSURE PROCESS
ALTN	ALTERNATE AMERICAN NATIONAL STAND.
ANSI	AMERICAN NATIONAL STANDARDS INSTITUTE
APVD	APPROVED
ARCH	ARCHITECTURAL
ARV	AIR RELEASE VALVE
AS	AIR SCOUR
AUTO	AUTOMATIC
AUX	AUXILIARY
AWG	AMERICAN WIRE GAGE
AWT	ADVANCED WASTE TREATMENT
BA	BACKWASH AIR
BC	BEGIN CURVE
BD	BOARD
BF	BLIND FLANGE
BFV	BUTTERFLY VALVE
BLDG	BUILDING
BM	BENCH MARK, BEAM
BO	BLOW OFF
BOD	BOTTOM OF DUCT
BOP	BOTTOM OF PIPE
BOT	BOTTOM
BPC	BELT PRESS CAKE
BRG	BEARING
BSP-40	BLACK STEEL PIPE, SCHEDULE 40
BSP-80	BLACK STEEL PIPE, SCHEDULE 80
BTU	BRITISH THERMAL UNIT
BV	BALL VALVE
BVC	BEGINNING OF VERTICAL CURVE
BWR	BACKWASH RETURN
BWS	BACKWASH SUPPLY
BWW	BACKWASH WASTE
BYP	BYPASS
C	CHANNEL (BEAM)
CAB	CABINET
CARV	COMBINATION AIR RELEASE VALVE
CB	CATCH BASIN
CCB	CHLORINE CONTACT BASIN
CCP	CONCRETE CYLINDER PIPE
CCS	CENTRAL CONTROL SYSTEM
CFM	CUBIC FEET PER MINUTE
CFS	CUBIC FEET PER SECOND
CHEM	CHEMICAL
CI	CAST IRON
CIGC	CAST IRON GROOVED COUPLING
CIMJ	CAST IRON MECHANICAL JOINT
CIP	CAST IRON PIPE
CIRJ	CAST IRON RESTRAINED JOINT
CISP	CAST IRON SOIL PIPE
CJ	CONSTRUCTION JOINT
CL	CHLORINE-LIQUID, CENTERLINE
CLCS	CEMENT-LINED AND COATED STEEL PIPE
CLDIP	CEMENT-LINED DUCTILE IRON PIPE
CLG	CEILING
CLO	CLOSET
CLR	CLEAR
CLSM	CONTROL LOW STRENGTH MATERIAL
CLST	CEMENT-LINED STEEL PIPE
C or CL	CENTERLINE
CMP	CORRUGATED METAL PIPE
CMU	CONCRETE MASONRY UNIT
CO	CLEANOUT
COL	COLUMN CONC CONCRETE
CONN	CONNECTION
CONT	CONTINUOUS, CONTINUATION
COORD	COORDINATE
COP	COPPER
CPLG	COUPLING
CPVC	CHLORINATED POLYVINYL CHLORIDE
CRS	COLD ROLLED STEEL
CS	CHLORINE SOLUTION
CT	CERAMIC TILE
CTD	CENTERED
CTR	CENTER
C TO C	CENTER TO CENTER
CU	CUBIC
CU FT	CUBIC FOOT
CU IN	CUBIC INCH
CU YD	CUBIC YARD
CULV	CULVERT
CV	CHECK VALVE
CW	COLD WATER
CWR	COLD WATER RETURN
CWS	COLD WATER SUPPLY
°C	DEGREE CELSIUS
DBA	DEFORMED BAR ANCHOR
D	DRAIN (SANITARY)
DRR	PUMP DRAIN RETURN
d	PENNY (NAIL SIZE)
DB	DISTRIBUTION BOX
DBL	DOUBLE
DC	DECHLORINATION
DET	DETAIL
DF	DOUGLAS FIR
DI	DROP INLET
DIP	DUCTILE IRON PIPE
DIA	DIAMETER
DIAG	DIAGONAL
DIL	DILUTE
DIMJ	DUCTILE IRON MECHANICAL JOINT
DIP	DUCTILE IRON PIPE
DIPGL	DUCTILE IRON PIPE, FLANGED, GLASS LINED
DJ	DISMANTLING JOINT
DIR	DIRECTION
DN	DOWN
DWG	DRAWING
E	EAST
EA	EACH
EWEF	EACH WAY, EACH FACE
EC	END CURVE
ECC	ECCENTRIC
EF	EACH FACE, EXHAUST FAN
EFL	EFFLUENT
EL	ELEVATION
ELB	ELBOW
ELC	ELECTRICAL LOAD CENTER
ELEC	ELECTRIC, ELECTRICAL
ENGR	ENGINEER
EO	EMERGENCY OVERFLOW
EQL SP	EQUALLY SPACED
EQPT	EQUIPMENT
ERB	EMERGENCY RETENTION BASIN
EVC	END OF VERTICAL CURVE
EW	EACH WAY
EXC	EXCAVATE
EXH	EXHAUST
EXP	EXPOSED, EXPANSION
EXP	JT EXPANSION JOINT
EXST	EXISTING
FAB	FABRICATION FACT FACTORY
FB	FLAT BAR
FC	FLEXIBLE COUPLING
FCA	FLANGED COUPLING ADAPTER
FCO	FLOOR CLEAN OUT
FD	FLOOR DRAIN
FDA	FLOOR DRAIN W/INTEGRAL TRAP
FDN	FOUNDATION
FE	FILTER EFFLUENT
FES	FLARED END SECTION
FEXT	FIRE EXTINGUISHER
FF	FINISH FLOOR
FG	FINISH GRADE
FHY	FIRE HYDRANT
FI	FILTER INFLUENT
FIG	FIGURE
FIL	FILTRATE
FL	FLOOR
FLG	FLANGE
FLH	FLAT HEAD
FLL	FLOW LINE
FLOC	FLOCCULATION
FLTR	FILTER FM FORCE MAIN
FNSH	FINISH
FO	FUEL OIL
FOC	FACE OF CONCRETE
FRP	FIBERGLASS REINFORCED PLASTIC
FT	FOOT OR FEET
FTG	FOOTING
FTW	FILTER TO WASTE
FW	FINISHED WATER
FWD	FORWARD
°F	DEGREE FAHRENHEIT
GA	GAGE
GAL	GALLON
GALV	GALVANIZED
GALV1	GALVANIZED IRON
GC	GROOVED COUPLING
GCO	GRADE CLEAN OUT
GCF	GROOVED COUPLING FITTING
GE	GROOVED END
GL	GLASS
GLDIP	GLASS LINED DUCTILE IRON PIPE
GLST	GLASS-LINED STEEL PIPE
GMMU	GLASS MESH MASONRY UNIT
GPD	GALLONS PER DAY
GPH	GALLONS PER HOUR
GPM	GALLONS PER MINUTE
GRTG	GRATING
GSP	GALVANIZED STEEL PIPE
GV	GATE VALVE
GVL	GRAVEL
GWB	GYPSUM WALLBOARD
GYP	GYPSUM
HAS	HEADED ANCHOR STUD
HD	HUB DRAIN
HDR	HEADER
HDW	HARDWARE
HGT	HEIGHT
HM	HOLLOW METAL
HORIZ	HORIZONTAL
HP	HORSEPOWER
HR	HOSE RACK, HANDRAIL
HT	HEIGHT
HV	HOSE VALVE
HWR	HOT WATER RETURN
HWS	HOT WATER SUPPLY
I&C	INSTRUMENTATION & CONTROL
ID	INSIDE DIAMETER
IF	INSIDE FACE IN INCH
INFL	INFLUENT
INSTM	INSTRUMENTATION
INSUL	INSULATE
INV	INVERT
IW	INDUSTRIAL WATER (NON-PROTECTED PW)
JAN	JANITOR
JT	JOINT
KIP	THOUSAND POUNDS
KW	KILOWATT
L	LEFT, ANGLE, LENGTH
LAB	LABORATORY
LAT'L	LATERAL
LAV	LAVATORY
LB	POUNDS
LB/CU FT	POUNDS PER CUBIC FOOT
LF	LINEAR FEET
LH	LEFT HAND
LNTL	LINTEL LONG LONGITUDINAL
LPG	LIQUIFIED PETROLEUM GAS
LR	LONG RADIUS
MTL	MATERIAL MAX MAXIMUM
MB	MACHINE BOLT
MCC	MOTOR CONTROL CENTER
MECH	MECHANICAL
MFR	MANUFACTURER
MGD	MILLION GALLONS PER DAY
MG/L	MILLIGRAMS PER LITER
MH	MANHOLE MIN MINIMUM, MINUTE
MISC	MISCELLANEOUS
MJ	MECHANICAL JOINT
MSNRY	MASONRY
MO	MASONARY OPENING
MTS	MILL TYPE STEEL PIPE
MWS	MAXIMUM WATER SURFACE
N	NORTH
NIC	NOT IN CONTRACT
NO	NUMBER, NUMBERING
NPT	NATIONAL PIPE THREAD
NTS	NOT TO SCALE
OC	ON CENTER
OD	OUTSIDE DIAMETER, OVERFLOW DRAIN
OF	OUTSIDE FACE, OVERFLOW
OFR	OVERFLOW RETURN
OG	ORIGINAL GROUND
OSD	OPEN SITE DRAIN
O TO O	OUT TO OUT
OPNG	OPENING
OPUD	OLIVEHURST PUBLIC UTILITY DISTRICT
OZ	OUNCE
P	PILASTER
PC	POINT OF CURVE
PCC	POINT OF COMPOUND CURVE
PCCP	PRETENSIONED CONCRETE CYLINDER PIPE
PD	PLANT DRAIN
PDR	PUMPED DRAIN
PE	PLAIN END, PRIMARY EFFLUENT
PENT	PENETRATION
PG	PROFILE GRADE
PG&E	PACIFIC GAS AND ELECTRIC
PI	POINT OF INTERSECTION, PRIMARY INFLUENT
P&ID	PROCESS & INSTRUMENTATION DIAGRAM
PJF	PREMOLDED JOINT FILLER
PL	PLATE (STEEL), PROPERTY LINE
PLYWD	PLYWOOD
PO	POLYMER SOLUTION
POA	ANIONIC POLYMER
POC	CATIONIC POLYMER
PON	NONIONIC POLYMER
PPS	POTASSIUM PERMANGANATE SOLUTION
PPM	PARTS PER MILLION
PPLST	POLYPROPYLENE-LINED STEEL PIPE
PRC	POINT OF REVERSE CURVE
PRCST	PRECAST
PREFAB	PREFABRICATED PRESS PRESSURE
PRI	PRIMARY
PRJ	PROPRIETARY RESTRAINED JOINT
PROP	PROPERTY
PSF	POUNDS PER SQUARE FOOT
PS	PUMP STATION
PSD	PRIMARY SLUDGE
PSI	POUNDS PER SQUARE INCH
PSIG	POUNDS PER SQUARE INCH, GAUGE
PT	POINT OF TANGENCY
PTD/WR	PAPER TOWEL DISPENSER/WASTE RECEPTACLE
PV	PLUG VALVE
PVC	POLYVINYL CHLORIDE PLASTIC
PVCGS	POLYVINYL CHLORIDE PLASTIC-GRAVITY SEWER
PVCW	POLYVINYL CHLORIDE PLASTIC-WATER SERVICE
PVMT	PAVEMENT
PW	POTABLE WATER
PWWD	PRESS WASH WATER DRAIN
RA	RETURN AIR
R, RAD	RADIUS
RAS	RETURN ACTIVATED SLUDGE
RC	REINFORCED CONCRETE
RCP	REINFORCED CONCRETE PIPE
RD	ROAD, ROOF DRAIN
RDCR	REDUCER
RDJ	RESTRAINED DISMANTLING JOINT
RDW	REDWOOD
RECIRC	RECIRCULATION
REF	REFER OR REFERENCE
REFR	REFRIGERATOR
REINF	REINFORCED, REINFORCING, REINFORCE
REQD	REQUIRED
RFCA	RESTRAINED FLANGE COUPLING ADAPTER
RH	RODHOLE
RJ	RESTRAINED JOINT
RL	RAIN LEADER
RLS	RUBBER LINED STEEL
RM	ROOM
RO	ROUGH OPENING
ROW	RIGHT OF WAY
RST	REINFORCING STEEL
RTN	RETURN
RV	ROOF VENT
RW	RAW WATER
RWBS	RAW WATER BASIN SOLIDS
R/W	RIGHT-OF-WAY
S	SOUTH
SA	SAMPLE
SAS	SODA ASH SOLUTION
SAT	SUSPENDED ACOUSTIC TILE
SB	SCRUB BRUSH
SBS	SEDIMENTATION BASIN SOLIDS
SC	SOLID CORE
SCHED	SCHEDULE
SCFH	STANDARD CUBIC FEET PER HOUR
SCFM	STANDARD CUBIC FEET PER MINUTE
SCH	SCHEDULE
SD	STORM DRAIN, SOAP DISPENSER
SE	SECONDARY EFFLUENT
SECT	SECTION
SED	SEDIMENTATION
SEW	SEWAGE
SH	SHEET
SHC	SODIUM HYPOCHLORITE
SHS	SOLIDS HANDLING SYSTEM
SIM	SIMILAR
SJI	STEEL JOIST INSTITUTE
SLP	SLOPE
SOLN	SOLUTION
SMWC	SUTTER MUTUAL WATER COMPANY
SP	SPACE OR SPACES
SPD	SUMP PUMP DRAIN
SPEC	SPECIFICATIONS
SPLY	SUPPLY
SQ	SQUARE
SQ FT	SQUARE FOOT
SQ IN	SQUARE INCH
SST	STAINLESS STEEL
STA	STATION STD STANDARD
STIF	STIFFENER
STL	STEEL, STEEL PIPE
STLS	STEEL PIPE (SPECIAL)
STR	STRAIGHT
STRL	STRUCTURAL
STRUCT	STRUCTURE
SUBFL	SUBFLOORL
SUSP	SUSPEND
SW	SURFACE WASH
SWS	SURFACE WASH SUPPLY
SYMM	SYMMETRICAL
TAN	TANGENT
TBG	TUBING
T&B	TOP AND BOTTOM
TC	TOP OF CURB
TDH	TOTAL DYNAMIC HEAD
TECH	TECHNICAL
TEL	TELEPHONE
TEMP	TEMPERATURE
TF	TOP FACE
T&G	TONGUE AND GROOVE
TH	TOILET PAPER HOLDER
THD	THREAD
THK	THICK
TP	TURNING POINT
TRANSV	TRANSVERSE
TST	TOP OF STEEL
TT	THRUST TIE
TTD	TOILET TISSUE DISPENSER
TW	TOP OF WALL
TYP	TYPICAL
UBC	UNIFORM BUILDING CODE
UD	UNDERDRAIN UH UNIT HEATER
UP	UNIT PROCESS
UPRR	UNION PACIFIC RAILROAD
UR	URINAL
V	VENT, VOLT, VALVE
VAC	VACUUM
VAR	VENT ACID RESISTANT
VCT	VINYL COMPOSITION TILE
VC	VERTICAL CURVE
VERT	VERTICAL
VIN	VINYL
VPS	VENEER PLASTER SYSTEM
VTR	VENT THRU ROOF
W1	NO 1 WATER (POTABLE)
W2	NO 2 NON POTABLE (CHLORINATED PLANT EFFLUENT) WATER
W/	WITH
W	WIDE FLANGE (BEAM), WEST
WAS	WASTE ACTIVATED SLUDGE
WC	WATER CLOSET
WD	WOOD
WH	WATER HEATER
WM	WATER METER
WR	WATER RESISTANT
WS	WATER SURFACE, WATER STOP
WSE	WATER SURFACE ELEVATION
WSH	ST WEATHERING SHEET STEEL
WSP	WELDED STEEL PIPE
WTR	WATER
WW	WASHWATER
WWF	WELDED WIRE FABRIC
YCPW	YUBA COUNTY PUBLIC WORKS
YD	YARD

NOTES:

1. FOR OTHER ABBREVIATIONS, SEE LEGENDS. CONTACT THE PROJECT ADMINISTRATOR
2. FOR ABBREVIATIONS NOT LISTED.
3. THIS IS A STANDARD LEGEND SHEET, THEREFORE, SOME SYMBOLS OR ABBREVIATIONS MAY APPEAR ON THIS SHEET AND MAY NOT BE UTILIZED ON THIS PROJECT.

REGISTERED PROFESSIONAL ENGINEER SEAN M. MINARD No. C52593 Exp. 12-31-24 CIVIL STATE OF CALIFORNIA

NO.	DATE	REVISION	BY	APVD
3	4-06-23	REVISED - STRUCTURE RELOCATED DOWNSTREAM		

DSGN | DR | CHK | APVD

M·H·M ENGINEERS & SURVEYORS SINCE 1892

SUTTER MUTUAL WATER COMPANY
BOHANNON WATER CONTROL PROJECT
SUTTER COUNTY, CALIFORNIA, U.S.A.

SUTTER MUTUAL WATER COMPANY

GENERAL
GENERAL ABBREVIATIONS

VERIFY SCALE
BAR IS ONE INCH ON ORIGINAL DRAWING.
0 1"

DATE	4/06/23
PROJ	22-120
DWG	G-003
SHEET	3 of 15

REVISED - ISSUED FOR CONSTRUCTION

©MHM INC 2022. ALL RIGHTS RESERVED.
REUSE OF DOCUMENTS: THIS DOCUMENT, AND THE IDEAS AND DESIGNS INCORPORATED HEREIN, AS AN INSTRUMENT OF PROFESSIONAL SERVICE, IS THE PROPERTY OF MHM INCORPORATED AND IS NOT TO BE USED, IN WHOLE OR IN PART, FOR ANY OTHER PROJECT WITHOUT THE WRITTEN AUTHORIZATION OF MHM INC.

CIVIL LEGEND

EXISTING	THIS CONTRACT	
× 157.7	⊗ 158.5	SPOT ELEVATION
155	155	CONTOUR LINE
	3:1	EMBANKMENT AND SLOPE
		DRAINAGEWAY OR DITCH
OR		CATCH BASIN
		SIGN
		MANHOLE
		FIRE HYDRANT
		POST OR GUARD POST
		GUY ANCHOR
		UTILITY POLE
		LIGHT POLE
		SURVEY CONTROL POINT OR POINT OF INTERSECTION
		DECIDUOUS TREE
		DENSE BRUSH
		DENSE TREE
		DOUBLE SWING GATE
		CENTER LINE, BUILDING, ROAD, ETC.
		GRADE BREAK LINE
		PROPERTY LINE
	N 1000.00 E 1000.00	STRUCTURE, BUILDING OR FACILITY LOCATION POINT - COORDINATES
OR	OR	STRUCTURE, BUILDING OR FACILITY
	OR OR	DEMOLITION
		ASPHALT CONCRETE PAVEMENT
		GRAVEL SURFACING
		RETAINING WALL
		CONCRETE CURB
		ARCHITECTURAL FENCE
		CHAIN LINK FENCE
		EDGE OF WATER
		CULVERT
		WALL

NOTES:

1. EXISTING PIPING, EQUIPMENT, AND TOPOGRAPHY IS SHOWN SCREENED AND/OR LIGHT-LINED. NEW PIPING, EQUIPMENT, STRUCTURE, AND FINISHED GRADE IS SHOWN HEAVY-LINED.
2. THIS IS A STANDARD LEGEND SHEET. SOME SYMBOLS MAY APPEAR ON THIS SHEET AND NOT BE USED ON THE PLANS.

MISCELLANEOUS LEGEND

DETAIL AND SECTION DESIGNATION

SECTION (LETTER) OR DETAIL (NUMERAL) DESIGNATION — A

DRAWING NUMBER (REPLACED WITH A LINE IF TAKEN AND SHOWN ON SAME SHEET)

ON DRAWING WHERE SECTION OR DETAIL IS TAKEN:
DRAWING NUMBER WHERE SHOWN PER FACILITY

ON DRAWING WHERE SECTION OR DETAIL IS SHOWN:
DRAWING NUMBER(S) WHERE TAKEN PER FACILITY

STANDARD DETAIL DESIGNATION

STANDARD DETAIL DESIGNATION (NUMERAL) — 12345 — SHOWN ON STANDARD DETAIL DRAWINGS

NOTE:
STANDARD DETAIL CALLOUTS ARE SHOWN TO INDICATE DETAIL REQUIRED AT SPECIFIC LOCATIONS. DETAILS ARE NOT CALLED OUT AT ALL LOCATIONS. WHERE A STANDARD DETAIL CALLOUT IS NOT SHOWN, THE CONTRACTOR SHALL USE THE STANDARD DETAIL MOST APPLICABLE AND CONSISTENT WITH OTHER WORK UNDER THIS CONTRACT.

STANDARD VALVE AND OPERATOR DESIGNATION

VALVE AND OPERATOR DESIGNATION — V301

NOTE: SEE SPEC SECTION 15202

GENERAL SITE NOTES:

1. THE HORIZONITAL DATUM FOR THIS PROJECT IS THE NORTH AMERICAN DATUM OF 1983 (NAD 83), CALIFORNIA COORDINATES, ZONE 2, EPOCH 2010.0000, IN U.S. SURVEY FEET.
2. THE VERTICAL DATUM FOR THIS PROJECT IS THE NORTH AMERICAN VERTICAL DATUM OF 1988 (NVGD 88) DERIVED USING GEOID 12B MODEL APPLIED TO NAD 83 ELLIPSOID HEIGHTS, IN U.S. SURVEY FEET.
3. MAINTAIN, RELOCATE, OR REPLACE EXISTING SURVEY MONUMENTS, CONTROL POINTS, AND STAKES WHICH ARE DISTURBED OR DESTROYED. PERFORM THE WORK TO PRODUCE THE SAME LEVEL OF ACCURACY AS THE ORIGINAL MONUMENT(S) IN A TIMELY MANNER, AND AT THE CONTRACTOR'S EXPENSE.
4. FOR LOCATION OF CONTROL POINT ON STRUCTURES, SEE STRUCTURAL DRAWINGS.
5. COORDINATES AND DIMENSIONS SHOWN FOR ROADWAY IMPROVEMENTS ARE TO FACE OF CURB OR EDGE OF PAVEMENT.
6. STAGING AREA SHALL BE FOR CONTRACTOR'S EMPLOYEE PARKING, CONTRACTOR'S TRAILERS AND ON-SITE STORAGE OF MATERIALS.
7. PROVIDE TEMPORARY FENCING AS NECESSARY TO MAINTAIN SECURITY AT ALL TIMES.
8. ELEVATIONS GIVEN ARE TO FINISH GRADE UNLESS OTHERWISE SHOWN.
9. SLOPE UNIFORMLY BETWEEN CONTOURS AND SPOT ELEVATIONS SHOWN.
10. ALL DISTURBED AREAS NOT RECEIVING A HARD SURFACE SHALL BE COVERED WITH APPROVED NO-MOW NATIVE GRASS SEED MIXTURE.
11. CONTRACTOR SHALL BE RESPONSIBLE FOR IMPLEMENTING AND MAINTAINING EROSION CONTROL DEVICES DURING CONSTRUCTION.
12. CONTRACTOR SHALL TAKE ALL OTHER MEASURES TO POSITIVELY PRECLUDE EROSION MATERIALS FROM LEAVING THE SITE. CONTRACTOR TO SUBMIT EROSION CONTROL PLAN.

GENERAL YARD PIPING AND UTILITIES NOTES:

1. EXISTING UNDERGROUND UTILITIES OBTAINED FROM HISTORICAL DESIGN DRAWINGS AND FROM SITE INVESTIGATION. CONTRACTOR SHALL FIELD VERIFY DEPTH AND LOCATION PRIOR TO EXCAVATION. PROTECT ALL EXISTING UTILITIES DURING CONSTRUCTION.
2. EXISTING PIPING AND EQUIPMENT ARE SHOWN SCREENED AND/OR LIGHT-LINED. NEW PIPING AND EQUIPMENT ARE SHOWN HEAVY-LINED. SEE YARD PIPING LEGEND.
3. UNLESS OTHERWISE SHOWN ALL PIPING SHALL HAVE A MINIMUM OF 3' COVER.
4. ALL PIPES SHALL HAVE A CONSTANT SLOPE BETWEEN INVERT ELEVATIONS UNLESS A FITTING IS SHOWN.

YARD PIPING LEGEND

8" PE	NOMINAL PIPE DIAMETER PIPE USE IDENTIFICATION
	PIPING < 18" DIAMETER
	PIPING ≧ 18" DIAMETER (ABOVE GRADE)
	PIPING ≧ 18" DIAMETER (BELOW GRADE)
	EXISTING PIPE TO BE ABANDONED
	EXISTING PIPE TO BE REMOVED
	NON-FREEZE HOSE VALVE (V-X) X = NO. IN SPECIFICATIONS
	NON-FREEZE HOSE VALVE WITH HOSE RACK (V-X) X = NO. IN SPECIFICATIONS
	INDICATOR POST VALVE
	GATE VALVE AND VALVE BOX
	BUTTERFLY VALVE AND VALVE BOX
	PLUG VALVE AND VALVE BOX
	FLEXIBLE COUPLING
	90° ELBOW UP
	90° ELBOW DOWN
	BEND < 90° UP
	BEND < 90° DOWN
	CONCENTRIC REDUCER
	CAP OR PLUG
	CLEANOUT
	FIRE HYDRANT

TRENCHING REQUIREMENTS FOR EXISTING UTILITIES

1. BEFORE YOU START ANY TRENCHING ON YOUR PROJECT, PLEASE CALL UNDERGROUND SERVICE ALERT AT 811 AT LEAST 48 HOURS PRIOR TO ANY EXCAVATION, TO HAVE YOUR WORK AREA MARKED FOR UNDERGROUND FACILITIES. CALL USA (811) TO OBTAIN EXACT LOCATION OF FACILITIES AND POT-HOLE TO VERIFY DEPTH OF OUR LINES (IF REQUIRED). CONTRACTOR SHALL HAVE A UP TO DATE USA TICKET ON HAND BEFORE ANY EXCAVATION WORK EVEN IF THE WORK WAS COMPLETED IN THE SAME AREA PRIOR.
2. PG&E REQUIREMENTS - BEFORE YOU START ANY TRENCHING ON YOUR PROJECT, PLEASE CALL UNDERGROUND SERVICE ALERT AT 811 AT LEAST 48 HOURS PRIOR TO ANY EXCAVATION, TO HAVE YOUR WORK AREA MARKED FOR UNDERGROUND FACILITIES. CALL USA (811) TO OBTAIN EXACT LOCATION OF FACILITIES AND POT-HOLE TO VERIFY DEPTH OF OUR LINES (IF REQUIRED). PLEASE NOTE THAT A STANDBY PG&E EMPLOYEE IS REQUIRED DURING ANY EXCAVATION WITHIN 10 FEET OF A GAS TRANSMISSION LINE.
3. KINDER MORGAN REQUIREMENTS - NOTIFY YOUR LOCAL ONE CALL CENTER BY CONTACTING 811 (CALL OR ONLINE REQUEST) IN ADVANCE OF ANY CONSTRUCTION OR EXCAVATION ACTIVITY, AS DICTATED BY STATE LAW, AND COORDINATE WITH THE LOCAL KINDER MORGAN DAMAGE PREVENTION INSPECTOR FOR LINE LOCATING AND PROJECT SCHEDULING. PLEASE NOTE ONLY KINDER MORGAN REPRESENTATIVES CAN PROBE KINDER MORGAN PIPELINES.
   - 3.1. A QUALIFIED REPRESENTATIVE FROM KINDER MORGAN MUST BE ON SITE WHENEVER AN EXCAVATION IS UNDERWAY OR EQUIPMENT IS BEING USED WITHIN 25 FEET OF OUR PIPELINE OR AS DETERMINED BY KINDER MORGAN PERSONNEL AND PROCEDURES.
   - 3.2. ANY DESIGN CHANGES AND/OR DRAWING REVISIONS REQUIRE ADDITIONAL KM REVIEW. PLANS/DRAWINGS SUBMITTED TO KM SHALL INCLUDE KM FACILITIES ILLUSTRATED IN PLAN VIEW AND PROFILE VIEW IN RELATION TO THE PROPOSED ENCROACHMENTS FOR REVIEW. IT IS THE ENCROACHING THIRD PARTY'S RESPONSIBILITY FOR ANY POTHOLING.
   - 3.3. COSTS ASSOCIATED WITH ROW INSPECTION, DAMAGE PREVENTION AND CODE COMPLIANCE MAY BE INCURRED. DEPENDING ON SPECIFIC CONDITIONS OF THE WORK, KINDER MORGAN MAY SEEK REIMBURSEMENT OF THESE COSTS.
4. AT&T REQUIREMENTS - BEFORE YOU START ANY TRENCHING ON YOUR PROJECT, PLEASE CALL UNDERGROUND SERVICE ALERT AT 811 AT LEAST 48 HOURS PRIOR TO ANY EXCAVATION, TO HAVE YOUR WORK AREA MARKED FOR UNDERGROUND FACILITIES. CALL USA (811) TO OBTAIN EXACT LOCATION OF FACILITIES AND POT-HOLE TO VERIFY DEPTH OF OUR LINES (IF REQUIRED).
5. COMCAST REQUIREMENTS - BEFORE YOU START ANY TRENCHING ON YOUR PROJECT, PLEASE CALL UNDERGROUND SERVICE ALERT AT 811 AT LEAST 48 HOURS PRIOR TO ANY EXCAVATION, TO HAVE YOUR WORK AREA MARKED FOR UNDERGROUND FACILITIES. CALL USA (811) TO OBTAIN EXACT LOCATION OF FACILITIES AND POT-HOLE TO VERIFY DEPTH OF OUR LINES (IF REQUIRED).
6. SPRINT REQUIREMENTS - BEFORE YOU START ANY TRENCHING ON YOUR PROJECT, PLEASE CALL UNDERGROUND SERVICE ALERT AT 811 AT LEAST 48 HOURS PRIOR TO ANY EXCAVATION, TO HAVE YOUR WORK AREA MARKED FOR UNDERGROUND FACILITIES. CALL USA (811) TO OBTAIN EXACT LOCATION OF FACILITIES AND POT-HOLE TO VERIFY DEPTH OF OUR LINES (IF REQUIRED).
7. OPUD REQUIREMENTS - BEFORE YOU START ANY TRENCHING ON YOUR PROJECT, PLEASE CALL UNDERGROUND SERVICE ALERT AT 811 AT LEAST 48 HOURS PRIOR TO ANY EXCAVATION, TO HAVE YOUR WORK AREA MARKED FOR UNDERGROUND FACILITIES. CALL USA (811) TO OBTAIN EXACT LOCATION OF FACILITIES AND POT-HOLE TO VERIFY DEPTH OF OUR LINES (IF REQUIRED).

REGISTERED PROFESSIONAL ENGINEER — BRIAN M. MINARD — No. C52595 — Exp. 12/31/24 — CIVIL — STATE OF CALIFORNIA

NO.	DATE	REVISION	DR	CHK	APVD	BY	APVD
1	4-06-23	REVISED - STRUCTURE RELOCATED DOWNSTREAM					

DSGN 22CU507.DWG

M·H·M ENGINEERS & SURVEYORS SINCE 1957

SUTTER MUTUAL WATER COMPANY
BOHANNON WATER CONTROL PROJECT
SUTTER COUNTY, CALIFORNIA, U.S.A.

SUTTER MUTUAL WATER COMPANY

CIVIL LEGEND AND NOTES

VERIFY SCALE
BAR IS ONE INCH ON ORIGINAL DRAWING.
0 1"

DATE	4/06/23
PROJ	22-120
DWG	G-004
SHEET	4 of 15

REVISED - ISSUED FOR CONSTRUCTION

REUSE OF DOCUMENTS: THIS DOCUMENT, AND THE IDEAS AND DESIGNS INCORPORATED HEREIN, AS AN INSTRUMENT OF PROFESSIONAL SERVICE, IS THE PROPERTY OF MHM INCORPORATED AND IS NOT TO BE USED, IN WHOLE OR IN PART, FOR ANY OTHER PROJECT WITHOUT THE WRITTEN AUTHORIZATION OF MHM INC.
©MHM INC 2022. ALL RIGHTS RESERVED.

DESIGN CRITERIA

1. APPLICABLE CODE: 2019 CALIFORNIA BUILDING CODE (CBC).
2. REFER TO THE DRAWINGS FOR ADDITIONAL AND SPECIFIC STRUCTURE LOADINGS AND REQUIREMENTS.
3. ALL LOADS SHOWN ARE SERVICE LEVEL (UNFACTORED) UNLESS SPECIFICALLY NOTED OTHERWISE.
4. DEAD LOADS: SELF WEIGHT
5. ROOF LOADS:
   - GROUND SNOW LOAD, Pg = 0 PSF
   - ROOF LIVE LOAD = 20 PSF
   - MISCELLANEOUS MECHANICAL AND ELECTRICAL LOADS = 5 PSF UNIFORM OR 300 POUNDS CONCENTRATED
6. LIVE LOADS:
   - STAIRS AND WALKWAYS LIVE LOAD = 100 PSF
   - SECONDARY CLARIFIER WALKWAY = 60 PSF
7. WIND LOADS:
   - ASCE 7 METHOD = MWFRS DIRECTIONAL PROCEDURE
   - BASIC WIND SPEED (3-SECOND GUST) = 100 MPH
   - EXPOSURE CATEGORY = C
   - RISK CATEGORY = III
8. SEISMIC LOADS:
   MAPPED SPECTRAL RESPONSE ACCELERATIONS
   - S_S = 0.508g
   - S_1 = 0.245g

   SITE-SPECIFIC DESIGN SPECTRAL RESPONSE ACCELERATIONS
   - S_{DS} =0.544g
   - S_{D1} =0.490g

   SITE CLASS = D
   RISK CATEGORY = III
   SEISMIC DESIGN CATEGORY = D
   IMPORTANCE FACTOR, Ie = 1.25
   WATER HOLDING STRUCTURES HAVE BEEN ANALYZED USING THE PROCEDURES OF ACI 350.3, SEISMIC DESIGN OF LIQUID-CONTAINING CONCRETE STRUCTURES, AS MODIFIED BY ASCE 7-16.
9. SEE FACILITY DRAWINGS FOR LATERAL FORCE-RESISTING SYSTEMS
10. SOIL DESIGN PARAMETERS:
    A. NET ALLOWABLE SOIL BEARING PRESSURES:
       - AT GRADE FOUNDATIONS 2,000 PSF
       - BELOW-GRADE FOUNDATIONS GREATER THAN 20 FT DEEP 3,000 PSF

    B. GROUND WATER (GW) ELEVATION:
       - DESIGN HIGH GW EL 40.0 (NAVD88)

    C. EQUIVALENT UNDRAINED FLUID PRESSURES:
       - AT REST: 85 PCF
       - PASSIVE: 150 PCF

    E. DYNAMIC EARTH PRESSURES:
       - EQUIVALENT FLUID WEIGHT 6 PCF
       - APPLIED AS A UNIFORM LOAD ON THE WALL WITH RESULTANT LOCATED AT WALL MID-HEIGHT

    F. VERTICAL SURCHARGE: (270PSF)(0.5) = 135 PSF
    G. COEFFICIENT OF FRICTION: 0.40
    H. MODULUS OF SUBGRADE REACTION 25 PCI
    I. SATURATED SOIL UNIT WEIGHT 135 PCF
    J. FACTOR OF SAFETY FOR BUOYANCY UPLIFT RESISTANCE:
       - NOT CONSIDERING SOIL WEDGE-TYPE ACTION FOS = 1.10 MINIMUN
       - INCLUDING SOIL WEDGE-TYPE ACTION FOS = 1.25 MINIMUN

    K. MINIMUM EMBEDMENT DEPTH: 18 IN

GENERAL INFORMATION

1. FOR ABBREVIATIONS NOT LISTED, SEE ASME Y14.38 “ABBREVIATIONS AND ACRONYMS: PUBLICATION AS DISTRIBUTED BY THE AMERICAN SOCIETY OF MECHANICAL ENGINEERS (ASME).
2. DESIGN DETAILS ARE INTENDED TO BE TYPICAL AND SHALL APPLY TO SIMILAR SITUATIONS OCCURRING THROUGHOUT THE PROJECT, WHETHER OR NOT THEY ARE INDIVIDUALLY CALLED OUT.
3. VERIFY FINAL OPENING DIMENSIONS IN WALLS, SLABS, AND DECKS WITH OTHER DISCIPLINE DRAWINGS PRIOR TO CONSTRUCTION OF THESE ELEMENTS.
4. FOR NUMBER, TYPE, SIZE, ARRANGEMENT, AND/OR LOCATION OF EQUIPMENT PADS, SEE OTHER DISCIPLINE DRAWINGS. COORDINATE WITH EQUIPMENT SUPPLIER PRIOR TO PLACING SLABS, WALLS AND FOUNDATIONS. COORDINATE PIPING OPENINGS WITH OTHER DISCIPLINE DRAWINGS.
5. DO NOT CUT OR MODIFY STRUCTURAL MEMBERS FOR PIPES, DUCTS, ETC, UNLESS SPECIFICALLY DETAILED OR APPROVED IN WRITING BY THE ENGINEER.
6. VISITS TO THE JOB SITE BY THE ENGINEER TO OBSERVE THE CONSTRUCTION DO NOT IN ANY WAY MEAN THAT ENGINEER IS GUARANTOR OF CONSTRUCTOR’S WORK, NOR RESPONSIBLE FOR THE COMPREHENSIVE OR SPECIAL INSPECTIONS, COORDINATION, SUPERVISION, OR SAFETY AT THE JOB SITE.
7. INFORMATION (DETAILING, DIMENSIONS, CONFIGURATIONS, AND ELEVATIONS, ETC.) OF EXISTING CONSTRUCTION SHOWN REFLECTS AVAILABLE EXISTING DESIGN DOCUMENTS, AND DOES NOT NECESSARILY REPRESENT THE AS-CONSTRUCTED CONDITIONS. THE CONTRACTOR SHALL FIELD VERIFY DIMENSIONS, ELEVATIONS AND DETAILING OF THE EXISTING STRUCTURES PRIOR TO UNDERTAKING ANY WORK THAT IS AFFECTED BY THE EXISTING STRUCTURE. NOTIFY ENGINEER IF CONDITIONS VARY FROM THAT SHOWN PRIOR TO STARTING WORK.
8. 8. SPECIAL INSPECTION (OWNER-FURNISHED) IS REQUIRED IN ACCORDANCE WITH CBC SECTIONS 1704 AND 1705 AS INDICATED IN THE STATEMENT OF SPECIAL INSPECTIONS IN SECTION 01 45 33.
9. STATEMENT OF SPECIAL INSPECTIONS PLAN SPECIFIED CONCRETE TESTING DURING CONSTRUCTION DOE NOT FULFILL FIELD QUALITY CONTROL BY CONTRACTOR. SPECIFIED LABORATORY TEST MIXES SHALL BE THE RESPONSIBILITY OF THE CONTRACTOR.

FOUNDATIONS

1. EXCAVATIONS SHALL BE SHORED TO PREVENT SUBSIDENCE AND DAMAGE TO ADJACENT EXISTING STRUCTURES, ROADS, UTILITIES, ETC.
2. FOUNDATION BEARING SURFACES SHALL BE OBSERVED BY THE GEOTECHNICAL ENGINEER PRIOR TO PLACEMENT OF FORMWORK OR REINFORCING STEEL. THE OBSERVATION SHALL VERIFY IF THE ACTUAL EXPOSED SUBGRADE IS AS ANTICIPATED BY THE SITE SPECIFIC BORINGS, TEST PITS AND DATA REPORTS.
3. NO BACKFILL SHALL BE PLACED BEHIND CANTILEVERED, FREE TOP WALLS UNTIL THE CONCRETE HAS ATTAINED 100 PERCENT OF ITS SPECIFIED 28 DAY COMPRESSIVE STRENGTH.
4. USE OF EXPLOSIVES IS ONLY ALLOWED WITH WRITTEN PERMISSION FROM ENGINEER.
5. ~~REFER TO GEOTECHNICAL DATA REPORT NO. 3842 BY BLACKBURN CONSULTING DATED APRIL 30, 2021.~~

FORMWORK, SHORING, AND BRACING

1. STRUCTURES SHOWN ON THE DRAWINGS HAVE BEEN DESIGNED FOR STABILITY UNDER FINAL CONDITIONS ONLY. DESIGN SHOWN DOES NOT INCLUDE NECESSARY COMPONENTS OR EQUIPMENT FOR STABILITY OF THE STRUCTURES DURING CONSTRUCTION. CONTRACTOR IS RESPONSIBLE FOR WORK RELATING TO CONSTRUCTION ERECTION METHODS, BRACING, SHORING, RIGGING, GUYS, SCAFFOLDING, FORMWORK, AND OTHER WORK AIDS REQUIRED TO SAFELY PERFORM THE WORK SHOWN.
2. TEMPORARY SHORING SHALL REMAIN IN PLACE UNTIL ELEVATED CONCRETE FLOOR OR SLABS HAVE REACHED 80 PERCENT OF THE 28 DAY COMPRESSIVE STRENGTH AS DETERMINED BY FIELD CYLINDER BREAKS.
3. “BURY” BARS OR “CARRIER” BARS ARE NOT ALLOWED FOR THE BOTTOM MATS OF REINFORCING IN ALL ELEVATED SLABS AND ARE NOT ALLOWED FOR THE TOP MATS OF REINFORCING IN ELEVATED SLABS LESS THAN 12 INCHES THICK.

CONCRETE REINFORCING

1. REINFORCING STEEL:
   TYPICAL: ASTM A615, GRADE 60
   ASTM A706, GRADE 60
2. FABRICATION AND PLACEMENT OF REINFORCING STEEL SHALL BE IN ACCORDANCE WITH CRSI MSP-1 MANUAL OF STANDARD PRACTICE”AND ACI 301 “SPECIFICATIONS FOR STRUCTURAL CONCRETE”.
3. CONCRETE COVER FOR REINFORCING, UNLESS SHOWN OTHERWISE, SHALL BE:
   - WHEN CAST AGAINST EARTH: 3”
   - OTHER CONCRETE SURFACES: 2”
4. REFER TO WALL CORNER AND WALL INTERSECTION REINFORCING DETAIL 0330-003. WALL CORNER REINFORCING SIZES AND SPACINGS SHALL BE AS SHOWN ON THE DRAWINGS AND REFERENCED TO THIS DETAIL. TYPICAL HORIZONTAL WALL REINFORCING SHALL LAP WITH THE CORNER HORIZONTAL REINFORCING.
5. 90 DEGREE BENDS, UNLESS OTHERWISE SHOWN, SHALL BE ACI 318 STANDARD HOOKS.
6. WALL FOOTING CORNER AND INTERSECTION REINFORCEMENT BARS SHALL BE EXTENDED INTO CONNECTING FOOTINGS AND LAPPED ON THE OPPOSITE FACE OF THE CONNECTING FOOTING. OUTSIDE FACE WALL FOOTING REINFORCEMENT SHALL BE LAPPED WITH CORNER BARS.
7. LAP VERTICAL WALL BARS WITH DOWELS FROM BASE SLAB REINFORCEMENT.
8. REINFORCING STEEL FOR FOOTINGS AND SLABS ON GRADE SHALL BE ADEQUATELY SUPPORTED ON BAR SUPPORTS WITH SPACERS TO KEEP REINFORCING ABOVE THE PREPARED GRADE. LIFTING REINFORCING OFF GRADE DURING CONCRETE PLACEMENT IS NOT PERMITTED.
9. REFER TO OPENING REINFORCING DETAILS 0330-001 AND 0330-002.
10. REINFORCEMENT BENDS AND LAPS, UNLESS OTHERWISE NOTED, SHALL SATISFY THE FOLLOWING MINIMUM REQUIREMENTS:

CONCRETE DESIGN STRENGTH = 4,500 PSI MIN AT 28 DAYS[3] GRADE 60 REINFORCING STEEL										
BAR SIZE		#3	#4	#5	#6	#7	#8	#9	#10	#11
LAP SPLICE LENGTH										
SPACING = 3”	TOP BAR [2]	1’-4”	1’-8”	2’-1”	3’-0”	5’-2”	6’-8”	8’-6”	10’-10”	`13’-4”
	OTHER BAR	1’-4”	1’-4”	1’-8”	2’-4”	4’-0”	5’-2”	6’-7”	8’-4”	10’-3”
SPACING = 4”	TOP BAR [2]	1’-4”	1’-8”	2’-0”	2’-5”	3’-10”	5’-0”	6’-5”	8’-1”	10’-0”
	OTHER BAR	1’-4”	1’-4”	1’-7”	1’-10”	3’-0”	3’-11”	4’-11”	6’-3”	7’-8”
SPACING ≥ 6”	TOP BAR [2]	1’-4”	1’-8”	2’-0”	2’-5”	3’-6”	4’-0”	5’-0”	6’-2”	7’-5”
	OTHER BAR	1’-4”	1’-4”	1’-7”	1’-10”	2’-9”	3’-1”	3’-10”	4’-9”	5’-8”
EMBEDMENT LENGTH										
SPACING = 3”	TOP BAR [2]	1’-0”	1’-3”	1’-8”	2’-4”	4’-0”	5’-2”	6’-7”	8’-4”	10’-3”
	OTHER BAR	1’-0”	1’-0”	1’-3”	1’-10”	3’-1”	4’-0”	5’-1”	6’-5”	7’-11”
SPACING = 4”	TOP BAR [2]	1’-0”	1’-3”	1’-7”	1’-10”	3’-0”	3’-11”	4’-11”	6’-3”	7’-8”
	OTHER BAR	1’-0”	1’-0”	1’-3”	1’-5”	2’-4”	3’-0”	3’-10”	4’-10”	5’-11”
SPACING ≥ 6”	TOP BAR [2]	1’-0”	1’-3”	1’-7”	1’-10”	2’-9”	3’-1”	3’-10”	4’-9”	5’-8”
	OTHER BAR	1’-0”	1’-0”	1’-3”	1’-5”	2’-1”	2’-5”	3’-0”	3’-8”	4’-5”

11. LAP LENGTHS ARE BASED ON MINIMUM CONCRETE COVER OF 2”. LONGER LENGTHS ARE REQUIRED FOR CONCRETE COVER LESS THAN 2”.
12. TOP BARS SHALL BE DEFINED AS ANY HORIZONTAL BARS PLACED SUCH THAT MORE THAN 12 INCHES OF CONCRETE IS CAST IN THE MEMBER BELOW THE BAR IN ANY SINGLE POUR. HORIZONTAL WALL BARS ARE CONSIDERED TOP BARS.
13. WHERE 3000 PSI CONCRETE IS USED, INCREASE ABOVE LENGTHS BY 16 PERCENT. WHERE 3500 PSI CONCRETE IS USED, INCREASE ABOVE LENGTHS BY 7 PERCENT.

CAST IN PLACE CONCRETE

1. 28-DAY COMPRESSIVE STRENGTHS (TO MEET STRUCTURAL STRENGTH REQUIREMENTS):
   - HYDRAULIC STRUCTURES: 4500 PSI
   - CONCRETE FILL: 3500 PSI
   - CURBS AND SIDEWALKS: 3500 PSI
   - DUCT BANKS AND PIPE ENCASEMENTS NOT INTEGRAL WITH FOUNDATIONS: 3500 PSI
2. 56-DAY COMPRESSIVE STRENGTHS (TO MEET DURIBILITY REQUIREMENTS OR ACI 318 AND ACI 350):
   - HYDRAULIC STRUCTURES: 5000 PSI
   - CONCRETE FILL: 4000 PSI
   - CURBS AND SIDEWALKS: 4000 PSI
   - DUCT BANKS AND PIPE ENCASEMENTS NOT INTEGRAL WITH FOUNDATIONS: 4000 PSI
3. CONSTRUCTION JOINTS INDICATED ARE SUGGESTED LOCATIONS. CONTRACTOR MAY REVISE LOCATION OF JOINTS, SUBJECT TO SPECIFIED REQUIREMENTS. LAYOUT SHOWING ALL CONSTRUCTION JOINT LOCATIONS SHALL BE SUBMITTED FOR REVIEW BY ENGINEER.
4. ROUGHEN AND CLEAN CONSTRUCTION JOINTS IN WALLS AND SLABS AS SPECIFIED PRIOR TO PLACING ADJACENT CONCRETE.
5. COORDINATE PLACEMENT OF OPENINGS, PIPE PENETRATIONS, CURBS, DOWELS, SLEEVES, CONDUITS, BOLTS AND INSERTS PRIOR TO PLACEMENT OF CONCRETE.
6. NO ALUMINUM CONDUIT OR PRODUCTS CONTAINING ALUMINUM OR ANY OTHER MATERIAL INJURIOUS TO THE CONCRETE SHALL BE EMBEDDED IN THE CONCRETE.
7. PATCH FORM TIE HOLES IN ACCORDANCE WITH DETAILS 0310-051 AND/OR 0310-052.

WELDING

1. WELDS SHALL CONFORM TO AMERICAN WELDING SOCIETY (AWS):
   - D1.1, STRUCTURAL WELDING CODE STEEL
   - D1.2, STRUCTURAL WELDING CODE ALUMINUM
   - D1.3, STRUCTURAL WELDING CODE SHEET STEEL
   - D1.4, STRUCTURAL WELDING CODE REINFORCING STEEL
   - D1.6, STRUCTURAL WELDING CODE STAINLESS STEEL
2. REPAIR WELDS FOUND DEFECTIVE IN ACCORDANCE WITH AWS D1.1 SECTION 5.26.
3. USE INTERMITTENT WELDS AT FIELD WELDS OF EMBED PLATES AND ANGLES TO AVOID SPALLING OR CRACKING OF THE EXISTING CONCRETE.
4. BUTT JOINT WELDS SHALL BE COMPLETE JOINT PENETRATION (CJP) UNLESS INDICATED OTHERWISE.

STRUCTURAL STEEL AND METAL FABRICATIONS

1. STRUCTURAL STEEL SHALL CONFORM TO THE FOLLOWING ASTM STANDARDS:
   - W-SHAPES A992
   - MISCELLANEOUS SHAPES INCLUDING ANGLES, CHANNELS, PLATES, ETC. A36
   - HOLLOW STRUCTURAL SECTIONS (HSS) A500, GRADE C
   - STEEL PIPE A53, GRADE B
   - STAINLESS STEEL SHAPES A276
2. ALUMINUM SHALL CONFORM TO THE FOLLOWING ASTM STANDARDS:
   - STRUCTURAL SHAPES B308
   - PLATES B209
3. STRUCTURAL STEEL SHALL BE FABRICATED AND ERECTED IN CONFORMANCE WITH THE AISC MANUAL OF STEEL CONSTRUCTION, CURRENT EDITION, AND CURRENT OSHA STANDARDS.
4. FASTENERS SHALL BE HIGH STRENGTH BOLTS CONFORMING TO THE FOLLOWING ASTM STANDARDS EXCEPT WHERE SPECIFICALLY INDICATED OTHERWISE:
   - UNLESS SHOWN OTHERWISE A325-N
   - ANCHOR BOLTS (AB)
     - STAINLESS STEEL F593, AISI TYPE 316, CONDITION CW
     - STEEL OR GALVANIZED STEEL F1554, GR 36 / A153
   - MACHINE BOLTS (MB)
     - STEEL A307
     - STAINLESS STEEL F593, AISI TYPE 316, CONDITION CW
     - GALVANIZED STEEL A307 / A153
     - ALUMINUM F468, ALLOY 2024-T4
5. ITEMS TO BE EMBEDDED IN CONCRETE SHALL BE CLEAN AND FREE OF OIL, DIRT AND PAINT.
6. NO HOLES OTHER THAN THOSE SPECIFICALLY DETAILED SHALL BE ALLOWED THROUGH STRUCTURAL STEEL MEMBERS. NO CUTTING OR BURNING OF STRUCTURAL STEEL IS PERMITTED WITHOUT THE APPROVAL OF THE ENGINEER.

DEFERRED SUBMITTALS

1. DEFERRED SUBMITTALS ARE THOSE PORTIONS OF THE DESIGN WHICH ARE NOT SUBMITTED AT THE TIME OF PERMIT APPLICATION AND WHICH ARE TO BE SUBMITTED TO THE PERMITTING AGENCY FOR ACCEPTANCE PRIOR TO INSTALLATION OF THAT PORTION OF THE WORK OR ARE REQUIRED TO BE SUBMITTED FOR REVIEW ONLY BY THE ENGINEER.
2. WHERE DEFERRED SUBMITTALS INCLUDE ADDITIONAL MATERIALS, INSTALLATION, ANCHORAGE, OR CERTIFICATION OF COMPONENTS THAT REQUIRE SPECIAL INSPECTION AND/OR STRUCTURAL OBSERVATION TO MEET CODE REQUIREMENTS, THE DEFERRED SUBMITTAL SHALL INCLUDE SPECIFIC LINE ITEMS TO BE ADDED TO THE APPROPRIATE TABLES IN THE PROJECT'S STATEMENT OF SPECIAL INSPECTIONS PLAN IF THEY ARE NOT ALREADY IDENTIFIED.
3. THE FOLLOWING IS A LIST OF DEFERRED SUBMITTALS PER SECTION 107.3.4.1 OF 2019 CBC THAT ARE EXPECTED TO CONTAIN STRUCTURAL CALCULATIONS OR SAFETY RELATED SYSTEM INFORMATION FOR REVIEW TO MEET BUILDING PERMITTING REQUIREMENTS FOR DESIGNED SYSTEMS. PRIOR TO INSTALLATION OF THE INDICATED STRUCTURAL ELEMENT, EQUIPMENT, DISTRIBUTION SYSTEM, OR COMPONENT OR ITS ANCHORAGE, THE CONTRACTOR SHALL SUBMIT THE REQUIRED CALCULATIONS AND SUPPORTING DATA AND DRAWINGS FOR REVIEW AND ACCEPTANCE BY THE ENGINEER. ADDITIONALLY, ACCEPTANCE INDICATED ON THE ENGINEER’S COMMENT FORM, ALONG WITH THE COMPLETED, FINAL SUBMITTAL SHALL THEN BE SUBMITTED BY THE CONTRACTOR TO THE PERMITTING AGENCY AND APPROVED PRIOR TO INSTALLATION OF THESE ITEMS.

REGISTERED PROFESSIONAL ENGINEER SEAN M. MINARD No. C52593 Exp. 12-31-24 CIVIL STATE OF CALIFORNIA

NO.	DATE	REVISION	BY	APVD
3	4-06-23	REVISED - STRUCTURE RELOCATED DOWNSTREAM		

DSGN 22CU507.DWG | DR | CHK | APVD

M·H·M ENGINEERS & SURVEYORS SINCE 1892

SUTTER MUTUAL WATER COMPANY
BOHANNON WATER CONTROL PROJECT
SUTTER COUNTY, CALIFORNIA, U.S.A.

SUTTER MUTUAL WATER COMPANY

STRUCTURAL NOTES 1

VERIFY SCALE
BAR IS ONE INCH ON ORIGINAL DRAWING.
0 1"

DATE	4/06/23
PROJ	22-120
DWG	G-005
SHEET	5 of 15

REVISED - ISSUED FOR CONSTRUCTION

©MHM INC 2022. ALL RIGHTS RESERVED.
REUSE OF DOCUMENTS: THIS DOCUMENT, AND THE IDEAS AND DESIGNS INCORPORATED HEREIN, AS AN INSTRUMENT OF PROFESSIONAL SERVICE, IS THE PROPERTY OF MHM INCORPORATED AND IS NOT TO BE USED, IN WHOLE OR IN PART, FOR ANY OTHER PROJECT WITHOUT THE WRITTEN AUTHORIZATION OF MHM INC.

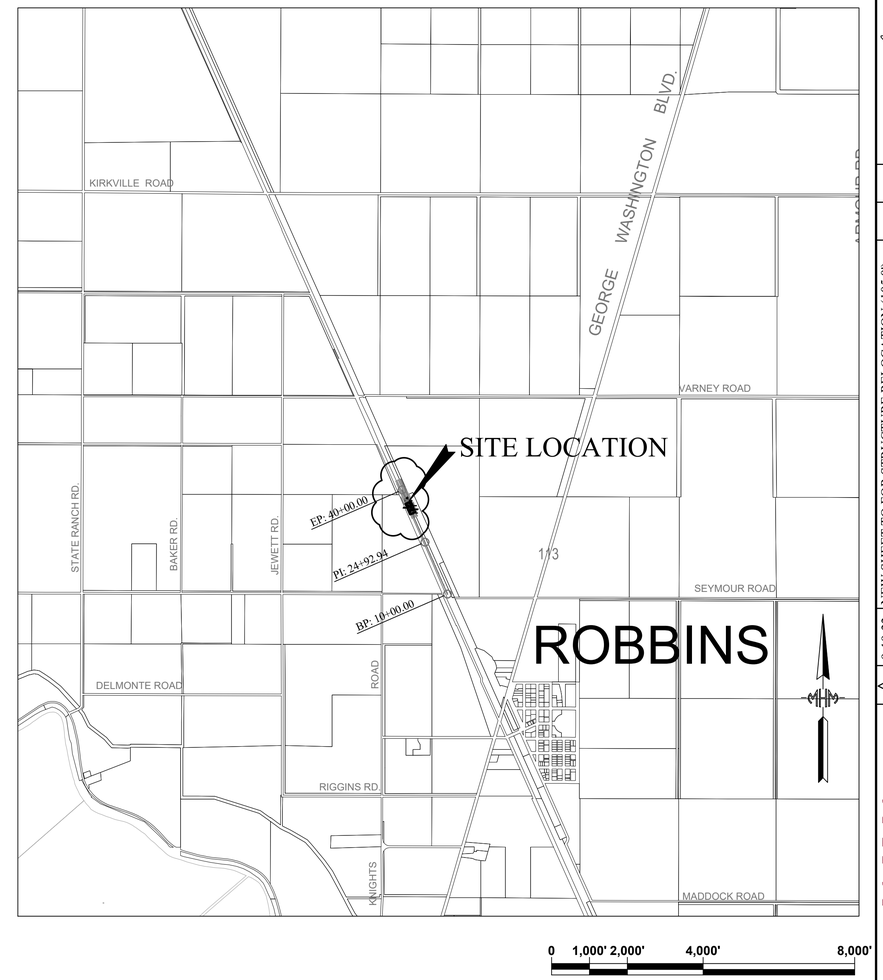

HORIZONTAL CONTROL STATEMENT

THE HORIZONITAL DATUM FOR THIS PROJECT IS THE NORTH AMERICAN DATUM OF 1983 (NAD 83), CALIFORNIA COORDINATES, ZONE 2, EPOCH 2010.0000, IN U.S. SURVEY FEET.

VERTICAL CONTROL STATEMENT

THE VERTICAL DATUM FOR THIS PROJECT IS THE NORTH AMERICAN VERTICAL DATUM OF 1988 (NVGD 88) DERIVED USING GEOID 12B MODEL APPLIED TO NAD 83 ELLIPSOID HEIGHTS, IN U.S. SURVEY FEET

REGISTERED PROFESSIONAL ENGINEER
BRIAN M. MINTO
No. C52599
Exp. 12/31/24
CIVIL
STATE OF CALIFORNIA

NO.	DATE	REVISION	BY	APVD
1	9-19-22	NEW SHEET TO FOR STRUCTURE RELOCATION (105.0')		
2	4-06-23	REVISED - STRUCTURE RELOCATED DOWNSTREAM		

DSGN | DR | CHK | APVD

M·H·M
ENGINEERS & SURVEYORS SINCE 1892

SUTTER MUTUAL WATER COMPANY
BOHANNON WATER CONTROL PROJECT
SUTTER COUNTY, CALIFORNIA, U.S.A.

SUTTER MUTUAL WATER COMPANY

GENERAL
SURVEY CONTROL AND SITE MAP

VERIFY SCALE
BAR IS ONE INCH ON ORIGINAL DRAWING
0 1"

DATE	4/06/23
PROJ	22-120
DWG	G-006
SHEET	6 of 15

REVISED - ISSUED FOR CONSTRUCTION

REUSE OF DOCUMENTS: THIS DOCUMENT, AND THE IDEAS AND DESIGNS INCORPORATED HEREIN, AS AN INSTRUMENT OF PROFESSIONAL SERVICE, IS THE PROPERTY OF MHM INC. AND IS NOT TO BE USED, IN WHOLE OR IN PART, FOR ANY OTHER PROJECT WITHOUT THE WRITTEN AUTHORIZATION OF MHM INC.
©MHM INC 2022. ALL RIGHTS RESERVED.

KEY NOTES:

1. INSTALL 60 INCH HDPE TYPE S (ADS SANITITE HP, ADS HP STORM DUAL WALL OR EQUAL) OR CLASS 3 RCP (TOTAL OF 8)
2. ~~REMOVE AND DISPOSE PORTION OF EXISTING WATER CONTROL STRUCTURE (WALKWAY AND MAIN STRUCTURE SHALL REMAIN. TRASH RACK WILL BE ATTACHED TO EXISTING STRUCTURE)~~
3. ~~REMOVE AND DISPOSE OF EXISTING 72 INCH PIPE CULVERTS (TOTAL OF 6)~~
4. MATCH EXISTING SLOPE WITH SMOOTH TRANSITION
5. INSTALL SHORTCRETE SLOPE PROTECTION (8 INCH WITH REBAR)
6. 3 INCH ASPHALT CONCRETE OVER 9 INCHES CLASS 2 AB
7. INSTALL RUBICON SLIPGATES (OWNER PROVIDED - GATES ARE LOCATED AT TISDALE PUMP STATION YARD)
8. INSTALL 8'-0" CHAIN LINK FENCE WITH DOUBLE EXTENSION ARMS AND CONCERTINA WIRE (SEE DWG SD-01) AND NO CC MB MESH (CL-8)
9. INSTALL 20'-0" DOUBLE SWING CHAIN LINK GATE (CL-8)
10. INSTALL 7'-0" PEDESTRIAN GATE (FRAMED INTO CHAIN LINK FENCE)
11. ~~REMOVE AND DISPOSE OF EXISTING FENCE~~
12. INSTALL TRASH RACK (SEE DWG SD-02 FOR DETAIL)

GENERAL NOTES:

- SEE DWG G-004 GENERAL NOTES
- EXISTING RIP RAP SHALL BE PROTECT-IN-PLACE.

KEY NOTES CONTINUED:

13. INSTALL H PILE. TOTAL OF 3 FOR BOOM
14. INSTALL RECTANGULAR BAR GRATING (MCNICHOLS HEAVY WELD GHB 4" X ⅜ WITH BANDING" OR EQUAL).
15. INSTALL HANDRAIL. SEE DRAWING SD-03 FOR DETAIL.
16. ~~REMOVE AND DISPOSE OF EXISTING GANGWAY~~
17. INSTALL 48 INCH WATERMAN SCC-10 CANAL GATE OR EQUAL WITH NON-RISING STEM (TOTAL OF 2)
18. INSTALL SOLAR PANEL ASSEMBLY INCLUDING FOUNDATION IN ACCORDANCE WITH RUBICON MANUFACTURE RECOMMENDATION. CONDUIT SHALL BE RUN FROM GATE TO SOLAR PANEL.
19. INSTALL 150 FOOT HEAVY DUTY FLOATING BARRIER (10 FOOT ELASTEC BRUTE BOOM 18 INCH DIAMETER OR EQUAL)
20. INSTALL PRECAST OUTFALL STRUCTURE (BRIGGS MODEL 2-OF56, 4-OF57, AND 2-OF58 OR EQUAL - OWNER SUPPLIED). THE OUTFALL STRUCTURE SHALL BE INSTALLED SO THERE IS NO MORE THAN 1/4 INCH GAP BETWEEN STRUCTURES OR CONCRETE BLOCK.
21. INSTALL 2'X6'X2' CONCRETE BLOCKS (OLD CASTLE ECOLOGY BLOCK OR EQUAL) - TOTAL OF 26 BLOCKS

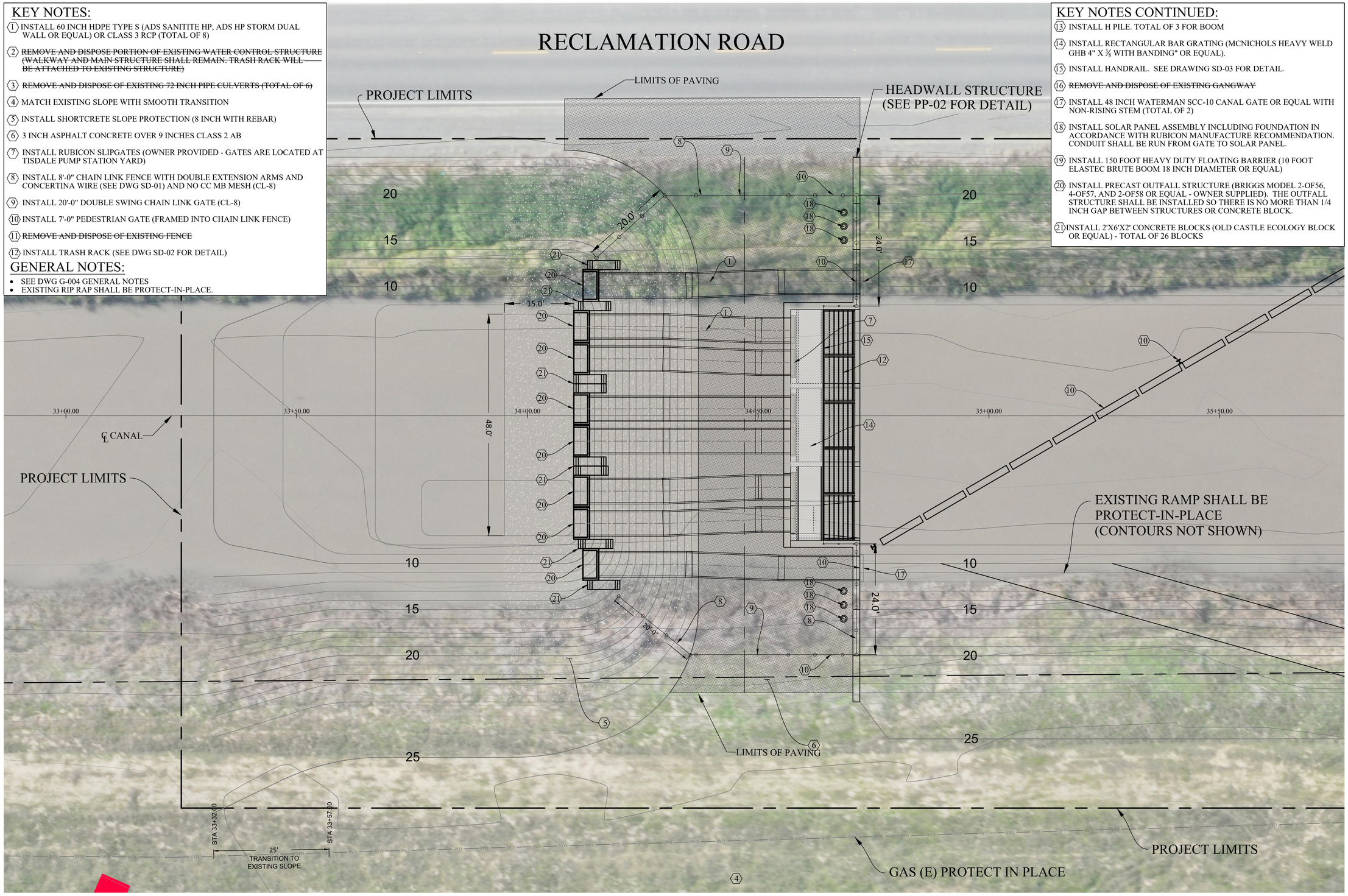

PLAN
1" = 10'

0 10 20 30
1" = 10'

REGISTERED PROFESSIONAL ENGINEER BRIAN M. MINARD No. C52595 Exp. 12-31-24 CIVIL STATE OF CALIFORNIA

NO.	DATE	REVISION	BY	APVD
1	7-21-22	ADD SOLAR PANEL PEDESTIAL AND CONTROLLERS		
2	9-19-22	NEW SHEET TO FOR STRUCTURE RELOCATION 200.0')		
3	4-06-23	REVISED - STRUCTURE RELOCATED DOWNSTREAM		

DSGN | DR | CHK | APVD

M·H·M ENGINEERS & SURVEYORS SINCE 1905

SUTTER MUTUAL WATER COMPANY
BOHANNON WATER CONTROL PROJECT
SUTTER COUNTY, CALIFORNIA, U.S.A.

SUTTER MUTUAL WATER COMPANY

BOHANNON CANAL
SITE LAYOUT

VERIFY SCALE
BAR IS ONE INCH ON ORIGINAL DRAWING.
0 1"

DATE	4/06/23
PROJ	22-120
DWG	PP-01A
SHEET	7A of 15

REVISED - ISSUED FOR CONSTRUCTION

REUSE OF DOCUMENTS: THIS DOCUMENT, AND THE IDEAS AND DESIGNS INCORPORATED HEREIN, AS AN INSTRUMENT OF PROFESSIONAL SERVICE, IS THE PROPERTY OF MHM INCORPORATED AND IS NOT TO BE USED, IN WHOLE OR IN PART, FOR ANY OTHER PROJECT WITHOUT THE WRITTEN AUTHORIZATION OF MHM INC.

©MHM INC 2022. ALL RIGHTS RESERVED.

KEY NOTES:

1. INSTALL 60 INCH HDPE TYPE S (ADS SANITITE HP, ADS HP STORM DUAL WALL OR EQUAL) OR CLASS 3 RCP (TOTAL OF 8)
2. ~~REMOVE AND DISPOSE PORTION OF EXISTING WATER CONTROL STRUCTURE (WALKWAY AND MAIN STRUCTURE SHALL REMAIN. TRASH RACK WILL BE ATTACHED TO EXISTING STRUCTURE)~~
3. ~~REMOVE AND DISPOSE OF EXISTING 72 INCH PIPE CULVERTS (TOTAL OF 6)~~
4. MATCH EXISTING SLOPE WITH SMOOTH TRANSITION
5. INSTALL SHORTCRETE SLOPE PROTECTION (8 INCH WITH REBAR)
6. 3 INCH ASPHALT CONCRETE OVER 9 INCHES CLASS 2 AB
7. INSTALL RUBICON SLIPGATES (OWNER PROVIDED - GATES ARE LOCATED AT TISDALE PUMP STATION YARD)
8. INSTALL 8'-0" CHAIN LINK FENCE WITH DOUBLE EXTENSION ARMS AND CONCERTINA WIRE (SEE DWG SD-01) AND NO CC MB MESH (CL-8)
9. INSTALL 20'-0" DOUBLE SWING CHAIN LINK GATE (CL-8)
10. INSTALL 7'-0" PEDESTRIAN GATE (FRAMED INTO CHAIN LINK FENCE)
11. ~~REMOVE AND DISPOSE OF EXISTING FENCE~~
12. INSTALL TRASH RACK (SEE DWG SD-02 FOR DETAIL)

GENERAL NOTES:

- SEE DWG G-004 GENERAL NOTES
- EXISTING RIP RAP SHALL BE PROTECT-IN-PLACE.

KEY NOTES CONTINUED:

13. INSTALL H PILE. TOTAL OF 3 FOR BOOM
14. INSTALL RECTANGULAR BAR GRATING (MCNICHOLS HEAVY WELD GHB 4" X ⅜ WITH BANDING" OR EQUAL).
15. INSTALL HANDRAIL. SEE DRAWING SD-03 FOR DETAIL.
16. ~~REMOVE AND DISPOSE OF EXISTING GANGWAY~~
17. INSTALL 48 INCH WATERMAN SCC-10 CANAL GATE OR EQUAL WITH NON-RISING STEM (TOTAL OF 2)
18. INSTALL SOLAR PANEL ASSEMBLY INCLUDING FOUNDATION IN ACCORDANCE WITH RUBICON MANUFACTURE RECOMMENDATION. CONDUIT SHALL BE RUN FROM GATE TO SOLAR PANEL SYSTEM.
19. INSTALL 150 FOOT HEAVY DUTY FLOATING BARRIER (10 FOOT ELASTEC BRUTE BOOM 18 INCH DIAMETER OR EQUAL)
20. INSTALL PRECAST OUTFALL STRUCTURE (BRIGGS MODEL 2-OF56, 4-OF57, AND 2-OF58 OR EQUAL - OWNER SUPPLIED). THE OUTFALL STRUCTURE SHALL BE INSTALLED SO THERE IS NO MORE THAN 1/4 INCH GAP BETWEEN STRUCTURES OR CONCRETE BLOCK.
21. INSTALL 2'X6'X2' CONCRETE BLOCKS (OLD CASTLE ECOLOGY BLOCK OR EQUAL) - TOTAL OF 26 BLOCKS

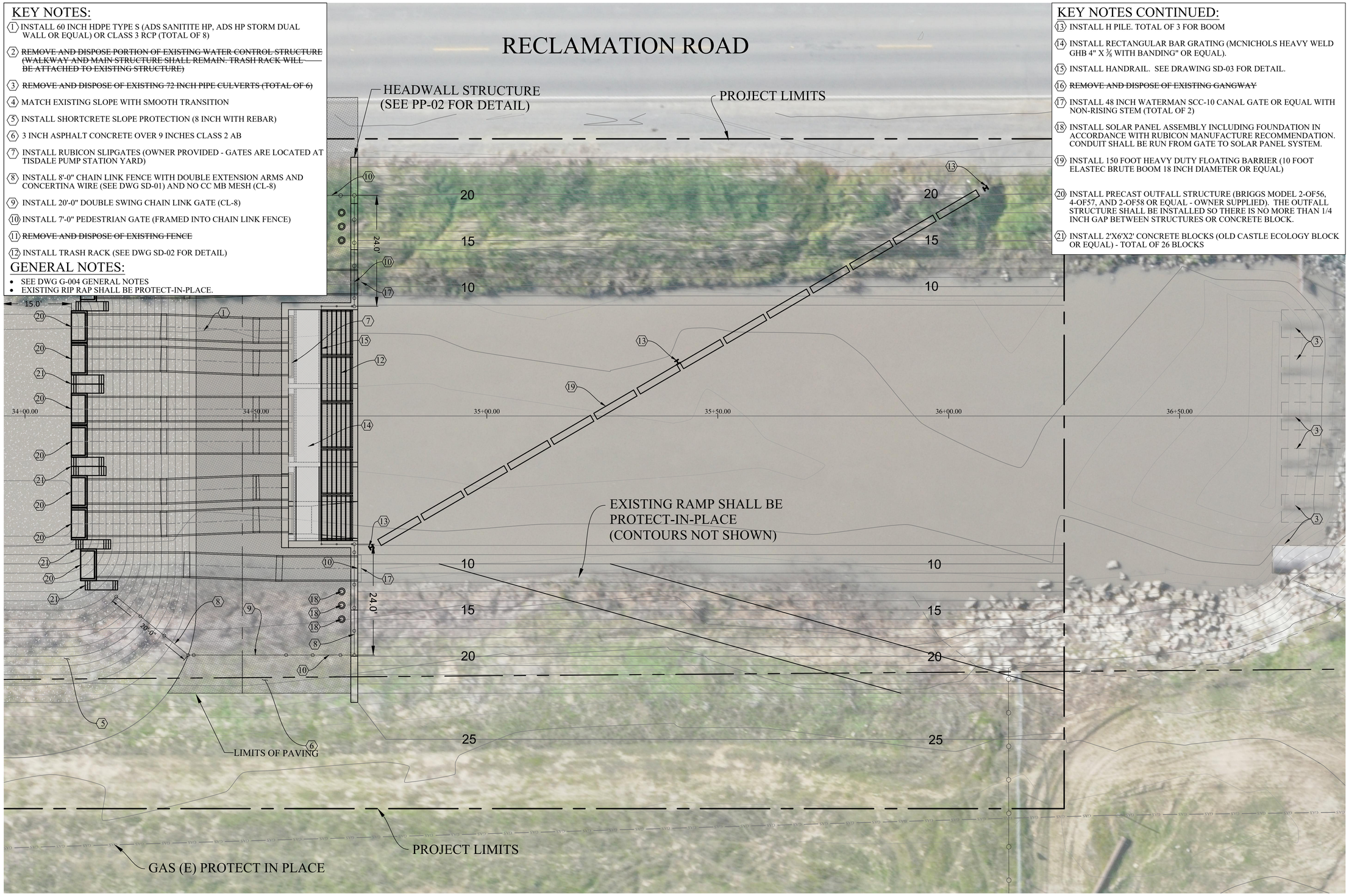

PLAN
1" = 10'

0 10 20 30
1" = 10'

REGISTERED PROFESSIONAL ENGINEER
BRIAN M. MINTO
No. C52555
Exp. 12-31-24
CIVIL
STATE OF CALIFORNIA

NO.	DATE	REVISION	BY	APVD
1	7-21-22	ADD SOLAR PANEL PEDESTIAL AND CONTROLLERS		
2	9-19-22	NEW SHEET TO FOR STRUCTURE RELOCATION (105.0')		
3	4-06-23	REVISED - STRUCTURE RELOCATED DOWNSTREAM		

DSGN | DR | CHK | APVD

M·H·M
ENGINEERS & SURVEYORS SINCE 1893

SUTTER MUTUAL WATER COMPANY
BOHANNON WATER CONTROL PROJECT
SUTTER COUNTY, CALIFORNIA, U.S.A.

SUTTER MUTUAL WATER COMPANY

BOHANNON CANAL
SITE LAYOUT

REUSE OF DOCUMENTS: THIS DOCUMENT, AND THE IDEAS AND DESIGNS INCORPORATED HEREIN, AS AN INSTRUMENT OF PROFESSIONAL SERVICE, IS THE PROPERTY OF MHM INCORPORATED AND IS NOT TO BE USED, IN WHOLE OR IN PART, FOR ANY OTHER PROJECT WITHOUT THE WRITTEN AUTHORIZATION OF MHM INC.

©MHM INC 2022. ALL RIGHTS RESERVED.

REVISED - ISSUED FOR CONSTRUCTION

VERIFY SCALE
BAR IS ONE INCH ON ORIGINAL DRAWING.
0 1"

DATE	4/06/23
PROJ	22-120
DWG	PP-01B
SHEET	7B of 15

KEY NOTES:

1. INSTALL 60 INCH HDPE TYPE S (ADS SANITITE HP, ADS HP STORM DUAL WALL OR EQUAL) OR CLASS 3 RCP (TOTAL OF 8)
2. ~~REMOVE AND DISPOSE PORTION OF EXISTING WATER CONTROL STRUCTURE (WALKWAY AND MAIN STRUCTURE SHALL REMAIN. TRASH RACK WILL BE ATTACHED TO EXISTING STRUCTURE)~~
3. ~~REMOVE AND DISPOSE OF EXISTING 72 INCH PIPE CULVERTS (TOTAL OF 6)~~
4. MATCH EXISTING SLOPE WITH SMOOTH TRANSITION
5. INSTALL SHORTCRETE SLOPE PROTECTION (8 INCH WITH REBAR)
6. 3 INCH ASPHALT CONCRETE OVER 9 INCHES CLASS 2 AB
7. INSTALL RUBICON SLIPGATES (OWNER PROVIDED - GATES ARE LOCATED AT TISDALE PUMP STATION YARD)

GENERAL NOTES:

- SEE DWG G-004 GENERAL NOTES
- EXISTING RIP RAP SHALL BE PROTECT-IN-PLACE.

KEY NOTES CONTINUED:

8. INSTALL 8'-0" CHAIN LINK FENCE WITH DOUBLE EXTENSION ARMS AND CONCERTINA WIRE (SEE DWG SD-01) AND NO CC MB MESH (CL-8)
9. INSTALL 20'-0" DOUBLE SWING CHAIN LINK GATE (CL-8)
10. INSTALL 7'-0" PEDESTRIAN GATE (FRAMED INTO CHAIN LINK FENCE)
11. ~~REMOVE AND DISPOSE OF EXISTING FENCE~~
12. INSTALL TRASH RACK (SEE DWG SD-02 FOR DETAIL)
13. INSTALL H PILE. TOTAL OF 3 FOR BOOM
14. INSTALL RECTANGULAR BAR GRATING (MCNICHOLS HEAVY WELD GHB 4" X 3/8 WITH BANDING" OR EQUAL).
15. INSTALL HANDRAIL. SEE DRAWING SD-03 FOR DETAIL.
16. ~~REMOVE AND DISPOSE OF EXISTING GANGWAY~~
17. INSTALL 48 INCH WATERMAN SCC-10 CANAL GATE OR EQUAL WITH NON-RISING STEM (TOTAL OF 2)
18. INSTALL SOLAR PANEL ASSEMBLY INCLUDING FOUNDATION IN ACCORDANCE WITH RUBICON MANUFACTURE RECOMMENDATION. CONDUIT SHALL BE RUN FROM SLIP GATE MOTOR TO THE SOLAR PANEL ASSEMBLY.
19. INSTALL 150 FOOT HEAVY DUTY FLOATING BARRIER (10 FOOT ELASTEC BRUTE BOOM 18 INCH DIAMETER OR EQUAL)
20. INSTALL PRECAST OUTFALL STRUCTURE (BRIGGS MODEL 2-OF56, 4-OF57, AND 2-OF58 OR EQUAL - OWNER SUPPLIED). THE OUTFALL STRUCTURE SHALL BE INSTALLED SO THERE IS NO MORE THAN 1/4 INCH GAP BETWEEN STRUCTURES OR CONCRETE BLOCK.
21. INSTALL 2'X6'X2' CONCRETE BLOCKS (OLD CASTLE ECOLOGY BLOCK OR EQUAL) - TOTAL OF 26 BLOCKS

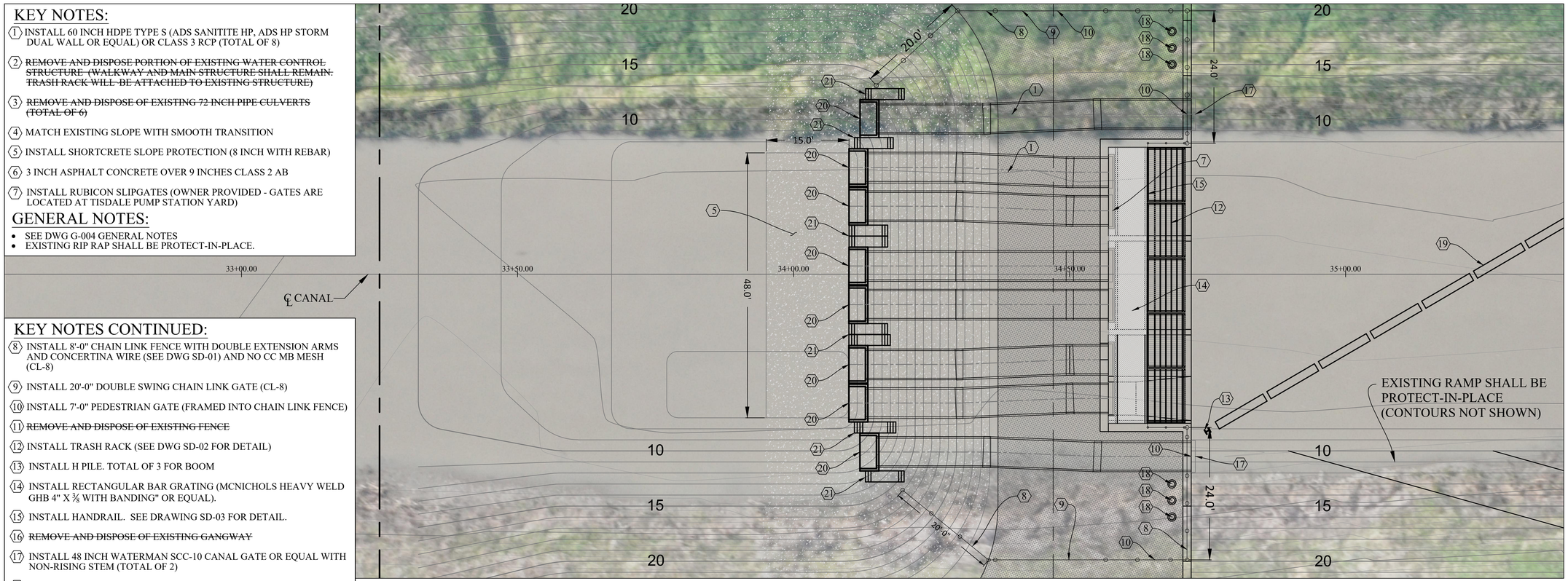

PLAN

1" = 10'

0 10 20 30

1" = 10'

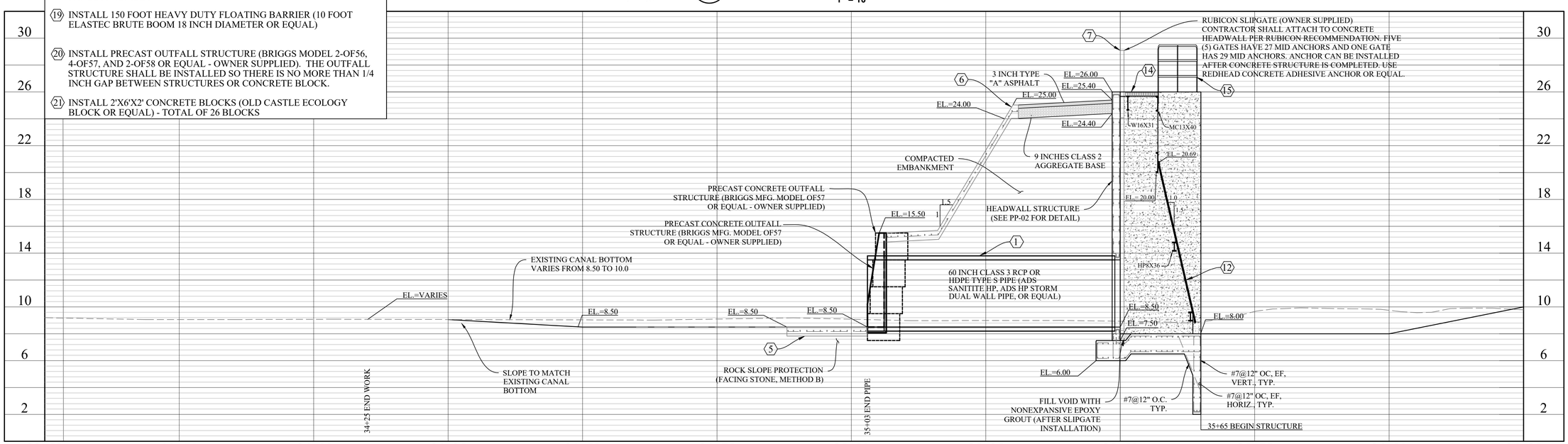

PROFILE

1" = 10' (H) 1" = 4' (V)

0 10 20 30

1" = 10'

NO.	DATE	REVISION	BY	APVD
1	9-19-22	NEW SHEET TO FOR STRUCTURE RELOCATION (105.0')		
2	2-26-23	REVISED - STRUCTURE RELOCATED DOWNSTREAM		

DSGN | DR | CHK | APVD

REGISTERED PROFESSIONAL ENGINEER REAM M. MINTO No. C52595 Exp. 12/31/24 CIVIL STATE OF CALIFORNIA

W·H·M ENGINEERS & SURVEYORS SINCE 1962

SUTTER MUTUAL WATER COMPANY
BOHANNON WATER CONTROL PROJECT
SUTTER COUNTY, CALIFORNIA, U.S.A.

SUTTER MUTUAL WATER COMPANY

PLAN AND PROFILE
BOHANNON WATER CONTROL
(STA 33+50 TO 36+25)

VERIFY SCALE
BAR IS ONE INCH ON ORIGINAL DRAWING.
0 1"

DATE	4/06/23
PROJ	22-120
DWG	PP-02
SHEET	8 of 15

REUSE OF DOCUMENTS: THIS DOCUMENT, AND THE IDEAS AND DESIGNS INCORPORATED HEREIN, AS AN INSTRUMENT OF PROFESSIONAL SERVICE, IS THE PROPERTY OF MHM INCORPORATED AND IS NOT TO BE USED, IN WHOLE OR IN PART, FOR ANY OTHER PROJECT WITHOUT THE WRITTEN AUTHORIZATION OF MHM INC.

©MHM INC 2022. ALL RIGHTS RESERVED.

REVISED - ISSUED FOR CONSTRUCTION

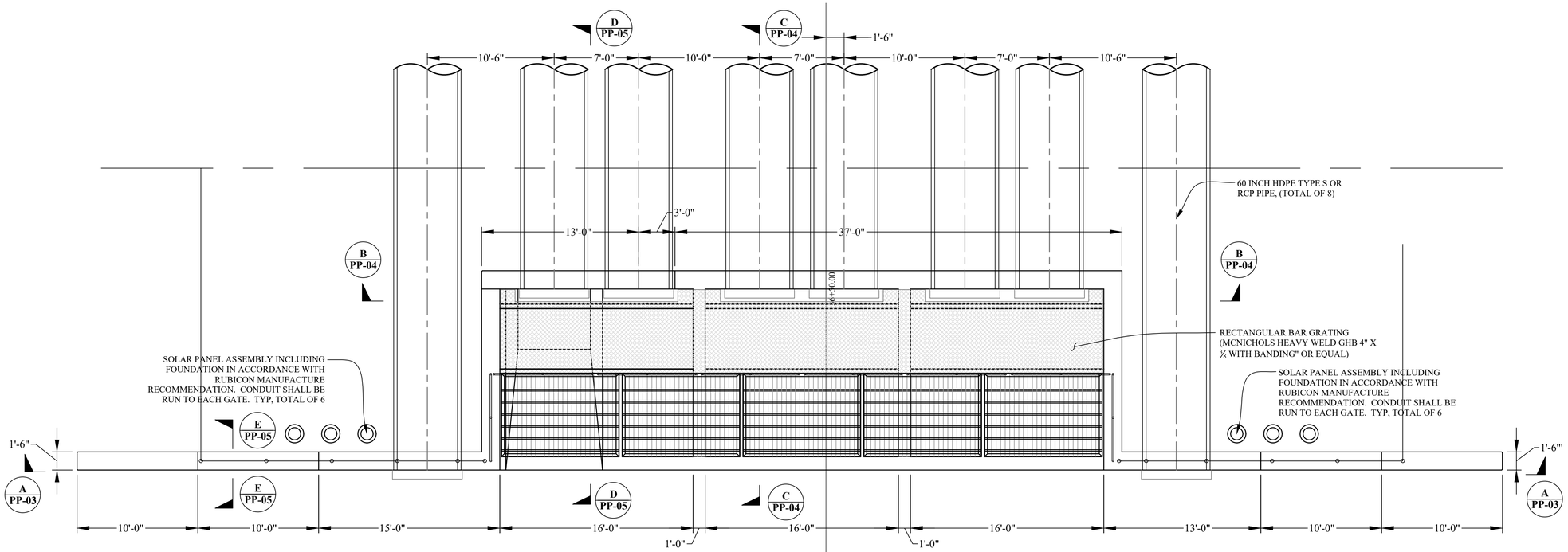

OUTFALL STRUCTURE - PLAN

SCALE 1"=5'-0"

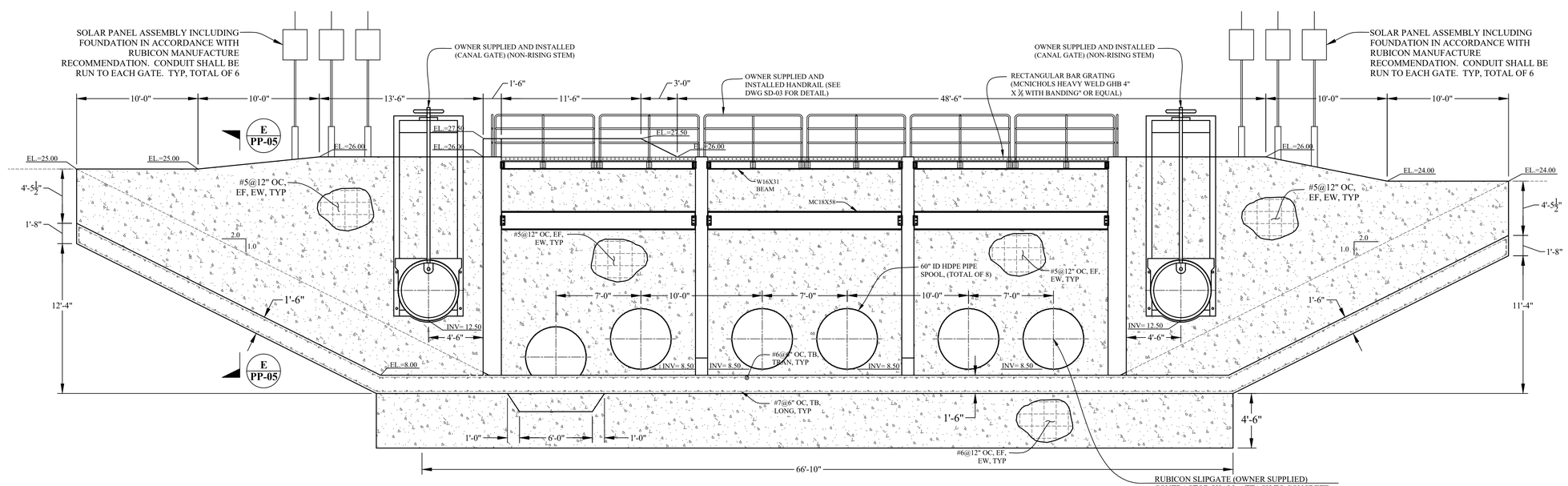

OUTFALL STRUCTURE - SECTION B-B

SCALE 1"=5'-0"

A PP-04

REGISTERED PROFESSIONAL ENGINEER REAN M. MINARD No. C52595 Exp. 12-31-24 CIVIL STATE OF CALIFORNIA

NO.	DATE	REVISION	DR	CHK	APVD	BY	APVD
1	4-06-23	REVISED - STRUCTURE RELOCATED DOWNSTREAM					

M·H·M ENGINEERS & SURVEYORS SINCE 1892

SUTTER MUTUAL WATER COMPANY
BOHANNON WATER CONTROL PROJECT
SUTTER COUNTY, CALIFORNIA, U.S.A.

SUTTER MUTUAL WATER COMPANY

PLAN
BAHANNON WATER CONTROL
PLAN VIEW

VERIFY SCALE
BAR IS ONE INCH ON ORIGINAL DRAWING.
0 1"

DATE	4/06/23
PROJ	22-120
DWG	PP-03
SHEET	9 of 15

REVISED - ISSUED FOR CONSTRUCTION

REUSE OF DOCUMENTS: THIS DOCUMENT, AND THE IDEAS AND DESIGNS INCORPORATED HEREIN, AS AN INSTRUMENT OF PROFESSIONAL SERVICE, IS THE PROPERTY OF MHM INCORPORATED AND IS NOT TO BE USED, IN WHOLE OR IN PART, FOR ANY OTHER PROJECT WITHOUT THE WRITTEN AUTHORIZATION OF MHM INC.

©MHM INC 2022. ALL RIGHTS RESERVED.

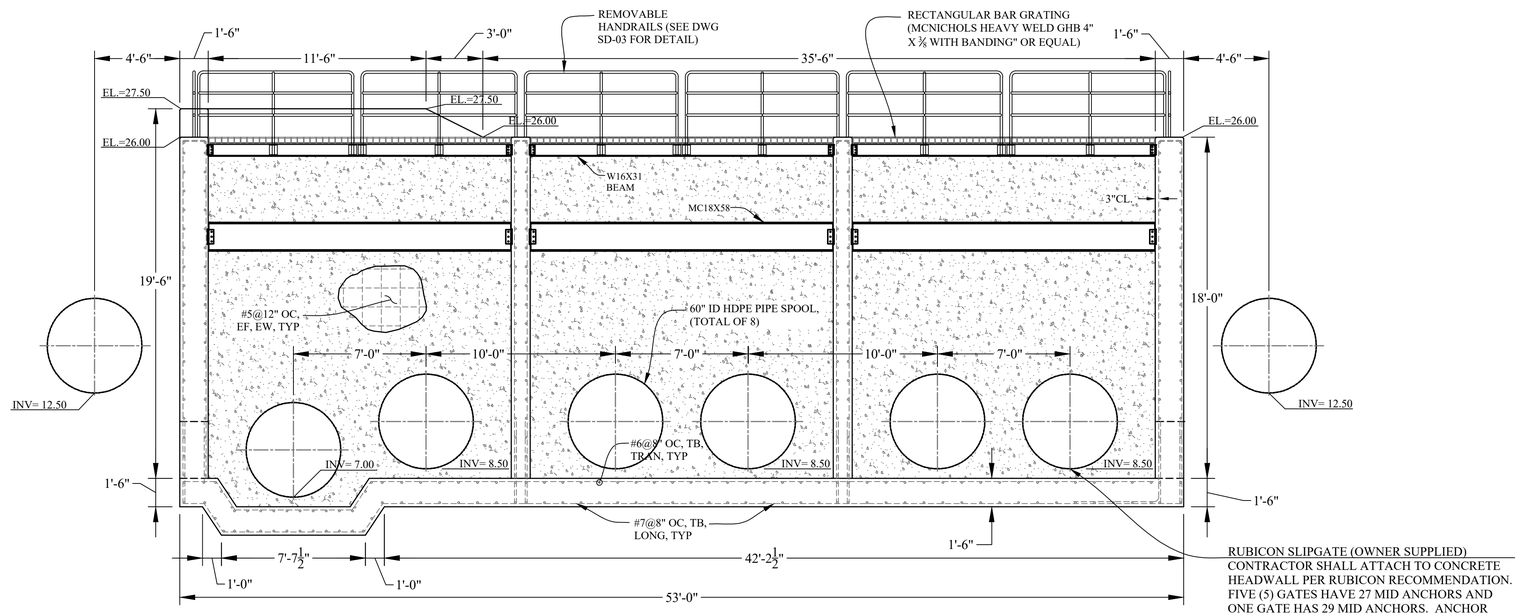

OUTFALL STRUCTURE - SECTION A-A

SCALE 1"=4'-0"

B
PP-04

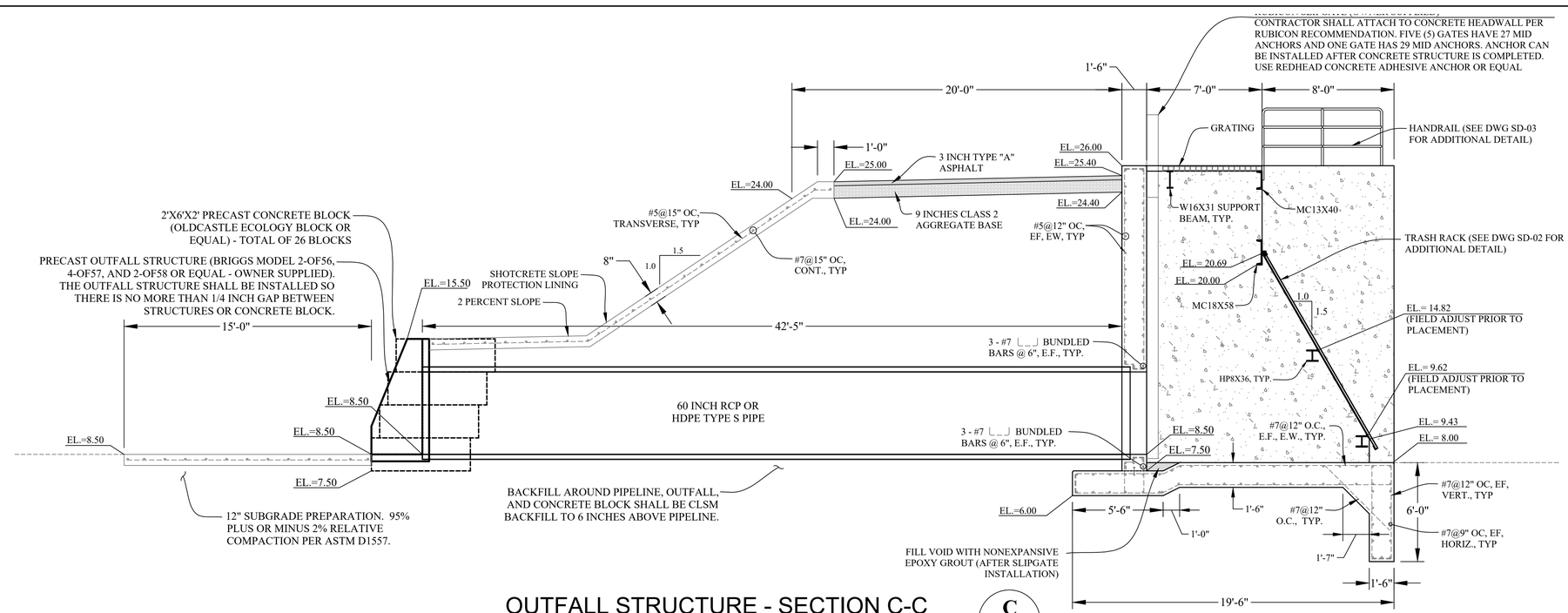

OUTFALL STRUCTURE - SECTION C-C

SCALE 1"=4'-0"

C
PP-04

NO.	DATE	DR	CHK	APVD	BY	APVD
2	2-26-23	REVISED - STRUCTURE RELOCATED DOWNSTREAM				

REVISION

DSGN

M·H·M ENGINEERS & SURVEYORS SINCE 1907

SUTTER MUTUAL WATER COMPANY
BOHANNON WATER CONTROL PROJECT
SUTTER COUNTY, CALIFORNIA, U.S.A.

SUTTER MUTUAL WATER COMPANY

SECTIONS
BAHANNON WATER CONTROL
SECTIONS - 1

VERIFY SCALE
BAR IS ONE INCH ON ORIGINAL DRAWING
0 1"

DATE	4/06/23
PROJ	22-120
DWG	PP-04
SHEET	10 of 15

REVISED - ISSUED FOR CONSTRUCTION

REUSE OF DOCUMENTS: THIS DOCUMENT, AND THE IDEAS AND DESIGNS INCORPORATED HEREIN, AS AN INSTRUMENT OF PROFESSIONAL SERVICE, IS THE PROPERTY OF MHM INCORPORATED AND IS NOT TO BE USED, IN WHOLE OR IN PART, FOR ANY OTHER PROJECT WITHOUT THE WRITTEN AUTHORIZATION OF MHM INC.
©MHM INC 2022. ALL RIGHTS RESERVED.

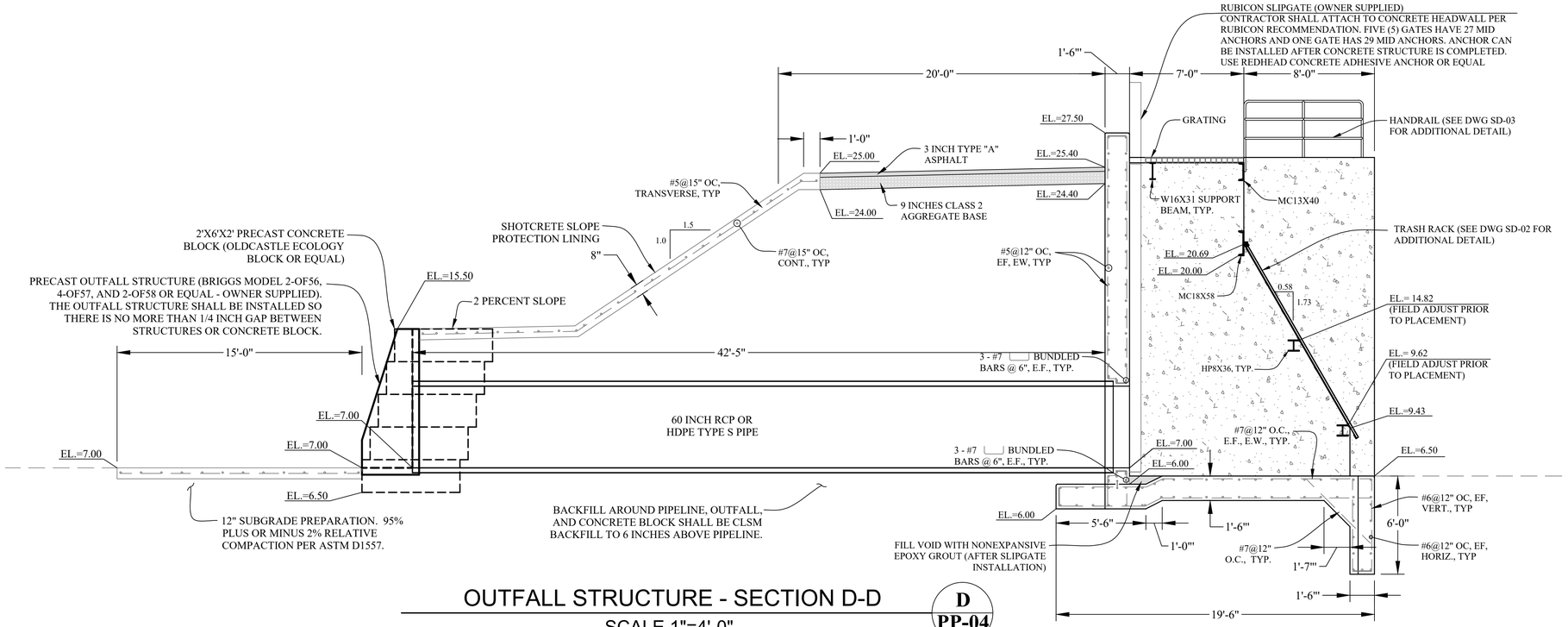

OUTFALL STRUCTURE - SECTION D-D

SCALE 1"=4'-0"

D
PP-04

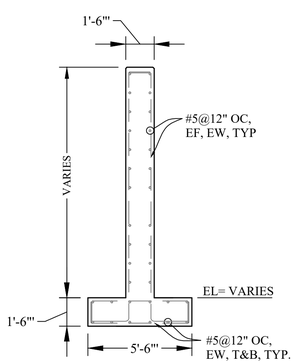

OUTFALL STRUCTURE - SECTION E-E

SCALE 1"=4'-0"

E
PP-05

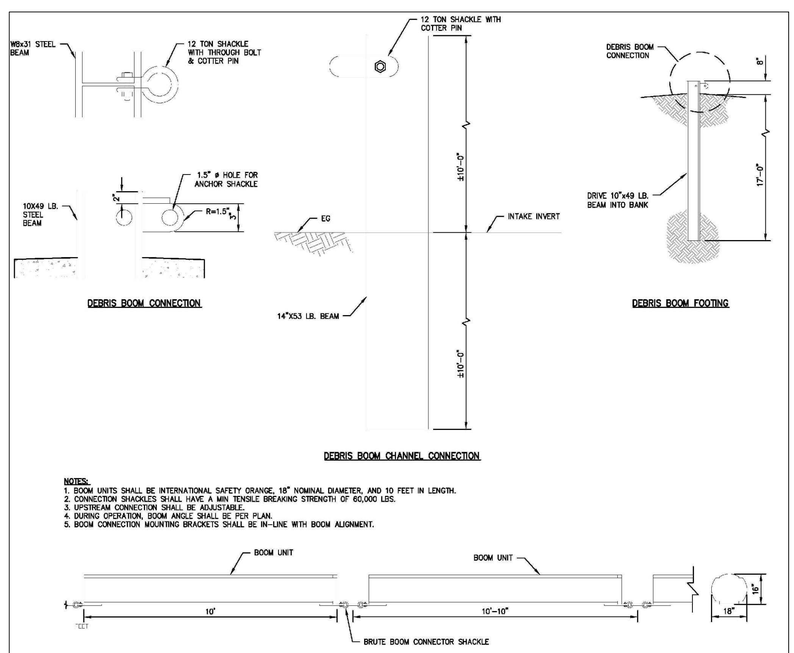

BRUTE DEBRIS BOOM - DETAIL

SCALE 1"=3'-0"

F
PP-05

NO.	DATE	REVISION	DR	CHK	APVD	BY	APVD
2	2-26-23	REVISED - STRUCTURE RELOCATED DOWNSTREAM					

REGISTERED PROFESSIONAL ENGINEER BRIAN M. MINTO No. C52595 Exp. 12-31-24 CIVIL STATE OF CALIFORNIA

M·H·M ENGINEERS & SURVEYORS SINCE 1970

SUTTER MUTUAL WATER COMPANY
BOHANNON WATER CONTROL PROJECT
SUTTER COUNTY, CALIFORNIA, U.S.A.

SUTTER MUTUAL WATER COMPANY

SECTIONS
BAHANNON WATER CONTROL
SECTIONS - 2

REUSE OF DOCUMENTS: THIS DOCUMENT, AND THE IDEAS AND DESIGNS INCORPORATED HEREIN, AS AN INSTRUMENT OF PROFESSIONAL SERVICE, IS THE PROPERTY OF MHM INCORPORATED AND IS NOT TO BE USED, IN WHOLE OR IN PART, FOR ANY OTHER PROJECT WITHOUT THE WRITTEN AUTHORIZATION OF MHM INC.

©MHM INC 2022. ALL RIGHTS RESERVED.

REVISED - ISSUED FOR CONSTRUCTION

VERIFY SCALE
BAR IS ONE INCH ON ORIGINAL DRAWING.
0 1"

DATE	4/06/23
PROJ	22-120
DWG	PP-05
SHEET	11 of 15

KEY NOTES:

1. INSTALL H-PILES. TOP SHALL BE AT ELEVATION 22.0 AND BOTTOM SHALL BE ELEVATION -15.0
2. INSTALL 150 FOOT HEAVY DUTY FLOATING BARRIER (10 FOOT ELASTEC BRUTE BOOM 18 INCH DIAMETER OR EQUAL)
3. INSTALL RECTANGULAR BAR GRATING (MCNICHOLS HEAVY WELD GHB 4" X ⅜ WITH BANDING" OR EQUAL).
4. INSTALL SHORTCRETE SLOPE PROTECTION (8 INCH WITH REBAR)
5. INSTALL TRASH RACK (SEE DWG SD-03 FOR MORE DETAIL)
6. INSTALL RUBICON SLIPGATES (OWNER PROVIDED - GATES ARE LOCATED AT TISDALE PUMP STATION YARD)
7. ~~INSTALL 4 X 52 X 2 CONCRETE SLAB. REBAR SHALL BE #4 @ 12 INCH ON CENTER BOTH WAYS~~

GENERAL NOTES:

SEE DWG G-004 GENERAL NOTES

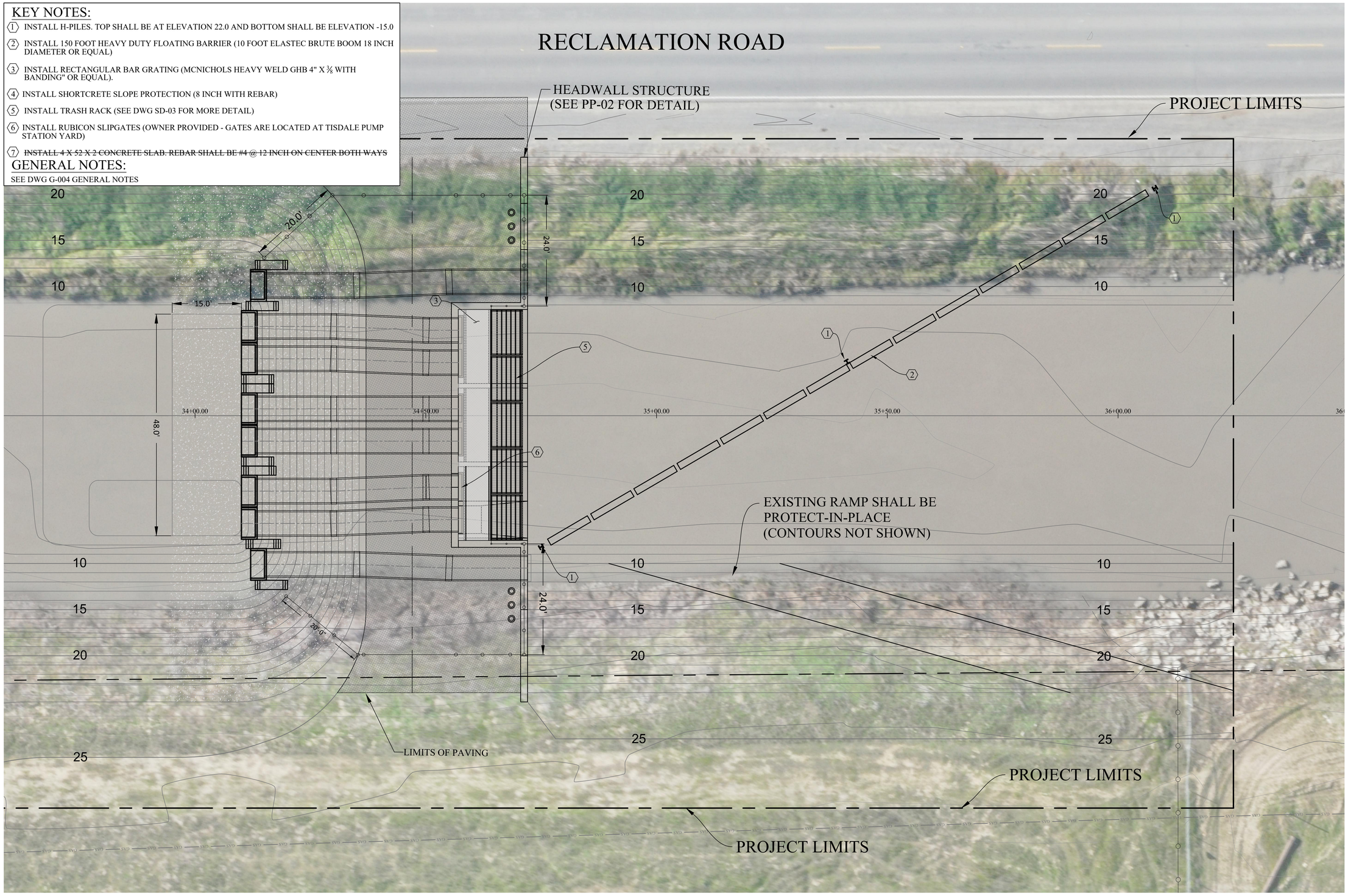

PLAN
1" = 10'

0 10 20 30
1" = 10'

REGISTERED PROFESSIONAL ENGINEER
BRIAN M. MINARD
No. C52595
Exp. 12/31/24
CIVIL
STATE OF CALIFORNIA

NO.	DATE	REVISION	BY	APVD
DSGN	DR	CHK	APVD	
1	2-26-23	REVISED - STRUCTURE RELOCATED DOWNSTREAM		

M·H·M
ENGINEERS & SURVEYORS SINCE 1892

SUTTER MUTUAL WATER COMPANY
BOHANNON WATER CONTROL PROJECT
SUTTER COUNTY, CALIFORNIA, U.S.A.

SUTTER MUTUAL WATER COMPANY

BOHANNON CANAL
SITE LAYOUT

VERIFY SCALE
BAR IS ONE INCH ON ORIGINAL DRAWING.
0 1"

DATE	4/06/23
PROJ	22-120
DWG	PP-06
SHEET	12 of 15

REVISED - ISSUED FOR CONSTRUCTION

REUSE OF DOCUMENTS: THIS DOCUMENT, AND THE IDEAS AND DESIGNS INCORPORATED HEREIN, AS AN INSTRUMENT OF PROFESSIONAL SERVICE, IS THE PROPERTY OF MHM INCORPORATED AND IS NOT TO BE USED, IN WHOLE OR IN PART, FOR ANY OTHER PROJECT WITHOUT THE WRITTEN AUTHORIZATION OF MHM INC.
©MHM INC 2022. ALL RIGHTS RESERVED.

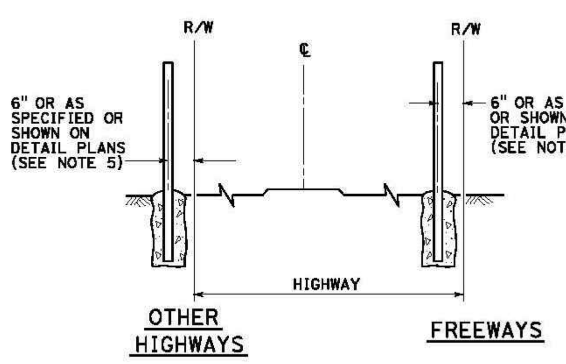

FENCE LOCATION

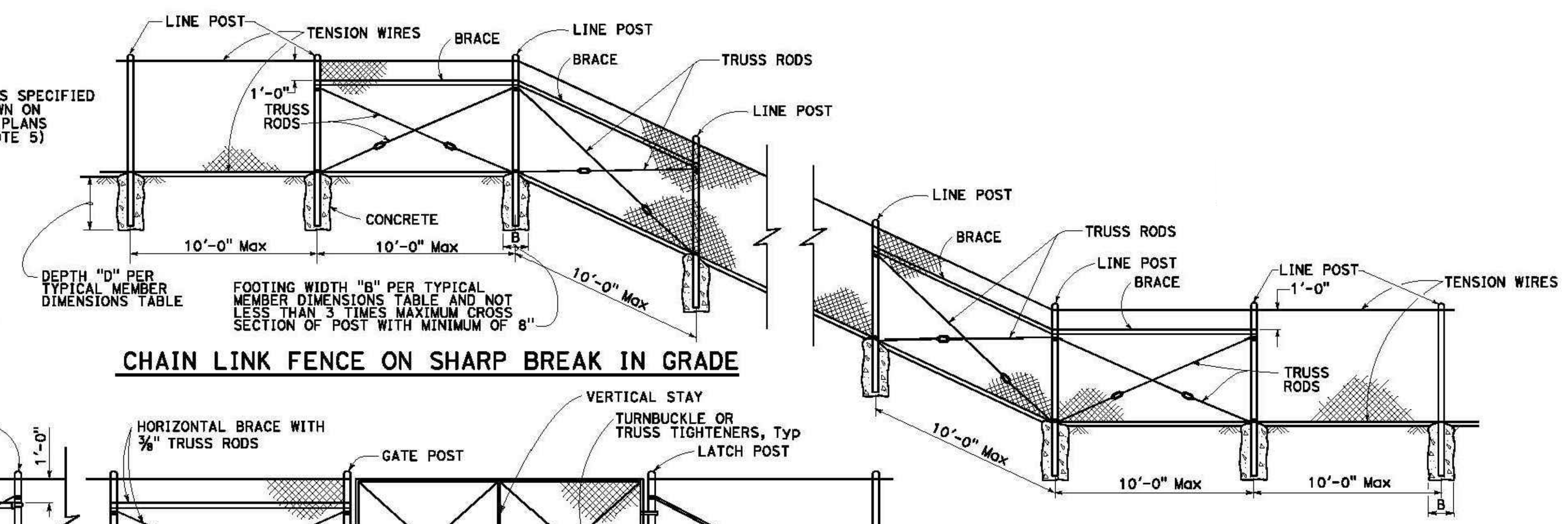

CHAIN LINK FENCE ON SHARP BREAK IN GRADE

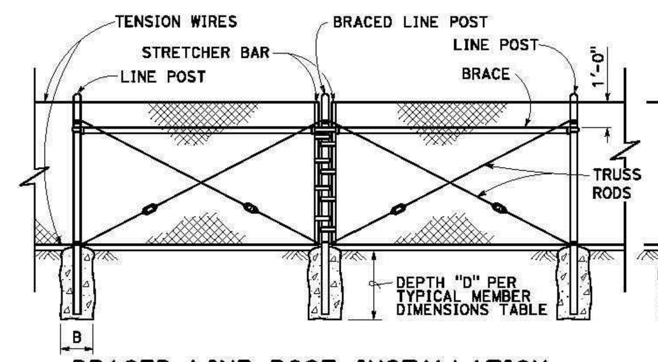

BRACED LINE POST INSTALLATION

Braced line post at intervals not exceeding 1000'

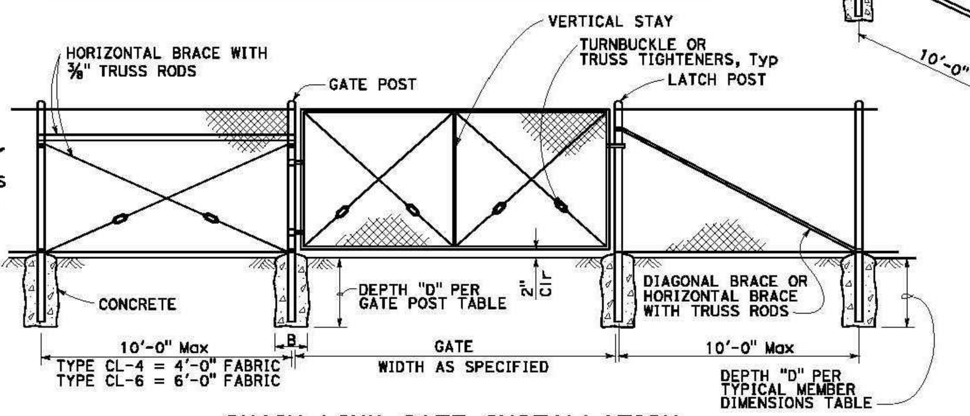

CHAIN LINK GATE INSTALLATION

Maximum Gate Width is 12'-0"
Vertical Stay is required in middle of gate greater than 8'-0" in width.

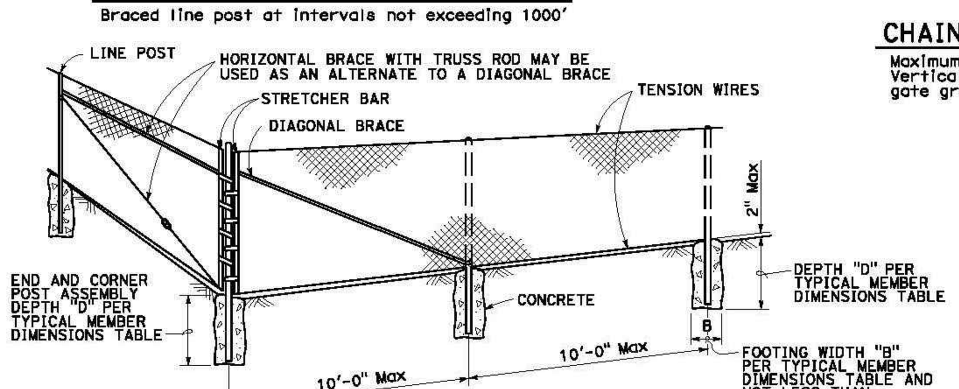

CORNER POST

GATE POST

FENCE HEIGHT (Max)	SLATTED	B (in)	D (ft)	ROUND PIPE SECTION	ROUND OD PIPE	WEIGHT (lb/ft)
5'-0"	NO	12"	2'-6"	3 Std	3.50"	7.58
6'-0"	NO	12"	2'-6"	3 Std	3.50"	7.58
8'-0"	NO	12"	3'-0"	3 Std	3.50"	7.58
10'-0"	NO	14"	3'-6"	3 Std	3.50"	7.58
5'-0"	YES	12"	3'-0"	3½ Std	4.00"	9.12
6'-0"	YES	14"	3'-6"	4 Std	4.50"	10.80
8'-0"	YES	18"	3'-6"	5 Std	5.56"	14.60
10'-0"	YES	20"	4'-0"	6 Std	6.63"	19.00

Above post dimensions and weights are minimums.
Larger sizes may be used upon approval.

TYPICAL MEMBER DIMENSIONS (See Notes)

				LINE POSTS					BRACES				
				ROUND PIPE			ROLL FORMED		ROUND PIPE			ROLL FORMED	
FENCE HEIGHT (Max)	SLATTED	B (in)	D (ft)	SECTION	ROUND OD PIPE	WEIGHT (lb/ft)	SECTION	WEIGHT (lb/ft)	SECTION	ROUND OD PIPE	WEIGHT (lb/ft)	SECTION	WEIGHT (lb/ft)
5'-0"	NO	8"	2'-6"	1½ Std	1.90"	2.72	1.875" x 1.625"	1.85	1½" Std	1.90"	2.72	1.625" x 1.250"	1.35
6'-0"	NO	10"	2'-6"	2 Std	2.38"	3.66	1.875" x 1.625"	2.40	2 Std	2.38"	3.66	1.625" x 1.250"	1.35
8'-0"	NO	12"	3'-0"	2½ Std	2.88"	5.80	3.250" x 2.500"	4.50	2 Std	2.38"	3.66	1.625" x 1.250"	1.35
10'-0"	NO	14"	3'-6"	3 Std	3.50"	7.58	3.250" x 2.500"	4.50	2½ Std	2.88"	5.80	1.625" x 1.250"	1.35
5'-0"	YES	12"	3'-0"	3½ Std	4.00"	9.12	N/A	-	2 Std	2.38"	3.66	N/A	-
6'-0"	YES	14"	3'-0"	4 Std	4.50"	10.80	N/A	-	2 Std	2.38"	3.66	N/A	-
8'-0"	YES	18"	3'-6"	5 Std	5.56"	14.60	N/A	-	2 Std	2.38"	3.66	N/A	-
10'-0"	YES	20"	4'-0"	6 Std	6.63"	19.00	N/A	-	2½ Std	2.88"	5.80	N/A	-

NOTES:

1. The table to the right shows minimum sized posts and braces complying with the specifications. Larger or heavier post and brace sizes may be used upon approval.
2. Sections shown in the tables must also comply with the strength requirements and other provisions of the Specifications.
3. Other sections which comply with the strength requirements and other provisions of the Specifications may be used upon approval.
4. Options exercised shall be uniform on any one project.
5. Offset to be 2'-0" at monument locations, measured at right angles to R/W lines. Taper to achieve offset to be at least 20'-0" long.
6. See Standard Plan A85B for Brace, Stretcher Bar, and Truss Tightener Details.

STATE OF CALIFORNIA
DEPARTMENT OF TRANSPORTATION

CHAIN LINK FENCE

NO SCALE

A85

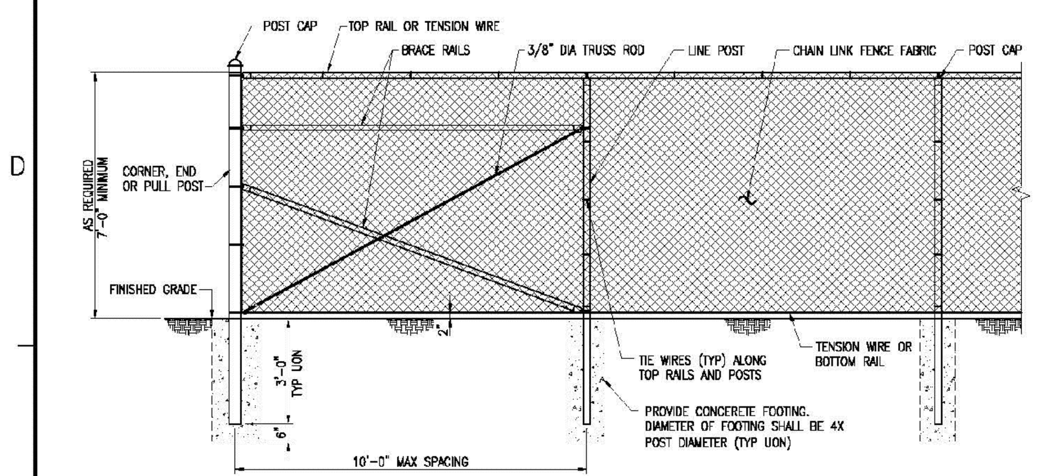

TYPICAL FENCE AND CORNER PANEL ELEVATION

SCALE: 1" = 1'-0"

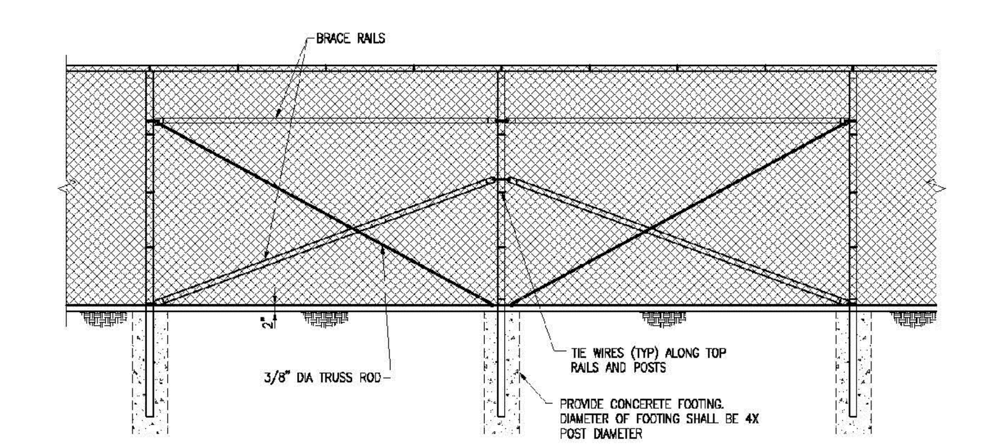

TYPICAL FENCE AND BRACED PANEL ELEVATION

SCALE: 1" = 1'-0"

NOTE (1): A BOTTOM RAIL CAN BE ADDED FOR SECURITY, IT SHALL BE INSTALLED APPROX 3" ABOVE GRADE (A MINIMUM OF 2" AND A MAXIMUM OF 4"). HARDWARE SHALL BE WELDED OR SHOT NAILED TO POSTS AND RAILS IN ORDER TO SECURE IN PLACE. ATTACH FABRIC TO NEW BOTTOM RAIL TO ELIMINATE POSSIBILITY OF PEELING UP FABRIC.

NOTE (2): SOME LOCATIONS MAY REQUIRE 8' OF FABRIC.

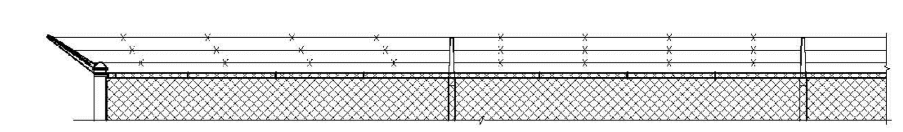

TYPICAL 3 STRAND BARBED WIRE AND SINGLE EXTENSION ARM CONFIGURATION

SCALE: 1" = 1'-0"

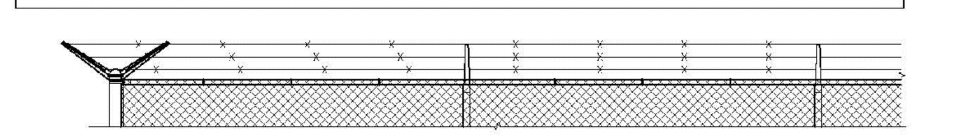

TYPICAL 6 STRAND BARBED WIRE AND DOUBLE EXTENSION ARM CONFIGURATION

SCALE: 1" = 1'-0"

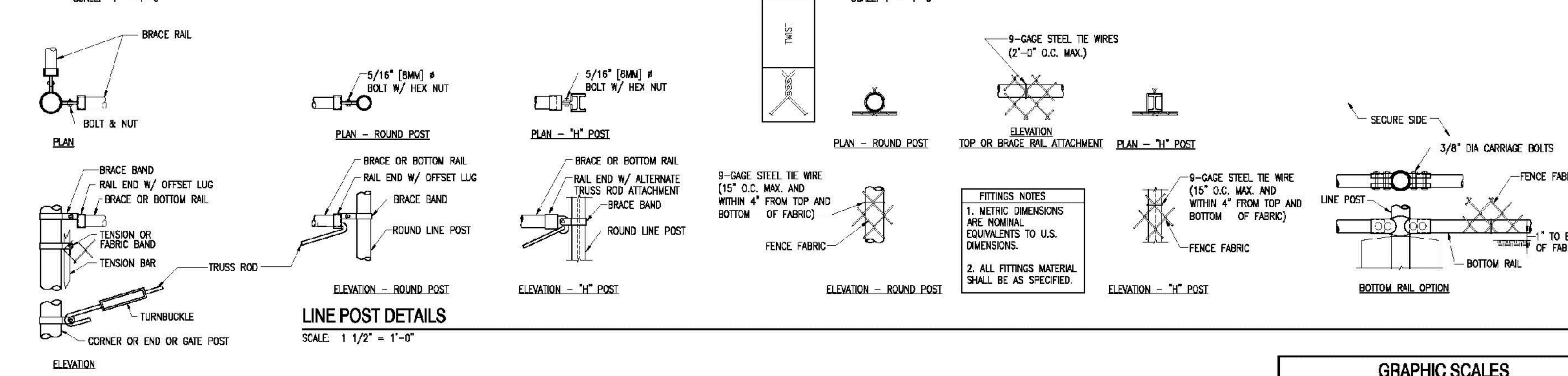

CORNER OR END POSTS

SCALE: 1 1/2" = 1'-0"

LINE POST DETAILS

SCALE: 1 1/2" = 1'-0"

GRAPHIC SCALES

1" = 1'-0"
1 1/2" = 1'-0"

UNIFIED FACILITIES CRITERIA 4-022-03 SECURITY ENGINEERING: FENCES, GATES AND GUARD FACILITIES
DEFINITIVE DRAWINGS FOR SECURITY FENCING, GATES AND CABLING

CHAIN LINK FENCE AND DETAILS

UFC-700

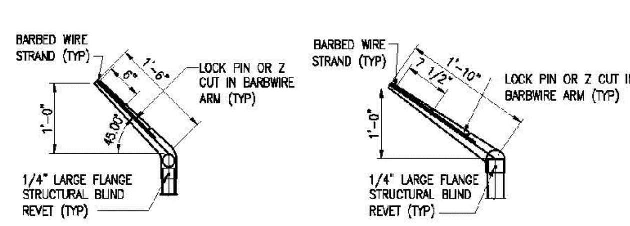

SINGLE EXTENSION ARM DETAILS

SCALE: 1" = 1'-0"

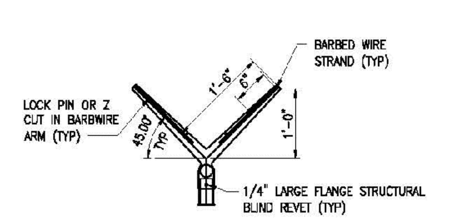

DOUBLE EXTENSION ARM DETAILS

SCALE: 1" = 1'-0"

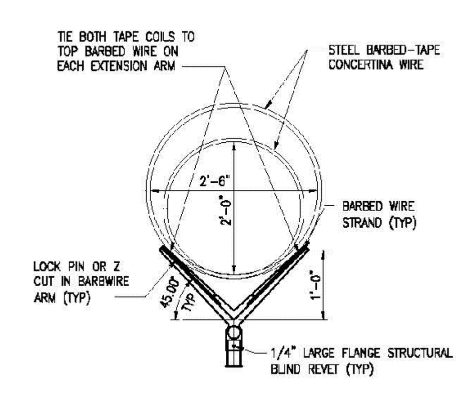

CONCERTNA WIRE MOUNTING

SCALE: 1" = 1'-0"

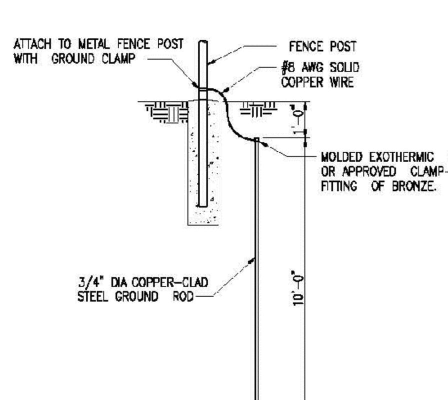

GROUNDING DETAIL

NO SCALE

CHAIN LINK FENCING NOTES

1. FABRIC: THE STANDARD FENCE FABRIC SHALL BE VINYL, ZINC OR ALUMINUM-COATED STEEL WIRE CHAIN LINK WITH MESH OPENINGS NOT LARGER THAN TWO INCHES PER SIDE AND A TWISTED AND BARBED SELVAGE AT TOP AND BOTTOM IN ACCORDANCE WITH THE SPECIFICATIONS. UTILIZE 6-GAUGE FOR BASE PERIMETER OR HEIGHTENED SECURITY ZONES AND 9-GAUGE FOR BASE INTERIOR OR WHEN JOINING AN EXISTING FENCE WHICH IS ALREADY 9-GAUGE.
2. FABRIC TIES: ONLY 12-GAUGE STEEL TIES SHALL BE USED. COATING OR PLATING WILL BE ELECTROLYTICALLY COMPATIBLE WITH THE FENCE FABRIC TO INHIBIT CORROSION.
3. REINFORCEMENT: TENSION WIRES SHALL BE INSTALLED AND INTERWOVEN (OR AFFIXED WITH FABRIC TIES) ALONG THE TOP & BOTTOM OF THE FENCE FOR STABILIZATION OF THE FENCE FABRIC.
4. FENCE HEIGHT: CHAIN LINK FABRIC SHALL BE 7' HIGH WITH AN ADDITIONAL 1' IN HEIGHT COMPOSED OF 3 STRANDS OF BARBED WIRE AS REQUIRED. THE TOTAL FENCE HEIGHT SHALL BE 8'.
5. GROUND CLEARANCE: BOTTOM OF THE FENCE FABRIC SHALL BE WITHIN TWO INCHES OF FIRM SOIL.
6. TOP GUARDS: A TOP GUARD IS AN OVERHANG OF BARBED WIRED ALONG THE TOP OF A FENCE, FACING OUTWARD (AWAY FROM PROTECTED SITE) AND UPWARD AT APPROX. 45 ANGLE. TOP GUARD SUPPORTING ARMS WILL BE PERMANENTLY AFFIXED TO THE TOP OF FENCE POSTS TO INCREASE THE OVERALL HEIGHT OF THE FENCE AT LEAST 1 FOOT. THREE STRANDS OF 12-GAUGE BARBED WIRE, EQUALLY SPACED, SHALL BE INSTALLED ON THE SUPPORTING ARMS.
7. FENCE POSTS: SHALL BE ASTM F1043 OR F1083 ROUND PIPE OR SQUARE TUBE AND SHALL BE GALVANIZED IN ACCORDANCE WITH THE SPECIFICATIONS. FENCE POST SPACING AND SIZE (DIAMETER) SHALL BE DETERMINED IN ACCORDANCE WITH CHAIN LINK FENCE MANUFACTURERS' INSTITUTE (WLG 2445). SPACING SHALL NOT EXCEED 10'-0" OC. SIZE (DIAMETER) SHALL NOT BE LESS THAN THAT SPECIFIED.

GRAPHIC SCALES

1" = 1'-0"

UNIFIED FACILITIES CRITERIA 4-022-03 SECURITY ENGINEERING: FENCES, GATES AND GUARD FACILITIES
DEFINITIVE DRAWINGS FOR SECURITY FENCING, GATES AND CABLING

BARBED WIRE ARRANGEMENT DETAILS

UFC-701

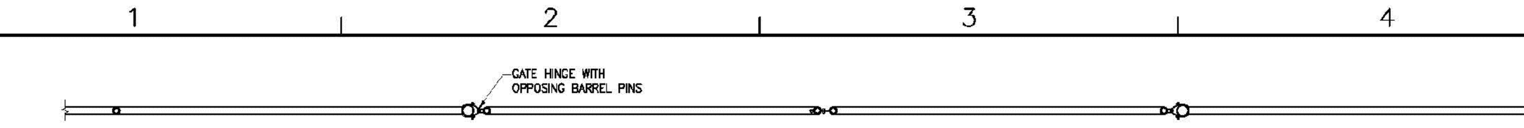

PLAN - DOUBLE SWING GATE

SCALE: 1" = 1'-0"

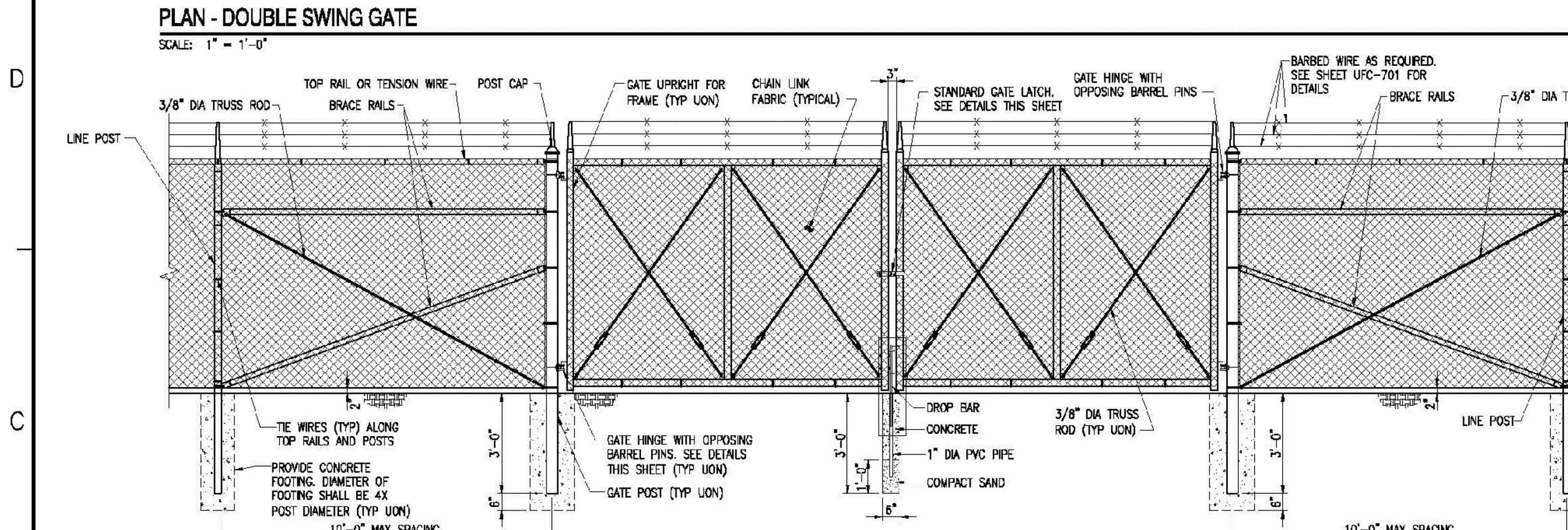

TYPICAL DOUBLE SWING GATE ELELVATION

SCALE: 1/2" = 1'-0"

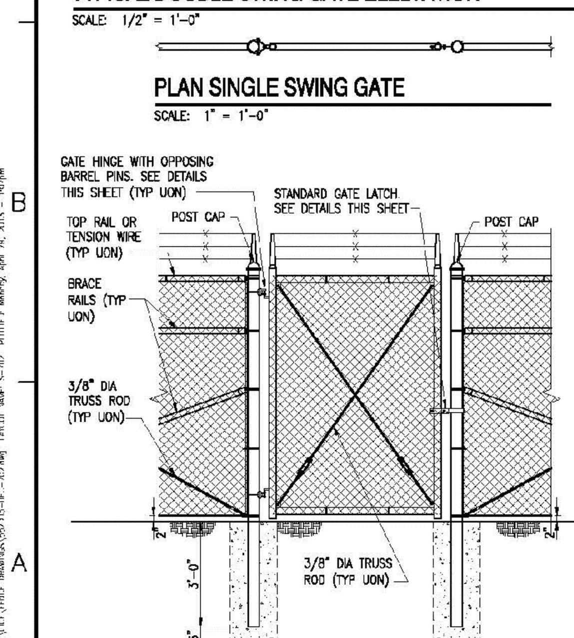

PLAN SINGLE SWING GATE

SCALE: 1" = 1'-0"

TYPICAL FENCE SINGLE SWING GATE ELELVATION

SCALE: 1/2" = 1'-0"

SINGLE OR DOUBLE LEAF GATES		
NOM HEIGHT (H)	UPRIGHT HT (U)	FRAME HT (F)
NOM HT INCLUDING BARBED WIRE	ACTUAL DIM	ACTUAL DIM
8'-0" [2438MM]	7'-10" [2388MM]	6'-8 1/2" [2045MM]

SINGLE LEAF GATES		
OPENING	GATE POSTS	HINGE SPACE (S)
FACE TO FACE	SQUARE & ROUND SIZES	POST TO UPRIGHT
3'-0" [914MM] THROUGH 6'-0" [1829MM]	2.5"[63.5MM]SQ x 3/16"TH OR 2.875" [73MM] OD	FOR SQUARE & ROUND GATE POSTS: 2 1/4" [57MM]
6'-0" [1829MM] THROUGH 12'-0" [3657MM]	4" [102MM] SQ x 3/16"TH OR 4" [102MM] OD	FOR SQUARE & ROUND GATE POSTS: 2 1/4" [57MM]
12'-0" [3657MM] THROUGH 19'-0" [5790MM]	6" [153MM] SQ x 3/16"TH OR 6.625" [168MM] OD	FOR SQUARE & ROUND GATE POSTS: 2 1/4" [57MM]
19'-0" [5790MM] THROUGH 23'-0" [7010MM]	8" [203MM] SQ x 1/4"TH OR 8.625" [219MM] OD	FOR SQUARE & ROUND GATE POSTS: 2 1/4" [57MM]

GATE POSTS & FOUNDATIONS: GATE POST SIZE AND ASSOCIATED FOOTING DIAMETER TO BE DETERMINED BY MANUFACTURER, BASED ON LEAF WEIGHT & DIMENSION, BUT NOT LESS THAN DIAMETER SHOWN ON THESE DRAWINGS. MINIMUM FOOTING DIAMETERS (TO BE FILLED W/4000 PSI CONC): 40" ø FOR 8" POST; 36" ø FOR 6" POST; 24" ø FOR 4" POST; OTHER SIZES TO BE DESIGNED BY MFR OR KTR. NO FOOTING WIDTH SHALL BE LESS THAN 4(X) THE POST WIDTH.

NOTE: IF GATE HINGES ARE NOT OPPOSING (AS SHOWN ABOVE) OR LEAF IS NOT LOCKED MECHANICALLY TO THE HINGES, WELD AN ANGLE, PLATE, OR BLOCK ABOVE HINGE TO RESTRICT LEAF FROM BEING REMOVED OR LIFTED OFF. RESTRICTION SHALL NOT HINDER OPERATION OF GATE.

NOTE: PROVIDE ONE DROP BAR FOR EACH LEAF (TYP). ASSOCIATED GALV SLEEVES TO BE INSTALLED FLUSH WILL GRADE AT FULLY OPEN AND CLOSED POSITIONS. CONTRACTOR SHALL PROVIDE 6" LAYER OF #10 STONE BELOW BOTTOM OF SLEEVE TO ALLOW FOR DRAINAGE.

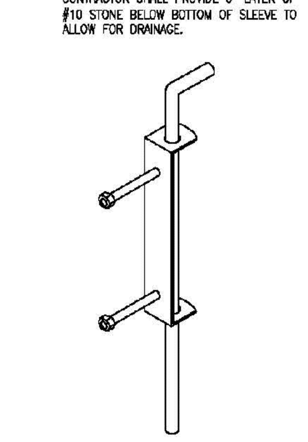

DETAIL: DROP BAR

NOT TO SCALE

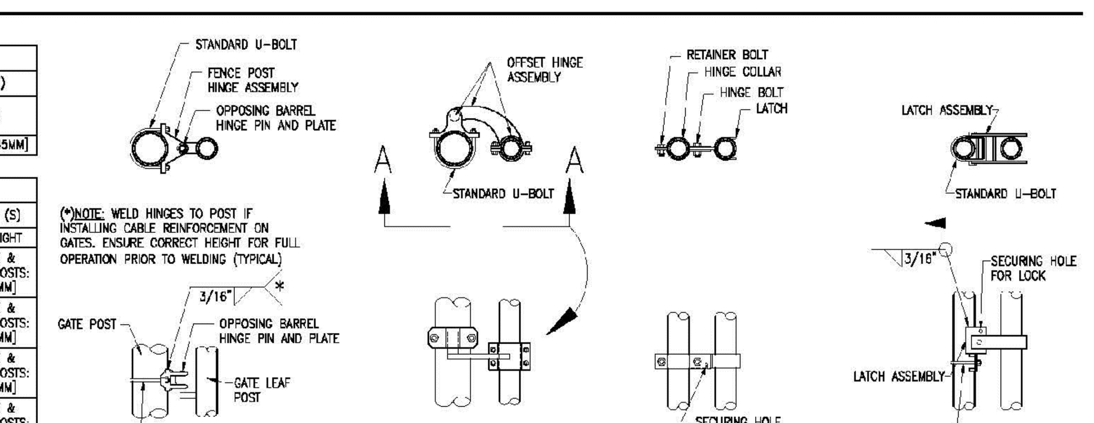

GATE HINGE DETAIL

SCALE: 1 1/2" = 1'-0"

OFFSET HINGE DETAIL

SCALE: 1 1/2" = 1'-0"

GATE LATCH DETAIL

SCALE: 1 1/2" = 1'-0"

FULCRUM LATCH DETAIL

SCALE: 1 1/2" = 1'-0"

GRAPHIC SCALES

1/2" = 1'-0"
1 1/2" = 1'-0"

UNIFIED FACILITIES CRITERIA 4-022-03 SECURITY ENGINEERING: FENCES, GATES AND GUARD FACILITIES
DEFINITIVE DRAWINGS FOR SECURITY FENCING, GATES AND CABLING

CHAIN LINK SWING GATE AND DETAILS

UFC-702

CHAIN LINK FENCE SHALL BE EIGHT (8) FEET UNLESS OTHERWISE STATED ON THE PLANS. THE CONCERTINA WIRE, DOUBLE EXTENSION ARMS, AND CLIMB RESISTANT MESH ARE NOT SHOWN BUT REQUIRED. PROVIDE SHOP DRAWING OF DOUBLE EXTENSION ARM DETAILS, CONCERTINA WIRE, AND CLIMB RESISTANT MESH PRIOR TO INSTALLATION. PLEASE NOTE STANDARD POST SPACING SHALL BE EIGHT (8) FOOT MAX AND DEPTH OF POSTS AND DIAMETER OF POSTS SHALL BE BASED ON 10'-0" FENCE.

REGISTERED PROFESSIONAL ENGINEER
SEAN M. MINARD
No. C52593
Exp. 12-31-24
CIVIL
STATE OF CALIFORNIA

NO.	DATE	REVISION	BY	APVD
3	4-06-23	REVISED - STRUCTURE RELOCATED DOWNSTREAM		

DSGN	DR	CHK	APVD

M·H·M
ENGINEERS & SURVEYORS SINCE 1892

SUTTER MUTUAL WATER COMPANY
BOHANNON WATER CONTROL PROJECT
SUTTER COUNTY, CALIFORNIA, U.S.A.

SUTTER MUTUAL WATER COMPANY

CONSTRUCTION DETAIL
FENCING

VERIFY SCALE
BAR IS ONE INCH ON ORIGINAL DRAWING.
0 1"

DATE	4/06/23
PROJ	22-120
DWG	SD-01
SHEET	13 of 15

REVISED - ISSUED FOR CONSTRUCTION

©MHM INC 2022. ALL RIGHTS RESERVED.
REUSE OF DOCUMENTS: THIS DOCUMENT, AND THE IDEAS AND DESIGNS INCORPORATED HEREIN, AS AN INSTRUMENT OF PROFESSIONAL SERVICE, IS THE PROPERTY OF MHM INCORPORATED AND IS NOT TO BE USED, IN WHOLE OR IN PART, FOR ANY OTHER PROJECT WITHOUT THE WRITTEN AUTHORIZATION OF MHM INC.

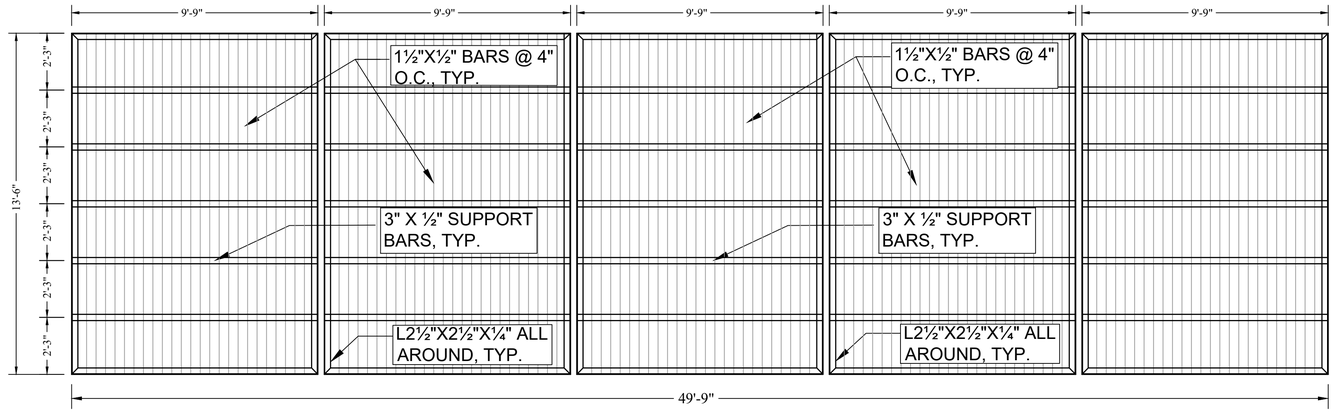

TRASH RACK DETAIL (A / SD-02)
SCALE 1" = 3'-0"

NOTES:
1. FIELD VERIFY ACTUAL FIELD DIMENSIONS OF TRASH RACK, PRIOR TO FABRICATION.
2. ALL CONNECTIONS SHALL BE WELDED. THE DIMENSIONS REFER TO ACTUAL TRASH RACK DIMENSIONS NOT PLAN VIEW DIMENSIONS.
3. THE DIMENSIONS DIFFER FROM PLAN BECAUSE OF THE SLOPE.
4. THE DETAIL SHOWS ALL FIVE (5) PARTS REQUIRED TO COMPLETE THE TRASH RACK. THERE ARE TWO (2) PANEL SIZES AS SHOWN.
5. THE TRASH RACK SHALL BE GALVANIZED OR EPOXY COATED AT THE FACTORY. NO COATING SHALL BE APPLIED IN THE FIELD.
6. THE TRASH RACK SHALL REST ON A CONCRETE PAD. THE CONCRETE PAD SHALL BE INSTALLED PRIOR TO INSTALLATION OF THE TRASH RACK.

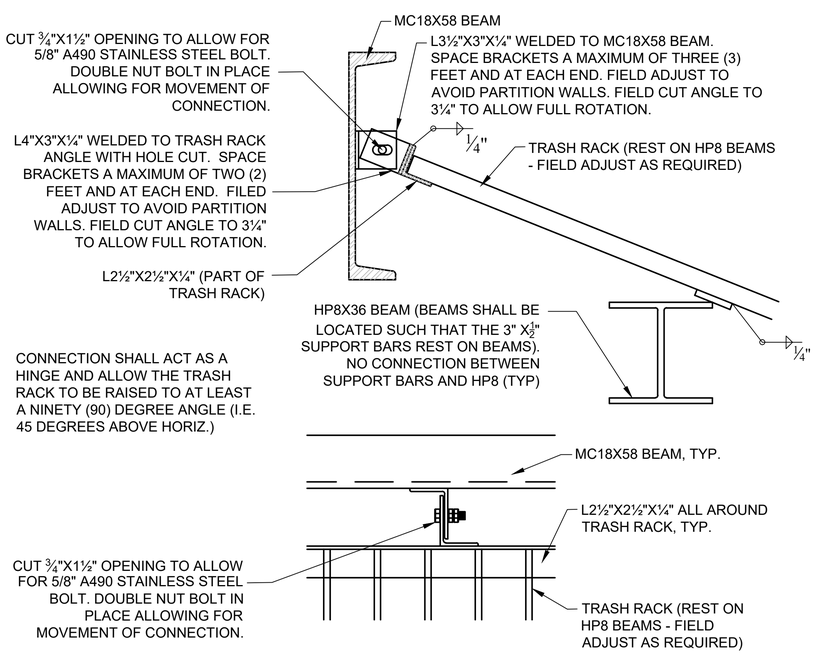

TRASH RACK TO BEAM CONNECTION (B / SD-02)
NOT TO SCALE

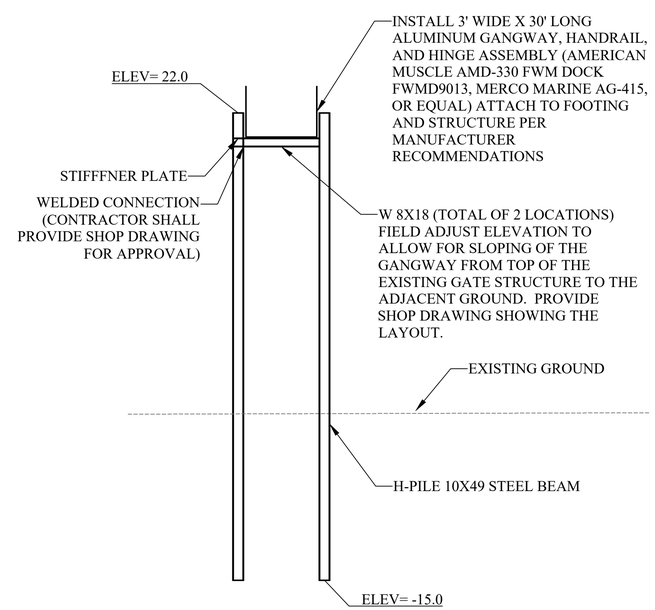

GANGWAY (C / SD-02)
NOT TO SCALE

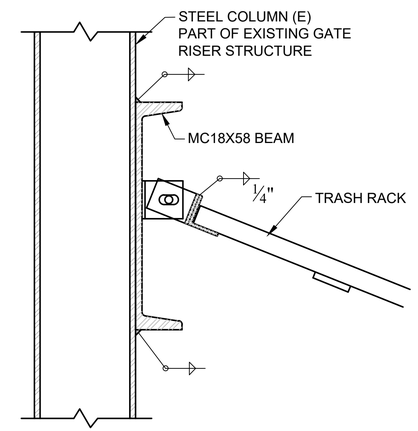

BEAM TO COLUMN (E) CONNECTION (D / SD-02)
NOT TO SCALE

REGISTERED PROFESSIONAL ENGINEER BRIAN M. MINTO No. C52593 Exp. 12-31-24 CIVIL STATE OF CALIFORNIA

NO.	DATE	REVISION	BY	APVD
1	4-06-23	REVISED - STRUCTURE RELOCATED DOWNSTREAM		

DSGN | DR | CHK | APVD

M·H·M ENGINEERS & SURVEYORS SINCE 1907

SUTTER MUTUAL WATER COMPANY
BOHANNON WATER CONTROL PROJECT
SUTTER COUNTY, CALIFORNIA, U.S.A.

SUTTER MUTUAL WATER COMPANY

DETAILS
TRASH RACK DETAILS

VERIFY SCALE
BAR IS ONE INCH ON ORIGINAL DRAWING
0 1"

DATE	4/06/23
PROJ	22-120
DWG	SD-02
SHEET	14 of 15

REVISED - ISSUED FOR CONSTRUCTION

REUSE OF DOCUMENTS: THIS DOCUMENT, AND THE IDEAS AND DESIGNS INCORPORATED HEREIN, AS AN INSTRUMENT OF PROFESSIONAL SERVICE, IS THE PROPERTY OF MHM INCORPORATED AND IS NOT TO BE USED, IN WHOLE OR IN PART, FOR ANY OTHER PROJECT WITHOUT THE WRITTEN AUTHORIZATION OF MHM INC.
©MHM INC 2022. ALL RIGHTS RESERVED.

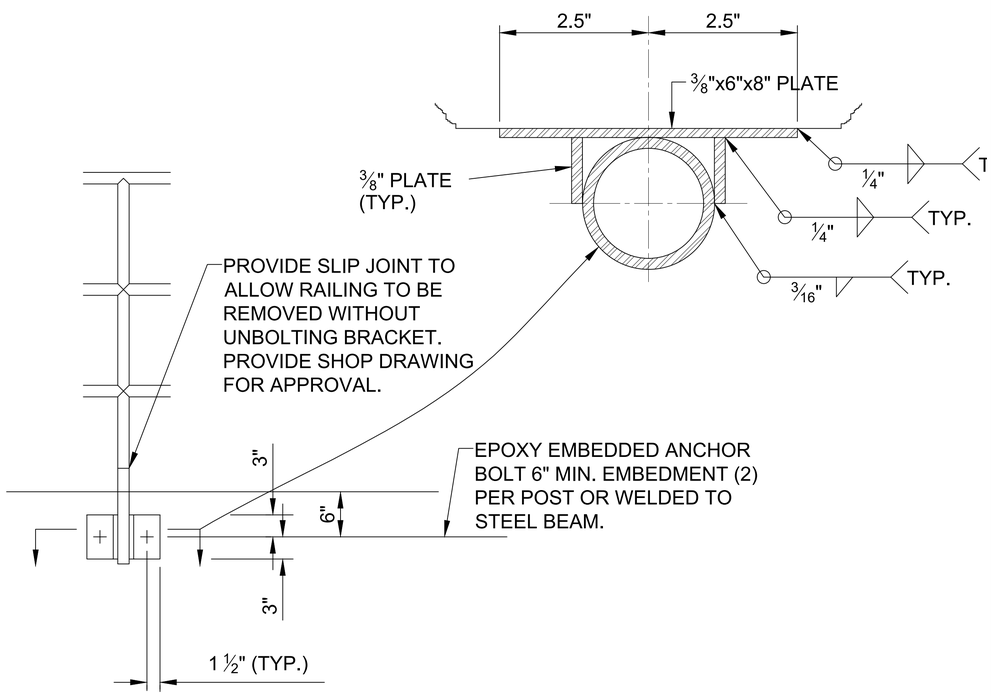

HANDRAIL CONNECTION DETAIL

NOT TO SCALE

A / **SD-03**

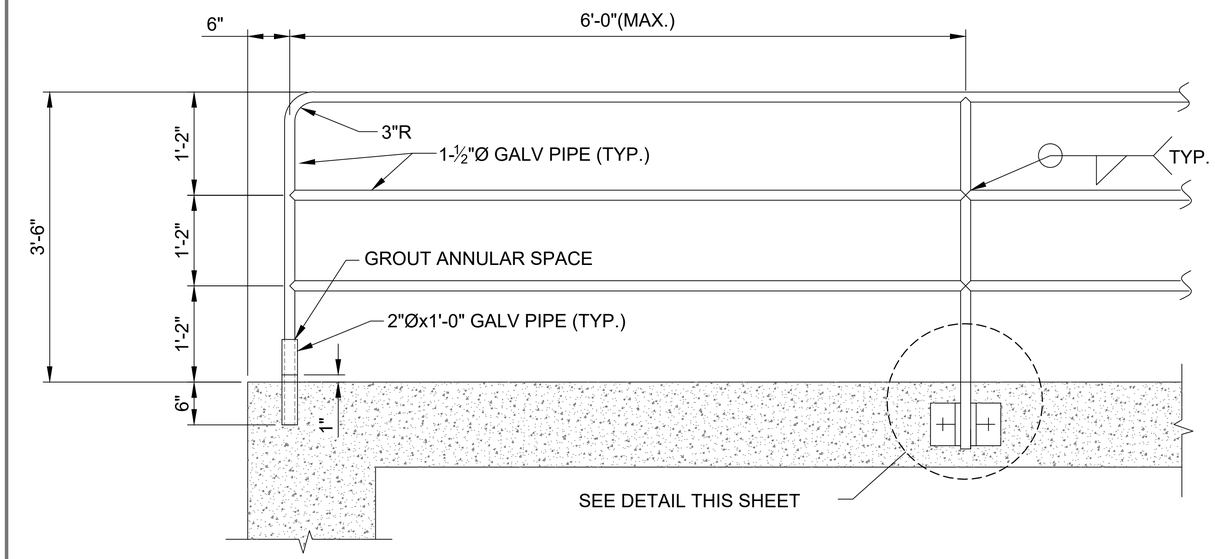

TYPICAL HANDRAIL DETAIL

NOT TO SCALE

B / **SD-03**

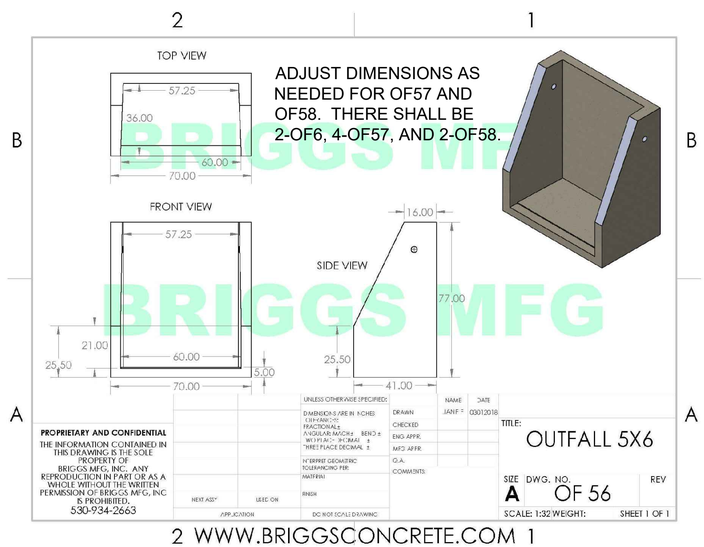

BRIGGS OUTFALL 5X6

NOT TO SCALE

C / **SD-03**

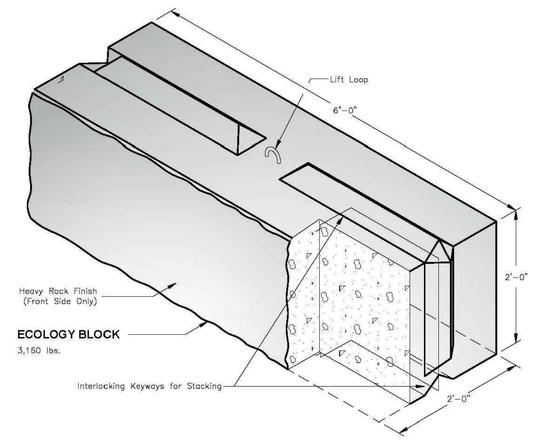

Oldcastle Precast® PO Box 323, Wilsonville, Oregon 97070-0323 Tel: (503) 682-2844 Fax: (503) 682-2657	ECOLOGY BLOCK File Name: 020-CRBBLK Issue Date: 2018 oldcastleprecast.com/wilsonville	BUMPER CURBS ECOLOGY BLOCK

ECOLOGY BLOCK DETAIL

NOT TO SCALE

D / **SD-03**

REGISTERED PROFESSIONAL ENGINEER BRIAN M. MINARD No. C52555 Exp. 12/31/24 CIVIL STATE OF CALIFORNIA

NO.	DATE	REVISION	DR	CHK	APVD
DSGN				BY	APVD

M·H·W ENGINEERS & SURVEYORS SINCE 1892

SUTTER MUTUAL WATER COMPANY
BOHANNON WATER CONTROL PROJECT
SUTTER COUNTY, CALIFORNIA, U.S.A.

SUTTER MUTUAL WATER COMPANY

DETAILS
HANDRAIL DETAILS

VERIFY SCALE
BAR IS ONE INCH ON ORIGINAL DRAWING.
0 1"

DATE	4/06/23
PROJ	22-120
DWG	SD-03
SHEET	15 of 15

REVISED - ISSUED FOR CONSTRUCTION

REUSE OF DOCUMENTS: THIS DOCUMENT, AND THE IDEAS AND DESIGNS INCORPORATED HEREIN, AS AN INSTRUMENT OF PROFESSIONAL SERVICE, IS THE PROPERTY OF MHM INCORPORATED AND IS NOT TO BE USED, IN WHOLE OR IN PART, FOR ANY OTHER PROJECT WITHOUT THE WRITTEN AUTHORIZATION OF MHM INC.
©MHM INC 2022. ALL RIGHTS RESERVED.

Appendix B

Federally-Listed Biological Resource Assessment Report

Federally-Listed Biological Resources Assessment Report

Sutter Mutual Water Company
Bohannon Dam Automation Project

Prepared by:

SMB Environmental, Inc.

May 2022

Table of Contents

Section 1 - Introduction **4**
1.1 Purpose of this Assessment **4**
1.2 Species of Concern **4**
Plant Species 4
Birds 4
Reptiles 4
Amphibians 4
Mammals 4
Fish 5
Invertebrates 5
Section 2 - Description of Proposed Action **6**
2.1 Project Location and Background **6**
2.2 Purpose and Need **10**
2.3 Proposed Action Description **10**
2.4 Construction Considerations **15**
2.4.1 Construction Access and Staging Areas 15
2.4.2 Dewatering 15
2.4.3 Clearing and Grubbing 16
2.4.4 Existing Dam Gate Structure Demolition and Removal 16
2.4.5 Construction of the New Dam Check Structures 16
Section 3 –Regulatory and Environmental Setting **18**
3.1 Regulatory Environment **18**
3.1.1 Federal Regulations **18**
3.1.1.1 Federal Endangered Species Act 18
3.1.1.2 Federal Migratory Bird Treaty Act 19
3.1.1.3 Federal Bald and Golden Eagle Protection Act 19
3.1.1.4 River and Harbors Act and Clean Water Act 19
3.2 Environmental Setting **20**
3.2.2 Wetlands and Other Waters of the U.S. 26
3.3 Potentially Affected Federal Species and Habitats **26**
Section 4 – Effects on Species and Habitat **30**
4.1 General Effects **30**
4.2 Effects to Federally-Listed Species and Habitat **30**
4.3 Waters of the United States, Including Wetlands **33**
Seasonal Wetland/Vernal pools 33
Other Waters of the U.S. 33

Section 5 Determination of Effects 34

5.1 No Effect....34

Plant Species....34

Birds....34

Amphibians....34

Mammals....34

Fish....34

Invertebrates....34

5.2 May Affect, But Not Likely to Adversely to Affect....34

Reptiles....34

Section 6 Bibliography 36

List of Tables

Table 1: Diversion Rates....6

Table 2: SMWC Crops....9

Table 3: Problems with Existing operations and Modernization Solutions....11

Table 4: Potential for Federal Status Special Status Species to Occur....22

List of Figures

Figure 1: General Location Map....7

Figure 2: SMWC Service Area....8

Figure 3: Existing Stuctures at Bohannon Dam....11

Figure 4: Examples of Modernized Check Structures....12

Figure 4a: Typical New Concrete Head Structure, Slip Gates and SCADA Facilities....13

Figure 5: Construction Staging Areas and Location....17

Figure 6: Location of Federal and State Species....21

Figure 7: Location of Habitats Observed and Assessed....22

Figure 8: Photos of Habitats Observed and Assessed....23

Attachments

Attachment A – USFWS Species Lists for SMWC Bohannon Dam Automation Project....A-1

Section 1 - Introduction

This document describes the potential effects of Sutter Mutual Water Company's (SMWC) proposed Bohannon Dam Automation Project (Proposed Action) on those federally listed and proposed species that may occur in the Proposed Action Area. This section describes the purpose of this assessment and identifies potential federally-listed species and species of concern that could be affected by the implementation of SMWC's Proposed Action.

1.1 Purpose of this Assessment

The purpose of this document is to describe potential effects of SMWC's Proposed Action on those federally listed and proposed species that may occur in the Proposed Action Area. This document conforms to and with the legal requirements set forth under Section 7 of the Endangered Species Act (16 U.S.C 1536(c) and 50 CFR 402). The U.S. Bureau of Reclamation (USBR) is the lead agency under the National Environmental Policy Act (NEPA) as SMWC is receiving federal funding under the U.S. Department of the Interior's Bureau of Reclamation WaterSmart: Energy and Efficiency Program. As a result, this document focuses on and evaluates the potential direct, indirect, and cumulative effects the Proposed Action may have on federally-listed and proposed species, and outlines those potential effects as well as recommended mitigation to reduce potential adverse effects to a less than significant level.

1.2 Species of Concern

Pursuant to Section 7(c) (1) of the Endangered Species Act, SMB obtained a list of federally-listed species potentially found within the Proposed Action Area from the U.S. Fish and Wildlife Service (USFWS) – See Attachment A. In addition, a field visit for the Proposed Action was conducted on October 6, 2021 to determine the potential for special-status species to occur within the general vicinity of the Proposed Action Study Area.

This document analyzes the potential effects of the Proposed Action upon the following federally-listed and proposed species identified in the USFWS Species list.

Plant Species

- None Listed

Birds

- None Listed

Reptiles

- *Thamnophis gigas* (FT, ST) — Giant garter snake

Amphibians

- *Ambystma californiense* (FT) — California tiger salamander
- *Rana aurora draytonii (F*T, SSC) — California Red-legged frog

Mammals

- None Listed

Fish

- *Hypomesus transpacificus* (FT) — Delta smelt
- *Oncorhynchus tshawytscha* (FT) — Chinook salmon, CV, spring-run
- *Oncorhynchus tshawytscha* (FT, SC) — Chinook salmon – Sac. River, winter-run
- *Spirinchus thaleichthys (FC, ST)* — Longfin smelt
- *Thaleichthys pacificus (FT)* — Eulachon

Invertebrates

- *Branchinecta lynchi* (FT) — Vernal pool fairy shrimp
- *Danaus plexippus (FC)* — Monarch butterfly
- *Desmocerus californicus dimorphus* (FT) — Valley elderberry longhorn beetle
- *Lepidurus packardi* (FT) — Vernal pool tadpole shrimp

Key to status codes:
FE = Federal Endangered
FT = Federal Threatened
FC = Federal Candidate
SE = State Endangered
ST = State Threatened

Sources:
U.S. Fish and Wildlife Service (USFWS). 2021. Information for Planning and Consultation (IPaC). List of threatened and endangered species that may occur in the Bohannon Dam Automation Project Area. September 16, 2021. Consultation Code: 08ESMF00-2021-SLI-2783. Event Code: 08ESMF00-2021-E-08098X=Critical Habitat

Section 2 - Description of Proposed Action

This section provides a description of the Proposed Action including the location and background, purpose and need, construction considerations, and operational considerations.

2.1 Project Location and Background

As shown in Figure 1, SMWC is located in the Sacramento River Valley Basin in Northern California approximately 45-miles northwest of Sacramento, California and is headquartered in the town of Robbin, CA.

Further and as shown in Figure 2, SMWC is located within the Sutter Sub-basin, and is bordered by three levee systems totaling 55 miles. Sutter Bypass is located along the eastern and southern edges of SMWC, and the Sacramento River is located to the west of SMWC. SMWC provides a reliable Sacramento River water supply to the area's farmers through the construction and maintenance of an irrigation system.

On February 5, 1919, SMWC underwent the articles of incorporation. The primary purpose of SMWC is to operate, manage, and control water systems, and handle water appropriations. SMWC water sources for appropriation water rights and BOR settlement contracts are the Sacramento River and the Shasta Dam.

SMWC entered into a negotiated agreement with Reclamation in 1964, quantifying the amount of water SMWC could divert from the Sacramento River. The resulting negotiated agreement recognized SMWC as a Sacramento River Settlement Contractor with an annual entitlement of a Base Supply of 169,500 ac-ft./year of flows from the Sacramento River and also provided for a 56,500 ac-ft. allocation of CVP Project Supply, resulting in a total contract entitlement of 226,000 ac-ft./year. SMWC typically pumps its water annually for crop irrigation from four plants making it the second largest diverter on the Sacramento River. The average combined diversion rate during the peak irrigation season (May through August) is approximately 1,300 acre-feet per day.

Table 1
Diversion Rates Documented in 2012 Sacramento Valley Regional Water Management Plan Annual Update

	CVP Project Water Agricultural	Base Supply Water Rights	TOTAL
Sutter Mutual Water Company	56,500 ac-ft./yr.	169,500 ac-ft./yr.	226,000 ac-ft./yr.
Source: 2006 Sacramento Valley Regional Water Management Plan Annual Update (page 2-193) https://www.usbr.gov/mp/watershare/docs/regional-plan.pdf			

In addition to the contract water, SMWC has entitlements to pump water during the non-irrigation season for wetlands and rice straw decomposition given appropriative rights during the winter months of approximately 250 cfs.

Features of the SMWC system include the Bohannon Dam for recapturing water for reuse, pumping plants, canals, laterals, and drains necessary to serve a Gross Service Area 50,083.27 acres. SMWC currently services 46,746 irrigable acres. The water delivery system is an open ditch and canal system

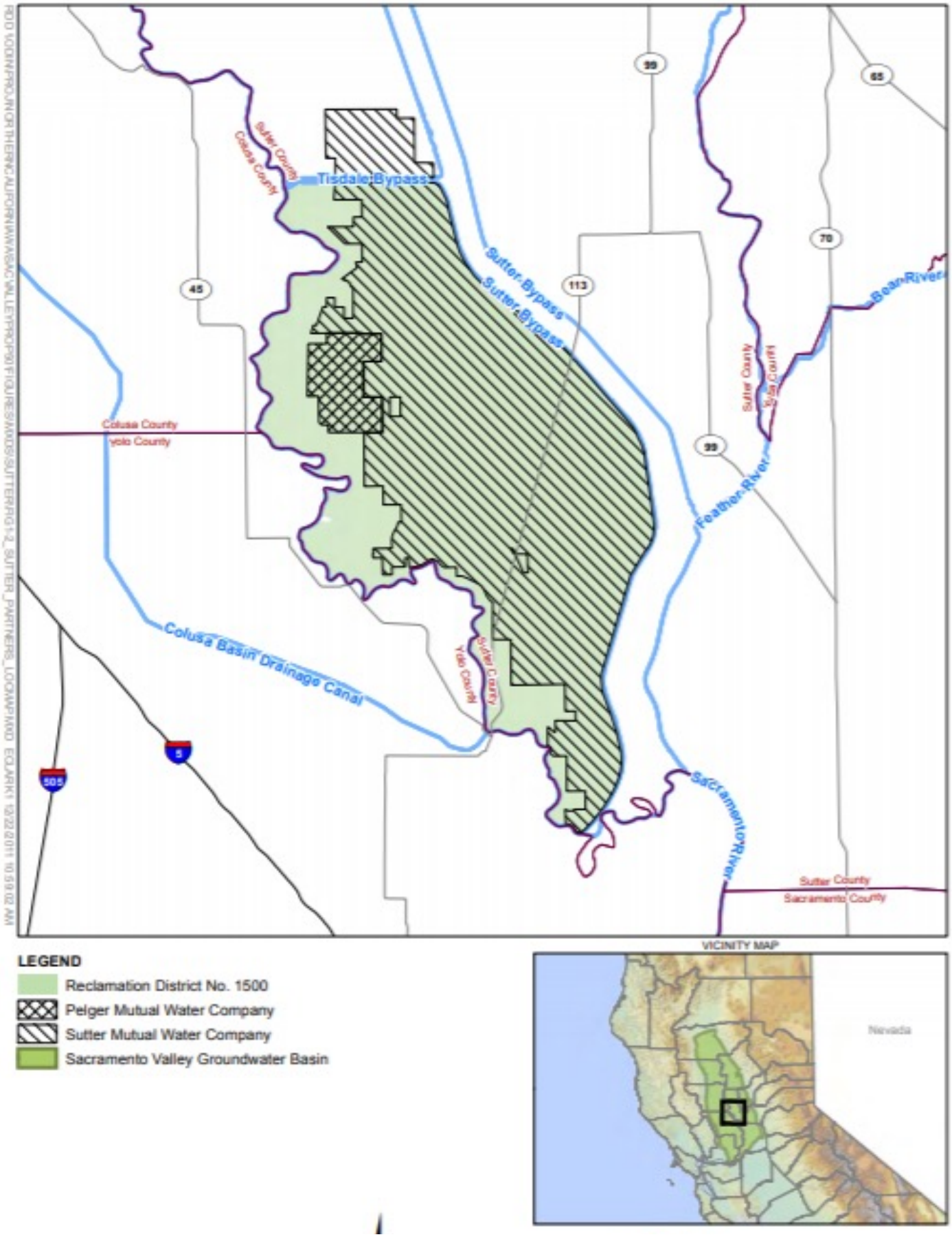

SMB ENVIRONMENTAL

Figure 1
General Project Location Map

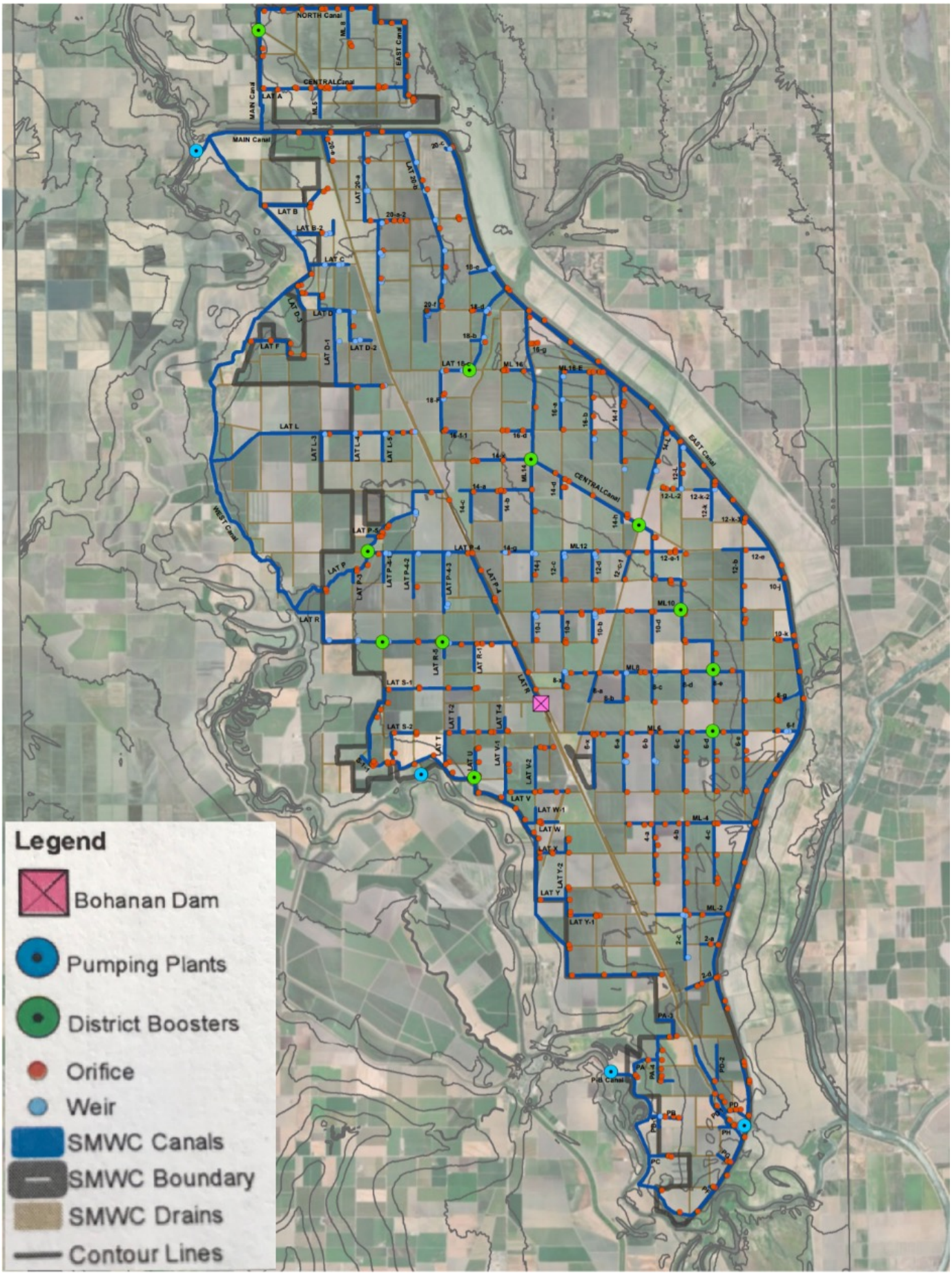

SMB ENVIRONMENTAL

Figure 2

SMWC Service Area and Bohannon Dam Location

constructed in the early 1900's. The Service Area includes approximately 200 miles of main canals and laterals and approximately 800 Irrigation turnouts and serves 150 landowners.

The SMWC operates four pumping plants at three locations: Tisdale Pumping Plant (960-cubic-feet-per-second [cfs] capacity), State Ranch Bend Pumping Plant (128 cfs), and Portuguese Bend Pumping Plant (106 cfs). SMWC also has nine booster pump sites (they typically operate four to five in any given year) and one internal recirculation system with a total combined capacity of 290 cfs per day. These facilities are used for drainage water reuse and are located in the central and northeast portions of SMWC. Additionally, SMWC uses four portable booster pumps for flexibility and maximizing its ability to recapture/recycle drain water.

SMWC has high water demands during the Rice flood up period (April/May) and during the re flood period (June) and is correlated with low river levels. The demand on the system is intense.

Table 1
SMWC 2012 Crops (April – October)

Crop Type	Crop Acres	% Crop Acres
Alfalfa	301	0.65%
Beans	949	2.05%
Corn	3,826	8.26%
Idle	23	0.05%
Melons	217	0.47%
Milo	698	1.51%
Rice	27,858	60.17%
Safflowers	715	1.54%
Sunflowers	6,051	13.07%
Tomatoes	3,150	6.80%
Vineseed	1,209	2.61%
Walnuts	142	0.31%
Wheat	1,157	2.50%
Crop Acres	**46,296**	**100.00%**

Source: 2012 Sacramento Valley Regional Water Management Plan Annual Update (page 144) https://water.ca.gov/LegacyFiles/wateruseefficiency/sb7/docs/2014/plans/Sacramento%20Valley%20Regional%20Water%20Management%20Plan%20Annual%20Update%202010-11.pdf

The SMWC boundary overlies the Sutter Sub-basin (Department groundwater basin number 5-21.62) of the Sacramento Valley Ground Water Basin. SMWC lies within the southwestern portion of the Sutter Groundwater Sub-basin. The total depth of fresh water in SMWC is approximately 4 feet bgs. The fresh water is underlain by saline water.

SMWC presently uses approximately 45,000 to 70,000 ac-ft./yr. of drainage water from sources both inside and outside of the Company. Private landowners pump an additional 5,000 to 15,000 ac-ft. from these sources. The western edge of the Company abuts a number of independent farmers (i.e., Rim-Landers) with individual contracts with Reclamation. These Rim-Landers are not within Company boundaries, but contribute flows that may be reused by SMWC famers. SMWC uses a portion of the Rim-Landers' tail water that they may not otherwise use within their system.

Excess tail water is directed into the Main Drainage canal and ultimately pumped back into the Sacramental Slough which flows back into the Sacramento River. Without controlling excess water, energy costs are incurred annual at $600,000.

Company operations are coordinated with RD 1500 and PMWC. RD 1500 manages drainage in the service area, while SMWC delivers water to the majority of water users in the basin area.

SMWC does not provide water service for municipal and industrial use.

The associated Reclamation District 1500 and surrounding lands of SMWC provide benefits for flood control, irrigation, sediment control, fish and wildlife enhancement and recreation. Surface drainage water is removed from the Sutter Basin by Reclamation District 1500 which maintains the levees and discharge pump station.

2.2 Purpose and Need

The purpose of the Proposed Action is to enhance water sustainability in the Sacramento River Basin with water savings on average of 20,000 acre-feet of water lost from the Main Drain each year, as a result of the Proposed Action's installation of a Supervisory Control and Data Acquisition (SCADA) system and automation controls on the gates to efficiently operate the irrigation system to reduce spills past the Bohannon Dam.

2.3 Proposed Action Description

The primary purpose of an open canal irrigation system is to accurately deliver on-demand water to farmers at consistent requested flow rates. Even with a highly skilled and trained workforce, efficient on-demand operation of canals is a big challenge when manually operated. Unpredictable water levels and potential shortages of water can occur. To ensure that the requested flow rates are delivered to farmers, canals are generally operated by supplying excess water from the head-works to ensure supply to farmers. This approach often results in operational spills which limit the availability of water for crop production or other beneficial use.

With an increasing focus on system operations efficiency, there is a growing awareness of the importance of eliminating or capturing canal and farm spills for reuse, whilst at the same time improving service levels to farmers.

Preventing lost water past the Bohannon Dam will allow the utilization of the water to contribute to multiple beneficial uses throughout the year, including sustained crop production, stream augmentation, preservation of wildlife habitat and food for migratory birds and native fish species, improved river health, Sutter Basin flood control, and assisting with river compact compliance.

This project will install SCADA components that allow for remote monitoring of irrigation delivery system conditions (water elevations, controls devices openings and timing) and allow for remote operation of delivery system control gates at Bohannon Dam weir. Using Rubicon's *SCADAConnect Live* cloud-based software, it will allow operators continual real-time monitoring and remote access to the site for superior operational oversight, as well as implementing on-the-fly changes in the events of severe weather changes as well as provide alarming to operators in the case of unexpected events at the site.

This project will use automaton aimed at preventing or reducing spillage from the main canal, and automation of drainage capture and reuse through intercepting spills and redirecting them using existing pumps from drains to canals for reuse. This project will install *Rubicon SlipGate* automation technology to

precisely manage water levels and augment supply into SMWC's Canal for further water use. Remote controlled gates with integrated water level sensing will be installed on new head structures, at the existing Bohannon Dam, replacing existing manual gates and existing structure.

The solution will maintain upstream level to a constant water level, ensure operational water level for pumps to extract captured water for irrigation into SMWC canals, automatic operation to allow water to pass through the dam structure during winter drainage and control water flow to minimize downstream risk of flooding.

The flows through these control gates will be coordinated by a centralized controller which responds in real-time to changing demand information and upstream water levels gathered through a SCADA radio telemetry network. The continuous real-time control solution will maximize the availability of stored water that is available for use by irrigators on the SMWC Canal, minimizing water losses and reduce pumping costs, saving staff time and mileage and improving operation efficiency.

Currently existing manually operated gates and structure that exist at the Bohannon Dam require constant monitoring by staff and manually adapting the system to maintain operational water levels resulting in lost water, varying water levels and varying flow rates. This impacts on lowering water efficiency and lower service levels to supply constant water level.

Existing problems in operation for water management and modernization solutions are summarized in Table 3 below. Figure 3 shows the existing Bohannon Dam Structure with its existing inefficiencies and Figure 4 provides examples of a modernized check gate structure, which is the essence of the Proposed Action.

Table 3
Problems with Existing operations and Modernization Solutions

Existing Problem	Modernization Solutions
Canal level varies by feet, varying farm flows.	Canal level will be maintained within inches, thereby providing steady flows.
Spill is not well controlled, resulting in significant losses to system.	Spill will be minimized through precise control and frequent adjustment.
Lack of flow adjustability in flood events results in canal overtopping.	Gates are sized for both normal operation and flood flows, minimizing/eliminating overtopping.
Access to site during flood events is very unsafe.	Remote control of gates minimizes the need to be onsite.
Ditch operators are spread thin to maintain their system of SMWC's canals.	Remote monitoring/control allows smart phone access to site at all times, thereby allowing for better operator coverage and remote feedback.

The Proposed Action will construct a new headwall at the weir of the Bohannon Dam. The check structures on the Bohannon Dam Head works will be fitted with six (6) *Rubicon SlipGates* to upgrade them to precision automated water management and control. These upgraded check structures are 100% water tight when the SlipGates are in their closed position, allowing the check structure to pass zero flow downstream when there is no flow demand scheduled.

These modernized structures will be managed by a central SCADA system, *Rubicon SCADAConnect Live* that precisely control the flows in the canal past the Bohannon Dam structure. Rubicon's cloud-based

SMB ENVIRONMENTAL

Figure 3
Existing Check Structures on the Bohannon Dam

SMB ENVIRONMENTAL

Figure 4

Examples of Modernized Slip Gates and Check Structure

Typical Rubicon Slip Gate with Solar and SCADA Antenna

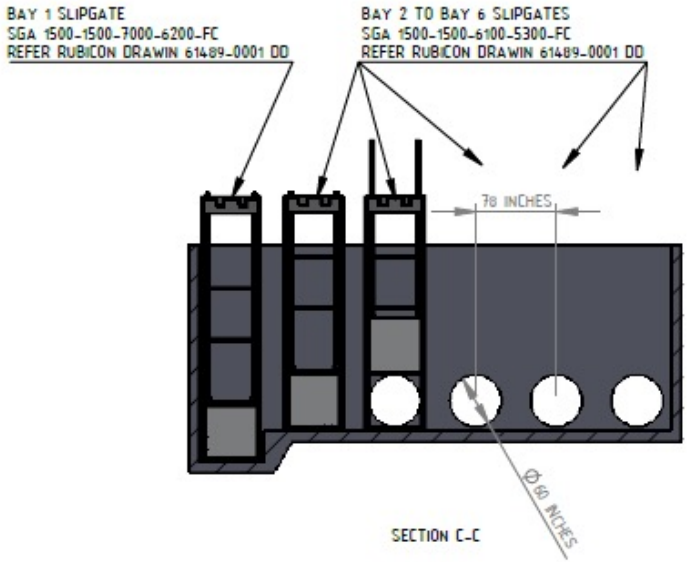

Typical New Concrete Headwall

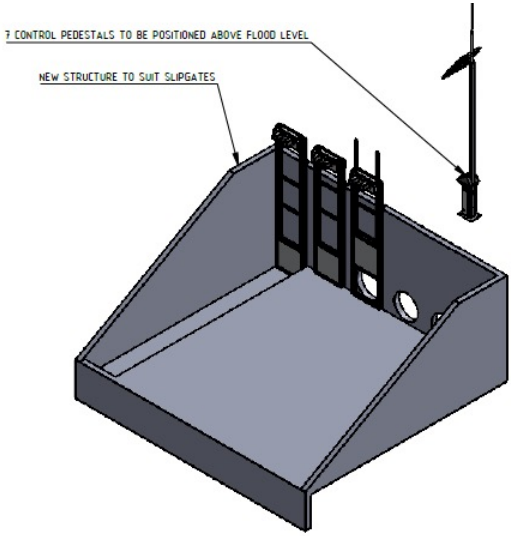

Typical New Concrete Headwall

SMB ENVIRONMENTAL

Figure 4a
Typical New Concrete Headwall, Slip Gates, and SCADA Facilities

software will provide remote and precise management of water management by writing gate position set points to each check structure to precisely match all water extractions including farmer water deliveries upstream and maintain required water level for operational efficiencies. The installation of the SCADA system at the site will realize savings to SMWC due to a reduction in the amount of water spilled, power consumed and number of personnel required to operate and maintain its system.

The SlipGates have been selected to meet the required discharge capacity per SMWC guidelines for the head work check structure. Trash racks will be added to each gate structure. SMWC will use experienced civil contractors for the modifications that will need to be made to relocating the position of the new structures.

2.4 Construction Considerations

Construction of the Proposed Action facilities is expected to take approximately 3 months and is anticipated to begin in the summer of 2022 and finish in the summer of 2022. Construction work will typically be done within normal working hours, weekdays between the hours of 7 a.m. and 4 p.m., and possibly on Saturdays between the hours of 7 a.m. and 4 p.m. The Proposed Action would be constructed entirely within the SMWC's existing property. During construction, approximately 5- to 10- people would be working on the Proposed Action. The construction activities would take place within the areas designated in Figure 5 and entirely within the boundaries of the SMWC's existing Bohannan Dam site. SMWC will employ appropriate construction best management practices (BMPs). As a final step of construction activities, the construction site would be cleaned up and restored to previous conditions. Construction trash and debris would be collected and disposed of properly. Once constructed, SMWC would resume existing day-to-day operations and maintenance procedures. No new permanent SMWC employees are anticipated to be required for the Proposed Action. Detailed below is a discussion of the construction methods and techniques.

2.4.1 Construction Access and Staging Areas

As shown on Figure 5, construction access will be provided on Reclamation Road coming through and just north of Robbins, California. The construction staging area is also identified on Figure 5. The total anticipated construction footprint and area of potential affect would be approximately 1-acre and actual disturbance would be closer to 0.25 acres.

2.4.2 Dewatering

Construction dewatering of the irrigation canal would be accomplished by simply not pumping water through SMWC's existing "screened" Tisdale Pumping Station on the Sacramento River and/or by re-routing the irrigation water around the construction site via other irrigation facilities or temporary bypass. As a result, no anadromous and/or special status fisheries from the Sacramento River would be affected or would need to be relocated. If any resulting standing water and/or shallow groundwater percolates into the construction area/zone, it will be pumped out and placed into a tank truck and will be used for dust control if and as deemed necessary. Any resultant water would then be re-placed into the irrigation canal, downstream of the existing dam/construction site.

2.4.3 Clearing and Grubbing

As shown in Figures 3 and 5, the existing irrigation canal is almost devoid of vegetation. Therefore, minimal vegetation, if any, is expected. There will be no clearing or grubbing of any vegetation that would directly affect giant garter snake habitat. The existing rip rap (approximately 20-feet deep, 50-feet in length and 40-feet wide), if affected, will be replaced back to existing or better condition.

2.4.4 Existing Dam Gate Structure Demolition and Removal

The existing dam check structures, access walkway, and hardware (as shown on Figure 3), will be removed mostly by hand, but it is anticipated that the work will also likely require the use of an excavator, dump truck, water truck, and backhoe or bobcat/small tractor. All of the metals and materials will be reused/recycled by SMWC for other operational uses within their jurisdictional boundaries. Any materials not being recycled/reused will be disposed of at an appropriate landfill – most likely at the Recology Ostrom Road Landfill in Wheatland, California. The existing pillars will be left in place to accept the new dam check structures. Therefore, there would be minimal, if any, need for any grading and/or importation and export of material. If any unanticipated grading work is actually required, it would be limited to to approximately 40-feet wide, 50-feet long and up to 10-feet deep and would be completed via backhoe or bobcat/small tractor. Total truck trips would be less than 1-2 trips per day during the 3-month construction period.

2.4.5 Construction of the New Dam Check Structures

As shown on Figures 4 and 4a and as described above, the new gate control structures and automated/SCADA systems will be put into place on the existing pillars. The total structure will be approximately the same size as the existing facility (i.e., approximately15-feet high and 50-feet wide). Each gate is about 60-inches wide and 17-feet tall. The canal bottom will be graded (up to 10-feet in depth) and then forms will be placed for the new concrete. The existing earthen berm will be removed and a new concrete headwall structure will be poured to support the new Slip Gates. SCADA attachments to the existing pillars will be accomplished via welded or bolted bracket connections. After construction, the site will be cleaned up and restored to existing or better conditions.

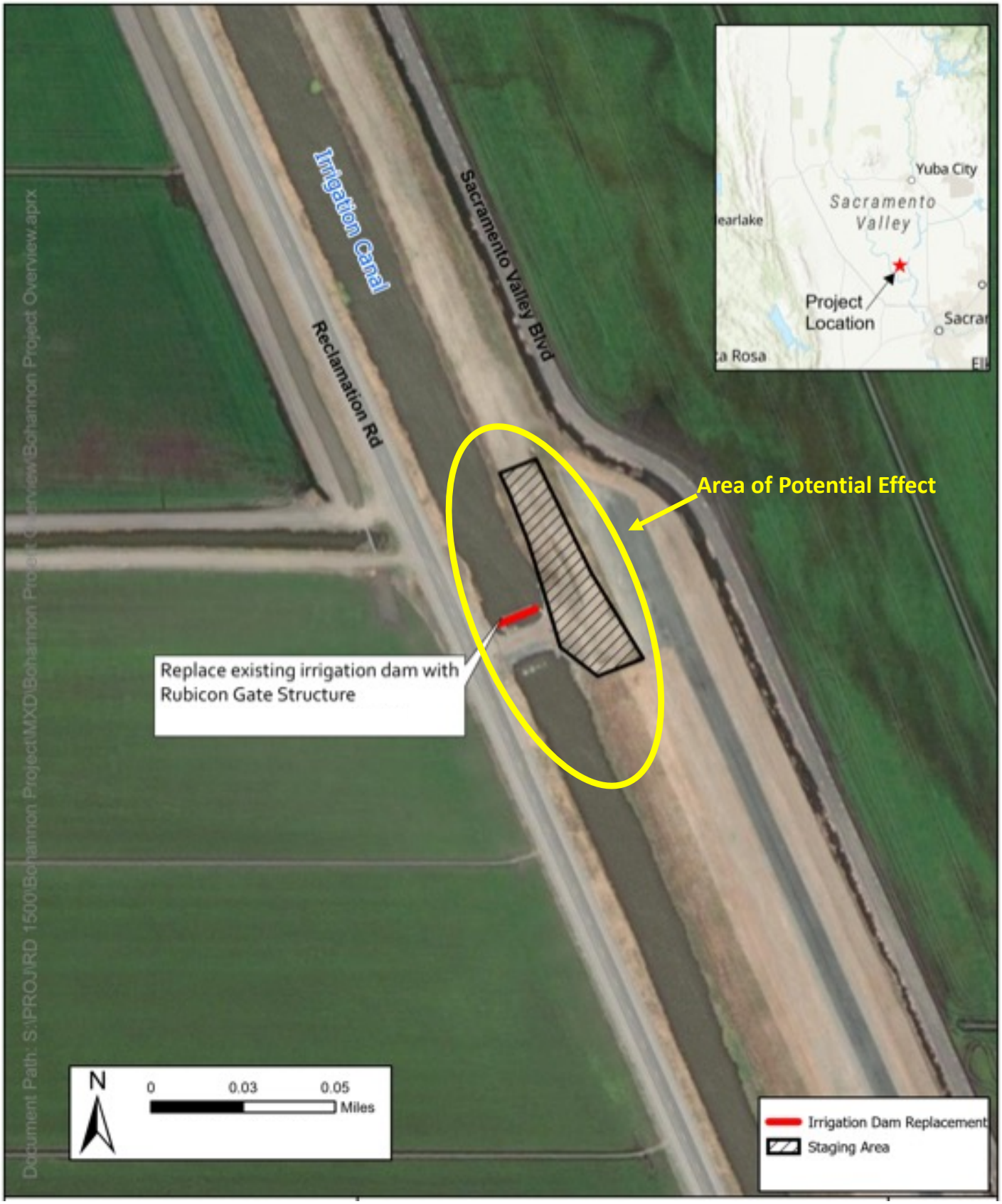

SMB ENVIRONMENTAL

Figure 5
Construction Staging Areas and Location

Section 3 –Regulatory and Environmental Setting

This section describes the existing environment within and around the Proposed Action Study Area as it pertains to state and federally-listed species.

3.1 Regulatory Environment

The following discussion identifies federal, state, and local regulations that serve to protect sensitive biological resources relevant to the environmental review process.

3.1.1 Federal Regulations

The following discussion identifies federal regulations that serve to protect sensitive biological resources relevant to the environmental review process.

3.1.1.1 Federal Endangered Species Act

The Secretary of the Interior (represented by the USFWS) and the Secretary of Commerce (represented by the National Marine Fisheries Service, NMFS) have joint authority to list a species and/or habitat as threatened or endangered under the Federal Endangered Species Act (FESA) (United States Code [USC], Title 16, Section 1533[c]). FESA prohibits the "take" of endangered or threatened fish, wildlife, or plants species in areas under federal jurisdiction or in violation of state law, in addition to adverse modifications to their critical habitat. Under FESA, the definition of "take" is to "harass, harm, pursue, hunt, shoot, wound, kill, trap, capture, or collect, or to attempt to engage in any such conduct." The USFWS and NMFS also interpret the definition of "harm" to include significant habitat modification that could result in the "take" of a species.

If an activity would result in the "take" of a federally listed species, one of the following is required: an incidental take permit under Section 10(a) of FESA, or an incidental take statement issued pursuant to federal interagency consultation under Section 7 of FESA. Such authorization typically requires various measures to avoid and minimize species take, and to protect the species and avoid jeopardy to the species' continued existence.

Pursuant to the requirements of Section 7 of FESA, a federal agency reviewing a proposed project which it may authorize, fund, or carry out must determine whether any federally listed threatened or endangered species, or species proposed for federal listing, may be present in the project area and determine whether implementation of the proposed project is likely to affect the species. In addition, the federal agency is required to determine whether a proposed project is likely to jeopardize the continued existence of a listed species or any species proposed to be listed under FESA or result in the destruction or adverse modification of critical habitat proposed or designated for such species (16 USC 1536[3], [4]).

Generally, the USFWS implements FESA for terrestrial and freshwater fish species and the NMFS implements FESA for marine and anadromous fish species. USFWS and/or NMFS must authorize projects where a federally listed species is present and likely to be affected by an existing or proposed project. Authorization may involve a letter of concurrence that the project will not result in the potential take of a listed species, or may result in the issuance of a Biological Opinion that describes measures that must

be undertaken to minimize the likelihood of an incidental take of a listed species. A project that is determined by USFWS or NMFS to jeopardize the continued existence of a listed species cannot be approved under a Biological Opinion.

Where a federal agency is not authorizing, funding, or carrying out a project, take that is incidental to the lawful operation of a project may be permitted pursuant to Section 10(a) of FESA through approval of a habitat conservation plan (HCP).

FESA requires the federal government to designate "critical habitat" for any species it lists under the Endangered Species Act. "Critical habitat" is defined as: (1) specific areas within the geographical area occupied by the species at the time of listing, if they contain physical or biological features essential to the species conservation, and those features that may require special management considerations or protection; and (2) specific areas outside the geographical area occupied by the species if the regulatory agency determines that the area itself is essential for conservation.

3.1.1.2 Federal Migratory Bird Treaty Act

The federal Migratory Bird Treaty Act (MBTA) (16 USC, Section 703, Supp. I, 1989), as amended by the Migratory Bird Treaty Reform Act, prohibits killing, possessing, or trading in migratory birds, except in accordance with regulations prescribed by the Secretary of the Interior. The act addresses whole birds, parts of birds, and bird nests and eggs. For projects that would not cause direct mortality of birds, the MBTA is generally interpreted in CEQA analyses as protecting active nests of all species of birds that are included in the "List of Migratory Birds" published in the Federal Register in 1995 and as amended in 2005. Though the MBTA allows permits to be issued for import and export, banding, scientific collecting, taxidermy, and rehabilitation, among other reasons, there is no provision in the MBTA that allows for species take related to creation or other development (Code of Federal Regulations, Title 50: Wildlife and fisheries Part 21; Migratory Bird Permits).

3.1.1.3 Federal Bald and Golden Eagle Protection Act

The Bald and Golden Eagle Protection Act (16 USC 668-668c), enacted in 1940, and amended several times since then, prohibits anyone, without a permit issued by the Secretary of the Interior, from "taking" bald eagles, including their parts, nests, or eggs. The act provides criminal penalties for persons who "take, possess, sell, purchase, barter, offer to sell, purchase or barter, transport, export or import, at any time or any manner, any bald eagle - [or any golden eagle], alive or dead, or any part, nest, or egg thereof." The act defines "take" as pursue, shoot, shoot at, poison, wound, kill, capture, trap, collect, molest, or disturb."

3.1.1.4 River and Harbors Act and Clean Water Act

The Secretary of the Army (represented by the Corps of Engineers [USACE]) has permitting authority over activities affecting waters of the United States under Section 10 of the River and Harbors Act (33 USC 403) and Section 404 of the Clean Water (33 USC 1344). Waters of the United States are defined in Title 33 CFR Part 328.3(a) and include a range of wet environments such as lakes, rivers, streams (including

intermittent streams), mudflats, sandflats, wetlands, sloughs, prairie potholes, wet meadows, playa lakes, or natural ponds. Section 10 of the River and Harbors Act requires a federal license or permit prior to accomplishing any work in, over, or under navigable waters of the United States, or which affects the course, location, condition or capacity of such waters. Section 404 of the Clean Water Act requires a federal license or permit prior to discharging dredged or fill material into waters of the United States, unless the activity is exempt (33 CFR 324.4) from Section 404 permit requirements (e.g., certain farming and forestry activities). To obtain a federal license or permit, project proponents must demonstrate that they have attempted to avoid the resource or minimize impacts on the resource; however, if it is not possible to avoid impacts or minimize impacts further, the project proponent is required to mitigate remaining project impacts on all federally-regulated waters of the United States.

Section 401 of the Act (33 USC 1341) requires any project proponents for a federal license or permit to conduct any activity including, but not limited to, the creation or operation of facilities, which may result in any discharge into navigable waters of the United States to obtain a certification from the state in which the discharge originates or would originate, or, if appropriate, from the interstate water pollution control agency having jurisdiction over the navigable waters at the point where the discharge originates or would originate, that the discharge will comply with the applicable effluent limitations and water quality standards. A certification obtained for the creation of any facility must also pertain to the subsequent operation of the facility.

3.2 Environmental Setting

As described in Section 2, the Proposed Action is located in a rural agricultural setting the Sacramento River Valley Basin in Northern California approximately 45-miles northwest of Sacramento, California and is headquartered in the town of Robbin, CA.

Further, SMWC is located within the Sutter Sub-basin, and is bordered by three levee systems totaling 55 miles. Sutter Bypass is located along the eastern and southern edges of SMWC, and the Sacramento River is located to the west of SMWC. SMWC provides a reliable Sacramento River water supply to the area's farmers through the construction and maintenance of an irrigation system that provides irrigation water for rice and other crops as detailed in Chapter 2.

As shown in Attachment A, a record search of USFWS' Species List was conducted for the area within a five-mile radius of the Project area to identify previously reported occurrences of state and federal special-status plants and animals. Figure 6 – shows the location of known state and federal listed species within the Project/Action Area.

In addition, a field visit of the Project/Action Study Area was conducted on October 6, 2021 to determine the potential for special-status species to occur within the general vicinity of the Proposed Action Study Area (i.e., Construction Area) as described in Chapter 2 – Description of Proposed Action. This field visit was not intended to be a protocol-level survey to determine the actual absence or presence of special-status species, but was conducted to determine the potential for special-status species to occur within the Proposed Action Area. No federally listed special-status species were observed during the field visits. Figure 7 provides the location of the following habitats observed and assessed during the field survey. Figure 8 provides of photographs of the habitats observed and assessed during the field survey,

California Natural Diversity Database (CNDDB) Commercial [ds85]

- Plant (80m)
- Plant (specific)
- Plant (non-specific)
- Plant (circular)
- Animal (80m)
- Animal (specific)
- Animal (non-specific)
- Animal (circular)
- Terrestrial Comm. (80m)
- Terrestrial Comm. (specific)
- Terrestrial Comm. (non-specific)
- Terrestrial Comm. (circular)
- Aquatic Comm. (80m)
- Aquatic Comm. (specific)
- Aquatic Comm. (non-specific)
- Aquatic Comm. (circular)
- Multiple (80m)
- Multiple (specific)
- Multiple (non-specific)
- Multiple (circular)
- Sensitive EO's (Commercial only)

1:72,224

0 0.5 1 2 mi

0 1 2 4 km

N

September 13, 2021

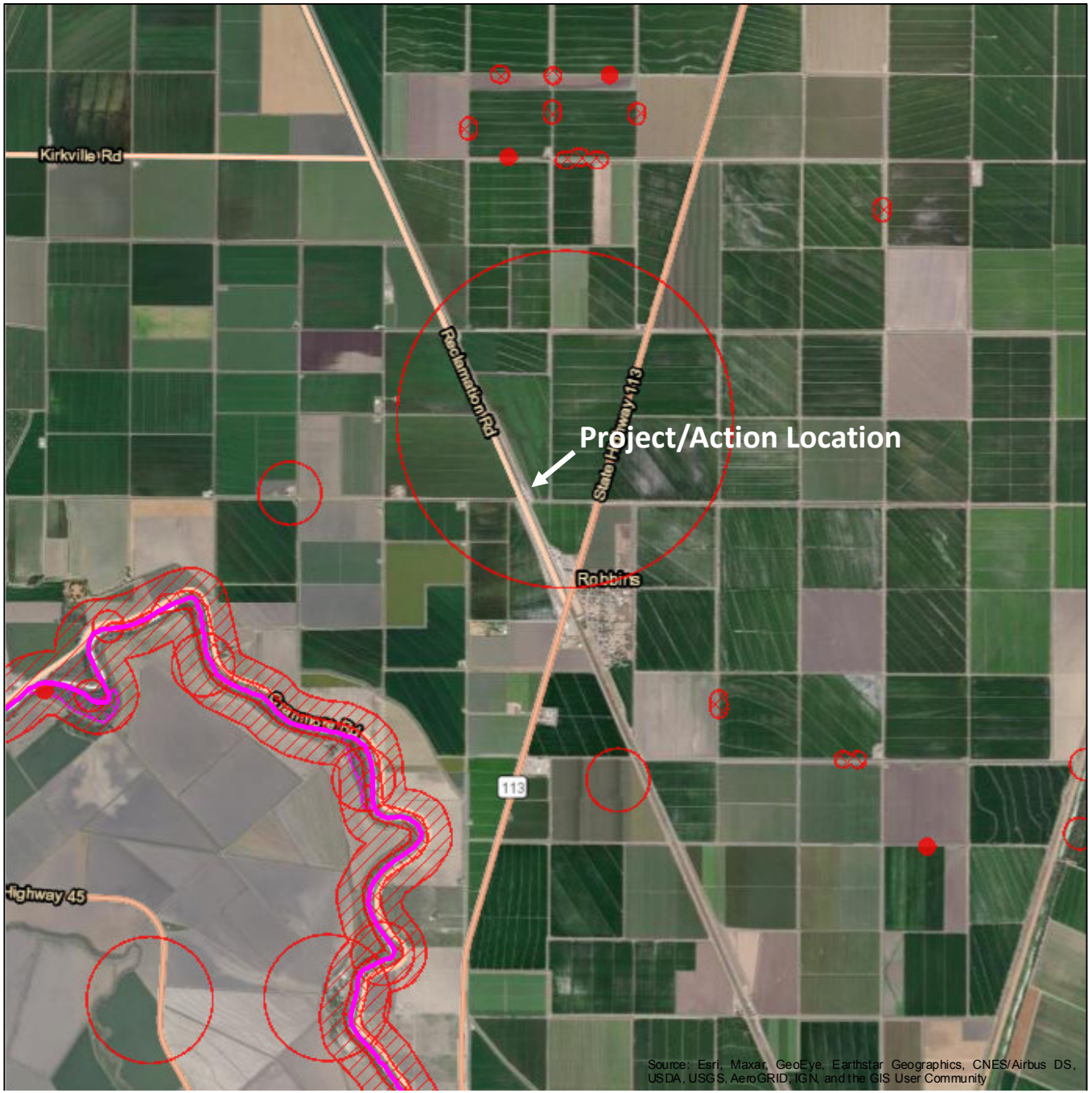

SMB ENVIRONMENTAL

Figure 6
Federal and State Special Status Species Known to Occur in Project/Action Area and Vicinity

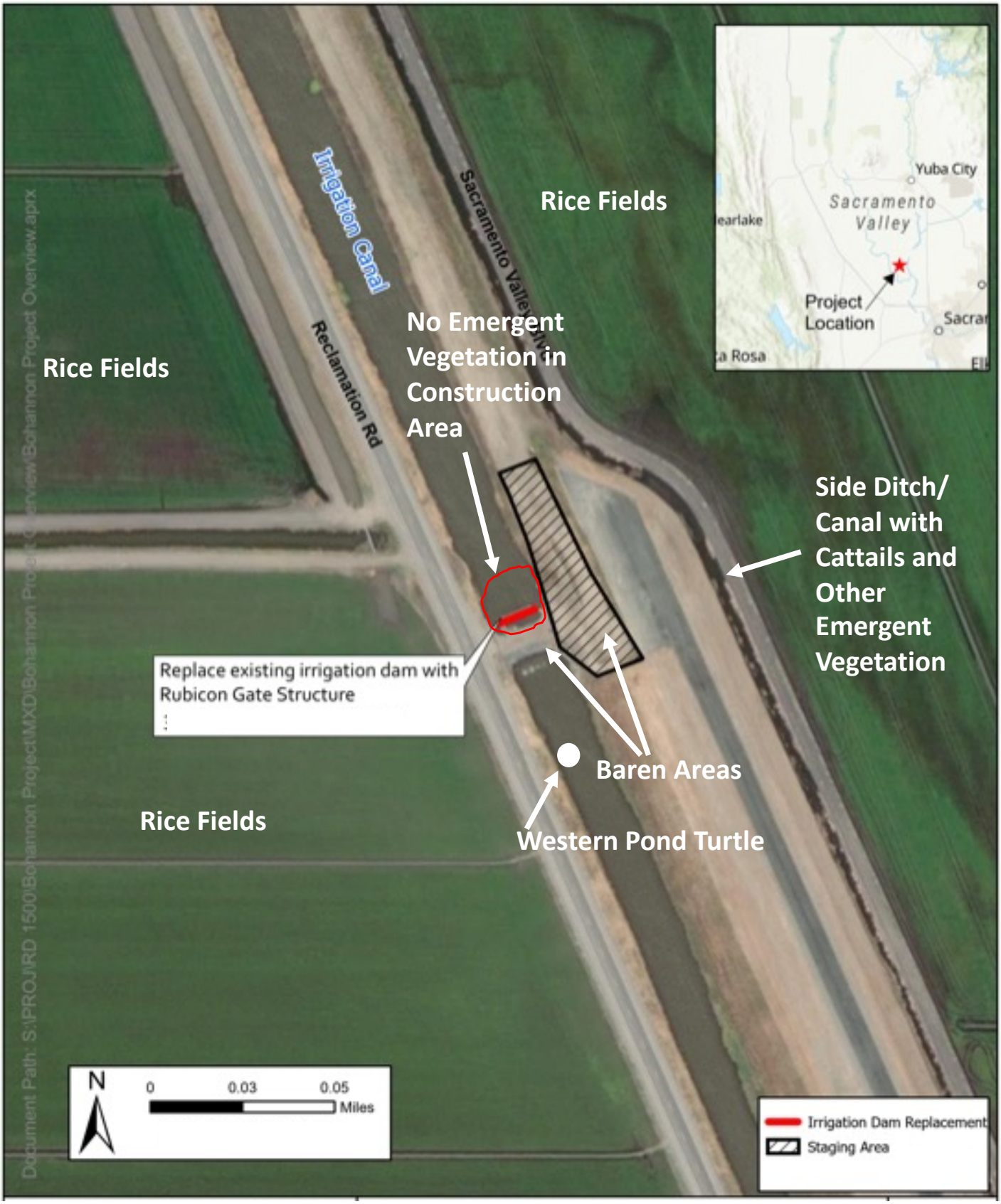

SMB ENVIRONMENTAL

Figure 7
Location of Habitats Observed and Assessed

Photo 1: Boardwalk on Dam and Burrows

Photo 2: Dam Structure

Photo 3: Side Ditch with Cattails

Photo 4: Snowy Egret

SMB ENVIRONMENTAL

Figure 8
Photos of Habitats Observed and Assessed

Photo 5: Staging Area

Photo 6: Looking at Dam from Staging Area

Photo 7: Top of Dam Looking NE at Irrigation Canal

Photo 8: Underside of Metal Dam Structure
No Swallow or Bat Nests

SMB ENVIRONMENTAL

Figure 8 (Continued)
Photos of Habitats Observed and Assessed

- **Irrigation Canal** – The irrigation canal mostly lacks emergent and floating vegetation along the banks and is highly turbid. Non-native Asian carp and bullfrogs were observed in the canal. Vegetation along the banks is dominated by non-native weedy species such as prickly lettuce (*Lactuca serriola*) and mustard (*Hirschfeldia incana*), with some native willow herb (*Epilobium brachycarpum*).
- **Barren** – Project staging areas are mostly barren and contain small amounts of non-native field bindweed (*Convolvulus arvensis*) and yellow starthistle (*Centaurea solstitialis*). Soil has previously been compacted and provides no viable habitat for Giant gartersnake ((*Thamnophis gigas* (FT, ST)) overwintering.
- **Side Ditch/Canal** – A side ditch/canal with limited emergent cattail (*Typha* spp.) vegetation is present to the west of the staging areas. This canal could provide some emergent wetland vegetation cover for species such as Giant gartersnake, but it is outside of the Project Study Area and Giant gartersnakes would not likely be affected by construction and operation of the Proposed Action, especially during the non-dormant season from March through October.
- **Rice Fields** – The surrounding agricultural area is mostly composed of irrigated rice fields. Giant gartersnakes are known to use these habitats along the Sacramento River corridor. However, no Giant gartersnakes or habitat were observed. The rice fields are outside of the Project Study Area and Giant gartersnakes would not likely be affected by construction and operation of the Proposed Action, especially during the non-dormant season from March through October.

During the October 6, 2021 field visit, the following wildlife species were observed:

- Cabbage white butterfly
- Mosquitofish species
- Carp species
- Bullfrog
- Western pond turtle (SSC)
- Pied-billed grebe
- Double-crested cormorant
- Great blue heron
- Great egret
- Snowy egret
- Green heron
- Turkey vulture (flyover)
- Red-tailed hawk (flyover)
- Greater yellowlegs
- Black phoebe
- Common raven (flyover)
- Savannah sparrow
- Brewer's blackbird
- Western meadowlark
- American goldfinch (flyover)
- River otter (scat)

No federally-listed special status plant and/or wildlife species, including the Giant gartersnake - *Thamnophis gigas* (FT, ST), were observed in the Project Study Area. Only one state special status wildlife species (i.e., western pond turtle - *Emys marmorata,* SSC) was observed in the irrigation canal about 100-

feet southwest of the Bohannan Dam.

3.2.2 Wetlands and Other Waters of the U.S.

Based upon a literature search and a reconnaissance field study on October 6, 2021, there are no known critical habitats, wetlands, vernal pools, and/or "Waters of the U.S." that would be affected by the Proposed Action Area.

3.3 Potentially Affected Federal Species and Habitats

The potential for each special status species to occur in the Study Area was then evaluated according to the following criteria:

- **No Potential.** Habitat on and adjacent to the site is clearly unsuitable for the species requirements (foraging, breeding, cover, substrate, elevation, hydrology, plant community, site history, disturbance regime).
- **Unlikely.** Few of the habitat components meeting the species requirements are present, and/or the majority of habitat on and adjacent to the site is unsuitable or of very poor quality. The species is not likely to be found on the site.
- **Moderate Potential.** Some of the habitat components meeting the species requirements are present, and/or only some of the habitat on or adjacent to the site is unsuitable. The species has a moderate probability of being found on the site.
- **High Potential.** All of the habitat components meeting the species requirements are present and/or most of the habitat on or adjacent to the site is highly suitable. The species has a high probability of being found on the site.
- **Present.** Species is observed on the site or has been recorded on the site recently.

Table 4 below lists the state and federally-listed species that have the potential to exist within the Proposed Action Area, along with their preferred habitats, the potential to occur within the Action Study Area, and recommendations to avoid and minimize potential effects to these species.

Table 4
Potential for Federally-Listed Special-Status Species to Occur in the Project/Action Study Area

Species	Status	Habitat	Potential for Occurrence	Recommendations
Plants				
None				
Birds				
Coccyzus americanus occidentalis western yellow-billed cuckoo	FT	Their breeding habitat is deciduous woods from southern Canada to Mexico. In California, breeds in large blocks of valley and foothill riparian habitat with 25 acres or more contiguous habitat. Found along the Sacramento River and the	**Unlikely.** Suitable dense riparian nesting and foraging habitat is not present nearby the Study Area.	No further actions are recommended for this species.

Table 4 Potential for Federally-Listed Special-Status Species to Occur in the Project/Action Study Area				
Species	**Status**	**Habitat**	**Potential for Occurrence**	**Recommendations**
		South Fork of the Kern River. Critical Habitat has been Proposed for this Species.		
Reptiles				
Thamnophis gigas Giant gartersnake	FT, ST	Due to its semiaquatic nature, it is rarely found less than ten meters from water[5] during the active season. Found in freshwater marshes, streams, and wetlands in the Sacramento and San Joaquin valleys of California. Requires bankside basking areas with emergent vegetation and nearby upland refugia.	**Unlikely to Moderate.** Suitable habitat is not present in the actual Project Study Area. However, adjacent irrigation canal and rice fields could provide habitat.	As a precautionary measure, conduct pre-construction field survey no less than 10 days prior to construction. If species is found, follow USFWS and CDFW protocols including appropriate fencing and biological monitoring, as appropriate.
Amphibians				
Ambystoma californiense California tiger Salamander – Central California Distinct Population Segment (DPS)	FT	Habitat is limited to the vicinity of large, fishless vernal pools or similar water bodies. Critical habitat has been designated for this species.	**Unlikely.** There are no vernal pools within the Study Area and the Study Area is outside critical habitat.	No further actions are recommended for this species.
Rana aurora draytonii California red-legged frog	FT, SSC	Associated with quiet perennial to intermittent ponds, stream pools and wetlands. Prefers shorelines with extensive vegetation. Documented to disperse through upland habitats after rains.	**Unlikely.** The location of the Study Area is outside the critical habitat. Numerous bullfrogs, a known predator of California red-legged frog, were observed during the site visit on October 6, 2021.	No further actions are recommended for this species.
Mammals				
None				
Fish				
Hypomesus transpacificus Delta smelt	FT	Found in large, main channels and open areas of the Bay. Occur from tidal freshwater reaches	**Not Present.** Suitable habitat is not present in the Study Area and the Study Area is	No further actions are recommended for this species.

Table 4 Potential for Federally-Listed Special-Status Species to Occur in the Project/Action Study Area				
Species	**Status**	**Habitat**	**Potential for Occurrence**	**Recommendations**
		of the Delta west to eastern San Pablo Bay.	outside the range of the species.	
Oncorhynchus mykiss irideus population 11 Steelhead, Central Valley DPS	FT	Freshwater rivers, creeks, and streams with unobstructed outlets to the ocean. Only occurs within the Central Valley.	**Not present.** Suitable habitat is not present in the Study Area and fish passage barriers exist downstream of the canal.	No further actions are recommended for this species
Oncorhynchus tshawytscha population 11 Central Valley spring-run Chinook salmon Evolutionary Significant Unit (ESU)	FT, ST	Spawns in the Sacramento and San Joaquin Rivers and their tributaries.	**Not present.** Suitable habitat is not present in the Study Area and fish passage barriers exist downstream of the canal.	No further actions are recommended for this species.
Spirinchus thaleichthys Longfin smelt	FC, ST	Found in several estuaries and lakes along the northern Pacific coast of North America.	**Unlikely.** No suitable natural stream habitat is present in the Study Area.	No further actions are recommended for this species.
Thaleichthys pacificus eulachon	FT	Spawns in the lower reaches of freshwater rivers and streams in the river systems of Northern California.	**Not present.** The Study Area is outside the geographic range and does not contain suitable habitat for this species.	No further actions are recommended for this species.
Invertebrates				
Branchinecta lynchi Vernal pool fairy shrimp	FT	Inhabits small, clear-water sandstone depression pools, grassy swales, slumps, or basalt-flow depression pools.	**Not Present.** Suitable habitat is not present in the Study Area.	No further actions are recommended for this species.
Danaus plexippus Monarch butterfly	FC	Breeds on milkweed host plants (*Asclepias* spp.) and forages on diverse plant species as adults. Monarchs are long-distance migrants and migrate thousands of miles to communal overwintering sites.	**Unlikely.** Suitable milkweed host plants are not present in the Study Area. May migrate or forage in the Study Area.	No further actions are recommended for this species.
Desmocerus californicus dimorphus	FT	Adults are active from March to June, feeding and mating. Adults have	**Not Present.** Suitable riparian habitat is not present in the Study	No further actions are recommended for this species.

Table 4
Potential for Federally-Listed Special-Status Species to Occur in the Project/Action Study Area

Species	Status	Habitat	Potential for Occurrence	Recommendations
Valley elderberry longhorn beetle		been observed feeding on the leafy foliage of the elderberry plant.	Area and there are no elderberry plants in the Study Area.	
Lepidurus packardi Vernal pool tadpole shrimp	FE	Lives in the endangered vernal pool type of habitat, and other freshwater aquatic habitats including ponds, reservoirs, ditches, road ruts, and other natural and artificial temporary water bodies.	**Not Present.** Suitable habitat is not present in the Study Area.	No further actions are recommended for this species.

Key to status codes:
FE = Federal Endangered
FT = Federal Threatened
FC = Federal Candidate
SE = State Endangered
ST = State Threatened
SSC = California Special Species of Concern
Sources:
U.S. Fish and Wildlife Service (USFWS). 2021. Information for Planning and Consultation (IPaC). List of threatened and endangered species that may occur in the Bohannon Dam Automation Project Area. September 16, 2021. Consultation Code: 08ESMF00-2021-SLI-2783. Event Code: 08ESMF00-2021-E-08098.

Section 4 – Effects on Species and Habitat

This section describes the potential effects on federally-listed species and habitat as a result of implementing the Proposed Action.

4.1 General Effects

Implementation of the Proposed Action has the potential to cause the following general effects on federally listed species and habitat in the Action Area.

- Increase in Human Activity. The Proposed Action will require construction crews to be working in the Action Area for several months. In addition, construction activities will cause an increase in noise and vibration in the Action Area, thereby potentially disturbing fish and wildlife causing them to avoid the area. This may indirectly cause reduced viability, as foraging opportunities may temporarily become more limited and/or chances for predation increase. However, this is not expected to be a significant issue. No mitigation measures are necessary.
- Increase in sedimentation and decrease in water quality. The Proposed Action may temporarily decrease water quality in the Action Area and immediately downstream if sediments or chemicals are discharged from the construction site. A decrease in water quality may cause a decline in preferred food sources or reduce concentrations of available oxygen for fish and/or amphibian eggs or yearlings. However, with the following standard construction best management practices, any temporary water quality issues will be reduced to less than significant levels.
    - **Erosion and Sedimentation Prevention Procedures.** SMWC shall prepare an Erosion Control Plan. The Erosion Control Plan will detail the erosion and sedimentation prevention measures to be implemented. As part of this plan, the Subrecipient will ensure that sediment-control devices are installed and maintained correctly. For example, sediment will be removed from engineering controls once the sediment has reached one-third of the exposed height of the control. The devices will be inspected frequently (i.e., daily or weekly, as necessary) to ensure that they are functioning properly; controls will be immediately repaired or replaced, or additional controls will be installed as necessary. Sediment that is captured in these controls may be disposed of on site in an appropriate, safe, approved area; or off site at an approved disposal site. Areas of soil disturbance, including temporarily disturbed areas, will be seeded with a regionally appropriate erosion control seed mixture. On soil slopes with an angle greater than 30 percent, erosion control blankets will be installed or a suitable and approved binding agent will be applied. Runoff will be diverted away from steep or denuded slopes. Where habitat for federally listed species is identified in, or adjacent to, the project footprint, all disturbed soils at the site will undergo erosion control treatment before the rainy season starts and after construction is terminated. Treatment may include temporary seeding and sterile straw mulch.

4.2 Effects to Federally-Listed Species and Habitat

This section describes the potential direct, indirect, and cumulative effects the Proposed Action may have to those species identified in Section 3.0 as having a medium or higher potential to occur within the Action Area. Potential species and habitats deemed to be absent or unlikely to occur are not discussed further

below. Possible interrelated and interdependent actions to the Proposed Action are also discussed. Potential effects are defined as follows.

- **Direct Effect.** Those effects generated directly from the Proposed Action, such as an incidental take during construction and elimination of suitable habitat due to construction (50CFR 402.02)
- **Indirect Effect.** Those effects that are caused by the Proposed Action and are later in time, such as the discharge of sediment or chemicals that may adversely affect water quality downstream of the Action Area (50 CFR 402.02).
- **Cumulative Effect.** Effects of future state or private activities that are reasonably certain to occur within the Proposed Action Area (50 CFR 402.02).
- **Interrelated Actions.** Those actions that are part of, and dependent upon, a larger action (50 CFR 402.02).
- **Interdependent Actions.** Actions that have no independent utility apart from the Proposed Action (50 CFR 402.02).

Based on literature searches and a site visit on October 6, 2021, construction and operation of the of the Proposed Action would not likely have any adverse effects on federally listed species and/or habitats, including Giant gartersake. This is most notably due to the fact that this is a relatively very small area and during construction, there would be no water in the main canal and adjacent irrigation canals that would support Giant gatersnakes. However, due to the proximity of rice fields and emergent vegetation around the Project/Action Area, the following precautionary measures are recommended.

- **Conduct A Preconstruction Survey for Special Status Wildlife Species.** A qualified biologist shall conduct a pre-construction survey for state and federal special status wildlife species no more than 10-days prior to construction. If a wildlife special species is found near any proposed construction areas, impacts on individuals and their habitat shall be avoided to the extent feasible. If occupied habitat can be avoided, an exclusion zone shall be established around the habitat and temporary USFWS suitable/authorized fencing shall be installed around the buffer area with "Sensitive Habitat Area" signs posted and clearly visible on the outside of the fence. The biologist shall conduct regular follow-up visits to monitor effectiveness.

- **Specific Giant Garter Snake Avoidance and Minimization Procedures.** Construction should be limited to between May 1 and October 1. This is the active period for giant garter snake, and direct mortality is lessened because snakes are expected to actively move and avoid danger. During this period, snakes are not brumating in burrows; therefore, any excavation would not likely result in adverse effects to the species. Prior to the start of construction, a USFWS-approved Biologist (Biologist) will conduct a training program for all construction personnel, including contractors and subcontractors. All construction personnel will be provided a fact sheet conveying this information. The same instruction will be provided to any new workers before they are authorized to perform project work. The training will include, at a minimum: 1) a description of the giant gartersnake and its habitat in the Action Area; 2) an explanation of the species status and protection under State and Federal laws; 3) the avoidance and minimization measures to be implemented to reduce adverse effects of this species (included herein); and 4) communication and work stoppage procedures in case a listed species is observed in the Action Area. Work activities will be restricted to existing roads, the existing Dam Structure, and the identified and barren staging area.

- Any vegetation and rip rap will be removed by hand to avoid and minimize potential for mortality that is often associated with mowers and other landscaping equipment. These areas will be revegetated at the completion of construction activities.
- Construction vehicles will observe a 15-mile-per-hour speed limit in the Action Area. This is particularly important during the time period when the snake may be sunning or moving along roadways.
- Vehicle and equipment fueling and maintenance operations will be at least 50-feet away from aquatic habitat (i.e., irrigation canal).
- Spill containment kits will be maintained on site at all times during construction operations and/or staging or fueling of equipment.
- Construction and ground disturbance will occur only during daytime hours; will cease no less than 30 minutes before sunset; and may not begin again earlier than 30 minutes after sunrise.
- All food and food-related trash items will be enclosed in sealed trash containers and properly disposed of off-site.
- Within 24 hours prior to the commencement of construction activities, the Project/Action Area will be surveyed for giant garter snakes by a Biologist. If found, the Biologist will provide the USFWS with a written report (e-mail is acceptable) that adequately documents the survey effort within 24 hours of commencement of construction activities. The Action Area will be re-inspected by the Biologist whenever a lapse in construction activity of 2 weeks or greater has occurred. If snakes are encountered during surveys, the Biologist will notify the USFWS immediately to determine the appropriate procedures. If that is the case, a report will be submitted, including date(s), location(s), habitat description, and any corrective measures taken to protect the snake, within 1 business day.
- During Action construction, if a giant garter snake is observed in the active construction zone, construction will cease, and a qualified Biologist and USFWS will be notified. Construction will resume once it is determined that the giant garter snake has moved away from the construction zone.
- To prevent giant garter snakes from becoming entangled, trapped, or injured, erosion control materials that use plastic or synthetic monofilament netting will not be used in the Project/Action Area. Acceptable materials include natural fibers such as jute, coconut, twine, or other similar fibers, that are USFWS approved.

- **Environmental Awareness Training.** All construction personnel shall be given environmental awareness training by the Proposed Project's environmental inspector or biological monitor before the start of construction. The training will familiarize all construction personnel with the federally listed species that may occur in the Action Area, their habitats, general provisions and protections afforded by the Endangered Species Act, measures to be implemented to protect these species, and the project boundaries. This training will be provided to any new worker before they are authorized to perform project work. As part of the environmental awareness training, construction personnel will be notified that no dogs or any other pets under control of construction personnel will be allowed in the Project/Action Area, and that no firearms will be permitted in the Action Area, unless carried by authorized security personnel or law enforcement.

- **Biological Monitor.** A USFWS-approved Biological Monitor will be present on site for all construction activities that occur within 100-feet of any identified suitable habitats for federally listed species that may be present during the construction of the Proposed Project/Action. SMWC will submit the Biological Monitor's qualifications to USFW's for approval 30-days prior to project construction. The Biological Monitor will ensure that all applicable avoidance and minimization measures are implemented during project construction. The Biological Monitor will also ensure that all vehicles entering the site are free of debris that may harbor organisms that could be introduced to the site, such as vegetation or mud from other areas.

4.3 Waters of the United States, Including Wetlands

The following is a summary of the potential to affect "Waters of the United States", including wetlands.

Overview

Seasonal Wetland/Vernal pools

Based on literature searches and a site visit on October 6, 2021, there are no seasonal wetlands and/or vernal pools in the Action Area. As a result, no seasonal wetlands and/or vernal pools would be affected by the Proposed Action.

Other Waters of the U.S.

Based on literature searches and a site visit on October 6, 2021, there are no "Waters of the United States" in the Action Area. As a result, no "Waters of the United States" would be affected by the Proposed Action.

Direct and Indirect Effects

Construction and operation of the Proposed Action would not have direct and indirect adverse impacts to "Waters of the United States", including seasonal wetlands and/or vernal pools.

Cumulative Effects

The Proposed Action would not have direct and indirect adverse impacts to "Waters of the United States", including seasonal wetlands and/or vernal pools. No other known development is currently planned in the Proposed Action Area that would remove or further degrade "Waters of the United States", including seasonal wetlands and/or vernal pools within the vicinity of Proposed Action Area. In addition, the Proposed Action would not have any long-term effects to "Waters of the United States", including seasonal wetlands and/or vernal pools in the region as once construction is complete.

Interdependent and Interrelated Effects

The Proposed Action is considered to be an action that has independent utility apart from other Projects in the Action Area and would not have any adverse interdependent and/or interrelated effects on "Waters of the United States", including seasonal wetlands and/or vernal pools.

Section 5 Determination of Effects

This section provides a summary and makes a determination as to the potential for the Proposed Action to affect the federally listed species identified in Section 1.

5.1 No Effect

Through the course of this study and analysis, it is our determination that the Proposed Action will not affect the following federally-listed special status species:

Plant Species

- None listed or observed

Birds

- *Agelaius tricolor* (M, SSC) — Tricolored blackbird
- *Coccyzus americanus occidentalis* (FT, SE) — Western Yellow-billed Cuckoo
- *Riparia riparia (M, ST)* — Bank swallow

Amphibians

- *Ambystma californiense* (FT) — California tiger salamander
- *Rana aurora draytonii (F*T, SSC) — California Red-legged frog

Mammals

- None listed or observed

Fish

- *Hypomesus transpacificus* (FT) — Delta smelt
- *Oncorhynchus tshawytscha* (FT) — Chinook salmon, CV, spring-run
- *Oncorhynchus tshawytscha* (FT, SC) — Chinook salmon – Sac. River, winter-run
- *Spirinchus thaleichthys (FC, ST)* — Longfin smelt
- *Thaleichthys pacificus (FT)* — Eulachon

Invertebrates

- *Branchinecta lynchi* (FT) — Vernal pool fairy shrimp
- *Danaus plexippus (FC)* — Monarch butterfly
- *Desmocerus californicus dimorphus* (FT) — Valley elderberry longhorn beetle
- *Lepidurus packardi* (FT) — Vernal pool tadpole shrimp

5.2 May Affect, But Not Likely to Adversely to Affect

Through the course of this study and analysis, it is our determination that the Proposed Action (in combination with the above-mentioned mitigation measures) may affect but not likely to adversely to affect the following federally-listed special status species:

Reptiles

- *Thamnophis gigas* (FT, ST) — Giant gartersnake

Key to status codes:
FE = Federal Endangered
FT = Federal Threatened
FC = Federal Candidate
Sources:
U.S. Fish and Wildlife Service (USFWS). 2021. Information for Planning and Consultation (IPaC). List of threatened and endangered species that may occur in the Bohannon Dam Automation Project Area. September 16, 2021. Consultation Code: 08ESMF00-2021-SLI-2783. Event Code: 08ESMF00-2021-E-08098X=Critical Habitat

Section 6 Bibliography

This section provides a listing of the major references and resources used in this report.

- U.S. Fish and Wildlife Service (USFWS). 2021. Information for Planning and Consultation (IPaC). List of threatened and endangered species that may occur in the Bohannon Dam Automation Project Area. September 16, 2021. Consultation Code: 08ESMF00-2021-SLI-2783. Event Code: 08ESMF00-2021-E-08098X=Critical Habitat

United States Department of the Interior

FISH AND WILDLIFE SERVICE
Sacramento Fish And Wildlife Office
Federal Building
2800 Cottage Way, Room W-2605
Sacramento, CA 95825-1846
Phone: (916) 414-6600 Fax: (916) 414-6713

In Reply Refer To: September 16, 2021
Consultation Code: 08ESMF00-2021-SLI-2783
Event Code: 08ESMF00-2021-E-08098
Project Name: Bohannon Dam Automation Project

Subject: List of threatened and endangered species that may occur in your proposed project location or may be affected by your proposed project

To Whom It May Concern:

The enclosed species list identifies threatened, endangered, proposed and candidate species, as well as proposed and final designated critical habitat, under the jurisdiction of the U.S. Fish and Wildlife Service (Service) that may occur within the boundary of your proposed project and/or may be affected by your proposed project. The species list fulfills the requirements of the Service under section 7(c) of the Endangered Species Act (Act) of 1973, as amended (16 U.S.C. 1531 *et seq.*).

Please follow the link below to see if your proposed project has the potential to affect other species or their habitats under the jurisdiction of the National Marine Fisheries Service:

http://www.nwr.noaa.gov/protected_species/species_list/species_lists.html

New information based on updated surveys, changes in the abundance and distribution of species, changed habitat conditions, or other factors could change this list. Please feel free to contact us if you need more current information or assistance regarding the potential impacts to federally proposed, listed, and candidate species and federally designated and proposed critical habitat. Please note that under 50 CFR 402.12(e) of the regulations implementing section 7 of the Act, the accuracy of this species list should be verified after 90 days. This verification can be completed formally or informally as desired. The Service recommends that verification be completed by visiting the ECOS-IPaC website at regular intervals during project planning and implementation for updates to species lists and information. An updated list may be requested through the ECOS-IPaC system by completing the same process used to receive the enclosed list.

The purpose of the Act is to provide a means whereby threatened and endangered species and the ecosystems upon which they depend may be conserved. Under sections 7(a)(1) and 7(a)(2) of the Act and its implementing regulations (50 CFR 402 *et seq.*), Federal agencies are required to

utilize their authorities to carry out programs for the conservation of threatened and endangered species and to determine whether projects may affect threatened and endangered species and/or designated critical habitat.

A Biological Assessment is required for construction projects (or other undertakings having similar physical impacts) that are major Federal actions significantly affecting the quality of the human environment as defined in the National Environmental Policy Act (42 U.S.C. 4332(2)(c)). For projects other than major construction activities, the Service suggests that a biological evaluation similar to a Biological Assessment be prepared to determine whether the project may affect listed or proposed species and/or designated or proposed critical habitat. Recommended contents of a Biological Assessment are described at 50 CFR 402.12.

If a Federal agency determines, based on the Biological Assessment or biological evaluation, that listed species and/or designated critical habitat may be affected by the proposed project, the agency is required to consult with the Service pursuant to 50 CFR 402. In addition, the Service recommends that candidate species, proposed species and proposed critical habitat be addressed within the consultation. More information on the regulations and procedures for section 7 consultation, including the role of permit or license applicants, can be found in the "Endangered Species Consultation Handbook" at:

http://www.fws.gov/endangered/esa-library/pdf/TOC-GLOS.PDF

Please be aware that bald and golden eagles are protected under the Bald and Golden Eagle Protection Act (16 U.S.C. 668 *et seq.*), and projects affecting these species may require development of an eagle conservation plan (http://www.fws.gov/windenergy/eagle_guidance.html). Additionally, wind energy projects should follow the wind energy guidelines (http://www.fws.gov/windenergy/) for minimizing impacts to migratory birds and bats.

Guidance for minimizing impacts to migratory birds for projects including communications towers (e.g., cellular, digital television, radio, and emergency broadcast) can be found at: http://www.fws.gov/migratorybirds/CurrentBirdIssues/Hazards/towers/towers.htm; http://www.towerkill.com; and http://www.fws.gov/migratorybirds/CurrentBirdIssues/Hazards/towers/comtow.html.

We appreciate your concern for threatened and endangered species. The Service encourages Federal agencies to include conservation of threatened and endangered species into their project planning to further the purposes of the Act. Please include the Consultation Tracking Number in the header of this letter with any request for consultation or correspondence about your project that you submit to our office.

Attachment(s):

- Official Species List

Official Species List

This list is provided pursuant to Section 7 of the Endangered Species Act, and fulfills the requirement for Federal agencies to "request of the Secretary of the Interior information whether any species which is listed or proposed to be listed may be present in the area of a proposed action".

This species list is provided by:

Sacramento Fish And Wildlife Office
Federal Building
2800 Cottage Way, Room W-2605
Sacramento, CA 95825-1846
(916) 414-6600

Project Summary

Consultation Code: 08ESMF00-2021-SLI-2783
Event Code: Some(08ESMF00-2021-E-08098)
Project Name: Bohannon Dam Automation Project
Project Type: WATER SUPPLY / DELIVERY
Project Description: Automate the gates at Bohannon Dam
Project Location:

Approximate location of the project can be viewed in Google Maps: https://www.google.com/maps/@38.9018545,-121.724659953125,14z

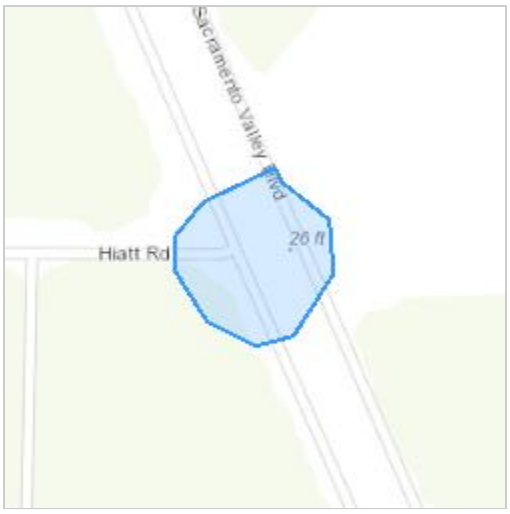

Counties: Sutter County, California

Endangered Species Act Species

There is a total of 8 threatened, endangered, or candidate species on this species list.

Species on this list should be considered in an effects analysis for your project and could include species that exist in another geographic area. For example, certain fish may appear on the species list because a project could affect downstream species.

IPaC does not display listed species or critical habitats under the sole jurisdiction of NOAA Fisheries[1], as USFWS does not have the authority to speak on behalf of NOAA and the Department of Commerce.

See the "Critical habitats" section below for those critical habitats that lie wholly or partially within your project area under this office's jurisdiction. Please contact the designated FWS office if you have questions.

---

1. NOAA Fisheries, also known as the National Marine Fisheries Service (NMFS), is an office of the National Oceanic and Atmospheric Administration within the Department of Commerce.

Reptiles

NAME	STATUS
Giant Garter Snake *Thamnophis gigas* No critical habitat has been designated for this species. Species profile: https://ecos.fws.gov/ecp/species/4482	Threatened

Amphibians

NAME	STATUS
California Red-legged Frog *Rana draytonii* There is **final** critical habitat for this species. The location of the critical habitat is not available. Species profile: https://ecos.fws.gov/ecp/species/2891	Threatened
California Tiger Salamander *Ambystoma californiense* Population: U.S.A. (Central CA DPS) There is **final** critical habitat for this species. The location of the critical habitat is not available. Species profile: https://ecos.fws.gov/ecp/species/2076	Threatened

Fishes

NAME	STATUS
Delta Smelt *Hypomesus transpacificus* There is **final** critical habitat for this species. The location of the critical habitat is not available. Species profile: https://ecos.fws.gov/ecp/species/321	Threatened

Insects

NAME	STATUS
Monarch Butterfly *Danaus plexippus* No critical habitat has been designated for this species. Species profile: https://ecos.fws.gov/ecp/species/9743	Candidate
Valley Elderberry Longhorn Beetle *Desmocerus californicus dimorphus* There is **final** critical habitat for this species. The location of the critical habitat is not available. Species profile: https://ecos.fws.gov/ecp/species/7850	Threatened

Crustaceans

NAME	STATUS
Vernal Pool Fairy Shrimp *Branchinecta lynchi* There is **final** critical habitat for this species. The location of the critical habitat is not available. Species profile: https://ecos.fws.gov/ecp/species/498	Threatened
Vernal Pool Tadpole Shrimp *Lepidurus packardi* There is **final** critical habitat for this species. The location of the critical habitat is not available. Species profile: https://ecos.fws.gov/ecp/species/2246	Endangered

Critical habitats

THERE ARE NO CRITICAL HABITATS WITHIN YOUR PROJECT AREA UNDER THIS OFFICE'S JURISDICTION.

Appendix C

Federal and State Special Status Species Known to Occur in Project/Action Area and Vicinity

California Natural Diversity Database (CNDDB) Commercial [ds85]

- Plant (80m)
- Plant (specific)
- Plant (non-specific)
- Plant (circular)
- Animal (80m)
- Animal (specific)
- Animal (non-specific)
- Animal (circular)
- Terrestrial Comm. (80m)
- Terrestrial Comm. (specific)
- Terrestrial Comm. (non-specific)
- Terrestrial Comm. (circular)
- Aquatic Comm. (80m)
- Aquatic Comm. (specific)
- Aquatic Comm. (non-specific)
- Aquatic Comm. (circular)
- Multiple (80m)
- Multiple (specific)
- Multiple (non-specific)
- Multiple (circular)
- Sensitive EO's (Commercial only)

1:72,224

N

0 0.5 1 2 mi

0 1 2 4 km

September 13, 2021

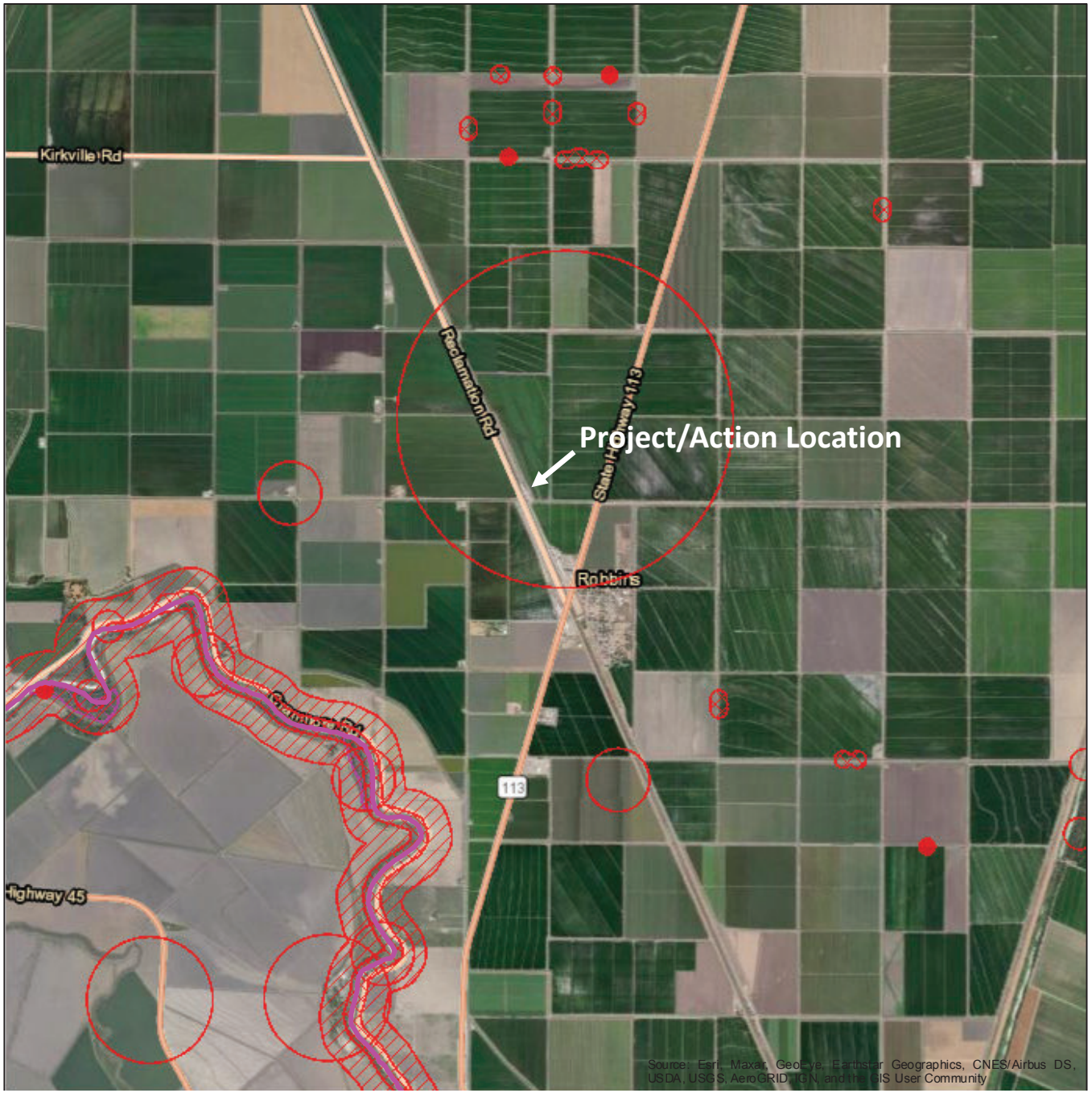

SMB ENVIRONMENTAL

Figure 8
Federal and State Special Status Species Known to Occur in Project/Action Area and Vicinity

This field visit was not intended to be a protocol-level survey to determine the actual absence or presence of special-status species, but was conducted to determine the potential for special-status species to occur within and a 500-foot buffer area of the Proposed Project/Action Area. Table 6 provides a summary of the potential for state and federal special status species to occur within the Proposed Project/Action Study Area.

Table 6
Potential for Special-Status Species to Occur in the Bohannan Dam Project/Action Study Area

Species	Status	Habitat	Potential for Occurrence	Recommendations
Plants				
Hibiscus lasiocarpos Woolly rose-mallow	1B.2	Grows in average, medium wet to wet soil in full sun in emergent wetlands. Tolerates some light shade; full sun produces best flowering and is the best environment for resisting potential diseases.	**Unlikely.** Suitable emergent wetland habitat is not present in the Study Area.	No further actions are recommended for this species.
Symphyotrichum lentum Suisun marsh aster	1B.2	It is endemic to the marshes of the Sacramento-San Joaquin River Delta of Northern California including the Suisun Marsh, in Solano County, for which it is named.	**Unlikely.** Suitable emergent wetland habitat is not present in the Study Area.	No further actions are recommended for this species.
Birds				
Agelaius tricolor Tricolored blackbird	ST, SSC	Breeding habitat includes dense riparian or emergent vegetation with nearby accessible water and suitable foraging space for insect prey within a few kilometers of the nesting colony. Often forms large breeding colonies. Wintering habitat includes grasslands and agricultural fields with low-growing vegetation.	**Nesting – Moderate.** Suitable emergent wetland nesting habitat is marginal in the Study Area, and is only present in the side ditch/canal west of the staging area. **Foraging – Moderate.** Suitable wintering habitat is present in the grassland and agricultural areas in the Study Area. There is one record of tricolored blackbird within 1 mile of the Study Area (CNDDB 2021).	If construction activities are planned within the nesting season (February 1-August 31, conduct pre-construction breeding/nesting bird surveys
Buteo swainsoni Swainson's hawk	SE	Their breeding habitat is prairie and dry grasslands in western North	**Nesting – Unlikely.** Suitable riparian nesting habitat is not	If construction activities are planned within the

Table 6 Potential for Special-Status Species to Occur in the Bohannan Dam Project/Action Study Area				
Species	**Status**	**Habitat**	**Potential for Occurrence**	**Recommendations**
		America. They build a stick nest in a tree or shrub or on a cliff edge. In California, breeding habitat includes riparian woodland and trees adjacent to riparian systems. Foraging habitat includes open grasslands, agricultural fields, and pastures.	present in the Study Area. **Foraging – Moderate.** Suitable grassland agricultural foraging habitat is present in the Study Area.	nesting season (February 1-August 31, conduct pre-construction breeding/nesting bird surveys
Charadrius montanus Mountain plover	SSC	Usually not found near bodies of water or even on wet soil; it prefers dry habitat with short grass (usually due to grazing) and bare ground. Winters in California and breeds in high-elevation grasslands in the interior.	**Wintering - Moderate.** The Study Area is not within the breeding range of this species. Suitable wintering habitat is present within the Study Area.	If construction activities are planned within the nesting season (February 1-August 31, conduct pre-construction breeding/nesting bird surveys
Coccyzus americanus occidentalis western yellow-billed cuckoo	FT, SE	Their breeding habitat is deciduous woods from southern Canada to Mexico. In California, breeds in large blocks of valley and foothill riparian habitat with 25 acres or more contiguous habitat. Found along the Sacramento River and the South Fork of the Kern River. Critical Habitat has been Proposed for this Species.	**Nesting and Foraging - Unlikely.** Suitable dense riparian nesting and foraging habitat is not present nearby the Study Area.	No further actions are recommended for this species.
Riparia riparia Bank swallow	ST	These birds' nest along the Sacramento River and its tributaries, excavating burrows in vertical banks created by natural river processes. Forages over water and river systems in California.	**Nesting – Unlikely.** Suitable bankside nesting habitat is not present in the Study Area. **Foraging – Moderate.** Suitable open water foraging habitat is present in the Study Area.	If construction activities are planned within the nesting season (February 1-August 31, conduct pre-construction breeding/nesting bird surveys
Other birds protected by the Migratory Bird Treaty Act (MBTA).	-	Various habitats.	Several native bird species were observed during an October 6th site visit, such as great	If construction activities are planned within the nesting season

Table 6
Potential for Special-Status Species to Occur in the Bohannan Dam Project/Action Study Area

Species	Status	Habitat	Potential for Occurrence	Recommendations
			egret, pied-billed grebe, black phoebe, and Brewer's blackbird.	(February 1-August 31, conduct pre-construction breeding/nesting bird surveys
Reptiles				
Thamnophis gigas Giant gartersnake	FT, ST	Due to its semiaquatic nature, it is rarely found less than ten meters from water[5] during the active season. Found in freshwater marshes, streams, and wetlands in the Sacramento and San Joaquin valleys of California. Requires bankside basking areas with emergent vegetation and nearby upland refugia.	**Present.** Suitable aquatic habitat is present in the Study Area, emergent vegetation is marginal within the irrigation canal. There are three records of Giant gartersnake within 1 mile of the Study Area (CNDDB 2021). October 2022 Survey noticed numerous Giant Gartner snakes in living the Rip Rap at/near the existing Bohannon Dam.	Conduct specific giant gartersnake pre-construction surveys, provide awareness training to construction workers, limit construction between May 1 and October 1, and have qualified biological monitor on-site during construction.
Emys marmorata Western pond turtle	SSC	Occurs in perennial ponds, lakes, rivers and streams with suitable basking habitat (mud banks, mats of floating vegetation, partially submerged logs) and submerged shelter.	**Present.** Suitable aquatic and upland habitat are present in the Study Area. Observed in the Study Area during a site visit on October 6, 2021.	Conduct pre-construction surveys and provide environmental awareness training to construction workers.
Amphibians				
Ambystoma californiense California tiger Salamander – Central California Distinct Population Segment (DPS)	FT	Habitat is limited to the vicinity of large, fishless vernal pools or similar water bodies. Critical habitat has been designated for this species.	**Unlikely.** There are no vernal pools within the Study Area and the Study Area is outside critical habitat.	No further actions are recommended for this species.
Rana aurora draytonii California red-legged frog	FT, SSC	Associated with quiet perennial to intermittent ponds, stream pools and wetlands. Prefers shorelines with extensive vegetation. Documented to disperse through upland habitats after rains.	**Unlikely.** The location of the Study Area is outside the critical habitat. Numerous bullfrogs, a known predator of California red-legged frog, were observed during the site visit on October 6, 2021.	No further actions are recommended for this species.

Table 6 Potential for Special-Status Species to Occur in the Bohannan Dam Project/Action Study Area				
Species	**Status**	**Habitat**	**Potential for Occurrence**	**Recommendations**
Mammals				
Lasiurus blossevillii Western red bat	SSC	These bats hang upside down from a tree branch from one foot because they are trying to blend in with their surroundings, such as dead leaves. Roosts in forests and woodlands from sea level up through mixed mesic conifer forests in coastal ranges and the Sierra Nevada. Forages in a variety of habitats including croplands, grasslands, shrublands, and open woodlands and forests. Prefers solitary roosts in trees and occasionally shrubs.	**Roosting – Unlikely.** Suitable riparian roosting habitat is not present in the Study Area. **Foraging - Moderate.** Suitable open foraging habitat is present nearby the Study Area.	No further actions are recommended for this species.
Fish				
Hypomesus transpacificus Delta smelt	FT	Found in large, main channels and open areas of the Bay. Occur from tidal freshwater reaches of the Delta west to eastern San Pablo Bay.	**Not Present.** Suitable habitat is not present in the Study Area and the Study Area is outside the range of the species.	No further actions are recommended for this species.
Oncorhynchus mykiss irideus population 11 Steelhead, Central Valley DPS	FT	Freshwater rivers, creeks, and streams with unobstructed outlets to the ocean. Only occurs within the Central Valley.	**Not present.** Suitable habitat is not present in the Study Area and fish passage barriers exist downstream of the canal.	No further actions are recommended for this species
Oncorhynchus tshawytscha population 11 Central Valley spring-run Chinook salmon Evolutionary Significant Unit (ESU)	FT, ST	Spawns in the Sacramento and San Joaquin Rivers and their tributaries.	**Not present.** Suitable habitat is not present in the Study Area and fish passage barriers exist downstream of the canal.	No further actions are recommended for this species.
Pogonichthys macrolepidotus Sacramento splittail	SSC	Found in the lower delta; spawns in Sacramento and San Joaquin Rivers. Documented to occur in the Napa River by the Napa RCD. Flooded vegetation is used for	**Unlikely.** No suitable stream habitat is present in the Study Area.	No further actions are recommended for this species.

Table 6
Potential for Special-Status Species to Occur in the Bohannan Dam Project/Action Study Area

Species	Status	Habitat	Potential for Occurrence	Recommendations
		spawning and foraging for juveniles.		
Spirinchus thaleichthys Longfin smelt	FC, ST	Found in several estuaries and lakes along the northern Pacific coast of North America.	**Unlikely.** No suitable natural stream habitat is present in the Study Area.	No further actions are recommended for this species.
Thaleichthys pacificus Eulachon	FT	Spawns in the lower reaches of freshwater rivers and streams in the river systems of Northern California.	**Not present.** The Study Area is outside the geographic range and does not contain suitable habitat for this species.	No further actions are recommended for this species.
Invertebrates				
Branchinecta lynchi Vernal pool fairy shrimp	FT	Inhabits small, clear-water sandstone depression pools, grassy swales, slumps, or basalt-flow depression pools.	**Not Present.** Suitable habitat is not present in the Study Area.	No further actions are recommended for this species.
Danaus plexippus Monarch butterfly	FC	Breeds on milkweed host plants (*Asclepias* spp.) and forages on diverse plant species as adults. Monarchs are long-distance migrants and migrate thousands of miles to communal overwintering sites.	**Unlikely.** Suitable milkweed host plants are not present in the Study Area. May migrate or forage in the Study Area.	No further actions are recommended for this species.
Desmocerus californicus dimorphus Valley elderberry longhorn beetle	FT	Adults are active from March to June, feeding and mating. Adults have been observed feeding on the leafy foliage of the elderberry plant.	**Not Present.** Suitable riparian habitat is not present in the Study Area and there are no elderberry plants in the Study Area.	No further actions are recommended for this species.
Lepidurus packardi Vernal pool tadpole shrimp	FE	Lives in the endangered vernal pool type of habitat, and other freshwater aquatic habitats including ponds, reservoirs, ditches, road ruts, and other natural and artificial temporary water bodies.	**Not Present.** Suitable habitat is not present in the Study Area.	No further actions are recommended for this species.

Key to status codes:
FE - Federal Endangered
FT - Federal Threatened
FC - Federal Candidate
SE - State Endangered

Table 6
Potential for Special-Status Species to Occur in the Bohannan Dam Project/Action Study Area

Species	Status	Habitat	Potential for Occurrence	Recommendations

ST - State Threatened
SSC - CDFW Species of Special Concern
CFP - CDFW Fully Protected Animal
List 1A CNPS List 1A: Plants presumed extinct in California
List 1B CNPS List 1B: Plants rare, threatened or endangered in California and elsewhere
List 2 CNPS List 2: Plants rare, threatened, or endangered in California, but more common elsewhere
List 3 CNPS List 3: Plants about which CNPS needs more information (a review list)

Sources:
California Natural Diversity Database (CNDDB). 2021. Rarefind, Version 5.0. Online database. California Department of Fish and Wildlife, Sacramento, CA. Accessed September 16, 2021.
U.S. Fish and Wildlife Service (USFWS). 2021. Information for Planning and Consultation (IPaC). List of threatened and endangered species that may occur in the Bohannon Dam Automation Project Area. September 16, 2021. Consultation Code: 08ESMF00-2021-SLI-2783. Event Code: 08ESMF00-2021-E-08098.

Figure 8 provides photos of habitats observed and assessed.

- **Irrigation Canal** – The irrigation canal mostly lacks emergent and floating vegetation along the banks and is highly turbid. Non-native Asian carp and bullfrogs were observed in the canal. Vegetation along the banks is dominated by non-native weedy species such as prickly lettuce (*Lactuca serriola*) and mustard (*Hirschfeldia incana*), with some native willow herb (*Epilobium brachycarpum*).
- **Barren** – Project staging areas are mostly barren and contain small amounts of non-native field bindweed (*Convolvulus arvensis*) and yellow starthistle (*Centaurea solstitialis*). Soil has previously been compacted and provides very few suitable burrows for Giant gartersnake ((*Thamnophis gigas* (FT, ST)) overwintering.
- **Side Ditch/Canal** – A side ditch/canal with emergent cattail (*Typha* spp.) vegetation is present to the west of the staging areas. This canal provides some emergent wetland vegetation cover for species such as Giant gartersnake and some limited habitat for wetland breeding species such as tricolored blackbird (ST, SSC).
- **Rice Fields** – The surrounding agricultural area is mostly composed of irrigated rice fields, observed in a dormant state during the site visit. Giant gartersnake are known to use these habitats along the Sacramento River corridor

During the October 6, 2021 and September 6, 2022 field visits, the following wildlife species were observed in the Proposed Project/Action Area:

- Giant gartersnake
- Cabbage white butterfly
- Mosquitofish species
- Carp species
- Bullfrog
- Western pond turtle (SSC)
- Pied-billed grebe
- Double-crested cormorant
- Great blue heron
- Great egret
- Snowy egret
- Green heron