Appendix A

Notice of Preparation (NOP) and NOP Comments

City of Carlsbad

NOTICE OF PREPARATION of a

SUPPLEMENTAL ENVIRONMENTAL IMPACT REPORT

Pursuant to Section 15163(c) of the California Environmental Quality Act (CEQA) Guidelines, a supplement to an Environmental Impact Report (EIR) shall be given the same kind of notice and public review as is given a draft EIR under Section 15087. As stated in the CEQA Guidelines Section 15087, when an EIR is required for a project, a Notice of Preparation (NOP) describing the project and its potential environmental effects shall be prepared.

You are being notified of the City of Carlsbad's (city) intent, as Lead Agency, to prepare a Supplemental EIR (SEIR) for the Housing Element Implementation and Public Safety Element Update project as described below, which may be of interest to you and/or the organization or agency that you represent. The SEIR will be a supplement to the Carlsbad General Plan and Climate Action Plan EIR (State Clearinghouse # 2011011004), certified in 2015. This project is city-initiated.

PROJECT NAME: Housing Element Implementation and Public Safety Element Update - GPA 2022-0001/ZCA 2022-0004/ZC 2022-0001/LCPA 2022-001/EIR 2022-0007 (PUB2022-0010)

PROJECT LOCATION: Carlsbad is a coastal community with approximately 115,000 residents. The city is approximately 42 square miles in area and is located along the northern coast of San Diego County (about 30 miles north of the City of San Diego). Carlsbad is bordered to the north of the City of Oceanside, to the south by the City of Encinitas, to the east by the cities of Vista and San Marcos, and to the west by the Pacific Ocean.

The city contains a combination of industrial, commercial, and residential development, including a large regional shopping center, an auto-retail center, a large industrial park area, the LEGOLAND California Educational/Recreational Park, and a regional airport, as well as three lagoons, limited agricultural areas and large tracts of preserved open space.

Interstate 5, El Camino Real, and Carlsbad Boulevard provide the major north-south routes through the city, as does the San Diego Northern Railroad (SDNRR) line. Major east-west routes include Carlsbad Village Drive, Tamarack Avenue, Cannon Road, Palomar Airport Road, Poinsettia Lane, and La Costa Avenue.

The regional setting is depicted in Figure 1. The Planning Area consists of the existing city limits and is depicted in Figure 2.

Figure 1 Regional Location

Imagery provided by Esri and its licensors © 2020.

Carlsbad City Limits

N

Figure 2 Carlsbad City Boundaries

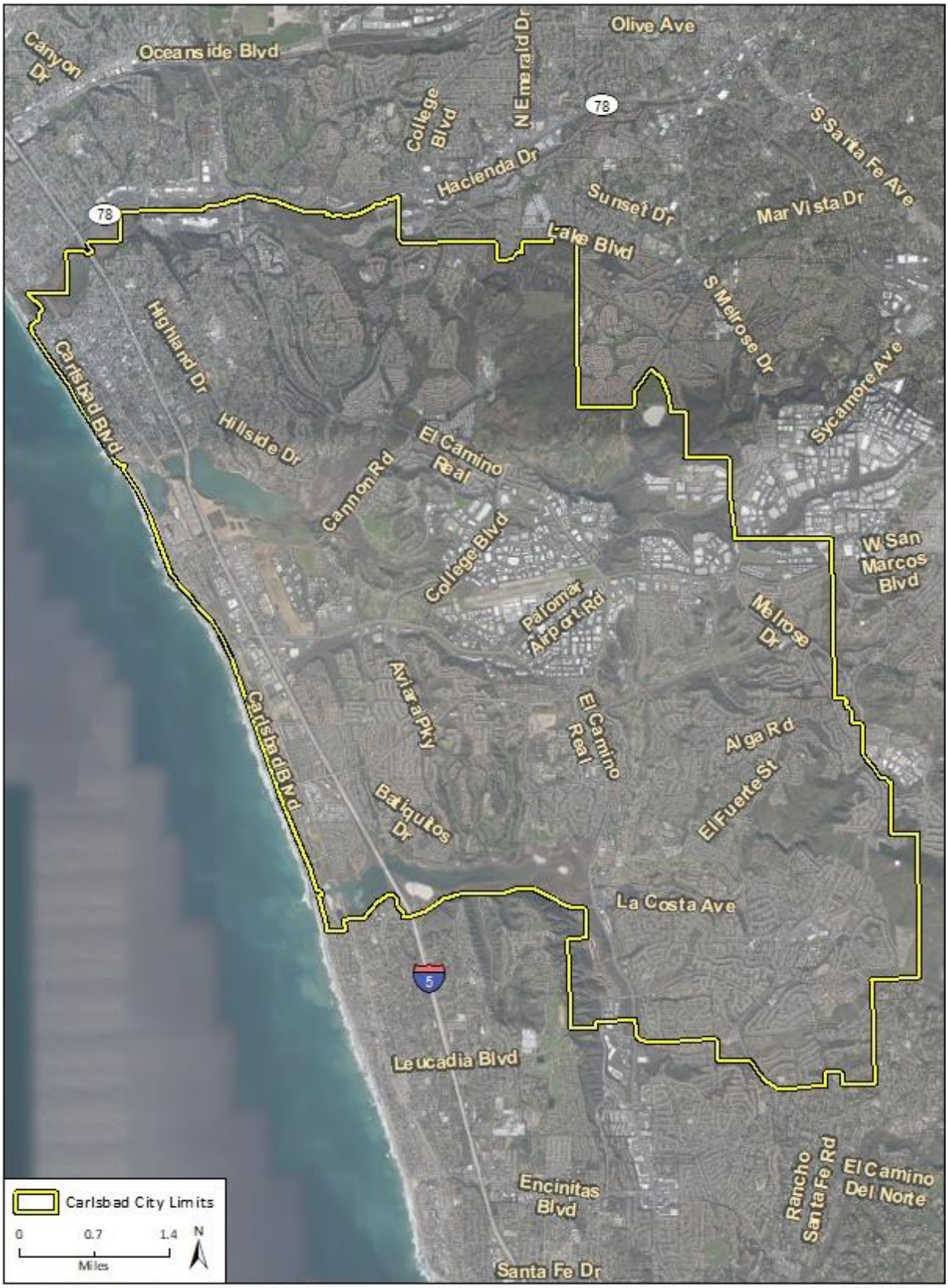

Imagery provided by Microsoft Bing and its licensors © 2020.

PROJECT DESCRIPTION: The project consists of updates to the General Plan, including the Land Use and Community Design Element and Public Safety Element, and updates to Carlsbad Municipal Code Title 21, the Zoning Ordinance. The updates are necessary to implement the programs of the city's Housing Element Update 2021-2029 (Housing Element), which was adopted by the Carlsbad City Council on April 6, 2021, and changes in state law.

General Plan Updates

Housing Element implementation triggers changes to the Land Use and Community Design Element. Furthermore, Housing Element approval and recently approved state housing and public safety legislation resulted in the need for changes to the Public Safety Element and the Zoning Ordinance. The Housing Element was analyzed under its own respective CEQA document, which was posted on the State Clearinghouse (SCH) website on April 22, 2021 (SCH#2011011004). Thus, this SEIR will solely analyze the potential impacts in relation to updates the city will propose to the General Plan, including the Land Use & Community Design Element and Public Safety Element, and to the city's Zoning Ordinance, discussed below.

Land Use & Community Design Element

The Land Use & Community Design Element provides the long-term vision, goals, and policies for Carlsbad through the year 2035. The overall focus is to accommodate change and growth in the city, while preserving and enhancing the features and attributes that make Carlsbad such a desirable place to live. Topics covered in the element include land use designations, revitalization of older neighborhoods, preservation of existing neighborhoods as well as environmental resources and open space, development of new neighborhoods with varied housing opportunities, land use constraints, and new opportunity areas. The element also includes goals and policies to help implement the element's vision and help maintain a healthy balance of development within Carlsbad.

As stated previously, implementation of the city's Housing Element triggers the need to make changes to the Land Use & Community Design Element, including the Land Use Map. These changes include the proposed addition of two new residential land use designations (R-35 and R-40) for the accommodation of higher density residential development, establishment of new minimum densities for some residential designations, miscellaneous, related changes to tables, text and policies, and changes to land use designations on multiple sites to accommodate the city's share of the Regional Housing Needs Assessment (RHNA).

The proposed changes to land use designations on multiple sites have been presented and discussed with the community on many occasions, including as part of the Housing Element adoption in April 2021, a City Council meeting in August 2021, public outreach conducted in fall 2021, and a City Council meeting on Feb. 15, 2022. At the February 2022 meeting, the City Council provided direction on specific sites to analyze environmentally as part of this SEIR and present for possible land use changes through the public hearing process, expected to occur in 2023.

More information on the potential housing sites identified, including a map, is available at carlsbadca.gov/housingplan.

Public Safety Element

The Public Safety Element is a required component of a City's General Plan that serves to reduce the potential short and long-term risk of death, injuries, property damage, and economic and social dislocation associated with potential hazards. The recent approval of the Housing Element, including the identification of new housing sites for the 6th cycle Housing Element site inventory, have triggered required analysis and compliance with recent state safety legislation. The Public Safety Element Update will address the requirements of new State legislation and incorporate new policies based on updated local and regional data. The update will address these legislative requirements, including but not limited to:

- Senate Bill 99; Identification of two access points in all emergency evacuation routes in Carlsbad
- Senate Bill 379; Inclusion of a climate change vulnerability assessment
- Senate Bill 1035; Consideration of climate adaptation and resiliency
- Senate Bill 1241; Assessment of high fire hazard severity zones
- Assembly Bill 162; Assessment of flood hazard and management
- Assembly Bill 747; Evaluation of evacuation route capacity

Zoning Ordinance Update

Carlsbad Municipal Code (CMC) Title 21 is known as the Zoning Ordinance of the City of Carlsbad and consists of two main elements, the Zoning Ordinance and Zoning Map. To prevent incompatible land use relationships, the city's Zoning Ordinance and Zoning Map designate different areas or zones for different types of land uses and establish standards for development.

As a result of new policies and programs set forth in the Housing Element, along with recent state zoning legislation, updates to Title 21 will be made to ensure compliance with the General Plan and state law.

The Zoning Ordinance and Map implement the city's Local Coastal Program. Revisions to both will also trigger amendments to the Local Coastal Program that will be subsequently sent to the California Coastal Commission.

ENVIRONMENTAL ANALYSIS: Approval of the Housing Element Implementation and Public Safety Element Update project would not include approval of any physical development (e.g., construction of housing or infrastructure). However, the SEIR will assume that such actions are reasonably foreseeable future outcomes of the project. As such, the SEIR will evaluate the potential physical environmental impacts that could result from future actions for implementing the policies proposed under the project at a programmatic level, in accordance with CEQA Guidelines Section 15168. The topical areas that will be addressed in the SEIR are:

- Aesthetics
- Air Quality
- Biological Resources
- Cultural Resources
- Energy
- Greenhouse Gas Emissions
- Geology, Soils, and Seismicity
- Hazards & Hazardous Materials
- Hydrology, Flooding, and Water Quality
- Land Use
- Noise
- Population & Housing
- Public Services
- Recreation
- Transportation
- Tribal Cultural Resources
- Utilities/Service Systems
- Wildfire

In addition, the SEIR will address cumulative impacts, growth inducing impacts, alternatives, and other issues required by CEQA.

PUBLIC COMMENT PERIOD:

Written Comments

The public review period begins Sept. 14, 2022 and ends October 14, 2022. The City of Carlsbad welcomes and will consider all written comments regarding potential environmental impacts of the project and issues to be addressed in the SEIR. **Written comments must be submitted by Oct. 14, 2022.**

Please direct your comments to:

Mail: Scott Donnell, Senior Planner
City of Carlsbad
Planning Division
1635 Faraday Avenue
Carlsbad, California 92008

Email: Scott.Donnell@carlsbadca.gov

Please identify the name, phone number, and email address of a contact person at your agency. For members of the public, please also include your name and contact information, such as a phone number, email or postal address.

Scoping Meetings

The City of Carlsbad will host one in person SEIR Scoping Meeting and one SEIR Virtual Scoping Meeting. The purpose of the scoping meetings is to solicit input on the scope and content of the environmental analysis that will be included in the Draft SEIR for the Housing Element Implementation and Public Safety Element Update project. The date, time and link for the meeting are as follows:

In person meeting:
Sept. 26, 2022, 6 p.m.
Faraday Administration Center
1635 Faraday Avenue
Carlsbad, CA 92008

Virtual meeting:
Sept. 28, 2022, 6 p.m.
Register online at carlsbadca.gov/housingplan

MORE INFORMATION:

Call 442-339-2600 or visit carlsbadca.gov/housingplan

Notice of Preparation

To: Governor's Office of Plng and Research
State Clearinghouse Unit
1400 Tenth St, Sacramento, CA 95814

From: City of Carlsbad
1635 Faraday Avenue
Carlsbad, CA 92008

Subject: Notice of Preparation of a Draft Environmental Impact Report

The City of Carlsbad will be the Lead Agency and will prepare an environmental impact report for the project identified below. We need to know the views of your agency as to the scope and content of the environmental information which is germane to your agency's statutory responsibilities in connection with the proposed project. Your agency will need to use the EIR prepared by our agency when considering your permit or other approval for the project.

The project description, location, and the potential environmental effects are contained in the attached materials. A copy of the Initial Study (☐ is ☒ is not) attached.

Due to the time limits mandated by State law, your response must be sent at the earliest possible date but not later than 30 days after receipt of this notice.

Please send your response to Scott Donnell, Senior Planner, at the address shown above. We will need the name for a contact person in your agency.

Project Title: Housing Element Implementation and Public Safety Element Update

Project Applicant, if any: City of Carlsbad

Date Sept. 19, 2022

Signature Scott Donnell

Title Senior Planner

Telephone 442-339-2618

Reference: California Code of Regulations, Title 14, (CEQA Guidelines) Sections 15082(a), 15103, 15375.

AMENDED

NOTICE OF PREPARATION of a

SUPPLEMENTAL ENVIRONMENTAL IMPACT REPORT

(SCH Number 2022090339)

Note: This amended notice extends the public comment period from Oct. 19, 2022, to Oct. 26, 2022. It also notes the addition of a third scoping meeting on Monday, Oct. 17, 2022. Details about these changes are provided in the "Public Comment Period" section at the end of this notice. The rest of the notice content has not changed.

Pursuant to Section 15163(c) of the California Environmental Quality Act (CEQA) Guidelines, a supplement to an Environmental Impact Report (EIR) shall be given the same kind of notice and public review as is given a draft EIR under Section 15087. As stated in the CEQA Guidelines Section 15087, when an EIR is required for a project, a Notice of Preparation (NOP) describing the project and its potential environmental effects shall be prepared.

You are being notified of the City of Carlsbad's (city) intent, as Lead Agency, to prepare a Supplemental EIR (SEIR) for the Housing Element Implementation and Public Safety Element Update project as described below, which may be of interest to you and/or the organization or agency that you represent. The SEIR will be a supplement to the Carlsbad General Plan and Climate Action Plan EIR (State Clearinghouse # 2011011004), certified in 2015. This project is city-initiated.

PROJECT NAME: Housing Element Implementation and Public Safety Element Update - GPA 2022-0001/ZCA 2022-0004/ZC 2022-0001/LCPA 2022-001/EIR 2022-0007 (PUB2022-0010)

PROJECT LOCATION: Carlsbad is a coastal community with approximately 115,000 residents. The city is approximately 42 square miles in area and is located along the northern coast of San Diego County (about 30 miles north of the City of San Diego). Carlsbad is bordered to the north of the City of Oceanside, to the south by the City of Encinitas, to the east by the cities of Vista and San Marcos, and to the west by the Pacific Ocean.

The city contains a combination of industrial, commercial, and residential development, including a large regional shopping center, an auto-retail center, a large industrial park area, the LEGOLAND California Educational/Recreational Park, and a regional airport, as well as three lagoons, limited agricultural areas and large tracts of preserved open space.

Interstate 5, El Camino Real, and Carlsbad Boulevard provide the major north-south routes through the city, as does the San Diego Northern Railroad (SDNRR) line. Major east-west routes include Carlsbad Village Drive, Tamarack Avenue, Cannon Road, Palomar Airport Road, Poinsettia Lane, and La Costa Avenue.

The regional setting is depicted in Figure 1. The Planning Area consists of the existing city limits and is depicted in Figure 2.

Figure 1 Regional Location

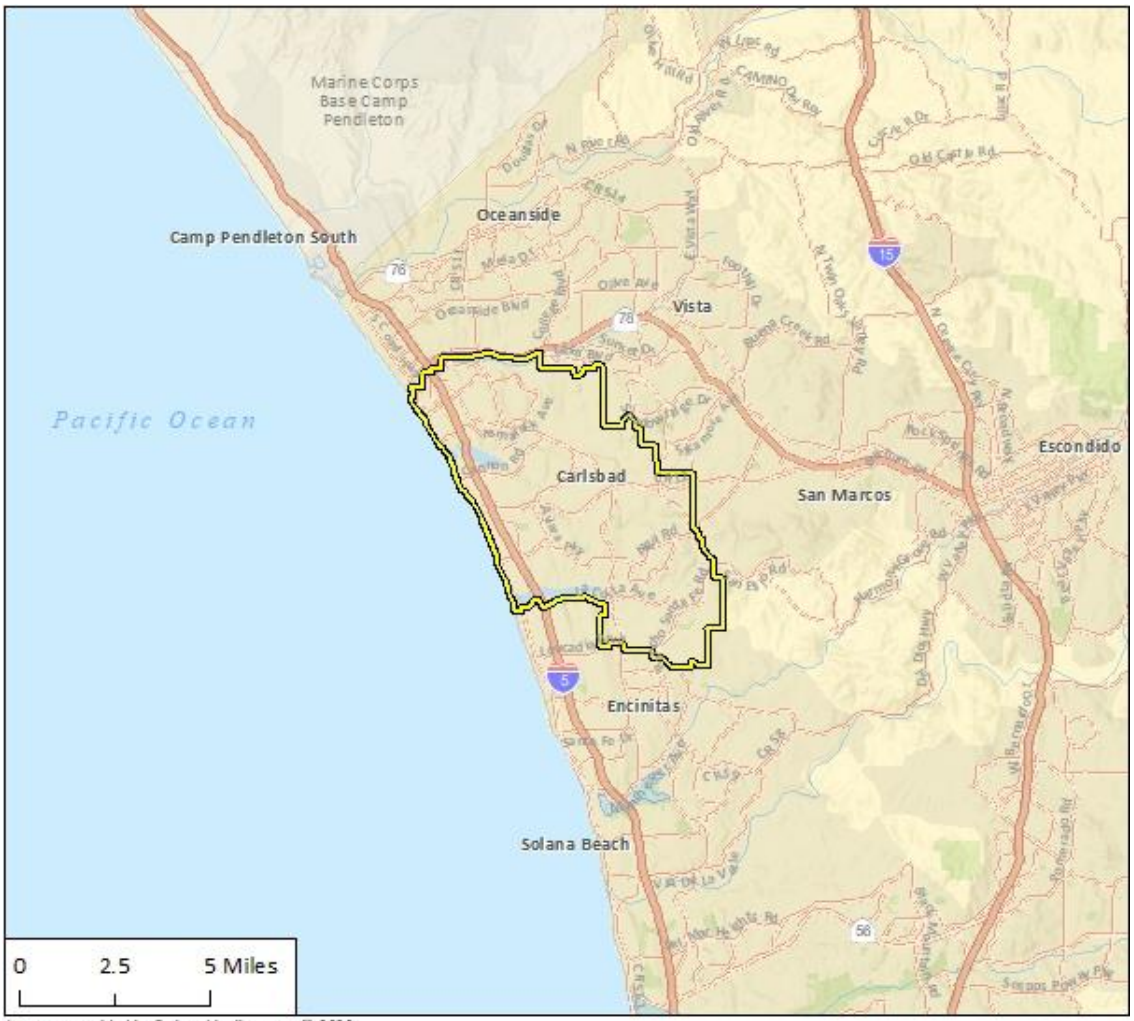

Imagery provided by Esri and its licensors © 2020.

Carlsbad City Limits

Figure 2 Carlsbad City Boundaries

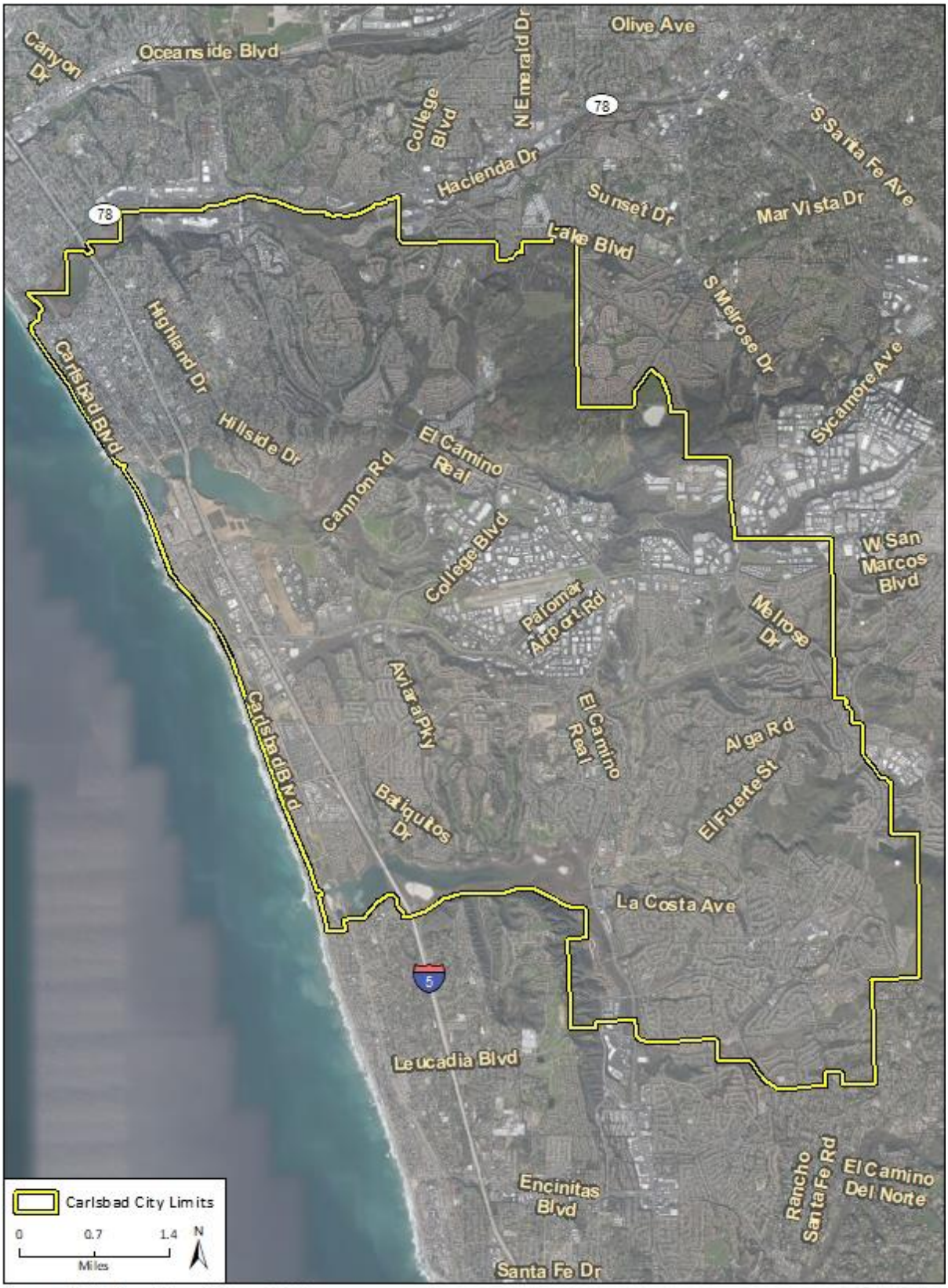

Imagery provided by Microsoft Bing and its licensors © 2020.

PROJECT DESCRIPTION: The project consists of updates to the General Plan, including the Land Use and Community Design Element and Public Safety Element, and updates to Carlsbad Municipal Code Title 21, the Zoning Ordinance. The updates are necessary to implement the programs of the city's Housing Element Update 2021-2029 (Housing Element), which was adopted by the Carlsbad City Council on April 6, 2021, and changes in state law.

General Plan Updates

Housing Element implementation triggers changes to the Land Use and Community Design Element. Furthermore, Housing Element approval and recently approved state housing and public safety legislation resulted in the need for changes to the Public Safety Element and the Zoning Ordinance. The Housing Element was analyzed under its own respective CEQA document, which was posted on the State Clearinghouse (SCH) website on April 22, 2021 (SCH#2011011004). Thus, this SEIR will solely analyze the potential impacts in relation to updates the city will propose to the General Plan, including the Land Use & Community Design Element and Public Safety Element, and to the city's Zoning Ordinance, discussed below.

Land Use & Community Design Element

The Land Use & Community Design Element provides the long-term vision, goals, and policies for Carlsbad through the year 2035. The overall focus is to accommodate change and growth in the city, while preserving and enhancing the features and attributes that make Carlsbad such a desirable place to live. Topics covered in the element include land use designations, revitalization of older neighborhoods, preservation of existing neighborhoods as well as environmental resources and open space, development of new neighborhoods with varied housing opportunities, land use constraints, and new opportunity areas. The element also includes goals and policies to help implement the element's vision and help maintain a healthy balance of development within Carlsbad.

As stated previously, implementation of the city's Housing Element triggers the need to make changes to the Land Use & Community Design Element, including the Land Use Map. These changes include the proposed addition of two new residential land use designations (R-35 and R-40) for the accommodation of higher density residential development, establishment of new minimum densities for some residential designations, miscellaneous, related changes to tables, text and policies, and changes to land use designations on multiple sites to accommodate the city's share of the Regional Housing Needs Assessment (RHNA).

The proposed changes to land use designations on multiple sites have been presented and discussed with the community on many occasions, including as part of the Housing Element adoption in April 2021, a City Council meeting in August 2021, public outreach conducted in fall 2021, and a City Council meeting on Feb. 15, 2022. At the February 2022 meeting, the City Council provided direction on specific sites to analyze environmentally as part of this SEIR and present for possible land use changes through the public hearing process, expected to occur in 2023.

More information on the potential housing sites identified, including a map, is available at carlsbadca.gov/housingplan.

Public Safety Element

The Public Safety Element is a required component of a City's General Plan that serves to reduce the potential short and long-term risk of death, injuries, property damage, and economic and social dislocation associated with potential hazards. The recent approval of the Housing Element, including the identification of new housing sites for the 6th cycle Housing Element site inventory, have triggered required analysis and compliance with recent state safety legislation. The Public Safety Element Update will address the requirements of new State legislation and incorporate new policies based on updated local and regional data. The update will address these legislative requirements, including but not limited to:

- Senate Bill 99; Identification of two access points in all emergency evacuation routes in Carlsbad
- Senate Bill 379; Inclusion of a climate change vulnerability assessment
- Senate Bill 1035; Consideration of climate adaptation and resiliency
- Senate Bill 1241; Assessment of high fire hazard severity zones
- Assembly Bill 162; Assessment of flood hazard and management
- Assembly Bill 747; Evaluation of evacuation route capacity

Zoning Ordinance Update

Carlsbad Municipal Code (CMC) Title 21 is known as the Zoning Ordinance of the City of Carlsbad and consists of two main elements, the Zoning Ordinance and Zoning Map. To prevent incompatible land use relationships, the city's Zoning Ordinance and Zoning Map designate different areas or zones for different types of land uses and establish standards for development.

As a result of new policies and programs set forth in the Housing Element, along with recent state zoning legislation, updates to Title 21 will be made to ensure compliance with the General Plan and state law.

The Zoning Ordinance and Map implement the city's Local Coastal Program. Revisions to both will also trigger amendments to the Local Coastal Program that will be subsequently sent to the California Coastal Commission.

ENVIRONMENTAL ANALYSIS: Approval of the Housing Element Implementation and Public Safety Element Update project would not include approval of any physical development (e.g., construction of housing or infrastructure). However, the SEIR will assume that such actions are reasonably foreseeable future outcomes of the project. As such, the SEIR will evaluate the potential physical environmental impacts that could result from future actions for implementing the policies proposed under the project at a programmatic level, in accordance with CEQA Guidelines Section 15168. The topical areas that will be addressed in the SEIR are:

- Aesthetics
- Air Quality
- Biological Resources
- Cultural Resources
- Energy
- Greenhouse Gas Emissions
- Geology, Soils, and Seismicity
- Hazards & Hazardous Materials
- Hydrology, Flooding, and Water Quality
- Land Use
- Noise
- Population & Housing
- Public Services
- Recreation
- Transportation
- Tribal Cultural Resources
- Utilities/Service Systems
- Wildfire

In addition, the SEIR will address cumulative impacts, growth inducing impacts, alternatives, and other issues required by CEQA.

PUBLIC COMMENT PERIOD:

Written Comments

The public review period begins Sept. 14, 2022 and ends October 26, 2022. The City of Carlsbad welcomes and will consider all written comments regarding potential environmental impacts of the project and issues to be addressed in the SEIR. **Written comments must be submitted by Oct. 26, 2022.**

Please direct your comments to:

Mail: Scott Donnell, Senior Planner
City of Carlsbad
Planning Division
1635 Faraday Avenue
Carlsbad, California 92008

Email: Scott.Donnell@carlsbadca.gov

Please identify the name, phone number, and email address of a contact person at your agency. For members of the public, please also include your name and contact information, such as a phone number, email or postal address.

Scoping Meetings

The City of Carlsbad will host two in person SEIR Scoping Meetings and one SEIR Virtual Scoping Meeting. The purpose of the scoping meetings is to solicit input on the scope and content of the environmental analysis that will be included in the Draft SEIR for the Housing Element Implementation and Public Safety Element Update project. The dates, times and link for the meetings are as follows:

- **In person meetings:**

  Sept. 26, 2022, 6 to 7:30 p.m.
  Faraday Administration Center
  1635 Faraday Avenue
  Carlsbad, CA 92008

  Oct. 17, 2022, 6 to 7:30 p.m.
  Faraday Administration Center
  1635 Faraday Avenue
  Carlsbad, CA 92008

- **Virtual meeting:**

  Sept. 28, 2022, 6 to 7:30 p.m.
  Register online at carlsbadca.gov/housingplan

MORE INFORMATION:

Call 442-339-2600 or visit carlsbadca.gov/housingplan

Amended Notice of Preparation

To: Governor's Office of Plng and Research
State Clearinghouse Unit
1400 Tenth St, Sacramento, CA 95814
(Address)

From: City of Carlsbad
1635 Faraday Avenue
Carlsbad, CA 92008
(Address)

Subject: Amended Notice of Preparation of a Draft Environmental Impact Report

The City of Carlsbad will be the Lead Agency and will prepare an environmental impact report for the project identified below. We need to know the views of your agency as to the scope and content of the environmental information which is germane to your agency's statutory responsibilities in connection with the proposed project. Your agency will need to use the EIR prepared by our agency when considering your permit or other approval for the project.

The project description, location, and the potential environmental effects are contained in the attached materials. A copy of the Initial Study (☐ is ☒ is not) attached.

Due to the time limits mandated by State law, your response must be sent at the earliest possible date but not later than 30 days after receipt of this notice.

Please send your response to Scott Donnell, Senior Planner, at the address shown above. We will need the name for a contact person in your agency.

Project Title: Housing Element Implementation and Public Safety Element Update

Project Applicant, if any: City of Carlsbad

Date Sept. 19, 2022

Signature Scott Donnell

Title Senior Planner

Telephone 442-339-2618

Reference: California Code of Regulations, Title 14, (CEQA Guidelines) Sections 15082(a), 15103, 15375.

From:	Howell, Susan@Wildlife
To:	Scott Donnell
Cc:	Drewe, Karen@Wildlife; Turner, Jennifer@Wildlife; Kalinowski, Alison (Ali)@Wildlife; Burlaza, Melanie@Wildlife; Ludovissy, Jennifer@Wildlife; OPR State Clearinghouse; Snyder, Jonathan
Subject:	Notice of Preparation
Date:	Monday, October 24, 2022 11:53:26 AM
Attachments:	2022090339_CarlsbadHousingUpdate_Clean2.docx.pdf

Good Morning Mr. Donnell;

Please find attached the Notice of Preparation of a Supplemental Environmental Impact Report for the Housing Element Implementation and Public Safety Element Update. If you have any questions or concerns regarding this letter, please contact Alison Kalinowski via email at Alison.Kalinowski@wildlife.ca.gov.
Thank you for your time,

Susan Howell
Staff Services Analyst
California Department of Fish and Wildlife
3883 Ruffin Road
San Diego, CA 92123
858-467-4253 (Office) 858-386-9368 (Cell)
Susan.Howell@wildlife.ca.gov

State of California – Natural Resources Agency
DEPARTMENT OF FISH AND WILDLIFE
South Coast Region
3883 Ruffin Road
San Diego, CA 92123
858-467-4201
www.wildlife.ca.gov

GAVIN NEWSOM, Governor
CHARLTON H. BONHAM, Director

October 24, 2022

Scott Donnell, Senior Planner
City of Carlsbad Planning Division
1635 Faraday Avenue
Carlsbad, California 92008
Scott.Donnell@carlsbadca.gov

Housing Element Implementation and Public Safety Element Update (PROJECT) NOTICE OF PREPARATION (NOP) OF A SUPPLEMENTAL ENVIRONMENTAL IMPACT REPORT (SEIR) SCH#: 2022090339

Dear Mr. Donnell:

The California Department of Fish and Wildlife (CDFW) has reviewed the above-referenced Notice of Preparation (NOP) of a Supplemental Environmental Impact Report (SEIR) for the Housing Element Implementation and Public Safety Element Update (Project) in the City of Carlsbad (City). The City has an approved and permitted Subarea Plan (City of Carlsbad Habitat Management Plan (HMP)) under the subregional North County Multiple Habitat Conservation Program (MHCP). The City adopted their HMP in December 1999; CDFW and the U.S. Fish and Wildlife Service (USFWS) (jointly, the Wildlife Agencies) granted final approvals, including an Implementing Agreement (IA), in November 2004. The SEIR for the proposed Project must ensure and verify that all requirements and conditions of the HMP and IA are met. The SEIR should also address biological issues that are not addressed in the HMP and IA, such as specific impacts to and mitigation requirements for wetlands or sensitive species and habitats that are not covered by the HMP and IA.

The SEIR will be a supplement to the Carlsbad General Plan and Climate Action Plan EIR (State Clearinghouse # 2011011004), certified in 2015. The Project consists of updates to the City's General Plan, including the Land Use and Community Design Element and Public Safety Element, and updates to Carlsbad Municipal Code Title 21, the Zoning Ordinance. The updates are necessary to implement the programs of the City's Housing Element Update 2021-2029 (Housing Element), which was adopted by the Carlsbad City Council on April 6, 2021, and changes in State law. Project approval would not include approval of any physical development (e.g., construction of housing or infrastructure); however, the SEIR will assume that such actions are reasonably foreseeable future outcomes of the Project. As such, the SEIR will evaluate the potential physical environmental impacts that could result from future actions in accordance with CEQA Guidelines Section 15168.

COMMENTS AND RECOMMENDATIONS

CDFW offers the following comments and recommendations to assist the City in adequately identifying, avoiding, and/or mitigating the Project's significant, or potentially significant, direct, and indirect impacts on fish and wildlife (biological) resources. Comments are based off information provided in the NOP and the Project Scoping Meeting Presentation, dated October 17, 2022, available on the City's website.

1) CDFW recommends that the SEIR "Biological Resources" section include the following:
   a. A discussion of direct, indirect, and cumulative impacts expected to adversely impact biological resources including resources in nearby public lands, open space, adjacent natural habitats, riparian ecosystems, and any designated and/or proposed existing reserve lands (e.g., preserve lands associated with a NCCP (NCCP, Fish & G. Code, § 2800 et. seq), including but not limited to Buena Vista Lagoon, Buena Vista Creek, Hosp Grove Park, and Agua Hedionda Creek). Impacts on, and maintenance of, wildlife corridors and habitat linkages, including linkages that connect coastal California gnatcatcher (*Polioptila californica californica*; ESA listed Threatened, CDFW Species of Special Concern (SSC)) populations, should be fully evaluated in the SEIR (CDFW, October 2022).

   b. Discussion of Project consistency with the biological goals and guidelines outlined in the City's Habitat Management Plan (HMP) and Implementation Agreement, (e.g., Adjacency Standards). In addition, the Project should not preclude the completion of a viable reserve system as outlined in the HMP.

   c. An analysis of impacts from changes in land use designations and zoning located nearby or adjacent to natural areas that may inadvertently contribute to wildlife-human interactions. A discussion of possible conflicts and mitigation measures to reduce these conflicts should be included in the SEIR.

   d. A cumulative effects analysis, as described under CEQA Guidelines section 15130. General and specific plans, as well as past, present, and anticipated future projects, should be analyzed relative to their impacts on similar plant communities and wildlife habitats.

Thank you for the opportunity to comment. CDFW appreciates the partnership with the City, and we look forward to working together in the future. Questions regarding this letter or further coordination should be directed to Alison Kalinowski, Environmental Scientist, at Alison.Kalinowski@wildlife.ca.gov.

Sincerely,

DocuSigned by:
David Mayer
D700B4520375406...

David A. Mayer
Environmental Program Manager
South Coast Region

ec: CDFW
Karen Drewe, CDFW, Karen.Drewe@wildlife.ca.gov
Jennifer Turner, CDFW, Jennifer.Turner@wildlife.ca.gov
Alison Kalinowski, CDFW, Alison.Kalinowski@wildlife.ca.gov
Melanie Burlaza, CDFW, Melanie.Burlaza@wildlife.ca.gov
Jennifer Ludovissy, CDFW, Jennifer.Ludovissy@wildlife.ca.gov
OPR
State Clearinghouse, Sacramento, State.Clearinghouse@opr.ca.gov

USFWS
Jonathan Snyder, USFWS, Jonathan_D_Snyder@fws.gov

References

California Department of Fish and Wildlife. October 2022. Special Animal List. Accessed from: https://nrm.dfg.ca.gov/FileHandler.ashx?DocumentID=109406&inline.

California Environmental Quality Act (CEQA). California Public Resources Code in section 21000 et seq. The "CEQA Guidelines" are found in Title 14 of the California Code of Regulations, commencing with section 15000.

City of Carlsbad. Amended Notice of Preparation of a Supplemental Environmental Impact Report Housing Element Implementation and Public Safety Element.

City of Carlsbad. October 2022. Public Scoping Meeting Presentation for Housing Element Implementation & Public Safety Element Update. Accessed from: https://www.carlsbadca.gov/home/showpublisheddocument/11606/638016815524830000.

City of Carlsbad. December 2021. Housing Element Update Public Input Summary Report. Accessed from: https://www.carlsbadca.gov/home/showpublisheddocument/9002/637792225009470000

California Department of Transportation

DISTRICT 11
4050 TAYLOR STREET, MS-240
SAN DIEGO, CA 92110
(619) 709-5152 | FAX (619) 688-4299 TTY 711
www.dot.ca.gov

October 19, 2022

11-SD-5, 78
PM VAR
Housing Element Implementation and Public Safety Element Update
NOP/SCH#2022090339

Mr. Scott Donnell
Senior Planner
City of Carlsbad
1636 Faraday Ave.
Carlsbad, CA 92008

Dear Mr. Donnell:

Thank you for including the California Department of Transportation (Caltrans) in the environmental review process for the Notice of Preparation (NOP) for the Housing Element Implementation and Public Safety Element Update located near Interstate 5 (I-5) and State Route 78 (SR-78). The mission of Caltrans is to provide a safe and reliable transportation network that serves all people and respects the environment. The Local Development Review (LDR) Program reviews land use projects and plans to ensure consistency with our mission and state planning priorities.

Safety is one of Caltrans' strategic goals. Caltrans strives to make the year 2050 the first year without a single death or serious injury on California's roads. We are striving for more equitable outcomes for the transportation network's diverse users. To achieve these ambitious goals, we will pursue meaningful collaboration with our partners. We encourage the implementation of new technologies, innovations, and best practices that will enhance the safety on the transportation network. These pursuits are both ambitious and urgent, and their accomplishment involves a focused departure from the status quo as we continue to institutionalize safety in all our work.

Caltrans is committed to prioritizing projects that are equitable and provide meaningful benefits to historically underserved communities, to ultimately improve transportation accessibility and quality of life for people in the communities we serve.

We look forward to working with the City of Carlsbad in areas where the City and Caltrans have joint jurisdiction to improve the transportation network and connections

between various modes of travel, with the goal of improving the experience of those who use the transportation system.

Caltrans has the following comments:

Traffic Impact Study

- New developments resulting from the City's Housing Element update should provide a Vehicle Miles of Travel (VMT) based Traffic Impact Study (TIS). Please use the Governor's Office of Planning and Research Guidance to identify VMT related impacts.[1]

- The TIS may also need to identify the proposed project's near-term and long-term safety or operational issues, on or adjacent to any existing or proposed State facilities.

Planning

As part of the City's 2022 Housing Element update, Caltrans requests that the City include discussions and mapping/graphics that describe the City's existing and future housing inventory per the City's Regional Housing Needs Assessment (RHNA).

Housing-element law requires a quantification of each jurisdiction's share of the regional housing need as established in the RHNA Plan prepared by the jurisdiction's metropolitan planning organization (MPO) or council of governments.

In accordance with California Government Code Sections 65583 and 65584, housing elements shall contain an analysis of population and employment trends and documentation of projections and quantification of the locality's existing and projected housing needs for all income levels. These projected needs shall include the locality's share of the regional housing needs (ie. RHNA) per Government Code Section 65584.

Complete Streets and Mobility Network

Caltrans views all transportation improvements as opportunities to improve safety, access and mobility for all travelers in California and recognizes bicycle, pedestrian and transit modes as integral elements of the transportation network. Caltrans supports improved transit accommodation through the provision of Park and Ride

[1] California Governor's Office of Planning and Research (OPR) 2018. "Technical Advisory on Evaluating Transportation Impacts in CEQA." https://opr.ca.gov/docs/20190122-743_Technical_Advisory.pdf

facilities, improved bicycle and pedestrian access and safety improvements, signal prioritization for transit, bus on shoulders, ramp improvements, or other enhancements that promotes a complete and integrated transportation network. Early coordination with Caltrans, in locations that may affect both Caltrans and the City of Carlsbad is encouraged.

To reduce greenhouse gas emissions and achieve California's Climate Change target, Caltrans is implementing Complete Streets and Climate Change policies into State Highway Operations and Protection Program (SHOPP) projects to meet multi-modal mobility needs. Caltrans looks forward to working with the City to evaluate potential Complete Streets projects.

Maintaining bicycle, pedestrian, and public transit access during construction is important. Mitigation to maintain bicycle, pedestrian, and public transit access during construction is in accordance with Caltrans' goals and policies.

Land Use and Smart Growth

Caltrans recognizes there is a strong link between transportation and land use. Development can have a significant impact on traffic and congestion on State transportation facilities. In particular, the pattern of land use can affect both local vehicle miles traveled and the number of trips. Caltrans supports collaboration with local agencies to work towards a safe, functional, interconnected, multi-modal transportation network integrated through applicable "smart growth" type land use planning and policies.

The City should continue to coordinate with Caltrans to implement necessary improvements at intersections and interchanges where the agencies have joint jurisdiction.

Environmental

Should future projects based upon the changes enacted from the General Plan have elements and/or mitigation measures that affect Caltrans' Right-of-Way (R/W), Caltrans would welcome the opportunity to be a Responsible Agency under the California Environmental Quality Act (CEQA).

Broadband

Caltrans recognizes that teleworking and remote learning lessen the impacts of traffic on our roadways and surrounding communities. This reduces the amount of VMT and decreases the amount of greenhouse gas (GHG) emissions and other pollutants. The

availability of affordable and reliable, high-speed broadband is a key component in supporting travel demand management and reaching the state's transportation and climate action goals.

Right-of-Way

- Per Business and Profession Code 8771, perpetuation of survey monuments by a licensed land surveyor is required, if they are being destroyed by any construction.
- Any work performed within Caltrans' R/W will require discretionary review and approval by Caltrans and an encroachment permit will be required for any work within the Caltrans' R/W prior to construction.

Additional information regarding encroachment permits may be obtained by contacting the Caltrans Permits Office at (619) 688-6158 or emailing D11.Permits@dot.ca.gov or by visiting the website at https://dot.ca.gov/programs/traffic-operations/ep. Early coordination with Caltrans is strongly advised for all encroachment permits.

If you have any questions or concerns, please contact Kimberly Dodson, LDR Coordinator, at (619) 985-1587 or by e-mail sent to Kimberly.Dodson@dot.ca.gov.

Sincerely,

Maurice A. Eaton

MAURICE EATON
Branch Chief
Local Development Review

NATIVE AMERICAN HERITAGE COMMISSION

NAHC HEADQUARTERS
1550 Harbor Boulevard
Suite 100
West Sacramento,
California 95691
(916) 373-3710
nahc@nahc.ca.gov
NAHC.ca.gov

September 27, 2022

Scott Donnell
City of Carlsbad, Planning Division
1635 Faraday Avenue
Carlsbad, CA 92008

Re: 2022090339, Housing Element Implementation and Public Safety Element Update Project, San Diego County

Dear Mr. Donnell:

The Native American Heritage Commission (NAHC) has received the Notice of Preparation (NOP), Draft Environmental Impact Report (DEIR) or Early Consultation for the project referenced above. The California Environmental Quality Act (CEQA) (Pub. Resources Code §21000 et seq.), specifically Public Resources Code §21084.1, states that a project that may cause a substantial adverse change in the significance of a historical resource, is a project that may have a significant effect on the environment. (Pub. Resources Code § 21084.1; Cal. Code Regs., tit.14, §15064.5 (b) (CEQA Guidelines §15064.5 (b)). If there is substantial evidence, in light of the whole record before a lead agency, that a project may have a significant effect on the environment, an Environmental Impact Report (EIR) shall be prepared. (Pub. Resources Code §21080 (d); Cal. Code Regs., tit. 14, § 5064 subd.(a)(1) (CEQA Guidelines §15064 (a)(1)). In order to determine whether a project will cause a substantial adverse change in the significance of a historical resource, a lead agency will need to determine whether there are historical resources within the area of potential effect (APE).

CEQA was amended significantly in 2014. Assembly Bill 52 (Gatto, Chapter 532, Statutes of 2014) (AB 52) amended CEQA to create a separate category of cultural resources, "tribal cultural resources" (Pub. Resources Code §21074) and provides that a project with an effect that may cause a substantial adverse change in the significance of a tribal cultural resource is a project that may have a significant effect on the environment. (Pub. Resources Code §21084.2). Public agencies shall, when feasible, avoid damaging effects to any tribal cultural resource. (Pub. Resources Code §21084.3 (a)). **AB 52 applies to any project for which a notice of preparation, a notice of negative declaration, or a mitigated negative declaration is filed on or after July 1, 2015.** If your project involves the adoption of or amendment to a general plan or a specific plan, or the designation or proposed designation of open space, on or after March 1, 2005, it may also be subject to Senate Bill 18 (Burton, Chapter 905, Statutes of 2004) (SB 18). **Both SB 18 and AB 52 have tribal consultation requirements**. If your project is also subject to the federal National Environmental Policy Act (42 U.S.C. § 4321 et seq.) (NEPA), the tribal consultation requirements of Section 106 of the National Historic Preservation Act of 1966 (154 U.S.C. 300101, 36 C.F.R. §800 et seq.) may also apply.

The NAHC recommends consultation with California Native American tribes that are traditionally and culturally affiliated with the geographic area of your proposed project as early as possible in order to avoid inadvertent discoveries of Native American human remains and best protect tribal cultural resources. Below is a brief summary of portions of AB 52 and SB 18 as well as the NAHC's recommendations for conducting cultural resources assessments.

Consult your legal counsel about compliance with AB 52 and SB 18 as well as compliance with any other applicable laws.

AB 52

AB 52 has added to CEQA the additional requirements listed below, along with many other requirements:

1. Fourteen Day Period to Provide Notice of Completion of an Application/Decision to Undertake a Project: Within fourteen (14) days of determining that an application for a project is complete or of a decision by a public agency to undertake a project, a lead agency shall provide formal notification to a designated contact of, or tribal representative of, traditionally and culturally affiliated California Native American tribes that have requested notice, to be accomplished by at least one written notice that includes:

- **a.** A brief description of the project.
- **b.** The lead agency contact information.
- **c.** Notification that the California Native American tribe has 30 days to request consultation. (Pub. Resources Code §21080.3.1 (d)).
- **d.** A "California Native American tribe" is defined as a Native American tribe located in California that is on the contact list maintained by the NAHC for the purposes of Chapter 905 of Statutes of 2004 (SB 18). (Pub. Resources Code §21073).

2. Begin Consultation Within 30 Days of Receiving a Tribe's Request for Consultation and Before Releasing a Negative Declaration, Mitigated Negative Declaration, or Environmental Impact Report: A lead agency shall begin the consultation process within 30 days of receiving a request for consultation from a California Native American tribe that is traditionally and culturally affiliated with the geographic area of the proposed project. (Pub. Resources Code §21080.3.1, subds. (d) and (e)) and prior to the release of a negative declaration, mitigated negative declaration or Environmental Impact Report. (Pub. Resources Code §21080.3.1(b)).

- **a.** For purposes of AB 52, "consultation shall have the same meaning as provided in Gov. Code §65352.4 (SB 18). (Pub. Resources Code §21080.3.1 (b)).

3. Mandatory Topics of Consultation If Requested by a Tribe: The following topics of consultation, if a tribe requests to discuss them, are mandatory topics of consultation:

- **a.** Alternatives to the project.
- **b.** Recommended mitigation measures.
- **c.** Significant effects. (Pub. Resources Code §21080.3.2 (a)).

4. Discretionary Topics of Consultation: The following topics are discretionary topics of consultation:

- **a.** Type of environmental review necessary.
- **b.** Significance of the tribal cultural resources.
- **c.** Significance of the project's impacts on tribal cultural resources.
- **d.** If necessary, project alternatives or appropriate measures for preservation or mitigation that the tribe may recommend to the lead agency. (Pub. Resources Code §21080.3.2 (a)).

5. Confidentiality of Information Submitted by a Tribe During the Environmental Review Process: With some exceptions, any information, including but not limited to, the location, description, and use of tribal cultural resources submitted by a California Native American tribe during the environmental review process shall not be included in the environmental document or otherwise disclosed by the lead agency or any other public agency to the public, consistent with Government Code §6254 (r) and §6254.10. Any information submitted by a California Native American tribe during the consultation or environmental review process shall be published in a confidential appendix to the environmental document unless the tribe that provided the information consents, in writing, to the disclosure of some or all of the information to the public. (Pub. Resources Code §21082.3 (c)(1)).

6. Discussion of Impacts to Tribal Cultural Resources in the Environmental Document: If a project may have a significant impact on a tribal cultural resource, the lead agency's environmental document shall discuss both of the following:

- **a.** Whether the proposed project has a significant impact on an identified tribal cultural resource.
- **b.** Whether feasible alternatives or mitigation measures, including those measures that may be agreed to pursuant to Public Resources Code §21082.3, subdivision (a), avoid or substantially lessen the impact on the identified tribal cultural resource. (Pub. Resources Code §21082.3 (b)).

7. Conclusion of Consultation: Consultation with a tribe shall be considered concluded when either of the following occurs:

a. The parties agree to measures to mitigate or avoid a significant effect, if a significant effect exists, on a tribal cultural resource; or

b. A party, acting in good faith and after reasonable effort, concludes that mutual agreement cannot be reached. (Pub. Resources Code §21080.3.2 (b)).

8. Recommending Mitigation Measures Agreed Upon in Consultation in the Environmental Document: Any mitigation measures agreed upon in the consultation conducted pursuant to Public Resources Code §21080.3.2 shall be recommended for inclusion in the environmental document and in an adopted mitigation monitoring and reporting program, if determined to avoid or lessen the impact pursuant to Public Resources Code §21082.3, subdivision (b), paragraph 2, and shall be fully enforceable. (Pub. Resources Code §21082.3 (a)).

9. Required Consideration of Feasible Mitigation: If mitigation measures recommended by the staff of the lead agency as a result of the consultation process are not included in the environmental document or if there are no agreed upon mitigation measures at the conclusion of consultation, or if consultation does not occur, and if substantial evidence demonstrates that a project will cause a significant effect to a tribal cultural resource, the lead agency shall consider feasible mitigation pursuant to Public Resources Code §21084.3 (b). (Pub. Resources Code §21082.3 (e)).

10. Examples of Mitigation Measures That, If Feasible, May Be Considered to Avoid or Minimize Significant Adverse Impacts to Tribal Cultural Resources:

a. Avoidance and preservation of the resources in place, including, but not limited to:

i. Planning and construction to avoid the resources and protect the cultural and natural context.

ii. Planning greenspace, parks, or other open space, to incorporate the resources with culturally appropriate protection and management criteria.

b. Treating the resource with culturally appropriate dignity, taking into account the tribal cultural values and meaning of the resource, including, but not limited to, the following:

i. Protecting the cultural character and integrity of the resource.

ii. Protecting the traditional use of the resource.

iii. Protecting the confidentiality of the resource.

c. Permanent conservation easements or other interests in real property, with culturally appropriate management criteria for the purposes of preserving or utilizing the resources or places.

d. Protecting the resource. (Pub. Resource Code §21084.3 (b)).

e. Please note that a federally recognized California Native American tribe or a non-federally recognized California Native American tribe that is on the contact list maintained by the NAHC to protect a California prehistoric, archaeological, cultural, spiritual, or ceremonial place may acquire and hold conservation easements if the conservation easement is voluntarily conveyed. (Civ. Code §815.3 (c)).

f. Please note that it is the policy of the state that Native American remains and associated grave artifacts shall be repatriated. (Pub. Resources Code §5097.991).

11. Prerequisites for Certifying an Environmental Impact Report or Adopting a Mitigated Negative Declaration or Negative Declaration with a Significant Impact on an Identified Tribal Cultural Resource: An Environmental Impact Report may not be certified, nor may a mitigated negative declaration or a negative declaration be adopted unless one of the following occurs:

a. The consultation process between the tribes and the lead agency has occurred as provided in Public Resources Code §21080.3.1 and §21080.3.2 and concluded pursuant to Public Resources Code §21080.3.2.

b. The tribe that requested consultation failed to provide comments to the lead agency or otherwise failed to engage in the consultation process.

c. The lead agency provided notice of the project to the tribe in compliance with Public Resources Code §21080.3.1 (d) and the tribe failed to request consultation within 30 days. (Pub. Resources Code §21082.3 (d)).

The NAHC's PowerPoint presentation titled, "Tribal Consultation Under AB 52: Requirements and Best Practices" may be found online at: http://nahc.ca.gov/wp-content/uploads/2015/10/AB52TribalConsultation_CalEPAPDF.pdf

SB 18

SB 18 applies to local governments and requires local governments to contact, provide notice to, refer plans to, and consult with tribes prior to the adoption or amendment of a general plan or a specific plan, or the designation of open space. (Gov. Code §65352.3). Local governments should consult the Governor's Office of Planning and Research's "Tribal Consultation Guidelines," which can be found online at: https://www.opr.ca.gov/docs/09_14_05_Updated_Guidelines_922.pdf.

Some of SB 18's provisions include:

1. Tribal Consultation: If a local government considers a proposal to adopt or amend a general plan or a specific plan, or to designate open space it is required to contact the appropriate tribes identified by the NAHC by requesting a "Tribal Consultation List." If a tribe, once contacted, requests consultation the local government must consult with the tribe on the plan proposal. **A tribe has 90 days from the date of receipt of notification to request consultation unless a shorter timeframe has been agreed to by the tribe.** (Gov. Code §65352.3 (a)(2)).

2. No Statutory Time Limit on SB 18 Tribal Consultation. There is no statutory time limit on SB 18 tribal consultation.

3. Confidentiality: Consistent with the guidelines developed and adopted by the Office of Planning and Research pursuant to Gov. Code §65040.2, the city or county shall protect the confidentiality of the information concerning the specific identity, location, character, and use of places, features and objects described in Public Resources Code §5097.9 and §5097.993 that are within the city's or county's jurisdiction. (Gov. Code §65352.3 (b)).

4. Conclusion of SB 18 Tribal Consultation: Consultation should be concluded at the point in which:

- **a.** The parties to the consultation come to a mutual agreement concerning the appropriate measures for preservation or mitigation; or
- **b.** Either the local government or the tribe, acting in good faith and after reasonable effort, concludes that mutual agreement cannot be reached concerning the appropriate measures of preservation or mitigation. (Tribal Consultation Guidelines, Governor's Office of Planning and Research (2005) at p. 18).

Agencies should be aware that neither AB 52 nor SB 18 precludes agencies from initiating tribal consultation with tribes that are traditionally and culturally affiliated with their jurisdictions before the timeframes provided in AB 52 and SB 18. For that reason, we urge you to continue to request Native American Tribal Contact Lists and "Sacred Lands File" searches from the NAHC. The request forms can be found online at: http://nahc.ca.gov/resources/forms/.

NAHC Recommendations for Cultural Resources Assessments

To adequately assess the existence and significance of tribal cultural resources and plan for avoidance, preservation in place, or barring both, mitigation of project-related impacts to tribal cultural resources, the NAHC recommends the following actions:

1. Contact the appropriate regional California Historical Research Information System (CHRIS) Center (https://ohp.parks.ca.gov/?page_id=30331) for an archaeological records search. The records search will determine:

- **a.** If part or all of the APE has been previously surveyed for cultural resources.
- **b.** If any known cultural resources have already been recorded on or adjacent to the APE.
- **c.** If the probability is low, moderate, or high that cultural resources are located in the APE.
- **d.** If a survey is required to determine whether previously unrecorded cultural resources are present.

2. If an archaeological inventory survey is required, the final stage is the preparation of a professional report detailing the findings and recommendations of the records search and field survey.

- **a.** The final report containing site forms, site significance, and mitigation measures should be submitted immediately to the planning department. All information regarding site locations, Native American human remains, and associated funerary objects should be in a separate confidential addendum and not be made available for public disclosure.
- **b.** The final written report should be submitted within 3 months after work has been completed to the appropriate regional CHRIS center.

3. Contact the NAHC for:

a. A Sacred Lands File search. Remember that tribes do not always record their sacred sites in the Sacred Lands File, nor are they required to do so. A Sacred Lands File search is not a substitute for consultation with tribes that are traditionally and culturally affiliated with the geographic area of the project's APE.

b. A Native American Tribal Consultation List of appropriate tribes for consultation concerning the project site and to assist in planning for avoidance, preservation in place, or, failing both, mitigation measures.

4. Remember that the lack of surface evidence of archaeological resources (including tribal cultural resources) does not preclude their subsurface existence.

a. Lead agencies should include in their mitigation and monitoring reporting program plan provisions for the identification and evaluation of inadvertently discovered archaeological resources per Cal. Code Regs., tit. 14, §15064.5(f) (CEQA Guidelines §15064.5(f)). In areas of identified archaeological sensitivity, a certified archaeologist and a culturally affiliated Native American with knowledge of cultural resources should monitor all ground-disturbing activities.

b. Lead agencies should include in their mitigation and monitoring reporting program plans provisions for the disposition of recovered cultural items that are not burial associated in consultation with culturally affiliated Native Americans.

c. Lead agencies should include in their mitigation and monitoring reporting program plans provisions for the treatment and disposition of inadvertently discovered Native American human remains. Health and Safety Code §7050.5, Public Resources Code §5097.98, and Cal. Code Regs., tit. 14, §15064.5, subdivisions (d) and (e) (CEQA Guidelines §15064.5, subds. (d) and (e)) address the processes to be followed in the event of an inadvertent discovery of any Native American human remains and associated grave goods in a location other than a dedicated cemetery.

If you have any questions or need additional information, please contact me at my email address: Pricilla.Torres-Fuentes@nahc.ca.gov.

Sincerely,

Pricilla Torres-Fuentes

Pricilla Torres-Fuentes
Cultural Resources Analyst

cc: State Clearinghouse

NATIVE AMERICAN HERITAGE COMMISSION

NAHC HEADQUARTERS
1550 Harbor Boulevard
Suite 100
West Sacramento,
California 95691
(916) 373-3710
nahc@nahc.ca.gov
NAHC.ca.gov

October 14, 2022

Scott Donnell
City of Carlsbad, Planning Division
1635 Faraday Avenue
Carlsbad, CA 92008

Re: 2022090339, Housing Element Implementation and Public Safety Element Update Project, San Diego County

Dear Mr. Donnell:

The Native American Heritage Commission (NAHC) has received the Notice of Preparation (NOP), Draft Environmental Impact Report (DEIR) or Early Consultation for the project referenced above. The California Environmental Quality Act (CEQA) (Pub. Resources Code §21000 et seq.), specifically Public Resources Code §21084.1, states that a project that may cause a substantial adverse change in the significance of a historical resource, is a project that may have a significant effect on the environment. (Pub. Resources Code § 21084.1; Cal. Code Regs., tit.14, §15064.5 (b) (CEQA Guidelines §15064.5 (b)). If there is substantial evidence, in light of the whole record before a lead agency, that a project may have a significant effect on the environment, an Environmental Impact Report (EIR) shall be prepared. (Pub. Resources Code §21080 (d); Cal. Code Regs., tit. 14, § 5064 subd.(a)(1) (CEQA Guidelines §15064 (a)(1)). In order to determine whether a project will cause a substantial adverse change in the significance of a historical resource, a lead agency will need to determine whether there are historical resources within the area of potential effect (APE).

CEQA was amended significantly in 2014. Assembly Bill 52 (Gatto, Chapter 532, Statutes of 2014) (AB 52) amended CEQA to create a separate category of cultural resources, "tribal cultural resources" (Pub. Resources Code §21074) and provides that a project with an effect that may cause a substantial adverse change in the significance of a tribal cultural resource is a project that may have a significant effect on the environment. (Pub. Resources Code §21084.2). Public agencies shall, when feasible, avoid damaging effects to any tribal cultural resource. (Pub. Resources Code §21084.3 (a)). **AB 52 applies to any project for which a notice of preparation, a notice of negative declaration, or a mitigated negative declaration is filed on or after July 1, 2015.** If your project involves the adoption of or amendment to a general plan or a specific plan, or the designation or proposed designation of open space, on or after March 1, 2005, it may also be subject to Senate Bill 18 (Burton, Chapter 905, Statutes of 2004) (SB 18). **Both SB 18 and AB 52 have tribal consultation requirements**. If your project is also subject to the federal National Environmental Policy Act (42 U.S.C. § 4321 et seq.) (NEPA), the tribal consultation requirements of Section 106 of the National Historic Preservation Act of 1966 (154 U.S.C. 300101, 36 C.F.R. §800 et seq.) may also apply.

The NAHC recommends consultation with California Native American tribes that are traditionally and culturally affiliated with the geographic area of your proposed project as early as possible in order to avoid inadvertent discoveries of Native American human remains and best protect tribal cultural resources. Below is a brief summary of portions of AB 52 and SB 18 as well as the NAHC's recommendations for conducting cultural resources assessments.

Consult your legal counsel about compliance with AB 52 and SB 18 as well as compliance with any other applicable laws.

AB 52

AB 52 has added to CEQA the additional requirements listed below, along with many other requirements:

1. Fourteen Day Period to Provide Notice of Completion of an Application/Decision to Undertake a Project: Within fourteen (14) days of determining that an application for a project is complete or of a decision by a public agency to undertake a project, a lead agency shall provide formal notification to a designated contact of, or tribal representative of, traditionally and culturally affiliated California Native American tribes that have requested notice, to be accomplished by at least one written notice that includes:

- **a.** A brief description of the project.
- **b.** The lead agency contact information.
- **c.** Notification that the California Native American tribe has 30 days to request consultation. (Pub. Resources Code §21080.3.1 (d)).
- **d.** A "California Native American tribe" is defined as a Native American tribe located in California that is on the contact list maintained by the NAHC for the purposes of Chapter 905 of Statutes of 2004 (SB 18). (Pub. Resources Code §21073).

2. Begin Consultation Within 30 Days of Receiving a Tribe's Request for Consultation and Before Releasing a Negative Declaration, Mitigated Negative Declaration, or Environmental Impact Report: A lead agency shall begin the consultation process within 30 days of receiving a request for consultation from a California Native American tribe that is traditionally and culturally affiliated with the geographic area of the proposed project. (Pub. Resources Code §21080.3.1, subds. (d) and (e)) and prior to the release of a negative declaration, mitigated negative declaration or Environmental Impact Report. (Pub. Resources Code §21080.3.1(b)).

- **a.** For purposes of AB 52, "consultation shall have the same meaning as provided in Gov. Code §65352.4 (SB 18). (Pub. Resources Code §21080.3.1 (b)).

3. Mandatory Topics of Consultation If Requested by a Tribe: The following topics of consultation, if a tribe requests to discuss them, are mandatory topics of consultation:

- **a.** Alternatives to the project.
- **b.** Recommended mitigation measures.
- **c.** Significant effects. (Pub. Resources Code §21080.3.2 (a)).

4. Discretionary Topics of Consultation: The following topics are discretionary topics of consultation:

- **a.** Type of environmental review necessary.
- **b.** Significance of the tribal cultural resources.
- **c.** Significance of the project's impacts on tribal cultural resources.
- **d.** If necessary, project alternatives or appropriate measures for preservation or mitigation that the tribe may recommend to the lead agency. (Pub. Resources Code §21080.3.2 (a)).

5. Confidentiality of Information Submitted by a Tribe During the Environmental Review Process: With some exceptions, any information, including but not limited to, the location, description, and use of tribal cultural resources submitted by a California Native American tribe during the environmental review process shall not be included in the environmental document or otherwise disclosed by the lead agency or any other public agency to the public, consistent with Government Code §6254 (r) and §6254.10. Any information submitted by a California Native American tribe during the consultation or environmental review process shall be published in a confidential appendix to the environmental document unless the tribe that provided the information consents, in writing, to the disclosure of some or all of the information to the public. (Pub. Resources Code §21082.3 (c)(1)).

6. Discussion of Impacts to Tribal Cultural Resources in the Environmental Document: If a project may have a significant impact on a tribal cultural resource, the lead agency's environmental document shall discuss both of the following:

- **a.** Whether the proposed project has a significant impact on an identified tribal cultural resource.
- **b.** Whether feasible alternatives or mitigation measures, including those measures that may be agreed to pursuant to Public Resources Code §21082.3, subdivision (a), avoid or substantially lessen the impact on the identified tribal cultural resource. (Pub. Resources Code §21082.3 (b)).

7. Conclusion of Consultation: Consultation with a tribe shall be considered concluded when either of the following occurs:

a. The parties agree to measures to mitigate or avoid a significant effect, if a significant effect exists, on a tribal cultural resource; or

b. A party, acting in good faith and after reasonable effort, concludes that mutual agreement cannot be reached. (Pub. Resources Code §21080.3.2 (b)).

8. Recommending Mitigation Measures Agreed Upon in Consultation in the Environmental Document: Any mitigation measures agreed upon in the consultation conducted pursuant to Public Resources Code §21080.3.2 shall be recommended for inclusion in the environmental document and in an adopted mitigation monitoring and reporting program, if determined to avoid or lessen the impact pursuant to Public Resources Code §21082.3, subdivision (b), paragraph 2, and shall be fully enforceable. (Pub. Resources Code §21082.3 (a)).

9. Required Consideration of Feasible Mitigation: If mitigation measures recommended by the staff of the lead agency as a result of the consultation process are not included in the environmental document or if there are no agreed upon mitigation measures at the conclusion of consultation, or if consultation does not occur, and if substantial evidence demonstrates that a project will cause a significant effect to a tribal cultural resource, the lead agency shall consider feasible mitigation pursuant to Public Resources Code §21084.3 (b). (Pub. Resources Code §21082.3 (e)).

10. Examples of Mitigation Measures That, If Feasible, May Be Considered to Avoid or Minimize Significant Adverse Impacts to Tribal Cultural Resources:

a. Avoidance and preservation of the resources in place, including, but not limited to:

i. Planning and construction to avoid the resources and protect the cultural and natural context.

ii. Planning greenspace, parks, or other open space, to incorporate the resources with culturally appropriate protection and management criteria.

b. Treating the resource with culturally appropriate dignity, taking into account the tribal cultural values and meaning of the resource, including, but not limited to, the following:

i. Protecting the cultural character and integrity of the resource.

ii. Protecting the traditional use of the resource.

iii. Protecting the confidentiality of the resource.

c. Permanent conservation easements or other interests in real property, with culturally appropriate management criteria for the purposes of preserving or utilizing the resources or places.

d. Protecting the resource. (Pub. Resource Code §21084.3 (b)).

e. Please note that a federally recognized California Native American tribe or a non-federally recognized California Native American tribe that is on the contact list maintained by the NAHC to protect a California prehistoric, archaeological, cultural, spiritual, or ceremonial place may acquire and hold conservation easements if the conservation easement is voluntarily conveyed. (Civ. Code §815.3 (c)).

f. Please note that it is the policy of the state that Native American remains and associated grave artifacts shall be repatriated. (Pub. Resources Code §5097.991).

11. Prerequisites for Certifying an Environmental Impact Report or Adopting a Mitigated Negative Declaration or Negative Declaration with a Significant Impact on an Identified Tribal Cultural Resource: An Environmental Impact Report may not be certified, nor may a mitigated negative declaration or a negative declaration be adopted unless one of the following occurs:

a. The consultation process between the tribes and the lead agency has occurred as provided in Public Resources Code §21080.3.1 and §21080.3.2 and concluded pursuant to Public Resources Code §21080.3.2.

b. The tribe that requested consultation failed to provide comments to the lead agency or otherwise failed to engage in the consultation process.

c. The lead agency provided notice of the project to the tribe in compliance with Public Resources Code §21080.3.1 (d) and the tribe failed to request consultation within 30 days. (Pub. Resources Code §21082.3 (d)).

The NAHC's PowerPoint presentation titled, "Tribal Consultation Under AB 52: Requirements and Best Practices" may be found online at: http://nahc.ca.gov/wp-content/uploads/2015/10/AB52TribalConsultation_CalEPAPDF.pdf

SB 18

SB 18 applies to local governments and requires local governments to contact, provide notice to, refer plans to, and consult with tribes prior to the adoption or amendment of a general plan or a specific plan, or the designation of open space. (Gov. Code §65352.3). Local governments should consult the Governor's Office of Planning and Research's "Tribal Consultation Guidelines," which can be found online at: https://www.opr.ca.gov/docs/09_14_05_Updated_Guidelines_922.pdf.

Some of SB 18's provisions include:

1. Tribal Consultation: If a local government considers a proposal to adopt or amend a general plan or a specific plan, or to designate open space it is required to contact the appropriate tribes identified by the NAHC by requesting a "Tribal Consultation List." If a tribe, once contacted, requests consultation the local government must consult with the tribe on the plan proposal. **A tribe has 90 days from the date of receipt of notification to request consultation unless a shorter timeframe has been agreed to by the tribe.** (Gov. Code §65352.3 (a)(2)).

2. No Statutory Time Limit on SB 18 Tribal Consultation. There is no statutory time limit on SB 18 tribal consultation.

3. Confidentiality: Consistent with the guidelines developed and adopted by the Office of Planning and Research pursuant to Gov. Code §65040.2, the city or county shall protect the confidentiality of the information concerning the specific identity, location, character, and use of places, features and objects described in Public Resources Code §5097.9 and §5097.993 that are within the city's or county's jurisdiction. (Gov. Code §65352.3 (b)).

4. Conclusion of SB 18 Tribal Consultation: Consultation should be concluded at the point in which:

- **a.** The parties to the consultation come to a mutual agreement concerning the appropriate measures for preservation or mitigation; or
- **b.** Either the local government or the tribe, acting in good faith and after reasonable effort, concludes that mutual agreement cannot be reached concerning the appropriate measures of preservation or mitigation. (Tribal Consultation Guidelines, Governor's Office of Planning and Research (2005) at p. 18).

Agencies should be aware that neither AB 52 nor SB 18 precludes agencies from initiating tribal consultation with tribes that are traditionally and culturally affiliated with their jurisdictions before the timeframes provided in AB 52 and SB 18. For that reason, we urge you to continue to request Native American Tribal Contact Lists and "Sacred Lands File" searches from the NAHC. The request forms can be found online at: http://nahc.ca.gov/resources/forms/.

NAHC Recommendations for Cultural Resources Assessments

To adequately assess the existence and significance of tribal cultural resources and plan for avoidance, preservation in place, or barring both, mitigation of project-related impacts to tribal cultural resources, the NAHC recommends the following actions:

1. Contact the appropriate regional California Historical Research Information System (CHRIS) Center (https://ohp.parks.ca.gov/?page_id=30331) for an archaeological records search. The records search will determine:

- **a.** If part or all of the APE has been previously surveyed for cultural resources.
- **b.** If any known cultural resources have already been recorded on or adjacent to the APE.
- **c.** If the probability is low, moderate, or high that cultural resources are located in the APE.
- **d.** If a survey is required to determine whether previously unrecorded cultural resources are present.

2. If an archaeological inventory survey is required, the final stage is the preparation of a professional report detailing the findings and recommendations of the records search and field survey.

- **a.** The final report containing site forms, site significance, and mitigation measures should be submitted immediately to the planning department. All information regarding site locations, Native American human remains, and associated funerary objects should be in a separate confidential addendum and not be made available for public disclosure.
- **b.** The final written report should be submitted within 3 months after work has been completed to the appropriate regional CHRIS center.

3. Contact the NAHC for:

a. A Sacred Lands File search. Remember that tribes do not always record their sacred sites in the Sacred Lands File, nor are they required to do so. A Sacred Lands File search is not a substitute for consultation with tribes that are traditionally and culturally affiliated with the geographic area of the project's APE.

b. A Native American Tribal Consultation List of appropriate tribes for consultation concerning the project site and to assist in planning for avoidance, preservation in place, or, failing both, mitigation measures.

4. Remember that the lack of surface evidence of archaeological resources (including tribal cultural resources) does not preclude their subsurface existence.

a. Lead agencies should include in their mitigation and monitoring reporting program plan provisions for the identification and evaluation of inadvertently discovered archaeological resources per Cal. Code Regs., tit. 14, §15064.5(f) (CEQA Guidelines §15064.5(f)). In areas of identified archaeological sensitivity, a certified archaeologist and a culturally affiliated Native American with knowledge of cultural resources should monitor all ground-disturbing activities.

b. Lead agencies should include in their mitigation and monitoring reporting program plans provisions for the disposition of recovered cultural items that are not burial associated in consultation with culturally affiliated Native Americans.

c. Lead agencies should include in their mitigation and monitoring reporting program plans provisions for the treatment and disposition of inadvertently discovered Native American human remains. Health and Safety Code §7050.5, Public Resources Code §5097.98, and Cal. Code Regs., tit. 14, §15064.5, subdivisions (d) and (e) (CEQA Guidelines §15064.5, subds. (d) and (e)) address the processes to be followed in the event of an inadvertent discovery of any Native American human remains and associated grave goods in a location other than a dedicated cemetery.

If you have any questions or need additional information, please contact me at my email address: Pricilla.Torres-Fuentes@nahc.ca.gov.

Sincerely,

Pricilla Torres-Fuentes

Pricilla Torres-Fuentes
Cultural Resources Analyst

cc: State Clearinghouse

Scott Donnell, Senior Planner
City of Carlsbad, Planning Division
1635 Faraday Ave.
Carlsbad, CA 92008
Scott.Donnell@carlsbadca.gov

Mr. Donnell,

Please see the following comments from Citizens for a Friendly Airport (C4FA). This is to go on record as our group's comment regarding RHNA Scoping. We hope consideration will be given specific to McClellan-Palomar Airport impact on the sites in the Airport Impact Area before any final decisions are determined.

Thank you for the opportunity to comment.

Sincerely,
Hope Nelson
Mary Anne Viney
Representing C4FA

From CEQA APPENDIX G: ENVIRONMENTAL CHECKLIST FORM, potential applicability to: VIII. HAZARDS AND HAZARDOUS MATERIALs, X. LAND USE AND PLANNING, and XII. NOISE as well as other potential environmental impacts:

Please include the following comments and questions:

The Palomar Airport is a source of potentially harmful levels of various air pollutants, including criteria air pollutants ozone, particulate matter and lead, as well as GHGs, to the surrounding community. Social Justice Issues: per the CA State Attorney General "Aircrafts emit particulate matter, nitrogen oxides, and hazardous air pollutants. Residents living within 10 miles of airports — which disproportionately include disadvantaged minority and low-income communities — are exposed to large amounts of these harmful pollutants through emissions from aircraft landing and takeoff operations."
Link: https://oag.ca.gov/news/press-releases/attorney-general-becerra-carb-lead-coalition-challenging-trump-administrations.

The RHNA site plan appears to locate at least some of the RHNA sites potentially in harm's way of perhaps maximum healthy and safety impacts from the Palomar Airport, including arrival and take-off paths. How will the health and safety of residents of the potential RHNA sites within the Airport Influence Area (AIA) be protected from health impacts of potentially dangerous levels of air pollution? Please identify specific steps/ mitigation that would be taken.

As determined by the Division of Aeronautics, CA State law requires that an Airport Compatibility Plan be based on a long-range Airport Master Plan or Airport Lay-Out Plan (ALP), that reflects the anticipated growth of the Airport during at least the next 20 years. Please include a review of the current Palomar Airport Master Plan and/ or ALP to determine how anticipated growth of the Airport during at least the next 20 years could impact the health and safety of residents of the proposed RHNA development and identify specific impacts to residents due to Airport growth.

Per a San Diego County Airport Staff email, "In addition to your RPZ questions, I would recommend you review Palomar Airport's Land Use Compatibility Plan (ALUCP) if you haven't already.
Link: https://san.org/File-Manager?Command=Core_Download&EntryId=2991. The ALUCP promotes compatibility between airports and the land uses that surround them. Sites 6 and 9 reside within the Airport's Safety Zones and noise contours, as identified in the compatibility plan. The City of Carlsbad Planning Department will utilize the compatibility plan when reviewing a proposed project near the airport."

Please note Airport Land Policy screen shot below, ALUC policy for infill, sourced from the ALUC plan. For Sites #6 and 9, please identify in which safety zones they are located, and identify zoning, noise level, safety and zoning (land use) restrictions, that would apply. Please provide this information for all other sites included within the Airport influence Area (AIA).

Please provide an overlay map of the AIA and the RHNA sites in order that the Public can review which RHNA sites are located within the AIA.

The AIA is comprised of noise, safety, airspace protection and overflight compatibility factors. Please identify and provide noise, safety, airspace protection and overflight compatibility factors/ regulations that would apply to RHA sites within the AIA.

The AIA is a defined area encompassing Palomar Airport over which the Land Use Compatibility Commission will make an airport land use consistency determination, based on the policies of the Palomar Airport of the ALUCP. Please identify and provide all official maps required to make the airport land use consistency determination.

Per the ALUC website, link: https://www.san.org/Airport-Projects/Land-Use-Compatibility, "Once ALUCPs have been adopted by the ALUC, local agencies with land located within the AIA boundary for any of the airports must, by law, amend their planning documents to conform to the applicable ALUCP." Please provide City of Carlsbad adopted ALUC plan, including criteria for making consistency determinations, building standards and height and land use restrictions, site layout, maximum density and intensity limits, and other relevant zoning restrictions and factors as noise and overflight notification.

Per the Airport Land Use Commission (ALUC) website "ALUCPs [the Airport Land Use Commission Plans] protect the health, safety and welfare of people on the ground and their property by providing noise

and safety standards and disclosure of overflight." and "ALUCPs provide guidance on appropriate land uses surrounding airports to protect the health and safety of people and property within the vicinity of an airport, as well as the public in general.", link: https://www.san.org/Airport-Projects/Land-Use-Compatibility,

Can the State RHNA regulations override ALUC zoning restrictions within the AIA?

Will the normal Environmental Impact Review and process be modified in any way to suit RHNA state regulations, conditions and/or timing? Please specify.

Please confirm the following from the California Airport Land Use Planning Handbook published by the California Department of Transportation, Division of Aeronautics as applicable to the RHNA sites within the AIA:
"1.3.3 Plan Consistency

"Government Code (Gov. Code) Section 65302.3 (a) states that a county's or city's general plan, as well as any applicable specific plans, "shall be consistent" with an ALUCP and that every affected county or city must amend its general and specific plans as necessary to keep them consistent with the ALUCP. The ALUC reviews the general plan (and applicable specific plans) and makes a consistency determination (PUC Section 21676(a)). If the ALUC determines the local plan to be inconsistent with the ALUCP, the local agency shall reconsider its plan, or overrule the ALUC's decision. The overrule is accomplished by a two-thirds vote of the local agency's governing body, accompanied by specific findings that its action meets the intent of Article 3.5 of the SAA (PUC Section 21676(a)) and other published case law. Any local agency seeking to amend its general plan, a specific plan, or adopt zoning ordinance or building regulation within the airport influence area must first refer its proposed amendments to the ALUC for a determination if the proposed action is consistent with the airport land use compatibility plan. If the ALUC determines that the amendment is not consistent, the local agency may not enact the plan or regulation unless a two-thirds of the local agency's governing body votes to overrule the ALUC's inconsistency determination and the local government makes specific findings that its proposed action is consistent with the purposes of the Article 3.5 of the SAA (PUC Section 21676 (b)) and other published case law. The significance of this is that even if a local agency invokes the overrule provision, the local agency's actions must be in compliance with SAA."

Will any of the RHNA sites be located within 1000 feet of the Palomar Airport Landfill? Projects that propose the construction of buildings on landfill property within 1,000 feet of buried waste are subject to specific requirements pursuant to California Code of Regulations Title 27 Section 21190, Post-closure Land Use,
link: https://www.sandiegocounty.gov/content/dam/sdc/dpw/AIRPORTS/palomar/documents/Master-Plan-Update/PEIR-Appendices/Final_PEIR_Appendix_C.pdf.

The Palomar Airport "is located on a site, which is included on a list of hazardous materials sites compiled pursuant to Government Code Section 65962.5."Link:shttps://www.sandiegocounty.gov/content/dam/sdc/dpw/AIRPORTS/palomar/documents/Master-Plan-Update/PEIR-Appendices/Final_PEIR_Appendix_C.pdf.
Is the City aware of these issues, what steps will be taken to protect RHNA residents?

Additional questions regarding the AIA process:

• What regulations are in place to protect low-income housing project residents from high decibel Noise coming from the nearby Airport?

• What provisions will be made to keep low-income residents safe given housing appears to be under the nearby Airport arrival paths?*

• Will the maps be the same for Noise, Air Pollution, Resident Safety?

• Who has final approval for building sites? What is the process? Steps involved?

• For sites in the Airport Land Use Compatibility Plan, at what point will the Airport Land Use Commission (ALUC) be engaged?**

• What and when in the process with there be further opportunities for citizen review?

(a) Except as specifically provided below, all policies provided in this *Compatibility Plan* shall apply to *infill*.

(b) *Infill* development is not permitted in the following locations.

(1) No type of *infill* development shall be permitted in Safety Zone 1 (the *runway protection zones*).

(2) Residential *infill* development shall not be permitted within Safety Zone 2 or Safety Zone 5, except as provided for in Policy 2.11.4.

(3) Residential *infill* development shall not be allowed where the dwellings would be exposed to noise levels of more than 70 dB CNEL.

(4) Infill is not applicable within Review Area 2 as land uses are not restricted in this area, other than with respect to height limits, related airspace protection policies, and overflight notification requirements.

(c) In locations within Safety Zones 2 and 5 (nonresidential development) and Safety Zones 3, 4 and 6 (residential and nonresidential development), development can be considered for *infill* if it meets any one of the following criteria.

(1) The parcel or parcels on which the *project* is to be situated is part of an area identified by the *local agency* on a map as appropriate for *infill* development, the *local agency* has submitted the map to the *ALUC* for *infill* identification and processing, and the *ALUC* has concurred with the *infill* identification. The intent is that all parcels eligible for *infill* be identified at one time by the *local agency*. This action may take place along with the process of amending a *general plan* for consistency with this *Compatibility Plan* or may be submitted by the *local agency* for consideration by the *ALUC* at the time of initial adoption of this *Compatibility Plan*.

(2) The project application submitted by the *local agency* to the *ALUC* for a consistency determination identifies the site as an area appropriate for *infill* development and the *ALUC* concurs with the *infill* identification. This situation may apply if a map has not been submitted by the *local agency* for *infill* identification consistent with the requirements of Policy 2.11.1 (c)(1), above.

(3) The *ALUC* determines that the parcel is part of an identifiable area of existing development, and:

- At least 65% of the identifiable area was developed prior to adoption of this *Compatibility Plan* with land uses not in conformance with this *Compatibility Plan*;

CEQA APPENDIX G: ENVIRONMENTAL CHECKLIST FORM: III. potential applicability to AIR QUALITY as well as other potential environmental impacts:

Please include the following comments:

San Diego County has failed to meet the Ozone air quality health standard and, according to the American Lung Association, the 24-hour health standard (short term) for Particulate Matter.

Criteria Air Pollutant Ozone Non-Attainment: San Diego County has not attained safe levels of ozone mandated by EPA for many years, and San Diego County ozone levels are now classified as severe. Per the American Lung Association: "The damage ozone does to the body can be deadly. Recent research has affirmed earlier findings that short-term exposure to ozone, even at levels below the current standard, likely increases the risk of premature death, particularly for older adults. There is also a growing body of evidence that long-term exposures to ambient ozone may be associated with an increased risk of cardiovascular and respiratory disease mortality."

Criteria Air Pollutant Particulate Matter:
CA Attorney General Bonta said in a press release concerning EPA Aircraft Emissions Standards litigation: "'Communities living, working, and going to school near airports are bearing the brunt of particulate matter pollution from airplanes and the resulting health consequences'...Particulate matter pollution causes up to 45,000 deaths per year nationwide and disproportionately impacts California's most vulnerable populations. Particulate matter is linked to increased mortality from COVID-19 and other serious public health problems including cardiovascular disease, respiratory impacts, and cancer...The worst health effects occur from particulate matter emitted from airplanes during takeoff and landing, most impacting communities that live, work, and go to school near airports. These communities are disproportionately low-income communities and communities of color…"
link: https://oag.ca.gov/news/press-releases/attorney-general-bonta-carb-epa-must-rethink-standards-regulating-particulate.

Other Air Pollutant that Palomar Airport is a source of, impacting public health:
Criteria Air pollutant Lead:
The verdict has been in for decades that lead is a developmental neurotoxin that is persistent in the human body and the environment, and that health impacts to children who live near airports are greater than the general population. The Environmental Protection Agency (EPA) states that there is no known safe level of exposure to lead. The situation is urgent and together, we must stop poisoning our children now. Communities of color that live under the fight path, such as Vista, which is about 50% Hispanic, may be at increased risk. Palomar Airport is amongst the 50 most lead-polluting airports in the nation.

GHGs:
GHGs: Aircraft are a significant, unregulated source of GHGs that cause climate change. "Climate change represents a massive threat to respiratory health: 1) by directly promoting or aggravating respiratory diseases; or 2) by increasing exposure to risk factors for respiratory diseases. Climate change increases the amount of pollen and allergen produced by each plant, mold proliferation and the concentrations of outdoor ozone and particulate matter at ground level. The main diseases of concern are asthma, rhinosinusitis, chronic obstructive pulmonary disease (COPD) and respiratory tract infections. Groups at higher risk of climate change effects include individuals with pre-existing cardiopulmonary diseases or disadvantaged individuals…". Link: https://err.ersjournals.com/content/23/132/161.

From: Lori Robbins
To: Scott Donnell
Subject: Another comment for environmental study
Date: Monday, September 26, 2022 7:58:31 PM

Hi Scott

The environmental studies should account for projects that have completed but not occupied yet, future projects that have been approved but have not broken ground yet.

Thanks much

Lori Robbins

From: Mary Mikolich
To: Scott Donnell
Subject: Area to be rezoned
Date: Wednesday, October 26, 2022 3:31:51 PM

Dear Mr. Donnell,
I am writing to voice my concern about the potential rezoning of area 10 near Breasi Ranch. Will there be feasibility studies? Now as we have it there is an airport close by which not only makes noise but leaves air pollution. We are next door to two hotels and have many businesses around us and have potential for higher amounts of crime. The hotels also have a lot of coming and going. It will bring more traffic as well. Please reconsider this area.
Yours truly,

Mary Mikolich

From: Brian D
To: Scott Donnell; Shannon Harker
Subject: Building at Site 10
Date: Wednesday, October 26, 2022 9:16:51 AM

Hello Scott and Shannon. First off, thank you for everything you are doing for the residents of Carlsbad. My family and I reside in the condos at Colt Place in Carlsbad. We are one of the 25 "affordable" units and it has been a huge blessing to own a condo instead of renting which we had done in Carlsbad for the previous 8 years. Being in the affordable program we probably have a unique view of the potential development at the end of the Colt Place cul-de-sac. While I support the idea of builders being required to sell a portion of new homes to lower income families my concern with this particular site revolves around traffic and parking. There is one way in and out which is the cul-de-sac other than driving through the hotel/commercial parking area which is not ideal. We already have significant traffic on the private road that connects Colt Place with the Sprouts shopping center, so much so that many residents wanted to gate the community. This ended up not being possible due to an easement that the shopping center has allowing traffic on the private road. Adding more units in that location would inevitably bring more traffic to our private road with residents cutting through going to the Sprouts center or just short-cutting out to El Fuerte. I would be in support of building maybe up to 15 units on that property but 30+ units would not be healthy for this area. I'm happy to jump on a call if you have any other questions for me. Again, I appreciate your time on this project.

Best regards,
Brian Davenport
6124 Colt Place, Unit 102
Carlsbad, CA 92009
760-300-0071

From: Valerie and Dennis Cowan
To: Scott Donnell
Subject: C4fa
Date: Sunday, October 16, 2022 10:27:14 AM

Dear Scott,
Carlsbad is a gem that need to be saved from continued development turning us into another OC. Please consider the following: Best Regards, Val and Dennis Cowan, South Carlsbad

- What regulations are in place to protect residents from:
  - High decibel **Noise** coming from the nearby Airport
  - **Air Pollution** coming from the nearby Airport, specifically
    - Lead
    - Particle Pollution
    - Ground Level GHG's
    - GHG's
- What provisions will be made to keep residents **safe** given new housing appears to be under the nearby Airport arrival paths?
- Will the City require a new comprehensive noise study to be performed to measure the impact of noise from Palomar Airport? The last one done for Palomar Airport was in 2005.
- Which of the various maps will delineate the Airport Influence Areas involved?
  - Will maps show changes to these Airport Influence Areas that will occur should the D-3 Airport be built per the Palomar Airport Master Plan?

- Will the maps be the same for Noise, Air Pollution, Resident Safety?
- Who has final approval for building sites?
    - What is the process?
    - Steps involved?

From:	derek brigden
To:	Scott Donnell; Scott Chadwick; Priya Bhat-Patel; Geoff.patnoe@carlsbad.gov
Cc:	derek brigden
Subject:	Carlsbad Housing Plan Site 10
Date:	Saturday, October 22, 2022 1:45:51 PM

My name is Derek Brigden and I am a resident homeowner on Colt Place.

I want to place on record my opposition to the rezoning of site 10. Adding any additional housing on this site will be very detrimental to the existing homeowners. There is no access to Palomar Airport road from the site. All the additional traffic will be on the Colt Place cul-de-sac. This would be disastrous in the event of any emergencies requiring evacuation.

Please remove Site 10 from your consideration.

Regards,
Derek Brigden
6148 Colt Place, Unit 102

From: mga_sca@msn.com
To: Scott Donnell
Subject: Carlsbad Housing Plan
Date: Thursday, September 15, 2022 4:25:38 PM

Hi Scott,

We recently purchased a property in Kensington at the Square condo development near the Bressi Ranch neighborhood. I received notice earlier this week on the proposed housing plan for lot 10 and was concerned on the conversion to high density housing vs. the current commercial zoning. Since moving into our property in early June, we have noticed on several occasions that people are sleeping in their cars on Colt Place (the main road into our housing development). As well as multiple car break-ins that were reported through our community emails.

As I was unable to provide input earlier, please consider this official feedback on my concern for converting lot 10 away from a commercial zone. With the congestion already in place in this specific location my hope is for you to consider alternative locations for the near future.

Please let me know if you have any questions on response.

Sincerely,
Mike Anderson
6018 Colt Pl, unit 101
Carlsbad
651-303-8492

From: Steve Jaffe
To: Scott Donnell
Subject: Carlsbad- Potential Housing Site #10
Date: Sunday, October 23, 2022 4:49:13 PM

Hi Scott,

I live in the Kensington at the Square community and currently am a member of the HOA Board of Directors. After additional counsel, our community actually needs any application requests or interest submitted to the City over the last (10) ten years for usage or development by any developer, builder or interested party.

Also, to help define concerns re: development on housing site #10 for your environmental study please formally note the concerns listed below.

CONCERNS for environmental impact: identifying pollution issues in the environment, inclusive of, but not limited to air, water, and land. The influence of additional population on the environment, review of spill anticipation programs and dangerous waste regulations, wildlife protection / extensive study of wildlife, natural land, animal, insect, soil, plant protection, water concerns, safety and usage. Concerns of any and all hazmat related problems, any and all waste problems, soil testing, emissions, any and all land, air and water possible contaminants or protection.

Truly amazes me that given the enormous drought conditions facing the state that the City and State are adding additional housing on vacant lots at this time versus retrofitting existing properties.

In addition we have significant parking/easement issues with the current business park adjacent to this parcel, as well as concerns for additional traffic on Colt Place as a result of adding new units. We further expect that more cars will use our complex as a drive through (and these folks typically drive way too fast) to the Sprouts shopping center and further endangering the lives of the children here who play outside. Have also had a number of reports of drug use/homeless damage/criminal activity in the business park and on Colt Pl adjacent to this parcel as well. Adding additional units will only exacerbate this problem.

For these reasons I request that the City eliminate Housing Site #10 from their list of potential building sites.

Thank you Scott.

Steve Jaffe
6108 Colt Pl, #101
Carlsbad, CA 92009

From: lee eckel
To: Scott Donnell
Subject: Carlsbad Site #10 EIR Study Input
Date: Wednesday, October 26, 2022 4:45:04 PM

Mr. Donnell. I live on Colt Place near the cul de sac that fronts the subject property. That 2.6 acre site is a difficult one for development for any use--commercial or residential--for the simple reason it has only a single, bottle neck opening for the ingress and egress of vehicles. The exit to the west is problematic at best as it involves going through the parking lots of the two existing hotel properties. The only exit to a public street is south on the Colt Place public street. (Going east involves driving on a private street maintained by the Kensington on Square Homeowners Association and the adjacent Sprout shopping center. At any kind of residential density even close to the 19/acre mentioned, traffic on a regular basis would be a strain and a burden on the short Colt Place stub, let alone an emergency where it would be nearly impossible to deal with another 50 or 100 vehicles. I am sure there are many other issues to consider in respect to planning for the development of this parcel, but I believe this one alone is a "deal killer" for the one under consideration at this time. Thank you and your staff for your consideration of our neighborhood's opinions and insights. Lee Eckel 6148 Colt Place (760) 889-9914

From: Jaimie Augustine
To: Scott Donnell; Scott Chadwick; Priya Bhat-Patel; Geoff.patnoe@carlsbad.gov
Subject: Carlsbad Site 10/11 for Affordable Housing
Date: Saturday, October 22, 2022 4:35:06 PM

Hello Scott and Carlsbad Planning Team,

I spoke with Councilman Blackburn and Shannon Harker yesterday about the EIR for sites 10/11, for proposed affordable housing. Unfortunately the survey has been inactivated so as a resident at Kensington at the Square in Bressi Ranch, I would like to provide my concerns for the record:

1. I would like traffic impacts, crime rate and police reports to be pulled. Additional people who do not have a vested interest in the area because they rent vs own, will negatively impact the safety of nearby residents. There is already heavy traffic through our complex due to the location. Any additional traffic will create an area that is unsafe for children and adults to walk due to the sheer volume of traffic.
2. Noise pollution. We already experience heavy traffic noise from Palomar Airport Road and jet/airplane noise from Palomar airport. Additional residents will only increase the noise.
3. The lot is currently home to many bird species including a few hawks and owls. I would like to understand the impacts to removing the places where they nest.

Thank you,

Jaimie Augustine
6026 Colt Pl #102
Carlsbad, CA 92009

From: Joyce Hassell
To: Scott Donnell
Subject: Carlsbad
Date: Wednesday, October 12, 2022 7:19:42 PM

Please stop building! Keep Carlsbad special with it's charm, as it is!
Thank you
Joyce Hassell RN
Sent from my iPhone

From: Steven Miller
To: Scott Donnell; Keith Blackburn; Planning
Subject: CEQA/ EIR study for Carlsbad site #10
Date: Tuesday, October 25, 2022 6:13:30 PM

Hello:

I am a resident next door to the proposed site #10 to build new housing. I want to raise my concerns to the city, including the staff, to consider the following issues in any environmental impact report:

1. Traffic: The site has in its current form limited egress and ingress. Most of the traffic in its current setup would have to exit out onto Colt Place (unless there is an easement where the Staybridge Suites is). I am concerned about too much traffic flooding onto Colt Place. Moreover, residents at site 10 going to Sprouts, CVS and the stores in that direction, need to cross over an easement which includes a road that the homeowners association at Kensington must pay 15.2% of the costs due to wear and tear. Perhaps any site 10 association should share with that expense.

2. There needs to be ingress and egress going from site 10 directly to Palomar Airport road which it is adjacent to to avoid further traffic/ congestion onto colt road.

3. Any density studies must also include not just enough parking for all residents, but for guests, deliveries and maintenance. Again and deficiency in this regard will only make things much worse on Colt Pl.

4. Electric Utilities handle new residents? In or around August 2022, there was a complete power outage in the neighborhood where site 10 is located. Wouldn't the additional construction of more units, therefore more residents, in light of the power outage put more, not less pressure on an already overburdened system? Is the power grid going to be expanded to handle this?

5. Noise: What is the impact of new noise in the surrounding area if site 10 is developed?

6. pollution: What is the impact the development will have on the environment.

5. What is the significance of the airport being so close to site 10?

6. Is there enough water to accommodate this new potential development?

7. Are there any endangered species of animals that live on site 10 that would be at risk should the site be developed?

8. Overdensity: I would like the staff and city to consider the above questions I raise based upon different hypothetical development densities they developers are proposing.

--
Steven

Steven L. Miller

6018 Colt Place #104
Carlsbad, CA. 92009
(818)515-2187

stevenlmillerlaw@gmail.com

From: Janet Newman
To: Scott Donnell
Subject: City cite 14
Date: Wednesday, October 12, 2022 6:33:08 PM

I strongly object to this planned development. It is way too much for the infrastructure of our small beach community. There certainly must be something better we can do. I understand the mandate from the state but this is totally out of line. Thanks

Sent from my iPhone

From:	Lory McGregor
To:	Scott Donnell
Subject:	Comments on Housing Plan
Date:	Friday, September 30, 2022 9:13:09 AM

Hello Scott,

I have been a resident of San Diego County since 1976 and Carlsbad since 2005. My home is in an neighborhood of single family homes, built in the late 70's. I realize the city and county are under pressure from the state to add housing units but think it should be done near transit centers and places of employment rather than in established neighborhoods. Allowing individual owners to add ADUs to their existing properties will change the character of neighborhoods over time and, while it is a financial benefit to the property owners, it may not benefit other homeowners. If there were a requirement that owners reside in the primary unit for a minimum of five years, that would help but not guarantee long term satisfaction and, it would be difficult to enforce. It is widely known that ADUs are not used exclusively for "in-laws", nor for low income renters. Rather the vast majority are priced according to local rental norms.

I believe additional housing units should be added in areas that are already zoned for higher density, rather than changing the character of our established neighborhoods. If the goal is for people drive less, then find areas near Coaster stations, bus routes, or on major streets where people can walk to work.

Thank you for taking my comments.

Lory McGregor
760-533-9329

From: Diane Nygaard
To: Scott Donnell
Subject: Comments on SEIR Scoping for Housing Element
Date: Friday, September 30, 2022 9:25:48 AM

Mr.Donnell

We have the following comments on the scoping for the Supplemental EIR for the Housing Element:

- Impact on CAP

This increase in development will result in increased GHG emissions beyond what was addressed in the CAP. While the list of items to be evaluated includes GHG, there is no specific reference to the CAP. The CAP will need to be updated to be consistent with this change in planned development. The enviro review for the CAP should probably be done concurrently with this, but at a minimum it needs to be clear how this will be coordinated.

- Consider how to address VMT analysis

Since the procedures for VMT are based on individual projects that are assessed at the TAZ level it is unclear how this works with multiple sites at a program level. Sites that are along major transportation corridors where there are good alternative transportation choices may or may not be located in a TAZ that reflects that. Somehow you will want to come up with an analysis methodology that helps prioritize investments in alternative transportation. It is unclear yet how the new MMLOS standards will impact this.

- Impact of ADU's and new state housing lAws

There are the planned sites for housing growth- and then there are those that are allowed, like ADU's and all of the density bonus and other state housing incentives. This is an analysis of housing impacts so it needs to consider those "unplanned" units as well. Carlsbad, like every other city in this region, has failed to put basic controls in place that would limit the adverse impacts of several of these new housing laws. They allow exceptions for health, safety, changes to the physical environment and impacts to historic resources. It is time to get serious about identifying those kinds of exemptions that would provide some checks and balances on these new state laws.

- impact on parks and open space

Of course the standard CEQA analysis would look at compliance with the GMP performance standards and conclude there is no impact. But that methodology is flawed, and fails to consider existing shortfalls in park acres because of the allocation of Veterans Park and double counting of acres as both natural open space and parkland; , and to open space for exempting 11 LFMZ;s and not taking any corrective action to address their shortfalls. Look at cumulative impacts and come up with ways to help address these existing shortfalls- that will be exacerbated by additional growth.

Thank you for considering our comments.

Diane Nygaard
On Behalf of Preserve Calavera

From: P Gray
To: Scott Donnell
Subject: Community imput meeting
Date: Monday, October 17, 2022 8:13:23 AM

Thank you for scheduling a second meeting!
I would like to ask what measures are being taken to monitor noise levels and flight paths of airplanes in the zoning areas of Palomar Airport.
I am constantly annoyed by low flying/noisy aircraft that have not followed the flight path to land or take off.
There seems to be no consideration for residents.
I do approve of affordable housing. I do not approve of any Palomar Airport expansion other than for safety reasons.
Thank you for your time and consideration.

Paul Gray

From:	Chris Barnes
To:	Scott Donnell
Cc:	Sherry
Subject:	Disastrous Environmental Impact - SITE 8
Date:	Wednesday, October 12, 2022 11:39:39 AM

Dear Scott,

I am writing to submit my input, as well as input from my family and neighbors, about the **disastrous potential environmental impact** resulting from the rezoning and re-development of Site 8 in Carlsbad's latest housing plan.

Site 8 is immediately adjacent to the **Aviara Apartments project, which will already add more than three hundred (300+) housing units** immediately north of Cottage Row (Site 8). Immediately **across the street is the Laurel Tree apartments, which already have 138 units.** Adding another 100+ housing units to this very compact area would have disastrous impacts on our community.

Traffic congestion, pollution, and crime are already major problems in the area. Just imagine how much worse it would be after adding another 500 cars to one city block!

Additionally, the aesthetics of a major apartment complex at Site 8, that would be sandwiched behind 3 dozen single-family houses, **would destroy the character of those neighborhoods**, and would immediately **reduce home values,** not only for those homes that back up to the development, but also **for the surrounding neighborhoods**, whose home values are affected by comps.

Finally, I should warn the City of Carlsbad that adding such dense housing development immediately below the Palomar Airport flight path **exposes those residents to dangerous airborne pollutants such as ground level ozone, particle pollution, and lead emissions**.

I hope I am not the first to remind you and the City that Palomar Airport only provides **leaded aviation fuel for its piston-engine planes**, which fly over the proposed SITE 8 development constantly-- literally all day and all night. As a taxpayer, **I do not want my city to be held liable for health claims and costly litigation** that could have been avoided by eliminating SITE 8 from the proposed housing plan.

Respectfully,

Chris & Sherry Barnes
6404 Calmeria Pl
Carlsbad, CA
858-864-8766

From: derek brigden
To: Scott Donnell
Cc: Priya Bhat-Patel; Geoff Patnoe
Subject: Environmental concerns regarding Site 10
Date: Wednesday, October 26, 2022 9:18:00 AM

Scott,

I would urge you and the city council members to make a site visit to Site 10. That should be enough to convince anyone that Site 10 is totally inappropriate for further housing development. Stand at the end of the Colt Place cul-de-sac and look at the site and try to envision 50 - 80 families living on that piece of land with perhaps 160 additional vehicles coming and going all day.

From an environmental perspective we need a complete study done on air, water, soil and noise pollution given the additional vehicle and foot traffic. Consideration also needs to be given to the fact that this site is on the flight path to Palomar Airport. Any emergencies, fire, earthquake or other would make evacuations difficult if not impossible given the single access point. In my opinion this would represent a huge liability issue for the city.

Finally, I believe we need to understand what Rincon's role is in this process, how they came to be hired, what relationship they have with potential developers, if any.

I look forward to your response.

Regards,
Derek Brigden
6148 Colt Place, Unit 102
(703) 283-9655

From: robin purcell
To: Scott Donnell
Subject: Environmental considerations/ housing development / Carlsbad
Date: Tuesday, September 27, 2022 2:33:36 PM

1,water : need to conserve in drought. Make new developments supply their own water(new water district for new development). make current water district limited to current customers I e no more water meters issued.

2 fire protection: need to improve infrastructure to allow effective fire evacuation plans . Do not allow developments which will impact current residents safety during evacuation.

3 electricity supply: during heat waves we are already under supplied. Make new developments supply own electricity I e solar installs for new neighborhoods paid for by developer.

4 air quality:Grading activity creates dust. The current level of watering down the dirt does Not keep particles from entering the air. Improve standards of particle control during construction.
Thank you

Sent from my iPhone

From: Tricia Kenyon
To: Scott Donnell
Subject: Environmental Housing Impact
Date: Wednesday, October 12, 2022 9:13:14 AM

Hi Scott -

As a local resident living full time in the area behind the Army Navy Academy, I'm extremely concerned about the proposal to build additional housing in the area. It is already extremely crowded with beach goers and those visiting the Village in addition to the current residents. The road is constantly congested with walkers, bikers and those heading to the beach, and it's impossible for visitors to ever find parking.

Please consider an area that is not already overwhelmed.

Thank you! Tricia Kenyon

Sent from my iPhone

From: Robert Billmeyer
To: Council Internet Email; Scott Donnell
Subject: Environmental Impact of New Housing Plan
Date: Sunday, September 25, 2022 10:59:43 AM

During the previous discussions of the new housing plans, I and others asked how the extra demands for water and electricity would be provided, since California already has difficulty meeting the demands of current users. The only answer I heard was it would be addressed in the environmental studies. Therefore, I assume we will all discover the answers in these studies. Thank you.

Robert Billmeyer
1566 Maritime Dr.
Carlsbad, CA 92011
760-889-2957

Sent from my iPhone

From: crystal nans
To: Scott Donnell
Subject: Environmental impacts to study for new building site
Date: Sunday, September 25, 2022 4:54:51 PM

If possible, it would be good to evaluate the impact on/of wildlife. The new building south of the 78 and west of College seems to have greatly increased the number of coyotes I have seen in the Spiniker Point area. Additionally, they are around more hours of the day and seem less afraid of people. Don't know if this is an impact that would make any kind of difference, but, I offer for consideration.

Sent from my Verizon Wireless 4G LTE Droid

From: Lisa Johnson
To: Scott Donnell
Subject: Environmental meeting suggestion.
Date: Tuesday, September 27, 2022 2:01:34 PM

Ban gas-powered lawn equipment (mowers, edgers, blowers, etc.)

Sent from my iPhone

From: Bob N.
To: Scott Donnell
Subject: environmental planning
Date: Wednesday, September 28, 2022 10:19:09 AM

Does a city "planning" person have a plan to magically provide more water during years of prolonged drought ??? All real estate investment has a small potential for risk. That potential is being realized with the drought affecting the western states. Building and developing in the middle of a drought is STUPID. Elected officials in Phoenix, Las Vegas, and Southern California that allow expansion during a drought with no guarantee of more water in the future are stupid and reckless. People that buy open land with the hope of future profits when it is sold and developed have no right to take water from others. That investment is a risk because there is absolutely NO guarantee of more water for their development. Right now it is PROBABLE there won't be enough water for EXISTING residents in the future because of reckless expansion.

From: David McFeaters
To: Scott Donnell
Subject: Environmental Scoping Meeting on Housing (OCT 17th)
Date: Monday, October 10, 2022 3:15:17 PM

Hello City of Carlsbad

I wanted to provide input on what environmental impacts should be considered in rezoning property to help with housing problems in Carlsbad. Three years ago I approached the city with these ideas with zero interest.

One idea I had was to look at some of the excess commercial properties we have in Carlsbad that have sat vacant and idle for years at a time. There are a number of areas locally that have vacant commercial property that could be rezoned for housing. Ideally, stand alone properties could provide short or even long term rentals that would be affordable to most.

I don't think this type of housing would be good for families but certainly elderly or temporary housing would be a good choice in that there may not be the need for extra parking spaces, less traffic, fewer visitors and less need for parks or open spaces nearby associated with the space.

Sincerely

--
David McFeaters
2385 Outlook Court
Carlsbad CA 92010
760-586-2645

From: Lori Robbins
To: Scott Donnell
Subject: Environmental study comments
Date: Tuesday, September 27, 2022 9:36:31 PM

Hi Scott
Also, after talking to some merchants in town, it seems that parking in the Village is hard to find at lunch time and dinner time - especially on the weekends and Farmers Market Day - Wednesday.
Environmental Impacts on Parking should be looked at during this peak period.
Thanks
Lori Robbins

- Sent from Lori's iPad

From: David Bentley
To: Scott Donnell
Subject: Environmental Study for Future Housing Sites
Date: Sunday, September 18, 2022 12:50:43 PM

Scott:

Thank you for the opportunity to comment. My concern relates to traffic impacts arising from the missing link of College Blvd. ("Reach A"), particularly in connection with "Site 4" and other Zone 15 area affordable housing sites.

Site 4

The potential Future Housing Site identified by the City as "Site 4" consists of properties located in Zone 15 at/near the intersection of College Blvd. & El Camino Real. The largest portion of Site 4 consists of 17 acres located at the northeast corner of College/El Camino Real, commonly referred to as the "Walmart site". The balance of Site 4 is comprised of contiguous lands owned by Gary West's company. Said contiguous lands may become developable when/if removed from the flood plain as part of the wetland mitigation project proposed and approved for the "West Equestrian" property located along the Agua Hedionda/Sunny Creek.

Potential Development

Although not yet entitled or formally approved for multi-family development, Site 4 could potentially generate 500-600 rental apartments. Naturally, if a mix of for-sale townhomes and rental apartments or retail and multi-family, is the ultimate development, Site 4 would likely yield something closer to 400 residential units. In any event, Site 4 represents a potentially significant traffic-generating project.

In addition to Site 4, two other multi-family projects in the Zone 15 area, located along the College Blvd. alignment near or at Cannon Road, represent significant additional affordable housing opportunities. The Kelly/4K (formerly, "Encinas Creek") project is currently in process with the City and is proposing approx. 150 rental apartments. North of the Kelly project, at the College/Cannon intersection, is the RCOA "Parcel 4" project (for which I hold a purchase option with the Rancho Carlsbad Owners Association). RCOA Parcel 4 is not yet entitled, but is designated in the General Plan as a multi-family site with 108 units allocated.

These three potential Zone 15 multi-family projects represent approximately 650 - 800 residential units that help satisfy the City's need for more affordable housing product. The balance of the Zone 15 area, which is substantially undeveloped, will ultimately generate hundreds of additional residential units at build-out; presumably, higher priced single family detached units.

Traffic Impacts

At present, traffic conditions along El Camino Real and Cannon Road, particularly during peak periods, suffers from impeded flows and substantial delays. Studies have concluded these traffic problems can be alleviated through construction of the last segment of College Blvd. - "Reach A". In addition to commuters from the Calavera Hills and Robertson Ranch neighborhoods, significant traffic is also generated by faculty and students of the Sage Creek High School, at the northeast corner of College and Cannon.

It also seems reasonable to assume the current inferior level of traffic service in this area will be further degraded by the additional traffic that will result from completion of the 250-unit Marja Acres project and the Robertson Ranch retail development; both of which are located along El Camino Real, just north of Cannon Road.

As noted by the City's own studies, analyses and hearings regarding traffic LOS problems near Zone 15 (2019/20), there is a long history of failed efforts by Zone 15 developers to construct the final section of College Blvd ("Reach A"), or to even agree on a financing mechanism for its construction. In addition, Gary West's Companies, which own the Cantarini Ranch and Dos Colinas properties that are located along both sides of Reach A, has publicly stated they have no interest in selling or developing those properties or participating in the construction of "Reach A" until someone else builds it.

Given the foregoing facts and background, can the Site 4 property be developed as proposed (i.e. 400 - 600 MF units) without completing College Blvd. "Reach A"? If it can be constructed without Reach A, what traffic mitigation measures would be required? If Reach A is required, what feasible financing options exist?

Your/City staff's consideration of the foregoing is appreciated,

David Bentley

Bentley Equity, Inc.
David M. Bentley, CCIM, ChFC - President
760-809-5216 * benteq@roadrunner.com
Web Site: www.dmbentley.com

Exhibit 11

Existing, Approved and Potential Affordable Housing

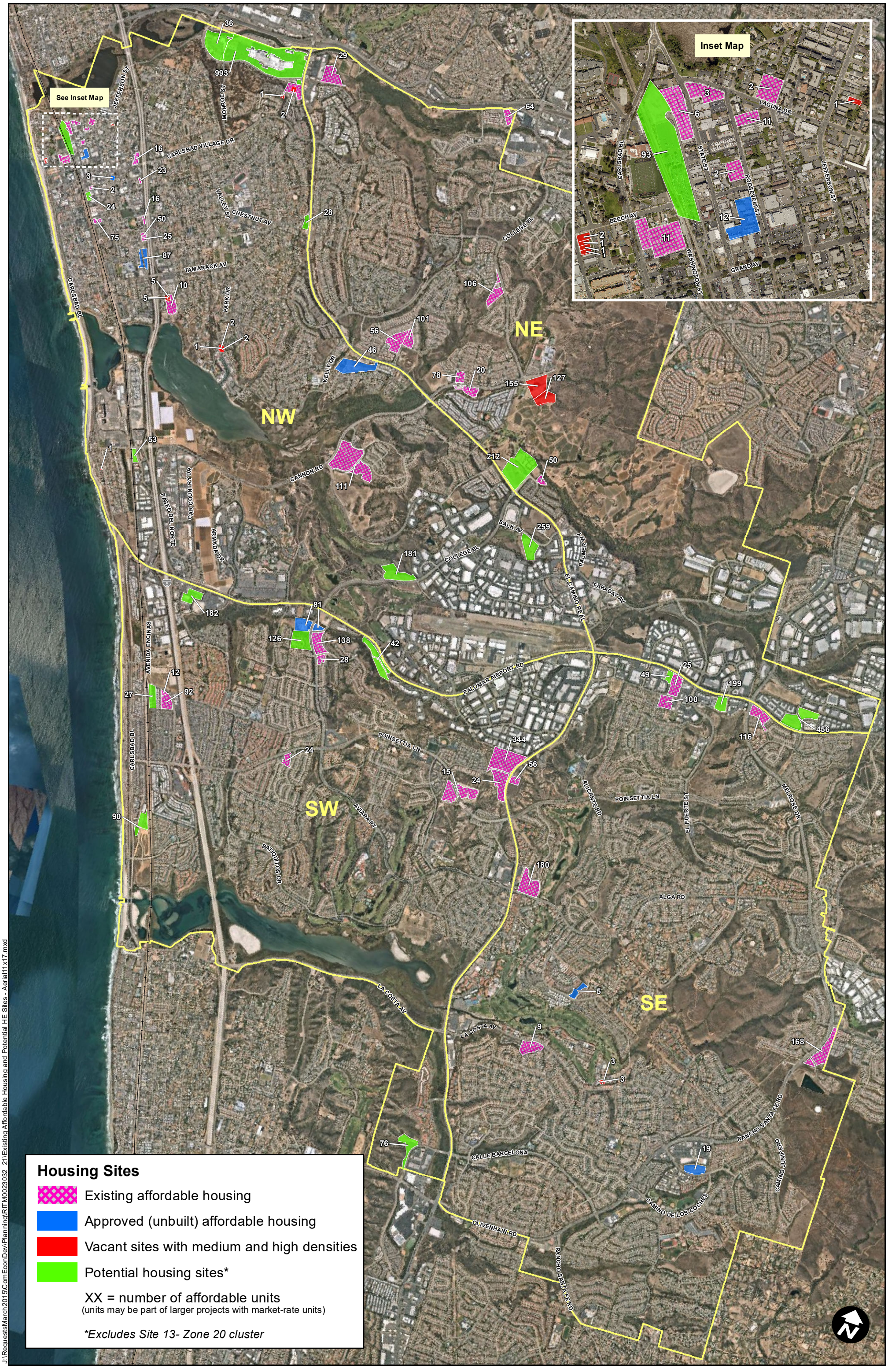

From: Heather King
To: Scott Donnell
Subject: Future housing
Date: Monday, September 26, 2022 2:06:19 PM

Please keep in mind the beauty of the coastline while deciding where to put future housing, especially condensed housing. Other beach cities down the coast of California have accommodated housing in areas further away from the coastline so as not to "pave Paradise and put up a parking lot." Not everyone needs to live walking distance from the water. I've worked very hard in my life and I can't afford it myself.
Thank you
Heather Richardson

From: Roslyn Raue
To: Scott Donnell
Subject: Future Housing Site 14
Date: Wednesday, October 12, 2022 11:51:47 AM

Scott,
I'm commenting on the proposed 200 units on Site 14 in Carlsbad Village.
Have you driven to the Village lately and tried to find a legal parking place??? Have you noticed the new building popping up in the Village??? There are no set backs from the sidewalk, there is no space between buildings, there are not enough parking spaces and there are empty public buses and Coaster trains. Bottom line, to many people in a very small space!!!! Head East in Carlsbad and there is plenty of geography and open space. 200 units could possibly mean 400 additional cars…are you kidding me?
Please reconsider this massive addition of apartments people and cars. It will destroy the special Village we know and love.
Roz Raue

Sent from my iPhone

From: DeeDee Rowlett
To: Scott Donnell
Subject: Future Housing Sites
Date: Monday, October 17, 2022 2:21:44 PM

Hi Scott,
I wanted to attend this evening's meeting however I have a prior commitment. I have concerns why District 1 and District 2 are absorbing all the affordable housing. I don't believe our infrastructure can handle much more. I feel some of the downtown sites could be a parking structure since there is little parking downtown.
Is this meeting going to be recorded?
Thanks.
DeeDee Rowlett

From: Vonnie Varner
To: Scott Donnell
Subject: future housing
Date: Sunday, September 25, 2022 6:54:25 AM

As I follow new developments I am concerned about the number or 3 story units townhomes. As the community ages, these are undesirable floorplans. Developers may find them cost effective but they may be white elephants in the future.

I love Carlsbad,
Vonnie Varner

From: nariggle@gmail.com
To: Scott Donnell
Subject: Future housing/Airport
Date: Sunday, October 16, 2022 2:54:14 PM

I have lived here on Plum Tree Rd under the flight path of Palomar Airport for 20 years. I have become most cynical in regards to the county and it's airport management. It is very political and profit oriented and I never quite trust the way things get handled. I have felt manipulated and I have ceased to be active. However, I would like to voice my ongoing concerns through email:
The growth and development of housing, without addressing the chronic noise and air pollution, in and around the airport, seems like a complete travesty to me. Accidental or purposeful? The noise and pollution that the airport creates exacerbates the stress of life in this corridor. The idea of quickly approving additional housing, low income or for maximum profit, without transparently addressing these profound quality of life issues once and for all seems patently dishonest and absurd. Were such a disconnect to move forward it will appear as political maneuvering, not actual planning.
Respectfully,
Nichola Riggle

Sent from my iPhone

From:	Jeff Murphy
To:	Scott Donnell
Cc:	Eric Lardy
Subject:	FW: Rezoning Site 10 and 11
Date:	Thursday, October 27, 2022 8:02:45 AM

Morning Scott,
Could you please contact Mr. Marshall on Geoff's request. Thanks.

JEFF

From: Geoff Patnoe <Geoff.Patnoe@carlsbadca.gov>
Sent: Wednesday, October 26, 2022 7:23 PM
To: Jeff Murphy <Jeff.Murphy@carlsbadca.gov>
Subject: Fwd: Rezoning Site 10 and 11

Begin forwarded message:

> **From:** Glenn Marshall <glennymarshall@yahoo.com>
> **Date:** October 26, 2022 at 6:42:16 PM PDT
> **To:** Geoff Patnoe <Geoff.Patnoe@carlsbadca.gov>
> **Subject: Fwd: Rezoning Site 10 and 11**
>
> Sent from my iPhone
>
> Begin forwarded message:
>
> > **From:** Glenn Marshall <glennymarshall@yahoo.com>
> > **Date:** October 26, 2022 at 6:29:31 PM PDT
> > **To:** Geoff.patnoe@carlsbad.gov
> > **Subject: Rezoning Site 10 and 11**
> >
> > I am a resident in Kensington Square over looking the parcel of property that is being considered for rezoning to accommodate affordable housing. I must register a complaint to develop such a project because it will severely impact the flow of traffic around the immediate area especially the amount of traffic that will inundate from the subject property beginning at Colt Place to the shopping complex. It is not fair for the homeowners to be subject to this increase traffic and corresponding noice. The access to and out of the area is limited which will only cause an

unnecessary burden around the surrounding businesses and homeowners.

The Marshalls

Sent from Yahoo Mail for iPhone

From: Planning
To: Scott Donnell
Subject: FW: Reminder: Give input on environmental study for future housing sites
Date: Wednesday, October 12, 2022 11:01:06 AM

Forwarding you an email from our Planning General Inbox - regarding scoping for future housing sites

From: Lorinda <lorindy@pacbell.net>
Sent: Wednesday, October 12, 2022 10:08 AM
To: Planning <Planning@CarlsbadCA.gov>
Subject: Re: Reminder: Give input on environmental study for future housing sites

In my opinion, we need a moratorium on housing. Why turn Carlsbad, and all of San Diego County, into a seething metropolis? Our infrastructure can't support any more growth. Roads are pitted, freeways are an impasse. There are too many huge gas guzzling trucks, bumper to bumper, all with empty beds. Tax the damn things by size and engine displacement. Public transportation is too slow. A 20-minute drive takes an hour or more by train/bus. Just because the world wants to move to Carlsbad, doesn't mean we must accommodate them. Its a travesty, what developers are doing to State Street. All the unique taverns and stores wiped out, to be replaced by institutional-looking high-rise apartments? Why? One ugly downtown San Diego is enough. Riverside County has lots of room, let people move there, as most of my friends did. Too much is never enough for greedy developers. Just STOP!

On Oct 12, 2022, at 8:04 AM, City of Carlsbad <planning@carlsbadca.gov> wrote:

Reminder: Third meeting added to give input on environmental study for future housing sites

Remember to mark your calendar for Monday, Oct. 17, to give input on what environmental impacts should be evaluated in a study on potential properties that could be rezoned to accommodate future housing. A reminder that the city also extended the deadline to provide comments from Oct. 14 to Oct. 26.

Environmental Scoping Meeting
Oct. 17, 6 to 7:30 p.m.
City of Carlsbad
Faraday Administration Center

1635 Faraday Ave.

You can provide input via mail or email through Oct. 26 to:

Scott Donnell, Senior Planner
City of Carlsbad
Planning Division
1635 Faraday Ave.
Carlsbad, CA 92008
Scott.Donnell@carlsbadca.gov

Next steps

After helping identify what environmental impacts should be evaluated, residents will have an opportunity to review and provide input on the draft report once it is developed. The supplemental environmental impact report will be presented to the City Council for consideration in 2023.

Background

The city is preparing a supplemental environmental impact report for its General Plan, approved in 2015. The report is required as part of the city's Housing Element Update, a state-required plan approved in July 2021 for how Carlsbad will accommodate projected housing needs through 2029.

As part of a Housing Element Update, the state also requires all cities analyze and update portions of their Public Safety Element, a separate chapter of the General Plan that focuses on citywide topics including climate resiliency, wildfire hazards and evacuation routes. Updates proposed will respond to requirements of new state legislation related to these topics.

The city worked with the community last year to choose the potential sites, and the next step is to perform environmental studies. This analysis will help inform the final selection of sites.

Zoning changes

The city's housing plan includes proposed changes to zoning that would allow more housing units on certain properties. This study will evaluate the environmental impacts of those changes, including how it might affect things like transportation, aesthetics and greenhouse gas emissions.

Housing program implementation

The housing plan also includes programs that require the city to make changes to housing standards, such as allowing additional types of housing and higher densities to meet state requirements. The environmental review will analyze the impacts of implementing some of these programs.

Learn more

- Housing Plan Update
- General Plan
- Scott Donnell, Senior Planner, scott.donnell@carlsbadca.gov

Visit the Website

City of Carlsbad1200 Carlsbad Village DriveCarlsbad, CA 92008

From:	Liberato Tortorici
To:	Scott Donnell
Subject:	Fwd: Community Input Meeting - New Housing Near Palomar Airport
Date:	Monday, October 17, 2022 11:52:14 AM

Mr. Donnell I will be unable to attend this evening's meeting but I'd like to share my issue/question about the Zoning Change Project.
Please see my email below that I sent to the C4FA group earlier today.

Thank you in advance for your consideration.
Liberato Tortorici
6436 La Paloma Street
Carlsbad, CA 92009.

---------- Forwarded message ---------
From: **Liberato Tortorici** <ldtortorici@gmail.com>
Date: Mon, Oct 17, 2022 at 11:44 AM
Subject: Re: Community Input Meeting - New Housing Near Palomar Airport
To: <c4fa.info@gmail.com>

I am sorry but I will not be able to make the meeting this evening. I am out of town on business in Lancaster, CA.

I do have one issue/question that I'd like addressed by City staff. My issue/question is as follows.

Will ADUs (Auxiliary Dwelling Units) be factored into the planning and environmental documents for this Project? Specifically, the impacts of ADUs on traffic, City services such as water service, sewerage collection and treatment, and trash/green waste/recyclables) pick-up, utility services such as electrical power (SDG&E), and emergency services such as fire department, ambulance and paramedic services. These impacts need to be factored in and addressed by the City for this project zoning change evaluation.

Please feel free to share my questions at the meeting and please identify who I am.

Liberato Tortorici
6436 La paloma Street
Carlsbad, CA 92009
ldtortorici@gmail.com

Thank you.

On Sun, Oct 16, 2022 at 10:19 AM C4FA <c4fa.info@pb07.ascendbywix.com> wrote:

Can't see this message? View in a browser

Community Input Meeting - New Housing Near Palomar Airport

Dear C4FA Supporters,

Congratulations! Due to public outcry, the City of Carlsbad has scheduled a second in-person Community Input meeting on environmental impacts of zoning changes across Carlsbad to allow additional housing to be built. The majority of these additional units will meet the state mandate for affordable housing in our community.

In years past, and still today, the impact of Palomar Airport has not been considered by the City or developers when building housing in Carlsbad. The impact of future plans for Palomar Airport has NEVER been considered with regard to residents and housing. We have a chance to change that.

Here is the link to the City's website describing the potential zoning changes and the process. Notice that Palomar Airport isn't even mentioned....

https://www.carlsbadca.gov/departments/community-development/planning/housing-plan-update

The Community Input meeting will be held on **Monday, Oct. 17, 2022 from 6pm -7:30pm at the City's Faraday Offices located at 1635 Faraday Avenue.** We encourage you to attend and ask questions.

Listed below are some questions C4FA would like to see addressed by Carlsbad:

- What regulations are in place to protect residents from:
  - High decibel **Noise** coming from the nearby Airport
  - **Air Pollution** coming from the nearby Airport, specifically
    - Lead
    - Particle Pollution
    - Ground Level GHG's
    - GHG's
- What provisions will be made to keep residents **safe** given new housing appears to be under the nearby Airport arrival paths?
- Will the City require a new comprehensive noise study to be performed to measure the impact of noise from Palomar Airport? The last one done for Palomar Airport was in 2005.
- Which of the various maps will delineate the Airport Influence Areas involved?

- Will maps show changes to these Airport Influence Areas that will occur should the D-3 Airport be built per the Palomar Airport Master Plan?

- Will the maps be the same for Noise, Air Pollution, Resident Safety?
- Who has final approval for building sites?
  - What is the process?
  - Steps involved?
- For sites in the Airport Land Use Compatibility Plan, at what point will the Airport Land Use Commission (ALUC) be engaged?
- What and when in the process with there be further opportunities for citizen review?

If you cannot attend Monday's meeting, please take a moment to email the City of Carlsbad Planning Department before Oct 26, 2022. Please email

scott.donnell@carlsbadca.gov

Subject: Housing Element Update

Hope to see you there!

Your Friends and Neighbors from C4FA

7040 Avenida Encinas,
Carlsbad, CA 92011

Suite 104-467

Share on social

https://www.c4fa.org/

From: robin purcell
To: Scott Donnell
Subject: Fwd: New legislation should be used to locate developement in Carlsbad
Date: Thursday, September 29, 2022 5:20:50 PM

Thank you for replying to my first email twice . I am forwarding the second email so I am sure you are aware of the new legislation from yesterday regarding commericial buildings.

Sent from my iPhone

Begin forwarded message:

> **From:** robin purcell <robin.purcell@gmail.com>
> **Date:** September 29, 2022 at 4:58:20 PM PDT
> **To:** Scott.Donnell@carlsbadca.gov
> **Subject: New legislation should be used to locate developement in Carlsbad**
>
> Environmental criteria should not focus only on the pre identified sites now that California has enacted new legislation allowing rezoning of under utilized commercial spaces.
>
> > CALIFORNIA — California is set to allow developers to convert underutilized or empty commercial buildings — such as shuttered box stores — into affordable housing, according to historic legislation signed by Gov. Gavin Newsom on Wednesday.
> >
> > The Democratic governor signed two bills — Senate Bill 6 and Assembly Bill 2011 — to incentivize developers to convert commercial corridors originally zoned for retail and office buildings to help the state bolster housing options.

Robin Purcell AWS, NWS
RobinPurcellPaints.blogspot.com

CAUTION: *Do not open attachments or click on links unless you recognize the sender and know the content is safe.*

From:	Cheryl Madrigal
To:	Scott Donnell
Cc:	Deneen Pelton
Subject:	GPA2022-0001 Supplemental EIR
Date:	Friday, September 30, 2022 9:43:59 AM
Attachments:	image001.jpg

Scott,

This email is written on behalf of the Rincon Band of Luiseño Indians ("Rincon Band" or "Tribe"), a federally recognized Indian tribe and sovereign government in response to your Notice of Preparation of a Supplemental Environmental Impact Report (GPA2022-0001).

The Rincon Band would like to point out that what is today known as the City of Carlsbad is located within the Traditional Use Area of the Luiseño people and is also withint the Tribe's specific area of historic interest. As such the Rincon Band is traditionally and culturally affiliated to the project area. The Tribe has knowledge of various areas within the city of high and moderate cultural sensitivity. We are asking to be consulted with and provided the opportunity to provide input on the Supplemental EIR. The Tribe is interested to attend any cultural resources field surveys and kindly ask to be notified and allowed to attend such field work. The Tribe believes that the potential exists for cultural resources to be identified during further research and survey work.

We are looking forward to working closely with you to jointly protect and preserve our cultural assets. If you have additional questions or concerns, please do not hesitate to contact our office at your convenience at (760) 749 1092 ext. 323 or via electronic mail at cmadrigal@rincon-nsn.gov.

Sincerely,

Cheryl

Cheryl Madrigal
Cultural Resources Manager
Tribal Historic Preservation Officer
Cultural Resources Department
Rincon Band of Luiseño Indians
1 West Tribal Road | Valley Center, CA 92082
Office: (760) 749 1092 ext. 323|Cell: 760-648-3000
Fax: 760-749-8901
Email: cmadrigal@rincon-nsn.gov

seal-rincon-website_03

From:	Jackye Willis
To:	Scott Donnell
Subject:	Great idea
Date:	Saturday, October 22, 2022 10:25:22 PM

Great idea putting housing at the Shoppes on city property near the bus terminal. Maybe the number should be less.
J. willis

Sent from my iPhone

TABLE 10–34: RECENT AFFORDABLE HOUSING PROJECTS

PROJECT AND LOCATION[1]	NUMBER OF AFFORDABLE UNITS	STATUS	PROJECT DENSITY (DU/AC)[2]	AFFORDABILITY	AVERAGE SUBSIDY/UNIT (AB/RESOLUTION#)[3]
Seagrove (State Street Townhomes) 2503 – 2599 State St.	6	Completed 2019	24.9	13% Low/87% Market	Inclusionary
Portola Senior and Montecito Apartments (Robertson Ranch Planning Areas 7 and 8) 2600 Gage Drive and 2510 W. Ranch St.	157	Completed 2018	18.8 and 22.7	36% Moderate, 64% Low	Inclusionary
Juniper at the Preserve (Quarry Creek Planning Area R-1) 2965 Luiseno Way	64	Completed 2017	20.2	Low-income	$20,000 (AB 22,248)
The Lofts at Carlsbad Village 1040 Carlsbad Village Dr.	16	Approved 2017	47.5	20% Low/80% Market	Density Bonus/Inclusionary
Pacific Wind Harding St. and Carol Pl.	87	Approved 2017	21.5	100% Low	$85,149 (AB 21,028)
Jefferson Luxury Apartments 3039 Jefferson St.	2	Approved 2018	34.4	15% Low/85% Market	Inclusionary
Lanai II (Miles Buena Vista) Southwest of Buena Vista Way and Crest Dr.	2	Completed 2019	3.2	15% Low/85% Market	Inclusionary
12 Pacific (Yada Farm) Southeast of Buena Vista Way and Valley St.	2	Completed 2019	2.8	15% Low/85% Market	Inclusionary
Beachwalk at Roosevelt 2675 – 2711 Roosevelt St.	2	Under construction	22.9	15% Low/85% Market	Inclusionary

PROJECT[1]	NUMBER OF AFFORDABLE UNITS	STATUS	PROJECT DENSITY (DU/AC)[2]	AFFORDABILITY	AVERAGE SUBSIDY/UNIT (AB/RESOLUTION#)[3]
Windsor Pointe (Harding St. site) 3606 Harding St.	26	Approved 2019	48	100% Very Low and Extremely Low	$165,868 (Res. 2020-032)
Windsor Pointe (Oak Av. site) 965 Oak Ave.	24	Approved 2019	55	100% Very Low and Extremely Low	$165,868 (Res. 2020-032)
Seascape Northeast of Black Rail Rd & Avena Ct E	2	Competed 2019	4.3	15% Low/85% Marker	Inclusionary
Afton Way 3103 – 3114 Afton Way	1	Completed 2019	1.9	15% Low/85% Market	Inclusionary
Casa Aldea(Cannon Road Senior Housing) 2615 Cannon Rd.	20	Approved 2019	15	20% Low/80% Market	Inclusionary
Kensington at the Square (Uptown Bressi Ranch) 6002 Colt Pl.	17	Approved 2019	11.6	20% Low/80% Market	Inclusionary
Highland View Homes 3794 Highland Dr.	1	Completed 2020	4	15% Low/85% Market	Inclusionary
Ashton (Magnolia-Brady) 1631 – 1657 Brady Cr.	1	Completed 2020	4	15% Low/85% Market	Inclusionary
Treviso (Poinsettia 61) 1641 Artemisia Ct.	15	Under construction	6.1	15% Low/85% Market	Inclusionary
Resort View Apartments West of Vieja Castilla Way, between Navarra Dr. and Pirineos Way	4	Approved 2020	30	20%Low/80% Market	Density Bonus/Inclusionary
Carlsbad Station Between Roosevelt St. and State St., north of Grand Ave. and south of Beech Ave.	12	Approved 2020	44.9	20% Low/80% Market	Density Bonus/Inclusionary
Romeria Point Apartments Southwest of Romeria St. and Gibraltar St.	3	Approved 2020	31.9	15% Very Low/85% Market	Density Bonus/Inclusionary
TOTAL	**464**				

[1]All projects are rentals unless otherwise noted.

[2]"du/ac" is dwelling units/acre.

[3] AB# identifies the City Council agenda bill number from which the subsidy amount was obtained. Agenda bill numbering has been discontinued, so resolution numbers from the City Council approval is provided for later projects.

From: Randi Greene
To: Scott Donnell
Subject: Housing and Environmental Impact
Date: Wednesday, September 28, 2022 9:17:18 AM

Scott, I feel strongly that we should be looking at empty office buildings. There would be no environmental impact on those spaces that are already built.

Here is a story about the other cities that are doing just that:

Cities and states across the country are looking to transform vacant office buildings into housing — a solution for both empty downtowns and housing shortages.

- **Adaptive reuse** of existing buildings also is gaining popularity for environmental benefits, *Kate Marino writes for Axios Markets*.

Why it matters: Commercial districts with little to no residential presence turned into near ghost towns during the pandemic, becoming a blight on the cityscape and a detriment to surviving businesses.

Reality check: Even though offices are still only half-full in many cities, these types of conversions have yet to really pick up steam. They're expensive, and loads of red tape and zoning laws usually get in the way.

What's happening: A few big cities are creating new incentives they hope will unleash a wave of housing conversions in the decade ahead.

- **Chicago this week** proposed an initiative to repurpose high-vacancy buildings in its downtown financial district into homes, offering tax credits and incentives along with financing tools.
- **In New York City,** real estate trade association REBNY estimates that a "conservative" conversion rate of 10% of NYC's lower-tier office buildings could generate approximately 14,000 new residential units.
- **The L.A. City Council** is expected to consider an updated ordinance that would provide financial incentives to convert downtown office buildings. A Rand study in L.A. found underutilized commercial properties that could collectively produce 92,000 housing units.

California's 2023 budget allocates $400 million in incentive grants for office-to-residential conversions.

- **Denver** is also funding studies.

D.C. Mayor Muriel Bowser pitched a 20-year tax abatement tied to these kinds of conversions.

The bottom line: Saying goodbye to concentrated office districts and 9-to-5 downtowns is a process that probably will play out for decades — part of the pandemic's lasting impact on our lifestyles and communities.

--
Randi Greene
831.869.8325

From:	Paige DeCino
To:	Scott Donnell
Subject:	Housing element comments
Date:	Wednesday, October 12, 2022 8:59:57 AM

Hi Scott,

In response to submitting comments re potential sites for housing, I'd like to have included the following:

- Is there a reason that Plaza Camino Real is not listed as a potential site given it's in a smart growth area with transit and services close by?
- I'm concerned that any housing at the Coaster stations will make parking for those public transit customers more difficult. What are the plans to provide enough parking (and lower GHG emissions) there?
- Site 3 (within my neighborhood) really seems untenable as a housing site due to the topography.
- It looks like most sites are located along transit routes, which is good!

Thanks for your effort on this.

Paige DeCino

From: Jan Ahrens
To: Scott Donnell
Subject: Housing Element Update
Date: Monday, October 17, 2022 8:07:54 AM

Questions I would like to see addressed by Carlsbad:

<!--[if !supportLists]-->• <!--[endif]-->What regulations are in place to protect residents from:

<!--[if !supportLists]-->○ <!--[endif]-->High decibel **Noise** coming from the nearby Airport

<!--[if !supportLists]-->○ <!--[endif]-->**Air Pollution** coming from the nearby Airport, specifically

<!--[if !supportLists]-->▪ <!--[endif]-->Lead

<!--[if !supportLists]-->▪ <!--[endif]-->Particle Pollution

<!--[if !supportLists]-->▪ <!--[endif]-->Ground Level GHG's

<!--[if !supportLists]-->▪ <!--[endif]-->GHG's

<!--[if !supportLists]-->• <!--[endif]-->What provisions will be made to keep residents **safe** given new housing appears to be under the nearby Airport arrival paths?

<!--[if !supportLists]-->• <!--[endif]-->Will the City require a new comprehensive noise study to be performed to measure the impact of noise from Palomar Airport? The last one done for Palomar Airport was in 2005.

<!--[if !supportLists]-->• <!--[endif]-->Which of the various maps will delineate the Airport Influence Areas involved?

<!--[if !supportLists]-->○ <!--[endif]-->Will maps show changes to these Airport Influence Areas that will occur should the D-3 Airport be built per the Palomar Airport Master Plan?

<!--[if !supportLists]-->• <!--[endif]-->Will the maps be the same for Noise, Air Pollution, Resident Safety?

<!--[if !supportLists]-->• <!--[endif]-->Who has final approval for building sites?

<!--[if !supportLists]-->○ <!--[endif]-->What is the process?

<!--[if !supportLists]-->○ <!--[endif]-->Steps involved?

<!--[if !supportLists]-->• <!--[endif]-->For sites in the Airport Land Use Compatibility Plan, at what point will the Airport Land Use Commission (ALUC) be engaged?

- <!--[endif]-->What and when in the process with there be further opportunities for citizen review?

Janet Ahrens
Oceanside, CA

From: Seth G
To: Scott Donnell
Subject: Housing Impact - SITE 8
Date: Wednesday, October 12, 2022 1:26:26 PM

Hi Scott -

I'm writing to you in order to submit my input about rezoning and re-development of Site 8.

I typically do not get involved as I thought this may get passed over, however, with a continuation of this plan I had to step in and give input.

We vehemently oppose this additional 100+ housing unit site. Traffic is bad and getting worse. Crime has been already rampant in the area and will only get worse. The quiet neighborhoods surrounding this area would get congested and become something that none of us signed up for.

My neighbors and I strongly suggest eliminating SITE 8 from the proposed housing plan.

Respectfully,

Seth Gustine
6408 Calmeria Pl
Carlsbad, CA 92011

From: June Lombardi
To: Scott Donnell
Subject: Housing plan - areas 17 & 18
Date: Wednesday, October 12, 2022 8:36:50 AM

Dear Mr. Donnell,

As a coastal resident of Carlsbad, I've experienced increased traffic and a lack of space in close proximity to the beaches. Carlsbad is a premier destination, especially during the long summer months.

Areas 17 and 18 should be designated as open public space for recreational use such as extended beach parks for picnic areas, fenced dog park areas, pickle ball, outdoor concert area, and parking for the residents of our beautiful city. Added growth will bring more pressure on our parks. The existing parks can't support popular summer venues, requiring bussing several miles away.

I support expanded growth without new taxes and bond measures, however specifically- areas 17 and 18 would utilize prime coastal real estate for the personal benefit of a few, and not benefit our Carlsbad residents. These areas should be dedicated to benefit all of Carlsbad.

Bus service will need to increase frequency along the Palomar corridor including College/Aviara with proposed growth with drop offs to the train station. Lastly, the timing of traffic lights also needs to be adjusted as well.

All the best,

June Lombardi
92011

From: Michelle Laird
To: Scott Donnell
Subject: Housing Plan Feedback
Date: Monday, October 24, 2022 11:07:25 AM

Dear Scott,

Thank you for the notice in the city newsletter about the city's plan to accommodate more housing.

My main concern is the number of units being proposed in North Carlsbad at Site 1 and 2 (over 1000 units combined).

Aesthetically, it will change north Carlsbad from an attractive suburban area bordering the lagoon to a urban, congested low income area. This, in turn, will likely drive down the prices of surrounding homes as well as the enjoyment of living here.

In terms of traffic, it will be a disaster. El Camino Real is already heavily congested in the mornings, afternoons and early evenings, on Saturdays, and during the holidays. I often have to wait through 2 light changes before moving onto the next light for another 2 changes. Adding 1000+ units will mean another 1000+ cars to this area. Although the bus station is there, let's face it - no one wants to give up their car. These new residents will be driving. Yes, there is Jefferson, but we know that most will be coming onto ECR.

In terms of the neighboring lagoon, I'm very concerned about how 1000+ densely built units at Site 1 and 2 will impact the health of that already struggling ecosystem.

Another concern I have is that north Carlsbad is already densely populated. Between Carlsbad Village Drive and the 78, there are a number of high density developments — Marbella, The Bluffs, Tanglewood, Rising Glen, Flower Fields, The Avenue, The Grove, Waterstone — and I'm sure I missed a few. Putting half of the low income housing requirements in this part of the city and in one concentrated area seems unreasonable. The south east section of the city also needs to share the responsibility of our growing population.

My thought is keeping the housing at Site 1 and 2 to 400 or ideally lower to maintain the suburban character of our city, to protect our lagoon, to prevent a traffic disaster, and to evenly distribute the housing throughout the community.

Can you please let me know what kinds of traffic and environmental studies are being done as part of Carlsbad's planning in north Carlsbad?

Thank you for considering my thoughts and opinions.

Sincerely,
Michelle & Steve Laird
92010, Carlsbad residents for 20 years

From: John Bottorff
To: Scott Donnell
Subject: Housing Plan Update Comment
Date: Thursday, September 29, 2022 10:23:29 AM

Hi Scott,

I wanted to send you an email to follow up on my comments on Monday.

1. Lead is still in aviation fuel. Jets do not use leaded fuel, but piston-engine aircraft do. These types of planes and helicopters are responsible for around 50% of airborne lead emissions in the US...they are the largest single source of lead pollution.

Lead is a toxic heavy metal and there is no safe level of lead exposure according to the World Health Organization, Centers for Disease Control and the American Academy of Pediatrics. It is especially harmful to children.

McClellan-Palomar airport is one of the top 3 lead polluters in San Diego County according to the EPA National Emissions Inventory. These aircraft dump over 700 pounds of lead onto nearby homes, schools and nurseries every year. That is not acceptable!

Unleaded AVGAS is now available for general aviation aircraft. So simply having unleaded fuel available instead of leaded will drastically reduce lead emissions and protect the health of our kids.

Please work with the County to install unleaded AVGAS fuel tanks at McClellan-Palomar and stop the sale of leaded fuel as soon as possible.

Let's all work together to Get the Lead Out! Here is a link to our Team 5: Get the Lead Out — CleanEarth4Kids page for more information.

2. How can the City of Carlsbad ensure new housing projects are not situated near McClellan-Palomar and its flight paths? Not only is the airport a source of lead and noise pollution, but all aircraft burn fossil fuels and put out toxic pollution. One of the most dangerous is particulate matter , or PM. PM2.5 is especially dangerous. These particles are 2.5 microns or smaller. By comparison, the average human hair is 50 microns wide. Researchers estimate that PM2.5 is responsible for almost 48,000 premature deaths in the US every year. Particulate matter irritates the lungs and research clearly shows that PM increases the risk of serious health outcomes including asthma, heart attacks, strokes, cancer, and brain conditions like Alzheimer's, Parkinson's and dementia.

3. What mitigation strategies like planting trees, noise barriers, etc. can be done to help people currently living near the airport? Especially lower income people of color who historically face additional burdens of toxic chemicals, pesticides and pollution. We know youth with asthma who live near the airport and flight path with their families. They and the other families there must have clean air to breathe!

Thank you for all the work that you and your staff are doing!

John Bottorff
CleanEarth4Kids.org
949-439-5459
J@CleanEarth4Kids.org

From: barbarafeldman2000@gmail.com
To: Scott Donnell
Subject: Housing plan
Date: Wednesday, October 12, 2022 12:04:01 PM

It saddens me that this town I have lived in for 23 years is being changed and ruined.
This is over the top Carlsbad and Sacramento.
Why are so many sites centered in one area and fewer in La Costa area?
I lived and worked in ghettos in San Francisco for many years. I worked to get out and now you bring it back to me.
It also feels like there is homeless dumping from LA.
If you build it they will come. Nice beach town, nice weather,used to have money.
You are being naive as to the negative changes to this once safe friendly beach town will be. ♀

Sent from my iPad

From:	kenpace
To:	Scott Donnell
Subject:	Housing plan: I feel any new housing should be on a bus route. Especially, in the case of low income, where cost of gas and a car can be impossible
Date:	Tuesday, September 27, 2022 4:38:47 PM

Sent from my Galaxy

From: Cee alan
To: Scott Donnell
Subject: Housing proposal
Date: Thursday, October 20, 2022 8:55:39 AM

Hello,
It does not escape anyone that South La Costa continues to evade any high density, lower income housing. Why is that? I can see from the map that Carsbad is literally squeezing units in cracks all over (ESPECIALLY near Bressi Ranch and the Palomar Airport east areas-like ALWAYS-and of course those are the LARGEST and ALWAYS the lowest income). When they brought in the Uptown Bressi development and rezoned for MORE housing in the Bressi aea (in the direct flight path no less) it came with the sentiment of, "this is the last housing in this area." But of course, here we are, some years later and all the highest densities and lowest income levels are proposed for our area AGAIN. How long will Aviara and South Carlsbad remain off limits from the high density, lower income housing mandates? I understand the coast region of Aviara, but the more inland parts? It is clear we continue to see NIMBY when it comes to South La Costa and Aviara. How is this appropriate?
Thank you,
Cee A.

From: barbarafeldman2000@gmail.com
To: Scott Donnell
Subject: Housing
Date: Wednesday, October 12, 2022 12:07:10 PM

Ps
I forgot to mention the traffic and the water we are supposed to be conserving?
How can this area sustain 2700 new complexes? ♀♀

Sent from my iPad

From: Brblank
To: Scott Donnell
Subject: Impacts
Date: Friday, October 14, 2022 10:56:08 PM

When you consider the impact of future zoning changes, I.e. multiple units on single family zoned properties, think about the cost for mitigating what I call roadway "choke points". This is where roadways reduce from three lines to two or two to one. Additional traffic due to more residents will require major roadway expansion. For example, El Camino Real outside of Omni LaCosta. A expande bridge over the creek and lagoon migration will be very costly. Numerous points are where commercial/residential developments have not happened to pay for extra lanes. Look forward to the final results……Bill Blank, 760-917-4448.

Sent from my iPhone

From: Josh
To: Scott Donnell
Subject: Increase Housing in cbad
Date: Thursday, September 15, 2022 10:33:19 PM

I would like you to stop ruining Carlsbad and trying to bulldoze nice open space and forest areas and mountain areas and areas that we used to hike and bike and enjoy the greatness that Carlsbad used to offer to try and pack people into the city that you are destroying.
How about leaving the city alone and letting the people from here enjoy it again. No more adding giant oversized business down town. Or homes and apartments anywhere in the city.
Thanks.
Josh

Sent from my iPhone

From:	D Lech
To:	Scott Donnell
Cc:	D Lech
Subject:	Input for Environmental Study for Future Housing Sites
Date:	Tuesday, October 11, 2022 9:56:56 AM

Dear Mr. Donnell,

Thank you for the opportunity to comment on the future housing sites. My comments are for Site # 3 at the corner of El Camino Real and Chestnut Avenue. I object to the proposed development at Site #3 for the reasons stated below, followed by alternative suggestions:

1) SAFETY- The additional traffic generated by the up-zoning and higher density as proposed creates a traffic safety hazard in an already congested and highly traveled intersection. This portion of El Camino Real currently serves as an alternative to Interstate 5 for drivers coming from the east on Highway 78. Vehicles are driving at 55 MPH or greater heading south to Tamarack Ave or Cannon Rd as an alternative to getting delayed in traffic at the I-5 and Highway 78 interchange. Traveling at that rate of speed, approaching and crossing the intersection of Chestnut, and then having to stop short after a slight downhill while approaching a possible stopped bus or for the numerous cars and e-bikes that could be exiting the proposed project on to El Camino Real is not safe. Not only is it dangerous, but it would inhibit the flow of traffic on this main thoroughfare.

2) ENVIRONMENT- The beautiful old growth grove of healthy, majestic eucalyptus trees are part of the character of Carlsbad. They took a lifetime to grow, beautify our neighborhood, and have become the home of owls, hawks, and other wildlife that all have a place and purpose in our natural environment. Without these predators, our rodent and pest population increases. Without these trees that clean our air and cool the temperature, our air quality and general quality of life suffers. Is it really worth losing this entire irreplaceable grove and its important role in preserving our neighborhood's character and quality of life for the sole benefit of adding more housing in an already densely packed area which is already built out?

I ask each of the decision makers to look at City Council Resolution No. 7642, Exhibit "A", titled "El Camino Real Corridor Development Standards". According to this document, the intent and purpose is to "maintain and enhance the appearance of the El

Camino Real roadway area" and "reflect the existence of certain identified characteristics which the City considers worthy of preservation" as well as "a general design concept for the entire length of the 126 foot wide El Camino Real right of way" including "restrictions for private properties fronting on the roadway." Is this document no longer valid?

My suggestion for an alternative site to place the displaced units would be to slightly increase the density at each of the other proposed sites to accommodate the approximately 28 units planned.

As another alternative, the recently passed Assembly Bill 2011 allows for affordable housing to be built on commercially zoned land and along commercial corridors. Perhaps Site #'s 9, 10, 11, or 12 would be appropriate as those sites are located along the commercial corridor of Palomar Airport Rd. with easy access to to I-5, bus routes, and the airport.

Since any development at Site # 3 would add a strong element of danger to drivers, e-bike riders, and pedestrians, as well as being detrimental to the environment, I suggest that the City consider using Proposition C funds to purchase the property as open space so that the existing neighborhoods can continue to enjoy the benefits of this natural habitat as the City maintains its commitment to "preserving unique city resources".

Thank you for the opportunity to be able to share my comments on Site #3.

Regards,

Diane Lech
PO Box 489
Carlsbad, CA 92018
619-322-8080

From: Doris Schiller
To: Scott Donnell
Subject: input for housing element update
Date: Saturday, September 24, 2022 3:11:48 PM

I understand that low income housing must be provided in the city of Carsbad, but I do not feel our government needs to provide subsidized housing close to the beach with ocean views such as may be provided on sites #5, #16 and #17. I am particularly concerned about the site at the Poinsettia Train Station. Right now, there is a nice parking lot with homes east of the lot. Placing a large building and a parking structure to replace the lost parking would have a negative impact on the surrounding area not to mention potentially ruin ocean views for areas east of the freeway such as the homes in the Altamira development. Perhaps the the city could reconsider the two sites that were removed that were in the Aviara area. This area does not have any low income sites at all.
Doris Schiller
6753 Oleander Way, Carlsbad, CA 92011

From: John Graham
To: Scott Donnell
Subject: Input on environmental study for future housing sites
Date: Wednesday, October 12, 2022 10:44:19 AM

Hello:

The following are my own observations around proposed residential project and re-zoning sites. I am not employed or have any other interest in any area of environmental law or advocacy, other than having donated to causes like the Sierra Club, the Audubon Society, and various wild and domestic animal shelter organizations. And I am not nearly an expert in this area. Apologies in advance for the long-windedness.

Site 1: Lagoon runoff and subsidence concerns from construction and living conditions, and nearby freeway interchange subsidence. The concurrent example I am thinking of is the construction of the interchange along I-5 and the Carmel Mountain road exit which created subsidence so massive that it forced Caltrans to abandon one of its offices on the west side due to the disturbance in the water table. I don't believe this or any other project proposed here will cause that much havoc, or be another Millennium Tower, but I do believe there is a danger of affecting the land in such a way that could cause engineering headaches at the very least.

Site 2: Toxic spillage from retail areas, which include auto repair, veterinary waste, food waste, possible misdirected commercial waste -- methylmercury fluorescent lighting, chemical degreasers and cleaners, microplastics from packaging and other containers, etc., including other commercial/industrial activity left over from various construction phases. There will also be geologic/paleontological concerns due to the area's recent fossil discoveries. This site is large enough and within the influence of the lagoon and freeway construction to also expect other archeological and paleontological artifacts, including Native American, reaching back possibly thousands if not hundreds of thousands of years. I believe anyone who wants to re-build anything on this site will likely have to deal with multiple lawsuits regardless of what they want to do with it, including the city if they ever want to reclaim it for whatever reason.

Site 3: This is the top of a hill with a fire station on the other side of El Camino, which suggests runoff potential during construction for all other surrounding areas. Main issue would be traffic congestion from a finished project. Any views from a multi-story tower here would be spectacular, but would also be subject to the strongest wind forces during high wind events.

Site 4: The adjacent golf course suggests airborne fertilizers and pesticides might be a problem. The vast amount of wildland space around Agua Hedionda Creek suggests that this might be part of a wildlife corridor. Traffic in and out of a complex here would be a serious problem. The city might have to commit to a redirection of the wildlands to the north and east and also produce a plan to finish connecting the north and south legs of College blvd for this site to make sense. This site might be better used as a fenced park/recreational area if a full connection of College is not part of the plan.

Site 5: Rail line subsidence and increased exposure to rail noise pollution for future residents of a

project completed here. It is unknown what pollutants, airborne or otherwise, if any, are produced by the nearby desalination plant, but that might be a good study to complete if only to encourage the building of other desalination plants.

Site 6: Golf course maintenance with airborne fertilizers and pesticides might be a problem. Probably a wildlife corridor. This part of College blvd is in real danger of heavy traffic with such a planned residential area because there is only one possible single-lane road in and out. A hypothetical connecting road to Faraday over the golf course is possible, but also possibly too expensive and impractical to even consider.

Site 7: The surrounding commercial and industrial area, including the airport, suggests air and noise pollution. The many electronic and biotech companies located in this area present the possibility for catastrophic accidental discharge of airborne contaminants in such events as building fires or transport accidents. This would not be too much of a problem for a transient population of hotel-goers, for example, but would be more of an issue for permanent residents. The fact that there are no other residential areas around this site is a concern for the type of commercial and industrial traffic that residents would need to compete with to navigate the roads.

Site 8: This area is already near perfectly acceptable residential neighborhoods, including Cottage Row. The grade of the hillside suggests the potential for landslides. The nearby school of flower design suggests certain airborne chemical treatments that might require further study. But assuming Cottage Row has already passed that kind of environmental review, this is otherwise an ideal location.

Site 9: Noise pollution from the airport and a very busy road, and runoff issues during construction towards homes that are already at this location. This area appears to have been already prepared for construction, but is by now probably a wildlife corridor which will be squeezed into a narrower path between housing developments. Additional fencing or other means of keeping dangerous wildlife (larger predators and smaller disease-carrying rodents and arthropods) away from residential areas will probably be necessary.

Site 10: Noise and particulate pollution from airport approaches and a very busy road. Area already appears prime for construction. Probable traffic increases.

Site 11: Noise and particulate pollution from airport approaches and a very busy road. Area already appears prime for construction. Probable traffic increases.

Site 12: Noise and particulate pollution from airport approaches and a very busy road. Area already appears prime for construction. Probable traffic increases. Nearby laboratory and engineering businesses may present an additional air pollution problem on days where the wind blows from the desert.

Site 13: I did not find a site 13 on the arcgis map.

Site 14: Rail line subsidence and increased exposure to noise pollution for future residents of a

project completed here from the rail line and the youth academy. Possible runoff concerns into the lagoon. Possible air pollutant exposure to local commercial/industrial businesses and the maintenance of the turf on the nearby playing fields and parks. Possibly increased traffic concerns for an already busy road system here. I do not know why the Coaster parking lot is included in this site area as Coaster parking is already at a premium. If a parking structure is being considered to replace lost spaces due to residential construction, I would be very concerned about that construction activity, subsidence, and the resulting patterns for the movement of water during rain storms. Drainage would be a prime concern for constructing a project of that scale. The zero-sum loss of Coaster parking should be a non-starter for a regional plan that favors public transportation. The area towards the northern tip of Site 14 appears to be a prime area for construction and residential activity if more than one road were accessible in and out of that complex along, for example, the unnamed Carlsbad Village Station road and a possible cross-route to State Street. An outlet to Carlsbad Blvd appears like it would be a traffic nightmare getting in and out, and would technically only be accessible from a single direction on that route. Anyone coming from Oceanside would probably attempt illegal U-turns further down the road to get back.

Site 15: Increased exposure to noise pollution for future residents of a project completed here from the rail line. This area contains commercial automotive activity where I would be concerned about toxic spillage of auto-related fluids here – the smell as well as the fumes. I would also be concerned about the impact any construction here would have on the walkable rail trail right next door, though that would be a great feature for residents to have at their disposal after they move in.

Site 16: Increased exposure to noise and particulate pollution for future residents of a project completed here from the freeway interchange, a very busy road, and a very busy Costco. This area contains/ed state-sponsored automotive maintenance activity where I would be concerned about toxic spillage of auto-related fluids here. This project would increase traffic in an already heavily congested area, and would probably require a mitigation plan of some sort that redirected traffic in and out of Paseo del Norte in a clever way that made attempting to exit to/from Palomar Airport Road through the 7/11 and restaurant parking lots less of an attractive idea.

Site 17: Please see my comments above for Site 14. I do not know why Coaster parking areas are being considered for residential construction projects, but it is alarming without knowing what the mitigations are going to be. This is otherwise an area where there are already residential neighborhoods.

Site 18: Toxic spillage and seepage from various unknown contents of individual public storage warehouse areas. I believe the northern area of this site was already the subject of mandated environmental cleanup efforts. It would need to be graded with a fine-tooth comb to get all of the contaminants out of the soils here. If that can be successfully cleared, however, the northern area of this site should be an ideal location for high-end high-density residential areas. The southern end, however, is an area where I would be concerned about erosion from rising sea levels. Not that I think it would be underwater any time soon, but that the land to the west could give way in a few decades, creating hazardous chain-reaction conditions for anyone who lived within 200 feet of the (new) shoreline. I believe planning efforts are already underway to redirect Carlsbad blvd to less hazardous ground around this area, and the campgrounds along the cliffs are being reconsidered for

just this reason. The new Hilton resort has undoubtedly figured out how to remain stable on its ground for the foreseeable future, but has likely not made the surrounding areas more stable with its construction.

Site 19: I know very little about this area of Carlsbad, but it appears to have wildlife corridor issues and upwind golf course issues. The nearby retail areas would probably present general traffic problems.

If you've read this far down, thank you. I am a 20+ year resident of Carlsbad and would like to see it prosper further into the future. I hope any of this might be helpful in some small way. Thanks for the opportunity to weigh in.

John Graham

From: Mike Geraghty
To: Scott Donnell
Subject: Input on Future Housing Sites - Site 8 and Site 9
Date: Saturday, September 24, 2022 5:00:15 PM

Mr. Donnell - Thank you for the opportunity to provide public input on the environmental impact of rezoning sites in the city to accommodate future housing including low income units.

I want to share my feedback regarding proposed locations called "Site 8" and "Site 9" on the report.

As a 21 year resident of Carlsbad, I want to express my opposition for specifically considering /rezoning Site 8 and Site 9 for higher density housing and specifically to adding affordable / low income housing to meet state requirements.

Currently, the area of Palomar Airport Road and Aviara Parkway has Laurel Tree apartments (138 units) and is adding an additional 329 units with the construction of Aviara apartments for a total of 467 units concentrated in a tight area. Adding more housing density and affordable housing will have a significant impact to this part of Carlsbad:

Transportation Impact
The intersection of Palomar Airport Road and Aviara Parkway is extremely busy and adding additional high density housing to Site 8 and/or Site 9 will bring greatly increase traffic, parking issues, noise, greenhouse gases, congestion and associated issues to an already busy intersection. I am curious if any analysis has been done on the existing traffic issues in this area- with the estimated increase of cars from the soon to be built Aviara apartments. Using Site 8 or Site 9 will put additional strain on this area of the city. My concern has always been the number of vehicles/parking availability that the proposed Aviara apartments will create - and adding additional housing in this area will make it even worse.

Aesthetic Impact

Building at Site 8 and/or Site 9 will cause a disproportional area of high density / affordable housing in a small area - which would not look appropriate in a very visible 'gateway' of Carlsbad - where many tourists and visitors come to Legoland and the Crossings Golf Course. Additional cars would require either unsightly parking structures or street parking - which again would detract from the image Carlsbad has created for itself.

Additional Environmental Impact

A small but important consideration is the increased garbage and general trash that high density / affordable housing creates. I encourage you or other Carlsbad City leaders to walk the streets around Laurel Tree Lane / 24 Hour Fitness and you will notice trash that people throw from their cars - or even people that apparently live in their cars.

I appreciate your willingness to include these comments in the public record for feedback on Site 8 and Site 9

Mike Geraghty
1191 Mariposa Road
Carlsbad, CA 92011

From: Christopher Byrum
To: Scott Donnell
Subject: INPUT ON HOUSING PLAN - SITE #3 - STRONGLY OPPOSE
Date: Friday, September 30, 2022 3:41:01 PM

Scott, I own the old Carlsbad Fire Station #3 directly across El Camino Real from this site. I STRONGLY OPPOSE increasing housing density at this location.

This is a bad idea for many reasons.

1. Traffic
This intersection already has enough traffic. Chestnut is the main entry-exit for this neighborhood.

2. High School
As you know the Carlsbad high school is just down on Chestnut. Chestnut gets extremely busy in the mornings & when school lets out. Chestnut does NOT need any more traffic.

3. Safety
There are kids on bikes EVERYWHERE on Chestnut going to school, crossing El Camino Real, etc.. Adding density & more traffic at this site is dangerous for the children. I HIGHLY RECOMMEND that the City of Carlsbad does NOT increase density here due to the safety concerns as well as increasing the City's liability in the event of an auto/bicycle accident due to increased traffic.

4. Noise
At my property I already deal with an unhealthy amount of noise pollution. Increasing density will increase noise in our neighborhood not only from the additional traffic but also during any type of construction. More people, more traffic, more noise

5. Air Pollution
Once again, I also deal with an unhealthy amount of air pollution due to the traffic on El Camino Real. There is absolutely no reason to increase this with a large construction project or additional auto pollution in our neighborhood.

6. Lawsuits
Trying to increase density at the site will I'm sure result in lawsuits from homeowners nearby.

7. Neighborhood aesthetics
The surrounding area is mostly single family homes. Not only that but there are a number of mature trees on that site that it would be a shame to see go.

8. Property Values
I feel adding density at this site will result in not only my property value being affected negatively but all surrounding homes as well. It is simply a bad idea.

Please take all these points into consideration. Every neighbor I've talked to feels the same way. We do not want increased density at this site.

Also, I had to find out about this proposed site from my neighbor. This has not been advertised properly ESPECIALLY to the property owners it affects the most. Notices with MAPS should have been passed out to every homeowner it affects with detailed site info. Once again I had to find out from a neighbor and then do research online. I did receive a very vague notice in the mail but this easily gets overlooked. It almost feels as though the City is trying to sneak this through.

--
Sincerely,

Chris Byrum, Broker
619-788-2361 c

BRE Lic# 01794251

From: Steven Medina
To: Scott Donnell
Subject: INPUT TO CARLSBAD HOUSING PLAN UPDATE
Date: Wednesday, October 26, 2022 7:43:48 PM

Good Day Mister Donnell -

As with all plans, the first consideration is the obvious "driving Factor(s)".

In the case of the subject plan update, it is unclear what the driving factor is. Have we, as a City, determined that:
1) we need more affordable multi-unit housing units?
2) if so, when was this determination made, by whom and where have the data sets been published in the public record?
3) since that data had been captured and published (in the public record) has the defined/published need been affected by known population migration and or population changes brought about by the current COVID-19 virus?
4) if so, did we identify the number of units required to support that pre-defined need, and as adjusted by migration and or virus impacts?
5) has there been any consideration for re-zoning to other uses other than for moderate-to-low income multi-family housing units?
6) if there have been other considerations, what were those defined needs (e.g., green space, recreational-use space, etc.)?
The above are just a few that Carlsbad Citizens need to better understand, so that a more informed decision can be made.

There has been much kerfuffle regarding a perceived over development in downtown Carlsbad. From an "outside perspective", it appears that real estate developers have gained the largest advantage from the recent growth "spurt". It also appears that multi-unit housing development has not taken into consideration, such as, parking, traffic congestion, increased foot traffic and a possible lack of appropriate infrastructure. This now contributing to an increased amount of congestion and related safety issues.

Noted that a number of proposed areas would be inter-mixed with commercial/industrial space. It is unclear, from the proposals, if consideration has been made of the impact upon such an inter-mixing. It is also unclear why commercial/industrial space was not deemed feasible. Is it possible that there is a diminished demand for such use or is it because a re-zoning would make it more financially viable (and attractive) for the City (increased tax revenue, etc.).

Hopefully, this proposed re-zoning will take the time to more comprehensively address the aforementioned issues, as well as those being brought about by the Citizens of Carlsbad.

If you have any questions or require additional information, please let me know.

Thanks so much for the opportunity to weigh-in.

Semper Fortis,

Steven R. Medina

Captain, US Navy (Retired)

Phone: 626-252-6792

E-Mail: steven.medina55@yahoo.com

"**EVERYTHING** is Interconnected"

From: mmaichen (null)
To: Scott Donnell
Subject: New plan for housing
Date: Saturday, September 24, 2022 12:38:16 PM

Hello,
I am concerned about the changes to the plans from years ago limiting growth and know that I am not alone.
Let's not ruin Carlsbad with over- building. One of the most appreciated aspects of living here is the open spaces. They show not disappear.
Over the years more and more spaces have disappeared as huge developments have been built. We are reaching the tipping point of losing the cherished character of Carlsbad.
Done even get me started of southern California's lack of water. As a native Californian of a considerable age I, and others, have lived through the spray- painting green the dead lawns, the buckets in the shower to collect warm up water and the bricks in the toilet tanks during our droughts, only to see massive building continue. We don't have the resources to accommodate such growth.
Thank you!
Marianne Maichen
Sent from my iPhone

From:	Madsen, Jackie
To:	Scott Donnell
Cc:	Scott Chadwick; Priya Bhat-Patel; Geoff.patnoe@carlsbad.gov
Subject:	Opposition of Re-Zoning Site 10
Date:	Saturday, October 22, 2022 2:57:42 PM

Hello Scott,

My name is Jackie Madsen. I am a resident homeowner on Colt Place. I am writing to express my opposition to the rezoning of site 10. Please add my response to the Public Inquiry Summary report on record as a no.

I am concerned about identifying pollution issues in the environment, inclusive of, but not limited to air, water, and land. The influence of additional population on the environment, review of spill anticipation programs and dangerous waste regulations, wildlife protection / extensive study of wildlife, natural land, animal, insect, soil, plant protection, water concerns, safety, and usage. I am concerned of hazmat related problems, all waste problems, soil testing, emissions, all land, air and water possible containments or protection.

Please remove Site 10 from your consideration.

Best Regards,
Jackie Madsen
6018 Colt Place, Unit 103

From: Kevin C.
To: Scott Donnell; Scott.Chadwick@carlsbad.gov; priya.bhat-patel@carlsbad.gov; Geoff.patnoe@carlsbad.gov
Subject: Planned rezoning Site 10
Date: Sunday, October 23, 2022 6:22:09 PM

All,

This email is in regard to the proposed rezoning of a vacant lot adjacent to the condominium community where I live. The site is off Colt Place in Bressi Ranch and is designated as Site 10 in the rezoning for housing purposes plan.

I would like to go on record as being against the rezoning of this lot for environmental reasons. The rezoning and development of this site would result in increased traffic, noise and pollution on Colt Place and in our Kensington condominium community.

Colt Place is a short cul-de-sac which is already heavily traveled by residents, visitors and those cutting through our community to get to the adjacent Sprouts/CVS commercial space. There would be a large increase in vehicular and pedestrian traffic and noise if site 10 was developed as residential. Parking is limited on Colt (especially in the evenings) and would worsen with more homes.

The environment would be further impacted by increased trash and animal waste. The city easement and sidewalk areas on Colt is currently in poor condition (dead grass and waste) and would worsen with additional residents and use. On any given day one can walk along the area and see large amounts of trash including fast food waste, smoking materials, used prophylactics and alcoholic beverage containers.

The environment would be directly impacted in a negative way if Site 10 is rezoned. Please drop this site from consideration. If this site and the much larger site, only a quarter mile to the east of Kensington are both rezoned and developed, Bressi Ranch on a larger scale would be greatly harmed.

Thank you for your efforts and consideration.

Kevin Carter
6002 Colt Pl. Unit 105
Carlsbad, CA 92009

From: Erin2Busy
To: Scott Donnell
Subject: Planned Sites
Date: Monday, September 26, 2022 10:52:58 AM

Hello, Scott.

I am unable to attend your upcoming meeting because of my job, but I wanted to give you my input. Unfortunately, I know that what I request will probably not be what ends up being done, based on the make-up of the commission and the council who continue to push as much low income into D1 as possible. Spreading the low income housing throughout the community is what's best for the community.

I run a nonprofit if Orange County and one thing that is always definitely clear is the value of spreading low income housing throughout the community. Students in schools with economically diverse students do better than low income and Title 1 schools. Parents that have the ability to transport their children to "better" schools do so, leaving the poorer school in even worse condition. Low income schools have less parent involvement and fewer students who participate in sports, band, etc. Parents are wrong when they assume that they can't have a lower income element in their schools as there are no studies confirming that children from low income homes are any more violent, disruptive or have less academic abilities. I hate to see residents in D3 an D4, and their representatives on the Council, continue to try to push lower income housing out of their community. It's elitist and unfair and a way to increase their property values.

In addition, not all low income jobs are in D1 and thus, having all the low income housing in D1 does not put them closer to where the jobs are and just because they are near to the train and bus stations does not mean that that's the way residents get to work. Most low income jobs do not pay for transportation, which is higher than the cost of driving and carpooling. The bus/train schedules do not always match work schedules and generally do not drop the rider off close enough to their jobs. Council members and the commissioners who think that having all of Carlsbad's low income housing at the mall location because it is near to the transit center are unrealistic and will increase their property values at the expense of D1 property values.

Finally, traffic between the 78, El Camino and Jefferson is already difficult and pouring more traffic onto these streets due to higher density and the new Oceanside hotels is unwise. Residents in D3 and D4 go south and see themselves as part of Encinitas or go east. They rarely come to the Village or D1 so they don't see a problem with the increased density.

I'm writing today to please ask you to spread the developments between the Districts and take into consideration that D1 currently has the lions share of low income housing. There is more room in the other Districts that you really don't need to shove it all on North Carlsbad.

Thank you,
Erin Nielsen

From:	Megan Gonzalez
To:	Scott Donnell
Cc:	Scott Donnell; Scott Chadwick; Priya Bhat-Patel; Geoff.patnoe@carlsbad.gov
Subject:	Planning for future housing in Carlsbad - notice Jan 28, 2022
Date:	Saturday, October 22, 2022 9:23:02 PM
Attachments:	Site 10 - Bressi Ranch Colt Pl with letter.pdf Site 11 - Bressi Ranch Gateway Rd with letter.pdf Exh 11 - Existing Affordable Housing and Potential HE Sites - Aerial11x17.pdf HE Table 10-34.pdf

---

Carlsbad City Council, Planning Department,

My name is Megan Gonzalez and I am a resident homeowner on Colt Place in Kensington at the Square,

I want to place on record my opposition to the rezoning of site 10. Adding any additional housing on this site will be very detrimental to the existing homeowners. There is no access to Palomar Airport road from the site. All the additional traffic will be on the Colt Place cul-de-sac. This would be disastrous in the event of any emergencies requiring evacuation.

Please remove Site 10 and site 11 from your consideration.

Regards,
Megan Gonzalez
Resident Bressi Ranch

Hello Scott please note this as on record for today is October 22 of which your survey site has been inactivated for input.
Please add to them Public inquiry summary report.
Many homeowners have concerns with the site 10 location.
The impact of traffic on our private road and environmental impacts.
Rezoning would be a huge negative impact on the current issues at hand.
Put this on record as a no.

Thank you for your comments. They will be included in the public input summary report presented to the City Council early next year. You can also provide additional input through tomorrow via our online survey, available athttps://www.surveymonkey.com/r/housingsites and continue to provide mail and email comments through October 22.

The lot should be developed as business/commercial in order to maintain consistency with past development on the surrounding larger parcel. Access to the 49 residences would be through a cul-de-sac that is already busy with traffic. 49 residences would only make things worse.

Megan González
Home Owner

Hi Megan,

Attached and below are resources to follow up our conversation yesterday.

- Fact sheets for sites 10 and 11 (Site 11 is another potential housing site in Bressi Ranch. It is located east of El Fuerte St and along Gateway) – attached

- Link to online interactive map of all 18 potential housing sites (note there is no site 13): https://carlsbad.maps.arcgis.com/apps/webappviewer/index.html?id=4a5a710965bd4e6da387aa3183fd5ae2

- Link to public input summary report on future housing in general and on each of the 18 sites): https://www.carlsbadca.gov/home/showpublisheddocument/9002/637795746394770000

- Link to information on the overall housing plan update and efforts to identify housing sites: https://www.carlsbadca.gov/departments/community-development/planning/housing-plan-update

- Link to Information bulletin explaining state housing mandates: https://www.carlsbadca.gov/home/showpublisheddocument/4008/637702583633930000.

- Link to city's affordable housing page: https://www.carlsbadca.gov/departments/community-development/housing.
    - The bottom of the left column links to the 2021 housing income limits.
    - The center column has "affordable rental housing" information and a map of all affordable rental housing in the city. Kensington is not identified here because it is an ownership, not rental, project.

- Map identifying existing, approved, and potential affordable housing (ownership and rental) throughout Carlsbad – attached.

- Housing Element table 10-34, recent affordable housing projects – attached (note table says Kensington has 17 affordable units; the correct number is 25).

Let me know if any questions.

Scott Donnell

Senior Planner

1635 Faraday Avenue

Carlsbad, CA 92008-7314

www.carlsbadca.gov

442-339-2618 | 760-602-8559 fax | scott.donnell@carlsbadca.gov

---

From: Megan Gonzalez <hoamegan@yahoo.com>
Sent: Thursday, February 24, 2022 2:02 PM
To: Scott Donnell <Scott.Donnell@carlsbadca.gov>
Cc: Megan Gonzalez <hoamegan@yahoo.com>; City Clerk <Clerk@carlsbadca.gov>
Subject: Planning for future housing in Carlsbad - notice Jan 28, 2022

Scott,
I left a voice message. I am the Vice President Board of Director for the Kensington at the Square Bressi Ranch community.
The homeowners received a notice dated Jan 28, 2022 planning for future housing in Carlsbad.

One of the areas designated lies between a commercial and residential land and is currently zoned as light manufacturing/industrial.
Colt Place 92009 - between Palomar Airport Road and Gateway Road

Map site #10.
Can you please share any information regarding the future use for this site?

Megan Gonzalez
Kensington at the Square

CAUTION: *Do not open attachments or click on links unless you recognize the sender and know the content is safe.*

From: June Ainsworth
To: Scott Donnell
Subject: Planning for low cost housing
Date: Tuesday, September 27, 2022 4:44:41 PM

Big yes to the property at the Carlsbad Shoppes. I always felt that to build housing where the old Sears store stands would be beneficial to all. Something attached to the actual shops would give the shopping center a much needed boost. Bring a grocery store (Frazier farms, Trader Joe's etc) would help too.

Big NO to site 14. Downtown Carlsbad is so crowded now. This will just bring more traffic. Us, love the historic feel by the transit center.

Building housing in the commercial areas that are vacant is a great idea too.

Finally, Big no on building by any of the open land. The diverse amount of wildlife is already suffering from over building. Leave the open spaces open!

Sent from Yahoo Mail on Android

From: Dean Taber
To: Scott Donnell
Subject: Poinsettia Station Housing
Date: Friday, October 14, 2022 9:51:21 AM

Hello Scott,
I am Robin Taber, I live in the Waters End development on Seaward Ave, next the Coaster Station. I understand the need to add more housing to Carlsbad, and the need close to transit. The area already has 3 story density, with what I think was the Blue Water lofts. This was suppose to be a live work area that has not lived up what it was billed to be. The retail is spotty and the day care building never was leased. The building themselves seem to be more than 3 stories because of rumored ground water was encountered when building the underground garage, thus being about 3 &1/2 stories tall. The building was also built without respect to the single family homes in Water End. They don't match anything next to them and seem on their way to becoming a future slum, since the building has not been painted since it was new.
Carlsbad's reaction to housing mandate seems to be clearly lacking any vision. The city seems to be reacting to the State on a law that is about to be challenged, since it does not make since to have a housing shortage and the state is losing population.
Housing should be build were the jobs are which are not at the train station. All along Palomar Airport road, downtown Carlsbad, and near the resorts, or in the resorts parking lots would appropriate.
That being said, I would support 3 story buildings (no to 4 &5), as long as they respect the homes they will be next to.
Regards,
Robin D Taber
601 Seaward Ave.

Sent from Mail for Windows

From: Don Christiansen
To: Scott Donnell
Subject: Potential Housing Sites
Date: Tuesday, October 25, 2022 1:33:24 PM

G'Day Scott!

I'd like to thank you and your fellow staff for putting together the "most excellent" interactive map AND for your public outreach on this subject.

Although I used the map to have a look at all the sites there are only three I will comment on.

From my perspective: Sites 1 and 2 are ideal candidates for increasing Carlsbad's housing supply. Highest and best use of Site 1 would be to fully develop it as multi-family housing. Site 2's highest and best use would be to keep the commercial areas that make "sustainable sense" and develop the remaining as multi-family housing. I've long thought that there is an opportunity for significant synergy between the businesses at the mall and the businesses and residents in the Village and Barrio. Housing at the mall could increase that synergy.

The sale of City owned Site 6 for residential development makes good sense to me. It's my understanding that the City is projecting a budget deficit within the next 5 years. Selling a non-performing asset like Site 6 makes much more sense than raising taxes.

That's it!

All the best,

Don Christiansen

From: Yolanda Higgins
To: Scott Donnell
Subject: Propose Site 5 as a viable option
Date: Wednesday, October 12, 2022 8:25:37 AM

Good morning,
I propose site 5 as a viable option. It is in close proximity to transportation, grocery shopping, expressway, and outdoor free activities, I.e. the beach.

I live in close proximity to site 4 and we just had two senior communities built and the traffic congestion is already maxed.

Thanks for your consideration.

Sent from Yahoo Mail for iPhone

From: JOHN NIX
To: Scott Donnell
Cc: john@primports.com
Subject: Proposed 200 Units / affordable housing
Date: Monday, September 26, 2022 5:59:31 PM

Mr Donnell,

I want to address the environmental impact of the proposed 200 Unit Affordable housing development being considered across the Railroad bridge in our community. We are residence and owners at 2321 Ocean St..... this development would impact property values in all of the surrounding area, and create more traffic which the area certainly does not need. During the summer months and holidays there is more out of community traffic that 200 units would add to, as well as increased crime.

Since when do we consider high value areas for Affordable housing ? We already experience high crime and police activity in this area. I do not believe the residence of this area, or the overall tax paying residence of Carlsbad support this. Your commission has already supported too many high density condo's in the village which is ruining what Carlsbad has always been know for. A quite residential beach community that ALL residence and owners have felt save in.

I encourage you and the commission to vote NO on this development.... It is BAD for Carlsbad and not supported by the residence of our proud community. We appreciate your consideration, and know you will make the correct decision in DECLINING THIS PROPOSAL.

Regards,

John H Nix

Joan P Nix

2321 Ocean Street

Carlsbad, California 92008

602 363 8619

From: Ashley Andrews
To: Scott Donnell
Subject: Public meeting about resigning
Date: Tuesday, September 27, 2022 1:45:41 PM

Hi Scott,

I have corresponded with you before concerning zone 8, my property on Mariposa Road backs up to the potential 150 unit complex you guys would like to build. I am extremely opposed to this proposed increase in units. I would like to attend any and all meetings concerning this project. Is there one tonight? Please let me know. I will also let all of my neighbors know so they can attend as well. This area is already being built up (the warehouse/empty lot near 24 hour fitness is adding a ton of housing already) and our roads/schools/parks cannot accommodate the insane amount of people the city is proposing moving into the area. Seriously bonkers that this is a proposed location.

Thanks,

Ashley Andrews
(760) 500-4400
Sent from my iPhone

From: Mike Kurnow
To: Scott Donnell
Subject: Questions regarding the influence of Palomar Airport on New Housing Plans
Date: Sunday, October 16, 2022 6:43:49 PM

I request that the following questions submitted by C4FA be addressed at the Community Input meeting to be held October 17:

- What regulations are in place to protect residents from:
  - High decibel **Noise** coming from the nearby Airport
  - **Air Pollution** coming from the nearby Airport, specifically
    - Lead
    - Particle Pollution
    - Ground Level GHG's
    - GHG's
- What provisions will be made to keep residents **safe** given new housing appears to be under the nearby Airport arrival paths?
- Will the City require a new comprehensive noise study to be performed to measure the impact of noise from Palomar Airport? The last one done for Palomar Airport was in 2005.
- Which of the various maps will delineate the Airport Influence Areas involved?
  - Will maps show changes to these Airport Influence Areas that will occur should the D-3 Airport be built per the Palomar Airport Master Plan?

- Will the maps be the same for Noise, Air Pollution, Resident Safety?
- Who has final approval for building sites?
    - What is the process?
    - Steps involved?
- For sites in the Airport Land Use Compatibility Plan, at what point will the Airport Land Use Commission (ALUC) be engaged?
- What and when in the process with there be further opportunities for citizen review?

As a resident of La Costa I am very concerned regarding any expansion of the Palomar airport, and change to its usage plans and / or operating hours impacting the quality of life of residents in the airport's influence areas.

Mike Kurnow

From:	gober2c@aol.com
To:	Scott Donnell
Cc:	Planning; Scott Chadwick; c4fa.info@gmail.com
Subject:	Re Public Input on City of Carlsbad Environmental Study for Future Housing Sites
Date:	Friday, October 21, 2022 2:20:43 PM

Scott Donnell, Senior Planner

City of Carlsbad

Planning Division

1635 Faraday Ave.

Carlsbad, CA 92008

Dear Mr. Donnell

The following environmental impacts need to be properly evaluated in the City of Carlsbad's study on potential properties that could be rezoned to accommodate future housing in accordance with California state mandates:

1. Traffic Considerations

2. Site Location and Aesthetic Considerations

3. Access to Relevant Existing Public Amenities

4. Impacts of the McClellan-Palomar Airport on any Future Planned Housing in Carlsbad, including a City of Carlsbad review and analysis of the airport's signed voluntary Noise Compliance Agreement with the FAA, including related obligations of the airport, and the required implementation of effective noise abatement policies and procedures.

Thank you very much for ensuring these impacts are properly considered and evaluated. Sincerely,

Giovanni and Anne Bertussi

Carlsbad, CA

From: planning@carlsbadca.gov
To: gober2c@aol.com
Sent: 10/14/2022 8:03:55 AM Pacific Standard Time

Subject: Reminder: Give input on environmental study for future housing sites

Reminder: Third meeting added to give input on environmental study for future housing sites

Remember to mark your calendar for Monday, Oct. 17, to give input on what environmental impacts should be evaluated in a study on potential properties that could be rezoned to accommodate future housing. A reminder that the city also extended the deadline to provide comments from Oct. 14 to Oct. 26.

Environmental Scoping Meeting
Oct. 17, 6 to 7:30 p.m.
City of Carlsbad

Faraday Administration Center
1635 Faraday Ave.

You can provide input via mail or email through Oct. 26 to:

Scott Donnell, Senior Planner
City of Carlsbad
Planning Division
1635 Faraday Ave.
Carlsbad, CA 92008
Scott.Donnell@carlsbadca.gov

Next steps

After helping identify what environmental impacts should be evaluated, residents will have an opportunity to review and provide input on the draft report once it is developed. The supplemental environmental impact report will be presented to the City Council for consideration in 2023.

Background

The city is preparing a supplemental environmental impact report for its General Plan, approved in 2015. The report is required as part of the city's Housing Element Update, a state-required plan approved in July 2021 for how Carlsbad will accommodate projected housing needs through 2029.

As part of a Housing Element Update, the state also requires all cities analyze and update portions of their Public Safety Element, a separate chapter of the General Plan that focuses on citywide topics including climate resiliency, wildfire hazards and evacuation routes. Updates proposed will respond to requirements of new state legislation related to these topics.

The city worked with the community last year to choose the potential sites, and the next step is to perform environmental studies. This analysis will help inform the final selection of sites.

Zoning changes

The city's housing plan includes proposed changes to zoning that would allow more housing units on certain properties. This study will evaluate the environmental impacts of those changes, including how it might affect things like transportation, aesthetics and greenhouse gas emissions.

Housing program implementation

The housing plan also includes programs that require the city to make changes to housing standards, such as allowing additional types of housing and higher densities to meet state requirements. The environmental review will analyze the impacts of implementing some of these programs.

Learn more

- Housing Plan Update
- General Plan

- Scott Donnell, Senior Planner, scott.donnell@carlsbadca.gov

Visit the Website

City of Carlsbad | 1200 Carlsbad Village Drive, Carlsbad, CA 92008

From: Jackye Willis
To: Scott Donnell
Subject: Re village apartments/parking structure
Date: Wednesday, October 19, 2022 8:20:24 AM

I think building more apartments (state mandate) would be better at the Shoppes at Carlsbad city owned property . It would be near public transit and would not require parking structure in the village, which is a bad idea. Jackye and George Willis, 2050 Laurie Cir, Carlsbad .

Sent from my iPhone

From:	Warren Kato
To:	Scott Donnell
Cc:	Katherine Kato; Warren Kato
Subject:	re: 3rd meeting added to give input on environmental study for future housing sites
Date:	Wednesday, September 28, 2022 3:23:26 PM

Thank you for the opportunity to comment on future housing planning in the City of Carlsbad. We are given the opportunity to give vision to the City for the wonderful place that Carlsbad is to live.

I do have an objection that might be beyond the scope of this open inquiry to the community to make comment. From the map online we are given the choice of commenting on the following sites: 2, 3, 4, 5, 6, 7, 9, 12, 14, 15, 16, 17, 18, and 19 = 14 sites.

The problem is that we are given the opportunity to comment only on a limited number of locations and not the broader area of all of Carlsbad. There are many areas in Carlsbad that are not included in this potential survey. Changing zoning on a few individual lots does not meet, in any meaningful way, the requests by the California State Legislature in its most recent statutes regarding the increased availability of housing in that entire state for hundreds of thousands of people. It seems that Carlsbad's response is limited at this time, not only in breadth but in expanse, to wit limited to a needed look at affordable housing and only in certain limited areas. I appreciate the comment that the CIty is contemplating changing zoning in certain areas but it is difficult to comment on these plans without further information.

Specifically, I point out the Sunny Creek area of Zone 15. The Sunny Creek Specific Plan area is bounded on the south by the Sunny Creek drainage basin, the Eastern boundary is fixed at the Los Monos area, the north by the City of Oceanside and the Ocean Hills development, and the west by College Blvd. and open space. This area is approximately 600 acres and is partially permitted. However, large parts are unpermitted and remain undeveloped. Despite best efforts by developers and investors, no grading permits have been pulled. It is speculation that development has stalled because of financing concerns over the extension of College Blvd. and a bridge over Sunny Creek. Normally these costs are passed through to buyers. But in the Sunny Creek Specific Plan area, many lot sizes are a minimum of one acre. This makes development and more housing financially unfeasible at the present time.

The mandate by the State of California (or more kindly request) is that housing increase statewide. In a ham-fisted way, they have mandated ADUs for any lot, and most recently in AB916 allowed two additional bedrooms per housing unit without any public hearing. The City of Carlsbad has always prided itself in the manner in which the entire community was beautifully planned. By taking prospective action, this City has the opportunity to increase housing density without more State mandates.

It appears that the best solution to these two problems is a recommendation by this committee to encourage development in this area by recommending to the City Council and the City of Carlsbad that the City do more in terms of financing the infrastructure needs as well as zoning changes that have been mentioned. Further possible recommendations include an amendment of the Sunny Creek Specific Plan. The needs include not only the extensions of College Blvd. but also necessary changes in planning needs for roads, water, sewer, and fire protection.

I represent the Kato Family Limited Partnership which currently has its holding in an agricultural lease. But with the cost of water and labor in the Southern California region and in particular the Carlsbad area, agriculture is not financially feasible at least in the long term. And as stated above, development is also not financially feasible. It would be a shame that this property ended up as vacant land when it could instead be productive property, taking up the problem of our housing shortage and also increasing the tax base for the City.

Thank you for allowing this opportunity to express our concerns, dreams and needs.

--
Warren Kato
(714) 504-6081

From: David McFeaters
To: Scott Donnell
Subject: Re: Environmental Scoping Meeting on Housing (OCT 17th)
Date: Wednesday, October 12, 2022 8:46:22 AM

Hi Scott, thanks for the update.

So great to hear the City of Carlsbad is giving more consideration to NC San Diego's urgent housing crisis. My group has put a ton of research into this idea in 2018-2019 with the idea of converting vacant & under used commercial properties into residential housing (possibly for senior citizens). At the time we had multiple standalone properties targeted and several property owners on board and willing to make the conversions. Getting zoning and the city's blessing on the projects is where the idea ended.

For years my family has owned and managed multiple commercial and residential properties in San Diego. We own a construction firm that has been in operation over 40 years. Our team was going to be able to build out and manage the entire solution once finished. There was also a local Carlsbad politician
involved who supported us. I think we can help you with this venture. I'd like to offer our assistance to you with the same team that was spearheading this idea in 2019.

With this new interest, I'd like to bring this project back for consideration. We'd want to reach back out to those property owners who were interested and continue and complete one or two or these projects as a test. Maybe we could meet and explain our plans further.

Regards,

David McFeaters
2385 Outlook Ct
Carlsbad 92010

On Tue, Oct 11, 2022 at 8:37 AM Scott Donnell <Scott.Donnell@carlsbadca.gov> wrote:

> Hi Mr. McFeaters,
>
> On Feb. 15, 2022, the City Council did provide direction to staff on the sites to study for potential rezoning that would allow residential. These sites include a mix of commercial, industrial, and low density residential properties. The commercial properties include a mix of vacant (sites 6, 7 and 19) and underutilized sites (sites 1, 2, 16). These sites are shown on an online map available here: Potential Housing Sites (arcgis.com).
>
> Like you, others have recommended the city look at commercial properties, particularly those that are underperforming, including vacant office buildings. The Housing Element

does contain a policy that encourages reuse of older commercial or industrial buildings. This year, the city also revised its Zoning Ordinance to permit both horizontal and vertical mixed use projects, which allows more flexibility in how residential is built in commercial areas.

Thank you for your comment.

Scott Donnell

Senior Planner

1635 Faraday Avenue

Carlsbad, CA 92008-7314

www.carlsbadca.gov

442-339-2618 o | scott.donnell@carlsbadca.gov

From: David McFeaters <mcfeate@gmail.com>
Sent: Monday, October 10, 2022 3:15 PM
To: Scott Donnell <Scott.Donnell@carlsbadca.gov>
Subject: Environmental Scoping Meeting on Housing (OCT 17th)

Hello City of Carlsbad

I wanted to provide input on what environmental impacts should be considered in rezoning property to help with housing problems in Carlsbad. Three years ago I approached the city with these ideas with zero interest.

One idea I had was to look at some of the excess commercial properties we have in Carlsbad that have sat vacant and idle for years at a time. There are a number of areas locally that have vacant commercial property that could be rezoned for housing. Ideally, stand alone properties could provide short or even long term rentals that would be affordable to most.

I don't think this type of housing would be good for families but certainly elderly or temporary housing would be a good choice in that there may not be the need for extra parking spaces, less traffic, fewer visitors and less need for parks or open spaces nearby associated with the space.

Sincerely

--

David McFeaters

2385 Outlook Court

Carlsbad CA 92010

760-586-2645

--
David McFeaters
2385 Outlook Court
Carlsbad CA 92010
760-586-2645

CAUTION: *Do not open attachments or click on links unless you recognize the sender and know the content is safe.*

From: Randi Greene
To: Scott Donnell
Subject: Re: Housing and Environmental Impact
Date: Thursday, September 29, 2022 8:15:18 PM

The buena vista lagoon and creek must be considered for environmental impact report done by scientists and input from fish and game.

Sent from my iPhone

> On Sep 29, 2022, at 5:10 PM, Scott Donnell <Scott.Donnell@carlsbadca.gov> wrote:
>
> Dear Randi,
>
> Thank you for taking the time to comment. The city's adopted Housing Element does contain programs to consider commercial properties and underutilized commercial, office and industrial space as appropriate. Nevertheless, your comment is appreciated.
>
> Scott Donnell
> Senior Planner
> 1635 Faraday Avenue
> Carlsbad, CA 92008-7314
> www.carlsbadca.gov
>
> 442-339-2618 o | scott.donnell@carlsbadca.gov
>
> ---
>
> **From:** Randi Greene <randigreene2003@gmail.com>
> **Sent:** Wednesday, September 28, 2022 9:17 AM
> **To:** Scott Donnell <Scott.Donnell@carlsbadca.gov>
> **Subject:** Housing and Environmental Impact
>
> Scott, I feel strongly that we should be looking at empty office buildings. There would be no environmental impact on those spaces that are already built.
>
> Here is a story about the other cities that are doing just that:
>
> **Cities and states** across the country are looking to transform vacant office buildings into housing — a solution for both empty downtowns and housing shortages.

- <!--[if !supportLists]--> <!--[endif]--> **Adaptive reuse** of existing buildings also is gaining popularity for environmental benefits, *Kate Marino writes for Axios Markets*.

Why it matters: Commercial districts with little to no residential presence turned into near ghost towns during the pandemic, becoming a blight on the cityscape and a detriment to surviving businesses.

Reality check: Even though offices are still only half-full in many cities, these types of conversions have yet to really pick up steam. They're expensive, and loads of red tape and zoning laws usually get in the way.

What's happening: A few big cities are creating new incentives they hope will unleash a wave of housing conversions in the decade ahead.

- <!--[if !supportLists]--> <!--[endif]--> **Chicago this week** proposed an initiative to repurpose high-vacancy buildings in its downtown financial district into homes, offering tax credits and incentives along with financing tools.
- <!--[if !supportLists]--> <!--[endif]--> **In New York City,** real estate trade association REBNY estimates that a "conservative" conversion rate of 10% of NYC's lower-tier office buildings could generate approximately 14,000 new residential units.
- <!--[if !supportLists]--> <!--[endif]--> **The L.A. City Council** is expected to consider an updated ordinance that would provide financial incentives to convert downtown office buildings. A Rand study in L.A. found underutilized commercial properties that could collectively produce 92,000 housing units.

California's 2023 budget allocates $400 million in incentive grants for office-to-residential conversions.

- <!--[if !supportLists]--> <!--[endif]--> **Denver** is also funding studies.
- <!--[if !supportLists]--> <!--[endif]--> **D.C. Mayor Muriel Bowser** pitched a 20-year tax abatement tied to these kinds of conversions.

The bottom line: Saying goodbye to concentrated office districts

and 9-to-5 downtowns is a process that probably will play out for decades — part of the pandemic's lasting impact on our lifestyles and communities.

--
Randi Greene
831.869.8325

CAUTION: *Do not open attachments or click on links unless you recognize the sender and know the content is safe.*

From: juliebdecker@gmail.com
To: Shannon Harker; Scott Donnell
Cc: jaimie.augustine@copangroup.net
Subject: Re: Housing Element Site No. 10
Date: Saturday, October 22, 2022 2:11:18 PM
Attachments: image001.gif
Site 10 - Bressi Ranch Colt Pl with letter.pdf

Hi Scott,

After additional counsel, our community actually needs any application requests or interest submitted to the City over the last (10) ten years for usage or development by any developer, builder or interested party.

Also, to help define concerns re: development on housing site #10 for your environmental study please formally note the
Concerns listed below.
CONCERNS for environmental impact: identifying pollution issues in the environment, inclusive of, but not limited to air, water, and land. The influence of additional population on the environment, review of spill anticipation programs and dangerous waste regulations, wildlife protection / extensive study of wildlife, natural land, animal, insect, soil, plant protection, water concerns, safety and usage. Concerns of any and all hazmat related problems, any and all waste problems, soil testing, emissions, any and all land, air and water possible containments or protection.

Thank you Scott. It was great listening to you on Monday and really appreciate all that you are doing to support the residents in the community. Thank you so much.

Julie Decker
(c) 619.977.0400
Sent from my iPhone

On Oct 22, 2022, at 9:32 AM, juliebdecker@gmail.com wrote:

Thank you Shannon.
We are grateful for your communications.
I was at the meeting on Monday and heard Mr. Donnell speak.
We have many concerns about the environmental impact on the community if development on site #10 is approved.

Mr. Donnell, do you have time for a call prior to October 26, 2022. Given this deadline, it is important that we speak early next week. We will stay flexible to accommodate your calendar.

Please note this email as an official record of our concerns re: housing site number 10.

Could you also provide the RFP responses, requirements and disclaimers of the

awarded planning consultant and any past relationship the committee or members have had with the awarded consultant? Additionally, any application requests for land usage or development, of any nature, on what is currently lot #10 in the past five years.

Thank you and we certainly appreciate all that you do to keep our community safe and viable.

Julie Decker
(c) 619.977.0400
Sent from my iPhone

On Oct 21, 2022, at 11:46 AM, Shannon Harker <Shannon.Werneke@carlsbadca.gov> wrote:

Hi Jaimie and Julie,
It was nice speaking with you both this morning. I understand you have some questions about the timing for the planning process that is currently underway to study the change in the land use designation for the vacant property located in Bressi Ranch, specifically at the terminus of the cul-de-sac for Colt Place, APN No. 213-262-17. The property you are inquiring about is identified as Potential Housing Site No. 10. Attached please find a fact sheet summarizing the proposal to change the designation from Planned Industrial to Residential, 19 to 23 dwelling units per acre. As we discussed, the city is currently studying the change in the designation at this site as well as several other sites as part of an Environmental Impact Report (EIR).

In speaking with the project manager, Scott Donnell (cc'd on this email), while the EIR process to study the impacts associated with the land use change won't be completed until sometime in 2023, there is a deadline of next Wednesday, October 26 to provide feedback on what should be studied as part of the EIR for the potential housing sites. If you would like additional information on the process, I've included a link to the Housing Update webpage:

https://www.carlsbadca.gov/departments/community-development/planning/housing-plan-update

If you have any addition questions about the process or you would like to provide specific comments on Housing Site No. 10, please contact Scott Donnell. Thanks!

Shannon

SHANNON HARKER
Senior Planner
Community Development Department
1635 Faraday Avenue
Carlsbad, CA 92008
www.carlsbadca.gov
442-339-2621|shannon.harker@carlsbadca.gov

SUBMITTAL APPOINTMENT:
Phone: 442-339-2600, option 2
Email: planning@carlsbadca.gov
Online: https://www.carlsbadca.gov/departments/community-development/book-an-appointment

From: Marcia Venegas-Garcia
To: Scott Donnell
Subject: Re: Housing Element
Date: Wednesday, October 19, 2022 1:48:32 PM

Hi Scott,
I was thinking more in terms of the proposed plans for the Palomar Airport and potential pollution caused by larger aircraft over housing that seniors might inhabit as part of an argument against that possibility.

Don't know if that will make sense to you, but happy to clarify.

Commissioner Venegas-García

On Oct 19, 2022, at 1:20 PM, Scott Donnell <Scott.Donnell@carlsbadca.gov> wrote:

Hi Commissioner Venegas-Garcia,

I don't know the answer to your question but will provide your comment to our environmental consultant. The consultant is helping the city study the environmental impacts associated with the project.

You may recall discussion about a smoke-free ordinance for multi-family housing. The approved Housing Element does contain a program calling for that ordinance's consideration:

<ATT09403 1.jpg>
Thank you.

Scott Donnell
Senior Planner
1635 Faraday Avenue
Carlsbad, CA 92008-7314
www.carlsbadca.gov

442-339-2618 o | scott.donnell@carlsbadca.gov

-----Original Message-----
From: Marcia Venegas-Garcia <marciav07@gmail.com>
Sent: Wednesday, October 19, 2022 12:18 PM
To: Scott Donnell <Scott.Donnell@carlsbadca.gov>
Subject: Housing Element

What consideration has been given to the growing number of seniors who may be more vulnerable to lung diseases caused by air pollution?

Marcia Venegas-García, Senior Commissioner

From:	Megan Gonzalez
To:	Scott Donnell
Cc:	Priya Bhat-Patel
Subject:	Re: Planning for future housing in Carlsbad - notice Jan 28, 2022
Date:	Saturday, October 22, 2022 11:47:16 AM
Attachments:	Site 10 - Bressi Ranch Colt Pl with letter.pdf Site 11 - Bressi Ranch Gateway Rd with letter.pdf Exh 11 - Existing Affordable Housing and Potential HE Sites - Aerial11x17.pdf HE Table 10-34.pdf

---

Hello Scott please note this as on record for today is October 22 of which your survey site has been inactivated for input.
Please add to them Public inquiry summary report.
Many homeowners have concerns with the site 10 location.
The impact of traffic on our private road and environmental impacts.
Rezoning would be a huge negative impact on the current issues at hand.
Put this on record as a no.

Thank you for your comments. They will be included in the public input summary report presented to the City Council early next year. You can also provide additional input through tomorrow via our online survey, available athttps://www.surveymonkey.com/r/housingsites and continue to provide mail and email comments through October 22.

The lot should be developed as business/commercial in order to maintain consistency with past development on the surrounding larger parcel. Access to the 49 residences would be through a cul-de-sac that is already busy with traffic. 49 residences would only make things worse.

Megan González
Home Owner

Hi Megan,

Attached and below are resources to follow up our conversation yesterday.

- Fact sheets for sites 10 and 11 (Site 11 is another potential housing site in Bressi Ranch. It is located east of El Fuerte St and along Gateway) – attached

- Link to online interactive map of all 18 potential housing sites (note there is no site 13): https://carlsbad.maps.arcgis.com/apps/webappviewer/index.html?id=4a5a710965bd4e6da387aa3183fd5ae2

- Link to public input summary report on future housing in general and on each of the 18 sites): https://www.carlsbadca.gov/home/showpublisheddocument/9002/637795746394770000

- Link to information on the overall housing plan update and efforts to identify housing sites: https://www.carlsbadca.gov/departments/community-development/planning/housing-plan-update

- Link to Information bulletin explaining state housing mandates: https://www.carlsbadca.gov/home/showpublisheddocument/4008/637702583633930000.

- Link to city's affordable housing page: https://www.carlsbadca.gov/departments/community-development/housing.
    - The bottom of the left column links to the 2021 housing income limits.
    - The center column has "affordable rental housing" information and a map of all affordable rental housing in the city. Kensington is not identified here because it is an ownership, not rental, project.

- Map identifying existing, approved, and potential affordable housing (ownership and rental) throughout Carlsbad – attached.

- Housing Element table 10-34, recent affordable housing projects – attached (note table says Kensington has 17 affordable units; the correct number is 25).

Let me know if any questions.

Scott Donnell

Senior Planner

1635 Faraday Avenue

Carlsbad, CA 92008-7314

www.carlsbadca.gov

442-339-2618 | 760-602-8559 fax | scott.donnell@carlsbadca.gov

From: Megan Gonzalez <hoamegan@yahoo.com>
Sent: Thursday, February 24, 2022 2:02 PM
To: Scott Donnell <Scott.Donnell@carlsbadca.gov>
Cc: Megan Gonzalez <hoamegan@yahoo.com>; City Clerk <Clerk@carlsbadca.gov>
Subject: Planning for future housing in Carlsbad - notice Jan 28, 2022

Scott,
I left a voice message. I am the Vice President Board of Director for the Kensington at the Square Bressi Ranch community.
The homeowners received a notice dated Jan 28, 2022 planning for future housing in Carlsbad.

One of the areas designated lies between a commercial and residential land and is currently zoned as light manufacturing/industrial.
Colt Place 92009 - between Palomar Airport Road and Gateway Road

Map site #10.
Can you please share any information regarding the future use for this site?

Megan Gonzalez
Kensington at the Square

CAUTION: *Do not open attachments or click on links unless you recognize the sender and know the content is safe.*

From: Sonck4@roadrunner.com
To: Scott Donnell
Subject: RE: Potential housing sites-Cottage Row/Site 8
Date: Thursday, September 22, 2022 1:32:14 PM

Thank you for your response, Scott. I know your job is not an easy one!!

My wife and I are 28 year residents of Carlsbad. It is such a great place to live, Mayors Lewis and Hall, along with current and past city councils, have done a tremendous job in mitigating over-development and ensuring our continued wonderful quality of life. I realize the nut jobs in Sacramento will only go on with their over-reach in making demands of local government and the City's hands are somewhat tied as it relates to housing, and particular affordable housing. That said, it seems to my eyes that as outlined in some of the other proposed sites, that hose that possess government and/or commercial property and are located further north and east within the city borders, would be best suited to meet the state's mandate. I look forward to keeping engaged of the progress.

Regards,

Don Sonck Mobile: 760.330.0525

From: "Scott Donnell"
To: "Sonck4@roadrunner.com"
Cc:
Sent: Thursday September 22 2022 11:40:47AM
Subject: RE: Potential housing sites-Cottage Row/Site 8

Mr. Sonck,

Thank you for providing input on Site 8 and taking the time to do so. It’s helpful to hear about people’s concerns. Your comments will be included in the draft environmental impact report prepared for the Housing Plan Update.

Scott Donnell

Senior Planner

1635 Faraday Avenue

Carlsbad, CA 92008-7314

www.carlsbadca.gov

442-339-2618 o | scott.donnell@carlsbadca.gov

From: Sonck4@roadrunner.com <Sonck4@roadrunner.com>
Sent: Friday, September 16, 2022 7:56 AM
To: Scott Donnell <Scott.Donnell@carlsbadca.gov>
Subject: Potential housing sites-Cottage Row/Site 8

Good day Mr. Donnell. I have reviewed the city's housing plan and as a resident of ShorePointe must protest the suggestion of building 150 units on The Cottage Row site8 area! Our community will be slammed by traffic from these units, particularly Mariposa Drive, Aviara Parkway and PlumTree Lane! We are a a community of families with K-12 kids as well as retirees!! With the city already having plans for development of the northwest and northeast corners of Aviara Drive and Palomar Airport Road, The resulting traffic and accompanying exhaust fumes, noise, and congestion will wreak havoc upon our community and is a huge public safety concern! Aviara Parkway has become a drag strip over the past several years with the construction and occupancy of the Laurel Tree Apartments located at Mariposa and Aviara Parkway! Our community has been saturated enough with new housing and associated traffic; NO MORE!!!! Go develop at some of the other 15 sites listed, particularly those that are currently commercial and government-owned properties!!! Stay away from our area! Enough is enough!!!

Respectfully,

Don Sonck

6482 Torreyanna Circle Mobile: 760.330.0525

CAUTION: *Do not open attachments or click on links unless you recognize the sender and know the content is safe.*

From:	gober2c@aol.com
To:	Planning; Scott Donnell; Scott Chadwick; Council Internet Email
Cc:	c4fa.info@gmail.com
Subject:	Re: Give input on environmental study for future housing sites
Date:	Sunday, September 25, 2022 11:42:23 AM

Dear Ladies and Gentlemen,

Once again, the City of Carlsbad Planning Department is not properly noticing the public to provide reasonable time for meaningful public research, evaluation and communication of potential environmental impacts of planned projects and projects under consideration in the City of Carlsbad in accordance with the California Environmental Quality Act, and other rules and regulations. Please reevaluate and properly notice the public to provide reasonable time for meaningful public research, evaluation and communication of potential environmental impacts of the planned projects and projects under consideration by the City of Carlsbad, as detailed below, and as only very recently communicated to us below. Thank you very much.
Sincerely,

Giovanni and Anne Bertussi
Carlsbad, Ca

From: planning@carlsbadca.gov
To: gober2c@aol.com
Sent: 9/23/2022 4:47:08 PM Pacific Standard Time
Subject: Give input on environmental study for future housing sites

Give input on environmental study for future housing sites

The City of Carlsbad is seeking public input on what environmental impacts should be evaluated in a study on potential sites that could be rezoned to accommodate future housing.

- This is part of the city's plan to promote the creation of more affordable housing, called the Housing Element Update, which was approved by the state in 2021.
- The city worked with the community last year to choose the potential sites, and the next step is to perform environmental studies.
- This analysis will help inform the final selection of sites.

How to provide input

The first of two meetings where residents can share their input will take place on Monday. Residents can provide input three ways:

In person meeting
Sept. 26, 6 p.m.
Faraday Administration Center
1635 Faraday Ave.

Virtual meeting
Sept. 28, 6 p.m.
Register online

Via mail or email through Oct. 14 to:
Scott Donnell, Senior Planner
City of Carlsbad
Planning Division
1635 Faraday Ave.
Carlsbad, CA 92008
Scott.Donnell@carlsbadca.gov

Next steps

After helping identify what environmental impacts should be evaluated, residents will have an opportunity to review and provide input on the draft report once it is developed. The supplemental environmental impact report will be presented to the City Council for consideration in 2023.

Background

The city is preparing a supplemental environmental impact report for its General Plan, approved in 2015. The report is required as part of the city's Housing Element Update, a state-required plan approved in July 2021 for how Carlsbad will accommodate projected housing needs through 2029.

As part of a Housing Element Update, the state also requires all cities analyze and update portions of their Public Safety Element, a separate chapter of the General Plan that focuses on citywide topics including climate resiliency, wildfire hazards and evacuation routes. Updates proposed will respond to requirements of new state legislation related to these topics.

Zoning changes

The city's housing plan includes proposed changes to zoning that would allow more housing units on certain properties. This study will evaluate the environmental impacts of those changes, including how it might affect things like transportation, aesthetics and greenhouse gas emissions.

Housing program implementation

The housing plan also includes programs that require the city to make changes to housing standards, such as allowing additional types of housing and higher densities to meet state requirements. The environmental review will analyze the impacts of implementing some of these programs.

Learn more

- Housing Plan Update
- General Plan
- Public Notice for Preparation of Supplemental Environmental Impact Report
- Scott Donnell, Senior Planner, scott.donnell@carlsbadca.gov

---

Visit the Website

From:	Patrick Goyarts
To:	Scott Donnell
Subject:	RE: Reminder: Give input on environmental study for future housing sites
Date:	Friday, October 14, 2022 11:26:47 AM
Attachments:	6B4952047AB844F4A5A026B5A631B274.png C46E377DC2574EF8AE895FD5D9B33B0A.png image003.png image002.png

---

Hello Scott,

- We've always talked about high density affordable housing at Sites 1 & 2 by public transportation – high rise condos, block towers. How many units are possible on this site to meet the projected +6,000 units by 2050? 2,000 units?
- Protect the coast, no more housing along the coast. South Ponto Park vs. development.
  - What we always fail to include for the citizens is all the other already planned development in the area, region, right across the border,…
    - We approved a resort not knowing there's another resort already approved on the other side of Batiquitos lagoon (Alia Maria).
    - How many homes, units are already approved off La Costa Ave by the freeway? 100's? They will also need a South Ponto Park.
- Do not open the 60 acres along the coast. The reason it is so nice for everyone that lives here is because it is somewhat protected with limited parking.
- Do not allow more housing units along the coast – sites 18, 17…
- Is the city close to having approved ADU plans to choose from with approved affordable pre-built units? Is the city planning for 1,000's of ADUs and what are the rules for short term ADU rentals? What % are actually affordable?
- The city does not need any more resorts, hotels based on the last $250K hotel occupancy survey 68%, and that was before Covid. Oceanside just added 15 new hotels, resorts? There are plenty for visitors to choose from.

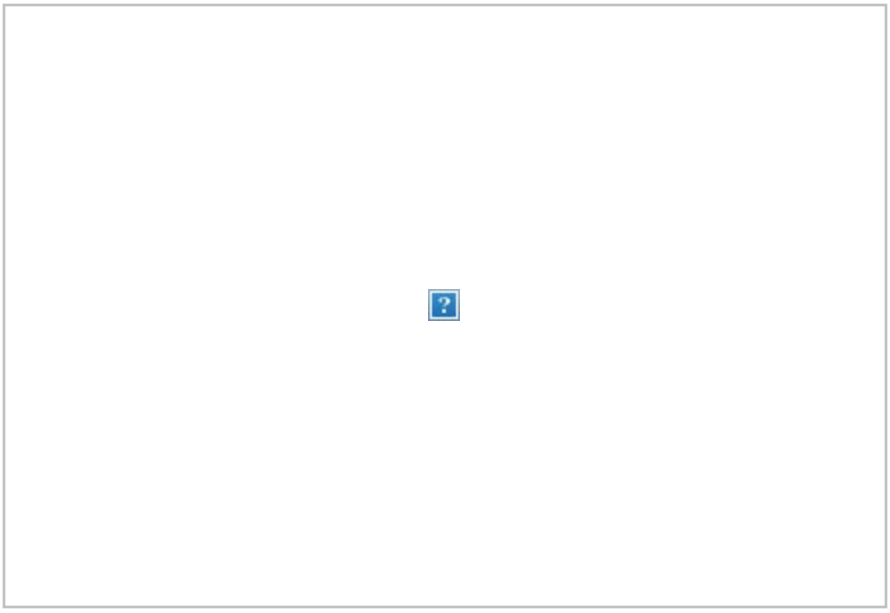

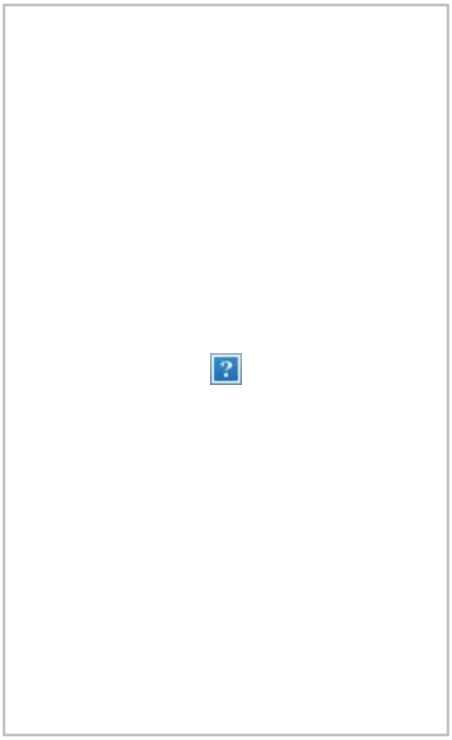

Thanks, Patrick

From:	Megan Gonzalez
To:	Scott Donnell
Cc:	Council Internet Email; Keith Blackburn
Subject:	Reallocate future planning Site 10 & site 11 Bressi Ranch
Date:	Tuesday, October 25, 2022 10:12:54 PM

Thank you for your response below, I would like this on record to reallocate site 10 and site 11 for future planning in other areas of Carlsbad.
Since early 2021 I have been in correspondence with your traffic division and planning division on solutions for traffic concerns and environmental issues that surround Kensington at the Square.
I have email correspondence with planning department, traffic division and Senior engineers who have also taken meetings with me on site to discuss the issues at hand.

Our Colt Place thoroughfare Private Road cuts our community in half - essentially a constant flow of vehicles and foot traffic. This road also connects our pool house and children's playground of which young children cross to and from each amenity area.
Our 125 homeowners have to maintenance this private road and the increased costs of repair would burden this small community.

Environmental concerns: emergency evacuations in a medium density with no main road route exits.

Our private resident only amenities areas that are not fenced for private access have already been abused as our HOA had to install signage to deter the onslaught of trespassers. Still ongoing issues with outsiders using our gas grills, picnic areas and play areas.

All reported to the Carlsbad Police Non- emergency.
Residential Break-in was reported to Carlsbad police. Numerous calls has been reported to Non-emergency over the past two years of this brand new community.

Geographical setting
High-to-very high expansión soils have been recorded 2014 and 2017. As noted in the study: Will not eliminate the potential for impacts due to highly expansive soils. Inherent risks associated with placing expansive soils near finished grade.

Many homeowners have concerns with the site 10 location and site 11 location.
The impact of traffic on our private road and environmental impacts.
Rezoning would be a huge negative impact on the current issues at hand.
Put this on record as a no.

Megan González
(760) 809-0608
Hoamegan@yahoo.com

> On Oct 24, 2022, at 10:41 AM, Scott Donnell <Scott.Donnell@carlsbadca.gov> wrote:

Hi Megan,

Now I see what you mean abut the link being inactivated. Yes, that was a link to a survey conducted last year, so it is not longer active.

However, as you probably know, we are now taking input on the environmental impacts to study that are related to the proposed housing sites and other project aspects through this Wednesday, Oct. 26.

Thank you.

Scott Donnell
Senior Planner
1635 Faraday Avenue
Carlsbad, CA 92008-7314
www.carlsbadca.gov

760-602-4618 | 760-602-8560 fax | scott.donnell@carlsbadca.gov

DURING THE CURRENT PUBLIC HEALTH EMERGENCY:
FOR ONGOING PROJECTS, PLEASE CONTACT YOUR PROJECT PLANNER TO SCHEDULE A RESUBMITTAL DROP-OFF APPOINTMENT.
FOR NEW PROJECT SUBMITTALS AND LANDSCAPE SUBMITTALS/RESUBMITTALS/ASBUILTS, PLEASE CALL OR EMAIL YOUR REQUEST FOR A SUBMITTAL DROP-OFF APPOINTMENT:
Phone: 760-602-4610
Email: planning@carlsbadca.gov

From: Megan Gonzalez <hoamegan@yahoo.com>
Sent: Saturday, October 22, 2022 10:49 AM
To: Scott Donnell <Scott.Donnell@carlsbadca.gov>
Cc: Scott Chadwick <Scott.Chadwick@carlsbadca.gov>; Priya Bhat-Patel <Priya.Bhat-Patel@carlsbadca.gov>
Subject: Site 10 & site 11

Re: site 10; site 11

Hello Scott please note this as on record for today is October 22 of which your survey site has been inactivated for input (survey link below).
Please add to this to the Public inquiry summary report on record as a no.
Many homeowners have concerns with the site 10 location and site 11 location.
The impact of traffic on our private road and environmental impacts.
Rezoning would be a huge negative impact on the current issues at hand.

Put this on record as a no.

Megan Gonzalez
Resident homeowner
Kensington at the Square

Thank you for your comments. They will be included in the public input summary report presented to the City Council early next year. You can also provide additional input through tomorrow via our online survey, available athttps://www.surveymonkey.com/r/housingsites and continue to provide mail and email comments through October 22.

The lot should be developed as business/commercial in order to maintain consistency with past development on the surrounding larger parcel. Access to the 49 residences would be through a cul-de-sac that is already busy with traffic. 49 residences would only make things worse.

CAUTION: *Do not open attachments or click on links unless you recognize the sender and know the content is safe.*

From: Steve Linke
To: Scott Donnell
Subject: Requested analyses for prospective housing sites
Date: Wednesday, September 28, 2022 1:07:17 PM

Conduct vehicle miles traveled (VMT) analyses using the standard VMT map or SANDAG model run method--not custom methods designed to show no impact. As an adjunct to the environmental analyses, conduct multimodal level of service (MMLOS) analyses (pedestrian, bicycle, vehicle, and transit, as applicable to the surrounding roadways) based on all vehicle trips projected to be generated--without subtracting fake trips that are not actually occurring.

From: Douglas Fullmer
To: Scott Donnell
Subject: Resident of Carlsbad comment
Date: Monday, September 19, 2022 12:07:50 PM

Hello Scott - Doug Fullmer here resending my comment. Sorry about that.

I would like to know how we support new housing, but unfortunately we aren't the only city building out because of state run ignorance . My first thought is water and power as our reservoirs have never seen these lows and our aquifers are depleted from over ground water pumping- some year round rivers have dried up w / no relief in site. We are already having rolling black outs- I don't get it. By over building would be the largest nail in the coffin .

Sent from my iPad

From: Madeleine Szabo
To: Scott Donnell; Council Internet Email
Subject: Revising the Housing Element
Date: Thursday, October 13, 2022 12:55:28 PM

Dear City Council,

Why does Carlsbad need more housing? Instead concentrate on reducing the **costs** of current housing so people aren't forced into the only affordable option, smaller multi-family dwelling units without privacy and property. Lobby the state to get rid of dictatorial mandates that crowd our city with more people and destroy the environment.

Environmental impacts? Bringing in more residents means greater use of electricity, water, roads, schools, city services. Dense housing impacts everyone's environment. It means destruction of more trees and natural habitats. It means the further depletion of scarce resources. More residents packed in multi-family buildings result in pollution and more garbage overfilling our landfills.

During the September heat wave, there was hardly enough electricity to accommodate current residents. Even the governor asked that Californians not charge their electric cars. How can the City take on more residents? Why should current residents suffer the effects of more crowded conditions?

The only "housing crisis" California has is overly expensive dwellings (versus other states). Rather than build more dwelling units, make current housing more affordable by cutting taxes, reducing fees, and minimizing unnecessary regulations that drive up costs.

Carlsbad does not need more cars. Even if the City built more lanes and more roads, the impact on the air quality of more cars is detrimental to the environment and public health.

Stop the nonsense. Push back against the State's undemocratic and unfair mandates. The State is promoting dense multi-family dwellings which impact the environment and quality of life. City governments **only** should respond to the needs and wants of the residents, not the State government which is further away from the people.

Respectfully submitted,
Madeleine Szabo

5338 Forecastle Court
Carlsbad, CA. 92008
mbszabo@snet.net
760-814-2550

CAUTION: *Do not open attachments or click on links unless you recognize the sender and know the content is safe.*

Oct. 17, 2022

City of Carlsbad Planning Dept.
Attn: Scott Donnell
1635 Faraday Ave.
Carlsbad, CA 92008

Dear Mr. Donnell,

I would like to share my input with you regarding Site #3 which is being considered as a future higher density housing site in our neighborhood. I am opposed to this idea for safety issues. Building so many units at the corner of Chestnut Avenue and El Camino Real is a safety hazard for several reasons. With all the children walking across this busy intersection for school or to go to the pool, it is already congested, and now with the influx of e-bikes being ridden by children alongside automobiles, it is a recipe for future disasters.

The driveways that would be needed for this project would have to be along the west side of El Camino Real, somewhere beyond the bus stop, so the flow of traffic in the right lane would be interrupted by busses, bikes, pedestrians, and cars exiting and entering the project at any given time. This is a dangerous plan when cars are driving at 55 MPH.

In addition, this area consists of exclusively single family homes, with only one condo project on the northwest corner. Residents of these homes/condos drive cars, and in the event of the need for evacuation, we would not be able to escape quickly enough from this area with the two main streets stopped with traffic. Adding more cars to this already dangerous intersection is not the wisest decision for our residents.

My suggestion is to plan for these proposed units to be built near already existing transportation hubs such as Poinsettia Station, Carlsbad Village Drive Station, or along Palomar Airport Road.

Thank you for considering my input in your decisions.

Sincerely,

Luigi Persico

SAN DIEGO COUNTY CLERK
CEQA FILING COVER SHEET

FILED
Sep 13, 2022 11:27 AM
Ernest J. Dronenburg, Jr.
SAN DIEGO COUNTY CLERK
File # 2022-000734

THIS SPACE FOR CLERK'S USE ONLY

Complete and attach this form to each CEQA Notice filed with the County Clerk

TYPE OR PRINT CLEARLY

Project Title

HOUSING ELEMENT IMPLEMENTATION AND PUBLIC SAFETY ELEMENT UPDATE - GPA 2022-0001/ZCA 2022-0004/ZC 2022-0001/LCPA 2022-001/EIR 2022-0007 (PUB2022-0010)

Check Document being Filed:

- ○ Environmental Impact Report (EIR)
- ○ Mitigated Negative Declaration (MND) or Negative Declaration (ND)
- ○ Notice of Exemption (NOE)
- ● Other (Please fill in type): NOTICE OF PREPARATION OF A DRAFT ENVIRONMENTAL IMPACT REPORT

FILED IN THE OFFICE OF THE SAN DIEGO COUNTY CLERK ON September 13, 2022
Posted September 13, 2022 **Removed** 10-13-2022
Returned to agency on 10-13-2022
DEPUTY D Butler

Filing fees are due at the time a Notice of Determination/Exemption is filed with our office.For more information on filing fees and No Effect Determinations, please refer to California Code of Regulations, Title 14, section 753.5.

City of Carlsbad

NOTICE OF PREPARATION of a

SUPPLEMENTAL ENVIRONMENTAL IMPACT REPORT

Pursuant to Section 15163(c) of the California Environmental Quality Act (CEQA) Guidelines, a supplement to an Environmental Impact Report (EIR) shall be given the same kind of notice and public review as is given a draft EIR under Section 15087. As stated in the CEQA Guidelines Section 15087, when an EIR is required for a project, a Notice of Preparation (NOP) describing the project and its potential environmental effects shall be prepared.

You are being notified of the City of Carlsbad's (city) intent, as Lead Agency, to prepare a Supplemental EIR (SEIR) for the Housing Element Implementation and Public Safety Element Update project as described below, which may be of interest to you and/or the organization or agency that you represent. The SEIR will be a supplement to the Carlsbad General Plan and Climate Action Plan EIR (State Clearinghouse # 2011011004), certified in 2015. This project is city-initiated.

PROJECT NAME: Housing Element Implementation and Public Safety Element Update - GPA 2022-0001/ZCA 2022-0004/ZC 2022-0001/LCPA 2022-001/EIR 2022-0007 (PUB2022-0010)

PROJECT LOCATION: Carlsbad is a coastal community with approximately 115,000 residents. The city is approximately 42 square miles in area and is located along the northern coast of San Diego County (about 30 miles north of the City of San Diego). Carlsbad is bordered to the north of the City of Oceanside, to the south by the City of Encinitas, to the east by the cities of Vista and San Marcos, and to the west by the Pacific Ocean.

The city contains a combination of industrial, commercial, and residential development, including a large regional shopping center, an auto-retail center, a large industrial park area, the LEGOLAND California Educational/Recreational Park, and a regional airport, as well as three lagoons, limited agricultural areas and large tracts of preserved open space.

Interstate 5, El Camino Real, and Carlsbad Boulevard provide the major north-south routes through the city, as does the San Diego Northern Railroad (SDNRR) line. Major east-west routes include Carlsbad Village Drive, Tamarack Avenue, Cannon Road, Palomar Airport Road, Poinsettia Lane, and La Costa Avenue.

The regional setting is depicted in Figure 1. The Planning Area consists of the existing city limits and is depicted in Figure 2.

Figure 1 Regional Location

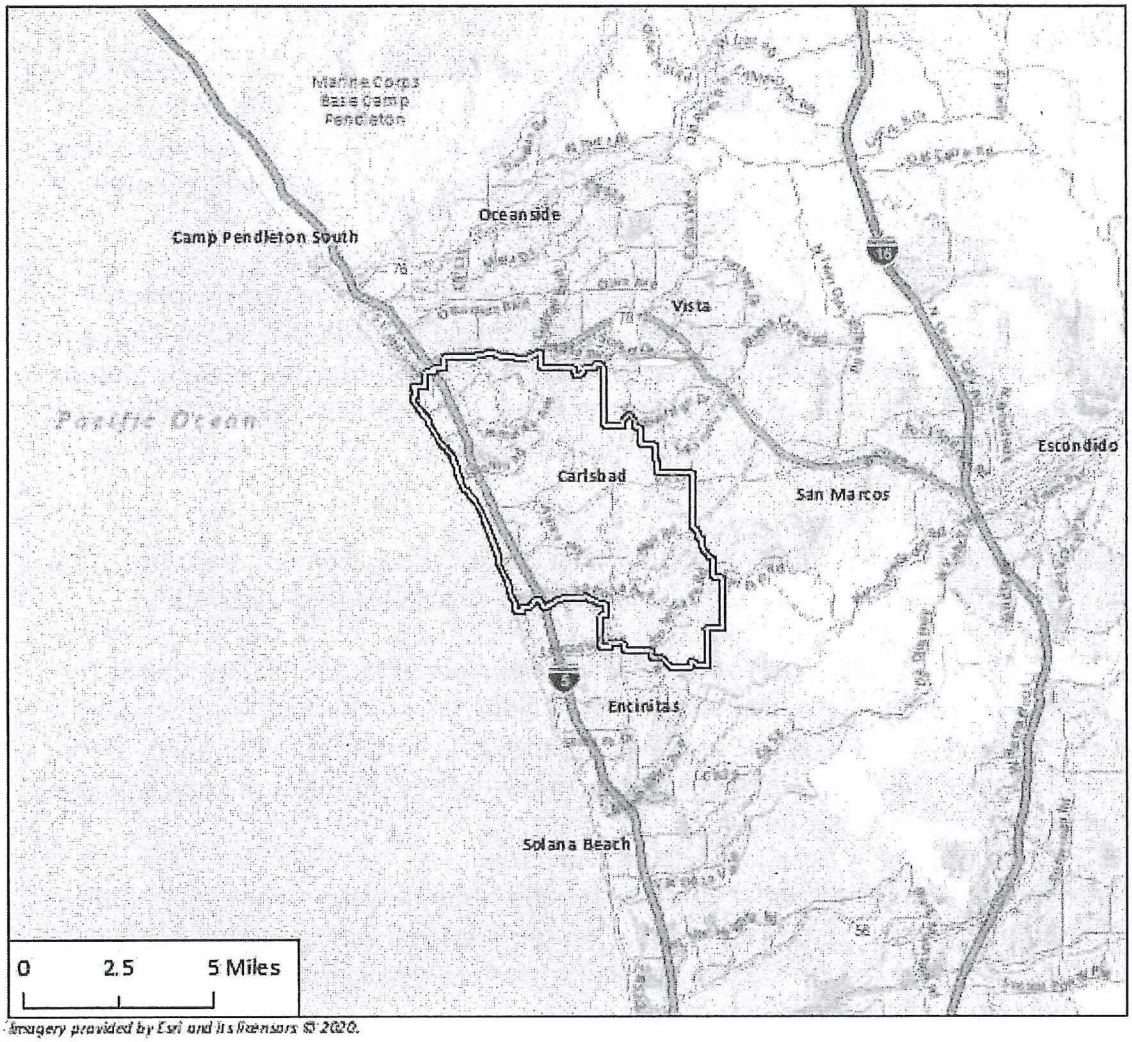

Imagery provided by Esri and its licensors © 2020.

Carlsbad City Limits N

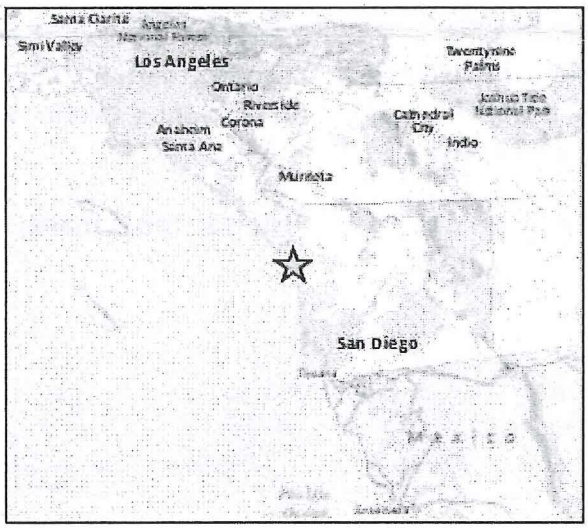

Figure 2 Carlsbad City Boundaries

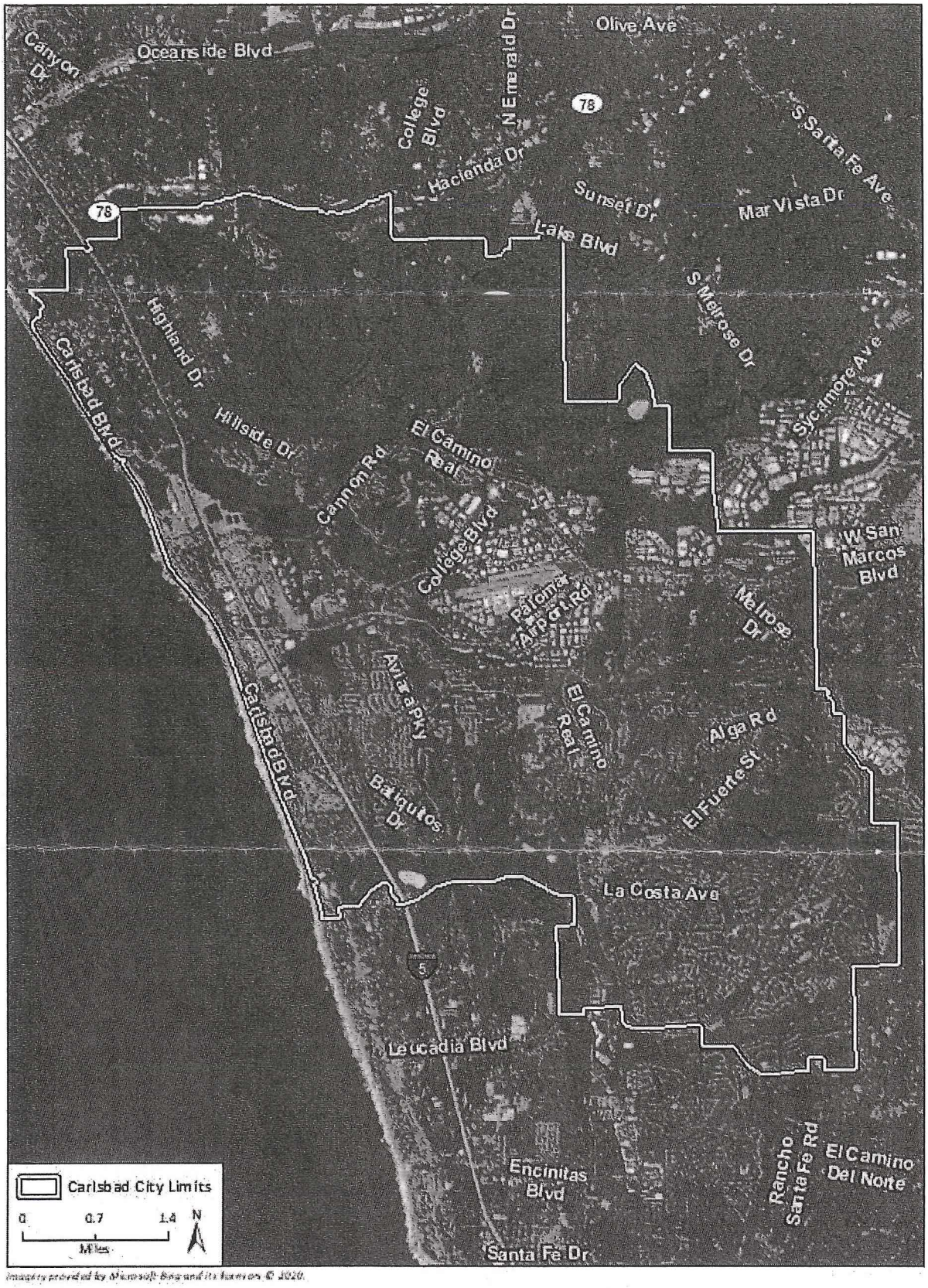

PROJECT DESCRIPTION: The project consists of updates to the General Plan, including the Land Use and Community Design Element and Public Safety Element, and updates to Carlsbad Municipal Code Title 21, the Zoning Ordinance. The updates are necessary to implement the programs of the city's Housing Element Update 2021-2029 (Housing Element), which was adopted by the Carlsbad City Council on April 6, 2021, and changes in state law.

General Plan Updates

Housing Element implementation triggers changes to the Land Use and Community Design Element. Furthermore, Housing Element approval and recently approved state housing and public safety legislation resulted in the need for changes to the Public Safety Element and the Zoning Ordinance. The Housing Element was analyzed under its own respective CEQA document, which was posted on the State Clearinghouse (SCH) website on April 22, 2021 (SCH#2011011004). Thus, this SEIR will solely analyze the potential impacts in relation to updates the city will propose to the General Plan, including the Land Use & Community Design Element and Public Safety Element, and to the city's Zoning Ordinance, discussed below.

Land Use & Community Design Element

The Land Use & Community Design Element provides the long-term vision, goals, and policies for Carlsbad through the year 2035. The overall focus is to accommodate change and growth in the city, while preserving and enhancing the features and attributes that make Carlsbad such a desirable place to live. Topics covered in the element include land use designations, revitalization of older neighborhoods, preservation of existing neighborhoods as well as environmental resources and open space, development of new neighborhoods with varied housing opportunities, land use constraints, and new opportunity areas. The element also includes goals and policies to help implement the element's vision and help maintain a healthy balance of development within Carlsbad.

As stated previously, implementation of the city's Housing Element triggers the need to make changes to the Land Use & Community Design Element, including the Land Use Map. These changes include the proposed addition of two new residential land use designations (R-35 and R-40) for the accommodation of higher density residential development, establishment of new minimum densities for some residential designations, miscellaneous, related changes to tables, text and policies, and changes to land use designations on multiple sites to accommodate the city's share of the Regional Housing Needs Assessment (RHNA).

The proposed changes to land use designations on multiple sites have been presented and discussed with the community on many occasions, including as part of the Housing Element adoption in April 2021, a City Council meeting in August 2021, public outreach conducted in fall 2021, and a City Council meeting on Feb. 15, 2022. At the February 2022 meeting, the City Council provided direction on specific sites to analyze environmentally as part of this SEIR and present for possible land use changes through the public hearing process, expected to occur in 2023.

More information on the potential housing sites identified, including a map, is available at carlsbadca.gov/housingplan.

Public Safety Element

The Public Safety Element is a required component of a City's General Plan that serves to reduce the potential short and long-term risk of death, injuries, property damage, and economic and social dislocation associated with potential hazards. The recent approval of the Housing Element, including the identification of new housing sites for the 6th cycle Housing Element site inventory, have triggered required analysis and compliance with recent state safety legislation. The Public Safety Element Update will address the requirements of new State legislation and incorporate new policies based on updated local and regional data. The update will address these legislative requirements, including but not limited to:

- Senate Bill 99; Identification of two access points in all emergency evacuation routes in Carlsbad
- Senate Bill 379; Inclusion of a climate change vulnerability assessment
- Senate Bill 1035; Consideration of climate adaptation and resiliency
- Senate Bill 1241; Assessment of high fire hazard severity zones
- Assembly Bill 162; Assessment of flood hazard and management
- Assembly Bill 747; Evaluation of evacuation route capacity

Zoning Ordinance Update

Carlsbad Municipal Code (CMC) Title 21 is known as the Zoning Ordinance of the City of Carlsbad and consists of two main elements, the Zoning Ordinance and Zoning Map. To prevent incompatible land use relationships, the city's Zoning Ordinance and Zoning Map designate different areas or zones for different types of land uses and establish standards for development.

As a result of new policies and programs set forth in the Housing Element, along with recent state zoning legislation, updates to Title 21 will be made to ensure compliance with the General Plan and state law.

The Zoning Ordinance and Map implement the city's Local Coastal Program. Revisions to both will also trigger amendments to the Local Coastal Program that will be subsequently sent to the California Coastal Commission.

ENVIRONMENTAL ANALYSIS: Approval of the Housing Element Implementation and Public Safety Element Update project would not include approval of any physical development (e.g., construction of housing or infrastructure). However, the SEIR will assume that such actions are reasonably foreseeable future outcomes of the project. As such, the SEIR will evaluate the potential physical environmental impacts that could result from future actions for implementing the policies proposed under the project at a programmatic level, in accordance with CEQA Guidelines Section 15168. The topical areas that will be addressed in the SEIR are:

- Aesthetics
- Air Quality
- Biological Resources
- Cultural Resources
- Energy
- Greenhouse Gas Emissions
- Geology, Soils, and Seismicity
- Hazards & Hazardous Materials
- Hydrology, Flooding, and Water Quality
- Land Use
- Noise
- Population & Housing
- Public Services
- Recreation
- Transportation
- Tribal Cultural Resources
- Utilities/Service Systems
- Wildfire

In addition, the SEIR will address cumulative impacts, growth inducing impacts, alternatives, and other issues required by CEQA.

PUBLIC COMMENT PERIOD:

Written Comments

The public review period begins Sept. 14, 2022 and ends October 14, 2022. The City of Carlsbad welcomes and will consider all written comments regarding potential environmental impacts of the project and issues to be addressed in the SEIR. **Written comments must be submitted by Oct. 14, 2022.**

Please direct your comments to:

Mail: Scott Donnell, Senior Planner
City of Carlsbad
Planning Division
1635 Faraday Avenue
Carlsbad, California 92008

Email: Scott.Donnell@carlsbadca.gov

Please identify the name, phone number, and email address of a contact person at your agency. For members of the public, please also include your name and contact information, such as a phone number, email or postal address.

Scoping Meetings

The City of Carlsbad will host one in person SEIR Scoping Meeting and one SEIR Virtual Scoping Meeting. The purpose of the scoping meetings is to solicit input on the scope and content of the environmental analysis that will be included in the Draft SEIR for the Housing Element Implementation and Public Safety Element Update project. The date, time and link for the meeting are as follows:

In person meeting:
Sept. 26, 2022, 6 p.m.
Faraday Administration Center
1635 Faraday Avenue
Carlsbad, CA 92008

Virtual meeting:
Sept. 28, 2022, 6 p.m.
Register online at carlsbadca.gov/housingplan

MORE INFORMATION:

Call 442-339-2600 or visit carlsbadca.gov/housingplan

San Diego County

Transaction #: 6685551
Receipt #: 2022409515

Ernest J. Dronenburg, Jr.
Assessor/Recorder/County Clerk
1600 Pacific Highway Suite 260
P. O. Box 121750, San Diego, CA 92112-1750
Tel. (619) 237-0502 Fax (619) 557-4155
www.sdarcc.com

Cashier Date: 09/13/2022
Cashier Location: SD

Print Date: 09/13/2022 11:28 am

Payment Summary

Total Fees:	$0.00
Total Payments:	$0.00
Balance:	$0.00

Payment

NO CHARGE PAYMENT $0.00

Total Payments $0.00

Filing

CEQA - NOTICE FILE #: 2022-000734 Date: 09/13/2022 11:27AM Pages: 8

Total Fees Due: $0.00

Grand Total - All Documents: $0.00

SAN DIEGO COUNTY CLERK
CEQA FILING COVER SHEET

FILED

Sep 13, 2022 03:36 PM
Ernest J. Dronenburg, Jr.
SAN DIEGO COUNTY CLERK
File # 2022-000737

THIS SPACE FOR CLERK'S USE ONLY

Complete and attach this form to each CEQA Notice filed with the County Clerk

TYPE OR PRINT CLEARLY

Project Title

HOUSING ELEMENT IMPLEMENTATION AND PUBLIC SAFETY ELEMENT UPDATE - GPA 2022-0001/ZCA 2022-0004/ZC 2022-0001/LCPA 2022-001/EIR 2022-0007 (PUB2022-0010)

Check Document being Filed:

- ( ) Environmental Impact Report (EIR)
- ( ) Mitigated Negative Declaration (MND) or Negative Declaration (ND)
- ( ) Notice of Exemption (NOE)
- (•) Other (Please fill in type): NOTICE OF PREPARATION OF A SUPPLEMENTAL ENVIRONMENTAL IMPACT REPORT

FILED IN THE OFFICE OF THE SAN DIEGO COUNTY CLERK ON September 13, 2022
Posted September 13, 2022 **Removed** 10-13-2022
Returned to agency on 10-14-2022
DEPUTY D Butler

Filing fees are due at the time a Notice of Determination/Exemption is filed with our office.For more information on filing fees and No Effect Determinations, please refer to California Code of Regulations, Title 14, section 753.5.

City of Carlsbad

NOTICE OF PREPARATION of a

SUPPLEMENTAL ENVIRONMENTAL IMPACT REPORT

Pursuant to Section 15163(c) of the California Environmental Quality Act (CEQA) Guidelines, a supplement to an Environmental Impact Report (EIR) shall be given the same kind of notice and public review as is given a draft EIR under Section 15087. As stated in the CEQA Guidelines Section 15087, when an EIR is required for a project, a Notice of Preparation (NOP) describing the project and its potential environmental effects shall be prepared.

You are being notified of the City of Carlsbad's (city) intent, as Lead Agency, to prepare a Supplemental EIR (SEIR) for the Housing Element Implementation and Public Safety Element Update project as described below, which may be of interest to you and/or the organization or agency that you represent. The SEIR will be a supplement to the Carlsbad General Plan and Climate Action Plan EIR (State Clearinghouse # 2011011004), certified in 2015. This project is city-initiated.

PROJECT NAME: Housing Element Implementation and Public Safety Element Update - GPA 2022-0001/ZCA 2022-0004/ZC 2022-0001/LCPA 2022-001/EIR 2022-0007 (PUB2022-0010)

PROJECT LOCATION: Carlsbad is a coastal community with approximately 115,000 residents. The city is approximately 42 square miles in area and is located along the northern coast of San Diego County (about 30 miles north of the City of San Diego). Carlsbad is bordered to the north of the City of Oceanside, to the south by the City of Encinitas, to the east by the cities of Vista and San Marcos, and to the west by the Pacific Ocean.

The city contains a combination of industrial, commercial, and residential development, including a large regional shopping center, an auto-retail center, a large industrial park area, the LEGOLAND California Educational/Recreational Park, and a regional airport, as well as three lagoons, limited agricultural areas and large tracts of preserved open space.

Interstate 5, El Camino Real, and Carlsbad Boulevard provide the major north-south routes through the city, as does the San Diego Northern Railroad (SDNRR) line. Major east-west routes include Carlsbad Village Drive, Tamarack Avenue, Cannon Road, Palomar Airport Road, Poinsettia Lane, and La Costa Avenue.

The regional setting is depicted in Figure 1. The Planning Area consists of the existing city limits and is depicted in Figure 2.

Figure 1 Regional Location

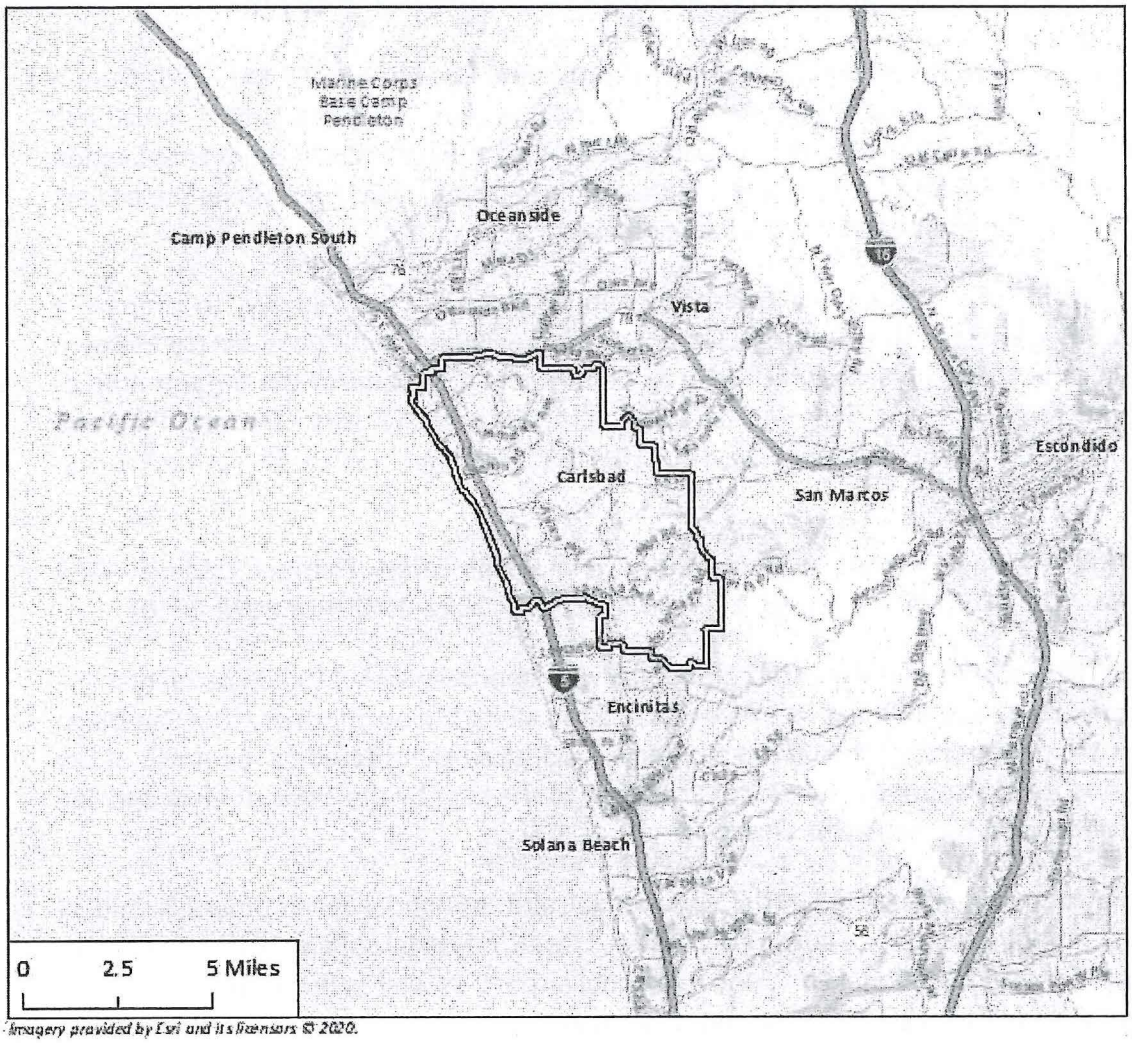

Imagery provided by Esri and its licensors © 2020.

Carlsbad City Limits

N

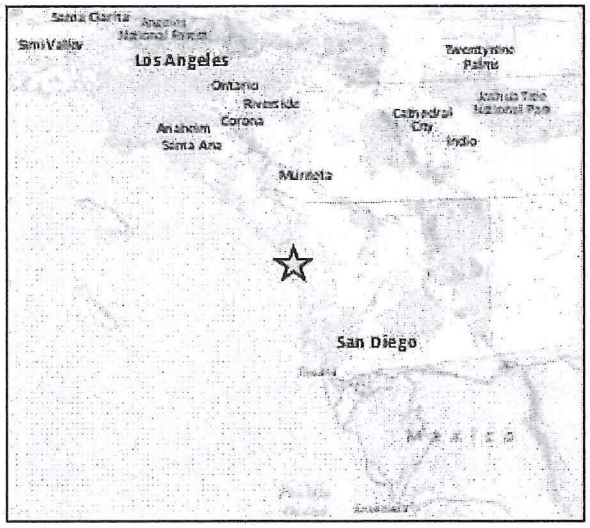

Figure 2 Carlsbad City Boundaries

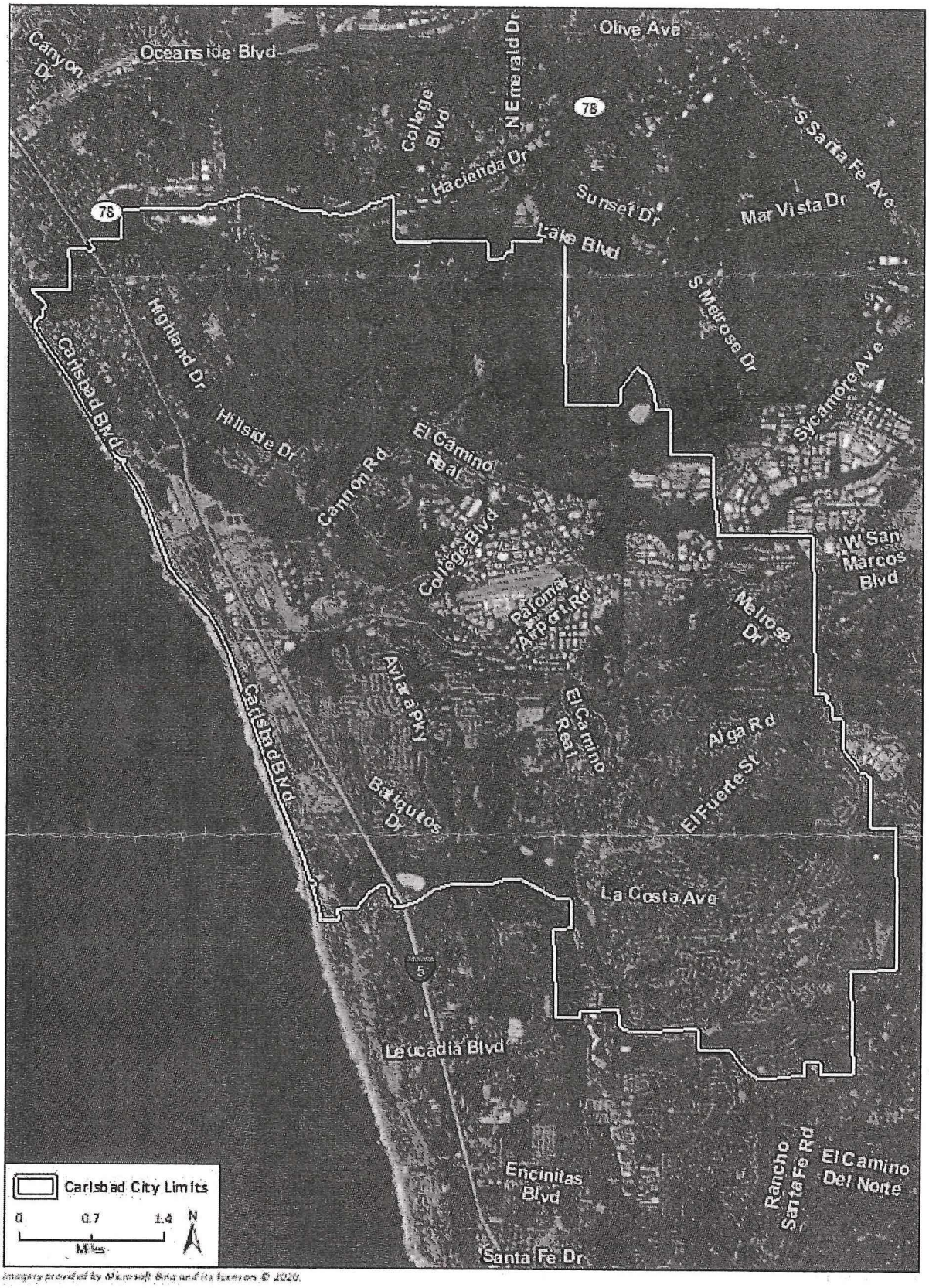

Imagery provided by Microsoft Bing and its licensors © 2020.

PROJECT DESCRIPTION: The project consists of updates to the General Plan, including the Land Use and Community Design Element and Public Safety Element, and updates to Carlsbad Municipal Code Title 21, the Zoning Ordinance. The updates are necessary to implement the programs of the city's Housing Element Update 2021-2029 (Housing Element), which was adopted by the Carlsbad City Council on April 6, 2021, and changes in state law.

General Plan Updates

Housing Element implementation triggers changes to the Land Use and Community Design Element. Furthermore, Housing Element approval and recently approved state housing and public safety legislation resulted in the need for changes to the Public Safety Element and the Zoning Ordinance. The Housing Element was analyzed under its own respective CEQA document, which was posted on the State Clearinghouse (SCH) website on April 22, 2021 (SCH#2011011004). Thus, this SEIR will solely analyze the potential impacts in relation to updates the city will propose to the General Plan, including the Land Use & Community Design Element and Public Safety Element, and to the city's Zoning Ordinance, discussed below.

Land Use & Community Design Element

The Land Use & Community Design Element provides the long-term vision, goals, and policies for Carlsbad through the year 2035. The overall focus is to accommodate change and growth in the city, while preserving and enhancing the features and attributes that make Carlsbad such a desirable place to live. Topics covered in the element include land use designations, revitalization of older neighborhoods, preservation of existing neighborhoods as well as environmental resources and open space, development of new neighborhoods with varied housing opportunities, land use constraints, and new opportunity areas. The element also includes goals and policies to help implement the element's vision and help maintain a healthy balance of development within Carlsbad.

As stated previously, implementation of the city's Housing Element triggers the need to make changes to the Land Use & Community Design Element, including the Land Use Map. These changes include the proposed addition of two new residential land use designations (R-35 and R-40) for the accommodation of higher density residential development, establishment of new minimum densities for some residential designations, miscellaneous, related changes to tables, text and policies, and changes to land use designations on multiple sites to accommodate the city's share of the Regional Housing Needs Assessment (RHNA).

The proposed changes to land use designations on multiple sites have been presented and discussed with the community on many occasions, including as part of the Housing Element adoption in April 2021, a City Council meeting in August 2021, public outreach conducted in fall 2021, and a City Council meeting on Feb. 15, 2022. At the February 2022 meeting, the City Council provided direction on specific sites to analyze environmentally as part of this SEIR and present for possible land use changes through the public hearing process, expected to occur in 2023.

More information on the potential housing sites identified, including a map, is available at carlsbadca.gov/housingplan.

Public Safety Element

The Public Safety Element is a required component of a City's General Plan that serves to reduce the potential short and long-term risk of death, injuries, property damage, and economic and social dislocation associated with potential hazards. The recent approval of the Housing Element, including the identification of new housing sites for the 6th cycle Housing Element site inventory, have triggered required analysis and compliance with recent state safety legislation. The Public Safety Element Update will address the requirements of new State legislation and incorporate new policies based on updated local and regional data. The update will address these legislative requirements, including but not limited to:

- Senate Bill 99; Identification of two access points in all emergency evacuation routes in Carlsbad
- Senate Bill 379; Inclusion of a climate change vulnerability assessment
- Senate Bill 1035; Consideration of climate adaptation and resiliency
- Senate Bill 1241; Assessment of high fire hazard severity zones
- Assembly Bill 162; Assessment of flood hazard and management
- Assembly Bill 747; Evaluation of evacuation route capacity

Zoning Ordinance Update

Carlsbad Municipal Code (CMC) Title 21 is known as the Zoning Ordinance of the City of Carlsbad and consists of two main elements, the Zoning Ordinance and Zoning Map. To prevent incompatible land use relationships, the city's Zoning Ordinance and Zoning Map designate different areas or zones for different types of land uses and establish standards for development.

As a result of new policies and programs set forth in the Housing Element, along with recent state zoning legislation, updates to Title 21 will be made to ensure compliance with the General Plan and state law.

The Zoning Ordinance and Map implement the city's Local Coastal Program. Revisions to both will also trigger amendments to the Local Coastal Program that will be subsequently sent to the California Coastal Commission.

ENVIRONMENTAL ANALYSIS: Approval of the Housing Element Implementation and Public Safety Element Update project would not include approval of any physical development (e.g., construction of housing or infrastructure). However, the SEIR will assume that such actions are reasonably foreseeable future outcomes of the project. As such, the SEIR will evaluate the potential physical environmental impacts that could result from future actions for implementing the policies proposed under the project at a programmatic level, in accordance with CEQA Guidelines Section 15168. The topical areas that will be addressed in the SEIR are:

- Aesthetics
- Air Quality
- Biological Resources
- Cultural Resources
- Energy
- Greenhouse Gas Emissions
- Geology, Soils, and Seismicity
- Hazards & Hazardous Materials
- Hydrology, Flooding, and Water Quality
- Land Use
- Noise
- Population & Housing
- Public Services
- Recreation
- Transportation
- Tribal Cultural Resources
- Utilities/Service Systems
- Wildfire

In addition, the SEIR will address cumulative impacts, growth inducing impacts, alternatives, and other issues required by CEQA.

PUBLIC COMMENT PERIOD:

Written Comments

The public review period begins Sept. 14, 2022 and ends October 14, 2022. The City of Carlsbad welcomes and will consider all written comments regarding potential environmental impacts of the project and issues to be addressed in the SEIR. **Written comments must be submitted by Oct. 14, 2022.**

Please direct your comments to:

Mail: Scott Donnell, Senior Planner
City of Carlsbad
Planning Division
1635 Faraday Avenue
Carlsbad, California 92008

Email: Scott.Donnell@carlsbadca.gov

Please identify the name, phone number, and email address of a contact person at your agency. For members of the public, please also include your name and contact information, such as a phone number, email or postal address.

Scoping Meetings

The City of Carlsbad will host one in person SEIR Scoping Meeting and one SEIR Virtual Scoping Meeting. The purpose of the scoping meetings is to solicit input on the scope and content of the environmental analysis that will be included in the Draft SEIR for the Housing Element Implementation and Public Safety Element Update project. The date, time and link for the meeting are as follows:

In person meeting:
Sept. 26, 2022, 6 p.m.
Faraday Administration Center
1635 Faraday Avenue
Carlsbad, CA 92008

Virtual meeting:
Sept. 28, 2022, 6 p.m.
Register online at carlsbadca.gov/housingplan

MORE INFORMATION:

Call 442-339-2600 or visit carlsbadca.gov/housingplan

San Diego County

Transaction #: 6743881
Receipt #: 2022425876

Ernest J. Dronenburg, Jr.
Assessor/Recorder/County Clerk
1600 Pacific Highway Suite 260
P. O. Box 121750, San Diego, CA 92112-1750
Tel. (619) 237-0502 Fax (619) 557-4155
www.sdarcc.com

Cashier Date: 09/23/2022
Cashier Location: SD

Print Date: 09/23/2022 2:35 pm

Payment Summary

Total Fees:	$0.00
Total Payments:	$0.00
Balance:	$0.00

Payment

NO CHARGE PAYMENT	$0.00
Total Payments	$0.00

Filing

CEQA - NOTICE FILE #: 2022-000768 Date: 09/23/2022 2:31PM Pages: 8

Total Fees Due:	$0.00
Grand Total - All Documents:	$0.00

Planning Division
City of Carlsbad
1635 Faraday Ave.
Carlsbad, CA 92018

Oct. 10, 2022

Dear Mr. Donnell,

Thank you for the opportunity to comment on the future housing sites. My comments below are for Site # 3 at the corner of El Camino Real and Chestnut Avenue. I object to the proposed development at Site #3 for the reasons stated below, followed by alternative suggestions:

1) SAFETY- The additional traffic generated by the up-zoning and higher density as proposed creates a traffic safety hazard in an already congested and highly traveled intersection. This portion of El Camino Real currently serves as an alternative to Interstate 5 for drivers coming from the east on Highway 78. Vehicles are driving at 55 MPH or greater heading south to Tamarack Ave or Cannon Rd as an alternative to getting delayed in traffic at the I-5 and Highway 78 interchange. Traveling at that rate of speed, approaching and crossing the intersection of Chestnut, and then having to stop short after a slight downhill while approaching a possible stopped bus or for the numerous cars and e-bikes that could be exiting the proposed project on to El Camino Real is not safe. Not only is it dangerous, but it would inhibit the flow of traffic on this main thoroughfare.
2) ENVIRONMENT- The beautiful old growth grove of healthy, majestic eucalyptus trees are part of the character of Carlsbad. They took a lifetime to grow, beautify our neighborhood, and have become the home of owls, hawks, and other wildlife that all have a place and purpose in our natural environment. Without these predators, our rodent and pest population increases. Without these trees that clean our air and cool the temperature, our air quality and general quality of life suffers. Is it really worth losing this entire irreplaceable grove and its important role in preserving our neighborhood's character and quality of life for the sole benefit of adding more housing in an already densely packed area which is already built out?

I ask each of the decision makers to look at City Council Resolution No. 7642, Exhibit "A", titled "El Camino Real Corridor Development Standards". According to this document, the intent and purpose is to "maintain and enhance the appearance of the El Camino Real roadway area" and "reflect the existence of certain identified characteristics which the City considers worthy of preservation" as well as "a general design concept for the entire length of the 126 foot wide El Camino Real right of way" including "restrictions for private properties fronting on the roadway." Is this document no longer valid?

My suggestion for an alternative site to place the displaced units would be to slightly increase the density at each of the other proposed sites to accommodate the approximately 28 units planned.

As another alternative, the recently passed Assembly Bill 2011 allows for affordable housing to be built on commercially zoned land and along commercial corridors. Perhaps Site #'s 9, 10, 11, or 12 would be appropriate as those sites are located along the commercial corridor of Palomar Airport Rd. with easy access to to I-5, bus routes, and the airport.

Since any development at Site # 3 would add a strong element of danger to drivers, e-bike riders, and pedestrians, as well as being detrimental to the environment, I suggest that the City consider using Proposition C funds to purchase the property as open space so that the existing neighborhoods can continue to enjoy the benefits of this natural habitat as the City maintains its commitment to "preserving unique city resources".

Thank you for the opportunity to be able to share my comments on Site #3.

Regards,

Diane Lech

Diane Lech
PO Box 489
Carlsbad, CA 92018
619-322-8080

NATIVE AMERICAN HERITAGE COMMISSION

NAHC HEADQUARTERS
1550 Harbor Boulevard
Suite 100
West Sacramento,
California 95691
(916) 373-3710
nahc@nahc.ca.gov
NAHC.ca.gov

September 27, 2022

Scott Donnell
City of Carlsbad, Planning Division
1635 Faraday Avenue
Carlsbad, CA 92008

Re: 2022090339, Housing Element Implementation and Public Safety Element Update Project, San Diego County

Dear Mr. Donnell:

The Native American Heritage Commission (NAHC) has received the Notice of Preparation (NOP), Draft Environmental Impact Report (DEIR) or Early Consultation for the project referenced above. The California Environmental Quality Act (CEQA) (Pub. Resources Code §21000 et seq.), specifically Public Resources Code §21084.1, states that a project that may cause a substantial adverse change in the significance of a historical resource, is a project that may have a significant effect on the environment. (Pub. Resources Code § 21084.1; Cal. Code Regs., tit.14, §15064.5 (b) (CEQA Guidelines §15064.5 (b)). If there is substantial evidence, in light of the whole record before a lead agency, that a project may have a significant effect on the environment, an Environmental Impact Report (EIR) shall be prepared. (Pub. Resources Code §21080 (d); Cal. Code Regs., tit. 14, § 5064 subd.(a)(1) (CEQA Guidelines §15064 (a)(1)). In order to determine whether a project will cause a substantial adverse change in the significance of a historical resource, a lead agency will need to determine whether there are historical resources within the area of potential effect (APE).

CEQA was amended significantly in 2014. Assembly Bill 52 (Gatto, Chapter 532, Statutes of 2014) (AB 52) amended CEQA to create a separate category of cultural resources, "tribal cultural resources" (Pub. Resources Code §21074) and provides that a project with an effect that may cause a substantial adverse change in the significance of a tribal cultural resource is a project that may have a significant effect on the environment. (Pub. Resources Code §21084.2). Public agencies shall, when feasible, avoid damaging effects to any tribal cultural resource. (Pub. Resources Code §21084.3 (a)). **AB 52 applies to any project for which a notice of preparation, a notice of negative declaration, or a mitigated negative declaration is filed on or after July 1, 2015.** If your project involves the adoption of or amendment to a general plan or a specific plan, or the designation or proposed designation of open space, on or after March 1, 2005, it may also be subject to Senate Bill 18 (Burton, Chapter 905, Statutes of 2004) (SB 18). **Both SB 18 and AB 52 have tribal consultation requirements**. If your project is also subject to the federal National Environmental Policy Act (42 U.S.C. § 4321 et seq.) (NEPA), the tribal consultation requirements of Section 106 of the National Historic Preservation Act of 1966 (154 U.S.C. 300101, 36 C.F.R. §800 et seq.) may also apply.

The NAHC recommends consultation with California Native American tribes that are traditionally and culturally affiliated with the geographic area of your proposed project as early as possible in order to avoid inadvertent discoveries of Native American human remains and best protect tribal cultural resources. Below is a brief summary of portions of AB 52 and SB 18 as well as the NAHC's recommendations for conducting cultural resources assessments.

Consult your legal counsel about compliance with AB 52 and SB 18 as well as compliance with any other applicable laws.

AB 52

AB 52 has added to CEQA the additional requirements listed below, along with many other requirements:

1. Fourteen Day Period to Provide Notice of Completion of an Application/Decision to Undertake a Project: Within fourteen (14) days of determining that an application for a project is complete or of a decision by a public agency to undertake a project, a lead agency shall provide formal notification to a designated contact of, or tribal representative of, traditionally and culturally affiliated California Native American tribes that have requested notice, to be accomplished by at least one written notice that includes:

- **a.** A brief description of the project.
- **b.** The lead agency contact information.
- **c.** Notification that the California Native American tribe has 30 days to request consultation. (Pub. Resources Code §21080.3.1 (d)).
- **d.** A "California Native American tribe" is defined as a Native American tribe located in California that is on the contact list maintained by the NAHC for the purposes of Chapter 905 of Statutes of 2004 (SB 18). (Pub. Resources Code §21073).

2. Begin Consultation Within 30 Days of Receiving a Tribe's Request for Consultation and Before Releasing a Negative Declaration, Mitigated Negative Declaration, or Environmental Impact Report: A lead agency shall begin the consultation process within 30 days of receiving a request for consultation from a California Native American tribe that is traditionally and culturally affiliated with the geographic area of the proposed project. (Pub. Resources Code §21080.3.1, subds. (d) and (e)) and prior to the release of a negative declaration, mitigated negative declaration or Environmental Impact Report. (Pub. Resources Code §21080.3.1(b)).

- **a.** For purposes of AB 52, "consultation shall have the same meaning as provided in Gov. Code §65352.4 (SB 18). (Pub. Resources Code §21080.3.1 (b)).

3. Mandatory Topics of Consultation If Requested by a Tribe: The following topics of consultation, if a tribe requests to discuss them, are mandatory topics of consultation:

- **a.** Alternatives to the project.
- **b.** Recommended mitigation measures.
- **c.** Significant effects. (Pub. Resources Code §21080.3.2 (a)).

4. Discretionary Topics of Consultation: The following topics are discretionary topics of consultation:

- **a.** Type of environmental review necessary.
- **b.** Significance of the tribal cultural resources.
- **c.** Significance of the project's impacts on tribal cultural resources.
- **d.** If necessary, project alternatives or appropriate measures for preservation or mitigation that the tribe may recommend to the lead agency. (Pub. Resources Code §21080.3.2 (a)).

5. Confidentiality of Information Submitted by a Tribe During the Environmental Review Process: With some exceptions, any information, including but not limited to, the location, description, and use of tribal cultural resources submitted by a California Native American tribe during the environmental review process shall not be included in the environmental document or otherwise disclosed by the lead agency or any other public agency to the public, consistent with Government Code §6254 (r) and §6254.10. Any information submitted by a California Native American tribe during the consultation or environmental review process shall be published in a confidential appendix to the environmental document unless the tribe that provided the information consents, in writing, to the disclosure of some or all of the information to the public. (Pub. Resources Code §21082.3 (c)(1)).

6. Discussion of Impacts to Tribal Cultural Resources in the Environmental Document: If a project may have a significant impact on a tribal cultural resource, the lead agency's environmental document shall discuss both of the following:

- **a.** Whether the proposed project has a significant impact on an identified tribal cultural resource.
- **b.** Whether feasible alternatives or mitigation measures, including those measures that may be agreed to pursuant to Public Resources Code §21082.3, subdivision (a), avoid or substantially lessen the impact on the identified tribal cultural resource. (Pub. Resources Code §21082.3 (b)).

7. Conclusion of Consultation: Consultation with a tribe shall be considered concluded when either of the following occurs:

a. The parties agree to measures to mitigate or avoid a significant effect, if a significant effect exists, on a tribal cultural resource; or

b. A party, acting in good faith and after reasonable effort, concludes that mutual agreement cannot be reached. (Pub. Resources Code §21080.3.2 (b)).

8. Recommending Mitigation Measures Agreed Upon in Consultation in the Environmental Document: Any mitigation measures agreed upon in the consultation conducted pursuant to Public Resources Code §21080.3.2 shall be recommended for inclusion in the environmental document and in an adopted mitigation monitoring and reporting program, if determined to avoid or lessen the impact pursuant to Public Resources Code §21082.3, subdivision (b), paragraph 2, and shall be fully enforceable. (Pub. Resources Code §21082.3 (a)).

9. Required Consideration of Feasible Mitigation: If mitigation measures recommended by the staff of the lead agency as a result of the consultation process are not included in the environmental document or if there are no agreed upon mitigation measures at the conclusion of consultation, or if consultation does not occur, and if substantial evidence demonstrates that a project will cause a significant effect to a tribal cultural resource, the lead agency shall consider feasible mitigation pursuant to Public Resources Code §21084.3 (b). (Pub. Resources Code §21082.3 (e)).

10. Examples of Mitigation Measures That, If Feasible, May Be Considered to Avoid or Minimize Significant Adverse Impacts to Tribal Cultural Resources:

a. Avoidance and preservation of the resources in place, including, but not limited to:

i. Planning and construction to avoid the resources and protect the cultural and natural context.

ii. Planning greenspace, parks, or other open space, to incorporate the resources with culturally appropriate protection and management criteria.

b. Treating the resource with culturally appropriate dignity, taking into account the tribal cultural values and meaning of the resource, including, but not limited to, the following:

i. Protecting the cultural character and integrity of the resource.

ii. Protecting the traditional use of the resource.

iii. Protecting the confidentiality of the resource.

c. Permanent conservation easements or other interests in real property, with culturally appropriate management criteria for the purposes of preserving or utilizing the resources or places.

d. Protecting the resource. (Pub. Resource Code §21084.3 (b)).

e. Please note that a federally recognized California Native American tribe or a non-federally recognized California Native American tribe that is on the contact list maintained by the NAHC to protect a California prehistoric, archaeological, cultural, spiritual, or ceremonial place may acquire and hold conservation easements if the conservation easement is voluntarily conveyed. (Civ. Code §815.3 (c)).

f. Please note that it is the policy of the state that Native American remains and associated grave artifacts shall be repatriated. (Pub. Resources Code §5097.991).

11. Prerequisites for Certifying an Environmental Impact Report or Adopting a Mitigated Negative Declaration or Negative Declaration with a Significant Impact on an Identified Tribal Cultural Resource: An Environmental Impact Report may not be certified, nor may a mitigated negative declaration or a negative declaration be adopted unless one of the following occurs:

a. The consultation process between the tribes and the lead agency has occurred as provided in Public Resources Code §21080.3.1 and §21080.3.2 and concluded pursuant to Public Resources Code §21080.3.2.

b. The tribe that requested consultation failed to provide comments to the lead agency or otherwise failed to engage in the consultation process.

c. The lead agency provided notice of the project to the tribe in compliance with Public Resources Code §21080.3.1 (d) and the tribe failed to request consultation within 30 days. (Pub. Resources Code §21082.3 (d)).

The NAHC's PowerPoint presentation titled, "Tribal Consultation Under AB 52: Requirements and Best Practices" may be found online at: http://nahc.ca.gov/wp-content/uploads/2015/10/AB52TribalConsultation_CalEPAPDF.pdf

SB 18

SB 18 applies to local governments and requires local governments to contact, provide notice to, refer plans to, and consult with tribes prior to the adoption or amendment of a general plan or a specific plan, or the designation of open space. (Gov. Code §65352.3). Local governments should consult the Governor's Office of Planning and Research's "Tribal Consultation Guidelines," which can be found online at: https://www.opr.ca.gov/docs/09_14_05_Updated_Guidelines_922.pdf.

Some of SB 18's provisions include:

1. Tribal Consultation: If a local government considers a proposal to adopt or amend a general plan or a specific plan, or to designate open space it is required to contact the appropriate tribes identified by the NAHC by requesting a "Tribal Consultation List." If a tribe, once contacted, requests consultation the local government must consult with the tribe on the plan proposal. **A tribe has 90 days from the date of receipt of notification to request consultation unless a shorter timeframe has been agreed to by the tribe.** (Gov. Code §65352.3 (a)(2)).

2. No Statutory Time Limit on SB 18 Tribal Consultation. There is no statutory time limit on SB 18 tribal consultation.

3. Confidentiality: Consistent with the guidelines developed and adopted by the Office of Planning and Research pursuant to Gov. Code §65040.2, the city or county shall protect the confidentiality of the information concerning the specific identity, location, character, and use of places, features and objects described in Public Resources Code §5097.9 and §5097.993 that are within the city's or county's jurisdiction. (Gov. Code §65352.3 (b)).

4. Conclusion of SB 18 Tribal Consultation: Consultation should be concluded at the point in which:

- **a.** The parties to the consultation come to a mutual agreement concerning the appropriate measures for preservation or mitigation; or
- **b.** Either the local government or the tribe, acting in good faith and after reasonable effort, concludes that mutual agreement cannot be reached concerning the appropriate measures of preservation or mitigation. (Tribal Consultation Guidelines, Governor's Office of Planning and Research (2005) at p. 18).

Agencies should be aware that neither AB 52 nor SB 18 precludes agencies from initiating tribal consultation with tribes that are traditionally and culturally affiliated with their jurisdictions before the timeframes provided in AB 52 and SB 18. For that reason, we urge you to continue to request Native American Tribal Contact Lists and "Sacred Lands File" searches from the NAHC. The request forms can be found online at: http://nahc.ca.gov/resources/forms/.

NAHC Recommendations for Cultural Resources Assessments

To adequately assess the existence and significance of tribal cultural resources and plan for avoidance, preservation in place, or barring both, mitigation of project-related impacts to tribal cultural resources, the NAHC recommends the following actions:

1. Contact the appropriate regional California Historical Research Information System (CHRIS) Center (https://ohp.parks.ca.gov/?page_id=30331) for an archaeological records search. The records search will determine:

- **a.** If part or all of the APE has been previously surveyed for cultural resources.
- **b.** If any known cultural resources have already been recorded on or adjacent to the APE.
- **c.** If the probability is low, moderate, or high that cultural resources are located in the APE.
- **d.** If a survey is required to determine whether previously unrecorded cultural resources are present.

2. If an archaeological inventory survey is required, the final stage is the preparation of a professional report detailing the findings and recommendations of the records search and field survey.

- **a.** The final report containing site forms, site significance, and mitigation measures should be submitted immediately to the planning department. All information regarding site locations, Native American human remains, and associated funerary objects should be in a separate confidential addendum and not be made available for public disclosure.
- **b.** The final written report should be submitted within 3 months after work has been completed to the appropriate regional CHRIS center.

3. Contact the NAHC for:

a. A Sacred Lands File search. Remember that tribes do not always record their sacred sites in the Sacred Lands File, nor are they required to do so. A Sacred Lands File search is not a substitute for consultation with tribes that are traditionally and culturally affiliated with the geographic area of the project's APE.

b. A Native American Tribal Consultation List of appropriate tribes for consultation concerning the project site and to assist in planning for avoidance, preservation in place, or, failing both, mitigation measures.

4. Remember that the lack of surface evidence of archaeological resources (including tribal cultural resources) does not preclude their subsurface existence.

a. Lead agencies should include in their mitigation and monitoring reporting program plan provisions for the identification and evaluation of inadvertently discovered archaeological resources per Cal. Code Regs., tit. 14, §15064.5(f) (CEQA Guidelines §15064.5(f)). In areas of identified archaeological sensitivity, a certified archaeologist and a culturally affiliated Native American with knowledge of cultural resources should monitor all ground-disturbing activities.

b. Lead agencies should include in their mitigation and monitoring reporting program plans provisions for the disposition of recovered cultural items that are not burial associated in consultation with culturally affiliated Native Americans.

c. Lead agencies should include in their mitigation and monitoring reporting program plans provisions for the treatment and disposition of inadvertently discovered Native American human remains. Health and Safety Code §7050.5, Public Resources Code §5097.98, and Cal. Code Regs., tit. 14, §15064.5, subdivisions (d) and (e) (CEQA Guidelines §15064.5, subds. (d) and (e)) address the processes to be followed in the event of an inadvertent discovery of any Native American human remains and associated grave goods in a location other than a dedicated cemetery.

If you have any questions or need additional information, please contact me at my email address: Pricilla.Torres-Fuentes@nahc.ca.gov.

Sincerely,

Pricilla Torres-Fuentes

Pricilla Torres-Fuentes
Cultural Resources Analyst

cc: State Clearinghouse

NATIVE AMERICAN HERITAGE COMMISSION

NAHC HEADQUARTERS
1550 Harbor Boulevard
Suite 100
West Sacramento,
California 95691
(916) 373-3710
nahc@nahc.ca.gov
NAHC.ca.gov

October 14, 2022

Scott Donnell
City of Carlsbad, Planning Division
1635 Faraday Avenue
Carlsbad, CA 92008

Re: 2022090339, Housing Element Implementation and Public Safety Element Update Project, San Diego County

Dear Mr. Donnell:

The Native American Heritage Commission (NAHC) has received the Notice of Preparation (NOP), Draft Environmental Impact Report (DEIR) or Early Consultation for the project referenced above. The California Environmental Quality Act (CEQA) (Pub. Resources Code §21000 et seq.), specifically Public Resources Code §21084.1, states that a project that may cause a substantial adverse change in the significance of a historical resource, is a project that may have a significant effect on the environment. (Pub. Resources Code § 21084.1; Cal. Code Regs., tit.14, §15064.5 (b) (CEQA Guidelines §15064.5 (b)). If there is substantial evidence, in light of the whole record before a lead agency, that a project may have a significant effect on the environment, an Environmental Impact Report (EIR) shall be prepared. (Pub. Resources Code §21080 (d); Cal. Code Regs., tit. 14, § 5064 subd.(a)(1) (CEQA Guidelines §15064 (a)(1)). In order to determine whether a project will cause a substantial adverse change in the significance of a historical resource, a lead agency will need to determine whether there are historical resources within the area of potential effect (APE).

CEQA was amended significantly in 2014. Assembly Bill 52 (Gatto, Chapter 532, Statutes of 2014) (AB 52) amended CEQA to create a separate category of cultural resources, "tribal cultural resources" (Pub. Resources Code §21074) and provides that a project with an effect that may cause a substantial adverse change in the significance of a tribal cultural resource is a project that may have a significant effect on the environment. (Pub. Resources Code §21084.2). Public agencies shall, when feasible, avoid damaging effects to any tribal cultural resource. (Pub. Resources Code §21084.3 (a)). **AB 52 applies to any project for which a notice of preparation, a notice of negative declaration, or a mitigated negative declaration is filed on or after July 1, 2015.** If your project involves the adoption of or amendment to a general plan or a specific plan, or the designation or proposed designation of open space, on or after March 1, 2005, it may also be subject to Senate Bill 18 (Burton, Chapter 905, Statutes of 2004) (SB 18). **Both SB 18 and AB 52 have tribal consultation requirements.** If your project is also subject to the federal National Environmental Policy Act (42 U.S.C. § 4321 et seq.) (NEPA), the tribal consultation requirements of Section 106 of the National Historic Preservation Act of 1966 (154 U.S.C. 300101, 36 C.F.R. §800 et seq.) may also apply.

The NAHC recommends consultation with California Native American tribes that are traditionally and culturally affiliated with the geographic area of your proposed project as early as possible in order to avoid inadvertent discoveries of Native American human remains and best protect tribal cultural resources. Below is a brief summary of portions of AB 52 and SB 18 as well as the NAHC's recommendations for conducting cultural resources assessments.

Consult your legal counsel about compliance with AB 52 and SB 18 as well as compliance with any other applicable laws.

AB 52

AB 52 has added to CEQA the additional requirements listed below, along with many other requirements:

1. Fourteen Day Period to Provide Notice of Completion of an Application/Decision to Undertake a Project: Within fourteen (14) days of determining that an application for a project is complete or of a decision by a public agency to undertake a project, a lead agency shall provide formal notification to a designated contact of, or tribal representative of, traditionally and culturally affiliated California Native American tribes that have requested notice, to be accomplished by at least one written notice that includes:

- **a.** A brief description of the project.
- **b.** The lead agency contact information.
- **c.** Notification that the California Native American tribe has 30 days to request consultation. (Pub. Resources Code §21080.3.1 (d)).
- **d.** A "California Native American tribe" is defined as a Native American tribe located in California that is on the contact list maintained by the NAHC for the purposes of Chapter 905 of Statutes of 2004 (SB 18). (Pub. Resources Code §21073).

2. Begin Consultation Within 30 Days of Receiving a Tribe's Request for Consultation and Before Releasing a Negative Declaration, Mitigated Negative Declaration, or Environmental Impact Report: A lead agency shall begin the consultation process within 30 days of receiving a request for consultation from a California Native American tribe that is traditionally and culturally affiliated with the geographic area of the proposed project. (Pub. Resources Code §21080.3.1, subds. (d) and (e)) and prior to the release of a negative declaration, mitigated negative declaration or Environmental Impact Report. (Pub. Resources Code §21080.3.1(b)).

- **a.** For purposes of AB 52, "consultation shall have the same meaning as provided in Gov. Code §65352.4 (SB 18). (Pub. Resources Code §21080.3.1 (b)).

3. Mandatory Topics of Consultation If Requested by a Tribe: The following topics of consultation, if a tribe requests to discuss them, are mandatory topics of consultation:

- **a.** Alternatives to the project.
- **b.** Recommended mitigation measures.
- **c.** Significant effects. (Pub. Resources Code §21080.3.2 (a)).

4. Discretionary Topics of Consultation: The following topics are discretionary topics of consultation:

- **a.** Type of environmental review necessary.
- **b.** Significance of the tribal cultural resources.
- **c.** Significance of the project's impacts on tribal cultural resources.
- **d.** If necessary, project alternatives or appropriate measures for preservation or mitigation that the tribe may recommend to the lead agency. (Pub. Resources Code §21080.3.2 (a)).

5. Confidentiality of Information Submitted by a Tribe During the Environmental Review Process: With some exceptions, any information, including but not limited to, the location, description, and use of tribal cultural resources submitted by a California Native American tribe during the environmental review process shall not be included in the environmental document or otherwise disclosed by the lead agency or any other public agency to the public, consistent with Government Code §6254 (r) and §6254.10. Any information submitted by a California Native American tribe during the consultation or environmental review process shall be published in a confidential appendix to the environmental document unless the tribe that provided the information consents, in writing, to the disclosure of some or all of the information to the public. (Pub. Resources Code §21082.3 (c)(1)).

6. Discussion of Impacts to Tribal Cultural Resources in the Environmental Document: If a project may have a significant impact on a tribal cultural resource, the lead agency's environmental document shall discuss both of the following:

- **a.** Whether the proposed project has a significant impact on an identified tribal cultural resource.
- **b.** Whether feasible alternatives or mitigation measures, including those measures that may be agreed to pursuant to Public Resources Code §21082.3, subdivision (a), avoid or substantially lessen the impact on the identified tribal cultural resource. (Pub. Resources Code §21082.3 (b)).

7. Conclusion of Consultation: Consultation with a tribe shall be considered concluded when either of the following occurs:

a. The parties agree to measures to mitigate or avoid a significant effect, if a significant effect exists, on a tribal cultural resource; or

b. A party, acting in good faith and after reasonable effort, concludes that mutual agreement cannot be reached. (Pub. Resources Code §21080.3.2 (b)).

8. Recommending Mitigation Measures Agreed Upon in Consultation in the Environmental Document: Any mitigation measures agreed upon in the consultation conducted pursuant to Public Resources Code §21080.3.2 shall be recommended for inclusion in the environmental document and in an adopted mitigation monitoring and reporting program, if determined to avoid or lessen the impact pursuant to Public Resources Code §21082.3, subdivision (b), paragraph 2, and shall be fully enforceable. (Pub. Resources Code §21082.3 (a)).

9. Required Consideration of Feasible Mitigation: If mitigation measures recommended by the staff of the lead agency as a result of the consultation process are not included in the environmental document or if there are no agreed upon mitigation measures at the conclusion of consultation, or if consultation does not occur, and if substantial evidence demonstrates that a project will cause a significant effect to a tribal cultural resource, the lead agency shall consider feasible mitigation pursuant to Public Resources Code §21084.3 (b). (Pub. Resources Code §21082.3 (e)).

10. Examples of Mitigation Measures That, If Feasible, May Be Considered to Avoid or Minimize Significant Adverse Impacts to Tribal Cultural Resources:

a. Avoidance and preservation of the resources in place, including, but not limited to:

i. Planning and construction to avoid the resources and protect the cultural and natural context.

ii. Planning greenspace, parks, or other open space, to incorporate the resources with culturally appropriate protection and management criteria.

b. Treating the resource with culturally appropriate dignity, taking into account the tribal cultural values and meaning of the resource, including, but not limited to, the following:

i. Protecting the cultural character and integrity of the resource.

ii. Protecting the traditional use of the resource.

iii. Protecting the confidentiality of the resource.

c. Permanent conservation easements or other interests in real property, with culturally appropriate management criteria for the purposes of preserving or utilizing the resources or places.

d. Protecting the resource. (Pub. Resource Code §21084.3 (b)).

e. Please note that a federally recognized California Native American tribe or a non-federally recognized California Native American tribe that is on the contact list maintained by the NAHC to protect a California prehistoric, archaeological, cultural, spiritual, or ceremonial place may acquire and hold conservation easements if the conservation easement is voluntarily conveyed. (Civ. Code §815.3 (c)).

f. Please note that it is the policy of the state that Native American remains and associated grave artifacts shall be repatriated. (Pub. Resources Code §5097.991).

11. Prerequisites for Certifying an Environmental Impact Report or Adopting a Mitigated Negative Declaration or Negative Declaration with a Significant Impact on an Identified Tribal Cultural Resource: An Environmental Impact Report may not be certified, nor may a mitigated negative declaration or a negative declaration be adopted unless one of the following occurs:

a. The consultation process between the tribes and the lead agency has occurred as provided in Public Resources Code §21080.3.1 and §21080.3.2 and concluded pursuant to Public Resources Code §21080.3.2.

b. The tribe that requested consultation failed to provide comments to the lead agency or otherwise failed to engage in the consultation process.

c. The lead agency provided notice of the project to the tribe in compliance with Public Resources Code §21080.3.1 (d) and the tribe failed to request consultation within 30 days. (Pub. Resources Code §21082.3 (d)).

The NAHC's PowerPoint presentation titled, "Tribal Consultation Under AB 52: Requirements and Best Practices" may be found online at: http://nahc.ca.gov/wp-content/uploads/2015/10/AB52TribalConsultation_CalEPAPDF.pdf

SB 18

SB 18 applies to local governments and requires local governments to contact, provide notice to, refer plans to, and consult with tribes prior to the adoption or amendment of a general plan or a specific plan, or the designation of open space. (Gov. Code §65352.3). Local governments should consult the Governor's Office of Planning and Research's "Tribal Consultation Guidelines," which can be found online at: https://www.opr.ca.gov/docs/09_14_05_Updated_Guidelines_922.pdf.

Some of SB 18's provisions include:

1. Tribal Consultation: If a local government considers a proposal to adopt or amend a general plan or a specific plan, or to designate open space it is required to contact the appropriate tribes identified by the NAHC by requesting a "Tribal Consultation List." If a tribe, once contacted, requests consultation the local government must consult with the tribe on the plan proposal. **A tribe has 90 days from the date of receipt of notification to request consultation unless a shorter timeframe has been agreed to by the tribe.** (Gov. Code §65352.3 (a)(2)).

2. No Statutory Time Limit on SB 18 Tribal Consultation. There is no statutory time limit on SB 18 tribal consultation.

3. Confidentiality: Consistent with the guidelines developed and adopted by the Office of Planning and Research pursuant to Gov. Code §65040.2, the city or county shall protect the confidentiality of the information concerning the specific identity, location, character, and use of places, features and objects described in Public Resources Code §5097.9 and §5097.993 that are within the city's or county's jurisdiction. (Gov. Code §65352.3 (b)).

4. Conclusion of SB 18 Tribal Consultation: Consultation should be concluded at the point in which:

- **a.** The parties to the consultation come to a mutual agreement concerning the appropriate measures for preservation or mitigation; or
- **b.** Either the local government or the tribe, acting in good faith and after reasonable effort, concludes that mutual agreement cannot be reached concerning the appropriate measures of preservation or mitigation. (Tribal Consultation Guidelines, Governor's Office of Planning and Research (2005) at p. 18).

Agencies should be aware that neither AB 52 nor SB 18 precludes agencies from initiating tribal consultation with tribes that are traditionally and culturally affiliated with their jurisdictions before the timeframes provided in AB 52 and SB 18. For that reason, we urge you to continue to request Native American Tribal Contact Lists and "Sacred Lands File" searches from the NAHC. The request forms can be found online at: http://nahc.ca.gov/resources/forms/.

NAHC Recommendations for Cultural Resources Assessments

To adequately assess the existence and significance of tribal cultural resources and plan for avoidance, preservation in place, or barring both, mitigation of project-related impacts to tribal cultural resources, the NAHC recommends the following actions:

1. Contact the appropriate regional California Historical Research Information System (CHRIS) Center (https://ohp.parks.ca.gov/?page_id=30331) for an archaeological records search. The records search will determine:

- **a.** If part or all of the APE has been previously surveyed for cultural resources.
- **b.** If any known cultural resources have already been recorded on or adjacent to the APE.
- **c.** If the probability is low, moderate, or high that cultural resources are located in the APE.
- **d.** If a survey is required to determine whether previously unrecorded cultural resources are present.

2. If an archaeological inventory survey is required, the final stage is the preparation of a professional report detailing the findings and recommendations of the records search and field survey.

- **a.** The final report containing site forms, site significance, and mitigation measures should be submitted immediately to the planning department. All information regarding site locations, Native American human remains, and associated funerary objects should be in a separate confidential addendum and not be made available for public disclosure.
- **b.** The final written report should be submitted within 3 months after work has been completed to the appropriate regional CHRIS center.

3. Contact the NAHC for:

a. A Sacred Lands File search. Remember that tribes do not always record their sacred sites in the Sacred Lands File, nor are they required to do so. A Sacred Lands File search is not a substitute for consultation with tribes that are traditionally and culturally affiliated with the geographic area of the project's APE.

b. A Native American Tribal Consultation List of appropriate tribes for consultation concerning the project site and to assist in planning for avoidance, preservation in place, or, failing both, mitigation measures.

4. Remember that the lack of surface evidence of archaeological resources (including tribal cultural resources) does not preclude their subsurface existence.

a. Lead agencies should include in their mitigation and monitoring reporting program plan provisions for the identification and evaluation of inadvertently discovered archaeological resources per Cal. Code Regs., tit. 14, §15064.5(f) (CEQA Guidelines §15064.5(f)). In areas of identified archaeological sensitivity, a certified archaeologist and a culturally affiliated Native American with knowledge of cultural resources should monitor all ground-disturbing activities.

b. Lead agencies should include in their mitigation and monitoring reporting program plans provisions for the disposition of recovered cultural items that are not burial associated in consultation with culturally affiliated Native Americans.

c. Lead agencies should include in their mitigation and monitoring reporting program plans provisions for the treatment and disposition of inadvertently discovered Native American human remains. Health and Safety Code §7050.5, Public Resources Code §5097.98, and Cal. Code Regs., tit. 14, §15064.5, subdivisions (d) and (e) (CEQA Guidelines §15064.5, subds. (d) and (e)) address the processes to be followed in the event of an inadvertent discovery of any Native American human remains and associated grave goods in a location other than a dedicated cemetery.

If you have any questions or need additional information, please contact me at my email address: Pricilla.Torres-Fuentes@nahc.ca.gov.

Sincerely,

Pricilla Torres-Fuentes

Pricilla Torres-Fuentes
Cultural Resources Analyst

cc: State Clearinghouse

From:	hopen51@att.net
To:	Scott Donnell
Subject:	Scoping Comments submitted by Citizens for a Friendly Airport
Date:	Wednesday, October 26, 2022 4:50:57 PM
Attachments:	2022-10-26 Scoping comments to Scott Donnell.pdf

---

Scott Donnell, Senior Planner
City of Carlsbad
Planning Division
1635 Faraday Ave.
Carlsbad, CA 92008
Scott.Donnell@carlsbadca.gov

Mr. Donnell,

Please see the attached document from Citizens for a Friendly Airport (C4FA). This is to go on record as our group's comment regarding RHNA Scoping. We hope consideration will be given specific to McClellan-Palomar Airport impact on the sites in the Airport Impact Area before any final decisions are determined.

Thank you for the opportunity to comment.

Sincerely,
Hope Nelson
Mary Anne Viney
Representing C4FA

From: Jim Plotkin
To: Scott Donnell
Subject: Site 8 Potential Housing
Date: Saturday, September 24, 2022 3:49:40 PM

Scott,

I do not know what type of feedback the city is looking for on this topic.

We are against the City expanding the Cottages and the proposed new apartment units nearby as well.

I live in Shorepointe (and very close to the Cottages) along with a few hundred other homes. I did not move here to have 500+ or so apartment units built right around the corner. The Cottages being expanded from 24 to 150 is crowded. This property is very close to our property. Recently we had two teenagers on our slope behind our house (near the cottages) smoking pot, littering and drinking. They were on private property. We are not looking for more trespassing due to the overcrowding nearby.

On top of that I was under the impression that there are 300 or more apartment units going in right next to the cottages and across the street. In addition, we already have 1 or 200 hundred low-income housing units across the street. I understand the state is mandating all of this housing, but shoving it in right on top of single-family developments is not the reason most or all of us moved into this area and neighborhood. When we purchased this home, our only concern was the airport noise not hundreds of new apartments. We have been in this neighborhood since March of 2002 and this area since 1997.

Maybe my stats or information are not spot on, but living in a nice neighborhood with 500 plus apartment units right on top of us is not my idea of why I live in this neighborhood or in Carlsbad. 24-hour fitness and their clients plus all of these apartments will create traffic issues and overcrowding. I doubt most City employees and council members are looking to move into a new neighborhood with 500 apartments right around the corner from their home.

If you're looking for different feedback, please advise.

Thanks,
Jim Plotkin
Calmeria Place

POTENTIAL HOUSING SITES

Site Number: 10 – Bressi Ranch Colt Place industrial parcel

City of Carlsbad

SITE DESCRIPTION

The site consists of a vacant 2.6-acre lot between the new Kensington at the Square townhomes to the east and the Staybridge Suites to the west. It is accessed from the north end of Colt Place and backs to Palomar Airport Road.

The lot has been previously graded. About .60 acre of the property along Palomar Airport Road is restricted by the McClellan-Palomar Airport Safety Zone 2, which allows only low-density residential development. This portion can count toward determining the site's density but cannot itself be developed with any dwelling units at the density proposed. None of the lot is impacted by airport noise such that residential construction would be precluded.

SITE FEATURES

- Vacant
- Graded
- Industrially designated
- Utilities accessible
- Airport constraints
- Close to services and jobs

SITE OPPORTUNITY

Under consideration are changes to the properties land use designation from PI, Planned Industrial, to R-23. The R-23 designation would permit a density range of 19 to 23 dwelling units per acre (du/ac). This density is the same as that applied to the Kensington at the Square townhomes to the east. Development of the parcel at the minimum density could potentially yield approximately 50 units.

The property owner is supportive of the designation change from PI to R-23, and a letter is attached.

To change the properties' designations to R-23, amendments to the General Plan, Zoning Ordinance, and Bressi Ranch Master Plan would be necessary and would require City Council approval. If the amendments were approved, industrial uses would no longer be permitted on the property.

The table below summarizes information about the site.

Parcels Numbers	213-262-17	**GMP Quadrant**	Southeast
Ownership	Private	**Parcel Size**	Approximately 2.6 acres
Current General Plan Designation	PI (Planned Industrial)	**Proposed General Plan Designation**	R-23 (Residential, 19 to 23 du/ac)
Current Residential Opportunity	0 units	**Proposed Residential Opportunity**	Approximately 50 units (at 19 du/ac)
Income category of units (based on minimum density)	Moderate		

HOWES | WEILER | LANDY
PLANNING & ENGINEERING

September 15, 2020

Don Neu, City Planner
City of Carlsbad – Planning Department
1635 Faraday Avenue,
Carlsbad, CA 92008

SUBJECT: Housing Element Update – Additional Site for Housing – Bressi Ranch – APN 213-262-17

Mr. Neu,

The purpose of this letter is to formally request that the Carlsbad Housing Element Advisory Committee and the Planning Department Staff consider an additional site for housing within the Bressi Ranch Master Plan area.

The requested site is located at the end of Colt Place on a vacant 2.6 acre parcel (APN 213-262-17) located between the existing Staybridge Suites hotel to the west and the Uptown Bressi residential project built by Shea Homes to the east. The proposed site location would be appropriate for high density residential.

The proposed project site meets many of the general plan goals, smart growth guidelines, comments made by the City Council and comments provided by the public.

Carlsbad General Plan - Land Use and Community Design

Goal 2 -G.1 – Promotes the "arrangement of varied uses that serve to protect and enhance the character and image of the city" by providing additional housing adjacent to existing high-density housing within a Master Planned Community already containing varied uses.

Goal 2 – G.2 – Promotes "a diversity of compatible land uses throughout the city to enable people to live close to job locations, adequate and convenient commercial services and public support systems such as transit, parks school and utilities". This project achieves all of these by being located within the Bressi Ranch Master Plan and adjacent to Palomar Airport Road.

Goal 2 – G.3 – Promotes "infill development that makes efficient use of limited land supply". The proposed site is one of the last remaining vacant properties in Bressi Ranch and would continue to enhance the Bressi Ranch overall all theme of a walkable community.

Goal 2 – G.4 – "Provide balanced neighborhoods with a variety of housing types and density ranges." The proposed density at am R-30 level would provide for a new higher density that further enhances the workforce housing desperately needed in this are of the City of Carlsbad.

Goals 2 – G.5 – "Protect the neighborhood atmosphere and identity of existing residential area." This site is located within the Bressi Ranch Master Plan and the master owner's association would help ensure the protection of the neighborhood atmosphere.

Smart Growth -

According to SANDAG, "Smart growth is a compact, efficient, and environmentally-sensitive urban development pattern. It focuses future growth and infill development close to jobs, services, and public facilities to maximize the use of existing infrastructure and preserve open space and natural resources. Smart growth is characterized by more compact, higher density development in urbanized areas throughout the region. These areas are walkable, bike-friendly, near public transit, and promote good community design, resulting in housing and transportation choices for those who live and work in these areas." This project site fits near perfectly into this definition. The location as specified previously is close to jobs, services and shopping. It is walkable, bike friendly and near public transportation and is adjacent to a major transit corridor.

City Council –

Provision of Workforce Housing – Similar to the General Plan Goal 2-G.2, the proposed site is located in very close proximity to many employment opportunities and the price point at the higher density should provide for more affordable type workforce housing.

Housing for Hospitality Sector – This proposed site would be located adjacent to two hotels.

Housing Along Transit Corridors – This proposed site is adjacent to Palomar Airport Road.

Public Comments –

Desire for Affordable Housing – Many comments expressed a desire for housing that is more affordable. This site proposes housing at a higher density and would therefore be more affordable.

Support for Housing in Industrial Areas – As a part of the survey questions, the highest-ranking location for new housing was "At vacant industrial sites that have been converted to residential use".

The current owner of this property also owns the hotels to the west and would like to provide the opportunity for his employees to live, work and shop in close proximity to the hotels. Additionally, this would also provide another opportunity for local employers to encourage their employees to live closer to their places of work. This will provide the ability to decrease VMTs and reduce carbon emissions. We believe support for such housing would be high within the Bressi Ranch employment centers.

Please include this location as a part of the list of properties to be reviewed by the Housing Element Advisory Committee. We appreciate your consideration of this request and look forward to working with the Housing Committee and City Staff on this effort. If you have any questions, please feel free to contact me.

Sincerely,

Stan Weiler, AICP
HWL - President

09

THIS MAP WAS PREPARED FOR ASSESSMENT PURPOSES ONLY. NO LIABILITY IS ASSUMED FOR THE ACCURACY OF THE DATA SHOWN. ASSESSOR'S PARCELS MAY NOT COMPLY WITH LOCAL SUBDIVISION OR BUILDING ORDINANCES.

SAN DIEGO COUNTY ASSESSOR'S MAP
213 — 26
SHT 3 OF 6
1" = 200'
11/9/2019 CS
Drawn: 03/24/05 By: MO From: 213-120

N

CHANGES

BLK	PRIOR APN	NEW APN	YR	CUT NO.
262		01 THRU 09	06	17
	01 THRU 05	10	07	1653
	10	11, 12, 13, 14 & CONDO	08	749
	11	15 THRU 17	15	1144
	06, 08, & 09	18 THRU 21	19	3
	07 & 18	22	19	1285
	22	22,23 SIDS & 24	20	562

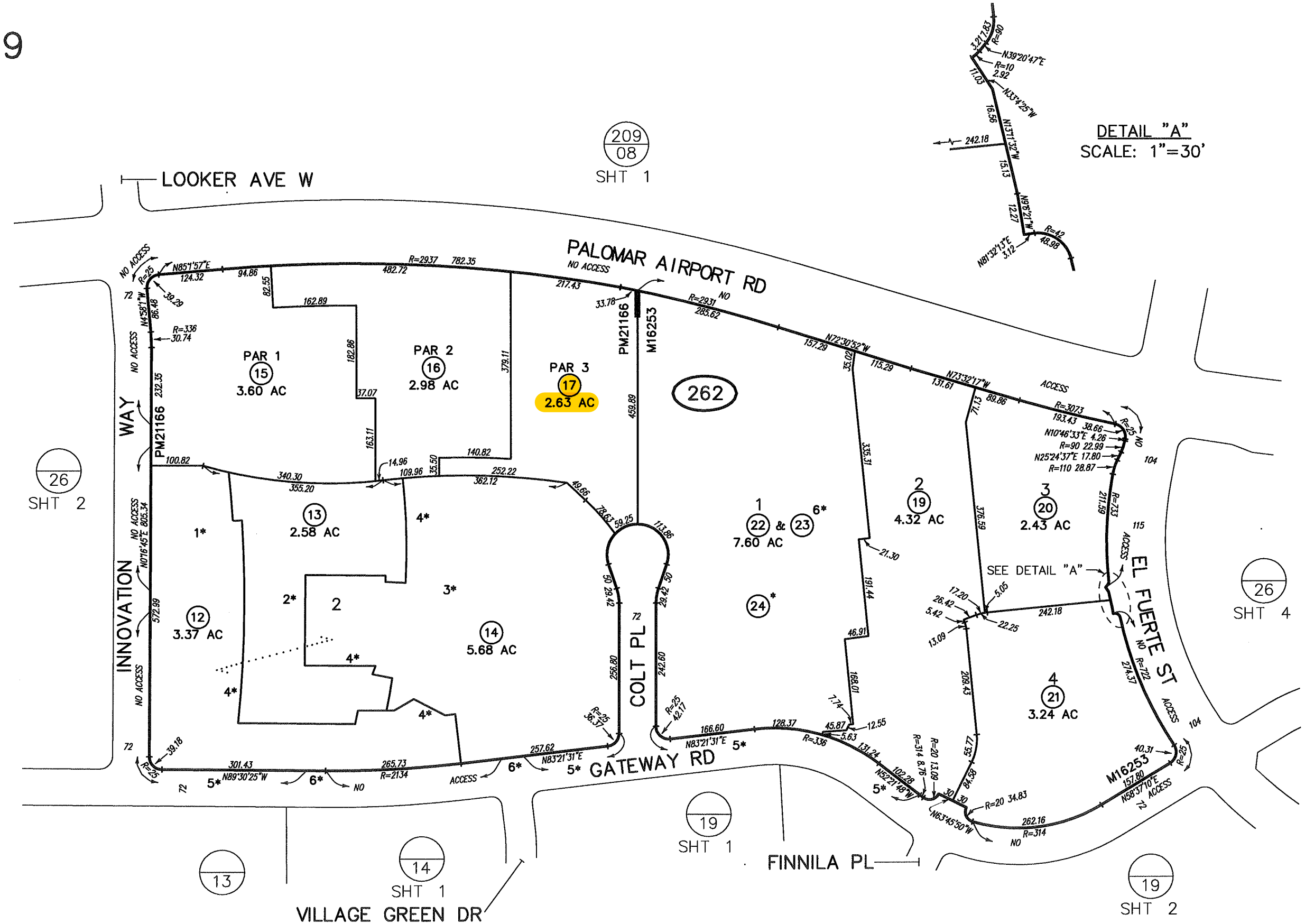

* COMMON AREA

1* CONDO
THE TOWERS AT BRESSI RANCH
PHASE I
DOC2007-0660041
(SEE SHT 5)

2* CONDO
THE TOWERS AT BRESSI RANCH
PHASE II
DOC2007-0667829
(SEE SHT 5)

3* CONDO
THE TOWERS AT BRESSI RANCH
PHASE III
DOC2007-0667830
(SEE SHT 5)

4* SEE CONDO PLANS FOR
BRGS & DISTS

5* NO ACCESS

6* CONDO
KENSINGTON AT THE SQUARE
DOC2019-0230474
(SEE SHT 6)

MAP 16253 – CARLSBAD TCT NO. 14-09 UPTOWN BRESSI RANCH
MAP 15630 – CARLSBAD TCT CT 06-20 THE TOWERS AT BRESSI RANCH
MAP 14960 – CARLSBAD TCT CT 02-15

POTENTIAL HOUSING SITES

Site Number: 11 – Bressi Ranch Gateway Road industrial parcels

City of Carlsbad

SITE DESCRIPTION

The site consists of two vacant industrial parcels south of Palomar Airport Road in Bressi Ranch. The adjacent parcels are along Gateway Road, just east of Pizza Port. The two parcels total about 5.33 acres.

There are no known physical constraints to development due to environmentally sensitive areas and the parcels are located outside the McClellan-Palomar Airport safety zones. Airport noise as well is not a constraint to residential development.

SITE FEATURES

- Vacant
- Graded
- Industrially designated
- Utilities accessible
- No site constraints
- Close to services and jobs

SITE OPPORTUNITY

Under consideration is a change of each property's land use designation from PI, Planned Industrial, to R-40, a new high-density residential land use designation. The R-40 designation would permit a density range of 37.5 to 40 dwelling units per acre (du/ac). This proposed designation is typical of apartments up to four to five stories tall. Together, both parcels could yield about 200 homes if developed at the minimum density.

The property owner is supportive of the designation change from PI to R-40.

To change the properties' designations to R-40, amendments to the General Plan, Zoning Ordinance, and Bressi Ranch Master Plan would be necessary and would require City Council approval. If the amendments were approved, industrial uses would no longer be permitted on the properties but would continue to be permitted on surrounding properties.

The table below summarizes information about the site, including affordability of the units that could yield from the site's development.

Parcels Numbers	213-263-19, 213-263-20	**GMP Quadrant**	Southeast
Ownership	Private	**Parcel Size**	Approximately 5.33 acres (both parcels)
Current General Plan Designation	PI (Planned Industrial)	**Proposed General Plan Designation**	R-40 (Residential, 37.5 to 40 du/ac)
Current Residential Opportunity	0 units	**Proposed Residential Opportunity**	Approximately 200 units (at 37.5 du/ac)
Income category of units (based on minimum density)	Lower		

From: willowbrookapple@aol.com
To: Scott Donnell
Subject: Site 14
Date: Friday, September 23, 2022 6:32:19 PM

Mr Donnell,

Thank you for the opportunity to express my concerns regarding the proposed 200 unit low income development near the village train station.
I bought a town home nearby for well over a million dollars. I feel we are being punishment doubly for buying close to transit. Not only do I hear the incessant train and buses and have to deal with the homeless, now it is an excuse to use expensive property close to the beach to meet state mandates. This area is already overwhelmed with problems. Please do not add 200 low cost units into the mix. This proposal will drive away the very people you want to live in the village. Those who can afford to support the local businesses year round. Do not create an undesirable area centered around transit. You will ultimately destroy the very thing our village needs, individuals happy to buy expensive housing which happens to come with lots of tax dollars for our beautiful city. Please help keep the village a place where people choose to live. I urge you to discontinue considering site 14.

Cheryl Swanson

Sent from the all new AOL app for Android

From: MIchael Kroopkin
To: Scott Donnell
Subject: site plan
Date: Friday, September 16, 2022 2:06:33 PM

Sorry I won't be able attend as that date is a major Jewish Holiday. However, I feel it is important to strongly protest the use of Site 4,, That area is always one of the most congested areas along ECR and to build multiple housing units there would only increase the problems, On paper it might look good but for everyone that lives in that general area it would be a major problem. I am asking that you reconsider for the good of the City.

Often I feel like my comments fall on deaf ears, I hope this is not one of those times.

Michael J. Kroopkin
2322 Masters Rd
760-931-6786

From: Christine Amato
To: Scott Donnell
Subject: Sites 10 & 11
Date: Saturday, October 22, 2022 3:02:15 PM

Hello Scott,

Please note this as on record for today, October 22, as your survey has been inactivated for input.

Please add to the public inquiry summary report on record as a no. Many homeowners have concerns with sites 10 and 11, and the impact of traffic on our private road and the environmental impact. Rezoning would be a huge negative due to the issues at hand. Our community is already dealing with inadequate street parking for overflow and guests, and many many people using our street to gain access to the shopping center. This is a hazard to our families as many children ride bikes and scooters in street

I will again reiterate a no to sites 10 and 11 in Carlsbad.

Christine Amato
Kensington At The Square
Resident and homeowner

Sent from my iPhone

From: MIchael Kroopkin
To: Scott Donnell
Subject: The environment
Date: Wednesday, October 12, 2022 3:41:14 PM

I know I have written before regarding my great concern over building low income housing on el Camino real. The impact of another possibility of a thousand more cars on ecr is very concerning not only from a traffic issue but for our environment. Carlsbad does not have a good situation regarding our air pollution both because of the high amount of traffic limited to just three east and west bound arteries but also because of the airport. Adding additional traffic is just adding to our already existing issues. Please reconsider any additional building along el Camino
There has to be a better way. Thank you Michael kroopkin 2322 masters rd.

Sent from my iPhone

From: Kervin Krause
To: Scott Donnell
Subject: The Shoppes Mall Property
Date: Friday, September 16, 2022 10:22:47 AM

Hello,

Please give us an update on the future plans at the Shoppes Mall location with so much potential. This is partly in response to the email sent about developing city-owned land. 5 years ago the council denied an application to develop our much-needed housing in such an amazing location! And this would actually offer the much needed affordable housing than the $1.5-2M condos taking over "The Village".

We enjoyed shopping at Westfield mall since the late '80s. Although now we do most of our shopping online, in The Village or along the PCH101 - although we do occasionally go to a movie or one of the restaurants here. We understand the city owns the parking lot. Our family feels this is an amazing yet underutilized location. So close to the 5 & 78 yet most of the parking lot sits empty most of the time. The transit area is dystopian in ugliness, it even feels dangerous at night being so far away from everything else.

Here is some further info I found on the proposed project.

“We would be taking a blighted area and a sea of asphalt into a walkable, livable community with additional green space for the community,” Goldman said.

Brian Harper, CEO of Rouse Properties, sent a letter to the city in March explaining why this development is a positive for the city and Rouse.

“We see The Shoppes at Carlsbad as the premiere multi-dimensional experience in the area and we believe the current improvements are simply the foundation for a first-class property,” Harper wrote. “The west end of the property, partially under city ownership, is currently a large and underutilized parking lot that represents surplus parking not required for the shopping center’s operations or compliance with city parking codes.”

https://thecoastnews.com/carlsbad-denies-application-for-mixed-use-development

Thank you,
Segovia-Krause Family
1220 Stratford Lane

Carlsbad Village by-the-Sea

know the content is safe.

Appendix B

Air Quality and Greenhouse Gas Emissions Modeling Results

Carlsbad GPU EIR v4 Detailed Report

Table of Contents

1. Basic Project Information

1.1. Basic Project Information

1.2. Land Use Types

1.3. User-Selected Emission Reduction Measures by Emissions Sector

2. Emissions Summary

2.4. Operations Emissions Compared Against Thresholds

2.5. Operations Emissions by Sector, Unmitigated

4. Operations Emissions Details

4.1. Mobile Emissions by Land Use

4.1.1. Unmitigated

4.2. Energy

4.2.1. Electricity Emissions By Land Use - Unmitigated

4.2.3. Natural Gas Emissions By Land Use - Unmitigated

4.3. Area Emissions by Source

4.3.2. Unmitigated

4.4. Water Emissions by Land Use

4.4.2. Unmitigated

4.5. Waste Emissions by Land Use

4.5.2. Unmitigated

4.6. Refrigerant Emissions by Land Use

4.6.1. Unmitigated

4.7. Offroad Emissions By Equipment Type

4.7.1. Unmitigated

4.8. Stationary Emissions By Equipment Type

4.8.1. Unmitigated

4.9. User Defined Emissions By Equipment Type

4.9.1. Unmitigated

4.10. Soil Carbon Accumulation By Vegetation Type

4.10.1. Soil Carbon Accumulation By Vegetation Type - Unmitigated

4.10.2. Above and Belowground Carbon Accumulation by Land Use Type - Unmitigated

4.10.3. Avoided and Sequestered Emissions by Species - Unmitigated

5. Activity Data

5.9. Operational Mobile Sources

5.9.1. Unmitigated

5.10. Operational Area Sources

5.10.1. Hearths

5.10.1.1. Unmitigated

5.10.2. Architectural Coatings

5.10.3. Landscape Equipment

5.11. Operational Energy Consumption

5.11.1. Unmitigated

5.12. Operational Water and Wastewater Consumption

5.12.1. Unmitigated

5.13. Operational Waste Generation

5.13.1. Unmitigated

5.14. Operational Refrigeration and Air Conditioning Equipment

5.14.1. Unmitigated

5.15. Operational Off-Road Equipment

5.15.1. Unmitigated

5.16. Stationary Sources

5.16.1. Emergency Generators and Fire Pumps

5.16.2. Process Boilers

5.17. User Defined

5.18. Vegetation

5.18.1. Land Use Change

5.18.1.1. Unmitigated

5.18.1. Biomass Cover Type

5.18.1.1. Unmitigated

5.18.2. Sequestration

5.18.2.1. Unmitigated

6. Climate Risk Detailed Report

6.1. Climate Risk Summary

6.2. Initial Climate Risk Scores

6.3. Adjusted Climate Risk Scores

6.4. Climate Risk Reduction Measures

7. Health and Equity Details

7.1. CalEnviroScreen 4.0 Scores

7.2. Healthy Places Index Scores

7.3. Overall Health & Equity Scores

7.4. Health & Equity Measures

7.5. Evaluation Scorecard

7.6. Health & Equity Custom Measures

8. User Changes to Default Data

1. Basic Project Information

1.1. Basic Project Information

Data Field	Value
Project Name	Carlsbad GPU EIR v4
Operational Year	2024
Lead Agency	—
Land Use Scale	Plan/community
Analysis Level for Defaults	County
Windspeed (m/s)	1.90
Precipitation (days)	21.8
Location	33.1599237850095, -117.34862128462754
County	San Diego
City	Carlsbad
Air District	San Diego County APCD
Air Basin	San Diego
TAZ	6228
EDFZ	12
Electric Utility	San Diego Gas & Electric
Gas Utility	San Diego Gas & Electric
App Version	2022.1.1.14

1.2. Land Use Types

Land Use Subtype	Size	Unit	Lot Acreage	Building Area (sq ft)	Landscape Area (sq ft)	Special Landscape Area (sq ft)	Population	Description
Apartments Mid Rise	3,295	Dwelling Unit	86.7	3,163,200	0.00	0.00	8,260	—

1.3. User-Selected Emission Reduction Measures by Emissions Sector

No measures selected

2. Emissions Summary

2.4. Operations Emissions Compared Against Thresholds

Criteria Pollutants (lb/day for daily, ton/yr for annual) and GHGs (lb/day for daily, MT/yr for annual)

Un/Mit.	TOG	ROG	NOx	CO	SO2	PM10E	PM10D	PM10T	PM2.5E	PM2.5D	PM2.5T	BCO2	NBCO2	CO2T	CH4	N2O	R	CO2e
Daily, Summer (Max)	—	—	—	—	—	—	—	—	—	—	—	—	—	—	—	—	—	—
Unmit.	5,177	5,156	164	7,014	13.0	859	139	998	855	35.2	891	92,935	230,103	323,038	210	12.2	688	332,621
Daily, Winter (Max)	—	—	—	—	—	—	—	—	—	—	—	—	—	—	—	—	—	—
Unmit.	5,159	5,139	167	6,745	12.9	859	139	998	855	35.2	891	92,935	221,900	314,835	210	12.5	39.9	323,852
Average Daily (Max)	—	—	—	—	—	—	—	—	—	—	—	—	—	—	—	—	—	—
Unmit.	1,193	1,239	91.3	2,022	4.14	194	139	333	193	35.2	229	21,985	193,735	215,720	144	7.40	310	221,845
Annual (Max)	—	—	—	—	—	—	—	—	—	—	—	—	—	—	—	—	—	—
Unmit.	218	226	16.7	369	0.76	35.5	25.4	60.8	35.3	6.43	41.7	3,640	32,075	35,715	23.9	1.23	51.3	36,729

2.5. Operations Emissions by Sector, Unmitigated

Criteria Pollutants (lb/day for daily, ton/yr for annual) and GHGs (lb/day for daily, MT/yr for annual)

Sector	TOG	ROG	NOx	CO	SO2	PM10E	PM10D	PM10T	PM2.5E	PM2.5D	PM2.5T	BCO2	NBCO2	CO2T	CH4	N2O	R	CO2e
Daily, Summer (Max)	—	—	—	—	—	—	—	—	—	—	—	—	—	—	—	—	—	—

Mobile	32.0	24.6	57.3	601	1.63	1.25	139	140	1.17	35.2	36.4	—	166,278	166,278	4.89	4.99	665	168,552
Area	5,144	5,131	100	6,411	11.3	858	—	858	854	—	854	91,508	38,658	130,166	84.5	6.57	—	134,235
Energy	0.69	0.34	5.89	2.51	0.04	0.48	—	0.48	0.48	—	0.48	—	24,001	24,001	1.67	0.14	—	24,083
Water	—	—	—	—	—	—	—	—	—	—	—	247	1,166	1,413	0.92	0.55	—	1,600
Waste	—	—	—	—	—	—	—	—	—	—	—	1,180	0.00	1,180	118	0.00	—	4,128
Refrig.	—	—	—	—	—	—	—	—	—	—	—	—	—	—	—	—	22.7	22.7
Total	5,177	5,156	164	7,014	13.0	859	139	998	855	35.2	891	92,935	230,103	323,038	210	12.2	688	332,621
Daily, Winter (Max)	—	—	—	—	—	—	—	—	—	—	—	—	—	—	—	—	—	—
Mobile	32.0	24.8	62.8	518	1.56	1.25	139	140	1.17	35.2	36.4	—	158,575	158,575	4.83	5.27	17.3	160,284
Area	5,126	5,114	98.5	6,225	11.3	858	—	858	854	—	854	91,508	38,159	129,666	84.4	6.57	—	133,734
Energy	0.69	0.34	5.89	2.51	0.04	0.48	—	0.48	0.48	—	0.48	—	24,001	24,001	1.67	0.14	—	24,083
Water	—	—	—	—	—	—	—	—	—	—	—	247	1,166	1,413	0.92	0.55	—	1,600
Waste	—	—	—	—	—	—	—	—	—	—	—	1,180	0.00	1,180	118	0.00	—	4,128
Refrig.	—	—	—	—	—	—	—	—	—	—	—	—	—	—	—	—	22.7	22.7
Total	5,159	5,139	167	6,745	12.9	859	139	998	855	35.2	891	92,935	221,900	314,835	210	12.5	39.9	323,852
Average Daily	—	—	—	—	—	—	—	—	—	—	—	—	—	—	—	—	—	—
Mobile	31.9	24.7	62.3	529	1.57	1.25	139	140	1.17	35.2	36.4	—	159,750	159,750	4.84	5.24	287	161,720
Area	1,161	1,214	23.0	1,490	2.54	193	—	193	192	—	192	20,558	8,819	29,377	19.0	1.48	—	30,292
Energy	0.69	0.34	5.89	2.51	0.04	0.48	—	0.48	0.48	—	0.48	—	24,001	24,001	1.67	0.14	—	24,083
Water	—	—	—	—	—	—	—	—	—	—	—	247	1,166	1,413	0.92	0.55	—	1,600
Waste	—	—	—	—	—	—	—	—	—	—	—	1,180	0.00	1,180	118	0.00	—	4,128
Refrig.	—	—	—	—	—	—	—	—	—	—	—	—	—	—	—	—	22.7	22.7
Total	1,193	1,239	91.3	2,022	4.14	194	139	333	193	35.2	229	21,985	193,735	215,720	144	7.40	310	221,845
Annual	—	—	—	—	—	—	—	—	—	—	—	—	—	—	—	—	—	—
Mobile	5.83	4.51	11.4	96.5	0.29	0.23	25.4	25.6	0.21	6.43	6.65	—	26,448	26,448	0.80	0.87	47.6	26,775
Area	212	222	4.20	272	0.46	35.2	—	35.2	35.0	—	35.0	3,404	1,460	4,864	3.14	0.24	—	5,015

Energy	0.13	0.06	1.07	0.46	0.01	0.09	—	0.09	0.09	—	0.09	—	3,974	3,974	0.28	0.02	—	3,987
Water	—	—	—	—	—	—	—	—	—	—	—	41.0	193	234	0.15	0.09	—	265
Waste	—	—	—	—	—	—	—	—	—	—	—	195	0.00	195	19.5	0.00	—	683
Refrig.	—	—	—	—	—	—	—	—	—	—	—	—	—	—	—	—	3.75	3.75
Total	218	226	16.7	369	0.76	35.5	25.4	60.8	35.3	6.43	41.7	3,640	32,075	35,715	23.9	1.23	51.3	36,729

4. Operations Emissions Details

4.1. Mobile Emissions by Land Use

4.1.1. Unmitigated

Mobile source emissions results are presented in Sections 2.6. No further detailed breakdown of emissions is available.

4.2. Energy

4.2.1. Electricity Emissions By Land Use - Unmitigated

Criteria Pollutants (lb/day for daily, ton/yr for annual) and GHGs (lb/day for daily, MT/yr for annual)

Land Use	TOG	ROG	NOx	CO	SO2	PM10E	PM10D	PM10T	PM2.5E	PM2.5D	PM2.5T	BCO2	NBCO2	CO2T	CH4	N2O	R	CO2e
Daily, Summer (Max)	—	—	—	—	—	—	—	—	—	—	—	—	—	—	—	—	—	—
Apartments Mid Rise	—	—	—	—	—	—	—	—	—	—	—	—	16,526	16,526	1.01	0.12	—	16,588
Total	—	—	—	—	—	—	—	—	—	—	—	—	16,526	16,526	1.01	0.12	—	16,588
Daily, Winter (Max)	—	—	—	—	—	—	—	—	—	—	—	—	—	—	—	—	—	—
Apartments Mid Rise	—	—	—	—	—	—	—	—	—	—	—	—	16,526	16,526	1.01	0.12	—	16,588

Total	—	—	—	—	—	—	—	—	—	—	—	—	16,526	16,526	1.01	0.12	—	16,588
Annual	—	—	—	—	—	—	—	—	—	—	—	—	—	—	—	—	—	—
Apartments Mid Rise	—	—	—	—	—	—	—	—	—	—	—	—	2,736	2,736	0.17	0.02	—	2,746
Total	—	—	—	—	—	—	—	—	—	—	—	—	2,736	2,736	0.17	0.02	—	2,746

4.2.3. Natural Gas Emissions By Land Use - Unmitigated

Criteria Pollutants (lb/day for daily, ton/yr for annual) and GHGs (lb/day for daily, MT/yr for annual)

Land Use	TOG	ROG	NOx	CO	SO2	PM10E	PM10D	PM10T	PM2.5E	PM2.5D	PM2.5T	BCO2	NBCO2	CO2T	CH4	N2O	R	CO2e
Daily, Summer (Max)	—	—	—	—	—	—	—	—	—	—	—	—	—	—	—	—	—	—
Apartments Mid Rise	0.69	0.34	5.89	2.51	0.04	0.48	—	0.48	0.48	—	0.48	—	7,475	7,475	0.66	0.01	—	7,496
Total	0.69	0.34	5.89	2.51	0.04	0.48	—	0.48	0.48	—	0.48	—	7,475	7,475	0.66	0.01	—	7,496
Daily, Winter (Max)	—	—	—	—	—	—	—	—	—	—	—	—	—	—	—	—	—	—
Apartments Mid Rise	0.69	0.34	5.89	2.51	0.04	0.48	—	0.48	0.48	—	0.48	—	7,475	7,475	0.66	0.01	—	7,496
Total	0.69	0.34	5.89	2.51	0.04	0.48	—	0.48	0.48	—	0.48	—	7,475	7,475	0.66	0.01	—	7,496
Annual	—	—	—	—	—	—	—	—	—	—	—	—	—	—	—	—	—	—
Apartments Mid Rise	0.13	0.06	1.07	0.46	0.01	0.09	—	0.09	0.09	—	0.09	—	1,238	1,238	0.11	< 0.005	—	1,241
Total	0.13	0.06	1.07	0.46	0.01	0.09	—	0.09	0.09	—	0.09	—	1,238	1,238	0.11	< 0.005	—	1,241

4.3. Area Emissions by Source

4.3.2. Unmitigated

Criteria Pollutants (lb/day for daily, ton/yr for annual) and GHGs (lb/day for daily, MT/yr for annual)

Source	TOG	ROG	NOx	CO	SO2	PM10E	PM10D	PM10T	PM2.5E	PM2.5D	PM2.5T	BCO2	NBCO2	CO2T	CH4	N2O	R	CO2e
Daily, Summer (Max)	—	—	—	—	—	—	—	—	—	—	—	—	—	—	—	—	—	—
Hearths	5,126	5,041	98.5	6,225	11.3	858	—	858	854	—	854	91,508	38,159	129,666	84.4	6.57	—	133,734
Consumer Products	—	67.7	—	—	—	—	—	—	—	—	—	—	—	—	—	—	—	—
Architectural Coatings	—	5.42	—	—	—	—	—	—	—	—	—	—	—	—	—	—	—	—
Landscape Equipment	18.0	17.1	1.85	186	0.01	0.07	—	0.07	0.10	—	0.10	—	500	500	0.02	< 0.005	—	502
Total	5,144	5,131	100	6,411	11.3	858	—	858	854	—	854	91,508	38,658	130,166	84.5	6.57	—	134,235
Daily, Winter (Max)	—	—	—	—	—	—	—	—	—	—	—	—	—	—	—	—	—	—
Hearths	5,126	5,041	98.5	6,225	11.3	858	—	858	854	—	854	91,508	38,159	129,666	84.4	6.57	—	133,734
Consumer Products	—	67.7	—	—	—	—	—	—	—	—	—	—	—	—	—	—	—	—
Architectural Coatings	—	5.42	—	—	—	—	—	—	—	—	—	—	—	—	—	—	—	—
Total	5,126	5,114	98.5	6,225	11.3	858	—	858	854	—	854	91,508	38,159	129,666	84.4	6.57	—	133,734
Annual	—	—	—	—	—	—	—	—	—	—	—	—	—	—	—	—	—	—
Hearths	210	207	4.04	255	0.46	35.2	—	35.2	35.0	—	35.0	3,404	1,419	4,823	3.14	0.24	—	4,974

Consumer Products	—	12.4	—	—	—	—	—	—	—	—	—	—	—	—	—	—	—	—
Architectural Coatings	—	0.99	—	—	—	—	—	—	—	—	—	—	—	—	—	—	—	—
Landscape Equipment	1.62	1.54	0.17	16.8	< 0.005	0.01	—	0.01	0.01	—	0.01	—	40.8	40.8	< 0.005	< 0.005	—	41.0
Total	212	222	4.20	272	0.46	35.2	—	35.2	35.0	—	35.0	3,404	1,460	4,864	3.14	0.24	—	5,015

4.4. Water Emissions by Land Use

4.4.2. Unmitigated

Criteria Pollutants (lb/day for daily, ton/yr for annual) and GHGs (lb/day for daily, MT/yr for annual)

Land Use	TOG	ROG	NOx	CO	SO2	PM10E	PM10D	PM10T	PM2.5E	PM2.5D	PM2.5T	BCO2	NBCO2	CO2T	CH4	N2O	R	CO2e
Daily, Summer (Max)	—	—	—	—	—	—	—	—	—	—	—	—	—	—	—	—	—	—
Apartments Mid Rise	—	—	—	—	—	—	—	—	—	—	—	247	1,166	1,413	0.92	0.55	—	1,600
Total	—	—	—	—	—	—	—	—	—	—	—	247	1,166	1,413	0.92	0.55	—	1,600
Daily, Winter (Max)	—	—	—	—	—	—	—	—	—	—	—	—	—	—	—	—	—	—
Apartments Mid Rise	—	—	—	—	—	—	—	—	—	—	—	247	1,166	1,413	0.92	0.55	—	1,600
Total	—	—	—	—	—	—	—	—	—	—	—	247	1,166	1,413	0.92	0.55	—	1,600
Annual	—	—	—	—	—	—	—	—	—	—	—	—	—	—	—	—	—	—

Apartme Mid Rise	—	—	—	—	—	—	—	—	—	—	—	41.0	193	234	0.15	0.09	—	265
Total	—	—	—	—	—	—	—	—	—	—	—	41.0	193	234	0.15	0.09	—	265

4.5. Waste Emissions by Land Use

4.5.2. Unmitigated

Criteria Pollutants (lb/day for daily, ton/yr for annual) and GHGs (lb/day for daily, MT/yr for annual)

Land Use	TOG	ROG	NOx	CO	SO2	PM10E	PM10D	PM10T	PM2.5E	PM2.5D	PM2.5T	BCO2	NBCO2	CO2T	CH4	N2O	R	CO2e
Daily, Summer (Max)	—	—	—	—	—	—	—	—	—	—	—	—	—	—	—	—	—	—
Apartme nts Mid Rise	—	—	—	—	—	—	—	—	—	—	—	1,180	0.00	1,180	118	0.00	—	4,128
Total	—	—	—	—	—	—	—	—	—	—	—	1,180	0.00	1,180	118	0.00	—	4,128
Daily, Winter (Max)	—	—	—	—	—	—	—	—	—	—	—	—	—	—	—	—	—	—
Apartme nts Mid Rise	—	—	—	—	—	—	—	—	—	—	—	1,180	0.00	1,180	118	0.00	—	4,128
Total	—	—	—	—	—	—	—	—	—	—	—	1,180	0.00	1,180	118	0.00	—	4,128
Annual	—	—	—	—	—	—	—	—	—	—	—	—	—	—	—	—	—	—
Apartme nts Mid Rise	—	—	—	—	—	—	—	—	—	—	—	195	0.00	195	19.5	0.00	—	683
Total	—	—	—	—	—	—	—	—	—	—	—	195	0.00	195	19.5	0.00	—	683

4.6. Refrigerant Emissions by Land Use

4.6.1. Unmitigated

Criteria Pollutants (lb/day for daily, ton/yr for annual) and GHGs (lb/day for daily, MT/yr for annual)

Land Use	TOG	ROG	NOx	CO	SO2	PM10E	PM10D	PM10T	PM2.5E	PM2.5D	PM2.5T	BCO2	NBCO2	CO2T	CH4	N2O	R	CO2e
Daily, Summer (Max)	—	—	—	—	—	—	—	—	—	—	—	—	—	—	—	—	—	—
Apartments Mid Rise	—	—	—	—	—	—	—	—	—	—	—	—	—	—	—	—	22.7	22.7
Total	—	—	—	—	—	—	—	—	—	—	—	—	—	—	—	—	22.7	22.7
Daily, Winter (Max)	—	—	—	—	—	—	—	—	—	—	—	—	—	—	—	—	—	—
Apartments Mid Rise	—	—	—	—	—	—	—	—	—	—	—	—	—	—	—	—	22.7	22.7
Total	—	—	—	—	—	—	—	—	—	—	—	—	—	—	—	—	22.7	22.7
Annual	—	—	—	—	—	—	—	—	—	—	—	—	—	—	—	—	—	—
Apartments Mid Rise	—	—	—	—	—	—	—	—	—	—	—	—	—	—	—	—	3.75	3.75
Total	—	—	—	—	—	—	—	—	—	—	—	—	—	—	—	—	3.75	3.75

4.7. Offroad Emissions By Equipment Type

4.7.1. Unmitigated

Criteria Pollutants (lb/day for daily, ton/yr for annual) and GHGs (lb/day for daily, MT/yr for annual)

Equipment Type	TOG	ROG	NOx	CO	SO2	PM10E	PM10D	PM10T	PM2.5E	PM2.5D	PM2.5T	BCO2	NBCO2	CO2T	CH4	N2O	R	CO2e

Daily, Summer (Max)	—	—	—	—	—	—	—	—	—	—	—	—	—	—	—	—	—	—
Total	—	—	—	—	—	—	—	—	—	—	—	—	—	—	—	—	—	—
Daily, Winter (Max)	—	—	—	—	—	—	—	—	—	—	—	—	—	—	—	—	—	—
Total	—	—	—	—	—	—	—	—	—	—	—	—	—	—	—	—	—	—
Annual	—	—	—	—	—	—	—	—	—	—	—	—	—	—	—	—	—	—
Total	—	—	—	—	—	—	—	—	—	—	—	—	—	—	—	—	—	—

4.8. Stationary Emissions By Equipment Type

4.8.1. Unmitigated

Criteria Pollutants (lb/day for daily, ton/yr for annual) and GHGs (lb/day for daily, MT/yr for annual)

Equipment Type	TOG	ROG	NOx	CO	SO2	PM10E	PM10D	PM10T	PM2.5E	PM2.5D	PM2.5T	BCO2	NBCO2	CO2T	CH4	N2O	R	CO2e
Daily, Summer (Max)	—	—	—	—	—	—	—	—	—	—	—	—	—	—	—	—	—	—
Total	—	—	—	—	—	—	—	—	—	—	—	—	—	—	—	—	—	—
Daily, Winter (Max)	—	—	—	—	—	—	—	—	—	—	—	—	—	—	—	—	—	—
Total	—	—	—	—	—	—	—	—	—	—	—	—	—	—	—	—	—	—
Annual	—	—	—	—	—	—	—	—	—	—	—	—	—	—	—	—	—	—
Total	—	—	—	—	—	—	—	—	—	—	—	—	—	—	—	—	—	—

4.9. User Defined Emissions By Equipment Type

4.9.1. Unmitigated

Criteria Pollutants (lb/day for daily, ton/yr for annual) and GHGs (lb/day for daily, MT/yr for annual)

Equipment Type	TOG	ROG	NOx	CO	SO2	PM10E	PM10D	PM10T	PM2.5E	PM2.5D	PM2.5T	BCO2	NBCO2	CO2T	CH4	N2O	R	CO2e
Daily, Summer (Max)	—	—	—	—	—	—	—	—	—	—	—	—	—	—	—	—	—	—
Total	—	—	—	—	—	—	—	—	—	—	—	—	—	—	—	—	—	—
Daily, Winter (Max)	—	—	—	—	—	—	—	—	—	—	—	—	—	—	—	—	—	—
Total	—	—	—	—	—	—	—	—	—	—	—	—	—	—	—	—	—	—
Annual	—	—	—	—	—	—	—	—	—	—	—	—	—	—	—	—	—	—
Total	—	—	—	—	—	—	—	—	—	—	—	—	—	—	—	—	—	—

4.10. Soil Carbon Accumulation By Vegetation Type

4.10.1. Soil Carbon Accumulation By Vegetation Type - Unmitigated

Criteria Pollutants (lb/day for daily, ton/yr for annual) and GHGs (lb/day for daily, MT/yr for annual)

Vegetation	TOG	ROG	NOx	CO	SO2	PM10E	PM10D	PM10T	PM2.5E	PM2.5D	PM2.5T	BCO2	NBCO2	CO2T	CH4	N2O	R	CO2e
Daily, Summer (Max)	—	—	—	—	—	—	—	—	—	—	—	—	—	—	—	—	—	—
Total	—	—	—	—	—	—	—	—	—	—	—	—	—	—	—	—	—	—
Daily, Winter (Max)	—	—	—	—	—	—	—	—	—	—	—	—	—	—	—	—	—	—
Total	—	—	—	—	—	—	—	—	—	—	—	—	—	—	—	—	—	—
Annual	—	—	—	—	—	—	—	—	—	—	—	—	—	—	—	—	—	—

Total	—	—	—	—	—	—	—	—	—	—	—	—	—	—	—	—	—	—

4.10.2. Above and Belowground Carbon Accumulation by Land Use Type - Unmitigated

Criteria Pollutants (lb/day for daily, ton/yr for annual) and GHGs (lb/day for daily, MT/yr for annual)

Land Use	TOG	ROG	NOx	CO	SO2	PM10E	PM10D	PM10T	PM2.5E	PM2.5D	PM2.5T	BCO2	NBCO2	CO2T	CH4	N2O	R	CO2e
Daily, Summer (Max)	—	—	—	—	—	—	—	—	—	—	—	—	—	—	—	—	—	—
Total	—	—	—	—	—	—	—	—	—	—	—	—	—	—	—	—	—	—
Daily, Winter (Max)	—	—	—	—	—	—	—	—	—	—	—	—	—	—	—	—	—	—
Total	—	—	—	—	—	—	—	—	—	—	—	—	—	—	—	—	—	—
Annual	—	—	—	—	—	—	—	—	—	—	—	—	—	—	—	—	—	—
Total	—	—	—	—	—	—	—	—	—	—	—	—	—	—	—	—	—	—

4.10.3. Avoided and Sequestered Emissions by Species - Unmitigated

Criteria Pollutants (lb/day for daily, ton/yr for annual) and GHGs (lb/day for daily, MT/yr for annual)

Species	TOG	ROG	NOx	CO	SO2	PM10E	PM10D	PM10T	PM2.5E	PM2.5D	PM2.5T	BCO2	NBCO2	CO2T	CH4	N2O	R	CO2e
Daily, Summer (Max)	—	—	—	—	—	—	—	—	—	—	—	—	—	—	—	—	—	—
Avoided	—	—	—	—	—	—	—	—	—	—	—	—	—	—	—	—	—	—
Subtotal	—	—	—	—	—	—	—	—	—	—	—	—	—	—	—	—	—	—
Sequestered	—	—	—	—	—	—	—	—	—	—	—	—	—	—	—	—	—	—
Subtotal	—	—	—	—	—	—	—	—	—	—	—	—	—	—	—	—	—	—
Removed	—	—	—	—	—	—	—	—	—	—	—	—	—	—	—	—	—	—

Subtotal	—	—	—	—	—	—	—	—	—	—	—	—	—	—	—	—	—	—
—	—	—	—	—	—	—	—	—	—	—	—	—	—	—	—	—	—	—
Daily, Winter (Max)	—	—	—	—	—	—	—	—	—	—	—	—	—	—	—	—	—	—
Avoided	—	—	—	—	—	—	—	—	—	—	—	—	—	—	—	—	—	—
Subtotal	—	—	—	—	—	—	—	—	—	—	—	—	—	—	—	—	—	—
Sequestered	—	—	—	—	—	—	—	—	—	—	—	—	—	—	—	—	—	—
Subtotal	—	—	—	—	—	—	—	—	—	—	—	—	—	—	—	—	—	—
Removed	—	—	—	—	—	—	—	—	—	—	—	—	—	—	—	—	—	—
Subtotal	—	—	—	—	—	—	—	—	—	—	—	—	—	—	—	—	—	—
—	—	—	—	—	—	—	—	—	—	—	—	—	—	—	—	—	—	—
Annual	—	—	—	—	—	—	—	—	—	—	—	—	—	—	—	—	—	—
Avoided	—	—	—	—	—	—	—	—	—	—	—	—	—	—	—	—	—	—
Subtotal	—	—	—	—	—	—	—	—	—	—	—	—	—	—	—	—	—	—
Sequestered	—	—	—	—	—	—	—	—	—	—	—	—	—	—	—	—	—	—
Subtotal	—	—	—	—	—	—	—	—	—	—	—	—	—	—	—	—	—	—
Removed	—	—	—	—	—	—	—	—	—	—	—	—	—	—	—	—	—	—
Subtotal	—	—	—	—	—	—	—	—	—	—	—	—	—	—	—	—	—	—
—	—	—	—	—	—	—	—	—	—	—	—	—	—	—	—	—	—	—

5. Activity Data

5.9. Operational Mobile Sources

5.9.1. Unmitigated

Land Use Type	Trips/Weekday	Trips/Saturday	Trips/Sunday	Trips/Year	VMT/Weekday	VMT/Saturday	VMT/Sunday	VMT/Year
Total all Land Uses	0.00	0.00	0.00	0.00	196,730	196,730	196,730	71,806,450

5.10. Operational Area Sources

5.10.1. Hearths

5.10.1.1. Unmitigated

Hearth Type	Unmitigated (number)
Apartments Mid Rise	—
Wood Fireplaces	1153
Gas Fireplaces	1812
Propane Fireplaces	0
Electric Fireplaces	0
No Fireplaces	330
Conventional Wood Stoves	0
Catalytic Wood Stoves	165
Non-Catalytic Wood Stoves	165
Pellet Wood Stoves	0

5.10.2. Architectural Coatings

Residential Interior Area Coated (sq ft)	Residential Exterior Area Coated (sq ft)	Non-Residential Interior Area Coated (sq ft)	Non-Residential Exterior Area Coated (sq ft)	Parking Area Coated (sq ft)
6405480	2,135,160	0.00	0.00	—

5.10.3. Landscape Equipment

Season	Unit	Value

Snow Days	day/yr	0.00
Summer Days	day/yr	180

5.11. Operational Energy Consumption

5.11.1. Unmitigated

Electricity (kWh/yr) and CO2 and CH4 and N2O and Natural Gas (kBTU/yr)

Land Use	Electricity (kWh/yr)	CO2	CH4	N2O	Natural Gas (kBTU/yr)
Apartments Mid Rise	11,172,916	540	0.0330	0.0040	23,323,448

5.12. Operational Water and Wastewater Consumption

5.12.1. Unmitigated

Land Use	Indoor Water (gal/year)	Outdoor Water (gal/year)
Apartments Mid Rise	115,763,482	0.00

5.13. Operational Waste Generation

5.13.1. Unmitigated

Land Use	Waste (ton/year)	Cogeneration (kWh/year)
Apartments Mid Rise	2,189	—

5.14. Operational Refrigeration and Air Conditioning Equipment

5.14.1. Unmitigated

Land Use Type	Equipment Type	Refrigerant	GWP	Quantity (kg)	Operations Leak Rate	Service Leak Rate	Times Serviced

Apartments Mid Rise	Average room A/C & Other residential A/C and heat pumps	R-410A	2,088	< 0.005	2.50	2.50	10.0
Apartments Mid Rise	Household refrigerators and/or freezers	R-134a	1,430	0.12	0.60	0.00	1.00

5.15. Operational Off-Road Equipment

5.15.1. Unmitigated

Equipment Type	Fuel Type	Engine Tier	Number per Day	Hours Per Day	Horsepower	Load Factor

5.16. Stationary Sources

5.16.1. Emergency Generators and Fire Pumps

Equipment Type	Fuel Type	Number per Day	Hours per Day	Hours per Year	Horsepower	Load Factor

5.16.2. Process Boilers

Equipment Type	Fuel Type	Number	Boiler Rating (MMBtu/hr)	Daily Heat Input (MMBtu/day)	Annual Heat Input (MMBtu/yr)

5.17. User Defined

Equipment Type	Fuel Type
—	—

5.18. Vegetation

5.18.1. Land Use Change

5.18.1.1. Unmitigated

Vegetation Land Use Type	Vegetation Soil Type	Initial Acres	Final Acres

5.18.1. Biomass Cover Type

5.18.1.1. Unmitigated

Biomass Cover Type	Initial Acres	Final Acres

5.18.2. Sequestration

5.18.2.1. Unmitigated

Tree Type	Number	Electricity Saved (kWh/year)	Natural Gas Saved (btu/year)

6. Climate Risk Detailed Report

6.1. Climate Risk Summary

Cal-Adapt midcentury 2040–2059 average projections for four hazards are reported below for your project location. These are under Representation Concentration Pathway (RCP) 8.5 which assumes GHG emissions will continue to rise strongly through 2050 and then plateau around 2100.

Climate Hazard	Result for Project Location	Unit
Temperature and Extreme Heat	8.12	annual days of extreme heat
Extreme Precipitation	2.70	annual days with precipitation above 20 mm
Sea Level Rise	0.00	meters of inundation depth
Wildfire	0.00	annual hectares burned

Temperature and Extreme Heat data are for grid cell in which your project are located. The projection is based on the 98th historical percentile of daily maximum/minimum temperatures from observed historical data (32 climate model ensemble from Cal-Adapt, 2040–2059 average under RCP 8.5). Each grid cell is 6 kilometers (km) by 6 km, or 3.7 miles (mi) by 3.7 mi.
Extreme Precipitation data are for the grid cell in which your project are located. The threshold of 20 mm is equivalent to about ¾ an inch of rain, which would be light to moderate rainfall if received over a full day or heavy rain if received over a period of 2 to 4 hours. Each grid cell is 6 kilometers (km) by 6 km, or 3.7 miles (mi) by 3.7 mi.
Sea Level Rise data are for the grid cell in which your project are located. The projections are from Radke et al. (2017), as reported in Cal-Adapt (2040–2059 average under RCP 8.5), and consider different increments of sea level rise coupled with extreme storm events. Users may select from four model simulations to view the range in potential inundation depth for the grid cell. The four simulations make different assumptions about expected rainfall and temperature are: Warmer/drier (HadGEM2-ES), Cooler/wetter (CNRM-CM5), Average conditions (CanESM2), Range of different rainfall and temperature possibilities (MIROC5). Each grid cell is 50 meters (m) by 50 m, or about 164 feet (ft) by 164 ft.

Wildfire data are for the grid cell in which your project are located. The projections are from UC Davis, as reported in Cal-Adapt (2040–2059 average under RCP 8.5), and consider historical data of climate, vegetation, population density, and large (> 400 ha) fire history. Users may select from four model simulations to view the range in potential wildfire probabilities for the grid cell. The four simulations make different assumptions about expected rainfall and temperature are: Warmer/drier (HadGEM2-ES), Cooler/wetter (CNRM-CM5), Average conditions (CanESM2), Range of different rainfall and temperature possibilities (MIROC5). Each grid cell is 6 kilometers (km) by 6 km, or 3.7 miles (mi) by 3.7 mi.

6.2. Initial Climate Risk Scores

Climate Hazard	Exposure Score	Sensitivity Score	Adaptive Capacity Score	Vulnerability Score
Temperature and Extreme Heat	N/A	N/A	N/A	N/A
Extreme Precipitation	N/A	N/A	N/A	N/A
Sea Level Rise	1	0	0	N/A
Wildfire	1	0	0	N/A
Flooding	0	0	0	N/A
Drought	N/A	N/A	N/A	N/A
Snowpack Reduction	N/A	N/A	N/A	N/A
Air Quality Degradation	N/A	N/A	N/A	N/A

The sensitivity score reflects the extent to which a project would be adversely affected by exposure to a climate hazard. Exposure is rated on a scale of 1 to 5, with a score of 5 representing the greatest exposure.
The adaptive capacity of a project refers to its ability to manage and reduce vulnerabilities from projected climate hazards. Adaptive capacity is rated on a scale of 1 to 5, with a score of 5 representing the greatest ability to adapt.
The overall vulnerability scores are calculated based on the potential impacts and adaptive capacity assessments for each hazard. Scores do not include implementation of climate risk reduction measures.

6.3. Adjusted Climate Risk Scores

Climate Hazard	Exposure Score	Sensitivity Score	Adaptive Capacity Score	Vulnerability Score
Temperature and Extreme Heat	N/A	N/A	N/A	N/A
Extreme Precipitation	N/A	N/A	N/A	N/A
Sea Level Rise	1	1	1	2
Wildfire	1	1	1	2
Flooding	1	1	1	2
Drought	N/A	N/A	N/A	N/A
Snowpack Reduction	N/A	N/A	N/A	N/A

Air Quality Degradation	N/A	N/A	N/A	N/A

The sensitivity score reflects the extent to which a project would be adversely affected by exposure to a climate hazard. Exposure is rated on a scale of 1 to 5, with a score of 5 representing the greatest exposure.
The adaptive capacity of a project refers to its ability to manage and reduce vulnerabilities from projected climate hazards. Adaptive capacity is rated on a scale of 1 to 5, with a score of 5 representing the greatest ability to adapt.
The overall vulnerability scores are calculated based on the potential impacts and adaptive capacity assessments for each hazard. Scores include implementation of climate risk reduction measures.

6.4. Climate Risk Reduction Measures

7. Health and Equity Details

7.1. CalEnviroScreen 4.0 Scores

The maximum CalEnviroScreen score is 100. A high score (i.e., greater than 50) reflects a higher pollution burden compared to other census tracts in the state.

Indicator	Result for Project Census Tract
Exposure Indicators	—
AQ-Ozone	29.9
AQ-PM	44.7
AQ-DPM	87.8
Drinking Water	10.4
Lead Risk Housing	46.8
Pesticides	23.2
Toxic Releases	14.1
Traffic	85.7
Effect Indicators	—
CleanUp Sites	0.00
Groundwater	59.6
Haz Waste Facilities/Generators	80.2
Impaired Water Bodies	77.3
Solid Waste	0.00

Sensitive Population	—
Asthma	10.6
Cardio-vascular	30.4
Low Birth Weights	11.8
Socioeconomic Factor Indicators	—
Education	51.2
Housing	45.6
Linguistic	18.1
Poverty	66.4
Unemployment	37.7

7.2. Healthy Places Index Scores

The maximum Health Places Index score is 100. A high score (i.e., greater than 50) reflects healthier community conditions compared to other census tracts in the state.

Indicator	Result for Project Census Tract
Economic	—
Above Poverty	43.59040164
Employed	47.8121391
Median HI	35.63454382
Education	—
Bachelor's or higher	53.18875914
High school enrollment	3.028358784
Preschool enrollment	11.35634544
Transportation	—
Auto Access	33.27345053
Active commuting	58.38573078
Social	—
2-parent households	22.80251508

Voting	60.81098422
Neighborhood	—
Alcohol availability	33.06813807
Park access	56.25561401
Retail density	80.14885153
Supermarket access	72.16732965
Tree canopy	38.05979725
Housing	—
Homeownership	10.75324009
Housing habitability	43.65456179
Low-inc homeowner severe housing cost burden	94.44373155
Low-inc renter severe housing cost burden	62.20967535
Uncrowded housing	34.55665341
Health Outcomes	—
Insured adults	20.10778904
Arthritis	29.1
Asthma ER Admissions	76.3
High Blood Pressure	63.5
Cancer (excluding skin)	24.3
Asthma	46.1
Coronary Heart Disease	23.5
Chronic Obstructive Pulmonary Disease	29.1
Diagnosed Diabetes	58.5
Life Expectancy at Birth	70.8
Cognitively Disabled	39.7
Physically Disabled	49.3
Heart Attack ER Admissions	87.2

Mental Health Not Good	44.5
Chronic Kidney Disease	35.4
Obesity	54.6
Pedestrian Injuries	43.7
Physical Health Not Good	49.1
Stroke	34.3
Health Risk Behaviors	—
Binge Drinking	10.6
Current Smoker	43.7
No Leisure Time for Physical Activity	51.7
Climate Change Exposures	—
Wildfire Risk	0.6
SLR Inundation Area	54.1
Children	69.7
Elderly	26.2
English Speaking	38.1
Foreign-born	29.6
Outdoor Workers	36.9
Climate Change Adaptive Capacity	—
Impervious Surface Cover	25.2
Traffic Density	95.7
Traffic Access	23.0
Other Indices	—
Hardship	54.8
Other Decision Support	—
2016 Voting	71.6

7.3. Overall Health & Equity Scores

Metric	Result for Project Census Tract
CalEnviroScreen 4.0 Score for Project Location (a)	30.0
Healthy Places Index Score for Project Location (b)	29.0
Project Located in a Designated Disadvantaged Community (Senate Bill 535)	No
Project Located in a Low-Income Community (Assembly Bill 1550)	Yes
Project Located in a Community Air Protection Program Community (Assembly Bill 617)	No

a: The maximum CalEnviroScreen score is 100. A high score (i.e., greater than 50) reflects a higher pollution burden compared to other census tracts in the state.
b: The maximum Health Places Index score is 100. A high score (i.e., greater than 50) reflects healthier community conditions compared to other census tracts in the state.

7.4. Health & Equity Measures

No Health & Equity Measures selected.

7.5. Evaluation Scorecard

Health & Equity Evaluation Scorecard not completed.

7.6. Health & Equity Custom Measures

No Health & Equity Custom Measures created.

8. User Changes to Default Data

Screen	Justification
Land Use	Pop & Housing section: The population determined for the 3,295 new residential units are based on calculations developed by the city for the 2015 General Plan EIR to estimate population at buildout. The estimate assumes 2.63 persons per household, with a 5.5 percent vacancy rate, and 0.86 percent of residents as group quarters (3,295 * 2.63 * 0.945 *1.0086 = 8,260).
Operations: Water and Waste Water	WTP 100% aerobic

Alt 2 Carlsbad GPU EIR Detailed Report

Table of Contents

1. Basic Project Information

1.1. Basic Project Information

1.2. Land Use Types

1.3. User-Selected Emission Reduction Measures by Emissions Sector

2. Emissions Summary

2.4. Operations Emissions Compared Against Thresholds

2.5. Operations Emissions by Sector, Unmitigated

4. Operations Emissions Details

4.1. Mobile Emissions by Land Use

4.1.1. Unmitigated

4.2. Energy

4.2.1. Electricity Emissions By Land Use - Unmitigated

4.2.3. Natural Gas Emissions By Land Use - Unmitigated

4.3. Area Emissions by Source

4.3.2. Unmitigated

4.4. Water Emissions by Land Use

4.4.2. Unmitigated

4.5. Waste Emissions by Land Use

4.5.2. Unmitigated

4.6. Refrigerant Emissions by Land Use

4.6.1. Unmitigated

4.7. Offroad Emissions By Equipment Type

4.7.1. Unmitigated

4.8. Stationary Emissions By Equipment Type

4.8.1. Unmitigated

4.9. User Defined Emissions By Equipment Type

4.9.1. Unmitigated

4.10. Soil Carbon Accumulation By Vegetation Type

4.10.1. Soil Carbon Accumulation By Vegetation Type - Unmitigated

4.10.2. Above and Belowground Carbon Accumulation by Land Use Type - Unmitigated

4.10.3. Avoided and Sequestered Emissions by Species - Unmitigated

5. Activity Data

5.9. Operational Mobile Sources

5.9.1. Unmitigated

5.10. Operational Area Sources

5.10.1. Hearths

5.10.1.1. Unmitigated

5.10.2. Architectural Coatings

5.10.3. Landscape Equipment

5.11. Operational Energy Consumption

5.11.1. Unmitigated

5.12. Operational Water and Wastewater Consumption

5.12.1. Unmitigated

5.13. Operational Waste Generation

5.13.1. Unmitigated

5.14. Operational Refrigeration and Air Conditioning Equipment

5.14.1. Unmitigated

5.15. Operational Off-Road Equipment

- 5.15.1. Unmitigated
- 5.16. Stationary Sources
  - 5.16.1. Emergency Generators and Fire Pumps
  - 5.16.2. Process Boilers
- 5.17. User Defined
- 5.18. Vegetation
  - 5.18.1. Land Use Change
    - 5.18.1.1. Unmitigated
  - 5.18.1. Biomass Cover Type
    - 5.18.1.1. Unmitigated
  - 5.18.2. Sequestration
    - 5.18.2.1. Unmitigated
- 6. Climate Risk Detailed Report
  - 6.1. Climate Risk Summary
  - 6.2. Initial Climate Risk Scores
  - 6.3. Adjusted Climate Risk Scores
  - 6.4. Climate Risk Reduction Measures

7. Health and Equity Details

7.1. CalEnviroScreen 4.0 Scores

7.2. Healthy Places Index Scores

7.3. Overall Health & Equity Scores

7.4. Health & Equity Measures

7.5. Evaluation Scorecard

7.6. Health & Equity Custom Measures

8. User Changes to Default Data

1. Basic Project Information

1.1. Basic Project Information

Data Field	Value
Project Name	Alt 2 Carlsbad GPU EIR
Operational Year	2024
Lead Agency	—
Land Use Scale	Plan/community
Analysis Level for Defaults	County
Windspeed (m/s)	1.90
Precipitation (days)	21.8
Location	33.1599237850095, -117.34862128462754
County	San Diego
City	Carlsbad
Air District	San Diego County APCD
Air Basin	San Diego
TAZ	6228
EDFZ	12
Electric Utility	San Diego Gas & Electric
Gas Utility	San Diego Gas & Electric
App Version	2022.1.1.14

1.2. Land Use Types

Land Use Subtype	Size	Unit	Lot Acreage	Building Area (sq ft)	Landscape Area (sq ft)	Special Landscape Area (sq ft)	Population	Description
Apartments Mid Rise	3,338	Dwelling Unit	87.8	3,204,480	0.00	0.00	8,367	—

1.3. User-Selected Emission Reduction Measures by Emissions Sector

No measures selected

2. Emissions Summary

2.4. Operations Emissions Compared Against Thresholds

Criteria Pollutants (lb/day for daily, ton/yr for annual) and GHGs (lb/day for daily, MT/yr for annual)

Un/Mit.	TOG	ROG	NOx	CO	SO2	PM10E	PM10D	PM10T	PM2.5E	PM2.5D	PM2.5T	BCO2	NBCO2	CO2T	CH4	N2O	R	CO2e
Daily, Summer (Max)	—	—	—	—	—	—	—	—	—	—	—	—	—	—	—	—	—	—
Unmit.	5,245	5,223	166	7,108	13.1	871	141	1,012	867	35.9	902	94,148	233,824	327,971	213	12.4	700	337,689
Daily, Winter (Max)	—	—	—	—	—	—	—	—	—	—	—	—	—	—	—	—	—	—
Unmit.	5,227	5,206	170	6,836	13.0	871	141	1,012	866	35.9	902	94,148	225,481	319,628	213	12.7	40.5	328,770
Average Daily (Max)	—	—	—	—	—	—	—	—	—	—	—	—	—	—	—	—	—	—
Unmit.	1,209	1,255	92.7	2,050	4.20	197	141	338	196	35.9	232	22,272	196,953	219,225	146	7.52	315	225,438
Annual (Max)	—	—	—	—	—	—	—	—	—	—	—	—	—	—	—	—	—	—
Unmit.	221	229	16.9	374	0.77	35.9	25.8	61.7	35.8	6.54	42.3	3,687	32,608	36,295	24.2	1.25	52.2	37,324

2.5. Operations Emissions by Sector, Unmitigated

Criteria Pollutants (lb/day for daily, ton/yr for annual) and GHGs (lb/day for daily, MT/yr for annual)

Sector	TOG	ROG	NOx	CO	SO2	PM10E	PM10D	PM10T	PM2.5E	PM2.5D	PM2.5T	BCO2	NBCO2	CO2T	CH4	N2O	R	CO2e
Daily, Summer (Max)	—	—	—	—	—	—	—	—	—	—	—	—	—	—	—	—	—	—

Mobile	32.5	25.1	58.3	611	1.66	1.27	141	143	1.19	35.9	37.0	—	169,166	169,166	4.97	5.07	677	171,479
Area	5,212	5,198	102	6,494	11.4	869	—	869	865	—	865	92,702	39,163	131,865	85.6	6.66	—	135,987
Energy	0.70	0.35	5.97	2.54	0.04	0.48	—	0.48	0.48	—	0.48	—	24,314	24,314	1.69	0.14	—	24,398
Water	—	—	—	—	—	—	—	—	—	—	—	251	1,181	1,431	0.93	0.56	—	1,621
Waste	—	—	—	—	—	—	—	—	—	—	—	1,195	0.00	1,195	119	0.00	—	4,181
Refrig.	—	—	—	—	—	—	—	—	—	—	—	—	—	—	—	—	23.0	23.0
Total	5,245	5,223	166	7,108	13.1	871	141	1,012	867	35.9	902	94,148	233,824	327,971	213	12.4	700	337,689
Daily, Winter (Max)	—	—	—	—	—	—	—	—	—	—	—	—	—	—	—	—	—	—
Mobile	32.6	25.2	63.9	527	1.58	1.27	141	143	1.19	35.9	37.0	—	161,329	161,329	4.91	5.37	17.6	163,068
Area	5,193	5,181	99.8	6,306	11.4	869	—	869	865	—	865	92,702	38,656	131,359	85.5	6.65	—	135,479
Energy	0.70	0.35	5.97	2.54	0.04	0.48	—	0.48	0.48	—	0.48	—	24,314	24,314	1.69	0.14	—	24,398
Water	—	—	—	—	—	—	—	—	—	—	—	251	1,181	1,431	0.93	0.56	—	1,621
Waste	—	—	—	—	—	—	—	—	—	—	—	1,195	0.00	1,195	119	0.00	—	4,181
Refrig.	—	—	—	—	—	—	—	—	—	—	—	—	—	—	—	—	23.0	23.0
Total	5,227	5,206	170	6,836	13.0	871	141	1,012	866	35.9	902	94,148	225,481	319,628	213	12.7	40.5	328,770
Average Daily	—	—	—	—	—	—	—	—	—	—	—	—	—	—	—	—	—	—
Mobile	32.5	25.1	63.4	538	1.60	1.27	141	143	1.19	35.9	37.0	—	162,524	162,524	4.92	5.33	292	164,528
Area	1,176	1,230	23.3	1,510	2.57	195	—	195	194	—	194	20,826	8,934	29,760	19.2	1.50	—	30,687
Energy	0.70	0.35	5.97	2.54	0.04	0.48	—	0.48	0.48	—	0.48	—	24,314	24,314	1.69	0.14	—	24,398
Water	—	—	—	—	—	—	—	—	—	—	—	251	1,181	1,431	0.93	0.56	—	1,621
Waste	—	—	—	—	—	—	—	—	—	—	—	1,195	0.00	1,195	119	0.00	—	4,181
Refrig.	—	—	—	—	—	—	—	—	—	—	—	—	—	—	—	—	23.0	23.0
Total	1,209	1,255	92.7	2,050	4.20	197	141	338	196	35.9	232	22,272	196,953	219,225	146	7.52	315	225,438
Annual	—	—	—	—	—	—	—	—	—	—	—	—	—	—	—	—	—	—
Mobile	5.93	4.59	11.6	98.2	0.29	0.23	25.8	26.0	0.22	6.54	6.76	—	26,908	26,908	0.81	0.88	48.4	27,240
Area	215	224	4.26	276	0.47	35.6	—	35.6	35.5	—	35.5	3,448	1,479	4,927	3.18	0.25	—	5,081

Energy	0.13	0.06	1.09	0.46	0.01	0.09	—	0.09	0.09	—	0.09	—	4,025	4,025	0.28	0.02	—	4,039
Water	—	—	—	—	—	—	—	—	—	—	—	41.5	195	237	0.15	0.09	—	268
Waste	—	—	—	—	—	—	—	—	—	—	—	198	0.00	198	19.8	0.00	—	692
Refrig.	—	—	—	—	—	—	—	—	—	—	—	—	—	—	—	—	3.80	3.80
Total	221	229	16.9	374	0.77	35.9	25.8	61.7	35.8	6.54	42.3	3,687	32,608	36,295	24.2	1.25	52.2	37,324

4. Operations Emissions Details

4.1. Mobile Emissions by Land Use

4.1.1. Unmitigated

Mobile source emissions results are presented in Sections 2.6. No further detailed breakdown of emissions is available.

4.2. Energy

4.2.1. Electricity Emissions By Land Use - Unmitigated

Criteria Pollutants (lb/day for daily, ton/yr for annual) and GHGs (lb/day for daily, MT/yr for annual)

Land Use	TOG	ROG	NOx	CO	SO2	PM10E	PM10D	PM10T	PM2.5E	PM2.5D	PM2.5T	BCO2	NBCO2	CO2T	CH4	N2O	R	CO2e
Daily, Summer (Max)	—	—	—	—	—	—	—	—	—	—	—	—	—	—	—	—	—	—
Apartments Mid Rise	—	—	—	—	—	—	—	—	—	—	—	—	16,742	16,742	1.02	0.12	—	16,804
Total	—	—	—	—	—	—	—	—	—	—	—	—	16,742	16,742	1.02	0.12	—	16,804
Daily, Winter (Max)	—	—	—	—	—	—	—	—	—	—	—	—	—	—	—	—	—	—
Apartments Mid Rise	—	—	—	—	—	—	—	—	—	—	—	—	16,742	16,742	1.02	0.12	—	16,804

Total	—	—	—	—	—	—	—	—	—	—	—	—	16,742	16,742	1.02	0.12	—	16,804
Annual	—	—	—	—	—	—	—	—	—	—	—	—	—	—	—	—	—	—
Apartments Mid Rise	—	—	—	—	—	—	—	—	—	—	—	—	2,772	2,772	0.17	0.02	—	2,782
Total	—	—	—	—	—	—	—	—	—	—	—	—	2,772	2,772	0.17	0.02	—	2,782

4.2.3. Natural Gas Emissions By Land Use - Unmitigated

Criteria Pollutants (lb/day for daily, ton/yr for annual) and GHGs (lb/day for daily, MT/yr for annual)

Land Use	TOG	ROG	NOx	CO	SO2	PM10E	PM10D	PM10T	PM2.5E	PM2.5D	PM2.5T	BCO2	NBCO2	CO2T	CH4	N2O	R	CO2e
Daily, Summer (Max)	—	—	—	—	—	—	—	—	—	—	—	—	—	—	—	—	—	—
Apartments Mid Rise	0.70	0.35	5.97	2.54	0.04	0.48	—	0.48	0.48	—	0.48	—	7,572	7,572	0.67	0.01	—	7,593
Total	0.70	0.35	5.97	2.54	0.04	0.48	—	0.48	0.48	—	0.48	—	7,572	7,572	0.67	0.01	—	7,593
Daily, Winter (Max)	—	—	—	—	—	—	—	—	—	—	—	—	—	—	—	—	—	—
Apartments Mid Rise	0.70	0.35	5.97	2.54	0.04	0.48	—	0.48	0.48	—	0.48	—	7,572	7,572	0.67	0.01	—	7,593
Total	0.70	0.35	5.97	2.54	0.04	0.48	—	0.48	0.48	—	0.48	—	7,572	7,572	0.67	0.01	—	7,593
Annual	—	—	—	—	—	—	—	—	—	—	—	—	—	—	—	—	—	—
Apartments Mid Rise	0.13	0.06	1.09	0.46	0.01	0.09	—	0.09	0.09	—	0.09	—	1,254	1,254	0.11	< 0.005	—	1,257
Total	0.13	0.06	1.09	0.46	0.01	0.09	—	0.09	0.09	—	0.09	—	1,254	1,254	0.11	< 0.005	—	1,257

4.3. Area Emissions by Source

4.3.2. Unmitigated

Criteria Pollutants (lb/day for daily, ton/yr for annual) and GHGs (lb/day for daily, MT/yr for annual)

Source	TOG	ROG	NOx	CO	SO2	PM10E	PM10D	PM10T	PM2.5E	PM2.5D	PM2.5T	BCO2	NBCO2	CO2T	CH4	N2O	R	CO2e
Daily, Summer (Max)	—	—	—	—	—	—	—	—	—	—	—	—	—	—	—	—	—	—
Hearths	5,193	5,107	99.8	6,306	11.4	869	—	869	865	—	865	92,702	38,656	131,359	85.5	6.65	—	135,479
Consumer Products	—	68.6	—	—	—	—	—	—	—	—	—	—	—	—	—	—	—	—
Architectural Coatings	—	5.50	—	—	—	—	—	—	—	—	—	—	—	—	—	—	—	—
Landscape Equipment	18.3	17.3	1.88	189	0.01	0.07	—	0.07	0.10	—	0.10	—	506	506	0.02	< 0.005	—	508
Total	5,212	5,198	102	6,494	11.4	869	—	869	865	—	865	92,702	39,163	131,865	85.6	6.66	—	135,987
Daily, Winter (Max)	—	—	—	—	—	—	—	—	—	—	—	—	—	—	—	—	—	—
Hearths	5,193	5,107	99.8	6,306	11.4	869	—	869	865	—	865	92,702	38,656	131,359	85.5	6.65	—	135,479
Consumer Products	—	68.6	—	—	—	—	—	—	—	—	—	—	—	—	—	—	—	—
Architectural Coatings	—	5.50	—	—	—	—	—	—	—	—	—	—	—	—	—	—	—	—
Total	5,193	5,181	99.8	6,306	11.4	869	—	869	865	—	865	92,702	38,656	131,359	85.5	6.65	—	135,479
Annual	—	—	—	—	—	—	—	—	—	—	—	—	—	—	—	—	—	—
Hearths	213	209	4.09	259	0.47	35.6	—	35.6	35.5	—	35.5	3,448	1,438	4,886	3.18	0.25	—	5,039

Consumer Products	—	12.5	—	—	—	—	—	—	—	—	—	—	—	—	—	—	—	—
Architectural Coatings	—	1.00	—	—	—	—	—	—	—	—	—	—	—	—	—	—	—	—
Landscape Equipment	1.64	1.56	0.17	17.0	< 0.005	0.01	—	0.01	0.01	—	0.01	—	41.3	41.3	< 0.005	< 0.005	—	41.5
Total	215	224	4.26	276	0.47	35.6	—	35.6	35.5	—	35.5	3,448	1,479	4,927	3.18	0.25	—	5,081

4.4. Water Emissions by Land Use

4.4.2. Unmitigated

Criteria Pollutants (lb/day for daily, ton/yr for annual) and GHGs (lb/day for daily, MT/yr for annual)

Land Use	TOG	ROG	NOx	CO	SO2	PM10E	PM10D	PM10T	PM2.5E	PM2.5D	PM2.5T	BCO2	NBCO2	CO2T	CH4	N2O	R	CO2e
Daily, Summer (Max)	—	—	—	—	—	—	—	—	—	—	—	—	—	—	—	—	—	—
Apartments Mid Rise	—	—	—	—	—	—	—	—	—	—	—	251	1,181	1,431	0.93	0.56	—	1,621
Total	—	—	—	—	—	—	—	—	—	—	—	251	1,181	1,431	0.93	0.56	—	1,621
Daily, Winter (Max)	—	—	—	—	—	—	—	—	—	—	—	—	—	—	—	—	—	—
Apartments Mid Rise	—	—	—	—	—	—	—	—	—	—	—	251	1,181	1,431	0.93	0.56	—	1,621
Total	—	—	—	—	—	—	—	—	—	—	—	251	1,181	1,431	0.93	0.56	—	1,621
Annual	—	—	—	—	—	—	—	—	—	—	—	—	—	—	—	—	—	—

Apartme Mid Rise	—	—	—	—	—	—	—	—	—	—	—	41.5	195	237	0.15	0.09	—	268
Total	—	—	—	—	—	—	—	—	—	—	—	41.5	195	237	0.15	0.09	—	268

4.5. Waste Emissions by Land Use

4.5.2. Unmitigated

Criteria Pollutants (lb/day for daily, ton/yr for annual) and GHGs (lb/day for daily, MT/yr for annual)

Land Use	TOG	ROG	NOx	CO	SO2	PM10E	PM10D	PM10T	PM2.5E	PM2.5D	PM2.5T	BCO2	NBCO2	CO2T	CH4	N2O	R	CO2e
Daily, Summer (Max)	—	—	—	—	—	—	—	—	—	—	—	—	—	—	—	—	—	—
Apartme nts Mid Rise	—	—	—	—	—	—	—	—	—	—	—	1,195	0.00	1,195	119	0.00	—	4,181
Total	—	—	—	—	—	—	—	—	—	—	—	1,195	0.00	1,195	119	0.00	—	4,181
Daily, Winter (Max)	—	—	—	—	—	—	—	—	—	—	—	—	—	—	—	—	—	—
Apartme nts Mid Rise	—	—	—	—	—	—	—	—	—	—	—	1,195	0.00	1,195	119	0.00	—	4,181
Total	—	—	—	—	—	—	—	—	—	—	—	1,195	0.00	1,195	119	0.00	—	4,181
Annual	—	—	—	—	—	—	—	—	—	—	—	—	—	—	—	—	—	—
Apartme nts Mid Rise	—	—	—	—	—	—	—	—	—	—	—	198	0.00	198	19.8	0.00	—	692
Total	—	—	—	—	—	—	—	—	—	—	—	198	0.00	198	19.8	0.00	—	692

4.6. Refrigerant Emissions by Land Use

4.6.1. Unmitigated

Criteria Pollutants (lb/day for daily, ton/yr for annual) and GHGs (lb/day for daily, MT/yr for annual)

Land Use	TOG	ROG	NOx	CO	SO2	PM10E	PM10D	PM10T	PM2.5E	PM2.5D	PM2.5T	BCO2	NBCO2	CO2T	CH4	N2O	R	CO2e
Daily, Summer (Max)	—	—	—	—	—	—	—	—	—	—	—	—	—	—	—	—	—	—
Apartments Mid Rise	—	—	—	—	—	—	—	—	—	—	—	—	—	—	—	—	23.0	23.0
Total	—	—	—	—	—	—	—	—	—	—	—	—	—	—	—	—	23.0	23.0
Daily, Winter (Max)	—	—	—	—	—	—	—	—	—	—	—	—	—	—	—	—	—	—
Apartments Mid Rise	—	—	—	—	—	—	—	—	—	—	—	—	—	—	—	—	23.0	23.0
Total	—	—	—	—	—	—	—	—	—	—	—	—	—	—	—	—	23.0	23.0
Annual	—	—	—	—	—	—	—	—	—	—	—	—	—	—	—	—	—	—
Apartments Mid Rise	—	—	—	—	—	—	—	—	—	—	—	—	—	—	—	—	3.80	3.80
Total	—	—	—	—	—	—	—	—	—	—	—	—	—	—	—	—	3.80	3.80

4.7. Offroad Emissions By Equipment Type

4.7.1. Unmitigated

Criteria Pollutants (lb/day for daily, ton/yr for annual) and GHGs (lb/day for daily, MT/yr for annual)

Equipment Type	TOG	ROG	NOx	CO	SO2	PM10E	PM10D	PM10T	PM2.5E	PM2.5D	PM2.5T	BCO2	NBCO2	CO2T	CH4	N2O	R	CO2e

Daily, Summer (Max)	—	—	—	—	—	—	—	—	—	—	—	—	—	—	—	—	—	—
Total	—	—	—	—	—	—	—	—	—	—	—	—	—	—	—	—	—	—
Daily, Winter (Max)	—	—	—	—	—	—	—	—	—	—	—	—	—	—	—	—	—	—
Total	—	—	—	—	—	—	—	—	—	—	—	—	—	—	—	—	—	—
Annual	—	—	—	—	—	—	—	—	—	—	—	—	—	—	—	—	—	—
Total	—	—	—	—	—	—	—	—	—	—	—	—	—	—	—	—	—	—

4.8. Stationary Emissions By Equipment Type

4.8.1. Unmitigated

Criteria Pollutants (lb/day for daily, ton/yr for annual) and GHGs (lb/day for daily, MT/yr for annual)

Equipment Type	TOG	ROG	NOx	CO	SO2	PM10E	PM10D	PM10T	PM2.5E	PM2.5D	PM2.5T	BCO2	NBCO2	CO2T	CH4	N2O	R	CO2e
Daily, Summer (Max)	—	—	—	—	—	—	—	—	—	—	—	—	—	—	—	—	—	—
Total	—	—	—	—	—	—	—	—	—	—	—	—	—	—	—	—	—	—
Daily, Winter (Max)	—	—	—	—	—	—	—	—	—	—	—	—	—	—	—	—	—	—
Total	—	—	—	—	—	—	—	—	—	—	—	—	—	—	—	—	—	—
Annual	—	—	—	—	—	—	—	—	—	—	—	—	—	—	—	—	—	—
Total	—	—	—	—	—	—	—	—	—	—	—	—	—	—	—	—	—	—

4.9. User Defined Emissions By Equipment Type

4.9.1. Unmitigated

Criteria Pollutants (lb/day for daily, ton/yr for annual) and GHGs (lb/day for daily, MT/yr for annual)

Equipment Type	TOG	ROG	NOx	CO	SO2	PM10E	PM10D	PM10T	PM2.5E	PM2.5D	PM2.5T	BCO2	NBCO2	CO2T	CH4	N2O	R	CO2e
Daily, Summer (Max)	—	—	—	—	—	—	—	—	—	—	—	—	—	—	—	—	—	—
Total	—	—	—	—	—	—	—	—	—	—	—	—	—	—	—	—	—	—
Daily, Winter (Max)	—	—	—	—	—	—	—	—	—	—	—	—	—	—	—	—	—	—
Total	—	—	—	—	—	—	—	—	—	—	—	—	—	—	—	—	—	—
Annual	—	—	—	—	—	—	—	—	—	—	—	—	—	—	—	—	—	—
Total	—	—	—	—	—	—	—	—	—	—	—	—	—	—	—	—	—	—

4.10. Soil Carbon Accumulation By Vegetation Type

4.10.1. Soil Carbon Accumulation By Vegetation Type - Unmitigated

Criteria Pollutants (lb/day for daily, ton/yr for annual) and GHGs (lb/day for daily, MT/yr for annual)

Vegetation	TOG	ROG	NOx	CO	SO2	PM10E	PM10D	PM10T	PM2.5E	PM2.5D	PM2.5T	BCO2	NBCO2	CO2T	CH4	N2O	R	CO2e
Daily, Summer (Max)	—	—	—	—	—	—	—	—	—	—	—	—	—	—	—	—	—	—
Total	—	—	—	—	—	—	—	—	—	—	—	—	—	—	—	—	—	—
Daily, Winter (Max)	—	—	—	—	—	—	—	—	—	—	—	—	—	—	—	—	—	—
Total	—	—	—	—	—	—	—	—	—	—	—	—	—	—	—	—	—	—
Annual	—	—	—	—	—	—	—	—	—	—	—	—	—	—	—	—	—	—

Total	—	—	—	—	—	—	—	—	—	—	—	—	—	—	—	—	—	—

4.10.2. Above and Belowground Carbon Accumulation by Land Use Type - Unmitigated

Criteria Pollutants (lb/day for daily, ton/yr for annual) and GHGs (lb/day for daily, MT/yr for annual)

Land Use	TOG	ROG	NOx	CO	SO2	PM10E	PM10D	PM10T	PM2.5E	PM2.5D	PM2.5T	BCO2	NBCO2	CO2T	CH4	N2O	R	CO2e
Daily, Summer (Max)	—	—	—	—	—	—	—	—	—	—	—	—	—	—	—	—	—	—
Total	—	—	—	—	—	—	—	—	—	—	—	—	—	—	—	—	—	—
Daily, Winter (Max)	—	—	—	—	—	—	—	—	—	—	—	—	—	—	—	—	—	—
Total	—	—	—	—	—	—	—	—	—	—	—	—	—	—	—	—	—	—
Annual	—	—	—	—	—	—	—	—	—	—	—	—	—	—	—	—	—	—
Total	—	—	—	—	—	—	—	—	—	—	—	—	—	—	—	—	—	—

4.10.3. Avoided and Sequestered Emissions by Species - Unmitigated

Criteria Pollutants (lb/day for daily, ton/yr for annual) and GHGs (lb/day for daily, MT/yr for annual)

Species	TOG	ROG	NOx	CO	SO2	PM10E	PM10D	PM10T	PM2.5E	PM2.5D	PM2.5T	BCO2	NBCO2	CO2T	CH4	N2O	R	CO2e
Daily, Summer (Max)	—	—	—	—	—	—	—	—	—	—	—	—	—	—	—	—	—	—
Avoided	—	—	—	—	—	—	—	—	—	—	—	—	—	—	—	—	—	—
Subtotal	—	—	—	—	—	—	—	—	—	—	—	—	—	—	—	—	—	—
Sequestered	—	—	—	—	—	—	—	—	—	—	—	—	—	—	—	—	—	—
Subtotal	—	—	—	—	—	—	—	—	—	—	—	—	—	—	—	—	—	—
Removed	—	—	—	—	—	—	—	—	—	—	—	—	—	—	—	—	—	—

Subtotal	—	—	—	—	—	—	—	—	—	—	—	—	—	—	—	—	—	—
—	—	—	—	—	—	—	—	—	—	—	—	—	—	—	—	—	—	—
Daily, Winter (Max)	—	—	—	—	—	—	—	—	—	—	—	—	—	—	—	—	—	—
Avoided	—	—	—	—	—	—	—	—	—	—	—	—	—	—	—	—	—	—
Subtotal	—	—	—	—	—	—	—	—	—	—	—	—	—	—	—	—	—	—
Sequestered	—	—	—	—	—	—	—	—	—	—	—	—	—	—	—	—	—	—
Subtotal	—	—	—	—	—	—	—	—	—	—	—	—	—	—	—	—	—	—
Removed	—	—	—	—	—	—	—	—	—	—	—	—	—	—	—	—	—	—
Subtotal	—	—	—	—	—	—	—	—	—	—	—	—	—	—	—	—	—	—
—	—	—	—	—	—	—	—	—	—	—	—	—	—	—	—	—	—	—
Annual	—	—	—	—	—	—	—	—	—	—	—	—	—	—	—	—	—	—
Avoided	—	—	—	—	—	—	—	—	—	—	—	—	—	—	—	—	—	—
Subtotal	—	—	—	—	—	—	—	—	—	—	—	—	—	—	—	—	—	—
Sequestered	—	—	—	—	—	—	—	—	—	—	—	—	—	—	—	—	—	—
Subtotal	—	—	—	—	—	—	—	—	—	—	—	—	—	—	—	—	—	—
Removed	—	—	—	—	—	—	—	—	—	—	—	—	—	—	—	—	—	—
Subtotal	—	—	—	—	—	—	—	—	—	—	—	—	—	—	—	—	—	—
—	—	—	—	—	—	—	—	—	—	—	—	—	—	—	—	—	—	—

5. Activity Data

5.9. Operational Mobile Sources

5.9.1. Unmitigated

Land Use Type	Trips/Weekday	Trips/Saturday	Trips/Sunday	Trips/Year	VMT/Weekday	VMT/Saturday	VMT/Sunday	VMT/Year
Total all Land Uses	0.00	0.00	0.00	0.00	200,147	200,147	200,147	73,053,655

5.10. Operational Area Sources

5.10.1. Hearths

5.10.1.1. Unmitigated

Hearth Type	Unmitigated (number)
Apartments Mid Rise	—
Wood Fireplaces	1168
Gas Fireplaces	1836
Propane Fireplaces	0
Electric Fireplaces	0
No Fireplaces	334
Conventional Wood Stoves	0
Catalytic Wood Stoves	167
Non-Catalytic Wood Stoves	167
Pellet Wood Stoves	0

5.10.2. Architectural Coatings

Residential Interior Area Coated (sq ft)	Residential Exterior Area Coated (sq ft)	Non-Residential Interior Area Coated (sq ft)	Non-Residential Exterior Area Coated (sq ft)	Parking Area Coated (sq ft)
6489072	2,163,024	0.00	0.00	—

5.10.3. Landscape Equipment

Season	Unit	Value

Snow Days	day/yr	0.00
Summer Days	day/yr	180

5.11. Operational Energy Consumption

5.11.1. Unmitigated

Electricity (kWh/yr) and CO2 and CH4 and N2O and Natural Gas (kBTU/yr)

Land Use	Electricity (kWh/yr)	CO2	CH4	N2O	Natural Gas (kBTU/yr)
Apartments Mid Rise	11,318,724	540	0.0330	0.0040	23,627,820

5.12. Operational Water and Wastewater Consumption

5.12.1. Unmitigated

Land Use	Indoor Water (gal/year)	Outdoor Water (gal/year)
Apartments Mid Rise	117,274,204	0.00

5.13. Operational Waste Generation

5.13.1. Unmitigated

Land Use	Waste (ton/year)	Cogeneration (kWh/year)
Apartments Mid Rise	2,218	—

5.14. Operational Refrigeration and Air Conditioning Equipment

5.14.1. Unmitigated

Land Use Type	Equipment Type	Refrigerant	GWP	Quantity (kg)	Operations Leak Rate	Service Leak Rate	Times Serviced

Apartments Mid Rise	Average room A/C & Other residential A/C and heat pumps	R-410A	2,088	< 0.005	2.50	2.50	10.0
Apartments Mid Rise	Household refrigerators and/or freezers	R-134a	1,430	0.12	0.60	0.00	1.00

5.15. Operational Off-Road Equipment

5.15.1. Unmitigated

Equipment Type	Fuel Type	Engine Tier	Number per Day	Hours Per Day	Horsepower	Load Factor

5.16. Stationary Sources

5.16.1. Emergency Generators and Fire Pumps

Equipment Type	Fuel Type	Number per Day	Hours per Day	Hours per Year	Horsepower	Load Factor

5.16.2. Process Boilers

Equipment Type	Fuel Type	Number	Boiler Rating (MMBtu/hr)	Daily Heat Input (MMBtu/day)	Annual Heat Input (MMBtu/yr)

5.17. User Defined

Equipment Type	Fuel Type
—	—

5.18. Vegetation

5.18.1. Land Use Change

5.18.1.1. Unmitigated

Vegetation Land Use Type	Vegetation Soil Type	Initial Acres	Final Acres

5.18.1. Biomass Cover Type

5.18.1.1. Unmitigated

Biomass Cover Type	Initial Acres	Final Acres

5.18.2. Sequestration

5.18.2.1. Unmitigated

Tree Type	Number	Electricity Saved (kWh/year)	Natural Gas Saved (btu/year)

6. Climate Risk Detailed Report

6.1. Climate Risk Summary

Cal-Adapt midcentury 2040–2059 average projections for four hazards are reported below for your project location. These are under Representation Concentration Pathway (RCP) 8.5 which assumes GHG emissions will continue to rise strongly through 2050 and then plateau around 2100.

Climate Hazard	Result for Project Location	Unit
Temperature and Extreme Heat	8.12	annual days of extreme heat
Extreme Precipitation	2.70	annual days with precipitation above 20 mm
Sea Level Rise	0.00	meters of inundation depth
Wildfire	0.00	annual hectares burned

Temperature and Extreme Heat data are for grid cell in which your project are located. The projection is based on the 98th historical percentile of daily maximum/minimum temperatures from observed historical data (32 climate model ensemble from Cal-Adapt, 2040–2059 average under RCP 8.5). Each grid cell is 6 kilometers (km) by 6 km, or 3.7 miles (mi) by 3.7 mi.
Extreme Precipitation data are for the grid cell in which your project are located. The threshold of 20 mm is equivalent to about ¾ an inch of rain, which would be light to moderate rainfall if received over a full day or heavy rain if received over a period of 2 to 4 hours. Each grid cell is 6 kilometers (km) by 6 km, or 3.7 miles (mi) by 3.7 mi.
Sea Level Rise data are for the grid cell in which your project are located. The projections are from Radke et al. (2017), as reported in Cal-Adapt (2040–2059 average under RCP 8.5), and consider different increments of sea level rise coupled with extreme storm events. Users may select from four model simulations to view the range in potential inundation depth for the grid cell. The four simulations make different assumptions about expected rainfall and temperature are: Warmer/drier (HadGEM2-ES), Cooler/wetter (CNRM-CM5), Average conditions (CanESM2), Range of different rainfall and temperature possibilities (MIROC5). Each grid cell is 50 meters (m) by 50 m, or about 164 feet (ft) by 164 ft.

Wildfire data are for the grid cell in which your project are located. The projections are from UC Davis, as reported in Cal-Adapt (2040–2059 average under RCP 8.5), and consider historical data of climate, vegetation, population density, and large (> 400 ha) fire history. Users may select from four model simulations to view the range in potential wildfire probabilities for the grid cell. The four simulations make different assumptions about expected rainfall and temperature are: Warmer/drier (HadGEM2-ES), Cooler/wetter (CNRM-CM5), Average conditions (CanESM2), Range of different rainfall and temperature possibilities (MIROC5). Each grid cell is 6 kilometers (km) by 6 km, or 3.7 miles (mi) by 3.7 mi.

6.2. Initial Climate Risk Scores

Climate Hazard	Exposure Score	Sensitivity Score	Adaptive Capacity Score	Vulnerability Score
Temperature and Extreme Heat	N/A	N/A	N/A	N/A
Extreme Precipitation	N/A	N/A	N/A	N/A
Sea Level Rise	0	0	0	N/A
Wildfire	0	0	0	N/A
Flooding	0	0	0	N/A
Drought	N/A	N/A	N/A	N/A
Snowpack Reduction	N/A	N/A	N/A	N/A
Air Quality Degradation	N/A	N/A	N/A	N/A

The sensitivity score reflects the extent to which a project would be adversely affected by exposure to a climate hazard. Exposure is rated on a scale of 1 to 5, with a score of 5 representing the greatest exposure.
The adaptive capacity of a project refers to its ability to manage and reduce vulnerabilities from projected climate hazards. Adaptive capacity is rated on a scale of 1 to 5, with a score of 5 representing the greatest ability to adapt.
The overall vulnerability scores are calculated based on the potential impacts and adaptive capacity assessments for each hazard. Scores do not include implementation of climate risk reduction measures.

6.3. Adjusted Climate Risk Scores

Climate Hazard	Exposure Score	Sensitivity Score	Adaptive Capacity Score	Vulnerability Score
Temperature and Extreme Heat	N/A	N/A	N/A	N/A
Extreme Precipitation	N/A	N/A	N/A	N/A
Sea Level Rise	1	1	1	2
Wildfire	1	1	1	2
Flooding	1	1	1	2
Drought	N/A	N/A	N/A	N/A
Snowpack Reduction	N/A	N/A	N/A	N/A

Air Quality Degradation	N/A	N/A	N/A	N/A

The sensitivity score reflects the extent to which a project would be adversely affected by exposure to a climate hazard. Exposure is rated on a scale of 1 to 5, with a score of 5 representing the greatest exposure.
The adaptive capacity of a project refers to its ability to manage and reduce vulnerabilities from projected climate hazards. Adaptive capacity is rated on a scale of 1 to 5, with a score of 5 representing the greatest ability to adapt.
The overall vulnerability scores are calculated based on the potential impacts and adaptive capacity assessments for each hazard. Scores include implementation of climate risk reduction measures.

6.4. Climate Risk Reduction Measures

7. Health and Equity Details

7.1. CalEnviroScreen 4.0 Scores

The maximum CalEnviroScreen score is 100. A high score (i.e., greater than 50) reflects a higher pollution burden compared to other census tracts in the state.

Indicator	Result for Project Census Tract
Exposure Indicators	—
AQ-Ozone	29.9
AQ-PM	44.7
AQ-DPM	87.8
Drinking Water	10.4
Lead Risk Housing	46.8
Pesticides	23.2
Toxic Releases	14.1
Traffic	85.7
Effect Indicators	—
CleanUp Sites	0.00
Groundwater	59.6
Haz Waste Facilities/Generators	80.2
Impaired Water Bodies	77.3
Solid Waste	0.00

Sensitive Population	—
Asthma	10.6
Cardio-vascular	30.4
Low Birth Weights	11.8
Socioeconomic Factor Indicators	—
Education	51.2
Housing	45.6
Linguistic	18.1
Poverty	66.4
Unemployment	37.7

7.2. Healthy Places Index Scores

The maximum Health Places Index score is 100. A high score (i.e., greater than 50) reflects healthier community conditions compared to other census tracts in the state.

Indicator	Result for Project Census Tract
Economic	—
Above Poverty	43.59040164
Employed	47.8121391
Median HI	35.63454382
Education	—
Bachelor's or higher	53.18875914
High school enrollment	3.028358784
Preschool enrollment	11.35634544
Transportation	—
Auto Access	33.27345053
Active commuting	58.38573078
Social	—
2-parent households	22.80251508

Voting	60.81098422
Neighborhood	—
Alcohol availability	33.06813807
Park access	56.25561401
Retail density	80.14885153
Supermarket access	72.16732965
Tree canopy	38.05979725
Housing	—
Homeownership	10.75324009
Housing habitability	43.65456179
Low-inc homeowner severe housing cost burden	94.44373155
Low-inc renter severe housing cost burden	62.20967535
Uncrowded housing	34.55665341
Health Outcomes	—
Insured adults	20.10778904
Arthritis	29.1
Asthma ER Admissions	76.3
High Blood Pressure	63.5
Cancer (excluding skin)	24.3
Asthma	46.1
Coronary Heart Disease	23.5
Chronic Obstructive Pulmonary Disease	29.1
Diagnosed Diabetes	58.5
Life Expectancy at Birth	70.8
Cognitively Disabled	39.7
Physically Disabled	49.3
Heart Attack ER Admissions	87.2

Mental Health Not Good	44.5
Chronic Kidney Disease	35.4
Obesity	54.6
Pedestrian Injuries	43.7
Physical Health Not Good	49.1
Stroke	34.3
Health Risk Behaviors	—
Binge Drinking	10.6
Current Smoker	43.7
No Leisure Time for Physical Activity	51.7
Climate Change Exposures	—
Wildfire Risk	0.6
SLR Inundation Area	54.1
Children	69.7
Elderly	26.2
English Speaking	38.1
Foreign-born	29.6
Outdoor Workers	36.9
Climate Change Adaptive Capacity	—
Impervious Surface Cover	25.2
Traffic Density	95.7
Traffic Access	23.0
Other Indices	—
Hardship	54.8
Other Decision Support	—
2016 Voting	71.6

7.3. Overall Health & Equity Scores

Metric	Result for Project Census Tract
CalEnviroScreen 4.0 Score for Project Location (a)	30.0
Healthy Places Index Score for Project Location (b)	29.0
Project Located in a Designated Disadvantaged Community (Senate Bill 535)	No
Project Located in a Low-Income Community (Assembly Bill 1550)	Yes
Project Located in a Community Air Protection Program Community (Assembly Bill 617)	No

a: The maximum CalEnviroScreen score is 100. A high score (i.e., greater than 50) reflects a higher pollution burden compared to other census tracts in the state.
b: The maximum Health Places Index score is 100. A high score (i.e., greater than 50) reflects healthier community conditions compared to other census tracts in the state.

7.4. Health & Equity Measures

No Health & Equity Measures selected.

7.5. Evaluation Scorecard

Health & Equity Evaluation Scorecard not completed.

7.6. Health & Equity Custom Measures

No Health & Equity Custom Measures created.

8. User Changes to Default Data

Screen	Justification
Land Use	Pop & Housing section: (3,338 * 2.63 * 0.945 *1.0086 = 8,367).
Operations: Water and Waste Water	WTP 100% aerobic

Appendix C

Previous Historical Resources Documentation

REGIONAL HISTORIC PRESERVATION STUDY

Carlsbad, CA

APRIL 19, 1980

Prepared By:
WESTEC Services, Inc.
3211 Fifth Avenue
San Diego, California 92103
For
Comprehensive Planning Organization of the San Diego Region
Security Pacific Plaza, 1200 Third Avenue, Suite 524
San Diego, California 92101
(714) 236-5300

This report was financed with Federal funds from the U.S. Department of Housing and Urban Development (HUD) and local funds from CPO Member Jurisdictions.

CONTENTS

Chapter I INTRODUCTION 3

Purpose and Goals of the Study 3
Scope of Work and Limitations 3
Pilot Area Boundary 4

Chapter II CULTURAL HISTORY OF THE STUDY AREA 9

Introduction 9
Prehistoric Period 9
San Dieguito 11
La Jolla-Pauma 12
Northern Diegueno - Kumeyaay - Luiseno 13
Protohistoric Period 14
Historic Period 16
Introduction 16
The Hispanic/Early American Pre-Railroad: 1769-1885 16
The Boom Years and Their Aftermath: 1885-1910 18
The Rebirth of Carlsbad: 1910-1930 21
Carlsbad Comes of Age: 1930-1950 24
Recent Land-Use Changes in the Carlsbad Area: 1950-present 27

Chapter III CULTURAL RESOURCES SURVEY AND INVENTORY RESULTS 33

Introduction 33
Paleontological Resources 33
Jurassic Period 33
Cretaceous Period 34
Eocene Period 34
Pleistocene Period 34
Summary 35
Archaeological Resources 35
Introduction 35
Literature Search Results 35
In-Field Survey Results 37
Field Techniques 37
Limitations 38
Site Forms 38
Archaeological Sites Within the Study Area 38
Previously Recorded Sites 38
Newly Discovered Sites 44

Historical Resources 46
Historic Buildings Survey 46
Criteria for Inclusion in the Historical Resources Inventory and Assessment 46
Identifying the Structures 47
Volunteers 48
Research Methods 48
Field Methods 49
Historical Write-Up 50
Format 51
Photographs, Descriptions and Histories of Historic Buildings 52
Features of the Built Environment 121
Natural Resources 136

Chapter IV SIGNIFICANCE OF CULTURAL RESOURCES IN THE PILOT AREA SURVEY 141

Introduction 141
Paleontological Significance 141
Archaeological Significance 141
Archaeological Site Evaluation Criteria 144
Historic/Architectural Significance 147
Features of the Built Environment: Significance 147
Natural Resources Significance 148

Chapter V ASSESSMENT OF CULTURAL RESOURCES AND RECOMMENDATIONS FOR PRESERVATION 151

Introduction 151
Paleontological Resources 151
Archaeological Resources 152
Historical Resources 154
Features of the Built Environment 158
Natural Resources 158

REFERENCES 163

APPENDIX A Paleontological Report 185

ATTACHMENTS
1. Persons and Institutions Consulted 196
2. Letter from the California State Historic Preservation Officer 198
3. Project Personnel 200
4. California Department of Parks and Recreation Archaeological Site Survey Record (DPR-422) 202
5. Archaeological Site Computer Record Form (Form ACF-1) 206

6. California Department of Parks and Recreation Historic Resources Inventory Form (R-523) 216

7. Historic Site Computer Record Form (Form HSCF-1) ... 220

ASSESSMENT OF CULTURAL RESOURCES AND RECOMMENDATIONS FOR PRESERVATION

INTRODUCTION

The scope of work completed for the present study was in sufficient detail to provide an adequate inventory of known and recently discovered cultural resources and provide a thorough survey of the areas delineated on Map 11 and discussed within the narrative sections for each resource type. In addition, literature search data are complete for the entire pilot area study.

Interpretation and analysis of data recovered during this study highlights and underscores several main points:

1. The salvage and preservation of cultural resources in the study area has to date occurred primarily on a catch-as-catch-can basis, with minimal organized effort.

2. Historic sites have generally been preserved and maintained, thus retaining a significant portion of historic Carlsbad.

3. Archaeological and paleontological sites have undergone severe disruption in spite of efforts by local City and County agencies to preserve or salvage such resources.

4. Lagoons, ancient sea terraces and other significant natural features have undergone varying degrees of alteration. No organized, uniform resource management plan has been developed for lagoons and natural features.

5. The study area possesses a combination of significant cultural resources which warrant preservation and enhancement.

The assessment and recommendations provided below are based on current guidelines and concepts of cultural resource management. If these recommendations have one central theme, it is that comprehensive programs and integrated approaches are necessary to preserve significant resources.

PALEONTOLOGICAL RESOURCES

The paleontological resources within the survey area deserve protection for their scientific, educational and cultural values. Many localities already have been lost or are now being destroyed, as at Laguna Riviera and Rancho La Costa. Wherever possible, remaining localities should

be preserved and kept accessible, at least to professional paleontologists. The possibility that late Pleistocene fossils can be related to early human occupation and environmental change also warrants further study.

New fossil localities opened by future excavations should at least be made temporarily accessible, if they cannot be permanently preserved. In the study area, new exposures are very likely to uncover fossils, especially in the zone of the existing Eocene vertebrate localities, in the Cretaceous rocks of Letterbox Canyon, and in surface Pleistocene deposits bounding the lagoons. Foraminifers, pollen and spores, and other microfossils, are especially likely to be discovered, even in existing exposures.

All suitable measures should be taken to assure, wherever possible, that paleontologic sites of unique character or unusual quality be kept available for future study or at least be made available for study before their destruction. Measures for preservation could include open space easements, integration into park lands or establishment of multi-resource preserves. Areas that contain more than one resource, e.g., archaeological-paleontological resources, could be set aside for future study and evaluation. Such preserves could also constitute semi-natural buffers between urbanized areas.

ARCHAEOLOGICAL RESOURCES

Archaeological resources in the study area vary from sites apparently possessing little scientific, cultural or aesthetic value, to sites that warrant preservation and intensive study. At this time, it is not possible to fully assess the 101 archaeological sites in the study area by National Register Criterion (d). In brief, Criterion (d) states that properties may qualify for the National Register if they have yielded or might yield data or information significant to interpreting the prehistory or history of an area. Although each site in the study area can no doubt yield some information, it is doubtful if all 101 sites warrant National Register status. However, based on the present study, it appears that 22 sites may warrant National Register nomination, e.g., CPO-21 25, 28, 36, 40, 42, 46, 51, 52, 54-57, 64-69, 79, 86, 89, 128.

The State Historic Preservation Officer, his staff and his advisors require a more detailed analysis of potential National Register status sites than is feasible within the scope of work for this study. Excavation, data analysis, contacts with native Americans and evaluation of retrieved data all must be considered as methods of collecting and synthesizing information for potential nomination to the National Register.

The Archaeological Site Evaluation Criteria (ASEC) as proposed by the San Diego County Archaeological Site Criteria Task Force was not applied to archaeological sites in the study area. The criteria now under review were in a draft stage at the time field work was conducted for the current study in May and June 1978. Because site

evaluation by the ASEC requires in-field assessment, it is not feasible to attempt to apply the criteria to sites after the fact, although the 22 sites listed above certainly fall within the higher thresholds of significance.

Future evaluation of any sites within the study area should follow the Archaeological Site Evaluation Criteria or similar locally generated criteria system. Although recent reviews of the ASEC have cited ambiguities and need for revision within the various categories of criteria, the approach is sound and will ultimately provide a successful method of site evaluation.

Full assessment of scientific, cultural, ethnic and social values should be completed not only on a site-by-site basis, but integrated into a cohesive and comprehensive analysis. Every effort should be made to avoid duplication of fieldwork and research. This study can provide a valuable overview of the study area and should be used as a major planning tool. However, future projects within the area actually inventoried and surveyed will still require archaeological evaluation and assessment. The data provided here should be used as baseline information. Changing research goals, combined impairment of sites and socio-economic values should be considered.

Considerable amounts of time and money could be saved if community planners, local agencies and developers pursued broader, more synthesized environmental studies. The current patchwork approach to archaeological resource inventory and assessment is wasteful both in terms of time and cost, and often defeats the purpose of environmental protection or cultural resource management. Future plans for open space, park lands or game or botanical sanctuaries should make every effort to include significant archaeological resources within the confines of such projects. Preservation of archaeological resources through stabilization or placement in areas exempt from development is often preferable to costly salvage excavation.

Future land swaps, public purchase of private lands and condemnation of land should consider early inventory and assessment of potential archaeological sites. Public purchase of private land only to find a major archaeological site that poses a significant constraint to development plans could be avoided by early resource inventories.

In brief, the archaeological resources within the survey area constitute varying levels of significance. At least 22 sites are potential candidates to the National Register of Historic Places. Others contain more limited scientific or cultural value but may, upon further investigation, qualify for National Register or State Landmark status. Long-range planning and an emphasis on preservation rather than expensive salvage operations are preferable means to mitigate potential adverse impacts while allowing continued development.

When required, salvage mitigation through excavation and analysis should be done in a comprehensive manner to ensure that archaeologists are not duplicating efforts. Criteria for archaeological site signi-

ficance should reflect those levels of significance presented in this report and the guidelines currently being formulated by the County of San Diego.

HISTORICAL RESOURCES

The historical resources within the study area are composed almost exclusively of houses or structures, with the exception of those features discussed in the following section of features of the built environment. The project architect has evaluated these resources for National Register status potential and local architectural/historical significance. The historical resources were evaluated and ranked as discussed in the following section. It is possible that changing historic values and depletion of existing architectural styles will justify later reevaluation of this determination.

Each site was evaluated on its own merit and was assigned a ranking as follows:

Site Ranking 1

...a site which may have the potential to meet criteria for inclusion in the National Register of Historic Places. These sites should be further researched and steps toward designation and conservation taken where appropriate.

The Pilot Area Survey found five sites which met the criteria for ranking as a "1" (listed below alphabetically). (Note: In all instances the historic name for the site is listed in parentheses; the year of initial construction is listed in parentheses following the common name(s). Where the name and/or use change of a site is known, the date in parentheses following either the historic name or the common name is the date of initial construction or the date of a subsequent change.)

Royal Palms Motel Beach and Tennis Club
(Alfred Cohen House) (1927)
3001 Carlsbad Boulevard

Santa Fe Depot
(Atchison, Topeka and Santa Fe Railway Depot)
(Santa Fe Depot) (1887)
1200 Elm Avenue

Carlsbad Mineral Spring Hotel
(Carlsbad-by-the-Sea) (1929)
2855 Carlsbad Boulevard

Luther Gage House (1930)
3080 Lincoln

Rancho Agua Hedionda Adobe (1842)
(Juan Marron Adobe)
2770 Sunny Creek Road

Site Ranking 2

...a site which has historic significance of local importance. These sites should be considered for research and preservation. In some instances, a site was ranked as a "2" rather than as a "1" due to extensive and largely unrecorded changes, additions and remodeling from the original.

The Pilot Area Survey determined that six sites met the criteria for ranking as a "2" (listed alphabetically).

Myer House
(Culver House)
3140 Highland

Magee House (1887)
(Samuel Church Smith House)
258 Beech

Rancho de la Motte Kirmse (1886)
(Shirley House)
1542 Oak

St. Michael's by-the-Sea Chapel (1894)
St. Michael's Episcopal Church
2775 Carlsbad Boulevard

Six Twenty Four Laguna
(Kreutzkamp House)
626 Laguna

Twin Inns (1886)
(Schutte House)
2978 Carlsbad Boulevard

Site Ranking 3

...a site which meets the established criteria for inclusion in the Pilot Area Survey but which is not considered to be a prime candidate for preservation. These sites should be further researched, complete measured drawings made, and photographic records taken as a means of assessing their potential significance.

If research shows a site to have more historical significance than was discovered in the course of the Pilot Area Survey, that site should be raised to a higher appropriate ranking. The newer structures are included in this section as they fit the criteria for the Pilot Area Survey and should be treated as having historicity.

It must be emphasized that all of these structures in this ranking have definite historic value. Although they do not currently appear to warrant National Register nomination, their inclusion in this survey is by itself a measure of historical significance.

The remaining 22 sites are ranked as "3" (listed alphabetically).

Anderson Cottages (c. 1940)
3044 State Street

Apex Hotel (c. 1920)
3200-3206 Carlsbad Boulevard

Army and Navy Academy (1936)
San Diego Army and Navy Academy
(Red Apple Inn) (1927)

Carlsbad Civic Center (1967)
1200 Elm

Killian Block Commercial Buildings (c. 1920's)
2900 Block - State Street

Deckleman Residence (1894)
1448 Forest Avenue

John A. Frazier Well (1883) and
Alt Karlsbad (1965)
2802 Carlsbad Boulevard

Gaus Residence (1922)
3162 Jefferson

Greenwood House (1935-40)
1166 Elm Avenue

Hess House (1889)
3048 Jefferson

Hill Cottage (possibily c. 1910)
3112 Lincoln

Vermilyea House (c. 1925)
Killian House
645 Grand

Frank Knowles House (c. 1899)
380 Cedar

Ocean Vista Cabins
(Ocean Vista Motel) (c. 1920)
2005 North Highway 101

Pebble House
3839 Garfield

St. Patrick's Catholic Church (1926)
3075 Harding

Ramsay House (c. 1890)
1330 Chuparosa

Schindler House (1927)
(Clark Shaw House)
3081 Highland

Carlsbad Union Church
(Old Carlsbad Union Church) (1925)
800 Pine

Magee Gardens (1887)
(Colonel Ward House)
(Alexander Shipley House)
2747 Carlsbad Boulevard

Young House (c. 1900)
352 Cedar

Wright House (c. 1888)
1088 Laguna

Although only five sites are considered as possessing potential for National Register nomination, the historic resources discussed in this report are, nevertheless, significant features in the local architectural/historical motif. Future development or plans for demolition of these features may be considered by many as potential adverse impacts to important resources. Local architects and historians should work with owners and government agencies to plan or explore the possibilities for preservation of historic resources.

Alternate use of dwellings otherwise scheduled for demolition may be one way for owners to realize economic gain while retaining the architectual/historical flavor of the structures. The Twin Inns and Magee Gardens are successful examples of conversion of dwellings into restaurants. Similarly, the Alfred Cohen house became the Royal Palms Motel, the Santa Fe Depot is now the Chamber of Commerce office, and the Greenwood House is the Carlsbad Park and Recreation Department's office.

It is recommended, and hoped, that the citizens and officials of Carlsbad continue their acquisition and revitalization of historic structures. The historic community and other interested citizens should be encouraged to continue their active role in maintaining and preserving their architectural/historical heritage. The Carlsbad Historical Society should work with the State Historic Preservation Officer and his staff to explore possible grants and programs to fund and implement additional research and preservation.


The Hispanic/Early American Pre-Railroad: 1769–1885
The Boom Years and Their Aftermath: 1885–1910
A Health Resort and Watering Place
The Rebirth of Carlsbad: 1910–1930
Notes and News
Carlsbad Locals, Etc.
Ideal weather for farmers.
Carlsbad school closes this week.
A. J. Culver is visiting in San Diego.
F. P. Smith visited at Sorrento last week.
C. Kreutzkamp has cucumbers about ready for marketing.
Frank Carpenter and family are occupying the Wilson cottage.
J. McGarvin and wife, of Oceanside, will soon move into the Patterson cottage here.
cultural resources survey
city of carlsbad
Prehistoric Period
San Dieguito
La Jolla-Pauma
Northern Diegueno
Kumeyaay
Luiseno
Rancho Agua Hedionda
SOUTH COAST LAND COMPANY
The SUPREME HEALTH RESORT OF THE WEST
RANCHO AGUA HEDIONDA
Carlsbad Comes of Age: 1930–1950
LOS DIEGOS HOTEL
roth & associates

CITY OF CARLSBAD
CULTURAL RESOURCES SURVEY

FINAL

PREPARED FOR:

City of Carlsbad
Housing and Redevelopment
2965 Roosevelt Street Suite B
Carlsbad, California
92008

PREPARED BY:

ROTH AND ASSOCIATES
2707 Congress Street Suite 2A
San Diego, California 92110

February 18, 1990

TABLE OF CONTENTS

INTRODUCTION

SCOPE OF WORK 5

TECHNICAL APPROACH

Archival Research Phase 7
Field Research Phase 10
Architectural Description Phase 11
Technical Limitations 27

HISTORIC CONTEXT

Prehistoric-Post WWII 29
Evolution of Building Styles 70

RESULTS

Record Searches 81
Archival Map Indications 85
Inventory Summary 88

RECOMMENDATIONS 116

REFERENCE 134

APPENDICES

A Historic Maps: 1925 Sanborn Fire Insurance Maps
Historic Maps: 1929 Sanborn Fire Insurance Maps

B (Not Attached)
Individual structural assessments/histories arranged alphabetically be streets:
Book 1: Adams-Crest
Book 2: El Camino Real-Highland
Book 3: Jefferson-Madison
Book 4: Magnolia-Spruce
Book 5: State-Outside Core Areas

INVENTORY SUMMARY

Through a combination of 100% survey, sample survey, windshield survey, community input and archival research, 325 historic properties including structures (314), locales (4) and features of the built environment (7) were evaluated as potentially historic sites reflective of the identified patterns, events, persons, architectural styles and cultural values important in the changing fabric of Carlsbad. The "locales" include the Kelly Stage Stop, Homestead site of Los Kiotes (later Rancho de los Quiotes), Calavera School site, and Stage Coach Park. "Features of the built environment" evaluated during this investigation include Hosp Grove, Highway #101, Bridge on Carlsbad Blvd., Calavera Lake/Dam, Calavera Rock Quarry, El Camino Real, and the rock retaining wall at the foot of Beech St.

Although only 11 of the identified resources are considered potentially eligible for nomination to the National Register of Historic Places (5) or inclusion as a California Historical Landmark (6), the historic resources discussed herein are, nevertheless, significant features in the local architectural and historical growth of this community. Inclusion was both lengthy and time consuming. Inclusion of structures was based on recognized architectural styles, the presence or absence of older vegetation, position on the lot, informant information and analysis of historic photographs depicting the city. The inclusion of non-structural resources was based on archival research. The majority of the structures are associated with the 1920-1942 growth of the city. However, as illustrated on Table #1, Carlsbad contains, at the least, 24 extant buildings and/or features reflective of the defined earlier periods of historic development.

The Inventory includes three levels of documentation. All 325 identified resources were photographed, mapped as to location, and given both a condition and potential significance grading. Two hundred thirteen (213) of the total contain only this level of documentation presented on a short one page form (keyed as "C" on the Summary Table). The above data combined with a detailed architectural description was provided for 65 of the structures (keyed as "B" on the Summary Table). These are

primarily the small bungalow/cottage and vernacular homes and the commercial buildings constructed during the 1920-1942 period; buildings which individually are neither architecturally nor historically unique but which provide a representative sample of building types of the period. The historical events which relate to the construction of these structures is discussed in detail in the text and within selected inventories. The level of documentation for 47 of the historic resources included a detailed architectural description and an indepth historical significance statement (keyed as "A" on the Summary Table). Resources addressed in this manner included the structures initially evaluated in the 1980 **Regional Historic Preservation Study** ,properties listed on the City of Carlsbad Historic Resource Inventory and those sites which research indicated were potentially important in symbolizing the defined temporal and topical themes. Table #1 defines the specific level of investigation for each resource.

Although "condition" does not alter either the architectural or historical significance of a particular resource, it is often used in determining the potential for restoration, rehabilitation or remodeling. Four arbitrary levels of condition were used in this study: "excellent", "good", "fair", and "deteriorated". What could be considered "good" in a middle or lower class neighborhood could be considered "fair" or "deteriorated in an upper middle-class area. There is no consistent or concise way of measuring condition without an examination of the structural soundness and integrity of each house.

It is important to note that **all** evaluations of condition made for this study were based on exterior facade, and in many cases only the front facade. Most, if not all of the exterior conditions grade into adjoining categories. (i.e. some buildings have a good front facade but the rear of the structure is rapidly deteriorating. Some buildings have new stucco with associated rotted or unreplaced wood elements; others appear to have a good exterior but the residents report that the house "is ready to fall down". The listings shown in the breakdown for each house represents blending rather than mutually exclusive categories. For the most part, "fair" and "good" could be interchanged, while "excellent" and "deteriorated" represent the two extremes. The overall results for each structure evaluated for condition are as follows: 48 were rated as "excellent", 9 as "deteriorated", the remaining 257 fell into the "good" to "fair" listing.

In the 1980 **Regional Historic Preservation Study**,the thirty-three (33) evaluated structures were given a ranking or grade of 1-3:

> **1** :site potentially meets the criteria for inclusion in the National Register (5);
>
> **#2** :site has historic significance of local importance (6);
>
> **#3** :site meets criteria for inclusion in survey but is not considered to be a prime candidate for preservation (22).

The researchers are in agreement regarding the initial evaluations of the 28 resources ranked as #2 and #3. However, as a result of the current assessment only two of the five resources listed in 1980 as potentially eleigible for the National Register meet the criteria (Santa Fe Depot and Rancho Agua Hedionda adobe).

For the **ROTH AND ASSOCIATES** study, each site was prioritized according to architectural/historical significance using a slightly different grading system. (The original 33 were reassessed based on current condition and additional background research. The grade given each corresponds to the following:

> **Grade 1** : Major Significance: Potential National Register Resource (5);
>
> **Grade 2** : Significant: Potential California State Register (6)
>
> **Grade 3** : Local Carlsbad significance (93)
>
> **Grade 4** : Site designated for recognition purposes only; individually neither architecturally nor historically unique yet meets criteria for inclusion as a part the historic fabric. On a per-site basis additional research may be warranted if demolition is planned; upgrading to a #3 possible; many of these resources have been given a 3/4 grading (223).

As defined in the technical approach, there is no ideal typology for defining house types. In describing the physical appearance of a structure, the researchers selected distinctive exterior features that create a full and accurate verbal picture (i.e. shape, framework, finish, accents). True "styles" do exist within the study area and are represented in commercial buildings, churches, hotels/auto courts, and homes. They include the following: (for definition of style is Architectural Description Phase within Technical Approach).

Queen Anne Victorian (2)

Address	Const. Date	Condition	Rank
2978 Carlsbad	1887	excell/good	1
3140 Highland	1887	excell/good	3

Carpenter Gothic (2)

Address	Const. Date	Condition	Rank
2775 Carlsbad	1894	excell/good	3
400 Elm	1887	excellent	1

Neo-Classic (1)

Address	Const. Date	Condition	Rank
3081 Highland	1920-32	excell/good	3

Monterey (1)

Address	Const. Date	Condition	Rank
3080 Lincoln	1925	excell/good	2

Spanish Eclectic (10)

Address	Const. Date	Condition	Rank
3640 Adams	1923	excell/good	3
2855 Carlsbad	1929	excell/good	3
2585 Carlsbad	1927	excellent/good	3
2560 Carlsbad	1927	good	3
3003 Carlsbad	1929	excell/good	3
3384 Highland	post-1928	excell/good	3
2901 State	1925	good	3
Haymar (remodel)	1842	excell/good	2
2770 Sunny Creek (remodel)	1842	excell/good	1
Rancho Los Quiotes	1935-1939	good/fair	2

Craftsman (4)

Address	Const. Date	Condition	Rank
351 Beech	pre-1919	excell/good	3
1330 Chuparosa	1904	good	3
1196 Magnolia	pre-1929	good	3
1212 Oak	pre-1929	excell/good	3

Colonial Revival:(2)

Address	Const. Date	Condition	Rank
4095 Highland	1929	excell/good	3
1257 Magnolia	post-1929	excell/good	3/4

The majority of extant structures fall into the categories of cottage/bungalow and vernacular. Although these terms refer more to size and form than style, they have been separated because they were not, as a rule designed by architects nor do they, in the strict sense of the word, reflect "high-style" architecture. Those identified as cottage/bungalow were typically the mass-produced homes of the early to mid-20th century which contain only subtle elements of recognized style. Based on definitions presented in Gowans (1987), Blumenson (1981), Harris (1989), Longstreth (1987), and various articles found within the **Old House Journal** , six (6) types of bungalow/cottage housing were distinguished within the study area: Craftsman elements (40), Spanish eclectic elements (39), Tudor elements (5), Colonial Revival elements (1), Pueblo elements (1), and Folk Victorian elements (5). The remaining were classified as Vernacular. "Vernaculars" are typically structures with basic functional form, straight lines and virtually no design elements; this building type occurs throughout the defined historic periods (See Table #1 for individual breakdowns).

Individual bungalow/cottages and vernaculars as to condition and grade are as follows:

Cottage/Bungalow

with Spanish Eclectic :(39)

Condition:	Total	Grade:	Total
excellent	2	1	1
good	25	2	0
fair	10	3	8
deterior.	2	4	30 (3/4)

with Craftsman: (40)

Condition	Total	Grade	Total
excellent	13	1	0
good	21	2	0
fair	6	3	9
deterior.	0	4	21 (3/4)

with Tudor: (5)

Condition	Total	Grade	Total
excellent	1	1	0
good	3	2	0
fair	1	3	3
deterior.	0	4	2 (3/4)

with Pueblo Revival (1)

Condition	Grade
excellent	3

Colonial Revival (1)

Condition	Grade
excellent	3

with Folk Victorian (5)

Condition	Total	Grade	Total
excellent	1	1	0
good	3	2	0
fair	1	3	3
deterior.	0	4	2 (3/4)

with Vernacular:(182)

Condition	Total	Grade	Total
excellent	7	1	1
good/fair	169	2	0
deterior.	5	3	27
		4	154 (3/4)

When no true style was evident, commercial structures were listed spearately and described as either one-part or two-part. Eleven (11) buildings (or groups of buildings) fall into this category. All are along State and Elm the historic core and main artery of Carlsbad. Most have undergone recent rehab and are in excellent to good condition. Two were ranked as 2; 8 as 3 and 2 as 3/4. Six barns were located within the study area and include two at Los Quiotes, the Kelly barn; one at 2770 Sunny Creek Road, one in Magee Park and one associated with 3140 Highland. Each is discussed within the associated inventory and were not included in the above total counts.

In order to qualify for the National Register, a property must possess significance in American history, architecture, archaeology, engineering, or culture; must be representative of significant themes or patterns; must retain the characteristics that make it a good representative of those identified themes or patterns (i.e.degrees of integrity of location, setting, design, materials, workmanship, and feeling); and must meet one or more of the specific criteria. These criteria identify properties significant for their ability to characterize, illustrate, reveal or recall those specific elements recognized by the public or professional and scientific community as important in understanding of our past as a nation (National Park Service 1982:9,17; Federal Register 1983; 36 CFR Part 60-64,66,800 and 1210 Appendix B).

The structures included and ranked in the inventory were selected on the basis of environmental, architectural, historical and cultural significance. The questions used in the 1980 study were asked in assessing the potential significance ranking of the selected resources:

Historical and Cultural Significance

* Is the building particularly representative of a distinct historical period, type, style, region, way of life?
* Is it an example of a type of building which was once common but is now rare?
* Is the building of greater antiquity than most of similar style or type?
* Is the building connected in any way with someone famous, important, or a local personalty?

* Is the building associated with a business or use which was once common but is now rare?
* Is the architect, builder or original owner famous or well-recognized in areas of National importance?

Architectural Significance

* Are construction material used in an unusual, significant, or effective manner or style?
* Does the building contain original materials or workmanship which can be valued in themselves?
* Is the structure especially well-preserved or could it be restored to its former condition?

Neighborhood Setting

* Is it particularly well-related to its site or to existing buildings? Does it express its function or method of construction well?
* Is the structure visible or accessible to the public?
* Is the surrounding land use significant factor in preservation of the structure?

In addition to these questions, temporal and overlapping thematically-specific themes were developed around which the historical importance of the resources were assessed. These themes (presented in the Historic Context and detailed in the individual inventories, included the following: Hispanic/Mexican Period (1769-1946), Early American Pre-Railroad Era (1846-1881), the Railroad and Land Boom Years (1881-1890), the No Growth Decades (1890-1914), the Expansion Decades following World War I (1917-1932), the Depression and Pre-World War II growth) are tied to the following themes: settlement and changing demography, water control, transportation systems' effect on community landscape, agricultural changes, land speculation and advertising's effect on development, and minorities' role in the economy. Extant structures from the mid to late 1920's are symbolic of the growth, changing land use and the architecture of the period.

Sub-themes of that era symbolically representing promotional development, entertainment, commercial development, tourist accommodations, construction needs, religion, agricultural changes, and varied home styles are represented. Many of the sites were used throughout the historic period (this is detailed in the individual histories). Where applicable, the topic-specific themes which individual structures represent are in parenthesis.

Hispanic Period

Stage Coach Park (settlement/agriculture)

2770 Sunny Creek Road (Rancho Agua Hedionda) (settlement/agriculture/Mexican American Building Styles)

Marron Adobe on Haymar Road (settlement/ Mexican-American Building styles)

El Camino Real (settlement/transportation)

Early American/Pre-Railroad

2770 Sunny Creek Road (settlement/agriculture/changing land use)

Stage Coach Park (settlement/mercantile/transportation),

Marron Adobe

Rancho de los Quiotes (site not structures) (Homesteading/Agriculture)

Stage Stop near Kelly Barn (transportation/settlement patterns)

Railroad/Land Boom:

Depot and sections of the line (400 Elm) (transportation/settlement/land speculation/promotion/ architecture)

Frazier's Well (2802 Carlsbad Blvd) (settlement/water control/promotion)

Schutte Residence (2978 Carlsbad Blvd) (architecture settlement/ land speculation/promotion)

Shirley Residence (1542 Oak) (same)

Culver House (3140 Highland) (same)

Samuel Church House (258 Beech) (same)

No Growth Decades:

Irwin and William Kelly farm sites (El Camino Real)
(agriculture/settlement patterns/architecture)

Kreutzcamp House (642 Laguna)

Hess House (3048 Jefferson)

Hill House (3112 Lincoln)

Beller House (1448 Forest)

Young House (352 Christiansan)

Knowles House (380 Christiansan)

St Michael's by the Sea (2775 Carlsbad Blvd.) (religion)

Ramsay House 1330 Chuparosa Way)

Calavera School site (education)

Hosp Grove (changing economics)

Expansion Decades:

Promotional Development:(Land Speculation/advertising)
South Coast Land Co. (2956 State St.)

Financial
First National Bank of Carlsbad (505 Elm)

Entertainment:
Carlsbad Theatre (2822 State St.)

Commercial Development:
Killian Building (2900 State St.)

Tourist Trade:
Hotel Los Diego (2901 State)
Shade-A-Sea Auto Inn (2560 State)
Red Apple Inn (2585 State)
Carlsbad Mineral Springs Hotel (State)

Construction Needs:
Geib Lumber (2787 State)
Home Builders Store (471-425 Elm)
Calaveras Rock Quarry

Religion:

St. Patricks Catholic Church (2650 Garfield)
Mission Santiago (3329 Roosevelt)
Advent Christian Church Camp (2476 Mountain View)

Agriculture:

Packing sheds along tracks
Ledgerwood House (3862 Carlsbad Blvd)
Wilson House (2691 Crest)
2916 Highland
519 Chinquapin (rear)
Pedley House (314 Date)

Estates:

Cohen House (3003 Carlsbad Blvd)
Shaw House (3081 Highland)
Gage House (3080 Lincoln)
Ingram House (3640 Adams)
Bowman cobble wall (foot of Beech St.)

Barrio Settlement:

Ramierez house (3309 Roosevelt)

Mass-Housing/Bungalow/Cottages:

The majority of the buildings listed on the short forms of the inventory

Depression Era:

Rancho de los Quiotes
Army-Navy Academy
Calaveras Dam
Changing transportation routes (Highway 101)

When studied as individual, isolated buildings, the majority of the structures within the defined study area do not qualify for federal, state or local historic designation. These homes, generally of no distinctive textbook style, were primarily dwellings of middle-class and blue collar workers who left little or no record in the local annals. The structures are neither architecturally nor historically unique. Although often in poor or deteriorated condition, some of the homes selected as of possible local importance were chosen because they were either good examples of the small, single-family home built in the early decades of the 20th century or they are known to have been built or lived in by early inhabitants of this community. A breakdown of Historic Site Board Grade is as follows: (Due to the large number of Grade #4's they are not individually listed (see Table 1))

Potential National Register/Grade 1 (5)

Address	Style	Condition
2978 Carlsbad Blvd	Queen Anne Victorian (1887)	ex/good
400 Elm	Carpenter Gothic (1887)	excellent
3309 Roosevelt	Vernacular (1918)	fair/deter.
3329 Roosevelt	B/C Spanish (1923)	fair/deter.
2770 Sunny Creek	Adobe rehab (1842)	excellent
	outbuildings (c.1900)	fair/deter.

Potential California Level Significance/Grade 2

Address	Style	Condition
El Camino Real	LAND MARK # 784	n/a
Kelly Barn	vern. barn 1906	deter.
Haymar Rd. Adobe	remodel-Spanish 1842	excel/good
3080 Lincoln	Monterey 1925	ex/good
2956 State	Spanish Eclectic (pre 1925)	ex/good
Rancho Los Quiotes	Spanish (1935-39)	fair/good
Stage Coach Park	Adobe ruins (1842)	deter.

Potential Local Significance/Grade 3

Note: the structures, locales and products of the built environment listed below provide a range of ages, styles and functions reflective of the entire span of growth and settlement within Carlsbad. For individual style/construction date and condition is Table #1. (44)

3640 Adams
1432 Basswood
258 Beech (house and barn)
327 Beech
351 Beech
2560 Carlsbad Blvd
2585 Carlsbad Blvd
2775 Carlsbad Blvd
2802 Carlsbad Blvd
2855 Carlsbad Blvd
3003 Carlsbad Blvd
3406 Carlsbad Blvd
3862 Carlsbad Blvd
142 Chestnut
1088 Chestnut
352 Christiansen
380 Christiansen
1330 Chuparosa
2597 Crest
2691 Crest
El Camino Real
William Kelly farm site
417 Elm
50 Elm
560-62 Elm
571 Elm
1166 Elm
1265 Elm
1448 Forest
2650 Garfield
3288 Garfield
3363 Garfield
3839 Garfield
2916 Highland
2987 Highland
3307 Highland
3016 Highland
3081 Highland
3140 Highland
3384 Highland
3788 Highland
3789 Highland
3828 Highland
4095 Highland
2801 Jefferson
2892 Jefferson
3048 Jefferson
3971 Jefferson
270 Juniper
1101 Knowles
609 Laguna
624 Laguna
3112 Lincoln
2738 Madison
3475 Madison
1098 Magnolia
1196 Magnolia
2476 Mt. View
1212 Oak
1542 Oak
4050 Park
4055 Park
2096 Roosevelt
2921B Roosevelt
3255 Roosevelt
3304 Roosevelt
3312 Roosevelt
3379 Roosevelt
342 Roosevelt
2639 State
2787 State
2822 State
2900 State
2940 State
2998 State
3044 State
3077 State
168 Sycamore
310 Tamarack
3190 Tyler
3176 Tyler
Bridge on Carlsbad Blvd
Highway #101
Calavera Lake/Dam
Calavera Road Quarry
Calavera School Site
Hosp Grove
Rock Retain Wall at foot of Beech
Kelly Stage Stop

Envision Carlsbad

Existing Conditions and Issues Exploration

Working Paper 4

History, the Arts and Cultural Resources; High Quality Education and Community Services

CITY OF CARLSBAD
Envision Carlsbad

www.carlsbadca.gov/envision

Working Paper 1
Sustainability

Working Paper 2
The Local Economy, Business Diversity and Tourism

Working Paper 3
Open Space and the Natural Environment;
Access to Recreation and Active, Healthy Lifestyles

Working Paper 4
History, the Arts and Cultural Resources;
High Quality Education and Community Services

Working Paper 5
Walking, Biking, Public Transportation and Connectivity

Working Paper 6
Small Town Feel, Beach Community Character and Connectedness;
Neighborhood Revitalization, Community Design and Livibility

City Council

Matt Hall, *Mayor*
Ann J. Kulchin, *Mayor Pro Tem*
Mark Packard, *Council Member*
Keith Blackburn, *Council Member*
Farrah Douglas, *Council Member*

City Staff

Lisa Hildabrand, *City Manager*
Gary Barberio, *Community and Economic Development Director*
Don Neu, *Planning Director*
David de Cordova, *Principal Planner (Project Manager)*
Chris DeCerbo, *Principal Planner*
Jennifer Jesser, *Senior Planner (Project Manager)*
Kristina Ray, *Communications Manager*
Rachel McGuire, *Communications Coordinator*
Barbara Nedros, *Administrative Secretary*

Consultants

DYETT & BHATIA
Urban and Regional Planners

Dudek, *Environmental Consultants*
Fehr & Peers, *Transportation Consultants*
Rosenow Spevacek Group, Inc., *Economic and Fiscal Consultants*
BW Research Partnership, Inc., *Public Opinion Surveyors*

This working paper prepared by Dyett & Bhatia and Dudek

Envision Carlsbad Citizens' Committee

EC³ Primary Member	*EC³ Alternate Member*
Mike Howes	Dr. Anne Spacie
Fred Sandquist	–
Barbara Hamilton	–
Jim Farley	–
Jim Comstock	Jack Cumming
Hap L'Heureux	Robert Nielsen
Gina McBride	–
Julie Baker	–
Eric Larson	–
Allen Sweet	–
Greg Nelson	–
Kirk Cowles	Guy Roney
Diane Proulx	Glen Etherington
Robert Gates	–
Jeff Segall	–
John O'Reilly	Jim Bradley
Jeannie Sprague-Bentley	Tina Schmidt
–	Sean Sexton
Sean Bentley	Chris Korogi

Contents

1 Introduction and Purpose 1

1.1 Background and Purpose 1

1.2 This Working Paper 1

2 Historic and Cultural Resources 3

2.1 Historic Overview 3

2.2 Key Regulatory Context 8

2.3 Historic and Cultural Resources 11

3 Arts and Culture 19

3.1 Institutions and Organizations 19

3.2 Events and Programs 22

3.3 Support for the Arts 24

4 Educational Resources 27

4.1 Childcare and Preschool 27

4.2 Public Schools 29

4.3 Private Schools 37

4.4 Higher Education 38

4.5 The Library System In Support of Lifelong Learning 39

5 Community Services 43

5.1 Police Services 43

5.2 Fire and Emergency Medical Services 46

5.3 Emergency Preparedness 48

5.4 Housing, Elderly and Community Services 49

6 Planning Issues and Implications 55

location, design, setting, materials, workmanship, feeling and/or association, in which the collective value of the improvements may be greater than the value of each individual improvement.

Historic Preservation Commission

The city's Historic Preservation Commission consists of five members appointed by the City Council and one ex-official representative of the Planning Commission. All regular members must have knowledge of and a demonstrated interest in historic preservation and local history. The commission advises the City Council and Planning Commission on all matters related to the identification, protection, retention and preservation of historic areas and sites. Duties include, but are not limited to, recommending the designation of historic landmarks or historic districts; maintaining an historic resources inventory; rendering advice and guidelines, upon the request of the property owner or occupant, on the restoration, alteration, decoration, landscaping or maintenance of any historic area or site; and conducting programs to educate local residents on historic places, structures, or events. The Historic Preservation Commission has requested updates to the Municipal Code governing their work, which are currently making their way to Council. Changes pertain to the duties of the Commissioners and inventory it is charged with maintaining.

In 1990, the city developed guidelines (City of Carlsbad Cultural Resource Guidelines) for the treatment of cultural resources consistent with federal, state, and local laws, as well as the Secretary of Interior's Standards for Archaeology and Historic Preservation. The city's guidelines establish standards of performance for resource investigation and present a systematic method of preserving identified resources. The guidelines are applicable to cultural resources from the prehistoric through historic periods and are implemented during CEQA compliance.[10]

10 City of Carlsbad 1994 Final Master Environmental Impacts Report for the City of Carlsbad General Plan Update. March.

The city's current process for designating landmarks and points of interest is outlined in Section 22.06.030 of the city's municipal code. This process is time-intensive, which could delay designations and potentially compromise the historic importance of the resource if a building deteriorates further during the process.

Heritage Tree Preservation

In keeping with direction from the Community Forest Management Plan (described in Working Paper #3), the City of Carlsbad prepared a Heritage Tree Report in two phases under the direction of the Historic Preservation Commission. Phase I (Village area) was accepted by the Historic Preservation Commission and the Parks and Recreation Commission (the Parks and Recreation Commission oversees implementation of the Community Forest Management Plan). Phase II of the report (including areas outside of the Village) has been accepted by the Historic Preservation Commission and is now pending review by the Parks Department staff and the Parks and Recreation Commission. It is anticipated that once sewer lateral issues have been resolved, both phases of the Heritage Tree Report will be presented to the City Council for inclusion in the Community Forest Management Plan.

2.3 Historic and Cultural Resources

A 1990 report titled "Cultural Resources Survey City of Carlsbad" provides a summary of prehistoric and historic resources in Carlsbad. According to this report, a total of 325 potential historic properties including 314 structures, four locales and seven features of the built environment were evaluated as potential historic sites reflective of the identified patterns, events, persons, architectural styles and cultural values important in the changing fabric of the city. Of the 325 sites, only five were further identified as potentially eligible for nomination to the National Register of Historic Places and seven were identified as potential California Historical Landmarks. The following is a list of resources that were identified in the survey as potential listings on the National Register of Historic Places:

- 2978 Carlsbad Blvd. (style Queen Anne Victorian, 1887)
- 400 Elm Ave. (Carlsbad Village Drive) (Carpenter Gothic, 1887)
- 3309 Roosevelt St. (Vernacular, 1918)
- 3329 Roosevelt St. (B/C Spanish, 1923)
- 2770 Sunny Creek Rd. (Adobe rehab, 1842; outbuildings, pre 1900s)

The following is a list of resources that were identified as potential listings as a California Historical Landmark:

- El Camino Real (Landmark #784)
- Kelly Barn (Vernacular, barn, 1906)
- Haymar Road Adobe (Remodel-Spanish, 1842)
- 3080 Lincoln Street (Monterey, 1925)
- 2956 State Street (Spanish Eclectic, pre 1925)
- Rancho De Los Kiotes (Spanish, 1935-39)
- Stage Coach Park (Adobe ruins, 1842)

While the remaining sites have not been identified as potential historic resources of federal or state listing, many are considered by the city as containing significant features in the local architectural and historic growth of the community.[11]

Listed Historic Resources

Several of the city's local historic resources have gone through the process to be listed in or determined eligible for listing in the National and California Registers as individual resources. The following properties, landmarks, or historic resources are currently listed.

- The National Register of Historic Places has identified two listed historic properties within the city: Carlsbad Santa Fe Depot (400 Carlsbad Village Drive) and Rancho De Los Kiotes.
- The California Office of Historic Preservation has two historic landmarks listed in Carlsbad: Rancho De Los Kiotes and Frazier's Well (Alt Karlsbad).
- The San Diego Archaeological Center, a non-profit corporation dedicated to preserving archeological collections, has identified two historic sites within Carlsbad: the Carlsbad Historical Society Museum (e.g. the Magee House) and the Leo Carrillo Ranch Historic Park.[12]

A brief description of these resources is provided below and their locations are depicted on Figure 2-1.

- **Magee House (1).** *Magee Park, 258 Beech St.* This craftsman's style home was originally built by Samuel Church Smith, one of the founders of the Carlsbad Land and Water Company in 1887. The Smith family remained in the home until the 1890s when the California land bust forced them to sell their Carlsbad real estate holdings and relocate to National City. Alexander Shipley, a retired foreign service diplomat, purchased the home in the 1890s and relocated with his wife Julia and daughter Florence. In 1912, Florence married Hugh Magee, a descendent of an original California Estudillo Family, and moved to Condor's Nest in Pala. She returned to Carlsbad in the 1940s after the death of her father and husband. As sole inheritor of her parent's estate and having no children of her own, upon her death in the 1970s, Florence left Magee house to the City of Carlsbad as a historic and recreational park. The Magee House is currently home to Carlsbad's Historical Society Museum, which offers views of life from the 1880s to present.[13] The city has a license agreement with the Historical Society for use of this city-owned facility.

11 Roth and Associates, Cultural Resource Survey City of Carlsbad, 1990. The Cultural Resources Survey exists as a survey but was deleted as an official record at the City Council Meeting on May 18, 1993. The properties noted in this survey are not on any city database and do not have any legal designation as historical. Nonetheless, as one of the few records of cultural resources in Carlsbad, the properties described in that survey as potentially historically significant are listed here for reference,

12 San Diego Archeological Center 2010. Historic North County San Diego Sites. Available at: http://www.sandiegoarchaeology.org/Cinch_Text.htm Viewed on Sept. 13, 2010.

13 San Diego Archaeological Center 2010 Historic North County San Diego Sites. Available at: http://www.sandiegoarchaeology.org/Cinch_Text.htm Viewed on Sept. 13, 2010.

Working Paper 4

Figure 2-1: Listed Historic Resources

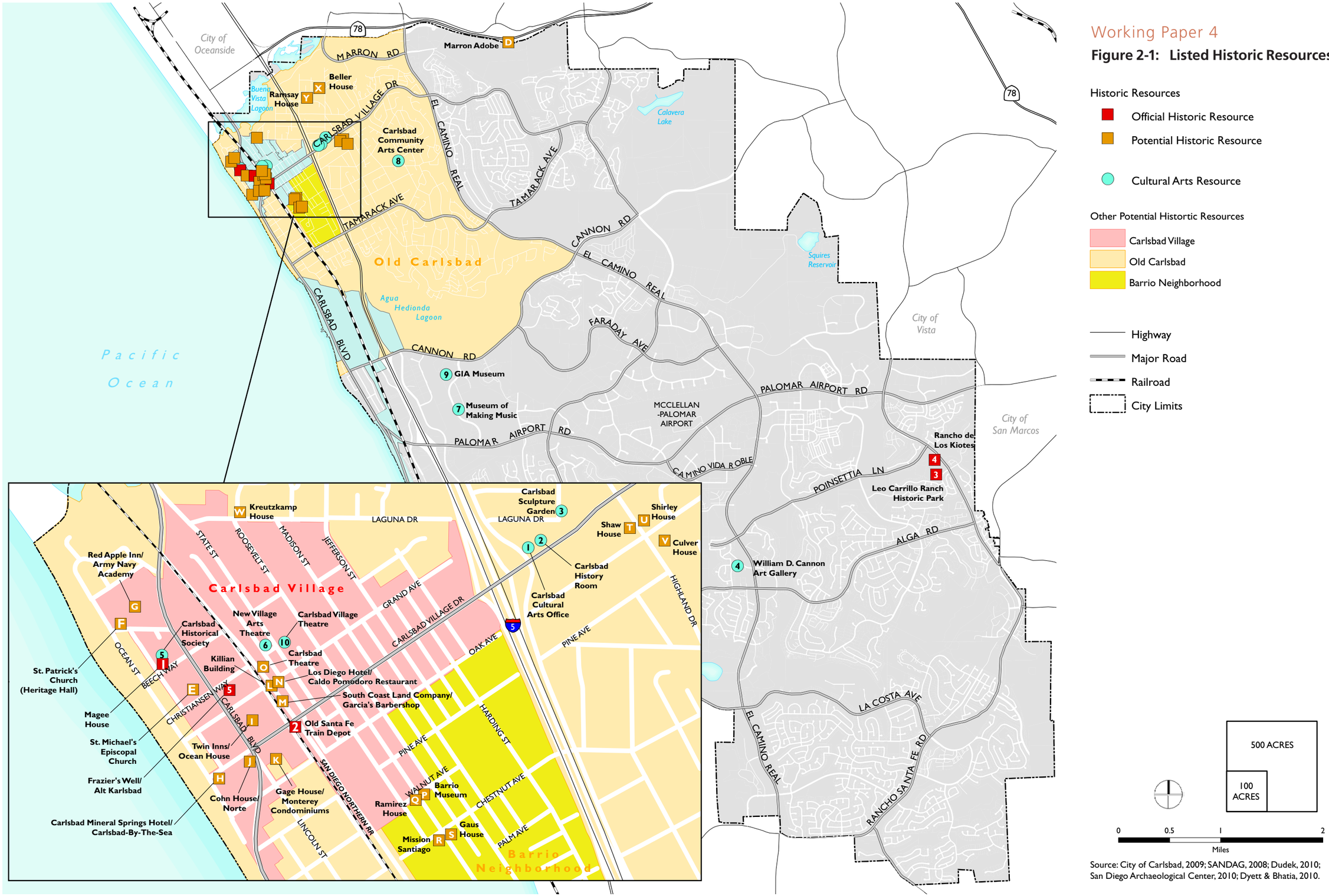

Source: City of Carlsbad, 2009; SANDAG, 2008; Dudek, 2010; San Diego Archaeological Center, 2010; Dyett & Bhatia, 2010.

- **Old Santa Fe Train Depot (2).** *400 Carlsbad Village Dr.* The depot was built in 1907 (replacing the first train depot built in 1887) by the Arizona Eastern Railway and also served as a telegraph office, post office, Wells Fargo Express Office, and general store. Later, this facility served as a shipping point for local fruit, vegetables and flowers. Closed in 1960, it is now the home of the Visitor's Information Center.[14]
- **Leo Carrillo Ranch Historic Park (3).** *6200 Flying Leo Carrillo Ln.* The Carrillo Ranch was once home to a cowboy actor named Leo Carrillo. Leo Carrillo's grandfather was the Mexican governor of California in 1837, and his father, the first Mayor of Santa Monica. Leo, his wife Edith and their daughter Antoinette all lived in the pueblo-style adobe house. The city has stabilized, preserved and restored many of the historic ranch buildings. The San Diego Archaeological Center has identified this site as a historic resource.[15] The city holds several events each year at the ranch such as the Leo Carrillo Film Festival, Wild Wild Fest, Dinner and a Movie, and Holiday at the Rancho.
- **Rancho de Los Kiotes (4).** In 1868**,** the Kelly family homesteaded 10,000 acres of land immediately south of Rancho Agua Hedionda. In 1937, Leo Carrillo purchased 1,700 acres, plus 838 acres two years later, to construct his ranch (refer to Leo Carrillo Ranch Historic Park, above).[16]
- **Frazier's Well/Alt Karlsbad (5).** *2802 Carlsbad Blvd.* John Frazier, one of Carlsbad's early pioneers, tapped a mineral spring on his homestead in 1883, an event that soon led to stops by train passengers to drink this water, rumored to have miraculous curative powers. The original well was declared a state historical site in 1955. Owners Kay and Chris Christiansen built Alt Karlsbad in 1964, recreating a 12th century structure as a backdrop for their replica of the famous European namesake.

Today, several historic resources are maintained and accessible to the public. Magee House (top) is home to the Historical Society Museum, while its grounds offer a pleasant open green space to the community (middle). Leo Carrillo Ranch is maintained as an historic park (bottom), and the city holds several public events there over the course of the year.

14 U.S. Department of Interior. National Park Service. National Register of Historic Places. Available at: http://nrhp.focus.nps.gove/natreghome.do?searchtype=natreghome

15 *Ibid.*

16 *Ibid.*

Other Potential Resources

The city acknowledges that there are several buildings and areas with local historic and/or architectural merit that characterize the city's heritage, as they meet the descriptions of structures of specific historic architectural styles, or they represent a settlement within a specific area that contributed to the cultural values of the city. A brief description of these buildings and/or locations is offered below and the location of these resources is shown on Figure 2-1. While these resources have been identified by the City of Carlsbad, the Save Our Heritage Organisation, and the Carlsbad Historical Society, they are not officially listed federal, state or local historic resources.

- **Carlsbad Village (A).** Carlsbad Village is located along Carlsbad Village Drive and is known for specialty shops, clothing stores, and restaurants. The village is home to buildings that consist of New England style architecture, and hosts events such as Carlsbad Art in the Village and Carlsbad Village Street Faire.
- **Old Carlsbad (B).** Old Carlsbad is the original boundaries of the City of Carlsbad, which encompasses the area south of Buena Vista Lagoon, west of El Camino Real, and north of Cannon Road. Several historic buildings are located in this area, including the Magee House.
- **Barrio Neighborhood (C).** The Barrio was the first neighborhood established in Carlsbad in the 1920s. The area includes several locally recognized historic buildings, businesses and sites.
- **Marrón Adobe (D).** (1850s) Property includes the Buena Vista Creek and El Salto Falls archaeological sites as well as natural open space, part of which is sensitive habitat.[17]
- **St. Michael's Episcopal Church (E).** *2775 Carlsbad Blvd (1894)*
- **St. Patrick's Church (Heritage Hall) (F).** *Magee Park, 2650 Garfield St.* (1926)
- **Red Apple Inn/Army Navy Academy (G).** *2585 Carlsbad Blvd.* (1927)
- **Carlsbad Mineral Springs Hotel/ Carlsbad-By-The-Sea (H).** *2855 Carlsbad Blvd.* (1930)
- **Twin Inns/ Ocean House (I).** *2978 Carlsbad Blvd.* (1887)
- **Cohn House/Norte (J).** *3003 Carlsbad Blvd.* (1929)
- **Gage House/ Monterey Condominiums (K).** *3080 Lincoln St.* (1934)
- **Killian Building (L).** *2900 State St.* (1920s)
- **South Coast Land Company/ Garcia's Barbershop (M).** *2956 State St.* (Circa 1914)
- **Los Diego Hotel/Caldo Pomodoro Restaurant (N).** *2907 State St.* (1925)
- **Carlsbad Theatre (O).** *2822 State St.* (1926-27)
- **Barrio Museum (P).** *3304 Roosevelt St.*
- **Ramirez House (Q).** *3309 Roosevelt St.* (1918)
- **Mission Santiago (R).** *3329 Roosevelt St.* (Circa 1923)
- **Gaus House (S).** *3442 Roosevelt St.* (1929)
- **Shaw House (T).** *3081 Highland Dr.* (1927)
- **Shirley House (U).** *1542 Oak St.* (Circa Late 1880s)
- **Culver House (V).** *3140 Highland Dr.* (Circa 1887)
- **Kreutzkamp House (W).** *624 Laguna Dr.* (1890s)
- **Beller House (X).** *1448 Forest Ave.* (Circa 1894)
- **Ramsay House (Y).** *1330 Chuparosa Way* (1904)

While the above resources have not been officially designated as federal, state, or local historic resources, they may be determined eligible for listing as official historic resources upon further review and analysis. For example, several potential historic buildings listed above consist of structures that are approximately 50 to 160 years old, and therefore, may qualify as an historic resource if other criteria (including local, state or federal) apply. According to the Cultural Resource Survey

17 Save Our Heritage Organisation. 2006. Marron Adobe. Viewed at: http://sohosandiego.org/reflections/2006-2/marron.htm. accessed Sept. 13, 2010.

St. Michael's Episcopal Church (top); St. Patrick's Church (Heritage Hall) (middle); Gage House/ Monterey Condominiums (bottom).

Twin Inns/ Ocean House (top); Barrio Museum and adjacent structure (middle); Gaus House (bottom).

City of Carlsbad, if a structure is not within the current inventory and appears to be at least fifty years old, it should be added to the inventory and background research should be conducted by a qualified historian. Since the city's first neighborhood was established in the 1920s (the Barrio) several other structures could also be reviewed and surveyed for historic value and potential for listing. In 1997, the Carlsbad City Council amended Carlsbad Municipal Code Title 22 (Historic Preservation Ordinance) to make compliance with the ordinance voluntary. As a result, a structure cannot be added to the city's historic resources inventory without the property owner's consent.

In cases when individual, isolated buildings do not qualify for federal, state, or local designation, but provide a good representation of a building of a specific era, they may benefit from being included in a historic neighborhood/district. Districting can also be an important component in the revitalization of inner city or low-income areas of a given community and a way to promote and educate the community about city history. Documentation of a specific area's historic significance helps encourage preservation of the district. Listing in the National Register of Historic Places provides incentives to property owners such as: federal preservation grants for planning and rehabilitation, federal investment tax credits, preservation easements to nonprofit organizations, international building code fire and life safety code alternatives, state tax benefits and grant opportunities.[18]

Learning About Carlsbad History

Although library resources are discussed in more detail in Chapter 4: Educational Resources, it is appropriate to mention here that the Carlsbad City Library maintains two important tools for learning about and recording Carlsbad's history: the Carlsbad History Room and the Genealogy Program.

- **Carlsbad History Room.** Although not a historic building or structure, Cole Library, located on Carlsbad Village Drive, is home to the Carlsbad History Room. The Carlsbad History Room collects and preserves local historical documents and makes them available for research. The collection includes newspapers in print and microfilm, yearbooks, scrapbooks, letters, boxed memorabilia, and more than 4,700 photos.
- **Genealogy Program.** Also housed in Cole Library, the Genealogy Program has as its purpose the exploration of family history. This is a leading cultural hobby in the nation, and complements Carlsbad's migrant population which has roots worldwide. The genealogy collection is one of the largest in Southern California and has a strong emphasis on the 17th, 18th and 19th centuries in the United States. The North San Diego County Genealogical Society sponsors several programs for the Carlsbad community related to this collection and area of interest.

18 National Park Service. 2010. National Register of Historic Places Fundamentals. Available at: http://www.nps.gov/nr/national_register_fundamentals.htm

3.7 Historical, Archaeological, and Paleontological Resources

Environmental Setting

This section describes historical, archaeological, and paleontological resources in Carlsbad. The information contained in this section is based on Working Paper 3: Open Space and the Natural Environment; Access to Recreation and Active, Healthy Lifestyles, as well as Working Paper 4: History, the Arts and Cultural Resources; High Quality Education and Community Services, both prepared by Dyett & Bhatia and Dudek.

PHYSICAL SETTING

Prehistoric Setting

Prior to 1798, two Native American tribes were known to occupy the area that is currently known as Carlsbad: the Luiseños and the Diegueños (or Kumeyaay). The Luiseños inhabited the area just north of the San Luis Rey River, east toward Pala and south to Agua Hedionda Lagoon. The Diegueños were a larger group, and inhabited an area spanning from the Batiquitos Lagoon south to Baja California.[1] A record search/mapping project completed in 1990 indicated that within Carlsbad city limits, approximately 480 prehistoric sites associated with these two Native American tribes have been recorded.

Although the locations of these resources were documented throughout the city, the majority of the prehistoric sites are located on broad mesa tops and along the lagoon terraces. This settlement pattern generally accompanied locally available resources, the proximity of fresh water, and the protection afforded by sheltered valleys and slopes. In accordance with California Government Code Section 65040.2(g)(3), which protects the confidentiality of information concerning the specific location of cultural places, a map depicting the location of these resources has not been provided. Though few sites remain due to intense land development over the past 30 years, recorded resources range from single isolated milling features or isolated lithic tools to multi-component settlements indicative of long-term and multicultural occupation.[2]

---

[1] Carlsbad Historical Society. 2010. "History of Carlsbad." Accessed September 13, 2010. www.carlsbadhistoricalsociety.com.

[2] Roth and Associates. 1990. "Cultural Resources Survey: City of Carlsbad."

Historical and Cultural Resources

Listed Historic Resources

Several of the city's local historic resources have gone through the process to be listed in or determined eligible for listing in the national and California registers as individual resources. The National Register of Historic Places (NRHP) has identified two listed historic properties within the city: Carlsbad Santa Fe Depot (400 Carlsbad Village Drive) and Rancho De Los Kiotes. The California Office of Historic Preservation has two historic landmarks listed in Carlsbad: Rancho De Los Kiotes and Frazier's Well (Alt Karlsbad located at 2802 Carlsbad Boulevard). The San Diego Archaeological Center, a nonprofit corporation dedicated to preserving archeological collections, has identified two historic sites within Carlsbad: the Carlsbad Historical Society Museum (the Magee House located at 258 Beech Street) and the Leo Carrillo Ranch Historic Park (6200 Flying Leo Carrillo Lane). A brief description of these properties, landmarks, or historic resources, shown on Figure 3.7-1, is provided below:

1. **Magee House.** Magee Park, 258 Beech Street. This craftsman's style home was originally built by Samuel Church Smith, one of the founders of the Carlsbad Land and Water Company in 1887. The Smith family remained in the home until the 1890s when the California land bust forced them to sell their Carlsbad real estate holdings and relocate to National City. Alexander Shipley, a retired foreign service diplomat, purchased the home in the 1890s and relocated with his wife Julia and daughter Florence. In 1912, Florence married Hugh Magee, a descendent of an original California Estudillo family, and moved to Condor's Nest in Pala. She returned to Carlsbad in the 1940s after the death of her father and husband. As sole inheritor of her parents' estate and having no children of her own, upon her death in the 1970s, Florence left Magee house to the city of Carlsbad as a historic and recreational park. The Magee House is currently home to Carlsbad's Historical Society Museum, which offers views of life from the 1880s to present.

2. **Old Santa Fe Train Depot**. 400 Carlsbad Village Dr. The depot was built in 1907 (replacing the first train depot built in 1887) by the Arizona Eastern Railway and also served as a telegraph office, post office, Wells Fargo Express office, and general store. Later, this facility served as a shipping point for local fruit, vegetables, and flowers. Closed in 1960, it is now the home of the Carlsbad Visitor's Information Center.

3. **Rancho de Los Kiotes/Leo Carrillo Ranch Historic Park**. 6200 Flying Leo Carrillo Lane. In 1868, the Kelly family homesteaded 10,000 acres of land immediately south of Rancho Agua Hedionda. In 1937, Leo Carrillo purchased 1,700 acres, plus 838 acres 2 years later, to construct his ranch (now the city-owned Leo Carrillo Ranch Historic Park). Leo Carrillo Ranch was once home to a cowboy actor named Leo Carrillo. Leo Carrillo's grandfather was the Mexican governor of California in 1837, and his father, the first mayor of Santa Monica. Leo, his wife Edith, and their daughter Antoinette all lived in the pueblo-style adobe house. The city has stabilized, preserved, and restored many of the historic ranch buildings. The city holds several events each year at the ranch such as the Leo Carrillo Film Festival, Wild Wild Fest, Dinner and a Movie, and Holiday at the Rancho.

4. **Frazier's Well/Alt Karlsbad**. 2802 Carlsbad Blvd. John Frazier, one of Carlsbad's early pioneers, tapped a mineral spring on his homestead in 1883, an event that soon led to stops by train passengers to drink this water, rumored to have miraculous curative powers. The original well was declared a state historical site in 1955. Owners Kay and Chris Christiansen built Alt Karlsbad in 1964, recreating a 12th century structure as a backdrop for their replica of the famous European namesake.

Potential Historical Resources

1990 Survey

A 1990 report titled Cultural Resources Survey City of Carlsbad provides a summary of prehistoric and historic resources in Carlsbad. According to this report, a total of 325 potential historic properties, including 314 structures, four locales and seven features of the built environment, were evaluated as potential historic sites reflective of the identified patterns, events, persons, architectural styles, and cultural values important in the changing fabric of the city. Of the 325 sites, only five were further identified as potentially eligible for nomination to the NRHP and seven were identified as potential California Historical Landmarks.

The following is a list of resources that were identified in the survey as potential listings on the NRHP:

- 2978 Carlsbad Boulevard (Queen Anne Victorian, 1887)
- 400 Elm Avenue (Carlsbad Village Drive) (Carpenter Gothic, 1887)
- 3309 Roosevelt Street (Vernacular, 1918)
- 3329 Roosevelt Street (B/C Spanish, 1923)
- 2770 Sunny Creek Road (Adobe rehab, 1842; outbuildings, c. 1900s).

The following is a list of resources that were identified as potential listings as a California Historical Landmark:

- El Camino Real (Landmark No. 784)
- Haymar Road (Adobe remodel-Spanish, 1842)
- 3080 Lincoln Street (Monterey, 1925)
- 2956 State Street (Spanish Eclectic, pre-1925)
- Rancho De Los Kiotes (Spanish, 1935–39)
- Stage Coach Park (Adobe ruins, 1842).

While the remaining sites have not been identified as potential historic resources of federal or state listing, many are considered by the city as containing significant features in the local architectural and historic growth of the community.

Other Potential Historical Resources

In addition to the potential resources listed above, there are several buildings and areas in the city with local historic and/or architectural merit that characterize the city's heritage, as they meet the descriptions of structures of specific historic architectural styles or they represent a settlement within a specific area that contributed to the cultural values of the city. A brief description of these buildings and/or locations is offered below and the location of these resources is shown on Figure 3.7-1. While these resources have been identified by the City of Carlsbad, the Save Our Heritage Organization, or the Carlsbad Historical Society, they are not officially listed federal, state, or local historic resources.

Figure 3.7-1

PROPOSED GENERAL PLAN

Historic and Cultural Arts Resources

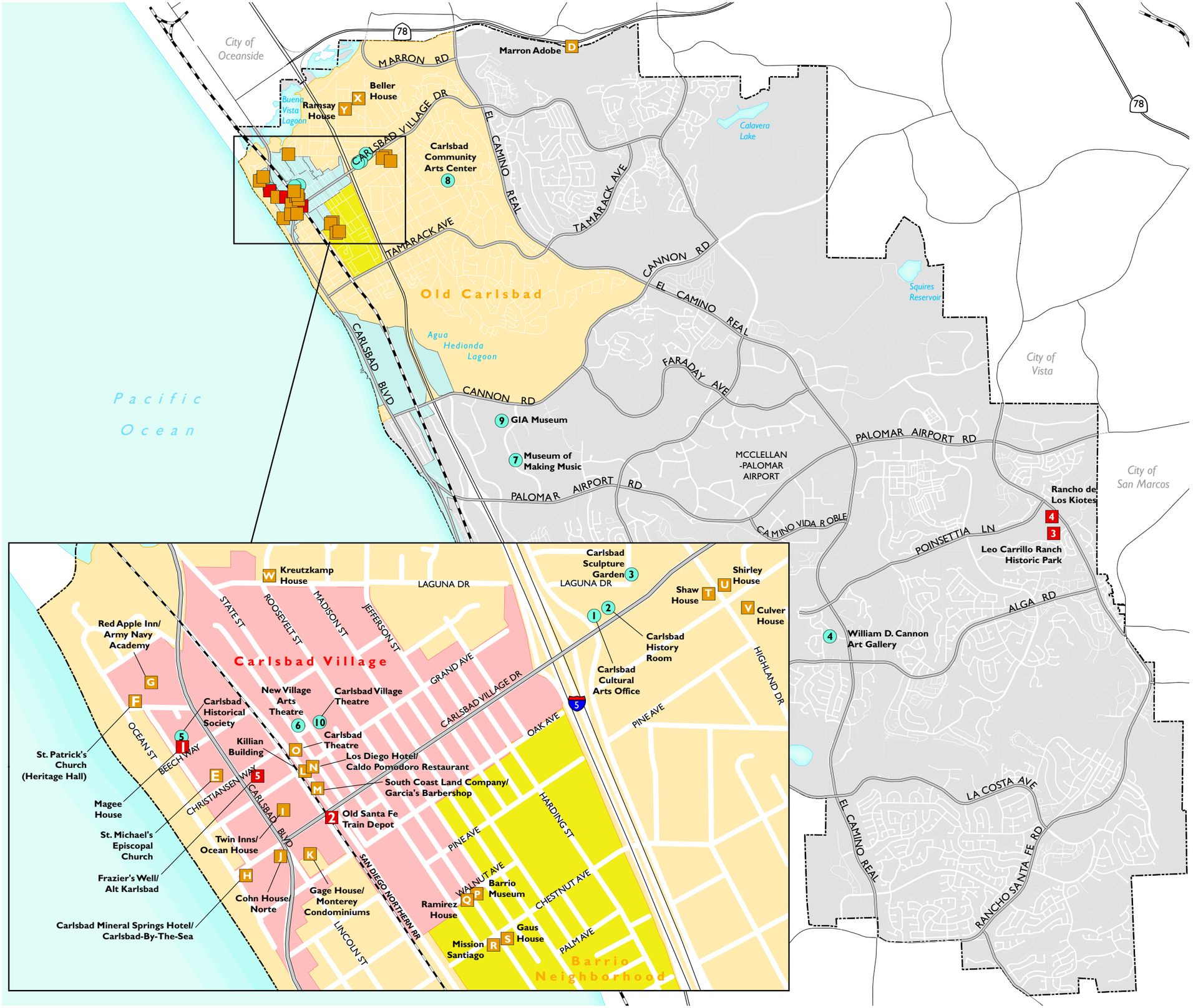

Historic Resources

- Official Historic Resource
- Potential Historic Resource
- Cultural Arts Resource

Other Potential Historic Resources

- Carlsbad Village
- Old Carlsbad
- Barrio Neighborhood

- Highway
- Major Road
- Railroad
- City Limits

Source: City of Carlsbad, 2009; SANDAG, 2008; Dudek, 2010; San Diego Archaeological Center, 2010; Dyett & Bhatia, 2010.

This page intentionally left blank.

Potential Historical Resources:

A. **Carlsbad Village.** Carlsbad Village is located along Carlsbad Village Drive and is known for specialty shops, clothing stores, and restaurants. The village is home to buildings that consist of New England style architecture, and hosts events such as Carlsbad Art in the Village and Carlsbad Village Street Faire.

B. **Old Carlsbad.** Carlsbad Village is located within Old Carlsbad. The original boundaries of the city. Old Carlsbad encompasses the area south of Buena Vista Lagoon, west of El Camino Real, and north of Cannon Road. Several historic buildings are located in this area, including the Magee House.

C. **Barrio Neighborhood.** The Barrio, located within the boundaries of Old Carlsbad, was the first neighborhood established in Carlsbad in the 1920s. The area includes several locally recognized historic buildings, businesses, and sites.

D. **Marrón Adobe.** (1850s) This property includes the Buena Vista Creek and El Salto Falls archaeological sites as well as natural open space, part of which is sensitive habitat.[4]

E. **St. Michael's Episcopal Church.** 2775 Carlsbad Boulevard (1894)

F. **St. Patrick's Church (Heritage Hall).** Magee Park, 2650 Garfield Street (1926)

G. **Red Apple Inn/Army Navy Academy.** 2585 Carlsbad Boulevard (1927)

H. **Carlsbad Mineral Springs Hotel/Carlsbad-By-the-Sea.** 2855 Carlsbad Boulevard (1930)

I. **Twin Inns/Ocean House.** 2978 Carlsbad Boulevard (1887)

J. **Cohn House/Norte.** 3003 Carlsbad Boulevard (1929)

K. **Gage House/Monterey Condominiums.** 3080 Lincoln Street (1934)

L. **Killian Building.** 2900 State Street (1920s)

M. **South Coast Land Company/Garcia's Barbershop.** 2956 State Street (Circa 1914)

N. **Los Diego Hotel/Caldo Pomodoro Restaurant.** 2907 State Street (1925)

O. **Carlsbad Theatre.** 2822 State Street (1926–27)

P. **Barrio Museum.** 3304 Roosevelt Street (1943)

Q. **Ramirez House.** 3309 Roosevelt Street (1918)

R. **Mission Santiago.** 3329 Roosevelt Street (Circa 1923)

S. **Gaus House.** 3442 Roosevelt Street (1929)

---

[4] Save Our Heritage Organization. 2006. "Marron Adobe." Accessed September 13, 2010. http://sohosandiego.org/reflections/2006-2/marron.htm.

T. **Shaw House.** 3081 Highland Drive (1927)

U. **Shirley House.** 1542 Oak Street (Circa late 1880s)

V. **Culver House.** 3140 Highland Drive (Circa 1887)

W. **Kreutzkamp House.** 624 Laguna Drive (1890s)

X. **Beller House.** 1448 Forest Avenue (Circa 1894)

Y. **Ramsay House.** 1330 Chuparosa Way (1904).

While the above resources have not been officially designated as federal, state, or local historic resources, they may be determined eligible for listing as official historic resources upon if other criteria (including local, state, or federal) apply.

Paleontological Setting

Paleontological resources are the remains and/or traces of prehistoric plant and animal life, exclusive of human remains. The formation of fossils typically involves the rapid burial of plant or animal remains and the formation of casts, molds, or impressions in the associated sediment (which subsequently becomes sedimentary rock). Because of this, the potential for fossil remains in a given geologic formation can be predicted based on known fossil occurrences from similar (or correlated) geologic formations in other locations. According to the County of San Diego's Guidelines for Determining Significance of Paleontological Resources, this is the case in San Diego County, where the geologic setting provides a basis for reasonably predicting the location of paleontological resources.

The Society of Vertebrate Paleontology has established a professional review process for the determination of paleontological potential and paleontologic sensitivity, as described in the following text. The determination of a site's (or rock unit's) degree of paleontological potential is first founded on a review of pertinent geological and paleontological literature and on locality records of specimens deposited in institutions. This preliminary review may suggest particular areas of known high potential. If an area of high potential cannot be delimited from the literature search and specimen records, a surface survey will determine the fossilferous potential and extent of the sedimentary units within a specific project. The field survey may extend outside the defined project to areas where rock units are better exposed. If an area is determined to have a high potential for containing paleontologic resources, a program to mitigate impacts is developed. In areas of high sensitivity, a pre-excavation survey is recommended to locate surface concentrations of fossils which might need special salvage methods. The sensitivity of rock units in which fossils occur may be divided into three operational categories.

I. HIGH POTENTIAL. Rock units from which vertebrate or significant invertebrate fossils or significant suites of plant fossils have been recovered are considered to have a potential for containing significant nonrenewable fossilferous resources. These units include but are not limited to, sedimentary formations and some volcanic formations, which contain significant nonrenewable paleontological resources anywhere within their geographical

7 Arts, History, Culture, and Education

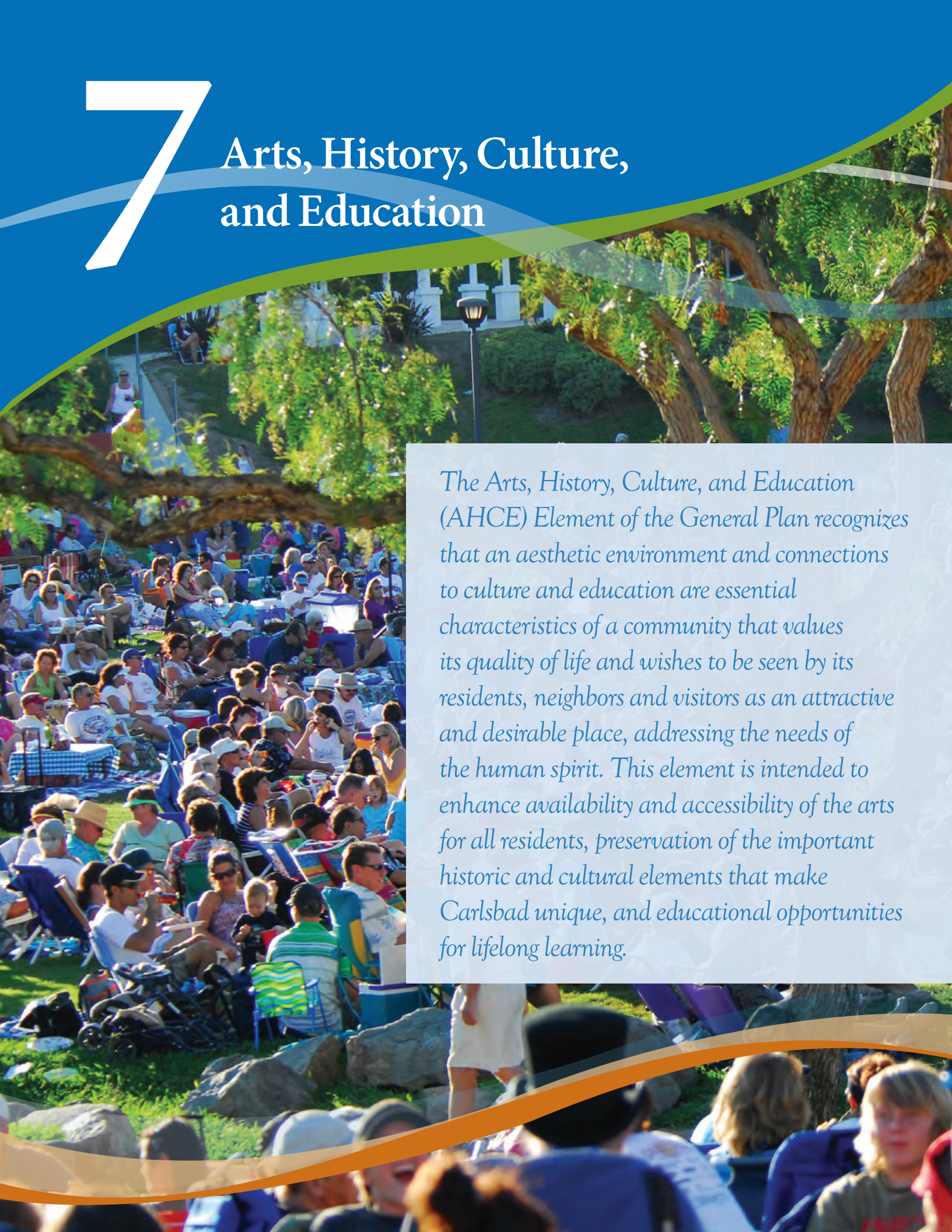

The Arts, History, Culture, and Education (AHCE) Element of the General Plan recognizes that an aesthetic environment and connections to culture and education are essential characteristics of a community that values its quality of life and wishes to be seen by its residents, neighbors and visitors as an attractive and desirable place, addressing the needs of the human spirit. This element is intended to enhance availability and accessibility of the arts for all residents, preservation of the important historic and cultural elements that make Carlsbad unique, and educational opportunities for lifelong learning.

TABLE 7–1: CARLSBAD NATIONAL AND STATE HISTORIC RESOURCES

NAME/DESCRIPTION	ADDRESS	NATIONAL REGISTER OF HISTORIC PLACES	CALIFORNIA REGISTER OF HISTORIC RESOURCES
Carlsbad Santa Fe Depot	400 Carlsbad Village Dr.	X	
Rancho de los Kiotes (Leo Carrillo Ranch Historic Park)	6200 Flying Leo Carrillo Ln.	X	X
Frazier's Well/Alt Karlsbad	2802 Carlsbad Blvd.		X

Source: Dyett & Bhatia, 2010.

Historic and Cultural Places and Landmarks

Carlsbad is home to many structures and places with historical and cultural value that help to connect the city's heritage to its present and future, as described in the historical narrative above. There are three resources in Carlsbad listed on the National Register of Historic Places and/or the California Register of Historical Resources (see Table 7-1). In addition, there are several resources potentially eligible for nomination to the state or federal registers. More information on listed resources and potential historic resources, including addresses and a map, can be found in Envision Carlsbad Working Paper 4 – History, the Arts and Cultural Resources; High Quality Education and Community Services.

Paleontological Resources

Paleontological resources are the remains and/or traces of prehistoric plant and animal life, exclusive of human remains. The formation of fossils typically involves the rapid burial of plant or animal remains and the formation of casts, molds, or impressions in the associated sediment (which subsequently becomes sedimentary rock). Because of this, the potential for fossil remains in a given geologic formation can be predicted based on known fossil occurrences from similar (or correlated) geologic formations in other locations.

The City of Carlsbad contains several geologic formations that include a sequence of marine and non-marine sedimentary rock units that record portions of the last 140 million years of earth history. The geologic formations found in the city are primarily the Lusardi Formation of the Cretaceous Age, as well as the Santiago Formation and Del Mar Formation of the Tertiary Age that overlie the Lusardi Formation. The Lusardi Formation consistently produces significant fossils and consists of sandstones and conglomerate that were deposited in a shallow sea that covered the region approximately 74 million years ago. The Santiago Formation and Del Mar Formation make up the sandstones and siltstones of the La Jolla Group, which is approximately 45 million years old and has produced a large number of vertebrate and invertebrate fossils. The La Jolla Group has a high potential for containing significant fossils. Loma Linda terrace deposits of the Quaternary Age have the potential to contain fossiliferous rock from Pleistocene terrace deposits of not more than two million years in age. These fossils are also potentially significant.

Mark-up 13 Oct 2020

"Historic" Properties in Carlsbad

November 21, 2019

Properties designated historic by City Council, marked with a plaque and/or appear in *Historic Carlsbad: A Self-Guided Tour*

	Property Name	Address	CC Action	Plaque	Tour	1980 List	1984 List	1986 List	2004 List	2010 List
*1	Alt Karlsbad/Frazier's Well	2802 Carlsbad Blvd.	X	X	X	X	X	X		X
	Army Navy Academy/Red Apple Inn	2605 Carlsbad Blvd.		X	X	X	X	X	X	X
	Barrio "Heart of the Barrio"	Walnut Ave. & Roosevelt St.		X						X
	Barrio Museum	3304 Roosevelt St.			X				X	X
	Beller House/Deckleman House	1448 Forest Ave.			X	X	X	X		X
2	Calavera Lake & Dam	Lake Calavera	X					X		
3	Calavera School Site	Calavera Hills Community Park	X	X				X		
	Carlsbad Springs Mineral Springs Hotel	2855 Carlsbad Blvd.			X	X	X	X		X
4	Carlsbad School District Office/Pine Street School	Pine Ave. & Harding St.	X					X		
	Carlsbad Theater	2822 State St.		X	X			X		X
5	Carlsbad Union Church	800 Pine Ave.	X			X	X	X		
*6	Carrillo Ranch	6200 Flying Leo Carrillo Ln.	X	X				X		X
	Cohn House	3003 Carlsbad Blvd.			X	X	X	X	X	X
7	Culver-Myers-Capp House	3140 Highland Dr.	X	X	X	X	X	X		X
	El Camino Real Bell	State St. & Grand Ave.		X						
8	Gage House	3080 Lincoln St.	X	X	X	X	X	X	X	X
9	Gaus House	3442 Roosevelt St.	X	X	X	X	X	X		X
10	Highland Bungalows	3264 Highland Dr.	X					X		
	Highway 101	Highway 101		X						
	Hosp Grove	2240 Jefferson St.		X						
11	Kelly Barn	El Camino Real	X					X		X
	Killian Building	2900 block of State St.			X	X	X	X	X	X
	Kreutzkamp House	624 Laguna Dr.			X	X	X	X		X
	Ledgerwood House	3862 Carlsbad Blvd.		X				X		
	Los Diego Hotel	2907 State St.			X			X	X	X
*12	Magee House	258 Beech St.	X	X	X	X	X	X		X
	Mission Santiago	3329 Roosevelt St.			X				X	X
	Ramirez Bungalow	3309 Roosevelt St.		X	X					X
13	Ramsay House	1330 Chuparosa Way	X		X	X	X	X		X
14	Rancho Agua Hedionda Adobe/Marron Adobe	2770 Sunny Creek Rd.	X			X	X	X		X
*15	Santa Fe Depot	400 Carlsbad Village Dr.	X	X	X	X	X	X		X
	Shaw House	3081 Highland Dr.			X	X	X	X		X
16	Shipley Ward House	2747 Carlsbad Blvd.	X			X	X	X		
	Shirley House (Rancho de la Motte-Kirmse-Shirley)	1542 Oak St.			X	X	X	X		X
17	South Coast Land Company	2958 State St.	X	X	X			X	X	X
18	Stagecoach Stop	El Camino Real	X							
19	St. Michael's Episcopal Church	2775 Carlsbad Blvd.	X	X	X	X	X	X		X
	St. Patrick's Church/Heritage Hall	2650 Garfield St.			X	X	X	X		X
	Twin Inns/Schutte House	2978 Carlsbad Blvd.		X	X	X	X	X		X
	Twin Inns Gazebo	Magee Park		X						
	Twin Inns Granary	Magee Park		X						

* National, State and/or San Diego Historic Places

Appendix D

Noise Measurement Data and Noise Modeling Results

Measurement 1

Data Logger 2
SET 3
A
SLOW
Range 40-100
L05 65.6
L10 62.2
L50 57.0
L90 52.4
L95 51.7
Max dB 73.5
2022/06/08 09:49:56
SEL 87.8
Leq 60.1

No.s	Date Time	dB
1	2022/06/08 09:48:06	52.9
2	2022/06/08 09:48:09	52.2
3	2022/06/08 09:48:12	52.7
4	2022/06/08 09:48:15	53.4
5	2022/06/08 09:48:18	55.4
6	2022/06/08 09:48:21	56.4
7	2022/06/08 09:48:24	57.9
8	2022/06/08 09:48:27	60.1
9	2022/06/08 09:48:30	56.3
10	2022/06/08 09:48:33	55.0
11	2022/06/08 09:48:36	58.6
12	2022/06/08 09:48:39	59.1
13	2022/06/08 09:48:42	70.0
14	2022/06/08 09:48:45	66.6
15	2022/06/08 09:48:48	60.8
16	2022/06/08 09:48:51	57.2
17	2022/06/08 09:48:54	55.2
18	2022/06/08 09:48:57	56.0
19	2022/06/08 09:49:00	55.9
20	2022/06/08 09:49:03	57.2
21	2022/06/08 09:49:06	56.9
22	2022/06/08 09:49:09	58.6
23	2022/06/08 09:49:12	60.9
24	2022/06/08 09:49:15	58.4
25	2022/06/08 09:49:18	57.8
26	2022/06/08 09:49:21	57.8
27	2022/06/08 09:49:24	58.6
28	2022/06/08 09:49:27	57.7
29	2022/06/08 09:49:30	57.4
30	2022/06/08 09:49:33	58.4
31	2022/06/08 09:49:36	57.9
32	2022/06/08 09:49:39	58.1
33	2022/06/08 09:49:42	58.5
34	2022/06/08 09:49:45	59.1
35	2022/06/08 09:49:48	61.5

36	2022/06/08	09:49:51	64.6
37	2022/06/08	09:49:54	73.4
38	2022/06/08	09:49:57	67.2
39	2022/06/08	09:50:00	66.8
40	2022/06/08	09:50:03	67.5
41	2022/06/08	09:50:06	65.6
42	2022/06/08	09:50:09	62.1
43	2022/06/08	09:50:12	57.7
44	2022/06/08	09:50:15	55.9
45	2022/06/08	09:50:18	58.0
46	2022/06/08	09:50:21	61.8
47	2022/06/08	09:50:24	71.5
48	2022/06/08	09:50:27	68.5
49	2022/06/08	09:50:30	59.8
50	2022/06/08	09:50:33	58.3
51	2022/06/08	09:50:36	57.7
52	2022/06/08	09:50:39	53.9
53	2022/06/08	09:50:42	54.6
54	2022/06/08	09:50:45	59.2
55	2022/06/08	09:50:48	58.2
56	2022/06/08	09:50:51	62.5
57	2022/06/08	09:50:54	60.4
58	2022/06/08	09:50:57	55.8
59	2022/06/08	09:51:00	54.1
60	2022/06/08	09:51:03	56.4
61	2022/06/08	09:51:06	57.1
62	2022/06/08	09:51:09	58.9
63	2022/06/08	09:51:12	57.7
64	2022/06/08	09:51:15	55.8
65	2022/06/08	09:51:18	55.4
66	2022/06/08	09:51:21	54.0
67	2022/06/08	09:51:24	52.7
68	2022/06/08	09:51:27	52.5
69	2022/06/08	09:51:30	52.3
70	2022/06/08	09:51:33	52.4
71	2022/06/08	09:51:36	52.0
72	2022/06/08	09:51:39	51.4
73	2022/06/08	09:51:42	52.5
74	2022/06/08	09:51:45	55.4
75	2022/06/08	09:51:48	55.9
76	2022/06/08	09:51:51	55.8
77	2022/06/08	09:51:54	56.9
78	2022/06/08	09:51:57	56.3
79	2022/06/08	09:52:00	56.7
80	2022/06/08	09:52:03	58.1
81	2022/06/08	09:52:06	58.6
82	2022/06/08	09:52:09	55.7
83	2022/06/08	09:52:12	53.8
84	2022/06/08	09:52:15	52.7
85	2022/06/08	09:52:18	51.9

86	2022/06/08 09:52:21	51.5
87	2022/06/08 09:52:24	51.9
88	2022/06/08 09:52:27	52.5
89	2022/06/08 09:52:30	55.4
90	2022/06/08 09:52:33	58.7
91	2022/06/08 09:52:36	60.3
92	2022/06/08 09:52:39	60.8
93	2022/06/08 09:52:42	62.0
94	2022/06/08 09:52:45	60.6
95	2022/06/08 09:52:48	60.0
96	2022/06/08 09:52:51	59.5
97	2022/06/08 09:52:54	58.2
98	2022/06/08 09:52:57	58.8
99	2022/06/08 09:53:00	61.1
100	2022/06/08 09:53:03	65.2
101	2022/06/08 09:53:06	63.6
102	2022/06/08 09:53:09	61.6
103	2022/06/08 09:53:12	58.7
104	2022/06/08 09:53:15	58.0
105	2022/06/08 09:53:18	57.4
106	2022/06/08 09:53:21	57.0
107	2022/06/08 09:53:24	57.2
108	2022/06/08 09:53:27	57.6
109	2022/06/08 09:53:30	57.2
110	2022/06/08 09:53:33	57.0
111	2022/06/08 09:53:36	57.3
112	2022/06/08 09:53:39	57.5
113	2022/06/08 09:53:42	57.4
114	2022/06/08 09:53:45	57.4
115	2022/06/08 09:53:48	57.5
116	2022/06/08 09:53:51	57.9
117	2022/06/08 09:53:54	58.3
118	2022/06/08 09:53:57	59.8
119	2022/06/08 09:54:00	62.1
120	2022/06/08 09:54:03	65.2
121	2022/06/08 09:54:06	61.7
122	2022/06/08 09:54:09	62.1
123	2022/06/08 09:54:12	64.4
124	2022/06/08 09:54:15	67.2
125	2022/06/08 09:54:18	65.7
126	2022/06/08 09:54:21	68.9
127	2022/06/08 09:54:24	61.7
128	2022/06/08 09:54:27	55.7
129	2022/06/08 09:54:30	52.7
130	2022/06/08 09:54:33	55.5
131	2022/06/08 09:54:36	59.2
132	2022/06/08 09:54:39	57.3
133	2022/06/08 09:54:42	57.2
134	2022/06/08 09:54:45	59.6
135	2022/06/08 09:54:48	58.1

136	2022/06/08	09:54:51	54.4
137	2022/06/08	09:54:54	53.9
138	2022/06/08	09:54:57	54.2
139	2022/06/08	09:55:00	53.4
140	2022/06/08	09:55:03	54.3
141	2022/06/08	09:55:06	60.7
142	2022/06/08	09:55:09	67.6
143	2022/06/08	09:55:12	61.8
144	2022/06/08	09:55:15	57.6
145	2022/06/08	09:55:18	56.4
146	2022/06/08	09:55:21	57.0
147	2022/06/08	09:55:24	54.8
148	2022/06/08	09:55:27	53.7
149	2022/06/08	09:55:30	53.2
150	2022/06/08	09:55:33	54.0
151	2022/06/08	09:55:36	56.2
152	2022/06/08	09:55:39	54.6
153	2022/06/08	09:55:42	56.1
154	2022/06/08	09:55:45	54.5
155	2022/06/08	09:55:48	54.7
156	2022/06/08	09:55:51	53.8
157	2022/06/08	09:55:54	55.8
158	2022/06/08	09:55:57	53.6
159	2022/06/08	09:56:00	52.2
160	2022/06/08	09:56:03	53.5
161	2022/06/08	09:56:06	52.8
162	2022/06/08	09:56:09	53.0
163	2022/06/08	09:56:12	53.9
164	2022/06/08	09:56:15	53.2
165	2022/06/08	09:56:18	54.5
166	2022/06/08	09:56:21	54.6
167	2022/06/08	09:56:24	55.7
168	2022/06/08	09:56:27	54.7
169	2022/06/08	09:56:30	52.9
170	2022/06/08	09:56:33	51.0
171	2022/06/08	09:56:36	52.0
172	2022/06/08	09:56:39	52.9
173	2022/06/08	09:56:42	51.7
174	2022/06/08	09:56:45	50.5
175	2022/06/08	09:56:48	50.9
176	2022/06/08	09:56:51	52.0
177	2022/06/08	09:56:54	56.0
178	2022/06/08	09:56:57	61.9
179	2022/06/08	09:57:00	61.3
180	2022/06/08	09:57:03	56.3
181	2022/06/08	09:57:06	53.1
182	2022/06/08	09:57:09	55.4
183	2022/06/08	09:57:12	58.8
184	2022/06/08	09:57:15	59.3
185	2022/06/08	09:57:18	56.3

186	2022/06/08 09:57:21	53.0
187	2022/06/08 09:57:24	51.4
188	2022/06/08 09:57:27	51.3
189	2022/06/08 09:57:30	58.1
190	2022/06/08 09:57:33	58.2
191	2022/06/08 09:57:36	56.3
192	2022/06/08 09:57:39	55.6
193	2022/06/08 09:57:42	55.1
194	2022/06/08 09:57:45	55.4
195	2022/06/08 09:57:48	56.1
196	2022/06/08 09:57:51	57.1
197	2022/06/08 09:57:54	56.8
198	2022/06/08 09:57:57	57.4
199	2022/06/08 09:58:00	59.7
200	2022/06/08 09:58:03	60.3

Measurement 2

Data Logger 2
SET 3
A
SLOW
Range 40-100
L05 70.2
L10 68.3
L50 56.9
L90 46.7
L95 46.1
Max dB 76.4
2022/06/08 10:12:47
SEL 91.8
Leq 64.1

No.s	Date Time	dB
1	2022/06/08 10:05:40	53.1
2	2022/06/08 10:05:43	48.0
3	2022/06/08 10:05:46	48.7
4	2022/06/08 10:05:49	65.5
5	2022/06/08 10:05:52	64.8
6	2022/06/08 10:05:55	64.5
7	2022/06/08 10:05:58	61.4
8	2022/06/08 10:06:01	52.7
9	2022/06/08 10:06:04	48.3
10	2022/06/08 10:06:07	46.6
11	2022/06/08 10:06:10	46.9
12	2022/06/08 10:06:13	57.0
13	2022/06/08 10:06:16	70.3
14	2022/06/08 10:06:19	61.0
15	2022/06/08 10:06:22	51.0
16	2022/06/08 10:06:25	47.6
17	2022/06/08 10:06:28	49.2
18	2022/06/08 10:06:31	63.5
19	2022/06/08 10:06:34	68.2
20	2022/06/08 10:06:37	64.5
21	2022/06/08 10:06:40	66.1
22	2022/06/08 10:06:43	61.6
23	2022/06/08 10:06:46	66.6
24	2022/06/08 10:06:49	67.4
25	2022/06/08 10:06:52	71.6
26	2022/06/08 10:06:55	64.0
27	2022/06/08 10:06:58	55.0
28	2022/06/08 10:07:01	50.5
29	2022/06/08 10:07:04	65.4
30	2022/06/08 10:07:07	67.0
31	2022/06/08 10:07:10	59.1
32	2022/06/08 10:07:13	58.0
33	2022/06/08 10:07:16	53.7
34	2022/06/08 10:07:19	48.7
35	2022/06/08 10:07:22	46.8

36	2022/06/08 10:07:25	46.6
37	2022/06/08 10:07:28	46.6
38	2022/06/08 10:07:31	49.7
39	2022/06/08 10:07:34	57.4
40	2022/06/08 10:07:37	60.8
41	2022/06/08 10:07:40	53.9
42	2022/06/08 10:07:43	65.4
43	2022/06/08 10:07:46	62.9
44	2022/06/08 10:07:49	66.8
45	2022/06/08 10:07:52	71.4
46	2022/06/08 10:07:55	61.8
47	2022/06/08 10:07:58	66.8
48	2022/06/08 10:08:01	68.1
49	2022/06/08 10:08:04	64.8
50	2022/06/08 10:08:07	65.1
51	2022/06/08 10:08:10	60.1
52	2022/06/08 10:08:13	63.6
53	2022/06/08 10:08:16	65.4
54	2022/06/08 10:08:19	56.9
55	2022/06/08 10:08:22	50.5
56	2022/06/08 10:08:25	49.8
57	2022/06/08 10:08:28	48.8
58	2022/06/08 10:08:31	48.4
59	2022/06/08 10:08:34	48.4
60	2022/06/08 10:08:37	47.6
61	2022/06/08 10:08:40	47.8
62	2022/06/08 10:08:43	48.7
63	2022/06/08 10:08:46	48.4
64	2022/06/08 10:08:49	49.1
65	2022/06/08 10:08:52	46.2
66	2022/06/08 10:08:55	47.8
67	2022/06/08 10:08:58	50.3
68	2022/06/08 10:09:01	52.3
69	2022/06/08 10:09:04	50.3
70	2022/06/08 10:09:07	48.1
71	2022/06/08 10:09:10	64.0
72	2022/06/08 10:09:13	66.0
73	2022/06/08 10:09:16	66.9
74	2022/06/08 10:09:19	62.2
75	2022/06/08 10:09:22	53.5
76	2022/06/08 10:09:25	54.0
77	2022/06/08 10:09:28	70.6
78	2022/06/08 10:09:31	63.3
79	2022/06/08 10:09:34	58.6
80	2022/06/08 10:09:37	49.3
81	2022/06/08 10:09:40	46.8
82	2022/06/08 10:09:43	46.7
83	2022/06/08 10:09:46	45.9
84	2022/06/08 10:09:49	45.9
85	2022/06/08 10:09:52	45.0

86	2022/06/08	10:09:55	44.4
87	2022/06/08	10:09:58	46.9
88	2022/06/08	10:10:01	46.7
89	2022/06/08	10:10:04	46.2
90	2022/06/08	10:10:07	48.6
91	2022/06/08	10:10:10	60.6
92	2022/06/08	10:10:13	62.1
93	2022/06/08	10:10:16	53.1
94	2022/06/08	10:10:19	48.3
95	2022/06/08	10:10:22	50.0
96	2022/06/08	10:10:25	49.3
97	2022/06/08	10:10:28	54.1
98	2022/06/08	10:10:31	60.4
99	2022/06/08	10:10:34	69.2
100	2022/06/08	10:10:37	64.8
101	2022/06/08	10:10:40	56.4
102	2022/06/08	10:10:43	52.7
103	2022/06/08	10:10:46	49.9
104	2022/06/08	10:10:49	51.1
105	2022/06/08	10:10:52	62.4
106	2022/06/08	10:10:55	66.9
107	2022/06/08	10:10:58	61.5
108	2022/06/08	10:11:01	62.0
109	2022/06/08	10:11:04	58.5
110	2022/06/08	10:11:07	55.0
111	2022/06/08	10:11:10	58.0
112	2022/06/08	10:11:13	71.8
113	2022/06/08	10:11:16	71.6
114	2022/06/08	10:11:19	69.1
115	2022/06/08	10:11:22	65.0
116	2022/06/08	10:11:25	56.2
117	2022/06/08	10:11:28	51.7
118	2022/06/08	10:11:31	52.0
119	2022/06/08	10:11:34	68.6
120	2022/06/08	10:11:37	66.2
121	2022/06/08	10:11:40	60.9
122	2022/06/08	10:11:43	62.1
123	2022/06/08	10:11:46	54.1
124	2022/06/08	10:11:49	47.1
125	2022/06/08	10:11:52	45.8
126	2022/06/08	10:11:55	46.0
127	2022/06/08	10:11:58	47.1
128	2022/06/08	10:12:01	60.3
129	2022/06/08	10:12:04	64.7
130	2022/06/08	10:12:07	62.3
131	2022/06/08	10:12:10	64.6
132	2022/06/08	10:12:13	58.1
133	2022/06/08	10:12:16	49.5
134	2022/06/08	10:12:19	46.3
135	2022/06/08	10:12:22	46.8

136	2022/06/08 10:12:25	50.4
137	2022/06/08 10:12:28	66.4
138	2022/06/08 10:12:31	67.9
139	2022/06/08 10:12:34	59.5
140	2022/06/08 10:12:37	71.1
141	2022/06/08 10:12:40	67.4
142	2022/06/08 10:12:43	59.4
143	2022/06/08 10:12:46	74.6
144	2022/06/08 10:12:49	68.3
145	2022/06/08 10:12:52	62.6
146	2022/06/08 10:12:55	61.7
147	2022/06/08 10:12:58	70.1
148	2022/06/08 10:13:01	73.4
149	2022/06/08 10:13:04	64.3
150	2022/06/08 10:13:07	54.0
151	2022/06/08 10:13:10	49.1
152	2022/06/08 10:13:13	47.7
153	2022/06/08 10:13:16	45.9
154	2022/06/08 10:13:19	44.9
155	2022/06/08 10:13:22	45.3
156	2022/06/08 10:13:25	46.7
157	2022/06/08 10:13:28	47.2
158	2022/06/08 10:13:31	47.9
159	2022/06/08 10:13:34	50.8
160	2022/06/08 10:13:37	64.9
161	2022/06/08 10:13:40	70.4
162	2022/06/08 10:13:43	72.8
163	2022/06/08 10:13:46	71.4
164	2022/06/08 10:13:49	64.7
165	2022/06/08 10:13:52	63.8
166	2022/06/08 10:13:55	60.9
167	2022/06/08 10:13:58	55.5
168	2022/06/08 10:14:01	68.2
169	2022/06/08 10:14:04	67.6
170	2022/06/08 10:14:07	66.8
171	2022/06/08 10:14:10	56.3
172	2022/06/08 10:14:13	57.9
173	2022/06/08 10:14:16	65.0
174	2022/06/08 10:14:19	56.8
175	2022/06/08 10:14:22	50.1
176	2022/06/08 10:14:25	51.6
177	2022/06/08 10:14:28	52.9
178	2022/06/08 10:14:31	49.5
179	2022/06/08 10:14:34	48.4
180	2022/06/08 10:14:37	48.8
181	2022/06/08 10:14:40	57.1
182	2022/06/08 10:14:43	68.7
183	2022/06/08 10:14:46	71.7
184	2022/06/08 10:14:49	72.4
185	2022/06/08 10:14:52	67.1

186	2022/06/08 10:14:55	66.4
187	2022/06/08 10:14:58	65.0
188	2022/06/08 10:15:01	66.7
189	2022/06/08 10:15:04	56.6
190	2022/06/08 10:15:07	49.3
191	2022/06/08 10:15:10	46.4
192	2022/06/08 10:15:13	46.1
193	2022/06/08 10:15:16	48.4
194	2022/06/08 10:15:19	47.5
195	2022/06/08 10:15:22	49.8
196	2022/06/08 10:15:25	53.6
197	2022/06/08 10:15:28	62.2
198	2022/06/08 10:15:31	64.9
199	2022/06/08 10:15:34	64.9
200	2022/06/08 10:15:37	59.6

Measurement 3

Data Logger 2
SET 3
A
SLOW
Range 40-100
L05 69.7
L10 68.0
L50 57.6
L90 42.3
L95 40.4
Max dB 75.6
2022/06/08 09:31:43
SEL 91.3
Leq 63.6

No.s	Date Time	dB
1	2022/06/08 09:27:06	60.7
2	2022/06/08 09:27:09	65.3
3	2022/06/08 09:27:12	64.6
4	2022/06/08 09:27:15	67.8
5	2022/06/08 09:27:18	62.6
6	2022/06/08 09:27:21	56.1
7	2022/06/08 09:27:24	63.2
8	2022/06/08 09:27:27	57.5
9	2022/06/08 09:27:30	69.3
10	2022/06/08 09:27:33	66.4
11	2022/06/08 09:27:36	70.0
12	2022/06/08 09:27:39	70.6
13	2022/06/08 09:27:42	68.8
14	2022/06/08 09:27:45	70.4
15	2022/06/08 09:27:48	68.5
16	2022/06/08 09:27:51	65.8
17	2022/06/08 09:27:54	61.8
18	2022/06/08 09:27:57	59.4
19	2022/06/08 09:28:00	66.2
20	2022/06/08 09:28:03	68.1
21	2022/06/08 09:28:06	64.5
22	2022/06/08 09:28:09	58.5
23	2022/06/08 09:28:12	57.4
24	2022/06/08 09:28:15	58.4
25	2022/06/08 09:28:18	59.2
26	2022/06/08 09:28:21	63.2
27	2022/06/08 09:28:24	66.2
28	2022/06/08 09:28:27	61.4
29	2022/06/08 09:28:30	60.9
30	2022/06/08 09:28:33	67.5
31	2022/06/08 09:28:36	59.6
32	2022/06/08 09:28:39	55.5
33	2022/06/08 09:28:42	48.6
34	2022/06/08 09:28:45	42.5
35	2022/06/08 09:28:48	41.3

36	2022/06/08 09:28:51	39.5
37	2022/06/08 09:28:54	40.0
38	2022/06/08 09:28:57	42.3
39	2022/06/08 09:29:00	40.5
40	2022/06/08 09:29:03	40.5
41	2022/06/08 09:29:06	46.1
42	2022/06/08 09:29:09	53.0
43	2022/06/08 09:29:12	49.8
44	2022/06/08 09:29:15	47.9
45	2022/06/08 09:29:18	46.3
46	2022/06/08 09:29:21	42.9
47	2022/06/08 09:29:24	43.5
48	2022/06/08 09:29:27	42.9
49	2022/06/08 09:29:30	43.7
50	2022/06/08 09:29:33	48.1
51	2022/06/08 09:29:36	65.1
52	2022/06/08 09:29:39	72.7
53	2022/06/08 09:29:42	70.5
54	2022/06/08 09:29:45	70.0
55	2022/06/08 09:29:48	64.5
56	2022/06/08 09:29:51	66.8
57	2022/06/08 09:29:54	62.9
58	2022/06/08 09:29:57	61.8
59	2022/06/08 09:30:00	61.0
60	2022/06/08 09:30:03	62.7
61	2022/06/08 09:30:06	59.2
62	2022/06/08 09:30:09	63.9
63	2022/06/08 09:30:12	65.4
64	2022/06/08 09:30:15	58.1
65	2022/06/08 09:30:18	52.0
66	2022/06/08 09:30:21	55.5
67	2022/06/08 09:30:24	49.3
68	2022/06/08 09:30:27	42.7
69	2022/06/08 09:30:30	41.1
70	2022/06/08 09:30:33	37.7
71	2022/06/08 09:30:36	37.3
72	2022/06/08 09:30:39	40.1
73	2022/06/08 09:30:42	38.0
74	2022/06/08 09:30:45	37.0
75	2022/06/08 09:30:48	41.1
76	2022/06/08 09:30:51	41.4
77	2022/06/08 09:30:54	48.2
78	2022/06/08 09:30:57	65.1
79	2022/06/08 09:31:00	67.8
80	2022/06/08 09:31:03	58.5
81	2022/06/08 09:31:06	56.0
82	2022/06/08 09:31:09	56.0
83	2022/06/08 09:31:12	55.9
84	2022/06/08 09:31:15	54.7
85	2022/06/08 09:31:18	57.6

86	2022/06/08 09:31:21	52.2
87	2022/06/08 09:31:24	48.9
88	2022/06/08 09:31:27	43.3
89	2022/06/08 09:31:30	40.9
90	2022/06/08 09:31:33	44.0
91	2022/06/08 09:31:36	49.9
92	2022/06/08 09:31:39	66.7
93	2022/06/08 09:31:42	71.7
94	2022/06/08 09:31:45	69.7
95	2022/06/08 09:31:48	63.6
96	2022/06/08 09:31:51	66.6
97	2022/06/08 09:31:54	67.1
98	2022/06/08 09:31:57	66.5
99	2022/06/08 09:32:00	67.4
100	2022/06/08 09:32:03	67.8
101	2022/06/08 09:32:06	63.5
102	2022/06/08 09:32:09	59.3
103	2022/06/08 09:32:12	54.3
104	2022/06/08 09:32:15	49.5
105	2022/06/08 09:32:18	50.3
106	2022/06/08 09:32:21	59.2
107	2022/06/08 09:32:24	58.9
108	2022/06/08 09:32:27	57.2
109	2022/06/08 09:32:30	49.6
110	2022/06/08 09:32:33	44.3
111	2022/06/08 09:32:36	43.6
112	2022/06/08 09:32:39	43.5
113	2022/06/08 09:32:42	47.1
114	2022/06/08 09:32:45	47.6
115	2022/06/08 09:32:48	52.1
116	2022/06/08 09:32:51	64.5
117	2022/06/08 09:32:54	68.9
118	2022/06/08 09:32:57	62.9
119	2022/06/08 09:33:00	71.1
120	2022/06/08 09:33:03	63.8
121	2022/06/08 09:33:06	56.4
122	2022/06/08 09:33:09	68.2
123	2022/06/08 09:33:12	67.1
124	2022/06/08 09:33:15	58.0
125	2022/06/08 09:33:18	52.4
126	2022/06/08 09:33:21	48.8
127	2022/06/08 09:33:24	46.6
128	2022/06/08 09:33:27	44.0
129	2022/06/08 09:33:30	52.2
130	2022/06/08 09:33:33	56.0
131	2022/06/08 09:33:36	59.7
132	2022/06/08 09:33:39	59.6
133	2022/06/08 09:33:42	53.6
134	2022/06/08 09:33:45	64.2
135	2022/06/08 09:33:48	61.7

136	2022/06/08 09:33:51	62.9
137	2022/06/08 09:33:54	69.0
138	2022/06/08 09:33:57	70.7
139	2022/06/08 09:34:00	67.3
140	2022/06/08 09:34:03	66.2
141	2022/06/08 09:34:06	67.8
142	2022/06/08 09:34:09	66.7
143	2022/06/08 09:34:12	59.7
144	2022/06/08 09:34:15	51.2
145	2022/06/08 09:34:18	51.5
146	2022/06/08 09:34:21	64.8
147	2022/06/08 09:34:24	55.3
148	2022/06/08 09:34:27	47.2
149	2022/06/08 09:34:30	43.3
150	2022/06/08 09:34:33	42.3
151	2022/06/08 09:34:36	48.0
152	2022/06/08 09:34:39	55.7
153	2022/06/08 09:34:42	54.8
154	2022/06/08 09:34:45	53.0
155	2022/06/08 09:34:48	51.9
156	2022/06/08 09:34:51	62.8
157	2022/06/08 09:34:54	69.7
158	2022/06/08 09:34:57	64.9
159	2022/06/08 09:35:00	66.3
160	2022/06/08 09:35:03	61.4
161	2022/06/08 09:35:06	57.9
162	2022/06/08 09:35:09	55.7
163	2022/06/08 09:35:12	60.3
164	2022/06/08 09:35:15	66.7
165	2022/06/08 09:35:18	58.4
166	2022/06/08 09:35:21	60.2
167	2022/06/08 09:35:24	60.3
168	2022/06/08 09:35:27	51.1
169	2022/06/08 09:35:30	51.5
170	2022/06/08 09:35:33	55.2
171	2022/06/08 09:35:36	60.5
172	2022/06/08 09:35:39	55.7
173	2022/06/08 09:35:42	49.6
174	2022/06/08 09:35:45	47.5
175	2022/06/08 09:35:48	54.8
176	2022/06/08 09:35:51	55.0
177	2022/06/08 09:35:54	63.0
178	2022/06/08 09:35:57	62.6
179	2022/06/08 09:36:00	62.1
180	2022/06/08 09:36:03	51.3
181	2022/06/08 09:36:06	45.0
182	2022/06/08 09:36:09	62.8
183	2022/06/08 09:36:12	56.2
184	2022/06/08 09:36:15	48.4
185	2022/06/08 09:36:18	49.2

186	2022/06/08 09:36:21	49.8
187	2022/06/08 09:36:24	54.4
188	2022/06/08 09:36:27	53.0
189	2022/06/08 09:36:30	69.6
190	2022/06/08 09:36:33	69.7
191	2022/06/08 09:36:36	69.9
192	2022/06/08 09:36:39	67.5
193	2022/06/08 09:36:42	71.0
194	2022/06/08 09:36:45	67.6
195	2022/06/08 09:36:48	65.0
196	2022/06/08 09:36:51	56.4
197	2022/06/08 09:36:54	46.5
198	2022/06/08 09:36:57	42.4
199	2022/06/08 09:37:00	42.9
200	2022/06/08 09:37:03	49.0

Measurement 4

Data Logger 2
SET 3
A
SLOW
Range 40-100
L05 53.9
L10 52.7
L50 47.4
L90 42.4
L95 40.2
Max dB 67.0
2022/06/08 08:26:47
SEL 79.1
Leq 51.4

No.s	Date Time	dB
1	2022/06/08 08:22:48	48.5
2	2022/06/08 08:22:51	46.3
3	2022/06/08 08:22:54	46.1
4	2022/06/08 08:22:57	46.2
5	2022/06/08 08:23:00	47.7
6	2022/06/08 08:23:03	48.8
7	2022/06/08 08:23:06	49.8
8	2022/06/08 08:23:09	49.7
9	2022/06/08 08:23:12	49.1
10	2022/06/08 08:23:15	49.6
11	2022/06/08 08:23:18	48.7
12	2022/06/08 08:23:21	53.6
13	2022/06/08 08:23:24	52.8
14	2022/06/08 08:23:27	49.5
15	2022/06/08 08:23:30	52.7
16	2022/06/08 08:23:33	53.9
17	2022/06/08 08:23:36	53.9
18	2022/06/08 08:23:39	49.7
19	2022/06/08 08:23:42	45.7
20	2022/06/08 08:23:45	42.6
21	2022/06/08 08:23:48	41.2
22	2022/06/08 08:23:51	42.7
23	2022/06/08 08:23:54	46.1
24	2022/06/08 08:23:57	51.6
25	2022/06/08 08:24:00	49.9
26	2022/06/08 08:24:03	50.0
27	2022/06/08 08:24:06	49.7
28	2022/06/08 08:24:09	45.0
29	2022/06/08 08:24:12	42.4
30	2022/06/08 08:24:15	45.6
31	2022/06/08 08:24:18	44.1
32	2022/06/08 08:24:21	43.1
33	2022/06/08 08:24:24	43.1
34	2022/06/08 08:24:27	43.3
35	2022/06/08 08:24:30	43.0

36	2022/06/08 08:24:33	44.2
37	2022/06/08 08:24:36	43.8
38	2022/06/08 08:24:39	44.5
39	2022/06/08 08:24:42	48.7
40	2022/06/08 08:24:45	52.6
41	2022/06/08 08:24:48	48.6
42	2022/06/08 08:24:51	45.5
43	2022/06/08 08:24:54	47.3
44	2022/06/08 08:24:57	45.0
45	2022/06/08 08:25:00	46.9
46	2022/06/08 08:25:03	47.2
47	2022/06/08 08:25:06	46.4
48	2022/06/08 08:25:09	45.8
49	2022/06/08 08:25:12	44.9
50	2022/06/08 08:25:15	45.1
51	2022/06/08 08:25:18	46.5
52	2022/06/08 08:25:21	47.1
53	2022/06/08 08:25:24	48.8
54	2022/06/08 08:25:27	49.8
55	2022/06/08 08:25:30	50.3
56	2022/06/08 08:25:33	49.0
57	2022/06/08 08:25:36	50.4
58	2022/06/08 08:25:39	45.0
59	2022/06/08 08:25:42	42.7
60	2022/06/08 08:25:45	42.7
61	2022/06/08 08:25:48	42.8
62	2022/06/08 08:25:51	42.8
63	2022/06/08 08:25:54	42.5
64	2022/06/08 08:25:57	42.8
65	2022/06/08 08:26:00	43.9
66	2022/06/08 08:26:03	45.9
67	2022/06/08 08:26:06	48.4
68	2022/06/08 08:26:09	50.6
69	2022/06/08 08:26:12	49.1
70	2022/06/08 08:26:15	49.3
71	2022/06/08 08:26:18	54.7
72	2022/06/08 08:26:21	51.1
73	2022/06/08 08:26:24	49.5
74	2022/06/08 08:26:27	50.5
75	2022/06/08 08:26:30	53.8
76	2022/06/08 08:26:33	56.6
77	2022/06/08 08:26:36	61.3
78	2022/06/08 08:26:39	60.4
79	2022/06/08 08:26:42	64.3
80	2022/06/08 08:26:45	66.5
81	2022/06/08 08:26:48	60.6
82	2022/06/08 08:26:51	58.5
83	2022/06/08 08:26:54	54.3
84	2022/06/08 08:26:57	49.1
85	2022/06/08 08:27:00	47.6

86	2022/06/08 08:27:03	46.7
87	2022/06/08 08:27:06	46.3
88	2022/06/08 08:27:09	45.4
89	2022/06/08 08:27:12	46.1
90	2022/06/08 08:27:15	47.3
91	2022/06/08 08:27:18	51.9
92	2022/06/08 08:27:21	52.8
93	2022/06/08 08:27:24	49.7
94	2022/06/08 08:27:27	49.2
95	2022/06/08 08:27:30	49.1
96	2022/06/08 08:27:33	47.7
97	2022/06/08 08:27:36	46.7
98	2022/06/08 08:27:39	47.4
99	2022/06/08 08:27:42	46.3
100	2022/06/08 08:27:45	45.6
101	2022/06/08 08:27:48	44.3
102	2022/06/08 08:27:51	44.0
103	2022/06/08 08:27:54	45.1
104	2022/06/08 08:27:57	44.3
105	2022/06/08 08:28:00	44.9
106	2022/06/08 08:28:03	44.5
107	2022/06/08 08:28:06	43.2
108	2022/06/08 08:28:09	43.1
109	2022/06/08 08:28:12	43.9
110	2022/06/08 08:28:15	44.1
111	2022/06/08 08:28:18	47.4
112	2022/06/08 08:28:21	53.5
113	2022/06/08 08:28:24	51.3
114	2022/06/08 08:28:27	46.0
115	2022/06/08 08:28:30	46.5
116	2022/06/08 08:28:33	50.1
117	2022/06/08 08:28:36	52.0
118	2022/06/08 08:28:39	60.6
119	2022/06/08 08:28:42	62.2
120	2022/06/08 08:28:45	51.9
121	2022/06/08 08:28:48	49.4
122	2022/06/08 08:28:51	52.3
123	2022/06/08 08:28:54	53.8
124	2022/06/08 08:28:57	52.3
125	2022/06/08 08:29:00	51.2
126	2022/06/08 08:29:03	49.3
127	2022/06/08 08:29:06	48.5
128	2022/06/08 08:29:09	51.5
129	2022/06/08 08:29:12	53.8
130	2022/06/08 08:29:15	51.3
131	2022/06/08 08:29:18	47.8
132	2022/06/08 08:29:21	47.6
133	2022/06/08 08:29:24	48.9
134	2022/06/08 08:29:27	51.1
135	2022/06/08 08:29:30	49.1

136	2022/06/08 08:29:33	46.4
137	2022/06/08 08:29:36	46.2
138	2022/06/08 08:29:39	43.7
139	2022/06/08 08:29:42	48.4
140	2022/06/08 08:29:45	47.8
141	2022/06/08 08:29:48	42.8
142	2022/06/08 08:29:51	42.7
143	2022/06/08 08:29:54	42.2
144	2022/06/08 08:29:57	42.3
145	2022/06/08 08:30:00	44.0
146	2022/06/08 08:30:03	45.4
147	2022/06/08 08:30:06	44.3
148	2022/06/08 08:30:09	43.4
149	2022/06/08 08:30:12	46.1
150	2022/06/08 08:30:15	51.1
151	2022/06/08 08:30:18	52.1
152	2022/06/08 08:30:21	49.9
153	2022/06/08 08:30:24	51.1
154	2022/06/08 08:30:27	48.8
155	2022/06/08 08:30:30	48.9
156	2022/06/08 08:30:33	50.1
157	2022/06/08 08:30:36	47.4
158	2022/06/08 08:30:39	46.1
159	2022/06/08 08:30:42	45.5
160	2022/06/08 08:30:45	47.7
161	2022/06/08 08:30:48	48.3
162	2022/06/08 08:30:51	48.5
163	2022/06/08 08:30:54	49.1
164	2022/06/08 08:30:57	49.5
165	2022/06/08 08:31:00	47.3
166	2022/06/08 08:31:03	48.0
167	2022/06/08 08:31:06	48.0
168	2022/06/08 08:31:09	48.0
169	2022/06/08 08:31:12	47.0
170	2022/06/08 08:31:15	47.3
171	2022/06/08 08:31:18	47.0
172	2022/06/08 08:31:21	47.9
173	2022/06/08 08:31:24	48.8
174	2022/06/08 08:31:27	48.7
175	2022/06/08 08:31:30	47.2
176	2022/06/08 08:31:33	46.8
177	2022/06/08 08:31:36	47.7
178	2022/06/08 08:31:39	46.7
179	2022/06/08 08:31:42	44.6
180	2022/06/08 08:31:45	42.8
181	2022/06/08 08:31:48	41.6
182	2022/06/08 08:31:51	40.7
183	2022/06/08 08:31:54	39.8
184	2022/06/08 08:31:57	39.6
185	2022/06/08 08:32:00	39.9

186	2022/06/08 08:32:03	40.3
187	2022/06/08 08:32:06	39.7
188	2022/06/08 08:32:09	39.6
189	2022/06/08 08:32:12	37.8
190	2022/06/08 08:32:15	39.0
191	2022/06/08 08:32:18	40.1
192	2022/06/08 08:32:21	42.4
193	2022/06/08 08:32:24	42.5
194	2022/06/08 08:32:27	40.1
195	2022/06/08 08:32:30	43.4
196	2022/06/08 08:32:33	50.0
197	2022/06/08 08:32:36	51.7
198	2022/06/08 08:32:39	50.9
199	2022/06/08 08:32:42	48.2
200	2022/06/08 08:32:45	45.4

Measurement 5

Data Logger 2
SET 240
A
SLOW
Range 40-100
L05 57.8
L10 57.1
L50 52.7
L90 51.4
L95 50.9
Max dB 68.3
2022/06/07 09:49:57
SEL 82.2
Leq 54.5

No.s	Date Time	dB
1	2022/06/07 09:48:27	53.2
2	2022/06/07 09:52:27	54.3

Measurement 6

Data Logger 2
SET 3
A
SLOW
Range 40-100
L05 71.3
L10 70.2
L50 61.7
L90 42.7
L95 38.9
Max dB 75.6
2022/06/08 07:45:54
SEL 93.5
Leq 65.9

No.s	Date Time	dB
1	2022/06/08 07:43:55	59.3
2	2022/06/08 07:43:58	57.3
3	2022/06/08 07:44:01	63.8
4	2022/06/08 07:44:04	59.3
5	2022/06/08 07:44:07	61.7
6	2022/06/08 07:44:10	58.7
7	2022/06/08 07:44:13	60.8
8	2022/06/08 07:44:16	67.4
9	2022/06/08 07:44:19	68.2
10	2022/06/08 07:44:22	70.0
11	2022/06/08 07:44:25	67.0
12	2022/06/08 07:44:28	60.4
13	2022/06/08 07:44:31	66.6
14	2022/06/08 07:44:34	65.0
15	2022/06/08 07:44:37	61.1
16	2022/06/08 07:44:40	64.2
17	2022/06/08 07:44:43	55.3
18	2022/06/08 07:44:46	55.6
19	2022/06/08 07:44:49	67.3
20	2022/06/08 07:44:52	61.5
21	2022/06/08 07:44:55	54.8
22	2022/06/08 07:44:58	47.9
23	2022/06/08 07:45:01	43.6
24	2022/06/08 07:45:04	42.7
25	2022/06/08 07:45:07	39.0
26	2022/06/08 07:45:10	37.9
27	2022/06/08 07:45:13	38.4
28	2022/06/08 07:45:16	44.5
29	2022/06/08 07:45:19	55.2
30	2022/06/08 07:45:22	58.0
31	2022/06/08 07:45:25	61.1
32	2022/06/08 07:45:28	61.9
33	2022/06/08 07:45:31	60.8
34	2022/06/08 07:45:34	73.2
35	2022/06/08 07:45:37	63.4

36	2022/06/08 07:45:40	65.1
37	2022/06/08 07:45:43	56.1
38	2022/06/08 07:45:46	67.0
39	2022/06/08 07:45:49	71.2
40	2022/06/08 07:45:52	75.6
41	2022/06/08 07:45:55	70.3
42	2022/06/08 07:45:58	70.6
43	2022/06/08 07:46:01	66.5
44	2022/06/08 07:46:04	69.5
45	2022/06/08 07:46:07	72.6
46	2022/06/08 07:46:10	71.8
47	2022/06/08 07:46:13	68.6
48	2022/06/08 07:46:16	66.2
49	2022/06/08 07:46:19	68.5
50	2022/06/08 07:46:22	65.0
51	2022/06/08 07:46:25	63.2
52	2022/06/08 07:46:28	69.7
53	2022/06/08 07:46:31	70.9
54	2022/06/08 07:46:34	69.8
55	2022/06/08 07:46:37	69.0
56	2022/06/08 07:46:40	67.3
57	2022/06/08 07:46:43	68.4
58	2022/06/08 07:46:46	68.0
59	2022/06/08 07:46:49	68.4
60	2022/06/08 07:46:52	68.7
61	2022/06/08 07:46:55	60.9
62	2022/06/08 07:46:58	68.5
63	2022/06/08 07:47:01	58.8
64	2022/06/08 07:47:04	54.0
65	2022/06/08 07:47:07	66.3
66	2022/06/08 07:47:10	69.9
67	2022/06/08 07:47:13	59.0
68	2022/06/08 07:47:16	51.4
69	2022/06/08 07:47:19	54.5
70	2022/06/08 07:47:22	70.6
71	2022/06/08 07:47:25	65.1
72	2022/06/08 07:47:28	63.8
73	2022/06/08 07:47:31	58.0
74	2022/06/08 07:47:34	65.2
75	2022/06/08 07:47:37	60.0
76	2022/06/08 07:47:40	56.8
77	2022/06/08 07:47:43	55.6
78	2022/06/08 07:47:46	53.5
79	2022/06/08 07:47:49	54.0
80	2022/06/08 07:47:52	50.3
81	2022/06/08 07:47:55	60.1
82	2022/06/08 07:47:58	66.9
83	2022/06/08 07:48:01	63.4
84	2022/06/08 07:48:04	63.4
85	2022/06/08 07:48:07	71.0

86	2022/06/08 07:48:10	66.3
87	2022/06/08 07:48:13	69.7
88	2022/06/08 07:48:16	69.5
89	2022/06/08 07:48:19	65.3
90	2022/06/08 07:48:22	62.7
91	2022/06/08 07:48:25	70.7
92	2022/06/08 07:48:28	64.8
93	2022/06/08 07:48:31	65.7
94	2022/06/08 07:48:34	69.6
95	2022/06/08 07:48:37	68.5
96	2022/06/08 07:48:40	65.9
97	2022/06/08 07:48:43	67.1
98	2022/06/08 07:48:46	62.3
99	2022/06/08 07:48:49	72.3
100	2022/06/08 07:48:52	70.1
101	2022/06/08 07:48:55	69.9
102	2022/06/08 07:48:58	60.3
103	2022/06/08 07:49:01	51.6
104	2022/06/08 07:49:04	42.6
105	2022/06/08 07:49:07	40.6
106	2022/06/08 07:49:10	42.9
107	2022/06/08 07:49:13	44.3
108	2022/06/08 07:49:16	39.1
109	2022/06/08 07:49:19	41.3
110	2022/06/08 07:49:22	54.6
111	2022/06/08 07:49:25	68.7
112	2022/06/08 07:49:28	61.7
113	2022/06/08 07:49:31	62.8
114	2022/06/08 07:49:34	54.8
115	2022/06/08 07:49:37	56.2
116	2022/06/08 07:49:40	50.5
117	2022/06/08 07:49:43	45.4
118	2022/06/08 07:49:46	51.8
119	2022/06/08 07:49:49	45.3
120	2022/06/08 07:49:52	44.7
121	2022/06/08 07:49:55	46.5
122	2022/06/08 07:49:58	52.1
123	2022/06/08 07:50:01	62.5
124	2022/06/08 07:50:04	67.9
125	2022/06/08 07:50:07	67.6
126	2022/06/08 07:50:10	70.1
127	2022/06/08 07:50:13	71.3
128	2022/06/08 07:50:16	71.0
129	2022/06/08 07:50:19	67.0
130	2022/06/08 07:50:22	70.1
131	2022/06/08 07:50:25	68.2
132	2022/06/08 07:50:28	60.6
133	2022/06/08 07:50:31	54.8
134	2022/06/08 07:50:34	48.2
135	2022/06/08 07:50:37	49.0

136	2022/06/08 07:50:40	49.3
137	2022/06/08 07:50:43	55.8
138	2022/06/08 07:50:46	69.6
139	2022/06/08 07:50:49	71.0
140	2022/06/08 07:50:52	64.1
141	2022/06/08 07:50:55	57.3
142	2022/06/08 07:50:58	60.0
143	2022/06/08 07:51:01	50.0
144	2022/06/08 07:51:04	43.2
145	2022/06/08 07:51:07	40.6
146	2022/06/08 07:51:10	37.8
147	2022/06/08 07:51:13	38.1
148	2022/06/08 07:51:16	40.5
149	2022/06/08 07:51:19	47.4
150	2022/06/08 07:51:22	61.6
151	2022/06/08 07:51:25	63.9
152	2022/06/08 07:51:28	57.4
153	2022/06/08 07:51:31	61.1
154	2022/06/08 07:51:34	59.0
155	2022/06/08 07:51:37	54.8
156	2022/06/08 07:51:40	50.4
157	2022/06/08 07:51:43	50.9
158	2022/06/08 07:51:46	63.1
159	2022/06/08 07:51:49	57.7
160	2022/06/08 07:51:52	56.9
161	2022/06/08 07:51:55	52.8
162	2022/06/08 07:51:58	50.4
163	2022/06/08 07:52:01	46.8
164	2022/06/08 07:52:04	38.3
165	2022/06/08 07:52:07	34.2
166	2022/06/08 07:52:10	35.9
167	2022/06/08 07:52:13	36.3
168	2022/06/08 07:52:16	37.6
169	2022/06/08 07:52:19	46.1
170	2022/06/08 07:52:22	56.3
171	2022/06/08 07:52:25	53.6
172	2022/06/08 07:52:28	50.5
173	2022/06/08 07:52:31	66.8
174	2022/06/08 07:52:34	70.5
175	2022/06/08 07:52:37	67.5
176	2022/06/08 07:52:40	70.5
177	2022/06/08 07:52:43	69.3
178	2022/06/08 07:52:46	69.3
179	2022/06/08 07:52:49	69.6
180	2022/06/08 07:52:52	71.5
181	2022/06/08 07:52:55	63.6
182	2022/06/08 07:52:58	69.8
183	2022/06/08 07:53:01	61.7
184	2022/06/08 07:53:04	61.9
185	2022/06/08 07:53:07	64.9

186	2022/06/08 07:53:10	65.2
187	2022/06/08 07:53:13	63.6
188	2022/06/08 07:53:16	69.3
189	2022/06/08 07:53:19	69.5
190	2022/06/08 07:53:22	69.1
191	2022/06/08 07:53:25	59.1
192	2022/06/08 07:53:28	49.7
193	2022/06/08 07:53:31	44.8
194	2022/06/08 07:53:34	52.0
195	2022/06/08 07:53:37	57.9
196	2022/06/08 07:53:40	51.5
197	2022/06/08 07:53:43	51.2
198	2022/06/08 07:53:46	51.7
199	2022/06/08 07:53:49	65.5
200	2022/06/08 07:53:52	69.3

Measurement 7

Data Logger 2
SET 3
A
SLOW
Range 40-100
L05 60.8
L10 57.8
L50 49.6
L90 42.8
L95 39.5
Max dB 69.3
2022/06/08 08:10:59
SEL 82.1
Leq 54.4

No.s	Date Time	dB
1	2022/06/08 08:03:21	59.4
2	2022/06/08 08:03:24	60.2
3	2022/06/08 08:03:27	56.9
4	2022/06/08 08:03:30	50.8
5	2022/06/08 08:03:33	42.4
6	2022/06/08 08:03:36	40.9
7	2022/06/08 08:03:39	46.5
8	2022/06/08 08:03:42	42.3
9	2022/06/08 08:03:45	42.5
10	2022/06/08 08:03:48	41.1
11	2022/06/08 08:03:51	39.0
12	2022/06/08 08:03:54	38.4
13	2022/06/08 08:03:57	38.4
14	2022/06/08 08:04:00	38.4
15	2022/06/08 08:04:03	38.9
16	2022/06/08 08:04:06	41.6
17	2022/06/08 08:04:09	50.1
18	2022/06/08 08:04:12	65.7
19	2022/06/08 08:04:15	63.9
20	2022/06/08 08:04:18	60.0
21	2022/06/08 08:04:21	53.7
22	2022/06/08 08:04:24	50.1
23	2022/06/08 08:04:27	51.2
24	2022/06/08 08:04:30	48.9
25	2022/06/08 08:04:33	56.3
26	2022/06/08 08:04:36	48.5
27	2022/06/08 08:04:39	43.2
28	2022/06/08 08:04:42	46.9
29	2022/06/08 08:04:45	49.8
30	2022/06/08 08:04:48	48.1
31	2022/06/08 08:04:51	48.9
32	2022/06/08 08:04:54	61.9
33	2022/06/08 08:04:57	61.5
34	2022/06/08 08:05:00	57.4
35	2022/06/08 08:05:03	52.7

36	2022/06/08 08:05:06	60.8
37	2022/06/08 08:05:09	57.4
38	2022/06/08 08:05:12	51.2
39	2022/06/08 08:05:15	49.3
40	2022/06/08 08:05:18	49.0
41	2022/06/08 08:05:21	52.0
42	2022/06/08 08:05:24	45.3
43	2022/06/08 08:05:27	48.6
44	2022/06/08 08:05:30	51.3
45	2022/06/08 08:05:33	50.7
46	2022/06/08 08:05:36	45.5
47	2022/06/08 08:05:39	47.7
48	2022/06/08 08:05:42	44.9
49	2022/06/08 08:05:45	38.7
50	2022/06/08 08:05:48	38.3
51	2022/06/08 08:05:51	45.8
52	2022/06/08 08:05:54	51.5
53	2022/06/08 08:05:57	52.9
54	2022/06/08 08:06:00	46.0
55	2022/06/08 08:06:03	49.8
56	2022/06/08 08:06:06	57.2
57	2022/06/08 08:06:09	61.7
58	2022/06/08 08:06:12	57.8
59	2022/06/08 08:06:15	48.9
60	2022/06/08 08:06:18	52.2
61	2022/06/08 08:06:21	56.1
62	2022/06/08 08:06:24	59.1
63	2022/06/08 08:06:27	55.1
64	2022/06/08 08:06:30	62.3
65	2022/06/08 08:06:33	57.2
66	2022/06/08 08:06:36	53.3
67	2022/06/08 08:06:39	47.3
68	2022/06/08 08:06:42	43.9
69	2022/06/08 08:06:45	49.6
70	2022/06/08 08:06:48	46.7
71	2022/06/08 08:06:51	50.0
72	2022/06/08 08:06:54	42.8
73	2022/06/08 08:06:57	51.0
74	2022/06/08 08:07:00	48.7
75	2022/06/08 08:07:03	50.5
76	2022/06/08 08:07:06	49.4
77	2022/06/08 08:07:09	47.9
78	2022/06/08 08:07:12	44.4
79	2022/06/08 08:07:15	43.6
80	2022/06/08 08:07:18	50.1
81	2022/06/08 08:07:21	50.1
82	2022/06/08 08:07:24	52.4
83	2022/06/08 08:07:27	52.1
84	2022/06/08 08:07:30	46.0
85	2022/06/08 08:07:33	51.7

86	2022/06/08 08:07:36	50.4
87	2022/06/08 08:07:39	45.6
88	2022/06/08 08:07:42	46.4
89	2022/06/08 08:07:45	48.8
90	2022/06/08 08:07:48	47.1
91	2022/06/08 08:07:51	46.1
92	2022/06/08 08:07:54	47.3
93	2022/06/08 08:07:57	49.5
94	2022/06/08 08:08:00	44.5
95	2022/06/08 08:08:03	49.5
96	2022/06/08 08:08:06	53.7
97	2022/06/08 08:08:09	48.1
98	2022/06/08 08:08:12	49.0
99	2022/06/08 08:08:15	62.1
100	2022/06/08 08:08:18	56.7
101	2022/06/08 08:08:21	50.0
102	2022/06/08 08:08:24	50.6
103	2022/06/08 08:08:27	51.5
104	2022/06/08 08:08:30	45.3
105	2022/06/08 08:08:33	42.4
106	2022/06/08 08:08:36	50.8
107	2022/06/08 08:08:39	49.1
108	2022/06/08 08:08:42	48.2
109	2022/06/08 08:08:45	47.4
110	2022/06/08 08:08:48	46.4
111	2022/06/08 08:08:51	50.1
112	2022/06/08 08:08:54	50.2
113	2022/06/08 08:08:57	48.7
114	2022/06/08 08:09:00	51.4
115	2022/06/08 08:09:03	52.7
116	2022/06/08 08:09:06	43.3
117	2022/06/08 08:09:09	43.1
118	2022/06/08 08:09:12	51.7
119	2022/06/08 08:09:15	51.5
120	2022/06/08 08:09:18	49.2
121	2022/06/08 08:09:21	53.1
122	2022/06/08 08:09:24	59.3
123	2022/06/08 08:09:27	60.8
124	2022/06/08 08:09:30	58.7
125	2022/06/08 08:09:33	53.2
126	2022/06/08 08:09:36	53.3
127	2022/06/08 08:09:39	52.4
128	2022/06/08 08:09:42	51.8
129	2022/06/08 08:09:45	51.2
130	2022/06/08 08:09:48	48.4
131	2022/06/08 08:09:51	42.0
132	2022/06/08 08:09:54	42.1
133	2022/06/08 08:09:57	48.6
134	2022/06/08 08:10:00	48.2
135	2022/06/08 08:10:03	47.3

136	2022/06/08 08:10:06	47.5
137	2022/06/08 08:10:09	48.9
138	2022/06/08 08:10:12	54.5
139	2022/06/08 08:10:15	45.3
140	2022/06/08 08:10:18	45.4
141	2022/06/08 08:10:21	48.4
142	2022/06/08 08:10:24	51.8
143	2022/06/08 08:10:27	48.7
144	2022/06/08 08:10:30	42.2
145	2022/06/08 08:10:33	47.0
146	2022/06/08 08:10:36	47.9
147	2022/06/08 08:10:39	49.0
148	2022/06/08 08:10:42	51.4
149	2022/06/08 08:10:45	48.5
150	2022/06/08 08:10:48	51.5
151	2022/06/08 08:10:51	54.7
152	2022/06/08 08:10:54	58.9
153	2022/06/08 08:10:57	69.3
154	2022/06/08 08:11:00	62.8
155	2022/06/08 08:11:03	54.3
156	2022/06/08 08:11:06	48.8
157	2022/06/08 08:11:09	51.0
158	2022/06/08 08:11:12	50.0
159	2022/06/08 08:11:15	46.5
160	2022/06/08 08:11:18	47.6
161	2022/06/08 08:11:21	50.6
162	2022/06/08 08:11:24	49.4
163	2022/06/08 08:11:27	51.6
164	2022/06/08 08:11:30	49.3
165	2022/06/08 08:11:33	51.8
166	2022/06/08 08:11:36	53.1
167	2022/06/08 08:11:39	49.9
168	2022/06/08 08:11:42	48.7
169	2022/06/08 08:11:45	50.6
170	2022/06/08 08:11:48	49.5
171	2022/06/08 08:11:51	51.0
172	2022/06/08 08:11:54	51.0
173	2022/06/08 08:11:57	51.3
174	2022/06/08 08:12:00	48.3
175	2022/06/08 08:12:03	47.7
176	2022/06/08 08:12:06	50.5
177	2022/06/08 08:12:09	46.2
178	2022/06/08 08:12:12	44.7
179	2022/06/08 08:12:15	44.5
180	2022/06/08 08:12:18	48.9
181	2022/06/08 08:12:21	48.1
182	2022/06/08 08:12:24	51.1
183	2022/06/08 08:12:27	49.4
184	2022/06/08 08:12:30	42.7
185	2022/06/08 08:12:33	49.2

186	2022/06/08 08:12:36	48.9
187	2022/06/08 08:12:39	51.4
188	2022/06/08 08:12:42	52.4
189	2022/06/08 08:12:45	47.8
190	2022/06/08 08:12:48	40.1
191	2022/06/08 08:12:51	39.2
192	2022/06/08 08:12:54	39.2
193	2022/06/08 08:12:57	44.2
194	2022/06/08 08:13:00	44.1
195	2022/06/08 08:13:03	47.5
196	2022/06/08 08:13:06	63.5
197	2022/06/08 08:13:09	59.1
198	2022/06/08 08:13:12	58.1
199	2022/06/08 08:13:15	59.4
200	2022/06/08 08:13:18	50.4

Measurement 8

Data Logger 2
SET 240
A
SLOW
Range 40-100
L05 68.9
L10 67.2
L50 60.0
L90 50.8
L95 48.8
Max dB 72.3
2022/06/07 10:10:46
SEL 91.1
Leq 63.4

No.s	Date Time	dB
1	2022/06/07 10:08:45	60.5
2	2022/06/07 10:12:45	55.1

Measurement 9

Data Logger 2
SET 240
A
SLOW
Range 40-100
L05 72.2
L10 70.8
L50 61.1
L90 52.8
L95 51.3
Max dB 77.2
2022/06/07 10:28:10
SEL 94.0
Leq 66.3

No.s	Date Time	dB
1	2022/06/07 10:24:42	54.7
2	2022/06/07 10:28:42	60.6

Measurement 10

Data Logger 2
SET 240
A
SLOW
Range 40-100
L05 59.0
L10 58.1
L50 53.7
L90 50.6
L95 48.6
Max dB 63.2
2022/06/07 07:43:56
SEL 82.9
Leq 55.2

No.s	Date Time	dB
1	2022/06/07 07:37:48	51.0
2	2022/06/07 07:41:48	53.6

Measurement 11

Data Logger 2
SET 3
A
SLOW
Range 40-100
L05 46.5
L10 46.2
L50 44.1
L90 42.8
L95 42.6
Max dB 51.3
2022/06/08 10:30:50
SEL 72.1
Leq 44.4

No.s	Date Time	dB
1	2022/06/08 10:28:56	46.8
2	2022/06/08 10:28:59	46.2
3	2022/06/08 10:29:02	43.9
4	2022/06/08 10:29:05	45.6
5	2022/06/08 10:29:08	47.2
6	2022/06/08 10:29:11	43.8
7	2022/06/08 10:29:14	47.9
8	2022/06/08 10:29:17	44.4
9	2022/06/08 10:29:20	45.8
10	2022/06/08 10:29:23	46.5
11	2022/06/08 10:29:26	46.5
12	2022/06/08 10:29:29	46.1
13	2022/06/08 10:29:32	45.8
14	2022/06/08 10:29:35	45.8
15	2022/06/08 10:29:38	44.5
16	2022/06/08 10:29:41	45.7
17	2022/06/08 10:29:44	46.0
18	2022/06/08 10:29:47	46.4
19	2022/06/08 10:29:50	45.4
20	2022/06/08 10:29:53	45.7
21	2022/06/08 10:29:56	44.6
22	2022/06/08 10:29:59	44.3
23	2022/06/08 10:30:02	43.9
24	2022/06/08 10:30:05	45.5
25	2022/06/08 10:30:08	44.6
26	2022/06/08 10:30:11	45.0
27	2022/06/08 10:30:14	44.4
28	2022/06/08 10:30:17	43.9
29	2022/06/08 10:30:20	44.7
30	2022/06/08 10:30:23	44.1
31	2022/06/08 10:30:26	44.1
32	2022/06/08 10:30:29	43.9
33	2022/06/08 10:30:32	45.9
34	2022/06/08 10:30:35	45.7
35	2022/06/08 10:30:38	46.1

36	2022/06/08 10:30:41	45.7
37	2022/06/08 10:30:44	46.1
38	2022/06/08 10:30:47	50.0
39	2022/06/08 10:30:50	45.2
40	2022/06/08 10:30:53	44.7
41	2022/06/08 10:30:56	46.2
42	2022/06/08 10:30:59	46.1
43	2022/06/08 10:31:02	46.6
44	2022/06/08 10:31:05	46.6
45	2022/06/08 10:31:08	46.9
46	2022/06/08 10:31:11	46.8
47	2022/06/08 10:31:14	45.9
48	2022/06/08 10:31:17	45.9
49	2022/06/08 10:31:20	46.2
50	2022/06/08 10:31:23	45.5
51	2022/06/08 10:31:26	44.1
52	2022/06/08 10:31:29	45.0
53	2022/06/08 10:31:32	45.3
54	2022/06/08 10:31:35	45.7
55	2022/06/08 10:31:38	45.9
56	2022/06/08 10:31:41	46.3
57	2022/06/08 10:31:44	46.3
58	2022/06/08 10:31:47	47.1
59	2022/06/08 10:31:50	46.8
60	2022/06/08 10:31:53	45.4
61	2022/06/08 10:31:56	44.7
62	2022/06/08 10:31:59	43.9
63	2022/06/08 10:32:02	43.7
64	2022/06/08 10:32:05	43.6
65	2022/06/08 10:32:08	43.6
66	2022/06/08 10:32:11	44.0
67	2022/06/08 10:32:14	44.2
68	2022/06/08 10:32:17	43.9
69	2022/06/08 10:32:20	44.4
70	2022/06/08 10:32:23	43.6
71	2022/06/08 10:32:26	44.4
72	2022/06/08 10:32:29	43.2
73	2022/06/08 10:32:32	42.6
74	2022/06/08 10:32:35	43.0
75	2022/06/08 10:32:38	42.9
76	2022/06/08 10:32:41	43.9
77	2022/06/08 10:32:44	43.8
78	2022/06/08 10:32:47	43.0
79	2022/06/08 10:32:50	43.5
80	2022/06/08 10:32:53	44.0
81	2022/06/08 10:32:56	42.7
82	2022/06/08 10:32:59	43.5
83	2022/06/08 10:33:02	43.0
84	2022/06/08 10:33:05	43.0
85	2022/06/08 10:33:08	43.0

86	2022/06/08 10:33:11	42.5
87	2022/06/08 10:33:14	43.0
88	2022/06/08 10:33:17	43.2
89	2022/06/08 10:33:20	43.0
90	2022/06/08 10:33:23	43.0
91	2022/06/08 10:33:26	42.4
92	2022/06/08 10:33:29	43.1
93	2022/06/08 10:33:32	43.6
94	2022/06/08 10:33:35	42.9
95	2022/06/08 10:33:38	44.2
96	2022/06/08 10:33:41	44.5
97	2022/06/08 10:33:44	42.8
98	2022/06/08 10:33:47	42.7
99	2022/06/08 10:33:50	43.8
100	2022/06/08 10:33:53	43.3
101	2022/06/08 10:33:56	42.9
102	2022/06/08 10:33:59	42.8
103	2022/06/08 10:34:02	42.0
104	2022/06/08 10:34:05	42.4
105	2022/06/08 10:34:08	42.6
106	2022/06/08 10:34:11	42.8
107	2022/06/08 10:34:14	42.7
108	2022/06/08 10:34:17	43.1
109	2022/06/08 10:34:20	43.5
110	2022/06/08 10:34:23	43.4
111	2022/06/08 10:34:26	43.8
112	2022/06/08 10:34:29	43.6
113	2022/06/08 10:34:32	43.3
114	2022/06/08 10:34:35	43.1
115	2022/06/08 10:34:38	44.6
116	2022/06/08 10:34:41	43.1
117	2022/06/08 10:34:44	43.8
118	2022/06/08 10:34:47	44.1
119	2022/06/08 10:34:50	43.8
120	2022/06/08 10:34:53	44.0
121	2022/06/08 10:34:56	43.9
122	2022/06/08 10:34:59	44.5
123	2022/06/08 10:35:02	44.1
124	2022/06/08 10:35:05	43.9
125	2022/06/08 10:35:08	43.9
126	2022/06/08 10:35:11	43.2
127	2022/06/08 10:35:14	43.6
128	2022/06/08 10:35:17	44.0
129	2022/06/08 10:35:20	44.1
130	2022/06/08 10:35:23	44.7
131	2022/06/08 10:35:26	44.2
132	2022/06/08 10:35:29	43.5
133	2022/06/08 10:35:32	43.5
134	2022/06/08 10:35:35	42.7
135	2022/06/08 10:35:38	42.5

136	2022/06/08 10:35:41	43.2
137	2022/06/08 10:35:44	43.6
138	2022/06/08 10:35:47	42.9
139	2022/06/08 10:35:50	43.3
140	2022/06/08 10:35:53	43.4
141	2022/06/08 10:35:56	43.4
142	2022/06/08 10:35:59	42.6
143	2022/06/08 10:36:02	42.7
144	2022/06/08 10:36:05	42.9
145	2022/06/08 10:36:08	42.7
146	2022/06/08 10:36:11	42.9
147	2022/06/08 10:36:14	44.2
148	2022/06/08 10:36:17	46.6
149	2022/06/08 10:36:20	45.0
150	2022/06/08 10:36:23	43.3
151	2022/06/08 10:36:26	43.8
152	2022/06/08 10:36:29	43.6
153	2022/06/08 10:36:32	43.4
154	2022/06/08 10:36:35	44.0
155	2022/06/08 10:36:38	44.5
156	2022/06/08 10:36:41	44.4
157	2022/06/08 10:36:44	45.8
158	2022/06/08 10:36:47	45.3
159	2022/06/08 10:36:50	44.4
160	2022/06/08 10:36:53	44.7
161	2022/06/08 10:36:56	44.7
162	2022/06/08 10:36:59	44.7
163	2022/06/08 10:37:02	43.8
164	2022/06/08 10:37:05	44.3
165	2022/06/08 10:37:08	42.7
166	2022/06/08 10:37:11	42.7
167	2022/06/08 10:37:14	43.0
168	2022/06/08 10:37:17	43.4
169	2022/06/08 10:37:20	43.2
170	2022/06/08 10:37:23	43.1
171	2022/06/08 10:37:26	43.3
172	2022/06/08 10:37:29	44.0
173	2022/06/08 10:37:32	43.7
174	2022/06/08 10:37:35	44.1
175	2022/06/08 10:37:38	44.3
176	2022/06/08 10:37:41	45.2
177	2022/06/08 10:37:44	45.0
178	2022/06/08 10:37:47	44.9
179	2022/06/08 10:37:50	45.9
180	2022/06/08 10:37:53	44.8
181	2022/06/08 10:37:56	44.3
182	2022/06/08 10:37:59	44.8
183	2022/06/08 10:38:02	45.1
184	2022/06/08 10:38:05	46.6
185	2022/06/08 10:38:08	45.6

186	2022/06/08 10:38:11	45.1
187	2022/06/08 10:38:14	46.0
188	2022/06/08 10:38:17	44.6
189	2022/06/08 10:38:20	44.1
190	2022/06/08 10:38:23	46.1
191	2022/06/08 10:38:26	44.8
192	2022/06/08 10:38:29	44.2
193	2022/06/08 10:38:32	45.3
194	2022/06/08 10:38:35	44.4
195	2022/06/08 10:38:38	44.6
196	2022/06/08 10:38:41	46.6
197	2022/06/08 10:38:44	44.8
198	2022/06/08 10:38:47	45.6
199	2022/06/08 10:38:50	45.7
200	2022/06/08 10:38:53	43.5

Measurement 12

Data Logger 2
SET 240
A
SLOW
Range 40-100
L05 64.7
L10 62.6
L50 57.1
L90 55.0
L95 54.6
Max dB 71.1
2022/06/07 09:30:27
SEL 87.3
Leq 59.6

No.s	Date Time	dB
1	2022/06/07 09:28:49	55.9
2	2022/06/07 09:32:49	57.2

Measurement 13

Data Logger 2
SET 240
A
SLOW
Range 40-100
L05 64.5
L10 62.6
L50 58.8
L90 42.5
L95 41.5
Max dB 70.6
2022/06/07 09:11:58
SEL 87.6
Leq 59.9

No.s	Date Time	dB
1	2022/06/07 09:06:46	63.8
2	2022/06/07 09:10:46	62.6

Measurement 14

Data Logger 2
SET 240
A
SLOW
Range 40-100
L05 60.9
L10 54.2
L50 44.8
L90 41.5
L95 41.1
Max dB 68.9
2022/06/07 08:41:21
SEL 81.9
Leq 54.2

No.s	Date Time	dB
1	2022/06/07 08:40:48	44.3
2	2022/06/07 08:44:48	41.1

Measurement 15

Data Logger 2
SET 240
A
SLOW
Range 40-100
L05 71.4
L10 69.9
L50 56.6
L90 45.8
L95 45.3
Max dB 74.6
2022/06/07 08:21:18
SEL 92.2
Leq 64.5

No.s	Date Time	dB
1	2022/06/07 08:12:31	49.8
2	2022/06/07 08:16:31	62.6

Roadway Construction Noise Model (RCNM),Version 1.1

Report date: 04/29/2023
Case Description: Housing Element Implementation and Public Safety Element Update

**** Receptor #1 ****

Description	Land Use	Baselines (dBA) Daytime	Evening	Night
50 Feet from Construction	Residential	65.0	65.0	65.0

Equipment

Description	Impact Device	Usage (%)	Spec Lmax (dBA)	Actual Lmax (dBA)	Receptor Distance (feet)	Estimated Shielding (dBA)
Excavator	No	40		80.7	50.0	0.0
Dozer	No	40		81.7	50.0	0.0
Jackhammer	Yes	20		88.9	50.0	0.0

Results

	Calculated (dBA)		Noise Limit Exceedance (dBA)		Noise Limits (dBA)		
	Day		Evening		Night		
Equipment	Lmax	Leq	Lmax	Leq	Lmax	Leq	Lmax
Excavator	80.7	76.7	N/A	N/A	N/A	N/A	N/A
Dozer	81.7	77.7	N/A	N/A	N/A	N/A	N/A
Jackhammer	88.9	81.9	N/A	N/A	N/A	N/A	N/A
Total	88.9	84.2	N/A	N/A	N/A	N/A	N/A

38HDR
Performance™ Series Air Conditioner with Puron® Refrigerant
1–1/2 to 5 Nominal Tons

Carrier®
Turn to the Experts.℠

Product Data

Puron™
the environmentally sound refrigerant

Performance™ SERIES

Carrier's Air Conditioners with Puron® refrigerant provide a collection of features unmatched by any other family of equipment. The 38HDR has been designed utilizing Carrier's Puron refrigerant. The environmentally sound refrigerant allows you to make a responsible decision in the protection of the earth's ozone layer.

As an Energy Star® Partner, Carrier Corporation has determined that this product meets the Energy Star® guidelines for energy efficiency. Refer to the combination ratings in the Product Data for system combinations that meet Energy Star® guidelines.

NOTE: Ratings contained in this document are subject to change at any time. Always refer to the AHRI directory (www.ahridirectory.org) for the most up-to-date ratings information.

INDUSTRY LEADING FEATURES / BENEFITS

Energy Efficiency

- 13 - 15 SEER/10.9 - 12.5 EER

Sound

- Levels as low as 68 dBA

Design Features

- New aesthetics
- Small footprint, same as old model and "stackable"
- WeatherArmor™ cabinet
  - — All steel cabinet construction
  - — Baked on powder paint
  - — Mesh coil guard

Reliability, Quality and Toughness

- Scroll compressor
- Crankcase Heater standard on sizes 030-060
- Factory-supplied filter drier
- High pressure switch
- Low pressure switch
- Line lengths up to 250' (76.2 m)
- Low ambient operation (down to -20°F/-28.9°C) with low ambient accessories.

MODEL NUMBER NOMENCLATURE

1	2	3	4	5	6	7	8	9	10	11	12	13
N	N	A	A	A/N	N	N	N	A/N	A/N	A/N	N	N
3	8	H	D	R	0	1	8	A	0	0	3	0
Product Series	HDR = Horizontal Discharge Condensing Unit			Cooling Capacity				Variations	Open	Open	Voltage	Minor Series
38=AC/HP	Major Model			1,000 Btuh Nominal				A=Standard	0=Not Defined	0=Not Defined	3=208/230–1 5=208/230–3 6=460/3	0, 1, 2...

38HDR

This product has been designed and manufactured to meet Energy Star® criteria for energy efficiency when matched with appropriate coil components. However, proper refrigerant charge and proper air flow are critical to achieve rated capacity and efficiency. Installation of this product should follow all manufacturing refrigerant charging and air flow instructions. **Failure to confirm proper charge and air flow may reduce energy efficiency and shorten equipment life.**

PHYSICAL DATA

UNIT 38HDR	018	024	030	036	048	060
NOMINAL CAPACITY (Tons)	1.5	2.0	2.50	3.0	4.0	5.0
OPERATING WEIGHT lb (kg)	155 (70.3)	180 (81.6)	200 (90.7)	218 (98.9)	284 (128.8)	294 (133.4)
REFRIGERANT TYPE	R–410A					
METERING DEVICE	TXV					
CHARGE lb (kg)	6.3 (2.86)	6.0 (2.73)	8.7 (3.95)	8.7 (3.95)	11.5 (5.23)	12.0 (5.45)
COMPRESSOR						
Type	Scroll					
Oil Charge (POE –oz)	25.0	25.0	25.0	25.0	42.0	42.0
Crankcase Heater (watts)	—	—	40	40	40	40
OUTDOOR FAN						
Rpm/Cfm	840/1720	840/1720	850/3900	850/3900	850/3900	850/3900
Diameter in. (mm)	18 (457)	18 (457)	24 (610)	24 (610)	24 (610)	24 (610)
No. Blades	3	3	3	3	3	3
Motor hp (w)	1/8 (93)	1/8 (93)	1/4 (187)	1/4 (187)	1/4 (187)	1/4 (187)
OUTDOOR COIL						
Face Area (sq ft)	5.8	7.3	12.1	12.1	14.1	14.1
No. Rows	2	2	2	2	2	2
FPI	20	20	20	20	20	20
HIGH PRESSURE SWITCH						
Cut–In (psig) Cutout (psig)	420 ± 25 650 ± 10	420 ± 25 650 ± 10	420 ± 25 650 ± 10	420 ± 25 650 ± 10	420 ± 25 650 ± 10	420 ± 25 650 ± 10
LOW PRESSURE SWITCH						
Cut–In (psig) Cutout (psig)	45 ± 25 20 ± 5	45 ± 25 20 ± 5	45 ± 25 20 ± 5	45 ± 25 20 ± 5	45 ± 25 20 ± 5	45 ± 25 20 ± 5
REFRIGERANT LINES						
Connection Type	Sweat					
Max. Liquid Line* (in.) OD	3/8	3/8	3/8	3/8	3/8	3/8
Rated Vapor Line† (in.) OD	5/8	5/8	3/4	3/4	7/8	1–1/8**
CONTROLS						
Control Voltage‡	24 vac					
System Voltage	208/230 v	208/230 v	208/230 v	208/230 v, Single and 3 Phase, 460 v, 3 Phase		
FINISH	Gray					

* See *Liquid Line Sizing For Cooling Only Systems with Puron Refrigerant* tables.

† Units are rated with 25 ft (7.6 m) of lineset length. See *Vapor Line Sizing and Cooling Capacity Loss* table when using other sizes and lengths of lineset.

‡ 24 v and a minimum of 40 va is provided in the fan coil unit.

** Vapor connection size is 7/8 inch.

FPI – Fins Per Inch

POE – Polyol Ester

REFRIGERANT PIPING LENGTH LIMITATIONS

Liquid Line Sizing and Maximum Total Equivalent Lengths† for Cooling Only Systems with Puron® Refrigerant:

The maximum allowable length of a residential split system depends on the liquid line diameter and vertical separation between indoor and outdoor units.

See Table below for liquid line sizing and maximum lengths :

Maximum Total Equivalent Length
Outdoor Unit BELOW Indoor Unit

Size	Liquid Line Connection	Liquid Line Diam. w/ TXV	AC with Puron Refrigerant Maximum Total Equivalent Length†: Outdoor unit BELOW Indoor Vertical Separation ft (m)								
			0–5 (0–1.5)	6–10 (1.8–3.0)	11–20 (3.4–6.1)	21–30 (6.4–9.1)	31–40 (9.4–12.2)	41–50 (12.5–15.2)	51–60 (15.5–18.3)	61–70 (18.6–21.3)	71–80 (21.6–24.4)
018 AC with Puron	3/8	1/4	150	150	125	100	100	75	– –	– –	– –
		5/16	250*	250*	250*	250*	250*	250*	250*	225*	150
		3/8	250*	250*	250*	250*	250*	250*	250*	250*	250*
024 AC with Puron	3/8	1/4	75	75	75	50	50	– –	– –	– –	– –
		5/16	250*	250*	250*	250*	250*	225*	175	125	100
		3/8	250*	250*	250*	250*	250*	250*	250*	250*	250*
030 AC with Puron	3/8	1/4	30	– –	– –	– –	– –	– –	– –	– –	– –
		5/16	175	225*	200	175	125	100	75	– –	– –
		3/8	250*	250*	250*	250*	250*	250*	250*	250*	250*
036 AC with Puron	3/8	5/16	175	150	150	100	100	100	75	– –	– –
		3//8	250*	250*	250*	250*	250*	250*	250*	250*	250*
048 AC with Puron	3/8	3/8	250*	250*	250*	250*	250*	250*	230	160	– –
060 AC with Puron	3/8	3/8	250*	250*	250*	225*	190	150	110	– –	– –

*** Maximum actual length not to exceed 200 ft (61 m)**

† Total equivalent length accounts for losses due to elbows or fitting. See the Long Line Guideline for details.

– – = outside acceptable range

Maximum Total Equivalent Length
Outdoor Unit ABOVE Indoor Unit

Size	Liquid Line Connection	Liquid Line Diam. w/ TXV	AC with Puron Refrigerant Maximum Total Equivalent Length†: Outdoor unit ABOVE Indoor Vertical Separation ft (m)							
			25 (7.6)	26–50 (7.9–15.2)	51–75 (15.5–22.9)	76–100 (23.2–30.5)	101–125 (30.8–38.1)	126–150 (38.4–45.7)	151–175 (46.0–53.3)	176–200 (53.6–61.0)
018 AC with Puron	3/8	1/4	175	250*	250*	250*	250*	250*	250*	250*
		5/16	250*	250*	250*	250*	250*	250*	250*	250*
		3/8	250*	250*	250*	250*	250*	250*	250*	250*
024 AC with Puron	3/8	1/4	100	125	175	200	225*	250*	250*	250*
		5/16	250*	250*	250*	250*	250*	250*	250*	250*
		3/8	250*	250*	250*	250*	250*	250*	250*	250*
030 AC with Puron	3/8	1/4	30	– –	– –	– –	– –	– –	– –	– –
		5/16	250*	250*	250*	250*	250*	250*	250*	250*
		3/8	250*	250*	250*	250*	250*	250*	250*	250*
036 AC with Puron	3/8	5/16	225*	250*	250*	250*	250*	250*	250*	250*
		3/8	250*	250*	250*	250*	250*	250*	250*	250*
048 AC with Puron	3/8	3/8	250*	250*	250*	250*	250*	250*	250*	250*
060 AC with Puron	3/8	3/8	250*	250*	250*	250*	250*	250*	250*	250*

*** Maximum actual length not to exceed 200 ft (61 m)**

† Total equivalent length accounts for losses due to elbows or fitting. See the Long Line Guideline for details.

– – = outside acceptable range

38HDR

REFRIGERANT CHARGE ADJUSTMENTS

Liquid Line Size	Puron Charge oz/ft (g/m)
3/8	0.60 (17.74) (Factory charge for lineset = 9 oz / 266.16 g)
5/16	0.40 (11.83)
1/4	0.27 (7.98)

Units are factory charged for 15 ft (4.6 m) of 3/8" liquid line. The factory charge for 3/8" lineset 9 oz (266.16 g). When using other length or diameter liquid lines, charge adjustments are required per the chart above.

Charging Formula:

[(Lineset oz/ft x total length) – (factory charge for lineset)] = charge adjustment

Example 1: System has 15 ft of line set using existing 1/4" liquid line. What charge adjustment is required?

Formula: (.27 oz/ft x 15ft) – (9 oz) = (-4.95) oz.

Net result is to remove 4.95 oz of refrigerant from the system

Example 2: System has 45 ft of existing 5/16" liquid line. What is the charge adjustment?

Formula: (.40 oz/ft. x 45ft) – (9 oz.) = 9 oz.

Net result is to add 9 oz of refrigerant to the system

LONG LINE APPLICATIONS

An application is considered Long Line, when the refrigerant level in the system requires the use of accessories to maintain acceptable refrigerant management for systems reliability. See Accessory Usage Guideline table for required accessories. Defining a system as long line depends on the liquid line diameter, actual length of the tubing, and vertical separation between the indoor and outdoor units.

For Air Conditioner systems, the chart below shows when an application is considered Long Line.

AC WITH PURON® REFRIGERANT LONG LINE DESCRIPTION ft (m)
Beyond these lengths, long line accessories are required

Liquid Line Size	Units On Same Level	Outdoor Below Indoor	Outdoor Above Indoor
1/4	No accessories needed within allowed lengths	No accessories needed within allowed lengths	175 (53.3)
5/16	120 (36.6)	50 (15.2) vertical or 120 (36.6) total	120 (36.6)
3/8	80 (24.4)	35 (10.7) vertical or 80 24.4) total	80 (24.4)

Note: See Long Line Guideline for details

VAPOR LINE SIZING AND COOLING CAPACITY LOSS

Acceptable vapor line diameters provide adequate oil return to the compressor while avoiding excessive capacity loss. The suction line diameters shown in the chart below are acceptable for AC systems with Puron refrigerant:

Vapor Line Sizing and Cooling Capacity Losses — Puron® Refrigerant 1-Stage Air Conditioner Applications

Unit Nominal Size (Btuh)	Maximum Liquid Line Diameters (In. OD)	Vapor Line Diameters (In. OD)	Cooling Capacity Loss (%) Total Equivalent Line Length ft. (m)								
			26–50 (7.9–15.2)	51–80 (15.5–24.4)	81–100 (24.7–30.5)	101–125 (30.8–38.1)	126–150 (38.4–45.7)	151–175 (46.0–53.3)	176–200 (53.6–61.0)	201–225 (61.3–68.6)	226–250 (68.9–76.2)
018 1 Stage AC with Puron	3/8	1/2	1	2	3	5	6	7	8	9	11
		5/8	0	1	1	1	2	2	2	3	3
		3/4	0	0	0	0	1	1	1	1	1
024 1 Stage AC with Puron	3/8	5/8	0	1	2	2	3	3	4	5	5
		3/4	0	0	1	1	1	1	1	2	2
		7/8	0	0	0	0	0	1	1	1	1
030 1 Stage AC with Puron	3/8	5/8	1	2	3	3	4	5	6	7	8
		3/4	0	0	1	1	1	2	2	2	3
		7/8	0	0	0	0	1	1	1	1	1
036 1 Stage AC with Puron	3/8	5/8	1	2	4	5	6	8	9	10	12
		3/4	0	1	1	2	2	3	3	4	4
		7/8	0	0	0	1	1	1	1	2	2
048 1 Stage AC with Puron	3/8	3/4	0	1	2	3	4	5	5	6	7
		7/8	0	0	1	1	2	2	2	3	3
		1 1/8	0	0	0	0	0	0	0	1	1
060 1 Stage AC with Puron	3/8	3/4	1	2	4	5	6	7	9	10	11
		7/8	0	1	2	2	3	4	4	5	5
		1 1/8	0	0	0	1	1	1	1	1	1

Applications in this area may be long line and may have height restrictions. See the *Residential Piping and Long Line Guideline*.

ACCESSORY THERMOSTATS

THERMOSTAT / SUBBASE PKG.	DESCRIPTION
TP–PRH01–A	Programmable Thermidistat
TP–NRH01–A	Non–programmable Thermidistat
TP–PAC01	Performance Series Programmable AC Stat
TP–NAC01	Performance Series Non–programmable AC Stat
TSTATCCSEN01–B	Outdoor Air Temperature Sensor
TSTATXXBBP01	Backplate for Builder's Thermostat
TSTATXXNBP01	Backplate for Non–Programmable Thermostat
TSTATXXPBP01	Backplate for Programmable Thermostat
TSTATXXCNV10	Thermostat Conversion Kit (4 to 5 wires) – 10 Pack

ACCESSORIES

KIT NUMBER	KIT NAME	018	024	030	036	048	060
KAACH1401AAA	Crankcase Heater	X	X				
Standard	Crankcase Heater			S	S	S	S
KAAFT0101AAA	Evaporator Freeze Stat	X	X	X	X	X	X
KAATD0101TDR	Time Delay Relay	X	X	X	X	X	X
KAAWS0101AAA	Winter Start Kit (for low ambient)	X	X	X	X	X	X
53DS–900–––086	Low Ambient Control (Puron)	X	X	X	X	X	X
53DS–900–––070	Wind Baffle	X					
53DS–900–––087	Wind Baffle		X				
53DS–900–––071	Wind Baffle			X	X		
53DS–900–––088	Wind Baffle					X	X
53DS–900–––075	Stacking Kit	X	X				
53DS–900–––076	Stacking Kit			X	X	X	X
53DS–900–––077	Wall Mounting Kit	X	X				
53DS–900–––078	Wall Mounting Kit			X	X	X	X

X = Accessory, S = Standard

ACCESSORY USAGE GUIDELINE

ACCESSORY	REQUIRED FOR LOW–AMBIENT COOLING APPLICATIONS (Below 55°F/12.8°C)	REQUIRED FOR LONG LINE APPLICATIONS* (Over 80 ft. / 24.4 m)	REQUIRED FOR SEA COAST APPLICATIONS (Within 2 miles / 3.2 km)
Compressor Start Assist Capacitor and Relay	Yes	Yes	No
Crankcase Heater	Yes	Yes	No
Evaporator Freeze Thermostat	Yes	No	No
Hard Shutoff TXV	Yes	Yes	Yes
Liquid Line Solenoid Valve	No	See Longline Application Guideline	No
Low–ambient Control	Yes	No	No
Winter Start Control	Yes	No	No

* For tubing line sets between 80 and 200 ft. (24.38 and 60.96 m) and/or 35 ft. (10.7 m) vertical differential, refer to Residential Piping and Longline Guideline.

Accessory Description and Usage (Listed Alphabetically)

1. Crankcase Heater

An electric resistance heater which mounts to the base of the compressor to keep the lubricant warm during off cycles. Improves compressor lubrication on restart and minimizes the chance of liquid slugging.

Usage Guideline:

Required in low ambient cooling applications.

Required in long line applications.

Suggested in all commercial applications.

2. Evaporator Freeze Thermostat

An SPST temperature-actuated switch that stops unit operation when evaporator reaches freeze-up conditions.

Usage Guideline:

Required when low ambient kit has been added.

3. Low-Ambient Control

A fan-speed control device activated by a temperature sensor, designed to control condenser fan motor speed in response to the saturated, condensing temperature during operation in cooling mode only. For outdoor temperatures down to -20°F (-28.9°C), it maintains condensing temperature at 100°F ±10°F (37.8°C ± 5.5°C).

Usage Guideline:

A Low Ambient Controller must be used when cooling operation is used at outdoor temperatures below 55°F (12.8°C).

Suggested for all commercial applications.

4. Outdoor Air Temperature Sensor

Designed for use with Carrier Thermostats listed in this publication. This device enables the thermostat to display the outdoor temperature. This device also

is required to enable special thermostat features such as auxiliary heat lock out.

Usage Guideline:

Suggested for all Carrier thermostats listed in this publication.

5. Thermostatic Expansion Valve (TXV)

A modulating flow-control valve which meters refrigerant liquid flow rate into the evaporator in response to the superheat of the refrigerant gas leaving the evaporator.

Kit includes valve, adapter tubes, and external equalizer tube. Hard shut off types are available.

NOTE: When using a hard shut off TXV with single phase reciprocating compressors, a Compressor Start Assist Capacitor and Relay is required.

Usage Guideline:

Accessory required to meet ARI rating and system reliability, where indoor not equipped.

Hard shut off TXV or LLS required in air conditioner long line applications.

Required for use on all zoning systems.

6. Time-Delay Relay

An SPST delay relay which briefly continues operation of indoor blower motor to provide additional cooling after the compressor cycles off.

NOTE: Most indoor unit controls include this feature. For those that do not, use the guideline below.

Usage Guideline:

Accessory required to meet ARI rating, where indoor not equipped.

7. Winter Start Control

This control is designed to alleviate nuisance opening of the low-pressure switch by bypassing it for the first 3 minutes of operation.

ELECTRICAL DATA

38HDR UNIT SIZE	V–PH–Hz	VOLTAGE RANGE*		COMPRESSOR		OUTDOOR FAN MOTOR			MIN CKT AMPS	FUSE/CKT BKR AMPS
		Min	Max	RLA	LRA	FLA	NEC Hp	kW Out		
018–31	208/230–1–60	187	253	9.0	48.0	0.8	0.125	0.09	12.1	20
024–32	208/230–1–60	187	253	13.5	58.3	0.8	0.125	0.09	17.7	25
030–31	208/230–1–60	187	253	14.1	73.0	1.5	0.250	0.19	19.1	30
036–31	208/230–1–60	187	253	14.1	77.0	1.5	0.250	0.19	19.1	30
	208/230–3–60	187	253	9.2	71.0	1.5	0.250	0.19	13.0	20
	460–3–60	414	506	5.6	38.0	0.8	0.250	0.19	7.9	10
048–32	208/230–1–60	187	253	19.9	109.0	1.5	0.250	0.19	26.4	40
	208/230–3–60	187	253	13.1	83.1	1.5	0.250	0.19	17.9	25
	460–3–60	414	506	6.1	41.0	0.8	0.250	0.19	8.4	15
060–32	208/230–1–60	187	253	26.4	134.0	1.5	0.250	0.19	34.5	60
	208/230–3–60	187	253	16.0	110.0	1.5	0.250	0.19	21.5	30
	460–3–60	414	506	7.8	52.0	0.8	0.250	0.19	10.6	15

* Permissible limits of the voltage range at which the unit will operate satisfactorily

FLA – Full Load Amps

HACR – Heating, Air Conditioning, Refrigeration

LRA – Locked Rotor Amps

NEC – National Electrical Code

RLA – Rated Load Amps (compressor)

NOTE: Control circuit is 24–V on all units and requires external power source. Copper wire must be used from service disconnect to unit. All motors/compressors contain internal overload protection.

Complies with 2007 requirements of ASHRAE Standards 90.1

A-WEIGHTED SOUND POWER (dBA)

Unit Size	Standard Rating (dBA)	Typical Octave Band Spectrum (dBA) (without tone adjustment)						
		125	250	500	1000	2000	4000	8000
018–31	68	52.0	57.5	60.5	63.5	60.5	57.5	46.5
024–32	69	57.5	61.5	63.0	61.0	60.0	56.0	45.0
030–31	72	56.5	63.0	65.0	66.0	64.0	62.5	57.0
036–31	72	65.0	61.5	63.5	65.0	64.5	61.0	54.5
048–32	72	58.5	61.0	64.0	67.5	66.0	64.0	57.0
060–32	72	63.0	61.5	64.0	66.5	66.0	64.5	55.5

NOTE: Tested in accordance with ARI Standard 270–08 (not listed in AHRI).

CHARGING SUBCOOLING (TXV-TYPE EXPANSION DEVICE)

UNIT SIZE–VOLTAGE, SERIES	REQUIRED SUBCOOLING °F (°C)
018–31	12 (6.7)
024–32	12 (6.7)
030–31	12 (6.7)
036–31	12 (6.7)
048–32	12 (6.7)
060–32	12 (6.7)

DIMENSIONS - ENGLISH

UNIT	SERIES	ELECTRICAL CHARACTERISTICS				A	B	C	D	E	F	G	H	J	K	L	M	N	P	OPERATING WEIGHT(lbs)	SHIPPING WEIGHT(lbs)	SHIPPING DIMENSIONS (L x W x H)
38HDR018	1	X	O	O	O	25 1/8"	36 15/16"	14 9/16"	16"	23 7/16"	17 3/16"	17 1/8"	22"	13"	6 5/8"	11 1/4"	5/8"	2 15/16"	6"	155	171	42 9/10" X 18" X 28 1/10"
38HDR024	1,2	X	O	O	O	31 1/8"	36 15/16"	14 9/16"	16"	23 7/16"	17 3/16"	23 1/8"	28"	14"	6 3/4"	11 5/8"	5/8"	2 15/16"	6"	180	198	42 9/10" X 18" X 34 1/10"
38HDR030	1	X	O	O	O	37 3/16"	44 9/16"	17 1/16"	18 7/16"	30 1/2"	19 5/8"	29 3/16"	34 1/16"	13 11/16"	8 1/8"	15 7/8"	3/4"	3 7/16"	6 1/2"	200	223	50 1/2" X 20 1/2" X 40 2/10"
38HDR036	1	X	O	X	X	37 3/16"	44 9/16"	17 1/16"	18 7/16"	30 1/2"	19 5/8"	29 3/16"	34 1/16"	13 11/16"	8 1/8"	15 7/8"	3/4"	3 7/16"	6 1/2"	218	240	50 1/2" X 20 1/2" X 40 2/10"
38HDR048	1,2	X	O	X	X	43 3/16"	44 9/16"	17 1/16"	18 7/16"	30 1/2"	19 5/8"	35 3/16"	40 1/16"	14 1/2"	8 1/2"	18 7/8"	7/8"	3 7/16"	6 1/2"	284	309	50 1/2" X 20 1/2" X 46 2/10"
38HDR060	1,2	X	O	X	X	43 3/16"	44 9/16"	17 1/16"	18 7/16"	30 1/2"	19 5/8"	35 3/16"	40 1/16"	14 1/2"	8 1/2"	18 7/8"	7/8"	3 7/16"	6 1/2"	294	319	50 1/2" X 20 1/2" X 46 2/10"
		208-230-1-60	230-1-60	208/230-3-60	460-3-60																	

X = YES
O = NO

1. REQUIRED CLEARANCES: WITH COIL FACING WALL; ALLOW 6" MIN CLEARANCE ON COIL SIDE AND COIL END AND 36" MIN CLEARANCE ON COMPRESSOR END AND FAN SIDE. WITH FAN FACING WALL; ALLOW 8" MIN CLEARANCE ON FAN SIDE AND COIL END AND 36" MIN CLEARANCE ON COMPRESSOR END AND COIL SIDE. WITH MULTI UNIT APPLICATION; ARRANGE UNITS SO DISCHARGE OF ONE DOES NOT ENTER INLET OF ANOTHER.
2. MINIMUM OUTDOOR OPERATING AMBIENT IN COOLING MODE IS 55°F, MAX. 125°F.
3. SERIES DESIGNATION IS THE 13TH POSITION OF THE UNIT MODEL NUMBER.
4. CENTER OF GRAVITY
5. ALL DIMENSIONS ARE IN "INCHES" UNLESS NOTED.

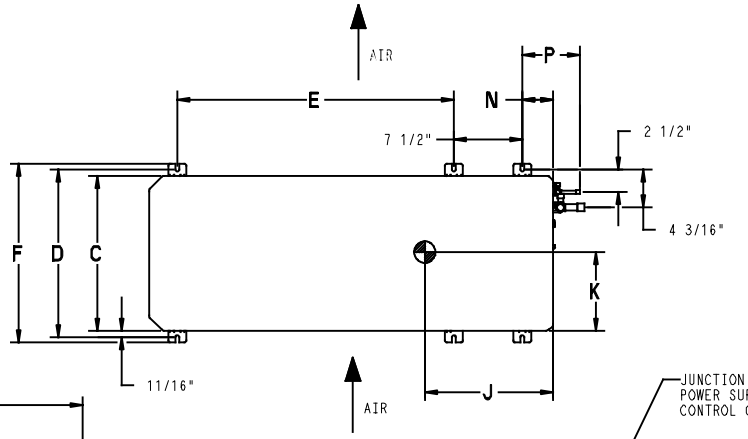

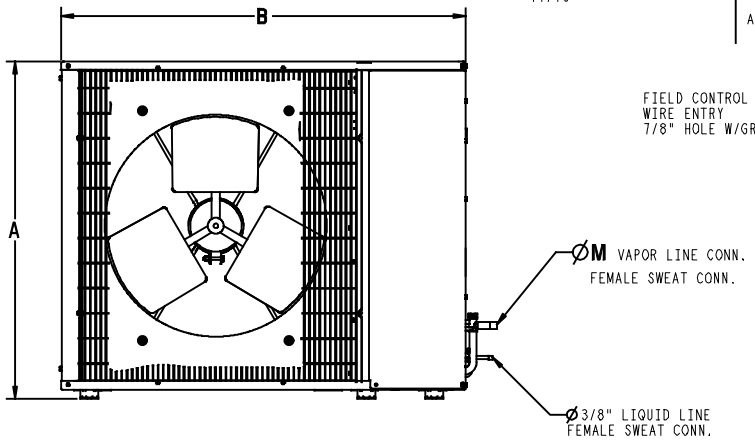

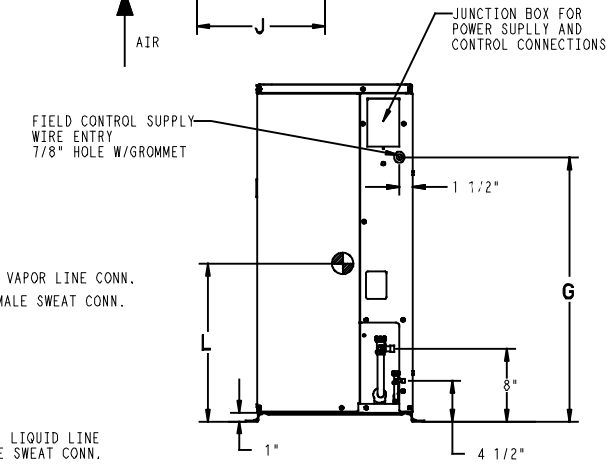

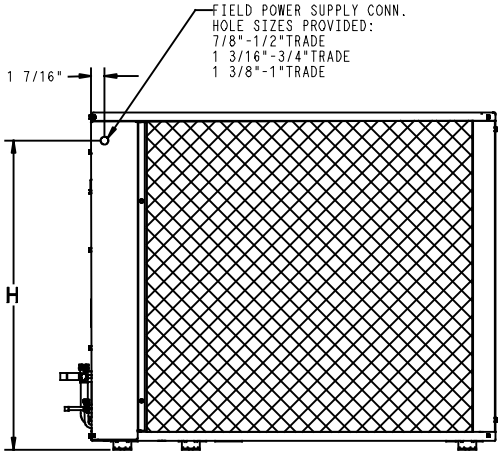

UNIT SIZE	MINIMUM MOUNTING PAD DIMENSIONS
18,24	23" X 42"
30,36,48,60	24" X 50"

DIMENSIONS - SI

UNIT	SERIES	ELECTRICAL CHARACTERISTICS				A	B	C	D	E	F	G	H	J	K	L	M	N	P	OPERATING WEIGHT(KG)	SHIPPING WEIGHT(KG)	SHIPPING DIMENSIONS (L x W x H)
38HDR018	1	X	O	O	O	638.2	938.2	369.9	406.4	595.3	436.6	435.0	558.8	330.2	168.3	285.8	15.9	74.6	152.4	70.4	77.7	1090.2 X 457.7 X 714.3
38HDR024	1,2	X	O	O	O	790.6	938.2	369.9	406.4	595.3	436.6	587.4	711.2	355.6	171.5	295.3	15.9	74.6	152.4	81.8	90.0	1090.2 X 457.7 X 866.7
38HDR030	1	X	O	O	O	944.6	1131.9	433.4	468.3	774.7	498.5	741.4	865.2	347.7	206.4	403.2	19.0	87.3	165.1	90.9	101.4	1282.7 X 520.7 X 1020.7
38HDR036	1	X	O	X	X	944.6	1131.9	433.4	468.3	774.7	498.5	741.4	865.2	347.7	206.4	403.2	19.0	87.3	165.1	99.0	109.0	1282.7 X 520.7 X 1020.7
38HDR048	1,2	X	O	X	X	1097.0	1131.9	433.4	468.3	774.7	498.5	893.8	1017.6	368.3	215.9	479.4	22.2	87.3	165.1	129.0	140.4	1282.7 X 520.7 X 1173.1
38HDR060	1,2	X	O	X	X	1097.0	1131.9	433.4	468.3	774.7	498.5	893.8	1017.6	368.3	215.9	479.4	22.2	87.3	165.1	133.6	145.0	1282.7 X 520.7 X 1173.1

208-230-1-60	230-1-60	208/230-3-60	460-3-60

X = YES
O = NO

1. REQUIRED CLEARANCES: WITH COIL FACING WALL; ALLOW 152.4 MIN CLEARANCE ON COIL SIDE AND COIL END AND 914.4 MIN CLEARANCE ON COMPRESSOR END AND FAN SIDE. WITH FAN FACING WALL; ALLOW 203.2 MIN CLEARANCE ON FAN SIDE AND COIL END AND 914.4 MIN CLEARANCE ON COMPRESSOR END AND COIL SIDE. WITH MULTI UNIT APPLICATION; ARRANGE UNITS SO DISCHARGE OF ONE DOES NOT ENTER INLET OF ANOTHER.
2. MINIMUM OUTDOOR OPERATING AMBIENT IN COOLING MODE IS 12.8°C, MAX. 51.7°C.
3. SERIES DESIGNATION IS THE 13TH POSITION OF THE UNIT MODEL NUMBER.
4. CENTER OF GRAVITY
5. ALL DIMENSIONS ARE IN "MM" UNLESS NOTED.

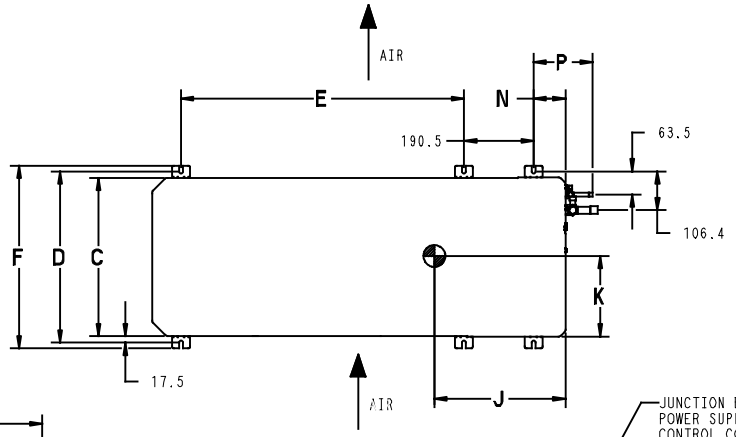

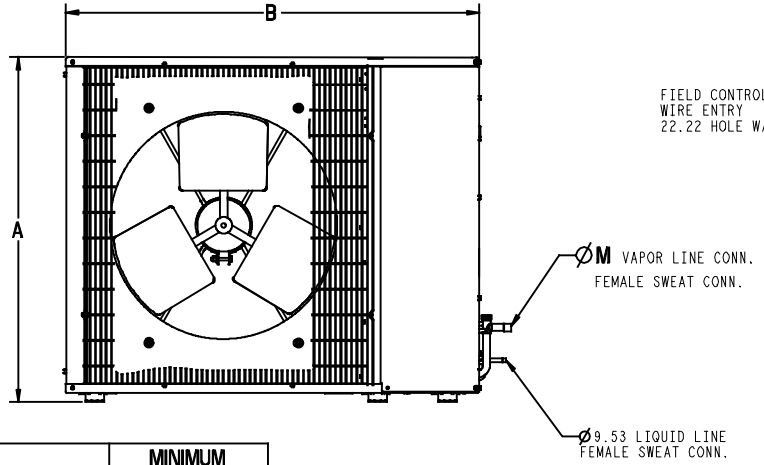

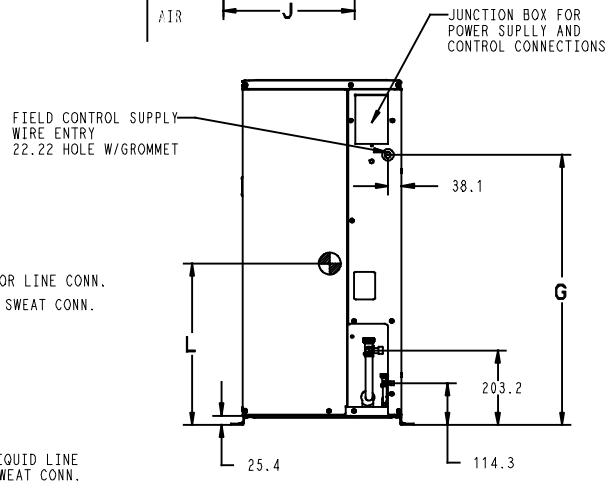

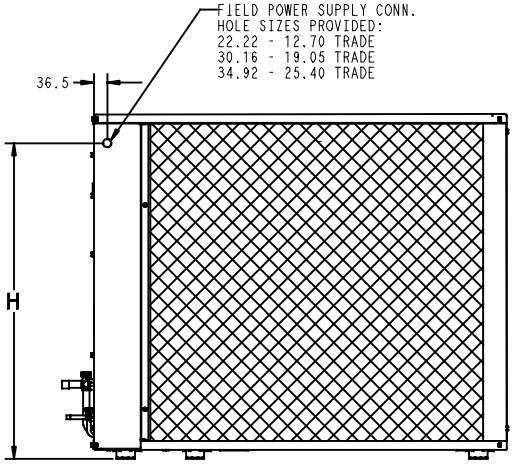

UNIT SIZE	MINIMUM MOUNTING PAD DIMENSIONS
18,24	584.2 X 1066.8
30,36,48,60	609.6 X 1270.0

COMBINATION RATINGS

ARI Ref. No.	Model Number	Indoor Model	Furnace Model	Capacity	EER	SEER
1085392	38HDR018−31	†CNPV*1814A**+TDR		17,000	11.0	13.0
1117974	38HDR018−31	40QAC024−−−3		18,000	11.5	13.0
1085396	38HDR018−31	CAP**1814A**	58CV(A,X)070−12	17,000	11.5	14.0
3015375	38HDR018−31	CAP**1814A**	58PH*045−08	17,000	11.5	14.0
1085394	38HDR018−31	CAP**1814A**+TDR		17,000	10.9	13.0
1085400	38HDR018−31	CAP**2414A**	58CV(A,X)070−12	17,400	11.5	14.0
3015376	38HDR018−31	CAP**2414A**	58PH*045−08	17,400	12.0	14.5
1085398	38HDR018−31	CAP**2414A**+TDR		17,400	11.0	13.0
1085456	38HDR018−31	CAP**2417A**	58CV(A,X)070−12	17,400	11.5	14.0
1085406	38HDR018−31	CAP**2417A**	58CV(A,X)090−16	17,400	11.5	14.0
3112072	38HDR018−31	CAP**2417A**	58MEB040−12	17,400	12.0	14.5
3112073	38HDR018−31	CAP**2417A**	58MEB060−12	17,400	12.0	14.5
1390388	38HDR018−31	CAP**2417A**	58MV(B,C)060−14	17,400	11.5	14.0
1085402	38HDR018−31	CAP**2417A**+TDR		17,400	11.0	13.0
1085432	38HDR018−31	CNPF*2418A**+TDR		17,400	11.0	13.0
1085428	38HDR018−31	CNPH*2417A**	58CV(A,X)070−12	17,400	11.5	14.0
1085430	38HDR018−31	CNPH*2417A**	58CV(A,X)090−16	17,400	11.5	14.0
3112076	38HDR018−31	CNPH*2417A**	58MEB040−12	17,400	12.0	14.5
3112077	38HDR018−31	CNPH*2417A**	58MEB060−12	17,400	12.0	14.5
1390392	38HDR018−31	CNPH*2417A**	58MV(B,C)060−14	17,400	11.5	14.0
1390396	38HDR018−31	CNPH*2417A**	58MV(B,C)080−14	17,400	11.5	14.0
3015379	38HDR018−31	CNPH*2417A**	58PH*045−08	17,400	12.0	14.5
1085420	38HDR018−31	CNPH*2417A**+TDR		17,400	11.0	13.0
1085408	38HDR018−31	CNPV*1814A**	58CV(A,X)070−12	17,000	11.5	14.0
3015377	38HDR018−31	CNPV*1814A**	58PH*045−08	17,000	11.5	14.0
1085412	38HDR018−31	CNPV*2414A**	58CV(A,X)070−12	17,400	11.5	14.0
3015378	38HDR018−31	CNPV*2414A**	58PH*045−08	17,400	12.0	14.5
1085410	38HDR018−31	CNPV*2414A**+TDR		17,400	11.0	13.0
1085458	38HDR018−31	CNPV*2417A**	58CV(A,X)070−12	17,400	11.5	14.0
1085418	38HDR018−31	CNPV*2417A**	58CV(A,X)090−16	17,400	11.5	14.0
3112074	38HDR018−31	CNPV*2417A**	58MEB040−12	17,400	12.0	14.5
3112075	38HDR018−31	CNPV*2417A**	58MEB060−12	17,400	12.0	14.5
1390390	38HDR018−31	CNPV*2417A**	58MV(B,C)060−14	17,400	11.5	14.0
1085414	38HDR018−31	CNPV*2417A**+TDR		17,400	11.0	13.0
1085442	38HDR018−31	CSPH*2412A**	58CV(A,X)070−12	17,400	11.5	14.0
1085444	38HDR018−31	CSPH*2412A**	58CV(A,X)090−16	17,400	11.5	14.0
3112078	38HDR018−31	CSPH*2412A**	58MEB040−12	17,400	12.0	14.5
3112079	38HDR018−31	CSPH*2412A**	58MEB060−12	17,400	12.0	14.5
1390394	38HDR018−31	CSPH*2412A**	58MV(B,C)060−14	17,400	11.5	14.0
1390398	38HDR018−31	CSPH*2412A**	58MV(B,C)080−14	17,400	11.5	14.0
3015380	38HDR018−31	CSPH*2412A**	58PH*045−08	17,400	12.0	14.5
1085434	38HDR018−31	CSPH*2412A**+TDR		17,400	11.0	13.0
1086232	38HDR018−31	FE4ANF002+UI		17,400	11.5	14.0
1085450	38HDR018−31	FF1ENP018		17,400	11.0	13.0
1085452	38HDR018−31	FF1ENP024		17,400	11.0	13.0
1085454	38HDR018−31	FV4BNF002		17,400	11.5	14.0
3404623	38HDR018−31	FV4CNF002		17,400	11.5	14.0
1085446	38HDR018−31	FX4CNF018		17,000	11.5	14.0
1085448	38HDR018−31	FX4CNF024		17,400	11.5	14.0
3465486	38HDR024−32	†CNPV*2414A**+TDR		23,400	11.0	13.0
3465806	38HDR024−32	40QAC024−3		22,800	11.5	13.0
3465488	38HDR024−32	CAP**2414A**	58CV(A,X)070−12	23,400	11.5	14.0
3465489	38HDR024−32	CAP**2414A**	58PH*045−08	23,400	11.5	14.0
3465487	38HDR024−32	CAP**2414A**+TDR		23,400	11.0	13.0
3465492	38HDR024−32	CAP**2417A**	58CV(A,X)090−16	23,400	11.5	14.0
3465493	38HDR024−32	CAP**2417A**	58MEB040−12	23,400	12.0	14.5
3465494	38HDR024−32	CAP**2417A**	58MEB060−12	23,400	12.0	14.5
3465495	38HDR024−32	CAP**2417A**	58MEB080−12	23,400	12.0	14.5
3465491	38HDR024−32	CAP**2417A**	58MV(B,C)060−14	23,400	11.5	14.0
3465490	38HDR024−32	CAP**2417A**+TDR		23,400	11.0	13.0
3465497	38HDR024−32	CAP**3014A**	58CV(A,X)070−12	23,400	11.5	14.0
3465498	38HDR024−32	CAP**3014A**	58PH*045−08	23,600	12.0	14.5
3465496	38HDR024−32	CAP**3014A**+TDR		23,600	11.0	13.0
3465501	38HDR024−32	CAP**3017A**	58CV(A,X)090−16	23,600	11.5	14.0
3465502	38HDR024−32	CAP**3017A**	58MEB040−12	23,600	12.0	14.5
3465503	38HDR024−32	CAP**3017A**	58MEB060−12	23,600	12.0	14.5
3465504	38HDR024−32	CAP**3017A**	58MEB080−12	23,600	12.0	14.5
3465500	38HDR024−32	CAP**3017A**	58MV(B,C)060−14	23,600	11.5	14.0
3465499	38HDR024−32	CAP**3017A**+TDR		23,600	11.0	13.0
3465554	38HDR024−32	CNPF*2418A**+TDR		23,400	11.0	13.0
3465529	38HDR024−32	CNPH*2417A**	58CV(A,X)070−12	23,400	11.5	14.0
3465530	38HDR024−32	CNPH*2417A**	58CV(A,X)090−16	23,400	11.5	14.0
3465531	38HDR024−32	CNPH*2417A**	58CV(A,X)110−20	23,400	11.5	14.0
3465532	38HDR024−32	CNPH*2417A**	58CV(A,X)135−22	23,400	11.5	14.0
3465533	38HDR024−32	CNPH*2417A**	58CV(A,X)155−22	23,400	11.5	14.0
3465535	38HDR024−32	CNPH*2417A**	58MEB040−12	23,400	12.0	14.5
3465536	38HDR024−32	CNPH*2417A**	58MEB060−12	23,400	12.0	14.5
3465537	38HDR024−32	CNPH*2417A**	58MEB080−12	23,400	12.0	14.5

See notes on page 26

COMBINATION RATINGS (CONT.)

ARI Ref. No.	Model Number	Indoor Model	Furnace Model	Capacity	EER	SEER
3465524	38HDR024−32	CNPH*2417A**	58MV(B,C)060−14	23,400	11.5	14.0
3465525	38HDR024−32	CNPH*2417A**	58MV(B,C)080−14	23,400	11.5	14.0
3465526	38HDR024−32	CNPH*2417A**	58MV(B,C)080−20	23,200	11.5	14.0
3465527	38HDR024−32	CNPH*2417A**	58MV(B,C)100−20	23,400	11.5	14.0
3465528	38HDR024−32	CNPH*2417A**	58MV(B,C)120−20	23,400	11.5	14.0
3465523	38HDR024−32	CNPH*2417A**	58MVB040−14	23,400	11.5	14.0
3465534	38HDR024−32	CNPH*2417A**	58PH*045−08	23,400	11.5	14.0
3465522	38HDR024−32	CNPH*2417A**+TDR		23,400	11.0	13.0
3465545	38HDR024−32	CNPH*3017A**	58CV(A,X)070−12	23,400	11.5	14.0
3465546	38HDR024−32	CNPH*3017A**	58CV(A,X)090−16	23,600	11.5	14.0
3465547	38HDR024−32	CNPH*3017A**	58CV(A,X)110−20	23,600	11.5	14.0
3465548	38HDR024−32	CNPH*3017A**	58CV(A,X)135−22	23,600	11.5	14.0
3465549	38HDR024−32	CNPH*3017A**	58CV(A,X)155−22	23,600	11.5	14.0
3465551	38HDR024−32	CNPH*3017A**	58MEB040−12	23,600	12.0	14.5
3465552	38HDR024−32	CNPH*3017A**	58MEB060−12	23,600	12.0	14.5
3465553	38HDR024−32	CNPH*3017A**	58MEB080−12	23,600	12.0	14.5
3465540	38HDR024−32	CNPH*3017A**	58MV(B,C)060−14	23,600	11.5	14.0
3465541	38HDR024−32	CNPH*3017A**	58MV(B,C)080−14	23,400	11.5	14.0
3465542	38HDR024−32	CNPH*3017A**	58MV(B,C)080−20	23,400	11.5	14.0
3465543	38HDR024−32	CNPH*3017A**	58MV(B,C)100−20	23,600	11.5	14.0
3465544	38HDR024−32	CNPH*3017A**	58MV(B,C)120−20	23,600	11.5	14.0
3465539	38HDR024−32	CNPH*3017A**	58MVB040−14	23,600	11.5	14.0
3465550	38HDR024−32	CNPH*3017A**	58PH*045−08	23,600	12.0	14.5
3465538	38HDR024−32	CNPH*3017A**+TDR		23,600	11.0	13.0
3465505	38HDR024−32	CNPV*2414A**	58CV(A,X)070−12	23,400	11.5	14.0
3465506	38HDR024−32	CNPV*2414A**	58PH*045−08	23,400	11.5	14.0
3465509	38HDR024−32	CNPV*2417A**	58CV(A,X)090−16	23,400	11.5	14.0
3465510	38HDR024−32	CNPV*2417A**	58MEB040−12	23,400	12.0	14.5
3465511	38HDR024−32	CNPV*2417A**	58MEB060−12	23,400	12.0	14.5
3465512	38HDR024−32	CNPV*2417A**	58MEB080−12	23,400	12.0	14.5
3465508	38HDR024−32	CNPV*2417A**	58MV(B,C)060−14	23,400	11.5	14.0
3465507	38HDR024−32	CNPV*2417A**+TDR		23,400	11.0	13.0
3465514	38HDR024−32	CNPV*3014A**	58CV(A,X)070−12	23,400	11.5	14.0
3465515	38HDR024−32	CNPV*3014A**	58PH*045−08	23,600	11.5	14.0
3465513	38HDR024−32	CNPV*3014A**+TDR		23,600	11.0	13.0
3465518	38HDR024−32	CNPV*3017A**	58CV(A,X)090−16	23,600	11.5	14.0
3465519	38HDR024−32	CNPV*3017A**	58MEB040−12	23,600	12.0	14.5
3465520	38HDR024−32	CNPV*3017A**	58MEB060−12	23,600	12.0	14.5
3465521	38HDR024−32	CNPV*3017A**	58MEB080−12	23,600	12.0	14.5
3465517	38HDR024−32	CNPV*3017A**	58MV(B,C)060−14	23,600	11.5	14.0
3465516	38HDR024−32	CNPV*3017A**+TDR		23,600	11.0	13.0
3465562	38HDR024−32	CSPH*2412A**	58CV(A,X)070−12	23,400	11.5	14.0
3465563	38HDR024−32	CSPH*2412A**	58CV(A,X)090−16	23,400	11.5	14.0
3465564	38HDR024−32	CSPH*2412A**	58CV(A,X)110−20	23,400	11.5	14.0
3465565	38HDR024−32	CSPH*2412A**	58CV(A,X)135−22	23,400	11.5	14.0
3465566	38HDR024−32	CSPH*2412A**	58CV(A,X)155−22	23,400	11.5	14.0
3465568	38HDR024−32	CSPH*2412A**	58MEB040−12	23,400	12.0	14.5
3465569	38HDR024−32	CSPH*2412A**	58MEB060−12	23,400	12.0	14.5
3465570	38HDR024−32	CSPH*2412A**	58MEB080−12	23,400	12.0	14.5
3465557	38HDR024−32	CSPH*2412A**	58MV(B,C)060−14	23,400	11.5	14.0
3465558	38HDR024−32	CSPH*2412A**	58MV(B,C)080−14	23,400	11.5	14.0
3465559	38HDR024−32	CSPH*2412A**	58MV(B,C)080−20	23,400	11.5	14.0
3465560	38HDR024−32	CSPH*2412A**	58MV(B,C)100−20	23,400	11.5	14.0
3465561	38HDR024−32	CSPH*2412A**	58MV(B,C)120−20	23,400	11.5	14.0
3465556	38HDR024−32	CSPH*2412A**	58MVB040−14	23,400	11.5	14.0
3465567	38HDR024−32	CSPH*2412A**	58PH*045−08	23,400	11.5	14.0
3465555	38HDR024−32	CSPH*2412A**+TDR		23,400	11.0	13.0
3465578	38HDR024−32	CSPH*3012A**	58CV(A,X)070−12	23,600	11.5	14.0
3465579	38HDR024−32	CSPH*3012A**	58CV(A,X)090−16	23,600	11.5	14.0
3465580	38HDR024−32	CSPH*3012A**	58CV(A,X)110−20	23,600	11.5	14.0
3465581	38HDR024−32	CSPH*3012A**	58CV(A,X)135−22	23,600	11.5	14.0
3465582	38HDR024−32	CSPH*3012A**	58CV(A,X)155−22	23,600	11.5	14.0
3465584	38HDR024−32	CSPH*3012A**	58MEB040−12	23,600	12.0	14.5
3465585	38HDR024−32	CSPH*3012A**	58MEB060−12	23,600	12.0	14.5
3465586	38HDR024−32	CSPH*3012A**	58MEB080−12	23,600	12.0	14.5
3465573	38HDR024−32	CSPH*3012A**	58MV(B,C)060−14	23,600	11.5	14.0
3465574	38HDR024−32	CSPH*3012A**	58MV(B,C)080−14	23,600	11.5	14.0
3465575	38HDR024−32	CSPH*3012A**	58MV(B,C)080−20	23,400	11.5	14.0
3465576	38HDR024−32	CSPH*3012A**	58MV(B,C)100−20	23,600	11.5	14.0
3465577	38HDR024−32	CSPH*3012A**	58MV(B,C)120−20	23,600	11.5	14.0
3465572	38HDR024−32	CSPH*3012A**	58MVB040−14	23,600	11.5	14.0
3465583	38HDR024−32	CSPH*3012A**	58PH*045−08	23,600	12.0	14.5
3465571	38HDR024−32	CSPH*3012A**+TDR		23,600	11.0	13.0
3465594	38HDR024−32	FE4AN(B,F)003+UI		23,800	12.0	14.5
3465592	38HDR024−32	FE4ANF002+UI		23,600	12.0	14.5
3465596	38HDR024−32	FE5ANB004+UI		24,000	12.0	14.5
3465597	38HDR024−32	FF1ENP024		22,800	11.0	13.0
3465606	38HDR024−32	FF1ENP025		23,400	11.5	14.0
3465600	38HDR024−32	FF1ENP030		23,000	11.0	13.0

See notes on page 26

COMBINATION RATINGS (CONT.)

ARI Ref. No.	Model Number	Indoor Model	Furnace Model	Capacity	EER	SEER
3465608	38HDR024−32	FF1ENP031		23,600	11.5	14.0
3465609	38HDR024−32	FF1ENP037		23,800	11.5	14.0
3465603	38HDR024−32	FV4BN(B,F)003		23,800	12.0	14.5
3465601	38HDR024−32	FV4BNF002		23,600	12.0	14.5
3465613	38HDR024−32	FV4CN(B,F)003		23,800	12.0	14.5
3465611	38HDR024−32	FV4CNF002		23,600	12.0	14.5
3465589	38HDR024−32	FX4CNF024		23,400	11.5	14.0
3465590	38HDR024−32	FX4CNF030		23,800	11.5	14.0
3465587	38HDR024−32	FY4ANF024		23,200	11.0	13.0
3465588	38HDR024−32	FY4ANF030		23,600	11.0	13.0
1085620	38HDR030−31	†CNPV*3014A**+TDR		28,000	11.0	13.0
1117978	38HDR030−31	40QAC036−−−3		29,000	12.0	13.0
1085624	38HDR030−31	CAP**3014A**	58CV(A,X)070−12	28,000	11.5	14.0
1085622	38HDR030−31	CAP**3014A**+TDR		28,000	11.0	13.0
1085788	38HDR030−31	CAP**3017A**	58CV(A,X)070−12	28,000	11.5	14.0
1085630	38HDR030−31	CAP**3017A**	58CV(A,X)090−16	28,000	11.5	14.0
3112104	38HDR030−31	CAP**3017A**	58MEB040−12	28,000	12.0	14.5
3112105	38HDR030−31	CAP**3017A**	58MEB060−12	28,000	12.0	14.5
3112106	38HDR030−31	CAP**3017A**	58MEB080−12	28,000	12.0	14.5
3112107	38HDR030−31	CAP**3017A**	58MEB080−16	28,000	12.0	14.5
1390448	38HDR030−31	CAP**3017A**	58MV(B,C)060−14	28,000	11.5	14.0
3015389	38HDR030−31	CAP**3017A**	58PH*070−16	28,000	11.5	14.0
1085626	38HDR030−31	CAP**3017A**+TDR		28,000	11.0	13.0
1085634	38HDR030−31	CAP**3614A**	58CV(A,X)070−12	28,600	11.5	14.0
1085632	38HDR030−31	CAP**3614A**+TDR		28,600	11.0	13.0
1085790	38HDR030−31	CAP**3617A**	58CV(A,X)070−12	28,600	11.5	14.0
1085640	38HDR030−31	CAP**3617A**	58CV(A,X)090−16	28,600	11.5	14.0
3112108	38HDR030−31	CAP**3617A**	58MEB040−12	28,600	12.0	14.5
3112109	38HDR030−31	CAP**3617A**	58MEB060−12	28,600	12.0	14.5
3112110	38HDR030−31	CAP**3617A**	58MEB080−12	28,600	12.0	14.5
3112111	38HDR030−31	CAP**3617A**	58MEB080−16	28,600	12.0	14.5
1390450	38HDR030−31	CAP**3617A**	58MV(B,C)060−14	28,600	11.5	14.0
3015390	38HDR030−31	CAP**3617A**	58PH*070−16	28,600	12.0	14.5
1085636	38HDR030−31	CAP**3617A**+TDR		28,600	11.0	13.0
1085794	38HDR030−31	CAP**3621A**	58CV(A,X)090−16	28,600	11.5	14.0
1085650	38HDR030−31	CAP**3621A**	58CV(A,X)110−20	28,600	11.5	14.0
1390464	38HDR030−31	CAP**3621A**	58MV(B,C)060−14	28,600	11.5	14.0
1390468	38HDR030−31	CAP**3621A**	58MV(B,C)080−14	28,600	11.5	14.0
1390480	38HDR030−31	CAP**3621A**	58MV(B,C)080−20	28,600	11.5	14.0
1390492	38HDR030−31	CAP**3621A**	58MV(B,C)100−20	28,600	11.5	14.0
3015391	38HDR030−31	CAP**3621A**	58PH*090−16	28,600	12.0	14.5
1085642	38HDR030−31	CAP**3621A**+TDR		28,600	11.0	13.0
1085724	38HDR030−31	CNPF*3618A**+TDR		28,600	11.0	13.0
1085690	38HDR030−31	CNPH*3017A**	58CV(A,X)070−12	28,000	11.5	14.0
1085692	38HDR030−31	CNPH*3017A**	58CV(A,X)090−16	28,000	11.5	14.0
1085694	38HDR030−31	CNPH*3017A**	58CV(A,X)110−20	28,000	11.5	14.0
1085696	38HDR030−31	CNPH*3017A**	58CV(A,X)135−22	28,000	11.5	14.0
1085698	38HDR030−31	CNPH*3017A**	58CV(A,X)155−22	28,000	11.5	14.0
3112120	38HDR030−31	CNPH*3017A**	58MEB040−12	28,000	12.0	14.5
3112121	38HDR030−31	CNPH*3017A**	58MEB060−12	28,000	12.0	14.5
3112122	38HDR030−31	CNPH*3017A**	58MEB080−12	28,000	12.0	14.5
3112123	38HDR030−31	CNPH*3017A**	58MEB080−16	28,000	12.0	14.5
1390456	38HDR030−31	CNPH*3017A**	58MV(B,C)060−14	28,000	11.5	14.0
1390472	38HDR030−31	CNPH*3017A**	58MV(B,C)080−14	28,000	11.5	14.0
1390484	38HDR030−31	CNPH*3017A**	58MV(B,C)080−20	28,000	11.5	14.0
1390496	38HDR030−31	CNPH*3017A**	58MV(B,C)100−20	28,000	11.5	14.0
1390504	38HDR030−31	CNPH*3017A**	58MV(B,C)120−20	28,000	11.5	14.0
3015395	38HDR030−31	CNPH*3017A**	58PH*070−16	28,000	11.5	14.0
3015396	38HDR030−31	CNPH*3017A**	58PH*090−16	28,000	11.5	14.0
1085676	38HDR030−31	CNPH*3017A**+TDR		28,000	11.0	13.0
1085714	38HDR030−31	CNPH*3617A**	58CV(A,X)070−12	28,600	11.5	14.0
1085716	38HDR030−31	CNPH*3617A**	58CV(A,X)090−16	28,600	11.5	14.0
1085718	38HDR030−31	CNPH*3617A**	58CV(A,X)110−20	28,600	11.5	14.0
1085720	38HDR030−31	CNPH*3617A**	58CV(A,X)135−22	28,600	11.5	14.0
1085722	38HDR030−31	CNPH*3617A**	58CV(A,X)155−22	28,600	11.5	14.0
3112124	38HDR030−31	CNPH*3617A**	58MEB040−12	28,600	12.0	14.5
3112125	38HDR030−31	CNPH*3617A**	58MEB060−12	28,600	12.0	14.5
3112126	38HDR030−31	CNPH*3617A**	58MEB080−12	28,600	12.0	14.5
3112127	38HDR030−31	CNPH*3617A**	58MEB080−16	28,600	12.0	14.5
1390458	38HDR030−31	CNPH*3617A**	58MV(B,C)060−14	28,600	11.5	14.0
1390474	38HDR030−31	CNPH*3617A**	58MV(B,C)080−14	28,600	11.5	14.0
1390486	38HDR030−31	CNPH*3617A**	58MV(B,C)080−20	28,600	11.5	14.0
1390498	38HDR030−31	CNPH*3617A**	58MV(B,C)100−20	28,600	11.5	14.0
1390506	38HDR030−31	CNPH*3617A**	58MV(B,C)120−20	28,600	11.5	14.0
3015397	38HDR030−31	CNPH*3617A**	58PH*070−16	28,600	12.0	14.5
3015398	38HDR030−31	CNPH*3617A**	58PH*090−16	28,600	12.0	14.5
1085700	38HDR030−31	CNPH*3617A**+TDR		28,600	11.0	13.0
1085652	38HDR030−31	CNPV*3014A**	58CV(A,X)070−12	28,000	11.5	14.0

See notes on page 26

COMBINATION RATINGS (CONT.)

ARI Ref. No.	Model Number	Indoor Model	Furnace Model	Capacity	EER	SEER
1085796	38HDR030−31	CNPV*3017A**	58CV(A,X)070−12	28,000	11.5	14.0
1085658	38HDR030−31	CNPV*3017A**	58CV(A,X)090−16	28,000	11.5	14.0
3112112	38HDR030−31	CNPV*3017A**	58MEB040−12	28,000	12.0	14.5
3112113	38HDR030−31	CNPV*3017A**	58MEB060−12	28,000	12.0	14.5
3112114	38HDR030−31	CNPV*3017A**	58MEB080−12	28,000	12.0	14.5
3112115	38HDR030−31	CNPV*3017A**	58MEB080−16	28,000	12.0	14.5
1390452	38HDR030−31	CNPV*3017A**	58MV(B,C)060−14	28,000	11.5	14.0
3015392	38HDR030−31	CNPV*3017A**	58PH*070−16	28,000	11.5	14.0
1085654	38HDR030−31	CNPV*3017A**+TDR		28,000	11.0	13.0
1085798	38HDR030−31	CNPV*3617A**	58CV(A,X)070−12	28,600	11.5	14.0
1085664	38HDR030−31	CNPV*3617A**	58CV(A,X)090−16	28,600	11.5	14.0
3112116	38HDR030−31	CNPV*3617A**	58MEB040−12	28,600	12.0	14.5
3112117	38HDR030−31	CNPV*3617A**	58MEB060−12	28,600	12.0	14.5
3112118	38HDR030−31	CNPV*3617A**	58MEB080−12	28,600	12.0	14.5
3112119	38HDR030−31	CNPV*3617A**	58MEB080−16	28,600	12.0	14.5
1390454	38HDR030−31	CNPV*3617A**	58MV(B,C)060−14	28,600	11.5	14.0
3015393	38HDR030−31	CNPV*3617A**	58PH*070−16	28,600	12.0	14.5
1085660	38HDR030−31	CNPV*3617A**+TDR		28,600	11.0	13.0
1085802	38HDR030−31	CNPV*3621A**	58CV(A,X)090−16	28,600	11.5	14.0
1085674	38HDR030−31	CNPV*3621A**	58CV(A,X)110−20	28,600	11.5	14.0
1390466	38HDR030−31	CNPV*3621A**	58MV(B,C)060−14	28,600	11.5	14.0
1390470	38HDR030−31	CNPV*3621A**	58MV(B,C)080−14	28,600	11.5	14.0
1390482	38HDR030−31	CNPV*3621A**	58MV(B,C)080−20	28,600	11.5	14.0
1390494	38HDR030−31	CNPV*3621A**	58MV(B,C)100−20	28,600	11.5	14.0
3015394	38HDR030−31	CNPV*3621A**	58PH*090−16	28,600	12.0	14.5
1085666	38HDR030−31	CNPV*3621A**+TDR		28,600	11.0	13.0
1085740	38HDR030−31	CSPH*3012A**	58CV(A,X)070−12	28,000	11.5	14.0
1085742	38HDR030−31	CSPH*3012A**	58CV(A,X)090−16	28,000	11.5	14.0
1085744	38HDR030−31	CSPH*3012A**	58CV(A,X)110−20	28,000	11.5	14.0
1085746	38HDR030−31	CSPH*3012A**	58CV(A,X)135−22	28,000	11.5	14.0
1085748	38HDR030−31	CSPH*3012A**	58CV(A,X)155−22	28,000	11.5	14.0
3112128	38HDR030−31	CSPH*3012A**	58MEB040−12	28,000	12.0	14.5
3112129	38HDR030−31	CSPH*3012A**	58MEB060−12	28,000	12.0	14.5
3112130	38HDR030−31	CSPH*3012A**	58MEB080−12	28,000	12.0	14.5
3112131	38HDR030−31	CSPH*3012A**	58MEB080−16	28,000	12.0	14.5
1390460	38HDR030−31	CSPH*3012A**	58MV(B,C)060−14	28,000	11.5	14.0
1390476	38HDR030−31	CSPH*3012A**	58MV(B,C)080−14	28,000	11.5	14.0
1390488	38HDR030−31	CSPH*3012A**	58MV(B,C)080−20	28,000	11.5	14.0
1390500	38HDR030−31	CSPH*3012A**	58MV(B,C)100−20	28,000	11.5	14.0
1390508	38HDR030−31	CSPH*3012A**	58MV(B,C)120−20	28,000	11.5	14.0
3015399	38HDR030−31	CSPH*3012A**	58PH*070−16	28,000	11.5	14.0
3015400	38HDR030−31	CSPH*3012A**	58PH*090−16	28,000	11.5	14.0
1085726	38HDR030−31	CSPH*3012A**+TDR		28,000	11.0	13.0
1085764	38HDR030−31	CSPH*3612A**	58CV(A,X)070−12	28,600	11.5	14.0
1085766	38HDR030−31	CSPH*3612A**	58CV(A,X)090−16	28,600	11.5	14.0
1085768	38HDR030−31	CSPH*3612A**	58CV(A,X)110−20	28,600	11.5	14.0
1085770	38HDR030−31	CSPH*3612A**	58CV(A,X)135−22	28,600	11.5	14.0
1085772	38HDR030−31	CSPH*3612A**	58CV(A,X)155−22	28,600	11.5	14.0
3112132	38HDR030−31	CSPH*3612A**	58MEB040−12	28,600	12.0	14.5
3112133	38HDR030−31	CSPH*3612A**	58MEB060−12	28,600	12.0	14.5
3112134	38HDR030−31	CSPH*3612A**	58MEB080−12	28,600	12.0	14.5
3112135	38HDR030−31	CSPH*3612A**	58MEB080−16	28,600	12.0	14.5
1390462	38HDR030−31	CSPH*3612A**	58MV(B,C)060−14	28,600	11.5	14.0
1390478	38HDR030−31	CSPH*3612A**	58MV(B,C)080−14	28,600	11.5	14.0
1390490	38HDR030−31	CSPH*3612A**	58MV(B,C)080−20	28,600	11.5	14.0
1390502	38HDR030−31	CSPH*3612A**	58MV(B,C)100−20	28,600	11.5	14.0
1390510	38HDR030−31	CSPH*3612A**	58MV(B,C)120−20	28,600	11.5	14.0
3015401	38HDR030−31	CSPH*3612A**	58PH*070−16	28,600	12.0	14.5
3015402	38HDR030−31	CSPH*3612A**	58PH*090−16	28,600	12.0	14.5
1085750	38HDR030−31	CSPH*3612A**+TDR		28,600	11.0	13.0
1086240	38HDR030−31	FE4AN(B,F)003+UI		28,600	11.5	14.0
1086242	38HDR030−31	FE4AN(B,F)005+UI		29,000	12.5	15.0
1086238	38HDR030−31	FE4ANF002+UI		28,600	11.5	14.0
1085782	38HDR030−31	FF1ENP030		28,000	11.0	13.0
1085784	38HDR030−31	FF1ENP036		28,600	11.0	13.0
1085786	38HDR030−31	FV4BNF002		28,600	11.5	14.0
3404625	38HDR030−31	FV4CNF002		28,600	11.5	14.0
1085780	38HDR030−31	FX4CN(B,F)036		28,600	11.5	14.0
1085778	38HDR030−31	FX4CNF030		28,000	11.5	14.0
1085774	38HDR030−31	FY4ANF030		28,000	11.0	13.0
1085776	38HDR030−31	FY4ANF036		28,600	11.0	13.0
1085804	38HDR036−31	†CNPV*4221A**+TDR		33,400	11.0	13.0
1117980	38HDR036−31	40QAC036−−−3		33,000	11.4	13.0
1085808	38HDR036−31	CAP**3614A**	58CV(A,X)070−12	32,600	11.5	13.5
3015403	38HDR036−31	CAP**3614A**	58PH*045−08	33,000	11.5	14.0
1085806	38HDR036−31	CAP**3614A**+TDR		32,600	11.0	13.0
1085982	38HDR036−31	CAP**3617A**	58CV(A,X)070−12	33,000	11.5	14.0
1085814	38HDR036−31	CAP**3617A**	58CV(A,X)090−16	33,000	11.5	14.0

See notes on page 26

COMBINATION RATINGS (CONT.)

ARI Ref. No.	Model Number	Indoor Model	Furnace Model	Capacity	EER	SEER
3112136	38HDR036−31	CAP**3617A**	58MEB040−12	33,000	12.0	14.5
3112137	38HDR036−31	CAP**3617A**	58MEB060−12	33,000	12.0	14.5
3112138	38HDR036−31	CAP**3617A**	58MEB080−12	33,000	12.0	14.5
3112139	38HDR036−31	CAP**3617A**	58MEB080−16	33,000	12.0	14.5
1390512	38HDR036−31	CAP**3617A**	58MV(B,C)060−14	33,000	11.5	13.5
3015404	38HDR036−31	CAP**3617A**	58PH*070−16	33,000	11.5	14.0
1085810	38HDR036−31	CAP**3617A**+TDR		33,000	11.0	13.0
1085986	38HDR036−31	CAP**3621A**	58CV(A,X)090−16	33,000	11.5	14.0
1085824	38HDR036−31	CAP**3621A**	58CV(A,X)110−20	33,000	11.5	14.0
3112140	38HDR036−31	CAP**3621A**	58MEB100−20	33,000	12.0	14.5
1390524	38HDR036−31	CAP**3621A**	58MV(B,C)060−14	33,000	11.5	14.0
1390532	38HDR036−31	CAP**3621A**	58MV(B,C)080−14	33,000	11.5	13.5
1390550	38HDR036−31	CAP**3621A**	58MV(B,C)080−20	33,000	11.5	13.5
1390568	38HDR036−31	CAP**3621A**	58MV(B,C)100−20	33,000	11.5	14.0
3015405	38HDR036−31	CAP**3621A**	58PH*090−16	33,000	12.0	14.5
3015406	38HDR036−31	CAP**3621A**	58PH*110−20	33,000	12.0	14.5
1085816	38HDR036−31	CAP**3621A**+TDR		33,000	11.0	13.0
1085990	38HDR036−31	CAP**4221A**	58CV(A,X)090−16	33,400	11.5	14.0
1085834	38HDR036−31	CAP**4221A**	58CV(A,X)110−20	33,400	11.5	14.0
3112141	38HDR036−31	CAP**4221A**	58MEB100−20	33,400	12.0	14.5
1390526	38HDR036−31	CAP**4221A**	58MV(B,C)060−14	33,400	11.5	14.0
1390534	38HDR036−31	CAP**4221A**	58MV(B,C)080−14	33,400	11.5	13.5
1390552	38HDR036−31	CAP**4221A**	58MV(B,C)080−20	33,400	11.5	14.0
1390570	38HDR036−31	CAP**4221A**	58MV(B,C)100−20	33,400	11.5	14.0
3015407	38HDR036−31	CAP**4221A**	58PH*090−16	33,400	12.0	14.5
3015408	38HDR036−31	CAP**4221A**	58PH*110−20	33,400	12.0	14.5
1085826	38HDR036−31	CAP**4221A**+TDR		33,400	11.0	13.0
1085998	38HDR036−31	CAP**4224A**	58CV(A,X)110−20	33,400	11.5	14.0
1085842	38HDR036−31	CAP**4224A**	58CV(A,X)135−22	33,400	11.5	14.0
1085844	38HDR036−31	CAP**4224A**	58CV(A,X)155−22	33,400	11.5	14.0
1390548	38HDR036−31	CAP**4224A**	58MV(B,C)080−14	33,400	11.5	14.0
1390566	38HDR036−31	CAP**4224A**	58MV(B,C)080−20	33,400	11.5	14.0
1390584	38HDR036−31	CAP**4224A**	58MV(B,C)100−20	33,400	11.5	14.0
1390586	38HDR036−31	CAP**4224A**	58MV(B,C)120−20	33,400	11.5	13.5
1085836	38HDR036−31	CAP**4224A**+TDR		33,400	11.0	13.0
1085918	38HDR036−31	CNPF*3618A**+TDR		33,000	11.0	13.0
1085884	38HDR036−31	CNPH*3617A**	58CV(A,X)070−12	33,000	11.5	13.5
1085886	38HDR036−31	CNPH*3617A**	58CV(A,X)090−16	33,000	11.5	13.5
1085888	38HDR036−31	CNPH*3617A**	58CV(A,X)110−20	33,000	11.5	13.5
1085890	38HDR036−31	CNPH*3617A**	58CV(A,X)135−22	33,000	11.5	13.5
1085892	38HDR036−31	CNPH*3617A**	58CV(A,X)155−22	33,000	11.5	14.0
3112156	38HDR036−31	CNPH*3617A**	58MEB040−12	33,000	12.0	14.5
3112157	38HDR036−31	CNPH*3617A**	58MEB060−12	33,000	12.0	14.5
3112158	38HDR036−31	CNPH*3617A**	58MEB080−12	33,000	12.0	14.5
3112159	38HDR036−31	CNPH*3617A**	58MEB080−16	33,000	12.0	14.5
3112160	38HDR036−31	CNPH*3617A**	58MEB100−20	33,000	12.0	14.5
1390516	38HDR036−31	CNPH*3617A**	58MV(B,C)060−14	33,000	11.5	13.5
1390540	38HDR036−31	CNPH*3617A**	58MV(B,C)080−14	33,000	11.5	13.5
1390558	38HDR036−31	CNPH*3617A**	58MV(B,C)080−20	33,000	11.5	13.5
1390576	38HDR036−31	CNPH*3617A**	58MV(B,C)100−20	33,000	11.5	13.5
1390588	38HDR036−31	CNPH*3617A**	58MV(B,C)120−20	33,000	11.5	13.5
3015414	38HDR036−31	CNPH*3617A**	58PH*045−08	33,000	11.5	14.0
3015415	38HDR036−31	CNPH*3617A**	58PH*070−16	33,000	11.5	14.0
3015416	38HDR036−31	CNPH*3617A**	58PH*090−16	33,000	12.0	14.5
3015417	38HDR036−31	CNPH*3617A**	58PH*110−20	33,000	12.0	14.5
1085870	38HDR036−31	CNPH*3617A**+TDR		33,000	11.0	13.0
1085908	38HDR036−31	CNPH*4221A**	58CV(A,X)070−12	33,400	11.5	14.0
1085910	38HDR036−31	CNPH*4221A**	58CV(A,X)090−16	33,400	11.5	14.5
1085912	38HDR036−31	CNPH*4221A**	58CV(A,X)110−20	33,400	11.5	14.5
1085914	38HDR036−31	CNPH*4221A**	58CV(A,X)135−22	33,400	11.5	14.5
1085916	38HDR036−31	CNPH*4221A**	58CV(A,X)155−22	33,400	11.5	14.5
3112161	38HDR036−31	CNPH*4221A**	58MEB040−12	33,400	12.0	14.5
3112162	38HDR036−31	CNPH*4221A**	58MEB060−12	33,400	12.0	14.5
3112163	38HDR036−31	CNPH*4221A**	58MEB080−12	33,400	12.0	14.5
3112164	38HDR036−31	CNPH*4221A**	58MEB080−16	33,400	12.0	14.5
3112165	38HDR036−31	CNPH*4221A**	58MEB100−20	33,400	12.0	14.5
1390518	38HDR036−31	CNPH*4221A**	58MV(B,C)060−14	33,400	11.5	14.0
1390542	38HDR036−31	CNPH*4221A**	58MV(B,C)080−14	33,400	11.5	14.0
1390560	38HDR036−31	CNPH*4221A**	58MV(B,C)080−20	33,400	11.5	14.0
1390578	38HDR036−31	CNPH*4221A**	58MV(B,C)100−20	33,400	11.5	14.0
1390590	38HDR036−31	CNPH*4221A**	58MV(B,C)120−20	33,400	11.5	14.5
3015418	38HDR036−31	CNPH*4221A**	58PH*045−08	33,400	11.5	14.0
3015419	38HDR036−31	CNPH*4221A**	58PH*070−16	33,400	11.5	14.0
3015420	38HDR036−31	CNPH*4221A**	58PH*090−16	33,400	12.0	14.5
3015421	38HDR036−31	CNPH*4221A**	58PH*110−20	33,400	12.0	14.5
1085894	38HDR036−31	CNPH*4221A**+TDR		33,400	11.0	13.0
1086000	38HDR036−31	CNPV*3617A**	58CV(A,X)070−12	33,000	11.5	14.0
1085850	38HDR036−31	CNPV*3617A**	58CV(A,X)090−16	33,000	11.5	13.5
3112142	38HDR036−31	CNPV*3617A**	58MEB040−12	33,000	12.0	14.5

See notes on page 26

COMBINATION RATINGS (CONT.)

ARI Ref. No.	Model Number	Indoor Model	Furnace Model	Capacity	EER	SEER
3112143	38HDR036−31	CNPV*3617A**	58MEB060−12	33,000	12.0	14.5
3112144	38HDR036−31	CNPV*3617A**	58MEB080−12	33,000	12.0	14.5
3112145	38HDR036−31	CNPV*3617A**	58MEB080−16	33,000	12.0	14.5
1390514	38HDR036−31	CNPV*3617A**	58MV(B,C)060−14	33,000	11.5	13.5
3015409	38HDR036−31	CNPV*3617A**	58PH*070−16	33,000	11.5	14.0
1085846	38HDR036−31	CNPV*3617A**+TDR		33,000	11.0	13.0
1086004	38HDR036−31	CNPV*3621A**	58CV(A,X)090−16	33,000	11.5	14.5
1085860	38HDR036−31	CNPV*3621A**	58CV(A,X)110−20	33,000	11.5	13.5
3112146	38HDR036−31	CNPV*3621A**	58MEB100−20	33,000	12.0	14.5
1390528	38HDR036−31	CNPV*3621A**	58MV(B,C)060−14	33,000	11.5	14.5
1390536	38HDR036−31	CNPV*3621A**	58MV(B,C)080−14	33,000	11.5	13.5
1390554	38HDR036−31	CNPV*3621A**	58MV(B,C)080−20	33,000	11.5	13.5
1390572	38HDR036−31	CNPV*3621A**	58MV(B,C)100−20	33,000	11.5	13.5
3015410	38HDR036−31	CNPV*3621A**	58PH*090−16	33,000	12.0	14.5
3015411	38HDR036−31	CNPV*3621A**	58PH*110−20	33,000	12.0	14.5
1085852	38HDR036−31	CNPV*3621A**+TDR		33,000	11.0	13.0
3112149	38HDR036−31	CNPV*4217A**	58CV(A,X)090−16	33,400	12.0	14.5
3112151	38HDR036−31	CNPV*4217A**	58MEB040−12	33,400	12.0	14.5
3112152	38HDR036−31	CNPV*4217A**	58MEB060−12	33,400	12.0	14.5
3112153	38HDR036−31	CNPV*4217A**	58MEB080−12	33,400	12.0	14.5
3112154	38HDR036−31	CNPV*4217A**	58MEB080−16	33,400	12.0	14.5
3112148	38HDR036−31	CNPV*4217A**	58MV(B,C)060−14	33,400	12.0	14.5
3112150	38HDR036−31	CNPV*4217A**	58PH*070−16	33,400	12.0	14.5
3112147	38HDR036−31	CNPV*4217A**+TDR		33,400	11.0	13.0
1086008	38HDR036−31	CNPV*4221A**	58CV(A,X)090−16	33,400	11.5	14.5
1085868	38HDR036−31	CNPV*4221A**	58CV(A,X)110−20	33,400	11.5	14.5
3112155	38HDR036−31	CNPV*4221A**	58MEB100−20	33,400	12.0	14.5
1390530	38HDR036−31	CNPV*4221A**	58MV(B,C)060−14	33,400	11.5	14.5
1390538	38HDR036−31	CNPV*4221A**	58MV(B,C)080−14	33,400	11.5	14.0
1390556	38HDR036−31	CNPV*4221A**	58MV(B,C)080−20	33,400	11.5	14.0
1390574	38HDR036−31	CNPV*4221A**	58MV(B,C)100−20	33,400	11.5	14.0
3015412	38HDR036−31	CNPV*4221A**	58PH*090−16	33,400	12.0	14.5
3015413	38HDR036−31	CNPV*4221A**	58PH*110−20	33,400	12.0	14.5
1085934	38HDR036−31	CSPH*3612A**	58CV(A,X)070−12	33,000	11.5	14.0
1085936	38HDR036−31	CSPH*3612A**	58CV(A,X)090−16	33,000	11.5	14.5
1085938	38HDR036−31	CSPH*3612A**	58CV(A,X)110−20	33,000	11.5	14.5
1085940	38HDR036−31	CSPH*3612A**	58CV(A,X)135−22	33,000	11.5	14.5
1085942	38HDR036−31	CSPH*3612A**	58CV(A,X)155−22	33,000	11.5	14.5
3112166	38HDR036−31	CSPH*3612A**	58MEB040−12	33,000	12.0	14.5
3112167	38HDR036−31	CSPH*3612A**	58MEB060−12	33,000	12.0	14.5
3112168	38HDR036−31	CSPH*3612A**	58MEB080−12	33,000	12.0	14.5
3112169	38HDR036−31	CSPH*3612A**	58MEB080−16	33,000	12.0	14.5
3112170	38HDR036−31	CSPH*3612A**	58MEB100−20	33,000	12.0	14.5
1390520	38HDR036−31	CSPH*3612A**	58MV(B,C)060−14	33,000	11.5	14.5
1390544	38HDR036−31	CSPH*3612A**	58MV(B,C)080−14	33,000	11.5	14.0
1390562	38HDR036−31	CSPH*3612A**	58MV(B,C)080−20	33,000	11.5	14.0
1390580	38HDR036−31	CSPH*3612A**	58MV(B,C)100−20	33,000	11.5	14.5
1390592	38HDR036−31	CSPH*3612A**	58MV(B,C)120−20	33,000	11.5	14.5
3015422	38HDR036−31	CSPH*3612A**	58PH*045−08	33,000	11.5	14.0
3015423	38HDR036−31	CSPH*3612A**	58PH*070−16	33,000	11.5	14.0
3015424	38HDR036−31	CSPH*3612A**	58PH*090−16	33,000	12.0	14.5
3015425	38HDR036−31	CSPH*3612A**	58PH*110−20	33,000	12.0	14.5
1085920	38HDR036−31	CSPH*3612A**+TDR		33,000	11.0	13.0
1085958	38HDR036−31	CSPH*4212A**	58CV(A,X)070−12	33,400	11.5	14.0
1085960	38HDR036−31	CSPH*4212A**	58CV(A,X)090−16	33,400	11.5	14.5
1085962	38HDR036−31	CSPH*4212A**	58CV(A,X)110−20	33,400	11.5	14.5
1085964	38HDR036−31	CSPH*4212A**	58CV(A,X)135−22	33,400	11.5	14.5
1085966	38HDR036−31	CSPH*4212A**	58CV(A,X)155−22	33,400	11.5	14.5
3112171	38HDR036−31	CSPH*4212A**	58MEB040−12	33,400	12.0	14.5
3112172	38HDR036−31	CSPH*4212A**	58MEB060−12	33,400	12.0	14.5
3112173	38HDR036−31	CSPH*4212A**	58MEB080−12	33,400	12.0	14.5
3112174	38HDR036−31	CSPH*4212A**	58MEB080−16	33,400	12.0	14.5
3112175	38HDR036−31	CSPH*4212A**	58MEB100−20	33,400	12.0	14.5
1390522	38HDR036−31	CSPH*4212A**	58MV(B,C)060−14	33,400	11.5	14.0
1390546	38HDR036−31	CSPH*4212A**	58MV(B,C)080−14	33,400	11.5	14.0
1390564	38HDR036−31	CSPH*4212A**	58MV(B,C)080−20	33,400	11.5	14.0
1390582	38HDR036−31	CSPH*4212A**	58MV(B,C)100−20	33,400	11.5	14.0
1390594	38HDR036−31	CSPH*4212A**	58MV(B,C)120−20	33,400	11.5	14.0
3015426	38HDR036−31	CSPH*4212A**	58PH*045−08	33,400	11.5	14.0
3015427	38HDR036−31	CSPH*4212A**	58PH*070−16	33,400	11.5	14.0
3015428	38HDR036−31	CSPH*4212A**	58PH*090−16	33,400	12.0	14.5
3015429	38HDR036−31	CSPH*4212A**	58PH*110−20	33,400	12.0	14.5
1085944	38HDR036−31	CSPH*4212A**+TDR		33,400	11.0	13.0
1086246	38HDR036−31	FE4AN(B,F)003+UI		33,000	11.5	14.0
1086248	38HDR036−31	FE4AN(B,F)005+UI		33,400	12.5	15.0
1086250	38HDR036−31	FE4ANB006+UI		33,400	12.5	15.0
1086244	38HDR036−31	FE4ANF002+UI		33,000	11.5	13.5
1085976	38HDR036−31	FF1ENP036		33,000	11.0	13.0
1085980	38HDR036−31	FV4BNB006		33,400	12.5	15.0

See notes on page 26

COMBINATION RATINGS (CONT.)

ARI Ref. No.	Model Number	Indoor Model	Furnace Model	Capacity	EER	SEER
1085978	38HDR036−31	FV4BNF002		33,000	11.5	13.5
3404627	38HDR036−31	FV4CNB006		33,400	12.5	15.0
3404626	38HDR036−31	FV4CNF002		33,000	11.5	13.5
1085972	38HDR036−31	FX4CN(B,F)036		33,000	11.5	14.0
1085974	38HDR036−31	FX4CN(B,F)042		33,400	11.5	14.0
1085968	38HDR036−31	FY4ANF036		33,000	11.0	13.0
1085970	38HDR036−31	FY4ANF042		33,400	11.0	13.0
1117042	38HDR036−51	†CNPV*4221A**+TDR		33,400	11.0	13.0
1117982	38HDR036−51	40QAC036−−−3		33,000	11.4	13.0
1117046	38HDR036−51	CAP**3614A**	58CV(A,X)070−12	32,600	11.5	13.5
3015466	38HDR036−51	CAP**3614A**	58PH*045−08	33,000	11.5	14.0
1117044	38HDR036−51	CAP**3614A**+TDR		32,600	11.0	13.0
1117228	38HDR036−51	CAP**3617A**	58CV(A,X)070−12	33,000	11.5	14.0
1117052	38HDR036−51	CAP**3617A**	58CV(A,X)090−16	33,000	11.5	14.0
3116284	38HDR036−51	CAP**3617A**	58MEB040−12	33,000	12.0	14.5
3116285	38HDR036−51	CAP**3617A**	58MEB060−12	33,000	12.0	14.5
3116286	38HDR036−51	CAP**3617A**	58MEB080−12	33,000	12.0	14.5
3116287	38HDR036−51	CAP**3617A**	58MEB080−16	33,000	12.0	14.5
1390596	38HDR036−51	CAP**3617A**	58MV(B,C)060−14	33,000	11.5	13.5
3015467	38HDR036−51	CAP**3617A**	58PH*070−16	33,000	11.5	14.0
1117048	38HDR036−51	CAP**3617A**+TDR		33,000	11.0	13.0
1117232	38HDR036−51	CAP**3621A**	58CV(A,X)090−16	33,000	11.5	14.0
1145786	38HDR036−51	CAP**3621A**	58CV(A,X)110−20	33,000	11.5	14.0
3116288	38HDR036−51	CAP**3621A**	58MEB100−20	33,000	12.0	14.5
1390602	38HDR036−51	CAP**3621A**	58MV(B,C)060−14	33,000	11.5	14.0
1390616	38HDR036−51	CAP**3621A**	58MV(B,C)080−14	33,000	11.5	13.5
1390634	38HDR036−51	CAP**3621A**	58MV(B,C)080−20	33,000	11.5	13.5
1390658	38HDR036−51	CAP**3621A**	58MV(B,C)100−20	33,000	11.5	14.0
3015468	38HDR036−51	CAP**3621A**	58PH*090−16	33,000	12.0	14.5
3015469	38HDR036−51	CAP**3621A**	58PH*110−20	33,000	12.0	14.5
1117054	38HDR036−51	CAP**3621A**+TDR		33,000	11.0	13.0
1117236	38HDR036−51	CAP**4221A**	58CV(A,X)090−16	33,400	11.5	14.0
1145796	38HDR036−51	CAP**4221A**	58CV(A,X)110−20	33,400	11.5	14.0
3116289	38HDR036−51	CAP**4221A**	58MEB100−20	33,400	12.0	14.5
1390604	38HDR036−51	CAP**4221A**	58MV(B,C)060−14	33,400	11.5	14.0
1390624	38HDR036−51	CAP**4221A**	58MV(B,C)080−14	33,400	11.5	13.5
1390642	38HDR036−51	CAP**4221A**	58MV(B,C)080−20	33,400	11.5	14.0
1390660	38HDR036−51	CAP**4221A**	58MV(B,C)100−20	33,400	11.5	14.0
3015470	38HDR036−51	CAP**4221A**	58PH*090−16	33,400	12.0	14.5
3015471	38HDR036−51	CAP**4221A**	58PH*110−20	33,400	12.0	14.5
1145788	38HDR036−51	CAP**4221A**+TDR		33,400	11.0	13.0
1117244	38HDR036−51	CAP**4224A**	58CV(A,X)110−20	33,400	11.5	14.0
1145804	38HDR036−51	CAP**4224A**	58CV(A,X)135−22	33,400	11.5	14.0
1145806	38HDR036−51	CAP**4224A**	58CV(A,X)155−22	33,400	11.5	14.0
1390622	38HDR036−51	CAP**4224A**	58MV(B,C)080−14	33,400	11.5	14.0
1390640	38HDR036−51	CAP**4224A**	58MV(B,C)080−20	33,400	11.5	14.0
1390656	38HDR036−51	CAP**4224A**	58MV(B,C)100−20	33,400	11.5	14.0
1390674	38HDR036−51	CAP**4224A**	58MV(B,C)120−20	33,400	11.5	13.5
1145798	38HDR036−51	CAP**4224A**+TDR		33,400	11.0	13.0
1117156	38HDR036−51	CNPF*3618A**+TDR		33,000	11.0	13.0
1145846	38HDR036−51	CNPH*3617A**	58CV(A,X)070−12	33,000	11.5	13.5
1145848	38HDR036−51	CNPH*3617A**	58CV(A,X)090−16	33,000	11.5	13.5
1145850	38HDR036−51	CNPH*3617A**	58CV(A,X)110−20	33,000	11.5	13.5
1145852	38HDR036−51	CNPH*3617A**	58CV(A,X)135−22	33,000	11.5	13.5
1145854	38HDR036−51	CNPH*3617A**	58CV(A,X)155−22	33,000	11.5	14.0
3116304	38HDR036−51	CNPH*3617A**	58MEB040−12	33,000	12.0	14.5
3116305	38HDR036−51	CNPH*3617A**	58MEB060−12	33,000	12.0	14.5
3116306	38HDR036−51	CNPH*3617A**	58MEB080−12	33,000	12.0	14.5
3116307	38HDR036−51	CNPH*3617A**	58MEB080−16	33,000	12.0	14.5
3116308	38HDR036−51	CNPH*3617A**	58MEB100−20	33,000	12.0	14.5
1390612	38HDR036−51	CNPH*3617A**	58MV(B,C)060−14	33,000	11.5	13.5
1390630	38HDR036−51	CNPH*3617A**	58MV(B,C)080−14	33,000	11.5	13.5
1390648	38HDR036−51	CNPH*3617A**	58MV(B,C)080−20	33,000	11.5	13.5
1390666	38HDR036−51	CNPH*3617A**	58MV(B,C)100−20	33,000	11.5	13.5
1390676	38HDR036−51	CNPH*3617A**	58MV(B,C)120−20	33,000	11.5	13.5
3015477	38HDR036−51	CNPH*3617A**	58PH*045−08	33,000	11.5	14.0
3015478	38HDR036−51	CNPH*3617A**	58PH*070−16	33,000	11.5	14.0
3015479	38HDR036−51	CNPH*3617A**	58PH*090−16	33,000	12.0	14.5
3015480	38HDR036−51	CNPH*3617A**	58PH*110−20	33,000	12.0	14.5
1145832	38HDR036−51	CNPH*3617A**+TDR		33,000	11.0	13.0
1145870	38HDR036−51	CNPH*4221A**	58CV(A,X)070−12	33,400	11.5	14.0
1145872	38HDR036−51	CNPH*4221A**	58CV(A,X)090−16	33,400	11.5	14.5
1145874	38HDR036−51	CNPH*4221A**	58CV(A,X)110−20	33,400	11.5	14.5
1117152	38HDR036−51	CNPH*4221A**	58CV(A,X)135−22	33,400	11.5	14.5
1117154	38HDR036−51	CNPH*4221A**	58CV(A,X)155−22	33,400	11.5	14.5
3116309	38HDR036−51	CNPH*4221A**	58MEB040−12	33,400	12.0	14.5
3116310	38HDR036−51	CNPH*4221A**	58MEB060−12	33,400	12.0	14.5
3116311	38HDR036−51	CNPH*4221A**	58MEB080−12	33,400	12.0	14.5

See notes on page 26

COMBINATION RATINGS (CONT.)

ARI Ref. No.	Model Number	Indoor Model	Furnace Model	Capacity	EER	SEER
3116312	38HDR036−51	CNPH*4221A**	58MEB080−16	33,400	12.0	14.5
3116313	38HDR036−51	CNPH*4221A**	58MEB100−20	33,400	12.0	14.5
1390614	38HDR036−51	CNPH*4221A**	58MV(B,C)060−14	33,400	11.5	14.0
1390632	38HDR036−51	CNPH*4221A**	58MV(B,C)080−14	33,400	11.5	14.0
1390650	38HDR036−51	CNPH*4221A**	58MV(B,C)080−20	33,400	11.5	14.0
1390668	38HDR036−51	CNPH*4221A**	58MV(B,C)100−20	33,400	11.5	14.0
1390678	38HDR036−51	CNPH*4221A**	58MV(B,C)120−20	33,400	11.5	14.5
3015481	38HDR036−51	CNPH*4221A**	58PH*045−08	33,400	11.5	14.0
3015482	38HDR036−51	CNPH*4221A**	58PH*070−16	33,400	11.5	14.0
3015483	38HDR036−51	CNPH*4221A**	58PH*090−16	33,400	12.0	14.5
3015484	38HDR036−51	CNPH*4221A**	58PH*110−20	33,400	12.0	14.5
1145856	38HDR036−51	CNPH*4221A**+TDR		33,400	11.0	13.0
1117246	38HDR036−51	CNPV*3617A**	58CV(A,X)070−12	33,000	11.5	14.0
1145812	38HDR036−51	CNPV*3617A**	58CV(A,X)090−16	33,000	11.5	13.5
3116290	38HDR036−51	CNPV*3617A**	58MEB040−12	33,000	12.0	14.5
3116291	38HDR036−51	CNPV*3617A**	58MEB060−12	33,000	12.0	14.5
3116292	38HDR036−51	CNPV*3617A**	58MEB080−12	33,000	12.0	14.5
3116293	38HDR036−51	CNPV*3617A**	58MEB080−16	33,000	12.0	14.5
1390610	38HDR036−51	CNPV*3617A**	58MV(B,C)060−14	33,000	11.5	13.5
3015472	38HDR036−51	CNPV*3617A**	58PH*070−16	33,000	11.5	14.0
1145808	38HDR036−51	CNPV*3617A**+TDR		33,000	11.0	13.0
1117250	38HDR036−51	CNPV*3621A**	58CV(A,X)090−16	33,000	11.5	14.5
1145822	38HDR036−51	CNPV*3621A**	58CV(A,X)110−20	33,000	11.5	13.5
3116294	38HDR036−51	CNPV*3621A**	58MEB100−20	33,000	12.0	14.5
1390606	38HDR036−51	CNPV*3621A**	58MV(B,C)060−14	33,000	11.5	14.5
1390626	38HDR036−51	CNPV*3621A**	58MV(B,C)080−14	33,000	11.5	13.5
1390644	38HDR036−51	CNPV*3621A**	58MV(B,C)080−20	33,000	11.5	13.5
1390662	38HDR036−51	CNPV*3621A**	58MV(B,C)100−20	33,000	11.5	13.5
3015473	38HDR036−51	CNPV*3621A**	58PH*090−16	33,000	12.0	14.5
3015474	38HDR036−51	CNPV*3621A**	58PH*110−20	33,000	12.0	14.5
1145814	38HDR036−51	CNPV*3621A**+TDR		33,000	11.0	13.0
3116297	38HDR036−51	CNPV*4217A**	58CV(A,X)090−16	33,400	12.0	14.5
3116299	38HDR036−51	CNPV*4217A**	58MEB040−12	33,400	12.0	14.5
3116300	38HDR036−51	CNPV*4217A**	58MEB060−12	33,400	12.0	14.5
3116301	38HDR036−51	CNPV*4217A**	58MEB080−12	33,400	12.0	14.5
3116302	38HDR036−51	CNPV*4217A**	58MEB080−16	33,400	12.0	14.5
3116296	38HDR036−51	CNPV*4217A**	58MV(B,C)060−14	33,400	12.0	14.5
3116298	38HDR036−51	CNPV*4217A**	58PH*070−16	33,400	12.0	14.5
3116295	38HDR036−51	CNPV*4217A**+TDR		33,400	11.0	13.0
1117254	38HDR036−51	CNPV*4221A**	58CV(A,X)090−16	33,400	11.5	14.5
1145830	38HDR036−51	CNPV*4221A**	58CV(A,X)110−20	33,400	11.5	14.5
3116303	38HDR036−51	CNPV*4221A**	58MEB100−20	33,400	12.0	14.5
1390608	38HDR036−51	CNPV*4221A**	58MV(B,C)060−14	33,400	11.5	14.5
1390628	38HDR036−51	CNPV*4221A**	58MV(B,C)080−14	33,400	11.5	14.0
1390646	38HDR036−51	CNPV*4221A**	58MV(B,C)080−20	33,400	11.5	14.0
1390664	38HDR036−51	CNPV*4221A**	58MV(B,C)100−20	33,400	11.5	14.0
3015475	38HDR036−51	CNPV*4221A**	58PH*090−16	33,400	12.0	14.5
3015476	38HDR036−51	CNPV*4221A**	58PH*110−20	33,400	12.0	14.5
1117172	38HDR036−51	CSPH*3612A**	58CV(A,X)070−12	33,000	11.5	14.0
1117174	38HDR036−51	CSPH*3612A**	58CV(A,X)090−16	33,000	11.5	14.5
1117176	38HDR036−51	CSPH*3612A**	58CV(A,X)110−20	33,000	11.5	14.5
1117178	38HDR036−51	CSPH*3612A**	58CV(A,X)135−22	33,000	11.5	14.5
1117180	38HDR036−51	CSPH*3612A**	58CV(A,X)155−22	33,000	11.5	14.5
3116314	38HDR036−51	CSPH*3612A**	58MEB040−12	33,000	12.0	14.5
3116315	38HDR036−51	CSPH*3612A**	58MEB060−12	33,000	12.0	14.5
3116316	38HDR036−51	CSPH*3612A**	58MEB080−12	33,000	12.0	14.5
3116317	38HDR036−51	CSPH*3612A**	58MEB080−16	33,000	12.0	14.5
3116318	38HDR036−51	CSPH*3612A**	58MEB100−20	33,000	12.0	14.5
1390598	38HDR036−51	CSPH*3612A**	58MV(B,C)060−14	33,000	11.5	14.5
1390618	38HDR036−51	CSPH*3612A**	58MV(B,C)080−14	33,000	11.5	14.0
1390636	38HDR036−51	CSPH*3612A**	58MV(B,C)080−20	33,000	11.5	14.0
1390652	38HDR036−51	CSPH*3612A**	58MV(B,C)100−20	33,000	11.5	14.5
1390670	38HDR036−51	CSPH*3612A**	58MV(B,C)120−20	33,000	11.5	14.5
3015485	38HDR036−51	CSPH*3612A**	58PH*045−08	33,000	11.5	14.0
3015486	38HDR036−51	CSPH*3612A**	58PH*070−16	33,000	11.5	14.0
3015487	38HDR036−51	CSPH*3612A**	58PH*090−16	33,000	12.0	14.5
3015488	38HDR036−51	CSPH*3612A**	58PH*110−20	33,000	12.0	14.5
1117158	38HDR036−51	CSPH*3612A**+TDR		33,000	11.0	13.0
1117196	38HDR036−51	CSPH*4212A**	58CV(A,X)070−12	33,400	11.5	14.0
1117198	38HDR036−51	CSPH*4212A**	58CV(A,X)090−16	33,400	11.5	14.5
1117200	38HDR036−51	CSPH*4212A**	58CV(A,X)110−20	33,400	11.5	14.5
1117202	38HDR036−51	CSPH*4212A**	58CV(A,X)135−22	33,400	11.5	14.5
1117204	38HDR036−51	CSPH*4212A**	58CV(A,X)155−22	33,400	11.5	14.5
3116319	38HDR036−51	CSPH*4212A**	58MEB040−12	33,400	12.0	14.5
3116320	38HDR036−51	CSPH*4212A**	58MEB060−12	33,400	12.0	14.5
3116321	38HDR036−51	CSPH*4212A**	58MEB080−12	33,400	12.0	14.5
3116322	38HDR036−51	CSPH*4212A**	58MEB080−16	33,400	12.0	14.5
3116323	38HDR036−51	CSPH*4212A**	58MEB100−20	33,400	12.0	14.5
1390600	38HDR036−51	CSPH*4212A**	58MV(B,C)060−14	33,400	11.5	14.0

See notes on page 26

COMBINATION RATINGS (CONT.)

ARI Ref. No.	Model Number	Indoor Model	Furnace Model	Capacity	EER	SEER
1390620	38HDR036−51	CSPH*4212A**	58MV(B,C)080−14	33,400	11.5	14.0
1390638	38HDR036−51	CSPH*4212A**	58MV(B,C)080−20	33,400	11.5	14.0
1390654	38HDR036−51	CSPH*4212A**	58MV(B,C)100−20	33,400	11.5	14.0
1390672	38HDR036−51	CSPH*4212A**	58MV(B,C)120−20	33,400	11.5	14.0
3015489	38HDR036−51	CSPH*4212A**	58PH*045−08	33,400	11.5	14.0
3015490	38HDR036−51	CSPH*4212A**	58PH*070−16	33,400	11.5	14.0
3015491	38HDR036−51	CSPH*4212A**	58PH*090−16	33,400	12.0	14.5
3015492	38HDR036−51	CSPH*4212A**	58PH*110−20	33,400	12.0	14.5
1117182	38HDR036−51	CSPH*4212A**+TDR		33,400	11.0	13.0
1117216	38HDR036−51	FE4AN(B,F)003+UI		33,000	11.5	14.0
1117218	38HDR036−51	FE4AN(B,F)005+UI		33,400	12.5	15.0
1117220	38HDR036−51	FE4ANB006+UI		33,400	12.5	15.0
1117214	38HDR036−51	FE4ANF002+UI		33,000	11.5	13.5
1117222	38HDR036−51	FF1ENP036		33,000	11.0	13.0
1117226	38HDR036−51	FV4BNB006		33,400	12.5	15.0
1117224	38HDR036−51	FV4BNF002		33,000	11.5	13.5
3404631	38HDR036−51	FV4CNB006		33,400	12.5	15.0
3404630	38HDR036−51	FV4CNF002		33,000	11.5	13.5
1117210	38HDR036−51	FX4CN(B,F)036		33,000	11.5	14.0
1117212	38HDR036−51	FX4CN(B,F)042		33,400	11.5	14.0
1117206	38HDR036−51	FY4ANF036		33,000	11.0	13.0
1117208	38HDR036−51	FY4ANF042		33,400	11.0	13.0
1117484	38HDR036−61	†CNPV*4221A**+TDR		33,400	11.0	13.0
1117984	38HDR036−61	40QAC036−−−3		33,000	11.4	13.0
1117488	38HDR036−61	CAP**3614A**	58CV(A,X)070−12	32,600	11.5	13.5
3015493	38HDR036−61	CAP**3614A**	58PH*045−08	33,000	11.5	14.0
1117486	38HDR036−61	CAP**3614A**+TDR		32,600	11.0	13.0
1117670	38HDR036−61	CAP**3617A**	58CV(A,X)070−12	33,000	11.5	14.0
1117494	38HDR036−61	CAP**3617A**	58CV(A,X)090−16	33,000	11.5	14.0
3116353	38HDR036−61	CAP**3617A**	58MEB040−12	33,000	12.0	14.5
3116354	38HDR036−61	CAP**3617A**	58MEB060−12	33,000	12.0	14.5
3116355	38HDR036−61	CAP**3617A**	58MEB080−12	33,000	12.0	14.5
3116356	38HDR036−61	CAP**3617A**	58MEB080−16	33,000	12.0	14.5
1390680	38HDR036−61	CAP**3617A**	58MV(B,C)060−14	33,000	11.5	13.5
3015494	38HDR036−61	CAP**3617A**	58PH*070−16	33,000	11.5	14.0
1117490	38HDR036−61	CAP**3617A**+TDR		33,000	11.0	13.0
1117674	38HDR036−61	CAP**3621A**	58CV(A,X)090−16	33,000	11.5	14.0
1117504	38HDR036−61	CAP**3621A**	58CV(A,X)110−20	33,000	11.5	14.0
3116357	38HDR036−61	CAP**3621A**	58MEB100−20	33,000	12.0	14.5
1390692	38HDR036−61	CAP**3621A**	58MV(B,C)060−14	33,000	11.5	14.0
1390700	38HDR036−61	CAP**3621A**	58MV(B,C)080−14	33,000	11.5	13.5
1390718	38HDR036−61	CAP**3621A**	58MV(B,C)080−20	33,000	11.5	13.5
1390736	38HDR036−61	CAP**3621A**	58MV(B,C)100−20	33,000	11.5	14.0
3015495	38HDR036−61	CAP**3621A**	58PH*090−16	33,000	12.0	14.5
3015496	38HDR036−61	CAP**3621A**	58PH*110−20	33,000	12.0	14.5
1117496	38HDR036−61	CAP**3621A**+TDR		33,000	11.0	13.0
1117678	38HDR036−61	CAP**4221A**	58CV(A,X)090−16	33,400	11.5	14.0
1117514	38HDR036−61	CAP**4221A**	58CV(A,X)110−20	33,400	11.5	14.0
3116358	38HDR036−61	CAP**4221A**	58MEB100−20	33,400	12.0	14.5
1390694	38HDR036−61	CAP**4221A**	58MV(B,C)060−14	33,400	11.5	14.0
1390702	38HDR036−61	CAP**4221A**	58MV(B,C)080−14	33,400	11.5	13.5
1390720	38HDR036−61	CAP**4221A**	58MV(B,C)080−20	33,400	11.5	14.0
1390738	38HDR036−61	CAP**4221A**	58MV(B,C)100−20	33,400	11.5	14.0
3015497	38HDR036−61	CAP**4221A**	58PH*090−16	33,400	12.0	14.5
3015498	38HDR036−61	CAP**4221A**	58PH*110−20	33,400	12.0	14.5
1117506	38HDR036−61	CAP**4221A**+TDR		33,400	11.0	13.0
1117686	38HDR036−61	CAP**4224A**	58CV(A,X)110−20	33,400	11.5	14.0
1117522	38HDR036−61	CAP**4224A**	58CV(A,X)135−22	33,400	11.5	14.0
1117524	38HDR036−61	CAP**4224A**	58CV(A,X)155−22	33,400	11.5	14.0
1390716	38HDR036−61	CAP**4224A**	58MV(B,C)080−14	33,400	11.5	14.0
1390734	38HDR036−61	CAP**4224A**	58MV(B,C)080−20	33,400	11.5	14.0
1390752	38HDR036−61	CAP**4224A**	58MV(B,C)100−20	33,400	11.5	14.0
1390754	38HDR036−61	CAP**4224A**	58MV(B,C)120−20	33,400	11.5	13.5
1117516	38HDR036−61	CAP**4224A**+TDR		33,400	11.0	13.0
1117598	38HDR036−61	CNPF*3618A**+TDR		33,000	11.0	13.0
1117564	38HDR036−61	CNPH*3617A**	58CV(A,X)070−12	33,000	11.5	13.5
1117566	38HDR036−61	CNPH*3617A**	58CV(A,X)090−16	33,000	11.5	13.5
1117568	38HDR036−61	CNPH*3617A**	58CV(A,X)110−20	33,000	11.5	13.5
1117570	38HDR036−61	CNPH*3617A**	58CV(A,X)135−22	33,000	11.5	13.5
1117572	38HDR036−61	CNPH*3617A**	58CV(A,X)155−22	33,000	11.5	14.0
3116373	38HDR036−61	CNPH*3617A**	58MEB040−12	33,000	12.0	14.5
3116374	38HDR036−61	CNPH*3617A**	58MEB060−12	33,000	12.0	14.5
3116375	38HDR036−61	CNPH*3617A**	58MEB080−12	33,000	12.0	14.5
3116376	38HDR036−61	CNPH*3617A**	58MEB080−16	33,000	12.0	14.5
3116377	38HDR036−61	CNPH*3617A**	58MEB100−20	33,000	12.0	14.5
1390684	38HDR036−61	CNPH*3617A**	58MV(B,C)060−14	33,000	11.5	13.5
1390708	38HDR036−61	CNPH*3617A**	58MV(B,C)080−14	33,000	11.5	13.5
1390726	38HDR036−61	CNPH*3617A**	58MV(B,C)080−20	33,000	11.5	13.5

See notes on page 26

COMBINATION RATINGS (CONT.)

ARI Ref. No.	Model Number	Indoor Model	Furnace Model	Capacity	EER	SEER
1390744	38HDR036−61	CNPH*3617A**	58MV(B,C)100−20	33,000	11.5	13.5
1390756	38HDR036−61	CNPH*3617A**	58MV(B,C)120−20	33,000	11.5	13.5
3015504	38HDR036−61	CNPH*3617A**	58PH*045−08	33,000	11.5	14.0
3015505	38HDR036−61	CNPH*3617A**	58PH*070−16	33,000	11.5	14.0
3015506	38HDR036−61	CNPH*3617A**	58PH*090−16	33,000	12.0	14.5
3015507	38HDR036−61	CNPH*3617A**	58PH*110−20	33,000	12.0	14.5
1117550	38HDR036−61	CNPH*3617A**+TDR		33,000	11.0	13.0
1117588	38HDR036−61	CNPH*4221A**	58CV(A,X)070−12	33,400	11.5	14.0
1117590	38HDR036−61	CNPH*4221A**	58CV(A,X)090−16	33,400	11.5	14.5
1117592	38HDR036−61	CNPH*4221A**	58CV(A,X)110−20	33,400	11.5	14.5
1117594	38HDR036−61	CNPH*4221A**	58CV(A,X)135−22	33,400	11.5	14.5
1117596	38HDR036−61	CNPH*4221A**	58CV(A,X)155−22	33,400	11.5	14.5
3116378	38HDR036−61	CNPH*4221A**	58MEB040−12	33,400	12.0	14.5
3116379	38HDR036−61	CNPH*4221A**	58MEB060−12	33,400	12.0	14.5
3116380	38HDR036−61	CNPH*4221A**	58MEB080−12	33,400	12.0	14.5
3116381	38HDR036−61	CNPH*4221A**	58MEB080−16	33,400	12.0	14.5
3116382	38HDR036−61	CNPH*4221A**	58MEB100−20	33,400	12.0	14.5
1390686	38HDR036−61	CNPH*4221A**	58MV(B,C)060−14	33,400	11.5	14.0
1390710	38HDR036−61	CNPH*4221A**	58MV(B,C)080−14	33,400	11.5	14.0
1390728	38HDR036−61	CNPH*4221A**	58MV(B,C)080−20	33,400	11.5	14.0
1390746	38HDR036−61	CNPH*4221A**	58MV(B,C)100−20	33,400	11.5	14.0
1390758	38HDR036−61	CNPH*4221A**	58MV(B,C)120−20	33,400	11.5	14.5
3015508	38HDR036−61	CNPH*4221A**	58PH*045−08	33,400	11.5	14.0
3015509	38HDR036−61	CNPH*4221A**	58PH*070−16	33,400	11.5	14.0
3015510	38HDR036−61	CNPH*4221A**	58PH*090−16	33,400	12.0	14.5
3015511	38HDR036−61	CNPH*4221A**	58PH*110−20	33,400	12.0	14.5
1117574	38HDR036−61	CNPH*4221A**+TDR		33,400	11.0	13.0
1117688	38HDR036−61	CNPV*3617A**	58CV(A,X)070−12	33,000	11.5	14.0
1117530	38HDR036−61	CNPV*3617A**	58CV(A,X)090−16	33,000	11.5	13.5
3116359	38HDR036−61	CNPV*3617A**	58MEB040−12	33,000	12.0	14.5
3116360	38HDR036−61	CNPV*3617A**	58MEB060−12	33,000	12.0	14.5
3116361	38HDR036−61	CNPV*3617A**	58MEB080−12	33,000	12.0	14.5
3116362	38HDR036−61	CNPV*3617A**	58MEB080−16	33,000	12.0	14.5
1390682	38HDR036−61	CNPV*3617A**	58MV(B,C)060−14	33,000	11.5	13.5
3015499	38HDR036−61	CNPV*3617A**	58PH*070−16	33,000	11.5	14.0
1117526	38HDR036−61	CNPV*3617A**+TDR		33,000	11.0	13.0
1117692	38HDR036−61	CNPV*3621A**	58CV(A,X)090−16	33,000	11.5	14.5
1117540	38HDR036−61	CNPV*3621A**	58CV(A,X)110−20	33,000	11.5	13.5
3116363	38HDR036−61	CNPV*3621A**	58MEB100−20	33,000	12.0	14.5
1390696	38HDR036−61	CNPV*3621A**	58MV(B,C)060−14	33,000	11.5	14.5
1390704	38HDR036−61	CNPV*3621A**	58MV(B,C)080−14	33,000	11.5	13.5
1390722	38HDR036−61	CNPV*3621A**	58MV(B,C)080−20	33,000	11.5	13.5
1390740	38HDR036−61	CNPV*3621A**	58MV(B,C)100−20	33,000	11.5	13.5
3015500	38HDR036−61	CNPV*3621A**	58PH*090−16	33,000	12.0	14.5
3015501	38HDR036−61	CNPV*3621A**	58PH*110−20	33,000	12.0	14.5
1117532	38HDR036−61	CNPV*3621A**+TDR		33,000	11.0	13.0
3116366	38HDR036−61	CNPV*4217A**	58CV(A,X)090−16	33,400	12.0	14.5
3116368	38HDR036−61	CNPV*4217A**	58MEB040−12	33,400	12.0	14.5
3116369	38HDR036−61	CNPV*4217A**	58MEB060−12	33,400	12.0	14.5
3116370	38HDR036−61	CNPV*4217A**	58MEB080−12	33,400	12.0	14.5
3116371	38HDR036−61	CNPV*4217A**	58MEB080−16	33,400	12.0	14.5
3116365	38HDR036−61	CNPV*4217A**	58MV(B,C)060−14	33,400	12.0	14.5
3116367	38HDR036−61	CNPV*4217A**	58PH*070−16	33,400	12.0	14.5
3116364	38HDR036−61	CNPV*4217A**+TDR		33,400	11.0	13.0
1117696	38HDR036−61	CNPV*4221A**	58CV(A,X)090−16	33,400	11.5	14.5
1117548	38HDR036−61	CNPV*4221A**	58CV(A,X)110−20	33,400	11.5	14.5
3116372	38HDR036−61	CNPV*4221A**	58MEB100−20	33,400	12.0	14.5
1390698	38HDR036−61	CNPV*4221A**	58MV(B,C)060−14	33,400	11.5	14.5
1390706	38HDR036−61	CNPV*4221A**	58MV(B,C)080−14	33,400	11.5	14.0
1390724	38HDR036−61	CNPV*4221A**	58MV(B,C)080−20	33,400	11.5	14.0
1390742	38HDR036−61	CNPV*4221A**	58MV(B,C)100−20	33,400	11.5	14.0
3015502	38HDR036−61	CNPV*4221A**	58PH*090−16	33,400	12.0	14.5
3015503	38HDR036−61	CNPV*4221A**	58PH*110−20	33,400	12.0	14.5
1117614	38HDR036−61	CSPH*3612A**	58CV(A,X)070−12	33,000	11.5	14.0
1117616	38HDR036−61	CSPH*3612A**	58CV(A,X)090−16	33,000	11.5	14.5
1117618	38HDR036−61	CSPH*3612A**	58CV(A,X)110−20	33,000	11.5	14.5
1117620	38HDR036−61	CSPH*3612A**	58CV(A,X)135−22	33,000	11.5	14.5
1117622	38HDR036−61	CSPH*3612A**	58CV(A,X)155−22	33,000	11.5	14.5
3116383	38HDR036−61	CSPH*3612A**	58MEB040−12	33,000	12.0	14.5
3116384	38HDR036−61	CSPH*3612A**	58MEB060−12	33,000	12.0	14.5
3116385	38HDR036−61	CSPH*3612A**	58MEB080−12	33,000	12.0	14.5
3116386	38HDR036−61	CSPH*3612A**	58MEB080−16	33,000	12.0	14.5
3116387	38HDR036−61	CSPH*3612A**	58MEB100−20	33,000	12.0	14.5
1390688	38HDR036−61	CSPH*3612A**	58MV(B,C)060−14	33,000	11.5	14.5
1390712	38HDR036−61	CSPH*3612A**	58MV(B,C)080−14	33,000	11.5	14.0
1390730	38HDR036−61	CSPH*3612A**	58MV(B,C)080−20	33,000	11.5	14.0
1390748	38HDR036−61	CSPH*3612A**	58MV(B,C)100−20	33,000	11.5	14.5
1390760	38HDR036−61	CSPH*3612A**	58MV(B,C)120−20	33,000	11.5	14.5
3015512	38HDR036−61	CSPH*3612A**	58PH*045−08	33,000	11.5	14.0

See notes on page 26

COMBINATION RATINGS (CONT.)

ARI Ref. No.	Model Number	Indoor Model	Furnace Model	Capacity	EER	SEER
3015513	38HDR036−61	CSPH*3612A**	58PH*070−16	33,000	11.5	14.0
3015514	38HDR036−61	CSPH*3612A**	58PH*090−16	33,000	12.0	14.5
3015515	38HDR036−61	CSPH*3612A**	58PH*110−20	33,000	12.0	14.5
1117600	38HDR036−61	CSPH*3612A**+TDR		33,000	11.0	13.0
1117638	38HDR036−61	CSPH*4212A**	58CV(A,X)070−12	33,400	11.5	14.0
1117640	38HDR036−61	CSPH*4212A**	58CV(A,X)090−16	33,400	11.5	14.5
1117642	38HDR036−61	CSPH*4212A**	58CV(A,X)110−20	33,400	11.5	14.5
1117644	38HDR036−61	CSPH*4212A**	58CV(A,X)135−22	33,400	11.5	14.5
1117646	38HDR036−61	CSPH*4212A**	58CV(A,X)155−22	33,400	11.5	14.5
3116388	38HDR036−61	CSPH*4212A**	58MEB040−12	33,400	12.0	14.5
3116389	38HDR036−61	CSPH*4212A**	58MEB060−12	33,400	12.0	14.5
3116390	38HDR036−61	CSPH*4212A**	58MEB080−12	33,400	12.0	14.5
3116391	38HDR036−61	CSPH*4212A**	58MEB080−16	33,400	12.0	14.5
3116392	38HDR036−61	CSPH*4212A**	58MEB100−20	33,400	12.0	14.5
1390690	38HDR036−61	CSPH*4212A**	58MV(B,C)060−14	33,400	11.5	14.0
1390714	38HDR036−61	CSPH*4212A**	58MV(B,C)080−14	33,400	11.5	14.0
1390732	38HDR036−61	CSPH*4212A**	58MV(B,C)080−20	33,400	11.5	14.0
1390750	38HDR036−61	CSPH*4212A**	58MV(B,C)100−20	33,400	11.5	14.0
1390762	38HDR036−61	CSPH*4212A**	58MV(B,C)120−20	33,400	11.5	14.0
3015516	38HDR036−61	CSPH*4212A**	58PH*045−08	33,400	11.5	14.0
3015517	38HDR036−61	CSPH*4212A**	58PH*070−16	33,400	11.5	14.0
3015518	38HDR036−61	CSPH*4212A**	58PH*090−16	33,400	12.0	14.5
3015519	38HDR036−61	CSPH*4212A**	58PH*110−20	33,400	12.0	14.5
1117624	38HDR036−61	CSPH*4212A**+TDR		33,400	11.0	13.0
1117658	38HDR036−61	FE4AN(B,F)003+UI		33,000	11.5	14.0
1117660	38HDR036−61	FE4AN(B,F)005+UI		33,400	12.5	15.0
1117662	38HDR036−61	FE4ANB006+UI		33,400	12.5	15.0
1117656	38HDR036−61	FE4ANF002+UI		33,000	11.5	13.5
1117664	38HDR036−61	FF1ENP036		33,000	11.0	13.0
1117668	38HDR036−61	FV4BNB006		33,400	12.5	15.0
1117666	38HDR036−61	FV4BNF002		33,000	11.5	13.5
3404635	38HDR036−61	FV4CNB006		33,400	12.5	15.0
3404634	38HDR036−61	FV4CNF002		33,000	11.5	13.5
1117652	38HDR036−61	FX4CN(B,F)036		33,000	11.5	14.0
1117654	38HDR036−61	FX4CN(B,F)042		33,400	11.5	14.0
1117648	38HDR036−61	FY4ANF036		33,000	11.0	13.0
1117650	38HDR036−61	FY4ANF042		33,400	11.0	13.0
3465144	38HDR048−32	†CNPV*4821A**+TDR		47,000	11.0	13.0
3465807	38HDR048−32	40QAC048−3		45,500	11.5	13.0
3465146	38HDR048−32	CAP**4817A**	58CV(A,X)090−16	46,500	11.5	13.5
3465148	38HDR048−32	CAP**4817A**	58MEB080−16	46,500	11.5	14.0
3465147	38HDR048−32	CAP**4817A**	58PH*070−16	46,500	11.5	13.5
3465145	38HDR048−32	CAP**4817A**+TDR		46,500	11.0	13.0
3465152	38HDR048−32	CAP**4821A**	58CV(A,X)110−20	46,500	11.5	13.5
3465155	38HDR048−32	CAP**4821A**	58MEB100−20	46,500	11.5	14.0
3465150	38HDR048−32	CAP**4821A**	58MV(B,C)080−20	46,000	11.5	13.5
3465151	38HDR048−32	CAP**4821A**	58MV(B,C)100−20	46,500	11.5	13.5
3465153	38HDR048−32	CAP**4821A**	58PH*090−16	46,500	11.5	14.0
3465154	38HDR048−32	CAP**4821A**	58PH*110−20	46,500	11.5	14.0
3465149	38HDR048−32	CAP**4821A**+TDR		47,000	11.0	13.0
3465158	38HDR048−32	CAP**4824A**	58CV(A,X)135−22	46,500	11.5	13.5
3465159	38HDR048−32	CAP**4824A**	58CV(A,X)155−22	46,500	11.5	13.5
3465161	38HDR048−32	CAP**4824A**	58MEB120−20	46,500	11.5	14.0
3465157	38HDR048−32	CAP**4824A**	58MV(B,C)120−20	46,500	11.5	13.5
3465160	38HDR048−32	CAP**4824A**	58PH*135−20	46,500	11.5	14.0
3465156	38HDR048−32	CAP**4824A**+TDR		47,000	11.0	13.0
3465165	38HDR048−32	CAP**6021A**	58CV(A,X)110−20	47,000	11.5	13.5
3465168	38HDR048−32	CAP**6021A**	58MEB100−20	47,000	12.0	14.5
3465163	38HDR048−32	CAP**6021A**	58MV(B,C)080−20	47,000	11.5	13.5
3465164	38HDR048−32	CAP**6021A**	58MV(B,C)100−20	47,000	11.5	13.5
3465166	38HDR048−32	CAP**6021A**	58PH*090−16	47,000	12.0	14.5
3465167	38HDR048−32	CAP**6021A**	58PH*110−20	47,000	12.0	14.5
3465162	38HDR048−32	CAP**6021A**+TDR		47,500	11.0	13.0
3465171	38HDR048−32	CAP**6024A**	58CV(A,X)135−22	47,000	11.5	13.5
3465172	38HDR048−32	CAP**6024A**	58CV(A,X)155−22	47,000	11.5	14.0
3465174	38HDR048−32	CAP**6024A**	58MEB120−20	47,000	12.0	14.5
3465170	38HDR048−32	CAP**6024A**	58MV(B,C)120−20	47,000	11.5	13.5
3465173	38HDR048−32	CAP**6024A**	58PH*135−20	47,000	12.0	14.5
3465169	38HDR048−32	CAP**6024A**+TDR		47,500	11.0	13.0
3465221	38HDR048−32	CNPF*4818A**+TDR		46,000	11.0	13.0
3465197	38HDR048−32	CNPH*4821A**	58CV(A,X)090−16	46,500	11.5	13.5
3465198	38HDR048−32	CNPH*4821A**	58CV(A,X)110−20	46,500	11.5	13.5
3465199	38HDR048−32	CNPH*4821A**	58CV(A,X)135−22	46,500	11.5	13.5
3465200	38HDR048−32	CNPH*4821A**	58CV(A,X)155−22	46,500	11.5	13.5
3465204	38HDR048−32	CNPH*4821A**	58MEB080−16	46,500	11.5	14.0
3465205	38HDR048−32	CNPH*4821A**	58MEB100−20	46,500	11.5	14.0
3465206	38HDR048−32	CNPH*4821A**	58MEB120−20	46,500	11.5	14.0
3465194	38HDR048−32	CNPH*4821A**	58MV(B,C)080−20	46,500	11.5	13.5

See notes on page 26

COMBINATION RATINGS (CONT.)

ARI Ref. No.	Model Number	Indoor Model	Furnace Model	Capacity	EER	SEER
3465195	38HDR048−32	CNPH*4821A**	58MV(B,C)100−20	46,500	11.5	13.5
3465196	38HDR048−32	CNPH*4821A**	58MV(B,C)120−20	46,500	11.5	13.5
3465201	38HDR048−32	CNPH*4821A**	58PH*090−16	46,500	11.5	13.5
3465202	38HDR048−32	CNPH*4821A**	58PH*110−20	46,500	11.5	13.5
3465203	38HDR048−32	CNPH*4821A**	58PH*135−20	46,500	11.5	13.5
3465193	38HDR048−32	CNPH*4821A**+TDR		47,000	11.0	13.0
3465211	38HDR048−32	CNPH*6024A**	58CV(A,X)090−16	47,000	11.5	13.5
3465212	38HDR048−32	CNPH*6024A**	58CV(A,X)110−20	47,000	11.5	13.5
3465213	38HDR048−32	CNPH*6024A**	58CV(A,X)135−22	47,000	11.5	13.5
3465214	38HDR048−32	CNPH*6024A**	58CV(A,X)155−22	47,000	11.5	14.0
3465218	38HDR048−32	CNPH*6024A**	58MEB080−16	47,000	11.5	14.0
3465219	38HDR048−32	CNPH*6024A**	58MEB100−20	47,000	12.0	14.5
3465220	38HDR048−32	CNPH*6024A**	58MEB120−20	47,000	12.0	14.5
3465208	38HDR048−32	CNPH*6024A**	58MV(B,C)080−20	47,000	11.5	13.5
3465209	38HDR048−32	CNPH*6024A**	58MV(B,C)100−20	47,000	11.5	13.5
3465210	38HDR048−32	CNPH*6024A**	58MV(B,C)120−20	47,000	11.5	13.5
3465215	38HDR048−32	CNPH*6024A**	58PH*090−16	47,000	12.0	14.5
3465216	38HDR048−32	CNPH*6024A**	58PH*110−20	47,000	12.0	14.5
3465217	38HDR048−32	CNPH*6024A**	58PH*135−20	47,000	12.0	14.5
3465207	38HDR048−32	CNPH*6024A**+TDR		47,500	11.0	13.0
3465177	38HDR048−32	CNPV*4821A**	58CV(A,X)110−20	46,500	11.5	13.5
3465180	38HDR048−32	CNPV*4821A**	58MEB100−20	46,500	11.5	13.5
3465175	38HDR048−32	CNPV*4821A**	58MV(B,C)080−20	46,500	11.5	13.5
3465176	38HDR048−32	CNPV*4821A**	58MV(B,C)100−20	46,500	11.5	13.5
3465178	38HDR048−32	CNPV*4821A**	58PH*090−16	46,500	11.5	14.0
3465179	38HDR048−32	CNPV*4821A**	58PH*110−20	46,500	11.5	14.0
3465183	38HDR048−32	CNPV*4824A**	58CV(A,X)135−22	46,500	11.5	13.5
3465184	38HDR048−32	CNPV*4824A**	58CV(A,X)155−22	46,500	11.5	13.5
3465186	38HDR048−32	CNPV*4824A**	58MEB120−20	46,500	11.5	14.0
3465182	38HDR048−32	CNPV*4824A**	58MV(B,C)120−20	46,500	11.5	13.5
3465185	38HDR048−32	CNPV*4824A**	58PH*135−20	46,500	11.5	14.0
3465181	38HDR048−32	CNPV*4824A**+TDR		47,000	11.0	13.0
3465189	38HDR048−32	CNPV*6024A**	58CV(A,X)135−22	47,000	11.5	13.5
3465190	38HDR048−32	CNPV*6024A**	58CV(A,X)155−22	47,000	11.5	14.0
3465192	38HDR048−32	CNPV*6024A**	58MEB120−20	47,000	12.0	14.5
3465188	38HDR048−32	CNPV*6024A**	58MV(B,C)120−20	47,000	11.5	13.5
3465191	38HDR048−32	CNPV*6024A**	58PH*135−20	47,000	12.0	14.5
3465187	38HDR048−32	CNPV*6024A**+TDR		47,500	11.0	13.0
3465226	38HDR048−32	CSPH*4812A**	58CV(A,X)090−16	46,500	11.5	13.5
3465227	38HDR048−32	CSPH*4812A**	58CV(A,X)110−20	46,500	11.5	13.5
3465228	38HDR048−32	CSPH*4812A**	58CV(A,X)135−22	46,500	11.5	13.5
3465229	38HDR048−32	CSPH*4812A**	58CV(A,X)155−22	46,500	11.5	13.5
3465233	38HDR048−32	CSPH*4812A**	58MEB080−16	46,500	11.5	14.0
3465234	38HDR048−32	CSPH*4812A**	58MEB100−20	46,500	11.5	14.0
3465235	38HDR048−32	CSPH*4812A**	58MEB120−20	46,500	11.5	14.0
3465223	38HDR048−32	CSPH*4812A**	58MV(B,C)080−20	46,500	11.5	13.5
3465224	38HDR048−32	CSPH*4812A**	58MV(B,C)100−20	46,500	11.5	13.5
3465225	38HDR048−32	CSPH*4812A**	58MV(B,C)120−20	46,500	11.5	13.5
3465230	38HDR048−32	CSPH*4812A**	58PH*090−16	46,500	11.5	14.0
3465231	38HDR048−32	CSPH*4812A**	58PH*110−20	46,500	11.5	14.0
3465232	38HDR048−32	CSPH*4812A**	58PH*135−20	46,500	11.5	14.0
3465222	38HDR048−32	CSPH*4812A**+TDR		47,000	11.0	13.0
3465240	38HDR048−32	CSPH*6012A**	58CV(A,X)090−16	47,000	11.5	13.5
3465241	38HDR048−32	CSPH*6012A**	58CV(A,X)110−20	47,000	11.5	14.0
3465242	38HDR048−32	CSPH*6012A**	58CV(A,X)135−22	47,000	11.5	14.0
3465243	38HDR048−32	CSPH*6012A**	58CV(A,X)155−22	47,000	11.5	14.0
3465247	38HDR048−32	CSPH*6012A**	58MEB080−16	47,000	12.0	14.5
3465248	38HDR048−32	CSPH*6012A**	58MEB100−20	47,000	12.0	14.5
3465249	38HDR048−32	CSPH*6012A**	58MEB120−20	47,000	12.0	14.5
3465237	38HDR048−32	CSPH*6012A**	58MV(B,C)080−20	47,000	11.5	13.5
3465238	38HDR048−32	CSPH*6012A**	58MV(B,C)100−20	47,000	11.5	13.5
3465239	38HDR048−32	CSPH*6012A**	58MV(B,C)120−20	47,000	11.5	13.5
3465244	38HDR048−32	CSPH*6012A**	58PH*090−16	47,000	12.0	14.5
3465245	38HDR048−32	CSPH*6012A**	58PH*110−20	47,000	12.0	14.5
3465246	38HDR048−32	CSPH*6012A**	58PH*135−20	47,000	12.0	14.5
3465236	38HDR048−32	CSPH*6012A**+TDR		47,500	11.0	13.0
3465254	38HDR048−32	FE4AN(B,F)005+UI		47,000	11.5	13.5
3465255	38HDR048−32	FE4ANB006+UI		47,500	11.5	14.0
3465256	38HDR048−32	FV4BN(B,F)005		47,000	11.5	14.0
3465257	38HDR048−32	FV4BNB006		47,500	11.5	14.0
3465252	38HDR048−32	FX4CN(B,F)048		47,000	11.5	13.5
3465253	38HDR048−32	FX4CN(B,F)060		47,500	11.5	14.0
3465251	38HDR048−32	FY4ANB060		47,500	11.0	13.0
3465250	38HDR048−32	FY4ANF048		47,000	11.0	13.0
3465258	38HDR048−52	†CNPV*4821A**+TDR		47,000	11.0	13.0
3465808	38HDR048−52	40QAC048−3		45,500	11.5	13.0
3465260	38HDR048−52	CAP**4817A**	58CV(A,X)090−16	46,500	11.5	13.5
3465262	38HDR048−52	CAP**4817A**	58MEB080−16	46,500	11.5	14.0

See notes on page 26

COMBINATION RATINGS (CONT.)

ARI Ref. No.	Model Number	Indoor Model	Furnace Model	Capacity	EER	SEER
3465261	38HDR048−52	CAP**4817A**	58PH*070−16	46,500	11.5	13.5
3465259	38HDR048−52	CAP**4817A**+TDR		46,500	11.0	13.0
3465266	38HDR048−52	CAP**4821A**	58CV(A,X)110−20	46,500	11.5	13.5
3465269	38HDR048−52	CAP**4821A**	58MEB100−20	46,500	11.5	14.0
3465264	38HDR048−52	CAP**4821A**	58MV(B,C)080−20	46,000	11.5	13.5
3465265	38HDR048−52	CAP**4821A**	58MV(B,C)100−20	46,500	11.5	13.5
3465267	38HDR048−52	CAP**4821A**	58PH*090−16	46,500	11.5	14.0
3465268	38HDR048−52	CAP**4821A**	58PH*110−20	46,500	11.5	14.0
3465263	38HDR048−52	CAP**4821A**+TDR		47,000	11.0	13.0
3465272	38HDR048−52	CAP**4824A**	58CV(A,X)135−22	46,500	11.5	13.5
3465273	38HDR048−52	CAP**4824A**	58CV(A,X)155−22	46,500	11.5	13.5
3465275	38HDR048−52	CAP**4824A**	58MEB120−20	46,500	11.5	14.0
3465271	38HDR048−52	CAP**4824A**	58MV(B,C)120−20	46,500	11.5	13.5
3465274	38HDR048−52	CAP**4824A**	58PH*135−20	46,500	11.5	14.0
3465270	38HDR048−52	CAP**4824A**+TDR		47,000	11.0	13.0
3465279	38HDR048−52	CAP**6021A**	58CV(A,X)110−20	47,000	11.5	13.5
3465282	38HDR048−52	CAP**6021A**	58MEB100−20	47,000	12.0	14.5
3465277	38HDR048−52	CAP**6021A**	58MV(B,C)080−20	47,000	11.5	13.5
3465278	38HDR048−52	CAP**6021A**	58MV(B,C)100−20	47,000	11.5	13.5
3465280	38HDR048−52	CAP**6021A**	58PH*090−16	47,000	12.0	14.5
3465281	38HDR048−52	CAP**6021A**	58PH*110−20	47,000	12.0	14.5
3465276	38HDR048−52	CAP**6021A**+TDR		47,500	11.0	13.0
3465285	38HDR048−52	CAP**6024A**	58CV(A,X)135−22	47,000	11.5	13.5
3465286	38HDR048−52	CAP**6024A**	58CV(A,X)155−22	47,000	11.5	14.0
3465288	38HDR048−52	CAP**6024A**	58MEB120−20	47,000	12.0	14.5
3465284	38HDR048−52	CAP**6024A**	58MV(B,C)120−20	47,000	11.5	13.5
3465287	38HDR048−52	CAP**6024A**	58PH*135−20	47,000	12.0	14.5
3465283	38HDR048−52	CAP**6024A**+TDR		47,500	11.0	13.0
3465335	38HDR048−52	CNPF*4818A**+TDR		46,000	11.0	13.0
3465311	38HDR048−52	CNPH*4821A**	58CV(A,X)090−16	46,500	11.5	13.5
3465312	38HDR048−52	CNPH*4821A**	58CV(A,X)110−20	46,500	11.5	13.5
3465313	38HDR048−52	CNPH*4821A**	58CV(A,X)135−22	46,500	11.5	13.5
3465314	38HDR048−52	CNPH*4821A**	58CV(A,X)155−22	46,500	11.5	13.5
3465318	38HDR048−52	CNPH*4821A**	58MEB080−16	46,500	11.5	14.0
3465319	38HDR048−52	CNPH*4821A**	58MEB100−20	46,500	11.5	14.0
3465320	38HDR048−52	CNPH*4821A**	58MEB120−20	46,500	11.5	14.0
3465308	38HDR048−52	CNPH*4821A**	58MV(B,C)080−20	46,500	11.5	13.5
3465309	38HDR048−52	CNPH*4821A**	58MV(B,C)100−20	46,500	11.5	13.5
3465310	38HDR048−52	CNPH*4821A**	58MV(B,C)120−20	46,500	11.5	13.5
3465315	38HDR048−52	CNPH*4821A**	58PH*090−16	46,500	11.5	13.5
3465316	38HDR048−52	CNPH*4821A**	58PH*110−20	46,500	11.5	13.5
3465317	38HDR048−52	CNPH*4821A**	58PH*135−20	46,500	11.5	13.5
3465307	38HDR048−52	CNPH*4821A**+TDR		47,000	11.0	13.0
3465325	38HDR048−52	CNPH*6024A**	58CV(A,X)090−16	47,000	11.5	13.5
3465326	38HDR048−52	CNPH*6024A**	58CV(A,X)110−20	47,000	11.5	13.5
3465327	38HDR048−52	CNPH*6024A**	58CV(A,X)135−22	47,000	11.5	13.5
3465328	38HDR048−52	CNPH*6024A**	58CV(A,X)155−22	47,000	11.5	14.0
3465332	38HDR048−52	CNPH*6024A**	58MEB080−16	47,000	11.5	14.0
3465333	38HDR048−52	CNPH*6024A**	58MEB100−20	47,000	12.0	14.5
3465334	38HDR048−52	CNPH*6024A**	58MEB120−20	47,000	12.0	14.5
3465322	38HDR048−52	CNPH*6024A**	58MV(B,C)080−20	47,000	11.5	13.5
3465323	38HDR048−52	CNPH*6024A**	58MV(B,C)100−20	47,000	11.5	13.5
3465324	38HDR048−52	CNPH*6024A**	58MV(B,C)120−20	47,000	11.5	13.5
3465329	38HDR048−52	CNPH*6024A**	58PH*090−16	47,000	12.0	14.5
3465330	38HDR048−52	CNPH*6024A**	58PH*110−20	47,000	12.0	14.5
3465331	38HDR048−52	CNPH*6024A**	58PH*135−20	47,000	12.0	14.5
3465321	38HDR048−52	CNPH*6024A**+TDR		47,500	11.0	13.0
3465291	38HDR048−52	CNPV*4821A**	58CV(A,X)110−20	46,500	11.5	13.5
3465294	38HDR048−52	CNPV*4821A**	58MEB100−20	46,500	11.5	13.5
3465289	38HDR048−52	CNPV*4821A**	58MV(B,C)080−20	46,500	11.5	13.5
3465290	38HDR048−52	CNPV*4821A**	58MV(B,C)100−20	46,500	11.5	13.5
3465292	38HDR048−52	CNPV*4821A**	58PH*090−16	46,500	11.5	14.0
3465293	38HDR048−52	CNPV*4821A**	58PH*110−20	46,500	11.5	14.0
3465297	38HDR048−52	CNPV*4824A**	58CV(A,X)135−22	46,500	11.5	13.5
3465298	38HDR048−52	CNPV*4824A**	58CV(A,X)155−22	46,500	11.5	13.5
3465300	38HDR048−52	CNPV*4824A**	58MEB120−20	46,500	11.5	14.0
3465296	38HDR048−52	CNPV*4824A**	58MV(B,C)120−20	46,500	11.5	13.5
3465299	38HDR048−52	CNPV*4824A**	58PH*135−20	46,500	11.5	14.0
3465295	38HDR048−52	CNPV*4824A**+TDR		47,000	11.0	13.0
3465303	38HDR048−52	CNPV*6024A**	58CV(A,X)135−22	47,000	11.5	13.5
3465304	38HDR048−52	CNPV*6024A**	58CV(A,X)155−22	47,000	11.5	14.0
3465306	38HDR048−52	CNPV*6024A**	58MEB120−20	47,000	12.0	14.5
3465302	38HDR048−52	CNPV*6024A**	58MV(B,C)120−20	47,000	11.5	13.5
3465305	38HDR048−52	CNPV*6024A**	58PH*135−20	47,000	12.0	14.5
3465301	38HDR048−52	CNPV*6024A**+TDR		47,500	11.0	13.0
3465340	38HDR048−52	CSPH*4812A**	58CV(A,X)090−16	46,500	11.5	13.5
3465341	38HDR048−52	CSPH*4812A**	58CV(A,X)110−20	46,500	11.5	13.5
3465342	38HDR048−52	CSPH*4812A**	58CV(A,X)135−22	46,500	11.5	13.5
3465343	38HDR048−52	CSPH*4812A**	58CV(A,X)155−22	46,500	11.5	13.5

See notes on page 26

COMBINATION RATINGS (CONT.)

ARI Ref. No.	Model Number	Indoor Model	Furnace Model	Capacity	EER	SEER
3465347	38HDR048−52	CSPH*4812A**	58MEB080−16	46,500	11.5	14.0
3465348	38HDR048−52	CSPH*4812A**	58MEB100−20	46,500	11.5	14.0
3465349	38HDR048−52	CSPH*4812A**	58MEB120−20	46,500	11.5	14.0
3465337	38HDR048−52	CSPH*4812A**	58MV(B,C)080−20	46,500	11.5	13.5
3465338	38HDR048−52	CSPH*4812A**	58MV(B,C)100−20	46,500	11.5	13.5
3465339	38HDR048−52	CSPH*4812A**	58MV(B,C)120−20	46,500	11.5	13.5
3465344	38HDR048−52	CSPH*4812A**	58PH*090−16	46,500	11.5	14.0
3465345	38HDR048−52	CSPH*4812A**	58PH*110−20	46,500	11.5	14.0
3465346	38HDR048−52	CSPH*4812A**	58PH*135−20	46,500	11.5	14.0
3465336	38HDR048−52	CSPH*4812A**+TDR		47,000	11.0	13.0
3465354	38HDR048−52	CSPH*6012A**	58CV(A,X)090−16	47,000	11.5	13.5
3465355	38HDR048−52	CSPH*6012A**	58CV(A,X)110−20	47,000	11.5	14.0
3465356	38HDR048−52	CSPH*6012A**	58CV(A,X)135−22	47,000	11.5	14.0
3465357	38HDR048−52	CSPH*6012A**	58CV(A,X)155−22	47,000	11.5	14.0
3465361	38HDR048−52	CSPH*6012A**	58MEB080−16	47,000	12.0	14.5
3465362	38HDR048−52	CSPH*6012A**	58MEB100−20	47,000	12.0	14.5
3465363	38HDR048−52	CSPH*6012A**	58MEB120−20	47,000	12.0	14.5
3465351	38HDR048−52	CSPH*6012A**	58MV(B,C)080−20	47,000	11.5	13.5
3465352	38HDR048−52	CSPH*6012A**	58MV(B,C)100−20	47,000	11.5	13.5
3465353	38HDR048−52	CSPH*6012A**	58MV(B,C)120−20	47,000	11.5	13.5
3465358	38HDR048−52	CSPH*6012A**	58PH*090−16	47,000	12.0	14.5
3465359	38HDR048−52	CSPH*6012A**	58PH*110−20	47,000	12.0	14.5
3465360	38HDR048−52	CSPH*6012A**	58PH*135−20	47,000	12.0	14.5
3465350	38HDR048−52	CSPH*6012A**+TDR		47,500	11.0	13.0
3465368	38HDR048−52	FE4AN(B,F)005+UI		47,000	11.5	13.5
3465369	38HDR048−52	FE4ANB006+UI		47,500	11.5	14.0
3465370	38HDR048−52	FV4BN(B,F)005		47,000	11.5	14.0
3465371	38HDR048−52	FV4BNB006		47,500	11.5	14.0
3465366	38HDR048−52	FX4CN(B,F)048		47,000	11.5	13.5
3465367	38HDR048−52	FX4CN(B,F)060		47,500	11.5	14.0
3465365	38HDR048−52	FY4ANB060		47,500	11.0	13.0
3465364	38HDR048−52	FY4ANF048		47,000	11.0	13.0
3465372	38HDR048−62	†CNPV*4821A**+TDR		47,000	11.0	13.0
3465809	38HDR048−62	40QAC048−3		45,500	11.5	13.0
3465374	38HDR048−62	CAP**4817A**	58CV(A,X)090−16	46,500	11.5	13.5
3465376	38HDR048−62	CAP**4817A**	58MEB080−16	46,500	11.5	14.0
3465375	38HDR048−62	CAP**4817A**	58PH*070−16	46,500	11.5	13.5
3465373	38HDR048−62	CAP**4817A**+TDR		46,500	11.0	13.0
3465380	38HDR048−62	CAP**4821A**	58CV(A,X)110−20	46,500	11.5	13.5
3465383	38HDR048−62	CAP**4821A**	58MEB100−20	46,500	11.5	14.0
3465378	38HDR048−62	CAP**4821A**	58MV(B,C)080−20	46,000	11.5	13.5
3465379	38HDR048−62	CAP**4821A**	58MV(B,C)100−20	46,500	11.5	13.5
3465381	38HDR048−62	CAP**4821A**	58PH*090−16	46,500	11.5	14.0
3465382	38HDR048−62	CAP**4821A**	58PH*110−20	46,500	11.5	14.0
3465377	38HDR048−62	CAP**4821A**+TDR		47,000	11.0	13.0
3465386	38HDR048−62	CAP**4824A**	58CV(A,X)135−22	46,500	11.5	13.5
3465387	38HDR048−62	CAP**4824A**	58CV(A,X)155−22	46,500	11.5	13.5
3465389	38HDR048−62	CAP**4824A**	58MEB120−20	46,500	11.5	14.0
3465385	38HDR048−62	CAP**4824A**	58MV(B,C)120−20	46,500	11.5	13.5
3465388	38HDR048−62	CAP**4824A**	58PH*135−20	46,500	11.5	14.0
3465384	38HDR048−62	CAP**4824A**+TDR		47,000	11.0	13.0
3465393	38HDR048−62	CAP**6021A**	58CV(A,X)110−20	47,000	11.5	13.5
3465396	38HDR048−62	CAP**6021A**	58MEB100−20	47,000	12.0	14.5
3465391	38HDR048−62	CAP**6021A**	58MV(B,C)080−20	47,000	11.5	13.5
3465392	38HDR048−62	CAP**6021A**	58MV(B,C)100−20	47,000	11.5	13.5
3465394	38HDR048−62	CAP**6021A**	58PH*090−16	47,000	12.0	14.5
3465395	38HDR048−62	CAP**6021A**	58PH*110−20	47,000	12.0	14.5
3465390	38HDR048−62	CAP**6021A**+TDR		47,500	11.0	13.0
3465399	38HDR048−62	CAP**6024A**	58CV(A,X)135−22	47,000	11.5	13.5
3465400	38HDR048−62	CAP**6024A**	58CV(A,X)155−22	47,000	11.5	14.0
3465402	38HDR048−62	CAP**6024A**	58MEB120−20	47,000	12.0	14.5
3465398	38HDR048−62	CAP**6024A**	58MV(B,C)120−20	47,000	11.5	13.5
3465401	38HDR048−62	CAP**6024A**	58PH*135−20	47,000	12.0	14.5
3465397	38HDR048−62	CAP**6024A**+TDR		47,500	11.0	13.0
3465449	38HDR048−62	CNPF*4818A**+TDR		46,000	11.0	13.0
3465425	38HDR048−62	CNPH*4821A**	58CV(A,X)090−16	46,500	11.5	13.5
3465426	38HDR048−62	CNPH*4821A**	58CV(A,X)110−20	46,500	11.5	13.5
3465427	38HDR048−62	CNPH*4821A**	58CV(A,X)135−22	46,500	11.5	13.5
3465428	38HDR048−62	CNPH*4821A**	58CV(A,X)155−22	46,500	11.5	13.5
3465432	38HDR048−62	CNPH*4821A**	58MEB080−16	46,500	11.5	14.0
3465433	38HDR048−62	CNPH*4821A**	58MEB100−20	46,500	11.5	14.0
3465434	38HDR048−62	CNPH*4821A**	58MEB120−20	46,500	11.5	14.0
3465422	38HDR048−62	CNPH*4821A**	58MV(B,C)080−20	46,500	11.5	13.5
3465423	38HDR048−62	CNPH*4821A**	58MV(B,C)100−20	46,500	11.5	13.5
3465424	38HDR048−62	CNPH*4821A**	58MV(B,C)120−20	46,500	11.5	13.5
3465429	38HDR048−62	CNPH*4821A**	58PH*090−16	46,500	11.5	13.5
3465430	38HDR048−62	CNPH*4821A**	58PH*110−20	46,500	11.5	13.5
3465431	38HDR048−62	CNPH*4821A**	58PH*135−20	46,500	11.5	13.5

See notes on page 26

COMBINATION RATINGS (CONT.)

ARI Ref. No.	Model Number	Indoor Model	Furnace Model	Capacity	EER	SEER
3465421	38HDR048−62	CNPH*4821A**+TDR		47,000	11.0	13.0
3465439	38HDR048−62	CNPH*6024A**	58CV(A,X)090−16	47,000	11.5	13.5
3465440	38HDR048−62	CNPH*6024A**	58CV(A,X)110−20	47,000	11.5	13.5
3465441	38HDR048−62	CNPH*6024A**	58CV(A,X)135−22	47,000	11.5	13.5
3465442	38HDR048−62	CNPH*6024A**	58CV(A,X)155−22	47,000	11.5	14.0
3465446	38HDR048−62	CNPH*6024A**	58MEB080−16	47,000	11.5	14.0
3465447	38HDR048−62	CNPH*6024A**	58MEB100−20	47,000	12.0	14.5
3465448	38HDR048−62	CNPH*6024A**	58MEB120−20	47,000	12.0	14.5
3465436	38HDR048−62	CNPH*6024A**	58MV(B,C)080−20	47,000	11.5	13.5
3465437	38HDR048−62	CNPH*6024A**	58MV(B,C)100−20	47,000	11.5	13.5
3465438	38HDR048−62	CNPH*6024A**	58MV(B,C)120−20	47,000	11.5	13.5
3465443	38HDR048−62	CNPH*6024A**	58PH*090−16	47,000	12.0	14.5
3465444	38HDR048−62	CNPH*6024A**	58PH*110−20	47,000	12.0	14.5
3465445	38HDR048−62	CNPH*6024A**	58PH*135−20	47,000	12.0	14.5
3465435	38HDR048−62	CNPH*6024A**+TDR		47,500	11.0	13.0
3465405	38HDR048−62	CNPV*4821A**	58CV(A,X)110−20	46,500	11.5	13.5
3465408	38HDR048−62	CNPV*4821A**	58MEB100−20	46,500	11.5	13.5
3465403	38HDR048−62	CNPV*4821A**	58MV(B,C)080−20	46,500	11.5	13.5
3465404	38HDR048−62	CNPV*4821A**	58MV(B,C)100−20	46,500	11.5	13.5
3465406	38HDR048−62	CNPV*4821A**	58PH*090−16	46,500	11.5	14.0
3465407	38HDR048−62	CNPV*4821A**	58PH*110−20	46,500	11.5	14.0
3465411	38HDR048−62	CNPV*4824A**	58CV(A,X)135−22	46,500	11.5	13.5
3465412	38HDR048−62	CNPV*4824A**	58CV(A,X)155−22	46,500	11.5	13.5
3465414	38HDR048−62	CNPV*4824A**	58MEB120−20	46,500	11.5	14.0
3465410	38HDR048−62	CNPV*4824A**	58MV(B,C)120−20	46,500	11.5	13.5
3465413	38HDR048−62	CNPV*4824A**	58PH*135−20	46,500	11.5	14.0
3465409	38HDR048−62	CNPV*4824A**+TDR		47,000	11.0	13.0
3465417	38HDR048−62	CNPV*6024A**	58CV(A,X)135−22	47,000	11.5	13.5
3465418	38HDR048−62	CNPV*6024A**	58CV(A,X)155−22	47,000	11.5	14.0
3465420	38HDR048−62	CNPV*6024A**	58MEB120−20	47,000	12.0	14.5
3465416	38HDR048−62	CNPV*6024A**	58MV(B,C)120−20	47,000	11.5	13.5
3465419	38HDR048−62	CNPV*6024A**	58PH*135−20	47,000	12.0	14.5
3465415	38HDR048−62	CNPV*6024A**+TDR		47,500	11.0	13.0
3465454	38HDR048−62	CSPH*4812A**	58CV(A,X)090−16	46,500	11.5	13.5
3465455	38HDR048−62	CSPH*4812A**	58CV(A,X)110−20	46,500	11.5	13.5
3465456	38HDR048−62	CSPH*4812A**	58CV(A,X)135−22	46,500	11.5	13.5
3465457	38HDR048−62	CSPH*4812A**	58CV(A,X)155−22	46,500	11.5	13.5
3465461	38HDR048−62	CSPH*4812A**	58MEB080−16	46,500	11.5	14.0
3465462	38HDR048−62	CSPH*4812A**	58MEB100−20	46,500	11.5	14.0
3465463	38HDR048−62	CSPH*4812A**	58MEB120−20	46,500	11.5	14.0
3465451	38HDR048−62	CSPH*4812A**	58MV(B,C)080−20	46,500	11.5	13.5
3465452	38HDR048−62	CSPH*4812A**	58MV(B,C)100−20	46,500	11.5	13.5
3465453	38HDR048−62	CSPH*4812A**	58MV(B,C)120−20	46,500	11.5	13.5
3465458	38HDR048−62	CSPH*4812A**	58PH*090−16	46,500	11.5	14.0
3465459	38HDR048−62	CSPH*4812A**	58PH*110−20	46,500	11.5	14.0
3465460	38HDR048−62	CSPH*4812A**	58PH*135−20	46,500	11.5	14.0
3465450	38HDR048−62	CSPH*4812A**+TDR		47,000	11.0	13.0
3465468	38HDR048−62	CSPH*6012A**	58CV(A,X)090−16	47,000	11.5	13.5
3465469	38HDR048−62	CSPH*6012A**	58CV(A,X)110−20	47,000	11.5	14.0
3465470	38HDR048−62	CSPH*6012A**	58CV(A,X)135−22	47,000	11.5	14.0
3465471	38HDR048−62	CSPH*6012A**	58CV(A,X)155−22	47,000	11.5	14.0
3465475	38HDR048−62	CSPH*6012A**	58MEB080−16	47,000	12.0	14.5
3465476	38HDR048−62	CSPH*6012A**	58MEB100−20	47,000	12.0	14.5
3465477	38HDR048−62	CSPH*6012A**	58MEB120−20	47,000	12.0	14.5
3465465	38HDR048−62	CSPH*6012A**	58MV(B,C)080−20	47,000	11.5	13.5
3465466	38HDR048−62	CSPH*6012A**	58MV(B,C)100−20	47,000	11.5	13.5
3465467	38HDR048−62	CSPH*6012A**	58MV(B,C)120−20	47,000	11.5	13.5
3465472	38HDR048−62	CSPH*6012A**	58PH*090−16	47,000	12.0	14.5
3465473	38HDR048−62	CSPH*6012A**	58PH*110−20	47,000	12.0	14.5
3465474	38HDR048−62	CSPH*6012A**	58PH*135−20	47,000	12.0	14.5
3465464	38HDR048−62	CSPH*6012A**+TDR		47,500	11.0	13.0
3465482	38HDR048−62	FE4AN(B,F)005+UI		47,000	11.5	13.5
3465483	38HDR048−62	FE4ANB006+UI		47,500	11.5	14.0
3465484	38HDR048−62	FV4BN(B,F)005		47,000	11.5	14.0
3465485	38HDR048−62	FV4BNB006		47,500	11.5	14.0
3465480	38HDR048−62	FX4CN(B,F)048		47,000	11.5	13.5
3465481	38HDR048−62	FX4CN(B,F)060		47,500	11.5	14.0
3465479	38HDR048−62	FY4ANB060		47,500	11.0	13.0
3465478	38HDR048−62	FY4ANF048		47,000	11.0	13.0
3465024	38HDR060−32	†CNPV*6024A**+TDR		57,000	11.0	13.0
3465810	38HDR060−32	40QAC060−3		56,000	11.0	13.0
3465026	38HDR060−32	CAP**6021A**	58CV(A,X)110−20	56,000	11.0	13.2
3465029	38HDR060−32	CAP**6021A**	58MEB100−20	56,000	11.0	13.5
3465027	38HDR060−32	CAP**6021A**	58PH*090−16	56,000	11.0	13.2
3465028	38HDR060−32	CAP**6021A**	58PH*110−20	56,000	11.0	13.5
3465025	38HDR060−32	CAP**6021A**+TDR		57,000	11.0	13.0
3465031	38HDR060−32	CAP**6024A**	58CV(A,X)135−22	56,000	11.0	13.5
3465032	38HDR060−32	CAP**6024A**	58CV(A,X)155−22	56,000	11.0	13.5

See notes on page 26

COMBINATION RATINGS (CONT.)

ARI Ref. No.	Model Number	Indoor Model	Furnace Model	Capacity	EER	SEER
3465034	38HDR060−32	CAP**6024A**	58MEB120−20	56,000	11.0	13.5
3465033	38HDR060−32	CAP**6024A**	58PH*135−20	56,000	11.0	13.5
3465030	38HDR060−32	CAP**6024A**+TDR		57,000	11.0	13.0
3465040	38HDR060−32	CNPH*6024A**	58CV(A,X)110−20	56,000	11.0	13.2
3465041	38HDR060−32	CNPH*6024A**	58CV(A,X)135−22	56,000	11.0	13.5
3465042	38HDR060−32	CNPH*6024A**	58CV(A,X)155−22	56,000	11.0	13.5
3465046	38HDR060−32	CNPH*6024A**	58MEB080−16	56,000	11.0	13.2
3465047	38HDR060−32	CNPH*6024A**	58MEB100−20	56,000	11.0	13.5
3465048	38HDR060−32	CNPH*6024A**	58MEB120−20	56,000	11.0	13.5
3465043	38HDR060−32	CNPH*6024A**	58PH*090−16	56,000	11.0	13.2
3465044	38HDR060−32	CNPH*6024A**	58PH*110−20	56,000	11.0	13.5
3465045	38HDR060−32	CNPH*6024A**	58PH*135−20	56,000	11.0	13.5
3465039	38HDR060−32	CNPH*6024A**+TDR		57,000	11.0	13.0
3465035	38HDR060−32	CNPV*6024A**	58CV(A,X)135−22	56,000	11.0	13.5
3465036	38HDR060−32	CNPV*6024A**	58CV(A,X)155−22	56,000	11.0	13.5
3465038	38HDR060−32	CNPV*6024A**	58MEB120−20	56,000	11.0	13.5
3465037	38HDR060−32	CNPV*6024A**	58PH*135−20	56,000	11.0	13.5
3465051	38HDR060−32	CSPH*6012A**	58CV(A,X)110−20	56,000	11.0	13.5
3465052	38HDR060−32	CSPH*6012A**	58CV(A,X)135−22	56,000	11.0	13.5
3465053	38HDR060−32	CSPH*6012A**	58CV(A,X)155−22	56,000	11.0	13.5
3465057	38HDR060−32	CSPH*6012A**	58MEB080−16	56,000	11.0	13.2
3465058	38HDR060−32	CSPH*6012A**	58MEB100−20	56,000	11.0	13.5
3465059	38HDR060−32	CSPH*6012A**	58MEB120−20	56,000	11.0	13.5
3465050	38HDR060−32	CSPH*6012A**	58MV(B,C)120−20	56,000	11.0	13.2
3465054	38HDR060−32	CSPH*6012A**	58PH*090−16	56,000	11.0	13.5
3465055	38HDR060−32	CSPH*6012A**	58PH*110−20	56,000	11.0	13.5
3465056	38HDR060−32	CSPH*6012A**	58PH*135−20	56,000	11.0	13.5
3465049	38HDR060−32	CSPH*6012A**+TDR		57,000	11.0	13.0
3465062	38HDR060−32	FE4ANB006+UI		57,500	11.0	13.5
3465063	38HDR060−32	FV4BNB006		57,500	11.0	13.5
3465061	38HDR060−32	FX4CN(B,F)060		57,500	11.0	13.5
3465060	38HDR060−32	FY4ANB060		57,000	11.0	13.0
3465064	38HDR060−52	†CNPV*6024A**+TDR		57,000	11.0	13.0
3465811	38HDR060−52	40QAC060−3		56,000	11.0	13.0
3465066	38HDR060−52	CAP**6021A**	58CV(A,X)110−20	56,000	11.0	13.2
3465069	38HDR060−52	CAP**6021A**	58MEB100−20	56,000	11.0	13.5
3465067	38HDR060−52	CAP**6021A**	58PH*090−16	56,000	11.0	13.2
3465068	38HDR060−52	CAP**6021A**	58PH*110−20	56,000	11.0	13.5
3465065	38HDR060−52	CAP**6021A**+TDR		57,000	11.0	13.0
3465071	38HDR060−52	CAP**6024A**	58CV(A,X)135−22	56,000	11.0	13.5
3465072	38HDR060−52	CAP**6024A**	58CV(A,X)155−22	56,000	11.0	13.5
3465074	38HDR060−52	CAP**6024A**	58MEB120−20	56,000	11.0	13.5
3465073	38HDR060−52	CAP**6024A**	58PH*135−20	56,000	11.0	13.5
3465070	38HDR060−52	CAP**6024A**+TDR		57,000	11.0	13.0
3465080	38HDR060−52	CNPH*6024A**	58CV(A,X)110−20	56,000	11.0	13.2
3465081	38HDR060−52	CNPH*6024A**	58CV(A,X)135−22	56,000	11.0	13.5
3465082	38HDR060−52	CNPH*6024A**	58CV(A,X)155−22	56,000	11.0	13.5
3465086	38HDR060−52	CNPH*6024A**	58MEB080−16	56,000	11.0	13.2
3465087	38HDR060−52	CNPH*6024A**	58MEB100−20	56,000	11.0	13.5
3465088	38HDR060−52	CNPH*6024A**	58MEB120−20	56,000	11.0	13.5
3465083	38HDR060−52	CNPH*6024A**	58PH*090−16	56,000	11.0	13.2
3465084	38HDR060−52	CNPH*6024A**	58PH*110−20	56,000	11.0	13.5
3465085	38HDR060−52	CNPH*6024A**	58PH*135−20	56,000	11.0	13.5
3465079	38HDR060−52	CNPH*6024A**+TDR		57,000	11.0	13.0
3465075	38HDR060−52	CNPV*6024A**	58CV(A,X)135−22	56,000	11.0	13.5
3465076	38HDR060−52	CNPV*6024A**	58CV(A,X)155−22	56,000	11.0	13.5
3465078	38HDR060−52	CNPV*6024A**	58MEB120−20	56,000	11.0	13.5
3465077	38HDR060−52	CNPV*6024A**	58PH*135−20	56,000	11.0	13.5
3465091	38HDR060−52	CSPH*6012A**	58CV(A,X)110−20	56,000	11.0	13.5
3465092	38HDR060−52	CSPH*6012A**	58CV(A,X)135−22	56,000	11.0	13.5
3465093	38HDR060−52	CSPH*6012A**	58CV(A,X)155−22	56,000	11.0	13.5
3465097	38HDR060−52	CSPH*6012A**	58MEB080−16	56,000	11.0	13.2
3465098	38HDR060−52	CSPH*6012A**	58MEB100−20	56,000	11.0	13.5
3465099	38HDR060−52	CSPH*6012A**	58MEB120−20	56,000	11.0	13.5
3465090	38HDR060−52	CSPH*6012A**	58MV(B,C)120−20	56,000	11.0	13.2
3465094	38HDR060−52	CSPH*6012A**	58PH*090−16	56,000	11.0	13.5
3465095	38HDR060−52	CSPH*6012A**	58PH*110−20	56,000	11.0	13.5
3465096	38HDR060−52	CSPH*6012A**	58PH*135−20	56,000	11.0	13.5
3465089	38HDR060−52	CSPH*6012A**+TDR		57,000	11.0	13.0
3465102	38HDR060−52	FE4ANB006+UI		57,500	11.0	13.5
3465103	38HDR060−52	FV4BNB006		57,500	11.0	13.5
3465101	38HDR060−52	FX4CN(B,F)060		57,500	11.0	13.5
3465100	38HDR060−52	FY4ANB060		57,000	11.0	13.0
3465104	38HDR060−62	†CNPV*6024A**+TDR		57,000	11.0	13.0
3465812	38HDR060−62	40QAC060−3		56,000	11.0	13.0
3465106	38HDR060−62	CAP**6021A**	58CV(A,X)110−20	56,000	11.0	13.2
3465109	38HDR060−62	CAP**6021A**	58MEB100−20	56,000	11.0	13.5

See notes on page 26

COMBINATION RATINGS (CONT.)

ARI Ref. No.	Model Number	Indoor Model	Furnace Model	Capacity	EER	SEER
3465107	38HDR060−62	CAP**6021A**	58PH*090−16	56,000	11.0	13.2
3465108	38HDR060−62	CAP**6021A**	58PH*110−20	56,000	11.0	13.5
3465105	38HDR060−62	CAP**6021A**+TDR		57,000	11.0	13.0
3465111	38HDR060−62	CAP**6024A**	58CV(A,X)135−22	56,000	11.0	13.5
3465112	38HDR060−62	CAP**6024A**	58CV(A,X)155−22	56,000	11.0	13.5
3465114	38HDR060−62	CAP**6024A**	58MEB120−20	56,000	11.0	13.5
3465113	38HDR060−62	CAP**6024A**	58PH*135−20	56,000	11.0	13.5
3465110	38HDR060−62	CAP**6024A**+TDR		57,000	11.0	13.0
3465120	38HDR060−62	CNPH*6024A**	58CV(A,X)110−20	56,000	11.0	13.2
3465121	38HDR060−62	CNPH*6024A**	58CV(A,X)135−22	56,000	11.0	13.5
3465122	38HDR060−62	CNPH*6024A**	58CV(A,X)155−22	56,000	11.0	13.5
3465126	38HDR060−62	CNPH*6024A**	58MEB080−16	56,000	11.0	13.2
3465127	38HDR060−62	CNPH*6024A**	58MEB100−20	56,000	11.0	13.5
3465128	38HDR060−62	CNPH*6024A**	58MEB120−20	56,000	11.0	13.5
3465123	38HDR060−62	CNPH*6024A**	58PH*090−16	56,000	11.0	13.2
3465124	38HDR060−62	CNPH*6024A**	58PH*110−20	56,000	11.0	13.5
3465125	38HDR060−62	CNPH*6024A**	58PH*135−20	56,000	11.0	13.5
3465119	38HDR060−62	CNPH*6024A**+TDR		57,000	11.0	13.0
3465115	38HDR060−62	CNPV*6024A**	58CV(A,X)135−22	56,000	11.0	13.5
3465116	38HDR060−62	CNPV*6024A**	58CV(A,X)155−22	56,000	11.0	13.5
3465118	38HDR060−62	CNPV*6024A**	58MEB120−20	56,000	11.0	13.5
3465117	38HDR060−62	CNPV*6024A**	58PH*135−20	56,000	11.0	13.5
3465131	38HDR060−62	CSPH*6012A**	58CV(A,X)110−20	56,000	11.0	13.5
3465132	38HDR060−62	CSPH*6012A**	58CV(A,X)135−22	56,000	11.0	13.5
3465133	38HDR060−62	CSPH*6012A**	58CV(A,X)155−22	56,000	11.0	13.5
3465137	38HDR060−62	CSPH*6012A**	58MEB080−16	56,000	11.0	13.2
3465138	38HDR060−62	CSPH*6012A**	58MEB100−20	56,000	11.0	13.5
3465139	38HDR060−62	CSPH*6012A**	58MEB120−20	56,000	11.0	13.5
3465130	38HDR060−62	CSPH*6012A**	58MV(B,C)120−20	56,000	11.0	13.2
3465134	38HDR060−62	CSPH*6012A**	58PH*090−16	56,000	11.0	13.5
3465135	38HDR060−62	CSPH*6012A**	58PH*110−20	56,000	11.0	13.5
3465136	38HDR060−62	CSPH*6012A**	58PH*135−20	56,000	11.0	13.5
3465129	38HDR060−62	CSPH*6012A**+TDR		57,000	11.0	13.0
3465142	38HDR060−62	FE4ANB006+UI		57,500	11.0	13.5
3465143	38HDR060−62	FV4BNB006		57,500	11.0	13.5
3465141	38HDR060−62	FX4CN(B,F)060		57,500	11.0	13.5
3465140	38HDR060−62	FY4ANB060		57,000	11.0	13.0

† Tested combination

EER — Energy Efficiency Ratio

SEER — Seasonal Energy Efficiency Ratio

TDR — Time−Delay Relay. In most cases, only 1 method should be used to achieve TDR function. Using more than 1 method in a system may cause degradation in performance. Use either the accessory Time−Delay Relay KAATD0101TDR or a furnace equipped with TDR. Most Carrier furnaces are equipped with TDR.

TXV — Thermostatic Expansion Valve

NOTES:

1. Ratings are net values reflecting the effects of circulating fan motor heat. Supplemental electric heat is not included.
2. Tested outdoor/indoor combinations have been tested in accordance with DOE test procedures for central air conditioners. Ratings for other combinations are determined under DOE computer simulation procedures.
3. Determine actual CFM values obtainable for your system by referring to fan performance data in fan coil or furnace coil literature.
4. Do not apply with capillary tube coils as performance and reliability are significantly affected.

DETAILED COOLING CAPACITIES*

EVAPORATOR AIR		CONDENSER ENTERING AIR TEMPERATURES °F (°C)																	
		75 (23.9)			85 (29.4)			95 (35)			105 (40.6)			115 (46.1)			125 (51.7)		
CFM	EWB °F (°C)	Capacity MBtuh†		Total System KW**	Capacity MBtuh†		Total System KW**	Capacity MBtuh†		Total System KW**	Capacity MBtuh†		Total System KW**	Capacity MBtuh†		Total System KW**	Capacity MBtuh†		Total System KW**
		Total	Sens‡		Total	Sens‡		Total	Sens‡		Total	Sens‡		Total	Sens‡		Total	Sens‡	
38HDR018 Outdoor Section With CNPV*1814A** Indoor Section																			
525	72 (22.2)	20.28	9.40	1.22	19.31	9.07	1.36	18.30	8.73	1.52	17.26	8.38	1.69	16.14	8.01	1.87	14.90	7.61	2.07
	67(19.4)	18.53	11.50	1.22	17.65	11.17	1.36	16.72	10.82	1.52	15.76	10.47	1.69	14.72	10.09	1.87	13.59	9.69	2.07
	62 (16.7)	16.93	13.58	1.23	16.13	13.24	1.37	15.29	12.89	1.52	14.43	12.52	1.69	13.57	13.57	1.87	12.71	12.71	2.07
	57 (13.9)	16.35	16.35	1.23	15.72	15.72	1.37	15.05	15.05	1.52	14.34	14.34	1.69	13.57	13.57	1.87	12.71	12.71	2.07
600	72(22.2)	20.65	9.87	1.25	19.63	9.53	1.39	18.59	9.18	1.54	17.50	8.83	1.71	16.34	8.46	1.90	15.05	8.05	2.10
	67(19.4)	18.90	12.25	1.25	17.97	11.91	1.39	17.00	11.56	1.55	16.00	11.20	1.72	14.93	10.82	1.90	13.75	10.41	2.10
	62 (16.7)	17.33	14.61	1.25	16.51	14.26	1.39	15.67	15.61	1.55	14.91	14.91	1.72	14.08	14.08	1.90	13.16	13.16	2.10
	57 (13.9)	17.07	17.07	1.25	16.39	16.39	1.39	15.67	15.67	1.55	14.91	14.91	1.72	14.08	14.08	1.90	13.16	13.16	2.10
675	72 (22.2)	20.91	10.30	1.27	19.86	9.96	1.41	18.78	9.61	1.57	17.67	9.26	1.74	16.47	8.88	1.93	15.15	8.46	2.13
	67 (19.4)	19.16	12.97	1.27	18.20	12.62	1.42	17.20	12.27	1.57	16.18	11.90	1.74	15.07	11.52	1.93	13.87	11.09	2.13
	62 (16.7)	17.70	17.52	1.28	16.94	16.94	1.42	16.17	16.17	1.57	15.37	15.37	1.74	14.49	14.49	1.93	13.52	13.52	2.13
	57(13.9)	17.67	17.67	1.28	16.94	16.94	1.42	16.17	16.17	1.57	15.37	15.37	1.74	14.49	14.49	1.93	13.52	13.52	2.13

COOLING INDOOR MODEL	CAPACITY	POWER	FURNACE MODEL
*CNPV*1814A**	1.00	1.00	
40QAC(Q)024–3	1.06	1.01	
CAP**1814A**	1.00	1.01	
CAP**2414A**	1.02	1.02	
CAP**2417A**	1.02	1.02	
CNPF*2418A**	1.02	1.02	
CNPH*2417A**	1.02	1.02	
CNPV*2414A**	1.02	1.02	
CNPV*2417A**	1.02	1.02	
CSPH*2412A**	1.02	1.02	
FE4ANF002	1.02	0.98	
FF1ENP018	1.00	1.05	
FF1ENP024	1.02	1.07	
FV4BNF002	1.02	0.99	
FX4CNF018	1.00	0.96	
FX4CNF024	1.02	0.98	
FY4ANF018	1.00	1.05	
FY4ANF024	1.02	1.07	
CAP**1814A**	1.00	0.96	58CV(A,X)070–12
CAP**2414A**	1.02	0.98	58CV(A,X)070–12
CNPH*2417A**	1.02	0.98	58CV(A,X)070–12
CNPV*1814A**	0.10	0.10	58CV(A,X)070–12
CNPV*2414A**	1.02	0.98	58CV(A,X)070–12
CSPH*2412A**	1.02	0.98	58CV(A,X)070–12
CAP**2417A**	1.02	0.98	58CV(A,X)090–16
CNPH*2417A**	1.02	0.98	58CV(A,X)090–16
CNPV*2417A**	1.02	0.98	58CV(A,X)090–16
CSPH*2412A**	1.02	0.98	58CV(A,X)090–16
CAP**2417A**	1.02	0.94	58MEB040–12
CNPH*2417A**	1.02	0.94	58MEB040–12
CNPV*2417A**	1.02	0.94	58MEB040–12
CSPH*2412A**	1.02	0.94	58MEB040–12
CAP**2417A**	1.02	0.94	58MEB060–12
CNPH*2417A**	1.02	0.94	58MEB060–12
CNPV*2417A**	1.02	0.94	58MEB060–12
CSPH*2412A**	1.02	0.94	58MEB060–12
CAP**2417A**	1.02	0.98	58MV(B,C)060–14
CNPH*2417A**	1.02	0.98	58MV(B,C)060–14
CNPV*2417A**	1.02	0.98	58MV(B,C)060–14
CSPH*2412A**	1.02	0.98	58MV(B,C)060–14
CNPH*2417A**	1.02	0.98	58MV(B,C)080–14

COOLING INDOOR MODEL	CAPACITY	POWER	FURNACE MODEL
CSPH*2412A**	1.02	0.98	58MV(B,C)080–14
CNPH*2417A**	1.02	0.98	58MVB040–14
CSPH*2412A**	1.02	0.98	58MVB040–14
CAP**1814A**	0.10	0.10	58PH*045–08
CAP**2414A**	1.02	0.94	58PH*045–08
CNPH*2417A**	1.02	0.94	58PH*045–08
CNPV*1814A**	1.00	0.96	58PH*045–08
CNPV*2414A**	1.02	0.94	58PH*045–08
CSPH*2412A**	1.02	0.94	58PH*045–08

See notes on pg. 34

DETAILED COOLING CAPACITIES* (CONT.)

EVAPORATOR AIR		CONDENSER ENTERING AIR TEMPERATURES °F (°C)																	
		75 (23.9)			85 (29.4)			95 (35)			105 (40.6)			115 (46.1)			125 (51.7)		
CFM	EWB °F (°C)	Capacity MBtuh†		Total System KW**	Capacity MBtuh†		Total System KW**	Capacity MBtuh†		Total System KW**	Capacity MBtuh†		Total System KW**	Capacity MBtuh†		Total System KW**	Capacity MBtuh†		Total System KW**
		Total	Sens‡		Total	Sens‡		Total	Sens‡		Total	Sens‡		Total	Sens‡		Total	Sens‡	
38HDR024 Outdoor Section With CNPV*2414A** Indoor Section																			
700	72 (22.2)	28.11	13.59	1.69	26.70	13.09	1.89	25.17	12.55	2.10	23.54	11.98	2.33	21.76	11.38	2.58	19.78	10.71	2.84
	67(19.4)	25.68	16.61	1.68	24.41	16.11	1.87	23.04	15.58	2.09	21.58	15.02	2.32	19.98	14.42	2.57	18.21	13.77	2.83
	62 (16.7)	23.47	19.61	1.67	22.34	19.11	1.86	21.13	18.58	2.08	19.86	18.01	2.31	18.57	18.57	2.55	17.23	17.23	2.82
	57 (13.9)	22.67	22.67	1.67	21.77	21.77	1.86	20.81	20.81	2.07	19.75	19.75	2.31	18.57	18.57	2.55	17.23	17.23	2.82
800	72(22.2)	28.62	14.25	1.73	27.14	13.73	1.93	25.53	13.18	2.14	23.83	12.61	2.37	21.98	11.99	2.62	19.92	11.32	2.88
	67(19.4)	26.18	17.67	1.72	24.84	17.16	1.91	23.40	16.61	2.13	21.88	16.05	2.36	20.22	15.43	2.61	18.38	14.76	2.87
	62 (16.7)	24.02	21.07	1.71	22.85	20.54	1.90	21.63	21.51	2.12	20.48	20.48	2.35	19.20	19.20	2.60	17.75	17.75	2.86
	57 (13.9)	23.64	23.64	1.71	22.68	22.68	1.90	21.62	21.62	2.12	20.48	20.48	2.35	19.20	19.20	2.60	17.75	17.75	2.86
900	72 (22.2)	28.99	14.87	1.77	27.45	14.34	1.96	25.78	13.78	2.18	24.03	13.20	2.41	22.12	12.57	2.66	20.00	11.89	2.92
	67 (19.4)	26.54	18.68	1.76	25.15	18.16	1.95	23.66	17.61	2.17	22.09	17.03	2.40	20.38	16.40	2.65	18.50	15.71	2.91
	62 (16.7)	24.51	22.41	1.75	23.41	23.41	1.94	22.28	22.28	2.16	21.06	21.06	2.39	19.70	19.70	2.64	18.15	18.15	2.91
	57(13.9)	24.45	24.45	1.75	23.41	23.41	1.94	22.28	22.28	2.16	21.06	21.06	2.39	19.70	19.70	2.64	18.15	18.15	2.91

COOLING INDOOR MODEL	CAPACITY	POWER	FURNACE MODEL
*CNPV*2414A**	1.00	1.00	
40QAC024–3	0.97	0.93	
CAP**2414A**	1.00	1.00	
CAP**2417A**	1.00	1.00	
CAP**3014A**	1.01	1.01	
CAP**3017A**	1.01	1.01	
CNPF*2418A**	1.00	1.00	
CNPH*2417A**	1.00	1.00	
CNPH*3017A**	1.01	1.01	
CNPV*2417A**	1.00	1.00	
CNPV*3014A**	1.01	1.01	
CNPV*3017A**	1.01	1.01	
CSPH*2412A**	1.00	1.00	
CSPH*3012A**	1.01	1.01	
FE4AN(B,F)003	1.02	0.93	
FE4ANF002	1.01	0.92	
FE5ANB004	1.03	0.94	
FF1ENP024	0.97	0.97	
FF1ENP025	1.00	0.96	
FF1ENP030	0.98	0.98	
FF1ENP031	1.01	0.96	
FF1ENP037	1.02	0.97	
FV4BN(B,F)003	1.02	0.93	
FV4BNF002	1.01	0.92	
FV4CN(B,F)003	1.02	0.93	
FV4CNF002	1.01	0.92	
FX4CNF024	1.00	0.96	
FX4CNF030	1.02	0.97	
FY4ANF024	0.99	0.99	
FY4ANF030	1.01	1.01	
CAP**2414A**	1.00	0.96	58CV(A,X)070–12
CAP**3014A**	1.00	0.96	58CV(A,X)070–12
CNPH*2417A**	1.00	0.96	58CV(A,X)070–12
CNPH*3017A**	1.00	0.96	58CV(A,X)070–12
CNPV*2414A**	1.00	0.96	58CV(A,X)070–12
CNPV*3014A**	1.00	0.96	58CV(A,X)070–12
CSPH*2412A**	1.00	0.96	58CV(A,X)070–12
CSPH*3012A**	1.01	0.96	58CV(A,X)070–12
CAP**2417A**	1.00	0.96	58CV(A,X)090–16
CAP**3017A**	1.01	0.96	58CV(A,X)090–16
CNPH*2417A**	1.00	0.96	58CV(A,X)090–16
CNPH*3017A**	1.01	0.96	58CV(A,X)090–16

COOLING INDOOR MODEL	CAPACITY	POWER	FURNACE MODEL
CNPV*2417A**	1.00	0.96	58CV(A,X)090–16
CNPV*3017A**	1.01	0.96	58CV(A,X)090–16
CSPH*2412A**	1.00	0.96	58CV(A,X)090–16
CSPH*3012A**	1.01	0.96	58CV(A,X)090–16
CNPH*2417A**	1.00	0.96	58CV(A,X)110–20
CNPH*3017A**	1.01	0.96	58CV(A,X)110–20
CSPH*2412A**	1.00	0.96	58CV(A,X)110–20
CSPH*3012A**	1.01	0.96	58CV(A,X)110–20
CNPH*2417A**	1.00	0.96	58CV(A,X)135–22
CNPH*3017A**	1.01	0.96	58CV(A,X)135–22
CSPH*2412A**	1.00	0.96	58CV(A,X)135–22
CSPH*3012A**	1.01	0.96	58CV(A,X)135–22
CNPH*2417A**	1.00	0.96	58CV(A,X)155–22
CNPH*3017A**	1.01	0.96	58CV(A,X)155–22
CSPH*2412A**	1.00	0.96	58CV(A,X)155–22
CSPH*3012A**	1.01	0.96	58CV(A,X)155–22
CAP**2417A**	1.00	0.92	58MEB040–12
CAP**3017A**	1.01	0.92	58MEB040–12
CNPH*2417A**	1.00	0.92	58MEB040–12
CNPH*3017A**	1.01	0.92	58MEB040–12
CNPV*2417A**	1.00	0.92	58MEB040–12
CNPV*3017A**	1.01	0.92	58MEB040–12
CSPH*2412A**	1.00	0.92	58MEB040–12
CSPH*3012A**	1.01	0.92	58MEB040–12
CAP**2417A**	1.00	0.92	58MEB060–12
CAP**3017A**	1.01	0.92	58MEB060–12
CNPH*2417A**	1.00	0.92	58MEB060–12
CNPH*3017A**	1.01	0.92	58MEB060–12
CNPV*2417A**	1.00	0.92	58MEB060–12
CNPV*3017A**	1.01	0.92	58MEB060–12
CSPH*2412A**	1.00	0.92	58MEB060–12
CSPH*3012A**	1.01	0.92	58MEB060–12
CAP**2417A**	1.00	0.92	58MEB080–12
CAP**3017A**	1.01	0.92	58MEB080–12
CNPH*2417A**	1.00	0.92	58MEB080–12
CNPH*3017A**	1.01	0.92	58MEB080–12
CNPV*2417A**	1.00	0.92	58MEB080–12
CNPV*3017A**	1.01	0.92	58MEB080–12
CSPH*2412A**	1.00	0.92	58MEB080–12
CSPH*3012A**	1.01	0.92	58MEB080–12
CAP**2417A**	1.00	0.96	58MV(B,C)060–14
CAP**3017A**	1.01	0.96	58MV(B,C)060–14

COOLING INDOOR MODEL	CAPACITY	POWER	FURNACE MODEL
CNPH*2417A**	1.00	0.96	58MV(B,C)060–14
CNPH*3017A**	1.01	0.96	58MV(B,C)060–14
CNPV*2417A**	1.00	0.96	58MV(B,C)060–14
CNPV*3017A**	1.01	0.96	58MV(B,C)060–14
CSPH*2412A**	1.00	0.96	58MV(B,C)060–14
CSPH*3012A**	1.01	0.96	58MV(B,C)060–14
CNPH*2417A**	1.00	0.96	58MV(B,C)080–14
CNPH*3017A**	1.00	0.96	58MV(B,C)080–14
CSPH*2412A**	1.00	0.96	58MV(B,C)080–14
CSPH*3012A**	1.01	0.96	58MV(B,C)080–14
CNPH*2417A**	0.99	0.95	58MV(B,C)080–20
CNPH*3017A**	1.00	0.96	58MV(B,C)080–20
CSPH*2412A**	1.00	0.96	58MV(B,C)080–20
CSPH*3012A**	1.00	0.96	58MV(B,C)080–20
CNPH*2417A**	1.00	0.96	58MV(B,C)100–20
CNPH*3017A**	1.01	0.96	58MV(B,C)100–20
CSPH*2412A**	1.00	0.96	58MV(B,C)100–20
CSPH*3012A**	1.01	0.96	58MV(B,C)100–20
CNPH*2417A**	1.00	0.96	58MV(B,C)120–20
CNPH*3017A**	1.01	0.96	58MV(B,C)120–20
CSPH*2412A**	1.00	0.96	58MV(B,C)120–20
CSPH*3012A**	1.01	0.96	58MV(B,C)120–20
CNPH*2417A**	1.00	0.96	58MVB040–14
CNPH*3017A**	1.01	0.96	58MVB040–14
CSPH*2412A**	1.00	0.96	58MVB040–14
CSPH*3012A**	1.01	0.96	58MVB040–14
CAP**2414A**	1.00	0.96	58PH*045–08
CAP**3014A**	1.01	0.92	58PH*045–08
CNPH*2417A**	1.00	0.96	58PH*045–08
CNPH*3017A**	1.01	0.92	58PH*045–08
CNPV*2414A**	1.00	0.96	58PH*045–08
CNPV*3014A**	1.01	0.96	58PH*045–08
CSPH*2412A**	1.00	0.96	58PH*045–08
CSPH*3012A**	1.01	0.92	58PH*045–08

See notes on pg. 34

DETAILED COOLING CAPACITIES* (CONT.)

EVAPORATOR AIR		CONDENSER ENTERING AIR TEMPERATURES °F (°C)																	
		75 (23.9)			85 (29.4)			95 (35)			105 (40.6)			115 (46.1)			125 (51.7)		
CFM	EWB °F (°C)	Capacity MBtuh†		Total System KW**	Capacity MBtuh†		Total System KW**	Capacity MBtuh†		Total System KW**	Capacity MBtuh†		Total System KW**	Capacity MBtuh†		Total System KW**	Capacity MBtuh†		Total System KW**
		Total	Sens‡		Total	Sens‡		Total	Sens‡		Total	Sens‡		Total	Sens‡		Total	Sens‡	
38HDR030 Outdoor Section With CNPV*3014A** Indoor Section																			
875	72 (22.2)	33.74	16.03	2.06	32.29	15.52	2.29	30.76	14.99	2.54	29.12	14.43	2.81	27.36	13.84	3.11	25.42	13.19	3.44
	67(19.4)	30.65	19.58	2.06	29.32	19.06	2.29	27.90	18.51	2.54	26.39	17.94	2.81	24.76	17.34	3.11	22.97	16.69	3.43
	62 (16.7)	28.07	23.01	2.07	26.73	22.59	2.29	25.47	22.03	2.54	24.10	21.45	2.81	22.76	22.72	3.11	21.45	21.45	3.43
	57 (13.9)	27.14	27.14	2.07	26.16	26.16	2.29	25.11	25.11	2.53	24.01	24.01	2.80	22.78	22.78	3.11	21.43	21.43	3.43
1000	72(22.2)	34.29	16.79	2.11	32.87	16.29	2.34	31.28	15.69	2.58	29.58	15.18	2.86	27.57	14.54	3.17	25.64	13.91	3.49
	67(19.4)	31.27	20.81	2.11	29.84	20.29	2.34	28.40	19.75	2.58	26.82	19.17	2.86	24.99	18.52	3.16	23.21	17.87	3.49
	62 (16.7)	28.72	24.92	2.11	27.38	24.26	2.34	26.11	26.11	2.58	24.94	24.94	2.85	23.54	23.54	3.16	22.22	22.22	3.48
	57 (13.9)	28.28	28.28	2.11	27.23	27.23	2.34	26.13	26.13	2.58	24.94	24.94	2.85	23.54	23.54	3.16	22.22	22.22	3.48
1125	72 (22.2)	34.76	17.52	2.16	33.30	17.00	2.39	31.65	16.46	2.63	29.90	15.89	2.91	28.03	15.27	3.21	25.95	14.60	3.53
	67 (19.4)	31.86	21.48	2.16	30.25	21.46	2.38	28.76	20.92	2.63	27.14	20.32	2.90	25.39	19.69	3.21	23.44	18.98	3.54
	62 (16.7)	29.27	29.04	2.16	28.12	28.12	2.38	26.98	26.98	2.63	25.71	25.71	2.90	24.35	24.35	3.20	22.84	22.84	3.53
	57(13.9)	29.23	29.23	2.16	28.13	28.13	2.38	26.99	26.99	2.63	25.71	25.71	2.90	24.23	24.23	3.21	22.85	22.85	3.53

COOLING INDOOR MODEL	CAPACITY	POWER	FURNACE MODEL
*CNPV*3014A**	1.00	1.00	
CAP**3014A**	1.00	1.00	
CAP**3017A**	1.00	1.00	
CAP**3614A**	1.02	1.02	
CAP**3617A**	1.02	1.02	
CAP**3621A**	1.02	1.02	
CNPF*3618A**	1.02	1.02	
CNPH*3017A**	1.00	1.00	
CNPH*3617A**	1.02	1.02	
CNPV*3017A**	1.00	1.00	
CNPV*3617A**	1.02	1.02	
CNPV*3621A**	1.02	1.02	
CSPH*3012A**	1.00	1.00	
CSPH*3612A**	1.02	1.02	
40QAC(Q)036–3	1.04	1.06	
FE4AN(B,F)003	1.02	0.98	
FE4AN(B,F)005	1.04	0.91	
FE4ANF002	1.02	0.98	
FE5ANB004	1.00	0.88	
FF1ENP030	1.00	1.00	
FF1ENP036	1.02	1.02	
FV4BN(B,F)003	1.03	0.98	
FV4BN(B,F)005	1.04	0.99	
FV4BNF002	1.02	0.98	
FX4CN(B,F)036	1.02	0.98	
FX4CNF030	1.00	0.96	
FY4ANF030	1.00	1.00	
FY4ANF036	1.02	1.02	
CAP**3014A**	1.00	0.96	58CV(A,X)070–12
CAP**3614A**	1.02	0.98	58CV(A,X)070–12
CNPH*3017A**	1.00	0.96	58CV(A,X)070–12
CNPH*3617A**	1.02	0.98	58CV(A,X)070–12
CNPV*3014A**	1.02	0.98	58CV(A,X)070–12
CSPH*3012A**	1.00	0.96	58CV(A,X)070–12
CSPH*3612A**	1.02	0.98	58CV(A,X)070–12
CAP**3017A**	1.00	0.96	58CV(A,X)090–16
CAP**3617A**	1.02	0.98	58CV(A,X)090–16
CNPH*3017A**	1.00	0.96	58CV(A,X)090–16
CNPH*3617A**	1.02	0.98	58CV(A,X)090–16
CNPV*3017A**	1.00	0.96	58CV(A,X)090–16
CNPV*3617A**	1.02	0.98	58CV(A,X)090–16
CSPH*3012A**	1.00	0.96	58CV(A,X)090–16

COOLING INDOOR MODEL	CAPACITY	POWER	FURNACE MODEL
CSPH*3612A**	1.02	0.98	58CV(A,X)090–16
CAP**3621A**	1.02	0.98	58CV(A,X)110–20
CNPH*3017A**	1.00	0.96	58CV(A,X)110–20
CNPH*3617A**	1.02	0.98	58CV(A,X)110–20
CNPV*3621A**	1.02	0.98	58CV(A,X)110–20
CSPH*3012A**	1.00	0.96	58CV(A,X)110–20
CSPH*3612A**	1.02	0.98	58CV(A,X)110–20
CNPH*3017A**	1.00	0.96	58CV(A,X)135–22
CNPH*3617A**	1.02	0.98	58CV(A,X)135–22
CSPH*3012A**	1.00	0.96	58CV(A,X)135–22
CSPH*3612A**	1.02	0.98	58CV(A,X)135–22
CNPH*3017A**	1.00	0.96	58CV(A,X)155–22
CNPH*3617A**	1.02	0.98	58CV(A,X)155–22
CSPH*3012A**	1.00	0.96	58CV(A,X)155–22
CSPH*3612A**	1.02	0.98	58CV(A,X)155–22
CAP**3017A**	1.00	0.92	58MEB040–12
CAP**3617A**	1.02	0.94	58MEB040–12
CNPH*3017A**	1.00	0.92	58MEB040–12
CNPH*3617A**	1.02	0.94	58MEB040–12
CNPV*3017A**	1.00	0.92	58MEB040–12
CNPV*3617A**	1.02	0.94	58MEB040–12
CSPH*3012A**	1.00	0.92	58MEB040–12
CSPH*3612A**	1.02	0.94	58MEB040–12
CAP**3017A**	1.00	0.92	58MEB060–12
CAP**3617A**	1.02	0.94	58MEB060–12
CNPH*3017A**	1.00	0.92	58MEB060–12
CNPH*3617A**	1.02	0.94	58MEB060–12
CNPV*3017A**	1.00	0.92	58MEB060–12
CNPV*3617A**	1.02	0.94	58MEB060–12
CSPH*3012A**	1.00	0.92	58MEB060–12
CSPH*3612A**	1.02	0.94	58MEB060–12
CAP**3017A**	1.00	0.92	58MEB080–12
CAP**3617A**	1.02	0.94	58MEB080–12
CNPH*3017A**	1.00	0.92	58MEB080–12
CNPH*3617A**	1.02	0.94	58MEB080–12
CNPV*3017A**	1.00	0.92	58MEB080–12
CNPV*3617A**	1.02	0.94	58MEB080–12
CSPH*3012A**	1.00	0.92	58MEB080–12
CSPH*3612A**	1.02	0.94	58MEB080–12
CAP**3017A**	1.00	0.92	58MEB080–16
CAP**3617A**	1.02	0.94	58MEB080–16
CNPH*3017A**	1.00	0.92	58MEB080–16

COOLING INDOOR MODEL	CAPACITY	POWER	FURNACE MODEL
CNPH*3617A**	1.02	0.94	58MEB080–16
CNPV*3017A**	1.00	0.92	58MEB080–16
CNPV*3617A**	1.02	0.94	58MEB080–16
CSPH*3012A**	1.00	0.92	58MEB080–16
CSPH*3612A**	1.02	0.94	58MEB080–16
CAP**3017A**	1.00	0.96	58MV(B,C)060–14
CAP**3617A**	1.02	0.98	58MV(B,C)060–14
CNPH*3017A**	1.00	0.96	58MV(B,C)060–14
CNPH*3617A**	1.02	0.98	58MV(B,C)060–14
CNPV*3017A**	1.00	0.96	58MV(B,C)060–14
CNPV*3617A**	1.02	0.98	58MV(B,C)060–14
CSPH*3012A**	1.00	0.96	58MV(B,C)060–14
CSPH*3612A**	1.02	0.98	58MV(B,C)060–14
CAP**3621A**	1.02	0.98	58MV(B,C)080–14
CNPH*3017A**	1.00	0.96	58MV(B,C)080–14
CNPH*3617A**	1.02	0.98	58MV(B,C)080–14
CNPV*3621A**	1.02	0.98	58MV(B,C)080–14
CSPH*3012A**	1.00	0.96	58MV(B,C)080–14
CSPH*3612A**	1.02	0.98	58MV(B,C)080–14
CAP**3621A**	1.02	0.98	58MV(B,C)080–20
CNPH*3017A**	1.00	0.96	58MV(B,C)080–20
CNPH*3617A**	1.02	0.98	58MV(B,C)080–20
CNPV*3621A**	1.02	0.98	58MV(B,C)080–20
CSPH*3012A**	1.00	0.96	58MV(B,C)080–20
CSPH*3612A**	1.02	0.98	58MV(B,C)080–20
CAP**3621A**	1.02	0.98	58MV(B,C)100–20
CNPH*3017A**	1.00	0.96	58MV(B,C)100–20
CNPH*3617A**	1.02	0.98	58MV(B,C)100–20
CNPV*3621A**	1.02	0.98	58MV(B,C)100–20
CSPH*3012A**	1.00	0.96	58MV(B,C)100–20
CSPH*3612A**	1.02	0.98	58MV(B,C)100–20
CNPH*3017A**	1.00	0.96	58MV(B,C)120–20
CNPH*3617A**	1.02	0.98	58MV(B,C)120–20
CSPH*3012A**	1.00	0.96	58MV(B,C)120–20
CSPH*3612A**	1.02	0.98	58MV(B,C)120–20
CNPH*3617A**	1.02	0.98	58MVB040–14
CSPH*3012A**	1.00	0.96	58MVB040–14
CSPH*3612A**	1.02	0.98	58MVB040–14
CAP**3017A**	1.00	0.96	58PH*070–16
CAP**3617A**	1.02	0.94	58PH*070–16
CNPH*3017A**	1.00	0.96	58PH*070–16
CNPH*3617A**	1.02	0.94	58PH*070–16

DETAILED COOLING CAPACITIES* (CONT.)

38HDR030 Outdoor Section With CNPV*3014A Indoor Section**

COOLING INDOOR MODEL	CAPACITY	POWER	FURNACE MODEL
CNPV*3017A**	1.00	0.96	58PH*070–16
CNPV*3617A**	1.02	0.94	58PH*070–16
CSPH*3012A**	1.00	0.96	58PH*070–16
CSPH*3612A**	1.02	0.94	58PH*070–16
CAP**3621A**	1.02	0.94	58PH*090–16
CNPH*3017A**	1.00	0.96	58PH*090–16
CNPH*3617A**	1.02	0.94	58PH*090–16
CNPV*3621A**	1.02	0.94	58PH*090–16
CSPH*3012A**	1.00	0.96	58PH*090–16
CSPH*3612A**	1.02	0.94	58PH*090–16

See notes on pg. 34

DETAILED COOLING CAPACITIES* (CONT.)

EVAPORATOR AIR		CONDENSER ENTERING AIR TEMPERATURES °F (°C)																	
		75 (23.9)			85 (29.4)			95 (35)			105 (40.6)			115 (46.1)			125 (51.7)		
CFM	EWB °F (°C)	Capacity MBtuh†		Total System KW**	Capacity MBtuh†		Total System KW**	Capacity MBtuh†		Total System KW**	Capacity MBtuh†		Total System KW**	Capacity MBtuh†		Total System KW**	Capacity MBtuh†		Total System KW**
		Total	Sens‡		Total	Sens‡		Total	Sens‡		Total	Sens‡		Total	Sens‡		Total	Sens‡	
38HDR036 Outdoor Section With CNPV*4221A** Indoor Section																			
1050	72 (22.2)	39.85	18.85	2.42	38.03	18.23	2.68	36.08	17.58	2.98	33.99	16.89	3.30	31.72	16.14	3.65	29.20	15.33	4.03
	67(19.4)	36.33	23.19	2.42	34.67	22.57	2.68	32.91	21.91	2.98	31.02	21.23	3.30	28.99	20.49	3.65	26.73	19.69	4.04
	62 (16.7)	33.23	27.51	2.42	31.75	26.88	2.68	30.20	26.20	2.98	28.60	28.45	3.30	27.06	27.06	3.65	25.34	25.34	4.03
	57 (13.9)	32.46	32.46	2.42	31.26	31.26	2.68	29.98	29.98	2.98	28.59	28.59	3.30	27.06	27.06	3.65	25.34	25.34	4.03
1200	72(22.2)	40.51	19.77	2.48	38.61	19.14	2.74	36.57	18.47	3.04	34.40	17.77	3.36	32.04	17.01	3.71	29.42	16.18	4.09
	67(19.4)	36.97	24.67	2.48	35.23	24.04	2.74	33.40	23.38	3.04	31.45	22.68	3.36	29.33	21.93	3.71	27.00	21.10	4.09
	62 (16.7)	34.01	29.52	2.48	32.53	32.23	2.74	31.11	31.11	3.04	29.61	29.61	3.36	27.97	27.97	3.71	26.12	26.12	4.09
	57 (13.9)	33.78	33.78	2.48	32.49	32.49	2.74	31.11	31.11	3.04	29.62	29.62	3.36	27.97	27.97	3.71	26.12	26.12	4.09
1350	72 (22.2)	40.99	20.64	2.54	39.02	19.99	2.80	36.91	19.31	3.09	34.67	18.60	3.42	32.24	17.83	3.77	29.54	16.99	4.15
	67 (19.4)	37.43	26.09	2.54	35.65	25.45	2.80	33.76	24.78	3.10	31.75	24.06	3.42	29.58	23.29	3.77	27.20	22.42	4.15
	62 (16.7)	34.86	34.86	2.54	33.49	33.49	2.80	32.02	32.02	3.10	30.44	30.44	3.42	28.70	28.70	3.77	26.73	26.73	4.15
	57(13.9)	34.86	34.86	2.54	33.49	33.49	2.80	32.03	32.03	3.10	30.44	30.44	3.42	28.70	28.70	3.77	26.73	26.73	4.15

COOLING INDOOR MODEL	CAPACITY	POWER	FURNACE MODEL
*CNPV*4221A**	1.00	1.00	
40QAC(Q)036–3	0.96	0.92	
CAP**3614A**	0.98	0.98	
CAP**3617A**	0.99	0.99	
CAP**3621A**	0.99	0.99	
CAP**4221A**	1.00	1.00	
CAP**4224A**	1.00	1.00	
CNPF*3618A**	0.99	0.99	
CNPH*3617A**	0.99	0.99	
CNPH*4221A**	1.00	1.00	
CNPV*3617A**	0.99	0.99	
CNPV*3621A**	0.99	0.99	
CNPV*4217A**	0.99	0.99	
CSPH*3612A**	0.99	0.99	
CSPH*4212A**	1.00	1.00	
FE4AN(B,F)003	0.99	0.95	
FE4AN(B,F)005	1.00	0.88	
FE4ANB006	1.00	0.88	
FE4ANF002	0.99	0.95	
FE5ANB004	1.04	0.91	
FF1ENP036	0.99	0.99	
FV4BN(B,F)003	0.99	0.91	
FV4BN(B,F)005	1.02	0.93	
FV4BNB006	1.00	0.88	
FV4BNF002	0.99	0.95	
FX4CN(B,F)036	0.99	0.95	
FX4CN(B,F)042	1.00	0.96	
FY4ANF036	0.99	0.99	
FY4ANF042	1.00	1.00	
CAP**3614A**	0.98	0.93	58CV(A,X)070–12
CNPH*3617A**	0.99	0.95	58CV(A,X)070–12
CNPH*4221A**	1.00	0.96	58CV(A,X)070–12
CSPH*3612A**	0.99	0.95	58CV(A,X)070–12
CSPH*4212A**	1.00	0.96	58CV(A,X)070–12
CAP**3617A**	0.99	0.95	58CV(A,X)090–16
CNPH*3617A**	0.99	0.95	58CV(A,X)090–16
CNPH*4221A**	1.00	0.96	58CV(A,X)090–16
CNPV*3617A**	0.99	0.95	58CV(A,X)090–16
CNPV*4217A**	1.00	0.92	58CV(A,X)090–16
CSPH*3612A**	0.99	0.95	58CV(A,X)090–16
CSPH*4212A**	1.00	0.96	58CV(A,X)090–16
CAP**3621A**	0.99	0.95	58CV(A,X)110–20

COOLING INDOOR MODEL	CAPACITY	POWER	FURNACE MODEL
CAP**4221A**	1.00	0.96	58CV(A,X)110–20
CNPH*3617A**	0.99	0.95	58CV(A,X)110–20
CNPH*4221A**	1.00	0.96	58CV(A,X)110–20
CNPV*3621A**	0.99	0.95	58CV(A,X)110–20
CNPV*4221A**	1.00	0.96	58CV(A,X)110–20
CSPH*3612A**	0.99	0.95	58CV(A,X)110–20
CSPH*4212A**	1.00	0.96	58CV(A,X)110–20
CAP**4224A**	1.00	0.96	58CV(A,X)135–22
CNPH*3617A**	0.99	0.95	58CV(A,X)135–22
CNPH*4221A**	1.00	0.96	58CV(A,X)135–22
CSPH*3612A**	0.99	0.95	58CV(A,X)135–22
CSPH*4212A**	1.00	0.96	58CV(A,X)135–22
CAP**4224A**	1.00	0.96	58CV(A,X)155–22
CNPH*3617A**	0.99	0.95	58CV(A,X)155–22
CNPH*4221A**	1.00	0.96	58CV(A,X)155–22
CSPH*3612A**	0.99	0.95	58CV(A,X)155–22
CSPH*4212A**	1.00	0.96	58CV(A,X)155–22
CAP**3617A**	0.99	0.91	58MEB040–12
CNPH*3617A**	0.99	0.91	58MEB040–12
CNPH*4221A**	1.00	0.92	58MEB040–12
CNPV*3617A**	0.10	0.09	58MEB040–12
CNPV*4217A**	1.00	0.92	58MEB040–12
CSPH*3612A**	0.99	0.91	58MEB040–12
CSPH*4212A**	1.00	0.92	58MEB040–12
CAP**3617A**	0.99	0.91	58MEB060–12
CNPH*3617A**	0.99	0.91	58MEB060–12
CNPH*4221A**	1.02	0.93	58MEB060–12
CNPV*3617A**	0.99	0.91	58MEB060–12
CNPV*4217A**	1.00	0.92	58MEB060–12
CSPH*3612A**	0.99	0.91	58MEB060–12
CSPH*4212A**	1.00	0.92	58MEB060–12
CAP**3617A**	0.99	0.91	58MEB080–12
CNPH*3617A**	0.99	0.91	58MEB080–12
CNPH*4221A**	1.00	0.92	58MEB080–12
CNPV*3617A**	0.99	0.91	58MEB080–12
CNPV*4217A**	1.00	0.92	58MEB080–12
CSPH*3612A**	0.99	0.91	58MEB080–12
CSPH*4212A**	1.00	0.92	58MEB080–12
CAP**3617A**	0.99	0.91	58MEB080–16
CNPH*3617A**	0.99	0.91	58MEB080–16
CNPH*4221A**	1.00	0.92	58MEB080–16
CNPV*3617A**	0.99	0.91	58MEB080–16

COOLING INDOOR MODEL	CAPACITY	POWER	FURNACE MODEL
CNPV*4217A**	1.00	0.92	58MEB080–16
CSPH*3612A**	0.99	0.91	58MEB080–16
CSPH*4212A**	1.00	0.92	58MEB080–16
CAP**3621A**	0.99	0.91	58MEB100–20
CAP**4221A**	1.00	0.92	58MEB100–20
CNPH*3617A**	0.99	0.91	58MEB100–20
CNPH*4221A**	1.00	0.92	58MEB100–20
CNPV*3621A**	0.99	0.91	58MEB100–20
CNPV*4221A**	1.00	0.92	58MEB100–20
CSPH*3612A**	0.99	0.91	58MEB100–20
CSPH*4212A**	1.00	0.92	58MEB100–20
CAP**3617A**	0.99	0.95	58MV(B,C)060–14
CNPH*3617A**	0.99	0.95	58MV(B,C)060–14
CNPH*4221A**	1.00	0.96	58MV(B,C)060–14
CNPV*3617A**	0.99	0.95	58MV(B,C)060–14
CNPV*4217A**	1.00	0.92	58MV(B,C)060–14
CSPH*3612A**	0.99	0.95	58MV(B,C)060–14
CSPH*4212A**	1.00	0.96	58MV(B,C)060–14
CAP**3621A**	0.99	0.95	58MV(B,C)080–14
CAP**4221A**	1.00	0.96	58MV(B,C)080–14
CNPH*3617A**	0.99	0.95	58MV(B,C)080–14
CNPH*4221A**	1.00	0.96	58MV(B,C)080–14
CNPV*3621A**	0.99	0.95	58MV(B,C)080–14
CNPV*4221A**	1.00	0.96	58MV(B,C)080–14
CSPH*3612A**	0.99	0.95	58MV(B,C)080–14
CSPH*4212A**	1.00	0.96	58MV(B,C)080–14
CAP**3621A**	0.99	0.95	58MV(B,C)080–20
CAP**4221A**	1.00	0.96	58MV(B,C)080–20
CNPH*3617A**	0.99	0.95	58MV(B,C)080–20
CNPH*4221A**	1.00	0.96	58MV(B,C)080–20
CNPV*3621A**	0.99	0.95	58MV(B,C)080–20
CNPV*4221A**	1.00	0.96	58MV(B,C)080–20
CSPH*3612A**	0.99	0.95	58MV(B,C)080–20
CSPH*4212A**	1.00	0.96	58MV(B,C)080–20
CAP**3621A**	0.99	0.95	58MV(B,C)100–20
CAP**4221A**	1.00	0.96	58MV(B,C)100–20
CNPH*3617A**	0.99	0.95	58MV(B,C)100–20
CNPH*4221A**	1.00	0.96	58MV(B,C)100–20
CNPV*3621A**	0.99	0.95	58MV(B,C)100–20
CNPV*4221A**	1.00	0.96	58MV(B,C)100–20
CSPH*3612A**	0.99	0.95	58MV(B,C)100–20
CSPH*4212A**	1.00	0.96	58MV(B,C)100–20

DETAILED COOLING CAPACITIES* (CONT.)

38HDR036 Outdoor Section With CNPV*4221A Indoor Section**

COOLING INDOOR MODEL	CAPACITY	POWER	FURNACE MODEL
CAP**4224A**	1.00	0.96	58MV(B,C)120–20
CNPH*3617A**	0.99	0.95	58MV(B,C)120–20
CNPH*4221A**	1.00	0.96	58MV(B,C)120–20
CSPH*3612A**	0.99	0.95	58MV(B,C)120–20
CSPH*4212A**	1.00	0.96	58MV(B,C)120–20
CAP**4224A**	1.00	0.96	58MVB040–14
CNPH*3617A**	0.99	0.95	58MVB040–14
CNPH*4221A**	1.00	0.96	58MVB040–14
CSPH*3612A**	0.99	0.95	58MVB040–14
CSPH*4212A**	1.00	0.96	58MVB040–14
CAP**3614A**	0.99	0.95	58PH*045–08
CNPH*3617A**	0.99	0.95	58PH*045–08
CNPH*4221A**	1.00	0.96	58PH*045–08
CSPH*3612A**	0.99	0.95	58PH*045–08
CSPH*4212A**	1.00	0.96	58PH*045–08
CAP**3617A**	0.99	0.95	58PH*070–16
CNPH*3617A**	0.99	0.95	58PH*070–16
CNPH*4221A**	1.00	0.96	58PH*070–16
CNPV*3617A**	0.99	0.95	58PH*070–16
CNPV*4217A**	1.00	0.92	58PH*070–16
CSPH*3612A**	0.99	0.95	58PH*070–16
CSPH*4212A**	1.00	0.96	58PH*070–16
CAP**3621A**	0.99	0.91	58PH*090–16
CAP**4221A**	1.00	0.92	58PH*090–16
CNPH*3617A**	0.99	0.91	58PH*090–16
CNPH*4221A**	1.00	0.92	58PH*090–16
CNPV*3621A**	0.99	0.91	58PH*090–16
CNPV*4221A**	1.00	0.92	58PH*090–16
CSPH*3612A**	0.99	0.91	58PH*090–16
CSPH*4212A**	1.00	0.92	58PH*090–16
CAP**3621A**	0.99	0.91	58PH*110–20
CAP**4221A**	1.02	0.93	58PH*110–20
CNPH*3617A**	0.99	0.91	58PH*110–20
CNPH*4221A**	1.02	0.93	58PH*110–20
CNPV*3621A**	0.99	0.91	58PH*110–20
CNPV*4221A**	1.00	0.92	58PH*110–20
CSPH*3612A**	0.99	0.91	58PH*110–20
CSPH*4212A**	1.00	0.92	58PH*110–20

See notes on pg. 34

DETAILED COOLING CAPACITIES* (CONT.)

EVAPORATOR AIR		CONDENSER ENTERING AIR TEMPERATURES °F (°C)																	
		75 (23.9)			85 (29.4)			95 (35)			105 (40.6)			115 (46.1)			125 (51.7)		
CFM	EWB °F (°C)	Capacity MBtuh†		Total System KW**	Capacity MBtuh†		Total System KW**	Capacity MBtuh†		Total System KW**	Capacity MBtuh†		Total System KW**	Capacity MBtuh†		Total System KW**	Capacity MBtuh†		Total System KW**
		Total	Sens‡		Total	Sens‡		Total	Sens‡		Total	Sens‡		Total	Sens‡		Total	Sens‡	
38HDR048 Outdoor Section With CNPV*4821A** Indoor Section																			
1460	72 (22.2)	57.22	27.09	3.31	54.16	26.03	3.74	50.83	24.90	4.20	47.23	23.69	4.69	43.24	22.38	5.21	38.87	20.99	5.76
	67(19.4)	52.21	33.21	3.33	49.49	32.17	3.76	46.57	31.08	4.22	43.40	29.91	4.71	39.95	28.66	5.23	36.03	27.26	5.77
	62 (16.7)	47.74	39.31	3.35	45.37	38.29	3.78	42.88	37.19	4.23	40.25	39.91	4.72	37.64	37.64	5.23	34.63	34.63	5.78
	57 (13.9)	46.44	46.44	3.36	44.53	44.53	3.78	42.48	42.48	4.23	40.21	40.21	4.72	37.65	37.65	5.23	34.63	34.63	5.78
1650	72(22.2)	58.13	28.26	3.37	54.91	27.17	3.81	51.42	26.01	4.27	47.67	24.78	4.76	43.52	23.45	5.28	39.26	22.10	5.84
	67(19.4)	53.07	35.09	3.40	50.21	34.03	3.83	47.16	32.91	4.29	43.87	31.73	4.78	40.28	30.44	5.30	36.23	28.99	5.85
	62 (16.7)	48.75	41.89	3.42	46.32	40.79	3.85	43.85	43.85	4.30	41.42	41.42	4.79	38.64	38.64	5.31	35.37	35.37	5.85
	57 (13.9)	48.17	48.17	3.43	46.11	46.11	3.85	43.88	43.88	4.30	41.42	41.42	4.79	38.64	38.64	5.31	35.37	35.37	5.85
1850	72 (22.2)	58.83	29.41	3.45	55.48	28.31	3.88	51.86	27.12	4.35	47.97	25.87	4.84	43.73	24.52	5.36	39.89	23.26	5.92
	67 (19.4)	53.74	36.97	3.48	50.78	35.90	3.91	47.62	34.76	4.37	44.22	33.55	4.86	40.51	32.22	5.38	36.39	30.70	5.93
	62 (16.7)	49.74	44.35	3.50	47.48	47.48	3.92	45.09	45.09	4.38	42.44	42.44	4.87	39.46	39.46	5.38	35.96	35.96	5.93
	57(13.9)	49.69	49.69	3.50	47.49	47.49	3.92	45.09	45.09	4.38	42.45	42.45	4.87	39.46	39.46	5.38	35.97	35.97	5.93

COOLING INDOOR MODEL	CAPACITY	POWER	FURNACE MODEL
*CNPV*4821A**	1.00	1.00	
40QAC048–3	0.97	0.93	
CAP**4817A**	0.99	0.99	
CAP**4821A**	1.00	1.00	
CAP**4824A**	1.00	1.00	
CAP**6021A**	1.01	1.01	
CAP**6024A**	1.01	1.01	
CNPF*4818A**	0.98	0.98	
CNPH*4821A**	1.00	1.00	
CNPH*6024A**	1.01	1.01	
CNPV*4824A**	1.00	1.00	
CNPV*6024A**	1.01	1.01	
CSPH*4812A**	1.00	1.00	
CSPH*6012A**	1.01	1.01	
FE4AN(B,F)005	1.00	0.96	
FE4ANB006	1.01	0.97	
FV4BN(B,F)005	1.00	0.96	
FV4BNB006	1.01	0.97	
FX4CN(B,F)048	1.00	0.96	
FX4CN(B,F)060	1.01	0.97	
FY4ANB060	1.01	1.01	
FY4ANF048	1.00	1.00	
CAP**4817A**	0.99	0.95	58CV(A,X)090–16
CNPH*4821A**	0.99	0.95	58CV(A,X)090–16
CNPH*6024A**	1.00	0.96	58CV(A,X)090–16
CSPH*4812A**	0.99	0.95	58CV(A,X)090–16
CSPH*6012A**	1.00	0.96	58CV(A,X)090–16
CAP**4821A**	0.99	0.95	58CV(A,X)110–20
CAP**6021A**	1.00	0.96	58CV(A,X)110–20
CNPH*4821A**	0.99	0.95	58CV(A,X)110–20
CNPH*6024A**	1.00	0.96	58CV(A,X)110–20
CNPV*4821A**	0.99	0.95	58CV(A,X)110–20
CSPH*4812A**	0.99	0.95	58CV(A,X)110–20
CSPH*6012A**	1.00	0.96	58CV(A,X)110–20
CAP**4824A**	0.99	0.95	58CV(A,X)135–22
CAP**6024A**	1.00	0.96	58CV(A,X)135–22
CNPH*4821A**	0.99	0.95	58CV(A,X)135–22
CNPH*6024A**	1.00	0.96	58CV(A,X)135–22
CNPV*4824A**	0.99	0.95	58CV(A,X)135–22
CNPV*6024A**	1.00	0.96	58CV(A,X)135–22
CSPH*4812A**	0.99	0.95	58CV(A,X)135–22
CSPH*6012A**	1.00	0.96	58CV(A,X)135–22

COOLING INDOOR MODEL	CAPACITY	POWER	FURNACE MODEL
CAP**4824A**	0.99	0.95	58CV(A,X)155–22
CAP**6024A**	1.00	0.96	58CV(A,X)155–22
CNPH*4821A**	0.99	0.95	58CV(A,X)155–22
CNPH*6024A**	1.00	0.96	58CV(A,X)155–22
CNPV*4824A**	0.99	0.95	58CV(A,X)155–22
CNPV*6024A**	1.00	0.96	58CV(A,X)155–22
CSPH*4812A**	0.99	0.95	58CV(A,X)155–22
CSPH*6012A**	1.00	0.96	58CV(A,X)155–22
CAP**4817A**	0.99	0.95	58MEB080–16
CNPH*4821A**	0.99	0.95	58MEB080–16
CNPH*6024A**	1.00	0.96	58MEB080–16
CSPH*4812A**	0.99	0.95	58MEB080–16
CSPH*6012A**	1.00	0.92	58MEB080–16
CAP**4821A**	0.99	0.95	58MEB100–20
CAP**6021A**	1.00	0.92	58MEB100–20
CNPH*4821A**	0.99	0.95	58MEB100–20
CNPH*6024A**	1.00	0.92	58MEB100–20
CNPV*4821A**	0.99	0.95	58MEB100–20
CSPH*4812A**	0.99	0.95	58MEB100–20
CSPH*6012A**	1.00	0.92	58MEB100–20
CAP**4824A**	0.99	0.95	58MEB120–20
CAP**6024A**	1.00	0.92	58MEB120–20
CNPH*4821A**	0.99	0.95	58MEB120–20
CNPH*6024A**	1.00	0.92	58MEB120–20
CNPV*4824A**	0.99	0.95	58MEB120–20
CNPV*6024A**	1.00	0.92	58MEB120–20
CSPH*4812A**	0.99	0.95	58MEB120–20
CSPH*6012A**	1.00	0.92	58MEB120–20
CAP**4821A**	0.98	0.94	58MV(B,C)080–20
CAP**6021A**	1.00	0.96	58MV(B,C)080–20
CNPH*4821A**	0.99	0.95	58MV(B,C)080–20
CNPH*6024A**	1.00	0.96	58MV(B,C)080–20
CNPV*4821A**	0.99	0.95	58MV(B,C)080–20
CSPH*4812A**	0.99	0.95	58MV(B,C)080–20
CSPH*6012A**	1.00	0.96	58MV(B,C)080–20
CAP**4821A**	0.99	0.95	58MV(B,C)100–20
CAP**6021A**	1.00	0.96	58MV(B,C)100–20
CNPH*4821A**	0.99	0.95	58MV(B,C)100–20
CNPH*6024A**	1.00	0.96	58MV(B,C)100–20
CNPV*4821A**	0.99	0.95	58MV(B,C)100–20
CSPH*4812A**	0.99	0.95	58MV(B,C)100–20
CSPH*6012A**	1.00	0.96	58MV(B,C)100–20

COOLING INDOOR MODEL	CAPACITY	POWER	FURNACE MODEL
CAP**4824A**	0.99	0.95	58MV(B,C)120–20
CAP**6024A**	1.00	0.96	58MV(B,C)120–20
CNPH*4821A**	0.99	0.95	58MV(B,C)120–20
CNPH*6024A**	1.00	0.96	58MV(B,C)120–20
CNPV*4824A**	0.99	0.95	58MV(B,C)120–20
CNPV*6024A**	1.00	0.96	58MV(B,C)120–20
CSPH*4812A**	0.99	0.95	58MV(B,C)120–20
CSPH*6012A**	1.00	0.96	58MV(B,C)120–20
CAP**4817A**	0.99	0.95	58PH*070–16
CAP**4821A**	0.99	0.95	58PH*090–16
CAP**6021A**	1.00	0.92	58PH*090–16
CNPH*4821A**	0.99	0.95	58PH*090–16
CNPH*6024A**	1.00	0.92	58PH*090–16
CNPV*4821A**	0.99	0.95	58PH*090–16
CSPH*4812A**	0.99	0.95	58PH*090–16
CSPH*6012A**	1.00	0.92	58PH*090–16
CAP**4821A**	0.99	0.95	58PH*110–20
CAP**6021A**	1.00	0.92	58PH*110–20
CNPH*4821A**	0.99	0.95	58PH*110–20
CNPH*6024A**	1.00	0.92	58PH*110–20
CNPV*4821A**	0.99	0.95	58PH*110–20
CSPH*4812A**	0.99	0.95	58PH*110–20
CSPH*6012A**	1.00	0.92	58PH*110–20
CAP**4824A**	0.99	0.95	58PH*135–20
CAP**6024A**	1.00	0.92	58PH*135–20
CNPH*4821A**	0.99	0.95	58PH*135–20
CNPH*6024A**	1.00	0.92	58PH*135–20
CNPV*4824A**	0.99	0.95	58PH*135–20
CNPV*6024A**	1.00	0.92	58PH*135–20
CSPH*4812A**	0.99	0.95	58PH*135–20
CSPH*6012A**	1.00	0.92	58PH*135–20

See notes on pg. 34

DETAILED COOLING CAPACITIES** (CONT.)

EVAPORATOR AIR		CONDENSER ENTERING AIR TEMPERATURES °F (°C)																	
		75 (23.9)			85 (29.4)			95 (35)			105 (40.6)			115 (46.1)			125 (51.7)		
CFM	EWB °F (°C)	Capacity MBtuh†		Total System KW**	Capacity MBtuh†		Total System KW**	Capacity MBtuh†		Total System KW**	Capacity MBtuh†		Total System KW**	Capacity MBtuh†		Total System KW**	Capacity MBtuh†		Total System KW**
		Total	Sens‡		Total	Sens‡		Total	Sens‡		Total	Sens‡		Total	Sens‡		Total	Sens‡	
38HDR060 Outdoor Section With CNPV*6024A** Indoor Section																			
1750	72 (22.2)	68.88	33.36	4.20	65.13	32.05	4.64	60.97	30.62	5.12	56.47	29.10	5.64	51.66	27.52	6.20	46.31	25.80	6.80
	67(19.4)	63.28	41.18	4.15	59.98	39.91	4.59	56.34	38.52	5.08	52.38	37.05	5.60	48.00	35.44	6.17	43.23	33.69	6.77
	62 (16.7)	58.24	48.95	4.11	55.37	47.69	4.55	52.27	46.30	5.04	48.91	48.85	5.57	45.63	45.63	6.15	41.69	41.69	6.76
	57 (13.9)	56.77	56.77	4.09	54.45	54.45	4.54	51.86	51.86	5.03	48.95	48.95	5.57	45.63	45.63	6.15	41.69	41.69	6.76
2000	72(22.2)	69.89	34.93	4.31	65.94	33.59	4.75	61.58	32.12	5.23	56.96	30.59	5.74	52.01	29.02	6.31	47.30	27.45	6.92
	67(19.4)	64.28	43.75	4.26	60.81	42.45	4.70	57.00	41.04	5.18	52.88	39.53	5.71	48.32	37.86	6.27	43.82	36.17	6.88
	62 (16.7)	59.48	52.47	4.22	56.55	51.08	4.66	53.58	53.58	5.15	50.40	50.40	5.68	46.78	46.78	6.26	42.62	42.62	6.87
	57 (13.9)	58.96	58.96	4.21	56.42	56.42	4.66	53.58	53.58	5.15	50.40	50.40	5.68	46.78	46.78	6.26	42.60	42.60	6.87
2250	72 (22.2)	70.60	36.41	4.42	66.50	35.04	4.86	61.97	33.55	5.33	57.25	32.02	5.85	52.14	30.44	6.41	48.41	29.01	7.04
	67 (19.4)	65.01	46.21	4.37	61.41	44.89	4.81	57.46	43.44	5.29	53.20	41.88	5.81	48.56	40.17	6.37	44.28	38.42	6.99
	62 (16.7)	60.67	60.67	4.33	58.00	58.00	4.78	54.94	54.94	5.26	51.52	51.52	5.79	47.63	47.63	6.36	43.18	43.18	6.98
	57(13.9)	60.73	60.73	4.33	58.00	58.00	4.78	54.94	54.94	5.26	51.52	51.52	5.79	47.63	47.63	6.36	43.14	43.14	6.98

COOLING INDOOR MODEL	CAPACITY	POWER	FURNACE MODEL
*CNPV*6024A**	1.00	1.00	
40QAC060–3	0.98	0.98	
CAP**6021A**	1.00	1.00	
CAP**6024A**	1.00	1.00	
CNPH*6024A**	1.00	1.00	
CSPH*6012A**	1.00	1.00	
FE4ANB006	1.01	1.01	
FV4BNB006	1.01	1.01	
FX4CN(B,F)060	1.01	1.01	
FY4ANB060	1.00	1.00	
CAP**6021A**	0.98	0.98	58CV(A,X)110–20
CNPH*6024A**	0.98	0.98	58CV(A,X)110–20
CSPH*6012A**	0.98	0.98	58CV(A,X)110–20
CAP**6024A**	0.98	0.98	58CV(A,X)135–22

COOLING INDOOR MODEL	CAPACITY	POWER	FURNACE MODEL
CNPH*6024A**	0.98	0.98	58CV(A,X)135–22
CNPV*6024A**	0.98	0.98	58CV(A,X)135–22
CSPH*6012A**	0.98	0.98	58CV(A,X)135–22
CAP**6024A**	0.98	0.98	58CV(A,X)155–22
CNPH*6024A**	0.98	0.98	58CV(A,X)155–22
CNPV*6024A**	0.98	0.98	58CV(A,X)155–22
CSPH*6012A**	0.98	0.98	58CV(A,X)155–22
CNPH*6024A**	0.98	0.98	58MEB080–16
CSPH*6012A**	0.98	0.98	58MEB080–16
CAP**6021A**	0.98	0.98	58MEB100–20
CNPH*6024A**	0.98	0.98	58MEB100–20
CSPH*6012A**	0.98	0.98	58MEB100–20
CAP**6024A**	0.98	0.98	58MEB120–20
CNPH*6024A**	0.98	0.98	58MEB120–20

COOLING INDOOR MODEL	CAPACITY	POWER	FURNACE MODEL
CNPV*6024A**	0.98	0.98	58MEB120–20
CSPH*6012A**	0.98	0.98	58MEB120–20
CSPH*6012A**	0.98	0.98	58MV(B,C)120–20
CAP**6021A**	0.98	0.98	58PH*090–16
CNPH*6024A**	0.98	0.98	58PH*090–16
CSPH*6012A**	0.98	0.98	58PH*090–16
CAP**6021A**	0.98	0.98	58PH*110–20
CNPH*6024A**	0.98	0.98	58PH*110–20
CSPH*6012A**	0.98	0.98	58PH*110–20
CAP**6024A**	0.98	0.98	58PH*135–20
CNPH*6024A**	0.98	0.98	58PH*135–20
CNPV*6024A**	0.98	0.98	58PH*135–20
CSPH*6012A**	0.98	0.98	58PH*135–20

NOTE: When the required data fall between the published data, interpolation may be performed. Extrapolation is not an acceptable practice.

* Detailed cooling capacities are based on indoor and outdoor unit at the same elevation per the latest edition of AHRI standard 210/240. If additional tubing length and/or indoor unit is located above outdoor unit, a slight variation in capacity may occur.

† Total and sensible capacities are net capacities. Blower motor heat has been subtracted.

‡ Sensible capacities shown are based on 80°F (27°C) entering air at the indoor coil. For sensible capacities at other than 80°F (27°C), deduct 835 Btuh (245 kW) per 1000 CFM (480 L/S) of indoor coil air for each degree below 80°F (27°C), or add 835 Btuh (245 kW) per 1000 CFM (480 L/S) of indoor coil air per degree above 80°F (27°C).
When the required data fall between the published data, interpolation may be performed.

** Total system kW is total of indoor and outdoor unit kilowatts.

CONDENSER ONLY RATINGS*

SST °F (°C)		CONDENSER ENTERING AIR TEMPERATURES °F (°C)							
		55 (12.8)	65 (18.3)	75 (23.9)	85 (29.4)	95 (35)	105 (40.6)	115 (46.1)	125 (51.7)
38HDR018–31									
30 (–1.6)	TCG	16.20	15.30	14.30	13.40	12.40	11.40	10.30	9.20
	SDT	67.40	77.00	86.50	96.00	105.50	114.90	124.40	133.70
	KW	0.86	0.98	1.11	1.26	1.42	1.59	1.77	1.96
35 (1.7)	TCG	17.90	16.90	15.90	14.80	13.80	12.70	11.60	10.40
	SDT	68.50	78.00	87.50	97.00	106.40	115.80	125.20	134.50
	KW	0.86	0.98	1.11	1.26	1.42	1.59	1.78	1.98
40 (4.4)	TCG	19.70	18.60	17.50	16.40	15.20	14.10	12.90	11.60
	SDT	69.70	79.10	88.60	98.00	107.40	116.80	126.10	135.30
	KW	0.85	0.97	1.11	1.26	1.42	1.60	1.79	1.99
45 (7.2)	TCG	21.60	20.40	19.20	18.00	16.80	15.50	14.20	12.80
	SDT	70.90	80.30	89.70	99.00	108.40	117.70	127.00	136.10
	KW	0.85	0.97	1.11	1.26	1.42	1.60	1.79	2.00
50 (10)	TCG	23.60	22.30	21.10	19.70	18.40	17.00	15.60	14.10
	SDT	72.20	81.50	90.80	100.10	109.40	118.60	127.80	136.90
	KW	0.85	0.97	1.11	1.26	1.42	1.60	1.79	2.00
55 (12.8)	TCG	25.70	24.30	22.90	21.50	20.00	18.60	17.00	15.40
	SDT	73.50	82.70	92.00	101.20	110.40	119.60	128.70	137.70
	KW	0.85	0.97	1.10	1.25	1.42	1.60	1.79	2.00
38HDR024–32									
30 (–1.6)	TCG	22.10	20.90	19.60	18.30	16.90	15.50	14.00	12.40
	SDT	69.00	78.50	88.00	97.40	106.80	116.10	125.30	134.50
	KW	1.08	1.24	1.41	1.60	1.80	2.02	2.25	2.48
35 (1.7)	TCG	24.30	23.00	21.70	20.30	18.80	17.20	15.60	13.80
	SDT	70.30	79.80	89.20	98.60	107.90	117.10	126.30	135.40
	KW	1.09	1.24	1.42	1.61	1.82	2.04	2.28	2.52
40 (4.4)	TCG	26.80	25.30	23.90	22.30	20.70	19.00	17.20	15.30
	SDT	71.70	81.10	90.50	99.80	109.10	118.20	127.30	136.30
	KW	1.10	1.26	1.43	1.62	1.83	2.06	2.30	2.55
45 (7.2)	TCG	29.40	27.80	26.20	24.50	22.70	20.90	18.90	16.70
	SDT	73.20	82.60	91.90	101.10	110.20	119.30	128.30	137.10
	KW	1.11	1.27	1.44	1.64	1.85	2.08	2.32	2.57
50 (10)	TCG	32.10	30.40	28.60	26.80	24.80	22.70	20.50	18.10
	SDT	74.80	84.10	93.30	102.40	111.50	120.40	129.20	137.90
	KW	1.12	1.28	1.46	1.65	1.86	2.09	2.33	2.59
55 (12.8)	TCG	35.00	33.10	31.20	29.10	26.90	24.60	22.20	19.50
	SDT	76.40	85.60	94.70	103.80	112.70	121.50	130.20	138.60
	KW	1.13	1.29	1.47	1.66	1.88	2.10	2.35	2.60
38HDR030–31									
30 (–1.6)	TCG	26.20	24.70	23.20	21.70	20.10	18.40	16.80	15.30
	SDT	72.00	82.30	92.90	103.80	115.00	126.90	139.00	148.90
	KW	1.30	1.48	1.69	1.92	2.19	2.50	2.84	3.12
35 (1.7)	TCG	28.80	27.30	25.70	24.10	22.40	20.60	18.90	17.40
	SDT	73.10	83.50	94.00	104.80	116.10	127.70	139.50	149.30
	KW	1.30	1.49	1.69	1.93	2.21	2.52	2.86	3.15
40 (4.4)	TCG	31.70	30.10	28.40	26.60	24.80	23.00	21.20	19.60
	SDT	74.30	84.70	95.20	105.90	117.10	128.60	140.00	149.70
	KW	1.31	1.49	1.70	1.94	2.22	2.53	2.87	3.18
45 (7.2)	TCG	34.80	33.10	31.20	29.40	27.40	25.50	23.60	21.90
	SDT	75.60	85.90	96.40	107.10	118.10	129.40	140.60	150.10
	KW	1.31	1.50	1.71	1.95	2.22	2.54	2.88	3.19
50 (10)	TCG	38.20	36.20	34.30	32.30	30.30	28.20	26.20	24.40
	SDT	76.90	87.20	97.60	108.20	119.20	130.30	141.10	150.50
	KW	1.32	1.50	1.71	1.95	2.23	2.55	2.89	3.20
55 (12.8)	TCG	41.70	39.70	37.60	35.50	33.30	31.10	29.00	27.10
	SDT	78.30	88.50	98.90	109.40	120.20	131.20	141.80	150.90
	KW	1.32	1.51	1.72	1.96	2.24	2.55	2.89	3.20
38HDR036–31									
30 (–1.6)	TCG	30.10	28.50	26.80	25.10	23.30	21.50	19.60	17.60
	SDT	70.90	80.80	90.90	101.00	111.20	121.60	132.30	143.30
	KW	1.50	1.71	1.94	2.20	2.50	2.83	3.19	3.58
35 (1.7)	TCG	33.20	31.50	29.70	27.80	25.90	24.00	21.90	19.90
	SDT	72.00	82.00	92.00	102.10	112.30	122.80	133.30	143.80
	KW	1.50	1.71	1.95	2.21	2.52	2.85	3.21	3.60
40 (4.4)	TCG	36.50	34.60	32.70	30.70	28.70	26.60	24.40	22.30
	SDT	73.30	83.20	93.20	103.20	113.40	123.60	134.10	144.50
	KW	1.51	1.72	1.95	2.22	2.52	2.85	3.23	3.63
45 (7.2)	TCG	40.10	38.10	36.00	33.80	31.70	29.40	27.10	24.80
	SDT	74.60	84.40	94.40	104.50	113.80	124.50	135.20	145.30
	KW	1.51	1.72	1.96	2.23	2.51	2.86	3.26	3.65
50 (10)	TCG	43.90	41.70	39.50	37.10	34.90	32.40	30.00	27.60
	SDT	75.90	85.80	95.70	105.90	115.50	125.90	136.20	146.00
	KW	1.52	1.73	1.97	2.24	2.54	2.89	3.27	3.66
55 (12.8)	TCG	48.00	45.70	43.30	40.70	38.30	35.70	33.10	30.50
	SDT	77.40	87.10	97.00	107.10	116.70	126.80	137.00	146.70
	KW	1.53	1.74	1.98	2.25	2.55	2.89	3.28	3.66

See notes on page 38

CONDENSER ONLY RATINGS* CONTINUED

SST °F (°C)		CONDENSER ENTERING AIR TEMPERATURES °F (°C)							
		55 (12.8)	65 (18.3)	75 (23.9)	85 (29.4)	95 (35)	105 (40.6)	115 (46.1)	125 (51.7)
38HDR048–32									
30 (–1.6)	TCG	48.40	45.50	42.50	39.50	36.20	32.90	30.60	28.10
	SDT	67.90	77.30	86.70	96.00	105.40	114.70	124.30	133.80
	KW	2.05	2.39	2.75	3.15	3.56	4.01	4.49	5.00
35 (1.7)	TCG	53.40	50.20	46.90	43.40	39.60	35.70	34.00	25.50
	SDT	69.10	78.40	87.80	97.00	106.20	115.40	125.10	133.00
	KW	2.02	2.37	2.74	3.14	3.56	4.01	4.51	4.99
40 (4.4)	TCG	58.70	55.10	51.40	47.50	43.10	38.30	33.00	27.10
	SDT	70.40	79.60	88.90	98.00	107.10	116.10	124.80	133.40
	KW	1.99	2.35	2.72	3.13	3.55	4.01	4.49	4.99
45 (7.2)	TCG	64.30	60.30	56.20	51.60	46.90	41.20	35.20	28.90
	SDT	71.80	80.90	90.00	99.10	108.10	116.80	125.40	133.80
	KW	1.96	2.32	2.70	3.11	3.54	4.00	4.48	4.99
50 (10)	TCG	70.30	65.80	61.10	55.80	50.40	44.20	37.30	34.60
	SDT	73.30	82.30	91.20	100.10	108.90	117.50	125.90	135.30
	KW	1.92	2.29	2.68	3.09	3.52	3.98	4.46	5.01
55 (12.8)	TCG	76.50	71.40	66.00	60.30	54.00	47.00	50.70	41.10
	SDT	74.80	83.60	92.50	101.20	109.80	118.20	129.40	137.00
	KW	1.88	2.25	2.64	3.06	3.49	3.95	4.57	5.05
38HDR060–32									
30 (–1.6)	TCG	59.30	55.30	50.90	46.20	40.40	37.90	33.80	30.30
	SDT	70.10	79.30	88.40	97.40	106.20	115.80	124.90	134.20
	KW	2.59	2.93	3.31	3.73	4.19	4.72	5.31	5.90
35 (1.7)	TCG	64.70	60.20	55.50	50.00	43.30	42.40	31.50	33.10
	SDT	71.40	80.50	89.50	98.40	106.90	116.90	124.20	134.90
	KW	2.62	2.97	3.34	3.76	4.21	4.76	5.25	5.93
40 (4.4)	TCG	69.90	65.30	60.10	53.80	55.90	47.40	31.70	35.60
	SDT	72.70	81.70	90.60	99.30	110.10	118.10	124.20	135.50
	KW	2.66	3.00	3.38	3.78	4.34	4.81	5.24	5.96
45 (7.2)	TCG	76.00	70.80	64.80	57.40	56.00	54.60	48.50	47.70
	SDT	74.10	83.00	91.80	100.20	110.00	119.90	128.60	138.80
	KW	2.71	3.04	3.40	3.80	4.32	4.89	5.43	6.08
50 (10)	TCG	82.20	76.70	69.30	70.90	61.80	58.60	30.50	52.10
	SDT	75.60	84.40	92.80	103.40	111.40	120.90	123.80	139.80
	KW	2.75	3.09	3.42	3.99	4.38	4.93	5.16	6.13
55 (12.8)	TCG	95.20	87.70	88.40	74.60	75.40	53.90	46.10	60.30
	SDT	78.80	87.10	97.50	104.30	114.70	119.50	127.70	141.70
	KW	2.85	3.13	3.74	3.95	4.56	4.78	5.33	6.25

* AHRI listing applies only to systems shown in Combination Ratings table.

KW – Outdoor Unit Kilowatts Only.

SDT – Saturated Temperature Leaving Compressor (°F)

SST – Saturated Temperature Entering Compressor (°F/°C)

TCG – Gross Cooling Capacity (1000 Btuh)

GUIDE SPECIFICATIONS
GENERAL

System Description

Outdoor-mounted, air-cooled, split-system air conditioner unit suitable for ground or rooftop installation. Unit consists of a hermetic compressor, an air-cooled coil, propeller-type condenser fan, and a control box. Unit will discharge supply air horizontally as shown on contract drawings. Unit will be used in a refrigeration circuit to match up to a packaged fan coil or coil unit.

Quality Assurance

— Unit will be rated in accordance with the latest edition of ARI Standard 210.

— Unit will be certified for capacity and efficiency, and listed in the latest ARI directory.

— Unit construction will comply with latest edition of ANSI/ ASHRAE and with NEC.

— Unit will be constructed in accordance with UL standards and will carry the UL label of approval. Unit will have c-UL approval.

— Unit cabinet will be capable of withstanding Federal Test
Method Standard No. 141 (Method 6061) 500-hr salt spray test.

— Air-cooled condenser coils will be leak tested and pressure tested

— Unit constructed in ISO9001 approved facility.

Delivery, Storage, and Handling

— Unit will be shipped as single package only and is stored and handled per unit manufacturer's recommendations.

Warranty (for inclusion by specifying engineer)

— U.S. and Canada only.

PRODUCTS

Equipment

— Factory assembled, single piece, air-cooled air conditioner unit. Contained within the unit enclosure is all factory wiring, piping, controls, compressor, refrigerant charge Puron® (R-410A), and special features required prior to field start-up.

Unit Cabinet

— Unit cabinet will be constructed of galvanized steel, bonderized, and coated with a powder coat paint.

Fans

— Condenser fan will be direct-drive propeller type, discharging air horizontally.

— Condenser fan motors will be totally enclosed, 1-phase type with class B insulation and permanently lubricated bearings. Shafts will be corrosion resistant.

— Fan blades will be statically and dynamically balanced.

— Condenser fan openings will be equipped with coated steel wire safety guards.

Compressor

— Compressor will be hermetically sealed.

— Compressor will be mounted on rubber vibration isolators.

Condenser Coil

— Condenser coil will be air cooled.

— Coil will be constructed of aluminum fins mechanically bonded to copper tubes which are then cleaned, dehydrated, and sealed.

Refrigeration Components

— Refrigeration circuit components will include liquid-line front-seating shutoff valve with sweat connections, vapor-line front-seating shutoff valve with sweat connections, system charge of Puron® (R-410A) refrigerant, and compressor oil.

— Unit will be equipped with high-pressure switch, low pressure switch and filter drier for Puron refrigerant.

Operating Characteristics

— The capacity of the unit will meet or exceed _____ Btuh at a suction temperature of _____ °F/°C. The power consumption at full load will not exceed _____ kW.

— Combination of the unit and the evaporator or fan coil unit will have a total net cooling capacity of _____ Btuh or greater at conditions of _____ CFM entering air temperature at the evaporator at _____ °F/°C wet bulb and _____ °F/°C dry bulb, and air entering the unit at _____ °F/°C.

— The system will have a SEER of _____ Btuh/watt or greater at DOE conditions.

Electrical Requirements

— Nominal unit electrical characteristics will be _____ v, single phase, 60 hz. The unit will be capable of satisfactory operation within voltage limits of _____ v to _____ v.

— Nominal unit electrical characteristics will be _____ v, three phase, 60 hz. The unit will be capable of satisfactory operation within voltage limits of _____ v to _____ v.

— Unit electrical power will be single point connection.

— Control circuit will be 24v.

Special Features

— Refer to section of this literature identifying accessories and descriptions for specific features and available enhancements.

SYSTEM DESIGN SUMMARY

1. Intended for outdoor installation with free air inlet and outlet. Outdoor fan external static pressure available is less than 0.01-in. wc.
2. Minimum outdoor operating air temperature without low-ambient operation accessory is 55°F (12.8°C).
3. Maximum outdoor operating air temperature is 125°F (51.7°C).
4. For reliable operation, unit should be level in all horizontal planes.
5. For interconnecting refrigerant tube lengths greater than 80 ft (23.4 m) and/or 35 ft (10.7 m) vertical differential, consult Residential Piping and Longline Guideline and Service Manual available from equipment distributor.
6. If any refrigerant tubing is buried, provide a 6 in. (152.4 mm) vertical rise to the valve connections at the unit. Refrigerant tubing lengths up to 36 in. (914.4 mm) may be buried without further consideration. Do not bury refrigerant lines longer than 36 in. (914.4 mm).
7. Use only copper wire for electric connection at unit. Aluminum and clad aluminum are not acceptable for the type of connector provided.
8. Do not apply capillary tube indoor coils to these units.
9. Factory-supplied filter drier must be installed.

Printed in U.S.A. Edition Date: 06/09 **Catalog No: 38HDR-4PD**

Replaces: 38HDR-3PD

Appendix E

Vehicle Miles Traveled (VMT) Analysis

FEHR PEERS

Memorandum

Date: June 8, 2023

To: Brenna Weatherby, Principal, Rincon Consultants, Inc.

From: Katy Cole, Maddie Hasani; Fehr & Peers

Subject: City of Carlsbad Housing Element Update Transportation Modeling Considerations and Results

SD22-0437

This memorandum presents an overview of options considered for the Carlsbad Housing Element Update (HEU). There are various methods and tools available for forecasting Vehicle Miles Traveled (VMT) for a project. This memorandum explains the methods/tools considered for the City of Carlsbad HEU and the scope of work for performing the currently preferred method.

Selecting a Transportation Modeling Tool/Method

Fehr & Peers began collaborating with the City of Carlsbad on methods for forecasting VMT for the HEU in 2022. Since the HEU would require updating residential land use assumptions for the entire city, using the SANDAG model was deemed the most appropriate tool.

Background on the SANDAG Model

Using the SANDAG Model has presented significant challenges over the last two years, and these challenges have necessitated revising the approach to using the SANDAG Model to estimate VMT. The following provides a summary of the considerations/challenges using the SANDAG Model:

- The SANDAG Model goes through major version changes every time a new SANDAG Regional Plan is adopted. The most recent model version change is to the "Activity Based Model 2+" (ABM2+), which is the model that includes a scenario for the December 2021 SANDAG Regional Plan/Sustainable Community Strategy (SCS).
- The previous version of the SANDAG Model, "Activity Based Model 2" (ABM2) had limited functionality because it was an interim version that SANDAG prepared only for the Federal Regional Transportation Plan. A fundamental limitation with ABM2 is that a user is unable to make land uses changes in the model (in other words, the land use file is locked and can't be edited). Custom modeling is not available using ABM2.
- SANDAG communicated that ABM2+ would have full functionality and would have the ability to adjust and test various land use assumptions; however, adding that functionality was going to

require additional SANDAG effort and ABM2+ would not be usable for custom modeling efforts until that functionality was added. ABM2+ became the current model in December 2021; however, the full functionality of ABM2+ was not available until July 15, 2022.

- The SANDAG Service Bureau typically performs custom modeling for member agencies and private clients. Their department is short-staffed; therefore, they were not able to perform the modeling in a timely manner that they had queued for the fully functional ABM2+.
- On September 23, 2022 the SANDAG Board directed SANDAG staff to remove the "road user charge" from the 2021 Regional Plan and prepare a focused amendment to the 2021 Regional Plan. This direction requires significant revisions to the SANDAG model and resulted in SANDAG alerting all projects that were in the modeling queue that all SANDAG Service Bureau modeling would be delayed at least six more months.
- The SANDAG Service Bureau had over 12 projects in the queue for custom modeling using ABM2+, they were unable to complete any of these projects and all custom modeling work is on hold.
- An overarching challenge is that the SANDAG model is a large tool that requires specialized expertise and significant computer processing power. The model can't be run on a standard computer, and it takes several days to completely run. Therefore, it can be cumbersome and time consuming to use.

Fall 2022 Modeling Options Considered

The SANDAG model background helps clarify why the modeling for the Carlsbad HEU has had delays and is now taking a new direction. The HEU entered into an agreement with SANDAG in April 2022 to perform the modeling and was number ten in the SANDAG Service Bureau queue. The SANDAG Service Bureau updated the schedule for performing the custom model runs several times, culminating in them canceling the contract for the Carlsbad HEU work after the SANDAG Board direction in September 2022 to remove the road user charge assumptions from the Regional Plan.

Due to this, the HEU Team again deliberated on an approach for performing the VMT analysis for the HEU. The following factors were considered:

- Schedule, especially considering the delays that have already been experienced.
- Reasonable land use assumptions.
- Use a model dataset that does not include road user charge.

In Fall 2022 the HEU Team decided to employ Fehr & Peers to perform custom model runs using ABM2+ that includes adjustments to the land use growth to reflect realistic growth assumptions in the City for a future year.

Fehr & Peers performed a detailed review of the SANDAG model assumptions including residential and employment land uses as well as policy to provide data for deciding the preferred option for performing the modeling for the HEU. **Table 1** summarizes the options considered.

Table 1: SANDAG Modeling Options Considered

Option	Land Use Summary	Model Policy/Other Inputs
Dataset 41 - DS41 *(No Build)*	• Post 2021 Regional Plan Project use	• No build scenario does not include the road user charge. • More consistent with the city's general plan than DS 42 • Inconsistent with the adopted 2021 Regional Plan
Dataset 42 - DS42 *(Build, Vision)*	• Post 2021 Regional Plan Project use • Consistent with Sustainable Community Strategy (CSC) use	• Build scenario includes road user charge. • Consistent with the adopted 2021 Regional Plan

Notes:
Source: Fehr & Peers, 2023

After evaluating the options and their respective land use and policy assumptions, the HEU team opted to use the No build DS41. This option aligns most closely with the City's general plan, and it does not include the road user charge policy. By selecting this option, the team was able to use more realistic land use assumptions while also factoring in regional transportation network investments and policies. Overall, this approach provided the most reasonable conclusion regarding VMT/GHG.

Scope of Work

The project is comprised of four distinct scenarios, each serving a unique purpose. These scenarios include the Base Year 2016 No Project Condition, Future Year Alternative 1 (No Project Alternative), Future Year Proposed Project, and Future Year with Project Alternative 2.

The first scenario, Base Year 2016 No Project Condition, is identical to the SANDAG 2016 model and has not been modified in any way. The second scenario, Year 2035 Alternative 1 (No Project Alternative), incorporates the land use and network assumptions from the SANDAG 2035 model but has been adjusted to align with the City's Adopted General Plan.

The third and fourth scenarios, Year 2035 Proposed Project and Year 2035 with Project Alternative 2, respectively, both feature the project land use assumptions based on each alternative.

To develop these scenarios, Fehr & Peers collaborated with SANDAG staff to acquire off-the-shelf model files containing the necessary model inputs and outputs for the years 2016 and 2035 related to the DS41. Once Fehr & Peers obtained all the necessary files from the SANDAG model, this data was utilized to

develop the project scenarios. Subsequently, we ran three separate models including Future Year No Project Condition, Future Year Proposed Project, and Future Year with Project Alternative 2.

Finally, the outputs generated from these model runs were used to calculate two VMT metrics: total VMT and VMT per capita. The total VMT was calculated using the CAP method, which includes all internal VMT, half of internal to external VMT, and external to internal VMT based on the model data. VMT per capita estimates the total VMT generated by the project's residents, in this case, the entire city, and is calculated by dividing the residents VMT by the number of residents.

Total VMT Generated (CAP)	All vehicle-trips are traced to the zone or zones of study. This includes internal to internal (II), 1/2 internal to external (IX), and 1/2 external to internal (XI) trips. May use final assignment origin-destination (OD) trip tables or production (P) and attraction (A) estimates multiplied by distance skims. When the model has multiple assignment periods, OD trip tables and congested skims from each period should be used.	

Total VMT and VMT per Capita were calculated for each project scenario using the origin-destination matrices (number of trips between two TAZs) and skim matrices (length of trips between two TAZs). Total VMT was calculated by multiplying the length of each segment by the ADT of each segment and summing over the area network.

VMT results are shown in **Table 2** and **Table 3**.

Table 2: Total VMT Summary

Scenario	VMT	Change from Baseline
Base Year 2016 No Project Condition	3,262,216	-
Year 2035 Alternative 1 (No Project Alternative)	3,661,216	399,000
Year 2035 Proposed Project	3,733,018	71,802[1]
Year 2035 with Project Alternative 2	3,733,074	71,858[1]

Source: SANDAG, Fehr & Peers 2023

[1] change from 2035 with Adopted General Plan.

Table 3: VMT per Capita Summary

Scenario	VMT/Capita
Base Year 2016 No Project Condition	24.0
Year 2035 Alternative 1 (No Project Alternative)	24.0
Year 2035 Proposed Project	23.6
Year 2035 with Project Alternative 2	23.7

Source: SANDAG, Fehr & Peers 2023

Both Year 2035 Proposed Project and Year 2035 with Project Alternative 2 lead to a higher total volume of VMT compared to the No Project Condition in 2035. Furthermore, the VMT per Capita numbers for these alternatives are higher than 85% of the city-wide VMT per Capita numbers in the base years of 2016 and 2035. The gap between the 2035 proposed project and Alternative 2 scenarios is relatively small, as the only notable difference lies in a few residential land use assumptions.