PRELIMINARY DRAINAGE STUDY

BRIDGE NO. 57C-0209
CAMINO DEL MAR BRIDGE OVER SAN DIEGUITO RIVER
Del Mar, California

City of Del Mar Project Tracking: TBD

April 25, 2022

Prepared for:
Kleinfelder
c/o Don Bloodworth
550 West Street, Ste 1200
San Diego, CA 92101

Prepared by:

SAN DIEGUITO ENGINEERING, INC.
Engineering | Surveying | Planning

San Dieguito Engineering, Inc.
1911 Palomar Oaks Way, Ste 200
Carlsbad, CA 92008
P: (858) 345-1149
F: (858) 345-1151

SDE Contact Person:
Raymond L Escobar, RCE #72463
SDE Project Number PW5794-04

[THIS PAGE INTENTIONALLY LEFT BLANK]

DECLARATION OF RESPONSIBLE CHARGE

I HEREBY DECLARE THAT I AM THE ENGINEER OF WORK FOR THIS PROJECT, THAT I HAVE EXERCISED RESPONSIBLE CHARGE OVER THE DESIGN OF THE PROJECT AS DEFINED IN SECTION 6703 OF THE BUSINESS AND PROFESSIONS CODE, AND THAT THE DESIGN IS CONSISTENT WITH CURRENT STANDARDS.

I UNDERSTAND THAT THE CHECK OF PROJECT DRAWINGS AND SPECIFICATIONS BY THE COUNTY OF SAN DIEGO IS CONFINED TO A REVIEW ONLY AND DOES NOT RELIEVE ME, AS ENGINEER OF WORK, OF MY RESPONSIBILITIES FOR PROJECT DESIGN.

BY: Raymond L Escobar DATE: 4-25-22
Raymond L Escobar

RCE NO.: 72463 EXPIRES: 06/30/2022

REGISTERED PROFESSIONAL ENGINEER
RAYMOND L. ESCOBAR
No. 72463
Exp. 06/30/22
CIVIL
STATE OF CALIFORNIA

SAN DIEGUITO ENGINEERING, INC.
462 STEVENS AVENUE, SUITE 305
SOLANA BEACH, CALIFORNIA 92075
PHONE: (858)345-1149

[THIS PAGE INTENTIONALLY LEFT BLANK]

Table of Contents

Introduction 1

Section 1 – Project Information 1

Project Description 1

Hydrologic Setting 1

Section 2 – Methodology and Design Criteria 4

Rational Method 4

Section 3 – Hydrologic Effect of Project 5

Drainage Patterns 5

Impervious Cover 5

Peak Runoff 5

Project Erosion and Sedimentation 7

Section 4 – Summary and Conclusions 7

Section 5 – References 7

List of Exhibits

Exhibit A – Vicinity Map

Exhibit B – Watershed Vicinity Map

Exhibit C – County General Plan Land Use/Zoning Map

Exhibit D – Soil Types

Exhibit E – FEMA Flood Insurance Rate Map

List of Appendices

Appendix A – Hydrology Calculations

Appendix B – Curb Inlet Sizing Calculations

Appendix C – Rip Rap Summary Table

Introduction

This drainage study presents an analysis of the effects that the proposed 'Bridge No. 57C-0209- Camino Del Mar Bridge Over San Dieguito River' Project may have on the *quantity* and *pattern* of storm water runoff in the local watershed. Storm water *quality* is addressed in the Green Streets PDP Exempt SWQMP for the project, under separate cover from this document.

This study examines the existing and proposed hydrology of the site and nearby watershed and presents preliminary design engineering recommendations for the project drainage facilities.

Section 1 – Project Information

This section describes the location, activities, and hydrologic setting (watershed, topography, land use, soils and vegetation, drainage patterns, and impervious cover) of the project site.

1.1 Project Description

1.1.1 Project Location

The project site is located within the City of Del Mar, California along Camino Del Mar south of Via De La Valle and north of Sandy Lane. Exhibit A provides a vicinity map for the site.

1.1.2 Project Activities Description

This project will replace the existing bridge structure crossing the San Dieguito River along Camino Del Mar. This crossing is located immediately east of the river's discharge into the Pacific Ocean. The improvements will include related work at the approaches including the reconstruction of inlets and facilities for pollution control as detailed in the project stormwater treatment document (Green Streets PDP Exempt SWQMP).

1.2 Hydrologic Setting

This section summarizes the project's size and location in context of the larger watershed perspective, topography, soil and vegetation conditions, percent impervious area, natural and infrastructure drainage features, and other relevant hydrologic and environmental factors specific to the project area's watershed.

The project site is located at the downstream end of the 345-square mile San Dieguito Watershed. It is more specifically located within the Solana Beach Hydrologic Area (905.1). The project area accounts for approximately 0.156 percent of the local San Dieguito watershed area. Exhibit B illustrates the project site in the context of the watershed.

1.2.1 Topography

The project site is situated in the seaside City of Del Mar in San Diego County. The site consists of the existing roadway (Camino del Mar) which is flat and slopes towards the south with an approximate grade of 0.33%. The road has a normal crown and drains from a raised median towards the exterior curb. The elevation difference across the site is about 3 feet from an elevation of 19' MSL to 16' MSL.

1.2.2 Current and Adjacent Land Use

The project site is currently a two-lane roadway including a bike lane each way. The western edge of the bridge also includes a boardwalk for pedestrians. The roadway includes parking lanes on the west and east sides immediately upstream and downstream of the existing bridge crossing.

Exhibit C illustrates the County of San Diego General Plan and Zoning near the project site.

1.2.3 Soil and Vegetation Conditions

The NRCS Web Soil Survey by the United States Department of Agriculture Soil Conservation Service was used for reference in determining the preliminary soil conditions at the site and surrounding areas. In general, the areas north of the bridge consist of tidal flats (type D) soils while the areas south of the bridge were Tujunga sand (type A) soils.

At this preliminary phase, infiltration testing has not been performed. Therefore, infiltration rates have not been determined. Based on the proposed design of the new bridge, drainage from the project will be directed towards two sump inlets on the north side of the bridge. Soils in this location are estimated to consist of type D soil with estimated infiltration rate between 0 – 0.025 inches per hour per the San Diego County BMP Design Manual.

The vegetation within the area is sparse along the median and roadside with small pockets of bushes and seagrass.

1.2.4 Existing Drainage Patterns and Facilities

The project site consisting of the Camino Del Mar roadway drains towards each side of the road and is then channeled south along the curb. Runoff north of the is collected prior to draining on to bridge. Flows on the eastern side of the road are collected by inlet and emptied into the San Dieguito lagoon. The flows from the western side of the road drain overland to the west and collected by a grated inlet then conveyed west and discharged over rip rap into the Pacific Ocean. Runoff from the bridge continues south along Camino Del Mar before getting collected by existing inlets in the vicinity of 28th and 29th Street.

1.2.5 Floodplain Mapping

The Federal Emergency Management Agency (FEMA) has mapped Special Flood Hazard Areas (SFHAs) for the project site. The project site is within an area on the FEMA Flood Insurance Rate Map designated as Regulatory Floodway with a Base Flood Elevation of approximately 12 feet. FIRM Map Number 06073C1307G is included in Exhibit E.

1.2.6 Downstream Conditions

The area immediately downstream of the bridge consist of medium to dense residential development with some small amount of office commercial. Flooding was evidenced at the inlet located at the southwest corner of the intersection of 29th Street and along the east side of Camino del Mar after moderate rain events.

1.2.7 Impervious Cover

The project study has concrete pavement and asphalt roadway pavement throughout the majority of the project area. The project will increase the amount of imperviousness by approximately 6,700 square feet. The increase can be attributed to the replacement and widening of the bridge structure as well as the required associated roadway transition.

Section 2 – Methodology and Design Criteria

This section summarizes the design criteria and methodology applied during drainage analysis of the project site. The design criteria and methodology follow the County of San Diego County Hydrology Manual (SDCHM) (June 2003) and the San Diego County Hydraulic Design Manual (September 2014) as appropriate for the project site.

2.1 Rational Method

Peak flows for this site were calculated using methodology in the SDCHM for the rational method utilizing the Advanced Engineering Software (AES-2016). These calculations were performed for both the existing and proposed conditions to quantify differences in peak rate of discharges. Runoff coefficients were weighted and based on Table 3-1 of the SDCHM. Time of concentration was calculated per Section 3.1.4 of the SDCHM and the corresponding runoff intensities for the 100-year storm were based upon a 6-hour precipitation of 2.45 inches. The 100-year (6 hour and 24 hour) isopluvials are located in Appendix A as well as the Pre-project and Post-project rational method hydrology calculations.

Though an increase in peak runoff rates is shown from the existing to developed condition for the proposed project, mitigation is not necessary since the project affected drainage areas will discharge directly into either the San Dieguito River or the Pacific Ocean. That is, the increase in runoff will have a negligible effect on the water surface elevations of the San Dieguito River due to its close proximity to the Pacific Ocean. Additionally, rip rap placed at the proposed pipe discharge points will help dissipate energy to below erosive levels. Appendix C contains a summary table of the rip needed at each pipe discharge point.

2.2 Hydraulic calculations (inlets/storm drain)

Preliminary inlet size calculations for the new curb inlets along Camino Del Mar have been included in this study and are included in Appendix B. Sizing of the inlets were performed per the San Diego County Hydraulic Design Manual for inlets located in a sag and on continuous grade. Preliminary hydraulic calculations for storm drain conveyances are included in the hydrologic model in Appendix A based on preliminary pipe diameters, invert elevations, and lengths.

Section 3 – Hydrologic Effect of Project

This section summarizes the quantities and location of storm water runoff from the project site. Discussion of the water quality aspects of the project can be found in the Green Streets PDP Exempt SWQMP prepared under separate cover from this report.

3.1 Drainage Patterns

The proposed project will slightly revise the existing condition drainage pattern but will have a negligible impact. As discussed in Section 1.2.4 above, the existing drainage patterns will change slightly with the proposed bridge improvements. A high point within the bridge section now creates a ridge line and will reverse the runoff direction on the northern section of the bridge compared to existing condition. Associated road improvements north of the bridge will also be required for transitioning the road to the new bridge. This includes sidewalk transitions and curb inlets placed at the newly created sump where the existing road meets the new pavement improvements.

Drainage flow length to the southern end of the bridge will be shortened due to the revised elevated bridge profile. Hydrologic analysis on the proposed improvements will determine the peak flows draining towards the area south of the new bridge and determine its impact due to widening and elevating the bridge.

3.2 Impervious Cover

The proposed imperviousness makeup of the site will conceptually remain the same as in existing condition. That is, the bridge will be reconstructed along the same alignment although with an increase width of about 7.5'. The overall width will increase from 61'-1" to 68'-6".

3.3 Peak Runoff

Rational Method 100-year hydrologic models for the existing and proposed conditions were performed to determine the project's impact relative to existing conditions. The existing and proposed condition models for the areas draining towards the south originally extended to the existing inlets. However, calculations indicated that, although the inlets would now receive runoff flows from a smaller tributary area, the peak flows increased. This occurred due to elevating the bridge which steepened the road slope and shortening the time of concentration. Therefore, to more accurately determine the flow increase attributable to the actual improvements, the models were revised to conclude at the south end of the bridge improvements. Table 3-1 on the next page summarizes the hydrologic effects for the project's drainage subareas. Nodes shown on the table correspond to the drainage inlet or discharge points depicted on the pre- and post-development hydrology maps in Appendix A.

Table 3-1 Summary of Hydrology Analysis

Location	Node	A (acre)	Q_{100} (cfs)
Existing- North of Bridge (existing DI#5)	22	0.34	1.60
Existing- North of Bridge (existing DI#4)	32	0.20	0.76
Existing- North of Bridge (existing DI#3)	12	0.58	2.48
Existing- South of Bridge (East)	42	0.87	2.21
Existing- South of Bridge (West)	52	0.66	1.86
Cumulative Existing		2.65	8.91
Post-North of Bridge (existing DI#5)	122	0.58	2.86
Post-North of Bridge (existing DI#4)	128	0.26	1.33
Post-North of Bridge (existing DI#3)	117	0.86	4.46
Post- South of Bridge (East, immediately south of abutment)	142	0.34	1.89
Post- South of Bridge (West, immediately south of abutment)	152	0.33	1.86
Post-South of Bridge (East, south end of improvements)	146	0.27	1.04
Post-South of Bridge (West, south end of improvements)	156	0.17	0.78
Cumulative Post-project		2.81	14.22
Difference		+0.16	+5.31

As indicated in the table above, peak flows from the proposed bridge improvements will result in an unmitigated peak flow increase of about 5.31 cfs. It should be noted, as previously mentioned, that although the drainage area flowing to the south end of the bridge decreased, the respective flow runoff experienced a slight cumulative increase of about 1.5 cfs for the combined (east and west) sides of the road. The area south of the bridge currently experiences flooding conditions. Therefore, two new inlets are proposed to collect runoff from the east and west sides of the street immediately south of the southern abutment. These inlets will collect bridge runoff and discharge at the San Dieguito River rather than be allowed to gutter flow towards the existing southern downstream inlets along Camino del Mar. This will serve to reduce the peak flow draining towards the existing inlet and help alleviate some of the flooding which currently occurs.

Per the table above, the project would directly discharge 12.4 cfs of runoff into the San Dieguito River where it meets the Pacific Ocean. This is an increase of 7.56 cfs compared to 4.84 cfs in existing conditions. Per the *Hydraulic and Sediment Transport Analyses for the Camino Del Mar Bridge Replacement (Alternatives 1.1, 2.1, and 9.2)* prepared by Wayne W. Chang (June 4, 2020), the Q100 peak flow within the San Dieguito River at the proposed bridge location is 41,800 cfs. Therefore, the overall peak flow increase of 7.56 cfs due to the project would represent an increase of less than 0.018%. In addition, the

site's location relative to the overall San Dieguito River means that the peak flows from the site and river will not coincide due to their vastly different lag times. That is, introduction of the site's peak flow runoff in to the river will not add to the rivers overall peak since it will arrive much sooner than the rivers peak flow. For this reason, mitigation of peak flow increases due to the project are not necessary or proposed.

3.4 Project Erosion and Sedimentation

Because runoff from the site will be over non-erodible surfaces from the roadway and sidewalks or will discharge at points with outlet protection such as rip rap energy dissipation, neither erosion or sedimentation are anticipated since velocities at runoff discharge points will be reduced to non-erosive levels.

Section 4 – Summary and Conclusions

This section provides a summary discussion of the potential effects of the proposed project on local water resources in terms of quantity and location.

- The proposed project will alter drainage directions relative to existing condition. This area diversion will, in turn, create a peak flow increase to the proposed condition discharge points north of the bridge. A small runoff increase was also determined at the south end of the bridge. However, the hydrologic impact from these increases will be insignificant since the site will discharge into the San Dieguito River where it empties to the Pacific Ocean. The peak flow increase will have a negligible effect on the water surface elevation within the San Dieguito River.
- The project will remove or replace existing drainage improvements and all storm drainage pipes and new facilities will be designed to convey the 100-year peak flows without causing flooding of proposed structure.

Section 5 – References

County of San Diego Department of Public Works Flood Control (June 2003). San Diego County Hydrology Manual.

County of San Diego Department of Public Works Flood Control Section (September 2014). San Diego County Hydraulic Design Manual.

County of San Diego Department of Public Works Flood Control Section (July 2005). San Diego County Drainage Design Manual.

Soil Conservation Service (December 1973). Soil Survey, San Diego Area, California.

Exhibit A

Vicinity Map

Vicinity Map

February 15, 2022

1:18,056

0 0.13 0.25 0.5 mi

0 0.2 0.4 0.8 km

Figure 1. Vicity Map- Camino del Mar Bridge Over San Dieguito River

USGS The National Map: National Boundaries Dataset, 3DEP Elevation Program, Geographic Names Information System, National Hydrography Dataset, National Land Cover Database, National Structures Dataset, and National Transportation Dataset; USGS Global Ecosystems; U.S. Census

Exhibit B

Watershed Vicinity Map

San Dieguito Watershed

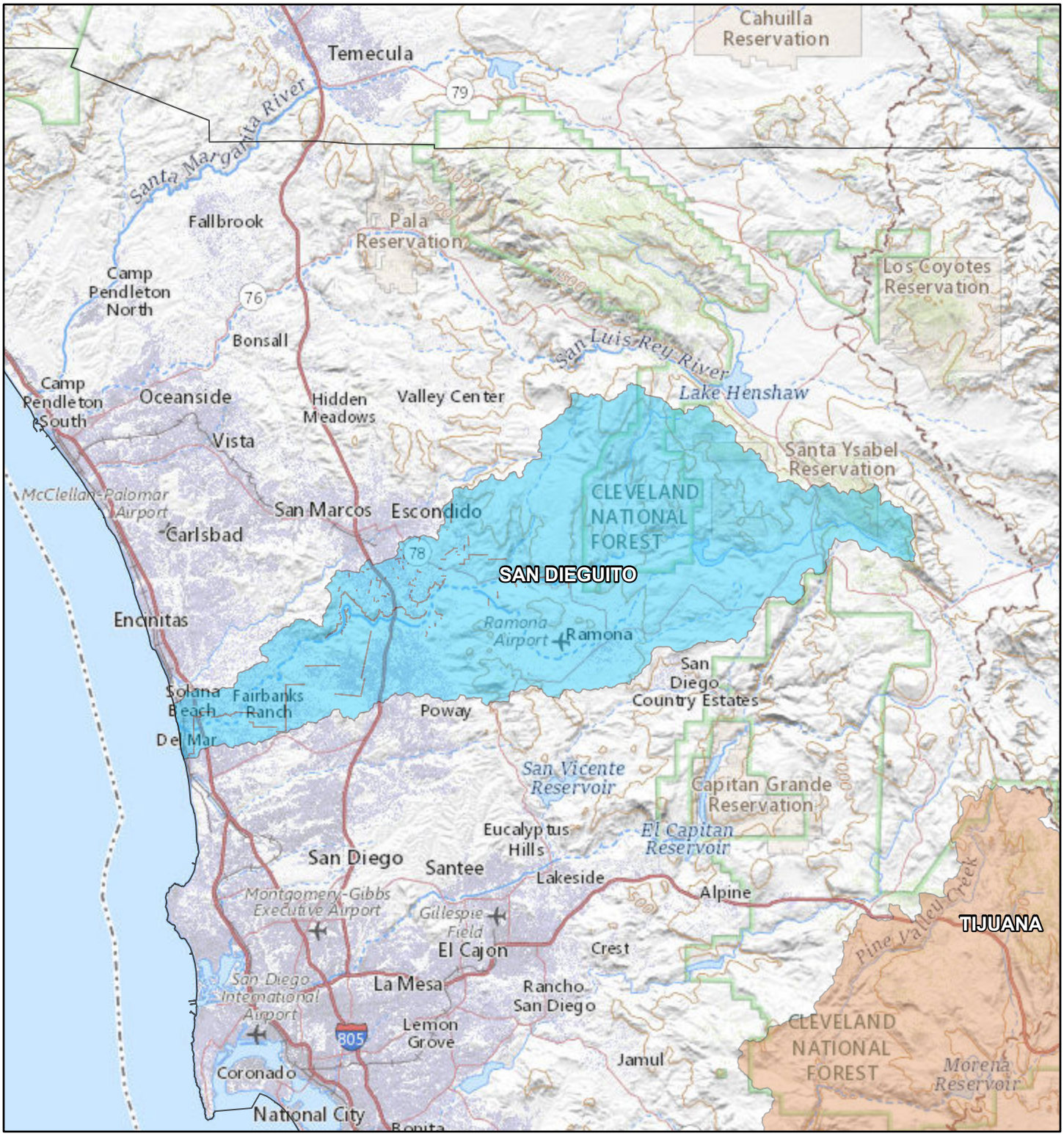

February 11, 2022

1:577,791

0 4 8 16 mi

0 5 10 20 km

USGS The National Map: National Boundaries Dataset, 3DEP Elevation Program, Geographic Names Information System, National Hydrography Dataset, National Land Cover Database, National Structures Dataset, and National Transportation Dataset; USGS Global Ecosystems; U.S. Census

San Dieguito Watershed

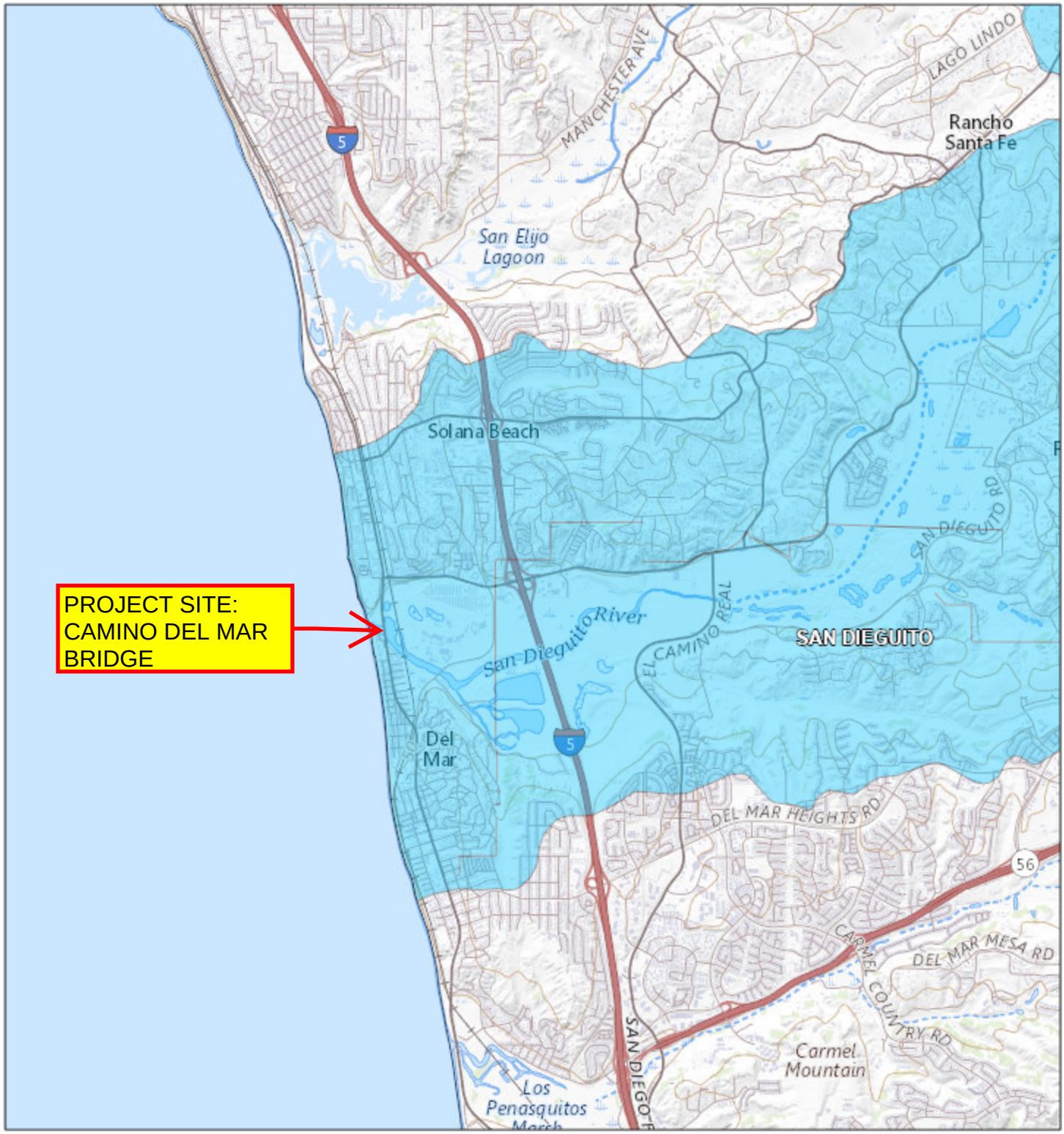

February 11, 2022

1:72,224

0 0.5 1 2 mi

0 0.75 1.5 3 km

USGS The National Map: National Boundaries Dataset, 3DEP Elevation Program, Geographic Names Information System, National Hydrography Dataset, National Land Cover Database, National Structures Dataset, and National Transportation Dataset; USGS Global Ecosystems; U.S. Census

Exhibit C

County General Plan Land Use/Zoning Map

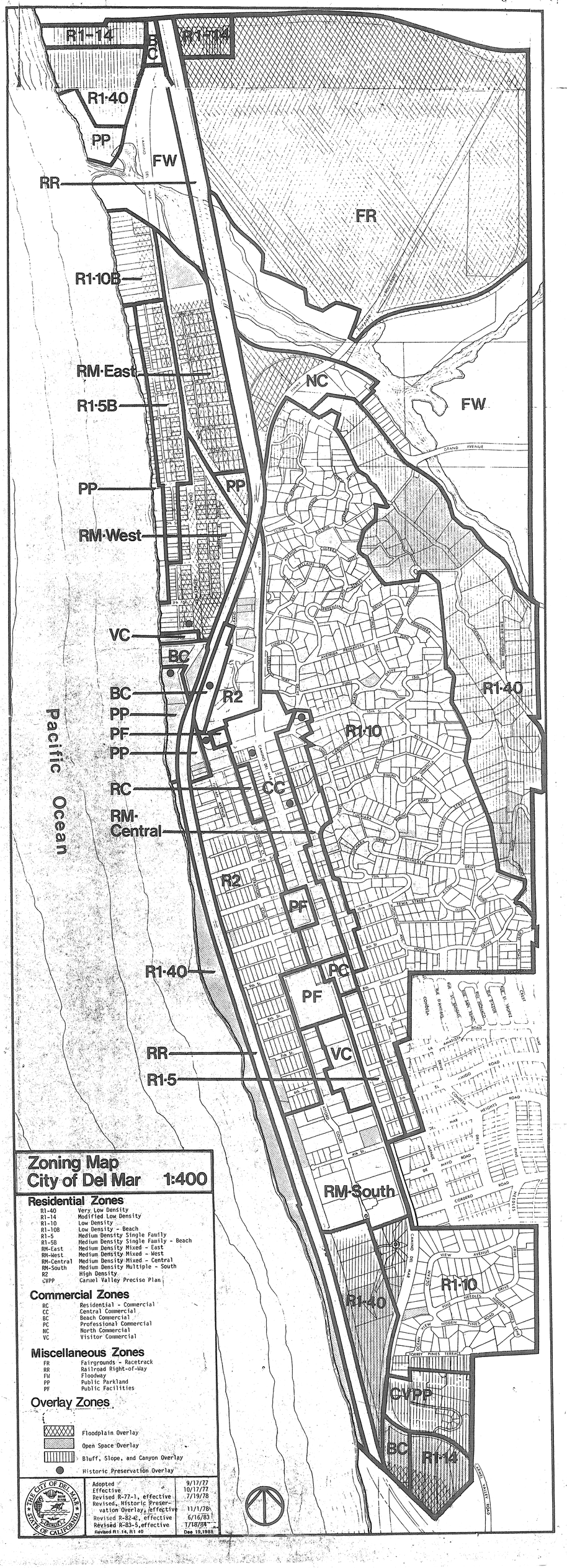
R1-14
BC
R1-14
R1-40
PP
FW
RR
FR
R1-10B
RM-East
R1-5B
NC
FW
PP
PP
RM-West
VC
BC
BC
R2
PP
PF
PP
RC
CC
RM-Central
R1-40
R1-10
R2
PF
PC
PF
R1-40
VC
RR
R1-5
RM-South
R1-10
R1-40
CVPP
BC
R1-14
Pacific Ocean
Zoning Map
City of Del Mar 1:400
Residential Zones
R1-40 Very Low Density
R1-14 Modified Low Density
R1-10 Low Density
R1-10B Low Density - Beach
R1-5 Medium Density Single Family
R1-5B Medium Density Single Family - Beach
RM-East Medium Density Mixed - East
RM-West Medium Density Mixed - West
RM-Central Medium Density Mixed - Central
RM-South Medium Density Multiple - South
R2 High Density
CVPP Carmel Valley Precise Plan
Commercial Zones
RC Residential - Commercial
CC Central Commercial
BC Beach Commercial
PC Professional Commercial
NC North Commercial
VC Visitor Commercial
Miscellaneous Zones
FR Fairgrounds - Racetrack
RR Railroad Right-of-Way
FW Floodway
PP Public Parkland
PF Public Facilities
Overlay Zones
Floodplain Overlay
Open Space Overlay
Bluff, Slope, and Canyon Overlay
Historic Preservation Overlay
THE CITY OF DEL MAR
STATE OF CALIFORNIA
Adopted 9/17/77
Effective 10/17/77
Revised R-77-1, effective 7/19/78
Revised, Historic Preservation Overlay, effective 11/1/78
Revised R-82-42, effective 6/16/83
Revised R-83-5, effective 1/18/84
Revised R1-14, R1-40 Dec 19,1988

**NOTE: The City has made every effort to ensure this maps accuracy. Please contact the City of Del Mar Planning Department regarding detailed zoning information and overlay zones. 858-755-9313 Counter Hours: 1pm - 5pm Monday-Friday

City of Del Mar
ZONING MAP

Residential Zones

- R1-40 Very Low Density
- R1-14 Modified Low Density
- R1-10 Low Density
- R1-10B Low Density - Beach
- R1-15 Medium Density Single Family
- R1-15B Medium Density Single Family - Beach
- RM - East Medium Density Mixed - East
- RM-West Medium Density Mixed - West
- RM-Central Medium Density Mixed - Central
- RM-South Medium Density Multiple - South
- R2 High Density
- CVPP Carmel Valley Precise Plan

Commercial Zones

- RC Residential - Commercial
- CC Central Commercial
- BC Beach Commercial
- PC Professional Commercial
- NC North Commercial
- VC Visitor Commercial

Miscellaneous Zones

- FR Fairgrounds - Racetrack
- RR Railroad Right-of-Way
- FW Floodway
- PP Public Parkland
- PF Public Facilities

- PSP Plaza Specific Plan
- HSP Hotel Specific Plan

0 1000 2000 3000 Feet

SANDAG
San Diego's Regional Planning Agency
November 2001

N
1:19585

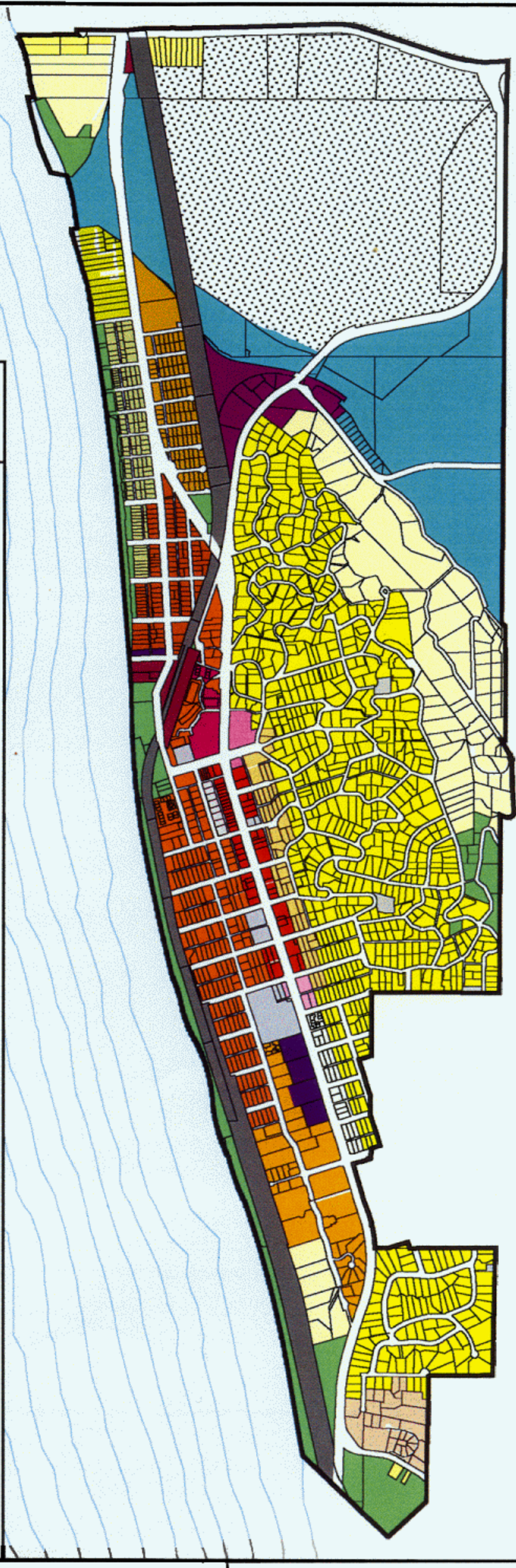

Exhibit D

Soil Types

Hydrologic Soil Group—San Diego County Area, California
(Camino Del Mar)

Map Scale: 1:3,710 if printed on A portrait (8.5" x 11") sheet.

N

Meters: 0 50 100 200 300

Feet: 0 150 300 600 900

Map projection: Web Mercator Corner coordinates: WGS84 Edge tics: UTM Zone 11N WGS84

MAP LEGEND

Area of Interest (AOI)

Area of Interest (AOI)

Soils

Soil Rating Polygons

- A
- A/D
- B
- B/D
- C
- C/D
- D
- Not rated or not available

Soil Rating Lines

- A
- A/D
- B
- B/D
- C
- C/D
- D
- Not rated or not available

Soil Rating Points

- A
- A/D
- B
- B/D
- C
- C/D
- D
- Not rated or not available

Water Features

Streams and Canals

Transportation

- Rails
- Interstate Highways
- US Routes
- Major Roads
- Local Roads

Background

Aerial Photography

MAP INFORMATION

The soil surveys that comprise your AOI were mapped at 1:24,000.

Warning: Soil Map may not be valid at this scale.

Enlargement of maps beyond the scale of mapping can cause misunderstanding of the detail of mapping and accuracy of soil line placement. The maps do not show the small areas of contrasting soils that could have been shown at a more detailed scale.

Please rely on the bar scale on each map sheet for map measurements.

Source of Map: Natural Resources Conservation Service
Web Soil Survey URL:
Coordinate System: Web Mercator (EPSG:3857)

Maps from the Web Soil Survey are based on the Web Mercator projection, which preserves direction and shape but distorts distance and area. A projection that preserves area, such as the Albers equal-area conic projection, should be used if more accurate calculations of distance or area are required.

This product is generated from the USDA-NRCS certified data as of the version date(s) listed below.

Soil Survey Area: San Diego County Area, California
Survey Area Data: Version 13, Sep 12, 2018

Soil map units are labeled (as space allows) for map scales 1:50,000 or larger.

Date(s) aerial images were photographed: Nov 3, 2014—Nov 22, 2014

The orthophoto or other base map on which the soil lines were compiled and digitized probably differs from the background imagery displayed on these maps. As a result, some minor shifting of map unit boundaries may be evident.

Hydrologic Soil Group

Map unit symbol	Map unit name	Rating	Acres in AOI	Percent of AOI
LG-W	Lagoon water		5.8	39.5%
Md	Made land		0.3	1.7%
MIC	Marina loamy coarse sand, 2 to 9 percent slopes	B	0.2	1.1%
TeF	Terrace escarpments		1.0	7.1%
Tf	Tidal flats	D	4.8	32.7%
TuB	Tujunga sand, 0 to 5 percent slopes	A	2.6	17.9%
Totals for Area of Interest			**14.7**	**100.0%**

Description

Hydrologic soil groups are based on estimates of runoff potential. Soils are assigned to one of four groups according to the rate of water infiltration when the soils are not protected by vegetation, are thoroughly wet, and receive precipitation from long-duration storms.

The soils in the United States are assigned to four groups (A, B, C, and D) and three dual classes (A/D, B/D, and C/D). The groups are defined as follows:

Group A. Soils having a high infiltration rate (low runoff potential) when thoroughly wet. These consist mainly of deep, well drained to excessively drained sands or gravelly sands. These soils have a high rate of water transmission.

Group B. Soils having a moderate infiltration rate when thoroughly wet. These consist chiefly of moderately deep or deep, moderately well drained or well drained soils that have moderately fine texture to moderately coarse texture. These soils have a moderate rate of water transmission.

Group C. Soils having a slow infiltration rate when thoroughly wet. These consist chiefly of soils having a layer that impedes the downward movement of water or soils of moderately fine texture or fine texture. These soils have a slow rate of water transmission.

Group D. Soils having a very slow infiltration rate (high runoff potential) when thoroughly wet. These consist chiefly of clays that have a high shrink-swell potential, soils that have a high water table, soils that have a claypan or clay layer at or near the surface, and soils that are shallow over nearly impervious material. These soils have a very slow rate of water transmission.

If a soil is assigned to a dual hydrologic group (A/D, B/D, or C/D), the first letter is for drained areas and the second is for undrained areas. Only the soils that in their natural condition are in group D are assigned to dual classes.

Rating Options

Aggregation Method: Dominant Condition

Component Percent Cutoff: None Specified

Tie-break Rule: Higher

Exhibit E

FEMA Flood Insurance Rate Map

National Flood Hazard Layer FIRMette

FEMA

32°58'45.43"N

117°16'21.26"W

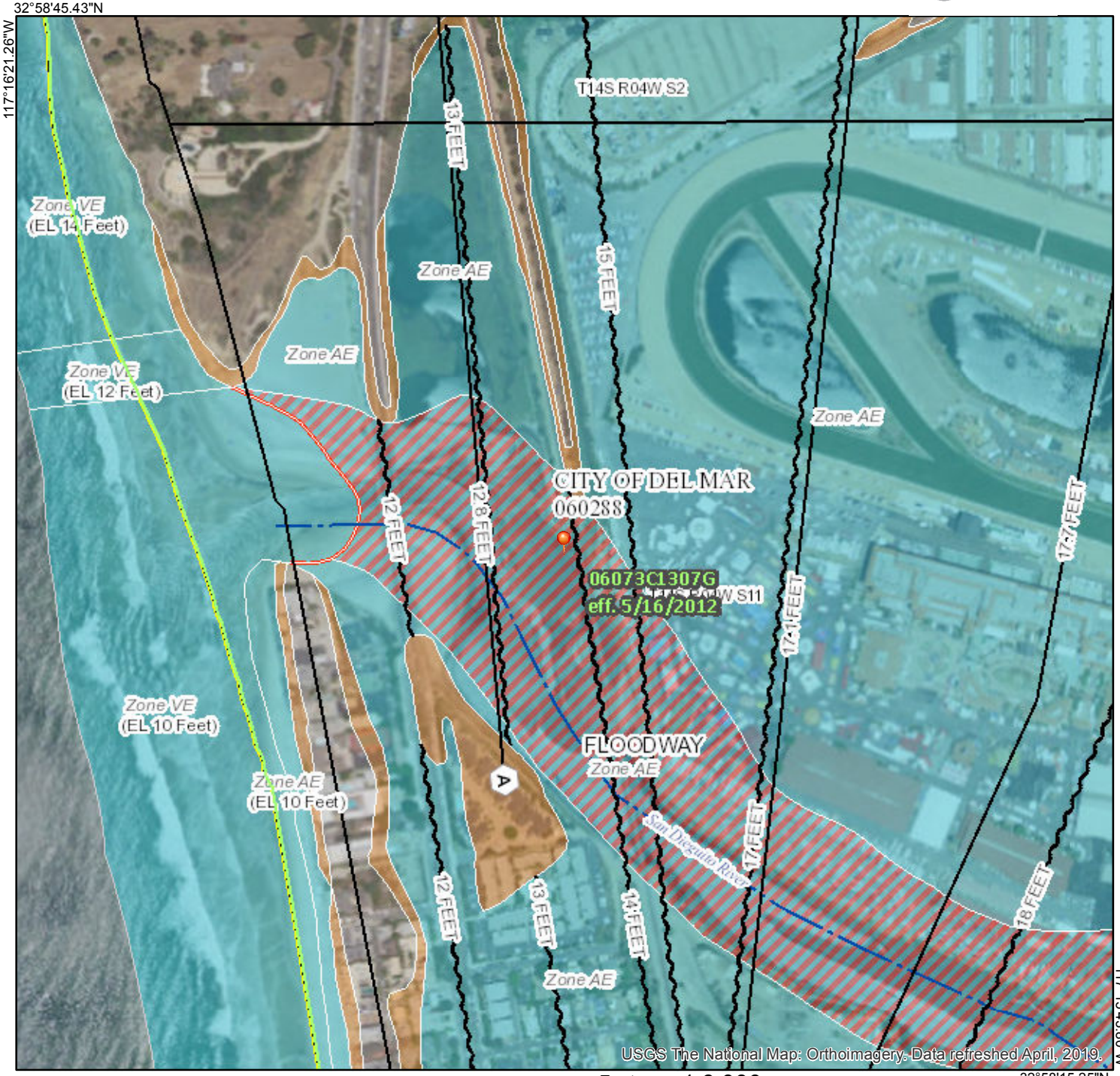

117°15'43.80"W

32°58'15.25"N

Feet 1:6,000

0 250 500 1,000 1,500 2,000

Legend

SEE FIS REPORT FOR DETAILED LEGEND AND INDEX MAP FOR FIRM PANEL LAYOUT

SPECIAL FLOOD HAZARD AREAS

- Without Base Flood Elevation (BFE) *Zone A, V, A99*
- With BFE or Depth *Zone AE, AO, AH, VE, AR*
- Regulatory Floodway

OTHER AREAS OF FLOOD HAZARD

- 0.2% Annual Chance Flood Hazard, Areas of 1% annual chance flood with average depth less than one foot or with drainage areas of less than one square mile *Zone X*
- Future Conditions 1% Annual Chance Flood Hazard *Zone X*
- Area with Reduced Flood Risk due to Levee. See Notes. *Zone X*
- Area with Flood Risk due to Levee *Zone D*

OTHER AREAS

- NO SCREEN Area of Minimal Flood Hazard *Zone X*
- Effective LOMRs
- Area of Undetermined Flood Hazard *Zone D*

GENERAL STRUCTURES

- Channel, Culvert, or Storm Sewer
- Levee, Dike, or Floodwall

OTHER FEATURES

- B 20.2 / 17.5 Cross Sections with 1% Annual Chance Water Surface Elevation
- 8 Coastal Transect
- 513 Base Flood Elevation Line (BFE)
- Limit of Study
- Jurisdiction Boundary
- Coastal Transect Baseline
- Profile Baseline
- Hydrographic Feature

MAP PANELS

- Digital Data Available
- No Digital Data Available
- Unmapped

N

The pin displayed on the map is an approximate point selected by the user and does not represent an authoritative property location.

This map complies with FEMA's standards for the use of digital flood maps if it is not void as described below. The basemap shown complies with FEMA's basemap accuracy standards

The flood hazard information is derived directly from the authoritative NFHL web services provided by FEMA. This map was exported on 5/14/2019 at 6:07:55 PM and does not reflect changes or amendments subsequent to this date and time. The NFHL and effective information may change or become superseded by new data over time.

This map image is void if the one or more of the following map elements do not appear: basemap imagery, flood zone labels, legend, scale bar, map creation date, community identifiers, FIRM panel number, and FIRM effective date. Map images for unmapped and unmodernized areas cannot be used for regulatory purposes.

Appendix A

Hydrology Manual Excerpts

Isopluvial Maps – 100-Year 6-Hour & 24-Hour

Hydrology Maps

Rational Method Calculations

Hydrology Manual Excerpts

Table 3-1
RUNOFF COEFFICIENTS FOR URBAN AREAS

Land Use		Runoff Coefficient "C"				
			Soil Type			
NRCS Elements	County Elements	% IMPER.	A	B	C	D
Undisturbed Natural Terrain (Natural)	Permanent Open Space	0*	0.20	0.25	0.30	0.35
Low Density Residential (LDR)	Residential, 1.0 DU/A or less	10	0.27	0.32	0.36	0.41
Low Density Residential (LDR)	Residential, 2.0 DU/A or less	20	0.34	0.38	0.42	0.46
Low Density Residential (LDR)	Residential, 2.9 DU/A or less	25	0.38	0.41	0.45	0.49
Medium Density Residential (MDR)	Residential, 4.3 DU/A or less	30	0.41	0.45	0.48	0.52
Medium Density Residential (MDR)	Residential, 7.3 DU/A or less	40	0.48	0.51	0.54	0.57
Medium Density Residential (MDR)	Residential, 10.9 DU/A or less	45	0.52	0.54	0.57	0.60
Medium Density Residential (MDR)	Residential, 14.5 DU/A or less	50	0.55	0.58	0.60	0.63
High Density Residential (HDR)	Residential, 24.0 DU/A or less	65	0.66	0.67	0.69	0.71
High Density Residential (HDR)	Residential, 43.0 DU/A or less	80	0.76	0.77	0.78	0.79
Commercial/Industrial (N. Com)	Neighborhood Commercial	80	0.76	0.77	0.78	0.79
Commercial/Industrial (G. Com)	General Commercial	85	0.80	0.80	0.81	0.82
Commercial/Industrial (O.P. Com)	Office Professional/Commercial	90	0.83	0.84	0.84	0.85
Commercial/Industrial (Limited I.)	Limited Industrial	90	0.83	0.84	0.84	0.85
Commercial/Industrial (General I.)	General Industrial	95	0.87	0.87	0.87	0.87

*The values associated with 0% impervious may be used for direct calculation of the runoff coefficient as described in Section 3.1.2 (representing the pervious runoff coefficient, Cp, for the soil type), or for areas that will remain undisturbed in perpetuity. Justification must be given that the area will remain natural forever (e.g., the area is located in Cleveland National Forest).
DU/A = dwelling units per acre
NRCS = National Resources Conservation Service

Note that the Initial Time of Concentration should be reflective of the general land-use at the upstream end of a drainage basin. A single lot with an area of two or less acres does not have a significant effect where the drainage basin area is 20 to 600 acres.

Table 3-2 provides limits of the length (Maximum Length (L_M)) of sheet flow to be used in hydrology studies. Initial T_i values based on average C values for the Land Use Element are also included. These values can be used in planning and design applications as described below. Exceptions may be approved by the "Regulating Agency" when submitted with a detailed study.

Table 3-2

MAXIMUM OVERLAND FLOW LENGTH (L_M) & INITIAL TIME OF CONCENTRATION (T_i)

Element*	DU/	.5%		1%		2%		3%		5%		10%	
	Acre	L_M	T_i	L_M	T_i	L_M	T_i	L_M	T_i	L_M	T_i	L_M	T_i
Natural		50	13.2	70	12.5	85	10.9	100	10.3	100	8.7	100	6.9
LDR	1	50	12.2	70	11.5	85	10.0	100	9.5	100	8.0	100	6.4
LDR	2	50	11.3	70	10.5	85	9.2	100	8.8	100	7.4	100	5.8
LDR	2.9	50	10.7	70	10.0	85	8.8	95	8.1	100	7.0	100	5.6
MDR	4.3	50	10.2	70	9.6	80	8.1	95	7.8	100	6.7	100	5.3
MDR	7.3	50	9.2	65	8.4	80	7.4	95	7.0	100	6.0	100	4.8
MDR	10.9	50	8.7	65	7.9	80	6.9	90	6.4	100	5.7	100	4.5
MDR	14.5	50	8.2	65	7.4	80	6.5	90	6.0	100	5.4	100	4.3
HDR	24	50	6.7	65	6.1	75	5.1	90	4.9	95	4.3	100	3.5
HDR	43	50	5.3	65	4.7	75	4.0	85	3.8	95	3.4	100	2.7
N. Com		50	5.3	60	4.5	75	4.0	85	3.8	95	3.4	100	2.7
G. Com		50	4.7	60	4.1	75	3.6	85	3.4	90	2.9	100	2.4
O.P./Com		50	4.2	60	3.7	70	3.1	80	2.9	90	2.6	100	2.2
Limited I.		50	4.2	60	3.7	70	3.1	80	2.9	90	2.6	100	2.2
General I.		50	3.7	60	3.2	70	2.7	80	2.6	90	2.3	100	1.9

*See Table 3-1 for more detailed description

Isopluvial Maps – 100-Year 6-Hour & 24-Hour

Camino del Mar Bridge, Bridge No. 57C-0209

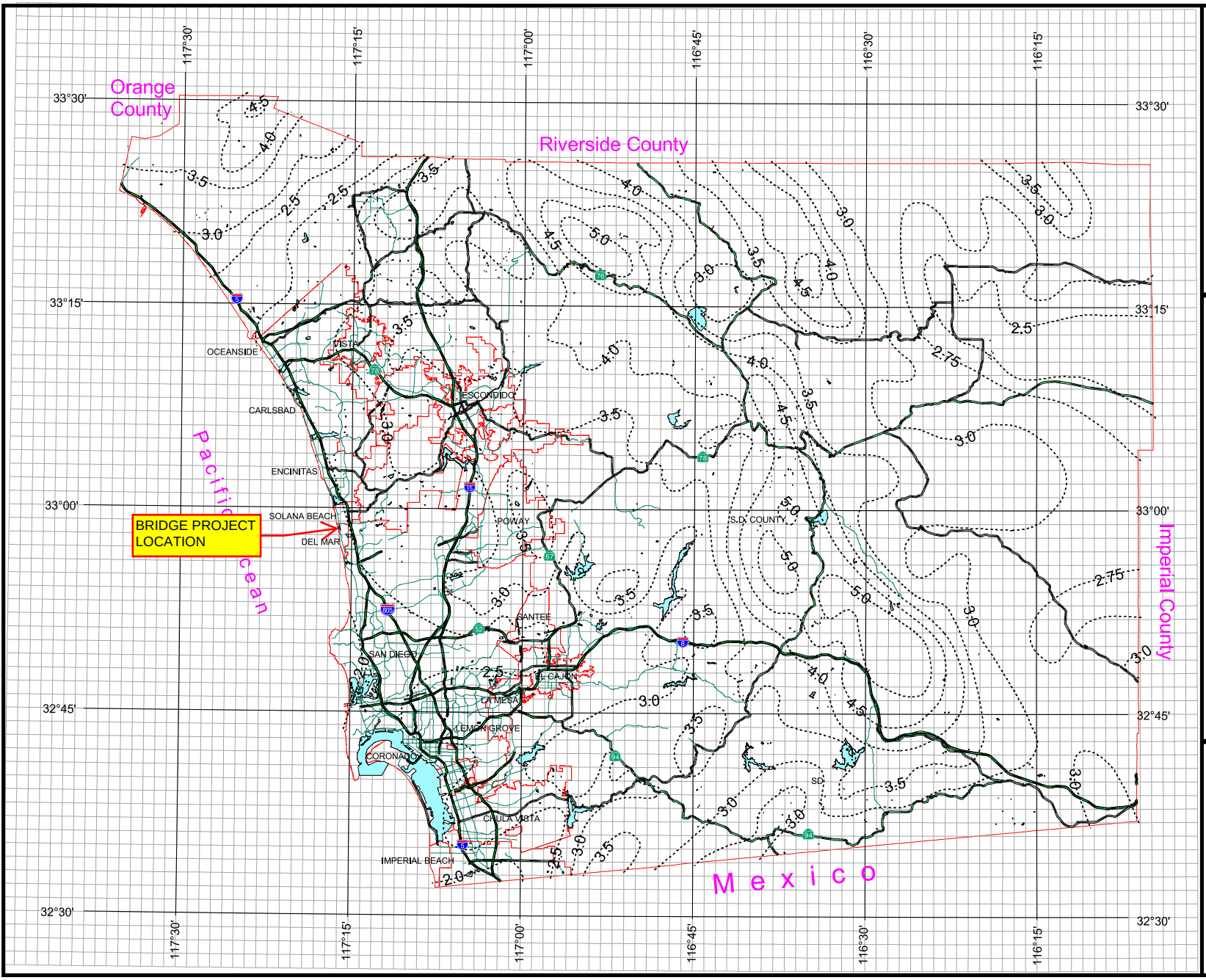

County of San Diego Hydrology Manual

Rainfall Isopluvials

100 Year Rainfall Event - 6 Hours

Isopluvial (inches)

100-YR, P6 = 2.45 IN

DPW GIS
Department of Public Works
Geographic Information Services

SanGIS
We Have San Diego Covered!

N
W E
S

3 0 3 Miles

THIS MAP IS PROVIDED WITHOUT WARRANTY OF ANY KIND, EITHER EXPRESS OR IMPLIED, INCLUDING, BUT NOT LIMITED TO, THE IMPLIED WARRANTIES OF MERCHANTABILITY AND FITNESS FOR A PARTICULAR PURPOSE. Copyright SanGIS. All Rights Reserved.

This products may contain information from the SANDAG Regional Information System which cannot be reproduced without the written permission of SANDAG.

This product may contain information which has been reproduced with permission granted by Thomas Brothers Maps.

Camino del Mar Bridge, Bridge No. 57C-0209

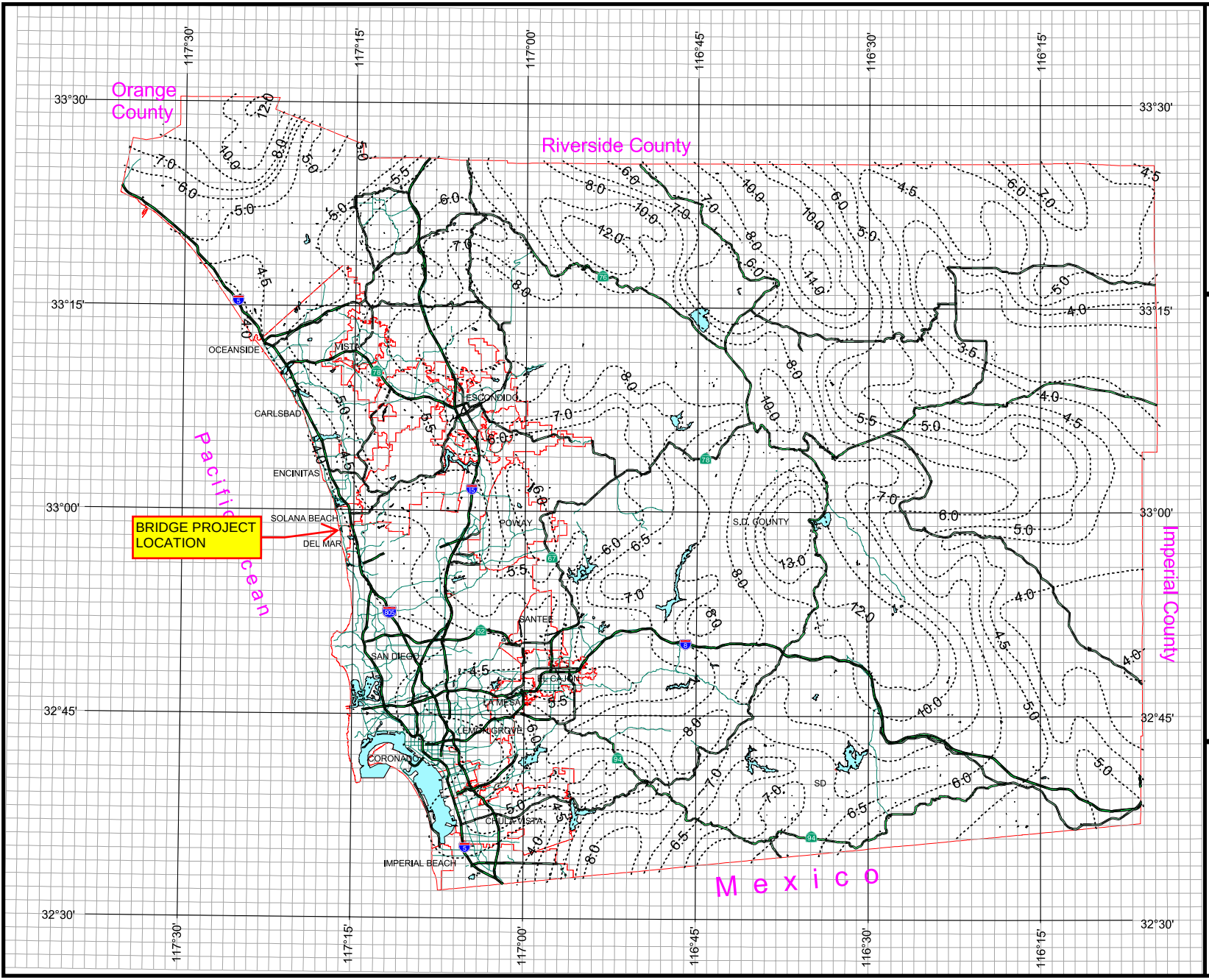

County of San Diego Hydrology Manual

Rainfall Isopluvials

100 Year Rainfall Event - 24 Hours

Isopluvial (inches)

100-YR, P24 = 3.9 IN

DPW GIS
Department of Public Works
Geographic Information Services

SanGIS
We Have San Diego Covered!

N
W E
S

3 0 3 Miles

THIS MAP IS PROVIDED WITHOUT WARRANTY OF ANY KIND, EITHER EXPRESS OR IMPLIED, INCLUDING, BUT NOT LIMITED TO, THE IMPLIED WARRANTIES OF MERCHANTABILITY AND FITNESS FOR A PARTICULAR PURPOSE. Copyright SanGIS. All Rights Reserved.

This products may contain information from the SANDAG Regional Information System which cannot be reproduced without the written permission of SANDAG.

This product may contain information which has been reproduced with permission granted by Thomas Brothers Maps.

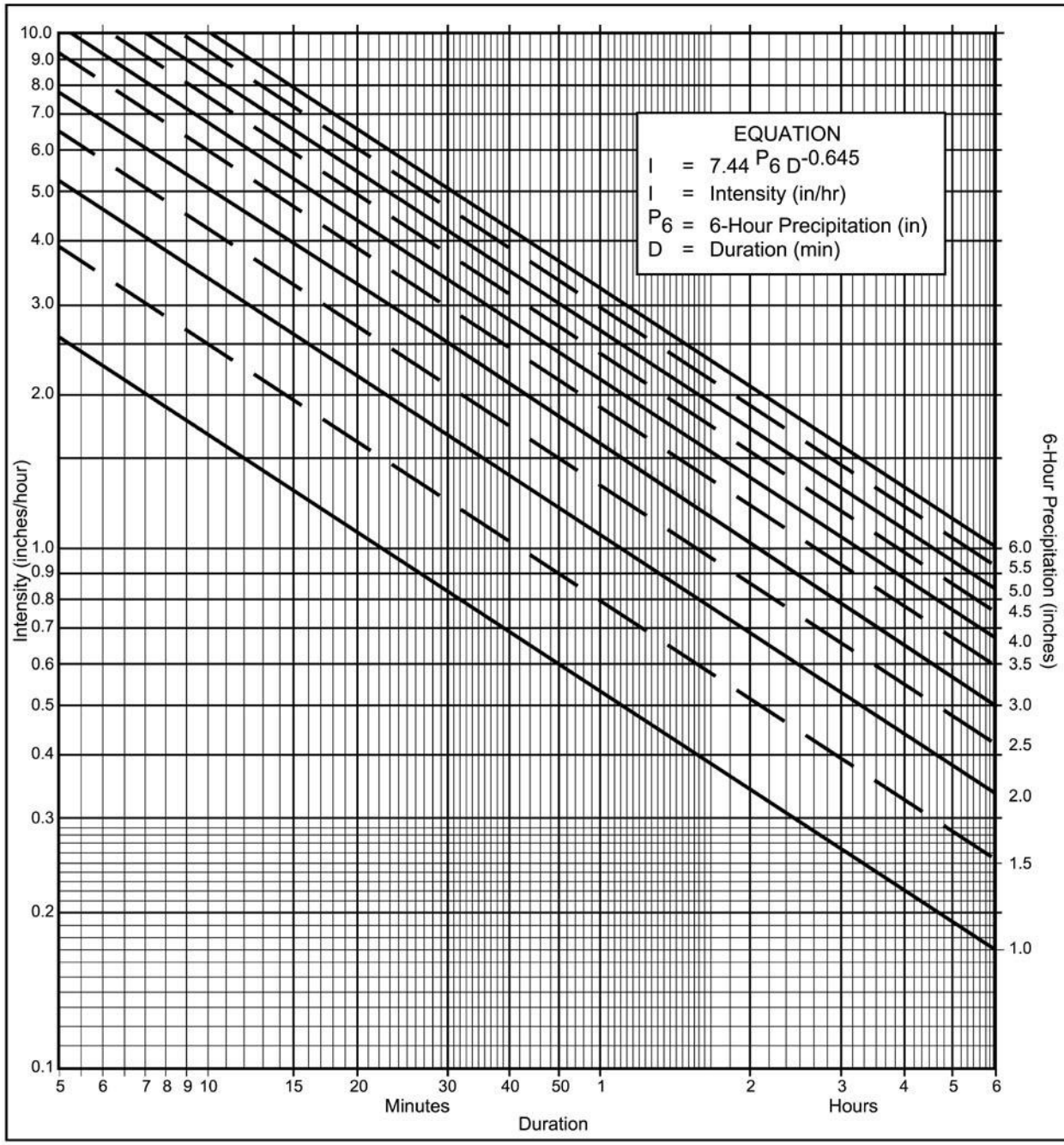

Directions for Application:

(1) From precipitation maps determine 6 hr and 24 hr amounts for the selected frequency. These maps are included in the County Hydrology Manual (10, 50, and 100 yr maps included in the Design and Procedure Manual).

(2) Adjust 6 hr precipitation (if necessary) so that it is within the range of 45% to 65% of the 24 hr precipitation (not applicaple to Desert).

(3) Plot 6 hr precipitation on the right side of the chart.

(4) Draw a line through the point parallel to the plotted lines.

(5) This line is the intensity-duration curve for the location being analyzed.

Application Form:

(a) Selected frequency 100 year

(b) P_6 = 2.45 in., P_{24} = 3.9 , $\frac{P_6}{P_{24}}$ = 62.8 %(2)

(c) Adjusted P_6(2) = 2.45 in.

(d) t_x = _____ min.

(e) I = _____ in./hr.

Note: This chart replaces the Intensity-Duration-Frequency curves used since 1965.

P6	1	1.5	2	2.5	3	3.5	4	4.5	5	5.5	6
Duration	I	I	I	I	I	I	I	I	I	I	I
5	2.63	3.95	5.27	6.59	7.90	9.22	10.54	11.86	13.17	14.49	15.81
7	2.12	3.18	4.24	5.30	6.36	7.42	8.48	9.54	10.60	11.66	12.72
10	1.68	2.53	3.37	4.21	5.05	5.90	6.74	7.58	8.42	9.27	10.11
15	1.30	1.95	2.59	3.24	3.89	4.54	5.19	5.84	6.49	7.13	7.78
20	1.08	1.62	2.15	2.69	3.23	3.77	4.31	4.85	5.39	5.93	6.46
25	0.93	1.40	1.87	2.33	2.80	3.27	3.73	4.20	4.67	5.13	5.60
30	0.83	1.24	1.66	2.07	2.49	2.90	3.32	3.73	4.15	4.56	4.98
40	0.69	1.03	1.38	1.72	2.07	2.41	2.76	3.10	3.45	3.79	4.13
50	0.60	0.90	1.19	1.49	1.79	2.09	2.39	2.69	2.98	3.28	3.58
60	0.53	0.80	1.06	1.33	1.59	1.86	2.12	2.39	2.65	2.92	3.18
90	0.41	0.61	0.82	1.02	1.23	1.43	1.63	1.84	2.04	2.25	2.45
120	0.34	0.51	0.68	0.85	1.02	1.19	1.36	1.53	1.70	1.87	2.04
150	0.29	0.44	0.59	0.73	0.88	1.03	1.18	1.32	1.47	1.62	1.76
180	0.26	0.39	0.52	0.65	0.78	0.91	1.04	1.18	1.31	1.44	1.57
240	0.22	0.33	0.43	0.54	0.65	0.76	0.87	0.98	1.08	1.19	1.30
300	0.19	0.28	0.38	0.47	0.56	0.66	0.75	0.85	0.94	1.03	1.13
360	0.17	0.25	0.33	0.42	0.50	0.58	0.67	0.75	0.84	0.92	1.00

Intensity-Duration Design Chart - Template

FIGURE

3-1

Hydrology Maps

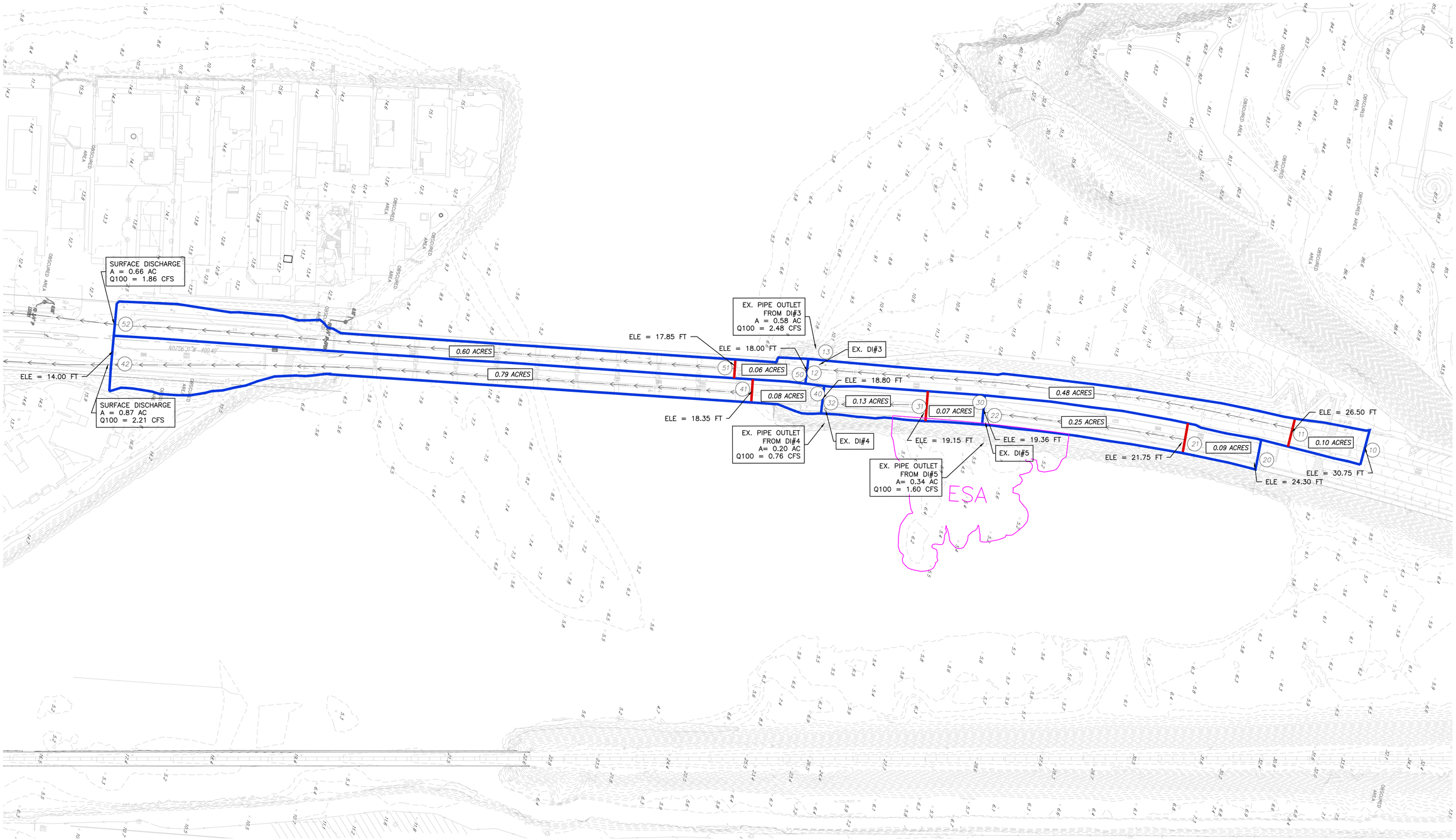

LEGEND

WATERSHED BOUNDARY	
DRAINAGE BOUNDARY	
INITIAL SUBAREA	
DRAINAGE FLOWPATH	
MODEL NODE #	
SUBAREA ACREAGE	1.31 ACRES

CAMINO DEL MAR BRIDGE
EXISTING CONDITION HYDROLOGY MAP

60 30 0 60 120

SCALE: 1" = 60'

EXISTING CONDITION HYDROLOGY MAP

SAN DIEGUITO ENGINEERING, INC
462 STEVENS AVE. Ste. 305
SOLANA BEACH, CA
92075-2066
PHONE: (858) 345-1149
www.sdeinc.com
CIVIL ENGINEERING • PLANNING
LAND SURVEYING

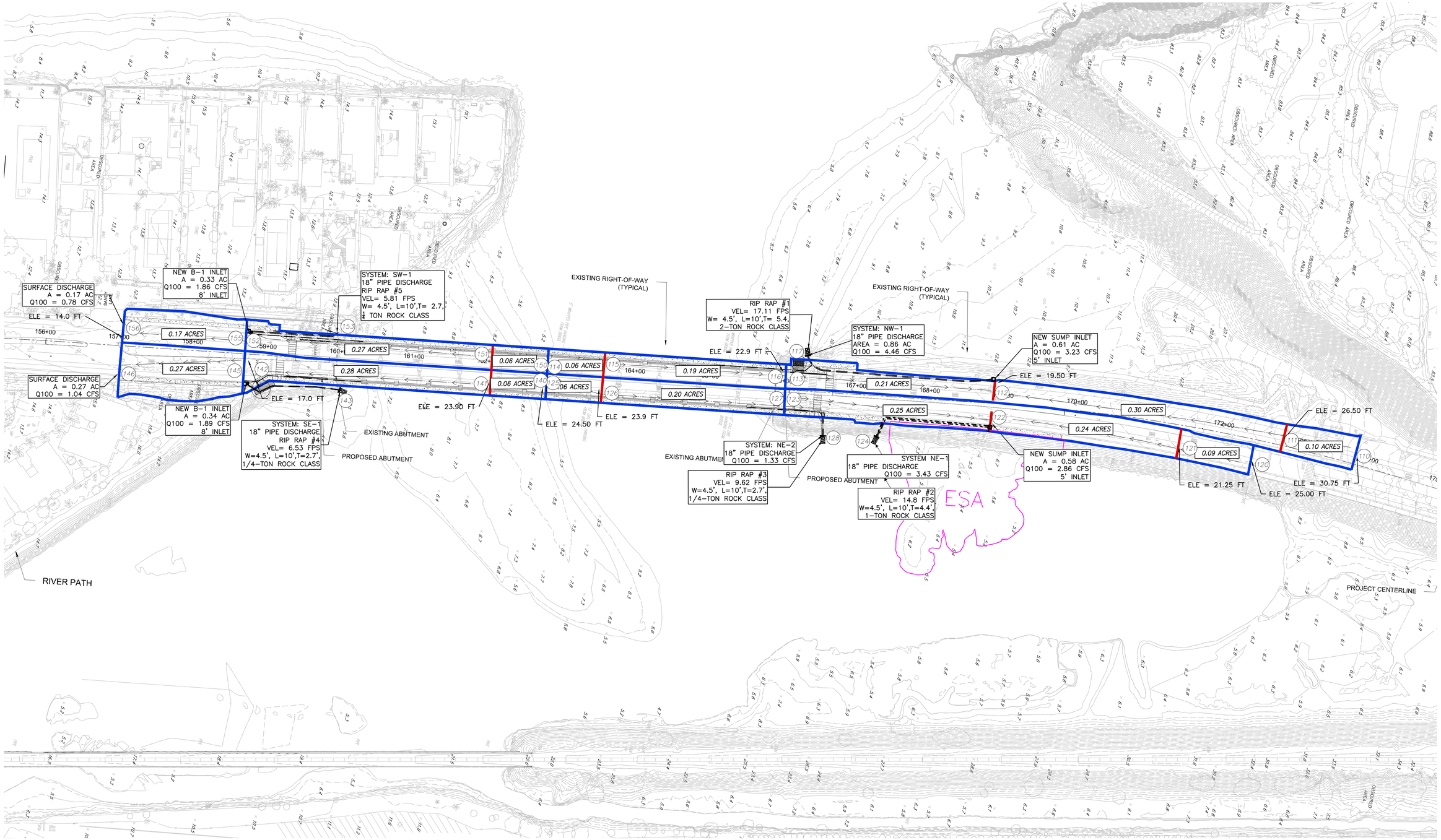

CAMINO DEL MAR BRIDGE
PROPOSED CONDITION HYDROLOGY MAP

LEGEND

- DRAINAGE BOUNDARY
- INITIAL SUBAREA
- DRAINAGE FLOWPATH
- MODEL NODE #
- SUBAREA ACREAGE — xx ACRES

60 30 0 60 120

SCALE: 1" = 60'

EXISTING CONDITION HYDROLOGY MAP

SAN DIEGUITO ENGINEERING, INC
462 STEVENS AVE. Ste. 305
SOLANA BEACH, CA
92075-2066
PHONE: (858) 345-1149
www.sdeinc.com
CIVIL ENGINEERING • PLANNING
LAND SURVEYING

I:\!DATA_PROJECTS\PN5794-04 FLOWFIELDER-CAMINO DEL MAR BRIDGE\CAD FILES\PN5794-04-DEL MAR BRIDGE-HYDRO-PRLIMS, 2022-04-25

Rational Method Calculations

Q100- Existing Condition Model

PW5794.04- Camino del Mar Bridge, Del Mar
Runoff Coefficient Determination

Existing Condition																		
Upstream Node	Downstream Node	Impervious (road, roofs, sidewalk)		Bldg		Landscape		Natural		Total Driveway	Driveway w/o Pavers		Pavers		Σ(a x c)	Total Subarea		Runoff Coeff per SDCHM
		sf	C-coeff	sf	c-coeff	sf	c-coeff	sf	c-coeff	sf	sf	c-coeff	sf	c-coeff		sf	ac	
10	11	3,719	0.90	0	0.90	580	0.35	0	0.35	0	0.00	0.90	0	0.35	3550	4299	0.10	0.83
11	12	20,214	0.90	0	0.90	672	0.35	0	0.35	0	0.00	0.90	0	0.35	18428	20886	0.48	0.88
20	21	3,327	0.90	0	0.90	549	0.35	0	0.35	0	0.00	0.90	0	0.35	3186	3876	0.09	0.82
21	22	8,946	0.90	0	0.90	2,160	0.35	0	0.35	0	0.00	0.90	0	0.35	8807	11106	0.25	0.79
30	31	2,290	0.90	0	0.90	705	0.35	0	0.35	0	0.00	0.90	0	0.35	2308	2995	0.07	0.77
31	32	4,131	0.90	0	0.90	1,363	0.35	0	0.35	0	0.00	0.90	0	0.35	4195	5494	0.13	0.76
40	41	2,617	0.90	0	0.90	692	0.35	0	0.35	0	0.00	0.90	0	0.35	2598	3309	0.08	0.78
41	42	26,172	0.90	0	0.90	8,108	0.35	0	0.35	0	0.00	0.90	0	0.35	26393	34280	0.79	0.77
50	51	2,356	0.90	0	0.90	335	0.35	0	0.35	0	0.00	0.90	0	0.35	2238	2691	0.06	0.83
51	52	22,418	0.90	0	0.90	3,513	0.35	0	0.35	0	0.00	0.90	0	0.35	21406	25931	0.60	0.83
		96,190		0		18,677		0		0	0		0			114867	2.64	

Q100- Existing Condition Model

```
****************************************************************************

            RATIONAL METHOD HYDROLOGY COMPUTER PROGRAM PACKAGE
            Reference: SAN DIEGO COUNTY FLOOD CONTROL DISTRICT
                         2003,1985,1981 HYDROLOGY MANUAL
         (c) Copyright 1982-2016 Advanced Engineering Software (aes)
             Ver. 23.0 Release Date: 07/01/2016  License ID 1690

                           Analysis prepared by:




 ************************** DESCRIPTION OF STUDY **************************
* CAMINO DEL MAR BRIDGE                                                    *
* 100-YEAR HYDROLOGIC ANALYSIS- EXISTING CONDITION                         *
* PW5794.04                                                                *
 ****************************************************************************

  FILE NAME: C:\AES\PW5794\EX100.DAT
  TIME/DATE OF STUDY: 14:07 04/24/2022
----------------------------------------------------------------------------
  USER SPECIFIED HYDROLOGY AND HYDRAULIC MODEL INFORMATION:
----------------------------------------------------------------------------
  2003 SAN DIEGO MANUAL CRITERIA

  USER SPECIFIED STORM EVENT(YEAR) = 100.00
  6-HOUR DURATION PRECIPITATION (INCHES) =   2.450
  SPECIFIED MINIMUM PIPE SIZE(INCH) =  12.00
  SPECIFIED PERCENT OF GRADIENTS(DECIMAL) TO USE FOR FRICTION SLOPE = 0.90
  SAN DIEGO HYDROLOGY MANUAL "C"-VALUES USED FOR RATIONAL METHOD
  NOTE: USE MODIFIED RATIONAL METHOD PROCEDURES FOR CONFLUENCE ANALYSIS
  *USER-DEFINED STREET-SECTIONS FOR COUPLED PIPEFLOW AND STREETFLOW MODEL*
     HALF-  CROWN TO   STREET-CROSSFALL:   CURB  GUTTER-GEOMETRIES:  MANNING
     WIDTH  CROSSFALL  IN-  / OUT-/PARK-  HEIGHT  WIDTH  LIP   HIKE  FACTOR
NO.   (FT)     (FT)    SIDE / SIDE/ WAY    (FT)    (FT)  (FT)  (FT)    (n)
===  =====  =========  =================  ======  ===== ====== ===== =======
  1   28.0     20.0    0.020/0.020/0.020   0.50    1.50 0.0313 0.125 0.0160
  2   20.0     15.0    0.020/0.020/0.020   0.50    1.50 0.0313 0.125 0.0160

  GLOBAL STREET FLOW-DEPTH CONSTRAINTS:
    1. Relative Flow-Depth =  0.00 FEET
       as (Maximum Allowable Street Flow Depth) - (Top-of-Curb)
    2. (Depth)*(Velocity) Constraint =  0.0 (FT*FT/S)
  *SIZE PIPE WITH A FLOW CAPACITY GREATER THAN
   OR EQUAL TO THE UPSTREAM TRIBUTARY PIPE.*

****************************************************************************
  FLOW PROCESS FROM NODE     10.00 TO NODE     11.00 IS CODE =  21
----------------------------------------------------------------------------
  >>>>>RATIONAL METHOD INITIAL SUBAREA ANALYSIS<<<<<
============================================================================
  *USER SPECIFIED(SUBAREA):
  STREETS & ROADS (CURBS/STORM DRAINS) RUNOFF COEFFICIENT = .8300
  S.C.S. CURVE NUMBER (AMC II) =   0
  INITIAL SUBAREA FLOW-LENGTH(FEET) =   100.00
  UPSTREAM ELEVATION(FEET) =     30.75
  DOWNSTREAM ELEVATION(FEET) =     26.50
  ELEVATION DIFFERENCE(FEET) =      4.25
  SUBAREA OVERLAND TIME OF FLOW(MIN.) =    2.787
  WARNING: INITIAL SUBAREA FLOW PATH LENGTH IS GREATER THAN
           THE MAXIMUM OVERLAND FLOW LENGTH =    86.25
           (Reference: Table 3-1B of Hydrology Manual)
           THE MAXIMUM OVERLAND FLOW LENGTH IS USED IN Tc CALCULATION!
   100 YEAR RAINFALL INTENSITY(INCH/HOUR) =  6.455
  NOTE: RAINFALL INTENSITY IS BASED ON Tc = 5-MINUTE.
  SUBAREA RUNOFF(CFS) =      0.54
  TOTAL AREA(ACRES) =      0.10   TOTAL RUNOFF(CFS) =      0.54

****************************************************************************
  FLOW PROCESS FROM NODE     11.00 TO NODE     12.00 IS CODE =  61
----------------------------------------------------------------------------
  >>>>>COMPUTE STREET FLOW TRAVEL TIME THRU SUBAREA<<<<<
```

```
  >>>>>(STANDARD CURB SECTION USED)<<<<<
==============================================================================
  UPSTREAM ELEVATION(FEET) =   26.50  DOWNSTREAM ELEVATION(FEET) =   18.00
  STREET LENGTH(FEET) =   651.00   CURB HEIGHT(INCHES) =  6.0
  STREET HALFWIDTH(FEET) = 22.00

  DISTANCE FROM CROWN TO CROSSFALL GRADEBREAK(FEET) =  11.00
  INSIDE STREET CROSSFALL(DECIMAL) =  0.020
  OUTSIDE STREET CROSSFALL(DECIMAL)  =  0.020

  SPECIFIED NUMBER OF HALFSTREETS CARRYING RUNOFF =  1
  STREET PARKWAY CROSSFALL(DECIMAL)  =  0.020
  Manning's FRICTION FACTOR for Streetflow Section(curb-to-curb) =   0.0150
  Manning's FRICTION FACTOR for Back-of-Walk Flow Section =   0.0200

    **TRAVEL TIME COMPUTED USING ESTIMATED FLOW(CFS) =       1.59
    STREETFLOW MODEL RESULTS USING ESTIMATED FLOW:
    STREET FLOW DEPTH(FEET) =  0.28
    HALFSTREET FLOOD WIDTH(FEET) =    7.70
    AVERAGE FLOW VELOCITY(FEET/SEC.) =    2.24
    PRODUCT OF DEPTH&VELOCITY(FT*FT/SEC.) =    0.63
  STREET FLOW TRAVEL TIME(MIN.) =   4.85   Tc(MIN.) =    7.63
   100 YEAR RAINFALL INTENSITY(INCH/HOUR) =  4.914
  *USER SPECIFIED(SUBAREA):
  STREETS & ROADS (CURBS/STORM DRAINS) RUNOFF COEFFICIENT = .8800
  S.C.S. CURVE NUMBER (AMC II) =   0
  AREA-AVERAGE RUNOFF COEFFICIENT =  0.871
  SUBAREA AREA(ACRES) =    0.48      SUBAREA RUNOFF(CFS) =    2.08
  TOTAL AREA(ACRES) =        0.6        PEAK FLOW RATE(CFS) =       2.48

  END OF SUBAREA STREET FLOW HYDRAULICS:
  DEPTH(FEET) = 0.31   HALFSTREET FLOOD WIDTH(FEET) =   9.40
  FLOW VELOCITY(FEET/SEC.) =  2.48   DEPTH*VELOCITY(FT*FT/SEC.) =   0.78
  LONGEST FLOWPATH FROM NODE     10.00 TO NODE     12.00 =     751.00 FEET.

****************************************************************************
  FLOW PROCESS FROM NODE     20.00 TO NODE     21.00 IS CODE =  21
----------------------------------------------------------------------------
  >>>>>RATIONAL METHOD INITIAL SUBAREA ANALYSIS<<<<<
==============================================================================
  *USER SPECIFIED(SUBAREA):
  STREETS & ROADS (CURBS/STORM DRAINS) RUNOFF COEFFICIENT = .8200
  S.C.S. CURVE NUMBER (AMC II) =   0
  INITIAL SUBAREA FLOW-LENGTH(FEET) =   100.00
  UPSTREAM ELEVATION(FEET) =     24.30
  DOWNSTREAM ELEVATION(FEET) =     21.75
  ELEVATION DIFFERENCE(FEET) =      2.55
  SUBAREA OVERLAND TIME OF FLOW(MIN.) =    3.206
  WARNING: INITIAL SUBAREA FLOW PATH LENGTH IS GREATER THAN
           THE MAXIMUM OVERLAND FLOW LENGTH =    75.50
           (Reference: Table 3-1B of Hydrology Manual)
           THE MAXIMUM OVERLAND FLOW LENGTH IS USED IN Tc CALCULATION!
   100 YEAR RAINFALL INTENSITY(INCH/HOUR) =  6.455
  NOTE: RAINFALL INTENSITY IS BASED ON Tc = 5-MINUTE.
  SUBAREA RUNOFF(CFS) =      0.48
  TOTAL AREA(ACRES) =      0.09   TOTAL RUNOFF(CFS) =      0.48

****************************************************************************
  FLOW PROCESS FROM NODE     21.00 TO NODE     22.00 IS CODE =  61
----------------------------------------------------------------------------
  >>>>>COMPUTE STREET FLOW TRAVEL TIME THRU SUBAREA<<<<<
  >>>>>(STANDARD CURB SECTION USED)<<<<<
==============================================================================
  UPSTREAM ELEVATION(FEET) =   21.75  DOWNSTREAM ELEVATION(FEET) =   19.36
  STREET LENGTH(FEET) =   270.00   CURB HEIGHT(INCHES) =  6.0
  STREET HALFWIDTH(FEET) = 28.00

  DISTANCE FROM CROWN TO CROSSFALL GRADEBREAK(FEET) =  14.00
  INSIDE STREET CROSSFALL(DECIMAL) =  0.020
  OUTSIDE STREET CROSSFALL(DECIMAL)  =  0.020

  SPECIFIED NUMBER OF HALFSTREETS CARRYING RUNOFF =  1
  STREET PARKWAY CROSSFALL(DECIMAL)  =  0.020
  Manning's FRICTION FACTOR for Streetflow Section(curb-to-curb) =   0.0150
  Manning's FRICTION FACTOR for Back-of-Walk Flow Section =   0.0200
```

```
    **TRAVEL TIME COMPUTED USING ESTIMATED FLOW(CFS) =       1.06
    STREETFLOW MODEL RESULTS USING ESTIMATED FLOW:
    STREET FLOW DEPTH(FEET) =  0.26
    HALFSTREET FLOOD WIDTH(FEET) =    6.92
    AVERAGE FLOW VELOCITY(FEET/SEC.) =    1.78
    PRODUCT OF DEPTH&VELOCITY(FT*FT/SEC.) =    0.47
  STREET FLOW TRAVEL TIME(MIN.) =   2.53   Tc(MIN.) =    5.74
   100 YEAR RAINFALL INTENSITY(INCH/HOUR) =  5.906
  *USER SPECIFIED(SUBAREA):
  STREETS & ROADS (CURBS/STORM DRAINS) RUNOFF COEFFICIENT = .7900
  S.C.S. CURVE NUMBER (AMC II) =   0
  AREA-AVERAGE RUNOFF COEFFICIENT =  0.798
  SUBAREA AREA(ACRES) =    0.25      SUBAREA RUNOFF(CFS) =    1.17
  TOTAL AREA(ACRES) =        0.3        PEAK FLOW RATE(CFS) =       1.60

  END OF SUBAREA STREET FLOW HYDRAULICS:
  DEPTH(FEET) = 0.29   HALFSTREET FLOOD WIDTH(FEET) =   8.38
  FLOW VELOCITY(FEET/SEC.) =  1.95   DEPTH*VELOCITY(FT*FT/SEC.) =   0.57
  LONGEST FLOWPATH FROM NODE     20.00 TO NODE     22.00 =     370.00 FEET.

****************************************************************************
  FLOW PROCESS FROM NODE     30.00 TO NODE     31.00 IS CODE =  21
----------------------------------------------------------------------------
  >>>>>RATIONAL METHOD INITIAL SUBAREA ANALYSIS<<<<<
============================================================================
  *USER SPECIFIED(SUBAREA):
  STREETS & ROADS (CURBS/STORM DRAINS) RUNOFF COEFFICIENT = .7700
  S.C.S. CURVE NUMBER (AMC II) =   0
  INITIAL SUBAREA FLOW-LENGTH(FEET) =    75.00
  UPSTREAM ELEVATION(FEET) =     19.36
  DOWNSTREAM ELEVATION(FEET) =     19.15
  ELEVATION DIFFERENCE(FEET) =      0.21
  SUBAREA OVERLAND TIME OF FLOW(MIN.) =    5.292
  WARNING: INITIAL SUBAREA FLOW PATH LENGTH IS GREATER THAN
           THE MAXIMUM OVERLAND FLOW LENGTH =    50.00
           (Reference: Table 3-1B of Hydrology Manual)
           THE MAXIMUM OVERLAND FLOW LENGTH IS USED IN Tc CALCULATION!
   100 YEAR RAINFALL INTENSITY(INCH/HOUR) =  6.223
  SUBAREA RUNOFF(CFS) =      0.34
  TOTAL AREA(ACRES) =      0.07   TOTAL RUNOFF(CFS) =      0.34

****************************************************************************
  FLOW PROCESS FROM NODE     31.00 TO NODE     32.00 IS CODE =  61
----------------------------------------------------------------------------
  >>>>>COMPUTE STREET FLOW TRAVEL TIME THRU SUBAREA<<<<<
  >>>>>(STANDARD CURB SECTION USED)<<<<<
============================================================================
  UPSTREAM ELEVATION(FEET) =   19.15  DOWNSTREAM ELEVATION(FEET) =   18.80
  STREET LENGTH(FEET) =   130.00   CURB HEIGHT(INCHES) =  6.0
  STREET HALFWIDTH(FEET) = 26.00

  DISTANCE FROM CROWN TO CROSSFALL GRADEBREAK(FEET) =  13.00
  INSIDE STREET CROSSFALL(DECIMAL) =  0.020
  OUTSIDE STREET CROSSFALL(DECIMAL)  =  0.020

  SPECIFIED NUMBER OF HALFSTREETS CARRYING RUNOFF =  1
  STREET PARKWAY CROSSFALL(DECIMAL)  =  0.020
  Manning's FRICTION FACTOR for Streetflow Section(curb-to-curb) =   0.0150
  Manning's FRICTION FACTOR for Back-of-Walk Flow Section =   0.0200

    **TRAVEL TIME COMPUTED USING ESTIMATED FLOW(CFS) =       0.58
    STREETFLOW MODEL RESULTS USING ESTIMATED FLOW:
    STREET FLOW DEPTH(FEET) =  0.26
    HALFSTREET FLOOD WIDTH(FEET) =    6.94
    AVERAGE FLOW VELOCITY(FEET/SEC.) =    0.97
    PRODUCT OF DEPTH&VELOCITY(FT*FT/SEC.) =    0.26
  STREET FLOW TRAVEL TIME(MIN.) =   2.23   Tc(MIN.) =    7.52
   100 YEAR RAINFALL INTENSITY(INCH/HOUR) =  4.959
  *USER SPECIFIED(SUBAREA):
  STREETS & ROADS (CURBS/STORM DRAINS) RUNOFF COEFFICIENT = .7600
  S.C.S. CURVE NUMBER (AMC II) =   0
  AREA-AVERAGE RUNOFF COEFFICIENT =  0.764
  SUBAREA AREA(ACRES) =    0.13      SUBAREA RUNOFF(CFS) =    0.49
  TOTAL AREA(ACRES) =        0.2        PEAK FLOW RATE(CFS) =       0.76

  END OF SUBAREA STREET FLOW HYDRAULICS:
```

```
  DEPTH(FEET) = 0.28   HALFSTREET FLOOD WIDTH(FEET) =   7.83
  FLOW VELOCITY(FEET/SEC.) =  1.03   DEPTH*VELOCITY(FT*FT/SEC.) =   0.29
  LONGEST FLOWPATH FROM NODE     30.00 TO NODE     32.00 =     205.00 FEET.

****************************************************************************
  FLOW PROCESS FROM NODE     40.00 TO NODE     41.00 IS CODE =  21
----------------------------------------------------------------------------
  >>>>>RATIONAL METHOD INITIAL SUBAREA ANALYSIS<<<<<
============================================================================
  *USER SPECIFIED(SUBAREA):
  STREETS & ROADS (CURBS/STORM DRAINS) RUNOFF COEFFICIENT = .7800
  S.C.S. CURVE NUMBER (AMC II) =   0
  INITIAL SUBAREA FLOW-LENGTH(FEET) =    75.00
  UPSTREAM ELEVATION(FEET) =     18.80
  DOWNSTREAM ELEVATION(FEET) =     18.35
  ELEVATION DIFFERENCE(FEET) =      0.45
  SUBAREA OVERLAND TIME OF FLOW(MIN.) =    4.925
  WARNING: INITIAL SUBAREA FLOW PATH LENGTH IS GREATER THAN
           THE MAXIMUM OVERLAND FLOW LENGTH =    52.00
           (Reference: Table 3-1B of Hydrology Manual)
           THE MAXIMUM OVERLAND FLOW LENGTH IS USED IN Tc CALCULATION!
   100 YEAR RAINFALL INTENSITY(INCH/HOUR) =  6.455
  NOTE: RAINFALL INTENSITY IS BASED ON Tc = 5-MINUTE.
  SUBAREA RUNOFF(CFS) =      0.40
  TOTAL AREA(ACRES) =      0.08   TOTAL RUNOFF(CFS) =      0.40

****************************************************************************
  FLOW PROCESS FROM NODE     41.00 TO NODE     42.00 IS CODE =  61
----------------------------------------------------------------------------
  >>>>>COMPUTE STREET FLOW TRAVEL TIME THRU SUBAREA<<<<<
  >>>>>(STANDARD CURB SECTION USED)<<<<<
============================================================================
  UPSTREAM ELEVATION(FEET) =   18.35  DOWNSTREAM ELEVATION(FEET) =   14.00
  STREET LENGTH(FEET) =   852.00   CURB HEIGHT(INCHES) =  6.0
  STREET HALFWIDTH(FEET) = 30.00

  DISTANCE FROM CROWN TO CROSSFALL GRADEBREAK(FEET) =  15.00
  INSIDE STREET CROSSFALL(DECIMAL) =  0.020
  OUTSIDE STREET CROSSFALL(DECIMAL)  =  0.020

  SPECIFIED NUMBER OF HALFSTREETS CARRYING RUNOFF =  1
  STREET PARKWAY CROSSFALL(DECIMAL)  =  0.020
  Manning's FRICTION FACTOR for Streetflow Section(curb-to-curb) =   0.0150
  Manning's FRICTION FACTOR for Back-of-Walk Flow Section =   0.0200

    **TRAVEL TIME COMPUTED USING ESTIMATED FLOW(CFS) =       1.45
    STREETFLOW MODEL RESULTS USING ESTIMATED FLOW:
    STREET FLOW DEPTH(FEET) =  0.31
    HALFSTREET FLOOD WIDTH(FEET) =    9.12
    AVERAGE FLOW VELOCITY(FEET/SEC.) =    1.53
    PRODUCT OF DEPTH&VELOCITY(FT*FT/SEC.) =    0.47
  STREET FLOW TRAVEL TIME(MIN.) =   9.28   Tc(MIN.) =   14.21
   100 YEAR RAINFALL INTENSITY(INCH/HOUR) =  3.292
  *USER SPECIFIED(SUBAREA):
  STREETS & ROADS (CURBS/STORM DRAINS) RUNOFF COEFFICIENT = .7700
  S.C.S. CURVE NUMBER (AMC II) =   0
  AREA-AVERAGE RUNOFF COEFFICIENT =  0.771
  SUBAREA AREA(ACRES) =    0.79      SUBAREA RUNOFF(CFS) =    2.00
  TOTAL AREA(ACRES) =        0.9        PEAK FLOW RATE(CFS) =       2.21

  END OF SUBAREA STREET FLOW HYDRAULICS:
  DEPTH(FEET) = 0.34   HALFSTREET FLOOD WIDTH(FEET) =  10.91
  FLOW VELOCITY(FEET/SEC.) =  1.69   DEPTH*VELOCITY(FT*FT/SEC.) =   0.58
  LONGEST FLOWPATH FROM NODE     40.00 TO NODE     42.00 =     927.00 FEET.

****************************************************************************
  FLOW PROCESS FROM NODE     50.00 TO NODE     51.00 IS CODE =  21
----------------------------------------------------------------------------
  >>>>>RATIONAL METHOD INITIAL SUBAREA ANALYSIS<<<<<
============================================================================
  *USER SPECIFIED(SUBAREA):
  STREETS & ROADS (CURBS/STORM DRAINS) RUNOFF COEFFICIENT = .8300
  S.C.S. CURVE NUMBER (AMC II) =   0
  INITIAL SUBAREA FLOW-LENGTH(FEET) =    75.00
  UPSTREAM ELEVATION(FEET) =     18.50
  DOWNSTREAM ELEVATION(FEET) =     18.00
```

```
  ELEVATION DIFFERENCE(FEET) =      0.50
  SUBAREA OVERLAND TIME OF FLOW(MIN.) =    4.063
  WARNING: INITIAL SUBAREA FLOW PATH LENGTH IS GREATER THAN
           THE MAXIMUM OVERLAND FLOW LENGTH =    53.33
           (Reference: Table 3-1B of Hydrology Manual)
           THE MAXIMUM OVERLAND FLOW LENGTH IS USED IN Tc CALCULATION!
   100 YEAR RAINFALL INTENSITY(INCH/HOUR) =  6.455
  NOTE: RAINFALL INTENSITY IS BASED ON Tc = 5-MINUTE.
  SUBAREA RUNOFF(CFS) =      0.32
  TOTAL AREA(ACRES) =      0.06   TOTAL RUNOFF(CFS) =      0.32

****************************************************************************
  FLOW PROCESS FROM NODE     51.00 TO NODE     52.00 IS CODE =  61
----------------------------------------------------------------------------
  >>>>>COMPUTE STREET FLOW TRAVEL TIME THRU SUBAREA<<<<<
  >>>>>(STANDARD CURB SECTION USED)<<<<<
============================================================================
  UPSTREAM ELEVATION(FEET) =   18.00  DOWNSTREAM ELEVATION(FEET) =   14.00
  STREET LENGTH(FEET) =   820.00   CURB HEIGHT(INCHES) =  6.0
  STREET HALFWIDTH(FEET) = 30.00

  DISTANCE FROM CROWN TO CROSSFALL GRADEBREAK(FEET) =  15.00
  INSIDE STREET CROSSFALL(DECIMAL) =  0.020
  OUTSIDE STREET CROSSFALL(DECIMAL)  =  0.020

  SPECIFIED NUMBER OF HALFSTREETS CARRYING RUNOFF =  1
  STREET PARKWAY CROSSFALL(DECIMAL)  =  0.020
  Manning's FRICTION FACTOR for Streetflow Section(curb-to-curb) =   0.0150
  Manning's FRICTION FACTOR for Back-of-Walk Flow Section =   0.0200

    **TRAVEL TIME COMPUTED USING ESTIMATED FLOW(CFS) =       1.21
    STREETFLOW MODEL RESULTS USING ESTIMATED FLOW:
    STREET FLOW DEPTH(FEET) =  0.30
    HALFSTREET FLOOD WIDTH(FEET) =    8.49
    AVERAGE FLOW VELOCITY(FEET/SEC.) =    1.44
    PRODUCT OF DEPTH&VELOCITY(FT*FT/SEC.) =    0.43
  STREET FLOW TRAVEL TIME(MIN.) =   9.50   Tc(MIN.) =   13.56
   100 YEAR RAINFALL INTENSITY(INCH/HOUR) =  3.391
  *USER SPECIFIED(SUBAREA):
  STREETS & ROADS (CURBS/STORM DRAINS) RUNOFF COEFFICIENT = .8300
  S.C.S. CURVE NUMBER (AMC II) =   0
  AREA-AVERAGE RUNOFF COEFFICIENT =  0.830
  SUBAREA AREA(ACRES) =    0.60      SUBAREA RUNOFF(CFS) =    1.69
  TOTAL AREA(ACRES) =        0.7        PEAK FLOW RATE(CFS) =       1.86

  END OF SUBAREA STREET FLOW HYDRAULICS:
  DEPTH(FEET) = 0.33   HALFSTREET FLOOD WIDTH(FEET) =  10.23
  FLOW VELOCITY(FEET/SEC.) =  1.60   DEPTH*VELOCITY(FT*FT/SEC.) =   0.53
  LONGEST FLOWPATH FROM NODE     50.00 TO NODE     52.00 =     895.00 FEET.
============================================================================
  END OF STUDY SUMMARY:
  TOTAL AREA(ACRES)     =        0.7  TC(MIN.) =     13.56
  PEAK FLOW RATE(CFS)   =       1.86
============================================================================
============================================================================
  END OF RATIONAL METHOD ANALYSIS
```

Q100- Proposed Condition Model

PW5794.04- Camino del Mar Bridge, Del Mar
Runoff Coefficient Determination

Proposed Condition																		
Upstream Node	Downstream Node	Sidewalk/Road/ Driveway		Bldg		Landscape		Natural		Total Driveway	Driveway Area w/o Pavers		Pavers		Σ(a x c)	Total Subarea		Runoff Coeff per SDCHM
		sf	C-coeff	sf	c-coeff	sf	c-coeff	sf	c-coeff	sf	sf	c-coeff	sf	c-coeff		sf	ac	
110	111	3,719	0.90	0	0.90	580	0.35	0	0.35	0	0	0.90	0	0.35	3550	4299	0.10	0.83
111	112	12,677	0.90	0	0.90	470	0.35	0	0.35	0	0	0.90	0	0.35	11574	13147	0.30	0.88
113	112	9,137	0.90	0	0.90	106	0.35	0	0.35	0	0	0.90	0	0.35	8260	9243	0.21	0.89
114	115	2,577	0.90	0	0.90	0	0.35	0	0.35	0	0	0.90	0	0.35	2319	2577	0.06	0.90
115	116	8,267	0.90	0	0.90	0	0.35	0	0.35	0	0	0.90	0	0.35	7440	8267	0.19	0.90
120	121	3,327	0.90	0	0.90	549	0.35	0	0.35	0	0	0.90	0	0.35	3186	3876	0.09	0.82
121	122	8,479	0.90	0	0.90	2,027	0.35	0	0.35	0	0	0.90	0	0.35	8341	10506	0.24	0.79
123	122	8,634	0.90	0	0.90	2,227	0.35	0	0.35	0	0	0.90	0	0.35	8550	10861	0.25	0.79
125	126	2,623	0.90	0	0.90	0	0.35	0	0.35	0	0	0.90	0	0.35	2361	2623	0.06	0.90
126	127	8,661	0.90	0	0.90	0	0.35	0	0.35	0	0	0.90	0	0.35	7795	8661	0.20	0.90
140	141	2,617	0.90	0	0.90	0	0.35	0	0.35	0	0	0.90	0	0.35	2355	2617	0.06	0.90
141	142	11,285	0.90	0	0.90	784	0.35	0	0.35	0	0	0.90	0	0.35	10431	12069	0.28	0.86
150	151	2,562	0.90	0	0.90	0	0.35	0	0.35	0	0	0.90	0	0.35	2306	2562	0.06	0.90
151	152	11,174	0.90	0	0.90	511	0.35	0	0.35	0	0	0.90	0	0.35	10235	11685	0.27	0.88
145	146	6,101	0.90	0	0.90	5,549	0.35	0	0.35	0	0	0.90	0	0.35	7433	11650	0.27	0.64
155	156	4,933	0.90	0	0.90	2,640	0.35	0	0.35	0	0	0.90	0	0.35	5364	7573	0.17	0.71
		106,773		0		15,443		0		0	0		0			122216	2.81	

Q100- Proposed Condition Model

```
____________________________________________________________________________
****************************************************************************

            RATIONAL METHOD HYDROLOGY COMPUTER PROGRAM PACKAGE
            Reference: SAN DIEGO COUNTY FLOOD CONTROL DISTRICT
                         2003,1985,1981 HYDROLOGY MANUAL
         (c) Copyright 1982-2016 Advanced Engineering Software (aes)
             Ver. 23.0 Release Date: 07/01/2016  License ID 1690

                           Analysis prepared by:




 ************************** DESCRIPTION OF STUDY **************************
* CAMINO DEL MAR BRIDGE                                                   *
* 100-YEAR HYDROLOGIC ANALYSIS- PROPOSED CONDITION                        *
* PW5794.04                                                               *
 ***************************************************************************

  FILE NAME: C:\AES\PW5794\PR100.DAT
  TIME/DATE OF STUDY: 14:03 04/24/2022
----------------------------------------------------------------------------
  USER SPECIFIED HYDROLOGY AND HYDRAULIC MODEL INFORMATION:
----------------------------------------------------------------------------
  2003 SAN DIEGO MANUAL CRITERIA

  USER SPECIFIED STORM EVENT(YEAR) = 100.00
  6-HOUR DURATION PRECIPITATION (INCHES) =   2.450
  SPECIFIED MINIMUM PIPE SIZE(INCH) =  12.00
  SPECIFIED PERCENT OF GRADIENTS(DECIMAL) TO USE FOR FRICTION SLOPE = 0.90
  SAN DIEGO HYDROLOGY MANUAL "C"-VALUES USED FOR RATIONAL METHOD
  NOTE: USE MODIFIED RATIONAL METHOD PROCEDURES FOR CONFLUENCE ANALYSIS
  *USER-DEFINED STREET-SECTIONS FOR COUPLED PIPEFLOW AND STREETFLOW MODEL*
     HALF-  CROWN TO   STREET-CROSSFALL:   CURB  GUTTER-GEOMETRIES:  MANNING
     WIDTH  CROSSFALL  IN-  / OUT-/PARK-  HEIGHT  WIDTH  LIP   HIKE  FACTOR
NO.   (FT)     (FT)    SIDE / SIDE/ WAY    (FT)    (FT)  (FT)  (FT)    (n)
===  =====  =========  =================  ======  ===== ====== ===== =======
  1   28.0     20.0    0.020/0.020/0.020   0.50    1.50 0.0313 0.125 0.0160
  2   20.0     15.0    0.020/0.020/0.020   0.50    1.50 0.0313 0.125 0.0160

  GLOBAL STREET FLOW-DEPTH CONSTRAINTS:
    1. Relative Flow-Depth =  0.00 FEET
       as (Maximum Allowable Street Flow Depth) - (Top-of-Curb)
    2. (Depth)*(Velocity) Constraint =  0.0 (FT*FT/S)
  *SIZE PIPE WITH A FLOW CAPACITY GREATER THAN
   OR EQUAL TO THE UPSTREAM TRIBUTARY PIPE.*

****************************************************************************
  FLOW PROCESS FROM NODE    110.00 TO NODE    111.00 IS CODE =  21
----------------------------------------------------------------------------
  >>>>>RATIONAL METHOD INITIAL SUBAREA ANALYSIS<<<<<
============================================================================
  *USER SPECIFIED(SUBAREA):
  STREETS & ROADS (CURBS/STORM DRAINS) RUNOFF COEFFICIENT = .8300
  S.C.S. CURVE NUMBER (AMC II) =   0
  INITIAL SUBAREA FLOW-LENGTH(FEET) =   100.00
  UPSTREAM ELEVATION(FEET) =     30.75
  DOWNSTREAM ELEVATION(FEET) =     26.50
  ELEVATION DIFFERENCE(FEET) =      4.25
  SUBAREA OVERLAND TIME OF FLOW(MIN.) =    2.787
  WARNING: INITIAL SUBAREA FLOW PATH LENGTH IS GREATER THAN
           THE MAXIMUM OVERLAND FLOW LENGTH =    86.25
           (Reference: Table 3-1B of Hydrology Manual)
           THE MAXIMUM OVERLAND FLOW LENGTH IS USED IN Tc CALCULATION!
   100 YEAR RAINFALL INTENSITY(INCH/HOUR) =  6.455
  NOTE: RAINFALL INTENSITY IS BASED ON Tc = 5-MINUTE.
  SUBAREA RUNOFF(CFS) =      0.54
  TOTAL AREA(ACRES) =      0.10   TOTAL RUNOFF(CFS) =      0.54

****************************************************************************
  FLOW PROCESS FROM NODE    111.00 TO NODE    112.00 IS CODE =  61
----------------------------------------------------------------------------
  >>>>>COMPUTE STREET FLOW TRAVEL TIME THRU SUBAREA<<<<<
```

```
  >>>>>(STANDARD CURB SECTION USED)<<<<<
============================================================================
  UPSTREAM ELEVATION(FEET) =   26.50  DOWNSTREAM ELEVATION(FEET) =   19.50
  STREET LENGTH(FEET) =   398.00   CURB HEIGHT(INCHES) =  6.0
  STREET HALFWIDTH(FEET) = 22.00

  DISTANCE FROM CROWN TO CROSSFALL GRADEBREAK(FEET) =  11.00
  INSIDE STREET CROSSFALL(DECIMAL) =  0.020
  OUTSIDE STREET CROSSFALL(DECIMAL)  =  0.020

  SPECIFIED NUMBER OF HALFSTREETS CARRYING RUNOFF =  1
  STREET PARKWAY CROSSFALL(DECIMAL)  =  0.020
  Manning's FRICTION FACTOR for Streetflow Section(curb-to-curb) =   0.0150
  Manning's FRICTION FACTOR for Back-of-Walk Flow Section =   0.0200

    **TRAVEL TIME COMPUTED USING ESTIMATED FLOW(CFS) =       1.34
    STREETFLOW MODEL RESULTS USING ESTIMATED FLOW:
    STREET FLOW DEPTH(FEET) =  0.26
    HALFSTREET FLOOD WIDTH(FEET) =    6.58
    AVERAGE FLOW VELOCITY(FEET/SEC.) =    2.42
    PRODUCT OF DEPTH&VELOCITY(FT*FT/SEC.) =    0.62
  STREET FLOW TRAVEL TIME(MIN.) =   2.74   Tc(MIN.) =    5.53
   100 YEAR RAINFALL INTENSITY(INCH/HOUR) =  6.051
  *USER SPECIFIED(SUBAREA):
  STREETS & ROADS (CURBS/STORM DRAINS) RUNOFF COEFFICIENT = .8800
  S.C.S. CURVE NUMBER (AMC II) =   0
  AREA-AVERAGE RUNOFF COEFFICIENT =  0.868
  SUBAREA AREA(ACRES) =    0.30      SUBAREA RUNOFF(CFS) =    1.60
  TOTAL AREA(ACRES) =        0.4        PEAK FLOW RATE(CFS) =       2.10

  END OF SUBAREA STREET FLOW HYDRAULICS:
  DEPTH(FEET) = 0.29   HALFSTREET FLOOD WIDTH(FEET) =   8.14
  FLOW VELOCITY(FEET/SEC.) =  2.69   DEPTH*VELOCITY(FT*FT/SEC.) =   0.78
  LONGEST FLOWPATH FROM NODE    110.00 TO NODE    112.00 =     498.00 FEET.

****************************************************************************
  FLOW PROCESS FROM NODE    113.00 TO NODE    112.00 IS CODE =  81
----------------------------------------------------------------------------
  >>>>>ADDITION OF SUBAREA TO MAINLINE PEAK FLOW<<<<<
============================================================================
   100 YEAR RAINFALL INTENSITY(INCH/HOUR) =  6.051
  *USER SPECIFIED(SUBAREA):
  STREETS & ROADS (CURBS/STORM DRAINS) RUNOFF COEFFICIENT = .8900
  S.C.S. CURVE NUMBER (AMC II) =   0
  AREA-AVERAGE RUNOFF COEFFICIENT = 0.8752
  SUBAREA AREA(ACRES) =    0.21   SUBAREA RUNOFF(CFS) =    1.13
  TOTAL AREA(ACRES) =        0.6   TOTAL RUNOFF(CFS) =       3.23
  TC(MIN.) =    5.53

****************************************************************************
  FLOW PROCESS FROM NODE    112.00 TO NODE    113.00 IS CODE =  31
----------------------------------------------------------------------------
  >>>>>COMPUTE PIPE-FLOW TRAVEL TIME THRU SUBAREA<<<<<
  >>>>>USING COMPUTER-ESTIMATED PIPESIZE (NON-PRESSURE FLOW)<<<<<
============================================================================
  ELEVATION DATA: UPSTREAM(FEET) =    17.00  DOWNSTREAM(FEET) =    14.30
  FLOW LENGTH(FEET) =   270.00   MANNING'S N =  0.013
  DEPTH OF FLOW IN  12.0 INCH PIPE IS   9.4 INCHES
  PIPE-FLOW VELOCITY(FEET/SEC.) =   4.90
  ESTIMATED PIPE DIAMETER(INCH) =  12.00    NUMBER OF PIPES =   1
  PIPE-FLOW(CFS) =       3.23
  PIPE TRAVEL TIME(MIN.) =   0.92    Tc(MIN.) =    6.45
  LONGEST FLOWPATH FROM NODE    110.00 TO NODE    113.00 =     768.00 FEET.

****************************************************************************
  FLOW PROCESS FROM NODE    113.00 TO NODE    113.00 IS CODE =   1
----------------------------------------------------------------------------
  >>>>>DESIGNATE INDEPENDENT STREAM FOR CONFLUENCE<<<<<
============================================================================
  TOTAL NUMBER OF STREAMS =  2
  CONFLUENCE VALUES USED FOR INDEPENDENT STREAM  1 ARE:
  TIME OF CONCENTRATION(MIN.) =    6.45
  RAINFALL INTENSITY(INCH/HR) =   5.48
  TOTAL STREAM AREA(ACRES) =     0.61
  PEAK FLOW RATE(CFS) AT CONFLUENCE =      3.23
```

```
****************************************************************************
  FLOW PROCESS FROM NODE    114.00 TO NODE    115.00 IS CODE =  21
----------------------------------------------------------------------------
  >>>>>RATIONAL METHOD INITIAL SUBAREA ANALYSIS<<<<<
============================================================================
  *USER SPECIFIED(SUBAREA):
  STREETS & ROADS (CURBS/STORM DRAINS) RUNOFF COEFFICIENT = .9000
  S.C.S. CURVE NUMBER (AMC II) =   0
  INITIAL SUBAREA FLOW-LENGTH(FEET) =    75.00
  UPSTREAM ELEVATION(FEET) =     24.50
  DOWNSTREAM ELEVATION(FEET) =     23.90
  ELEVATION DIFFERENCE(FEET) =      0.60
  SUBAREA OVERLAND TIME OF FLOW(MIN.) =    2.902
  WARNING: INITIAL SUBAREA FLOW PATH LENGTH IS GREATER THAN
           THE MAXIMUM OVERLAND FLOW LENGTH =    56.00
           (Reference: Table 3-1B of Hydrology Manual)
           THE MAXIMUM OVERLAND FLOW LENGTH IS USED IN Tc CALCULATION!
   100 YEAR RAINFALL INTENSITY(INCH/HOUR) =  6.455
  NOTE: RAINFALL INTENSITY IS BASED ON Tc = 5-MINUTE.
  SUBAREA RUNOFF(CFS) =      0.35
  TOTAL AREA(ACRES) =      0.06   TOTAL RUNOFF(CFS) =      0.35

****************************************************************************
  FLOW PROCESS FROM NODE    115.00 TO NODE    116.00 IS CODE =  61
----------------------------------------------------------------------------
  >>>>>COMPUTE STREET FLOW TRAVEL TIME THRU SUBAREA<<<<<
  >>>>>(STANDARD CURB SECTION USED)<<<<<
============================================================================
  UPSTREAM ELEVATION(FEET) =   23.90  DOWNSTREAM ELEVATION(FEET) =   22.90
  STREET LENGTH(FEET) =   241.00   CURB HEIGHT(INCHES) =  6.0
  STREET HALFWIDTH(FEET) = 22.00

  DISTANCE FROM CROWN TO CROSSFALL GRADEBREAK(FEET) =  11.00
  INSIDE STREET CROSSFALL(DECIMAL) =  0.020
  OUTSIDE STREET CROSSFALL(DECIMAL)  =  0.020

  SPECIFIED NUMBER OF HALFSTREETS CARRYING RUNOFF =  1
  STREET PARKWAY CROSSFALL(DECIMAL)  =  0.020
  Manning's FRICTION FACTOR for Streetflow Section(curb-to-curb) =   0.0150
  Manning's FRICTION FACTOR for Back-of-Walk Flow Section =   0.0200

    **TRAVEL TIME COMPUTED USING ESTIMATED FLOW(CFS) =       0.84
    STREETFLOW MODEL RESULTS USING ESTIMATED FLOW:
    STREET FLOW DEPTH(FEET) =  0.27
    HALFSTREET FLOOD WIDTH(FEET) =    7.40
    AVERAGE FLOW VELOCITY(FEET/SEC.) =    1.25
    PRODUCT OF DEPTH&VELOCITY(FT*FT/SEC.) =    0.34
  STREET FLOW TRAVEL TIME(MIN.) =   3.20   Tc(MIN.) =    6.10
   100 YEAR RAINFALL INTENSITY(INCH/HOUR) =  5.676
  *USER SPECIFIED(SUBAREA):
  STREETS & ROADS (CURBS/STORM DRAINS) RUNOFF COEFFICIENT = .9000
  S.C.S. CURVE NUMBER (AMC II) =   0
  AREA-AVERAGE RUNOFF COEFFICIENT =  0.900
  SUBAREA AREA(ACRES) =    0.19      SUBAREA RUNOFF(CFS) =    0.97
  TOTAL AREA(ACRES) =        0.2        PEAK FLOW RATE(CFS) =       1.28

  END OF SUBAREA STREET FLOW HYDRAULICS:
  DEPTH(FEET) = 0.31   HALFSTREET FLOOD WIDTH(FEET) =   9.03
  FLOW VELOCITY(FEET/SEC.) =  1.37   DEPTH*VELOCITY(FT*FT/SEC.) =   0.42
  LONGEST FLOWPATH FROM NODE    114.00 TO NODE    116.00 =     316.00 FEET.

****************************************************************************
  FLOW PROCESS FROM NODE    116.00 TO NODE    113.00 IS CODE =   1
----------------------------------------------------------------------------
  >>>>>DESIGNATE INDEPENDENT STREAM FOR CONFLUENCE<<<<<
  >>>>>AND COMPUTE VARIOUS CONFLUENCED STREAM VALUES<<<<<
============================================================================
  TOTAL NUMBER OF STREAMS =  2
  CONFLUENCE VALUES USED FOR INDEPENDENT STREAM  2 ARE:
  TIME OF CONCENTRATION(MIN.) =    6.10
  RAINFALL INTENSITY(INCH/HR) =   5.68
  TOTAL STREAM AREA(ACRES) =     0.25
  PEAK FLOW RATE(CFS) AT CONFLUENCE =      1.28

  ** CONFLUENCE DATA **
  STREAM     RUNOFF       Tc      INTENSITY      AREA
```

```
  NUMBER      (CFS)     (MIN.)   (INCH/HOUR)    (ACRE)
      1        3.23     6.45        5.480          0.61
      2        1.28     6.10        5.676          0.25

  RAINFALL INTENSITY AND TIME OF CONCENTRATION RATIO
  CONFLUENCE FORMULA USED FOR  2 STREAMS.

  ** PEAK FLOW RATE TABLE **
  STREAM     RUNOFF      Tc      INTENSITY
  NUMBER      (CFS)    (MIN.)   (INCH/HOUR)
      1        4.34     6.10       5.676
      2        4.46     6.45       5.480

  COMPUTED CONFLUENCE ESTIMATES ARE AS FOLLOWS:
  PEAK FLOW RATE(CFS) =       4.46   Tc(MIN.) =    6.45
  TOTAL AREA(ACRES) =        0.9
  LONGEST FLOWPATH FROM NODE    110.00 TO NODE    113.00 =     768.00 FEET.

****************************************************************************
  FLOW PROCESS FROM NODE    113.00 TO NODE    117.00 IS CODE =  31
----------------------------------------------------------------------------
  >>>>>COMPUTE PIPE-FLOW TRAVEL TIME THRU SUBAREA<<<<<
  >>>>>USING COMPUTER-ESTIMATED PIPESIZE (NON-PRESSURE FLOW)<<<<<
============================================================================
  ELEVATION DATA: UPSTREAM(FEET) =    14.30  DOWNSTREAM(FEET) =     9.00
  FLOW LENGTH(FEET) =    25.00   MANNING'S N =  0.013
  ESTIMATED PIPE DIAMETER(INCH) INCREASED TO 12.000
  DEPTH OF FLOW IN  12.0 INCH PIPE IS   4.4 INCHES
  PIPE-FLOW VELOCITY(FEET/SEC.) =  17.11
  ESTIMATED PIPE DIAMETER(INCH) =  12.00    NUMBER OF PIPES =   1
  PIPE-FLOW(CFS) =       4.46
  PIPE TRAVEL TIME(MIN.) =   0.02    Tc(MIN.) =    6.47
  LONGEST FLOWPATH FROM NODE    110.00 TO NODE    117.00 =     793.00 FEET.

+--------------------------------------------------------------------------+
|                                                                          |
|                                                                          |
|                                                                          |
+--------------------------------------------------------------------------+

****************************************************************************
  FLOW PROCESS FROM NODE    120.00 TO NODE    121.00 IS CODE =  21
----------------------------------------------------------------------------
  >>>>>RATIONAL METHOD INITIAL SUBAREA ANALYSIS<<<<<
============================================================================
  *USER SPECIFIED(SUBAREA):
  STREETS & ROADS (CURBS/STORM DRAINS) RUNOFF COEFFICIENT = .8200
  S.C.S. CURVE NUMBER (AMC II) =   0
  INITIAL SUBAREA FLOW-LENGTH(FEET) =   100.00
  UPSTREAM ELEVATION(FEET) =     24.30
  DOWNSTREAM ELEVATION(FEET) =     21.75
  ELEVATION DIFFERENCE(FEET) =      2.55
  SUBAREA OVERLAND TIME OF FLOW(MIN.) =    3.206
  WARNING: INITIAL SUBAREA FLOW PATH LENGTH IS GREATER THAN
           THE MAXIMUM OVERLAND FLOW LENGTH =    75.50
           (Reference: Table 3-1B of Hydrology Manual)
           THE MAXIMUM OVERLAND FLOW LENGTH IS USED IN Tc CALCULATION!
   100 YEAR RAINFALL INTENSITY(INCH/HOUR) =  6.455
  NOTE: RAINFALL INTENSITY IS BASED ON Tc = 5-MINUTE.
  SUBAREA RUNOFF(CFS) =      0.48
  TOTAL AREA(ACRES) =      0.09   TOTAL RUNOFF(CFS) =      0.48

****************************************************************************
  FLOW PROCESS FROM NODE    121.00 TO NODE    122.00 IS CODE =  61
----------------------------------------------------------------------------
  >>>>>COMPUTE STREET FLOW TRAVEL TIME THRU SUBAREA<<<<<
  >>>>>(STANDARD CURB SECTION USED)<<<<<
============================================================================
  UPSTREAM ELEVATION(FEET) =   21.75  DOWNSTREAM ELEVATION(FEET) =   18.74
  STREET LENGTH(FEET) =   253.00   CURB HEIGHT(INCHES) =  6.0
  STREET HALFWIDTH(FEET) = 28.00

  DISTANCE FROM CROWN TO CROSSFALL GRADEBREAK(FEET) =  14.00
  INSIDE STREET CROSSFALL(DECIMAL) =  0.020
  OUTSIDE STREET CROSSFALL(DECIMAL)  =  0.020
```

```
  SPECIFIED NUMBER OF HALFSTREETS CARRYING RUNOFF =  1
  STREET PARKWAY CROSSFALL(DECIMAL)  =  0.020
  Manning's FRICTION FACTOR for Streetflow Section(curb-to-curb) =   0.0150
  Manning's FRICTION FACTOR for Back-of-Walk Flow Section =   0.0200

    **TRAVEL TIME COMPUTED USING ESTIMATED FLOW(CFS) =       1.06
    STREETFLOW MODEL RESULTS USING ESTIMATED FLOW:
    STREET FLOW DEPTH(FEET) =  0.25
    HALFSTREET FLOOD WIDTH(FEET) =    6.43
    AVERAGE FLOW VELOCITY(FEET/SEC.) =    2.00
    PRODUCT OF DEPTH&VELOCITY(FT*FT/SEC.) =    0.51
  STREET FLOW TRAVEL TIME(MIN.) =   2.11   Tc(MIN.) =    5.31
   100 YEAR RAINFALL INTENSITY(INCH/HOUR) =  6.208
  *USER SPECIFIED(SUBAREA):
  STREETS & ROADS (CURBS/STORM DRAINS) RUNOFF COEFFICIENT = .7900
  S.C.S. CURVE NUMBER (AMC II) =   0
  AREA-AVERAGE RUNOFF COEFFICIENT =  0.798
  SUBAREA AREA(ACRES) =    0.24      SUBAREA RUNOFF(CFS) =    1.18
  TOTAL AREA(ACRES) =        0.3        PEAK FLOW RATE(CFS) =       1.64

  END OF SUBAREA STREET FLOW HYDRAULICS:
  DEPTH(FEET) = 0.29   HALFSTREET FLOOD WIDTH(FEET) =   7.99
  FLOW VELOCITY(FEET/SEC.) =  2.16   DEPTH*VELOCITY(FT*FT/SEC.) =   0.62
  LONGEST FLOWPATH FROM NODE    120.00 TO NODE    122.00 =     353.00 FEET.

****************************************************************************
  FLOW PROCESS FROM NODE    123.00 TO NODE    122.00 IS CODE =  81
----------------------------------------------------------------------------
  >>>>>ADDITION OF SUBAREA TO MAINLINE PEAK FLOW<<<<<
============================================================================
   100 YEAR RAINFALL INTENSITY(INCH/HOUR) =  6.208
  *USER SPECIFIED(SUBAREA):
  STREETS & ROADS (CURBS/STORM DRAINS) RUNOFF COEFFICIENT = .7900
  S.C.S. CURVE NUMBER (AMC II) =   0
  AREA-AVERAGE RUNOFF COEFFICIENT = 0.7947
  SUBAREA AREA(ACRES) =    0.25   SUBAREA RUNOFF(CFS) =    1.23
  TOTAL AREA(ACRES) =        0.6   TOTAL RUNOFF(CFS) =       2.86
  TC(MIN.) =    5.31

****************************************************************************
  FLOW PROCESS FROM NODE    122.00 TO NODE    124.00 IS CODE =  31
----------------------------------------------------------------------------
  >>>>>COMPUTE PIPE-FLOW TRAVEL TIME THRU SUBAREA<<<<<
  >>>>>USING COMPUTER-ESTIMATED PIPESIZE (NON-PRESSURE FLOW)<<<<<
============================================================================
  ELEVATION DATA: UPSTREAM(FEET) =    15.00  DOWNSTREAM(FEET) =     8.00
  FLOW LENGTH(FEET) =    35.00   MANNING'S N =  0.013
  ESTIMATED PIPE DIAMETER(INCH) INCREASED TO 12.000
  DEPTH OF FLOW IN  12.0 INCH PIPE IS   3.5 INCHES
  PIPE-FLOW VELOCITY(FEET/SEC.) =  14.80
  ESTIMATED PIPE DIAMETER(INCH) =  12.00    NUMBER OF PIPES =   1
  PIPE-FLOW(CFS) =       2.86
  PIPE TRAVEL TIME(MIN.) =   0.04    Tc(MIN.) =    5.35
  LONGEST FLOWPATH FROM NODE    120.00 TO NODE    124.00 =     388.00 FEET.

+--------------------------------------------------------------------------+
|                                                                          |
|                                                                          |
|                                                                          |
+--------------------------------------------------------------------------+

****************************************************************************
  FLOW PROCESS FROM NODE    125.00 TO NODE    126.00 IS CODE =  21
----------------------------------------------------------------------------
  >>>>>RATIONAL METHOD INITIAL SUBAREA ANALYSIS<<<<<
============================================================================
  *USER SPECIFIED(SUBAREA):
  STREETS & ROADS (CURBS/STORM DRAINS) RUNOFF COEFFICIENT = .9000
  S.C.S. CURVE NUMBER (AMC II) =   0
  INITIAL SUBAREA FLOW-LENGTH(FEET) =    75.00
  UPSTREAM ELEVATION(FEET) =     24.50
  DOWNSTREAM ELEVATION(FEET) =     23.90
  ELEVATION DIFFERENCE(FEET) =      0.60
  SUBAREA OVERLAND TIME OF FLOW(MIN.) =    2.902
  WARNING: INITIAL SUBAREA FLOW PATH LENGTH IS GREATER THAN
           THE MAXIMUM OVERLAND FLOW LENGTH =    56.00
```

```
          (Reference: Table 3-1B of Hydrology Manual)
          THE MAXIMUM OVERLAND FLOW LENGTH IS USED IN Tc CALCULATION!
   100 YEAR RAINFALL INTENSITY(INCH/HOUR) =  6.455
  NOTE: RAINFALL INTENSITY IS BASED ON Tc = 5-MINUTE.
  SUBAREA RUNOFF(CFS) =      0.35
  TOTAL AREA(ACRES) =      0.06   TOTAL RUNOFF(CFS) =      0.35

****************************************************************************
  FLOW PROCESS FROM NODE    126.00 TO NODE    127.00 IS CODE =  61
----------------------------------------------------------------------------
  >>>>>COMPUTE STREET FLOW TRAVEL TIME THRU SUBAREA<<<<<
  >>>>>(STANDARD CURB SECTION USED)<<<<<
============================================================================
  UPSTREAM ELEVATION(FEET) =   23.90  DOWNSTREAM ELEVATION(FEET) =   22.90
  STREET LENGTH(FEET) =   241.00   CURB HEIGHT(INCHES) =  6.0
  STREET HALFWIDTH(FEET) = 28.00

  DISTANCE FROM CROWN TO CROSSFALL GRADEBREAK(FEET) =  14.00
  INSIDE STREET CROSSFALL(DECIMAL) =  0.020
  OUTSIDE STREET CROSSFALL(DECIMAL)  =  0.020

  SPECIFIED NUMBER OF HALFSTREETS CARRYING RUNOFF =  1
  STREET PARKWAY CROSSFALL(DECIMAL)  =  0.020
  Manning's FRICTION FACTOR for Streetflow Section(curb-to-curb) =   0.0150
  Manning's FRICTION FACTOR for Back-of-Walk Flow Section =   0.0200

    **TRAVEL TIME COMPUTED USING ESTIMATED FLOW(CFS) =       0.86
    STREETFLOW MODEL RESULTS USING ESTIMATED FLOW:
    STREET FLOW DEPTH(FEET) =  0.28
    HALFSTREET FLOOD WIDTH(FEET) =    7.51
    AVERAGE FLOW VELOCITY(FEET/SEC.) =    1.27
    PRODUCT OF DEPTH&VELOCITY(FT*FT/SEC.) =    0.35
  STREET FLOW TRAVEL TIME(MIN.) =   3.17   Tc(MIN.) =    6.07
   100 YEAR RAINFALL INTENSITY(INCH/HOUR) =  5.693
  *USER SPECIFIED(SUBAREA):
  STREETS & ROADS (CURBS/STORM DRAINS) RUNOFF COEFFICIENT = .9000
  S.C.S. CURVE NUMBER (AMC II) =   0
  AREA-AVERAGE RUNOFF COEFFICIENT =  0.900
  SUBAREA AREA(ACRES) =    0.20      SUBAREA RUNOFF(CFS) =    1.02
  TOTAL AREA(ACRES) =        0.3        PEAK FLOW RATE(CFS) =       1.33

  END OF SUBAREA STREET FLOW HYDRAULICS:
  DEPTH(FEET) = 0.31   HALFSTREET FLOOD WIDTH(FEET) =   9.17
  FLOW VELOCITY(FEET/SEC.) =  1.39   DEPTH*VELOCITY(FT*FT/SEC.) =   0.43
  LONGEST FLOWPATH FROM NODE    125.00 TO NODE    127.00 =     316.00 FEET.

****************************************************************************
  FLOW PROCESS FROM NODE    127.00 TO NODE    128.00 IS CODE =  31
----------------------------------------------------------------------------
  >>>>>COMPUTE PIPE-FLOW TRAVEL TIME THRU SUBAREA<<<<<
  >>>>>USING COMPUTER-ESTIMATED PIPESIZE (NON-PRESSURE FLOW)<<<<<
============================================================================
  ELEVATION DATA: UPSTREAM(FEET) =    17.00  DOWNSTREAM(FEET) =     7.00
  FLOW LENGTH(FEET) =    90.00   MANNING'S N =  0.013
  ESTIMATED PIPE DIAMETER(INCH) INCREASED TO 12.000
  DEPTH OF FLOW IN  12.0 INCH PIPE IS   2.8 INCHES
  PIPE-FLOW VELOCITY(FEET/SEC.) =   9.62
  ESTIMATED PIPE DIAMETER(INCH) =  12.00    NUMBER OF PIPES =   1
  PIPE-FLOW(CFS) =       1.33
  PIPE TRAVEL TIME(MIN.) =   0.16    Tc(MIN.) =    6.23
  LONGEST FLOWPATH FROM NODE    125.00 TO NODE    128.00 =     406.00 FEET.

+--------------------------------------------------------------------------+
|                                                                          |
|                                                                          |
|                                                                          |
+--------------------------------------------------------------------------+

****************************************************************************
  FLOW PROCESS FROM NODE    140.00 TO NODE    141.00 IS CODE =  21
----------------------------------------------------------------------------
  >>>>>RATIONAL METHOD INITIAL SUBAREA ANALYSIS<<<<<
============================================================================
  *USER SPECIFIED(SUBAREA):
  STREETS & ROADS (CURBS/STORM DRAINS) RUNOFF COEFFICIENT = .9000
  S.C.S. CURVE NUMBER (AMC II) =   0
```

```
  INITIAL SUBAREA FLOW-LENGTH(FEET) =    75.00
  UPSTREAM ELEVATION(FEET) =     24.50
  DOWNSTREAM ELEVATION(FEET) =     23.90
  ELEVATION DIFFERENCE(FEET) =      0.60
  SUBAREA OVERLAND TIME OF FLOW(MIN.) =    2.902
  WARNING: INITIAL SUBAREA FLOW PATH LENGTH IS GREATER THAN
           THE MAXIMUM OVERLAND FLOW LENGTH =    56.00
           (Reference: Table 3-1B of Hydrology Manual)
           THE MAXIMUM OVERLAND FLOW LENGTH IS USED IN Tc CALCULATION!
   100 YEAR RAINFALL INTENSITY(INCH/HOUR) =  6.455
  NOTE: RAINFALL INTENSITY IS BASED ON Tc = 5-MINUTE.
  SUBAREA RUNOFF(CFS) =      0.35
  TOTAL AREA(ACRES) =      0.06   TOTAL RUNOFF(CFS) =      0.35

****************************************************************************
  FLOW PROCESS FROM NODE    141.00 TO NODE    142.00 IS CODE =  61
----------------------------------------------------------------------------
  >>>>>COMPUTE STREET FLOW TRAVEL TIME THRU SUBAREA<<<<<
  >>>>>(STANDARD CURB SECTION USED)<<<<<
============================================================================
  UPSTREAM ELEVATION(FEET) =   23.90  DOWNSTREAM ELEVATION(FEET) =   17.00
  STREET LENGTH(FEET) =   330.00   CURB HEIGHT(INCHES) =  6.0
  STREET HALFWIDTH(FEET) = 30.00

  DISTANCE FROM CROWN TO CROSSFALL GRADEBREAK(FEET) =  15.00
  INSIDE STREET CROSSFALL(DECIMAL) =  0.020
  OUTSIDE STREET CROSSFALL(DECIMAL)  =  0.020

  SPECIFIED NUMBER OF HALFSTREETS CARRYING RUNOFF =  1
  STREET PARKWAY CROSSFALL(DECIMAL)  =  0.020
  Manning's FRICTION FACTOR for Streetflow Section(curb-to-curb) =   0.0150
  Manning's FRICTION FACTOR for Back-of-Walk Flow Section =   0.0200

    **TRAVEL TIME COMPUTED USING ESTIMATED FLOW(CFS) =       1.12
    STREETFLOW MODEL RESULTS USING ESTIMATED FLOW:
    STREET FLOW DEPTH(FEET) =  0.24
    HALFSTREET FLOOD WIDTH(FEET) =    5.69
    AVERAGE FLOW VELOCITY(FEET/SEC.) =    2.53
    PRODUCT OF DEPTH&VELOCITY(FT*FT/SEC.) =    0.61
  STREET FLOW TRAVEL TIME(MIN.) =   2.17   Tc(MIN.) =    5.07
   100 YEAR RAINFALL INTENSITY(INCH/HOUR) =  6.396
  *USER SPECIFIED(SUBAREA):
  STREETS & ROADS (CURBS/STORM DRAINS) RUNOFF COEFFICIENT = .8600
  S.C.S. CURVE NUMBER (AMC II) =   0
  AREA-AVERAGE RUNOFF COEFFICIENT =  0.867
  SUBAREA AREA(ACRES) =    0.28      SUBAREA RUNOFF(CFS) =    1.54
  TOTAL AREA(ACRES) =        0.3        PEAK FLOW RATE(CFS) =       1.89

  END OF SUBAREA STREET FLOW HYDRAULICS:
  DEPTH(FEET) = 0.27   HALFSTREET FLOOD WIDTH(FEET) =   7.43
  FLOW VELOCITY(FEET/SEC.) =  2.81   DEPTH*VELOCITY(FT*FT/SEC.) =   0.77
  LONGEST FLOWPATH FROM NODE    140.00 TO NODE    142.00 =     405.00 FEET.

****************************************************************************
  FLOW PROCESS FROM NODE    142.00 TO NODE    143.00 IS CODE =  31
----------------------------------------------------------------------------
  >>>>>COMPUTE PIPE-FLOW TRAVEL TIME THRU SUBAREA<<<<<
  >>>>>USING COMPUTER-ESTIMATED PIPESIZE (NON-PRESSURE FLOW)<<<<<
============================================================================
  ELEVATION DATA: UPSTREAM(FEET) =    13.00  DOWNSTREAM(FEET) =     9.00
  FLOW LENGTH(FEET) =   140.00   MANNING'S N =  0.013
  ESTIMATED PIPE DIAMETER(INCH) INCREASED TO 12.000
  DEPTH OF FLOW IN  12.0 INCH PIPE IS   4.7 INCHES
  PIPE-FLOW VELOCITY(FEET/SEC.) =   6.53
  ESTIMATED PIPE DIAMETER(INCH) =  12.00    NUMBER OF PIPES =   1
  PIPE-FLOW(CFS) =       1.89
  PIPE TRAVEL TIME(MIN.) =   0.36    Tc(MIN.) =    5.43
  LONGEST FLOWPATH FROM NODE    140.00 TO NODE    143.00 =     545.00 FEET.

+--------------------------------------------------------------------------+
|                                                                          |
|                                                                          |
|                                                                          |
+--------------------------------------------------------------------------+

****************************************************************************
```

```
  FLOW PROCESS FROM NODE    150.00 TO NODE    151.00 IS CODE =  21
----------------------------------------------------------------------------
  >>>>>RATIONAL METHOD INITIAL SUBAREA ANALYSIS<<<<<
============================================================================
  *USER SPECIFIED(SUBAREA):
  STREETS & ROADS (CURBS/STORM DRAINS) RUNOFF COEFFICIENT = .9000
  S.C.S. CURVE NUMBER (AMC II) =   0
  INITIAL SUBAREA FLOW-LENGTH(FEET) =    75.00
  UPSTREAM ELEVATION(FEET) =     24.50
  DOWNSTREAM ELEVATION(FEET) =     23.90
  ELEVATION DIFFERENCE(FEET) =      0.60
  SUBAREA OVERLAND TIME OF FLOW(MIN.) =    2.902
  WARNING: INITIAL SUBAREA FLOW PATH LENGTH IS GREATER THAN
           THE MAXIMUM OVERLAND FLOW LENGTH =    56.00
           (Reference: Table 3-1B of Hydrology Manual)
           THE MAXIMUM OVERLAND FLOW LENGTH IS USED IN Tc CALCULATION!
   100 YEAR RAINFALL INTENSITY(INCH/HOUR) =  6.455
  NOTE: RAINFALL INTENSITY IS BASED ON Tc = 5-MINUTE.
  SUBAREA RUNOFF(CFS) =      0.35
  TOTAL AREA(ACRES) =      0.06   TOTAL RUNOFF(CFS) =      0.35

****************************************************************************
  FLOW PROCESS FROM NODE    151.00 TO NODE    152.00 IS CODE =  61
----------------------------------------------------------------------------
  >>>>>COMPUTE STREET FLOW TRAVEL TIME THRU SUBAREA<<<<<
  >>>>>(STANDARD CURB SECTION USED)<<<<<
============================================================================
  UPSTREAM ELEVATION(FEET) =   23.90  DOWNSTREAM ELEVATION(FEET) =   17.00
  STREET LENGTH(FEET) =   330.00   CURB HEIGHT(INCHES) =  6.0
  STREET HALFWIDTH(FEET) = 30.00

  DISTANCE FROM CROWN TO CROSSFALL GRADEBREAK(FEET) =  15.00
  INSIDE STREET CROSSFALL(DECIMAL) =  0.020
  OUTSIDE STREET CROSSFALL(DECIMAL)  =  0.020

  SPECIFIED NUMBER OF HALFSTREETS CARRYING RUNOFF =  1
  STREET PARKWAY CROSSFALL(DECIMAL)  =  0.020
  Manning's FRICTION FACTOR for Streetflow Section(curb-to-curb) =   0.0150
  Manning's FRICTION FACTOR for Back-of-Walk Flow Section =   0.0200

    **TRAVEL TIME COMPUTED USING ESTIMATED FLOW(CFS) =       1.11
    STREETFLOW MODEL RESULTS USING ESTIMATED FLOW:
    STREET FLOW DEPTH(FEET) =  0.24
    HALFSTREET FLOOD WIDTH(FEET) =    5.69
    AVERAGE FLOW VELOCITY(FEET/SEC.) =    2.51
    PRODUCT OF DEPTH&VELOCITY(FT*FT/SEC.) =    0.60
  STREET FLOW TRAVEL TIME(MIN.) =   2.20   Tc(MIN.) =    5.10
   100 YEAR RAINFALL INTENSITY(INCH/HOUR) =  6.375
  *USER SPECIFIED(SUBAREA):
  STREETS & ROADS (CURBS/STORM DRAINS) RUNOFF COEFFICIENT = .8800
  S.C.S. CURVE NUMBER (AMC II) =   0
  AREA-AVERAGE RUNOFF COEFFICIENT =  0.884
  SUBAREA AREA(ACRES) =    0.27      SUBAREA RUNOFF(CFS) =    1.51
  TOTAL AREA(ACRES) =        0.3        PEAK FLOW RATE(CFS) =       1.86

  END OF SUBAREA STREET FLOW HYDRAULICS:
  DEPTH(FEET) = 0.27   HALFSTREET FLOOD WIDTH(FEET) =   7.38
  FLOW VELOCITY(FEET/SEC.) =  2.81   DEPTH*VELOCITY(FT*FT/SEC.) =   0.77
  LONGEST FLOWPATH FROM NODE    150.00 TO NODE    152.00 =     405.00 FEET.

****************************************************************************
  FLOW PROCESS FROM NODE    152.00 TO NODE    153.00 IS CODE =  31
----------------------------------------------------------------------------
  >>>>>COMPUTE PIPE-FLOW TRAVEL TIME THRU SUBAREA<<<<<
  >>>>>USING COMPUTER-ESTIMATED PIPESIZE (NON-PRESSURE FLOW)<<<<<
============================================================================
  ELEVATION DATA: UPSTREAM(FEET) =    13.00  DOWNSTREAM(FEET) =     9.75
  FLOW LENGTH(FEET) =   155.00   MANNING'S N =  0.013
  ESTIMATED PIPE DIAMETER(INCH) INCREASED TO 12.000
  DEPTH OF FLOW IN  12.0 INCH PIPE IS   5.1 INCHES
  PIPE-FLOW VELOCITY(FEET/SEC.) =   5.81
  ESTIMATED PIPE DIAMETER(INCH) =  12.00    NUMBER OF PIPES =   1
  PIPE-FLOW(CFS) =       1.86
  PIPE TRAVEL TIME(MIN.) =   0.44    Tc(MIN.) =    5.54
  LONGEST FLOWPATH FROM NODE    150.00 TO NODE    153.00 =     560.00 FEET.
```

```
+----------------------------------------------------------------------------+
|                                                                            |
|                                                                            |
|                                                                            |
+----------------------------------------------------------------------------+

****************************************************************************
  FLOW PROCESS FROM NODE    145.00 TO NODE    146.00 IS CODE =  21
----------------------------------------------------------------------------
  >>>>>RATIONAL METHOD INITIAL SUBAREA ANALYSIS<<<<<
============================================================================
  *USER SPECIFIED(SUBAREA):
  STREETS & ROADS (CURBS/STORM DRAINS) RUNOFF COEFFICIENT = .6400
  S.C.S. CURVE NUMBER (AMC II) =   0
  INITIAL SUBAREA FLOW-LENGTH(FEET) =   165.00
  UPSTREAM ELEVATION(FEET) =     17.00
  DOWNSTREAM ELEVATION(FEET) =     14.00
  ELEVATION DIFFERENCE(FEET) =      3.00
  SUBAREA OVERLAND TIME OF FLOW(MIN.) =    5.602
  WARNING: INITIAL SUBAREA FLOW PATH LENGTH IS GREATER THAN
           THE MAXIMUM OVERLAND FLOW LENGTH =    68.18
           (Reference: Table 3-1B of Hydrology Manual)
           THE MAXIMUM OVERLAND FLOW LENGTH IS USED IN Tc CALCULATION!
   100 YEAR RAINFALL INTENSITY(INCH/HOUR) =  5.999
  SUBAREA RUNOFF(CFS) =      1.04
  TOTAL AREA(ACRES) =      0.27   TOTAL RUNOFF(CFS) =      1.04

+----------------------------------------------------------------------------+
|                                                                            |
|                                                                            |
|                                                                            |
+----------------------------------------------------------------------------+

****************************************************************************
  FLOW PROCESS FROM NODE    155.00 TO NODE    156.00 IS CODE =  21
----------------------------------------------------------------------------
  >>>>>RATIONAL METHOD INITIAL SUBAREA ANALYSIS<<<<<
============================================================================
  *USER SPECIFIED(SUBAREA):
  STREETS & ROADS (CURBS/STORM DRAINS) RUNOFF COEFFICIENT = .7100
  S.C.S. CURVE NUMBER (AMC II) =   0
  INITIAL SUBAREA FLOW-LENGTH(FEET) =   165.00
  UPSTREAM ELEVATION(FEET) =     17.00
  DOWNSTREAM ELEVATION(FEET) =     14.00
  ELEVATION DIFFERENCE(FEET) =      3.00
  SUBAREA OVERLAND TIME OF FLOW(MIN.) =    4.749
  WARNING: INITIAL SUBAREA FLOW PATH LENGTH IS GREATER THAN
           THE MAXIMUM OVERLAND FLOW LENGTH =    68.18
           (Reference: Table 3-1B of Hydrology Manual)
           THE MAXIMUM OVERLAND FLOW LENGTH IS USED IN Tc CALCULATION!
   100 YEAR RAINFALL INTENSITY(INCH/HOUR) =  6.455
  NOTE: RAINFALL INTENSITY IS BASED ON Tc = 5-MINUTE.
  SUBAREA RUNOFF(CFS) =      0.78
  TOTAL AREA(ACRES) =      0.17   TOTAL RUNOFF(CFS) =      0.78
============================================================================
  END OF STUDY SUMMARY:
  TOTAL AREA(ACRES)     =        0.2  TC(MIN.) =      4.75
  PEAK FLOW RATE(CFS)   =       0.78
============================================================================
============================================================================
  END OF RATIONAL METHOD ANALYSIS
```

Appendix B

Curb Inlet Sizing Calculations

INLET CALCULATIONS

CAMINO DEL MAR PROJECT

BRIDGE NO. 57C-0209

Inlets in SAG condition

$Q = 0.67\ h\ L\ (2gd_o)^{1/2}$ (equation 2-9, San Diego Hydraulic Design Manual)

Node	Q (cfs)	h (ft)	g (ft^2/s)	d_o (ft)	Req. inlet opening (ft)	Length Used (ft)	Type
112	3.23	0.5	32.2	0.33	2.09	5	B, SDRSD D-02
122	2.86	0.5	32.2	0.33	1.85	5	B, SDRSD D-02

Inlets on Continuous slope

$Q/L_T = 0.7\ (a + y)^{3/2}$ (equation 2-2, San Diego Hydraulic Design Manual)

Node	Slope %	Q (cfs)	y (ft)	a (ft)	Req. inlet opening (ft)	Length Used (ft)	Type
142	2.00	1.89	0.21	0.33	6.80	8	B-1, SDRSD D-02
152	2.00	1.86	0.21	0.33	6.70	8	B-1, SDRSD D-02

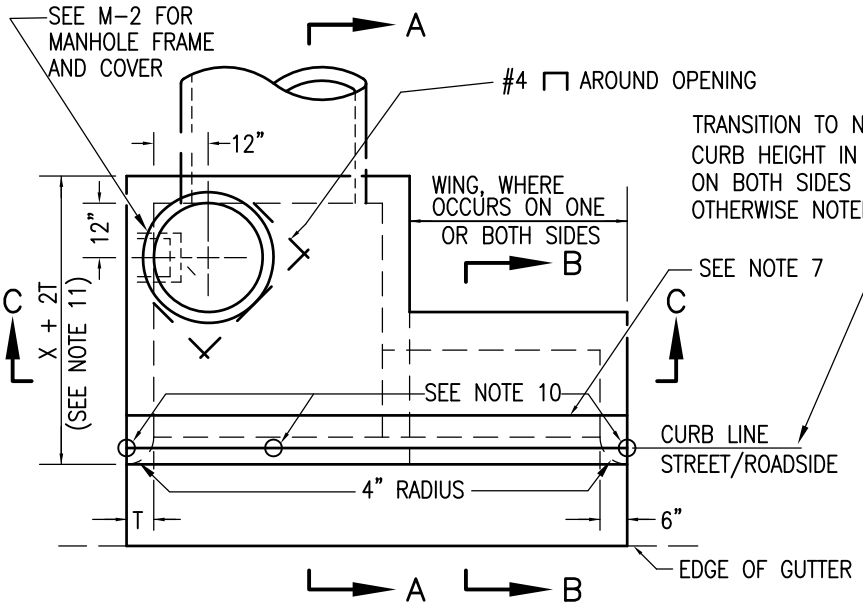

PLAN

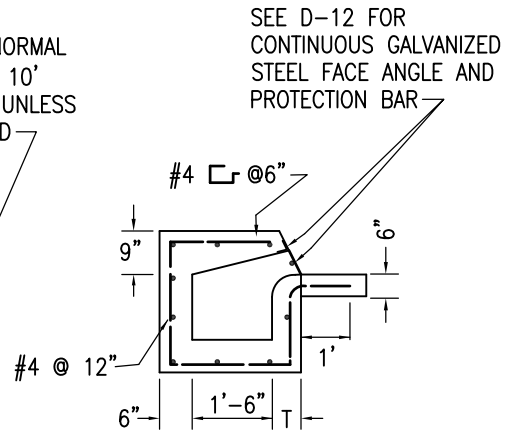

SECTION B-B

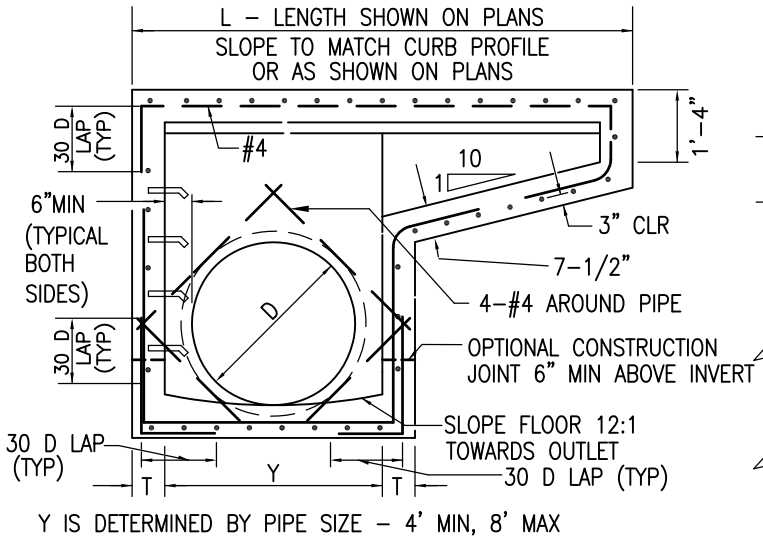

Y IS DETERMINED BY PIPE SIZE - 4' MIN, 8' MAX

SECTION C-C

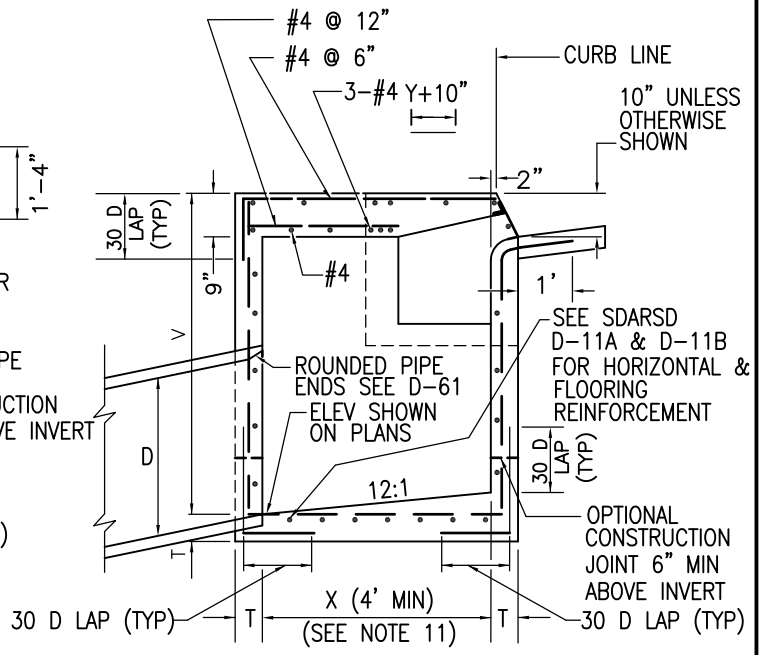

SECTION A-A

NOTES

1. SEE D-11A, D-11B & D-12 FOR ADDITIONAL NOTES AND DETAILS.
2. TYPES ARE DESIGNATED ON PLANS AS FOLLOWS: B (NO WING), B-1 (ONE WING) or B-2 (TWO WINGS).
3. MAINTAIN 1-1/2" CLEAR SPACING BETWEEN REINFORCING AND CONCRETE SURFACE UNLESS OTHERWISE NOTED.
4. STEPS SHALL BE INSTALLED WHEN V EXCEEDS 4'. SEE D-11A FOR DETAILS.
5. CONCRETE GUTTER TO MATCH ADJACENT GUTTERS.
6. AN EXPANSION JOINT SHALL BE PLACED AT THE ENDS OF THE INLET WHERE THE CURB IS TO ADJOIN.
7. PROVIDE 1/4" TOOLED GROOVE IN TOP SLAB IN LINE WITH BACK OF ADJACENT CURB.
8. SURFACE OF TOP SLAB TO MATCH SIDEWALK FINISH AND SLOPE.
9. IF REQUIRED BY LOCAL AGENCY, EXTEND TOP SLAB STEEL REINFORCEMENT 12" INTO ADJACENT SIDEWALK.
10. ELEVATIONS SHALL BE SHOWN ON PLANS WHERE INDICATED BY "O" SYMBOL.
11. IF REQUIRED BY LOCAL AGENCY, ENLARGE CURB INLET TOP TO WIDTH OF ADJACENT SIDEWALK (X + 2T NOT TO EXCEED 5'-6") BY LENGTH OF INLET INCLUDING WING(S). REINFORCING STEEL SHALL BE EXTENDED ACROSS ENLARGED TOP TO CLEAR DISTANCES SHOWN.

LEGEND ON PLANS

Revision	By	Approved	Date
ORIGINAL		Kercheval	12/75
Edited		T. Stanton	02/09
Edited	S.S.	T. Regello	03/11
Edited	T.R.	T. Regello	10/15
Edited	M.W.	M. Widelski	10/18

SAN DIEGO REGIONAL STANDARD DRAWING

CURB INLET - TYPE B

RECOMMENDED BY THE SAN DIEGO REGIONAL STANDARDS COMMITTEE

10/25/2018

Chairperson R.C.E. 19246 Date

DRAWING NUMBER D-02

Appendix C

Preliminary Rip Rap – Energy Dissipation Calculations

RIP RAP CALCULATIONS

CAMINO DEL MAR PROJECT

BRIDGE NO. 57C-0209

Rip Rap ID#	Location	Node #	Outlet Pipe Diameter (in)	Q (cfs)	Velocity (fps)	Width (ft)	Length (ft)	Rock Classification	Thickness (ft)
1	Northwest end of Bridge	117	18	4.46	17.11	4.5	10	2- Ton	5.4
2	275' northeast of north end of Bridge	124	18	2.86	14.8	4.5	10	1-Ton	4.4'
3	Northeast end of Bridge	128	18	1.33	9.62	4.5	10	1/4 Ton	2.7
4	Southeast end of Bridge	143	18	1.89	6.53	4.5	10	1/4 Ton	2.7
5	Southwest end of Bridge	153	18	1.86	5.81	4.5	10	1/4 Ton	2.7

Table 7–1 (below) per July 2005
San Diego County Drainage Design Manual

Design Velocity ft/sec*	Rock Class	Rip–Rap Thickness "T" (min)
6–10	No. 2 backing	1.1ft
10–12	1/4 ton	2.7ft
12–14	1/2 ton	3.5ft
14–16	1 ton	4.4ft
16–18	2 ton	5.4ft

*over 20 ft/sec requires special design

D = Pipe Diameter
W = Bottom Width of Channel

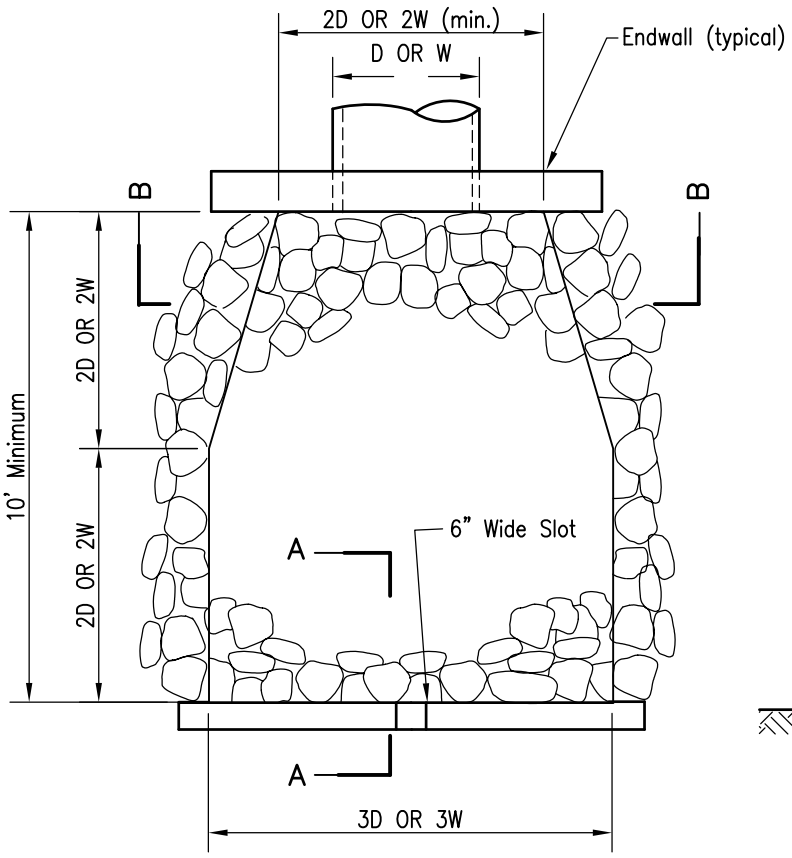

PLAN

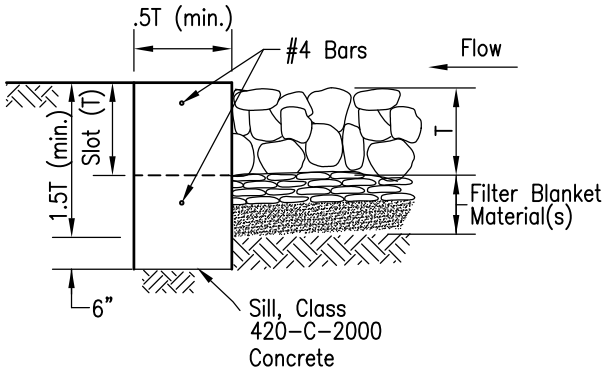

SECTION A–A

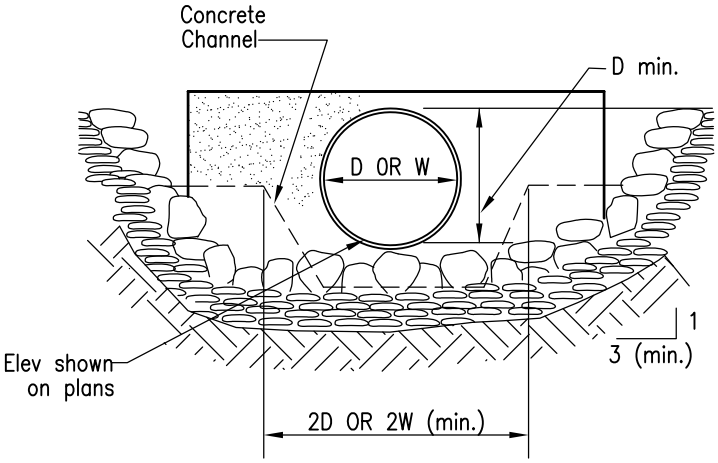

SECTION B–B

NOTES

1. Plans shall specify:
   (A) Rock Class and rip–rap thickness (T). T shall be at least 1.5 times the nominal equivalent diameter of stone (d_{50}) of the specified rip–rap.
   (B) Filter blanket material, number of layers and thickness.
2. Rip rap shall be either quarry stone or broken concrete (if shown on the plans). Cobbles are not acceptable.
3. Rip rap shall be placed over filter blanket material, which may be either granular material or non–woven geotextile filter fabric; material at weight specified in plans or specifications.
4. See Table 200–1.7 in San Diego Regional Supplement to Greenbook for selection of filter blanket.
5. Rip rap energy dissipaters shall be designated as either Type 1 or Type 2. Type 1 shall be with concrete sill; Type 2 shall be without sill.

Revision	By	Approved	Date
ORIGINAL		Kercheval	12/75
Add Metric		T. Stanton	03/03
Add Rip Rap Table		S. Brady	04/06
Edited		T. Stanton	02/09
Edited	S.S.	T. Regello	03/11

SAN DIEGO REGIONAL STANDARD DRAWING

RIP RAP ENERGY DISSIPATER

RECOMMENDED BY THE SAN DIEGO REGIONAL STANDARDS COMMITTEE

7/26/2012

Chairperson R.C.E. 19246 Date

DRAWING NUMBER D-40