06 - Tul - 198 – PM 0.0/44.0
06-0X2600 – 0618000045 –PPNO 7105
201.151 – SHOPP
June/2022

Project Report

To

Request Project Approval

On Route 198 at various locations in Tulare County

Between Kings County Line

And Sequoia National Park Boundary

I have reviewed the right-of-way information contained in this report and the right-of- way data sheet attached hereto, and find the data to be complete, current and accurate:

MARIA TOLES,
Deputy District Director,
Right of Way

APPROVAL RECOMMENDED:

Shavonne Conley
SHAVONNE CONLEY, Project Manager

APPROVED:

DIANA GOMEZ, District 6 Director

7-6-2022
Date

Vicinity Map

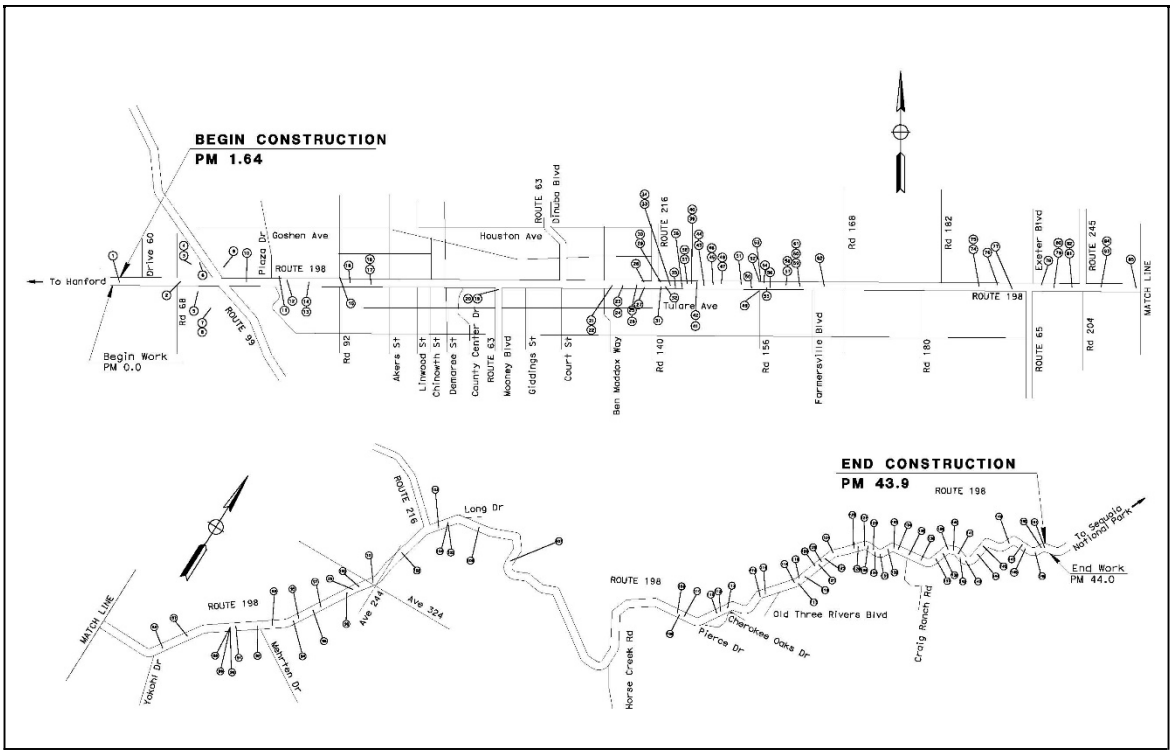

<u>On Route 198 in Tulare County from Kings County Line to Sequoia National Park Boundary</u>

This project report has been prepared under the direction of the following registered civil engineer. The registered civil engineer attests to the technical information contained herein and the engineering data upon which recommendations, conclusions, and decisions are based.

06-16-2022

REGISTERED CIVIL ENGINEER *DATE*

REGISTERED PROFESSIONAL ENGINEER
David E Melis
No. C54383
Exp. 12/31/23
CIVIL
STATE OF CALIFORNIA

Table of Contents

1. INTRODUCTION

Project Description:

This project proposes to rehabilitate culverts in Tulare County, on State Route (SR) 198 at various locations from the Kings County Line at PM 0.0 to PM 44.0, near the Sequoia National Park Boundary at PM 44.16 (Attachment A). The eastern project limit from the Conceptual Report dated January 10, 2017 was coincident with the Sequoia National Park Boundary at PM 44.16, but this was adjusted during the PA/ED phase to PM 44.0 with the eastern-most culvert located at PM 43.88. A project change request (PCR) will be processed to reflect this change.

Culverts at 122 locations will be rehabilitated by being replaced, relined, or joint sealed. Existing culvert materials vary from reinforced concrete pipe to corrugated steel pipe. Culverts range from 12 to 48 inches in diameter.

The Project Construction Capital Cost is estimated at $11,416,000 and Right of Way Capital Cost is $576,000, both escalated to mid-point of construction.

Project Limits	06-Tul-198 PM 0.0/44.0	
Number of Alternatives	2 – Build (1) & No Build (1)	
	Current Cost Estimate:	**Escalated Cost Estimate:**
Capital Outlay Support	$10,600,000	$11,599,000
Capital Outlay Construction	$10,079,000	$11,416,000
Capital Outlay Right-of-Way	$522,000	$576,000
Funding Source	SHOPP/201.151	
Funding Year	2022/2023	
Type of Facility	4-lane Freeway/Expressway and 2-Lane Conventional Highway	
Number of Structures	0	
SHOPP Project Output	122 Drainage Culverts/8,936 LF	
Environmental Determination or Document	Initial Study with Negative Declaration (IS/ND) under the California Environmental Quality Act (CEQA), and Categorical Exclusion (CE) under National Environmental Quality Act (NEPA)	
Legal Description	In Tulare County, at various locations, from Kings County Line to Sequoia National Park Boundary	
Project Development Category	4B	

2. RECOMMENDATION

It is recommended that this Project Report be approved using the build alternative and that the project proceed to the design phase.

3. BACKGROUND

Starting at the Tulare/Kings County line, SR 198 traverses flat agricultural and urbanized areas of the San Joaquin Valley, leading to rolling foothill and mountainous terrain up to the entrance into Sequoia National Park. SR 198 consists of 4-lane expressway and freeway segments from Road 44 to SR 245, and a 2-lane conventional highway east of SR 245 to the eastern project limit, with narrow lanes and minimal shoulders in the rolling and mountainous areas.

This project was approved by a Conceptual Report dated January 10, 2017. During the Project Initiation phase, 151 culvert locations were identified for repair. These culverts vary in size, shape, and material, and primarily convey flow of surface water and stream flow across the highway right of way. Deficiencies of the existing culverts are due to corrosion, joint separation, debris/sediment blockage, and damaged or missing end treatments.

After the environmental phase begun, Caltrans Maintenance determined that culverts at 11 locations were addressed by other projects and the Project Development Team (PDT) removed them from the scope of this project, reducing the number of culverts to from 151 to 140. Following the completion of the Draft Project Report and Draft Environmental Document, a reinspection determined that there were 18 additional locations that should be removed from the scope of the project because the culverts were found to be in good condition, were abandoned, had been replaced by another project, or had been incorrectly included in the Project Initiation Document because the proposed rehabilitation measure (culvert end treatment) was not eligible for the program. The total number of culverts to be rehabilitated by the project has been reduced to 122. A Project Change Request was prepared for these changes. The proposed drainage improvements are discussed in more detail in the Build Alternative section of this report and listed in Attachment B.

This project will extend the life of the drainage systems, replace undersized culverts, and help maintain the operational integrity of the highway.

4. PURPOSE AND NEED

Purpose:
The purpose of this project is to restore the existing drainage systems to a state of good repair by repairing or replacing existing deteriorating culverts within the project limits.

Need:

A. Problem, Deficiencies, Justification

The identified deficient drainage systems (culverts) found within the project limits have perforations, heavy rust, joint separations, damaged or missing end treatments and/or are clogged with sediment and debris. Replacing and repairing the clogged culverts is necessary to maintain the operational integrity of the highway. Maintaining these drainage systems will extend the life of the culverts as well as the roadway integrity.

B. Regional and System Planning

SR 198 within Tulare County is a 2 to 4-lane Conventional/Freeway/Expressway with interchange connections with SR 99, 63 and 216 within the project limits. The posted speed limit is 55 mph east of SR 245/Road 204.

SR 198 is part of the National Network (NN) from PM 0.0 to 3.71. SR 198 is a designated Terminal Access route from PM 3.71 to 38.60. SR 198 is a designated CA Legal Advisory route with 30 KPRA (Kingpin to Rear Axle) from PM 38.6 to 44.0.

The segment of SR 198 from Kings/Tulare County line (PM 0.0) to east of Road 68 (PM R3.3) is an Expressway with a 10 foot outside shoulder and a 5 foot inside shoulder in a flat, rural area. The segment from east of Road 68 (PM R3.3) to Outside Creek (PM R16.6) is a 4-lane Freeway in a flat, mostly urban area. The segment from Outside Creek (PM R16.6) to east of SR 245 (PM 19.9) is a 4-lane Expressway through a flat, rural area. East of SR 245 (PM 19.9) to the Sequoia National Park Boundary (PM 44.16), SR 198 is a 2-lane conventional highway with 12 to 10-foot lanes and 0 to 8 foot outside shoulders.

C. Traffic

The projected Average Daily Traffic (ADT), Design Hour Volume, Peak Hour Directional Volume Percentage, Truck Design Hourly Volume Percentage, Traffic Index, and Equivalent Single Axle Loads for 10-year and 20-year design periods for the segments of SR 198 are shown in the tables below.

SR 198 – PM 0.0 to PM 3.8	Design Periods	
	10-Year	20-Year
	2025-2035	2025-2045
2025 ADT	28,500	28,500
2035 ADT	32,000	
2045 ADT		36,500
2035 Design Hour Volume	3,100	
2045 Design Hour Volume		3,500
Peak-Hour Directional Volume Percentage (D)	58%	58%
Truck Design Hourly Volume Percentage	7%	7%
Traffic Index (TI)	10.5	11.5
Equivalent Single Axle Load (ESAL)	3,320,000	7,100,000
Trucks comprise 6.6% of the ADT		

SR 198 – PM 3.8 to PM 11.7	Design Periods	
	10-Year	20-Year
	2025-2035	2025-2045
2025 ADT	70,000	70,000
2035 ADT	80,500	
2045 ADT		92,500
2035 Design Hour Volume	8,200	
2045 Design Hour Volume		9,400
Peak-Hour Directional Volume Percentage (D)	65%	65%
Truck Design Hourly Volume Percentage	9%	9%
Traffic Index (TI)	12.0	13.0
Equivalent Single Axle Load (ESAL)	9,400,000	20,430,000
Trucks comprise 9.0% of the ADT		

SR 198 – PM 11.7 to PM 19.7	Design Periods	
	10-Year	20-Year
	2025-2035	2025-2045
2025 ADT	34,500	34,500
2035 ADT	38,500	
2045 ADT		42,500
2035 Design Hour Volume	3,600	
2045 Design Hour Volume		4,000
Peak-Hour Directional Volume Percentage (D)	60%	60%
Truck Design Hourly Volume Percentage	9%	9%
Traffic Index (TI)	10.5	11.5
Equivalent Single Axle Load (ESAL)	3,620,000	7,660,000
Trucks comprise 9.9% of the ADT		

SR 198 – PM 19.7 to PM 42.3	Design Periods	
	10-Year	20-Year
	2025-2035	2025-2045
2025 ADT	7,100	7,100
2035 ADT	7,500	
2045 ADT		8,000
2035 Design Hour Volume	750	
2045 Design Hour Volume		800
Peak-Hour Directional Volume Percentage (D)	66%	66%
Truck Design Hourly Volume Percentage	3%	3%
Traffic Index (TI)	10.0	11.0
Equivalent Single Axle Load (ESAL)	2,360,000	4,870,000
Trucks comprise 18.0% of the ADT		

SR 198 – PM 42.3 to PM 44.0	Design Periods	
	10-Year	20-Year
	2025-2035	2025-2045
2025 ADT	1,650	1,650
2035 ADT	1,750	
2045 ADT		1,850
2035 Design Hour Volume	350	
2045 Design Hour Volume		370
Peak-Hour Directional Volume Percentage (D)	80%	80%
Truck Design Hourly Volume Percentage	3%	3%
Traffic Index (TI)	6.0	6.5
Equivalent Single Axle Load (ESAL)	29,000	61,000
Trucks comprise 3.2% of the ADT		

5. ALTERNATIVES

A. Viable Alternatives

The Build alternative proposes to repair or replace culverts at 122 locations on SR 198*;* thereby*,* preventing further deterioration and potential failure of the existing culverts and erosion of embankments due to storm water runoff.

Table 1 lists the culvert locations recommended by the Project Development Team (PDT) for rehabilitation after a field review.

Culverts with a diameter of 24 inches or larger that are corroded and perforated will be replaced with a culvert of the same diameter. Culverts with a diameter of 18 inches or less will be replaced with a 24-inch diameter pipe. Existing culverts with a deteriorated interior lining, but still deemed structurally sound, will be relined. Joint separations will be repaired. Headwalls, inlets, and flared end sections will be replaced or modified as part of the culvert replacement.

Table 1 – Culvert Locations

Loc	SR	PM	Culvert Material	Culvert Size	Recommendation
1	198	1.64	HDPE	24"	Joint Sealing/Repair of Existing Culvert
~~2~~	~~198~~	~~3.11~~	~~CSP~~	~~18"~~	~~Barrel Lining of Existing Culvert~~
3	198	3.54	CSP	24"	Barrel Lining of Existing Culvert
4	198	3.54	CSP	24"	Barrel Lining of Existing Culvert
5	198	3.54	CSP	24"	Barrel Lining of Existing Culvert
6	198	3.63	CSP	24"	Barrel Lining of Existing Culvert
~~7~~	~~198~~	~~3.73~~	~~CSP~~	~~24"~~	~~Place Flared End Section on Existing Culvert~~
8	198	3.73	CSP	24"	Barrel Lining of Existing Culvert
9	198	3.83	CSP	12"	Barrel Lining of Existing Culvert
10	198	4.45	CSP	18"	Barrel Lining of Existing Culvert
11	198	5.28	CSP	24"	Barrel Lining of Existing Culvert
12	198	5.34	CSP	18"	Barrel Lining of Existing Culvert
~~13~~	~~198~~	~~5.59~~	~~CSP~~	~~18"~~	~~Barrel Lining of Existing Culvert~~
~~14~~	~~198~~	~~5.59~~	~~CSP~~	~~18"~~	~~Barrel Lining of Existing Culvert~~
15	198	5.80	CSP	18"	Barrel Lining of Existing Culvert
~~16~~	~~198~~	~~5.80~~	~~CSP~~	~~18"~~	~~Restore and Stabilize Embankment~~
17	198	6.31	CSP/HDPE	18"	Remove and Replace Existing Culvert
18	198	6.31	CSP	18"	Barrel Lining of Existing Culvert
19	198	8.15	Concrete	15"	Joint Sealing/Repair
20	198	8.15	Concrete	18"	Joint Sealing/Repair
21	198	11.01	CSP	24"	Remove and Replace Existing Culvert
22	198	11.01	CSP	24"	Remove and Replace Existing Culvert
23	198	11.28	CSP	24"	Barrel Lining of Existing Culvert
24	198	11.28	CSP	24"	Barrel Lining of Existing Culvert
25	198	11.56	CSP	18"	Remove and Replace Existing Culvert
26	198	11.56	CSP	18"	Barrel Lining of Existing Culvert
~~27~~	~~198~~	~~11.64~~	~~CSP~~	~~18"~~	~~Barrel Lining of Existing Culvert~~
~~28~~	~~198~~	~~11.64~~	~~CSP~~	~~18"~~	~~Barrel Lining of Existing Culvert~~
29	198	11.79	CSP	18"	Barrel Lining of Existing Culvert
30	198	11.79	CSP	18"	Barrel Lining of Existing Culvert
31	198	11.81	CSP	18"	Barrel Lining of Existing Culvert
32	198	11.91	CSP	18"	Barrel Lining of Existing Culvert
33	198	11.96	CSP	24"	Barrel Lining of Existing Culvert
34	198	11.96	CSP	24"	Barrel Lining of Existing Culvert
35	198	12.28	CSP	24"	Barrel Lining of Existing Culvert
36	198	12.47	CSP	24"	Remove and Replace Existing Culvert
37	198	12.65	CSP	24"	Barrel Lining of Existing Culvert
38	198	12.65	CSP Arch	24” x 18”	Barrel Lining of Existing Culvert
39	198	12.84	CSP	24"	Remove and Replace Existing Culvert

Loc	SR	PM	Culvert Material	Culvert Size	Recommendation
40	198	12.84	CSP Arch	24” x 18”	Barrel Lining of Existing Culvert
41	198	12.94	CSP	24"	Remove and Replace Existing Culvert
42	198	12.94	CSP	24"	Remove and Replace Existing Culvert
43	198	13.06	CSP	24"	Barrel Lining of Existing Culvert
44	198	13.06	CSP	18"	Barrel Lining of Existing Culvert
45	198	13.31	CSP	24"	Barrel Lining of Existing Culvert
46	198	13.31	CSP Arch	24” x 18”	Barrel Lining of Existing Culvert
47	198	13.40	CSP	24"	Barrel Lining of Existing Culvert
48	198	13.40	CSP	24"	Barrel Lining of Existing Culvert
49	198	13.67	CSP	18"	Barrel Lining of Existing Culvert
~~50~~	~~198~~	~~13.67~~	~~CSP~~	~~18"~~	~~Barrel Lining of Existing Culvert~~
51	198	13.67	CSP	18"	Barrel Lining of Existing Culvert
52	198	13.67	CSP	24"	Remove and Replace Existing Culvert
53	198	13.67	CSP	18"	Barrel Lining of Existing Culvert
54	198	13.67	CSP	18"	Barrel Lining of Existing Culvert
55	198	13.67	CSP	18"	Barrel Lining of Existing Culvert
56	198	14.09	CSP	24"	Remove and Replace Existing Culvert
57	198	14.42	CSP	24"	Remove and Replace Existing Culvert
58	198	14.42	CSP	18"	Remove and Replace Existing Culvert
~~59~~	~~198~~	~~14.64~~	~~CSP~~	~~24"~~	~~Remove and Replace Existing Culvert~~
~~60~~	~~198~~	~~14.64~~	~~CSP~~	~~24"~~	~~Barrel Lining of Existing Culvert~~
~~61~~	~~198~~	~~14.64~~	~~CSP Arch~~	~~24” x 12”~~	~~Barrel Lining of Existing Culvert~~
62	198	14.72	CSP	18"	Remove and Replace Existing Culvert
74	198	17.98	CSP	24"	Barrel Lining of Existing Culvert
75	198	17.98	CSP	24"	Barrel Lining of Existing Culvert
76	198	18.14	CSP	24"	Remove and Replace Existing Culvert
77	198	18.37	CSP	24"	Remove and Replace Existing Culvert
78	198	19.18	CSP	18"	Barrel Lining of Existing Culvert
79	198	19.30	CSP	24"	Remove and Replace Existing Culvert
80	198	19.30	CSP	24"	Remove and Replace Existing Culvert
~~81~~	~~198~~	~~19.58~~	~~CSP~~	~~24"~~	~~Barrel Lining of Existing Culvert~~
~~82~~	~~198~~	~~19.58~~	~~CSP~~	~~24"~~	~~Barrel Lining of Existing Culvert~~
83	198	19.81	CSP	24"	Barrel Lining of Existing Culvert
84	198	19.81	CSP	24"	Barrel Lining of Existing Culvert
85	198	20.43	CSP arch	24” x 12”	Barrel Lining of Existing Culvert
86	198	22.32	CSP	24"	Barrel Lining of Existing Culvert
87	198	22.86	CSP	18"	Barrel Lining of Existing Culvert
88	198	23.64	CSP	24"	Remove and Replace Existing Culvert
89	198	23.64	CSP	24"	Remove and Replace Existing Culvert
~~90~~	~~198~~	~~23.64~~	~~CSP~~	~~2 @ 36"~~	~~Barrel Lining of Two Existing Culverts~~
~~91~~	~~198~~	~~23.76~~	~~CSP~~	~~24"~~	~~Barrel Lining of Existing Culvert~~

Loc	SR	PM	Culvert Material	Culvert Size	Recommendation
92	198	24.15	CSP	24"	Remove and Replace Existing Culvert
93	198	24.40	CSP	24"	Barrel Lining of Existing Culvert
94	198	24.87	CSP	24"	Barrel Lining of Existing Culvert
95	198	24.96	CSP	24"	Barrel Lining of Existing Culvert
96	198	25.24	CSP	24"	Barrel Lining of Existing Culvert
97	198	25.39	CSP	24"	Barrel Lining of Existing Culvert
98	198	25.98	CSP	24"	Remove and Replace Existing Culvert
99	198	26.11	CSP	24"	Barrel Lining of Existing Culvert
100	198	26.20	Concrete/ CSP	12"/18"	Remove and Replace Existing Culvert
101	198	26.49	CSP	24"	Remove and Replace Existing Culvert
102	198	27.29	CSP	24"	Remove and Replace Existing Culvert
103	198	28.12	CSP	24"	Remove and Replace Existing Culvert
104	198	28.28	CSP	18"	Remove and Replace Existing Culvert
105	198	28.28	CSP	18"	Remove and Replace Existing Culvert
106	198	28.91	CSP	36"	Barrel Lining of Existing Culvert
107	198	30.29	CSP	42"	Barrel Lining of Existing Culvert
108	198	35.86	CSP	24"	Remove and Replace Existing Culvert
109	198	35.89	CSP	18"	Remove and Replace Existing Culvert
110	198	35.89	Concrete	18"	Remove and Replace Existing Culvert
111	198	36.66	CSP	18"	Remove and Replace Existing Culvert
112	198	36.72	CSP	24"	Barrel Lining of Existing Culvert
113	198	36.84	CSP	18"	Remove and Replace Existing Culvert
114	198	37.59	CSP	24"	Barrel Lining of Existing Culvert
115	198	37.69	CSP	18"	Remove and Replace Existing Culvert
116	198	38.27	CSP	18"	Barrel Lining of Existing Culvert
117	198	38.33	CSP	18"	Remove and Replace Existing Culvert
118	198	38.39	CSP	18"	Remove and Replace Existing Culvert
119	198	38.50	CSP	12"	Remove and Replace Existing Culvert
120	198	38.78	CSP	18"	Remove and Replace Existing Culvert
121	198	38.82	CSP	18"	Remove and Replace Existing Culvert
122	198	38.91	CSP	24"	Remove and Replace Existing Culvert
123	198	38.99	CSP	12"	Barrel Lining of Existing Culvert
124	198	39.20	CSP	12"	Barrel Lining of Existing Culvert
~~125~~	~~198~~	~~39.60~~	~~CSP~~	~~18"~~	~~Remove and Replace Existing Culvert~~
126	198	39.63	CSP	18"	Remove and Replace Existing Culvert
127	198	39.73	CSP	18"	Remove and Replace Existing Culvert
~~128~~	~~198~~	~~39.77~~	~~CSP~~	~~18"~~	~~Remove and Replace Existing Culvert~~
129	198	39.97	CSP	18"	Barrel Lining of Existing Culvert
130	198	40.09	CSP	18"	Remove and Replace Existing Culvert
131	198	40.14	CSP	24"	Remove and Replace Existing Culvert

Loc	SR	PM	Culvert Material	Culvert Size	Recommendation
132	198	40.20	CSP	12"	Remove and Replace Existing Culvert
133	198	40.41	CSP	18"	Remove and Replace Existing Culvert
134	198	40.45	CSP	18"	Remove and Replace Existing Culvert
135	198	40.65	CSP	18"	Remove and Replace Existing Culvert
136	198	41.12	CSP	18"	Barrel Lining of Existing Culvert
137	198	41.35	CSP	12"	Barrel Lining of Existing Culvert
138	198	41.50	CSP	18"	Remove and Replace Existing Culvert
139	198	41.62	CSP	18"	Barrel Lining of Existing Culvert
140	198	41.74	CSP	24"	Remove and Replace Existing Culvert
~~141~~	~~198~~	~~41.85~~	~~CSP~~	~~12"~~	~~Remove and Replace Existing Culvert. Restore and Stabilize Embankment~~
142	198	41.89	CSP	18”	Remove and Replace Existing Culvert
143	198	41.97	CSP	12”	Remove and Replace Existing Culvert
144	198	42.38	CSP	18”	Remove and Replace Existing Culvert
145	198	42.54	CSP	12”	Remove and Replace Existing Culvert
146	198	43.11	CSP	24”	Remove and Replace Existing Culvert
147	198	43.39	CSP	18”	Remove and Replace Existing Culvert
148	198	43.47	CSP	18”	Barrel Lining of Existing Culvert
149	198	43.59	CSP	18”	Barrel Lining of Existing Culvert
150	198	43.80	CSP	12”	Remove and Replace Existing Culvert
151	198	43.88	CSP	18”	Remove and Replace Existing Culvert

Note: Locations 63 to 73 included in the PID were eliminated from the scope of work because a prior construction project addressed the culverts at those locations. Locations shown struck through on this table were eliminated after the Draft Project Report was approved.

62 existing culvert locations will be repaired with culvert barrel lining. Prior to lining, the culverts will be cleaned and inspected. Grading around the inlet and outlets will be minimal. The existing flow line grade will remain unchanged.

At 57 locations, the existing culverts will be removed and replaced. The flow line grade of the new culvert will match the existing culvert, except where the culvert needs to be lowered to maintain the minimum pipe cover or if there are constructability issues or utility conflicts that would require a change in the profile or alignment of the new culvert. Existing inlets and headwalls will also be replaced. Trenchless excavation construction (TEC) methods, such as pipe jacking or directional boring, are proposed at 14 locations within freeway/expressway segments with high traffic volumes to minimize disruptions of existing traffic. Additionally, a TCE is anticipated at Location 120 within the community of Three Rivers for trenchless construction to avoid disrupting two properties with open trench methods. Open trench construction methods with one-way traffic control are proposed at the remaining locations within the conventional highway segment.

The existing joint seals will be inspected and repaired as needed in three locations.

Nonstandard Design Features

Existing geometric elements of the highway, such as lane widths, shoulder widths, horizontal and vertical alignment do not meet current design standards. This project will maintain the existing non-standard features of the roadway, since the scope of the project is limited to the rehabilitating the existing drainage systems within the project limits. A Design Standard Decision Document will be prepared for locations where the replacement of a culvert end treatment, such as a headwall, cannot be relocated outside of the Clear Recovery Zone (CRZ).

Accessibility

Americans with Disabilities Act (ADA) curb ramp improvements are not included in the scope of this project because pedestrians are prohibited within the access-controlled freeway or expressway segments of SR 198. Additionally, there are no existing pedestrian facilities on the highway segments in the rural, rolling, and mountainous areas. Any Inlets located in the roadway of highway segments where bicycles are permitted will be upgraded with bicycle-proof grates.

Right of Way

Most of the work will take place inside State right-of-way; however, 36 temporary construction easements have been identified at various locations to perform construction work. 17 permanent drainage easements will be acquired at locations where the existing drainage facility extends beyond the State's right-of-way.

Utilities

The approximate locations of existing electric overhead (OH) lines and underground (UG) utilities have been determined within the project limits. Potholing will be conducted to determine any potential conflicts with underground utilities. Utility relocations are not anticipated. Existing utilities are expected to be protected in place.

B. Rejected Alternatives

The No Build Alternative was rejected, as it would fail to address the deteriorating conditions of the existing drainage systems. Unpredicted flooding during a heavy raining season can occur and result in culvert and pavement failure.

6. CONSIDERATIONS REQUIRING DISCUSSION

A. Hazardous Waste

Excess soils, containing aerially deposited lead, will be reused within the project limits depending on the level of contamination.

B. Value Analysis
Since the project is under the project cost threshold of $25 million, a Value Analysis (VA) will not be required.

C. Resource Conservation
The proposed improvements will extend the life and integrity of the deteriorating drainage systems, thus reducing future maintenance needs and contributing to resource conservation.

The proposed project would not increase energy consumptions by motorists.

D. Right-of-Way Issues
A total of 36 temporary construction easements (TCEs) were identified. 17 permanent easements are needed for this project where the existing drainage facility extends outside of the State's right-of-way.

Positive identification of existing utilities will be done prior to final design. Utility conflicts will be avoided and no relocations are anticipated.

There is no railroad involvement within the project limits.

A Right of Way Data Sheet was prepared to identify right-of-way costs (Attachment F). The escalated Right of Way Capital estimate, including utility identification from the Right of Way Data Sheet, is $576,000.

E. Environmental Compliance
The CEQA environmental document for the proposed project is an Initial Study with Proposed Negative Declaration. The draft environmental document is included with this report. (Attachment E)

A Categorical Exclusion will be prepared to comply with NEPA. Caltrans will serve as the NEPA lead agency under its assumption of responsibility pursuant to 23 U.S. Code 326.

F. Air Quality Conformity
This project is exempt from Air Quality Conformity under 40 CFR 93.126 Table 2, Exempt Projects.

G. Title VI Considerations
All considerations under Title VI of the Civil Rights Act of 1964, and related statutes, must be included in the project. The project proposes to maintain the existing facilities only and will not produce any negative community impacts. Impacts to minority or low-income populations are not expected.

H. Noise Abatement Decision Report
The project does not propose any increase in the number of lanes and would not

increase noise levels.

I. Life-Cycle Cost Analysis
Not Applicable.

J. Reversible Lanes
This project does not qualify as a capacity increasing or a major street or highway realignment project and reversible lanes have not been considered. Providing reversible lanes within the project limits is outside the project's scope of work.

K. Stormwater Compliance
To document stormwater quality issues and design decisions made regarding compliance with the Department's National Pollutant Discharge Elimination System (NPDES) Permit, a Short Form Stormwater Data Report has been prepared. The project will create 2.7 and 0.0 acres of Disturbed Soil Area (DSA) and Net New Impervious (NNI), respectively. The 2.7 acres of DSA was determined by estimating the construction footprint for the removal and replacement or relining of the culverts. The 0.0 acres of NNI is based on the replacement of paved surfaces excavated during construction only.

303(d) listed water bodies within the project limits include Mill Creek, Packwood Creek, Outside Creek, and Kaweah Lake.

Since the DSA is less than 1.0 acre at any of the contiguous sites within ¼ mile between each other, the project qualifies for a Water Pollution Control Program (WPCP), and no Risk Level determination is required. The WPCP will incorporate applicable temporary construction site Best Management Practices (BMPs) within the project limits. Project specific BMPs will be determined and quantified during the PS&E phase of the project. Temporary construction BMPs have been estimated in accordance with the Project Planning and Design Guide (PPDG).

7. OTHER CONSIDERATIONS AS APPROPRIATE

Public Hearing Process
An opportunity for a Public Hearing was offered to the public but a request was not received.

Permits
The following regulatory permits and/or approvals would be required for project construction:

- Section 401 Waste Discharge Permit (Central Valley Water Resources Control Board)
- Section 404 Permit (U.S. Army Corps of Engineers)
- 1600 Streambed Alteration Agreement (California Department of Fish and Wildlife)

Transportation Management Plan
Preliminary traffic impacts and mitigation for this project have been outlined in the attached Transportation Management Plan Data Sheet (TMP Data Sheet) (Attachment G). Costs associated with the traffic impact mitigation measures listed in the TMP Data Sheet have been included in this document's estimate.

A TMP for this project is required and should be requested when the design is complete enough to determine specific traffic impacts, but yet early enough to make design changes/additions required for traffic mitigation.

Lane requirement charts and detailed TMP will be provided during PS&E stage.

Lane closures are not allowed when the traffic volume is beyond the capacity of the remaining lanes. Nighttime work outside peak hours is anticipated for this project.

Alternate one-way (reversing) traffic control will be implemented.

Cooperative Agreements
Not Applicable.

Other Agreements
Not Applicable.

Report on Feasibility of Providing Access to Navigable Rivers
Not Applicable.

Public Boat Ramps
Not Applicable.

Stage Construction
Culvert replacement will be performed using open trenches, with one-way traffic control within conventional highway segments. Trenchless Excavation Construction (TEC) methods are recommended for replacement of culverts within freeway and expressway segments with shoulder closures.

Accommodation of Oversize Loads
SR 198 is part of the National Network (NN) from PM 0.0 to R3.71. SR 198 is a designated Terminal Access route from PM R3.71 to 38.60. SR 198 is a designated CA Legal Advisory route with 30 KPRA (Kingpin to Rear Axle) from PM 38.6 to 44.0.

Graffiti Control
This issue does not have a known impact on the project's cost schedule or program's requirements

Asset Management

This project is to restore the existing drainage systems to a state of good repair and extend their life by replacing or repairing the identified deteriorating culverts within the project limits. Replacing or repairing the clogged culverts is necessary to maintain the operational integrity of the highway since clogged culverts can cause flooding and erode the roadway. Poorly functioning culverts can result in saturation of soil under the roadway pavement and cause uneven settlement of the roadbed and cracking of the pavement.

This project will repair or replace 122 drainage systems.

Complete Streets

The California Department of Transportation (Caltrans) recognizes that walking, biking, transit, and passenger rail are integral to our vision of delivering a brighter future for all through a world-class transportation network. Additionally, Caltrans recognizes that streets are not only used for transportation but are also valuable community spaces.

The scope of the project is to rehabilitate or replace existing culverts at various locations on SR 198. Although Complete Streets features are outside of the project scope, bicycle-proof grates will be installed or upgraded on drainage systems that are being rehabilitated or replaced in segments where bicycles are allowed within project limits.

Climate Change Considerations

Measures to reduce greenhouse gas emissions include:

- Alternative fuels such as renewable diesel to be used for construction equipment.
- Idling will be limited to 5 minutes for delivery and dump trucks and other diesel-powered equipment.
- Recycled water is to be used where possible to reduce the amount of potable used by construction activities.
- Improved fuel efficiency by construction equipment would be obtained by maintaining equipment in proper working condition, using the right sized equipment for the job, and using equipment with new technologies when possible.
- Caltrans Environmental Construction Liaison will include preconstruction training information for contractor workers regarding methods to reduce greenhouse gas emissions related to construction.

Broadband and Advance Technologies

The goal for Caltrans Broadband Middle-Mile Network (BMMN) Program is to provide equitable access to high-speed broadband service and prioritize inclusion of

unserved and underserved populations, anchor institutions (hospitals, universities, government entities and community non-profits), tribal entities, and agricultural regions.

Portions of this project are on the BMMN; specifically, PM 25.911 to PM 40.259 have been identified. We will be working with the Broadband unit to add the project scope in the PS&E phase.

Other Appropriate Topics
Not Applicable.

8. FUNDING, PROGRAMMING AND ESTIMATE

Funding
It has been determined that this project is eligible for Federal-aid funding.

Programming
This project is programmed in the 2020 SHOPP and funded in the 2022/2023 fiscal year from the Drainage System Restoration Program (201.151)

Fund Source	Fiscal Year Estimate					
20.XX.201.151	Prior	20/21	21/22	22/23	23/24	Total
Component	In thousands of dollars ($1,000)					
PA&ED Support		$3,515				$3,515
PS&E Support			$3,298			$3,298
Right-of-Way Support			$1,759			$1,759
Construction Support				$3,027		$3,027
Right-of-Way				$337		$337
Construction				$11,548		$11,548
Total		$3,515	$5,057	$14,912		$23,484

**Values are escalated to mid-point of the duration of each component.*
The support to capital cost ratio is 97.6%. An escalation rate of 3.2% was used for capital costs.
Right of Way (ROW) capital is escalated at 5%.

Estimate
The project cost estimate is included in Attachment D. Unit costs were developed by reviewing recent projects with similar scope using the online Caltrans Cost Database. An escalation rate of 3.2% was applied for capital costs.

The current year cost estimate for the repair, rehabilitation, or replacement of the drainage culverts and appurtenances is $10,079,000. Escalated to the mid-point of construction, the estimated construction cost is $11,416,000.

9. DELIVERY SCHEDULE

Project Milestones		Milestone Date (Month/Day/Year)
PROGRAM PROJECT	M015	07/29/2020
BEGIN ENVIRONMENTAL	M020	07/29/2020
PA & ED	M200	06/30/2022
RIGHT OF WAY REQUIREMENTS	M224	10/01/2021
REGULAR RIGHT OF WAY	M225	02/01/2022
PS&E TO DOE	M377	02/01/2023
RIGHT OF WAY CERTIFICATION	M410	05/24/2023
READY TO LIST	M460	05/30/2023
HEADQUARTERS ADVERTISE	M480	08/15/2023
AWARD	M495	11/15/2023
APPROVE CONTRACT	M500	02/01/2024
CONTRACT ACCEPTANCE	M600	08/01/2025
END PROJECT EXPENDITURES	M800	10/10/2028

10. RISKS

There are 19 total risks that have been identified (10 from Environmental, 2 from design, 3 from Right of Way, and 4 from Construction). A Risk Register (Attachment I) has been prepared by the project development team to assess, respond to, and monitor identified project risks that may occur throughout the life of the project. The primary risk to this project would be delays to the schedule due to having to go through the condemnation process during acquisition of TCE's.

11. EXTERNAL AGENCY COORDINATION

Federal Highway Administration (FHWA)

This project is considered to be an Assigned Project in accordance with the current Federal Highway Administration (FHWA) and Department of Transportation (Caltrans) Joint Stewardship and Oversight Agreement.

The project requires the following coordination:

US Army Corps of Engineers
Permit for:
Clean Water Act Section 404

California Department of Fish and Wildlife
California Fish and Game Code Section 1600
Streambed Alteration Agreement

Central Valley Water Resources Control Board
Clean Water Act Section 401
Waste Discharge Permit

12. PROJECT REVIEWS

Scoping team field review PDT Date 07/27/21
Scoping team field review attendance roster attached.
District Program Advisor Marco Sanchez Date
Headquarters SHOPP Program Advisor Parviz Lashi Date
District Maintenance Daniel Chapa Date
Headquarters Project Delivery Coordinator Paul Gennaro Date
Project Manager Shavonne Conley Date
FHWA N/A Date
District Safety Review Date
Constructability Review Date
Other Date

13. PROJECT PERSONNEL

Shavonne Conley	Project Manager	(559) 383-5609
Abdul Baker	Design Manager	(559) 243-8037
Michael Robbins	Design Oversight Engineer	(559) 383-5512
David Melis	Consultant Project Engineer (NCM Engineering)	(916) 769-6296
Juergen Vespermann	Environmental Manager	(559) 832-0051
David Sherman	Right of Way Manager	(559) 385-5188
Tom Overstreet	Surveys Manager	(559) 903-4937
Brenda Felder	Construction Manager	(559) 651-8310
Gerardo Rocha	Asset Manager	(559) 383-5987

14. ATTACHMENTS (126 Pages)

A. Location Map (1 page)
B. Locations of Construction (2 pages)
C. Preliminary Drainage Layout Plans (46 pages)
D. Capital Outlay Project Cost – Project Cost Estimate (10 pages)
E. Environmental Document (70 pages)
F. Right of Way Data Sheet (5 pages)
G. Transportation Management Plan (4 pages)
H. Storm Water Data Report - Cover Page (1 page)
I. Risk Register (3 pages)
J. Asset Management SHOPP Tool

Dist	COUNTY	ROUTE	POST MILES TOTAL PROJECT	SHEET No.	TOTAL SHEETS
06	TUL	198	0.0/44.0	01	XX

STATE OF CALIFORNIA

DEPARTMENT OF TRANSPORTATION

PROJECT PLANS FOR CONSTRUCTION ON

STATE HIGHWAY

IN TULARE COUNTY ON ROUTE 198 FROM KINGS COUNTRY LINE TO SEQUOIA NATIONAL PARK BOUNDARY

TO BE SUPPLEMENTED BY STANDARD PLANS DATED 2018

INDEX OF PLANS

THE STANDARD PLAN LIST APPLICABLE TO THIS CONTRACT IS INCLUDED IN THE NOTICE TO BIDDERS AND SPECIAL PROVISIONS BOOK.

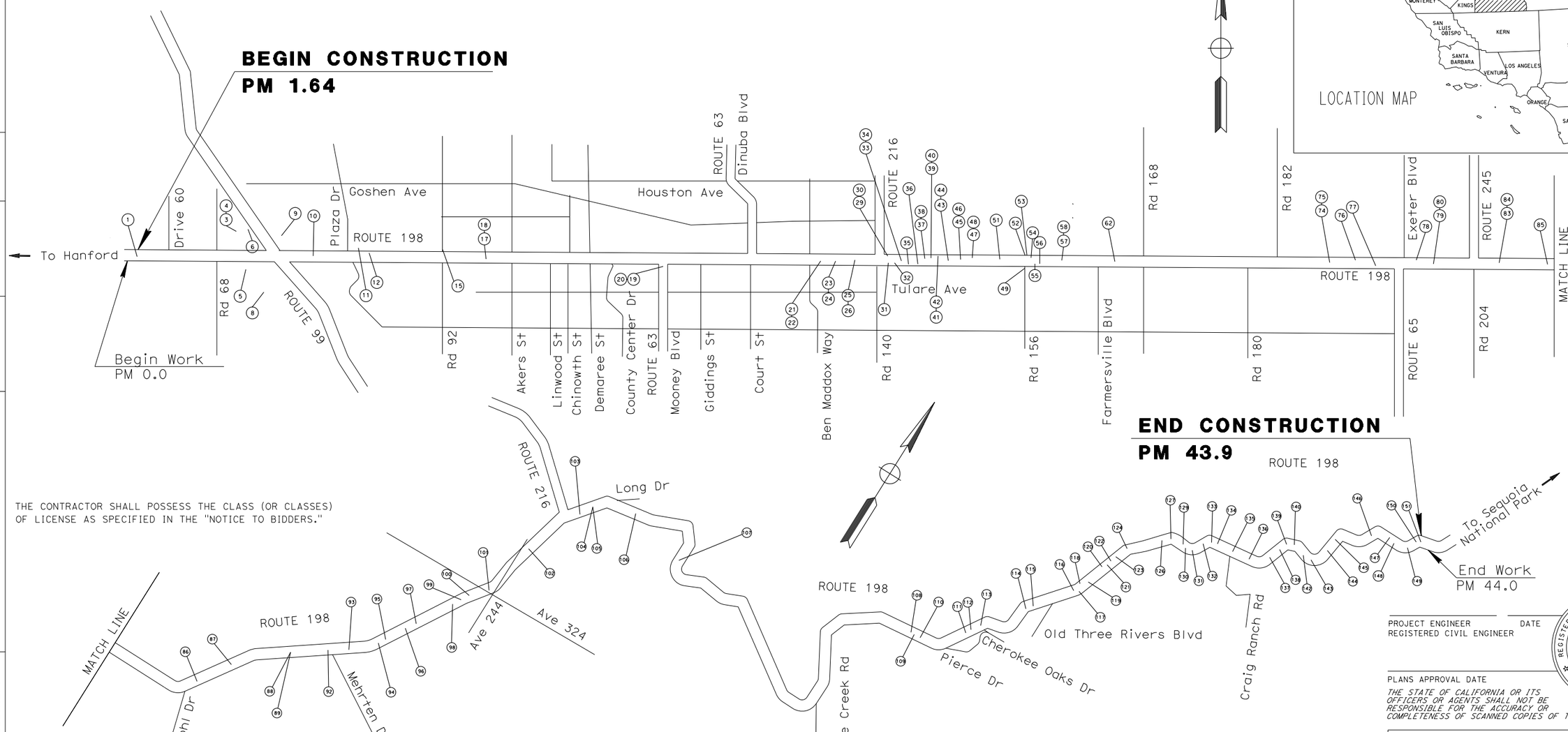

THE CONTRACTOR SHALL POSSESS THE CLASS (OR CLASSES) OF LICENSE AS SPECIFIED IN THE "NOTICE TO BIDDERS."

NO SCALE

PROJECT ENGINEER DATE
REGISTERED CIVIL ENGINEER

PLANS APPROVAL DATE

REGISTERED PROFESSIONAL ENGINEER No. Exp. CIVIL STATE OF CALIFORNIA

THE STATE OF CALIFORNIA OR ITS OFFICERS OR AGENTS SHALL NOT BE RESPONSIBLE FOR THE ACCURACY OR COMPLETENESS OF SCANNED COPIES OF THIS PLAN SHEET.

ATTACHMENT A

CONTRACT No.	06-0X2600
PROJECT ID	0618000045

APPROVED AS TO IMPACT ON STATE FACILITIES AND CONFORMANCE WITH APPLICABLE STATE STANDARDS AND PRACTICES AND THAT TECHNICAL OVERSIGHT WAS PERFORMED.

DATE SIGNED | LICENSE Exp DATE | REGISTRATION No.

CALTRANS DESIGN OVERSIGHT APPROVAL: ABDUL BAKER

CONSULTANT DESIGN MANAGER: STEVE MISLINSKI

LAST REVISION XX-XX-XX | DATE PLOTTED => 16-MAY-2022 | TIME PLOTTED => 09:01

Dist	COUNTY	ROUTE	POST MILES TOTAL PROJECT	SHEET No.	TOTAL SHEETS
06	Tul	198	0.0/44.0		XX

REGISTERED CIVIL ENGINEER DATE

XX-XX-XX
PLANS APPROVAL DATE

REGISTERED PROFESSIONAL ENGINEER No. Exp. CIVIL STATE OF CALIFORNIA

THE STATE OF CALIFORNIA OR ITS OFFICERS OR AGENTS SHALL NOT BE RESPONSIBLE FOR THE ACCURACY OR COMPLETENESS OF SCANNED COPIES OF THIS PLAN SHEET.

DEWBERRY ENGINEERS INC.
11060 WHITE ROCK ROAD,
SUITE 200
RANCHO CORDOVA, CA 95670

LOCATIONS OF CONSTRUCTION

LOCATION No.	POST MILE	SHEET No.	EXISTING PIPE SIZE	EXISTING PIPE MATERIAL	PROPOSED PIPE SIZE	PROPOSED PIPE MATERIAL	IMPROVEMENT
1	1.64	D-1	24"	HDPE			JOINT SEALING/REPAIR
2	LOCATION ELIMINATED						
3	3.54	D-1	24"	CSP			CULVERT BARREL LINING
4	3.54	D-2	24"	CSP			CULVERT BARREL LINING
5	3.54	D-2	24"	CSP			CULVERT BARREL LINING
6	3.63	D-3	24"	CSP			CULVERT BARREL LINING
7	LOCATION ELIMINATED						
8	3.73	D-3	24"	CSP			CULVERT BARREL LINING
9	3.83	D-4	12"	CSP			CULVERT BARREL LINING
10	4.45	D-4	18"	CSP			CULVERT BARREL LINING
11	5.28	D-4	24"	CSP			CULVERT BARREL LINING
12	5.34	D-5	18"	CSP			CULVERT BARREL LINING
13	LOCATION ELIMINATED						
14	LOCATION ELIMINATED						
15	5.80	D-6	18"	CSP			CULVERT BARREL LINING
16	LOCATION ELIMINATED						
17	6.31	D-7	18"	CSP/HDPE	24"	JACKED RCP	REPLACE
18	6.31	D-7	18"	CSP			CULVERT BARREL LINING
19	8.15		18"	CONCRETE			JOINT SEALING/REPAIR
20	8.15		18"	CONCRETE			JOINT SEALING/REPAIR
21	11.01	D-8	24"	CSP	24"	JACKED RCP	REPLACE
22	11.01	D-8	24"	CSP	24"	JACKED RCP	REPLACE
23	11.28	D-9	24"	CSP			CULVERT BARREL LINING
24	11.28	D-9	24"	CSP			CULVERT BARREL LINING
25	11.56	D-9	18"	CSP	24"	JACKED RCP	REPLACE
26	11.56	D-10	18"	CSP			CULVERT BARREL LINING
27	LOCATION ELIMINATED						
28	LOCATION ELIMINATED						
29	11.79	D-11	18"	CSP			CULVERT BARREL LINING
30	11.79	D-11	18"	CSP			CULVERT BARREL LINING
31	11.81	D-11	18"	CSP			CULVERT BARREL LINING
32	11.91	D-12	18"	CSP			CULVERT BARREL LINING
33	11.96	D-12	24"	CSP			CULVERT BARREL LINING
34	11.96	D-12	24"	CSP			CULVERT BARREL LINING
35	12.28	D-13	24"	CSP			CULVERT BARREL LINING
36	12.47	D-13	24"	CSP	24"	JACKED RCP	REPLACE
37	12.65	D-13	24"	CSP			CULVERT BARREL LINING
38	12.65	D-14	24"	CSP arch			CULVERT BARREL LINING
39	12.84	D-14	24"	CSP	24"	JACKED RCP	REPLACE
40	12.84	D-14	24"	CSP arch			CULVERT BARREL LINING

LOCATIONS OF CONSTRUCTION

LOCATION No.	POST MILE	SHEET No.	EXISTING PIPE SIZE	EXISTING PIPE MATERIAL	PROPOSED PIPE SIZE	PROPOSED PIPE MATERIAL	IMPROVEMENT
41	12.94	D-15	24"	CSP	24"	JACKED RCP	REPLACE
42	12.94	D-15	24"	CSP	24"	JACKED RCP	REPLACE
43	13.06	D-15	24"	CSP			CULVERT BARREL LINING
44	13.06	D-16	18"	CSP arch			CULVERT BARREL LINING
45	13.31	D-16	24"	CSP			CULVERT BARREL LINING
46	13.31	D-16	24"	CSP			CULVERT BARREL LINING
47	13.40	D-17	24"	CSP			CULVERT BARREL LINING
48	13.40	D-17	24"	CSP			CULVERT BARREL LINING
49	13.67	D-17	18"	CSP			CULVERT BARREL LINING
50	13.67	D-18	18"	CSP			CULVERT BARREL LINING
51	LOCATION ELIMINATED						
52	13.67	D-18	24"	CSP	24"	JACKED RCP	REPLACE
53	13.67	D-19	18"	CSP			CULVERT BARREL LINING
54	13.67	D-19	18"	CSP			CULVERT BARREL LINING
55	13.67	D-19	18"	CSP			CULVERT BARREL LINING
56	14.09	D-20	24"	CSP	24"	JACKED RCP	REPLACE
57	14.42	D-20	24"	CSP	24"	JACKED RCP	REPLACE
58	14.42	D-20	18"	CSP	24"	JACKED RCP	REPLACE
59	LOCATION ELIMINATED						
60	LOCATION ELIMINATED						
61	LOCATION ELIMINATED						
62	14.72	D-22	18"	CSP	24"	JACKED RCP	REPLACE
74	17.98	D-22	24"	CSP			CULVERT BARREL LINING
75	17.98	D-22	24"	CSP			CULVERT BARREL LINING
76	18.14	D-23	24"	CSP	24"	JACKED RCP	REPLACE
77	18.37	D-23	24"	CSP	24"	JACKED RCP	REPLACE
78	19.18	D-23	18"	CSP			CULVERT BARREL LINING
79	19.30	D-24	24"	CSP	24"	JACKED RCP	REPLACE
80	19.30	D-24	24"	CSP	24"	JACKED RCP	REPLACE
81	LOCATION ELIMINATED						
82	LOCATION ELIMINATED						
83	19.81	D-25	24"	CSP			CULVERT BARREL LINING
84	19.81	D-25	24"	CSP			CULVERT BARREL LINING
85	20.43	D-25	24"	CSP arch			CULVERT BARREL LINING
86	22.32	D-25	24"	CSP			CULVERT BARREL LINING
87	22.86	D-26	18"	CSP			CULVERT BARREL LINING
88	23.64	D-26	24"	CSP	24"	APC	REPLACE
89	23.64	D-26	24"	CSP	24"	APC	REPLACE
90	LOCATION ELIMINATED						
91	LOCATION ELIMINATED						

LOCATIONS OF CONSTRUCTION

NO SCALE

ATTACHMENT B **LC-1**

REVISED BY | DATE REVISED
PAUL BRADBURY | DAVE MELIS
CALCULATED-DESIGNED BY | CHECKED BY
CONSULTANT FUNCTIONAL SUPERVISOR | JOSE SILVA
STATE OF CALIFORNIA - DEPARTMENT OF TRANSPORTATION
Caltrans

LAST REVISION XX-XX-XX | DATE PLOTTED => 19-APR-2022 | TIME PLOTTED => 13:21

Dist	COUNTY	ROUTE	POST MILES TOTAL PROJECT	SHEET No.	TOTAL SHEETS
06	Tul	198	0.0/44.0		XX

REGISTERED CIVIL ENGINEER DATE

XX-XX-XX
PLANS APPROVAL DATE

REGISTERED PROFESSIONAL ENGINEER No. Exp. CIVIL STATE OF CALIFORNIA

THE STATE OF CALIFORNIA OR ITS OFFICERS OR AGENTS SHALL NOT BE RESPONSIBLE FOR THE ACCURACY OR COMPLETENESS OF SCANNED COPIES OF THIS PLAN SHEET.

DEWBERRY ENGINEERS INC.
11060 WHITE ROCK ROAD,
SUITE 200
RANCHO CORDOVA, CA 95670

LOCATIONS OF CONSTRUCTION

LOCATION No.	POST MILE	SHEET No.	EXISTING		PROPOSED		
			PIPE SIZE	PIPE MATERIAL	PIPE SIZE	PIPE MATERIAL	IMPROVEMENT
92	24.15	D-28	24"	CSP	24"	APC	REPLACE
93	24.40	D-28	24"	CSP			CULVERT BARREL LINING
94	24.78	D-29	24"	CSP			CULVERT BARREL LINING
95	24.96	D-29	24"	CSP			CULVERT BARREL LINING
96	25.24	D-29	24"	CSP			CULVERT BARREL LINING
97	25.39	D-30	24"	CSP			CULVERT BARREL LINING
98	25.98	D-30	24"	CSP	24"	APC	REPLACE
99	26.11	D-30	24"	CSP			CULVERT BARREL LINING
100	26.20	D-31	18"	CONCRETE/CSP	24"	APC	REPLACE
101	26.49	D-31	24"	CSP	24"	APC	REPLACE ONLY 1 CULVERT
102	27.29	D-31	24"	CSP	24"	APC	REPLACE
103	28.12	D-32	24"	CSP	24"	APC	REPLACE
104	28.28	D-32	18"	CSP	24"	APC	REPLACE
105	28.28	D-32	18"	CSP	24"	APC	REPLACE
106	28.91	D-33	36"	CSP			CULVERT BARREL LINING
107	30.29	D-33	42"	CSP			CULVERT BARREL LINING
108	35.86	D-34	24"	CSP	24"	APC	REPLACE
109	35.89	D-34	18"	CSP	24"	APC	REPLACE
110	35.89	D-34	18"	CONCRETE	24"	APC	REPLACE
111	36.66	D-35	18"	CSP	24"	APC	REPLACE
112	36.72	D-35	24"	CSP			CULVERT BARREL LINING
113	36.84	D-35	18"	CSP	24"	APC	REPLACE
114	37.59	D-36	24"	CSP			CULVERT BARREL LINING
115	37.69	D-36	18"	CSP	24"	APC	REPLACE
116	38.27	D-36	18"	CSP			CULVERT BARREL LINING
117	38.33	D-37	18"	CSP	24"	APC	REPLACE
118	38.39	D-37	18"	CSP	24"	APC	REPLACE
119	38.50	D-37	12"	CSP	24"	APC	REPLACE
120	38.78	D-38	18"	CSP	24"	APC	REPLACE
121	38.82	D-38	18"	CSP	24"	APC	REPLACE
122	38.91	D-38	24"	CSP	24"	APC	REPLACE
123	38.99	D-39	12"	CSP			CULVERT BARREL LINING
124	39.20	D-39	12"	CSP			CULVERT BARREL LINING

LOCATIONS OF CONSTRUCTION

LOCATION No.	POST MILE	SHEET No.	EXISTING		PROPOSED		
			PIPE SIZE	PIPE MATERIAL	PIPE SIZE	PIPE MATERIAL	IMPROVEMENT
125	LOCATION ELIMINATED						
126	39.63	D-40	18"	CSP	24"	APC	REPLACE
127	39.73	D-40	18"	CSP	24"	APC	REPLACE
128	LOCATION ELIMINATED						
129	39.97	D-41	18"	CSP			CULVERT BARREL LINING
130	40.09	D-40	18"	CSP	24"	APC	REPLACE
131	40.14	D-41	24"	CSP	24"	APC	REPLACE
132	40.20	D-42	12"	CSP	24"	APC	REPLACE
133	40.41	D-42	18"	CSP	24"	APC	REPLACE
134	40.45	D-42	18"	CSP	24"	APC	REPLACE
135	40.65	D-43	18"	CSP	24"	APC	REPLACE
136	41.12	D-43	18"	CSP			CULVERT BARREL LINING
137	41.35	D-43	12"	CSP			CULVERT BARREL LINING
138	41.50	D-44	18"	CSP	24"	APC	REPLACE
139	41.62	D-44	18"	CSP			CULVERT BARREL LINING
140	41.74	D-44	24"	CSP	24"	APC	REPLACE
141	LOCATION ELIMINATED						
142	41.89	D-45	18"	CSP	24"	APC	REPLACE
143	41.97	D-45	12"	CSP	24"	APC	REPLACE
144	42.38	D-46	18"	CSP	24"	APC	REPLACE
145	42.54	D-46	12"	CSP	24"	APC	REPLACE
146	43.11	D-46	24"	CSP	24"	APC	REPLACE
147	43.39	D-47	18"	CSP	24"	APC	REPLACE
148	43.47	D-47	18"	CSP			CULVERT BARREL LINING
149	43.59	D-48	18"	CSP			CULVERT BARREL LINING
150	43.80	D-48	12"	CSP	24"	APC	REPLACE
151	43.88	D-48	18"	CSP	24"	APC	REPLACE

REVISED BY | DATE REVISED
PAUL BRADBURY | DAVE MELIS
CALCULATED-DESIGNED BY | CHECKED BY
CONSULTANT FUNCTIONAL SUPERVISOR | JOSE SILVA

STATE OF CALIFORNIA - DEPARTMENT OF TRANSPORTATION
Caltrans

LOCATIONS OF CONSTRUCTION
NO SCALE
ATTACHMENT B **LC-2**

LAST REVISION XX-XX-XX | DATE PLOTTED => 19-APR-2022 TIME PLOTTED => 13:21

Dist	COUNTY	ROUTE	POST MILES TOTAL PROJECT	SHEET No.	TOTAL SHEETS
06	Tul	198	0.0/44.0		XX

REGISTERED CIVIL ENGINEER DATE

XX-XX-XX
PLANS APPROVAL DATE

REGISTERED PROFESSIONAL ENGINEER
No.
Exp.
CIVIL
STATE OF CALIFORNIA

THE STATE OF CALIFORNIA OR ITS OFFICERS OR AGENTS SHALL NOT BE RESPONSIBLE FOR THE ACCURACY OR COMPLETENESS OF SCANNED COPIES OF THIS PLAN SHEET.

DEWBERRY ENGINEERS INC.
11060 WHITE ROCK ROAD,
SUITE 200
RANCHO CORDOVA, CA 95670

NOTE:

FOR ACCURATE RIGHT OF WAY DATA, CONTACT RIGHT OF WAY ENGINEERING AT THE DISTRICT OFFICE.

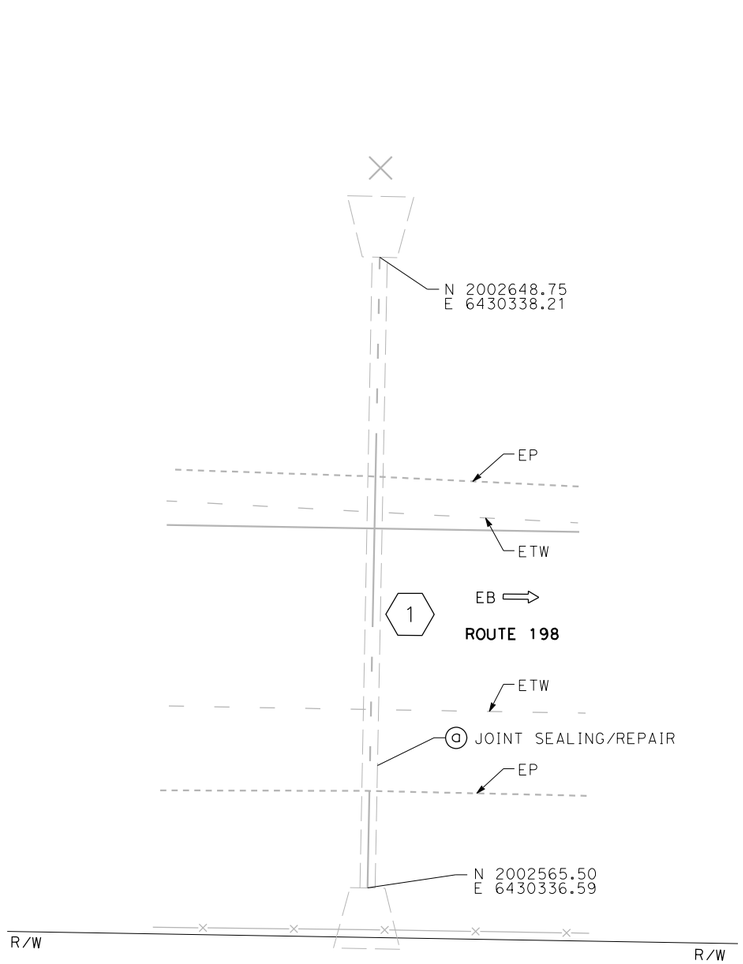

LOCATION No. 1

ROUTE 198, PM 1.64

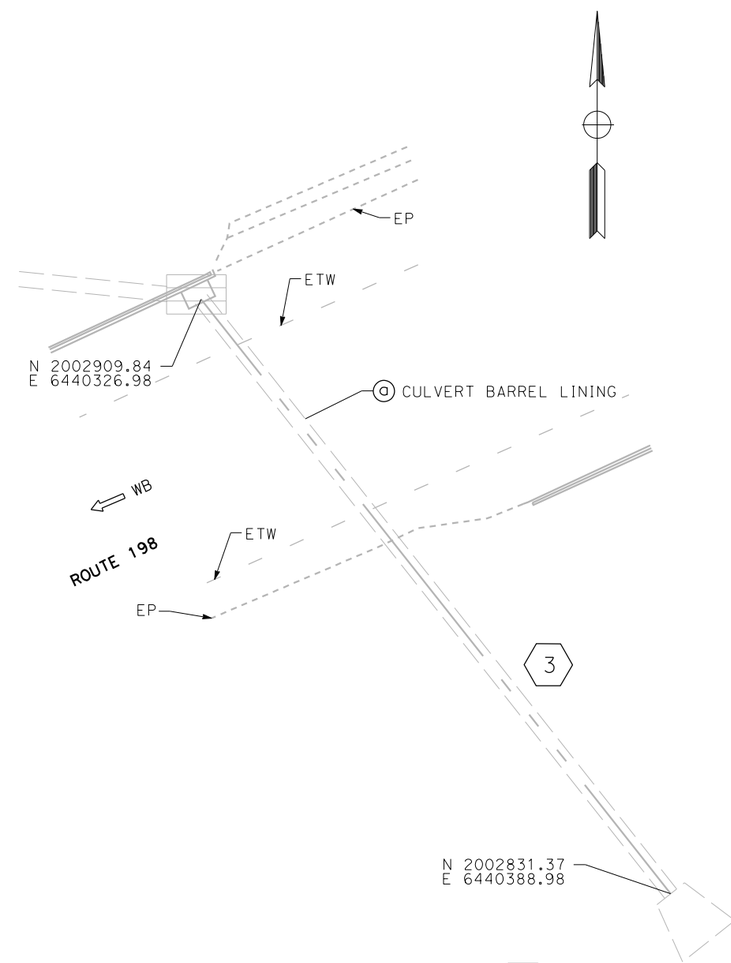

LOCATION No. 3

ROUTE 198, PM 3.54

APPROVED FOR DRAINAGE WORK ONLY

DRAINAGE PLAN

SCALE: 1"=10'

ATTACHMENT C

D-1

STATE OF CALIFORNIA - DEPARTMENT OF TRANSPORTATION

Caltrans

CONSULTANT FUNCTIONAL SUPERVISOR: JOSE SILVA

CALCULATED-DESIGNED BY: PAUL BRADBURY

CHECKED BY: DAVE MELIS

REVISED BY

DATE REVISED

LAST REVISION XX-XX-XX

DATE PLOTTED => 9/30/2021
TIME PLOTTED => 4:35:52 PM

Dist	COUNTY	ROUTE	POST MILES TOTAL PROJECT	SHEET No.	TOTAL SHEETS
06	Tul	198	0.0/44.0		XX

REGISTERED CIVIL ENGINEER DATE

XX-XX-XX
PLANS APPROVAL DATE

REGISTERED PROFESSIONAL ENGINEER
No.
Exp.
CIVIL
STATE OF CALIFORNIA

THE STATE OF CALIFORNIA OR ITS OFFICERS OR AGENTS SHALL NOT BE RESPONSIBLE FOR THE ACCURACY OR COMPLETENESS OF SCANNED COPIES OF THIS PLAN SHEET.

DEWBERRY ENGINEERS INC.
11060 WHITE ROCK ROAD,
SUITE 200
RANCHO CORDOVA, CA 95670

NOTE:

FOR ACCURATE RIGHT OF WAY DATA, CONTACT RIGHT OF WAY ENGINEERING AT THE DISTRICT OFFICE.

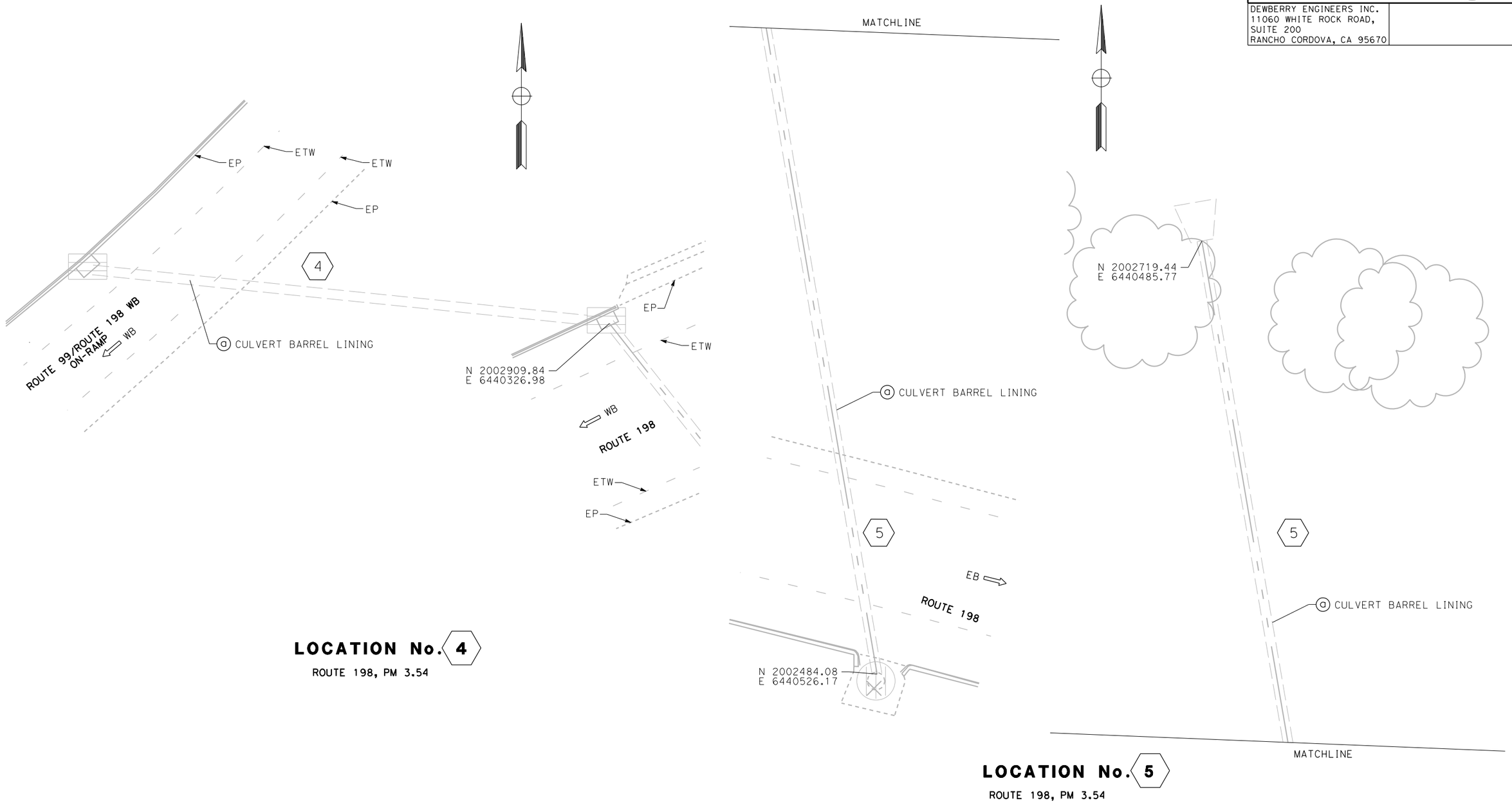

LOCATION No. 4

ROUTE 198, PM 3.54

LOCATION No. 5

ROUTE 198, PM 3.54

APPROVED FOR DRAINAGE WORK ONLY

DRAINAGE PLAN

SCALE: 1"=10'

ATTACHMENT C

D-2

REVISED BY	DATE REVISED

CALCULATED-DESIGNED BY	CHECKED BY
PAUL BRADBURY	DAVE MELIS

CONSULTANT FUNCTIONAL SUPERVISOR: JOSE SILVA

STATE OF CALIFORNIA - DEPARTMENT OF TRANSPORTATION

Caltrans

LAST REVISION XX-XX-XX

DATE PLOTTED => 9/30/2021
TIME PLOTTED => 4:35:56 PM

Dist	COUNTY	ROUTE	POST MILES TOTAL PROJECT	SHEET No.	TOTAL SHEETS
06	Tul	198	0.0/44.0		XX

REGISTERED CIVIL ENGINEER DATE

XX-XX-XX
PLANS APPROVAL DATE

REGISTERED PROFESSIONAL ENGINEER No. Exp. CIVIL STATE OF CALIFORNIA

THE STATE OF CALIFORNIA OR ITS OFFICERS OR AGENTS SHALL NOT BE RESPONSIBLE FOR THE ACCURACY OR COMPLETENESS OF SCANNED COPIES OF THIS PLAN SHEET.

DEWBERRY ENGINEERS INC.
11060 WHITE ROCK ROAD,
SUITE 200
RANCHO CORDOVA, CA 95670

NOTE:

FOR ACCURATE RIGHT OF WAY DATA, CONTACT RIGHT OF WAY ENGINEERING AT THE DISTRICT OFFICE.

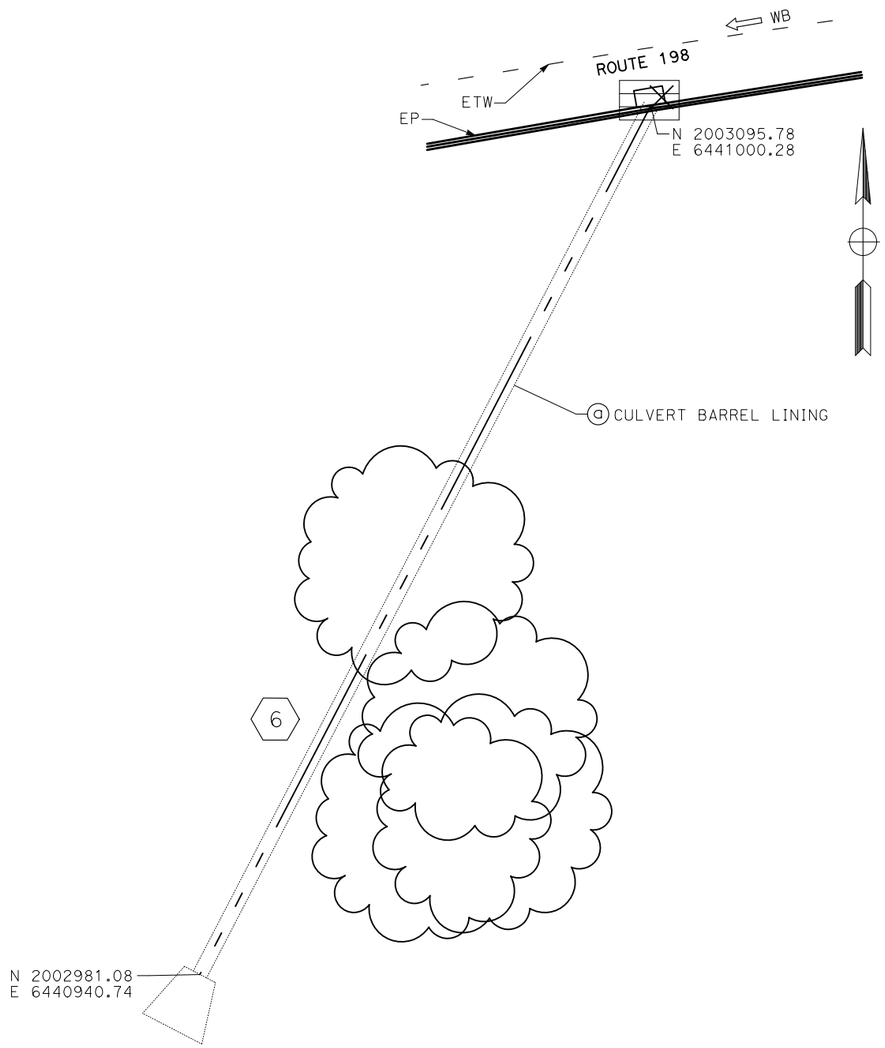

LOCATION No. 6
ROUTE 198, PM 3.63

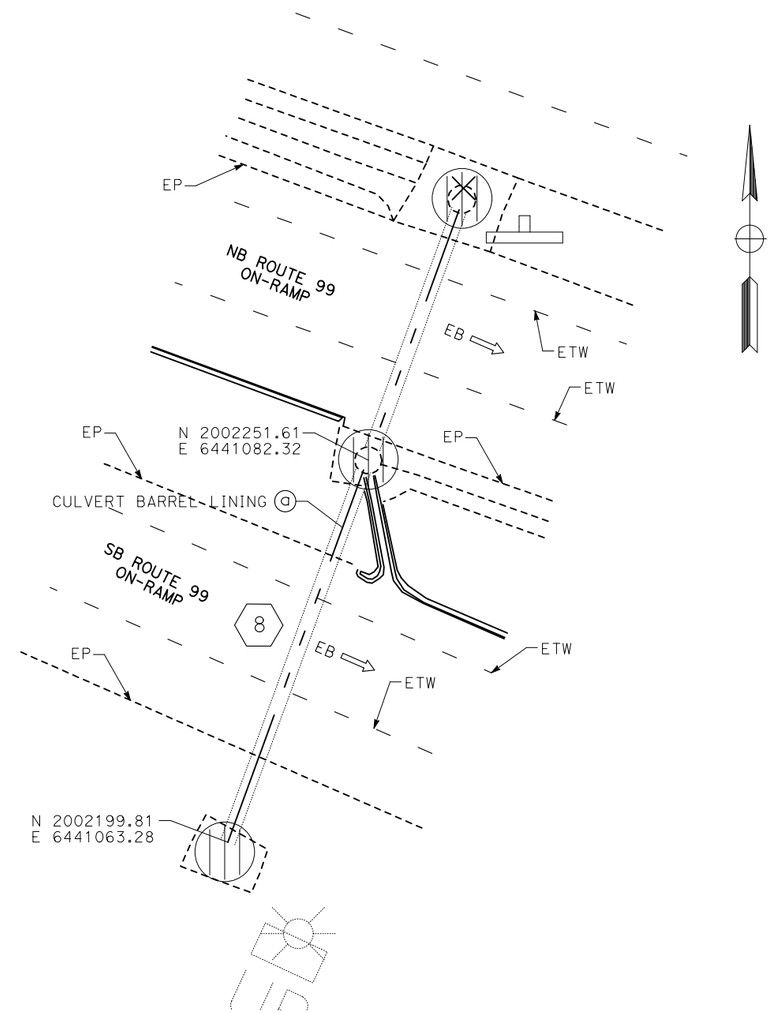

LOCATION No. 8
ROUTE 198, PM 3.73

APPROVED FOR DRAINAGE WORK ONLY

DRAINAGE PLAN
SCALE: 1"=10'
ATTACHMENT C

D-3

STATE OF CALIFORNIA - DEPARTMENT OF TRANSPORTATION
Caltrans

CONSULTANT FUNCTIONAL SUPERVISOR: JOSE SILVA
CALCULATED-DESIGNED BY: PAUL BRADBURY
CHECKED BY: DAVE MELIS
REVISED BY
DATE REVISED

LAST REVISION XX-XX-XX
DATE PLOTTED => 19-APR-2022
TIME PLOTTED => 13:21

Dist	COUNTY	ROUTE	POST MILES TOTAL PROJECT	SHEET No.	TOTAL SHEETS
06	Tul	198	0.0/44.0		XX

REGISTERED CIVIL ENGINEER DATE

XX-XX-XX
PLANS APPROVAL DATE

REGISTERED PROFESSIONAL ENGINEER No. Exp. CIVIL STATE OF CALIFORNIA

THE STATE OF CALIFORNIA OR ITS OFFICERS OR AGENTS SHALL NOT BE RESPONSIBLE FOR THE ACCURACY OR COMPLETENESS OF SCANNED COPIES OF THIS PLAN SHEET.

DEWBERRY ENGINEERS INC.
11060 WHITE ROCK ROAD,
SUITE 200
RANCHO CORDOVA, CA 95670

NOTE:

FOR ACCURATE RIGHT OF WAY DATA, CONTACT RIGHT OF WAY ENGINEERING AT THE DISTRICT OFFICE.

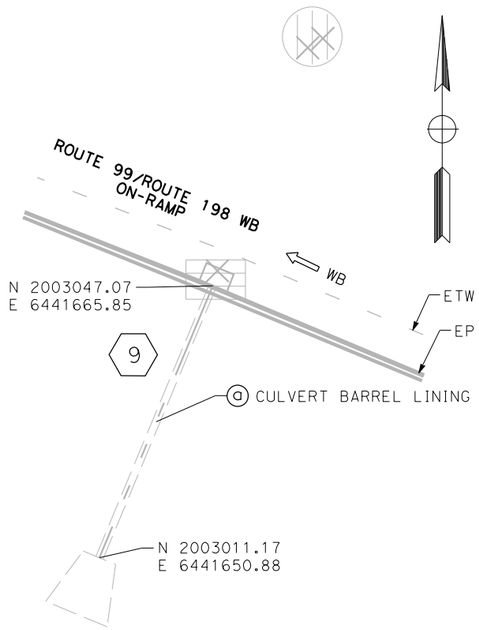

LOCATION No. 9
ROUTE 198, PM 3.83

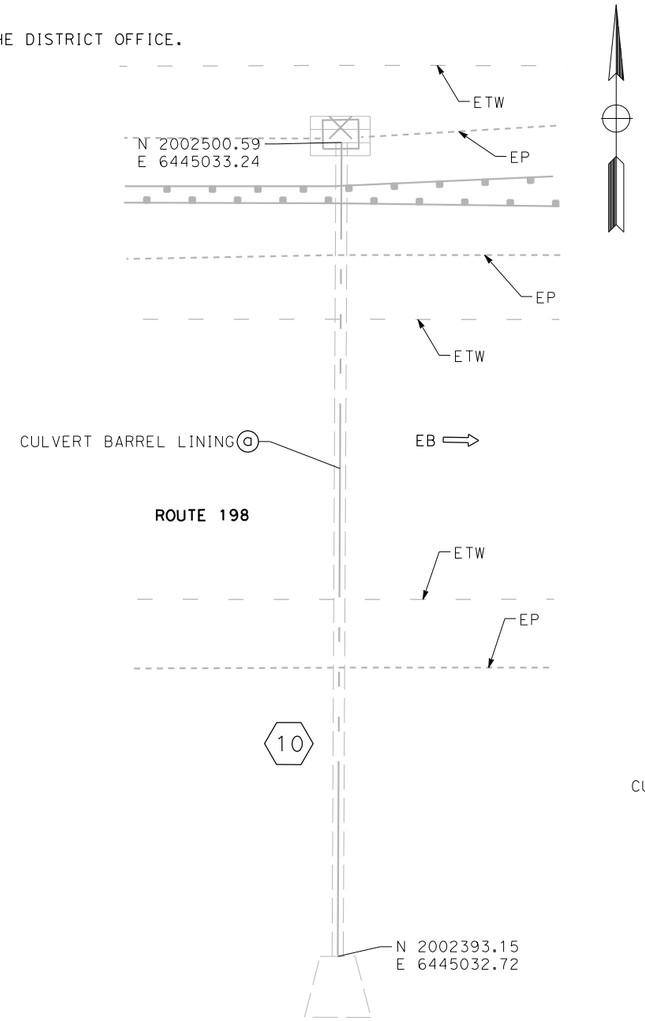

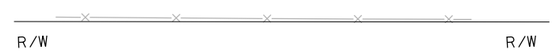

LOCATION No. 10
ROUTE 198, PM 4.45

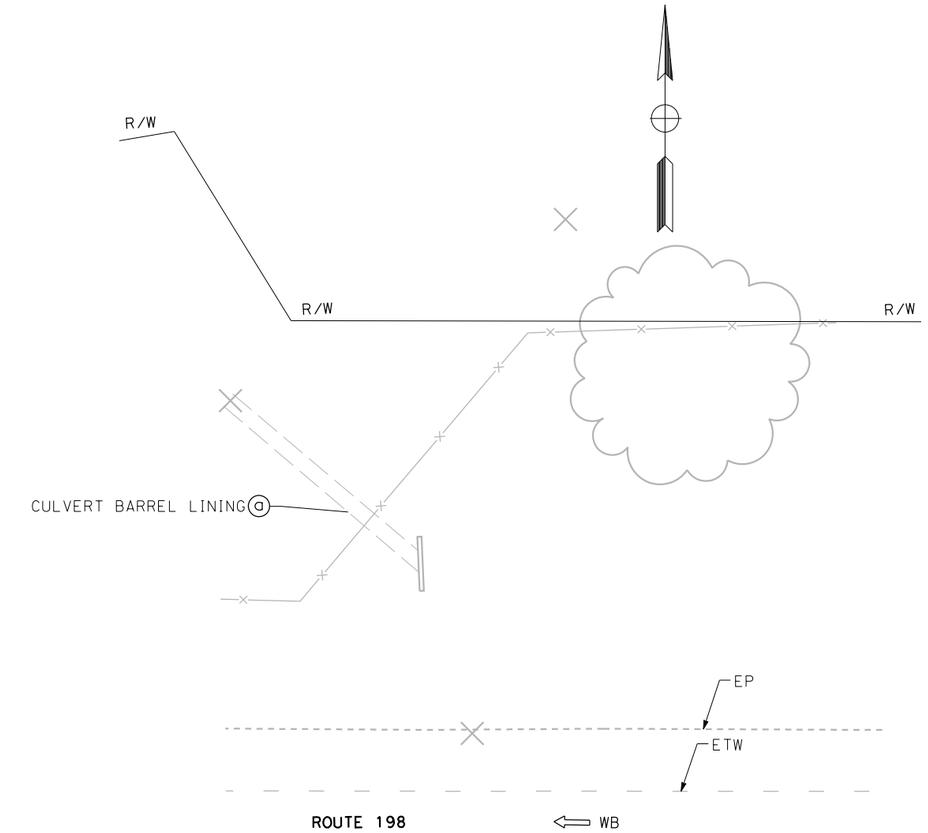

LOCATION No. 11
ROUTE 198, PM 5.28

APPROVED FOR DRAINAGE WORK ONLY

DRAINAGE PLAN

SCALE: 1"=10'

ATTACHMENT C

D-4

STATE OF CALIFORNIA - DEPARTMENT OF TRANSPORTATION
Caltrans

CONSULTANT FUNCTIONAL SUPERVISOR: JOSE SILVA
CALCULATED-DESIGNED BY: PAUL BRADBURY
CHECKED BY: DAVE MELIS
REVISED BY
DATE REVISED

LAST REVISION XX-XX-XX
DATE PLOTTED => 9/30/2021
TIME PLOTTED => 4:36:03 PM

Dist	COUNTY	ROUTE	POST MILES TOTAL PROJECT	SHEET No.	TOTAL SHEETS
06	Tul	198	0.0/44.0		XX

REGISTERED CIVIL ENGINEER DATE

XX-XX-XX
PLANS APPROVAL DATE

REGISTERED PROFESSIONAL ENGINEER
No.
Exp.
CIVIL
STATE OF CALIFORNIA

THE STATE OF CALIFORNIA OR ITS OFFICERS OR AGENTS SHALL NOT BE RESPONSIBLE FOR THE ACCURACY OR COMPLETENESS OF SCANNED COPIES OF THIS PLAN SHEET.

DEWBERRY ENGINEERS INC.
11060 WHITE ROCK ROAD,
SUITE 200
RANCHO CORDOVA, CA 95670

NOTE:

FOR ACCURATE RIGHT OF WAY DATA, CONTACT RIGHT OF WAY ENGINEERING AT THE DISTRICT OFFICE.

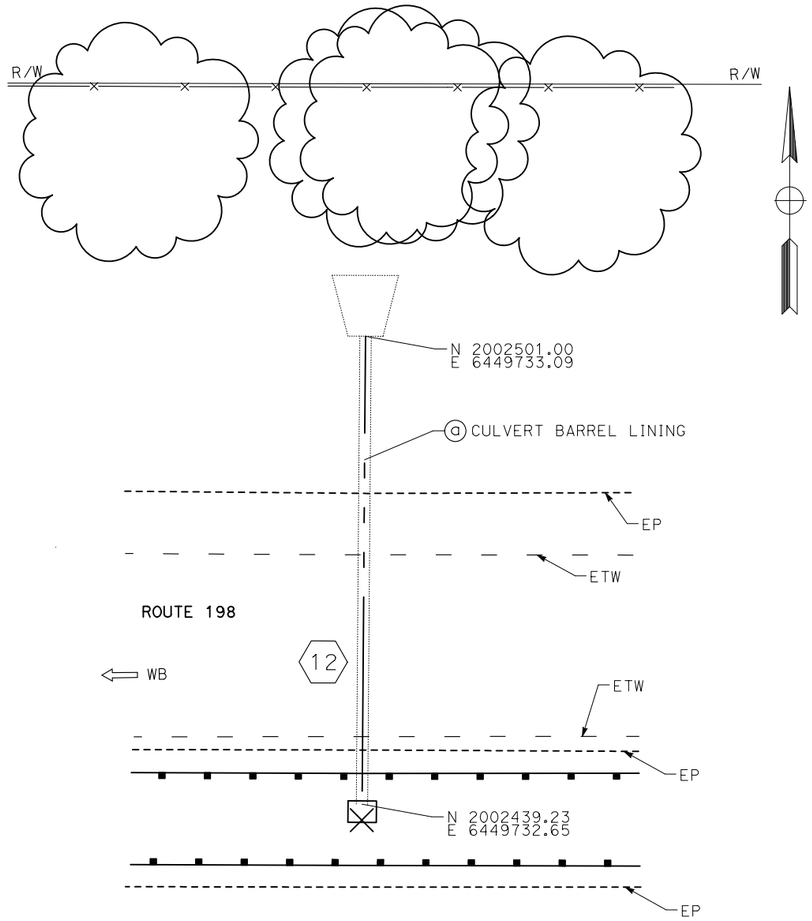

LOCATION No. 12

ROUTE 198, PM 5.34

APPROVED FOR DRAINAGE WORK ONLY

DRAINAGE PLAN

SCALE: 1"=10'

ATTACHMENT C

D-5

REVISED BY	DATE REVISED
PAUL BRADBURY	DAVE MELIS
CALCULATED-DESIGNED BY	CHECKED BY
CONSULTANT FUNCTIONAL SUPERVISOR	JOSE SILVA

STATE OF CALIFORNIA - DEPARTMENT OF TRANSPORTATION

Caltrans

LAST REVISION XX-XX-XX | DATE PLOTTED => 19-APR-2022 | TIME PLOTTED => 13:21

Dist	COUNTY	ROUTE	POST MILES TOTAL PROJECT	SHEET No.	TOTAL SHEETS
06	Tul	198	0.0/44.0		XX

REGISTERED CIVIL ENGINEER DATE

XX-XX-XX
PLANS APPROVAL DATE

REGISTERED PROFESSIONAL ENGINEER
No.
Exp.
CIVIL
STATE OF CALIFORNIA

THE STATE OF CALIFORNIA OR ITS OFFICERS OR AGENTS SHALL NOT BE RESPONSIBLE FOR THE ACCURACY OR COMPLETENESS OF SCANNED COPIES OF THIS PLAN SHEET.

DEWBERRY ENGINEERS INC.
11060 WHITE ROCK ROAD,
SUITE 200
RANCHO CORDOVA, CA 95670

NOTE:

FOR ACCURATE RIGHT OF WAY DATA, CONTACT RIGHT OF WAY ENGINEERING AT THE DISTRICT OFFICE.

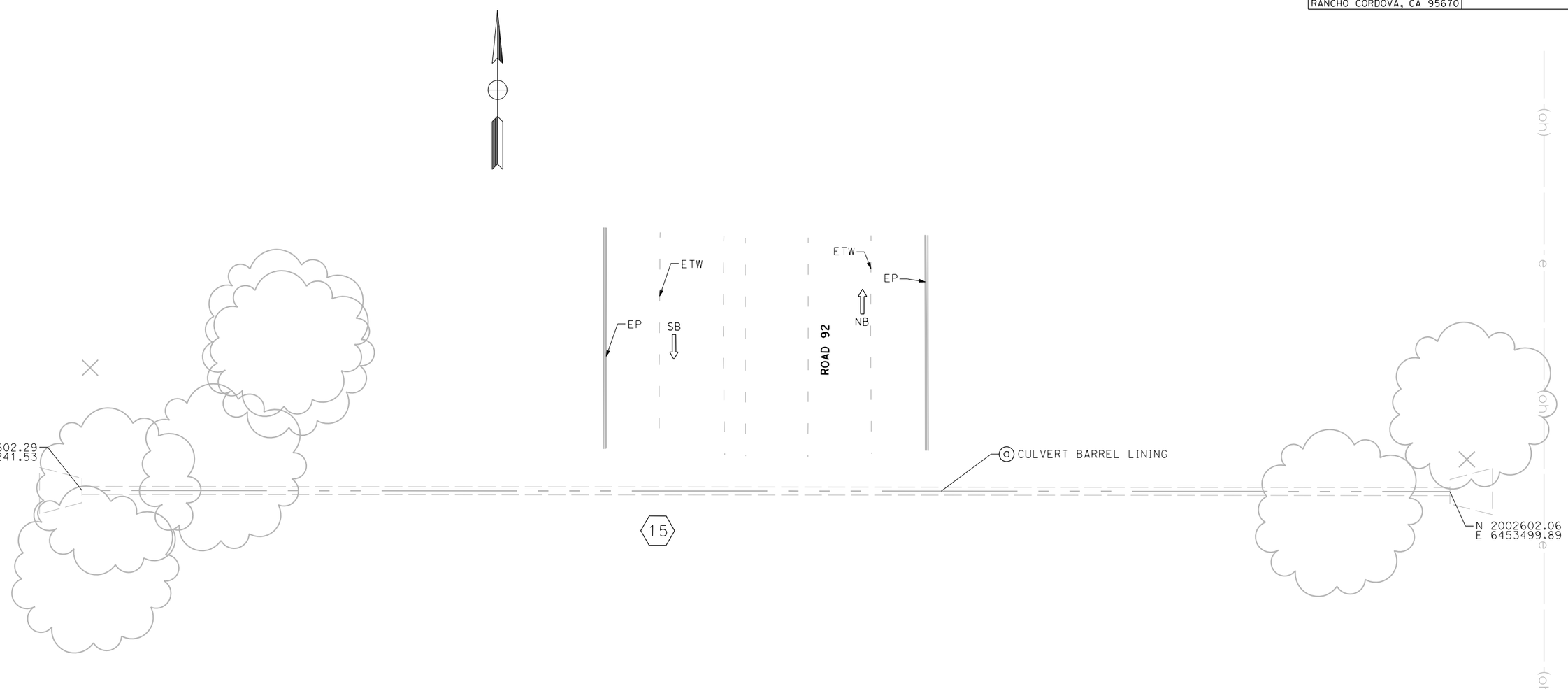

LOCATION No. 15

ROUTE 198, PM 5.80

APPROVED FOR DRAINAGE WORK ONLY

DRAINAGE PLAN

SCALE: 1"=10'

ATTACHMENT C

D-6

REVISED BY	DATE REVISED

PAUL BRADBURY — CALCULATED-DESIGNED BY
DAVE MELIS — CHECKED BY
JOSE SILVA — CONSULTANT FUNCTIONAL SUPERVISOR

STATE OF CALIFORNIA - DEPARTMENT OF TRANSPORTATION
Caltrans

LAST REVISION XX-XX-XX | DATE PLOTTED => 9/30/2021 | TIME PLOTTED => 4:36:09 PM

Dist	COUNTY	ROUTE	POST MILES TOTAL PROJECT	SHEET No.	TOTAL SHEETS
06	Tul	198	0.0/44.0		XX

REGISTERED CIVIL ENGINEER DATE

XX-XX-XX
PLANS APPROVAL DATE

REGISTERED PROFESSIONAL ENGINEER
No.
Exp.
CIVIL
STATE OF CALIFORNIA

THE STATE OF CALIFORNIA OR ITS OFFICERS OR AGENTS SHALL NOT BE RESPONSIBLE FOR THE ACCURACY OR COMPLETENESS OF SCANNED COPIES OF THIS PLAN SHEET.

DEWBERRY ENGINEERS INC.
11060 WHITE ROCK ROAD,
SUITE 200
RANCHO CORDOVA, CA 95670

NOTE:

FOR ACCURATE RIGHT OF WAY DATA, CONTACT RIGHT OF WAY ENGINEERING AT THE DISTRICT OFFICE.

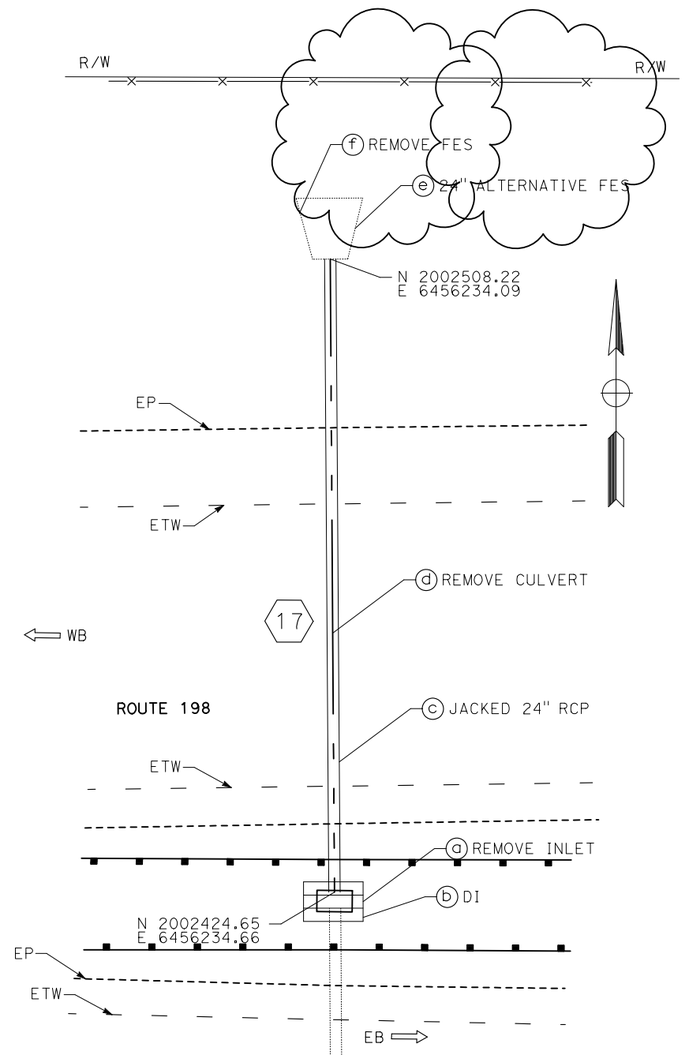

LOCATION No. 17

ROUTE 198, PM 6.31

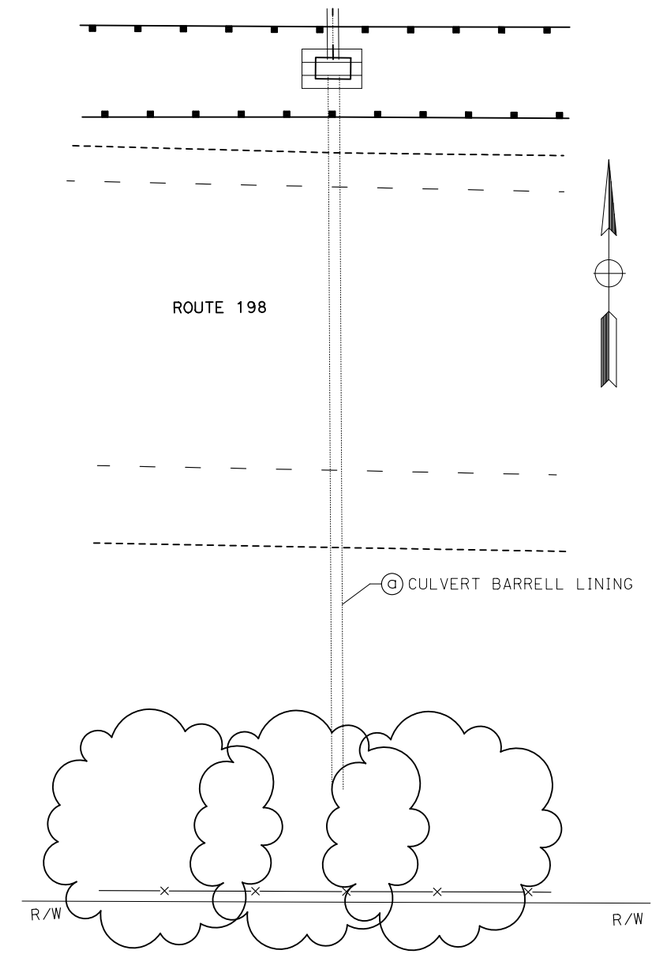

LOCATION No. 18

ROUTE 198, PM 6.31

APPROVED FOR DRAINAGE WORK ONLY

DRAINAGE PLAN

SCALE: 1"=10'

ATTACHMENT C

D-7

REVISED BY	DATE REVISED

PAUL BRADBURY	DAVE MELIS

CALCULATED-DESIGNED BY	CHECKED BY

CONSULTANT FUNCTIONAL SUPERVISOR
JOSE SILVA

STATE OF CALIFORNIA - DEPARTMENT OF TRANSPORTATION

Caltrans

LAST REVISION XX-XX-XX | DATE PLOTTED => 19-APR-2022 | TIME PLOTTED => 13:21

Dist	COUNTY	ROUTE	POST MILES TOTAL PROJECT	SHEET No.	TOTAL SHEETS
06	Tul	198	0.0/44.0		XX

REGISTERED CIVIL ENGINEER DATE

XX-XX-XX
PLANS APPROVAL DATE

REGISTERED PROFESSIONAL ENGINEER No. Exp. CIVIL STATE OF CALIFORNIA

THE STATE OF CALIFORNIA OR ITS OFFICERS OR AGENTS SHALL NOT BE RESPONSIBLE FOR THE ACCURACY OR COMPLETENESS OF SCANNED COPIES OF THIS PLAN SHEET.

DEWBERRY ENGINEERS INC.
11060 WHITE ROCK ROAD,
SUITE 200
RANCHO CORDOVA, CA 95670

NOTE:

FOR ACCURATE RIGHT OF WAY DATA, CONTACT RIGHT OF WAY ENGINEERING AT THE DISTRICT OFFICE.

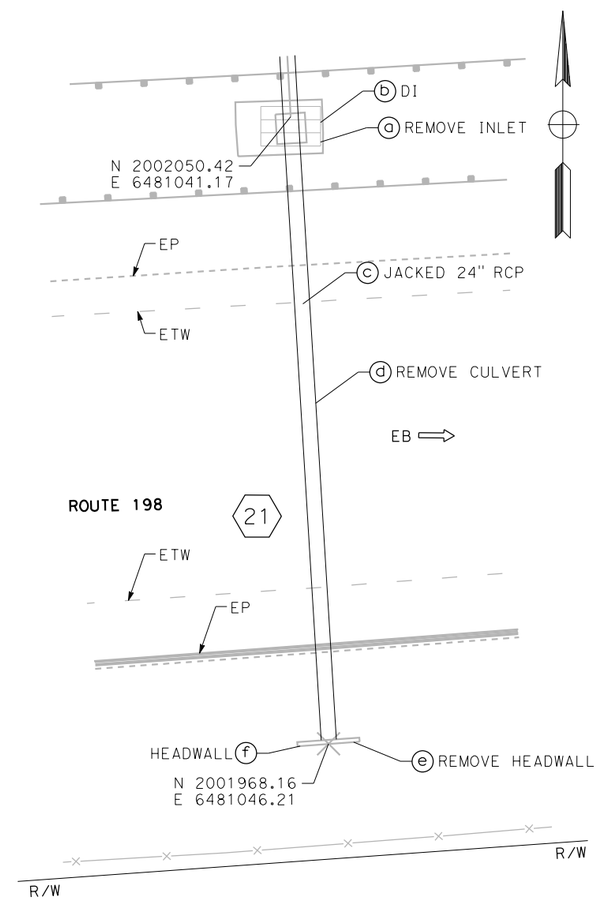

LOCATION No. 21

ROUTE 198, PM 11.01

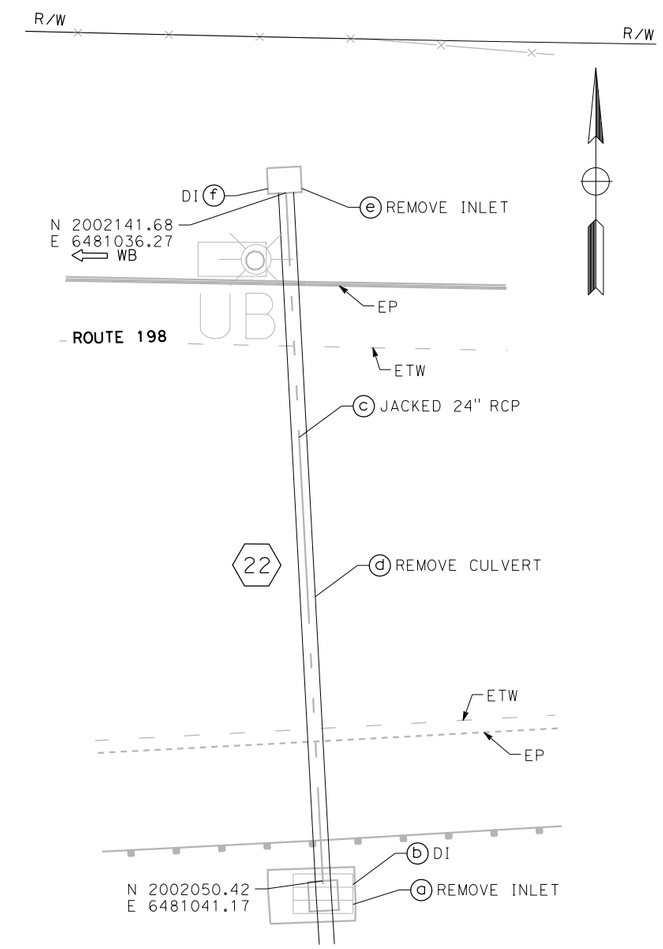

LOCATION No. 22

ROUTE 198, PM 11.01

APPROVED FOR DRAINAGE WORK ONLY

DRAINAGE PLAN

SCALE: 1"=10'

ATTACHMENT C

D-8

STATE OF CALIFORNIA - DEPARTMENT OF TRANSPORTATION

Caltrans

CONSULTANT FUNCTIONAL SUPERVISOR: JOSE SILVA

CALCULATED-DESIGNED BY: PAUL BRADBURY

CHECKED BY: DAVE MELIS

REVISED BY

DATE REVISED

LAST REVISION XX-XX-XX

DATE PLOTTED => 9/30/2021
TIME PLOTTED => 4:36:16 PM

Dist	COUNTY	ROUTE	POST MILES TOTAL PROJECT	SHEET No.	TOTAL SHEETS
06	Tul	198	0.0/44.0		XX

REGISTERED CIVIL ENGINEER DATE

XX-XX-XX
PLANS APPROVAL DATE

REGISTERED PROFESSIONAL ENGINEER No. Exp. CIVIL STATE OF CALIFORNIA

THE STATE OF CALIFORNIA OR ITS OFFICERS OR AGENTS SHALL NOT BE RESPONSIBLE FOR THE ACCURACY OR COMPLETENESS OF SCANNED COPIES OF THIS PLAN SHEET.

DEWBERRY ENGINEERS INC.
11060 WHITE ROCK ROAD,
SUITE 200
RANCHO CORDOVA, CA 95670

NOTE:

FOR ACCURATE RIGHT OF WAY DATA, CONTACT RIGHT OF WAY ENGINEERING AT THE DISTRICT OFFICE.

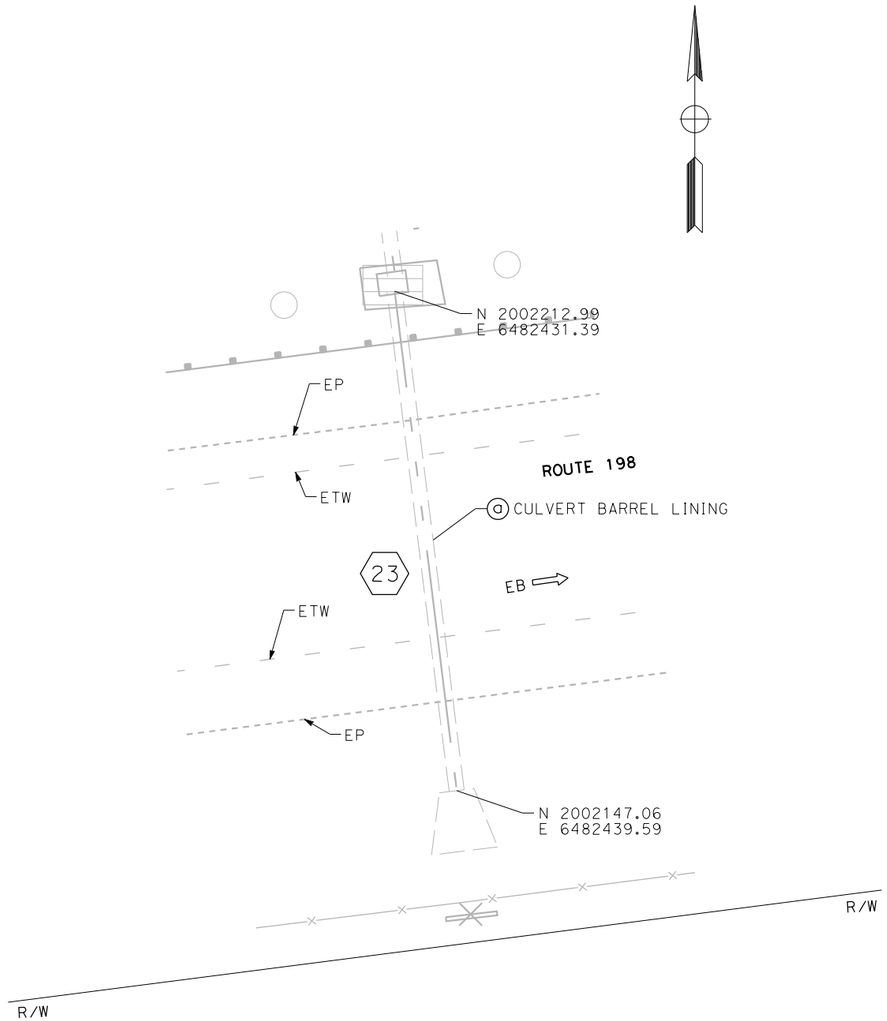

LOCATION No. 23
ROUTE 198, PM 11.28

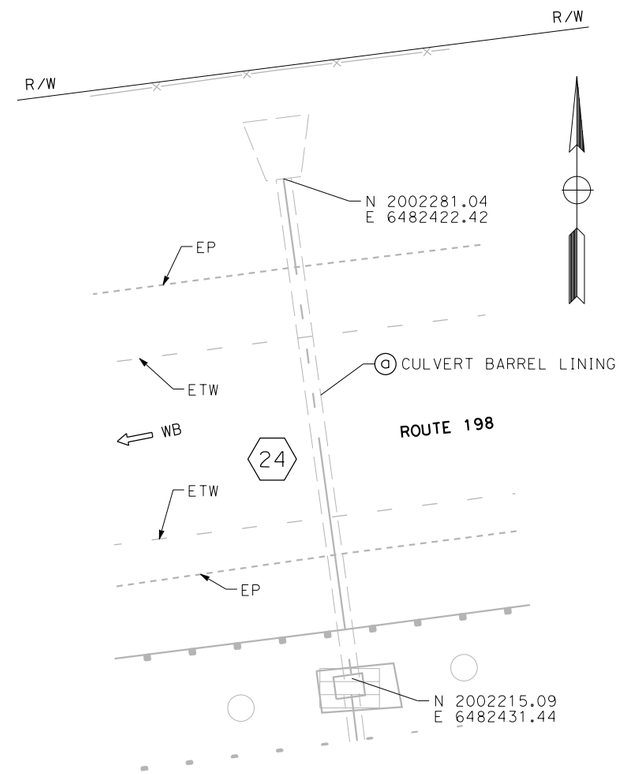

LOCATION No. 24
ROUTE 198, PM 11.28

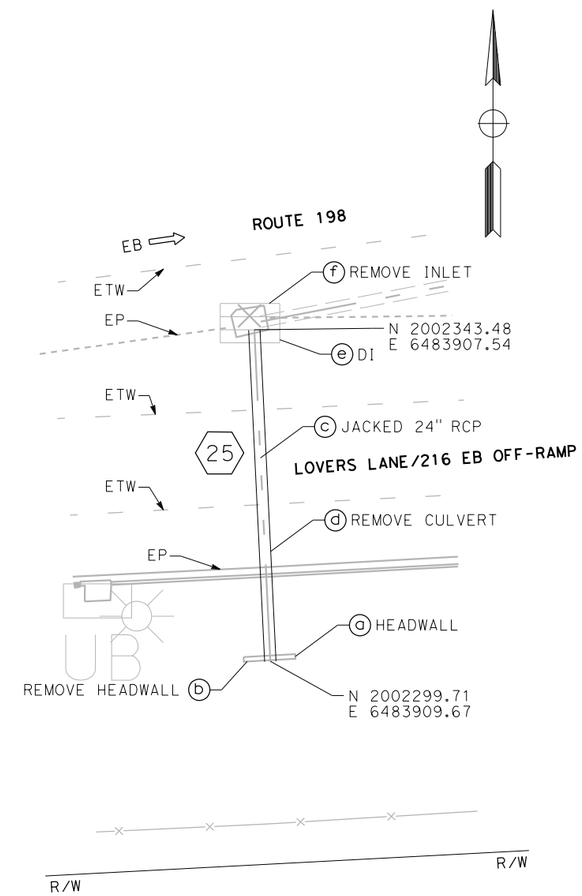

LOCATION No. 25
ROUTE 198, PM 11.56

APPROVED FOR DRAINAGE WORK ONLY

DRAINAGE PLAN

SCALE: 1"=10'

ATTACHMENT C

D-9

STATE OF CALIFORNIA - DEPARTMENT OF TRANSPORTATION
Caltrans

CONSULTANT FUNCTIONAL SUPERVISOR	CALCULATED-DESIGNED BY	REVISED BY
JOSE SILVA	PAUL BRADBURY	
	DAVE MELIS	
	CHECKED BY	DATE REVISED

LAST REVISION XX-XX-XX
DATE PLOTTED => 9/30/2021
TIME PLOTTED => 4:36:19 PM

Dist	COUNTY	ROUTE	POST MILES TOTAL PROJECT	SHEET No.	TOTAL SHEETS
06	Tul	198	0.0/44.0		XX

REGISTERED CIVIL ENGINEER DATE

XX-XX-XX
PLANS APPROVAL DATE

REGISTERED PROFESSIONAL ENGINEER
No.
Exp.
CIVIL
STATE OF CALIFORNIA

THE STATE OF CALIFORNIA OR ITS OFFICERS OR AGENTS SHALL NOT BE RESPONSIBLE FOR THE ACCURACY OR COMPLETENESS OF SCANNED COPIES OF THIS PLAN SHEET.

DEWBERRY ENGINEERS INC.
11060 WHITE ROCK ROAD,
SUITE 200
RANCHO CORDOVA, CA 95670

NOTE:

FOR ACCURATE RIGHT OF WAY DATA, CONTACT RIGHT OF WAY ENGINEERING AT THE DISTRICT OFFICE.

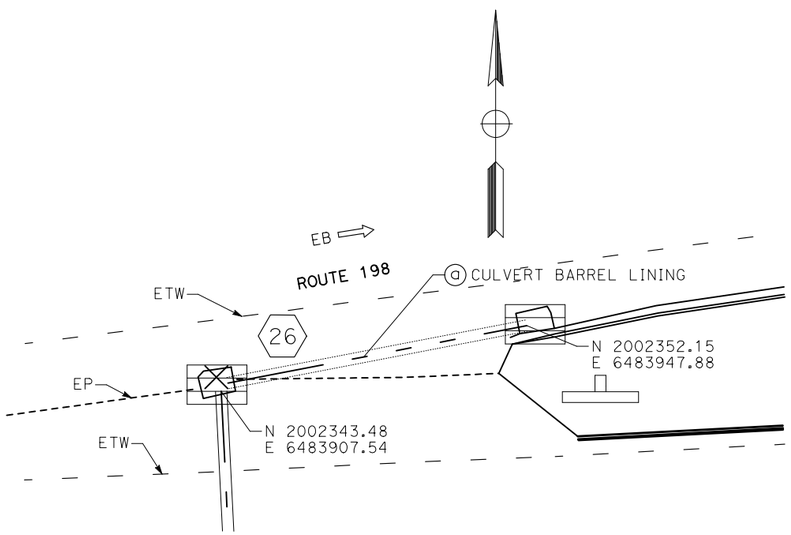

LOCATION No. 26

ROUTE 198, PM 11.56

APPROVED FOR DRAINAGE WORK ONLY

DRAINAGE PLAN

SCALE: 1"=10'

ATTACHMENT C

D-10

STATE OF CALIFORNIA - DEPARTMENT OF TRANSPORTATION

Caltrans

CONSULTANT FUNCTIONAL SUPERVISOR: JOSE SILVA

CALCULATED-DESIGNED BY: PAUL BRADBURY

CHECKED BY: DAVE MELIS

REVISED BY

DATE REVISED

LAST REVISION XX-XX-XX

DATE PLOTTED => 19-APR-2022
TIME PLOTTED => 13:21

Dist	COUNTY	ROUTE	POST MILES TOTAL PROJECT	SHEET No.	TOTAL SHEETS
06	Tul	198	0.0/44.0		XX

REGISTERED CIVIL ENGINEER DATE

XX-XX-XX
PLANS APPROVAL DATE

REGISTERED PROFESSIONAL ENGINEER No. Exp. CIVIL STATE OF CALIFORNIA

THE STATE OF CALIFORNIA OR ITS OFFICERS OR AGENTS SHALL NOT BE RESPONSIBLE FOR THE ACCURACY OR COMPLETENESS OF SCANNED COPIES OF THIS PLAN SHEET.

DEWBERRY ENGINEERS INC.
11060 WHITE ROCK ROAD,
SUITE 200
RANCHO CORDOVA, CA 95670

NOTE:

FOR ACCURATE RIGHT OF WAY DATA, CONTACT RIGHT OF WAY ENGINEERING AT THE DISTRICT OFFICE.

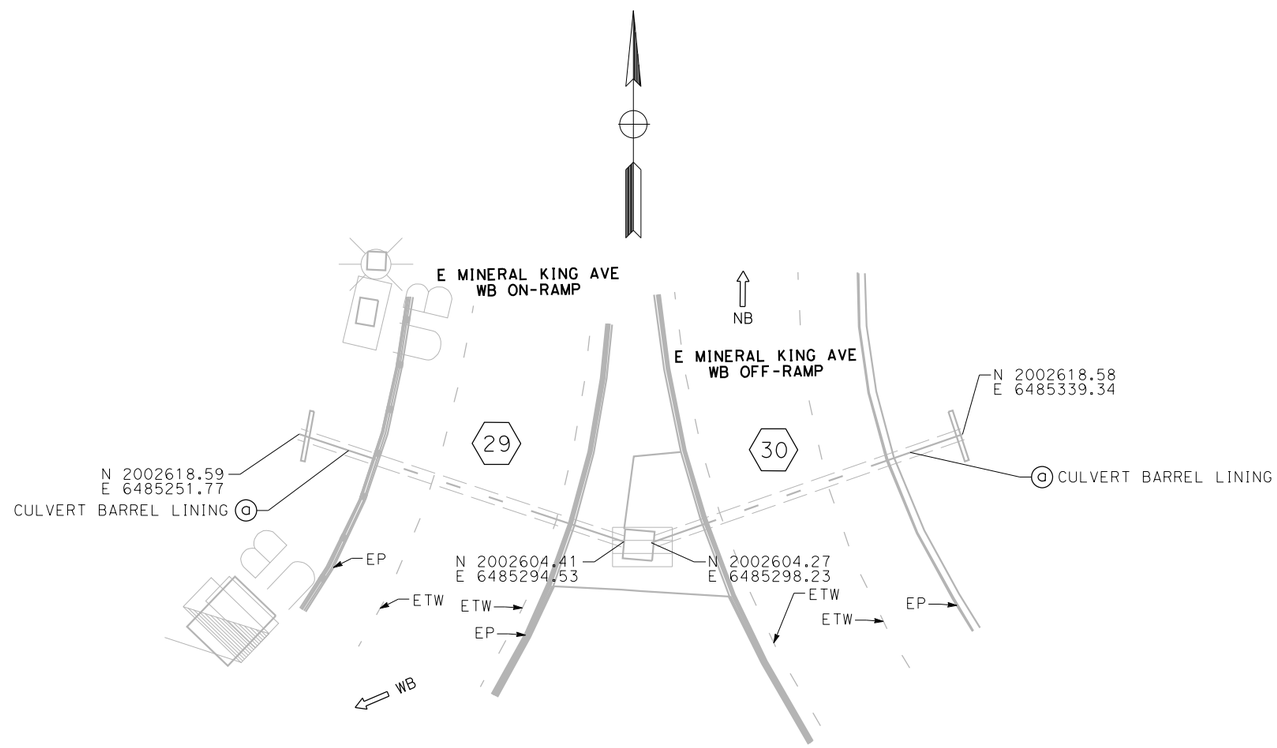

LOCATION No. 29
ROUTE 198, PM 11.79

LOCATION No. 30
ROUTE 198, PM 11.79

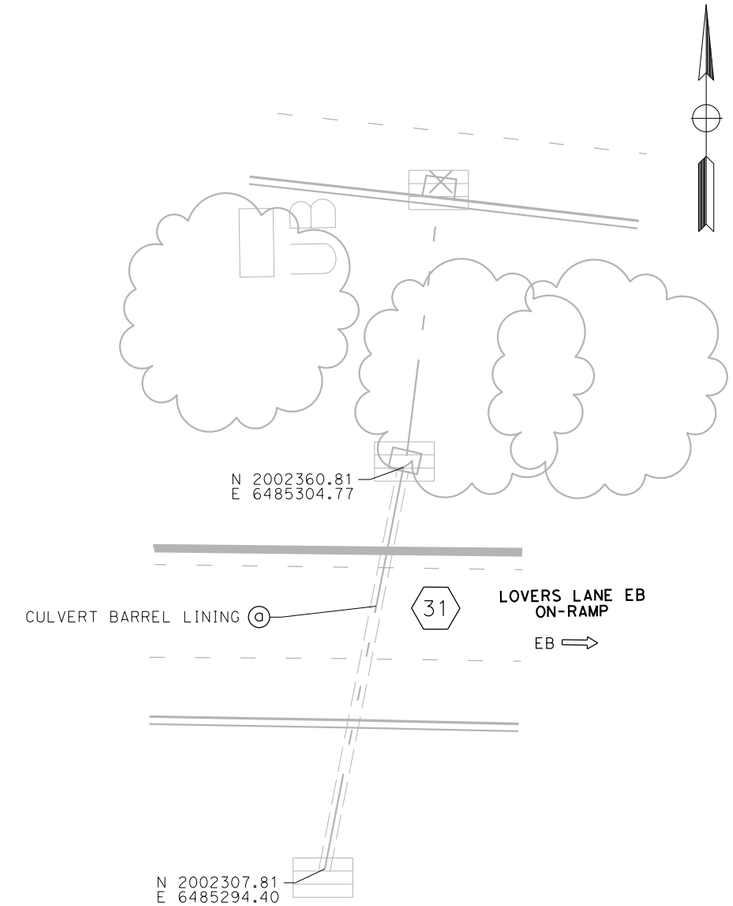

LOCATION No. 31
ROUTE 198, PM 11.81

APPROVED FOR DRAINAGE WORK ONLY

DRAINAGE PLAN

SCALE: 1"=10'

ATTACHMENT C

D-11

STATE OF CALIFORNIA - DEPARTMENT OF TRANSPORTATION

Caltrans

CONSULTANT FUNCTIONAL SUPERVISOR: JOSE SILVA

CALCULATED-DESIGNED BY: PAUL BRADBURY | CHECKED BY: DAVE MELIS

REVISED BY | DATE REVISED

LAST REVISION XX-XX-XX | DATE PLOTTED => 9/30/2021 | TIME PLOTTED => 5:13:58 PM

Dist	COUNTY	ROUTE	POST MILES TOTAL PROJECT	SHEET No.	TOTAL SHEETS
06	Tul	198	0.0/44.0		XX

REGISTERED CIVIL ENGINEER DATE

XX-XX-XX
PLANS APPROVAL DATE

REGISTERED PROFESSIONAL ENGINEER
No.
Exp.
CIVIL
STATE OF CALIFORNIA

THE STATE OF CALIFORNIA OR ITS OFFICERS OR AGENTS SHALL NOT BE RESPONSIBLE FOR THE ACCURACY OR COMPLETENESS OF SCANNED COPIES OF THIS PLAN SHEET.

DEWBERRY ENGINEERS INC.
11060 WHITE ROCK ROAD,
SUITE 200
RANCHO CORDOVA, CA 95670

NOTE:

FOR ACCURATE RIGHT OF WAY DATA, CONTACT RIGHT OF WAY ENGINEERING AT THE DISTRICT OFFICE.

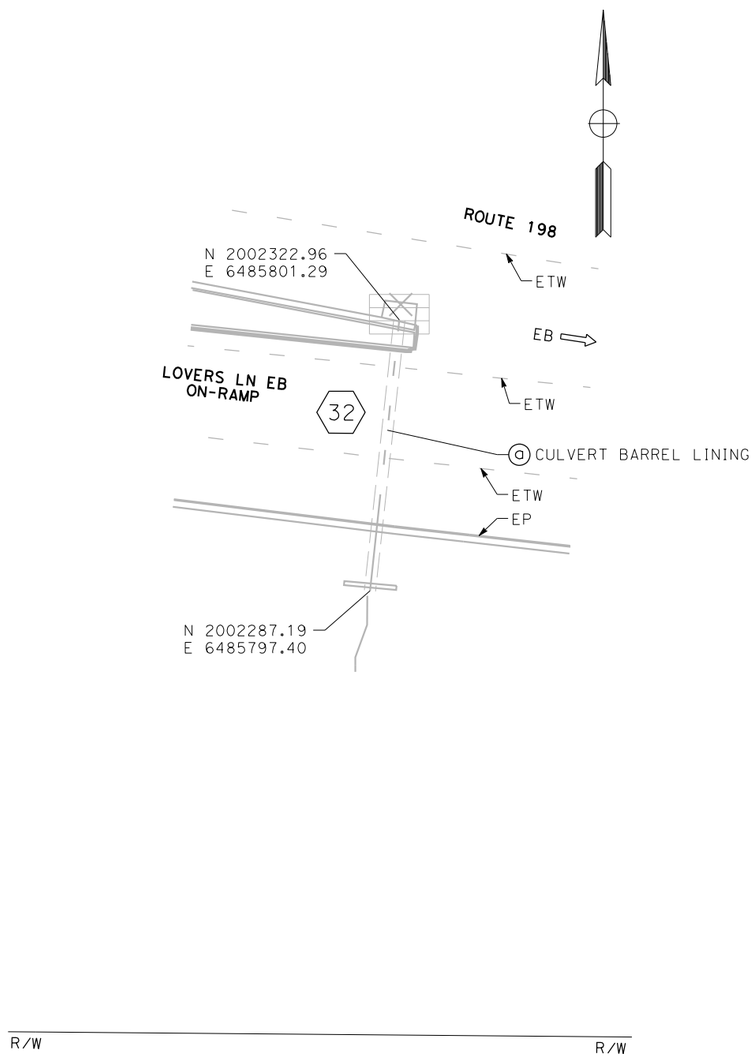

LOCATION No. 32

ROUTE 198, PM 11.91

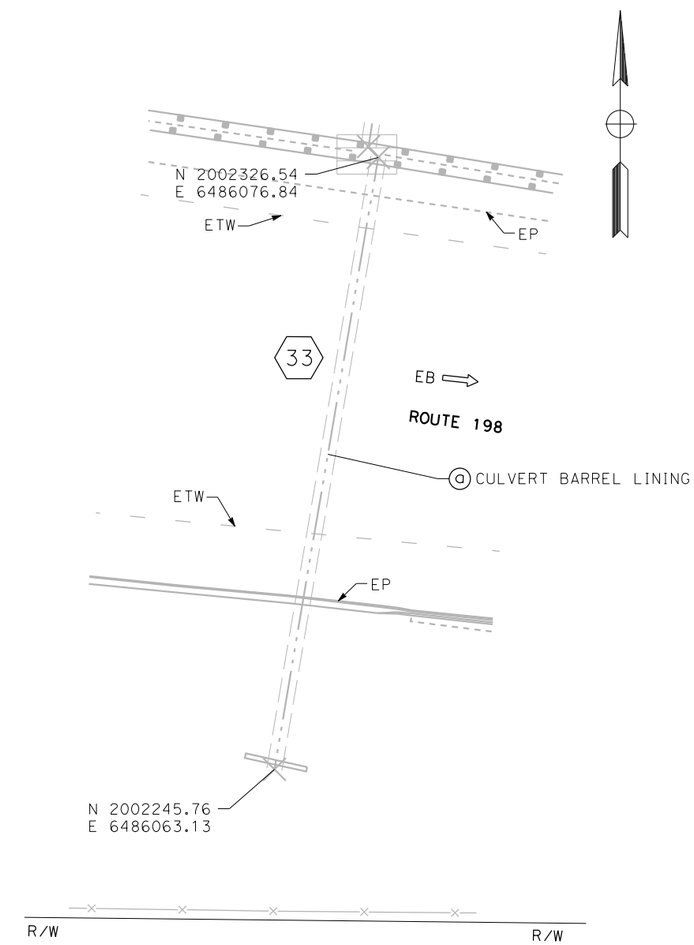

LOCATION No. 33

ROUTE 198, PM 11.96

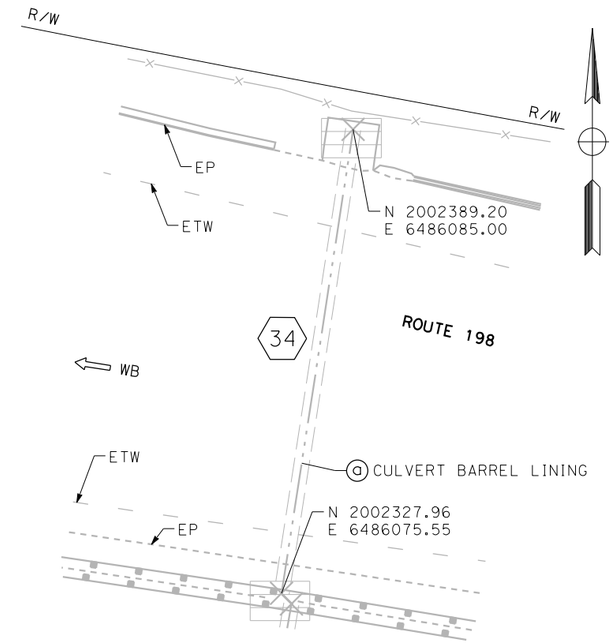

LOCATION No. 34

ROUTE 198, PM 11.96

APPROVED FOR DRAINAGE WORK ONLY

DRAINAGE PLAN

SCALE: 1"=10'

ATTACHMENT C

D-12

STATE OF CALIFORNIA - DEPARTMENT OF TRANSPORTATION

Caltrans

CONSULTANT FUNCTIONAL SUPERVISOR: JOSE SILVA

CALCULATED-DESIGNED BY: PAUL BRADBURY

CHECKED BY: DAVE MELIS

REVISED BY

DATE REVISED

LAST REVISION XX-XX-XX

DATE PLOTTED => 9/30/2021
TIME PLOTTED => 4:36:30 PM

Dist	COUNTY	ROUTE	POST MILES TOTAL PROJECT	SHEET No.	TOTAL SHEETS
06	Tul	198	0.0/44.0		XX

REGISTERED CIVIL ENGINEER DATE

XX-XX-XX
PLANS APPROVAL DATE

REGISTERED PROFESSIONAL ENGINEER No. Exp. CIVIL STATE OF CALIFORNIA

THE STATE OF CALIFORNIA OR ITS OFFICERS OR AGENTS SHALL NOT BE RESPONSIBLE FOR THE ACCURACY OR COMPLETENESS OF SCANNED COPIES OF THIS PLAN SHEET.

DEWBERRY ENGINEERS INC.
11060 WHITE ROCK ROAD,
SUITE 200
RANCHO CORDOVA, CA 95670

NOTE:

FOR ACCURATE RIGHT OF WAY DATA, CONTACT RIGHT OF WAY ENGINEERING AT THE DISTRICT OFFICE.

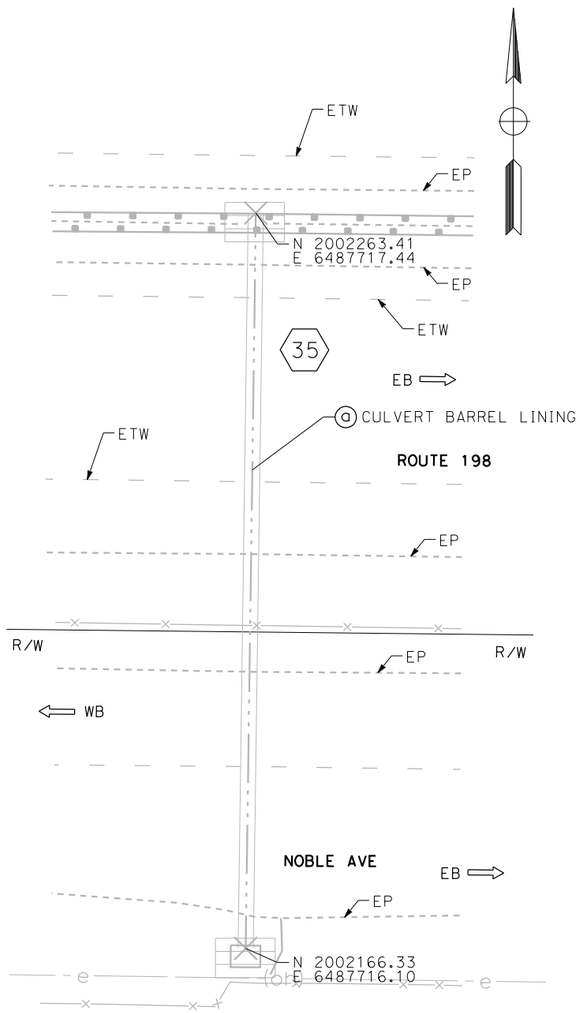

LOCATION No. 35

ROUTE 198, PM 12.28

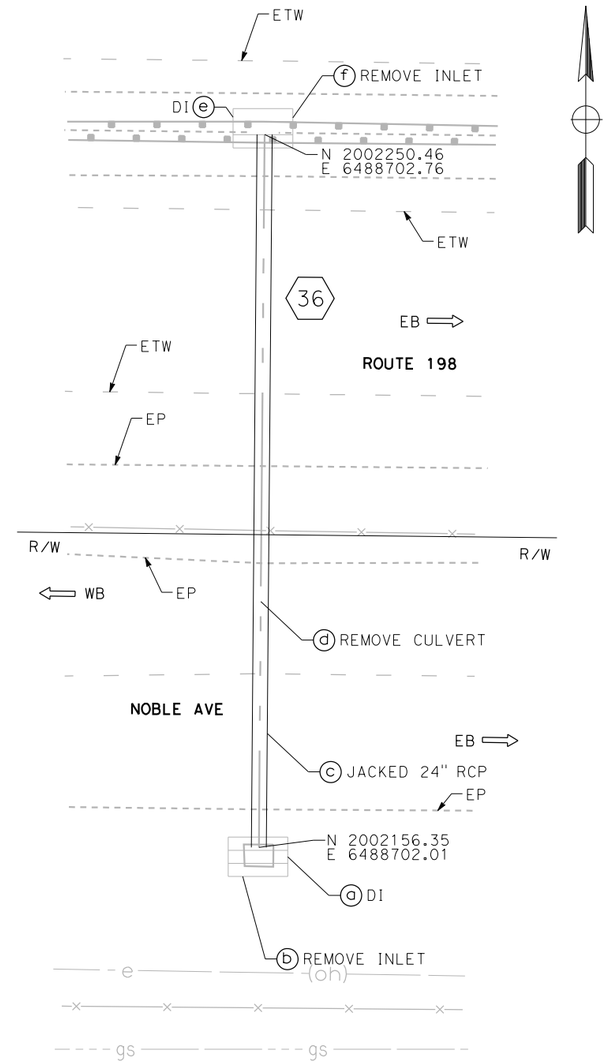

LOCATION No. 36

ROUTE 198, PM 12.47

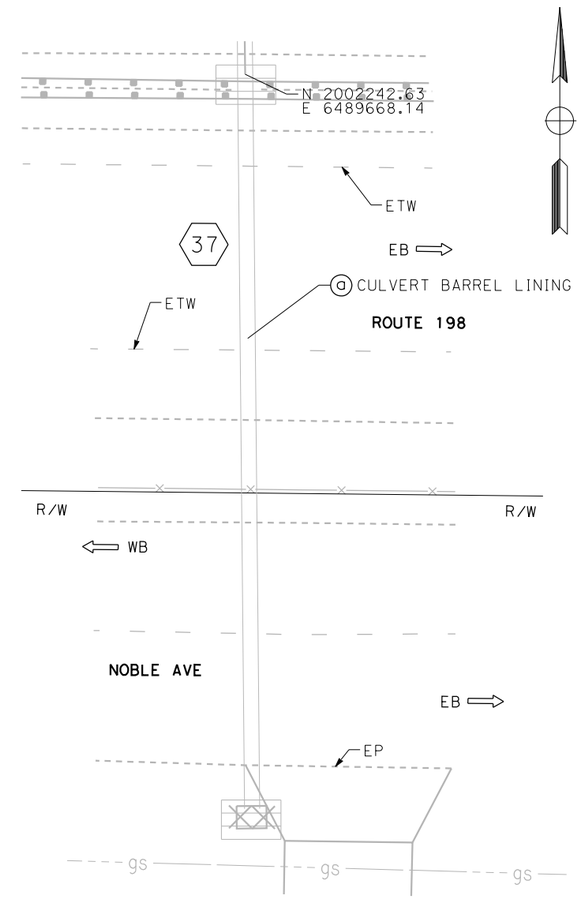

LOCATION No. 37

ROUTE 198, PM 12.65

APPROVED FOR DRAINAGE WORK ONLY

DRAINAGE PLAN

SCALE: 1"=10'

ATTACHMENT C

D-13

REVISED BY	DATE REVISED
PAUL BRADBURY	DAVE MELIS
CALCULATED-DESIGNED BY	CHECKED BY
CONSULTANT FUNCTIONAL SUPERVISOR	JOSE SILVA

STATE OF CALIFORNIA - DEPARTMENT OF TRANSPORTATION

Caltrans

LAST REVISION XX-XX-XX
DATE PLOTTED => 9/30/2021
TIME PLOTTED => 4:36:34 PM

Dist	COUNTY	ROUTE	POST MILES TOTAL PROJECT	SHEET No.	TOTAL SHEETS
06	Tul	198	0.0/44.0		XX

REGISTERED CIVIL ENGINEER DATE

XX-XX-XX
PLANS APPROVAL DATE

REGISTERED PROFESSIONAL ENGINEER No. Exp. CIVIL STATE OF CALIFORNIA

THE STATE OF CALIFORNIA OR ITS OFFICERS OR AGENTS SHALL NOT BE RESPONSIBLE FOR THE ACCURACY OR COMPLETENESS OF SCANNED COPIES OF THIS PLAN SHEET.

DEWBERRY ENGINEERS INC.
11060 WHITE ROCK ROAD,
SUITE 200
RANCHO CORDOVA, CA 95670

NOTE:

FOR ACCURATE RIGHT OF WAY DATA, CONTACT RIGHT OF WAY ENGINEERING AT THE DISTRICT OFFICE.

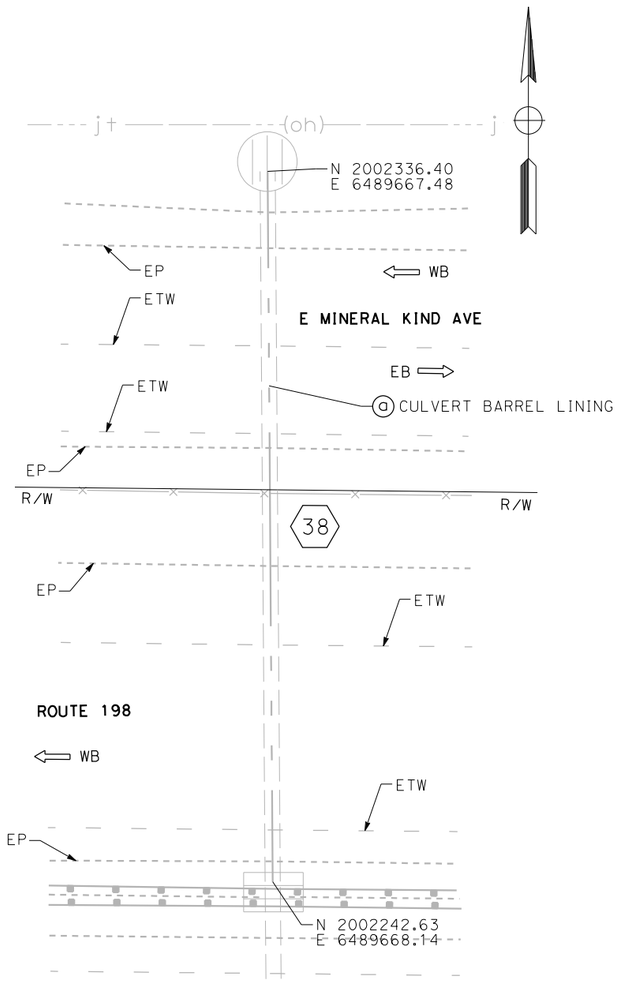

LOCATION No. 38
ROUTE 198, PM 12.65

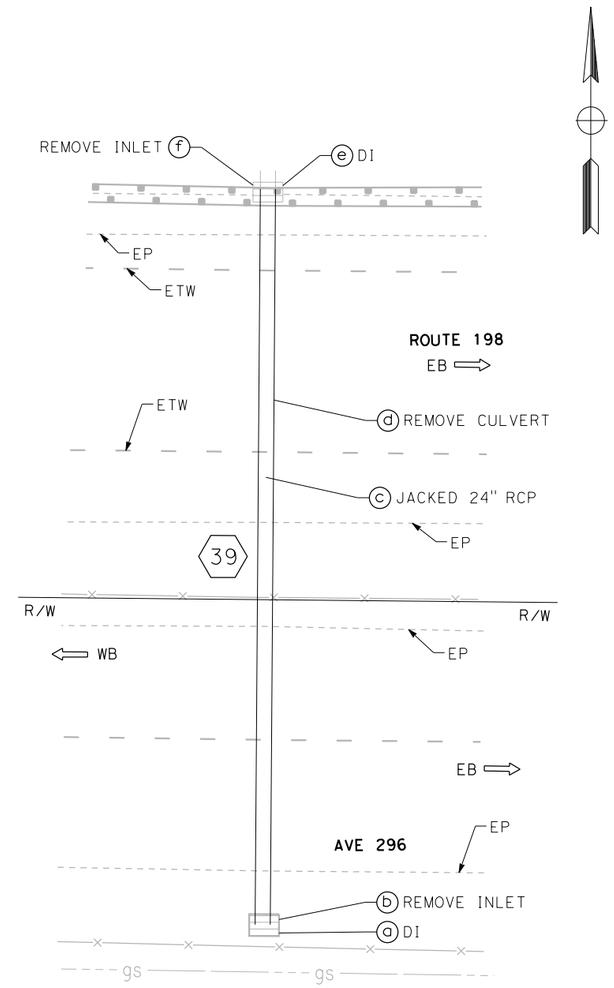

LOCATION No. 39
ROUTE 198, PM 12.84

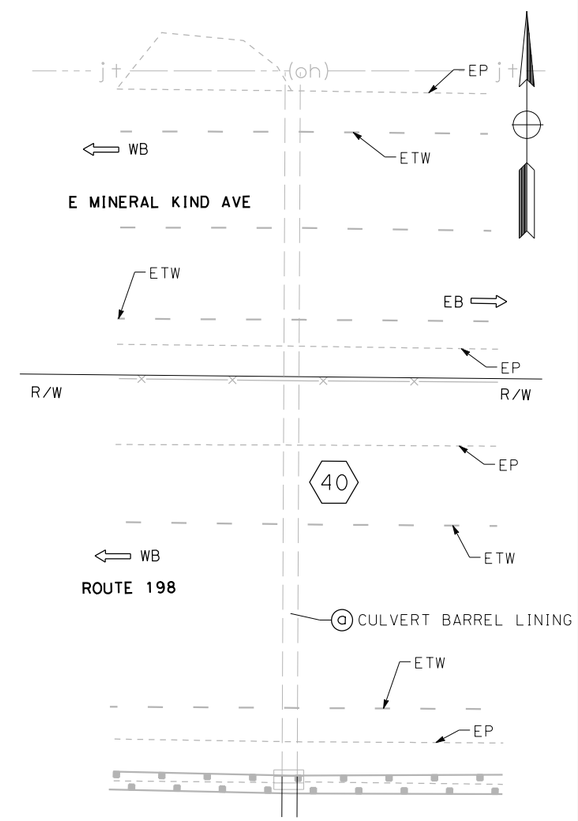

LOCATION No. 40
ROUTE 198, PM 12.84

APPROVED FOR DRAINAGE WORK ONLY

DRAINAGE PLAN
SCALE: 1"=10'
ATTACHMENT C

D-14

REVISED BY	DATE REVISED
PAUL BRADBURY	DAVE MELIS
CALCULATED-DESIGNED BY	CHECKED BY
CONSULTANT FUNCTIONAL SUPERVISOR	JOSE SILVA

STATE OF CALIFORNIA - DEPARTMENT OF TRANSPORTATION
Caltrans

LAST REVISION XX-XX-XX
DATE PLOTTED => 9/30/2021
TIME PLOTTED => 4:36:37 PM

Dist	COUNTY	ROUTE	POST MILES TOTAL PROJECT	SHEET No.	TOTAL SHEETS
06	Tul	198	0.0/44.0		XX

REGISTERED CIVIL ENGINEER DATE

XX-XX-XX
PLANS APPROVAL DATE

REGISTERED PROFESSIONAL ENGINEER
No.
Exp.
CIVIL
STATE OF CALIFORNIA

THE STATE OF CALIFORNIA OR ITS OFFICERS OR AGENTS SHALL NOT BE RESPONSIBLE FOR THE ACCURACY OR COMPLETENESS OF SCANNED COPIES OF THIS PLAN SHEET.

DEWBERRY ENGINEERS INC.
11060 WHITE ROCK ROAD,
SUITE 200
RANCHO CORDOVA, CA 95670

NOTE:

FOR ACCURATE RIGHT OF WAY DATA, CONTACT RIGHT OF WAY ENGINEERING AT THE DISTRICT OFFICE.

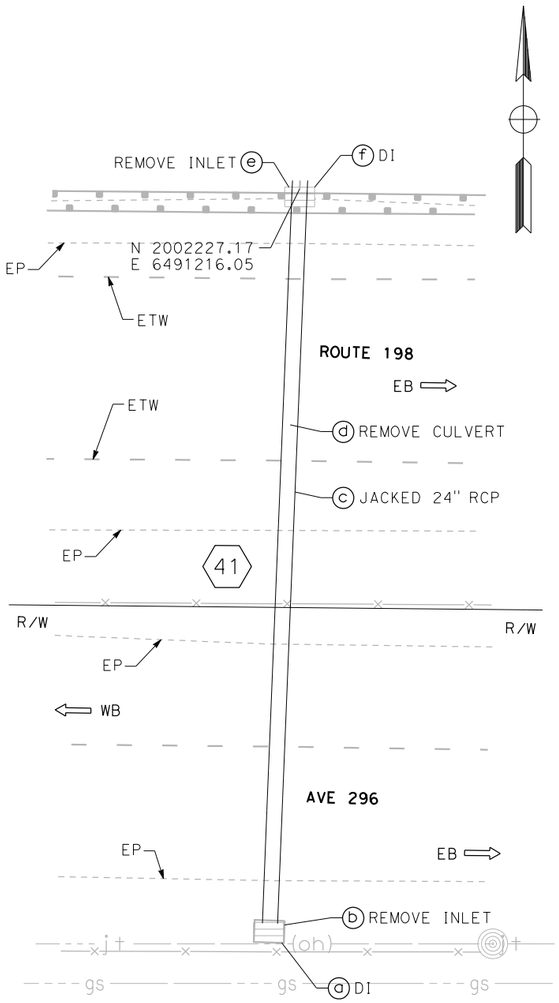

LOCATION No. 41

ROUTE 198, PM 12.94

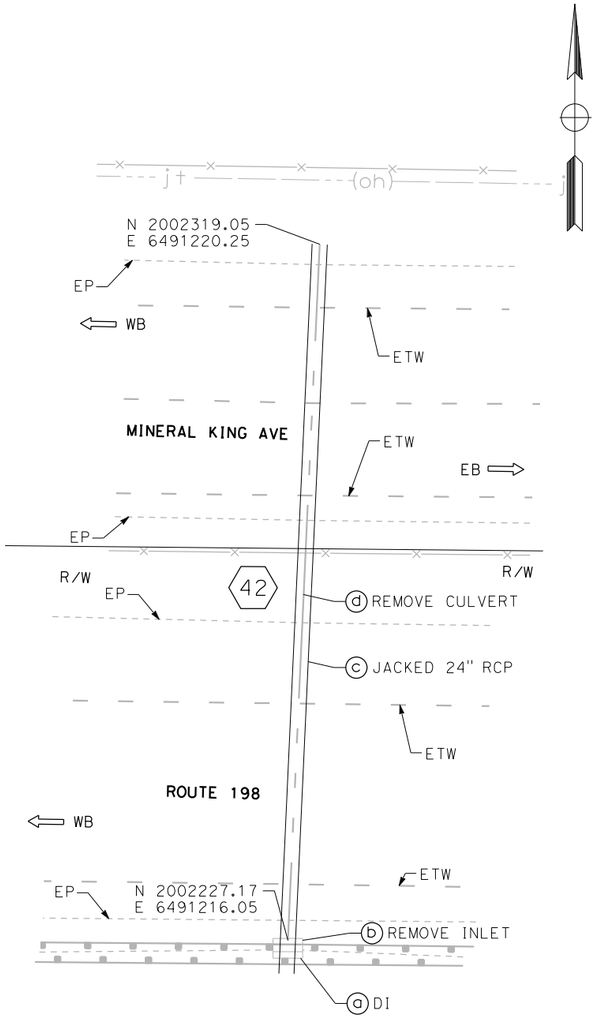

LOCATION No. 42

ROUTE 198, PM 12.94

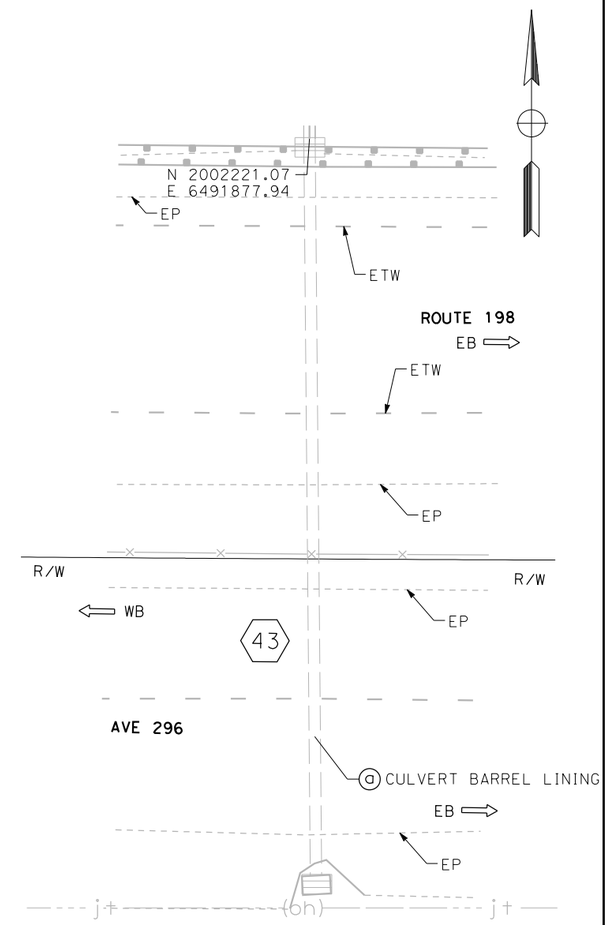

LOCATION No. 43

ROUTE 198, PM 13.06

APPROVED FOR DRAINAGE WORK ONLY

DRAINAGE PLAN

SCALE: 1"=10'

ATTACHMENT C

D-15

REVISED BY	DATE REVISED
PAUL BRADBURY	DAVE MELIS
CALCULATED-DESIGNED BY	CHECKED BY
CONSULTANT FUNCTIONAL SUPERVISOR	JOSE SILVA

STATE OF CALIFORNIA - DEPARTMENT OF TRANSPORTATION

Caltrans

LAST REVISION XX-XX-XX | DATE PLOTTED => 9/30/2021 TIME PLOTTED => 4:36:41 PM

Dist	COUNTY	ROUTE	POST MILES TOTAL PROJECT	SHEET No.	TOTAL SHEETS
06	Tul	198	0.0/44.0		XX

REGISTERED CIVIL ENGINEER DATE

XX-XX-XX
PLANS APPROVAL DATE

REGISTERED PROFESSIONAL ENGINEER No. Exp. CIVIL STATE OF CALIFORNIA

THE STATE OF CALIFORNIA OR ITS OFFICERS OR AGENTS SHALL NOT BE RESPONSIBLE FOR THE ACCURACY OR COMPLETENESS OF SCANNED COPIES OF THIS PLAN SHEET.

DEWBERRY ENGINEERS INC.
11060 WHITE ROCK ROAD,
SUITE 200
RANCHO CORDOVA, CA 95670

NOTE:

FOR ACCURATE RIGHT OF WAY DATA, CONTACT RIGHT OF WAY ENGINEERING AT THE DISTRICT OFFICE.

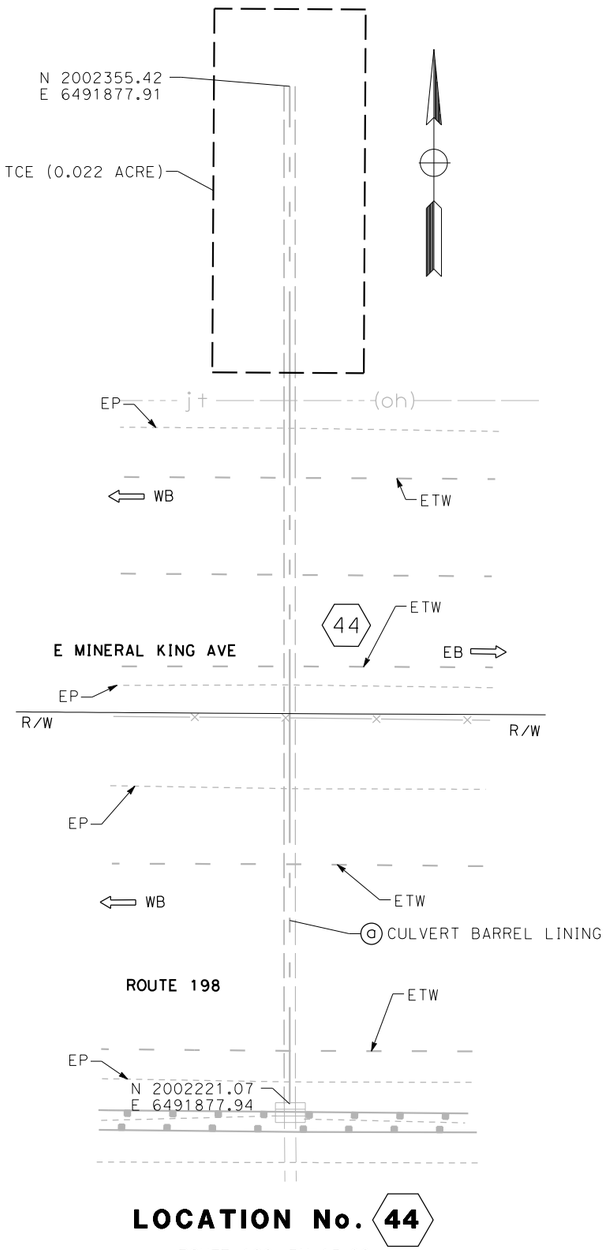

LOCATION No. 44

ROUTE 198, PM 13.06

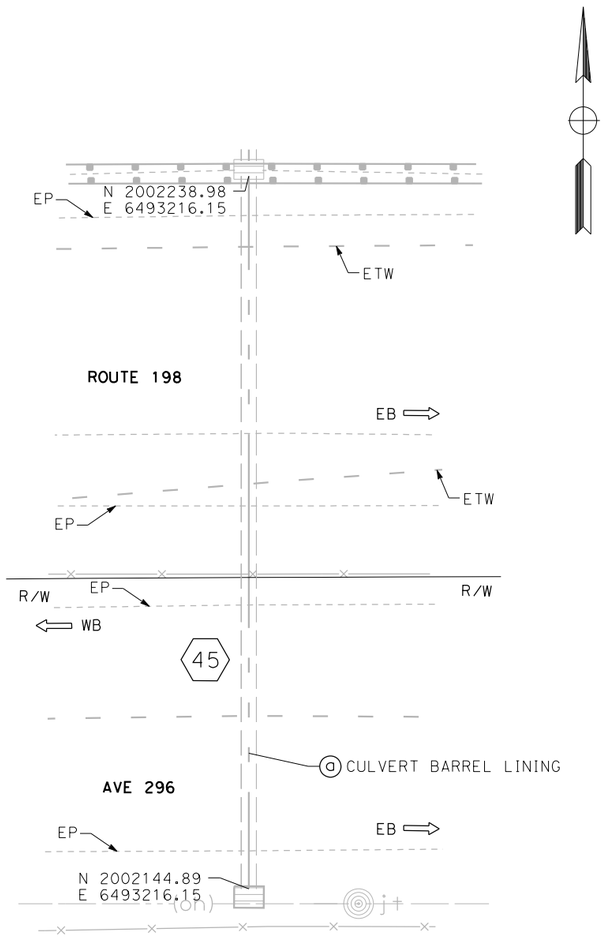

LOCATION No. 45

ROUTE 198, PM 13.31

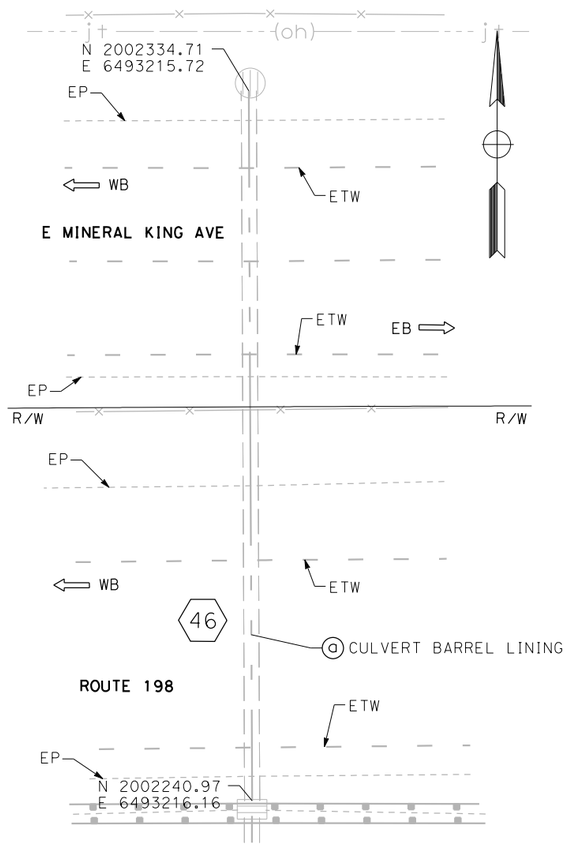

LOCATION No. 46

ROUTE 198, PM 13.31

APPROVED FOR DRAINAGE WORK ONLY

DRAINAGE PLAN

SCALE: 1"=10'

ATTACHMENT C

D-16

REVISED BY	DATE REVISED
PAUL BRADBURY	DAVE MELIS
CALCULATED-DESIGNED BY	CHECKED BY
CONSULTANT FUNCTIONAL SUPERVISOR	JOSE SILVA

STATE OF CALIFORNIA - DEPARTMENT OF TRANSPORTATION

Caltrans

LAST REVISION XX-XX-XX
DATE PLOTTED => 9/30/2021
TIME PLOTTED => 4:36:45 PM

Dist	COUNTY	ROUTE	POST MILES TOTAL PROJECT	SHEET No.	TOTAL SHEETS
06	Tul	198	0.0/44.0		XX

REGISTERED CIVIL ENGINEER DATE

XX-XX-XX
PLANS APPROVAL DATE

REGISTERED PROFESSIONAL ENGINEER No. Exp. CIVIL STATE OF CALIFORNIA

THE STATE OF CALIFORNIA OR ITS OFFICERS OR AGENTS SHALL NOT BE RESPONSIBLE FOR THE ACCURACY OR COMPLETENESS OF SCANNED COPIES OF THIS PLAN SHEET.

DEWBERRY ENGINEERS INC.
11060 WHITE ROCK ROAD,
SUITE 200
RANCHO CORDOVA, CA 95670

NOTE:

FOR ACCURATE RIGHT OF WAY DATA, CONTACT RIGHT OF WAY ENGINEERING AT THE DISTRICT OFFICE.

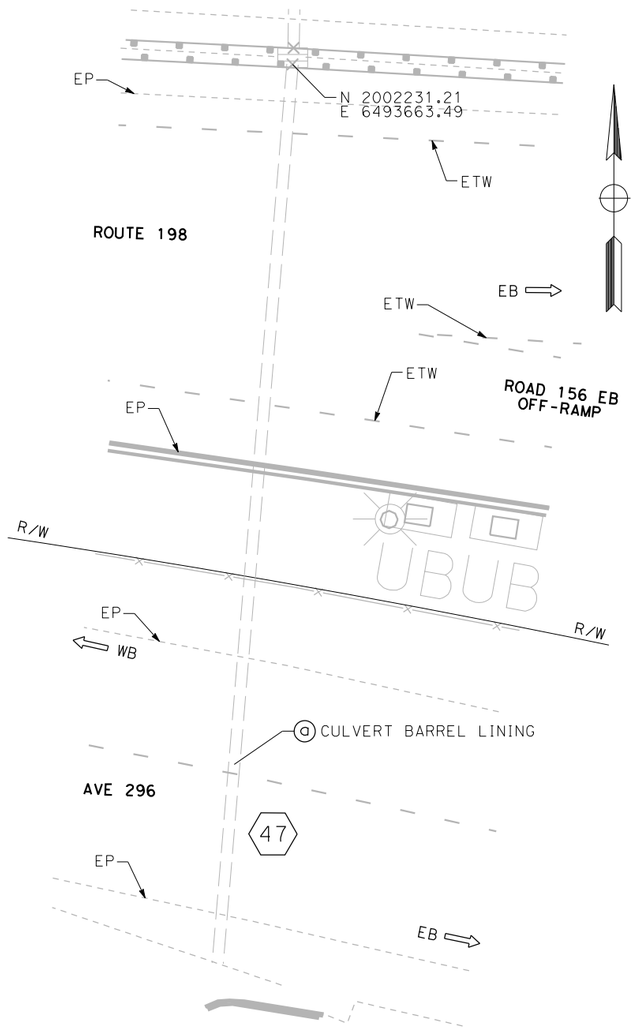

LOCATION No. 47
ROUTE 198, PM 13.40

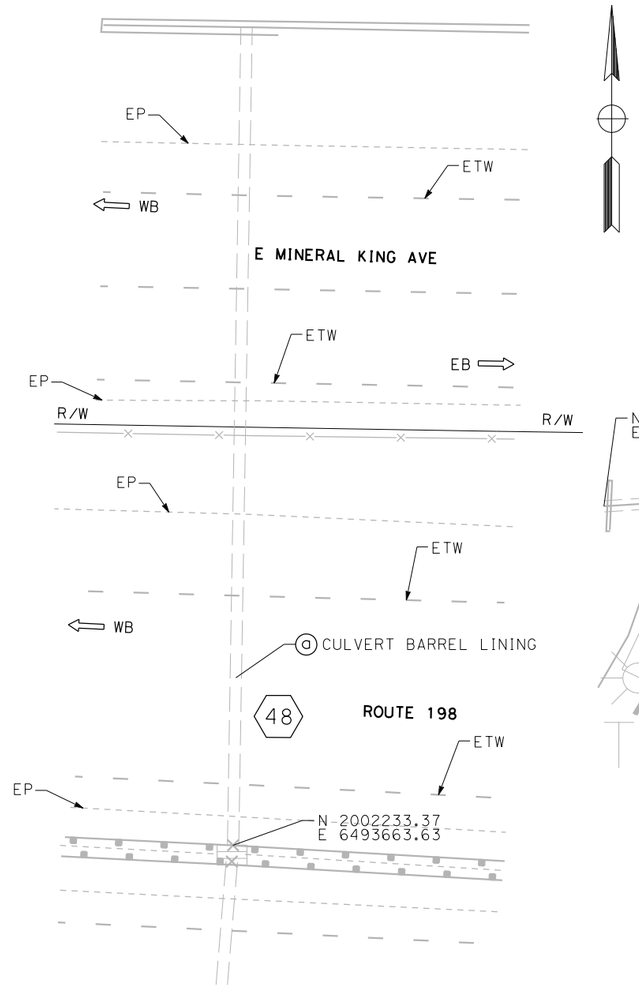

LOCATION No. 48
ROUTE 198, PM 13.40

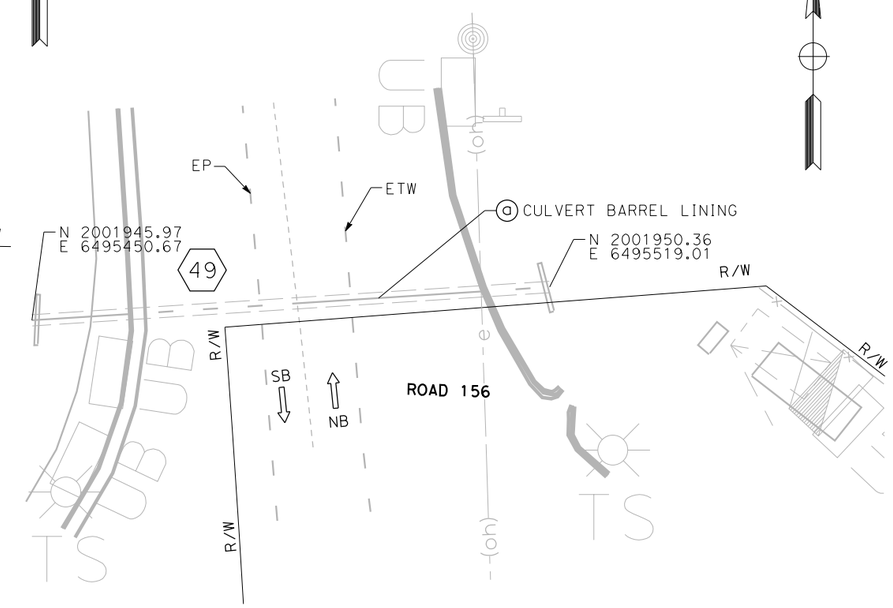

LOCATION No. 49
ROUTE 198, PM 13.67

APPROVED FOR DRAINAGE WORK ONLY

DRAINAGE PLAN

SCALE: 1"=10'

ATTACHMENT C

D-17

STATE OF CALIFORNIA - DEPARTMENT OF TRANSPORTATION
Caltrans

CONSULTANT FUNCTIONAL SUPERVISOR: JOSE SILVA
CALCULATED-DESIGNED BY: PAUL BRADBURY
CHECKED BY: DAVE MELIS
REVISED BY
DATE REVISED

LAST REVISION XX-XX-XX
DATE PLOTTED => 9/30/2021
TIME PLOTTED => 4:36:49 PM

Dist	COUNTY	ROUTE	POST MILES TOTAL PROJECT	SHEET No.	TOTAL SHEETS
06	Tul	198	0.0/44.0		XX

REGISTERED CIVIL ENGINEER DATE

XX-XX-XX
PLANS APPROVAL DATE

REGISTERED PROFESSIONAL ENGINEER No. Exp. CIVIL STATE OF CALIFORNIA

THE STATE OF CALIFORNIA OR ITS OFFICERS OR AGENTS SHALL NOT BE RESPONSIBLE FOR THE ACCURACY OR COMPLETENESS OF SCANNED COPIES OF THIS PLAN SHEET.

DEWBERRY ENGINEERS INC.
11060 WHITE ROCK ROAD,
SUITE 200
RANCHO CORDOVA, CA 95670

NOTE:

FOR ACCURATE RIGHT OF WAY DATA, CONTACT RIGHT OF WAY ENGINEERING AT THE DISTRICT OFFICE.

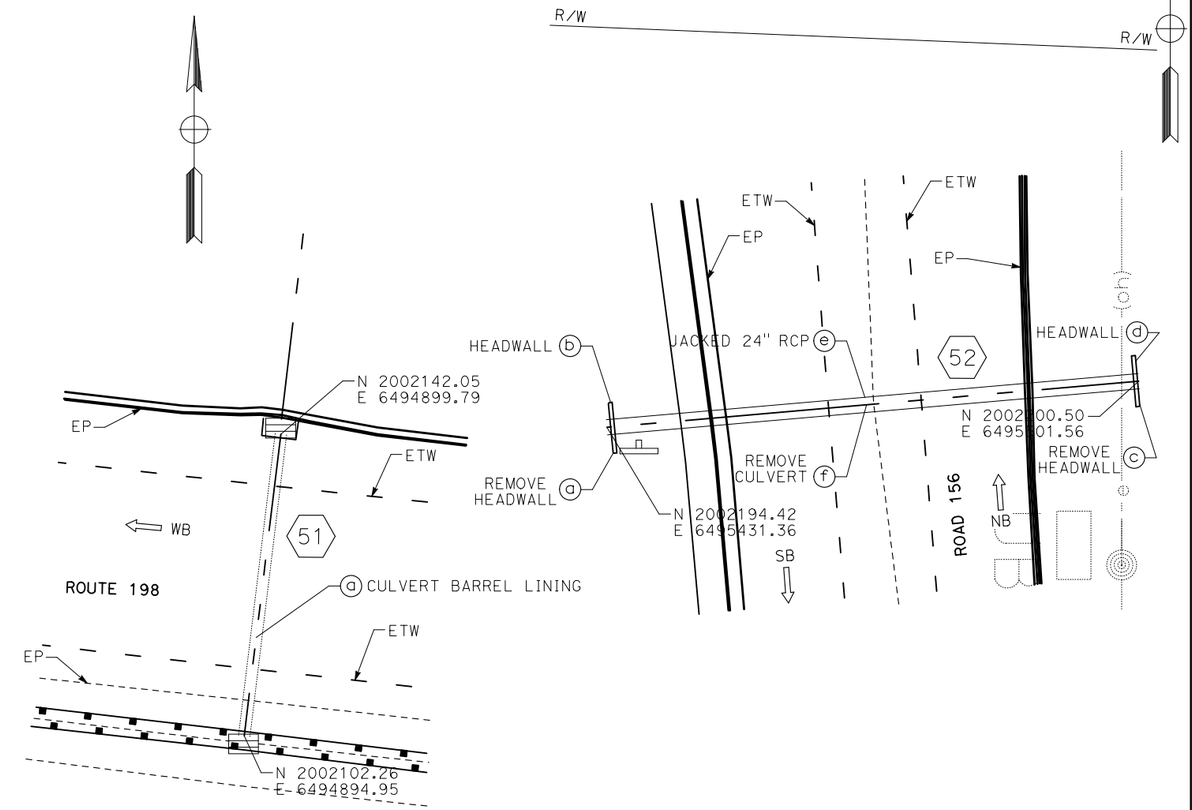

LOCATION No. 51

ROUTE 198, PM 13.67

LOCATION No. 52

ROUTE 198, PM 13.67

APPROVED FOR DRAINAGE WORK ONLY

DRAINAGE PLAN

SCALE: 1"=10'

ATTACHMENT C

D-18

STATE OF CALIFORNIA - DEPARTMENT OF TRANSPORTATION

Caltrans

CONSULTANT FUNCTIONAL SUPERVISOR: JOSE SILVA

CALCULATED-DESIGNED BY: PAUL BRADBURY

CHECKED BY: DAVE MELIS

REVISED BY

DATE REVISED

LAST REVISION XX-XX-XX

DATE PLOTTED => 19-APR-2022
TIME PLOTTED => 13:21

Dist	COUNTY	ROUTE	POST MILES TOTAL PROJECT	SHEET No.	TOTAL SHEETS
06	Tul	198	0.0/44.0		XX

REGISTERED CIVIL ENGINEER DATE

XX-XX-XX
PLANS APPROVAL DATE

REGISTERED PROFESSIONAL ENGINEER
No.
Exp.
CIVIL
STATE OF CALIFORNIA

THE STATE OF CALIFORNIA OR ITS OFFICERS OR AGENTS SHALL NOT BE RESPONSIBLE FOR THE ACCURACY OR COMPLETENESS OF SCANNED COPIES OF THIS PLAN SHEET.

DEWBERRY ENGINEERS INC.
11060 WHITE ROCK ROAD,
SUITE 200
RANCHO CORDOVA, CA 95670

NOTE:

FOR ACCURATE RIGHT OF WAY DATA, CONTACT RIGHT OF WAY ENGINEERING AT THE DISTRICT OFFICE.

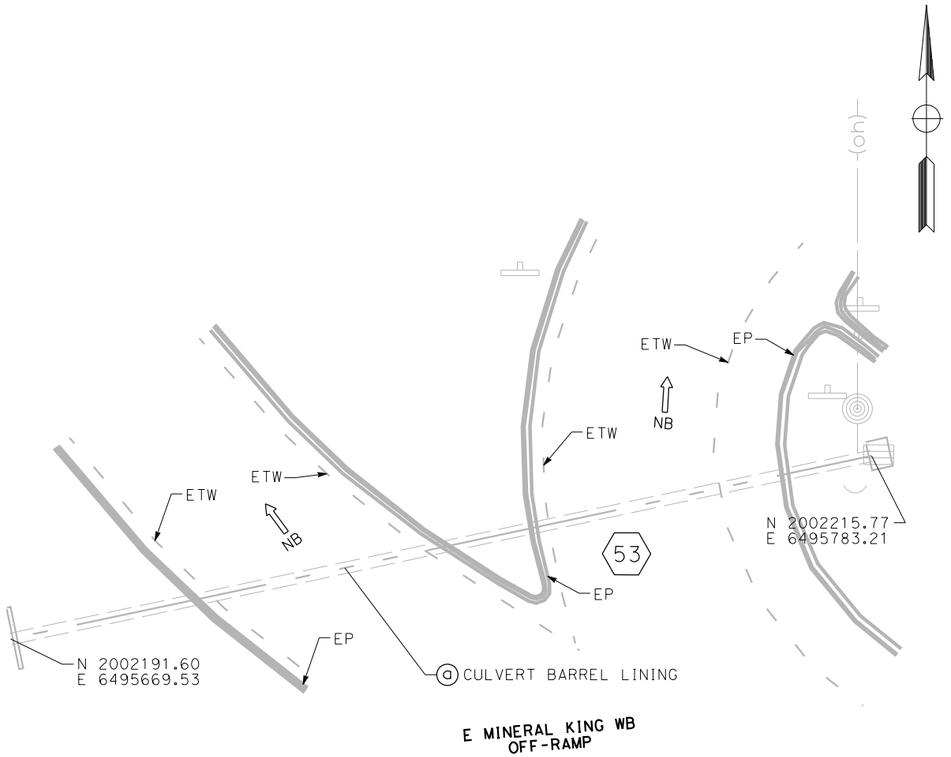

LOCATION No. 53

ROUTE 198, PM 13.67

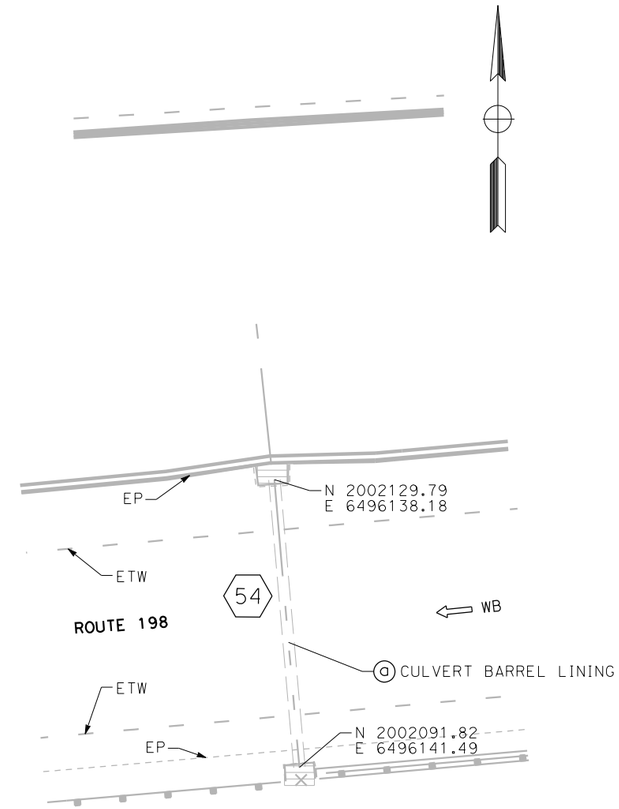

LOCATION No. 54

ROUTE 198, PM 13.67

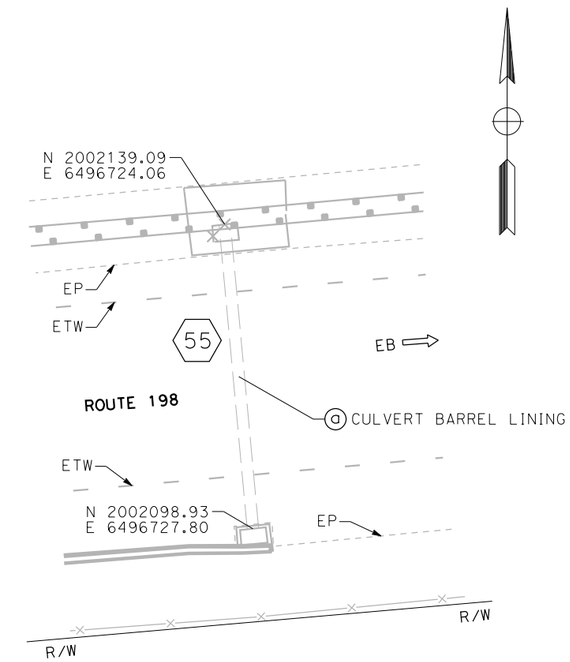

LOCATION No. 55

ROUTE 198, PM 13.67

APPROVED FOR DRAINAGE WORK ONLY

DRAINAGE PLAN

SCALE: 1"=10'

ATTACHMENT C

D-19

REVISED BY	DATE REVISED
PAUL BRADBURY	DAVE MELIS

CALCULATED-DESIGNED BY / CHECKED BY

CONSULTANT FUNCTIONAL SUPERVISOR: JOSE SILVA

STATE OF CALIFORNIA - DEPARTMENT OF TRANSPORTATION

Caltrans

LAST REVISION XX-XX-XX | DATE PLOTTED => 9/30/2021 | TIME PLOTTED => 4:36:56 PM

Dist	COUNTY	ROUTE	POST MILES TOTAL PROJECT	SHEET No.	TOTAL SHEETS
06	Tul	198	0.0/44.0		XX

REGISTERED CIVIL ENGINEER DATE

XX-XX-XX
PLANS APPROVAL DATE

REGISTERED PROFESSIONAL ENGINEER No. Exp. CIVIL STATE OF CALIFORNIA

THE STATE OF CALIFORNIA OR ITS OFFICERS OR AGENTS SHALL NOT BE RESPONSIBLE FOR THE ACCURACY OR COMPLETENESS OF SCANNED COPIES OF THIS PLAN SHEET.

DEWBERRY ENGINEERS INC.
11060 WHITE ROCK ROAD,
SUITE 200
RANCHO CORDOVA, CA 95670

NOTE:

FOR ACCURATE RIGHT OF WAY DATA, CONTACT RIGHT OF WAY ENGINEERING AT THE DISTRICT OFFICE.

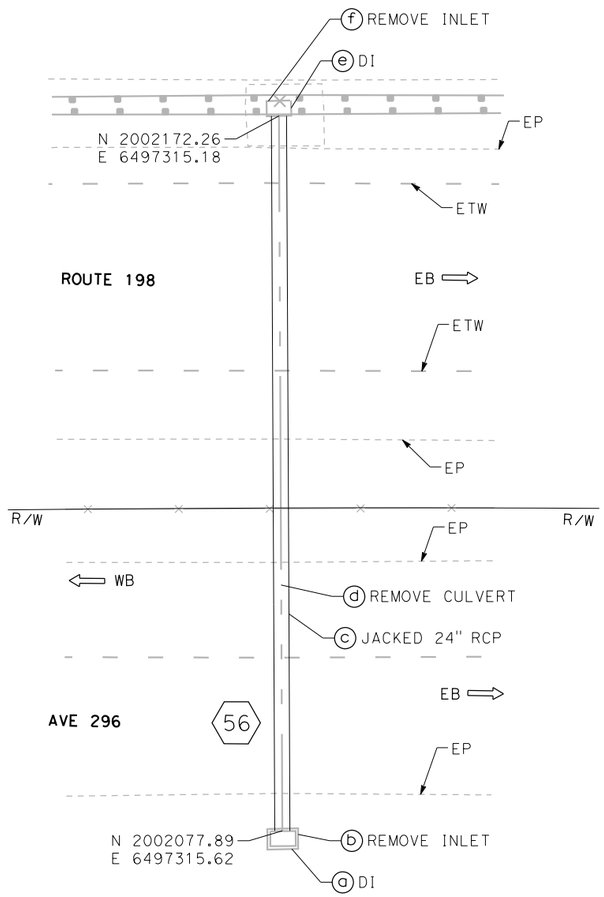

LOCATION No. 56
ROUTE 198, PM 14.09

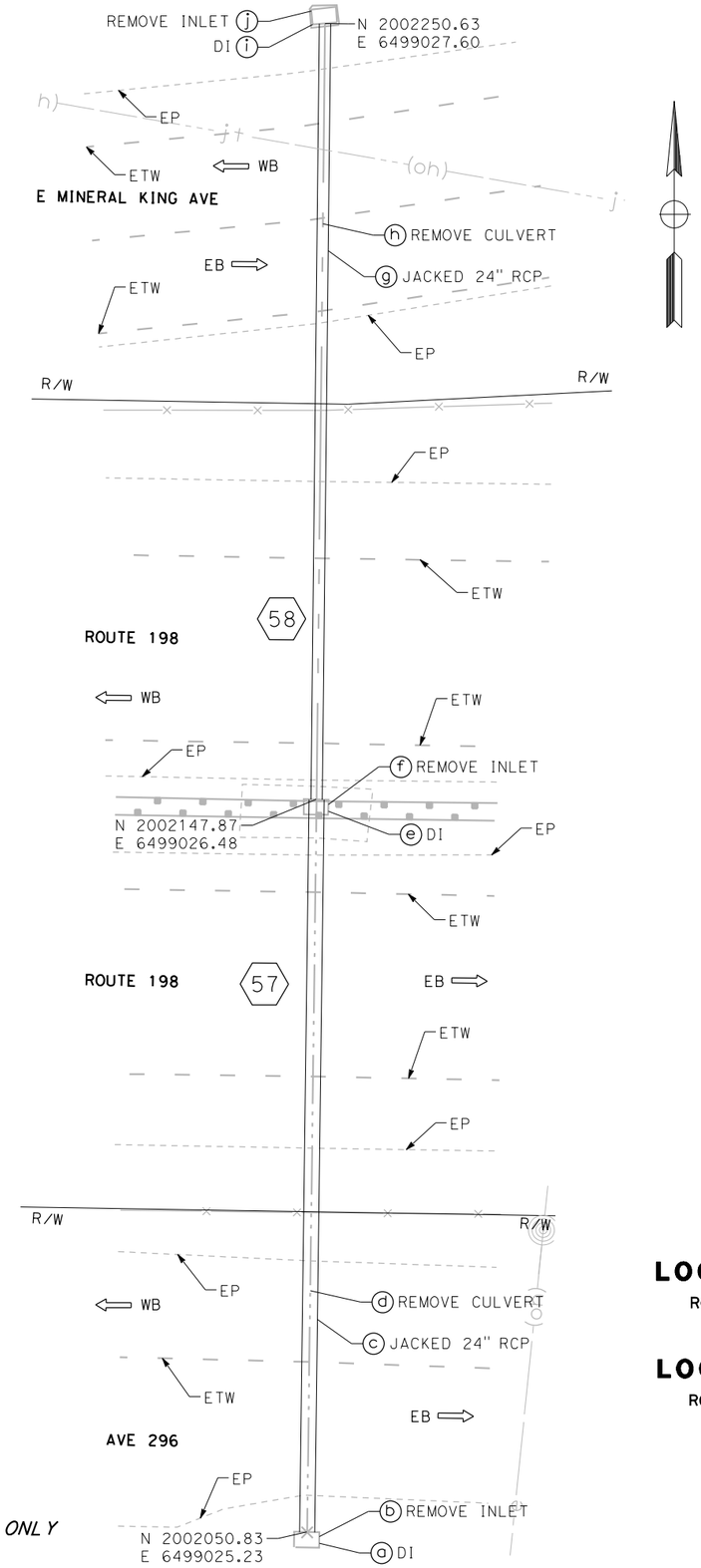

LOCATION No. 58
ROUTE 198, PM 14.42

LOCATION No. 57
ROUTE 198, PM 14.42

APPROVED FOR DRAINAGE WORK ONLY

DRAINAGE PLAN

SCALE: 1"=10'

ATTACHMENT C

D-20

STATE OF CALIFORNIA - DEPARTMENT OF TRANSPORTATION
Caltrans

CONSULTANT FUNCTIONAL SUPERVISOR: JOSE SILVA
CALCULATED-DESIGNED BY: PAUL BRADBURY
CHECKED BY: DAVE MELIS
REVISED BY
DATE REVISED

LAST REVISION XX-XX-XX
DATE PLOTTED => 9/30/2021
TIME PLOTTED => 4:37:00 PM

Dist	COUNTY	ROUTE	POST MILES TOTAL PROJECT	SHEET No.	TOTAL SHEETS
06	Tul	198	0.0/44.0		XX

REGISTERED CIVIL ENGINEER DATE

XX-XX-XX
PLANS APPROVAL DATE

REGISTERED PROFESSIONAL ENGINEER No. Exp. CIVIL STATE OF CALIFORNIA

THE STATE OF CALIFORNIA OR ITS OFFICERS OR AGENTS SHALL NOT BE RESPONSIBLE FOR THE ACCURACY OR COMPLETENESS OF SCANNED COPIES OF THIS PLAN SHEET.

DEWBERRY ENGINEERS INC.
11060 WHITE ROCK ROAD,
SUITE 200
RANCHO CORDOVA, CA 95670

NOTE:

FOR ACCURATE RIGHT OF WAY DATA, CONTACT RIGHT OF WAY ENGINEERING AT THE DISTRICT OFFICE.

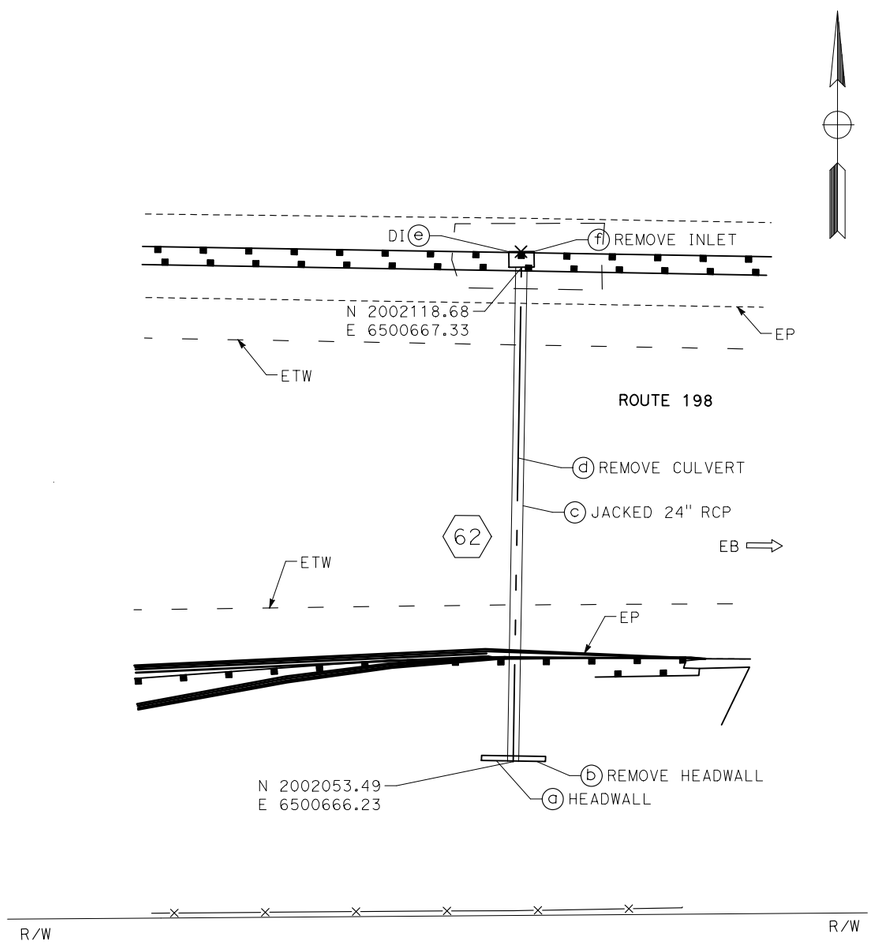

LOCATION No. 62
ROUTE 198, PM 14.72

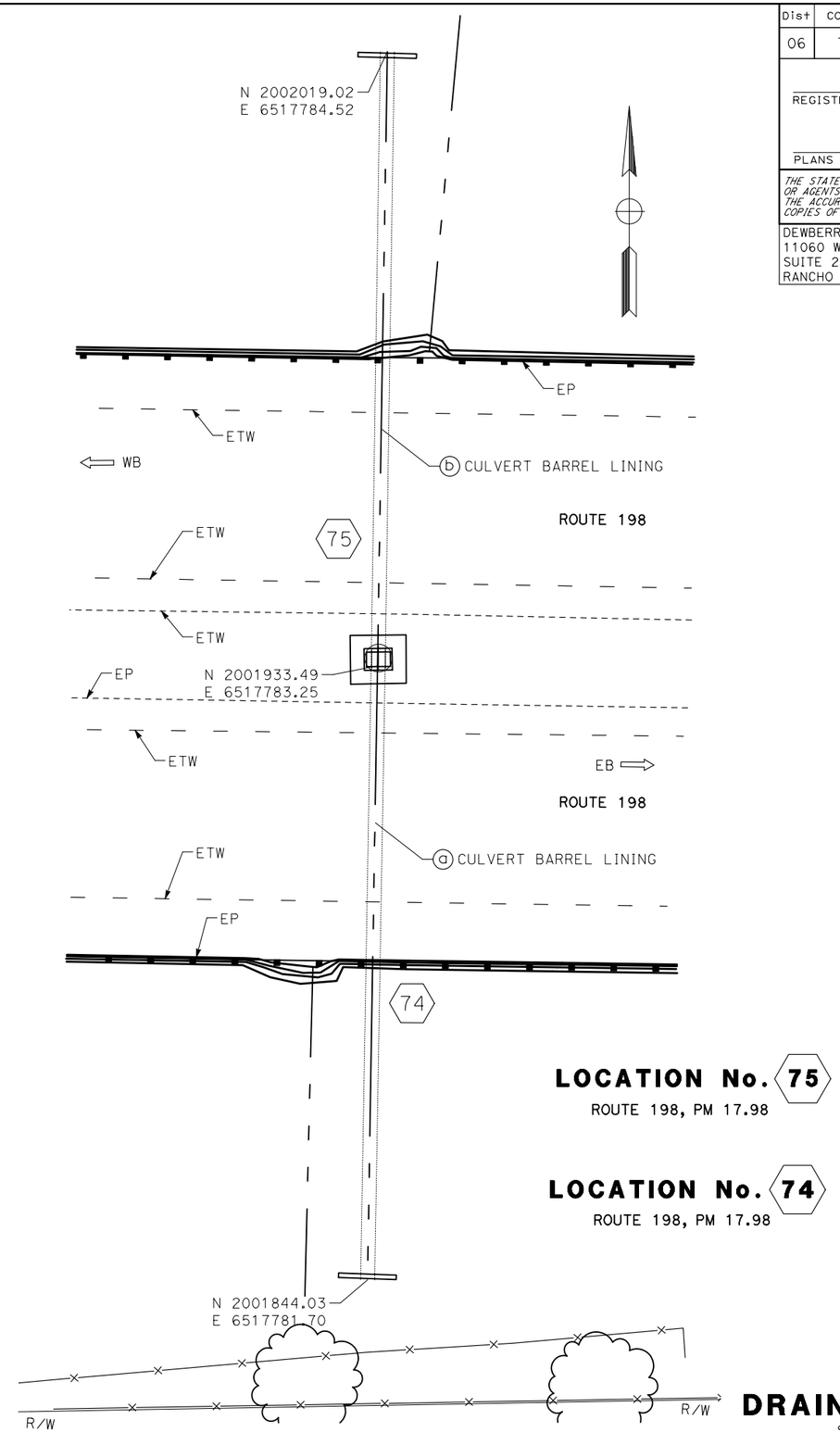

LOCATION No. 75
ROUTE 198, PM 17.98

LOCATION No. 74
ROUTE 198, PM 17.98

APPROVED FOR DRAINAGE WORK ONLY

DRAINAGE PLAN
SCALE: 1"=10'
ATTACHMENT C

D-21

STATE OF CALIFORNIA - DEPARTMENT OF TRANSPORTATION
Caltrans

CONSULTANT FUNCTIONAL SUPERVISOR: JOSE SILVA
CALCULATED-DESIGNED BY: PAUL BRADBURY
CHECKED BY: DAVE MELIS
REVISED BY
DATE REVISED

LAST REVISION XX-XX-XX
DATE PLOTTED => 19-APR-2022
TIME PLOTTED => 13:21

Dist	COUNTY	ROUTE	POST MILES TOTAL PROJECT	SHEET No.	TOTAL SHEETS
06	Tul	198	0.0/44.0		XX

REGISTERED CIVIL ENGINEER DATE

XX-XX-XX
PLANS APPROVAL DATE

REGISTERED PROFESSIONAL ENGINEER No. Exp. CIVIL STATE OF CALIFORNIA

THE STATE OF CALIFORNIA OR ITS OFFICERS OR AGENTS SHALL NOT BE RESPONSIBLE FOR THE ACCURACY OR COMPLETENESS OF SCANNED COPIES OF THIS PLAN SHEET.

DEWBERRY ENGINEERS INC.
11060 WHITE ROCK ROAD,
SUITE 200
RANCHO CORDOVA, CA 95670

NOTE:

FOR ACCURATE RIGHT OF WAY DATA, CONTACT RIGHT OF WAY ENGINEERING AT THE DISTRICT OFFICE.

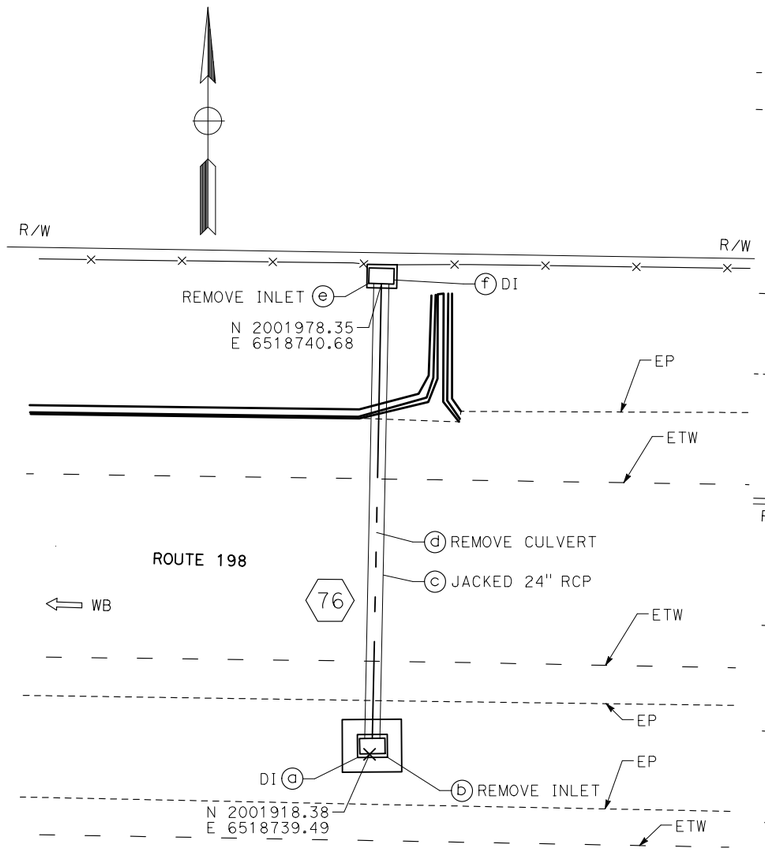

LOCATION No. 76

ROUTE 198, PM 18.14

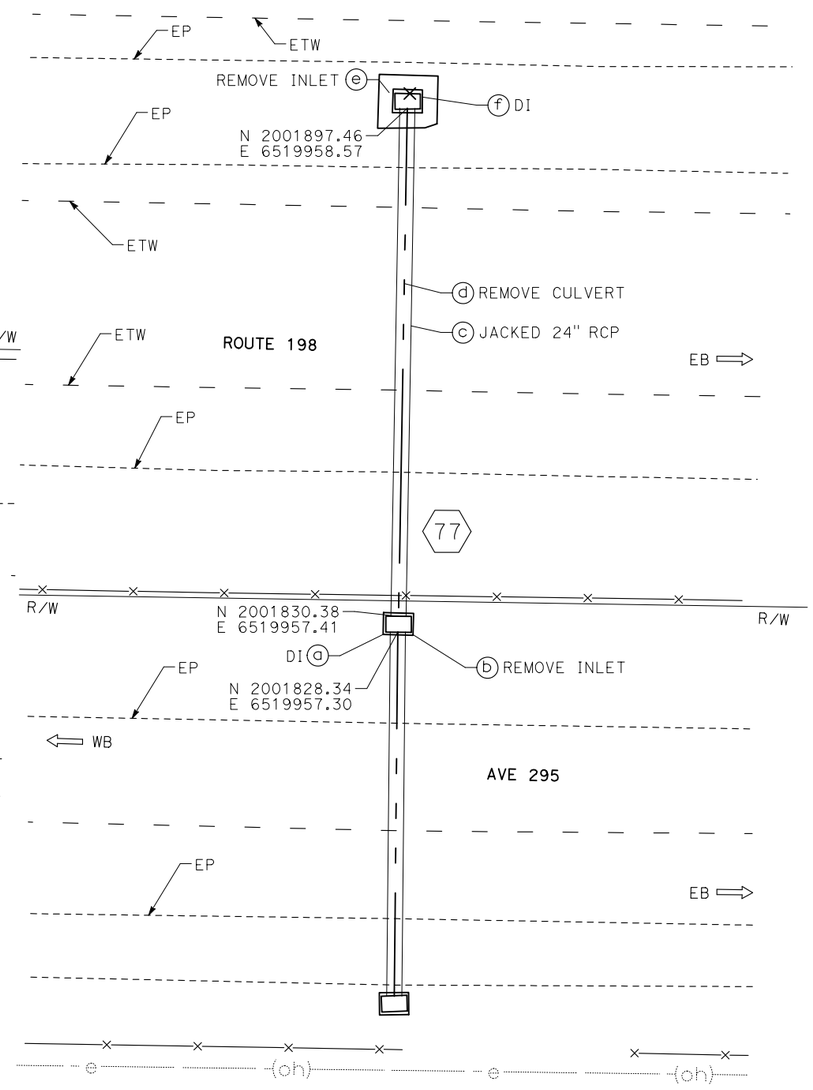

LOCATION No. 77

ROUTE 198, PM 18.37

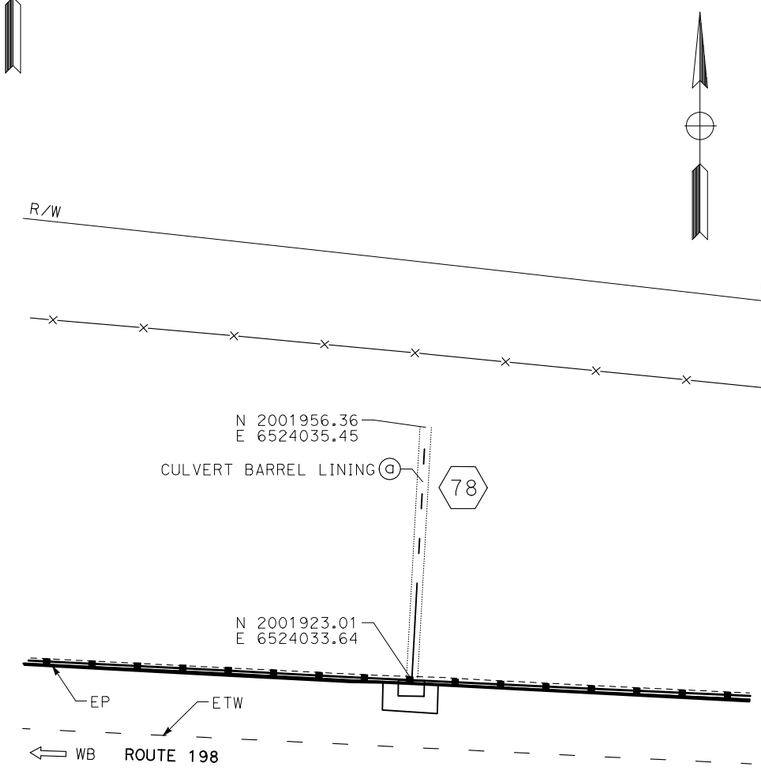

LOCATION No. 78

ROUTE 198, PM 19.18

APPROVED FOR DRAINAGE WORK ONLY

DRAINAGE PLAN

SCALE: 1"=10'

ATTACHMENT C

D-22

REVISED BY	DATE REVISED
PAUL BRADBURY	DAVE MELIS
CALCULATED-DESIGNED BY	CHECKED BY
CONSULTANT FUNCTIONAL SUPERVISOR	JOSE SILVA

STATE OF CALIFORNIA - DEPARTMENT OF TRANSPORTATION

Caltrans

LAST REVISION XX-XX-XX | DATE PLOTTED => 19-APR-2022 | TIME PLOTTED => 13:21

Dist	COUNTY	ROUTE	POST MILES TOTAL PROJECT	SHEET No.	TOTAL SHEETS
06	Tul	198	0.0/44.0		XX

REGISTERED CIVIL ENGINEER DATE

XX-XX-XX
PLANS APPROVAL DATE

REGISTERED PROFESSIONAL ENGINEER No. Exp. CIVIL STATE OF CALIFORNIA

THE STATE OF CALIFORNIA OR ITS OFFICERS OR AGENTS SHALL NOT BE RESPONSIBLE FOR THE ACCURACY OR COMPLETENESS OF SCANNED COPIES OF THIS PLAN SHEET.

DEWBERRY ENGINEERS INC.
11060 WHITE ROCK ROAD,
SUITE 200
RANCHO CORDOVA, CA 95670

NOTE:

FOR ACCURATE RIGHT OF WAY DATA, CONTACT RIGHT OF WAY ENGINEERING AT THE DISTRICT OFFICE.

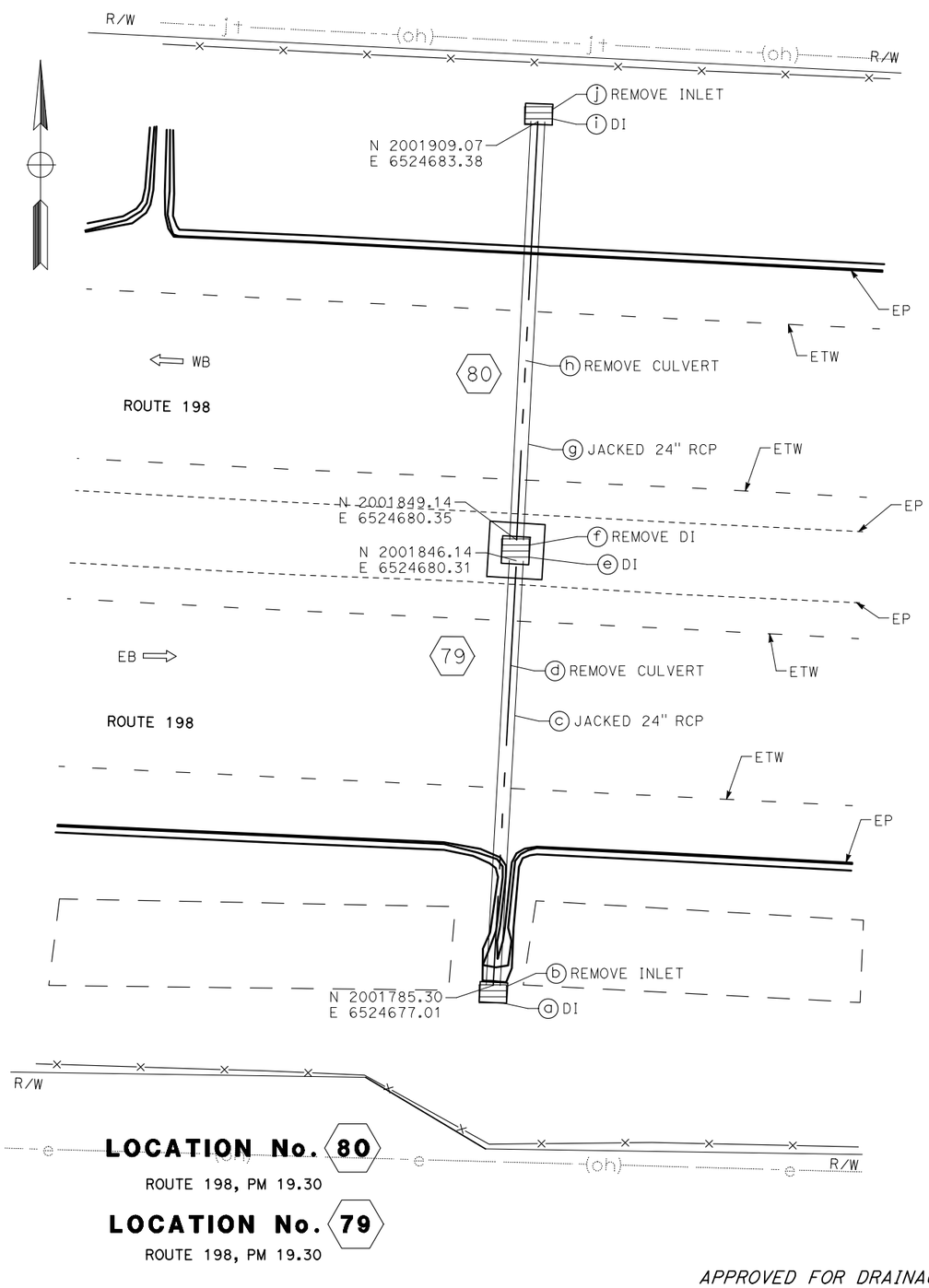

APPROVED FOR DRAINAGE WORK ONLY

DRAINAGE PLAN

SCALE: 1"=10'

ATTACHMENT C

D-23

STATE OF CALIFORNIA - DEPARTMENT OF TRANSPORTATION

Caltrans

CONSULTANT FUNCTIONAL SUPERVISOR: JOSE SILVA

CALCULATED-DESIGNED BY: PAUL BRADBURY

CHECKED BY: DAVE MELIS

REVISED BY

DATE REVISED

LAST REVISION XX-XX-XX

DATE PLOTTED => 19-APR-2022
TIME PLOTTED => 13:21

Dist	COUNTY	ROUTE	POST MILES TOTAL PROJECT	SHEET No.	TOTAL SHEETS
06	Tul	198	0.0/44.0		XX

REGISTERED CIVIL ENGINEER DATE

XX-XX-XX
PLANS APPROVAL DATE

REGISTERED PROFESSIONAL ENGINEER No. Exp. CIVIL STATE OF CALIFORNIA

THE STATE OF CALIFORNIA OR ITS OFFICERS OR AGENTS SHALL NOT BE RESPONSIBLE FOR THE ACCURACY OR COMPLETENESS OF SCANNED COPIES OF THIS PLAN SHEET.

DEWBERRY ENGINEERS INC.
11060 WHITE ROCK ROAD,
SUITE 200
RANCHO CORDOVA, CA 95670

NOTE:

FOR ACCURATE RIGHT OF WAY DATA, CONTACT RIGHT OF WAY ENGINEERING AT THE DISTRICT OFFICE.

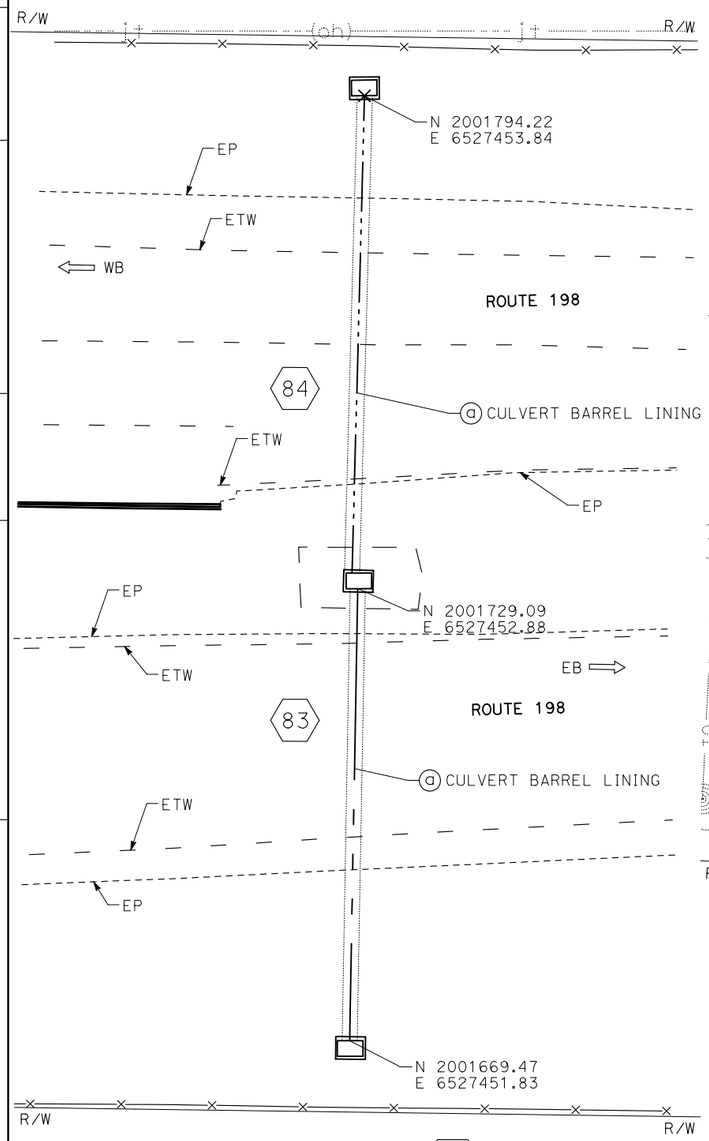

LOCATION No. 84

ROUTE 198, PM 19.81

LOCATION No. 83

ROUTE 198, PM 19.81

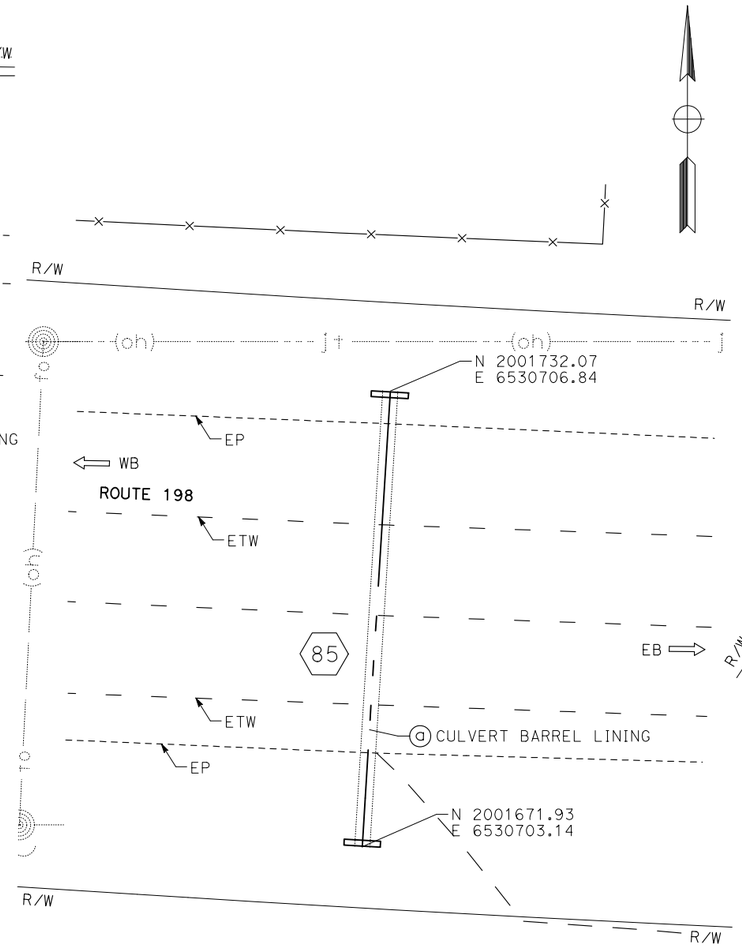

LOCATION No. 85

ROUTE 198, PM 20.43

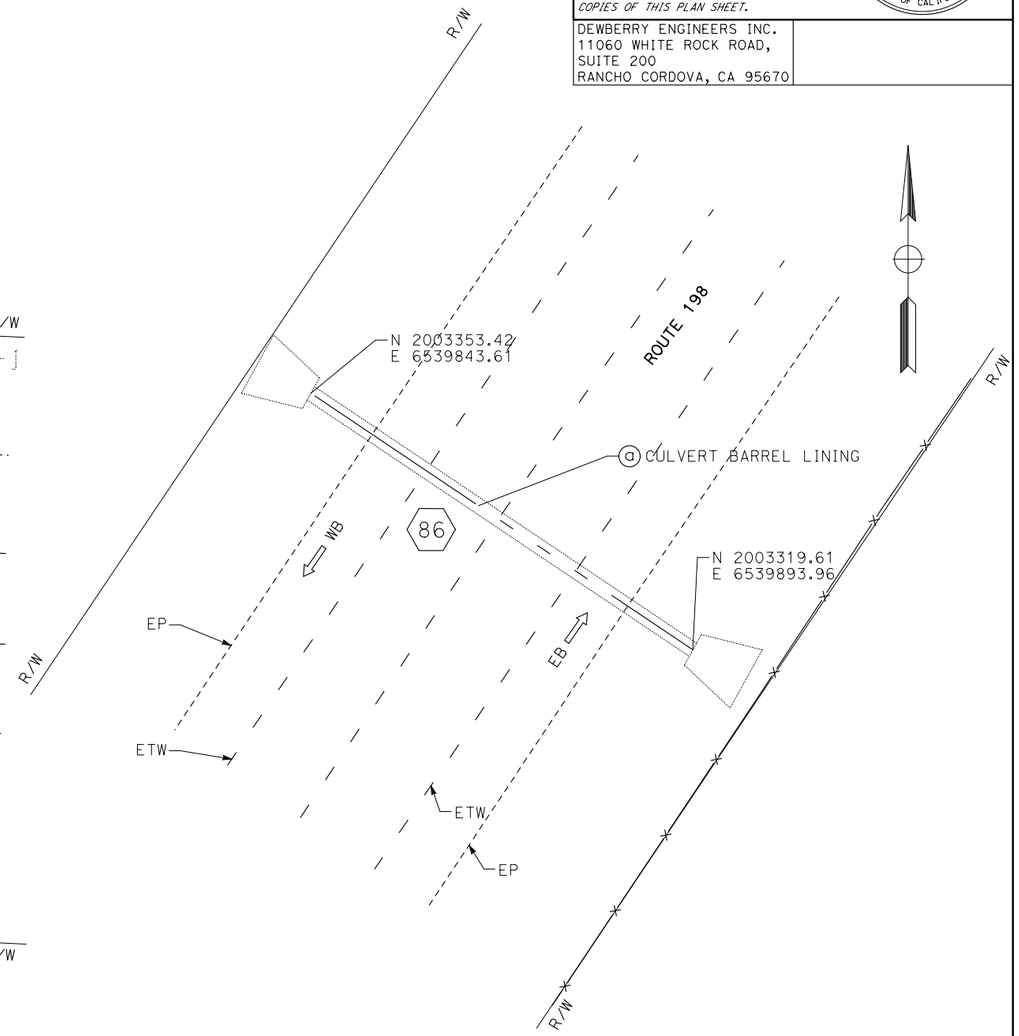

LOCATION No. 86

ROUTE 198, PM 22.32

APPROVED FOR DRAINAGE WORK ONLY

DRAINAGE PLAN

SCALE: 1"=10'

ATTACHMENT C

D-24

STATE OF CALIFORNIA - DEPARTMENT OF TRANSPORTATION

Caltrans

CONSULTANT FUNCTIONAL SUPERVISOR: JOSE SILVA

CALCULATED-DESIGNED BY: PAUL BRADBURY | CHECKED BY: DAVE MELIS

REVISED BY | DATE REVISED

LAST REVISION XX-XX-XX | DATE PLOTTED => 19-APR-2022 | TIME PLOTTED => 13:21

Dist	COUNTY	ROUTE	POST MILES TOTAL PROJECT	SHEET No.	TOTAL SHEETS
06	Tul	198	0.0/44.0		XX

REGISTERED CIVIL ENGINEER DATE

XX-XX-XX
PLANS APPROVAL DATE

REGISTERED PROFESSIONAL ENGINEER No. Exp. CIVIL STATE OF CALIFORNIA

THE STATE OF CALIFORNIA OR ITS OFFICERS OR AGENTS SHALL NOT BE RESPONSIBLE FOR THE ACCURACY OR COMPLETENESS OF SCANNED COPIES OF THIS PLAN SHEET.

DEWBERRY ENGINEERS INC.
11060 WHITE ROCK ROAD,
SUITE 200
RANCHO CORDOVA, CA 95670

NOTE:

FOR ACCURATE RIGHT OF WAY DATA, CONTACT RIGHT OF WAY ENGINEERING AT THE DISTRICT OFFICE.

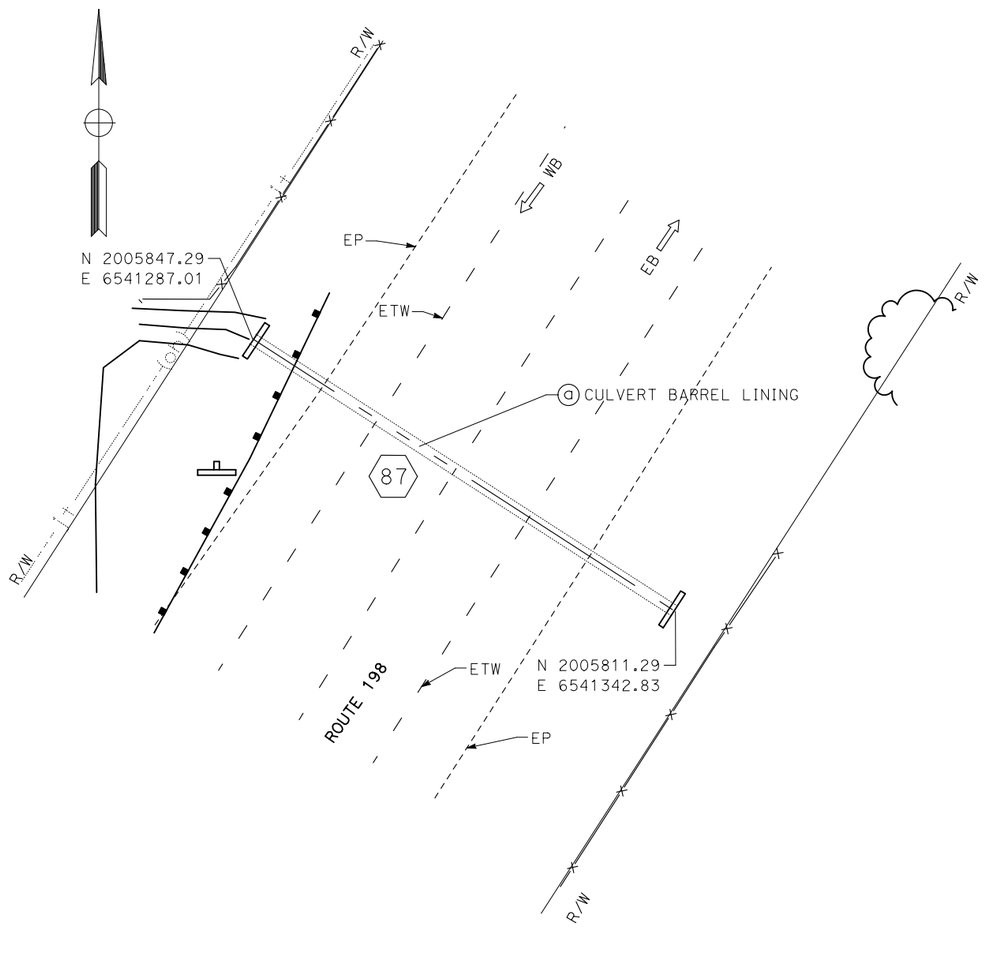

LOCATION No. 87

ROUTE 198, PM 22.86

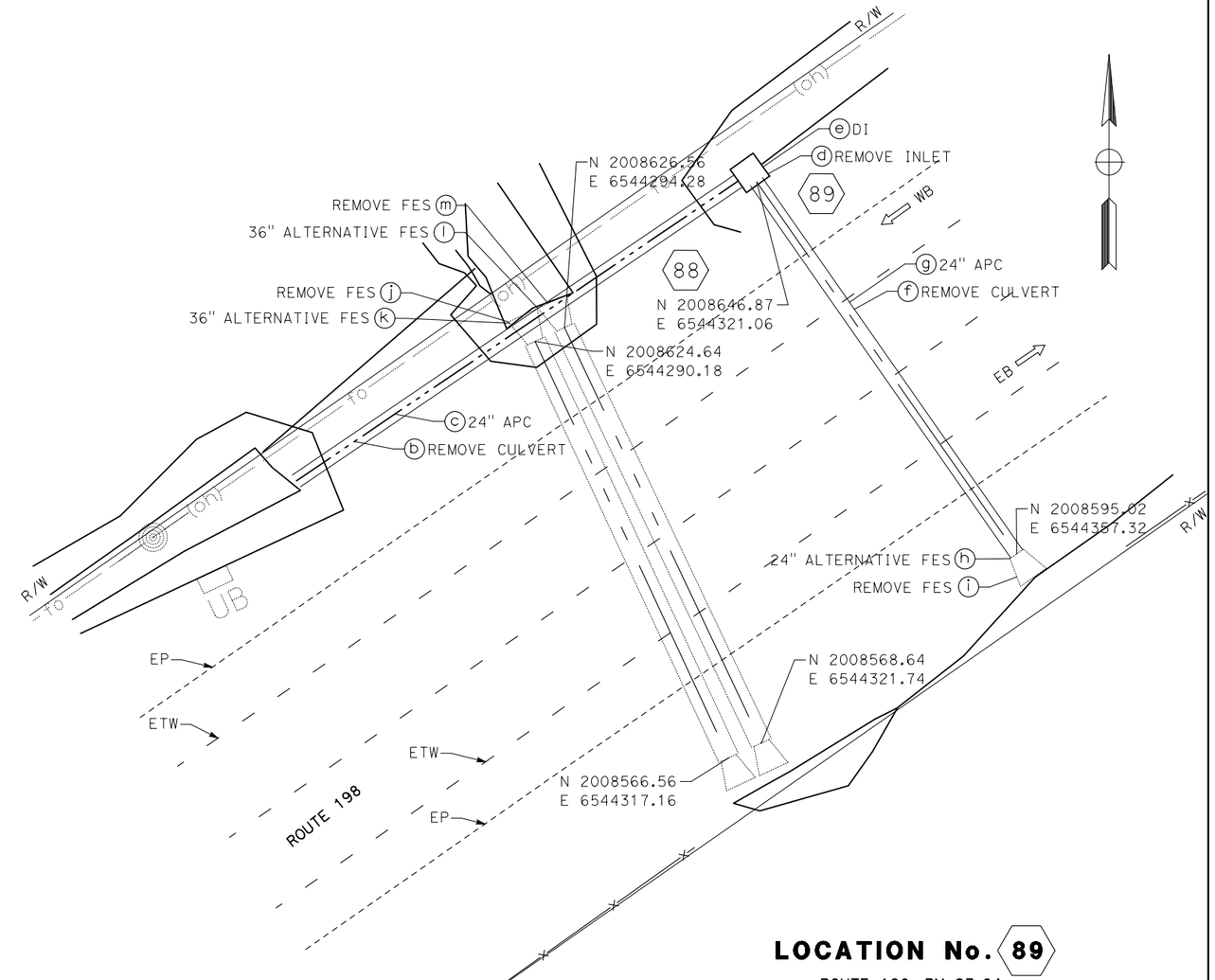

LOCATION No. 89

ROUTE 198, PM 23.64

LOCATION No. 88

ROUTE 198, PM 23.64

APPROVED FOR DRAINAGE WORK ONLY

DRAINAGE PLAN

SCALE: 1"=10'

ATTACHMENT C

D-25

STATE OF CALIFORNIA - DEPARTMENT OF TRANSPORTATION

Caltrans

CONSULTANT FUNCTIONAL SUPERVISOR: JOSE SILVA

CALCULATED-DESIGNED BY: PAUL BRADBURY

CHECKED BY: DAVE MELIS

REVISED BY

DATE REVISED

LAST REVISION XX-XX-XX

DATE PLOTTED => 19-APR-2022

TIME PLOTTED => 13:21

Dist	COUNTY	ROUTE	POST MILES TOTAL PROJECT	SHEET No.	TOTAL SHEETS
06	Tul	198	0.0/44.0		XX

REGISTERED CIVIL ENGINEER DATE

XX-XX-XX
PLANS APPROVAL DATE

REGISTERED PROFESSIONAL ENGINEER No. Exp. CIVIL STATE OF CALIFORNIA

THE STATE OF CALIFORNIA OR ITS OFFICERS OR AGENTS SHALL NOT BE RESPONSIBLE FOR THE ACCURACY OR COMPLETENESS OF SCANNED COPIES OF THIS PLAN SHEET.

DEWBERRY ENGINEERS INC.
11060 WHITE ROCK ROAD,
SUITE 200
RANCHO CORDOVA, CA 95670

NOTE:

FOR ACCURATE RIGHT OF WAY DATA, CONTACT RIGHT OF WAY ENGINEERING AT THE DISTRICT OFFICE.

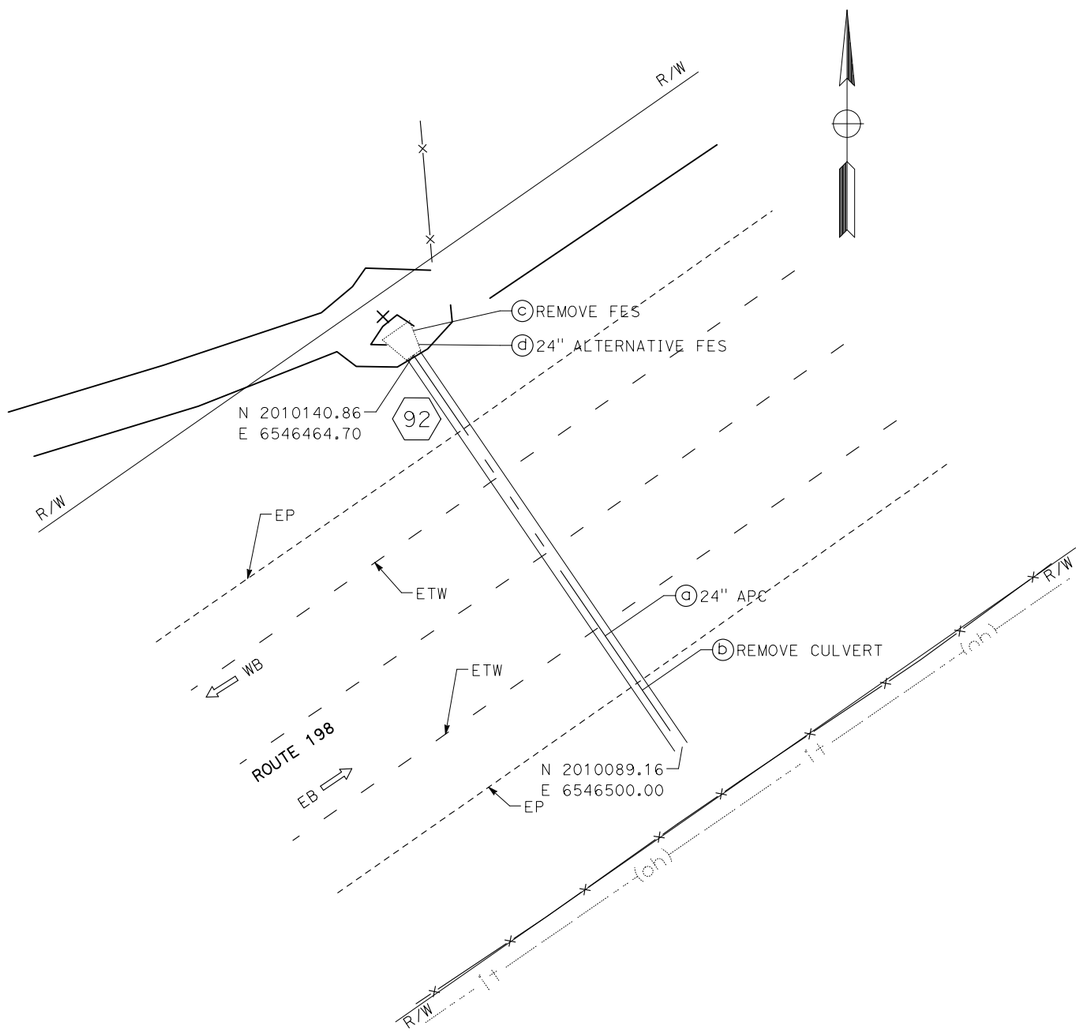

LOCATION No. 92

ROUTE 198, PM 24.15

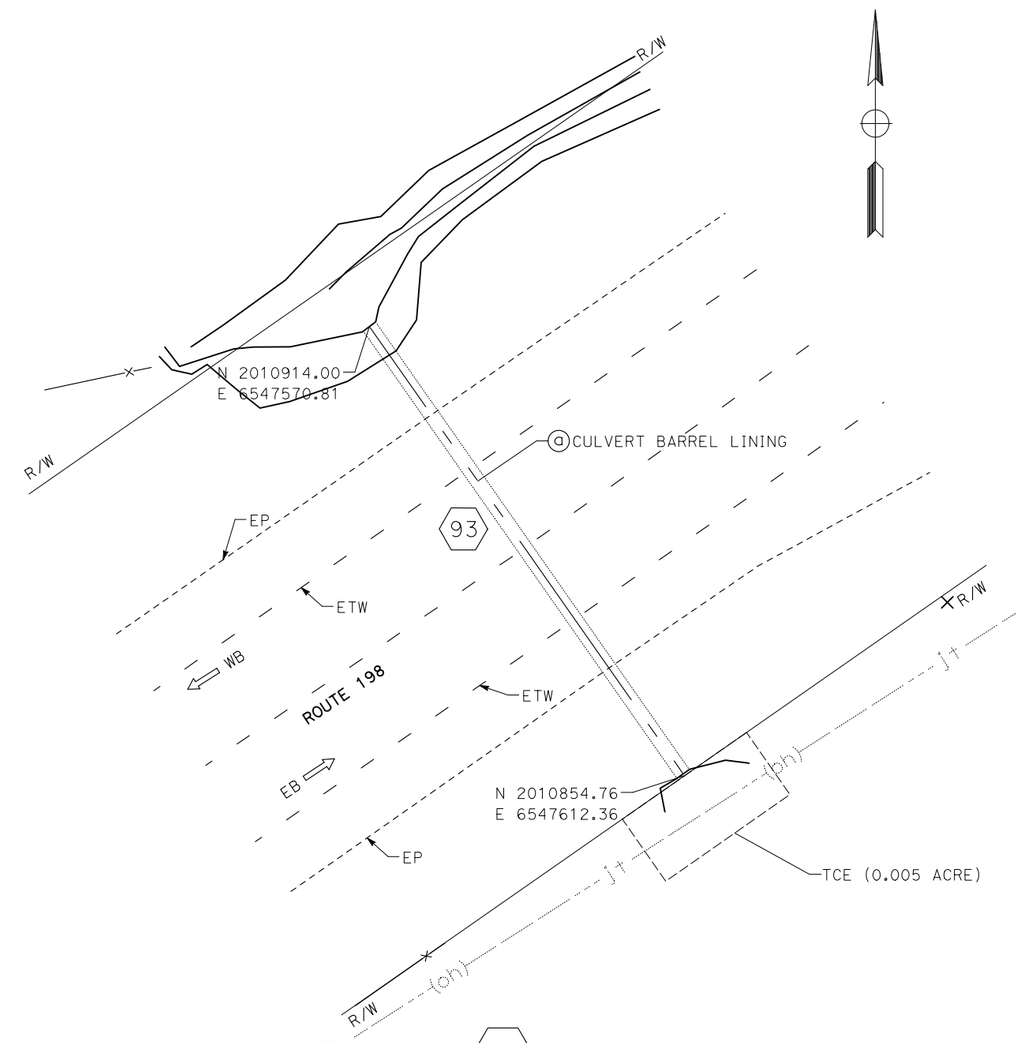

LOCATION No. 93

ROUTE 198, PM 24.40

APPROVED FOR DRAINAGE WORK ONLY

DRAINAGE PLAN

SCALE: 1"=10'

ATTACHMENT C

D-26

STATE OF CALIFORNIA - DEPARTMENT OF TRANSPORTATION

Caltrans

CONSULTANT FUNCTIONAL SUPERVISOR: JOSE SILVA

CALCULATED-DESIGNED BY: PAUL BRADBURY

CHECKED BY: DAVE MELIS

REVISED BY

DATE REVISED

LAST REVISION XX-XX-XX

DATE PLOTTED => 19-APR-2022

TIME PLOTTED => 13:21

Dist	COUNTY	ROUTE	POST MILES TOTAL PROJECT	SHEET No.	TOTAL SHEETS
06	Tul	198	0.0/44.0		XX

REGISTERED CIVIL ENGINEER DATE

XX-XX-XX
PLANS APPROVAL DATE

REGISTERED PROFESSIONAL ENGINEER No. Exp. CIVIL STATE OF CALIFORNIA

THE STATE OF CALIFORNIA OR ITS OFFICERS OR AGENTS SHALL NOT BE RESPONSIBLE FOR THE ACCURACY OR COMPLETENESS OF SCANNED COPIES OF THIS PLAN SHEET.

DEWBERRY ENGINEERS INC.
11060 WHITE ROCK ROAD,
SUITE 200
RANCHO CORDOVA, CA 95670

NOTE:

FOR ACCURATE RIGHT OF WAY DATA, CONTACT RIGHT OF WAY ENGINEERING AT THE DISTRICT OFFICE.

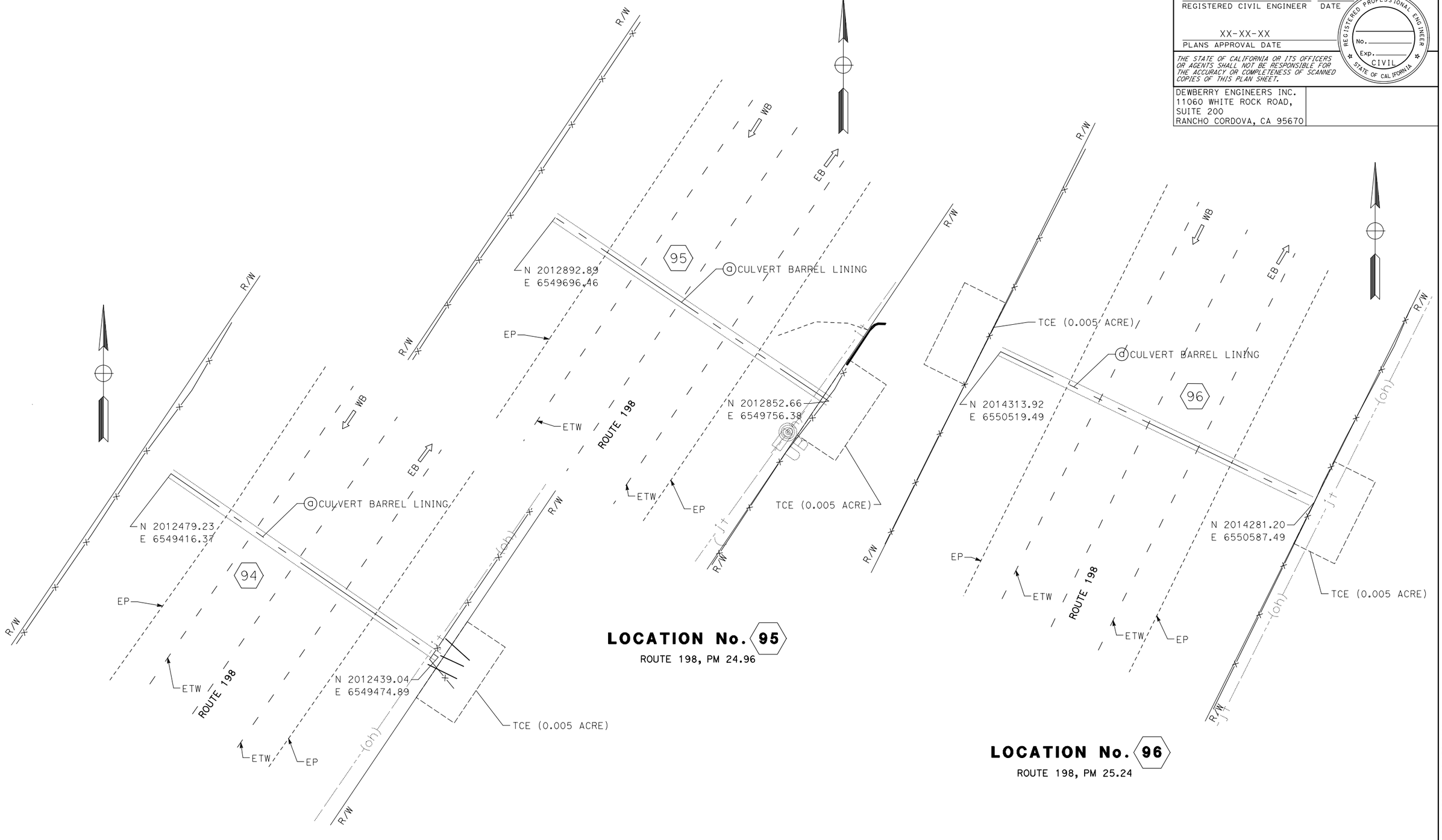

LOCATION No. 95
ROUTE 198, PM 24.96

LOCATION No. 96
ROUTE 198, PM 25.24

LOCATION No. 94
ROUTE 198, PM 24.87

APPROVED FOR DRAINAGE WORK ONLY

DRAINAGE PLAN
SCALE: 1"=10'
ATTACHMENT C

D-27

STATE OF CALIFORNIA - DEPARTMENT OF TRANSPORTATION
Caltrans

CONSULTANT FUNCTIONAL SUPERVISOR: JOSE SILVA
CALCULATED-DESIGNED BY: PAUL BRADBURY
CHECKED BY: DAVE MELIS
REVISED BY
DATE REVISED

LAST REVISION XX-XX-XX
DATE PLOTTED => 19-APR-2022
TIME PLOTTED => 13:21

Dist	COUNTY	ROUTE	POST MILES TOTAL PROJECT	SHEET No.	TOTAL SHEETS
06	Tul	198	0.0/44.0		XX

REGISTERED CIVIL ENGINEER DATE

XX-XX-XX
PLANS APPROVAL DATE

REGISTERED PROFESSIONAL ENGINEER No. Exp. CIVIL STATE OF CALIFORNIA

THE STATE OF CALIFORNIA OR ITS OFFICERS OR AGENTS SHALL NOT BE RESPONSIBLE FOR THE ACCURACY OR COMPLETENESS OF SCANNED COPIES OF THIS PLAN SHEET.

DEWBERRY ENGINEERS INC.
11060 WHITE ROCK ROAD,
SUITE 200
RANCHO CORDOVA, CA 95670

NOTE:

FOR ACCURATE RIGHT OF WAY DATA, CONTACT RIGHT OF WAY ENGINEERING AT THE DISTRICT OFFICE.

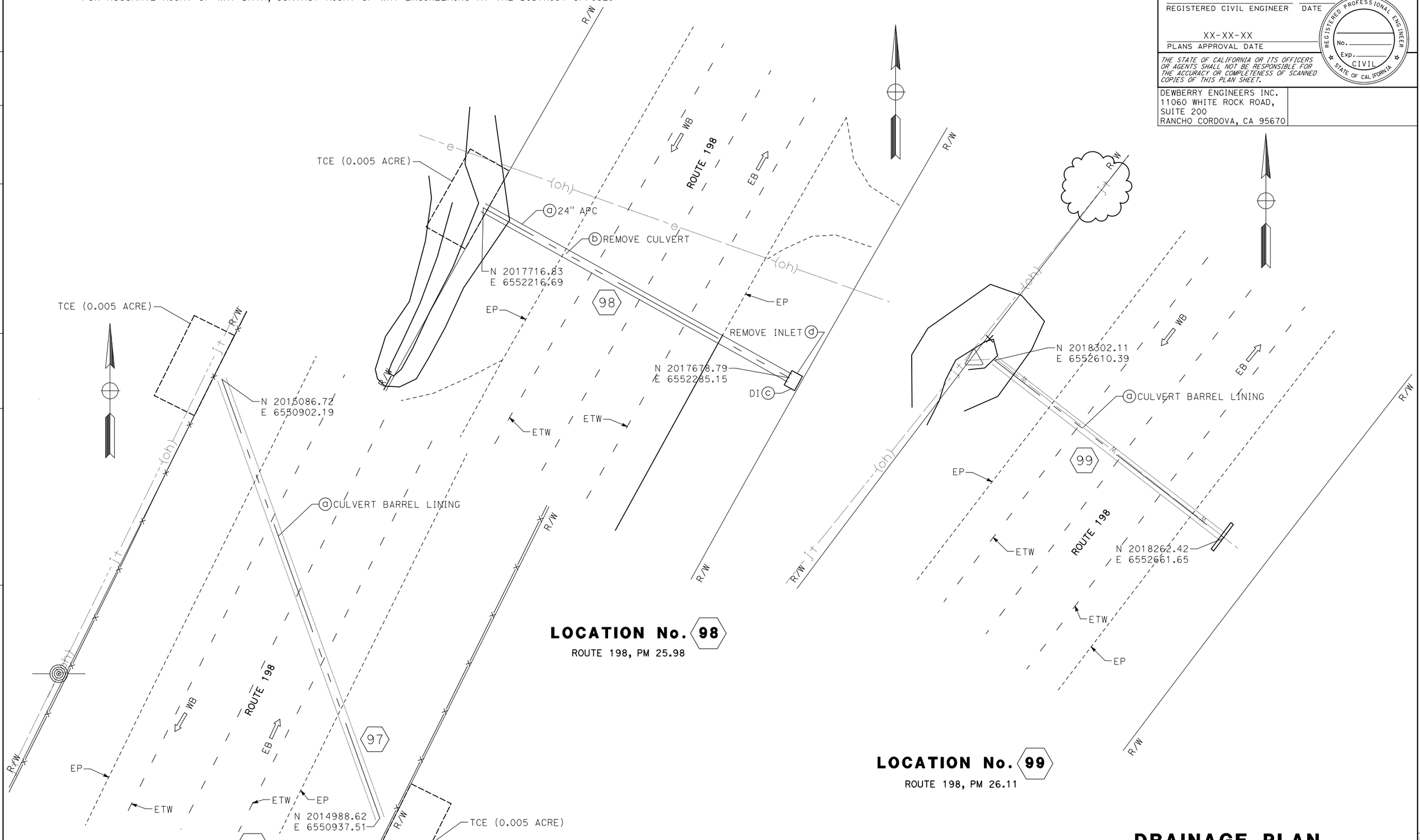

LOCATION No. 98
ROUTE 198, PM 25.98

LOCATION No. 97
ROUTE 198, PM 25.39

LOCATION No. 99
ROUTE 198, PM 26.11

APPROVED FOR DRAINAGE WORK ONLY

DRAINAGE PLAN
SCALE: 1"=10'
ATTACHMENT C

D-28

STATE OF CALIFORNIA - DEPARTMENT OF TRANSPORTATION
Caltrans®

CONSULTANT FUNCTIONAL SUPERVISOR: JOSE SILVA
CALCULATED-DESIGNED BY: PAUL BRADBURY
CHECKED BY: DAVE MELIS
REVISED BY
DATE REVISED

LAST REVISION XX-XX-XX
DATE PLOTTED => 19-APR-2022
TIME PLOTTED => 13:21

Dist	COUNTY	ROUTE	POST MILES TOTAL PROJECT	SHEET No.	TOTAL SHEETS
06	Tul	198	0.0/44.0		XX

REGISTERED CIVIL ENGINEER DATE

XX-XX-XX
PLANS APPROVAL DATE

REGISTERED PROFESSIONAL ENGINEER No. Exp. CIVIL STATE OF CALIFORNIA

THE STATE OF CALIFORNIA OR ITS OFFICERS OR AGENTS SHALL NOT BE RESPONSIBLE FOR THE ACCURACY OR COMPLETENESS OF SCANNED COPIES OF THIS PLAN SHEET.

DEWBERRY ENGINEERS INC.
11060 WHITE ROCK ROAD,
SUITE 200
RANCHO CORDOVA, CA 95670

NOTE:

FOR ACCURATE RIGHT OF WAY DATA, CONTACT RIGHT OF WAY ENGINEERING AT THE DISTRICT OFFICE.

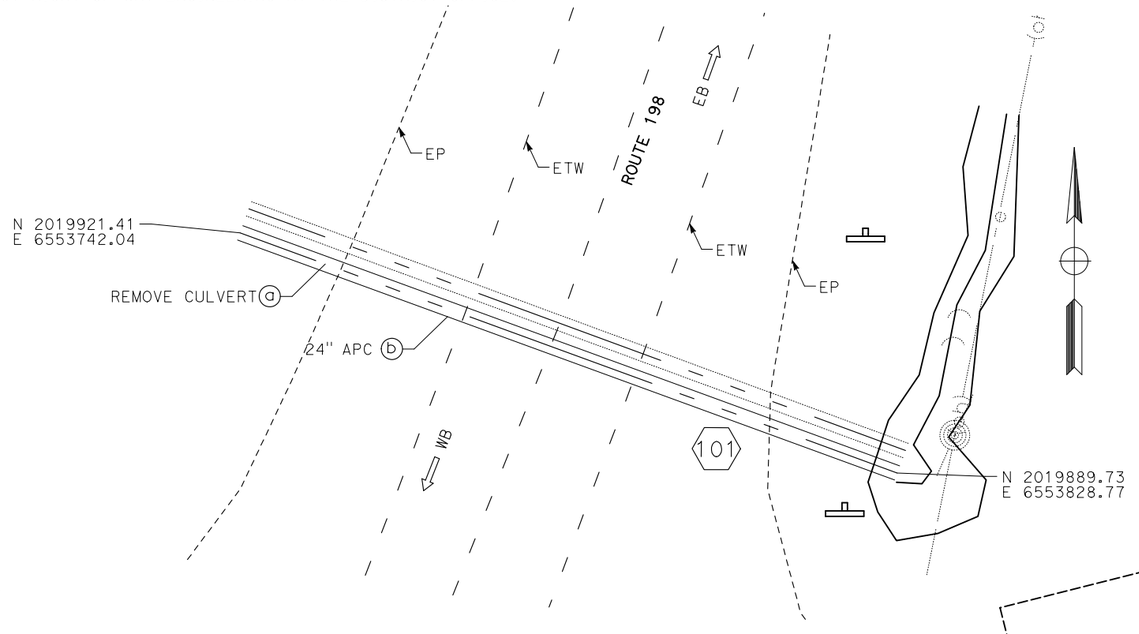

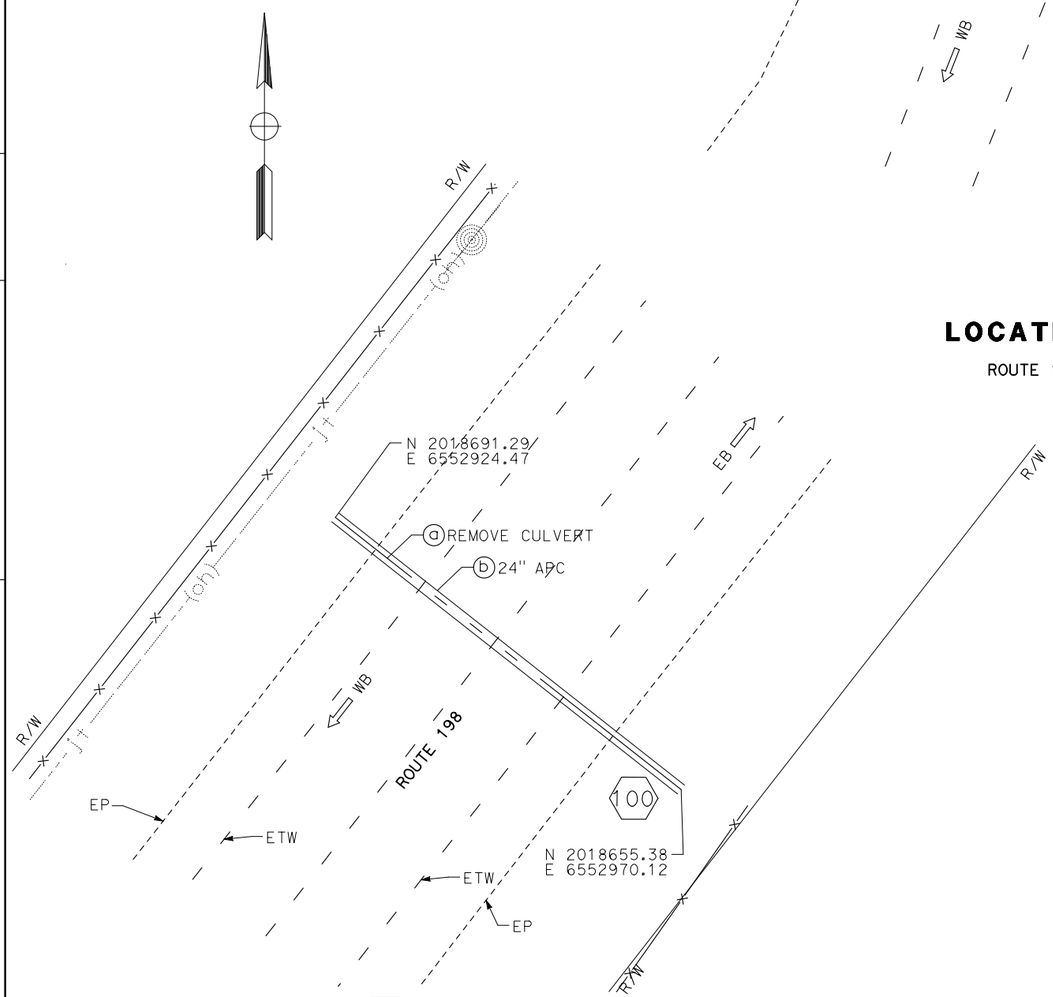

LOCATION No. 100

ROUTE 198, PM 26.20

LOCATION No. 101

ROUTE 198, PM 26.49

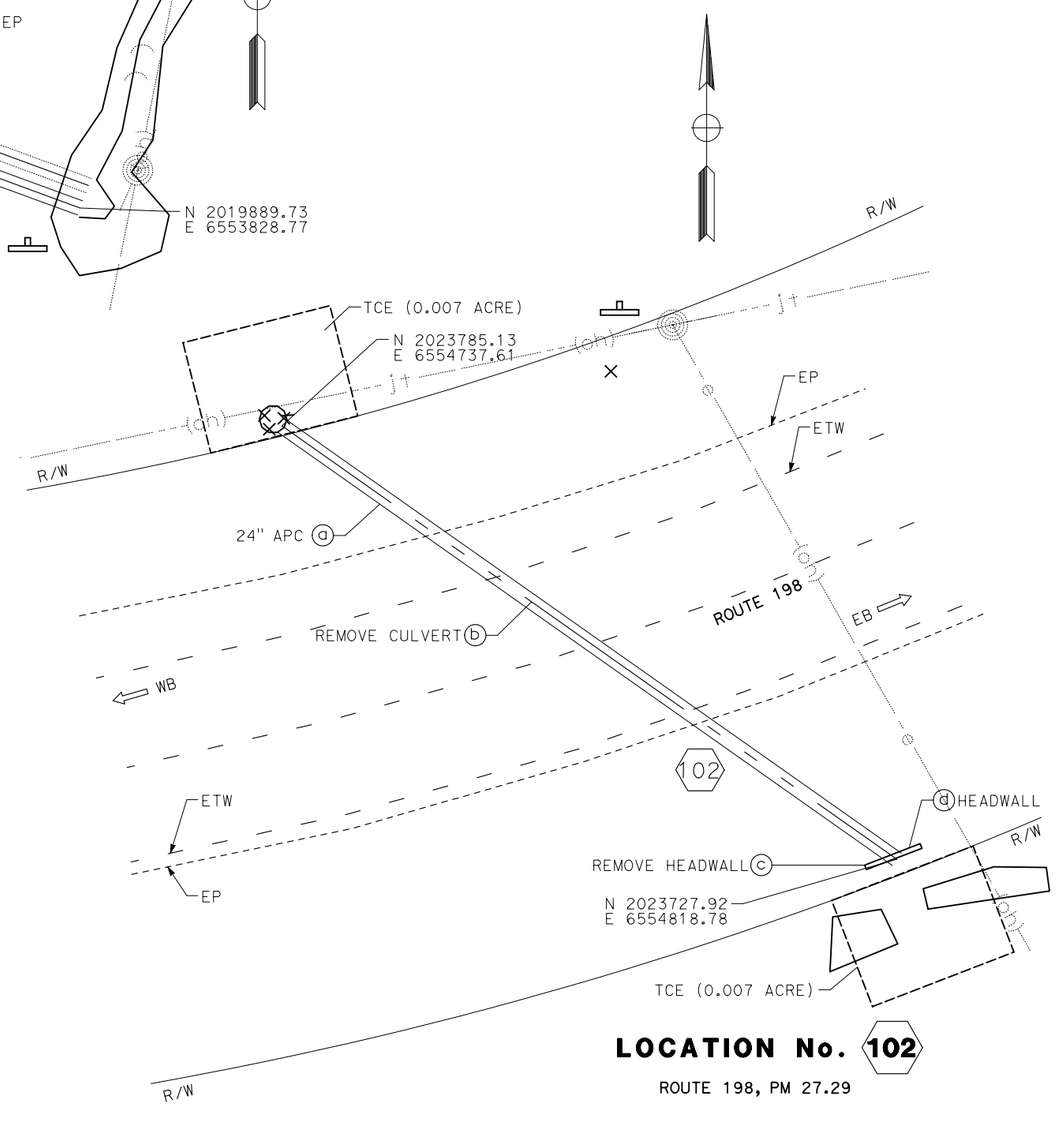

LOCATION No. 102

ROUTE 198, PM 27.29

APPROVED FOR DRAINAGE WORK ONLY

DRAINAGE PLAN

SCALE: 1"=10'

ATTACHMENT C

D-29

STATE OF CALIFORNIA - DEPARTMENT OF TRANSPORTATION

Caltrans

CONSULTANT FUNCTIONAL SUPERVISOR: JOSE SILVA

CALCULATED-DESIGNED BY: PAUL BRADBURY

CHECKED BY: DAVE MELIS

REVISED BY

DATE REVISED

LAST REVISION XX-XX-XX

DATE PLOTTED => 19-APR-2022
TIME PLOTTED => 13:21

Dist	COUNTY	ROUTE	POST MILES TOTAL PROJECT	SHEET No.	TOTAL SHEETS
06	Tul	198	0.0/44.0		XX

REGISTERED CIVIL ENGINEER DATE

XX-XX-XX
PLANS APPROVAL DATE

REGISTERED PROFESSIONAL ENGINEER No. Exp. CIVIL STATE OF CALIFORNIA

THE STATE OF CALIFORNIA OR ITS OFFICERS OR AGENTS SHALL NOT BE RESPONSIBLE FOR THE ACCURACY OR COMPLETENESS OF SCANNED COPIES OF THIS PLAN SHEET.

DEWBERRY ENGINEERS INC.
11060 WHITE ROCK ROAD,
SUITE 200
RANCHO CORDOVA, CA 95670

NOTE:

FOR ACCURATE RIGHT OF WAY DATA, CONTACT RIGHT OF WAY ENGINEERING AT THE DISTRICT OFFICE.

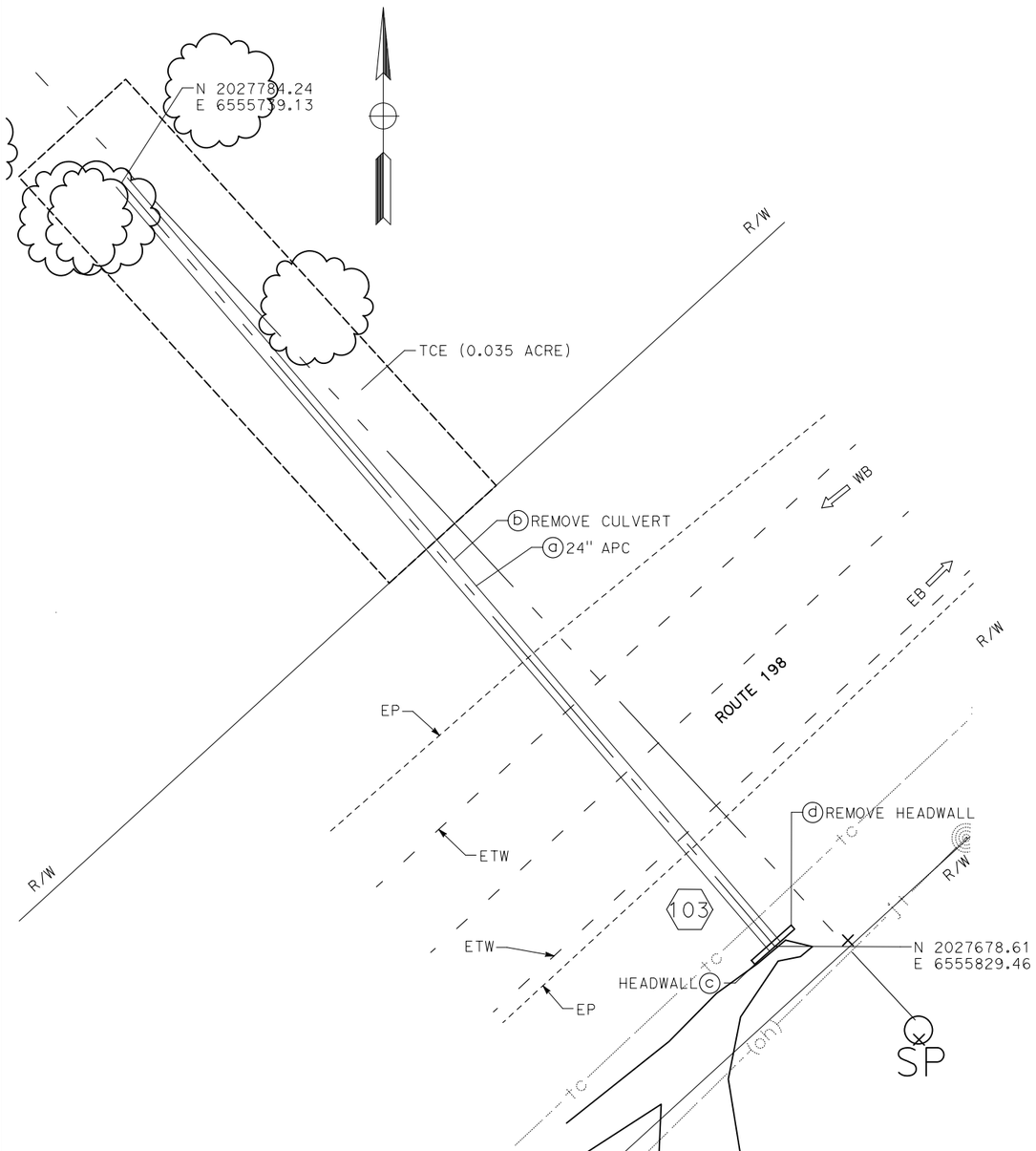

LOCATION No. 103
ROUTE 198, PM 28.12

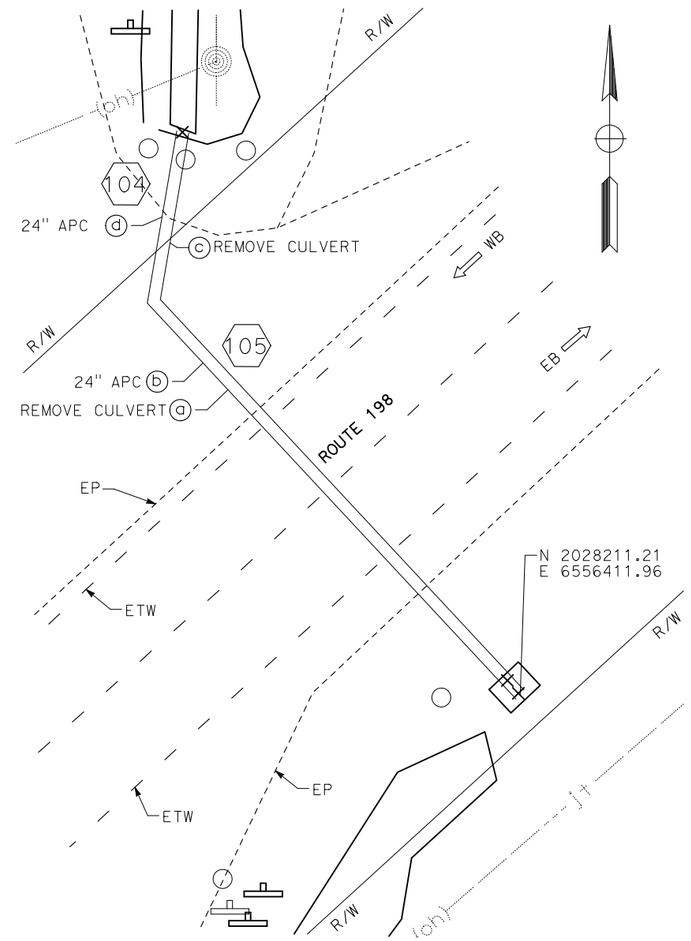

LOCATION No. 104
ROUTE 198, PM 28.28

LOCATION No. 105
ROUTE 198, PM 28.28

APPROVED FOR DRAINAGE WORK ONLY

DRAINAGE PLAN

SCALE: 1"=10'

ATTACHMENT C

D-30

STATE OF CALIFORNIA - DEPARTMENT OF TRANSPORTATION

CONSULTANT FUNCTIONAL SUPERVISOR: JOSE SILVA

CALCULATED-DESIGNED BY: PAUL BRADBURY | CHECKED BY: DAVE MELIS

REVISED BY | DATE REVISED

LAST REVISION XX-XX-XX | DATE PLOTTED => 19-APR-2022 | TIME PLOTTED => 13:21

Dist	COUNTY	ROUTE	POST MILES TOTAL PROJECT	SHEET No.	TOTAL SHEETS
06	Tul	198	0.0/44.0		XX

REGISTERED CIVIL ENGINEER DATE

XX-XX-XX
PLANS APPROVAL DATE

REGISTERED PROFESSIONAL ENGINEER
No.
Exp.
CIVIL
STATE OF CALIFORNIA

THE STATE OF CALIFORNIA OR ITS OFFICERS OR AGENTS SHALL NOT BE RESPONSIBLE FOR THE ACCURACY OR COMPLETENESS OF SCANNED COPIES OF THIS PLAN SHEET.

DEWBERRY ENGINEERS INC.
11060 WHITE ROCK ROAD,
SUITE 200
RANCHO CORDOVA, CA 95670

NOTE:

FOR ACCURATE RIGHT OF WAY DATA, CONTACT RIGHT OF WAY ENGINEERING AT THE DISTRICT OFFICE.

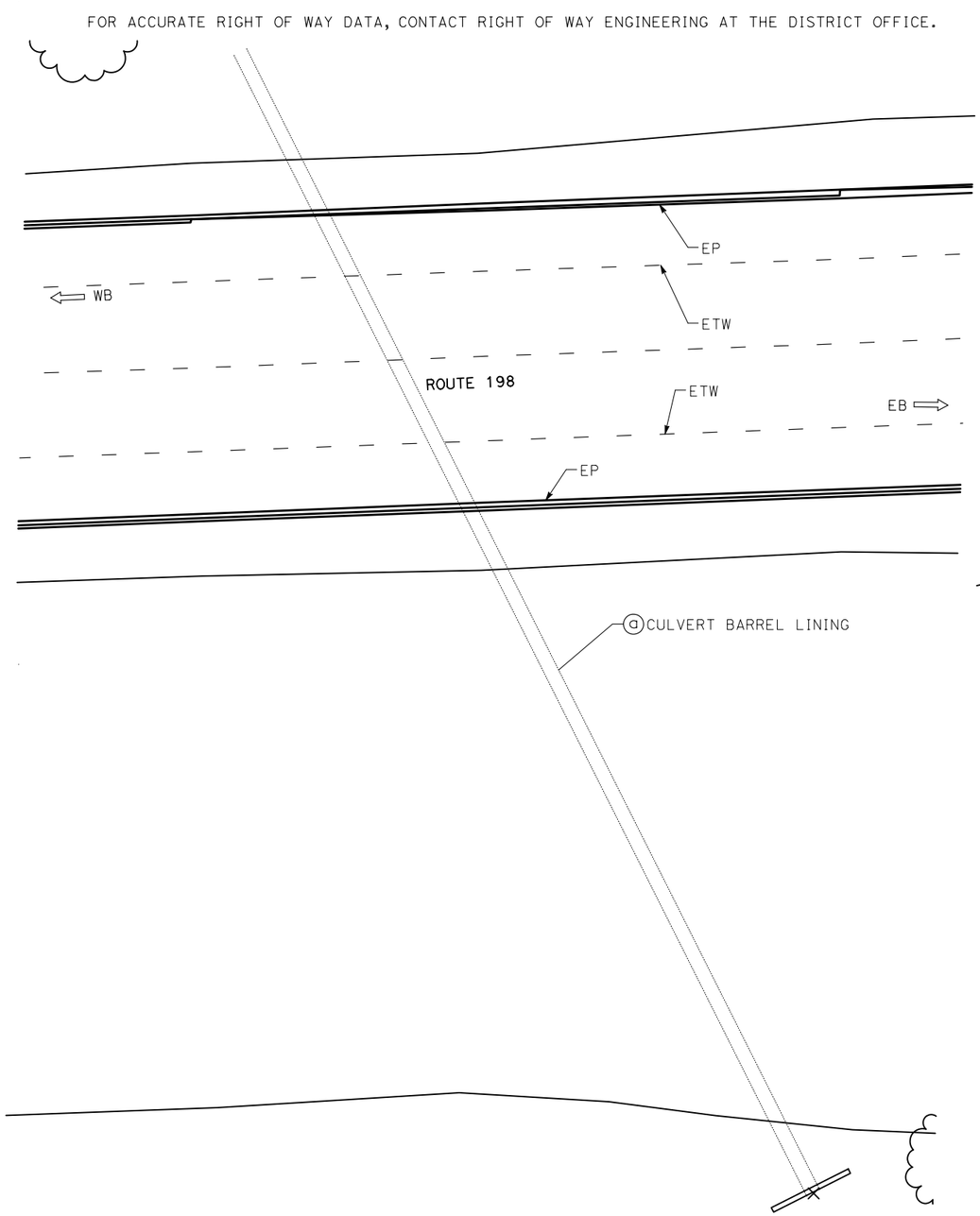

LOCATION No. 106

ROUTE 198, PM 28.91

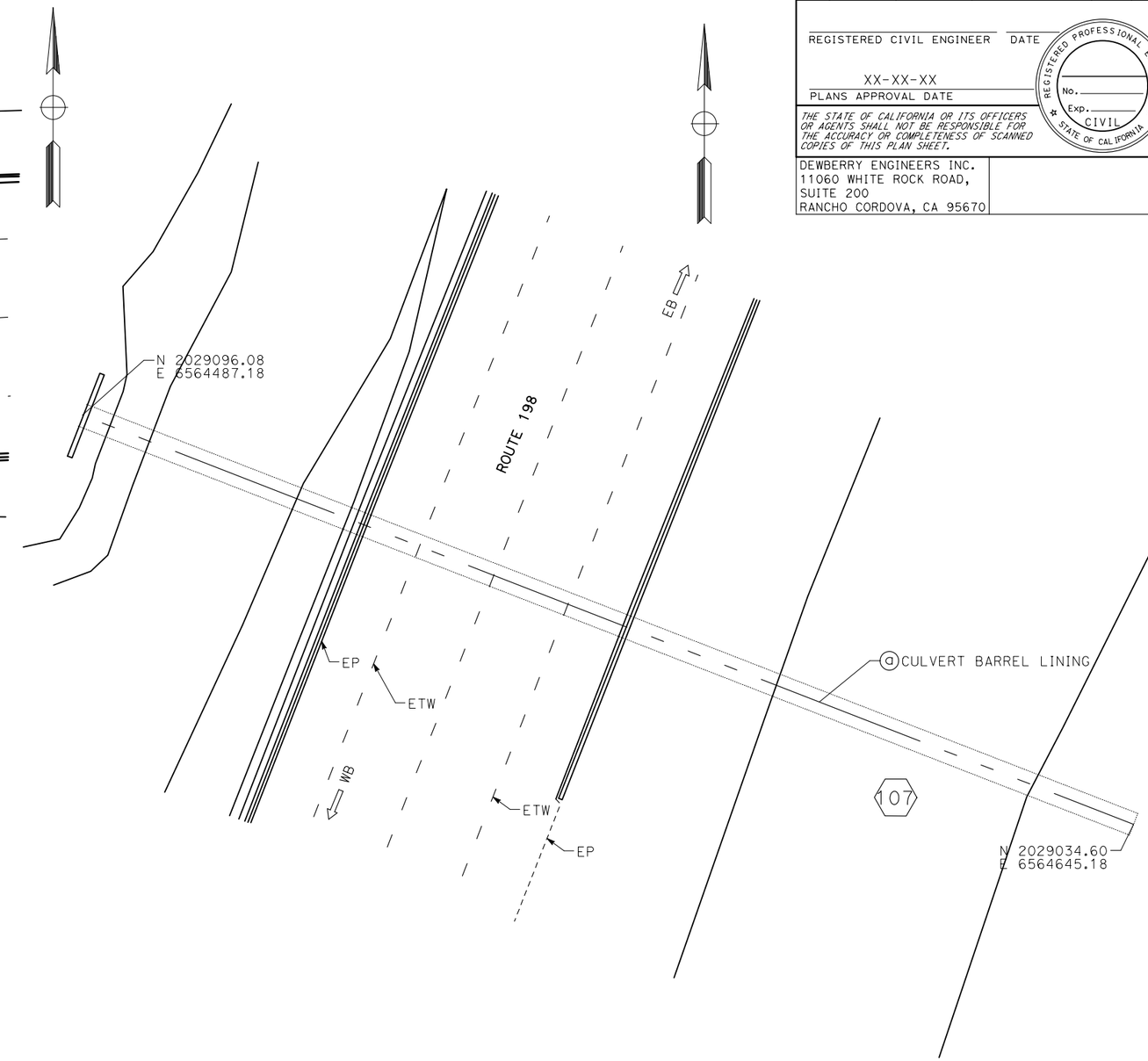

LOCATION No. 107

ROUTE 198, PM 30.29

APPROVED FOR DRAINAGE WORK ONLY

DRAINAGE PLAN

SCALE: 1"=10'

ATTACHMENT C

D-31

REVISED BY	DATE REVISED
PAUL BRADBURY	DAVE MELIS
CALCULATED-DESIGNED BY	CHECKED BY
CONSULTANT FUNCTIONAL SUPERVISOR	
JOSE SILVA	

STATE OF CALIFORNIA - DEPARTMENT OF TRANSPORTATION

Caltrans

LAST REVISION XX-XX-XX
DATE PLOTTED => 19-APR-2022
TIME PLOTTED => 13:21

Dist	COUNTY	ROUTE	POST MILES TOTAL PROJECT	SHEET No.	TOTAL SHEETS
06	Tul	198	0.0/44.0		XX

REGISTERED CIVIL ENGINEER DATE

XX-XX-XX
PLANS APPROVAL DATE

REGISTERED PROFESSIONAL ENGINEER No. Exp. CIVIL STATE OF CALIFORNIA

THE STATE OF CALIFORNIA OR ITS OFFICERS OR AGENTS SHALL NOT BE RESPONSIBLE FOR THE ACCURACY OR COMPLETENESS OF SCANNED COPIES OF THIS PLAN SHEET.

DEWBERRY ENGINEERS INC.
11060 WHITE ROCK ROAD,
SUITE 200
RANCHO CORDOVA, CA 95670

NOTE:

FOR ACCURATE RIGHT OF WAY DATA, CONTACT RIGHT OF WAY ENGINEERING AT THE DISTRICT OFFICE.

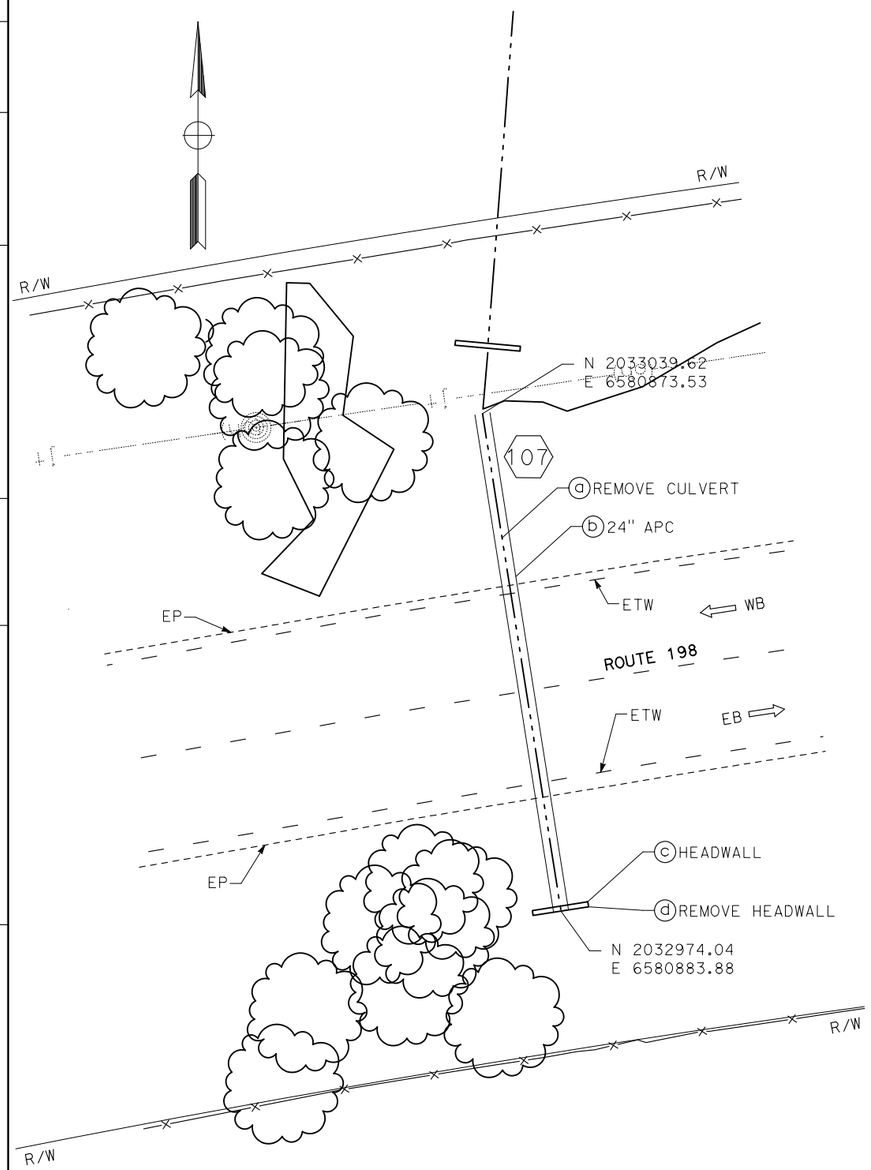

LOCATION No. 108

ROUTE 198, PM 35.86

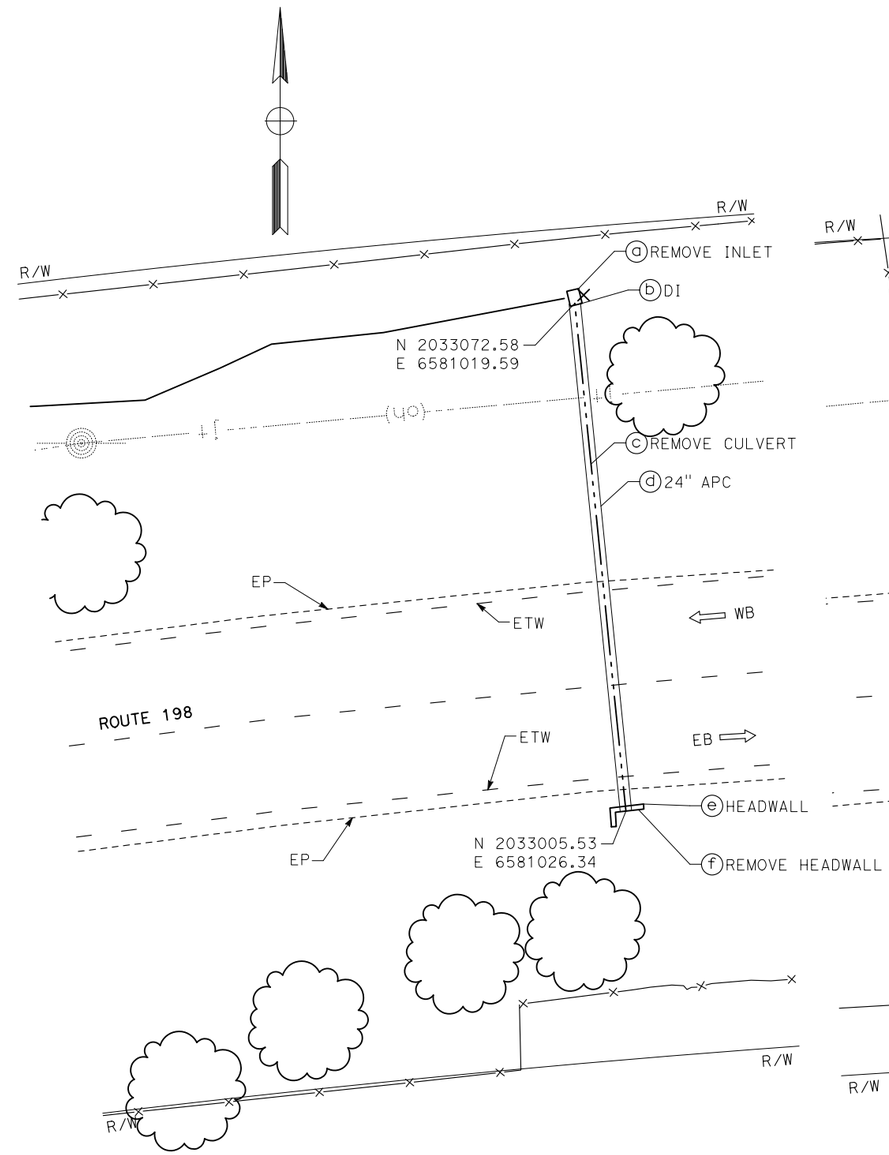

LOCATION No. 109

ROUTE 198, PM 35.89

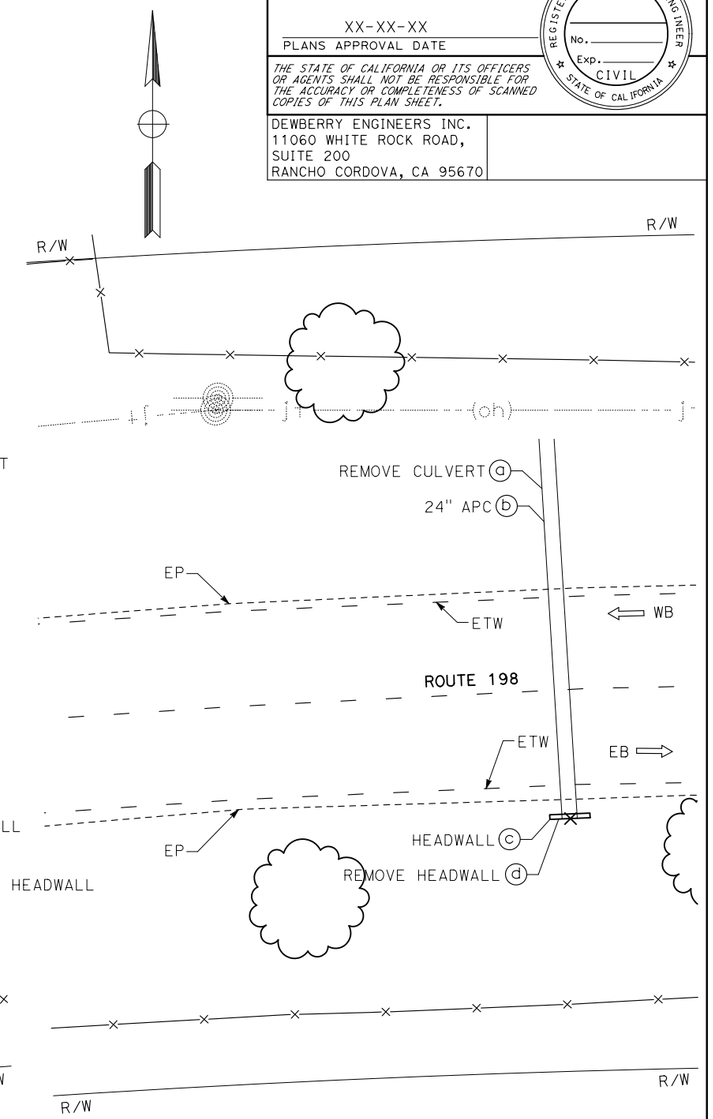

LOCATION No. 110

ROUTE 198, PM 35.89

APPROVED FOR DRAINAGE WORK ONLY

DRAINAGE PLAN

SCALE: 1"=10'

ATTACHMENT C

D-32

STATE OF CALIFORNIA - DEPARTMENT OF TRANSPORTATION

Caltrans

CONSULTANT FUNCTIONAL SUPERVISOR: JOSE SILVA

CALCULATED-DESIGNED BY: PAUL BRADBURY

CHECKED BY: DAVE MELIS

REVISED BY

DATE REVISED

LAST REVISION XX-XX-XX

DATE PLOTTED => 19-APR-2022
TIME PLOTTED => 13:21

Dist	COUNTY	ROUTE	POST MILES TOTAL PROJECT	SHEET No.	TOTAL SHEETS
06	Tul	198	0.0/44.0		XX

REGISTERED CIVIL ENGINEER DATE

XX-XX-XX
PLANS APPROVAL DATE

REGISTERED PROFESSIONAL ENGINEER No. Exp. CIVIL STATE OF CALIFORNIA

THE STATE OF CALIFORNIA OR ITS OFFICERS OR AGENTS SHALL NOT BE RESPONSIBLE FOR THE ACCURACY OR COMPLETENESS OF SCANNED COPIES OF THIS PLAN SHEET.

DEWBERRY ENGINEERS INC.
11060 WHITE ROCK ROAD,
SUITE 200
RANCHO CORDOVA, CA 95670

NOTE:

FOR ACCURATE RIGHT OF WAY DATA, CONTACT RIGHT OF WAY ENGINEERING AT THE DISTRICT OFFICE.

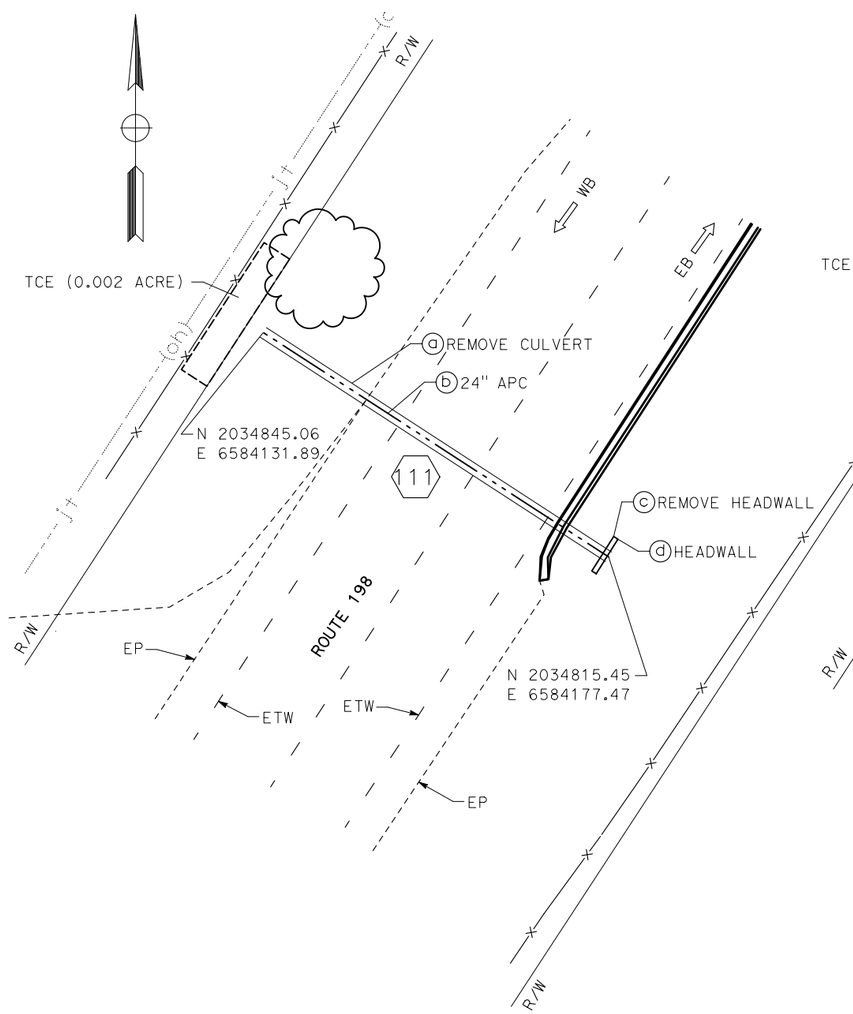

LOCATION No. 111

ROUTE 198, PM 36.66

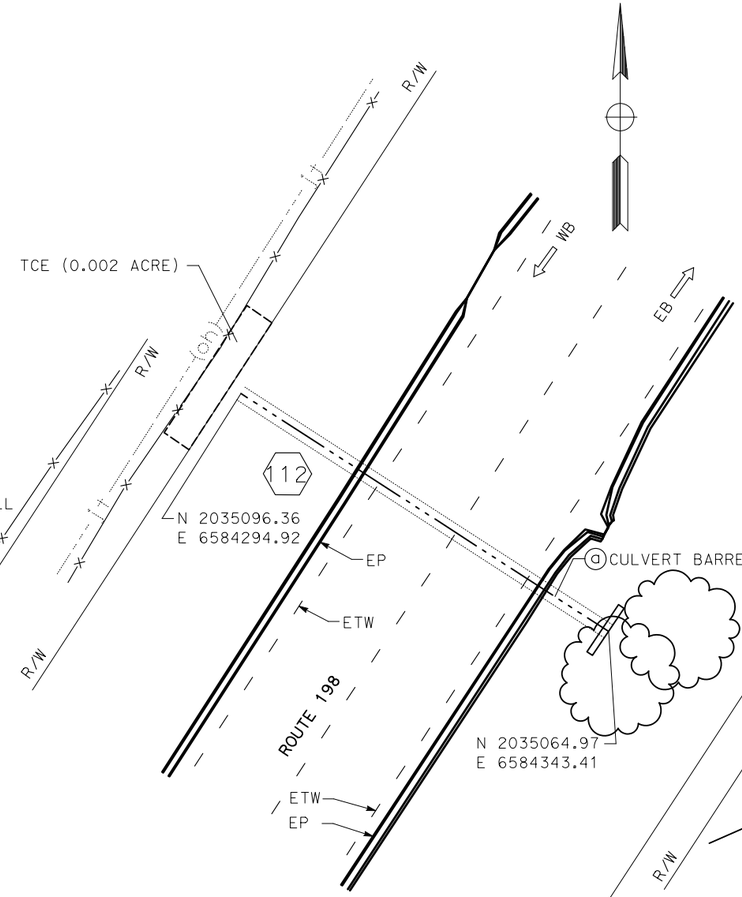

LOCATION No. 112

ROUTE 198, PM 36.72

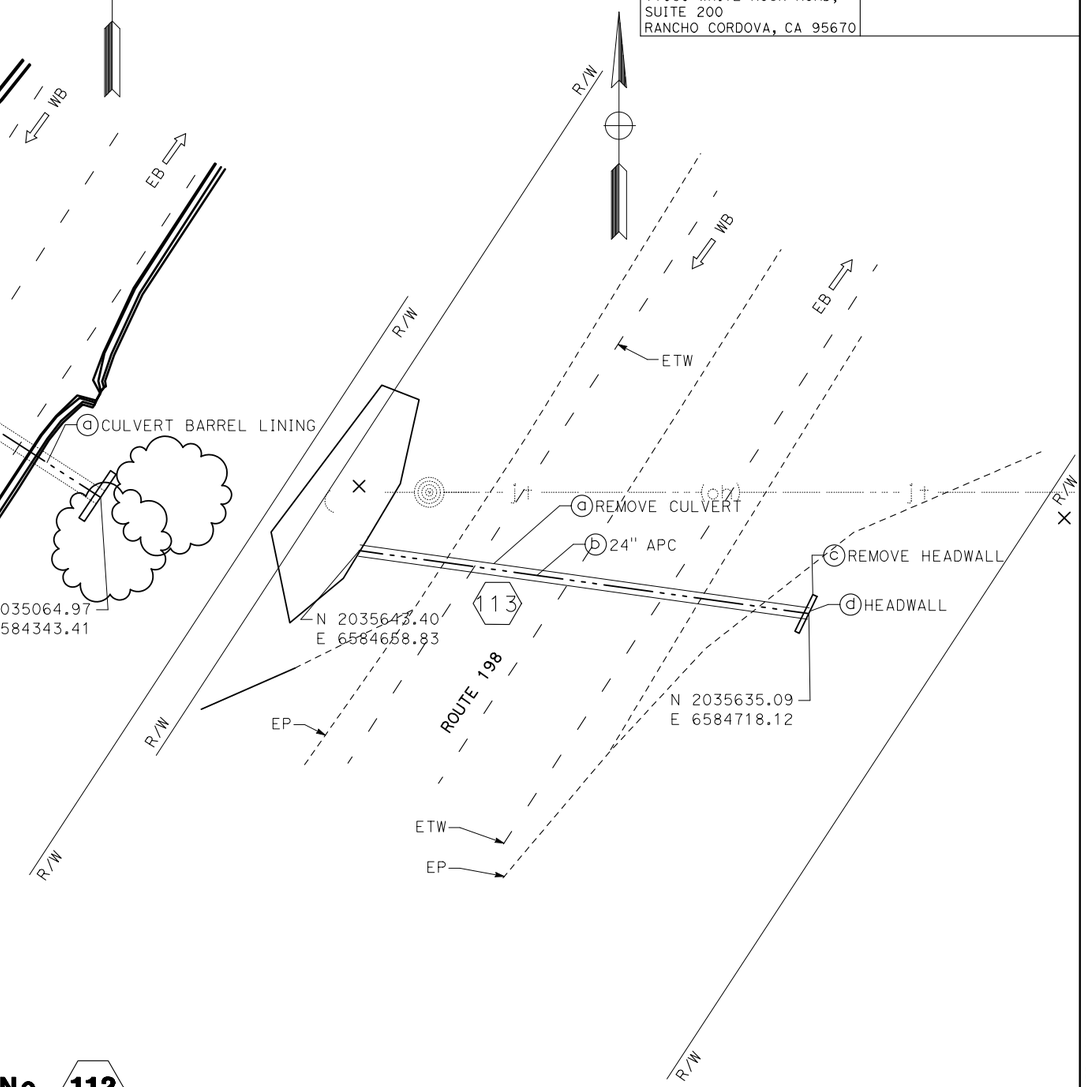

LOCATION No. 113

ROUTE 198, PM 36.84

APPROVED FOR DRAINAGE WORK ONLY

DRAINAGE PLAN

SCALE: 1"=10'

ATTACHMENT C

D-33

REVISED BY	DATE REVISED
PAUL BRADBURY	DAVE MELIS
CALCULATED-DESIGNED BY	CHECKED BY
CONSULTANT FUNCTIONAL SUPERVISOR	JOSE SILVA

STATE OF CALIFORNIA - DEPARTMENT OF TRANSPORTATION

Caltrans

LAST REVISION XX-XX-XX | DATE PLOTTED => 19-APR-2022 | TIME PLOTTED => 13:21

Dist	COUNTY	ROUTE	POST MILES TOTAL PROJECT	SHEET No.	TOTAL SHEETS
06	Tul	198	0.0/44.0		XX

REGISTERED CIVIL ENGINEER DATE

XX-XX-XX
PLANS APPROVAL DATE

REGISTERED PROFESSIONAL ENGINEER No. Exp. CIVIL STATE OF CALIFORNIA

THE STATE OF CALIFORNIA OR ITS OFFICERS OR AGENTS SHALL NOT BE RESPONSIBLE FOR THE ACCURACY OR COMPLETENESS OF SCANNED COPIES OF THIS PLAN SHEET.

DEWBERRY ENGINEERS INC.
11060 WHITE ROCK ROAD,
SUITE 200
RANCHO CORDOVA, CA 95670

NOTE:

FOR ACCURATE RIGHT OF WAY DATA, CONTACT RIGHT OF WAY ENGINEERING AT THE DISTRICT OFFICE.

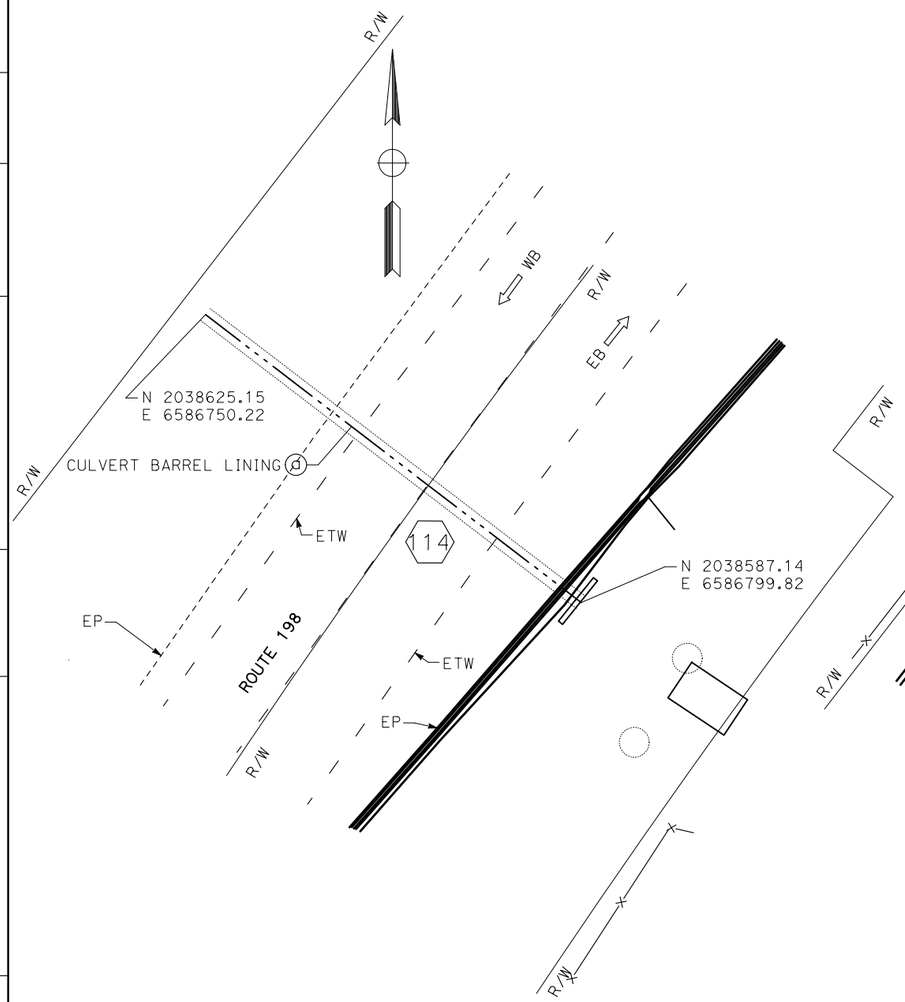

LOCATION No. 114

ROUTE 198, PM 37.59

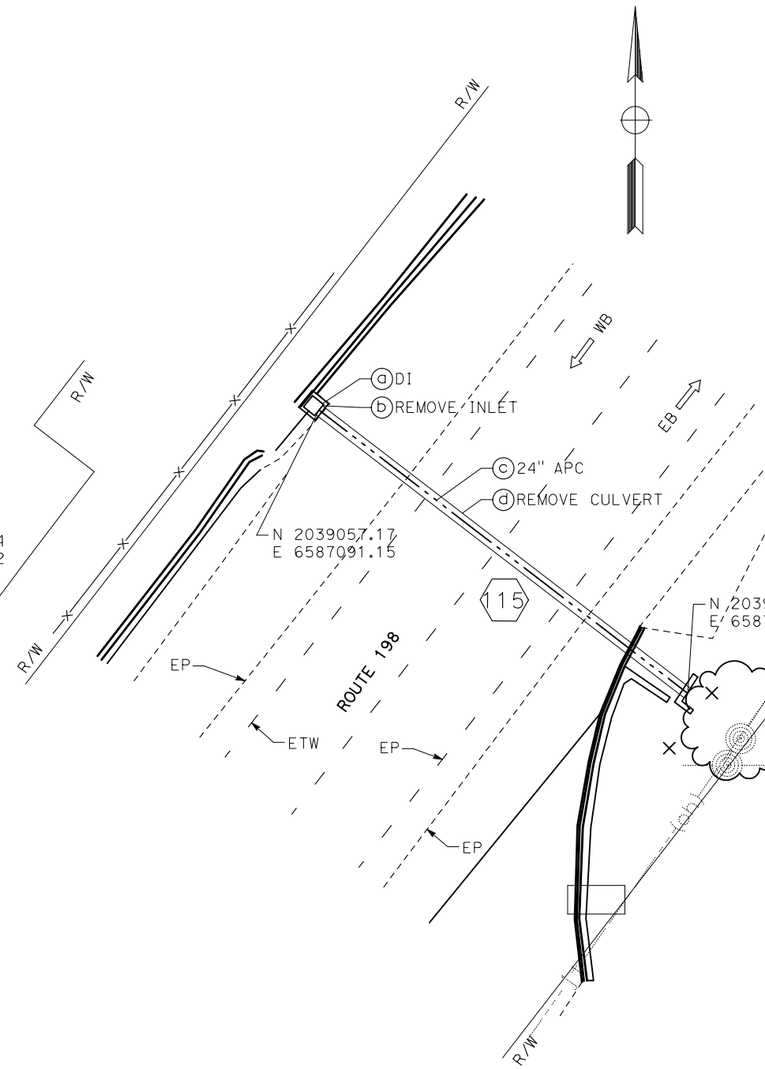

LOCATION No. 115

ROUTE 198, PM 37.69

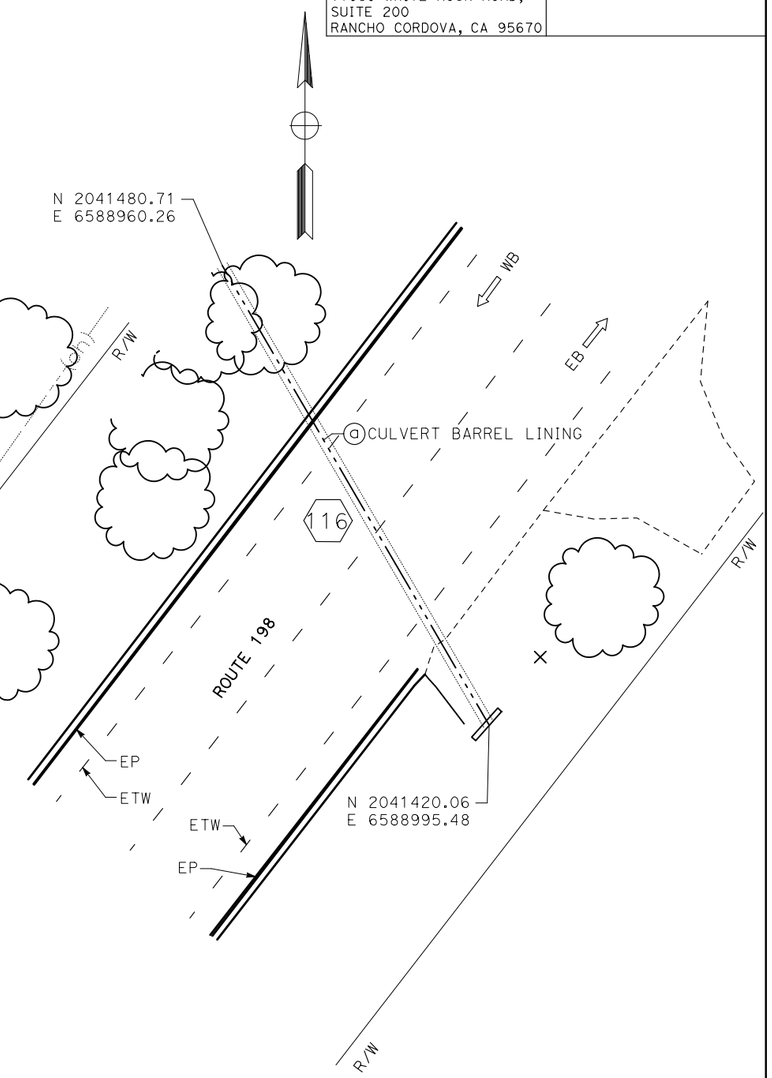

LOCATION No. 116

ROUTE 198, PM 38.27

APPROVED FOR DRAINAGE WORK ONLY

DRAINAGE PLAN

SCALE: 1"=10'

ATTACHMENT C

D-34

STATE OF CALIFORNIA - DEPARTMENT OF TRANSPORTATION

Caltrans

CONSULTANT FUNCTIONAL SUPERVISOR: JOSE SILVA

CALCULATED-DESIGNED BY: PAUL BRADBURY

CHECKED BY: DAVE MELIS

REVISED BY

DATE REVISED

LAST REVISION XX-XX-XX

DATE PLOTTED => 19-APR-2022
TIME PLOTTED => 13:21

Dist	COUNTY	ROUTE	POST MILES TOTAL PROJECT	SHEET No.	TOTAL SHEETS
06	Tul	198	0.0/44.0		XX

REGISTERED CIVIL ENGINEER DATE

XX-XX-XX
PLANS APPROVAL DATE

REGISTERED PROFESSIONAL ENGINEER No. Exp. CIVIL STATE OF CALIFORNIA

THE STATE OF CALIFORNIA OR ITS OFFICERS OR AGENTS SHALL NOT BE RESPONSIBLE FOR THE ACCURACY OR COMPLETENESS OF SCANNED COPIES OF THIS PLAN SHEET.

DEWBERRY ENGINEERS INC.
11060 WHITE ROCK ROAD,
SUITE 200
RANCHO CORDOVA, CA 95670

NOTE:

FOR ACCURATE RIGHT OF WAY DATA, CONTACT RIGHT OF WAY ENGINEERING AT THE DISTRICT OFFICE.

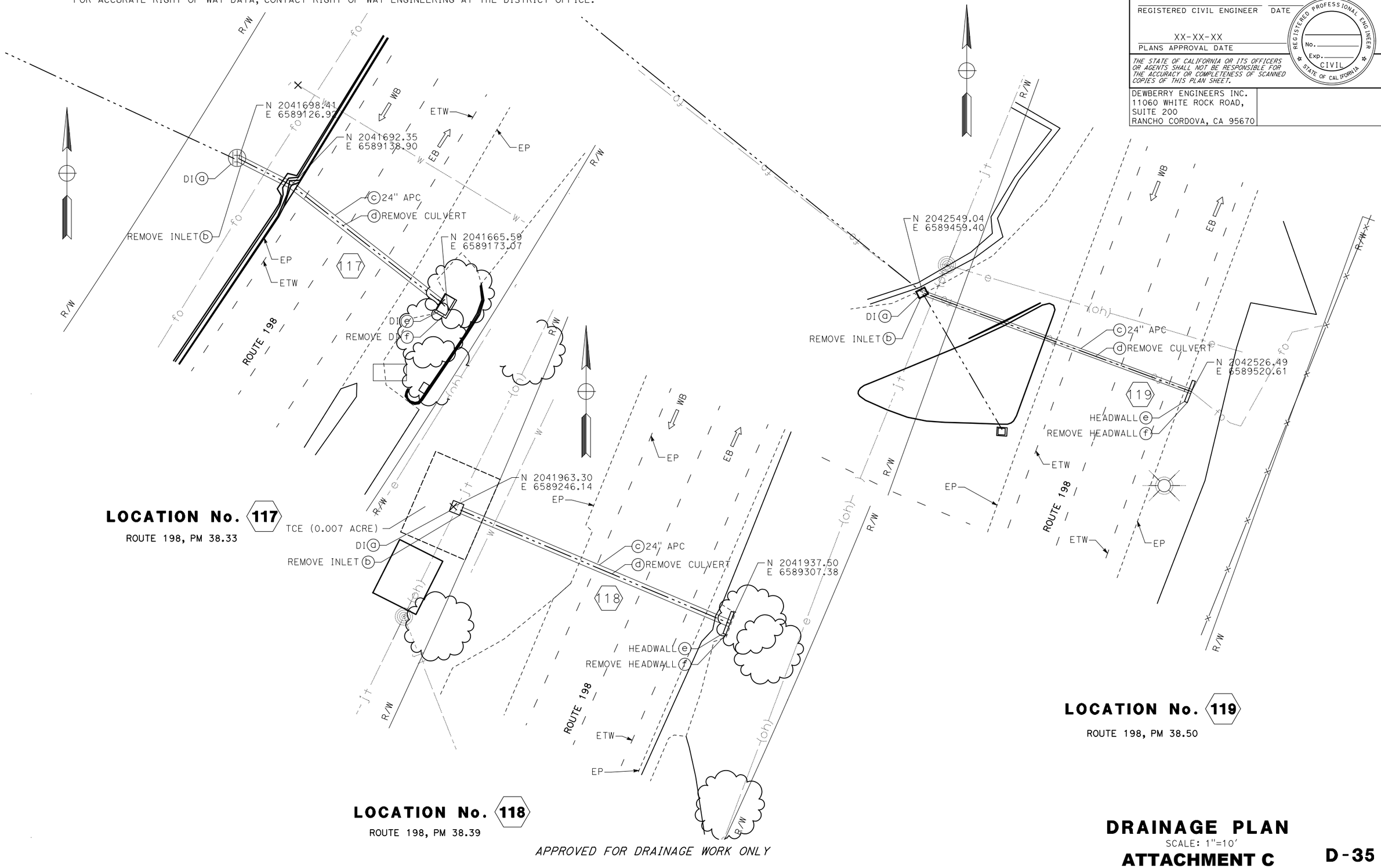

APPROVED FOR DRAINAGE WORK ONLY

DRAINAGE PLAN

SCALE: 1"=10'

ATTACHMENT C

D-35

STATE OF CALIFORNIA - DEPARTMENT OF TRANSPORTATION

Caltrans

CONSULTANT FUNCTIONAL SUPERVISOR: JOSE SILVA

CALCULATED-DESIGNED BY: PAUL BRADBURY | CHECKED BY: DAVE MELIS

REVISED BY | DATE REVISED

LAST REVISION XX-XX-XX | DATE PLOTTED => 19-APR-2022 | TIME PLOTTED => 13:21

BORDER LAST REVISED 7/2/2010 | USERNAME => dmelis | DGN FILE => 0618000045ia035.dgn | RELATIVE BORDER SCALE IS IN INCHES 0 1 2 3 | UNIT 1449 | PROJECT NUMBER & PHASE 0618000045

Dist	COUNTY	ROUTE	POST MILES TOTAL PROJECT	SHEET No.	TOTAL SHEETS
06	Tul	198	0.0/44.0		XX

REGISTERED CIVIL ENGINEER DATE

XX-XX-XX
PLANS APPROVAL DATE

REGISTERED PROFESSIONAL ENGINEER No. Exp. CIVIL STATE OF CALIFORNIA

THE STATE OF CALIFORNIA OR ITS OFFICERS OR AGENTS SHALL NOT BE RESPONSIBLE FOR THE ACCURACY OR COMPLETENESS OF SCANNED COPIES OF THIS PLAN SHEET.

DEWBERRY ENGINEERS INC.
11060 WHITE ROCK ROAD,
SUITE 200
RANCHO CORDOVA, CA 95670

NOTE:

FOR ACCURATE RIGHT OF WAY DATA, CONTACT RIGHT OF WAY ENGINEERING AT THE DISTRICT OFFICE.

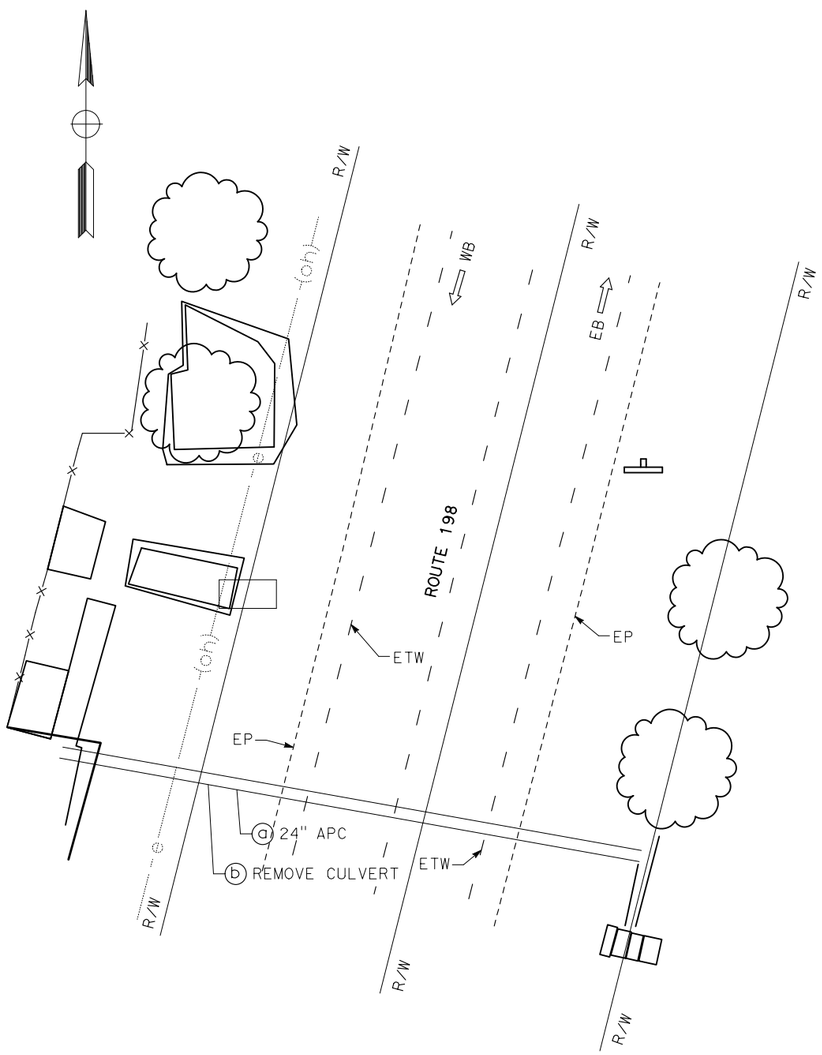

LOCATION No. 120

ROUTE 198, PM 38.78

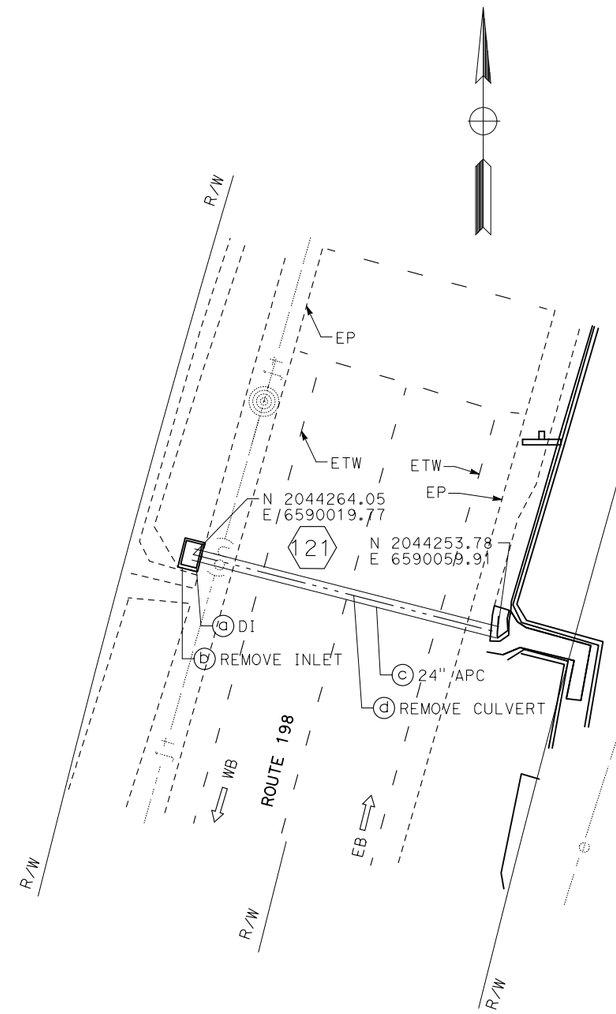

LOCATION No. 121

ROUTE 198, PM 38.82

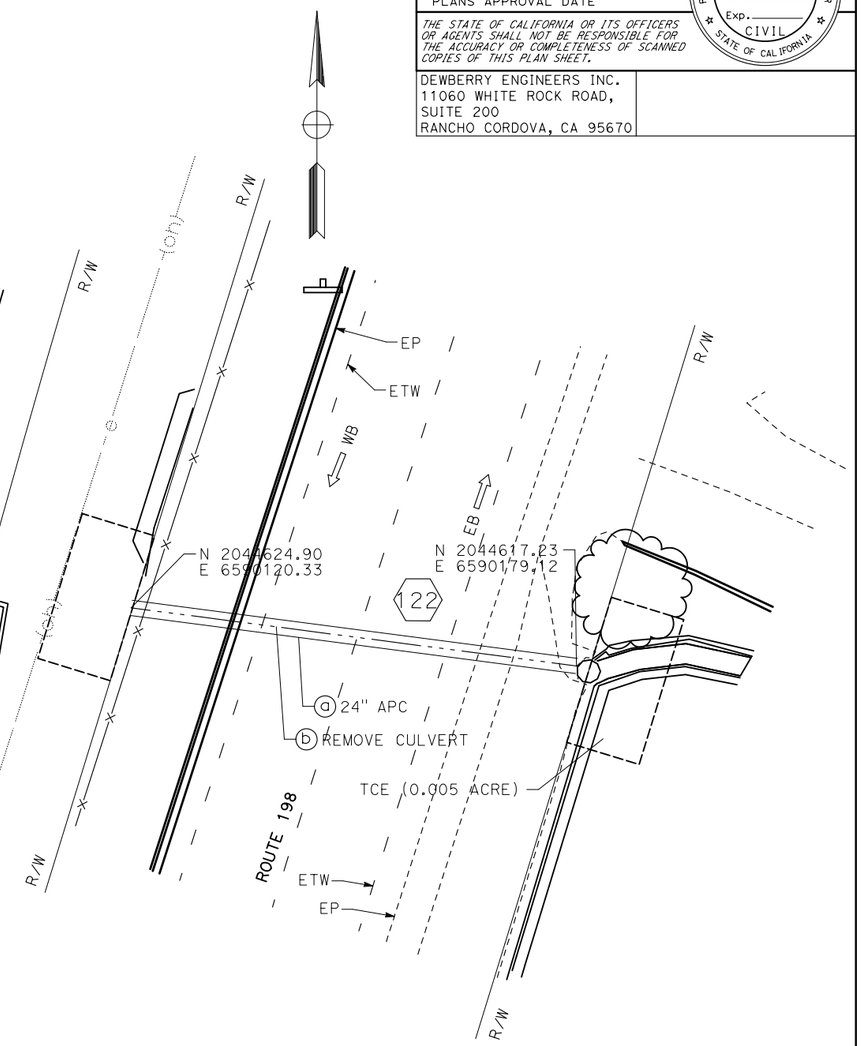

LOCATION No. 122

ROUTE 198, PM 38.91

APPROVED FOR DRAINAGE WORK ONLY

DRAINAGE PLAN

SCALE: 1"=10'

ATTACHMENT C

D-36

STATE OF CALIFORNIA - DEPARTMENT OF TRANSPORTATION

Caltrans

CONSULTANT FUNCTIONAL SUPERVISOR: JOSE SILVA

CALCULATED-DESIGNED BY: PAUL BRADBURY

CHECKED BY: DAVE MELIS

REVISED BY

DATE REVISED

LAST REVISION XX-XX-XX

DATE PLOTTED => 19-APR-2022
TIME PLOTTED => 13:21

Dist	COUNTY	ROUTE	POST MILES TOTAL PROJECT	SHEET No.	TOTAL SHEETS
06	Tul	198	0.0/44.0		XX

REGISTERED CIVIL ENGINEER DATE

XX-XX-XX
PLANS APPROVAL DATE

REGISTERED PROFESSIONAL ENGINEER No. Exp. CIVIL STATE OF CALIFORNIA

THE STATE OF CALIFORNIA OR ITS OFFICERS OR AGENTS SHALL NOT BE RESPONSIBLE FOR THE ACCURACY OR COMPLETENESS OF SCANNED COPIES OF THIS PLAN SHEET.

DEWBERRY ENGINEERS INC.
11060 WHITE ROCK ROAD,
SUITE 200
RANCHO CORDOVA, CA 95670

NOTE:

FOR ACCURATE RIGHT OF WAY DATA, CONTACT RIGHT OF WAY ENGINEERING AT THE DISTRICT OFFICE.

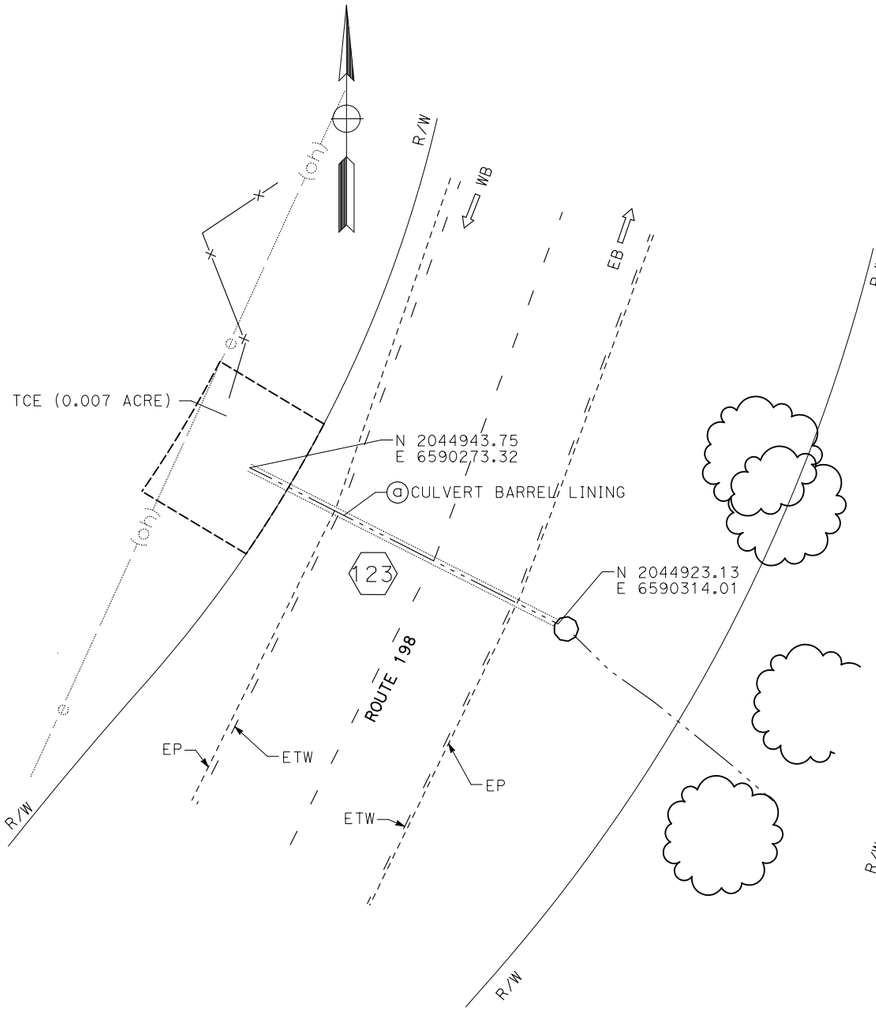

LOCATION No. 123

ROUTE 198, PM 38.99

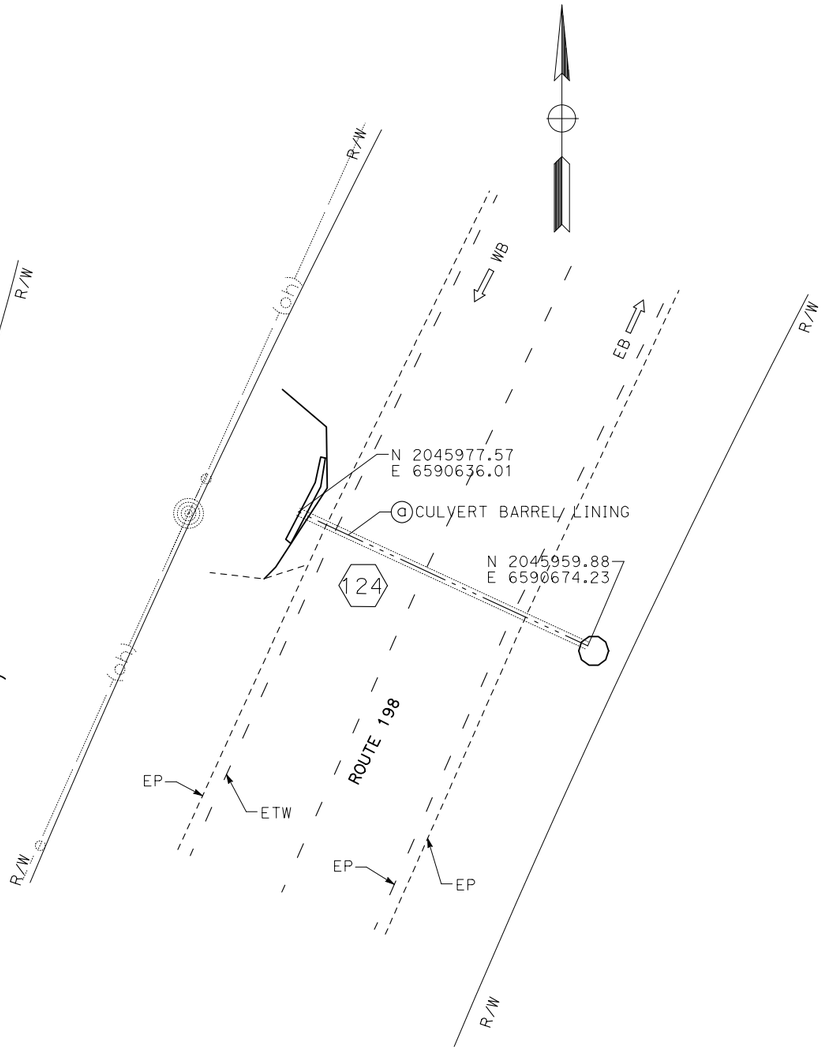

LOCATION No. 124

ROUTE 198, PM 39.20

APPROVED FOR DRAINAGE WORK ONLY

DRAINAGE PLAN

SCALE: 1"=10'

ATTACHMENT C

D-37

STATE OF CALIFORNIA - DEPARTMENT OF TRANSPORTATION

Caltrans

CONSULTANT FUNCTIONAL SUPERVISOR: JOSE SILVA

PAUL BRADBURY | DAVE MELIS | REVISED BY | DATE REVISED

CALCULATED-DESIGNED BY | CHECKED BY

LAST REVISION XX-XX-XX | DATE PLOTTED => 19-APR-2022 | TIME PLOTTED => 13:21

BORDER LAST REVISED 7/2/2010 | USERNAME => dmellis | DGN FILE => 0618000045ia037.dgn | RELATIVE BORDER SCALE IS IN INCHES 0 1 2 3 | UNIT 1449 | PROJECT NUMBER & PHASE 0618000045

Dist	COUNTY	ROUTE	POST MILES TOTAL PROJECT	SHEET No.	TOTAL SHEETS
06	Tul	198	0.0/44.0		XX

REGISTERED CIVIL ENGINEER DATE

XX-XX-XX
PLANS APPROVAL DATE

REGISTERED PROFESSIONAL ENGINEER No. Exp. CIVIL STATE OF CALIFORNIA

THE STATE OF CALIFORNIA OR ITS OFFICERS OR AGENTS SHALL NOT BE RESPONSIBLE FOR THE ACCURACY OR COMPLETENESS OF SCANNED COPIES OF THIS PLAN SHEET.

DEWBERRY ENGINEERS INC.
11060 WHITE ROCK ROAD,
SUITE 200
RANCHO CORDOVA, CA 95670

NOTE:

FOR ACCURATE RIGHT OF WAY DATA, CONTACT RIGHT OF WAY ENGINEERING AT THE DISTRICT OFFICE.

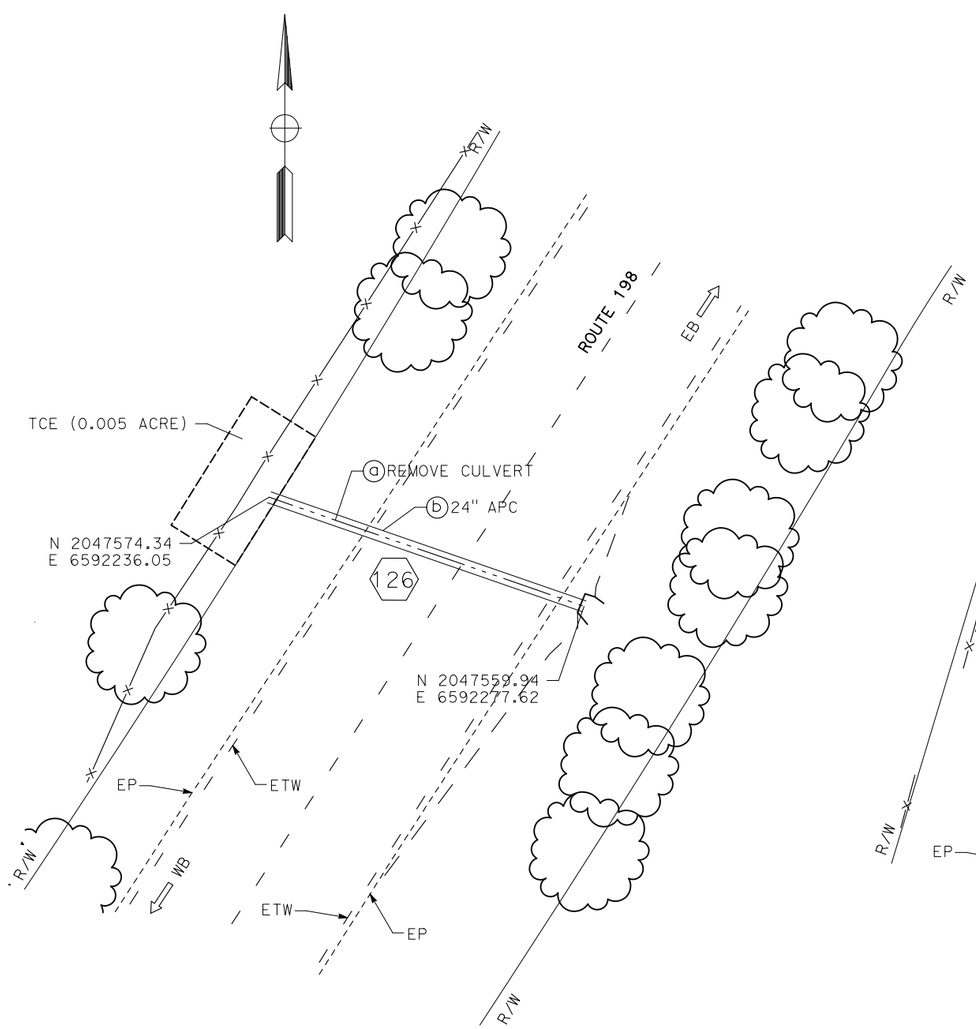

LOCATION No. 126

ROUTE 198, PM 39.63

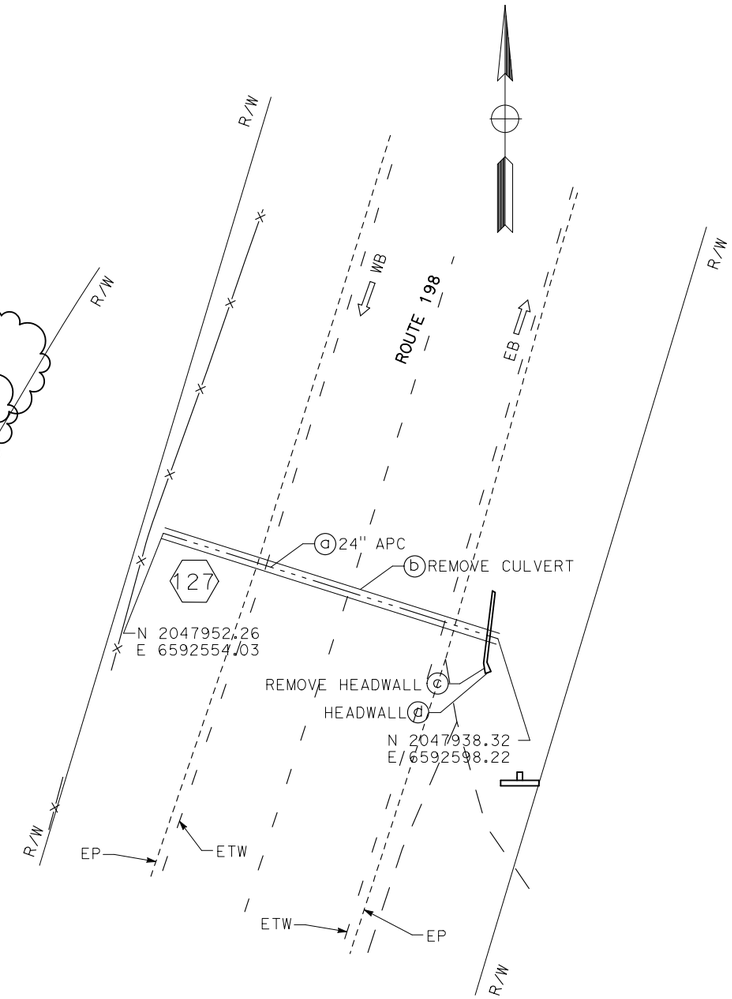

LOCATION No. 127

ROUTE 198, PM 39.73

APPROVED FOR DRAINAGE WORK ONLY

DRAINAGE PLAN

SCALE: 1"=10'

ATTACHMENT C

D-38

STATE OF CALIFORNIA - DEPARTMENT OF TRANSPORTATION

Caltrans

CONSULTANT FUNCTIONAL SUPERVISOR: JOSE SILVA

CALCULATED-DESIGNED BY: PAUL BRADBURY

CHECKED BY: DAVE MELIS

REVISED BY

DATE REVISED

LAST REVISION XX-XX-XX

DATE PLOTTED => 19-APR-2022
TIME PLOTTED => 13:21

Dist	COUNTY	ROUTE	POST MILES TOTAL PROJECT	SHEET No.	TOTAL SHEETS
06	Tul	198	0.0/44.0		XX

REGISTERED CIVIL ENGINEER DATE

XX-XX-XX
PLANS APPROVAL DATE

REGISTERED PROFESSIONAL ENGINEER No. Exp. CIVIL STATE OF CALIFORNIA

THE STATE OF CALIFORNIA OR ITS OFFICERS OR AGENTS SHALL NOT BE RESPONSIBLE FOR THE ACCURACY OR COMPLETENESS OF SCANNED COPIES OF THIS PLAN SHEET.

DEWBERRY ENGINEERS INC.
11060 WHITE ROCK ROAD,
SUITE 200
RANCHO CORDOVA, CA 95670

NOTE:

FOR ACCURATE RIGHT OF WAY DATA, CONTACT RIGHT OF WAY ENGINEERING AT THE DISTRICT OFFICE.

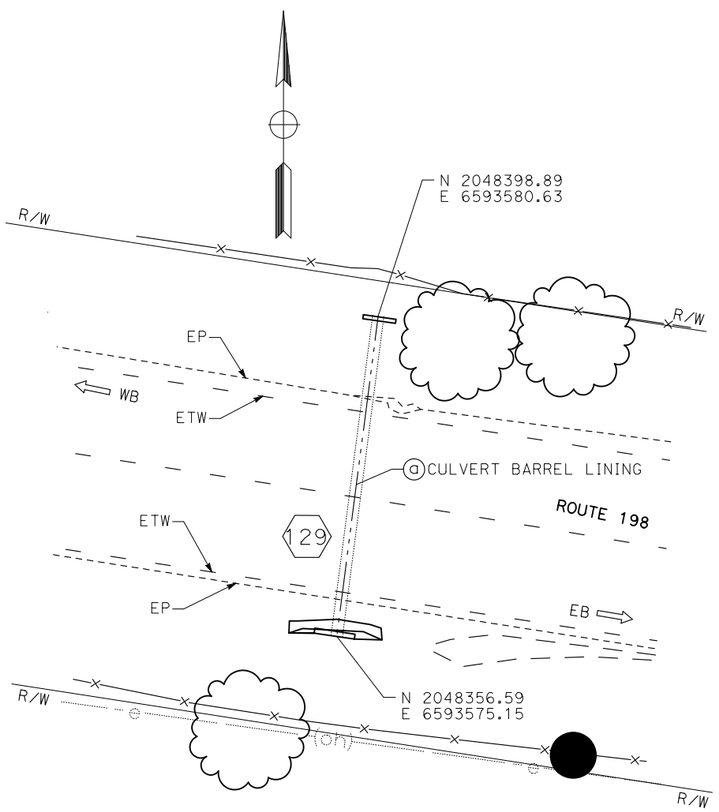

LOCATION No. 129

ROUTE 198, PM 39.97

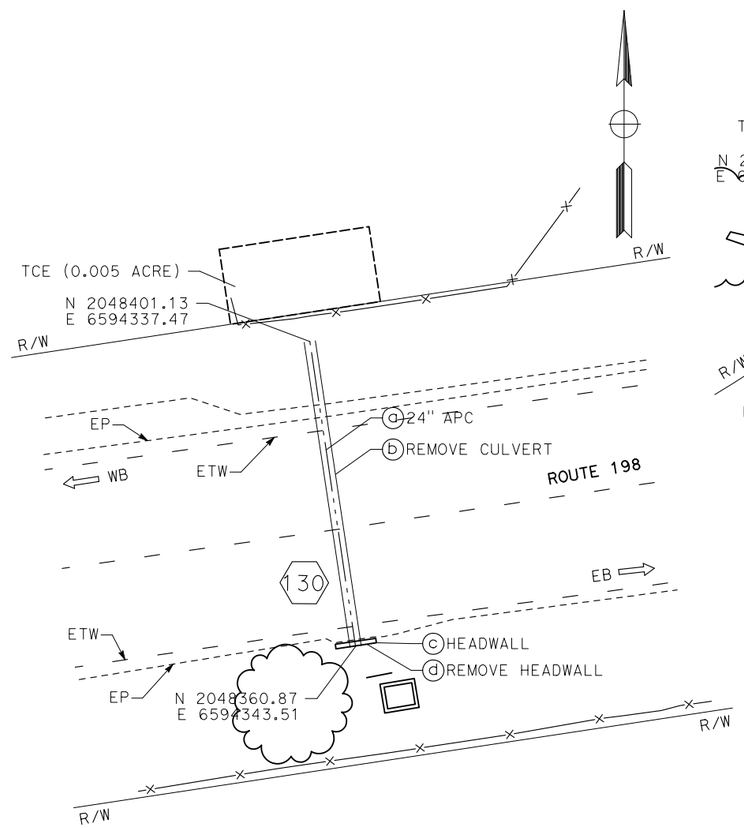

LOCATION No. 130

ROUTE 198, PM 40.09

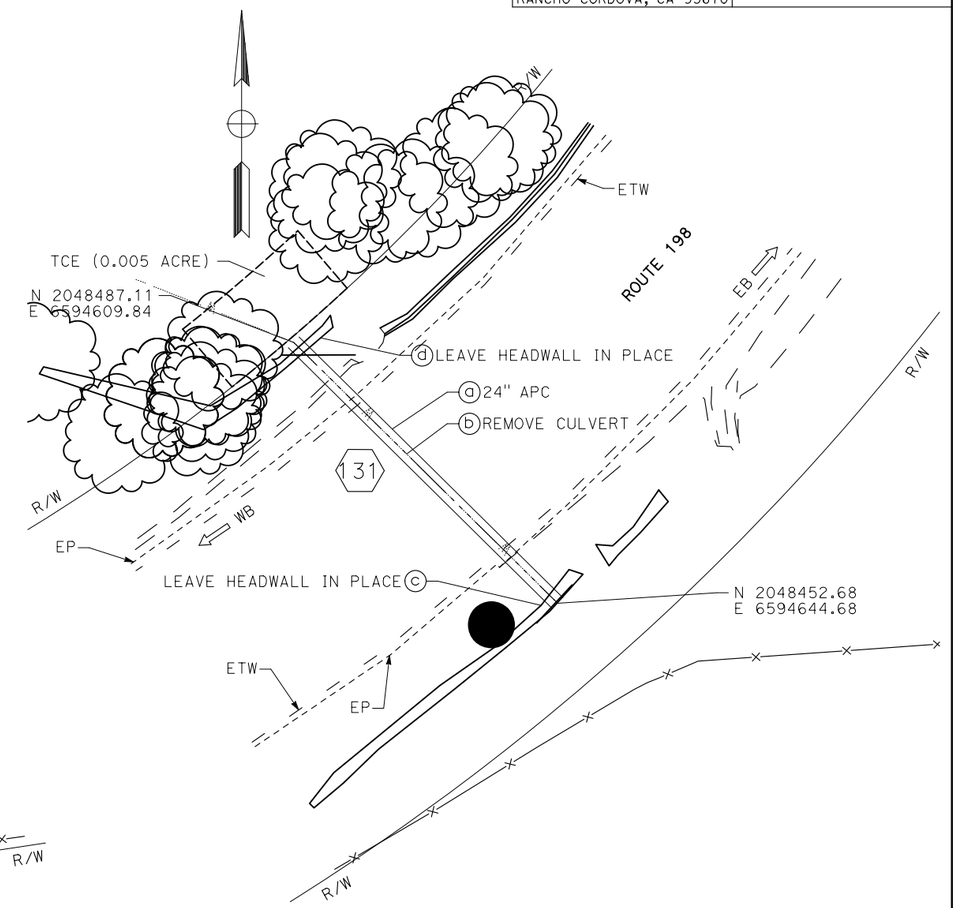

LOCATION No. 131

ROUTE 198, PM 40.14

APPROVED FOR DRAINAGE WORK ONLY

DRAINAGE PLAN

SCALE: 1"=10'

ATTACHMENT C

D-39

STATE OF CALIFORNIA - DEPARTMENT OF TRANSPORTATION

Caltrans

CONSULTANT FUNCTIONAL SUPERVISOR: JOSE SILVA

CALCULATED-DESIGNED BY: PAUL BRADBURY | CHECKED BY: DAVE MELIS

REVISED BY | DATE REVISED

LAST REVISION XX-XX-XX | DATE PLOTTED => 19-APR-2022 | TIME PLOTTED => 13:21

Dist	COUNTY	ROUTE	POST MILES TOTAL PROJECT	SHEET No.	TOTAL SHEETS
06	Tul	198	0.0/44.0		XX

REGISTERED CIVIL ENGINEER DATE

XX-XX-XX
PLANS APPROVAL DATE

REGISTERED PROFESSIONAL ENGINEER No. Exp. CIVIL STATE OF CALIFORNIA

THE STATE OF CALIFORNIA OR ITS OFFICERS OR AGENTS SHALL NOT BE RESPONSIBLE FOR THE ACCURACY OR COMPLETENESS OF SCANNED COPIES OF THIS PLAN SHEET.

DEWBERRY ENGINEERS INC.
11060 WHITE ROCK ROAD,
SUITE 200
RANCHO CORDOVA, CA 95670

NOTE:

FOR ACCURATE RIGHT OF WAY DATA, CONTACT RIGHT OF WAY ENGINEERING AT THE DISTRICT OFFICE.

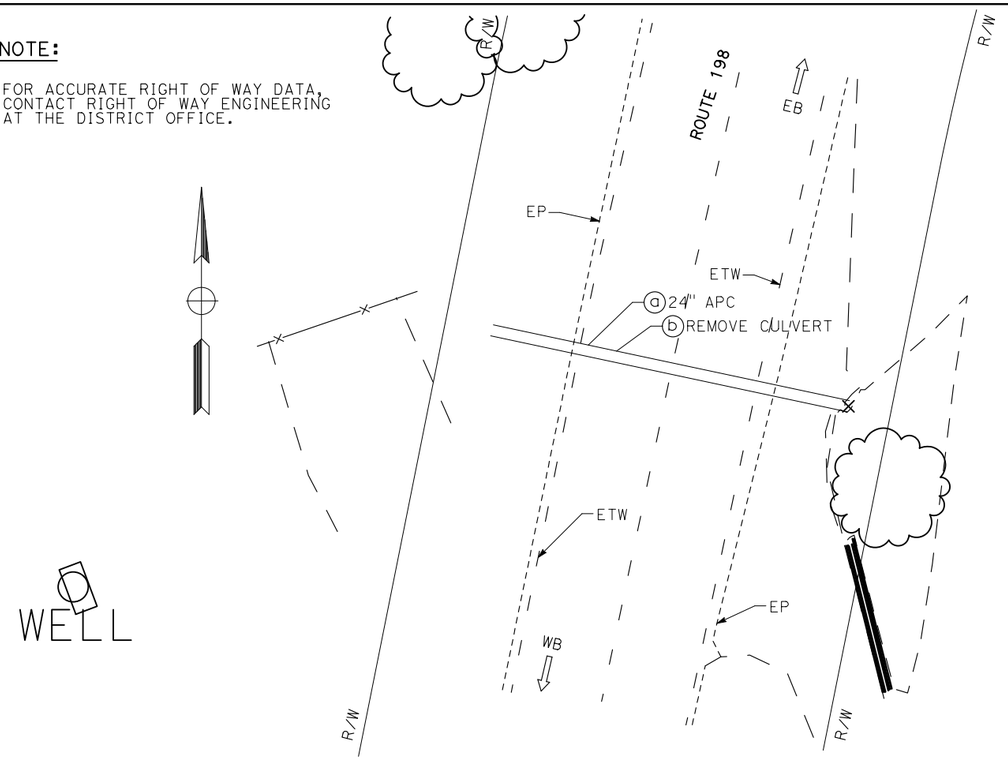

LOCATION No. 132
ROUTE 198, PM 40.20

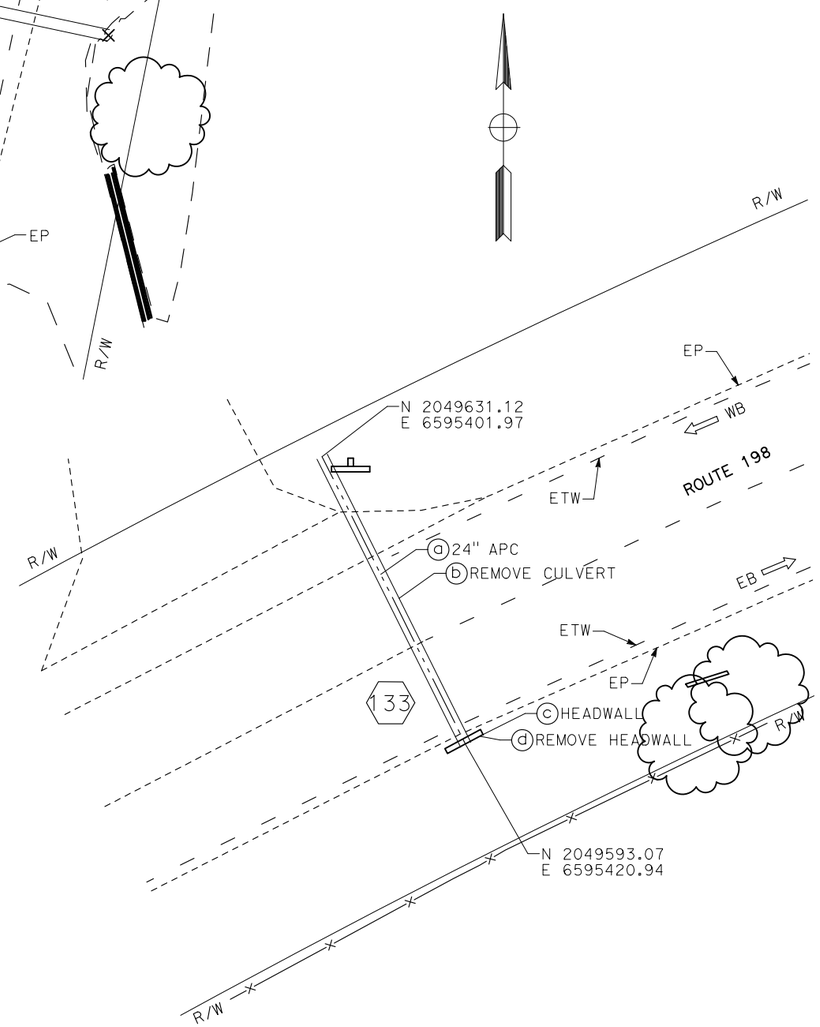

LOCATION No. 133
ROUTE 198, PM 40.41

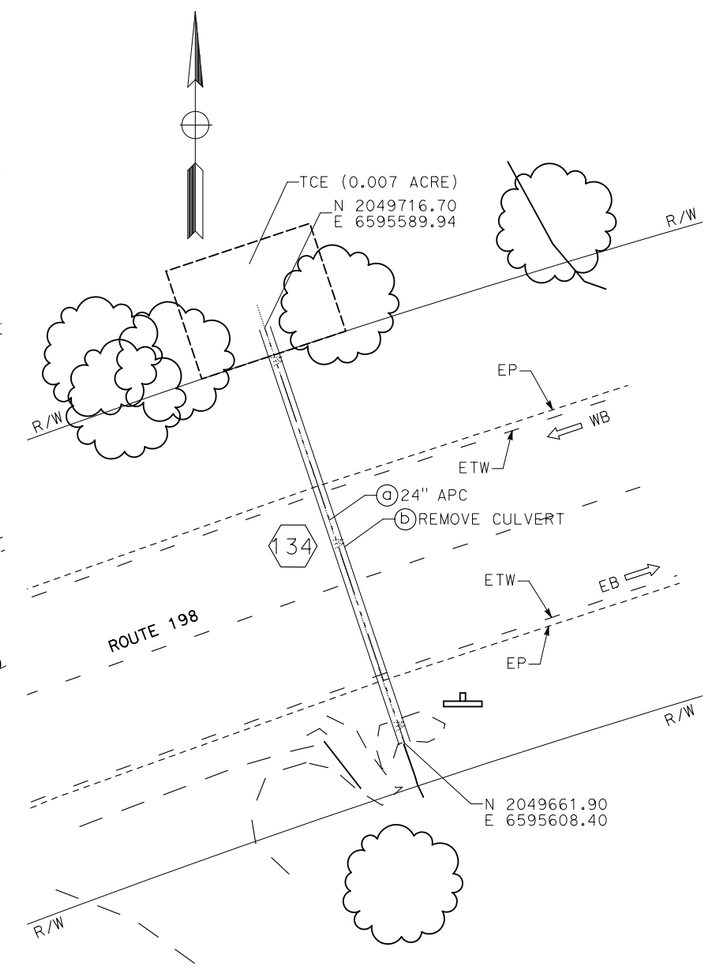

LOCATION No. 134
ROUTE 198, PM 40.45

APPROVED FOR DRAINAGE WORK ONLY

DRAINAGE PLAN

SCALE: 1"=10'

ATTACHMENT C

D-40

REVISED BY	DATE REVISED

CALCULATED-DESIGNED BY	CHECKED BY
PAUL BRADBURY	DAVE MELIS

CONSULTANT FUNCTIONAL SUPERVISOR: JOSE SILVA

STATE OF CALIFORNIA - DEPARTMENT OF TRANSPORTATION

Caltrans

LAST REVISION XX-XX-XX | DATE PLOTTED => 19-APR-2022 | TIME PLOTTED => 13:21

Dist	COUNTY	ROUTE	POST MILES TOTAL PROJECT	SHEET No.	TOTAL SHEETS
06	Tul	198	0.0/44.0		XX

REGISTERED CIVIL ENGINEER DATE

XX-XX-XX
PLANS APPROVAL DATE

REGISTERED PROFESSIONAL ENGINEER No. Exp. CIVIL STATE OF CALIFORNIA

THE STATE OF CALIFORNIA OR ITS OFFICERS OR AGENTS SHALL NOT BE RESPONSIBLE FOR THE ACCURACY OR COMPLETENESS OF SCANNED COPIES OF THIS PLAN SHEET.

DEWBERRY ENGINEERS INC.
11060 WHITE ROCK ROAD,
SUITE 200
RANCHO CORDOVA, CA 95670

NOTE:

FOR ACCURATE RIGHT OF WAY DATA, CONTACT RIGHT OF WAY ENGINEERING AT THE DISTRICT OFFICE.

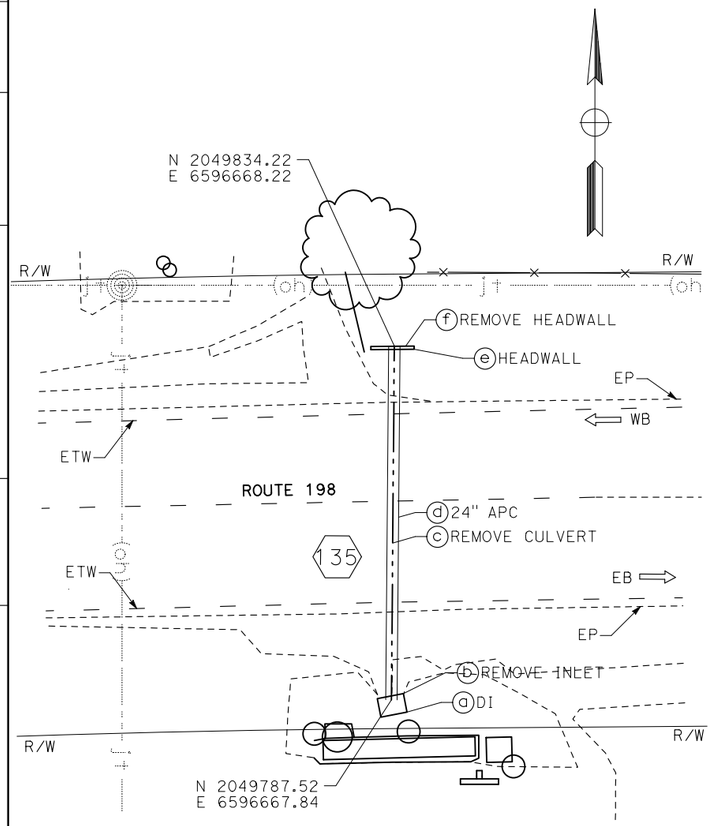

LOCATION No. 135

ROUTE 198, PM 40.65

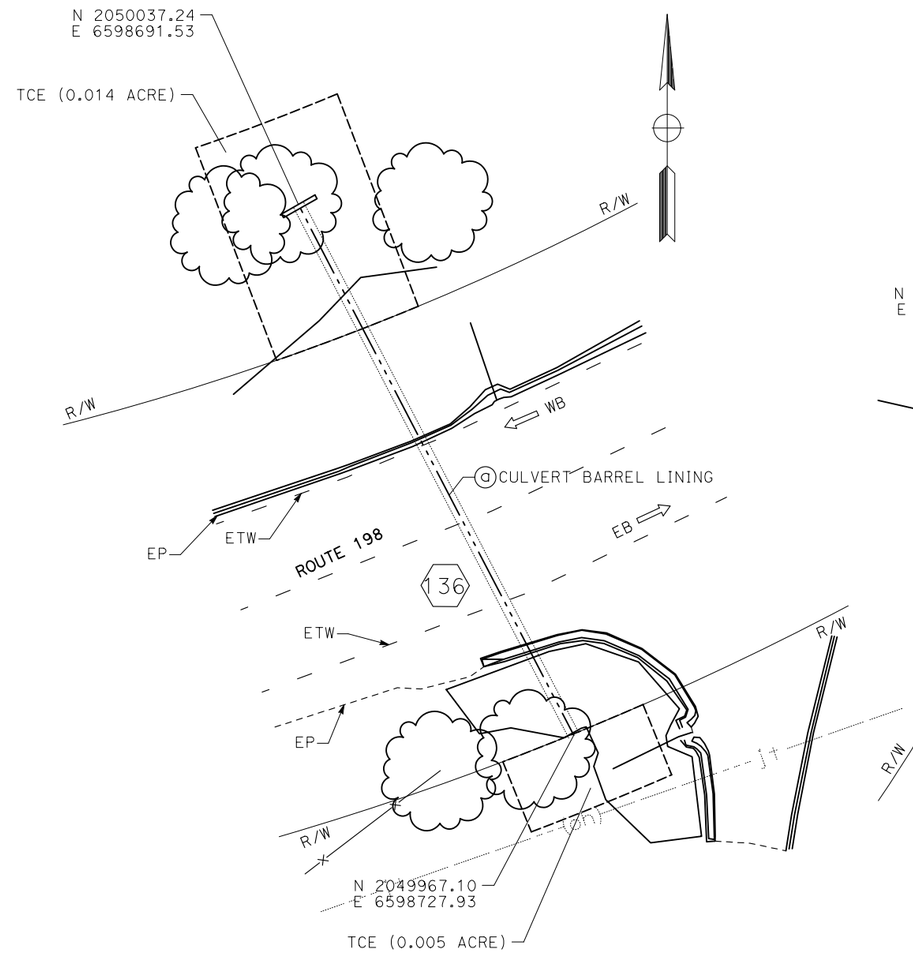

LOCATION No. 136

ROUTE 198, PM 41.12

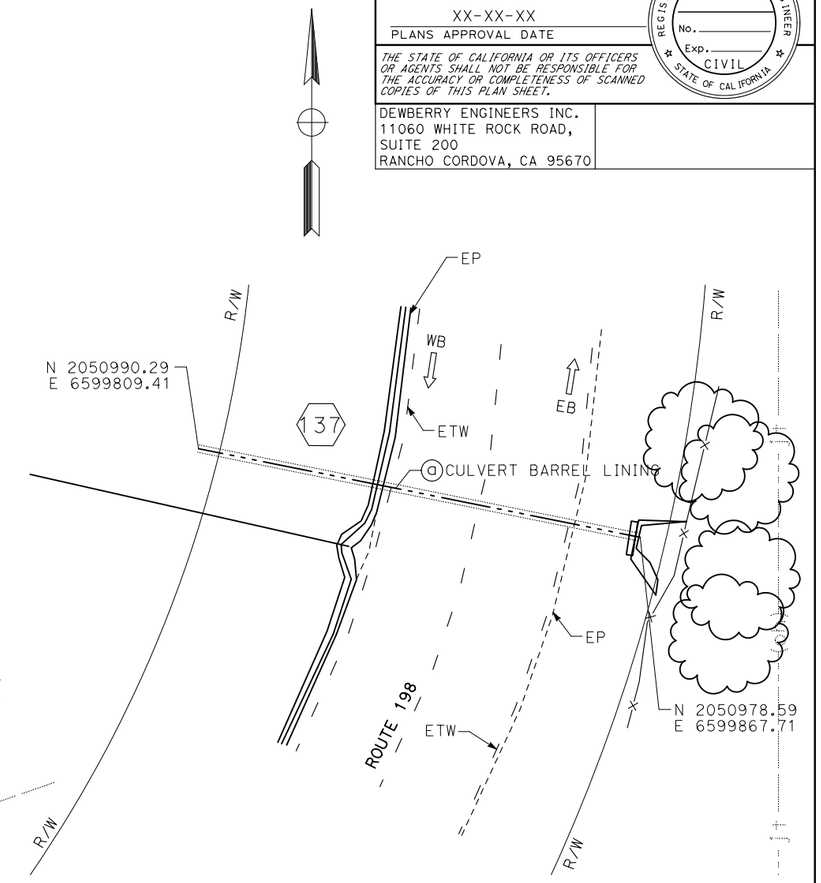

LOCATION No. 137

ROUTE 198, PM 41.35

APPROVED FOR DRAINAGE WORK ONLY

DRAINAGE PLAN

SCALE: 1"=10'

ATTACHMENT C

D-41

REVISED BY	DATE REVISED
PAUL BRADBURY	DAVE MELIS
CALCULATED-DESIGNED BY	CHECKED BY
CONSULTANT FUNCTIONAL SUPERVISOR	JOSE SILVA

STATE OF CALIFORNIA - DEPARTMENT OF TRANSPORTATION

Caltrans

LAST REVISION XX-XX-XX | DATE PLOTTED => 19-APR-2022 | TIME PLOTTED => 13:21

Dist	COUNTY	ROUTE	POST MILES TOTAL PROJECT	SHEET No.	TOTAL SHEETS
06	Tul	198	0.0/44.0		XX

REGISTERED CIVIL ENGINEER DATE

XX-XX-XX
PLANS APPROVAL DATE

REGISTERED PROFESSIONAL ENGINEER No. Exp. CIVIL STATE OF CALIFORNIA

THE STATE OF CALIFORNIA OR ITS OFFICERS OR AGENTS SHALL NOT BE RESPONSIBLE FOR THE ACCURACY OR COMPLETENESS OF SCANNED COPIES OF THIS PLAN SHEET.

DEWBERRY ENGINEERS INC.
11060 WHITE ROCK ROAD,
SUITE 200
RANCHO CORDOVA, CA 95670

NOTE:

FOR ACCURATE RIGHT OF WAY DATA, CONTACT RIGHT OF WAY ENGINEERING AT THE DISTRICT OFFICE.

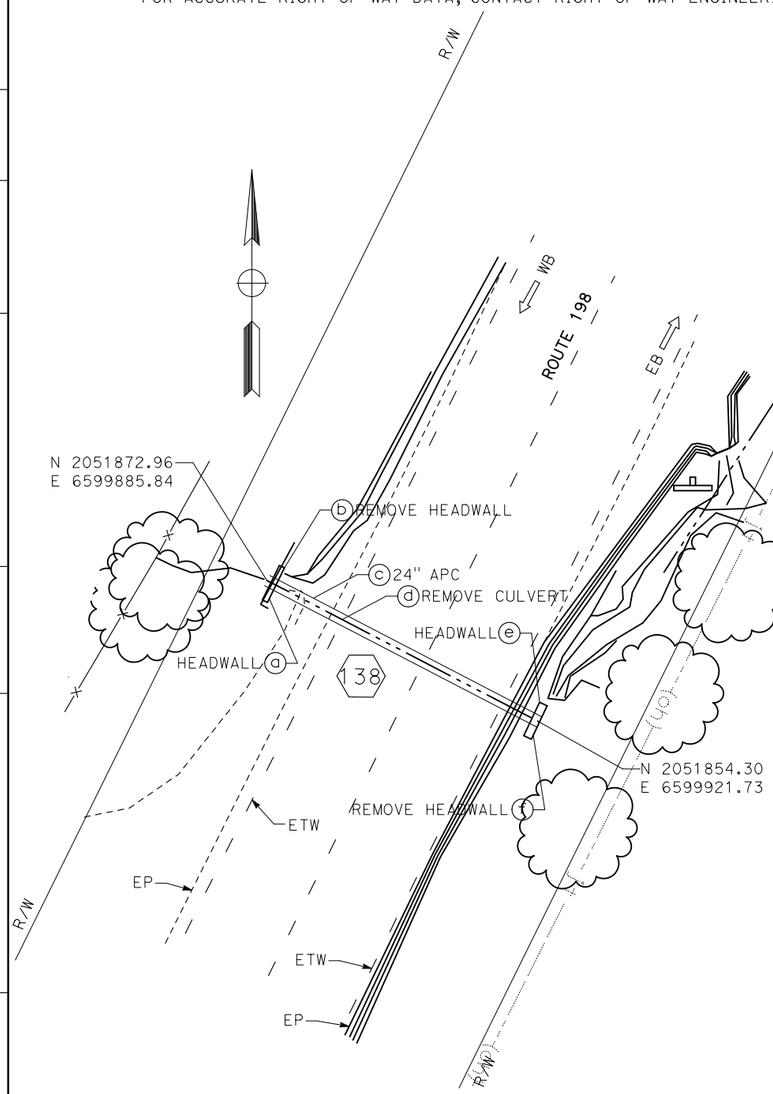

LOCATION No. 138

ROUTE 198, PM 41.50

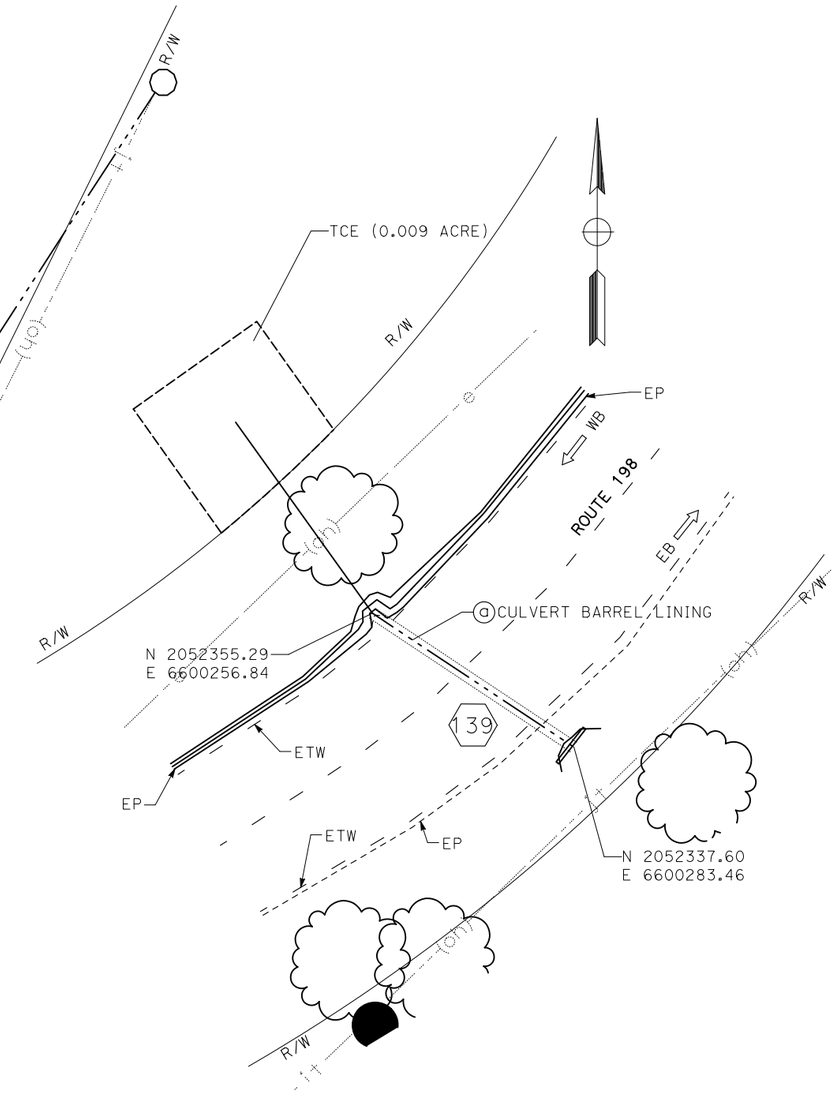

LOCATION No. 139

ROUTE 198, PM 41.62

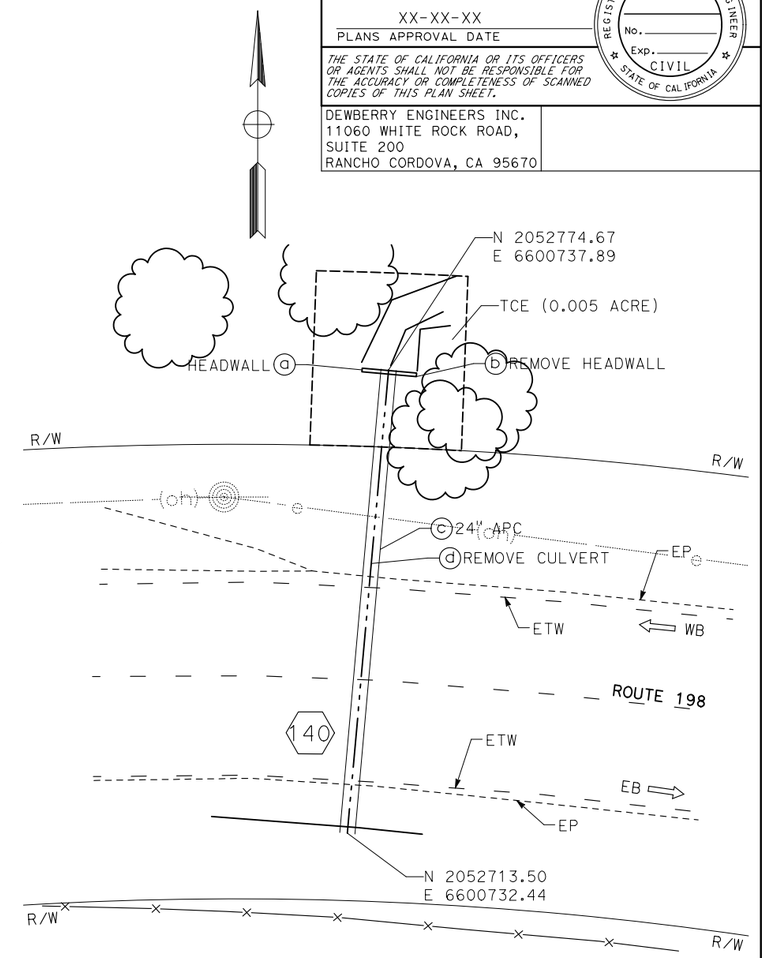

LOCATION No. 140

ROUTE 198, PM 41.74

APPROVED FOR DRAINAGE WORK ONLY

DRAINAGE PLAN

SCALE: 1"=10'

ATTACHMENT C

D-42

STATE OF CALIFORNIA - DEPARTMENT OF TRANSPORTATION

Caltrans

CONSULTANT FUNCTIONAL SUPERVISOR: JOSE SILVA

CALCULATED-DESIGNED BY: PAUL BRADBURY | CHECKED BY: DAVE MELIS

REVISED BY | DATE REVISED

LAST REVISION XX-XX-XX | DATE PLOTTED => 19-APR-2022 | TIME PLOTTED => 13:21

Dist	COUNTY	ROUTE	POST MILES TOTAL PROJECT	SHEET No.	TOTAL SHEETS
06	Tul	198	0.0/44.0		XX

REGISTERED CIVIL ENGINEER DATE

XX-XX-XX
PLANS APPROVAL DATE

REGISTERED PROFESSIONAL ENGINEER No. Exp. CIVIL STATE OF CALIFORNIA

THE STATE OF CALIFORNIA OR ITS OFFICERS OR AGENTS SHALL NOT BE RESPONSIBLE FOR THE ACCURACY OR COMPLETENESS OF SCANNED COPIES OF THIS PLAN SHEET.

DEWBERRY ENGINEERS INC.
11060 WHITE ROCK ROAD,
SUITE 200
RANCHO CORDOVA, CA 95670

NOTE:

FOR ACCURATE RIGHT OF WAY DATA, CONTACT RIGHT OF WAY ENGINEERING AT THE DISTRICT OFFICE.

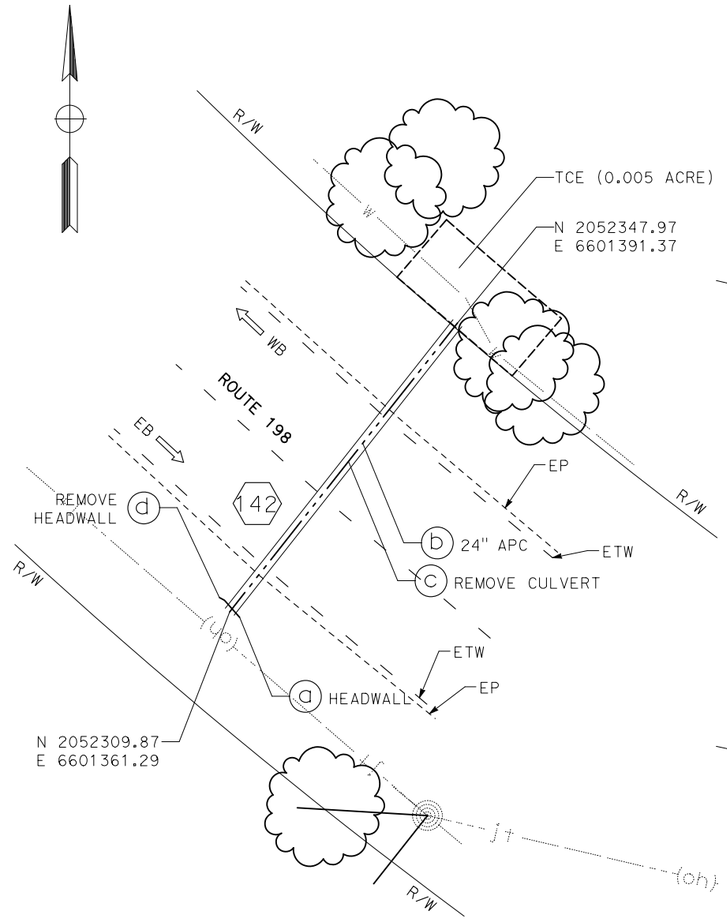

LOCATION No. 142

ROUTE 198, PM 41.89

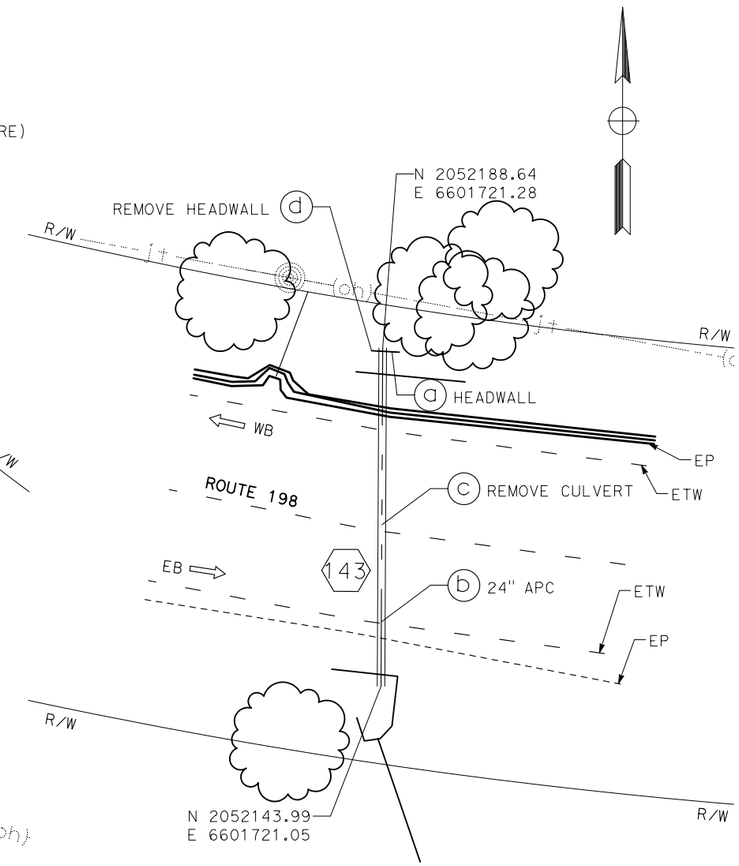

LOCATION No. 143

ROUTE 198, PM 41.97

APPROVED FOR DRAINAGE WORK ONLY

DRAINAGE PLAN

SCALE: 1"=10'

ATTACHMENT C

D-43

STATE OF CALIFORNIA - DEPARTMENT OF TRANSPORTATION

Caltrans

CONSULTANT FUNCTIONAL SUPERVISOR: JOSE SILVA

CALCULATED-DESIGNED BY: PAUL BRADBURY

CHECKED BY: DAVE MELIS

REVISED BY

DATE REVISED

LAST REVISION XX-XX-XX

DATE PLOTTED => 19-APR-2022
TIME PLOTTED => 13:21

Dist	COUNTY	ROUTE	POST MILES TOTAL PROJECT	SHEET No.	TOTAL SHEETS
06	Tul	198	0.0/44.0		XX

REGISTERED CIVIL ENGINEER DATE

XX-XX-XX
PLANS APPROVAL DATE

REGISTERED PROFESSIONAL ENGINEER No. Exp. CIVIL STATE OF CALIFORNIA

THE STATE OF CALIFORNIA OR ITS OFFICERS OR AGENTS SHALL NOT BE RESPONSIBLE FOR THE ACCURACY OR COMPLETENESS OF SCANNED COPIES OF THIS PLAN SHEET.

DEWBERRY ENGINEERS INC.
11060 WHITE ROCK ROAD,
SUITE 200
RANCHO CORDOVA, CA 95670

NOTE:

FOR ACCURATE RIGHT OF WAY DATA, CONTACT RIGHT OF WAY ENGINEERING AT THE DISTRICT OFFICE.

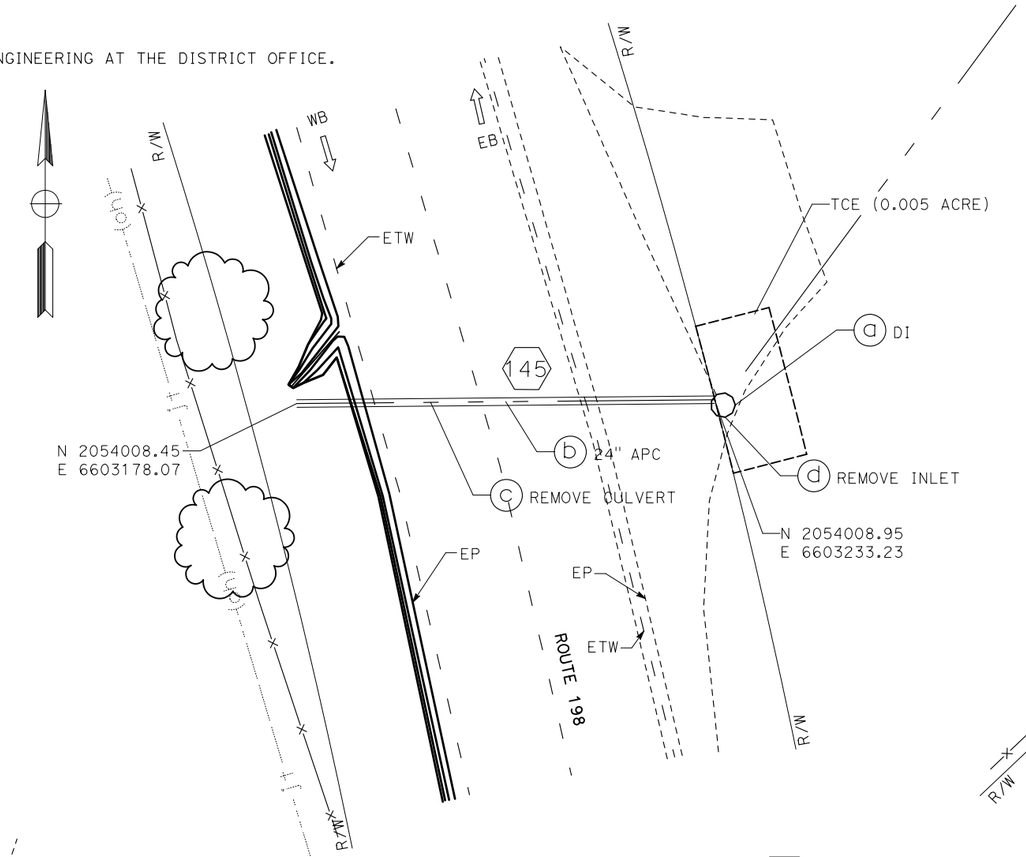

LOCATION No. 145

ROUTE 198, PM 42.54

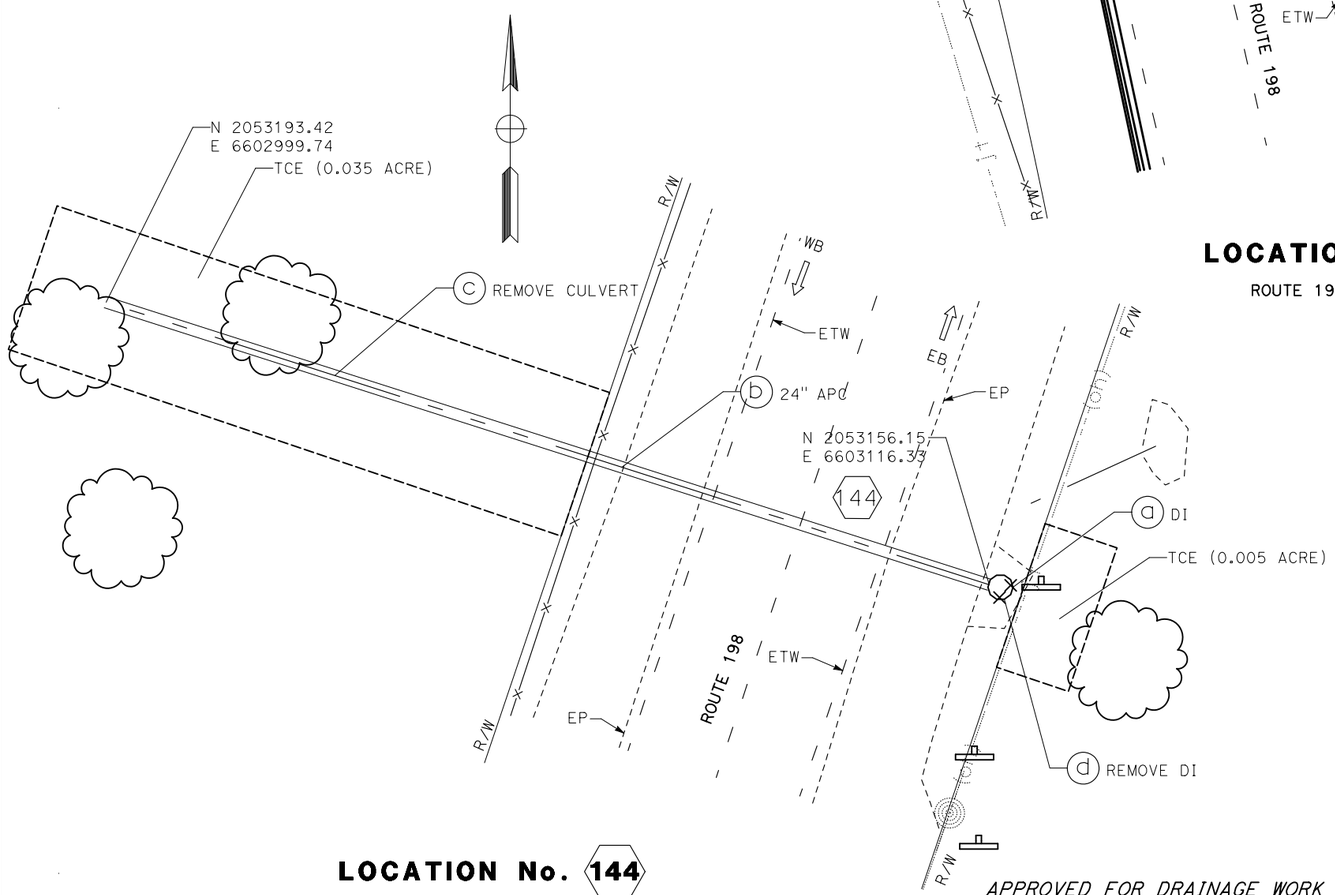

LOCATION No. 144

ROUTE 198, PM 42.38

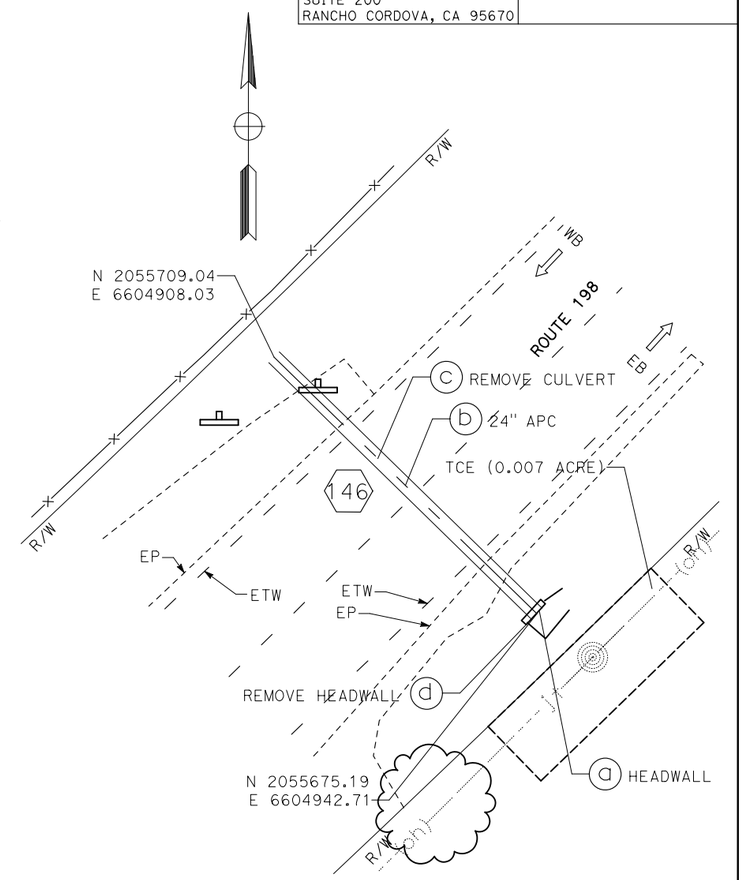

LOCATION No. 146

ROUTE 198, PM 43.11

APPROVED FOR DRAINAGE WORK ONLY

DRAINAGE PLAN

SCALE: 1"=10'

ATTACHMENT C

D-44

REVISED BY	DATE REVISED
PAUL BRADBURY	DAVE MELIS
CALCULATED-DESIGNED BY	CHECKED BY
CONSULTANT FUNCTIONAL SUPERVISOR	JOSE SILVA

STATE OF CALIFORNIA - DEPARTMENT OF TRANSPORTATION

Caltrans

LAST REVISION XX-XX-XX | DATE PLOTTED => 19-APR-2022 | TIME PLOTTED => 13:21

Dist	COUNTY	ROUTE	POST MILES TOTAL PROJECT	SHEET No.	TOTAL SHEETS
06	Tul	198	0.0/44.0		XX

REGISTERED CIVIL ENGINEER DATE

XX-XX-XX
PLANS APPROVAL DATE

REGISTERED PROFESSIONAL ENGINEER No. Exp. CIVIL STATE OF CALIFORNIA

THE STATE OF CALIFORNIA OR ITS OFFICERS OR AGENTS SHALL NOT BE RESPONSIBLE FOR THE ACCURACY OR COMPLETENESS OF SCANNED COPIES OF THIS PLAN SHEET.

DEWBERRY ENGINEERS INC.
11060 WHITE ROCK ROAD,
SUITE 200
RANCHO CORDOVA, CA 95670

NOTE:

FOR ACCURATE RIGHT OF WAY DATA, CONTACT RIGHT OF WAY ENGINEERING AT THE DISTRICT OFFICE.

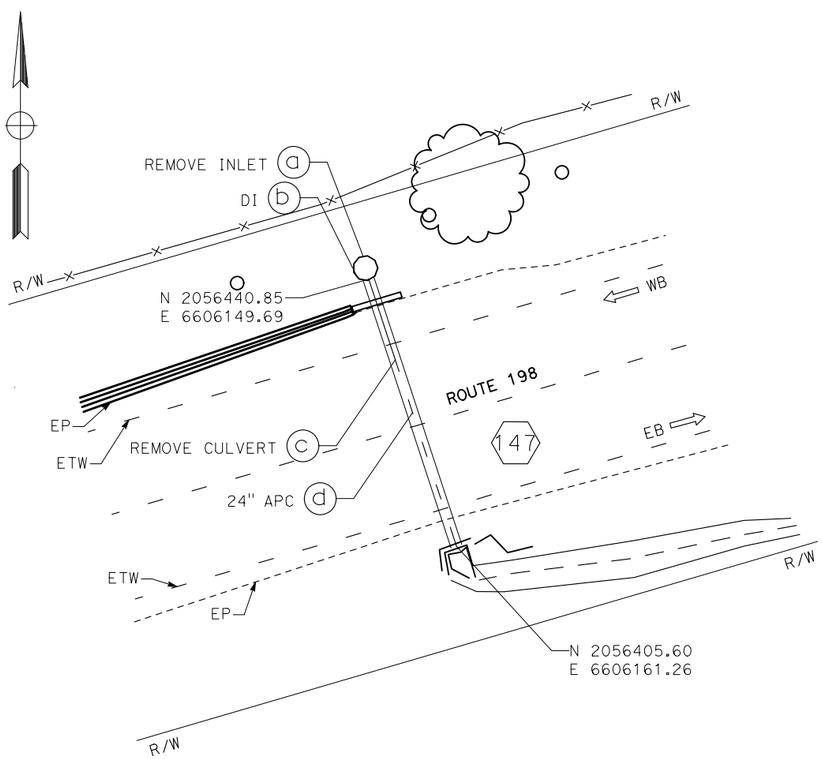

LOCATION No. 147
ROUTE 198, PM 43.39

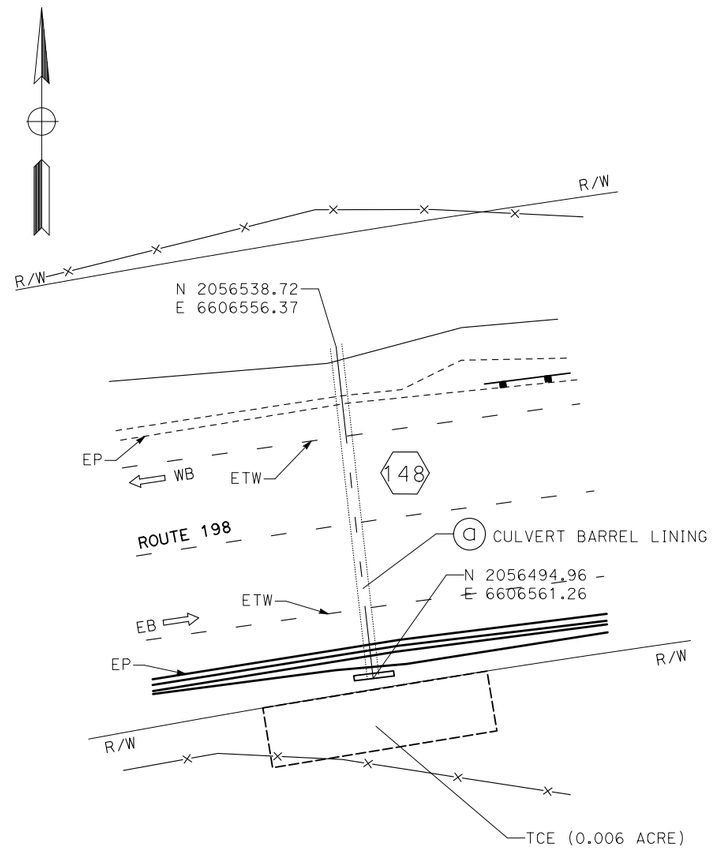

LOCATION No. 148
ROUTE 198, PM 43.47

APPROVED FOR DRAINAGE WORK ONLY

DRAINAGE PLAN
SCALE: 1"=10'
ATTACHMENT C

D-45

STATE OF CALIFORNIA - DEPARTMENT OF TRANSPORTATION
Caltrans

CONSULTANT FUNCTIONAL SUPERVISOR: JOSE SILVA
CALCULATED-DESIGNED BY: PAUL BRADBURY
CHECKED BY: DAVE MELIS
REVISED BY
DATE REVISED

LAST REVISION XX-XX-XX
DATE PLOTTED => 19-APR-2022
TIME PLOTTED => 13:21

Dist	COUNTY	ROUTE	POST MILES TOTAL PROJECT	SHEET No.	TOTAL SHEETS
06	Tul	198	0.0/44.0		XX

REGISTERED CIVIL ENGINEER DATE

XX-XX-XX
PLANS APPROVAL DATE

REGISTERED PROFESSIONAL ENGINEER No. Exp. CIVIL STATE OF CALIFORNIA

THE STATE OF CALIFORNIA OR ITS OFFICERS OR AGENTS SHALL NOT BE RESPONSIBLE FOR THE ACCURACY OR COMPLETENESS OF SCANNED COPIES OF THIS PLAN SHEET.

DEWBERRY ENGINEERS INC.
11060 WHITE ROCK ROAD,
SUITE 200
RANCHO CORDOVA, CA 95670

NOTE:

FOR ACCURATE RIGHT OF WAY DATA, CONTACT RIGHT OF WAY ENGINEERING AT THE DISTRICT OFFICE.

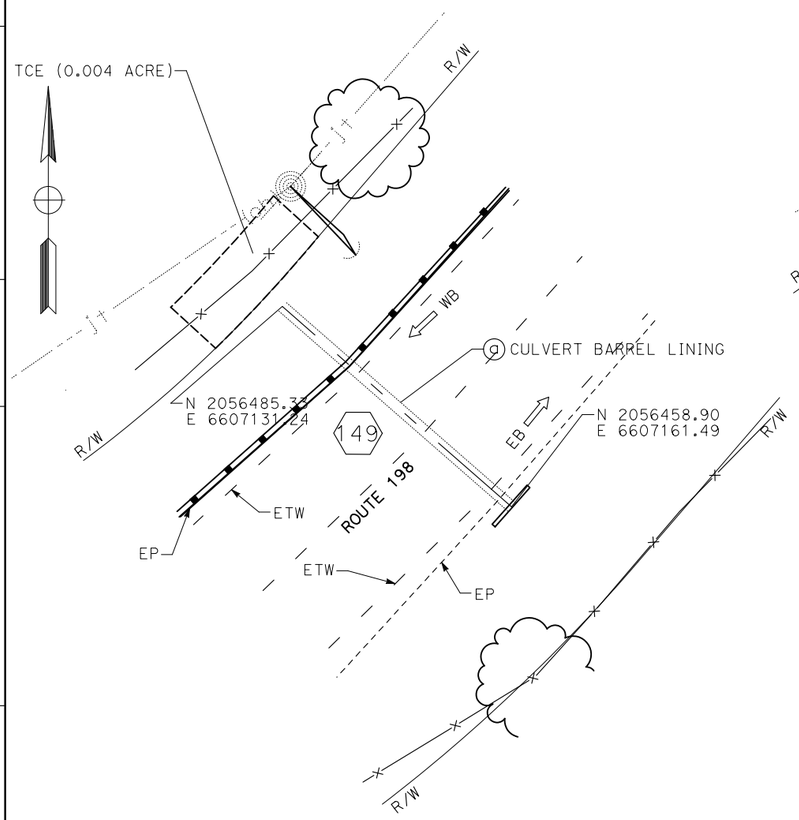

LOCATION No. 149

ROUTE 198, PM 43.59

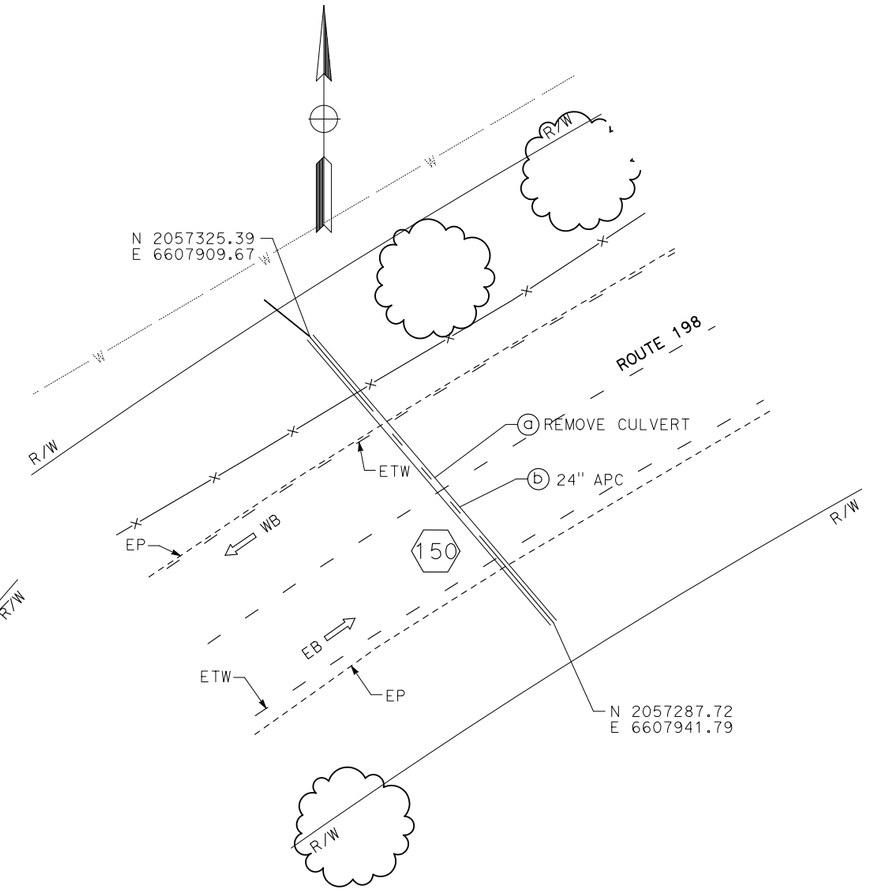

LOCATION No. 150

ROUTE 198, PM 43.80

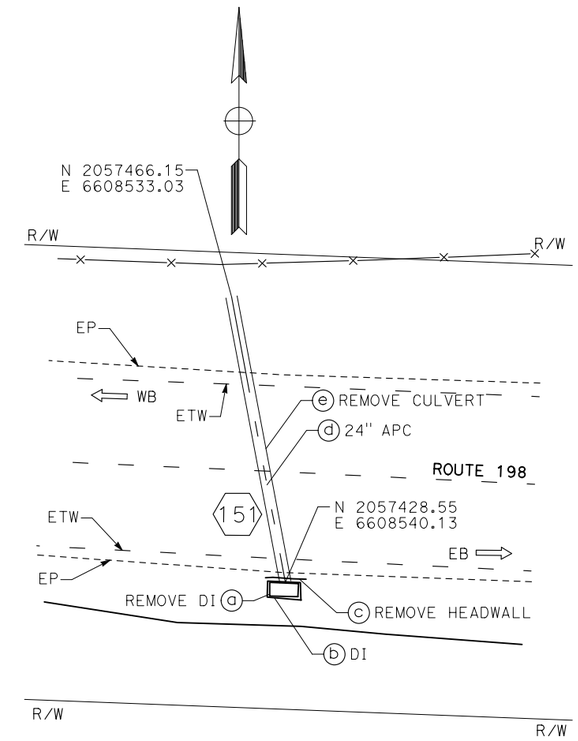

LOCATION No. 151

ROUTE 198, PM 43.88

APPROVED FOR DRAINAGE WORK ONLY

DRAINAGE PLAN

SCALE: 1"=10'

ATTACHMENT C

D-46

REVISED BY	DATE REVISED
PAUL BRADBURY	DAVE MELIS
CALCULATED-DESIGNED BY	CHECKED BY
CONSULTANT FUNCTIONAL SUPERVISOR	JOSE SILVA

STATE OF CALIFORNIA - DEPARTMENT OF TRANSPORTATION

Caltrans

LAST REVISION XX-XX-XX
DATE PLOTTED => 19-APR-2022
TIME PLOTTED => 13:21

Tulare 198 Culverts Repair and Replacement Project

On State Route 198 in Tulare County
06-TUL-198-PM 0.0-44.0
Project ID Number 0618000045
State Clearinghouse Number 2021120503

Initial Study
with Negative Declaration

Volume 1 of 2

Prepared by the
State of California Department of Transportation

May 2022

General Information About This Document

Document prepared by: Jason Adair, Associate Environmental Planner.

[The following text has been added since the draft environmental document was circulated.] The Initial Study was circulated to the public for 32 days between December 12, 2021, and January 12, 2022. Comments received during this period are included in Appendix C, which has been added since the draft environmental document was circulated. Elsewhere, language has been added throughout the document to indicate where a change has been made since the circulation of the draft environmental document. Minor editorial changes and clarifications have not been so indicated.

For individuals with sensory disabilities, this document can be made available in Braille, in large print, on audiocassette, or on computer disk. To obtain a copy in one of these alternate formats, please write to or call Caltrans, Attention: Chelsea Starr, District 6 Environmental Division, California Department of Transportation, 2015 East Shields Avenue, Suite 100-200, Fresno, California 93726; 559-383-5432 (Voice), or use the California Relay Service 1-800-735-2929 (Teletype to Voice), 1-800-735-2922 (Voice to Teletype), 1-800-855-3000 (Spanish Teletype to Voice and Voice to Teletype), 1-800-854-7784 (Spanish and English Speech-to-Speech), or 711.

State Clearinghouse Number 2021120503
06-TUL-198-PM 0.0-44.0
Project ID Number 0618000045

Repair or replace 140 culverts at various locations on State Route 198 from post miles 0.0 to 44.0 in Tulare County

INITIAL STUDY
with Negative Declaration

Submitted Pursuant to: (State) Division 13, California Public Resources Code

THE STATE OF CALIFORNIA
Department of Transportation
and
Responsible Agency: California Transportation Commission

Jennifer H Taylor

Jennifer H. Taylor
Environmental Office Chief, District 6
California Department of Transportation
CEQA Lead Agency

05/26/2022

Date

The following individual can be contacted for more information about this document:

Juergen Vespermann, 2015 East Shields Avenue, Suite 100-200, Fresno, California 93726; 559-832-0051

Negative Declaration

Pursuant to: Division 13, Public Resources Code

State Clearinghouse Number: 2021120503

District-County-Route-Post Mile: 06-TUL-198-PM 0.0-44.0

EA/Project Number: EA 06-0X260 and Project ID Number 0618000045

Project Description

The California Department of Transportation (Caltrans) proposes to repair or replace 140 culverts on State Route 198 in Tulare County at various locations from the Kings/Tulare county line to Pumpkin Hollow Bridge on the Kaweah River, about half a mile west of the Sequoia National Park entrance.

Determination

An Initial Study has been prepared by Caltrans, District 6.

On the basis of this study, it is determined that the proposed action will not have a significant effect on the environment for the following reasons:

The project will have no effect on aesthetics, agriculture and forest resources, air quality, cultural resources, paleontology, energy, hazards and hazardous materials, hydrology and water quality, land use and planning, mineral resources, noise, population and housing, public services, recreation, transportation, tribal cultural resources, utilities and service systems, and wildfires.

The project will have no significant effect on geology and soils (paleontological resources), greenhouse gas emissions, and biological resources.

Jennifer H Taylor

Jennifer H. Taylor
Environmental Office Chief, District 6
California Department of Transportation

05/26/2022

Date

Table of Contents

Chapter 1 Proposed Project

1.1 Introduction

The California Department of Transportation (Caltrans) proposes to repair or replace 122 culverts on State Route 198 in Tulare County at various locations from the Kings/Tulare county line to Pumpkin Hollow Bridge on the Kaweah River, about half a mile west of the Sequoia National Park entrance.

State Route 198 in Tulare County begins about 3.5 miles west of State Route 99 at the Kings/Tulare county line (Road 44) in a flat agricultural area consisting of row crops, fruit and nut orchards, and dairies. This state route extends eastward from State Route 99 through the City of Visalia for 9 miles through urban flat terrain. To the east and north of Visalia, State Route 198 runs through flat agricultural land within the San Joaquin Valley for about 14 miles; the highway is bordered by nut and fruit tree orchards, including citrus, vineyards, and rangelands. Approximately 1 mile north of Lemon Cove, State Route 198 climbs past Terminus Dam to Lake Kaweah. East of the lake, the state route follows the Kaweah River through the rural community of Three Rivers in mountainous terrain, ending just short of Pumpkin Hollow Bridge.

Currently, the segment of State Route 198 from the Kings/Tulare county line to the east of Road 68 is a four-lane expressway with 10-foot-wide outside shoulders and 5-foot-wide inside shoulders. The segment from east of Road 80 (Plaza Drive) to Outside Creek is a four-lane freeway. The highway segment from Outside Creek to State Route 245 is a four-lane expressway. The highway segment from State Route 245 to the Sequoia National Park boundary is a rural, conventional two-lane highway with 0- to 2-foot-wide outside shoulders.

The preliminary estimated construction cost of the project is $11,087,000. The project is to be funded from the 2020 State Highway Operation and Protection Program's Drainage System Restoration Program in the 2022/2023 fiscal year.

Construction is scheduled to begin in April 2024 and will take 300 working days to complete. No night work is planned for this project.

1.2 Purpose and Need

1.2.1 Purpose

The purpose of the project is to preserve the operational integrity of the highway system.

1.2.2 Need

Rehabilitation of drainage culverts is essential for this segment of State Route 198 in Tulare County to avoid possible future flooding damage and the resulting pavement failure caused by blocked and defective culverts. Maintaining culverts is necessary for the stability and proper functioning of the roadway.

These culverts have reached or exceeded their design life. They are perforated, heavily rusted, and have damaged end sections and separated joints. Repairing and replacing the culverts is necessary to maintain the highway in good operating condition.

1.3 Project Description

The project will repair or replace 122 culverts on State Route 198 in Tulare County at various locations from the Kings/Tulare county line to Pumpkin Hollow Bridge on the Kaweah River, about half a mile west of the Sequoia National Park entrance. See Figure 1-1 for the project vicinity map and Figure 1-2 for the project location map.

Figure 1-1 Project Vicinity Map

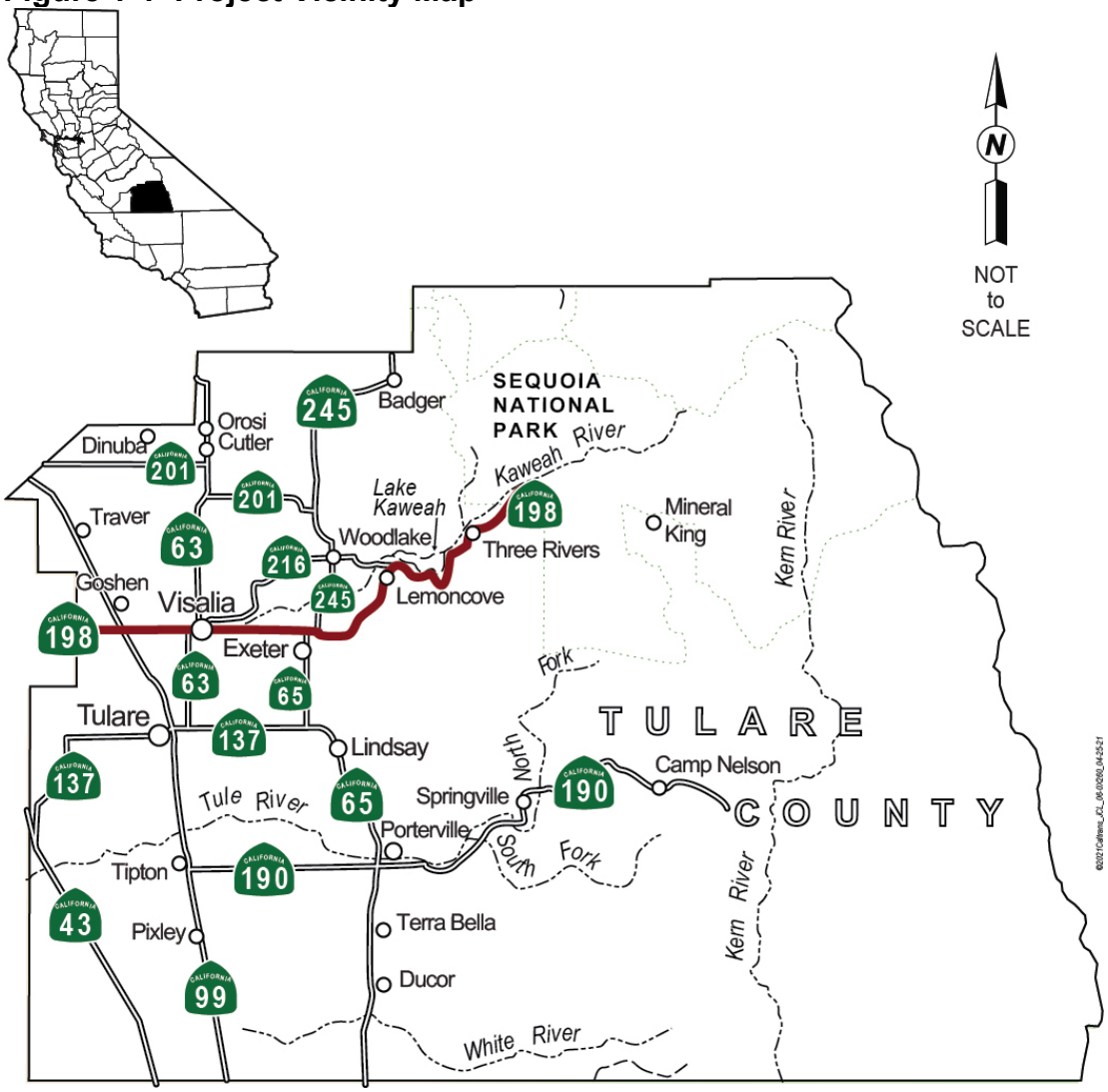

Figure 1-2 Project Location Map

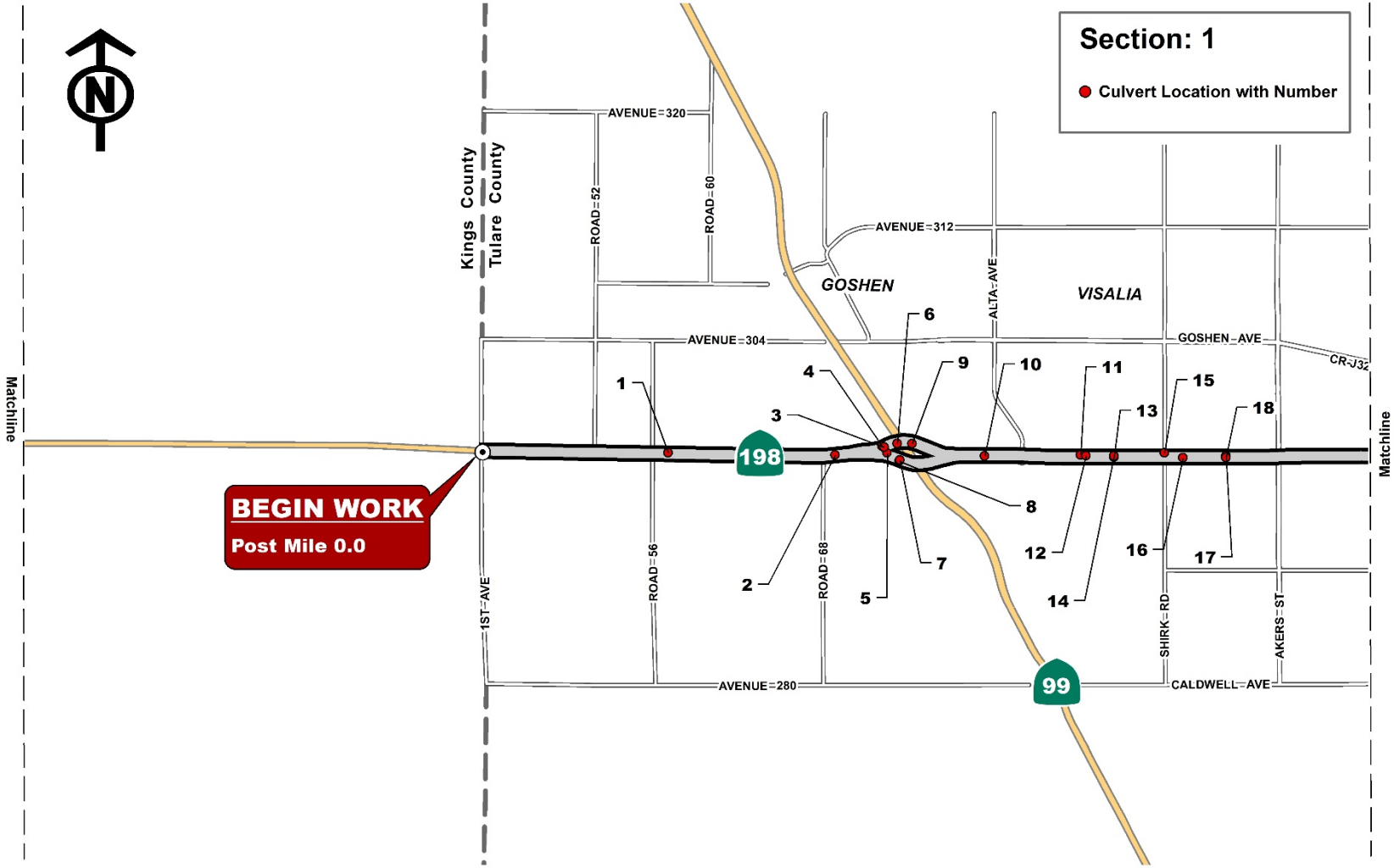

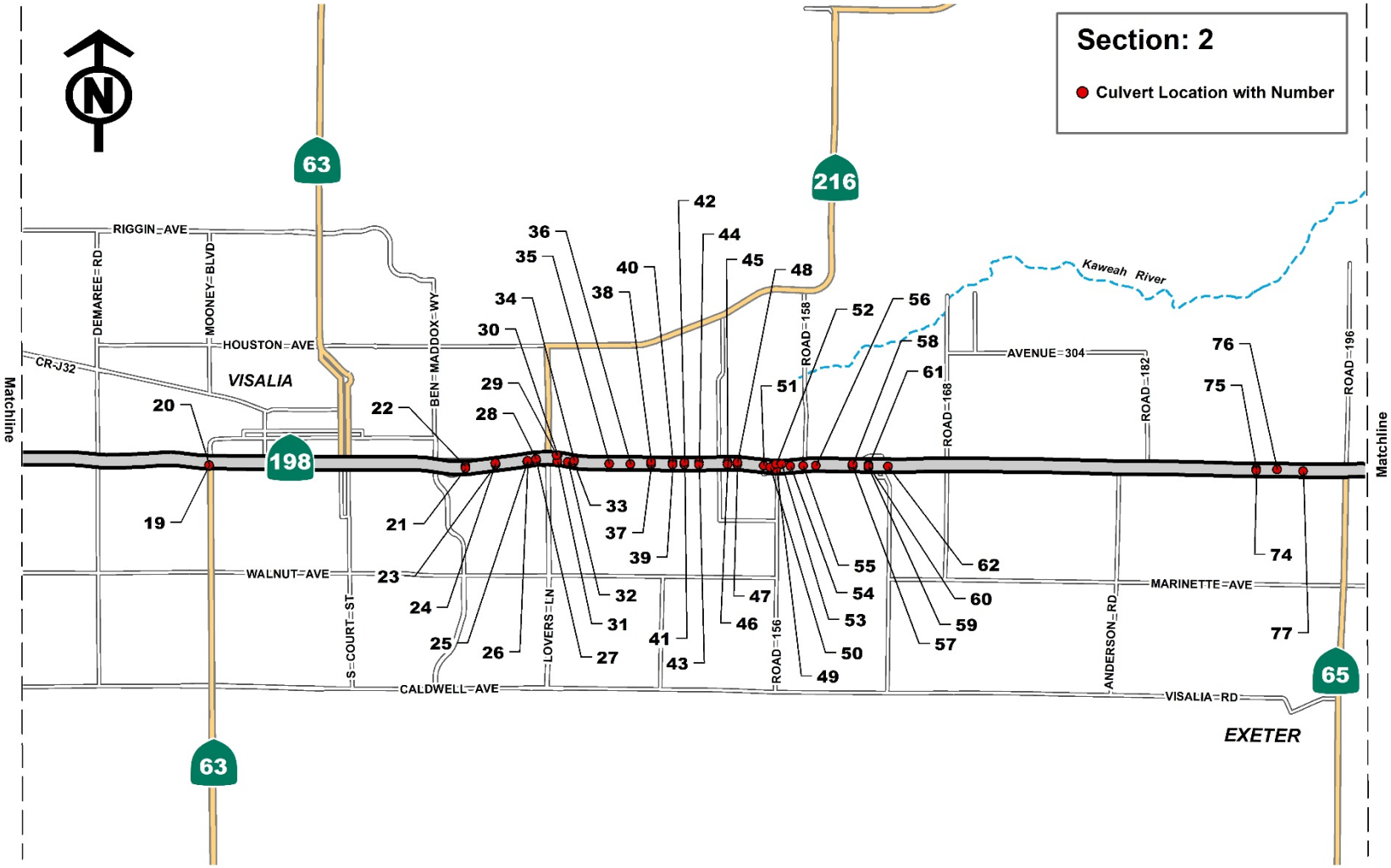
Section: 2
Culvert Location with Number
N
63
216
198
65
RIGGIN AVE
DEMAREE RD
MOONEY BLVD
HOUSTON AVE
CR-J32
VISALIA
BEN MADDOX WY
WALNUT AVE
S COURT ST
LOVERS LN
CALDWELL AVE
ROAD 156
ROAD 158
ROAD 168
AVENUE 304
ROAD 182
ANDERSON RD
MARINETTE AVE
VISALIA RD
ROAD 196
EXETER
Kaweah River
Matchline
Matchline
19
20
21
22
23
24
25
26
27
28
29
30
31
32
33
34
35
36
37
38
39
40
41
42
43
44
45
46
47
48
49
50
51
52
53
54
55
56
57
58
59
60
61
62
74
75
76
77

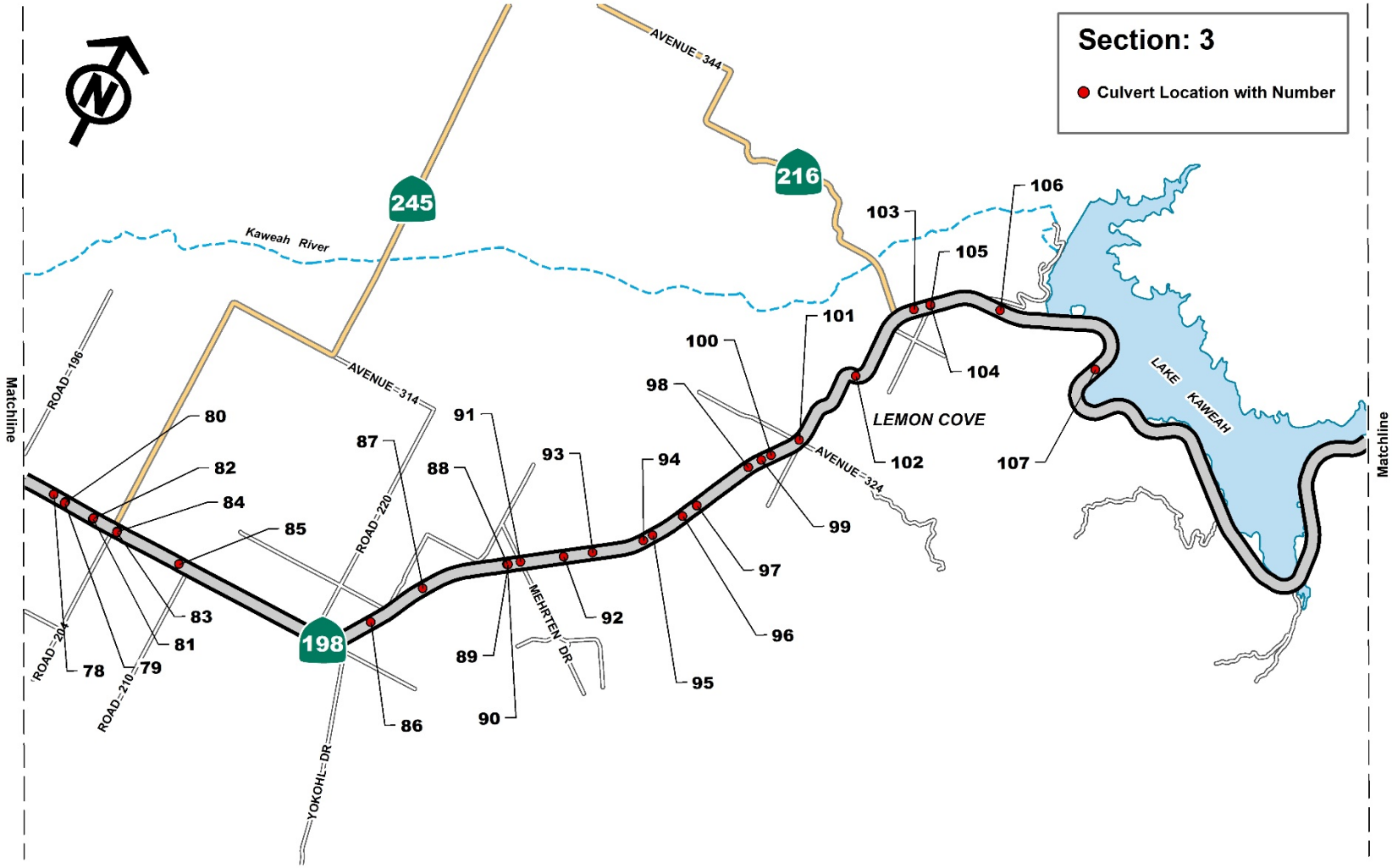
Section: 3
Culvert Location with Number
Kaweah River
245
216
198
AVENUE=344
AVENUE=314
AVENUE=324
ROAD=196
ROAD=204
ROAD=210
ROAD=220
YOKOHL=DR
MEHRTEN DR
LEMON COVE
LAKE KAWEAH
Matchline
Matchline
78
79
80
81
82
83
84
85
86
87
88
89
90
91
92
93
94
95
96
97
98
99
100
101
102
103
104
105
106
107

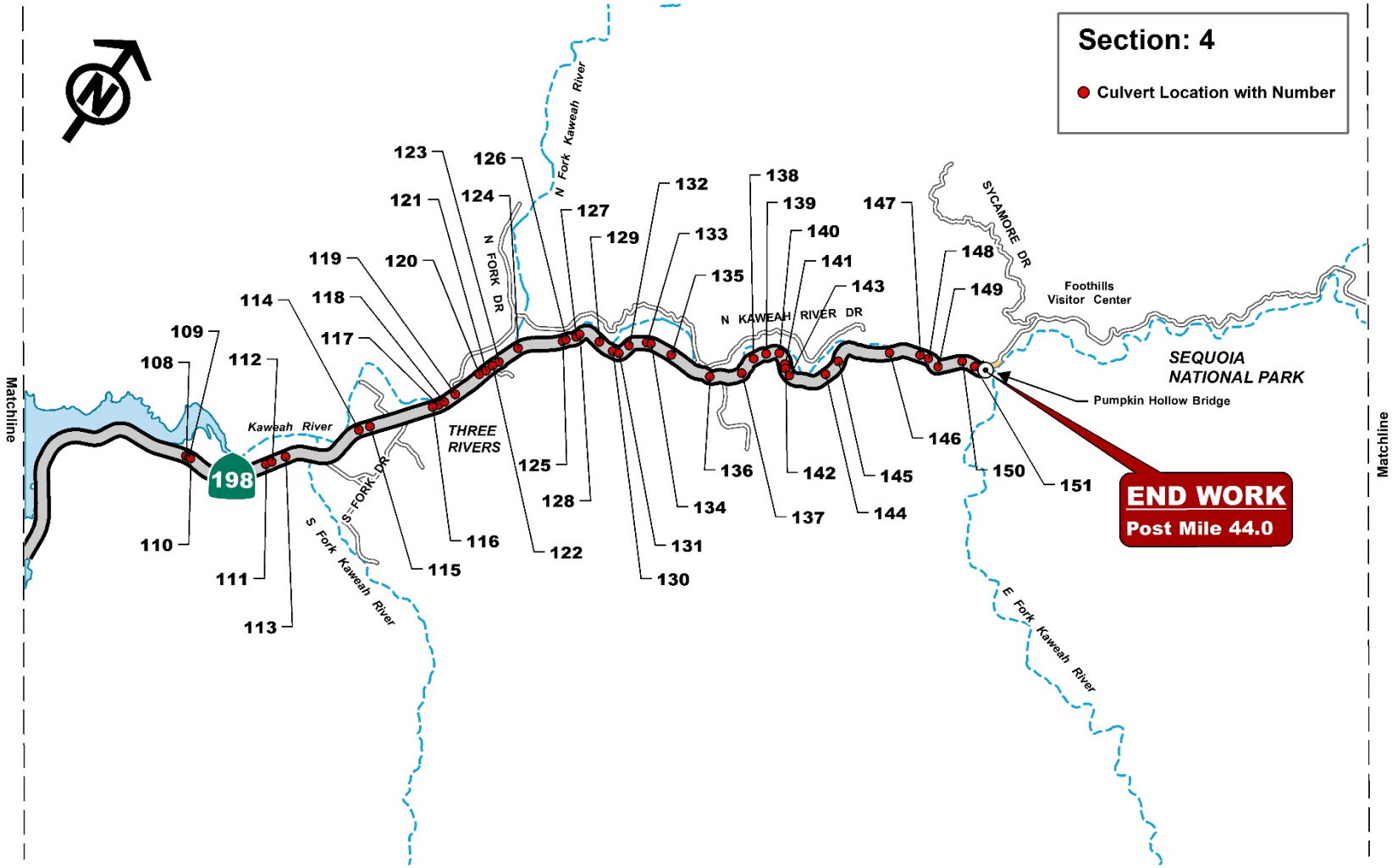
Section: 4
Culvert Location with Number
Matchline
Matchline
198
Kaweah River
THREE RIVERS
N FORK DR
S FORK DR
S Fork Kaweah River
N Fork Kaweah River
N KAWEAH RIVER DR
SYCAMORE DR
Foothills Visitor Center
SEQUOIA NATIONAL PARK
Pumpkin Hollow Bridge
E Fork Kaweah River
END WORK
Post Mile 44.0
108
109
110
111
112
113
114
115
116
117
118
119
120
121
122
123
124
125
126
127
128
129
130
131
132
133
134
135
136
137
138
139
140
141
142
143
144
145
146
147
148
149
150
151

1.4 Project Alternatives

1.4.1 Build Alternatives

The Build Alternative will restore the existing drainage system to good condition by repairing and/or replacing the identified deteriorating culverts within the project limits.

Most of the existing culverts are corrugated steel pipe (also known by the abbreviation CSP). A few culverts are high-density polyethylene (abbreviated HDPE) or concrete.

[The following sentence has been updated since the draft environmental document was circulated.] An estimated 57 culverts will be replaced. All new culverts will be 24 inches in diameter, so smaller diameter culverts will be upgraded. The pipe materials will likely be reinforced concrete pipe at most locations; plastic culvert pipe may also be used at some locations. The line and grade of the new culvert will match that of the existing culvert unless the culvert needs to be lowered to maintain the minimum cover over the pipe, or if a change in the profile or alignment of the culvert is needed in order to install it properly. Existing inlets and headwalls will be replaced as well.

Two construction methods are proposed for installing the new culverts. [The following sentence has been updated since the draft environmental document was circulated.] At 14 locations that are in freeway/expressway segments with high traffic volumes, trenchless excavation construction methods (jack and bore method) are proposed to minimize disruptions to existing traffic and to avoid needing to trench through concrete pavement. For new culverts on the two-lane conventional highway, open trench construction methods are proposed.

[The following sentence has been updated since the draft environmental document was circulated.] Most of the repair work will involve installing culvert barrel linings using the cured-in-place pipe method at 62 locations. Grading around the inlet and outlet of the existing culvert will be minimal. Repairs at three culverts will include joint sealing and repair.

The existing slopes at the culvert outlet will be restored by stabilizing the slope with rock slope protection and erosion control.

At the time environmental studies began, 151 culverts were planned for repair or replacement. [The following sentence has been updated since the draft environmental document was circulated.] Since that time, 29 locations were eliminated from the scope of work because they were in good shape based on a field inspection or they had been replaced during a prior construction project.

Table 1.1 lists each culvert location, the material of the existing pipe, and the diameter, length, and proposed improvements to repair or replace each culvert. In the table, the following abbreviations or terms are used: CSP—corrugated steel pipe; CSP arch—corrugated steel pipe that is bent to be flatter on the bottom; HDPE—high-density polyethylene; Dual—a set of two pipes of the same diameter lie abutting each other; APC—alternative pipe culvert—the contractor chooses the type of pipe from a list in the specifications.

[Table 1.1 has been updated since the draft environmental document was circulated.]

Table 1.1 Culvert Improvements on State Route 198

Location	Post Mile	Culvert Material	Existing Diameter (Inches)	Existing Length (Feet)	Proposed Improvement
1	1.64	HDPE	24	83	Joint sealing/repair
Not Applicable	Not Applicable	Not Applicable	Not Applicable	Not Applicable	Not Applicable
3	3.54	CSP	24	103	Culvert barrel lining
4	3.54	CSP	24	107	Culvert barrel lining
5	3.54	CSP	24	246	Culvert barrel lining
6	3.63	CSP	24	90	Culvert barrel lining
Not Applicable	Not Applicable	Not Applicable	Not Applicable	Not Applicable	Not Applicable
8	3.73	CSP	24	191	Culvert barrel lining
9	3.83	CSP	12	40	Culvert barrel lining
10	4.45	CSP	Dual 18	69	Culvert barrel lining
11	5.28	CSP	24	37	Culvert barrel lining
12	5.34	CSP	Dual 18	64	Culvert barrel lining
Not Applicable	Not Applicable	Not Applicable	Not Applicable	Not Applicable	Not Applicable
Not Applicable	Not Applicable	Not Applicable	Not Applicable	Not Applicable	Not Applicable
15	5.80	CSP	18	54	Culvert barrel lining
Not Applicable	Not Applicable	Not Applicable	Not Applicable	Not Applicable	Not Applicable

Location	Post Mile	Culvert Material	Existing Diameter (Inches)	Existing Length (Feet)	Proposed Improvement
17	6.31	CSP/HDPE	18	78	Replace with 24-inch-diameter reinforced concrete pipe using the jack and bore method
18	6.31	CSP	18	78	Culvert barrel lining
19	8.15	Concrete	15	23	Joint sealing/repair
20	8.15	Concrete	18	48	Joint sealing/repair
21	11.01	CSP	24	84	Replace with 24-inch-diameter reinforced concrete pipe using the jack and bore method
22	11.01	CSP	24	94	Replace with 24-inch-diameter reinforced concrete pipe using the jack and bore method
23	11.28	CSP	24	68	Culvert barrel lining
24	11.28	CSP	24	64	Culvert barrel lining
25	11.56	CSP	18	47	Replace with 24-inch-diameter reinforced concrete pipe using the jack and bore method
26	11.56	CSP	18	56	Culvert barrel lining
Not Applicable	Not Applicable	Not Applicable	Not Applicable	Not Applicable	Not Applicable
Not Applicable	Not Applicable	Not Applicable	Not Applicable	Not Applicable	Not Applicable
29	11.79	CSP	18	46	Culvert barrel lining
30	11.79	CSP	18	46	Culvert barrel lining
31	11.81	CSP	18	62	Culvert barrel lining
32	11.91	CSP	18	48	Culvert barrel lining
33	11.96	CSP	24	83	Culvert barrel lining

Location	Post Mile	Culvert Material	Existing Diameter (Inches)	Existing Length (Feet)	Proposed Improvement
34	11.96	CSP	24	63	Culvert barrel lining
35	12.28	CSP	24	93	Culvert barrel lining
36	12.47	CSP	24	96	Replace with 24-inch-diameter reinforced concrete pipe using the jack and bore method
37	12.65	CSP	24	97	Culvert barrel lining
38	12.65	CSP arch	24 by 18	98	Culvert barrel lining
39	12.84	CSP	24	96	Replace with 24-inch-diameter reinforced concrete pipe using the jack and bore method
40	12.84	CSP arch	24 by 18	98	Culvert barrel lining
41	12.94	CSP	24	96	Replace with 24-inch-diameter reinforced concrete pipe using the jack and bore method
42	12.94	CSP	24	94	Replace with 24-inch-diameter reinforced concrete pipe using the jack and bore method
43	13.06	CSP	24	98	Culvert barrel lining
44	13.06	CSP	18	135	Culvert barrel lining
45	13.31	CSP	24	98	Culvert barrel lining
46	13.31	CSP arch	24 by 18	100	Culvert barrel lining
47	13.40	CSP	24	116	Culvert barrel lining
48	13.40	CSP	24	107	Culvert barrel lining
49	13.67	CSP	18	58	Culvert barrel lining

Location	Post Mile	Culvert Material	Existing Diameter (Inches)	Existing Length (Feet)	Proposed Improvement
Not Applicable	Not Applicable	Not Applicable	Not Applicable	Not Applicable	Not Applicable
51	13.67	CSP	18	44	Culvert barrel lining
52	13.67	CSP	24	117	Replace with 24-inch-diameter reinforced concrete pipe using the jack and bore method
53	13.67	CSP	18	46	Culvert barrel lining
54	13.67	CSP	18	63	Culvert barrel lining
55	13.67	CSP	18	45	Culvert barrel lining
56	14.09	CSP	24	96	Replace with 24-inch-diameter reinforced concrete pipe using the jack and bore method
57	14.42	CSP	24	100	Replace with 24-inch-diameter reinforced concrete pipe using the jack and bore method
58	14.42	CSP	18	108	Replace with 24-inch-diameter reinforced concrete pipe using the jack and bore method
Not Applicable	Not Applicable	Not Applicable	Not Applicable	Not Applicable	Not Applicable
Not Applicable	Not Applicable	Not Applicable	Not Applicable	Not Applicable	Not Applicable
Not Applicable	Not Applicable	Not Applicable	Not Applicable	Not Applicable	Not Applicable
62	14.72	CSP	18	63	Replace with 24-inch-diameter reinforced concrete pipe using the jack and bore method
74	17.98	CSP	24	86	Culvert barrel lining
75	17.98	CSP	24	87	Culvert barrel lining

Location	Post Mile	Culvert Material	Existing Diameter (Inches)	Existing Length (Feet)	Proposed Improvement
76	18.14	CSP	24	66	Replace with 24-inch-diameter alternative pipe culvert
77	18.37	CSP	24	64	Replace with 24-inch-diameter alternative pipe culvert
78	19.18	CSP	18	46	Culvert barrel lining
79	19.30	CSP	24	60	Replace with 24-inch-diameter alternative pipe culvert
80	19.30	CSP	24	66	Replace with 24-inch-diameter alternative pipe culvert
Not Applicable	Not Applicable	Not Applicable	Not Applicable	Not Applicable	Not Applicable
Not Applicable	Not Applicable	Not Applicable	Not Applicable	Not Applicable	Not Applicable
83	19.81	CSP	24	61	Culvert barrel lining
84	19.81	CSP	24	63	Culvert barrel lining
85	20.43	CSP arch	24 by 12	60	Culvert barrel lining
86	22.32	CSP	24	60	Culvert barrel lining
87	22.86	CSP	18	63	Culvert barrel lining
88	23.64	CSP	24	74	Replace with 24-inch-diameter alternative pipe culvert
89	23.64	CSP	24	65	Replace with 24-inch-diameter alternative pipe culvert
Not Applicable	Not Applicable	Not Applicable	Not Applicable	Not Applicable	Not Applicable
Not Applicable	Not Applicable	Not Applicable	Not Applicable	Not Applicable	Not Applicable

Location	Post Mile	Culvert Material	Existing Diameter (Inches)	Existing Length (Feet)	Proposed Improvement
92	24.15	CSP	24	61	Replace with 24-inch-diameter alternative pipe culvert
93	24.40	CSP	24	69	Culvert barrel lining
94	24.87	CSP	24	68	Culvert barrel lining
95	24.96	CSP	24	68	Culvert barrel lining
96	25.24	CSP	24	73	Culvert barrel lining
97	25.39	CSP	24	101	Culvert barrel lining
98	25.98	CSP	24	81	Replace with 24-inch-diameter alternative pipe culvert
99	26.11	CSP	24	63	Culvert barrel lining
100	26.20	Concrete/CSP	12/18	58	Replace with 24-inch-diameter alternative pipe culvert
101	26.49	CSP	Dual 24	89	Replace one pipe with a 24-inch-diameter alternative pipe culvert
102	27.29	CSP	24	98	Replace with 24-inch-diameter alternative pipe culvert
103	28.12	CSP	24	135	Replace with 24-inch-diameter alternative pipe culvert
104	28.28	CSP	18	20	Replace with 24-inch-diameter alternative pipe culvert
105	28.28	CSP	18	74	Replace with 24-inch-diameter alternative pipe culvert

Location	Post Mile	Culvert Material	Existing Diameter (Inches)	Existing Length (Feet)	Proposed Improvement
106	28.91	CSP	36	278	Culvert barrel lining
107	30.29	CSP	48	169	Culvert barrel lining
108	35.86	CSP	24	64	Replace with 24-inch-diameter alternative pipe culvert
109	35.89	CSP	18	67	Replace with 24-inch-diameter alternative pipe culvert
110	35.89	Concrete	18	45	Replace with 24-inch-diameter alternative pipe culvert
111	36.66	CSP	18	52	Replace with 24-inch-diameter alternative pipe culvert
112	36.72	CSP	24	54	Culvert barrel lining
113	36.84	CSP	18	57	Replace with 24-inch-diameter alternative pipe culvert
114	37.59	CSP	24	63	Culvert barrel lining
115	37.69	CSP	18	64	Replace with 24-inch-diameter alternative pipe culvert
116	38.27	CSP	18	67	Culvert barrel lining
117	38.33	CSP	18	75	Replace with 24-inch-diameter alternative pipe culvert
118	38.39	CSP	18	61	Replace with 24-inch-diameter alternative pipe culvert

Location	Post Mile	Culvert Material	Existing Diameter (Inches)	Existing Length (Feet)	Proposed Improvement
119	38.50	CSP	12	37	Replace with 24-inch-diameter alternative pipe culvert
120	38.78	CSP	18	185	Replace with 24-inch-diameter reinforced concrete pipe using the jack and bore method.
121	38.82	CSP	18	42	Replace with 24-inch-diameter alternative pipe culvert
122	38.91	CSP	24	59	Replace with 24-inch-diameter alternative pipe culvert
123	38.99	CSP	12	45	Culvert barrel lining
124	39.20	CSP	12	40	Culvert barrel lining
Not Applicable	Not Applicable	Not Applicable	Not Applicable	Not Applicable	Not Applicable
126	39.63	CSP	18	44	Replace with 24-inch-diameter alternative pipe culvert
127	39.73	CSP	18	43	Replace with 24-inch-diameter alternative pipe culvert
Not Applicable	Not Applicable	Not Applicable	Not Applicable	Not Applicable	Not Applicable
129	39.97	CSP	18	38	Culvert barrel lining
130	40.09	CSP	18	39	Replace with 24-inch-diameter alternative pipe culvert
131	40.14	CSP	24	45	Replace with 24-inch-diameter alternative pipe culvert

Location	Post Mile	Culvert Material	Existing Diameter (Inches)	Existing Length (Feet)	Proposed Improvement
132	40.20	CSP	12	48	Replace with 24-inch-diameter alternative pipe culvert
133	40.41	CSP	18	41	Replace with 24-inch-diameter alternative pipe culvert
134	40.45	CSP	18	57	Replace with 24-inch-diameter alternative pipe culvert
135	40.65	CSP	18	47	Replace with 24-inch-diameter alternative pipe culvert
136	41.12	CSP	18	74	Culvert barrel lining
137	41.35	CSP	12	48	Culvert barrel lining
138	41.50	CSP	18	42	Replace with 24-inch-diameter alternative pipe culvert
139	41.62	CSP	18	60	Culvert barrel lining
140	41.74	CSP	24	55	Replace with 24-inch-diameter alternative pipe culvert
Not Applicable	Not Applicable	Not Applicable	Not Applicable	Not Applicable	Not Applicable
Not Applicable	Not Applicable	Not Applicable	Not Applicable	Not Applicable	Not Applicable
143	41.97	CSP	12	38	Replace with 24-inch-diameter alternative pipe culvert
144	42.38	CSP	18	106	Replace with 24-inch-diameter alternative pipe culvert

Location	Post Mile	Culvert Material	Existing Diameter (Inches)	Existing Length (Feet)	Proposed Improvement
145	42.54	CSP	12	57	Replace with 24-inch-diameter alternative pipe culvert
146	43.11	CSP	24	46	Replace with 24-inch-diameter alternative pipe culvert
147	43.39	CSP	18	36	Replace with 24-inch-diameter alternative pipe culvert
148	43.47	CSP	18	41	Culvert barrel lining
149	43.59	CSP	18	40	Culvert barrel lining
150	43.80	CSP	12	46	Replace with 24-inch-diameter alternative pipe culvert
151	43.88	CSP	18	38	Replace with 24-inch-diameter alternative pipe culvert

[The following text has been added since the draft environmental document was circulated.] A total of 29 locations were eliminated from the scope of work because they were in good shape based on a field inspection or they had been replaced during a prior construction project.

[The following sentence has been updated since the draft environmental document was circulated.] Temporary construction easements will be needed from approximately 36 parcels because Caltrans' right-of-way is very narrow along some parts of the rural highway near Lemon Cove and in the vicinity of Three Rivers. Table 1.2 shows the location and post mile, Assessor's Parcel Number, and area of temporary construction easements in fractions of an acre.

No right-of-way acquisition will be needed. [The following sentence has been updated since the draft environmental document was circulated.] However, approximately 16 permanent drainage easements will need to be acquired from adjoining landowners where existing culverts extend beyond Caltrans' narrow right-of-way. Table 1.3 shows the location, Assessor's Parcel Number, and the area of permanent drainage easements in fractions of an acre.

Because construction work will take place in these permanent easements, the locations are also listed in Table 1.2 as requiring temporary construction easements.

[Table 1.2 and Table 1.3 have been updated since the draft environmental document was circulated.]

Table 1.2 Temporary Construction Easements Needed

Location	Post Mile	Assessor's Parcel Number (APN)	Temporary Construction Easement Area (Acre)
44	13.06	(APN) 103-510-006	0.022
93	24.40	(APN) 115-050-070	0.005
94	24.87	(APN) 113-370-026	0.005
95	24.96	(APN) 113-370-025	0.005
96	25.24	(APN) 113-370-020	0.005
96	25.24	(APN) 113-370-010	0.005
97	25.39	(APN) 113-360-001	0.005
97	25.39	(APN) 113-360-007	0.005
98	25.98	(APN) 113-250-076	0.005
102	27.29	(APN) 113-130-001	0.007
Not Available	Not Available	Not Available	Not Available
103	28.12	(APN) 113-160-012	0.035
111	36.66	(APN) 066-100-010	0.002
112	36.72	(APN) 068-130-041	0.002
118	38.39	(APN) 068-030-011	0.007
120	38.78	(APN) 068-320-043	0.070
120	38.78	(APN) 068-320-044	0.090
122	38.91	(APN) 068-320-018	0.005
122	38.91	(APN) 067-190-008	0.005
123	38.99	(APN) 067-190-008	0.007
126	39.63	(APN) 067-140-011	0.005
130	40.09	(APN) 069-160-001	0.005
131	40.14	(APN) 069-160-001	0.005
134	40.45	(APN) 069-200-046	0.007
136	41.12	(APN) 069-190-035	0.014
136	41.12	(APN) 069-190-033	0.005
137	41.35	(APN) 069-450-011	0.007
139	41.62	(APN) 069-450-011	0.009
140	41.74	(APN) 069-350-025	0.011
Not Applicable	Not Applicable	Not Applicable	Not Applicable
Not Applicable	Not Applicable	Not Applicable	Not Applicable
142	41.89	(APN) 069-420-003	0.005
144	42.38	(APN) 069-040-03	0.035
144	42.38	(APN) 069-040-012	0.005
145	42.54	(APN) 069-050-038	0.002
145	42.54	(APN) 069-050-039	0.002
146	43.11	(APN) 069-300-014	0.007
148	43.47	(APN) 069-300-020	0.006
149	43.59	(APN) 069-060-040	0.004

Table 1.3 Permanent Drainage Easements Needed

Location	Post Mile	Assessor's Parcel Number (APN)	Permanent Drainage Easement Area (Acre)
103	28.12	(APN) 113-160-007	0.035
118	38.39	(APN) 068-030-011	0.007
120	38.78	(APN) 068-320-043	0.070
120	38.78	(APN) 068-320-044	0.090
122	38.91	(APN) 068-320-018	0.005
123	38.99	(APN) 067-190-008	0.007
126	39.63	(APN) 067-140-011	0.005
134	40.45	(APN) 069-200-046	0.007
136	41.12	(APN) 069-190-035	0.014
137	41.35	(APN) 069-450-011	0.007
139	41.62	(APN) 069-450-011	0.009
140	41.74	(APN) 069-350-025	0.011
Not Applicable	Not Applicable	Not Applicable	Not Applicable
Not Applicable	Not Applicable	Not Applicable	Not Applicable
142	41.89	(APN) 069-420-003	0.005
144	42.38	(APN) 069-040-034	0.035
145	42.54	(APN) 069-050-038	0.002
145	42.54	(APN) 069-050-039	0.002

During construction along the two-lane conventional highway segment of State Route 198, one-way traffic control will be implemented during working hours. Within the freeway and expressway segments, shoulder closures are anticipated next to the construction areas.

The preliminary estimated construction cost of the project is $11,087,000. The project will be funded from the 2020 State Highway Operation and Protection Program's Drainage System Restoration Program in the 2022/2023 fiscal year.

This project contains a number of standardized project measures that are used on most, if not all, Caltrans projects and were not developed in response to any specific environmental impact resulting from the proposed project. These measures are listed later in this chapter under "Standard Measures and Best Management Practices Included in all Build Alternatives."

1.4.2 No-Build (No-Action) Alternative

The No-Build Alternative will mean that the culverts identified for repair or replacement by this project will continue to deteriorate, causing potential flood damage and pavement failure. The No-Build Alternative will not meet the purpose and need of the project.

1.5 Identification of a Preferred Alternative

The Build Alternative was selected as the preferred alternative because it will preserve the operational integrity of the highway system. Repairing and replacing the culverts is necessary to maintain the highway in good operating condition. The Build Alternative is the only alternative that meets the purpose and need of the project.

1.6 Standard Measures and Best Management Practices Included in all Build Alternatives

The project may include, but will not be limited to, the following Standard Special Provisions:

- 7-1.02K(6)(j)(iii) Earth Material Containing Lead
- 13-2 Water Pollution Control Program
- 13-4 Job Site Management
- 14-1.02 Environmentally Sensitive Area: Pertains to environmentally sensitive areas marked on the ground. Do not enter an environmentally sensitive area unless authorized. If breached, notify the resident engineer.
- 14-6.03 Species Protection: Pertains to protecting regulated species and their habitat that occur within or near the job site. Upon discovery of a regulated species, notify the resident engineer.
- 14-6.03B Bird Protection: Pertains to protecting migratory and nongame birds, their occupied nests, and their eggs. Upon discovery of an injured or dead bird or migratory or nongame bird nests that may be adversely affected by construction activities, immediately stop all work and notify the resident engineer. Exclusion devices, nesting-prevention measures, and removing constructed and unoccupied nests may be used.
- 14-7.03 Discovery of Unanticipated Paleontological Resources: If paleontological resources are discovered at the job site, do not disturb the resources and immediately stop all work within a 60-foot radius of the discovery, secure the area, and notify the resident engineer. Do not move paleontological resources or take them from the job site.
- 14-9.02 Air Pollution Control: Comply with air pollution control rules, regulations, ordinances, and statutes that apply to work performed under the construction contract.
- 14-11 Hazardous Waste and Contamination: Includes specifications relating to hazardous waste and contamination.
- 14-11.04 Dust Control: Excavation, transportation, and handling of material containing hazardous waste or contamination must result in no visible dust migration. When clearing, grubbing, and performing earthwork

operations in areas containing hazardous waste or contamination, provide a water truck or tank on the job site.

- 14-11.12 (also 36-4 and/or 84-9.03B) Removal of Yellow Traffic Stripe and Pavement Marking with Hazardous Waste Residue: Includes specifications for removing, handling, and disposing of yellow thermoplastic and yellow-painted traffic stripe and pavement marking. The residue from the removal of this material is a generated hazardous waste (lead chromate). Removal of existing yellow thermoplastic and yellow-painted traffic stripe and pavement marking exposes workers to health hazards that must be addressed in a Lead Compliance Plan.
- 14-11.13C Safety and Health Protection Measures: Applies to worker protective measures for potential lead exposure.

1.7 Discussion of the NEPA Categorical Exclusion

This document contains information regarding compliance with the California Environmental Quality Act (CEQA) and other state laws and regulations. Separate environmental documentation, supporting a Categorical Exclusion determination, has been prepared in accordance with the National Environmental Policy Act. When needed for clarity, or as required by CEQA, this document may contain references to federal laws and/or regulations (CEQA, for example, requires consideration of adverse effects on species identified as a candidate, sensitive, or special-status species by the U.S. National Marine Fisheries Service and the U.S. Fish and Wildlife Service—that is, species protected by the Federal Endangered Species Act).

1.8 Permits and Approvals Needed

The following permits, licenses, agreements, and certifications are required for project construction:

Agency	Permit/Approval	Status
California Department of Fish and Wildlife	1602 Lake and Streambed Alteration Agreement	Will be applied for during the design phase of the project.
U.S. Army Corps of Engineers	Section 404 Nationwide Permit	Will be applied for during the design phase of the project.
Central Valley Regional Water Quality Control Board	Section 401 Water Quality Certification	Will be applied for during the design phase of the project.

Chapter 2 CEQA Evaluation

2.1 CEQA Environmental Checklist

This checklist identifies physical, biological, social, and economic factors that might be affected by the proposed project. Potential impact determinations include Significant and Unavoidable Impact, Less Than Significant Impact With Mitigation Incorporated, Less Than Significant Impact, and No Impact. In many cases, background studies performed in connection with a project will indicate that there are no impacts to a particular resource. A “No Impact” answer reflects this determination. The questions in this checklist are intended to encourage the thoughtful assessment of impacts and do not represent thresholds of significance.

Project features, which can include both design elements of the project and standardized measures that are applied to all or most Caltrans projects, such as Best Management Practices and measures included in the Standard Plans and Specifications or as Standard Special Provisions, are considered to be an integral part of the project and have been considered prior to any significance determinations documented below.

“No Impact” determinations in each section are based on the scope, description, and location of the proposed project as well as the appropriate technical report (bound separately in Volume 2), and no further discussion is included in this document.

2.1.1 Aesthetics

During the scoping phase of the project, it was determined, based on the type of project, that a Scenic Resources Evaluation did not need to be prepared; therefore, the following determinations have been made:

Except as provided in Public Resources Code Section 21099:

Question—Would the project:	CEQA Significance Determinations for Aesthetics
a) Have a substantial adverse effect on a scenic vista?	**No Impact**
b) Substantially damage scenic resources, including, but not limited to, trees, rock outcroppings, and historic buildings within a state scenic highway?	**No Impact**

Question—Would the project:	CEQA Significance Determinations for Aesthetics
c) In non-urbanized areas, substantially degrade the existing visual character or quality of public views of the site and its surroundings? (Public views are those that are experienced from a publicly accessible vantage point.) If the project is in an urbanized area, would the project conflict with applicable zoning and other regulations governing scenic quality?	**No Impact**
d) Create a new source of substantial light or glare which would adversely affect day or nighttime views in the area?	**No Impact**

2.1.2 Agriculture and Forest Resources

In determining whether impacts to agricultural resources are significant environmental effects, lead agencies may refer to the California Agricultural Land Evaluation and Site Assessment Model (1997) prepared by the California Department of Conservation as an optional model to use in assessing impacts on agriculture and farmland. In determining whether impacts to forest resources, including timberland, are significant environmental effects, lead agencies may refer to information compiled by the California Department of Forestry and Fire Protection regarding the state's inventory of forest land, including the Forest and Range Assessment Project and the Forest Legacy Assessment Project; and the forest carbon measurement methodology provided in Forest Protocols adopted by the California Air Resources Board.

Considering that this project will not acquire any new right-of-way, the following determinations have been made:

Question—Would the project:	CEQA Significance Determinations for Agriculture and Forest Resources
a) Convert Prime Farmland, Unique Farmland, or Farmland of Statewide Importance (Farmland), as shown on the maps prepared pursuant to the Farmland Mapping and Monitoring Program of the California Resources Agency, to non-agricultural use?	**No Impact**
b) Conflict with existing zoning for agricultural use, or a Williamson Act contract?	**No Impact**

Question—Would the project:	CEQA Significance Determinations for Agriculture and Forest Resources
c) Conflict with existing zoning, or cause rezoning of, forest land (as defined in Public Resources Code Section 12220(g)), timberland (as defined by Public Resources Code Section 4526), or timberland zoned Timberland Production (as defined by Government Code Section 51104(g))?	**No Impact**
d) Result in the loss of forest land or conversion of forest land to non-forest use?	**No Impact**
e) Involve other changes in the existing environment which, due to their location or nature, could result in conversion of farmland to non-agricultural use or conversion of forest land to non-forest use?	**No Impact**

2.1.3 Air Quality

Where available, the significance criteria established by the applicable air quality management district or air pollution control district may be relied upon to make the following determinations.

Considering the information in the Air Quality Memorandum dated September 27, 2021, the following significance determinations have been made:

Question—Would the project:	CEQA Significance Determinations for Air Quality
a) Conflict with or obstruct implementation of the applicable air quality plan?	**No Impact**
b) Result in a cumulatively considerable net increase of any criteria pollutant for which the project region is non-attainment under an applicable federal or state ambient air quality standard?	**No Impact**
c) Expose sensitive receptors to substantial pollutant concentrations?	**No Impact**
d) Result in other emissions (such as those leading to odors) adversely affecting a substantial number of people?	**No Impact**

2.1.4 Biological Resources

Considering the information in the Natural Environment Study dated September 29, 2021, the following significance determinations have been made:

Question—Would the project:	CEQA Significance Determinations for Biological Resources
a) Have a substantial adverse effect, either directly or through habitat modifications, on any species identified as a candidate, sensitive, or special-status species in local or regional plans, policies, or regulations, or by the California Department of Fish and Wildlife, U.S. Fish and Wildlife Service, or National Oceanic and Atmospheric Administration Fisheries?	**Less Than Significant Impact**
b) Have a substantial adverse effect on any riparian habitat or other sensitive natural community identified in local or regional plans, policies, regulations or by the California Department of Fish and Wildlife or U.S. Fish and Wildlife Service?	**No Impact**
c) Have a substantial adverse effect on state or federally protected wetlands (including, but not limited to, marsh, vernal pool, coastal, etc.) through direct removal, filling, hydrological interruption, or other means?	**Less Than Significant Impact**
d) Interfere substantially with the movement of any native resident or migratory fish or wildlife species or with established native resident or migratory wildlife corridors, or impede the use of native wildlife nursery sites?	**No Impact**
e) Conflict with any local policies or ordinances protecting biological resources, such as a tree preservation policy or ordinance?	**No Impact**
f) Conflict with the provisions of an adopted Habitat Conservation Plan, Natural Community Conservation Plan, or other approved local, regional, or state habitat conservation plan?	**No Impact**

Affected Environment

a) For details of biological studies, please refer to the Natural Environment Study in Volume 2 (also available upon request—see the last page of this document).

For a list of Federal Endangered Species Act determinations for the project, see Appendix B.

Special-Status Plant Species

The following special-status plant species were not observed within the action area (the area that will be directly affected by the project, plus adjacent areas that may be indirectly affected) and are not expected to be present: San Joaquin adobe sunburst *(Pseudobahia peirsonii)* (Federally Threatened, State Endangered, and California Native Plant Society List 1B.1) and striped adobe lily *(Fritillaria striata)* (State Threatened, California Native Plant Society List 1B.1), and these California Native Plant Society-listed species: brittlescale *(Atriplex depressa),* calico monkeyflower *(Diplacus pictus),* and heartscale *(Atriplex cordulata var. cordulata).*

None of the following species were observed during the several botanical surveys conducted throughout the growing season. However, these species could potentially be present within the action area.

Four California Native Plant Society List 1B.2 plant species—Madera leptosiphon *(Leptosiphon serrulatus),* mouse buckwheat *(Eriogonum nudum var. murinum),* recurved larkspur *(Delphinium recurvatum),* and winter's sunflower *(Helianthus winteri)*—were not observed during botanical surveys; there is a very low potential that they are present in the action area. In addition, Springville clarkia *(Clarkia springvillensis),* another California Native Plant Society List 1B.2 plant species, which is also a California Endangered species, was not seen; there is a very low potential for this species to occur in the action area.

There is a low potential for these species listed on the California Native Plant Society rare and endangered plant inventory to be present within the action area: Kaweah monkeyflower *(Erythranthe norrisii),* Sierra Nevada monkeyflower *(Erythranthe sierrae),* lesser saltscale *(Atriplex minuscula),* Munz's iris *(Iris munzii),* and spiny-sepaled button celery *(Eryngium spinosepalum).*

Although the following three species were not observed during botanical surveys, there is a moderate potential for these plants to grow in the project footprint.

Kaweah brodiaea (Brodiaea insignis)

The Kaweah brodiaea is a State of California Endangered species. The California Native Plant Society's rare and endangered plant inventory ranks this species as a List 1B.2 plant.

This species grows only in the southern Sierra Nevada foothills, especially around the Kaweah and Tule River drainages.

Kings River monkeyflower (Erythranthe acutidens)

The California Native Plant Society's rare and endangered plant inventory ranks the Kings River monkeyflower as a List 3 plant.

This monkeyflower species grows only in the Sierra Nevada foothills. Due to the ephemeral nature of water at most culvert locations, conditions within the action area generally remain drier than the moist sites preferred by this species.

Streambank spring beauty (Claytonia parviflora subsp. grandiflora)

The California Native Plant Society's rare and endangered plant inventory ranks the streambank spring beauty as a List 4.2 plant.

The streambank spring beauty is distributed throughout California's Sierra Nevada foothills.

While foothill woodland and seasonal ephemerally wet drainages and disturbed areas are present throughout the action area, this species was not seen during botanical surveys.

Special-Status Animal Species

The following special-status animal species were not observed within the action area (the area that will be directly affected by the project, plus adjacent areas that may be indirectly affected) and are not expected to be present or to nest within the action area.

Bald eagle *(Haliaeetus leucocephalus)*—(California fully protected species and Forest Service Sensitive Species, also federally protected under the Bald and Golden Eagle Protection Act, the Migratory Bird Treaty Act, and the Lacey Act).

California condor *(Gymnogyps californianus)*—(federally and state listed as endangered and California fully protected species).

San Joaquin kit fox *(Vulpes macrotis mutica)*—(federally endangered and state threatened species).

Crotch's bumblebee *(Bombus crotchii)*—(California state candidate for endangered species).

The American badger *(Taxidea taxus),* Northern California legless lizard *(Anniella pulchra)*, western spadefoot toad *(Spea hammondii),* and the tricolored blackbird *(Agelaius tricolor)* are California Species of Special Concern. The tricolored blackbird is also listed as threatened by the State of California.

Swainson's hawk (Buteo swainsoni)

Swainson's hawk is listed as threatened by the State of California.

Most of the California population of Swainson's hawk is found in the Great Valley. During the summer months, this species eats mostly insects, smaller birds, and small mammals while occasionally taking reptiles, amphibians, and other invertebrates.

Swainson's hawks prefer open habitats for foraging, such as fallow or alfalfa fields and rangeland habitats. Although much of their native grassland habitat has been converted to agricultural land, this species has adapted to the changing environment. These hawks roost in scattered tree stands near suitable foraging areas and are often seen following field tractors that stir up small mammals in the field. Due to habitat conversion and the introduction of non-native grasses, perennial grasslands were replaced with annual grasslands (with low prey populations), as well as with agricultural crops.

Breeding habitat for this species is commonly associated with riparian areas in California, probably because some trees still remain there. Nesting usually begins in late March, and the young usually leave the nest by July. Nests are typically made out of sticks, bark, and fresh leaves and are usually placed near the top of a tree, which may be solitary or in a small grove along a stream. If a preferred nesting site is not available, Swainson's hawks occasionally nest on power poles or transmission towers or even in orchard trees. Nesting Swainson's hawks are somewhat tolerant of human activity. Nest sites are often near roads and houses and frequently near the edge of cultivated fields.

Several recent Swainson's hawk observations were recorded within 1 mile of the action area. Several nests were reported along State Route 198 between the Kings/Tulare county line and the City of Visalia, recorded between 1999 and 2016. Potential nesting trees are present within the Caltrans right-of-way throughout the project limits.

No nesting Swainson's hawks were seen during biological surveys conducted for the project. Protocol-level surveys for this species were not conducted.

It is anticipated that Swainson's hawks are likely to be present and nesting in suitable trees within or next to the action area during the breeding season.

c) Waters and Wetlands

The action area falls within the National Fish and Wildlife Foundation's Kaweah River/Tule River Watershed Service Area. Also, the project is within the Upper Kaweah sub-watershed (Hydrologic Unit Code 8 – 18030007) and the Upper Tule sub-watershed (Hydrologic Unit Code 8 – 18030006).

The project study area includes 28 potentially jurisdictional drainages. Of these jurisdictional channels, 26 are ephemeral in nature, containing water only immediately following a rain event and draining runoff from the adjacent hills. Two drainages (Locations 128 and 138) contain intermittent flows from human-made upstream retention ponds fed by several small ephemeral drainages.

Environmental Consequences

a) Special-Status Plant Species

No direct or indirect impacts to special-status plant species are anticipated from this project. Work will be confined mostly to the paved road surface, compacted shoulder areas, and very small areas around the inlets and outlets of existing culverts. No special-status species are known to be currently occupying areas within or right next to proposed worksites. Preconstruction species surveys, environmentally sensitive area fencing, and biological monitoring, if necessary, will enable the project to avoid and minimize impacts to special-status species.

Special-Status Animal Species

No impacts are expected to these species, their habitats, or nests: bald eagles, California condors, Crotch's bumblebees, American badgers, Northern California legless lizards, western spadefoot toads, pallid bats, western mastiff bats, San Joaquin kit foxes, and tricolored blackbirds.

No direct impacts to special-status animal species are anticipated from this project. Work will be confined mostly to the paved road surface, compacted shoulder areas, and very small areas around the inlets and outlets of existing culverts. No special-status species are known to be currently occupying areas within or right next to proposed worksites. The most likely impacts will be from construction-related disturbances resulting from noise, vibration, vehicle activity, and the presence of work crews, which could cause animals to be displaced from the work area. Preconstruction species surveys, nest-protection buffers, environmentally sensitive area fencing, and biological monitoring, if necessary, will enable the project to avoid and minimize impacts to special-status species.

Before construction begins, a qualified biologist will conduct a Worker Environmental Awareness Training for all work personnel to inform them of the special-status species potentially within the work area, protective measures, reporting procedures, and consequences of violating environmental laws and permit requirements.

Swainson's hawk (Buteo swainsoni)

No impacts to the quality or quantity of available foraging habitat are anticipated to be caused by the project. Given the relatively low intensity of the proposed work, the short duration of work at each culvert site, and the

high baseline level of disturbance, no effects to Swainson's hawks are anticipated with the implementation of avoidance and minimization measures.

c) Waters and Wetlands

No wetlands are present within the project footprint.

While several blue-line drainages are present within the overall vicinity of the project, no impacts to these waterways are proposed or anticipated.

Of the 28 potentially jurisdictional drainages, 16 drainages are proposed for culvert replacement, with the remaining 12 proposed for relining. Work at drainages will be performed during no-flow conditions when possible. Culvert relining and minor repair work will have very minor, temporary impacts to waterways that will not involve fill or result in alterations to flow or carrying capacity. Culvert replacement work will result in impacts to waterways due to soil disturbance and the excavation of the culvert trench. No proposed actions will result in diminished streamflow or altered flow patterns. Streamflow capacity will be increased where culverts are being enlarged from a diameter of 18 inches to 24 inches.

Some locations proposed for work under this project are expected to fall under the jurisdiction of the California Department of Fish and Wildlife, the U.S. Army Corps of Engineers, and the Regional Water Quality Control Board as ephemeral to intermittent natural drainages as Waters of the U.S.

A total of 0.13 acre of temporary impacts to ephemeral drainages is currently estimated.

A U.S. Army Corps of Engineers 404 Nationwide permit will be obtained for the project.

The project will also obtain a 401 Water Quality Certification from the Regional Water Quality Control Board.

The project will obtain a 1602 Lake and Streambed Alteration Agreement because this permit is required for impacts to natural channels, including ephemeral drainages. However, mitigation under a 1602 permit is typically required only for permanent impacts to jurisdictional channels, and no permanent impacts are anticipated at this time.

Avoidance, Minimization, and/or Mitigation Measures

The following avoidance and minimization measures are proposed for plant species:

- Focused botanical preconstruction surveys will be performed the flowering season before work at all worksites where ground disturbance is anticipated and suitable habitat for listed species exists.

- If populations of special-status plants are discovered in proximity to worksites, populations will be delineated and protected by an environmentally sensitive area buffer, clearly designated by high visibility fencing or flagging.
- For any flowering populations discovered within a worksite, immediately before any soil disturbance, the location of each population will be noted on a worksite plan. The plants will then be excavated along with sufficient blocks of the surrounding soil to retain the root structure. The plants and soil will be placed in a safe location near the worksite and kept moist. Upon completion of the work, the plants will be carefully placed within or as close to their original location as possible.
- For worksites where construction begins after the flowering period, if special-status plant populations are discovered in the worksite, the topsoil will be removed and stored safely near the work area and replaced after construction is finished to maintain the existing seed bank and ensure the continued growth of that population.

The following avoidance and minimization measure is proposed for animal species:

- Worker Environmental Awareness Training will be performed by a qualified biologist for all work personnel to inform them of the special-status species potentially within the work area, protective measures, reporting procedures, and consequences of violating environmental laws and permit requirements.

The following avoidance and minimization measures are proposed for Swainson's hawk *(Buteo swainsoni)*

- Protocol-level nesting surveys in accordance with the Recommended Timing and Methodology for Swainson's hawk Nesting Surveys in California's Central Valley will be completed the season before construction to determine if any Swainson's hawks are nesting in the project area.
- If nesting pairs are identified within 500 feet of the project footprint, additional avoidance and minimization measures will be implemented to avoid direct impacts. These measures will include, but will not be limited to, Environmentally Sensitive Area fencing enclosing the nest tree, a 500-foot buffer surrounding the nest, and a biological monitor will be present during construction activities that occur within this buffer.

Waters

A U.S. Army Corps of Engineers 404 Nationwide permit will be obtained due to an estimated total of 0.13 acre of temporary impacts to ephemeral drainages.

The project will obtain a 401 Water Quality Certification from the Regional Water Quality Control Board.

The project will also obtain a 1602 Lake and Streambed Alteration Agreement because this permit is required for impacts to natural channels, including ephemeral drainages. However, because no permanent impacts to 1602 jurisdictional channels are anticipated, no compensatory mitigation is proposed.

2.1.5 Cultural Resources

Considering the information in the Historic Property Survey Report dated September 9, 2021, the following significance determinations have been made:

Question—Would the project:	CEQA Significance Determinations for Cultural Resources
a) Cause a substantial adverse change in the significance of a historical resource pursuant to Section 15064.5?	**No Impact**
b) Cause a substantial adverse change in the significance of an archaeological resource pursuant to Section 15064.5?	**No Impact**
c) Disturb any human remains, including those interred outside of dedicated cemeteries?	**No Impact**

No cultural resources were identified within the Area of Potential Effects defined for the culvert locations work. Therefore, the Caltrans finding is No Historic Properties Affected.

On December 1, 2020, consultation with tribes was initiated by Caltrans to complete Section 106 and CEQA cultural studies compliance. Ten tribal representatives were contacted; additional information was mailed out on May 25, 2021, and August 30, 2021. Consultation is ongoing to date.

No specific tribal resources have been identified within the Area of Potential Effects for the project.

New archaeological surveys will be required if project plans are changed to include areas that have not been previously surveyed. Expanding the Area of Potential Effects for temporary construction and drainage easements will trigger the requirement for supplemental cultural resources studies if the easements are enlarged in the future.

If cultural materials or remains are encountered during construction, it is Caltrans' policy that work must stop in that area until a qualified archaeologist

can evaluate the nature and significance of the discovery. In addition, Caltrans will contact consulting parties.

2.1.6 Energy

Considering that the project will simply repair or replace existing culverts that are failing, the following significance determinations have been made:

Question—Would the project:	CEQA Significance Determinations for Energy
a) Result in potentially significant environmental impact due to wasteful, inefficient, or unnecessary consumption of energy resources during project construction or operation?	**No Impact**
b) Conflict with or obstruct a state or local plan for renewable energy or energy efficiency?	**No Impact**

2.1.7 Geology and Soils

Considering the Alquist-Priolo Earthquake Fault Zones Map viewed at https://maps.conservation.ca.gov/cgs/eqzapp/ and https://maps.conservation.ca.gov/cgs/informationwarehouse/index.html?map=landslides on June 18, 2021, the information included in the Water Quality Memorandum dated September 16, 2021, and the Paleontological Identification Report dated September 29, 2021, the following significance determinations have been made:

Question—Would the project:	CEQA Significance Determinations for Geology and Soils
a) Directly or indirectly cause potential substantial adverse effects, including the risk of loss, injury, or death involving: i) Rupture of a known earthquake fault, as delineated on the most recent Alquist-Priolo Earthquake Fault Zoning Map issued by the State Geologist for the area or based on other substantial evidence of a known fault? Refer to Division of Mines and Geology Special Publication 42.	**No Impact**
a) Directly or indirectly cause potential substantial adverse effects, including the risk of loss, injury, or death involving: ii) Strong seismic ground shaking?	**No Impact**

Question—Would the project:	CEQA Significance Determinations for Geology and Soils
a) Directly or indirectly cause potential substantial adverse effects, including the risk of loss, injury, or death involving: iii) Seismic-related ground failure, including liquefaction?	**No Impact**
a) Directly or indirectly cause potential substantial adverse effects, including the risk of loss, injury, or death involving: iv) Landslides?	**No Impact**
b) Result in substantial soil erosion or the loss of topsoil?	**No Impact**
c) Be located on a geologic unit or soil that is unstable, or that would become unstable as a result of the project, and potentially result in onsite or offsite landslide, lateral spreading, subsidence, liquefaction or collapse?	**No Impact**
d) Be located on expansive soil, as defined in Table 18-1-B of the Uniform Building Code (1994), creating substantial risks to life or property?	**No Impact**
e) Have soils incapable of adequately supporting the use of septic tanks or alternative wastewater disposal systems where sewers are not available for the disposal of wastewater?	**No Impact**
f) Directly or indirectly destroy a unique paleontological resource or site or unique geologic feature?	**Less Than Significant Impact**

Affected Environment

f) Paleontological Resources

From west to east within the Great Valley geomorphic province of the San Joaquin Valley, the geology underlying the project area consists of Holocene fan deposits, Pleistocene nonmarine sediments, and Holocene alluvium. The fan deposits include the Modesto Formation, and the Riverbank Formation is part of the Pleistocene nonmarine sediments.

Within the Sierra Nevada geomorphic province, the geologic materials consist of Mesozoic granitic rocks and Pre-Cretaceous metamorphic rock.

Due to recent discoveries, including at the State Route 99 Plainsburg Road/Arboleda Drive freeway project in Merced County, the paleontological sensitivity of the Modesto Formation and the Riverbank Formation is categorized as high. The high sensitivity of the Modesto Formation and the Riverbank Formation is equivalent to the high potential definition in the tripartite classification scale that Caltrans uses.

High potential includes rock units, which, based on previous studies, contain or are likely to contain scientifically significant vertebrates, invertebrates, or plant fossils.

Environmental Consequences

f) Paleontological Resources

High potential paleontological resources of the Modesto Formation and the Riverbank Formation underlie the project area. Based on the ground disturbance activities associated with the project, the resources will be impacted; however, the extent and intensity of the proposed ground disturbance activities are expected to be localized and limited to shallow soils that were previously disturbed when the original culverts were constructed. Because the soil has already been disturbed, it is now classified as fill. As a result, scientifically significant fossils are unlikely to be encountered. Paleontological mitigation is not recommended at this time.

If an unanticipated fossil discovery were to occur during construction, Specification Section 14-7.03 of the Caltrans 2018 Standard Specifications identifies the procedures required to protect the paleontological resource.

Avoidance, Minimization, and/or Mitigation Measures

No mitigation is required.

2.1.8 Greenhouse Gas Emissions

Considering the information in the Climate Change technical report dated September 15, 2021, the following significance determinations have been made:

Question—Would the project:	CEQA Significance Determinations for Greenhouse Gas Emissions
a) Generate greenhouse gas emissions, either directly or indirectly, that may have a significant impact on the environment?	**Less Than Significant Impact**
b) Conflict with an applicable plan, policy or regulation adopted for the purpose of reducing the emissions of greenhouse gases?	**Less Than Significant Impact**

Affected Environment

a, b) This project will repair or replace 140 culverts at spot locations along the 44-mile length of State Route 198 in Tulare County. The route goes through mostly flat agricultural, grazing, and urban land uses west of Lake Kaweah, then climbs past Terminus Dam to Lake Kaweah and follows the Kaweah River through the rural community of Three Rivers in mountainous terrain, ending just short of Pumpkin Hollow Bridge near the boundary of Sequoia National Park. Within the project limits, the route includes segments of a four-lane expressway, four-lane freeway, and rural conventional two-lane highway.

Environmental Consequences

a, b) This project will not add capacity to the highway. There will be no increase in operational emissions because the project will repair or replace existing culverts. With the implementation of construction greenhouse gas reduction measures, impacts will be less than significant.

Construction greenhouse gas emissions for the project were calculated using Caltrans' Construction Emissions Tool (CAL-CET) v1.1. Project construction is expected to generate approximately 688 tons of carbon dioxide (CO2) during 300 working days.

While some construction greenhouse gas emissions will be unavoidable, implementing standard conditions or Best Management Practices designed to reduce or eliminate emissions as part of the project will reduce impacts to less than significant.

Measures to reduce greenhouse gas emissions include:

- Alternative fuels such as renewable diesel to be used for construction equipment.
- Idling will be limited to 5 minutes for delivery and dump trucks and other diesel-powered equipment.
- Recycled water is to be used where possible to reduce the amount of potable water used by construction activities.
- Improved fuel efficiency by construction equipment will be obtained by maintaining equipment in proper working condition, using the right-sized equipment for the job, and using equipment with new technologies when possible.
- During preconstruction training for contractor workers, the Caltrans Environmental Construction Liaison must include information regarding methods to reduce greenhouse gas emissions related to construction.

Avoidance, Minimization, and/or Mitigation Measures

No mitigation is needed.

2.1.9 Hazards and Hazardous Materials

Considering the information in the Initial Site Assessment dated September 27, 2021, the Noise Compliance Memorandum dated September 21, 2021, and the California Department of Forestry and Fire Protection's Fire Hazard Severity Zone Maps, the following significance determinations have been made:

Question—Would the project:	CEQA Significance Determinations for Hazards and Hazardous Materials
a) Create a significant hazard to the public or the environment through the routine transport, use, or disposal of hazardous materials?	**No Impact**
b) Create a significant hazard to the public or the environment through reasonably foreseeable upset and accident conditions involving the release of hazardous materials into the environment?	**No Impact**
c) Emit hazardous emissions or handle hazardous or acutely hazardous materials, substances, or waste within 0.25 mile of an existing or proposed school?	**No Impact**
d) Be located on a site which is included on a list of hazardous materials sites compiled pursuant to Government Code Section 65962.5 and, as a result, would it create a significant hazard to the public or the environment?	**No Impact**
e) For a project located within an airport land use plan or, where such a plan has not been adopted, within 2 miles of a public airport or public use airport, would the project result in a safety hazard or excessive noise for people residing or working in the project area?	**No Impact**
f) Impair implementation of or physically interfere with an adopted emergency response plan or emergency evacuation plan?	**No Impact**
g) Expose people or structures, either directly or indirectly, to a significant risk of loss, injury or death involving wildland fires?	**No Impact**

2.1.10 Hydrology and Water Quality

Considering the information in the Water Quality Memorandum dated September 16, 2021, and the Location Hydraulic Study signed August 4, 2021, the following significance determinations have been made:

Question—Would the project:	CEQA Significance Determinations for Hydrology and Water Quality
a) Violate any water quality standards or waste discharge requirements or otherwise substantially degrade surface water or groundwater quality?	**No Impact**
b) Substantially decrease groundwater supplies or interfere substantially with groundwater recharge such that the project may impede sustainable groundwater management of the basin?	**No Impact**
c) Substantially alter the existing drainage pattern of the site or area, including through the alteration of the course of a stream or river or through the addition of impervious surfaces, in a manner which would: (i) result in substantial erosion or siltation onsite or offsite;	**No Impact**
(ii) substantially increase the rate or amount of surface runoff in a manner which would result in flooding onsite or offsite;	**No Impact**
(iii) create or contribute runoff water which would exceed the capacity of existing or planned stormwater drainage systems or provide substantial additional sources of polluted runoff; or	**No Impact**
(iv) impede or redirect flood flows?	**No Impact**
d) In flood hazard, tsunami, or seiche zones, risk release of pollutants due to project inundation?	**No Impact**
e) Conflict with or obstruct implementation of a water quality control plan or sustainable groundwater management plan?	**No Impact**

2.1.11 Land Use and Planning

Considering that the project will only involve the repair or replacement of existing culverts and that the project improvements will not affect the land use

of properties next to the highway, the following significance determinations have been made:

Question—Would the project:	CEQA Significance Determinations for Land Use and Planning
a) Physically divide an established community?	**No Impact**
b) Cause a significant environmental impact due to a conflict with any land use plan, policy, or regulation adopted for the purpose of avoiding or mitigating an environmental effect?	**No Impact**

2.1.12 Mineral Resources

Considering that the project will not acquire any new right-of-way, the following significance determinations have been made:

Question—Would the project:	CEQA Significance Determinations for Mineral Resources
a) Result in the loss of availability of a known mineral resource that would be of value to the region and the residents of the state?	**No Impact**
b) Result in the loss of availability of a locally important mineral resource recovery site delineated on a local general plan, specific plan or other land use plan?	**No Impact**

2.1.13 Noise

Considering the information in the Noise Memorandum dated September 21, 2021, the following significance determinations have been made:

Question—Would the project result in:	CEQA Significance Determinations for Noise
a) Generation of a substantial temporary or permanent increase in ambient noise levels in the vicinity of the project in excess of standards established in the local general plan or noise ordinance, or applicable standards of other agencies?	**No Impact**
b) Generation of excessive groundborne vibration or groundborne noise levels?	**No Impact**

Question—Would the project result in:	CEQA Significance Determinations for Noise
c) For a project located within the vicinity of a private airstrip or an airport land use plan or, where such a plan has not been adopted, within 2 miles of a public airport or public use airport, would the project expose people residing or working in the project area to excessive noise levels?	**No Impact**

2.1.14 Population and Housing

Considering that the project will not add capacity to the highway or acquire any new right-of-way, the following determinations have been made:

Question—Would the project:	CEQA Significance Determinations for Population and Housing
a) Induce substantial unplanned population growth in an area, either directly (for example, by proposing new homes and businesses) or indirectly (for example, through extension of roads or other infrastructure)?	**No Impact**
b) Displace substantial numbers of existing people or housing, necessitating the construction of replacement housing elsewhere?	**No Impact**

2.1.15 Public Services

Considering that the project will not affect any government facilities or trigger the need for new facilities or government services, the following determinations have been made:

Question:	CEQA Significance Determinations for Public Services
a) Would the project result in substantial adverse physical impacts associated with the provision of new or physically altered governmental facilities, need for new or physically altered governmental facilities, the construction of which could cause significant environmental impacts, in order to maintain acceptable service ratios, response times or other performance objectives for any of the public services: Fire protection?	**No Impact**
Police protection?	**No Impact**
Schools?	**No Impact**
Parks?	**No Impact**
Other public facilities?	**No Impact**

2.1.16 Recreation

Considering that the project will not affect parks or recreational facilities or trigger the need for more recreational facilities to be constructed, the following determinations have been made:

Question—Would the project:	CEQA Significance Determinations for Recreation
a) Would the project increase the use of existing neighborhood and regional parks or other recreational facilities such that substantial physical deterioration of the facility would occur or be accelerated?	**No Impact**
b) Does the project include recreational facilities or require the construction or expansion of recreational facilities which might have an adverse physical effect on the environment?	**No Impact**

2.1.17 Transportation

Considering that this maintenance project will not add capacity to the highway or reconfigure the roadway, the following determinations have been made:

Question—Would the project:	CEQA Significance Determinations for Transportation
a) Conflict with a program, plan, ordinance, or policy addressing the circulation system, including transit, roadway, bicycle and pedestrian facilities?	**No Impact**
b) Conflict or be inconsistent with CEQA Guidelines Section 15064.3, subdivision (b)?	**No Impact**
c) Substantially increase hazards due to a geometric design feature (e.g., sharp curves or dangerous intersections) or incompatible uses (e.g., farm equipment)?	**No Impact**
d) Result in inadequate emergency access?	**No Impact**

2.1.18 Tribal Cultural Resources

Considering the information in the Historic Property Survey Report dated September 9, 2021, the following significance determinations have been made:

Will the project cause a substantial adverse change in the significance of a tribal cultural resource, defined in Public Resources Code Section 21074 as either a site, feature, place, cultural landscape that is geographically defined in terms of the size and scope of the landscape, sacred place, or object with cultural value to a California Native American tribe, and that is:

Question:	CEQA Significance Determinations for Tribal Cultural Resources
a) Listed or eligible for listing in the California Register of Historical Resources, or in a local register of historical resources as defined in Public Resources Code Section 5020.1(k), or	**No Impact**
b) A resource determined by the lead agency, in its discretion and supported by substantial evidence, to be significant pursuant to criteria set forth in subdivision (c) of Public Resources Code Section 5024.1. In applying the criteria set forth in subdivision (c) of Public Resources Code Section 5024.1, the lead agency shall consider the significance of the resource to a California Native American tribe.	**No Impact**

2.1.19 Utilities and Service Systems

Considering that the proposed project is a highway maintenance project and will not trigger the need for utilities and service systems, the following significance determinations have been made:

Question—Would the project:	CEQA Significance Determinations for Utilities and Service Systems
a) Require or result in the relocation or construction of new or expanded water, wastewater treatment or stormwater drainage, electric power, natural gas, or telecommunications facilities, the construction or relocation of which could cause significant environmental effects?	**No Impact**
b) Have sufficient water supplies available to serve the project and reasonably foreseeable future development during normal, dry and multiple dry years?	**No Impact**
c) Result in a determination by the wastewater treatment provider which serves or may serve the project that it has adequate capacity to serve the project's projected demand in addition to the provider's existing commitments?	**No Impact**
d) Generate solid waste in excess of state or local standards, or in excess of the capacity of local infrastructure, or otherwise impair the attainment of solid waste reduction goals?	**No Impact**
e) Comply with federal, state, and local management and reduction statutes and regulations related to solid waste?	**No Impact**

2.1.20 Wildfire

Considering the information in the California Department of Forestry and Fire Protection's Fire Hazard Severity Zone Maps and information in the Climate Change technical report dated September 15, 2021, the following significance determinations have been made:

Question—Would the project:	CEQA Significance Determinations for Wildfire
a) Substantially impair an adopted emergency response plan or emergency evacuation plan?	**No Impact**

Question—Would the project:	CEQA Significance Determinations for Wildfire
b) Due to slope, prevailing winds, and other factors, exacerbate wildfire risks, and thereby expose project occupants to pollutant concentrations from a wildfire or the uncontrolled spread of a wildfire?	**No Impact**
c) Require the installation or maintenance of associated infrastructure (such as roads, fuel breaks, emergency water sources, power lines or other utilities) that may exacerbate fire risk or that may result in temporary or ongoing impacts to the environment?	**No Impact**
d) Expose people or structures to significant risks, including downslope or downstream flooding or landslides, as a result of runoff, post-fire slope instability, or drainage changes?	**No Impact**

2.1.21 Mandatory Findings of Significance

Question:	CEQA Significance Determinations for Mandatory Findings of Significance
a) Does the project have the potential to substantially degrade the quality of the environment, substantially reduce the habitat of a fish or wildlife species, cause a fish or wildlife population to drop below self-sustaining levels, threaten to eliminate a plant or animal community, substantially reduce the number or restrict the range of a rare or endangered plant or animal or eliminate important examples of the major periods of California history or prehistory?	**No Impact**
b) Does the project have impacts that are individually limited, but cumulatively considerable? (“Cumulatively considerable” means that the incremental effects of a project are considerable when viewed in connection with the effects of past projects, the effects of other current projects, and the effects of probable future projects)?	**No Impact**
c) Does the project have environmental effects which will cause substantial adverse effects on human beings, either directly or indirectly?	**No Impact**

Appendix A Title VI Policy Statement

STATE OF CALIFORNIA—CALIFORNIA STATE TRANSPORTATION AGENCY Gavin Newsom, Governor

DEPARTMENT OF TRANSPORTATION
OFFICE OF THE DIRECTOR
P.O. BOX 942873, MS-49
SACRAMENTO, CA 94273-0001
PHONE (916) 654-6130
FAX (916) 653-5776
TTY 711
www.dot.ca.gov

Making Conservation a California Way of Life.

September 2021

NON-DISCRIMINATION POLICY STATEMENT

The California Department of Transportation, under Title VI of the Civil Rights Act of 1964, ensures "*No person in the United States shall, on the ground of race, color, or national origin, be excluded from participation in, be denied the benefits of, or be subjected to discrimination under any program or activity receiving federal financial assistance.*"

Caltrans will make every effort to ensure nondiscrimination in all of its services, programs and activities, whether they are federally funded or not, and that services and benefits are fairly distributed to all people, regardless of race, color, or national origin. In addition, Caltrans will facilitate meaningful participation in the transportation planning process in a nondiscriminatory manner.

Related federal statutes, remedies, and state law further those protections to include sex, disability, religion, sexual orientation, and age.

For information or guidance on how to file a complaint, or obtain more information regarding Title VI, please contact the Title VI Branch Manager at (916) 324-8379 or visit the following web page: https://dot.ca.gov/programs/civil-rights/title-vi .

To obtain this information in an alternate format such as Braille or in a language other than English, please contact the California Department of Transportation, Office of Civil Rights, at 1823 14th Street, MS-79, Sacramento, CA 95811; PO Box 942874, MS-79, Sacramento, CA 94274-0001; (916) 324-8379 (TTY 711); or at Title.VI@dot.ca.gov.

Toks Omishakin
Director

"Provide a safe and reliable transportation network that serves all people and respects the environment."

Appendix B Federal Endangered Species Act Determinations

Species	Scientific Name	Status	Federal Endangered Species Act Determination
Fisher	*Pekania pennanti*	Federally Endangered	*No effect*
Fresno kangaroo rat	*Dipodomys nitratoides exilis*	Federally Endangered	*No effect*
San Joaquin kit fox	*Vulpes macrotis mutica*	Federally Endangered	*No effect*
Tipton kangaroo rat	*Dipodomys nitratoides nitratoides*	Federally Endangered	*No effect*
California condor	*Gymnogyps californianus*	Federally Endangered	*No effect*
Blunt-nosed leopard lizard	*Gambelia sila*	Federally Endangered	*No effect*
Giant garter snake	*Thamnophis gigas*	Federally Threatened	*No effect*
California red-legged frog	*Rana draytonii*	Federally Threatened	*No effect*
California tiger salamander	*Ambystoma californiense*	Federally Threatened	*No effect*
Delta smelt	*Hypomesus transpacificus*	Federally Threatened	*No effect*
Conservancy fairy shrimp	*Branchinecta conservatio*	Federally Endangered	*No effect*
Vernal pool fairy shrimp	*Branchinecta lynchi*	Federally Threatened	*No effect*
Vernal pool tadpole shrimp	*Lepidurus packardi*	Federally Endangered	*No effect*
Greene's tuctoria	*Tuctoria greenei*	Federally Endangered	*No effect*
San Joaquin adobe sunburst	*Pseudobahia peirsonii*	Federally Threatened	*No effect*
San Joaquin Valley Orcutt grass	*Orcuttia inaequalis*	Federally Threatened	*No effect*
Springville clarkia	*Clarkia springvillensis*	Federally Threatened	*No effect*
California condor critical habitat	*Not Applicable*	Critical Habitat	*No effect*

Appendix C Comment Letters and Responses

This appendix has been added since the draft environmental document was circulated.

This appendix contains the comments received during the public circulation and comment period from December 21, 2021, to January 21, 2022, retyped for readability. The comment letters are stated verbatim as submitted, with acronyms, abbreviations, and any original grammatical or typographical errors included. A Caltrans response follows each comment presented. Copies of the original comment letters and documents can be found in Volume 2 of this document.

A public notice in English and Spanish was posted in the Visalia Times-Delta on December 21, 2021. It stated the public review and comment period for the draft environmental document would run from December 21, 2021, to January 21, 2022, and offered the public an opportunity to request a virtual public hearing. There were no requests for a virtual public hearing during the public circulation.

Two comments were received during the circulation period—one from the State Clearinghouse and Planning Unit and another from the California Department of Fish and Wildlife. Each comment is presented below, followed by a Caltrans response.

Comment from the State Clearinghouse and Planning Unit

Comment 1:

The State Clearinghouse (SCH) would like to inform you that our office will transition from providing close of review period acknowledgement on your CEQA environmental document, at this time. During the phase of not receiving notice on the close of review period, comments submitted by State Agencies at the close of review period (and after) are available on CEQAnet. Please visit: https://ceqanet.opr.ca.gov/Search/Advanced

Filter for the SCH# of your project OR your “Lead Agency”

If filtering by “Lead Agency”

Select the correct project

Only State Agency comments will be available in the “attachments” section: bold and highlighted

Thank you for using CEQA Submit.

Mikayla Vaba

Office of Planning and Research (OPR)

State Clearing House

Response to comment 1: Thank you for circulating the Initial Study with Proposed Negative Declaration for the Tulare 198 Culverts Repair and Replacement Project and acknowledging Caltrans’ compliance with California Environmental Quality Act requirements pursuant to State Clearinghouse guidelines. Caltrans has recorded the corresponding State Clearinghouse number for this project.

Comment from Julie A. Vance, Regional Manager, California Department of Fish and Wildlife

Comment 1:

January 20, 2022

Juergen Vespermann

California Department of Transportation, District 6

2015 East Shields Avenue, Suite 100

Fresno, California 93721

Subject: State Route 198 Culvert Repair/Replacement Project (Project)

Initial Study with proposed Negative Declaration

State Clearinghouse No. 2021120503

Dear Mr. Vespermann:

The California Department of Fish and Wildlife (CDFW) received a proposed Negative Declaration (ND) and its supporting Initial Study (IS) prepared by the California Department of Transportation (Caltrans) for the above-referenced Project pursuant to the California Environmental Quality Act (CEQA) and CEQA Guidelines.1 The IS was reportedly supported by a Natural Environment Study which was cited in the IS, but not provided or made available for review.

Thank you for the opportunity to provide comments and recommendations regarding those activities involved in the Project that may affect California fish and wildlife. Likewise, CDFW appreciates the opportunity to provide comments regarding those aspects of the Project that CDFW, by law, may be required to carry out or approve through the exercise of its own regulatory authority under Fish and Game Code.

CDFW ROLE

CDFW is California's Trustee Agency for fish and wildlife resources and holds those resources in trust by statute for all the people of the State (Fish and G. Code, §§ 711.7, subd. (a) & 1802; Pub. Resources Code, § 21070; CEQA Guidelines § 15386, subd. (a)). CDFW, in its trustee capacity, has jurisdiction over the conservation, protection, and management of fish, wildlife, native plants, and habitat necessary for biologically sustainable populations of those species (Id., § 1802). Similarly, for purposes of CEQA, CDFW is charged by law to provide, as available, biological expertise during public agency

environmental review efforts, focusing specifically on projects and related activities that have the potential to adversely affect fish and wildlife resources.

CDFW is also submitting comments as a Responsible Agency under CEQA (Pub. Resources Code, § 21069; CEQA Guidelines, § 15381). CDFW expects that it may need to exercise regulatory authority as provided by the Fish and Game Code. As proposed, for example, the Project may be subject to CDFW's lake and streambed alteration regulatory authority (Fish & G. Code, § 1600 et seq.). Likewise, to the extent implementation of the Project as proposed may result in "take" as defined by State law of any species protected under the California Endangered Species Act (CESA) (Fish & G. Code, § 2050 et seq.), related authorization as provided by the Fish and Game Code will be required.

PROJECT DESCRIPTION SUMMARY

Proponent: Caltrans

Objective: Caltrans proposes to repair or replace as many as 140 culverts which occur beneath the State Route 198 roadway between post mile 1 (near the Tulare/Kings county line) and post mile 44 (east of Lake Kaweah) in Tulare County (Project). All Project-related activities will occur within the existing right-of-way either within the paved travel lanes, paved shoulders adjoining the travel lanes, unpaved but compacted and engineered shoulder backing, or within the ruderal habitat areas beyond the travel lanes and shoulder backing. The Project will involve vegetation removal, temporary construction easements, and permanent drainage easements, but will be accomplished while the streams are naturally dry so water diversions will not be needed. Additionally, no nightwork is anticipated. Caltrans indicates that CDFW will be notified for those Project activities which will occur within streams.

Location: The 43-mile segment of State Route 198 (SR 198) where the subject culverts exist is entirely located within Tulare County, and is bound by urban, rural, and agricultural development, and natural lands along its length.

Timeframe: Unspecified.

COMMENTS AND RECOMMENDATIONS

During botanical and wildlife surveys conducted during preparation of the IS, Caltrans did not observe any special-status plants or animals. Caltrans plans to conduct additional botanical surveys in advance of commencing Project activities, as well as protocol-level surveys for the State threatened Swainson's hawk (Buteo swainsoni) (SWHA). However, Caltrans does not propose additional surveys for the State fully protected golden eagle (Aquila chrysaetos), the State endangered and State fully protected bald eagle (Haliaeetus leucocephalus), the State and federally endangered and State

fully protected California condor (Gymnogyps californianus), the rare and endemic Crotch bumble bee (Bombus crotchii) which is a Species of Greatest Conservation Need (SGCN) in California (CDFW 2015), or nesting birds in general in advance of commencing Project Activities. Caltrans indicates in the IS that if special status plant populations are detected during the pre-activity surveys, they will be avoided. Further, Caltrans indicates that if work is conducted during the SWHA nesting season, active nests will be avoided observing a 500-foot no-disturbance buffer. However, CDFW does not agree that these avoidance and minimization measures sufficiently reduce to less-than-significant the potential Project-related impacts to biological resources at and near the Project area.

CDFW offers the following comments to assist Caltrans in adequately identifying and sufficiently reducing to less-than-significant the potentially significant, direct and indirect Project-related impacts to fish and wildlife (biological) resources. Editorial comments or other suggestions may also be included to improve the document.

I. Environmental Setting and Related Impact

Would the Project have a substantial adverse effect, either directly or through habitat modifications, on any species identified as a candidate, sensitive, or special-status species in local or regional plans, policies, or regulations, or by CDFW or the United States Fish and Wildlife Service (USFWS)?

COMMENT 1: Migratory Birds including Swainson's Hawk (SWHA) and California Condor, golden eagle, and Bald Eagle

Issue: Migratory birds are known to nest in trees and shrubs along the entire 43-mile Project area. Additionally, SWHA are known to nest in trees along the western portion of the Project area, and bald eagle and California condor are known to occur in areas adjoining the eastern portion of the Project area. The Project activities will involve varying degrees of ground disturbance within the right-of-way and CDFW considers it possible that the Project-related activities would represent a novel stimulus which could result in nest abandonment if they occur in proximity to nesting birds. This nest abandonment would represent a significant impact to nesting birds, including SWHA, bald eagle, and California condor, and could result in take as it is defined in section 86 of Fish and Game Code.

Specific Impacts: In the IS, Caltrans states that because active SWHA nests could occur at or sufficiently close to the Project area, protocol level surveys will be conducted the nesting season prior to the commencement of Project activities. Further, Caltrans proposes the implementation of a 500-foot no-disturbance buffer around active SWHA nests in the event any are detected during these surveys. CDFW recommends these surveys, as well as surveys for bald eagle, California condor, and nesting birds in general be conducted

no more than 30 days prior to the commencement of Project activities (if those activities occur or extend into the nesting season). Further, CDFW considers the proposed 500-foot no-disturbance buffer for either SWHA, bald eagle, or California condor insufficient to avoid take of individuals of those species. Therefore, CDFW does not agree that the proposed pre-construction surveys for SWHA alone reduces to less-than-significant the potential Project-related impacts on nesting birds.

Evidence impact would be significant: SWHA in particular exhibit high nest-site fidelity year after year and lack of suitable nesting habitat in the San Joaquin Valley limits their local distribution and abundance (CDFW 2016). Adoption of the ND as it is written will allow activities that will involve ground disturbance, roadwork, grading, and excavation employing heavy equipment and work crews within ½-mile of active listed raptors including SWHA, bald eagle, and California condor nests, and within 500 feet of non-listed raptors, and within 250 feet of passerines. These activities could negatively affect these nests and have the potential to result in nest abandonment.

Recommended Potentially Feasible Avoidance and Mitigation Measure(s): Because the Project-related activities represent novel stimuli and threaten nest abandonment, CDFW recommends Caltrans propose surveying for, and maintaining a 250-foot no-disturbance buffer around active passerine nests, a 500-foot no-disturbance buffer around non-listed raptor nests, and a ½-mile no-disturbance buffer around listed raptor (e.g., SWHA, bald eagle, and California condor) nests in order to reduce to less-than-significant the Project-related impacts to nesting birds. CDFW recommends edits to the existing SWHA Avoidance, Minimization, and Mitigation Measures section of the IS, and incorporation of similar measures providing for the complete avoidance of impacts to nesting bald eagle, California condor, and nesting birds in general. Further, CDFW recommends these revised/additional measures be made quantifiable and enforceable conditions of Project approval.

Recommended Edits to Avoidance, Minimization, and Mitigation Measures section of the IS which begins on page 31 of the IS.

Currently, under the Avoidance, Minimization, and Mitigation Measures section of the IS, Caltrans proposes conducting surveys for SWHA at and near the Project area the “season before construction” and implementation of a 500-foot no-disturbance buffer around active nests that are detected. CDFW recommends Caltrans conduct these surveys for SWHA no more than 30 days prior to starting Project activities at all culverts which occur within ½ mile of suitable SWHA nesting habitat. Further, CDFW advises Caltrans implement a ½-mile no-disturbance buffer around any active nest trees detected, until the young have fledged and are no longer reliant on parental care. Additionally, because golden eagle, bald eagle, California condor, and nesting birds in general may occur or near the Project area, CDFW recommends surveys for these species and nesting birds in general be

conducted no more than 30 days prior to commencing Project activities. Further CDFW recommends maintaining ½-mile no-disturbance buffers around all active fully protected raptor (e.g., golden eagle, bald eagle, and California condor) nests, 500-foot no-disturbance buffers around all active unlisted raptor nests, and 250-foot no-disturbance buffers around all active passerine nests.

If the aforementioned edits to the existing Avoidance, Minimization, and Mitigation Measures section of the IS are not made for SWHA, and/or the aforementioned buffers are not feasible, CDFW recommends Caltrans obtain incidental take coverage under section 2081 subdivision (b) of Fish and Game Code and that the acquisition of an ITP be specified in the revised IS. In summary, if the edited avoidance measure is not feasible, mitigation (take authorization) would be required to reduce to less-than-significant the unavoidable Project-related impacts to SWHA. Due to the State fully protected status, CDFW cannot authorize incidental take of California condor, golden eagle, or bald eagle.

Response to comment 1: Both general preconstruction surveys and protocol Swainson's hawk surveys would capture any other migratory birds or raptors within the anticipated buffer. Caltrans has successfully avoided impacts to Swainson's hawk nesting along the State Highway System throughout the Central Valley with the implementation of a 500-foot radius no-disturbance buffer.

The bulk of the project is within developed residential, agricultural, and rural-residential areas of Tulare County. The project is unlikely to present novel stimuli given that the project area is frequently subject to high levels of vehicular, pedestrian, heavy equipment, and agricultural disturbance that results from human occupation of the action area, private construction, highway maintenance, fire fuels reduction work, and recreational traffic.

In the experience of Caltrans biologists, Swainson's hawk and other raptors nesting more than 500 feet from the State Highway System are frequently habituated to high levels of disturbance and unlikely to experience disruption by construction, especially given the low temporal and spatial impacts of culvert work at each location. Culvert replacements are not anticipated to extend beyond one working day at most culvert locations and are generally not visible from a distance of 0.5 mile.

COMMENT 2: Crotch Bumble Bee (CBB)

Issue: CBB have been documented to occur within areas of suitable habitat within the Project vicinity (CDFW 2022). Suitable CBB habitat includes areas of grasslands and upland scrub that contain requisite habitat elements, such as small mammal burrows. CBB primarily nest in late February through late October underground in abandoned small mammal burrows but may also

nest under perennial bunch grasses or thatched annual grasses, under brush piles, in old bird nests, and in dead trees or hollow logs (Williams et al. 2014; Hatfield et al. 2015). Overwintering sites utilized by CBB mated queens include soft, disturbed soil (Goulson 2010), or under leaf litter or other debris (Williams et al. 2014). Therefore, potential ground disturbance and vegetation removal associated with Project implementation may significantly impact local CBB populations.

While much of the land on both sides of the Project site exists as commercial development, there are discreet areas adjoining the west end of the Project area which persist as ruderal, scrub, and grassland habitat. CDFW recommends Caltrans conduct an assessment of these habitat areas adjoining the Project area for potentially suitable CBB habitat. If suitable CBB habitat exists in areas of planned Project-related ground disturbance, equipment staging, or materials laydown, potential CBB nesting sites in these areas would have to be avoided in order to reduce to less-than-significant the Project-related impacts to the species.

Specific Impacts: Without a determination with respect to the presence or absence of CBB habitat at and adjoining the Project area, CDFW cannot concur that the Project-related impacts to the species are less-than-significant. CBB nest in underground burrows and in thatched area and unless these potential nest sites are avoided, Project-related ground disturbance could result in take of the species. In the IS, Caltrans does not address the potential for the presence of CBB at or near the Project area.

Evidence impact would be significant: CBB was once common throughout most of the central and southern California; however, it now appears to be absent from most of it, especially in the central portion of its historic range within California's Central Valley (Hatfield et al. 2014). Analyses by the Xerces Society et al. (2018) suggest there have been sharp declines in relative abundance by 98% and persistence by 80% over the last ten years. CBB could continue to occupy the habitat areas within and adjoining portions of the Project Area and Project-related ground disturbance in these areas could result in significant impacts to the species.

Recommended Potentially Feasible Avoidance, Minimization, and Mitigation Measure: Because suitable CBB habitat may be present in the vicinity of at least portions of the Project Area, CDFW recommends the following measure be added to ensure that impacts to the species will be less-than-significant and completely avoided. Further, CDFW recommends these measures be made conditions of Project approval.

Recommended addition of Avoidance, Minimization, and/or Minimization Measures for CBB in the IS.

In order to determine if CBB occupy habitat areas of the right-of-way or adjoining lands, CDFW recommends Caltrans revise the Avoidance, Minimization, and Mitigation Measures section of the IS to include plans to assess whether habitat areas within or adjoining the right-of-way constitute suitable habitat for CBB. If not, this should be addressed in the IS and no further measures would be needed. But if suitable habitat is present at or near the right-of-way, and suitable burrows or areas of thatch cannot be avoided, CDFW recommends the IS include a measure requiring surveys for CBB in advance of commencing Project activities. If no individuals or nests are detected during these surveys, Caltrans may in fact be able to accomplish the Project avoiding the species and significant impacts to the species. However, if CBB are found to occupy habitat areas at or near the right-of-way, the Project would have the potential to result in significant impacts to the species unless the potential nesting sites can be avoided. If this avoidance is not feasible, CDFW recommends Caltrans propose consultation with CDFW in the revised IS. II. Editorial Comments and/or Suggestions

Response to Comment 2: Habitat suitability assessments for Crotch's bumblebee were conducted during surveys and discussed in the Natural Environment Study. While Crotch's bumblebee has been historically documented in the vicinity, the only recent (less than 20 years) observation is greater than 35 air miles, with most adjacent observations predating 1979. Culvert ground disturbance is generally limited to the channel itself, with limited upland impacts. Given the tendency of bumblebees, in general, to avoid nesting and overwintering in seasonally inundated areas, disturbance of nests or overwintering queens is unlikely. Impacts to floral resources that may be used by the Crotch's bumblebee are discountable and minor, with minimal herbaceous vegetation removal anticipated for construction.

Appropriateness of ND: In summary, the above recommended revisions to the IS pertain to avoidance of nesting birds including SWHA, bald eagle, California condor and nesting birds in general within the specified buffers from the Project right-of-way to completely avoid significant effects to the species under this Negative Declaration. If surveys confirm the presence of nesting birds at or within the specified buffers, Caltrans may not be able to accomplish the Project while avoiding significant effects to these species without first obtaining incidental take authorization under section 2081 subdivision (b) of Fish and Game Code. Incidental take authorization would involve minimization of, and mitigation for, take of the permitted species. Considering this, CDFW recommends Caltrans incorporate the recommended revisions to the IS and propose an MND for the Project, in lieu of the currently proposed ND.

ENVIRONMENTAL DATA

CEQA requires that information developed in environmental impact reports and negative declarations be incorporated into a database which may be

used to make subsequent or supplemental environmental determinations (Pub. Resources Code, § 21003, subd. (e)). Accordingly, please report any special-status species and natural communities detected during Project surveys to CNDDB. The CNDDB field survey form can be found at the following link: https://www.wildlife.ca.gov/Data/CNDDB/Submitting-Data. The completed form can be mailed electronically to CNDDB at the following email address: CNDDB@wildlife.ca.gov. The types of information reported to CNDDB can be found at the following link: https://www.wildlife.ca.gov/Data/CNDDB/Plants-and-Animals.

FILING FEES

If it is determined that the Project has the potential to impact biological resources, an assessment of filing fees will be necessary. Fees are payable upon filing of the Notice of Determination by the Lead Agency and serve to help defray the cost of environmental review by CDFW. Payment of the fee is required in order for the underlying project approval to be operative, vested, and final (Cal. Code Regs, tit. 14, § 753.5; Fish & G. Code, § 711.4; Pub. Resources Code, § 21089).

CDFW appreciates the opportunity to comment on the Project to assist Caltrans in identifying and avoiding the Project's impacts on biological resources.

More information on survey and monitoring protocols for sensitive species can be found at CDFW's website (https://www.wildlife.ca.gov/Conservation/Survey-Protocols). If you have any questions, please contact Steven Hulbert, Senior Environmental Scientist (Specialist), at the address provided on this letterhead, by telephone at (559) 575-6415 or by electronic mail at Steven.Hulbert@wildlife.ca.gov.

Sincerely,

Julie A. Vance

Regional Manager

cc: United States Fish and Wildlife Service

2800 Cottage Way, Suite W-2605

Sacramento, California 95825

ec: State Clearinghouse

state.clearinghouse@opr.ca.gov

Steven Hulbert

California Department of Fish and Wildlife

LITERATURE CITED

CDFW. 2022. Biogeographic Information and Observation System (BIOS). https://www.wildlife.ca.gov/Data/BIOS. Accessed January 10, 2022.

CDFW. 2015. California State Wildlife Action Plan, 2015.

CDFW. 2016. Five Year Status Review for Swainson's Hawk (Buteo swainsoni). California Department of Fish and Wildlife. April 11, 2016.

Goulson, D. 2010. Bumblebees: behaviour, ecology, and conservation. Oxford University Press, New York. 317pp.

Hatfield, R, S. Colla, S. Jepsen, L. Richardson, R. Thorp, and S. Foltz Jordan. 2014. Draft IUCN Assessments for North American Bombus spp. for the North American IUCN Bumble Bee Specialist Group. The Xerces Society for Invertebrate Conservation, www.xerces.org, Portland, OR.

Williams, P. H., R. W. Thorp, L. L. Richardson, and S. R. Colla. 2014. The Bumble Bees of North America: An Identification guide. Princeton University Press, Princeton, New Jersey, USA. 208 pp.

Xerces Society for Invertebrate Conservation, Defenders of Wildlife, and Center for Food Safety. 2018. A petition to the state of California fish and game commission to list the Crotch bumble bee (Bombus crotchii), Franklin's bumble bee (Bombus franklini), Suckley cuckoo bumble bee (Bombus suckleyi), and western bumble bee (Bombus occidentalis occidentalis) as Endangered under the California Endangered Species Act. October 2018.

Attachment 1

CALIFORNIA DEPARTMENT OF FISH AND WILDLIFE

RECOMMENDED MITIGATION MONITORING AND REPORTING PROGRAM (MMRP)

PROJECT: State Route 198 Culvert Repair/Replacement Project (Project)

SCH No.: 2021120503

RECOMMENDED MITIGATION MEASURE

STATUS/DATE/INITIALS

Before Disturbing Soil or Vegetation

Mitigation Measure 1:

SWHA, bald eagle, California condor, and nesting bird Avoidance

Mitigation Measure 2:

SWHA and bald eagle Take Authorization (if avoidance is not feasible)

Mitigation Measure 3:

CBB Avoidance

Mitigation Measure 4:

CBB Consultation with CDFW (if avoidance is not feasible)

List of Technical Studies Bound Separately (Volume 2)

Air Quality Memorandum

Noise Memorandum

Water Quality Memorandum

Natural Environment Study

Location Hydraulic Study

Historic Property Survey Report

- Historic Resource Evaluation Report
- Historic Architectural Survey Report
- Archaeological Survey Report

Hazardous Waste Memorandum

- Initial Site Assessment

Paleontological Identification Report

Climate Change Study

To obtain a copy of one or more of these technical studies/reports or the Initial Study, please send your request to:

Juergen Vespermann
District 6 Environmental Division
California Department of Transportation
2015 East Shields Avenue, Suite 100-200, Fresno, California 93726

Or send your request via email to: juergen.vespermann@dot.ca.gov
Or call Juergen Vespermann at 559-832-0051

Please provide the following information in your request:

Tulare 198 Culverts Repair and Replacement Project
State Route 198 in Tulare County
06-TUL-198-PM 0.0-44.0
Project ID number 0618000045

STATE OF CALIFORNIA CALIFORNIA STATE TRANSPORTATION AGENCY

Memorandum

To: Ernesto Garcia

Attn: David Melis

Adbul Baker

From: **Department of Transportation**
Division of Right of Way Central Region

Date: 6/27/2022

File: **CD** 06 **EA** 0X2600 **Alt** Rev2
Co TUL **RTE** 198

DESCRIPTION:
Repair and replace culverts.

Subject: **RIGHT OF WAY DATA SHEET**

We have completed an estimate of the right of way costs for the above-referenced project based on the Right of Way Data Sheet Request Form dated 12/3/2021

The following assumptions and limiting conditions were identified:

Parcels

It is assumed that these parcels will have continued access both during and after construction. The information provided for this Datsheet is based on publicly available GIS data, and google earth.

Utility

Datasheet previously updated (06-0X2600-Rev1) to reflect an increase of potholes requested. The project engineer stated that potholing will be necessary, but no utility involvement or relocation is required. It is presumed that this means all utility facilities above ground and underground in the project area will be worked around. Any adjustment of facilities constitutes involvement and the full R/W utility process and timeline would be necessary before the project could be certified.

Right of Way Lead Time will require a minimum 18 months after we receive Certified Appraisal Maps and/or Utility Conflict Plans, obtained necessary environmental clearance and applicable freeway agreements have been approved.

Recommended for approval by: David Sherman

DAVID SHERMAN
Senior Right of Way Agent
(559) 383-5188

ATTACHMENT F

General Description of R/W and Excess Lands Required (zoning, use, major improvements, critical or sensitive parcels, etc.):

The proposed drainage restoration project is on State Route 198, from 0.0 miles west of junction SR 198 and SR 99 to just before the Sequoia National Park entrance, in Tulare County near the town of Three Rivers. The project proposes to repair, replace, and clean culverts located at various locations from PM 0.00 to PM 44.0. There are 36 Temporary Construction Easements requested on this alternative, and 17 permanent drainage easements. The Temporary Construction Easements will be used for ingress/egress of workers and equipment, and short-term storage of equipment if necessary. All improvements in the TCE locations will not be disturbed according to Design. The properties located on this project consist of residential use, commercial use, and miscellaneous use. All acquisition values are nominal and therefore the acquisition value was raised to $2500 for every parcel. There are no outdoor advertising signs on this project.

General Description of Utility Involvement:

Updated Datasheet Rev2: Maintenance project to repair, replace, and clean culverts on SR198 from PM 0.0 at the Kings/ Tulare County Line to the PM 44.0. A review of permits indicates the following utilities are in or near the work area: SCE electrical distribution, AT&T telephone and fiber optic, California Water Service water lines, and So Cal Gas natural gas lines.

General Description of Railroad Involvement:

No railroad facilities will be affected.

Right Of Way Cost Estimate	Current Year	Contingency Rate	Escalation Rate	Escalated Year
	2021	25%	5%	2023
Acquisition:	$112,500	25%	5%	**$124,031**
Mitigation:	$144,423	25%	5%	**$159,226**
State Share of Utilities:	$225,000	25%	5%	**$248,063**
Expert Witness:	$0	25%	5%	**$0**
Relocation Assistance:	$0	25%	5%	**$0**
Demolition and Clearance:	$0	25%	5%	**$0**
Title and Escrow:	$40,500	25%	5%	**$44,651**
Ad Signs:	$0	25%	5%	**$0**
Total Current Value:	$522,423			**$575,971**

If RW Cost Est fields are blank, Costs = $0

NOTE: above estimate includes railroad engineering in the amount of: $0.00

Estimated Construction Contract Work (CCW): 0 R/W LEAD TIME/Mo. 18

Estimated Pothole Date 3/1/2022

Cost Break Down

Pot Hole	180,000
# Pot Holes	180

Mitigation

Land	0
Bank	0
Permit Fees	115,538

Parcel Area

Total R/W Required:	0.66
Total Excess Area:	0

Parcel Data

# of Parcel Type X:	0		
# of Parcel Type A: less than $10,000 non-complex	36		
# of Parcel Type B: more than $10,000 non-complex	0		
# of Parcel Type C: complex, special valuation	0		
# of Parcel Type D: most complex/time consuming	0	# of Duals Needed:	0
Totals:	36	**Totals:**	0

# of Excess Parcels: 0

ATTACHMENT F

Misc R/W Work

# of RAP Displacements:	0
# of Clearance/Demos:	0
# of Const Permits:	0
# of Condemnations:	0

RR Involvement

Railroad Facilities or Right of Way Affected?	NA
Const/Maint Agreement:	NA
Service Contract Count:	0
Right of Entry:	NA
Clauses:	NA
Estimated Lead-time:	None

Utilities

5 Companies to be potholed
5 Companies for Verification
0 Companies for Utility Relocations
JUA/CCUAs are not needed

Is there a significant effect on assessed valuation: No

Were any previously unidentified sites with hazardous waste or material found: No

Are RAP displacements required: No

# of single family: 0 # of muliti-family: 0 # of business/nonprofit: 0 # of farms: 0

Sufficient replacement housing will be available without last resort housing: N/A

Are material borrow or disposal sites required: No

Are there potential relinquishments or abandonments: No

Are there any existing or potential airspace sites: No

Are environmental mitigation parcels required: No

Data for evaluation provided by:

Estimator:	Nicole Olsen	12/9/2021
Railroad Liaison Agent:	Sandra Sifuentes	12/3/2021
Utility Relocation Coordinator:	Geoffrey Greene	12/9/2021

I have personally reviewed this Right of Way Sheet and all supporting information. I find this Data Sheet complete and current, subject to the limiting conditions set forth.

David Sherman for

NICHOLAS G. DUMAS
Office Chief, District 6 Right of Way

Date
ENTERED PMCS
BY: Erika Graham

ATTACHMENT F

Department of Transportation
District 6

TRANSPORTATION MANAGEMENT PLAN DATA SHEET

06-Tul 198-PM 0.0-44.0

Tulare 198 Culvert Rehab

PROJECT/EA NO: 0618000045-0X260

June 21, 2022

Prepared For: ABDUL BAKER, Design Senior
Office of D6 Design, Branch A

Prepared By: BRINDER BASSI

Concurred By:

ISIDRO PEREZ
District 6 – Traffic Management Chief

Approved By:

Brinder Bassi
BRINDER BASSI
District 6 – TMP Assistant Manager

This Transportation Management Plan (TMP) data sheet is prepared in response to a request from Office of Central Region Design Services, Branch A dated June 21, 2022.

Attached is the TMP Data Sheet for the above referenced project. Per Deputy Directive 60-R2, TMP must be considered at the early stage of all projects and activities performed on the State Highway System. The following items shall be included in the project initiation document (PID) and/or Project Report(PR):

1) The TMP Data Sheet shall be attached.
2) Any costs associated with the traffic impact mitigation measures listed in the TMP Data Sheet shall be included.
3) The following statements shall be included:

   "Preliminary traffic impacts and mitigation for this project have been outlined in the attached Transportation Management Plan Data Sheet (TMP Data Sheet). Costs associated with the traffic impact mitigation measures listed in the TMP Data Sheet have been included in this documents estimate."

ATTACHMENT G

"A TMP for this project is required and should be requested when the design is complete enough to determine specific traffic impacts, but yet early enough to make design changes/additions required for traffic mitigation."

"Lane requirement charts and detailed TMP will be provided during PS&E stage."

"Lane closures are not allowed when the traffic volume is beyond the capacity of the remaining lanes. Nighttime work outside peak hours is anticipated for this project."

Alternate one-way (reversing) traffic control will be implemented."

If you have any questions, please feel free to contact Isidro Perez at 559-383-5246 or Brinder Bassi at 559-383-5182.

Attachments:
- TMP Data Sheet

DISTRICT 6 - TRANSPORTATION MANAGEMENT PLAN

DATA SHEET

(TMP Elements and Costs)

CO/RTE	TUL	198	***PM***	0.0/44.0	***PROJ. NO.***	0618000045
					EA. NO.	0X260
PROJECT NAME	Tulare 198 Culvert Rehab					
PROJECT LIMIT	In Tulare County on Route 198 from Kings/Tulare county line to Sequoia National Park boundary					
PROJECT DESCRIPTION	Repair and replace culverts at various locations					

A) ***The project includes the following:***
(Check all that applicable type of facility closures.)

- ☑ Highway or Freeway Lanes
- ☑ Highway or Freeway Shoulders
- ☐ Freeway Connectors
- ☐ Full/Complete Freeway/Highway Closure
- ☑ Freeway Off-ramps
- ☑ Freeway On-ramps
- ☐ Local Streets

B) ***Are there any construction strategies that can restore existing number of lanes?***
☑ No ☐ Yes *(Check all applicable strategies.)*

- ☐ Temporary Roadway Widening
  Structure Involvement? ☐ Yes ☑ No (If yes, notify Project Manager)
- ☐ Lane Restriping (Temporary narrow lane widths)
- ☐ Roadway Realignment (Detour around work area)
- ☐ Median and/or Right Shoulder Utilization
- ☐ Use of HOV lane as Temporary Mixed Flow Lane
- ☐ Staging Alternatives (Explain Below)

C) ***Calculated Delay***
(To be performed if construction strategies in Item B do not mitigate congestion resulting from Item A or on all projects along Interstate 5 and Route 99)

1. Estimated Maximum Individual delay _____ minutes
2. Existing or Acceptable Individual Vehicle Delay _____ minutes
3. Estimated Individual Vehicle Delay Requiring Mitigation _____ minutes
4. Estimate Delay Cost (Most Applicable)
   - ☐ Extended Weekend Closure
   - ☐ Weekly (7 days)
5. Estimated Duration of Project Related Delays _____ # of Days
6. Cost of Construction Related delays _____

TMP Estimates based on X-Number of Working Days requiring Lane/Shoulder/Ramp/Freeway/Highway Closures: **270** Working Days

Total Working Days to Construct the Project: **270** Working Days

ATTACHMENT G

TMP DATASHEET

Date:	*June 21, 2022*	***Cnty/Rte:***	*TUL*	*198*
Design Senior:	*Abdul Baker*	***PM:***	*0.0/44.0*	*198*
Branch: A	***Office of D6 Design***	***Project/EA No:***	*0618000045*	*0X260*

D) ***Preliminary TMP Elements and cost:*** (Identify all elements and estimated costs that will be used to mitigate congestion resulting from the proposed construction activities.)

1. Public Information (BEES #066063)

☐	Brochures & Mailers	
☑	Press Release/Media Alerts	$27,000
☐	Paid Advertisements	
☐	Public Information Center/Kiosks	
☐	Telephone Hotline	
☑	Planned Lane Closure Website	$0
☐	Project Website	
☐	Pubic Meetings	
☑	Freight Travel Information	$0

2. Motorist Information Strategies

☑	Traffic Radio Announcements	$0
☐	Fixed CMS	
☑	Portable CMS (BEES #128650)	$97,000
☐	Temporary Motorist Information Signs	
☐	Ground Mounted Signs (Detour)	
☐	Dynamic Speed Message Sign	
☐	Highway Advisory Radio	
☑	CT Hwy Infom. Network (CHIN)	$0

3. Incident Management

☑	Transportation Management Center	$0
☐	Traffic Management Team (TMT)	
☐	Intelligent Transportation Systems	
☐	Traff. Surveillance (Loop & CCTV)	
☐	Helicopter Surveillance	
☐	Tow/Freeway	
☑	COZEEP (BEES #066062)	$540,000

4. Construction Strategies (In Addition to Elements Identified on Item B)

☑	Lane Requirement Chart	$0
☐	Construction Staging	
☐	Traffic Handling Plans	
☐	Full Facility Closures	
☐	Local Road Closures	
☐	Lane Modifications	
☑	One-Way Reversing Operation	$0

4. Construction Strategies (In Addition to Elements Identified on Item B)

☐	Two-way Traffic On One Side	
☑	Reversible Lanes	$0
☐	Ramp/Connector Closure	
☑	Night Work	$0
☐	Extended Weekend Work	
☐	Ped/Bicycle Access Improvements	
☐	Maintain Business Access	
☐	C + T Bidding	
☐	Innovative Construction Techniques	
☑	Coordination w/ Adj. Construction Site	$0
☐	Speed Limit Reduction	
☐	Traffic Screens	

5. Demand Management

☐	HOV Lane/Ramps	
☐	Variable Work Hours	
☐	Telecommuting	
☐	Truck/Heavy Vehicle Restrictions	
☐	Rideshare Promotions	
☐	Ramp Metering	
☐	Transit Incentives	
☐	Shuttle Services	
☐	Ridesharing/Carpooling Incentives	
☐	Park & Ride Promotion	

6. Alternative Route Strategies

☐	Off-site Detours/Use of Alt. Rtes	
☐	Signal Timing/Coord. Improvements	
☐	Temporary Traffic Signals	
☐	Signal Retiming	
☐	Street/Intersection Improvements	
☐	Turn Restrictions	
☐	Parking Restrictions	

7. Other Considerations

☐	Application of New Technologies	
☐	Other	

TOTAL ESTIMATED COST OF TMP	**$664,000**

PROJECT NOTES:

1. Current dollar values used. Inflation was not factored into the estimate.
2. There are no noise restrictions / moratoriums for night work.
3. Traffic Control/Maintain Traffic costs was not provided. Please consult with the OE or construction office for this estimate.
4. Portable CMS specified for this project by this estimate is designed for congestion relief as outlined by DD-60.
Portable CMS required for other purposes should be included under other specifications.
5. COZEEP specified for this project by this estimate is designated for congestion relief as outlined by DD-60.
COZEEP required for other purposes should be included under other specifications.
6. The TMP is a living document that is subject to change if material changes take place in the final version of the project phase or if changes are required during construction to respond to excessive levels of congestion.
*The estimated cost will depend on the Design Engineer's and Office of Traffic Design's Estimate.
7. This revised TMP Data Sheet supersedes the previous TMP Data Sheet dated July 6, 2021.
*The estimated cost will depend on the Design Engineer's and Office of Traffic Design's Estimate.

PREPARED BY:	OFFICE OF TRAFFIC OPERATIONS	DATE:
Brinder Bassi		June 21, 2022

ATTACHMENT G

Dist-County-Route: 06-Tul-198
Post Mile Limits: 0.0/44.0
Project Type: Drainage System Clean/Repair
Project ID (EA): 0618000045 (06-0X2600)
Program Identification: SHOPP 201.151
Phase: ☐ PID ☒ PA/ED ☐ PS&E

Regional Water Quality Control Board(s): Central Valley Region (5-F)

1.	Does the project disturb 5 or more acres of soil?	Yes ☐	No ☒
2.	Does the project disturb 1 or more acres of soil and not qualify for the Rainfall Erosivity Waiver?	Yes ☐	No ☒
3.	Is the project required to implement Treatment BMPs?	Yes ☐	No ☒
4.	Does the project impact existing Treatment BMPs?	Yes ☐	No ☒

If the answer to any of the preceding questions is "Yes", prepare a Long Form – Stormwater Data Report. Unless otherwise agreed upon by the District/Regional Design Stormwater Coordinator.

Total Disturbed Soil Area: 2.8 ac
New Impervious Surface: 0.0 ac
Estimated Const. Start Date: 02/01/2024
Estimated Const. Completion Date: 08/01/2025
Risk Level: RL 1 ☐ RL 2 ☐ RL 3 ☐ Not Applicable ☒
Is MWELO applicable? Yes ☐ No ☒

This Short Form – Stormwater Data Report has been prepared under the direction of the following Licensed Person. The Licensed Person attests to the technical information contained herein and the data upon which recommendations, conclusions, and decisions are based. Professional Engineer or Landscape Architect stamp required at PS&E only.

***Chris Sewell**, Registered Project Engineer* *Date*

I concur with the Construction water pollution control strategy and selected temporary BMPs in this report:

[Stamp Required at PS&E only]

***David D. Troop**, District Construction SW Coordinator* *Date*

I have reviewed the stormwater quality design issues and find this report to be complete, current and accurate:

***Mazin Al Ali**, Regional NPDES/SW Coordinator* *Date*

ATTACHMENT H

Risk Register / Risk Management Plan for 06-0X260, Tul 198 Culvert Rehab

v3.1 last modified 04/13/2018 CB

Risk Checkpoint:	PA&ED
Date:	6/10/2022
Project Nickname:	Tul 198 Culvert Rehab
EA:	06-0X260
Co-Rt, Post Miles:	Tul-198-PM 0.0/44.00
Project Manager:	Shavonne Conley
FY & Program (SHOPP or STIP):	2020 (SHOPP)
Total Costs (Capital & Support):	$24,000k
RTL Target:	5/30/2023

Phase	Cost Contingency Range $k			Schedule Contingency Range (Wkg Days)		
	Optimistic	PERT	Pessimistic	Optimistic	PERT	Pessimistic
0-PA&ED	$0	$0	$0	0	0	0
1-PS&E	$0	$0	$0	0	0	0
2-RW Sup	$0	$0	$0	0	0	0
3-Con Sup	$0	$0	$0	0	0	0
Support Contingency	$0	$0	$0	0	0	0
9-RW Cap	$0	$0	$0	0	0	0
4-Con Cap	$0	$0	$0	0	0	0
Capital Contingency	$0	$0	$0	0	0	0
Total Contingency	$0	$0	$0	0	0	0

Risk Identification								Risk Assessment			Risk Response				Quantifying "Red" (High P & I) Level Risks			
Status	ID #	Type	Category	Title	Risk Statement	Current status / assumptions	Risk Trigger	Probability (P)	Cost Impact Schedule Impact (I)	Cost Score Schedule Score (PxI)	Strategy	Response Actions	Risk Owner	Updated	Impacted Phase	Calculated Contingency	Support (hours) Capital Cost $k	Schedule (Days)
Active	1	Threat	Environmental	Replanting	As a result of limited area within the Caltrans ROW, the need to complete mitigation requirements off-site may occur, planting outside of the ROW will increase the cost and schedule of the project and the potential of creating a Child EA to accommodate the additional work and time required to coordinate	Replanting of trees will take place on-site within the Caltrans right-of-way.	Need identified to remove any trees, woody shrubs, or other vegetation.	1-Very Low (1-10%) 10%	4 - Moderate ($1500000k - $2997000k) 2 - Low (<1 month)	4 2	Mitigate	Environmental mitigation specialists will need to purchase land that meets the habitat requirements for replanting riparian trees or use already purchased land that meets the habitat requirements.	Biology	9/10/2021	4-Con Cap		O ML P	O ML P
Active	2	Threat	Environmental	Nesting Birds	As a result of construction needing to be done during the bird nesting season (Feb. 1-Sept. 30), compliance with the Migratory Bird Treaty Act could lead to delays during construction.	Construction activities will overlap with the bird nesting season and migratory birds are likely to be found.	Construction activities need to take place between Feb. 1 and Sept.30 during the bird nesting season. A biological monitor may be required to monitor the nest until the young birds can fly.	3-Moderate (31-50%) 40%	2 - Low (<$1500k) 4 - Moderate (1-3 months)	6 12	Accept	Biologist, in coordination with RE and contractor, will conduct preconstruction migratory bird survey two weeks prior to any construction activities. ESAs, typically delimited by high-visibility fencing, excludes work for 100 feet from the nesting bird (300 feet for raptors, and 600 feet for Swanson's hawk). However , CDFW can require no work within 1/2 mile of nesting hawk.	Biology	9/10/2021	4-Con Cap		O ML P	O ML P
Active	3	Threat	Environmental	404 Nationwide Permit Credits	As a result of changes in the project footprint, an increase in number of mitigation credits may be required by the US Army Corps of Engineers, which would lead to increased project costs.	0.05 credits will be needed for "In Lieu Fee" (404 mitigation).	Change of project footprint, especially after permits received.	1-Very Low (1-10%) 5%	2 - Low (<$0k) 8 - High (3-6 months)	2 8	Avoid	Coordinate with Design and Construction to limit work area required to replace and rehabilitate culverts.	Biology	9/10/2021	4-Con Cap		O ML P	O ML P
Active	4	Threat	Environmental	404 Individual Permit	As a result of impacts to wetlands and waters of the U.S. exceeding 5 acres, an US Army Corps of Engineers 404 Individual permit may be needed, which would lead to increased obligations during construction.	An US Army Corps of Engineers 404 Nationwide permit will be used to mitigate for impacts to wetlands and waters of the U.S.	Impacts to wetlands and waters of the U.S. at culvert locations total more than 5 acres.	2-Low (11-30%) 20%	4 - Moderate ($1500000k - $2997000k) 4 - Moderate (1-3 months)	8 8	Avoid	Coordinate with Design and Construction to limit the work area and decrease potential impacts to wetland areas and water of the U.S.	Biology	9/10/2021	4-Con Cap		O ML P	O ML P
Active	6	Threat	Environmental	LOC/BO	As a result of the potential for impacts to occur to special status species, the need for a Biological Opinion may occur, which would increase scheduling time and add to environmental commitments.	A Letter of Concurrence (LOC) will be required from the US Fish & Wildlife Service.	U.S. Fish & Wildlife Service does not agree with Caltrans that impacts to special status species are less than adverse.	2-Low (11-30%) 20%	2 - Low (<$1500000k) 4 - Moderate (1-3 months)	4 8	Accept	Communicate with the US Fish & Wildlife Service about the reasons for needing a Biological Opinion, and obtain the Biological Opinion. US Fish & Wildlife Service may add additional measures in the Biological Opinion that will need to be implemented.	Biology	9/10/2021	4-Con Cap		c O ML P	O ML P
Active	7	Threat	Environmental	401 Permit Annual Fee	As a result of construction work continuing past one year, a 401 permit annual fee may be required, which would lead to increased project costs.	Ground disturbance will be confined to a given area and staging areas will be clearly defined.	Construction work is not completed within one calendar year.	2-Low (11-30%) 20%	2 - Low (<$1500000k) 4 - Moderate (1-3 months)	4 8	Accept	Communicate with design and construction to complete work within one calendar year	Biology	9/10/2021	4-Con Cap		O ML P	O ML P
Active	10	Threat	Environmental	Inadvertent Discovery during construction	There is a risk that buried cultural resources will be discovered during construction of the project.	No additional archaeological sites will be encountered during ground-disturbing activities during construction.	Inadvertent Discovery	4-High (51-70%) 60%	2 - Low (<$0k) 8 - High (3-6 months)	8 32	Accept	Stop work in that area of construction, coordinate with State Historic Preservation Officer and other resource agencies as required. Estimated cost $50,000-$300,000.	Cultural Resources	9/10/2021	4-Con Cap		O ML P	O ML P
Active	11	Threat	Environmental	Unanticipated Paleontological Discovery	As a result of any changes in the project description that would result in more excavation and impact to high sensitivity paleontological resource, mitigation would be required. And if mitigation were to be required, a mitigation plan would be required. The mitigation plan would include a budget that would be premised upon the discovery of a specified number of fossils that would be assumed for the	If the current project description remains unchanged, the current status of the project relative to the potential to impact a high sensitivity paleontological resource is 0.	Discovery of an amount of fossils greater than planned for in mitigation plan budget.	1-Very Low (1-10%) 5%	1 - Very Low (Insignificant) 1 - Very Low (Insignificant)	1 1	Mitigate	Immediately bring in additional consultant staff to remove an unanticipated discovery of fossils greater than what was assumed for the original budget. The increase in staff would remove fossils so as to not delay construction. Based upon the new discovery, a revised budget would be prepared for a new estimate of mitigation cost.	Paleontology	9/10/2021	4-Con Cap 4-Con Cap			
Active	14	Threat	Design	Utility Conflict	As a result of utilities located within area for culvert reconstruction, utilities might be in conflict with construction activities, requiring extended relocation or work around.	Currently utility relocation is included in the right of way process	Utilities not identified in the PID and are identified during PJD process	2-Low (11-30%) 20%	2 - Low (<$1500k) 4 - Moderate (1-3 months)	4 8	Mitigate	During PAED phase, identify all utilities within the project limits, verify and plan to relocate.	Design	9/10/2021	4-Con Cap		O ML P	O ML P
Active	15	Threat	Design	Culvert Installation	As a result of different site conditions, installation methods may require different strategy which will increase cost	No difficulties will be encountered during standard construction practices.	Site condition will not lend to standard construction practices	2-Low (11-30%) 20%	4 - Moderate ($1500k - $2997k) 2 - Low (<1 month)	8 4	Mitigate	During PAED and PSE phase review site conditions to ensure standard construction methods can be employed.	Design	9/10/2021	4-Con Cap		O ML P	O ML P
Active	22	Threat	Environmental	Section 4(f) (Lake Kaweah Recreation Area)	If the project footprint includes temporary construction easements from US Army Corps of Engineers property, or they do not agree that culverts impacts are de minimis, a full-blown Section 4(f) analysis and mitigation would be required.	Section 4(f) impacts may be de minimums if construction impacts are minor and temporary.	Requirement for temporary easement or acquisition from Lake Kaweah which is designated as a park and recreation area by the US Army Corps of Engineers.	3-Moderate (31-50%) 40%	2 - Low (<$1500k) 8 - High (3-6 months)	6 24	Avoid	PDT would need to begin coordination with US Army Corps of Engineers early in the 0 phase regarding potential 4(f) impacts. Design needs to provide details of temporary construction easements and any acquisition needed from US Army Corps of Engineers property at Lake Kaweah for Section 4(f) analysis. Mitigation would be required.	Environmental	9/10/2021	4-Con Cap		O ML P	O ML P
					As a result of culvert work adjacent to Lake Kaweah, access to some parcels owned by the US Army Corps of Engineers is needed to construct	Permit for work on Federal	Requirement for temporary		16 - Very High (>$6000k)	64		PDT would need to begin coordination with US Army Corps of Engineers early in the 0 phase regarding			0-PA&ED Sup		O ML P	O ML P

ATTACHMENT I

Risk Identification								Risk Assessment			Risk Response				Quantifying "Red" (High P & I) Level Risks			
Status	ID #	Type	Category	Title	Risk Statement	Current status / assumptions	Risk Trigger	Probability (P)	Cost Impact Schedule Impact (I)	Cost Score Schedule Score (PxI)	Strategy	Response Actions	Risk Owner	Updated	Impacted Phase	Calculated Contingency	Support (hours) Capital Cost $k	Schedule (Days)
Active	23	Threat	Environmental	Permission to Cross Federal Land	the project, then this federal permit would need to be applied for during the 0 Phase . This would consume excessive time and resources during the 0 and 1 Phases by Right of Way, Design, Environmental, and Project Manager, and would not work with compressed schedule.	Lands will be required from the US Army Corps of Engineers.	easement or acquisition from any property owned by a Federal agency.	4-High (51-70%) 60%	16 - Very High (>6 months)	64	Avoid	potential 4(f) impacts. Design to provide details of temporary construction easements and any acquisition needed from US Army Corps of Engineers property at Lake Kaweah for Section 4(f) analysis. Mitigation would be required.	Environmental/ROW	9/10/2021	2-RW Sup		O ML P	O ML P
Active	24	Threat	Right of Way	Permit for work on Federal Lands	As a result of culvert work adjacent to Lake Kaweah, access to some parcels owned by the US Army Corps of Engineers is needed to construct the project. Obtaining the required permit to do this work will consume extra time and resources during the 0 and 1 Phases, and will put delivery dates at risk.	Permit for work on Federal Lands will be required from the US Army Corps of Engineers.	Requirement for temporary easement or acquisition from any property owned by a Federal agency.	4-High (51-70%) 60%	4 - Moderate ($1500k - $2997k)	16	Accept	PDT needs to begin coordination with US Army Corps of Engineers early in the 0 phase. ROW completes Application for Transportation and Utility Systems and Facilities on Federal Lands (SF-299) with information obtained from Design, Environmental, Hydraulics,etc. Coordination will continue until RTL when permit is issued by federal agency.	Right of Way	8/8/2018	0-PA&ED Sup		O ML P	O ML P
									8 - High (3-6 months)	32					2-RW Sup		O ML P	O ML P
Active	25	Threat	Construction	Rock Outcropping in Culvert Installation	As a result of increasing the size of the culvert and lowering the flowline, there may be conflict with a outcropping of rock which would require blasting for removal.	Currently assuming outcropping is not needed	During PS&E it is identified that rock is in the footprint of upgraded culvert	3-Moderate (31-50%) 40%	2 - Low (<$1500k)	6	Mitigate	During the PS&E phase, culverts that require rock outcroppings by blasting are identified and if cannot be avoided are added accordingly	Design	9/10/2021				
									4 - Moderate (1-3 months)	12					4-Con Cap		O ML P	O ML P
Active	26	Threat	Construction	Dewatering	As a result of water being in the work area a pumping plan or water diversion plan would be needed that could increase schedule and cost.	Assuming water will be present during constriction	Culvert inspection	3-Moderate (31-50%) 40%	4 - Moderate ($1500k - $2997k)	12	Mitigate	During PS&E analysis if work will be in the wet season and add extra work days and funds if needed.	Design	9/10/2021				
									4 - Moderate (1-3 months)	12					4-Con Cap		O ML P	O ML P
Active	27	Threat	Construction	Culvert lining	As a result of lining inspection, additional culvert replacement may increase which would lead to increase in schedule and cost.	Approximately 20% of relining will change to replacement.	Culvert inspection	2-Low (11-30%) 20%	4 - Moderate ($1500k - $2997k)	8	Accept	Obtain results of the maintenance inspection report and vote more funds.PM will seek revised schedule as possible.	PPM	7/16/2021				
									2 - Low (<1 month)	4					4-Con Cap		O ML P	O ML P
Active	28	Opportunity	Construction	Culvert lining	As a result of lining inspection, culvert may not be necessary, which would lead to decrease in schedule and cost.	Approximately 5% of relining will not be required	Culvert Inspection	2-Low (11-30%) 20%	4 - Moderate ($1500k - $2997k)	8	Accept	Obtain results of the maintenance inspection report and vote for less funds	PPM	7/16/2021				
									2 - Low (<1 month)	4					4-Con Cap		O ML P	O ML P
Active	29	Threat	Right of Way	Schedule Delay	If any of the Temporary Construction Easement's go through the condemnation process, the project schedule and cost may be impacted	Temporary Construction Easement doesn't go through the condemnation process	Temporary Construction Easement go through the condemnation process	3-Moderate (31-50%) 40%	4 - Moderate ($1500k - $2997k)	12	Accept	If risk materializes, PM will seek revised schedule (time extension) as allowed by CTC rules or PDT will look into modifying scope	RW/PM	7/1/2021				
									8 - High (3-6 months)	24					4-Con Cap		O ML P	O ML P
Active	30	Threat	Right of Way	Title Reports	As a result of title reports delays, the project schedule will be impacted	Title reports delays are anticipated	Title reports delays	2-Low (11-30%) 20%	4 - Moderate ($1200k - $2397.6k)	8	Accept	If risk materializes, PM will seek revised schedule (time extension) as allowed by CTC rules or PDT will look into modifying scope	PM/RW	10/11/2021	4-Con Cap		O ML P	O ML P
									8 - High (3-6 months)	16					9-RW Cap		O ML P	O ML P
Retired	5	Opportunity	Environmental	RMA	As a result of the Routine Maintenance Agreement, some culvert work may be covered under the agreement, which would lead to decreased project costs due to a potential of fewer permits required.	Culvert work will not be covered under the Routine Maintenance Agreement (RMA).	If the new RMA includes work of cleaning and relining culverts in the agreement.	3-Moderate (31-50%) 20%	2 - Low (<$1500000k)	6	Accept	Coordinate with Maintenance and provide list of culverts, postmiles, and work prescribed at each culvert.	Biology	7/31/2018				
									4 - Moderate (1-3 months)	12								
Retired	8	Threat	Environmental	Cultural Resources	There is a risk that additional cultural resources will be identified during surveys, which would require additional evaluation and testing (Historic Resources Evaluation Report, Extended Phase I archaeological testing, Phase II excavation).	No additional cultural resources are present in the project area.	Discovery of additional cultural resources.	2-Low (11-30%) 20%	4 - Moderate ($1500000k - $2997000k)	8	Accept	Consult with State Historic Preservation Officer on eligibility of newly identified cultural resources. Estimated cost $100,000 - $300,000.	Cultural Resources	8/7/2018				
									2 - Low (<1 month)	4								
Retired	9	Threat	Environmental	Cultural Resources Eligible for National Register of Historic Places	If it is determined that a cultural resource would have an adverse effect due to construction of the project, mitigation (Phase 3 excavation and/or a Memorandum of Agreement) will be required.	No historic properties would be adversely affected.	A finding that the project would have an adverse effect to a historic property.	3-Moderate (31-50%) 40%	2 - Low (<$1500000k)	6	Mitigate	Consult with State Historic Preservation Officer on mitigation plan. Estimated cost $50,000 - $200,000.	Cultural Resources	8/7/2018				
									4 - Moderate (1-3 months)	12								
Retired	12	Threat	Environmental	Section 4(f) (Cultural Resources)	If a historic architectural resource is found to have an adverse effect due to construction of the project, full Section 4(f) analysis and mitigation would be required in addition to the Section 106 compliance noted in Risk #9, Cultural Resources Eligible for National Register of Historic Places.	No historic properties would be adversely affected.	A finding that the project would have an adverse effect to a built environment resource.	3-Moderate (31-50%) 40%	2 - Low (<$0k)	6	Mitigate	Consult with State Historic Preservation Officer on mitigation plan. Estimated cost $50,000 - $200,000.	Environmental	8/7/2018				
									4 - Moderate (1-3 months)	12								
Retired	13	Threat	Environmental	Determination of Project Footprint at Locations	If Surveys work is not completed and Design does not provide the project footprint, including temporary construction easements and potential acquisition, when Request for Studies sent to Environmental early in 0 Phase, Environmental will not be able to perform analysis and produce studies.	Surveys Division work will be done early in the 0 Phase.	Environmental not provided with project footprint for each location early in 0 Phase.	3-Moderate (31-50%) 40%	4 - Moderate ($1500000k - $2997000k)	12	Avoid	Add extra months into the 0 Phase schedule so that Surveys information has been provided to Design so that the project footprint at each location can be provided to Environmental at the same time as the Request for Studies.	Surveys	8/7/2018				
									4 - Moderate (1-3 months)	12								
Retired	16	Threat	Environmental	Appropriate Mitigation Parcels	As a result of low/no inventory of available properties, a willing seller with an appropriate parcel may not be available, which would lead to the need for a RFP to complete mitigation	If offsite mitigation is required, appropriate mitigation parcels will be	No appropriate mitigation parcels available for purchase can be found	2-Low (11-30%)	2 - Low (<$1500k)	4	Accept	Pursue an RFP for credit creation or PRM	Biology	5/6/2021				

ATTACHMENT I

Risk Identification								Risk Assessment			Risk Response				Quantifying "Red" (High P & I) Level Risks			
Status	ID #	Type	Category	Title	Risk Statement	Current status / assumptions	Risk Trigger	Probability (P)	Cost Impact Schedule Impact (I)	Cost Score Schedule Score (PxI)	Strategy	Response Actions	Risk Owner	Updated	Impacted Phase	Calculated Contingency	Support (hours) Capital Cost $k	Schedule (Days)
					the need for a RPP to complete mitigation requirements through credit creation or PRM	available for purchase	purchase can be found	20%	8 - High (3-6 months)	16								
Retired	17	Threat	Environmental	Site Protections of Mitigation Parcel	If permitted responsible mitigation is required, site protection mechanisms may be required (if we are not able to plant on government land) and these would include a CDFW approved Conservation Easement Holder, Fee title owner, endowment holder, land manager. If property acquisition is required, additional costs will be required, and a revised cost estimate will be needed	No permitted responsible mitigation will be required	permitted responsible mitigation is required and replanting cannot be completed on government land.	1-Very Low (1-10%) 5%	2 - Low (<$1500k) 8 - High (3-6 months)	2 8	Avoid	Pursue replanting on government land and avoid property acquisition	Biology	5/6/2021				
Retired	18	Threat	Environmental	Replanting Permitting	If replanting occurs within a jurisdictional area, additional permitting may be required, increasing the cost of the mitigation and potentially the schedule to completion	Replanting will occur in upland, non-jurisdictional channels	Replanting cannot be conducted outside of jurisdictional areas.	2-Low (11-30%) 20%	2 - Low (<$1500k) 4 - Moderate (1-3 months)	4 8	Avoid	Pursue replanting outside of jurisdictional channels.	Biology	5/6/2021				
Retired	19	Threat	Environmental	Site Prep of Mitigation Parcel	If the mitigation parcel requires preparation or debris removal prior to planting , the cost of the mitigation project may increase and depending on when the property is obtained, the schedule may be prolonged	Replanting locations will not require site prep or debris removal	Replanting site needs debris removal or site prep prior to replanting	3-Moderate (31-50%) 40%	1 - Very Low (Insignificant) 4 - Moderate (1-3 months)	3 12	Avoid	Pursue replanting sites where no/minimal prep and debris removal will be required	Biology	5/6/2021				
Retired	20	Threat	Environmental	Mineral Rights of Mitigation Parcel	If Mineral Rights are severed or a remoteness opinion is needed for a potential mitigation parcel, the project may incur additional costs and the schedule may be prolonged as additional coordination with the agencies and reporting will be required	No severed Mineral Rights or remoteness opinions will be needed	Severed Mineral Rights or remoteness opinions are needed for mitigation project.	1-Very Low (1-10%) 5%	2 - Low (<$1500k) 8 - High (3-6 months)	2 8	Accept	Accept mineral right severance or need for remoteness opinion.	Biology	5/6/2021				
Retired	21	Threat	Environmental	Use of CCC Crew for Mitigation Planting	If a California Conservation Corps (CCC) crew is not available for the replanting effort, a task order for contractor support during construction may be required, this has the potential to elevate the cost of the proposed mitigation project.	CCC will be available to assist replanting under a cooperative state agency agreement	CCC or coop agreement are not available	2-Low (11-30%) 20%	2 - Low (<$1500k) 2 - Low (<1 month)	4 4	Accept	Utilize contractor task order or CCO for replanting effort	Biology	5/6/2021				

(3) PROGRAMMING NOMINATION (Post-PID) — PRG

Project ID		Project Location		Schedule		Support Cost ($K)		Capital Cost ($K)		Review	
Update-Accomp/Perf?	Yes	County	TUL	Dist Dir Approval	05/21/19	PA&ED Cost ($K)	3,515.0	R/W Cap ($K)	337.0	SHOPP Amendment	05/14/20
PPNO		Route	198	Requested SHOPP Cycle	2020	PS&E Cost ($K)	3,298.0	CONS Cap ($K)	11,548.0		
		BackPM	0.0	Requested RTL FY	2022/23	R/W Cost ($K)	1,759.0	Project Cost ($K)			
		AheadPM	44.00			CONS Cost ($K)	3,027.0				
						Total Support Cost ($K)	11,599.0	Total Cost ($K)	23,484.0		

Activity/Project Location: Replace and reline culverts

(4) POST PROGRAMMING CHANGES (Post-Programming) — PPC

Project ID		Project Location		PCR or Change Document Details		CTIPS Programmed Schedule		CTIPS Programmed Cost ($K)		Review	
Update-Accomp/Perf?	Yes	County	TUL	Document ID		SHOPP Cycle		Support Cost ($K)	11,599.0	SHOPP Amendment	
SHOPP Tool ID	19372	Route	198	Document Number		RTL FY		R/W Cap ($K)	337.0		
EA	0X260	BackPM	0.0	Document Type				CONS Cap ($K)	11,548.0		
AMS Project ID (EFIS)	0618000045	AheadPM	44.00	Approval Date				Total Cost ($K)	23484.0		
PPNO				Split/Combine							
				Cross Ref Project ID #							

Activity/Project Location: Replace and reline culverts

SHOPP Project - Accomplishment - Performance Measures - Benefits

District: 06 **Tool ID:** 19372 **Project ID:** 0618000045 **EA:** 0X260 **Co-Rte-PM:** TUL-198-0.0/44.00 (Primary Location)

Res In PID WP: 08/03/17 **Project Manager:** Ernesto Garcia

Save to Excel

☐ Bridge ☐ Pavement ☑ Drainage ☐ Facilities ☐ Safety, Signs & Lighting ☐ Mobility ☐ Roadside ☑ Complete Streets ☑ Sustainability /Climate Change ☐ Advance Mitigation /Mitigation ☐ Major Damage & Betterments ☑ Green-house Gases ☐ Relinquishment

Performance & Accomplishments (PPC)

	ActID	Activity Detail	Performance Objective	Unit of Measurement	Quantity	Pre-Good	Pre-Fair	Pre-Poor	New	Post-Good	Post-Fair	Post-Poor	HQ Program Review - Agree with District?	HQ Comment	Review Date	Performance Change Date After Review	Comment
1	C01	Replace/Install Culverts (201.151)	No Performance Objective in the SHSMP	Each	57.0		20.000	37.000		57.000							
2	C02	Replace/Install Culverts (201.151)	Drainage Restoration	Linear Feet	3926.82		1420.690	2506.130		3926.820							
3	C03	Slip Line Culvert (201.151)	No Performance Objective in the SHSMP	Each	3.0			3.000		3.000							
4	C04	Slip Line Culvert (201.151)	Drainage Restoration	Linear Feet	154.18			154.180		154.180							
5	C05	Cure in Place Line Culvert (201.151)	No Performance Objective in the SHSMP	Each	62.0		41.000	21.000		62.000							
6	C06	Cure in Place Line Culvert (201.151)	Drainage Restoration	Linear Feet	4854.78		3311.590	1543.190		4854.780							
7	C09	Headwall/Endwall (201.151)	No Performance Objective in the SHSMP	Each	30.0			30.000		30.000			Yes		02/23/22		
8	C11	Energy Dissipation & Other Element {RSP,DI, FES etc.} (201.151)	No Performance Objective in the SHSMP	Each	51.0			51.000		51.000			Yes		02/23/22		
9	C17	Fish Passage in the Priority List	Fish Passage	Each	0.0												
10	C18	Fish Passage Not in the Priority List	No Performance Objective in the SHSMP	Each	0.0												
11	H32	Is any Location Within the Project Limits Ped/Bike Accessible?	No Performance Objective in the SHSMP	Yes/No	Yes												Yes
12	H37	Bicycle-Tolerable Drainage Grates	No Performance Objective in the SHSMP	Each	2.0			2.000		2.000							
13	H55	Complete Streets Not Applicable (1,2,3)	Culv Only	1,2,3													Unsuitable for scope of project
14	I12	Use of Locally Available Building Materials	No Performance Objective in the SHSMP	Linear Miles	44.0												
15	N04	Defer	No Performance Objective in the SHSMP	-													not a CE/CE

ATTACHMENT J