State Street Village - Redlands

TRAFFIC ANALYSIS

CITY OF REDLANDS

PREPARED BY:

Aric Evatt, PTP
aevatt@urbanxroads.com

Charlene So, PE
cso@urbanxroads.com

Robert Vu, PE
rvu@urbanxroads.com

JULY 30, 2021

14013-03 TA Report

DRAFT

DRAFT

TABLE OF CONTENTS

TABLE OF CONTENTS ..... **III**
APPENDICES ..... **V**
LIST OF EXHIBITS ..... **VII**
LIST OF TABLES ..... **IX**
LIST OF ABBREVIATED TERMS ..... **XI**
1 INTRODUCTION **1**
1.1 Summary of Findings 1
1.2 Project Overview 3
1.3 Analysis Scenarios 5
1.4 Study Area 5
1.5 Deficiencies 7
1.6 Recommendations 8
1.7 Site Adjacent Roadway and Site Access Improvements 9
1.8 Queuing Analysis at the Project Driveways 14
1.9 Pedestrian and Bicycle Facilities Recommendations 14
1.10 Senate Bill 743 – Vehicle Miles traveled (VMT) 15
2 METHODOLOGIES **17**
2.1 Level of Service 17
2.2 Intersection Capacity Analysis 17
2.3 Traffic Signal Warrant Analysis Methodology 19
2.4 LOS Criteria 20
2.5 Thresholds of Significance 21
3 AREA CONDITIONS **23**
3.1 Existing Circulation Network 23
3.2 General Plan Circulation Element 23
3.3 Bicycle and Pedestrian Facilities 23
3.4 Transit Service 33
3.5 Existing (2021) Traffic Counts 33
3.6 Existing (2021) Conditions Intersection Operations Analysis 36
3.7 Traffic Signal Warrants Analysis 36
4 PROJECTED FUTURE TRAFFIC **39**
4.1 Project Trip Generation 39
4.2 Project Trip Distribution 42
4.3 Modal Split 42
4.4 Project Trip Assignment 45
5 E+P TRAFFIC CONDITIONS **49**
5.1 Roadway Improvements 49
5.2 E+P Traffic Volume Forecasts 49
5.3 Intersection Operations Analysis 49
5.4 Traffic Signal Warrants Analysis 49
5.5 Recommended Improvements 53
6 LOCAL AND REGIONAL FUNDING MECHANISMS **55**

DRAFT

6.1 City of Redlands Development Impact Fee Program 55
6.2 Measure "I" Funds 55
6.3 Measure U 56
7 REFERENCES 57

DRAFT

APPENDICES

APPENDIX 1.1: APPROVED TRAFFIC STUDY SCOPING AGREEMENT
APPENDIX 1.2: SITE ADJACENT QUEUES
APPENDIX 3.1: EXISTING TRAFFIC COUNTS
APPENDIX 3.2: EXISTING (2021) CONDITIONS INTERSECTION OPERATIONS ANALYSIS WORKSHEETS
APPENDIX 3.3: EXISTING (2021) CONDITIONS TRAFFIC SIGNAL WARRANT ANALYSIS WORKSHEETS
APPENDIX 5.1: E+P CONDITIONS INTERSECTION OPERATIONS ANALYSIS WORKSHEETS
APPENDIX 5.2: E+P CONDITIONS TRAFFIC SIGNAL WARRANT ANALYSIS WORKSHEETS
APPENDIX 5.3: E+P CONDITIONS INTERSECTION OPERATIONS ANALYSIS WORKSHEETS WITH IMPROVEMENTS

DRAFT

This Page Intentionally Left Blank

DRAFT

LIST OF EXHIBITS

EXHIBIT 1-1: LOCATION MAP 2
EXHIBIT 1-2: PRELIMINARY SITE PLAN 4
EXHIBIT 1-3: STUDY AREA 6
EXHIBIT 1-4: SITE ADJACENT ROADWAY AND SITE ACCESS RECOMMENDATIONS 10
EXHIBIT 3-1: EXISTING NUMBER OF THROUGH LANES AND INTERSECTION CONTROLS 24
EXHIBIT 3-2: CITY OF REDLANDS GENERAL PLAN CIRCULATION ELEMENT 25
EXHIBIT 3-3: CITY OF REDLANDS GENERAL PLAN ROADWAY CROSS-SECTIONS (PAGE 1 OF 4) 26
EXHIBIT 3-3: CITY OF REDLANDS GENERAL PLAN ROADWAY CROSS-SECTIONS (PAGE 2 OF 4) 27
EXHIBIT 3-3: CITY OF REDLANDS GENERAL PLAN ROADWAY CROSS-SECTIONS (PAGE 3 OF 4) 28
EXHIBIT 3-3: CITY OF REDLANDS GENERAL PLAN ROADWAY CROSS-SECTIONS (PAGE 4 OF 4) 29
EXHIBIT 3-4: EXISTING PEDESTRIAN FACILITIES 30
EXHIBIT 3-5: CITY OF REDLANDS GENERAL PLAN BICYCLE FACILITIES 31
EXHIBIT 3-6: CITY OF REDLANDS GENERAL PLAN MULTI-USE TRAILS 32
EXHIBIT 3-7: EXISTING TRANSIT ROUTES 34
EXHIBIT 3-8: EXISTING (2021) TRAFFIC VOLUMES (PAGE 1 OF 2) 37
EXHIBIT 3-8: EXISTING (2021) TRAFFIC VOLUMES (PAGE 2 OF 2) 38
EXHIBIT 4-1: PROJECT (RESIDENTIAL) TRIP DISTRIBUTION 43
EXHIBIT 4-2: PROJECT (RETAIL/OFFICE) TRIP DISTRIBUTION 44
EXHIBIT 4-3: PROJECT ONLY TRAFFIC VOLUMES (PAGE 1 OF 2) 46
EXHIBIT 4-3: PROJECT ONLY TRAFFIC VOLUMES (PAGE 2 OF 2) 47
EXHIBIT 5-1: E+P TRAFFIC VOLUMES (PAGE 1 OF 2) 50
EXHIBIT 5-1: E+P TRAFFIC VOLUMES (PAGE 2 OF 2) 51

DRAFT

This Page Intentionally Left Blank

DRAFT

LIST OF TABLES

TABLE 1-1: STUDY AREA INTERSECTIONS 7
TABLE 1-2: SUMMARY OF LOS BY ANALYSIS SCENARIO 8
TABLE 1-3: SUMMARY OF IMPROVEMENTS BY ANALYSIS SCENARIO 9
TABLE 2-1: SIGNALIZED INTERSECTION LOS THRESHOLDS 18
TABLE 2-2: UNSIGNALIZED INTERSECTION LOS THRESHOLDS 19
TABLE 2-3: TRAFFIC SIGNAL WARRANT ANALYSIS LOCATIONS 20
TABLE 3-1: INTERSECTION ANALYSIS FOR EXISTING (2021) CONDITIONS 36
TABLE 4-1: EXISTING TRIP GENERATION 40
TABLE 4-2: ITE TRIP GENERATION RATES 40
TABLE 4-3: PROJECT TRIP GENERATION SUMMARY 41
TABLE 4-4: EXISTING TRIP GENERATION COMPARISON 41
TABLE 4-5: REDLANDS MALL FULL OCCUPANCY TRIP GENERATION COMPARISON 42
TABLE 5-1: INTERSECTION ANALYSIS FOR E+P CONDITIONS 52
TABLE 5-2: INTERSECTION ANALYSIS FOR E+P CONDITIONS WITH IMPROVEMENTS 53

DRAFT

This Page Intentionally Left Blank

DRAFT

LIST OF ABBREVIATED TERMS

(1)	Reference
ADT	Average Daily Traffic
CA MUTCD	California Manual on Uniform Traffic Control Devices
Caltrans	California Department of Transportation
CEQA	California Environmental Quality Act
CMP	Congestion Management Program
DIF	Development Impact Fee
DU	Dwelling Unit
E+P	Existing Plus Project
HCM	Highway Capacity Manual
ITE	Institute of Transportation Engineers
LOS	Level of Service
N/A	Not Applicable
NCHRP	National Cooperative Highway Research Program
OPR	Office of Planning and Research
PHF	Peak Hour Factor
Project	State Street Village - Redlands
SBCTA	San Bernardino County Transportation Authority
TA	Traffic Analysis
TSF	Thousand Square Feet
VMT	Vehicle Miles Traveled

DRAFT

This Page Intentionally Left Blank

DRAFT

1 INTRODUCTION

This report presents the results of the traffic analysis (TA) for the proposed State Street Village - Redlands redevelopment (Project) which is bounded by Redlands Boulevard, Orange Street, Citrus Avenue, and Eureka Street, in the City of Redlands, as shown on Exhibit 1-1.

The purpose of this traffic analysis is to evaluate the potential deficiencies to traffic and circulation associated with the development of the proposed Project, and to recommend improvements to mitigate deficiencies considered significant in comparison to established regulatory thresholds. The scope of this study has been developed through consultation with the City of Redlands, and follows the City's traffic study requirements. The Project Traffic Study Scoping agreement with the City of Redlands is provided in Appendix 1.1 of this TA.

1.1 SUMMARY OF FINDINGS

The Project is proposing to construct the following improvements as design features in conjunction with development of the site:

- Project to construct 3rd Street from the Redlands Boulevard to Citrus Avenue at its ultimate full-section width as a Local Street (60-foot right-of-way) in compliance with the circulation recommendations found in the City of Redlands General Plan Circulation Element.
- Project to construct State Street from the 3rd Street to Orange Street at its ultimate full-section width as a Local Street (60-foot right-of-way) in compliance with the circulation recommendations found in the City of Redlands General Plan Circulation Element.
- Modify the traffic signal at the intersection of Orange Street and Redlands Boulevard to provide a cycle length of 120 seconds and maintain the existing lanes. No additional lanes are necessary to accommodate the Project traffic.

Additional details are provided in Section 1.8 *On-Site Roadway and Site Access Improvements* of this report. The contribution of Project traffic to the off-site study area intersections is less than significant. As such, no improvements have been recommended at the off-site study area intersections.

DRAFT

EXHIBIT 1-1: LOCATION MAP

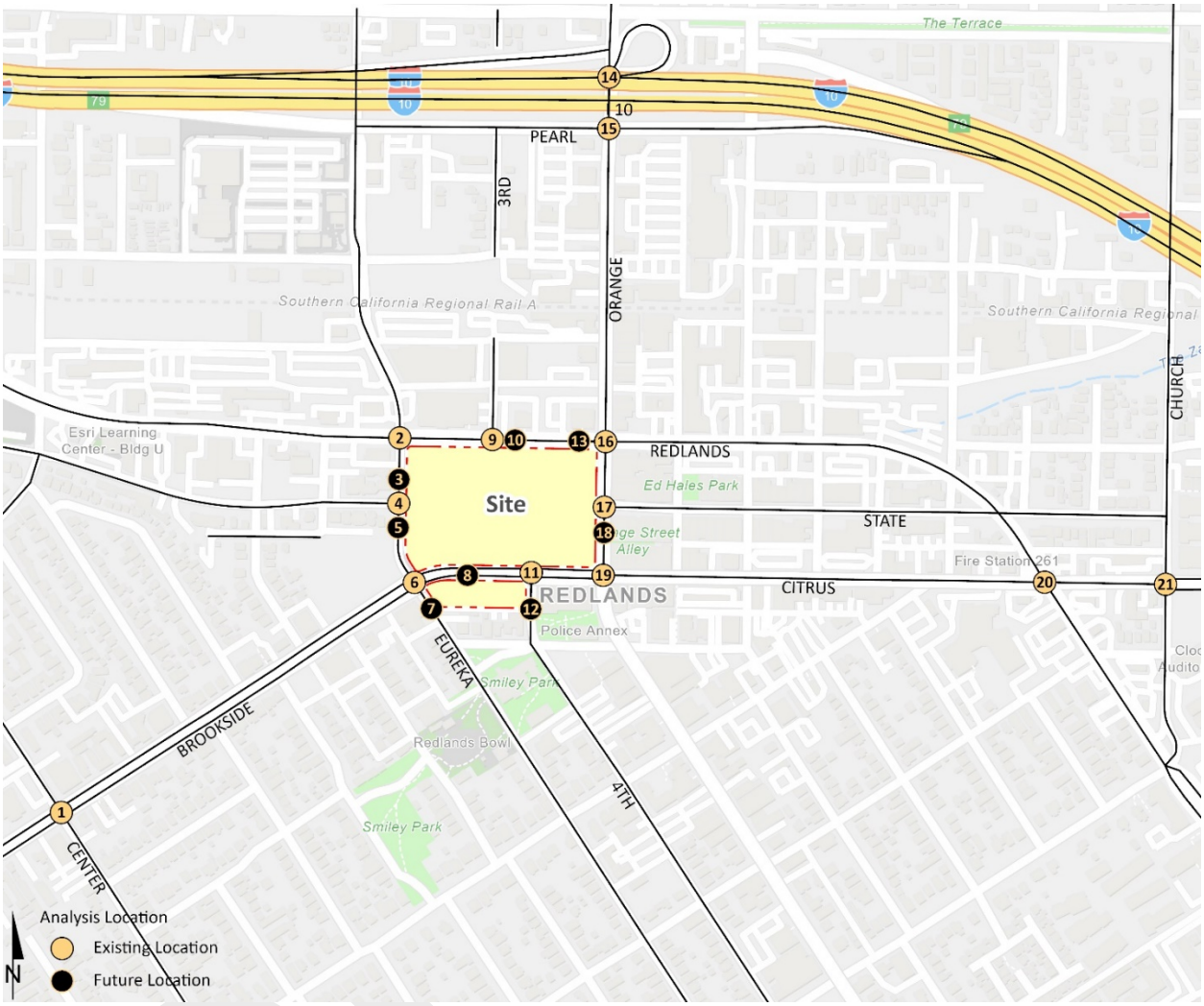

1.2 PROJECT OVERVIEW

The site is occupied by the Redlands Mall, which is currently vacant, in conjunction with a CVS Pharmacy, Union Bank, and Denny's restaurant (which were operational at the time the driveway counts were conducted for existing uses). The mall site is proposed to be redeveloped with mixed-use buildings with housing over retail, restaurants, and other services. Specifically, the proposed uses include 723 multifamily residential units (within six 3 to 5 story buildings) and include live/work units with studio and one/two/three-bedroom plans, 39,000 square feet of retail space, 32,000 square feet of restaurant space, 12,222 square feet of office space, and a 2,200 square foot rooftop restaurant. A drug store of approximately 14,500 square feet with drive-through window for the pharmacy is planned for the outparcel site on the south side of Citrus Avenue. The Project is anticipated to be constructed in a single phase by the year 2025. A preliminary site plan is shown on Exhibit 1-2. Vehicular traffic access will be provided via the following driveways (see Exhibit 1-2):

- Eureka St. & Driveway 1 – right-in/right-out access
- Eureka St. & Driveway 2 – right-in/right-out access
- Eureka St. & Driveway 3 – full access
- Driveway 4 & Citrus Av. – right-in/right-out access
- 3rd St. & Redlands Bl. – full access
- 3rd St. & Citrus Av. – full access
- Driveway 5 & Redlands Bl. – right-in/right-out access
- 4th St. & Driveway 3 – full access
- Driveway 6 & Redlands Bl. – right-in/right-out access
- Orange St. & State St. – full access
- Orange St. & Driveway 7 – right-in/right-out access

It should be noted that the driveways lead to proposed parking garages, whereas Driveway 3 and Driveway 4 for the outparcel leads an open parking lot. Regional access to the Project site is provided via the I-10 Freeway and Orange Street interchange.

Trips generated by the Project's proposed land use has been estimated based on trip generation rates collected by the Institute of Transportation Engineers (ITE) and published in their most current edition of the Trip Generation Manual, 10th Edition, 2017. (1) The Project is anticipated to generate a net increase of 1,866 two-way trips per day with 682 AM peak hour trips and 217 PM peak hour trips. The assumptions and methods used to estimate the Project's trip generation characteristics are discussed in detail in Section 4.1 *Project Trip Generation* of this report.

DRAFT

EXHIBIT 1-2: PRELIMINARY SITE PLAN

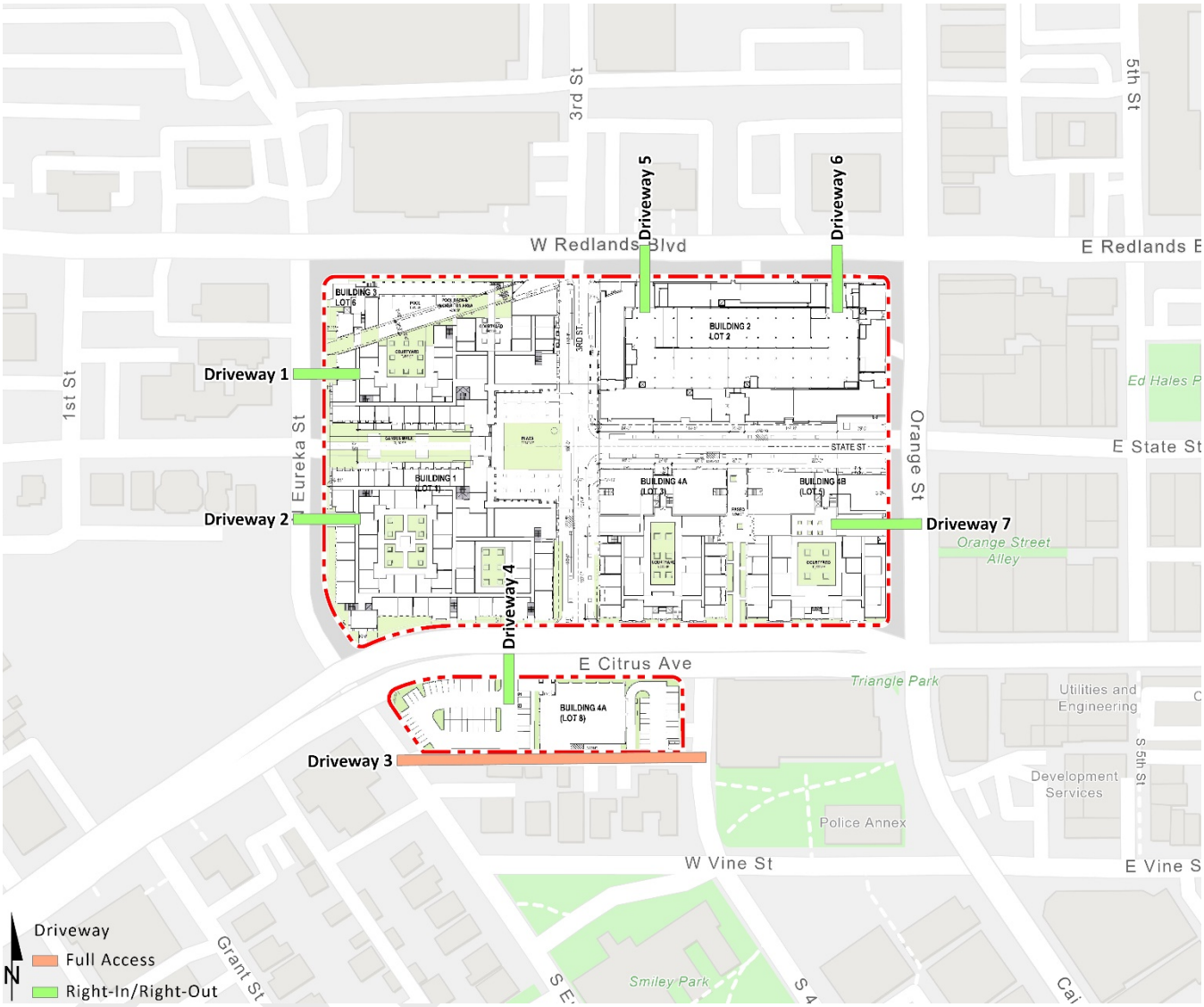

1.3 ANALYSIS SCENARIOS

For the purposes of this traffic study, potential deficiencies to traffic and circulation have been assessed for each of the following conditions:

- Existing (1 scenario)
- Existing plus Project (1 scenario)

1.3.1 EXISTING (2021) CONDITIONS

Information for Existing conditions is disclosed to represent the baseline traffic conditions as they existed at the time this report was prepared. Historic and new traffic counts have been utilized to adjust the baseline to account for the effects of the currently on-going COVID-19 pandemic. Additional details on the adjustments made to Existing traffic volumes are discussed in Section 3.5 *Existing (2021) Traffic Counts* of this report.

1.3.2 EXISTING PLUS PROJECT CONDITIONS

The Existing Plus Project (E+P) analysis determines significant traffic deficiencies that would occur on the existing roadway system with the addition of Project traffic. The E+P analysis has been utilized to identify the project-specific deficiencies associated solely with the development of the proposed Project based on a comparison of the E+P traffic conditions to Existing conditions.

1.4 STUDY AREA

To ensure that this TA satisfies the City of Redlands' traffic study requirements, Urban Crossroads, Inc. prepared a project traffic study scoping package for review by City staff prior to the preparation of this report. The Agreement provides an outline of the Project study area, trip generation, trip distribution, and analysis methodology. The Agreement approved by the City is included in Appendix 1.1.

The following 22 study area intersections shown on Exhibit 1-3 and listed in Table 1-1 were selected for this TA based on consultation with City of Redlands staff. The "50 peak hour trip" criterion utilized by the City of Redlands is consistent with the methodology employed by the County of San Bernardino, and generally represents a minimum number of trips at which a typical intersection would have the potential to be substantively deficient by a given development proposal. Although each intersection may have unique operating characteristics, this traffic engineering rule of thumb is a widely utilized tool for estimating a potential area of deficiency (i.e., study area).

DRAFT

EXHIBIT 1-3: STUDY AREA

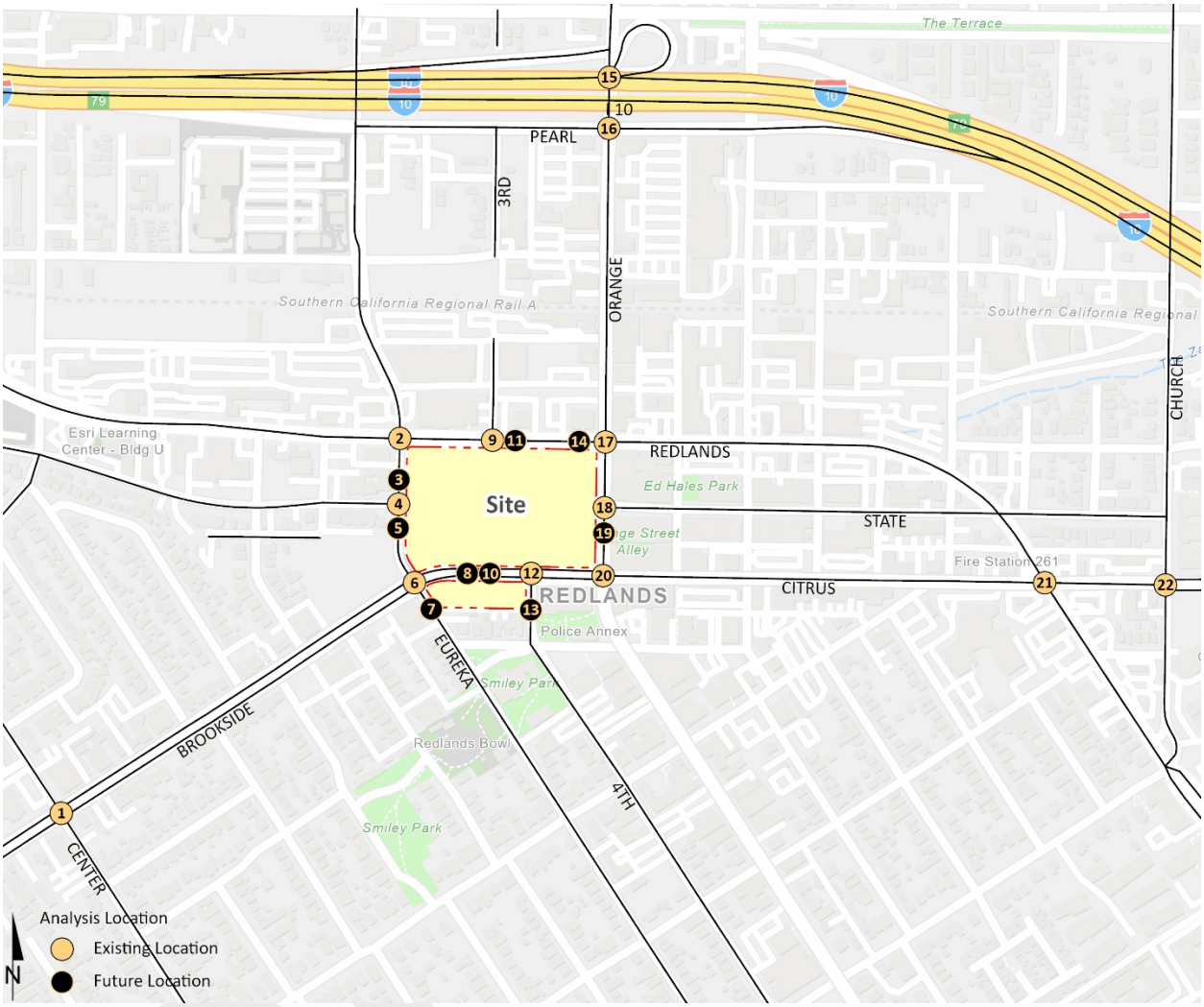

TABLE 1-1: STUDY AREA INTERSECTIONS

#	Intersection
1	Center St. & Brookside Av.*
2	Eureka St. & Redlands Bl.
3	Eureka St. & Driveway 1 – Future Intersection
4	Eureka St. & State St.
5	Eureka St. & Driveway 2 – Future Intersection
6	Eureka St. & Citrus Av.
7	Eureka St. & Driveway 3 – Future Intersection*
8	Driveway 4 & Citrus Av. – Future Intersection
9	3rd St. & Redlands Bl.
10	3rd St. & Citrus Av. – Future Intersection
11	Driveway 5 & Redlands Bl. – Future Intersection
12	4th St. & Citrus Av.
13	4th St. & Driveway 3 – Future Intersection*
14	Driveway 6 & Redlands Bl. – Future Intersection
15	Orange St. & I-10 WB Ramps
16	Orange St. & Pearl Av.
17	Orange St. & Redlands Bl.
18	Orange St. & State St.
19	Orange St. & Driveway 7 – Future Intersection
20	Orange St. & Citrus Av.
21	Redlands Bl. & Citrus Av.
22	Church St. & Citrus Av.

* Note: The Project is anticipated to contribute less than 50 peak hour trips to this study area intersection.

1.5 DEFICIENCIES

This section provides a summary of deficiencies by analysis scenario. Section 2 *Methodologies* provides information on the methodologies used in the analysis and Section 5 *E+P Traffic Conditions* includes the detailed analysis. A summary of LOS results for all analysis scenarios is presented on Table 1-2.

1.5.1 E+P CONDITIONS

The following study area intersection is anticipated to operate at a deficient LOS (i.e., LOS D or worse) with the addition of Project traffic under E+P traffic conditions:

- Orange St. & Redlands Bl. (#17) – LOS D AM peak hour only

This deficiency is Project-related as the deficiency does not occur under Existing traffic conditions and only occurs with the addition of Project traffic.

DRAFT

1.6 RECOMMENDATIONS

This section provides a summary of deficiencies and recommended improvements. Section 2 *Methodologies* provides information on the methodologies used in the analyses and Section 5 *E+P Traffic Conditions* include the detailed analyses. The study area intersection deficiency occurs with Project traffic (see Table 1-2). As such, there is a direct project-related deficiency that can be mitigated.

TABLE 1-2: SUMMARY OF LOS BY ANALYSIS SCENARIO

		Existing		E+P	
#	Intersection	AM	PM	AM	PM
1	Center St. & Brookside Av.	A - C	A - C	A - C	A - C
2	Eureka St. & Redlands Bl.	A - C	A - C	A - C	A - C
3	Eureka St. & Driveway 1	N/A	N/A	A - C	A - C
4	Eureka St. & State St.	A - C	A - C	A - C	A - C
5	Eureka St. & Driveway 2	N/A	N/A	A - C	A - C
6	Eureka St. & Brookside Av./Citrus	A - C	A - C	A - C	A - C
7	Eureka St. & Driveway 3	N/A	N/A	A - C	A - C
8	Driveway 4 & Citrus Av.	N/A	N/A	A - C	A - C
9	3rd St. & Redlands Bl.	A - C	A - C	A - C	A - C
10	3rd St. & Citrus Av.	N/A	N/A	A - C	A - C
11	Driveway 5 & Redlands Bl.	N/A	N/A	A - C	A - C
12	4th St. & Citrus Av.	A - C	A - C	A - C	A - C
13	4th St. & Driveway 3	N/A	N/A	A - C	A - C
14	Driveway 6 & Redlands Bl.	N/A	N/A	A - C	A - C
15	Orange St. & I-10 WB On-Ramps	A - C	A - C	A - C	A - C
16	Orange St. & Pearl Av.	A - C	A - C	A - C	A - C
17	Orange St. & Redlands Bl.	A - C	A - C	D	A - C
18	Orange St. & State St.	A - C	A - C	A - C	A - C
19	Orange St. & Driveway 7	N/A	N/A	A - C	A - C
20	Orange St./Cajon St. & Citrus Av.	A - C	A - C	A - C	A - C
21	Redlands Bl. & Citrus Av.	A - C	A - C	A - C	A - C
22	Church St. & Citrus Av.	A - C	A - C	A - C	A - C

= A - C = D = E - F

1.6.1 Circulation System Deficiencies and Recommended Improvements

A summary of the operationally deficient study area intersections and recommended improvements required to achieve acceptable circulation system performance are described in detail within Section 3 *Area Conditions* and Section 5 *E+P Traffic Conditions* of this report.

A summary of off-site improvements needed to address intersection operational deficiencies for each analysis scenario is included in Table 1-3. These recommended improvements are consistent with or less than the geometrics assumed in the City of Redlands General Plan Circulation Element. Improvements found to be included in the City of Redlands's (lead agency) Development Impact Fee (DIF) program have been identified as such.

TABLE 1-3: SUMMARY OF IMPROVEMENTS BY ANALYSIS SCENARIO

#	Intersection Location	Jurisdiction	Recommended Improvements E+P	Improvements in DIF, etc.[1,2]	Project Responsibility
17	Orange St. & Redlands Bl.	City of Redlands	- Modify the traffic signal to provide a 120 cycle length.	No	Construct

[1] Improvements included in City of Redlands DIF program have been identified as such.

[2] Program improvements constructed by Project may be eligible for fee credit. In lieu fee payment is at discretion of City. Represents the fair share percentage for the Project during the most impacted peak hour.

1.7 Site Adjacent Roadway and Site Access Improvements

1.7.1 Site Adjacent Roadway Recommendations

The recommended site-adjacent roadway improvements for the Project are described below. Exhibit 1-4 illustrates the site access recommendations.

Redlands Boulevard – Redlands Boulevard is an east-west oriented roadway located along the Project's northern boundary. Redlands Boulevard is currently constructed at its ultimate full-section pavement width as a Boulevard (96- to 106-foot right-of-way) between Eureka Street and Orange Street consistent with the City of Redlands General Plan Circulation Element.

Eureka Street – Eureka Street is a north-south oriented roadway located along the Project's western boundary. Eureka Street is currently constructed at its ultimate full-section pavement width as a Minor Arterial (88-foot right-of-way) between Redlands Boulevard and Citrus Avenue consistent with the City of Redlands General Plan Circulation Element.

Orange Street – Orange Street is a north-south oriented roadway located along the Project's eastern boundary. Orange Street is currently constructed at its ultimate full-section pavement width as a Minor Arterial (88-foot right-of-way) between Redlands Boulevard and Citrus Avenue consistent with the City of Redlands General Plan Circulation Element.

Citrus Avenue – Citrus Avenue is an east-west oriented roadway located along the Project's southern boundary. Citrus Avenue is currently constructed at its ultimate full-section pavement width as a Major Arterial (110-foot right-of-way) between the Eureka Street and Orange Street consistent with the City of Redlands General Plan Circulation Element.

EXHIBIT 1-4: SITE ADJACENT ROADWAY AND SITE ACCESS RECOMMENDATIONS

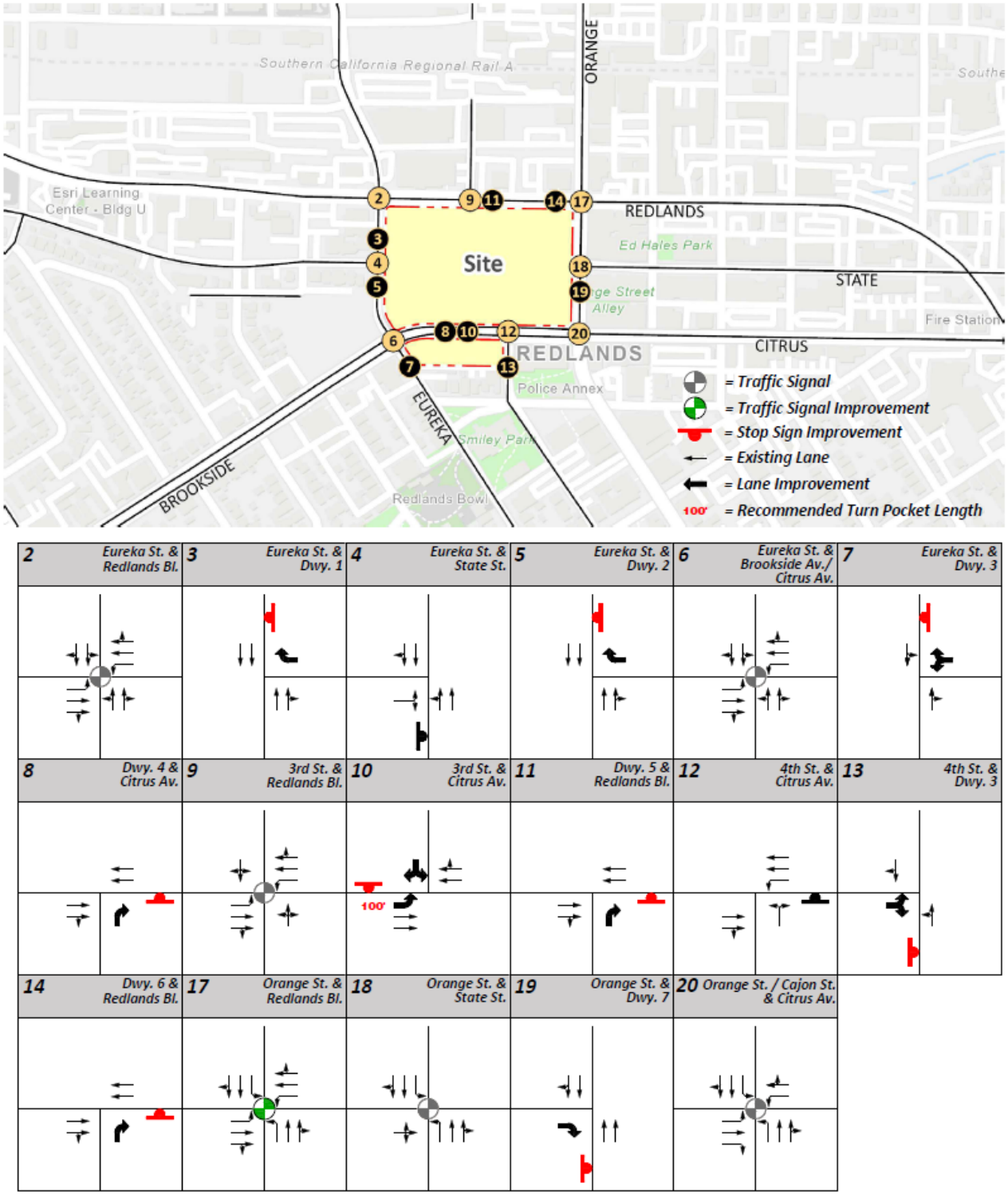

3rd Street – 3rd Street is a north-south oriented roadway located bisected by the Project. Construct 3rd Street at its ultimate full-section pavement width as a Local Street (60-foot right-of-way) between the Redlands Boulevard and the Project's southern boundary consistent with the City of Redlands General Plan Circulation Element.

State Street – State Street is an east-west oriented roadway located bisected by the Project. Construct State Street at its ultimate full-section pavement width as a Local Street (60-foot right-of-way) between the 3rd Street and Orange Street consistent with the City of Redlands General Plan Circulation Element.

4th Street – 4th Street is a north-south oriented roadway located along the Project's eastern boundary. 4th Street is currently constructed at its ultimate full-section pavement width as a Local Street (60-foot right-of-way) between the Citrus Avenue and the Project's southern boundary consistent with the City of Redlands General Plan Circulation Element.

Wherever necessary, roadways adjacent to the Project, site access points and site-adjacent intersections will be constructed to be consistent with the identified roadway classifications and respective cross-sections in the City of Redlands General Plan Circulation Element.

1.7.2 SITE ACCESS RECOMMENDATIONS

The recommended site access driveway improvements for the Project are described below. Exhibit 1-4 also illustrates the site access improvements. Construction of on-site and site adjacent improvements shall occur in conjunction with adjacent Project development activity or as needed for Project access purposes.

Eureka Street & Redlands Boulevard (#2) – Maintain the intersection with the current traffic signal and existing lane geometrics.

Eureka Street & Driveway 1 (#3) – Install a stop control on the westbound approach and construct the intersection with the following geometrics:

- Northbound Approach: One through lane and one shared through-right turn lane.
- Southbound Approach: Two through lanes.
- Eastbound Approach: Not Applicable (N/A)
- Westbound Approach (Project Driveway 1): One right turn only lane.

Eureka Street & State Street (#4) – Maintain the current stop control on the eastbound approach and construct the intersection with the following geometrics:

- Northbound Approach: One shared left-through lane and one through lane.
- Southbound Approach: One through lane and one shared through-right turn lane.
- Eastbound Approach: One shared left-right turn lane.
- Westbound Approach: N/A

Eureka Street & Driveway 2 (#5) – Install a stop control on the westbound approach and construct the intersection with the following geometrics:

- Northbound Approach: One through lane and one shared through-right turn lane.
- Southbound Approach: Two through lanes.
- Eastbound Approach: N/A
- Westbound Approach (Project Driveway 2): One right turn only lane.

Eureka Street & Brookside Avenue/Citrus Avenue (#6) – Maintain the intersection with the current traffic signal and existing lane geometrics.

Eureka Street & Driveway 3 (#7) – Install a stop control on the westbound approach and construct the intersection with the following geometrics:

- Northbound Approach: One shared through-right turn lane.
- Southbound Approach: One shared left-through lane.
- Eastbound Approach: N/A
- Westbound Approach (Project Driveway 3): One shared left-right turn lane.

Driveway 4 & Citrus Avenue (#8) – Install a stop control on the northbound approach and construct the intersection with the following geometrics:

- Northbound Approach (Project Driveway 4): One right turn only lane.
- Southbound Approach: N/A
- Eastbound Approach: One through lane and one shared through-right turn lane.
- Westbound Approach: Two through lanes.

3rd Street & Redlands Boulevard (#9) – Maintain the intersection with the current traffic signal and existing lane geometrics.

3rd Street & Citrus Avenue (#10) – Install a stop control on the southbound approach and construct the intersection with the following geometrics:

- Northbound Approach: N/A
- Southbound Approach: One shared left-right turn lane.
- Eastbound Approach: One left turn lane with a minimum storage length of 100’ and two through lanes.
- Westbound Approach: One through lane and one shared through-right turn lane.

Driveway 5 & Redlands Boulevard (#11) – Install a stop control on the northbound approach and construct the intersection with the following geometrics:

- Northbound Approach (Project Driveway 5): One right turn only lane.
- Southbound Approach: N/A
- Eastbound Approach: One through lane and one shared through-right turn lane.
- Westbound Approach: Two through lanes.

DRAFT

4th Street & Citrus Avenue (#12) – Maintain the current stop control on the northbound approach and construct the intersection with the following geometrics:

- Northbound Approach: One shared left-right turn lane.
- Southbound Approach: N/A
- Eastbound Approach: One through lane and one shared through-right turn lane.
- Westbound Approach: One left turn lane and two through lanes.

4th Street & Driveway 3 (#13) – Install a stop control on the eastbound approach and construct the intersection with the following geometrics:

- Northbound Approach: One shared left-through lane.
- Southbound Approach: One shared through-right turn lane.
- Eastbound Approach (Project Driveway 3): One shared left-right turn lane.
- Westbound Approach: N/A

Driveway 6 & Redlands Boulevard (#14) – Install a stop control on the northbound approach and construct the intersection with the following geometrics:

- Northbound Approach (Project Driveway 6): One right turn only lane.
- Southbound Approach: N/A
- Eastbound Approach: One through lane and one shared through-right turn lane.
- Westbound Approach: Two through lanes.

Orange Street & Redlands Boulevard (#17) – Modify the traffic signal to provide a cycle length of 120 seconds and construct the intersection with the following geometrics:

- Northbound Approach: One left turn lane, one through lane and one shared through-right turn lane.
- Southbound Approach: One left turn lane, one through lane and one shared through-right turn lane.
- Eastbound Approach: One left turn lane, one through lane and one shared through-right turn lane.
- Westbound Approach: One left turn lane, one through lane and one shared through-right turn lane.

Orange Street & State Street (#18) – Maintain the intersection with the current traffic signal and existing lane geometrics.

Orange Street & Driveway 7 (#19) – Install a stop control on the eastbound approach and construct the intersection with the following geometrics:

- Northbound Approach: Two through lanes.
- Southbound Approach: One through lane and one shared through-right turn lane.
- Eastbound Approach (Project Driveway 7): One right turn only lane.
- Westbound Approach: N/A

DRAFT

Orange Street & Citrus Avenue (#20) – Maintain the intersection with the current traffic signal and existing lane geometrics.

On-site traffic signing and striping should be implemented in conjunction with detailed construction plans for the Project site.

Sight distance at each project access point should be reviewed with respect to standard Caltrans and City of Redlands sight distance standards at the time of preparation of final grading, landscape, and street improvement plans.

1.8 QUEUING ANALYSIS AT THE PROJECT DRIVEWAYS

A queuing analysis was conducted along the site adjacent roadways for E+P traffic conditions to determine the turn pocket lengths necessary to accommodate near term 95th percentile queues. The analysis was conducted for both the weekday AM and weekday PM peak hours. The E+P queuing results are provided in Appendix 1.2 of this report.

The traffic modeling and signal timing optimization software package Synchro (Version 11) has been utilized to assess queues at the Project access points. Synchro is a macroscopic traffic software program that is based on the signalized and unsignalized intersection capacity analyses as specified in the HCM. Macroscopic level models represent traffic in terms of aggregate measures for each movement at the study intersections. Equations are used to determine measures of effectiveness such as delay and queue length in Synchro. The LOS and capacity analysis performed by Synchro takes into consideration optimization and coordination of signalized intersections within a network.

SimTraffic is designed to model networks of signalized and unsignalized intersections, with the primary purpose of checking and fine-tuning signal operations. SimTraffic uses the input parameters from Synchro to generate random simulations. The 95th percentile queue is not necessarily ever observed; it is simply based on statistical calculations (or Average Queue plus 1.65 standard deviations). SimTraffic has been utilized to assess peak hour queuing at the site access driveways for E+P traffic conditions. The random simulations generated by SimTraffic have been utilized to determine the 50th and 95th percentile queue lengths observed for each turn lane. A SimTraffic simulation has been recorded five (5) times, during the weekday AM and weekday PM peak hours, and has been seeded for 30-minute periods with 60-minute recording intervals.

The peak hour queuing analysis was utilized to determine the required turn pocket storage lengths necessary to accommodate the 95th percentile peak hour traffic flows and to ensure there was adequate spacing between the proposed driveways and study intersections with no queuing issues.

1.9 PEDESTRIAN AND BICYCLE FACILITIES RECOMMENDATIONS

The proposed Project is a mixed-use development consisting of residential, retail, office, and restaurant use. The mixed-use nature of the Project encourages pedestrian circulation within the boundaries of the Project site and the surrounding uses. As such, quality pedestrian and

bicycle facilities are recommended to promote pedestrian and bicyclist circulation. The Project can apply the following, where feasible, to promote pedestrian and bicyclist circulation:

- construct paved pedestrian space that is continuous from curb to building
- minimize spatial gaps created by parking or other non-pedestrian areas
- plant trees along the street edge in a rhythmic pattern
- provide pedestrian-scaled lighting to supplement overhead street lighting
- provide secure and convenient bicycle parking
- implement bike boxes at signalized intersections to improve bicyclist visibility
- apply green bike lanes within conflict areas with vehicular traffic

1.10 SENATE BILL 743 – VEHICLE MILES TRAVELED (VMT)

Senate Bill 743 (SB 743), approved in 2013, endeavors to change the way transportation impacts will be determined according to the California Environmental Quality Act (CEQA). The Office of Planning and Research (OPR) has recommended the use of vehicle miles traveled (VMT) as the replacement for automobile delay-based LOS. In December 2018, the Natural Resources Agency finalized updates to CEQA Guidelines to incorporate SB 743 (i.e., VMT). While a lead agency has the option to immediately apply the new VMT based analysis methodology and thresholds for the purposes of evaluating transportation impacts, statewide application of the new guidelines is required July 1, 2020.

The City of Redlands City Council adopted their VMT guidelines only July 21, 2020. The City acknowledges automobile delay will no longer be considered a CEQA impact for development projects and will use VMT as the metric for determining. As such, the LOS operations included in this TA for study area intersections are informational and are not anticipated to support the environmental document. The VMT analysis for the proposed Project has been prepared under separate cover from the TA.

DRAFT

This Page Intentionally Left Blank

DRAFT

2 METHODOLOGIES

This section of the report presents the methodologies used to perform the traffic analyses summarized in this report. The methodologies described are generally consistent with City of Redlands and San Bernardino County CMP traffic study guidelines. (2)

2.1 LEVEL OF SERVICE

Traffic operations of roadway facilities are described using the term "Level of Service" (LOS). LOS is a qualitative description of traffic flow based on several factors such as speed, travel time, delay, and freedom to maneuver. Six levels are typically defined ranging from LOS A, representing completely free-flow conditions, to LOS F, representing breakdown in flow resulting in stop-and-go conditions. LOS E represents operations at or near capacity, an unstable level where vehicles are operating with the minimum spacing for maintaining uniform flow.

2.2 INTERSECTION CAPACITY ANALYSIS

The definitions of LOS for interrupted traffic flow (flow restrained by the existence of traffic signals and other traffic control devices) differ slightly depending on the type of traffic control. The LOS is typically dependent on the quality of traffic flow at the intersections along a roadway. The *Highway Capacity Manual* (HCM) methodology expresses the LOS at an intersection in terms of delay time for the various intersection approaches. (3) The HCM uses different procedures depending on the type of intersection control.

2.2.1 SIGNALIZED INTERSECTIONS

The City of Redlands requires signalized intersection operations analysis based on the methodology described in the HCM 6th Edition. (3) Intersection LOS operations are based on an intersection's average control delay. Control delay includes initial deceleration delay, queue move-up time, stopped delay, and final acceleration delay. For signalized intersections, LOS is directly related to the average control delay per vehicle and is correlated to a LOS designation as described in Table 2-1. Study area intersections have been evaluated using the Synchro (Version 11) analysis software package.

Synchro is a macroscopic traffic software program that is based on the signalized intersection capacity analysis as specified in the HCM. Macroscopic level models represent traffic in terms of aggregate measures for each movement at the study intersections. Equations are used to determine measures of effectiveness such as delay and queue length. The level of service and capacity analysis performed by Synchro takes into consideration optimization and coordination of signalized intersections within a network.

DRAFT

TABLE 2-1: SIGNALIZED INTERSECTION LOS THRESHOLDS

Description	Average Control Delay (Seconds), V/C ≤ 1.0	Level of Service, V/C ≤ 1.0	Level of Service, V/C > 1.0
Operations with very low delay occurring with favorable progression and/or short cycle length.	0 to 10.00	A	F
Operations with low delay occurring with good progression and/or short cycle lengths.	10.01 to 20.00	B	F
Operations with average delays resulting from fair progression and/or longer cycle lengths. Individual cycle failures begin to appear.	20.01 to 35.00	C	F
Operations with longer delays due to a combination of unfavorable progression, long cycle lengths, or high V/C ratios. Many vehicles stop and individual cycle failures are noticeable.	35.01 to 55.00	D	F
Operations with high delay values indicating poor progression, long cycle lengths, and high V/C ratios. Individual cycle failures are frequent occurrences. This is considered to be the limit of acceptable delay.	55.01 to 80.00	E	F
Operation with delays unacceptable to most drivers occurring due to over saturation, poor progression, or very long cycle lengths	80.01 and up	F	F

Source: HCM, 6th Edition

The peak hour traffic volumes have been adjusted using a peak hour factor (PHF) to reflect peak 15-minute volumes. Common practice for LOS analysis is to use a peak 15-minute rate of flow. However, flow rates are typically expressed in vehicles per hour. The PHF is the relationship between the peak 15-minute flow rate and the full hourly volume (e.g., PHF = [Hourly Volume] / [4 x Peak 15-minute Flow Rate]). The use of a 15-minute PHF produces a more detailed analysis as compared to analyzing vehicles per hour. Existing PHFs have been used for all analysis scenarios. Per Chapter 4 of the HCM 6th Edition, PHF values over 0.95 often are indicative of high traffic volumes with capacity constraints on peak hour flows while lower PHF values are indicative of greater variability of flow during the peak hour. (3)

2.2.2 UNSIGNALIZED INTERSECTIONS

The City of Redlands requires the operations of unsignalized intersections be evaluated using the methodology described in the HCM 6th Edition. (3) The LOS rating is based on the weighted average control delay expressed in seconds per vehicle (see Table 2-2).

DRAFT

TABLE 2-2: UNSIGNALIZED INTERSECTION LOS THRESHOLDS

Description	Average Control Delay Per Vehicle (Seconds)	Level of Service, V/C ≤ 1.0	Level of Service, V/C > 1.0
Little or no delays.	0 to 10.00	A	F
Short traffic delays.	10.01 to 15.00	B	F
Average traffic delays.	15.01 to 25.00	C	F
Long traffic delays.	25.01 to 35.00	D	F
Very long traffic delays.	35.01 to 50.00	E	F
Extreme traffic delays with intersection capacity exceeded.	> 50.00	F	F

Source: HCM, 6th Edition

At two-way or side-street stop-controlled intersections, LOS is calculated for each controlled movement and for the left turn movement from the major street, as well as for the intersection as a whole. For approaches composed of a single lane, the delay is computed as the average of all movements in that lane. The "worst case" movement delay and LOS is reported for the intersection. For all-way stop controlled intersections, LOS is computed for the intersection as a whole.

2.3 TRAFFIC SIGNAL WARRANT ANALYSIS METHODOLOGY

The term "signal warrants" refers to the list of established criteria used by the Caltrans and other public agencies to quantitatively justify or ascertain the potential need for installation of a traffic signal at an otherwise unsignalized intersection. This TA uses the signal warrant criteria presented in the latest edition of the California Department of Transportation (Caltrans) California Manual on Uniform Traffic Control Devices *(CA MUTCD)* for all study area intersections. (4)

The signal warrant criteria for Existing conditions are based upon several factors, including volume of vehicular and pedestrian traffic, frequency of accidents, and location of school areas. The Caltrans CA MUTCD indicates that the installation of a traffic signal should be considered if one or more of the signal warrants are met. (4) Specifically, this TA utilizes the Peak Hour Volume-based Warrant 3 as the appropriate representative traffic signal warrant analysis for existing study area intersections for all analysis scenarios. Warrant 3 is appropriate to use for this TA because it provides specialized warrant criteria for intersections with rural characteristics (e.g., located in communities with populations of less than 10,000 persons or with adjacent major streets operating above 40 miles per hour). For the purposes of this study, the speed limit was the basis for determining whether Urban or Rural warrants were used for a given intersection.

Future intersections that do not currently exist have been assessed regarding the potential need for new traffic signals based on future average daily traffic (ADT) volumes, using the Caltrans planning level ADT-based signal warrant analysis worksheets. Traffic signal warrant analyses were performed for the following study area intersection shown in Table 2-3:

TABLE 2-3: TRAFFIC SIGNAL WARRANT ANALYSIS LOCATIONS

ID	Intersection Location	Jurisdiction
4	Eureka St. & State St.	City of Redlands
7	Eureka St. & Driveway 3 – Future Intersection	City of Redlands
10	3rd St. & Citrus Av. – Future Intersection	City of Redlands
12	4th St. & Citrus Av.	City of Redlands
13	4th St. & Driveway 3 – Future Intersection	City of Redlands

Traffic signal warrant analyses were performed for all of the full access unsignalized study area intersections. The traffic signal warrant analyses for future conditions are presented in Section 5 *E+P Traffic Conditions* of this report.

It is important to note that a signal warrant defines the minimum condition under which the installation of a traffic signal might be warranted. Meeting this threshold condition does not require that a traffic control signal be installed at a particular location, but rather, that other traffic factors and conditions be evaluated in order to determine whether the signal is truly justified. It should also be noted that signal warrants do not necessarily correlate with LOS. An intersection may satisfy a signal warrant condition and operate at or above acceptable LOS or operate below acceptable LOS and not meet a signal warrant.

2.4 LOS CRITERIA

2.4.1 CITY OF REDLANDS

The City of Redlands has established specific performance criteria for intersection operations. These performance criteria include standards related to determining the significance of project deficiencies on the roadway system. The City of Redlands has established LOS C as the minimum level of service for its intersections. Therefore, any intersection operating at LOS D or worse will be considered deficient for the purposes of this analysis. Additionally, General Plan Policy 5.20c from the Redlands General Plan states that: Where the current level of service at a location within the City of Redlands is below the LOS C standard, no development project shall be approved that cannot be mitigated so that it does not reduce the existing level of service at that location (i.e., intersections in Redlands that are deficient to start out with are acceptable as long as they do not further degrade LOS) except as provided in Section 5.20b.

2.4.2 CMP

The CMP definition of deficiency is based on maintaining a level of service standard of LOS E or better, where feasible, except where an existing LOS F condition is identified in the CMP document.

DRAFT

2.4.3 MEASURE U

General Plan Policy 5.20b of Measure U (see GP Figure 5-1):

> *The purpose and intent of this initiative measure is to establish comprehensive and inviolable principles of managed development for the City of Redlands that will preserve, enhance, and maintain the special quality of life valued by this community. The principles of managed development established by this initiative measure assure that future development within the City of Redlands occurs in a way that promotes the social and economic well-being of the entire community.*

In order to be in compliance with Measure U, the Project is required to maintain a minimum LOS C or better at all intersections presently at LOS C or better.

2.5 THRESHOLDS OF SIGNIFICANCE

2.5.1 CITY OF REDLANDS INTERSECTIONS

The following thresholds of significance will be utilized to determine whether the addition of Project traffic at a study intersection results in a significant project-related deficiency:

- A significant project deficiency occurs at a study intersection if the addition of project-generated trips reduces the peak hour level of service of the study intersection to change from acceptable operation (e.g., LOS A, B or C) to deficient operation (e.g., LOS D, E or F) and, if applicable, also causes an unsignalized intersection to satisfy a Caltrans traffic signal warrant; or
- A significant project deficiency occurs at a study intersection if the addition of project-generated trips worsens the pre-project level of service grade at a deficiently operating (e.g., LOS D, E or F) intersection and, if applicable, also causes an unsignalized intersection to satisfy a Caltrans traffic signal warrant.

2.5.2 CMP INTERSECTIONS

To determine whether the addition of project traffic (as defined through the comparison of Existing traffic conditions to E+P traffic conditions) at a CMP study intersection would result in a direct project-specific traffic deficiency, the following will be utilized:

- When the pre-Project condition is at or better than LOS E for CMP intersections (i.e., acceptable LOS), and project-generated traffic, as measured by 50 or more peak hour trips, causes deterioration below LOS E (i.e., unacceptable LOS), a deficiency is deemed to occur.

In the event that an intersection is operating at or is forecast to operate at a deficient LOS, the CMP guidelines have defined a series of steps to be completed to determine the Project's contribution to the deficiency of intersections, which has been applied to both CMP and non-CMP study area intersections. The steps are as follows:

- Determine the mitigation measures necessary to achieve an acceptable service level,
- Calculate the Project's share in the future traffic volume projections for the peak hours,
- Estimate the cost to implement recommended mitigation measures, and
- Calculate the Project's fair-share contribution to mitigate the Project's traffic deficiencies

2.5.3 MEASURE U

Per 5.20c of Measure U, where the current LOS at a location within the City of Redlands is below the LOS C standard, no development project shall be approved that cannot be mitigated so that it does not reduce the existing LOS at that location except as provided in Section 5.20b.

DRAFT

3 AREA CONDITIONS

This section provides a summary of the existing circulation network, the City of Redlands General Plan Circulation Network, and a review of existing peak hour intersection operations and traffic signal warrants.

3.1 EXISTING CIRCULATION NETWORK

Pursuant to the Traffic Study Scoping Agreement (Appendix 1.1) and discussion with City of Redlands staff, the study area includes a total of 22 existing and future intersections as shown previously on Exhibit 1-3. Exhibit 3-1 illustrates the study area intersections located near the proposed Project and identifies the number of through traffic lanes for existing roadways and intersection traffic controls.

3.2 GENERAL PLAN CIRCULATION ELEMENT

As previously noted, the Project site is located within the City of Redlands. Exhibit 3-2 shows the City of Redlands General Plan Circulation Element. Exhibit 3-3 shows the City of Redlands General Plan roadway cross-sections.

3.3 BICYCLE AND PEDESTRIAN FACILITIES

The existing pedestrian facilities within the study area are shown on Exhibit 3-4. Existing bus stop locations, crosswalks, sidewalks, and bike lanes are shown. Exhibits 3-5 and 3-6 illustrates the planned bicycle facilities and trails in the vicinity of the Project as included on the City of Redlands General Plan Bicycle Facilities and Multi-Use Trails. There are existing Class II (on-road, striped) and Class III (on-road, not striped) along Citrus Avenue to the south of the Project. Future bicycle routes are proposed along Redlands Boulevard and Orange Street. The multi-use trail is proposed along Redlands Boulevard that will connect to an existing multi-use trail to the east along Church Street and to the west of Texas Street to the Orange Blossom Trail.

The proposed extension of State Street into the Project will extend the commercial activity of historic State Street and provide new pedestrian and bicyclist connectivity through Downtown. The introduction of Third Street through the site will provide vital pedestrian connectivity including a pedestrian connection to the Arrow Line train station.

DRAFT

EXHIBIT 3-1: EXISTING NUMBER OF THROUGH LANES AND INTERSECTION CONTROLS

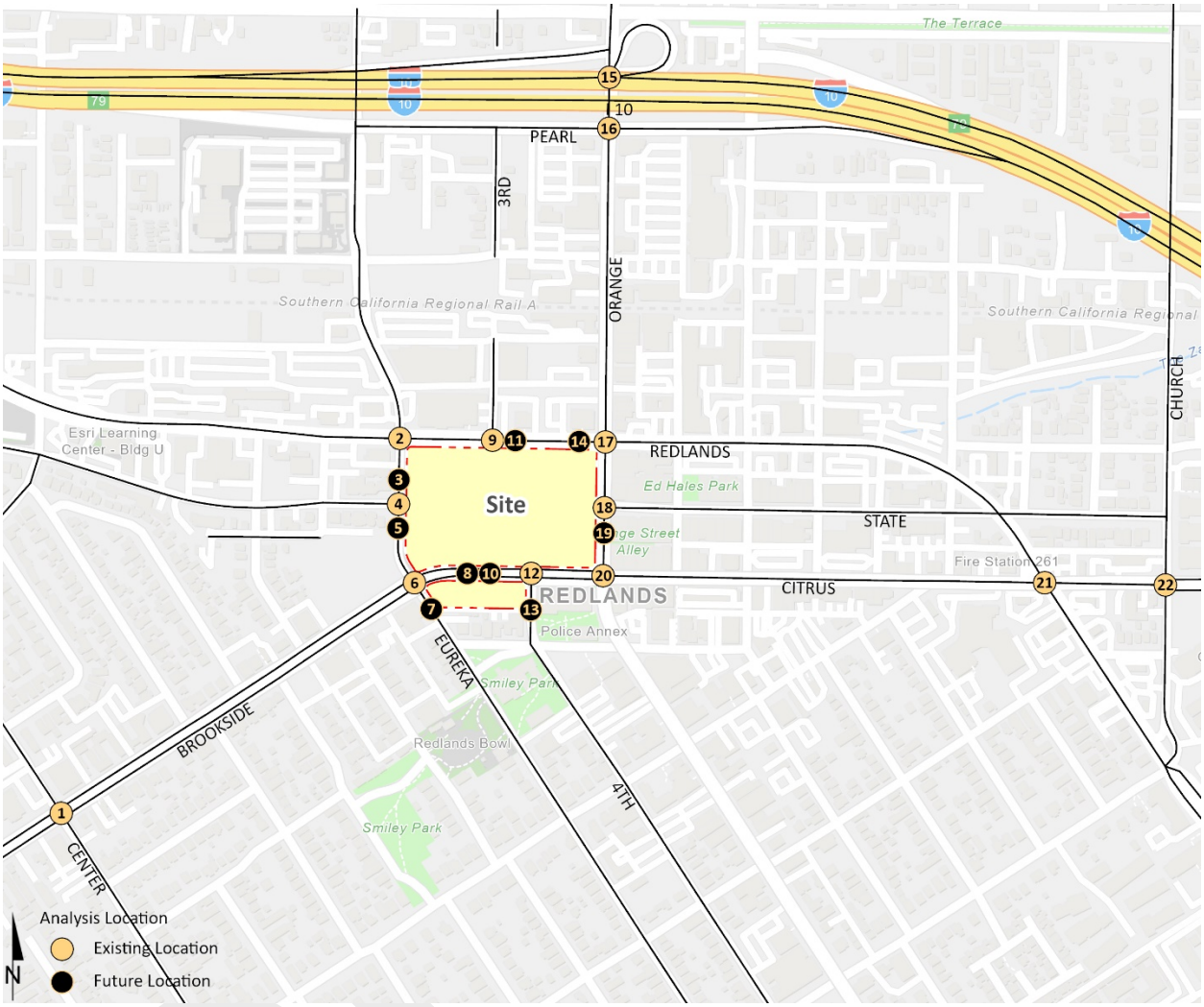

EXHIBIT 3-2: CITY OF REDLANDS GENERAL PLAN CIRCULATION ELEMENT

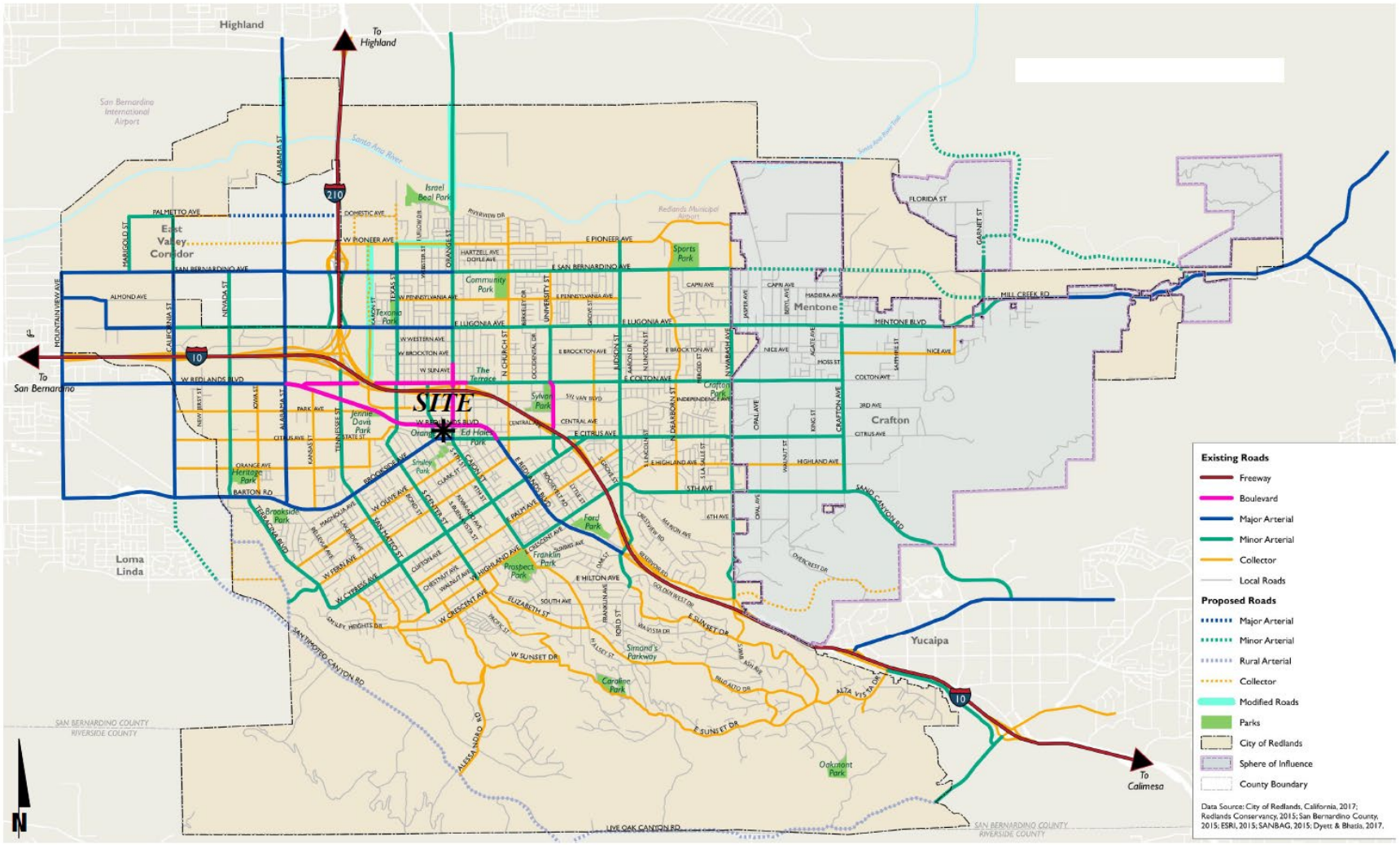

EXHIBIT 3-3: CITY OF REDLANDS GENERAL PLAN ROADWAY CROSS-SECTIONS (PAGE 1 OF 4)

MAJOR ARTERIALS

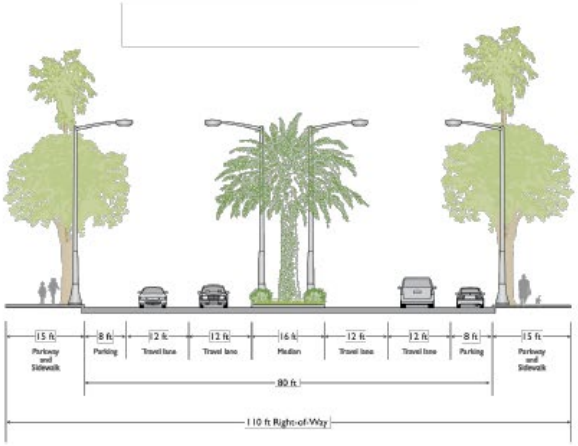

n. Major Arterial – 4 Lanes Divided(Standard)

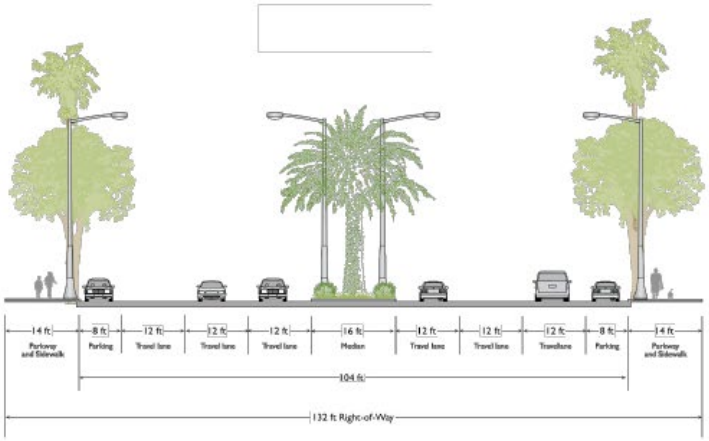

p. Major Arterial – 6 Lanes Divided (Standard)

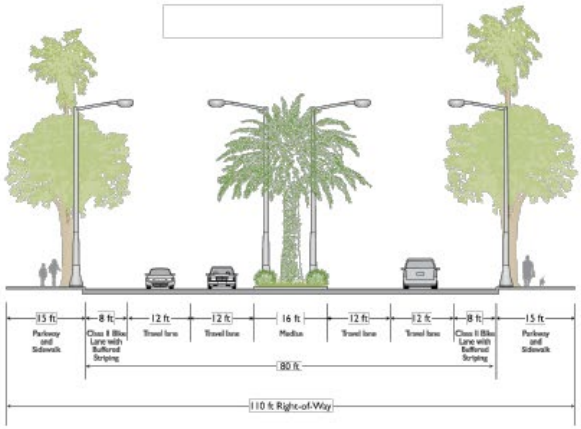

o. Major Arterial – 4 Lanes Divided (Complete Streets)

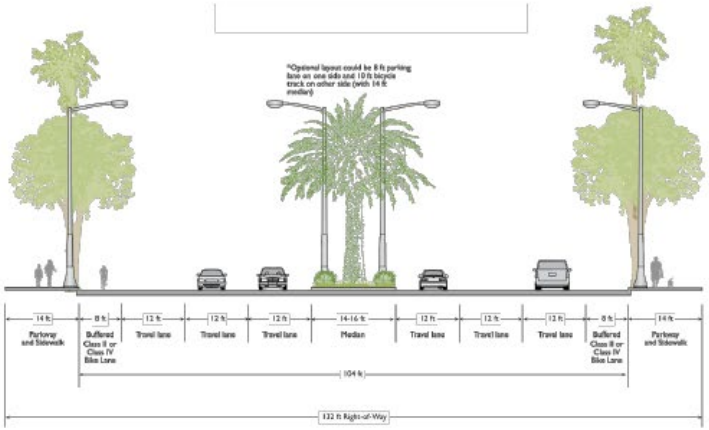

q. Major Arterial – 6 Lanes Divided (Complete Streets)

Notes:

1. Street sections are illustrative. Minor variations and deviations from dimensions are permitted, and would not require a General Plan Amendment.
2. Bicycle facilities are based on dimensions included in the Bicycle Facility Design Guidelines for the Bicycle Master Plan (2015).

EXHIBIT 3-3: CITY OF REDLANDS GENERAL PLAN ROADWAY CROSS-SECTIONS (PAGE 2 OF 4)

MINOR AND RURAL ARTERIALS

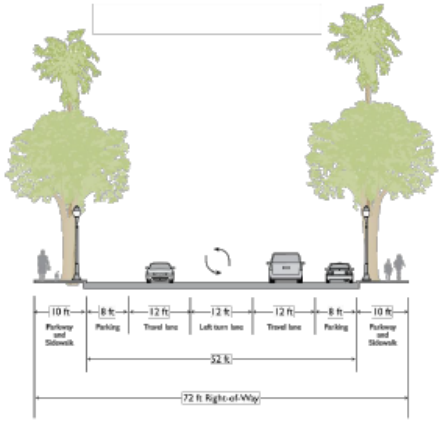

i. Minor Arterial – 2 Lanes Plus Left Turn Lane (Standard)

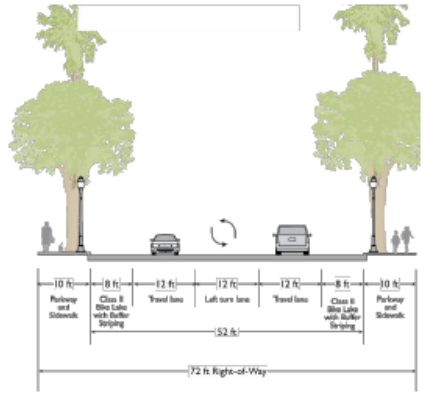

k. Minor Arterial – 2 Lanes Plus Left Turn Lane (Complete Streets)

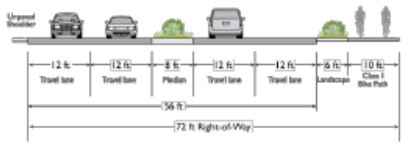

m. Rural Arterial

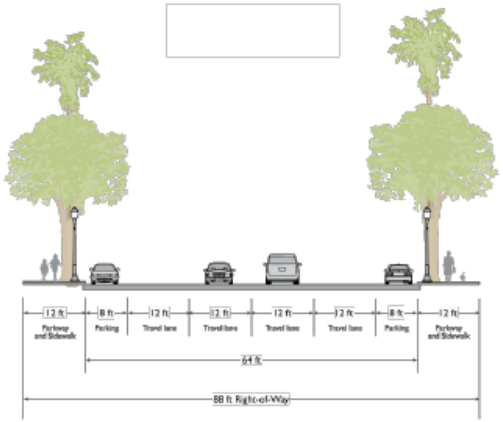

j. Minor Arterial – 4 Lanes Undivided (Standard)

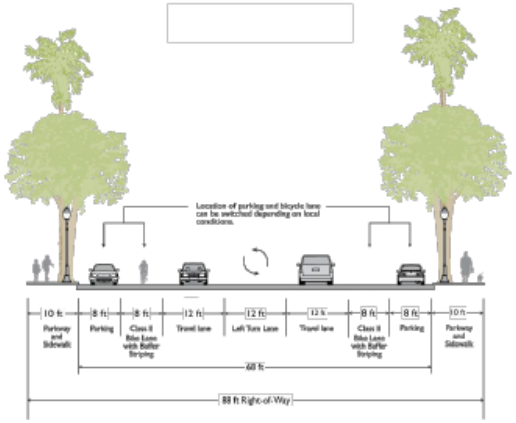

l. Minor Arterial – 2 Lanes Plus Left Turn Lane, Bicycle Lanes, and Parking (Complete Streets)

Notes:

1. Street sections are illustrative. Minor variations and deviations from dimensions are permitted, and would not require a General Plan Amendment.
2. Bicycle facilities are based on dimensions included in the Bicycle Facility Design Guidelines for the Bicycle Master Plan (2015).

EXHIBIT 3-3: CITY OF REDLANDS GENERAL PLAN ROADWAY CROSS-SECTIONS (PAGE 3 OF 4)

COLLECTORS

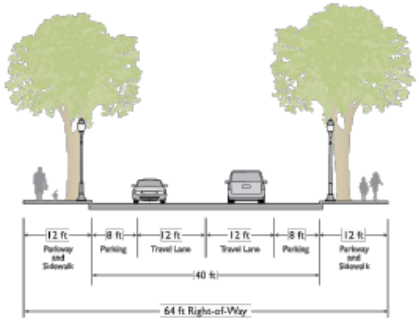

d. Collector – Residential (Standard)

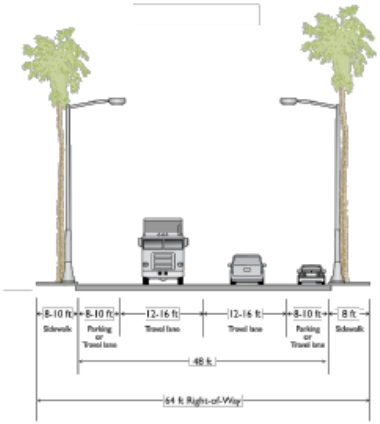

f. Collector – Industrial (Standard)

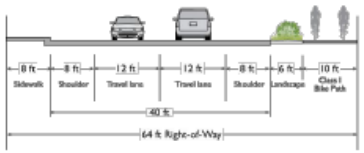

h. Alternative Collector

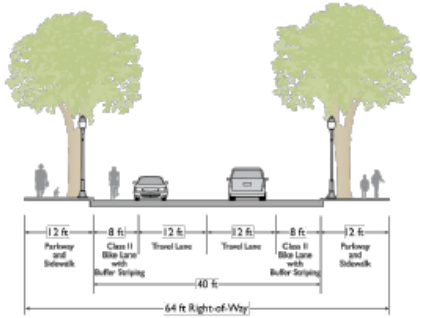

e. Collector – Residential (Complete Streets)

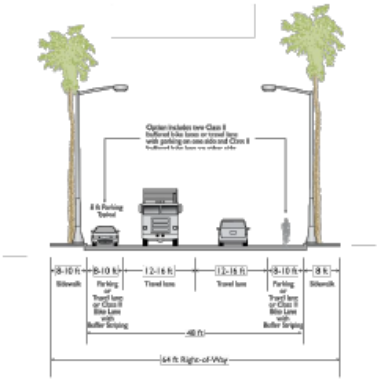

g. Collector – Industrial (Complete Streets)

Notes:

1. Street sections are illustrative. Minor variations and deviations from dimensions are permitted, and would not require a General Plan Amendment.
2. Bicycle facilities are based on dimensions included in the Bicycle Facility Design Guidelines for the Bicycle Master Plan (2015).

EXHIBIT 3-3: CITY OF REDLANDS GENERAL PLAN ROADWAY CROSS-SECTIONS (PAGE 4 OF 4)

BOULEVARDS

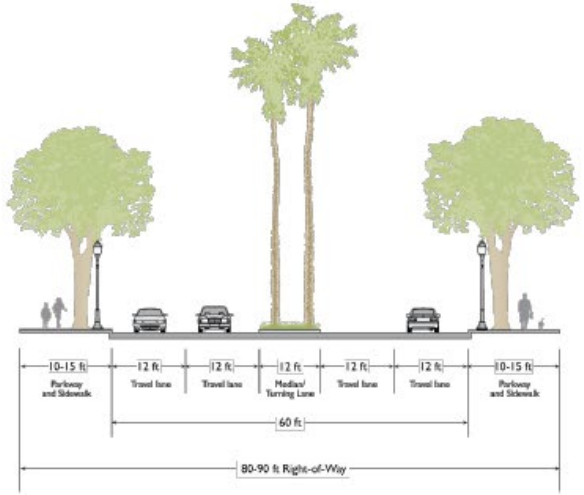

a. Boulevard (Standard)

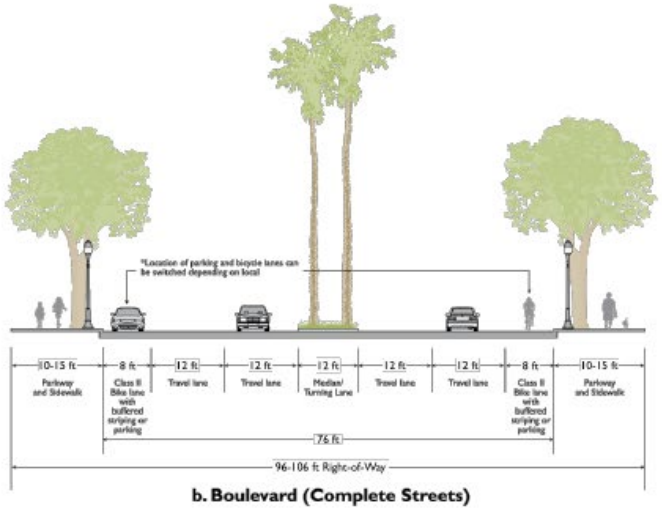

b. Boulevard (Complete Streets)

LOCAL STREET

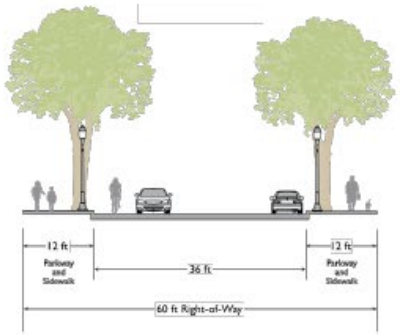

c. Local Street (Standard)

Notes:

1. Street sections are illustrative. Minor variations and deviations from dimensions are permitted, and would not require a General Plan Amendment.
2. Bicycle facilities are based on dimensions included in the Bicycle Facility Design Guidelines for the Bicycle Master Plan (2015).

EXHIBIT 3-4: EXISTING PEDESTRIAN FACILITIES

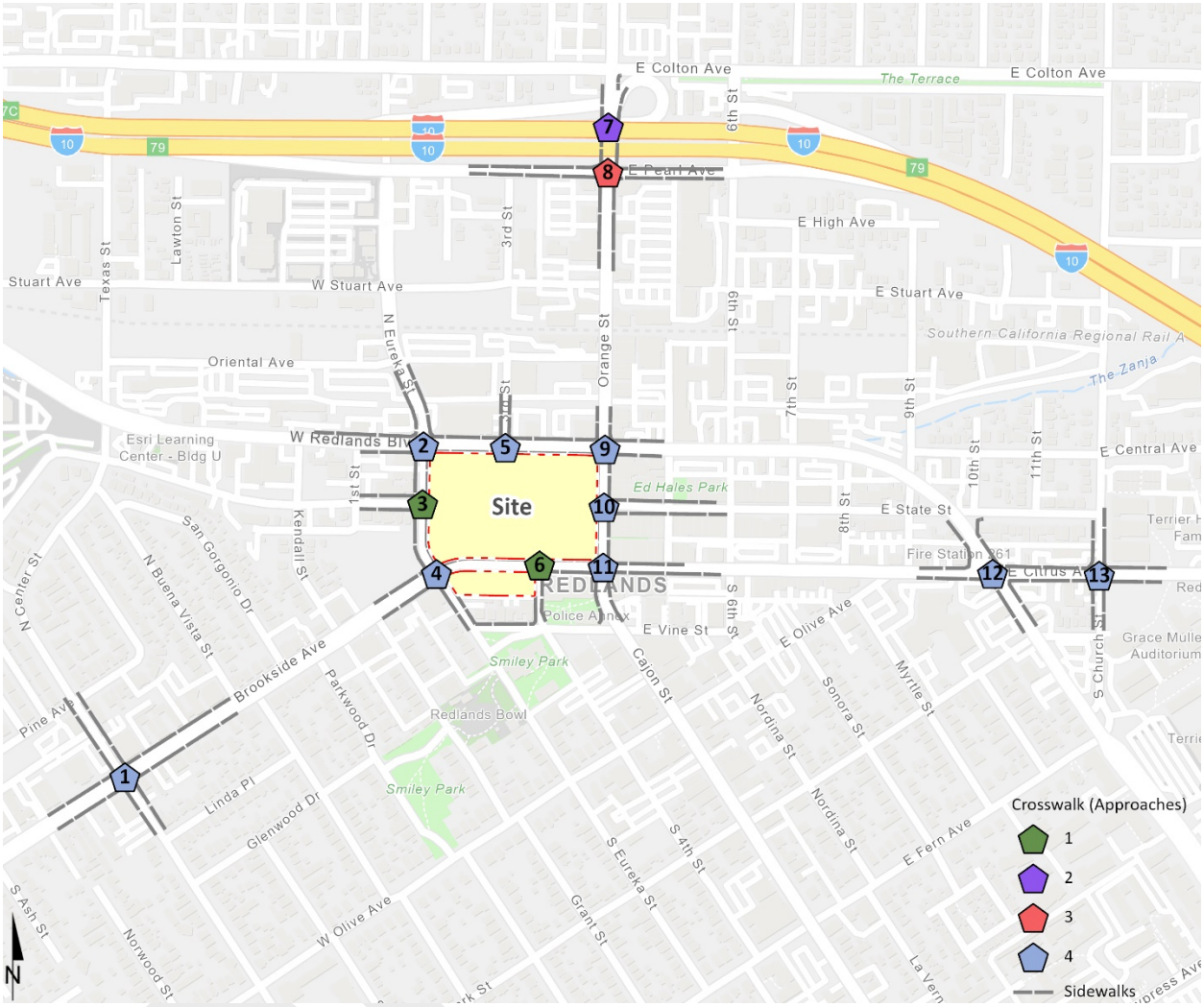

EXHIBIT 3-5: CITY OF REDLANDS GENERAL PLAN BICYCLE FACILITIES

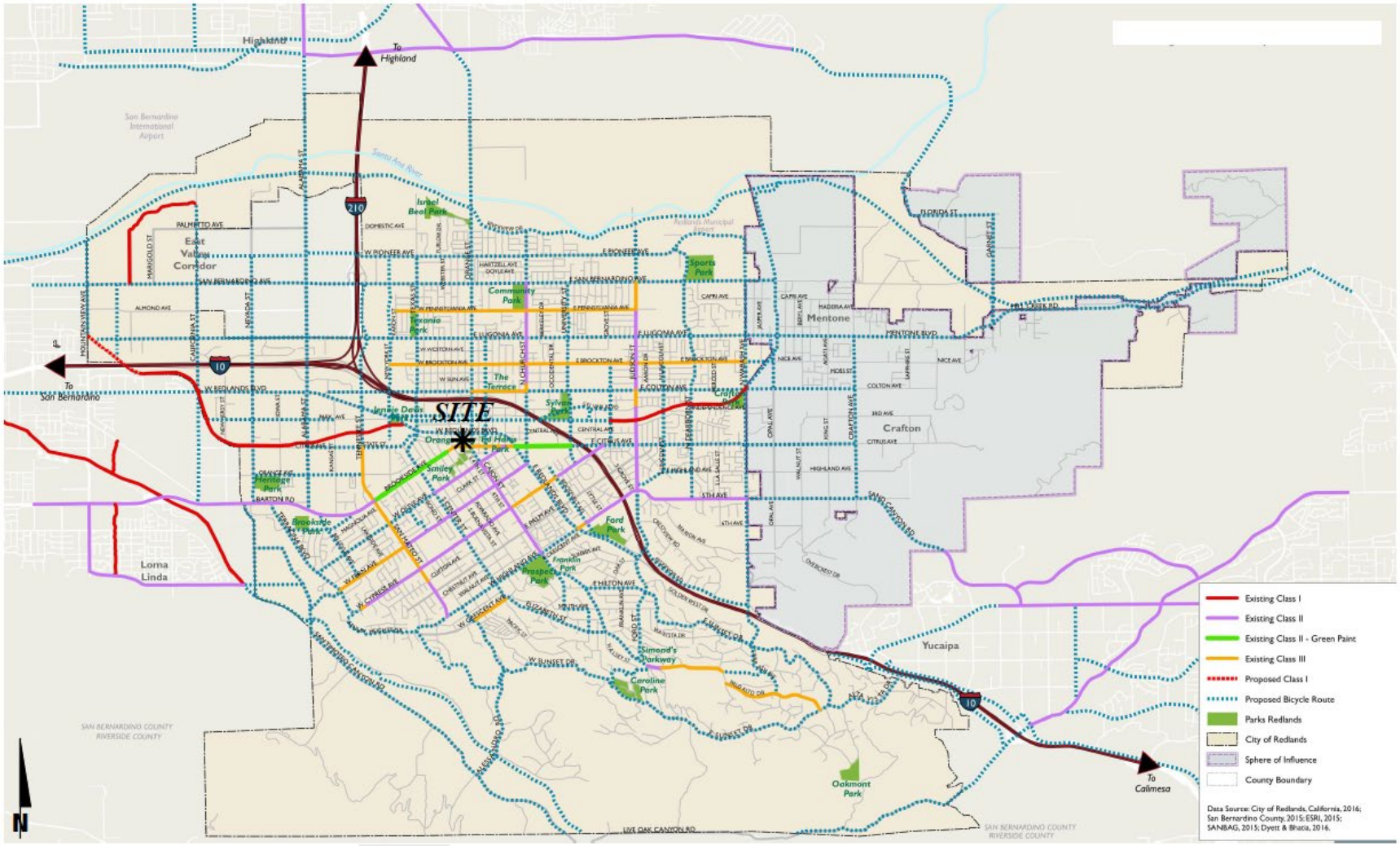

EXHIBIT 3-6: CITY OF REDLANDS GENERAL PLAN MULTI-USE TRAILS

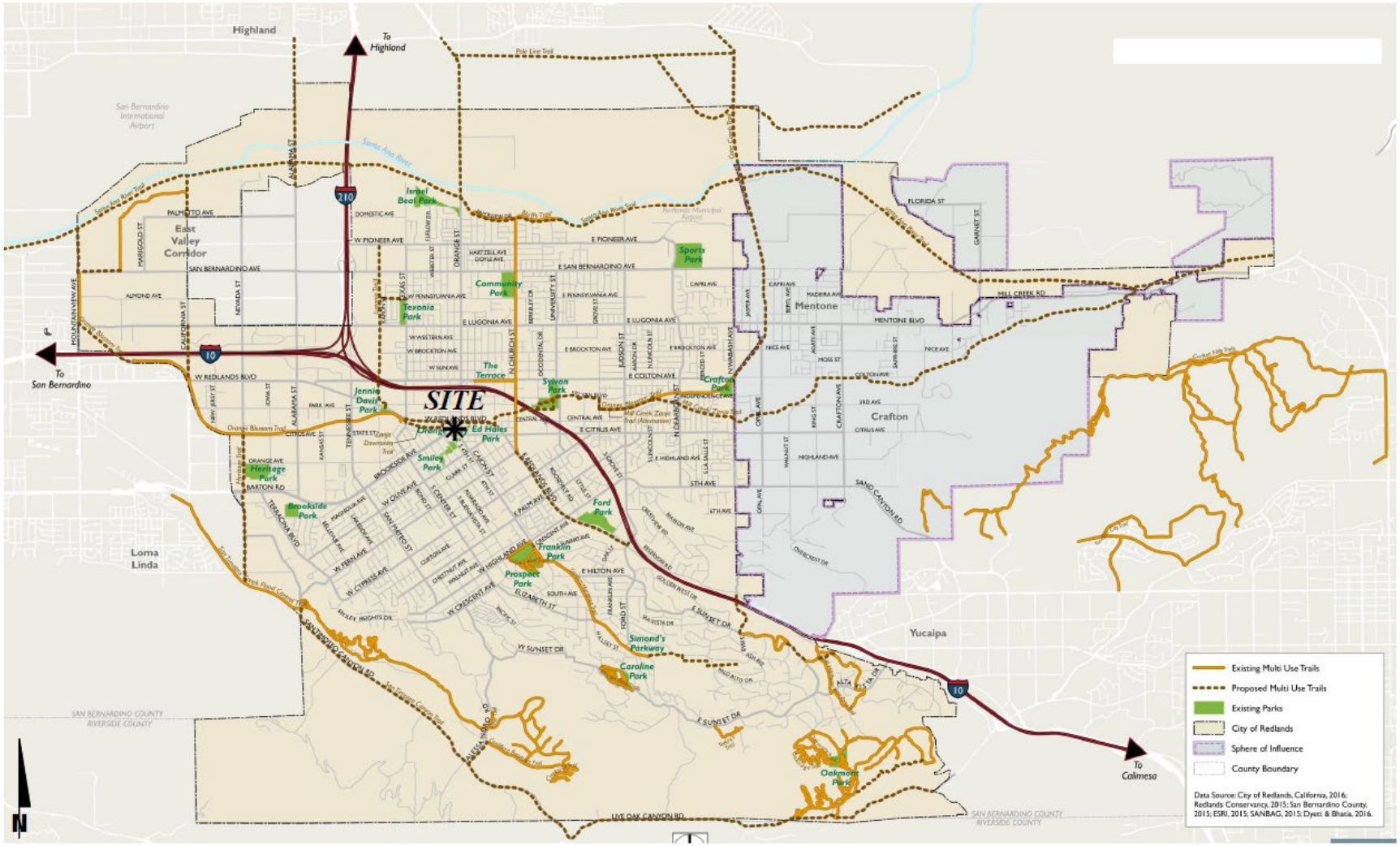

3.4 TRANSIT SERVICE

The study area is currently served by Omnitrans, a public transit agency serving the County of San Bernardino and the City of Redlands, with bus service in the study area along the following, as illustrated on Exhibit 3-7:

- Redlands Boulevard, Eureka Street, and Pearl Avenue via Route 8
- Eureka Street and Orange Street via Route 15
- Citrus Avenue, Brookside Avenue, Eureka Street, and Redlands Boulevard via Route 19

As such, there are existing routes that could likely serve the Project with Route 19 being the most feasible as it has existing stops along the Project's northern frontage along Redlands Boulevard. Transit service is reviewed and updated by Omnitrans periodically to address ridership, budget, and community demand needs. Changes in land use can affect these periodic adjustments which may lead to either enhanced or reduced service where appropriate.

3.5 EXISTING (2021) TRAFFIC COUNTS

The intersection LOS analysis is based on the traffic volumes observed during the peak hour conditions using traffic count data collected in 2019 and 2021. The following peak hours were selected for analysis:

- Weekday AM Peak Hour (peak hour between 7:00 AM and 9:00 AM)
- Weekday PM Peak Hour (peak hour between 4:00 PM and 6:00 PM)

Due to the currently ongoing COVID-19 pandemic, schools and businesses within the study area were closed or operating at less than full capacity at the time this study was prepared. Traffic counts older than the current year (2021) would be brought to current conditions through the application of a growth factor. The growth factor is recommended to be the average population, employment, and household growth per the RTP for the City of Redlands, which is 0.76%. The adopted Southern California Association of Governments (SCAG) 2020 Regional Transportation Plan/Sustainable Communities Strategy (RTP/SCS) (September 2020) growth forecasts for the City of Redlands identifies projected growth in population of 69,500 in 2016 to 80,800 in 2045, or a 0.52% increase over the 29-year period. The change in population equates to roughly a 16.26% growth rate, compounded annually. Similarly, growth over the same 29-year period in households is projected to increase by 26.23%, or a 0.81% annual growth rate. Finally, growth in employment over the same 29-year period is projected to increase by 32.16%, or a 0.97% annual growth rate.

DRAFT

EXHIBIT 3-7: EXISTING TRANSIT ROUTES

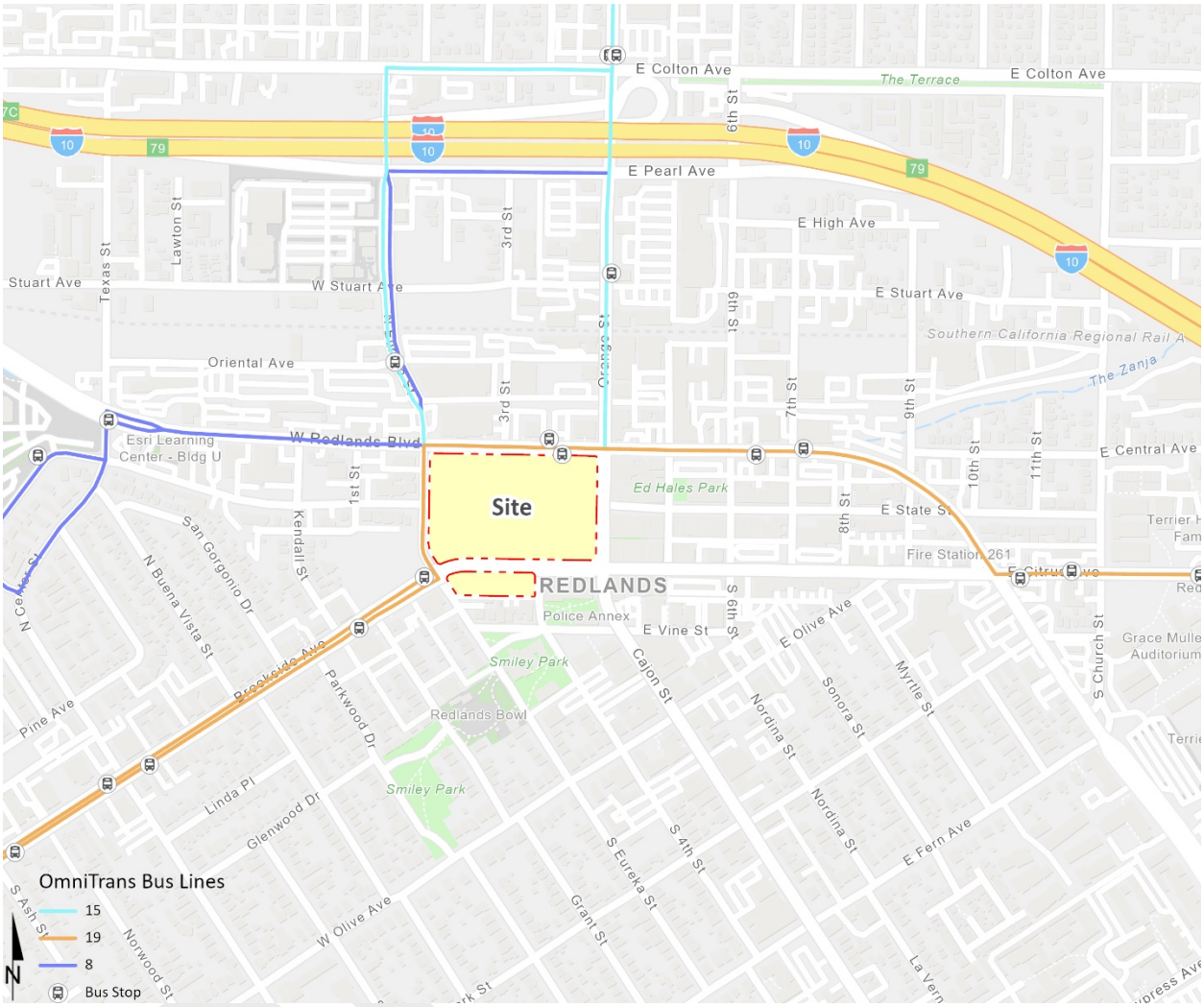

As such, historic pre-COVID (2019) traffic counts were utilized in conjunction with a 0.76% per year growth rate (compounded annually) to reflect adjusted 2021 conditions for the following intersections:

- Eureka St. & Redlands Bl. (#2)
- Eureka St. & Brookside Av./Citrus Av. (#6)
- Orange St. & I-10 WB On-Ramps (#15)
- Orange St. & Pearl Av. (#16)
- Orange St. & Redlands Bl. (#17)
- Orange St./Cajon St. & Citrus Av. (#20)
- Redlands Bl. & Citrus Av. (#21)
- Church St. & Citrus Av. (#22)

The 2019 count data are representative of typical weekday peak hour traffic conditions in the study area. There were no observations made in the field that would indicate atypical traffic conditions on the count dates, such as construction activity or detour routes and near-by schools were in session and operating on normal schedules.

Historic traffic count data was not readily available for the remaining study area intersections (those not listed above). As such, 2021 traffic counts have been collected at these intersections in order to compare and develop an adjustment factor based on historic 2019 traffic count data to the recently collected 2021 traffic count data. This adjustment factor has been applied to the traffic count data at the intersections where historic traffic count data was not readily available to reflect non-COVID traffic conditions. Where applicable, traffic volumes have also been flow conserved in order to not have any loss of vehicles. The raw manual peak hour turning movement traffic count data sheets are included in Appendix 3.1.

Existing weekday Average Daily Traffic (ADT) volumes are shown on Exhibit 3-8. Where actual 24-hour tube count data was not available, Existing ADT volumes were based upon factored intersection peak hour counts collected by Urban Crossroads, Inc. using the following formula for each intersection leg:

Weekday PM Peak Hour (Approach Volume + Exit Volume) x 13.56 = Leg Volume

A comparison of the PM peak hour and daily traffic volumes of various roadway segments within the study area indicated that the peak-to-daily relationship is approximately 7.38 percent. As such, the above equation utilizing a factor of 13.56 estimates the ADT volumes on the study area roadway segments assuming a peak-to-daily relationship of approximately 7.38 percent (i.e., 1/0.0738 = 13.56) and was assumed to sufficiently estimate ADT volumes for planning-level analyses. Existing weekday AM and weekday PM peak hour intersection volumes (in actual vehicles) are also shown on Exhibit 3-8.

3.6 EXISTING (2021) CONDITIONS INTERSECTION OPERATIONS ANALYSIS

Existing peak hour traffic operations have been evaluated for the study area intersections based on the analysis methodologies presented in Section 2.2 *Intersection Capacity Analysis* of this report. The intersection operations analysis results are summarized in Table 3-1 which indicates that the existing study area intersections are currently operating at an acceptable LOS during the peak hours. The intersection operations analysis worksheets are included in Appendix 3.2 of this TA.

3.7 TRAFFIC SIGNAL WARRANTS ANALYSIS

Traffic signal warrants for Existing traffic conditions are based on existing peak hour intersection turning volumes. The study area intersections do not currently meet peak hour volume-based traffic signal warrants for Existing traffic conditions (see Appendix 3.3).

TABLE 3-1: INTERSECTION ANALYSIS FOR EXISTING (2021) CONDITIONS

#	Intersection	Traffic Control[1]	Delay[2] (secs.) AM	Delay[2] (secs.) PM	Level of Service AM	Level of Service PM
1	Center St. & Brookside Av.	TS	14.6	21.5	B	C
2	Eureka St. & Redlands Bl.	TS	15.0	18.9	B	B
3	Eureka St. & Driveway 1		Future Intersection			
4	Eureka St. & State St.	CSS	20.9	19.1	C	C
5	Eureka St. & Driveway 2		Future Intersection			
6	Eureka St. & Brookside Av./Citrus Av.	TS	8.4	8.1	A	A
7	Eureka St. & Driveway 3		Future Intersection			
8	Driveway 4 & Citrus Av.		Future Intersection			
9	3rd St. & Redlands Bl.	TS	6.6	8.3	A	A
10	3rd St. & Citrus Av.		Future Intersection			
11	Driveway 5 & Redlands Bl.		Future Intersection			
12	4th St. & Citrus Av.	CSS	15.9	17.4	C	C
13	4th St. & Driveway 3		Future Intersection			
14	Driveway 6 & Redlands Bl.		Future Intersection			
15	Orange St. & I-10 WB On-Ramps	UC	0.0	0.0	A	A
16	Orange St. & Pearl Av.	TS	8.9	14.9	A	B
17	Orange St. & Redlands Bl.	TS	21.0	28.9	C	C
18	Orange St. & State St.	TS	3.8	5.4	A	A
19	Orange St. & Driveway 7		Future Intersection			
20	Orange St./Cajon St. & Citrus Av.	TS	9.2	9.7	A	A
21	Redlands Bl. & Citrus Av.	TS	20.5	30.7	C	C
22	Church St. & Citrus Av.	TS	17.4	9.1	B	A

[1] CSS = Cross-street Stop; TS = Traffic Signal; UC = Uncontrolled

[2] Per the Highway Capacity Manual (6th Edition), overall average intersection delay and level of service are shown for intersections with a traffic signal or all way stop control. For intersections with cross street stop control, the delay and level of service for the worst individual movement (or movements sharing a single lane) are shown.

EXHIBIT 3-8: EXISTING (2021) TRAFFIC VOLUMES (PAGE 1 OF 2)

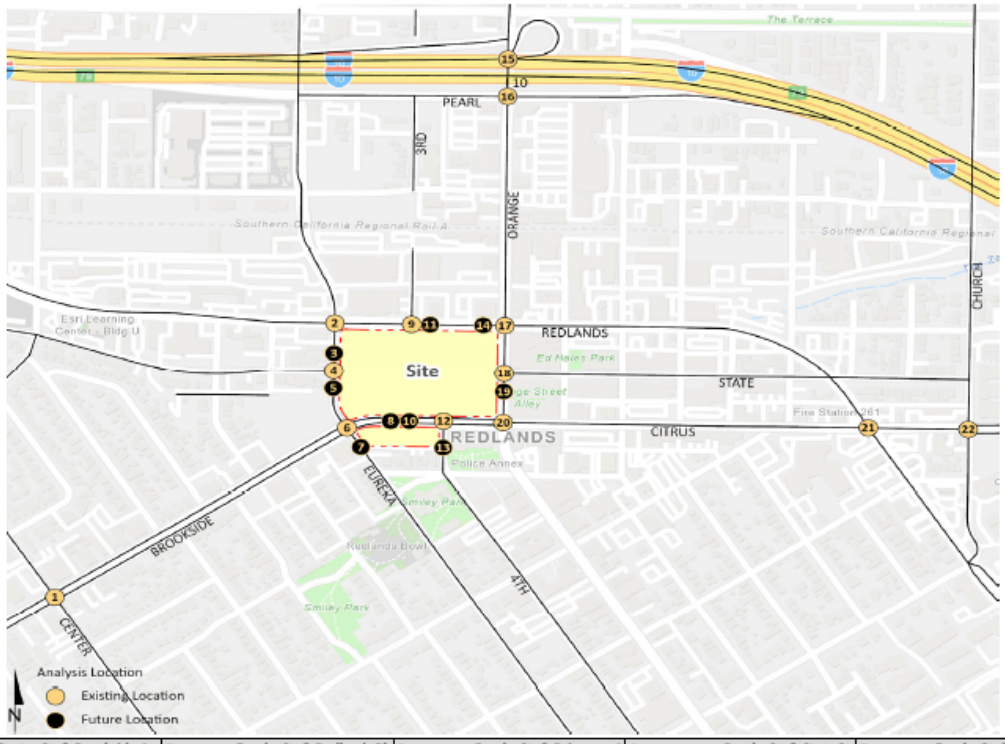

1 Center St. & Brookside Av.

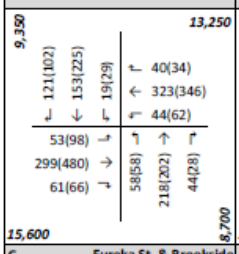

2 Eureka St. & Redlands Bl.

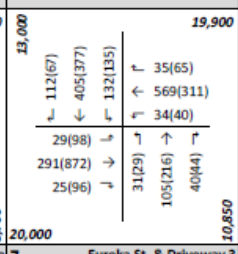

3 Eureka St. & Driveway 1

Future Intersection

4 Eureka St. & State St.

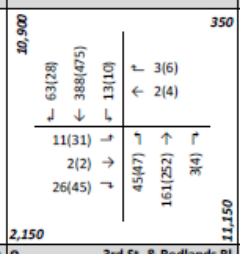

5 Eureka St. & Driveway 2

Future Intersection

6 Eureka St. & Brookside Av./Citrus Av.

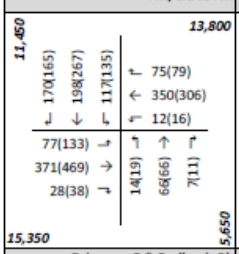

7 Eureka St. & Driveway 3

Future Intersection

8 Driveway 4 & Citrus Av.

Future Intersection

9 3rd St. & Redlands Bl.

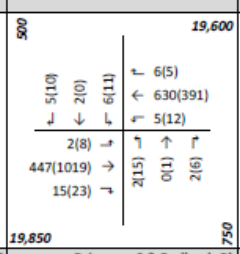

10 3rd St. & Citrus Av.

Future Intersection

11 Driveway 5 & Redlands Bl.

Future Intersection

12 4th St. & Citrus Av.

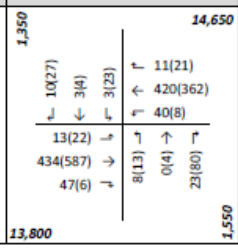

13 4th St. & Driveway 3

Future Intersection

14 Driveway 6 & Redlands Bl.

Future Intersection

15 Orange St. & I-10 WB On-Ramps

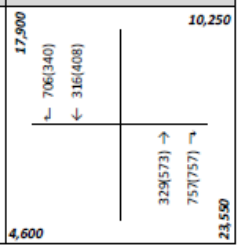

##(##) AM(PM) Peak Hour Intersection Volumes

Average Daily Trips

EXHIBIT 3-8: EXISTING (2021) TRAFFIC VOLUMES (PAGE 2 OF 2)

16 Orange St. & Pearl Av.

23,550 | *10,150*

15(24) ↳	277(332) ↓	23(51) ↳
168(256) ⤻	283(351) →	118(138) ⤳
↰ 188(174)	← 47(63)	↰ 13(28)
↰ 6(14)	↑ 730(901)	↱ 28(80)

11,500 | *20,250*

17 Orange St. & Redlands Bl.

21,150 | *21,700*

47(70) ↳	274(306) ↓	62(136) ↳
58(137) ⤻	326(795) →	47(105) ⤳
← 232(254)	← 558(317)	↰ 35(58)
↰ 39(41)	↑ 484(531)	↱ 24(40)

19,850 | *14,650*

18 Orange St. & State St.

14,650 | *3,150*

22(58) ↳	286(307) ↓	48(102) ↳
16(50) ⤻	5(13) →	5(19) ⤳
↰ 15(17)	↑ 531(562)	↱ 60(118)

2,150 | *13,900*

19 Orange St. & Driveway 7

Future Intersection

20 Orange St./Cajon St. & Citrus Av.

13,900 | *10,650*

48(63) ↳	224(212) ↓	18(52) ↳
64(166) ⤻	257(332) →	139(192) ⤳
← 48(158)	← 324(255)	↰ 13(31)
↰ 100(73)	↑ 494(374)	↱ 30(21)

14,650 | *12,250*

21 Redlands Bl. & Citrus Av.

20,700 | *13,250*

24(151) ↳	206(676) ↓	84(151) ↳
23(142) ⤻	210(360) →	91(268) ⤳
← 207(130)	← 300(234)	↰ 65(52)
↰ 215(87)	↑ 611(276)	↱ 39(51)

16,850 | *19,100*

22 Church St. & Citrus Av.

9,450 | *13,400*

127(142) ↳	175(177) ↓	36(90) ↳
72(96) ⤻	279(425) →	41(21) ⤳
← 42(23)	← 430(315)	↰ 72(65)
↰ 43(14)	↑ 182(168)	↱ 96(70)

13,750 | *7,000*

##(##) AM(PM) Peak Hour Intersection Volumes

Average Daily Trips

4 PROJECTED FUTURE TRAFFIC

This section presents the traffic volumes estimated to be generated by the Project, as well as the Project's trip assignment onto the study area roadway network. The site is occupied by the Redlands Mall, which is currently vacant, in conjunction with a CVS Pharmacy, Union Bank, and Denny's restaurant (which were operational at the time the driveway counts were conducted for existing uses). The mall site is proposed to be redeveloped with mixed-use buildings with housing over retail, restaurants, and other services. Specifically, the proposed uses include 723 multifamily residential units (within six 3 to 5 story buildings) and include live/work units with studio and one/two/three-bedroom plans, 39,000 square feet of retail space, 32,000 square feet of restaurant space, 12,222 square feet of office space, and a 2,200 square foot rooftop restaurant. A drug store of approximately 14,500 square feet with drive-through window for the pharmacy is planned for the outparcel site on the south side of Citrus Avenue. The Project is anticipated to be built out and occupied in the year 2025. The Project would have access to all surrounding streets in conjunction to an extension of Third Street and State Street, which will improve connectivity through the site. Third Street will provide pedestrian connectivity including a pedestrian connection to the Arrow Line train station.

4.1 PROJECT TRIP GENERATION

Trip generation represents the amount of traffic which is both attracted to and produced by a development. Determining traffic generation for a specific project is therefore based upon forecasting the amount of traffic that is expected to be both attracted to and produced by the specific land uses being proposed for a given development.

The ITE Trip Generation Manual is a nationally recognized source for estimating site specific trip generation. ITE recently released an updated edition of the Trip Generation Manual (10th Edition) in 2017. (1) The Trip Generation manual is based on more than 4,800 trip generation studies submitted to ITE by public agencies, consulting firms, universities/colleges, developers, associations, and local sections/districts/student chapters of ITE. The trip generation rates utilized for the purposes of this analysis are based upon data collected by ITE and presented in ITE's most recent edition of Trip Generation Manual, (10th Edition, 2017).

As noted previously, the site is currently occupied by an existing CVS Pharmacy, Union Bank, and Denny's restaurant. As such, driveway counts were conducted on April 14, 2021, to capture the vehicle trips associated with the existing uses. It was verified that these uses were occupied and in operational. Table 4-1 summarizes the peak hour and daily traffic counts collected at each driveway and also provides a sum for all existing uses.

DRAFT

TABLE 4-1: EXISTING TRIP GENERATION

	Redlands Mall[2]						
	AM Peak Hour			PM Peak Hour			
Land Use	In	Out	Total	In	Out	Total	Daily
April 14, 2021							
Eureka North Driveway	1	2	3	0	7	7	122
Eureka South Driveway	2	0	2	6	0	6	118
Redlands West Driveway	10	4	14	44	13	57	539
Redlands East Driveway	3	5	8	7	16	23	347
Orange North Driveway	0	0	0	0	0	0	15
Orange South Driveway	27	12	39	61	75	136	1,503
Citrus Driveway	14	8	22	38	52	90	1,074
Total Trips[1]	**57**	**31**	**88**	**156**	**163**	**319**	**3,718**

[1] Trip generation represents the sum of all driveways.

Trip generation estimates for the proposed Project have been developed using data from the Institute of Transportation Engineers (ITE) Trip Generation Manual (10th Edition, 2017). The trip generation rates used to estimate Project traffic are summarized in Table 4-2.

TABLE 4-2: ITE TRIP GENERATION RATES

	ITE		AM Peak Hour			PM Peak Hour			
Land Use[1]	Code	Units[2]	In	Out	Total	In	Out	Total	Daily
Multifamily Housing (Mid-Rise)	221	DU	0.09	0.27	0.36	0.27	0.17	0.44	5.44
Office	710	TSF	1.00	0.16	1.16	0.18	0.97	1.15	9.74
Shopping Center[3]	820	TSF	2.65	1.63	4.28	3.31	3.58	6.89	80.51
Pharmacy/Drugstore w/Drive-Thru window	881	TSF	2.04	1.80	3.84	5.15	5.14	10.29	109.16
Quality Restaurant	931	TSF	0.37	0.36	0.73	5.23	2.57	7.80	83.84
High Turnover (Sit-Down) Restaurant	932	TSF	5.47	4.47	9.94	6.06	3.71	9.77	112.18
Fast-Food Restaurant without Drive-Through Window	933	TSF	15.06	10.04	25.10	14.17	14.17	28.34	346.23

[1] Trip Generation Source: Institute of Transportation Engineers (ITE), Trip Generation Manual, Tenth Edition (2017).

[2] DU = Dwelling Units; TSF = thousand square feet

[3] Regression equation utilized to determine the trip generation rates as opposed to average trip rates.

Internal capture is a percentage reduction that can be applied to the trip generation estimates for individual land uses to account for trips internal to the site. In other words, trips may be made between individual retail uses on-site and can be made either by walking or using internal roadways without using external streets. For example, patrons of the retail may visit the restaurant uses or residents could visit retail/restaurant/office uses without leaving the immediate site and are therefore considered as vehicle trips that are internal to the site. The internal capture rate for the retail, office, restaurant, and residential uses on-site are based on the NCHRP 684 Internal Trip Capture Estimation Tool.

Pass-by trips are defined as intermediate stops on the way from an origin to a primary trip destination without a route diversion. Pass-by trips are attracted from traffic passing the site on an adjacent street or roadway that offers direct access to the generator. These types of trips are many times associated with retail uses. As the Project is proposed to include retail and restaurant

uses, pass-by percentages have been obtained and applied accordingly from the ITE Trip Generation Handbook, 3rd Edition (2017).

As shown on Table 4-3, the Project is anticipated to generate a net total of approximately 5,584 two-way trips per day with 770 AM peak hour trips and 536 PM peak hour trips.

TABLE 4-3: PROJECT TRIP GENERATION SUMMARY

		AM Peak Hour			PM Peak Hour			
Land Use	**Quantity Units[1]**	**In**	**Out**	**Total**	**In**	**Out**	**Total**	**Daily**
Residential Land Use								
Multifamily Housing (Mid-Rise)	723 DU	68	193	260	194	124	318	3,934
Internal Capture:		-4	-41	-45	-87	-46	-133	-1,646
Multifamily Housing (Mid-Rise) Subtotal:		*64*	*152*	*215*	*107*	*78*	*185*	*2,288*
Retail Land Use								
Shopping Center	39.000 TSF	103	64	167	129	140	269	3,140
Internal Capture:		-9	-9	-17	-82	-78	-161	-1,878
Pass-By (34% PM/Daily):		0	0	0	-21	-21	-42	-430
Pharmacy/Drugstore w/Drive-Thru window	14.500 TSF	30	26	56	75	75	149	1,584
Internal Capture:		-4	-4	-9	-42	-40	-81	-862
Pass-By (49% PM/Daily):		0	0	0	-17	-17	-34	-778
Retail Subtotal:		*120*	*77*	*197*	*42*	*59*	*100*	*776*
Restaurant Land Use								
Quality Restaurant	2.200 TSF	1	1	2	11	6	17	186
Internal Capture:		0	-1	-1	-2	-1	-3	-36
Pass-By (41% PM/Daily):		0	0	0	-2	-2	-4	-62
High Turnover (Sit-Down) Restaurant	16.000 TSF	87	72	159	97	59	156	1,796
Internal Capture:		-12	-4	-16	-21	-32	-53	-608
Pass-By (43% PM/Daily):		0	0	0	-12	-12	-24	-512
Fast-Food Restaurant without Drive-Through Window	16.000 TSF	241	161	402	227	227	454	5,540
Internal Capture:		-40	-12	-52	-67	-101	-168	-2,054
Pass-By (49% AM; 50% PM/Daily):		-73	-73	-146	-63	-63	-126	-1,744
Restaurant Subtotal:		*203*	*144*	*347*	*161*	*78*	*239*	*2,418*
Office Land Use								
General Office	12.222 TSF	12	2	14	2	12	14	120
Internal Capture:		-2	-1	-3	0	-2	-2	-18
Office Subtotal:		*10*	*1*	*11*	*2*	*10*	*12*	*102*
Project Buildout Total:		**396**	**374**	**770**	**312**	**225**	**536**	**5,584**

[1] DU = Dwelling Units; TSF = thousand square feet

Table 4-4 provides a comparison of the existing land use trip generation and the proposed Project trip generation estimates. The development of the proposed Project is anticipated to generate a net increase of 1,866 two-way trips per day with an increase of 682 trips during the AM peak hour and 217 trips during the PM peak hour in comparison to the existing uses.

TABLE 4-4: EXISTING TRIP GENERATION COMPARISON

	AM Peak Hour			PM Peak Hour			
Land Use	**In**	**Out**	**Total**	**In**	**Out**	**Total**	**Daily**
Existing Land Uses[1]	57	31	88	156	163	319	3,718
Proposed Project	396	374	770	312	225	536	5,584
Variance	**339**	**343**	**682**	**156**	**62**	**217**	**1,866**

[1] Based on existing driveway counts observed for the existing land uses.

Table 4-5 provides a trip generation comparison of the anticipated full occupancy of the Redlands Mall (if it were to be reoccupied) and the proposed Project trip generation estimates. The development of the proposed Project is anticipated to generate 556 fewer two-way trips per day and 30 fewer PM peak hour trips along with an anticipated net increase of 523 AM peak hour trips in comparison to the anticipated full occupancy of the Redlands Mall. The net increase in the morning peak hour is related to the various residential and restaurant uses proposed for the Project.

TABLE 4-5: REDLANDS MALL FULL OCCUPANCY TRIP GENERATION COMPARISON

	ITE		AM Peak Hour			PM Peak Hour			
Land Use[1]	Code	Units[2]	In	Out	Total	In	Out	Total	Daily
Shopping Center[3]	820	TSF	0.81	0.49	1.30	2.21	2.39	4.60	48.96

[1] Trip Generation Source: Institute of Transportation Engineers (ITE), Trip Generation Manual, Tenth Edition (2017).

[2] TSF = thousand square feet

[3] Regression equation utilized to determine the trip generation rates as opposed to average trip rates.

		AM Peak Hour			PM Peak Hour			
Land Use	Quantity Units[1]	In	Out	Total	In	Out	Total	Daily
Redlands Mall	190.000 TSF	154	93	247	420	454	874	9,304
Pass-By (34% PM/Daily):		0	0	0	-154	-154	-308	-3,164
Redlands Mall Total:		154	93	247	266	300	566	6,140
Proposed Project Total		396	374	770	312	225	536	5,584
Variance		**242**	**281**	**523**	**46**	**-75**	**-30**	**-556**

[1] TSF = thousand square feet

4.2 PROJECT TRIP DISTRIBUTION

Trip distribution is the process of identifying the probable destinations, directions or traffic routes that will be utilized by Project traffic. The potential interaction between the planned land uses and surrounding regional access routes are considered, to identify the route where the Project traffic would distribute. The Project trip distribution was developed based on anticipated travel patterns to and from the Project site and developed based on an understanding of existing travel patterns in the area, the geographical location of the site, and the site's proximity to the regional arterial and state highway system. Exhibit 4-1 illustrates the Project's residential trip distribution patterns while the retail, restaurant, and office use trip distribution patterns are reflected on Exhibit 4-2.

4.3 MODAL SPLIT

Although the use of public transit, walking, and/or bicycling have the potential to reduce Project-related traffic, such reductions have not been taken into considerations in this traffic study in order to provide a conservative analysis of the Project's potential to result in significant traffic deficiencies.

EXHIBIT 4-1: PROJECT (RESIDENTIAL) TRIP DISTRIBUTION

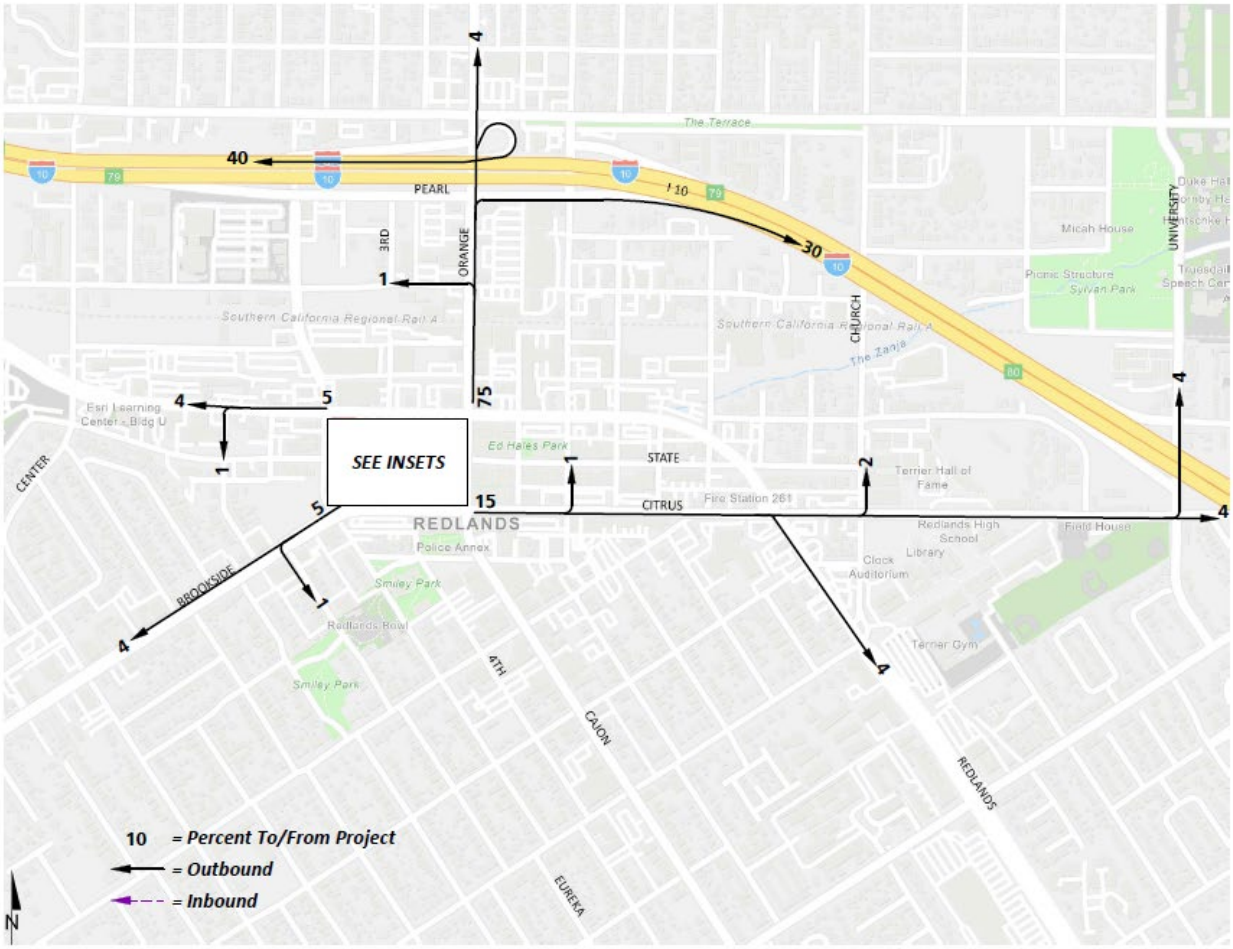

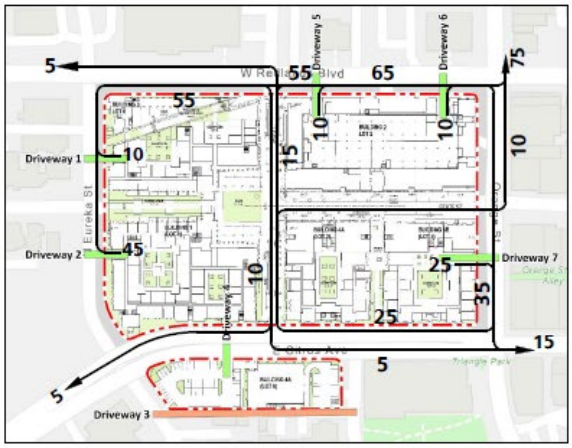

EXHIBIT 4-2: PROJECT (RETAIL/OFFICE) TRIP DISTRIBUTION

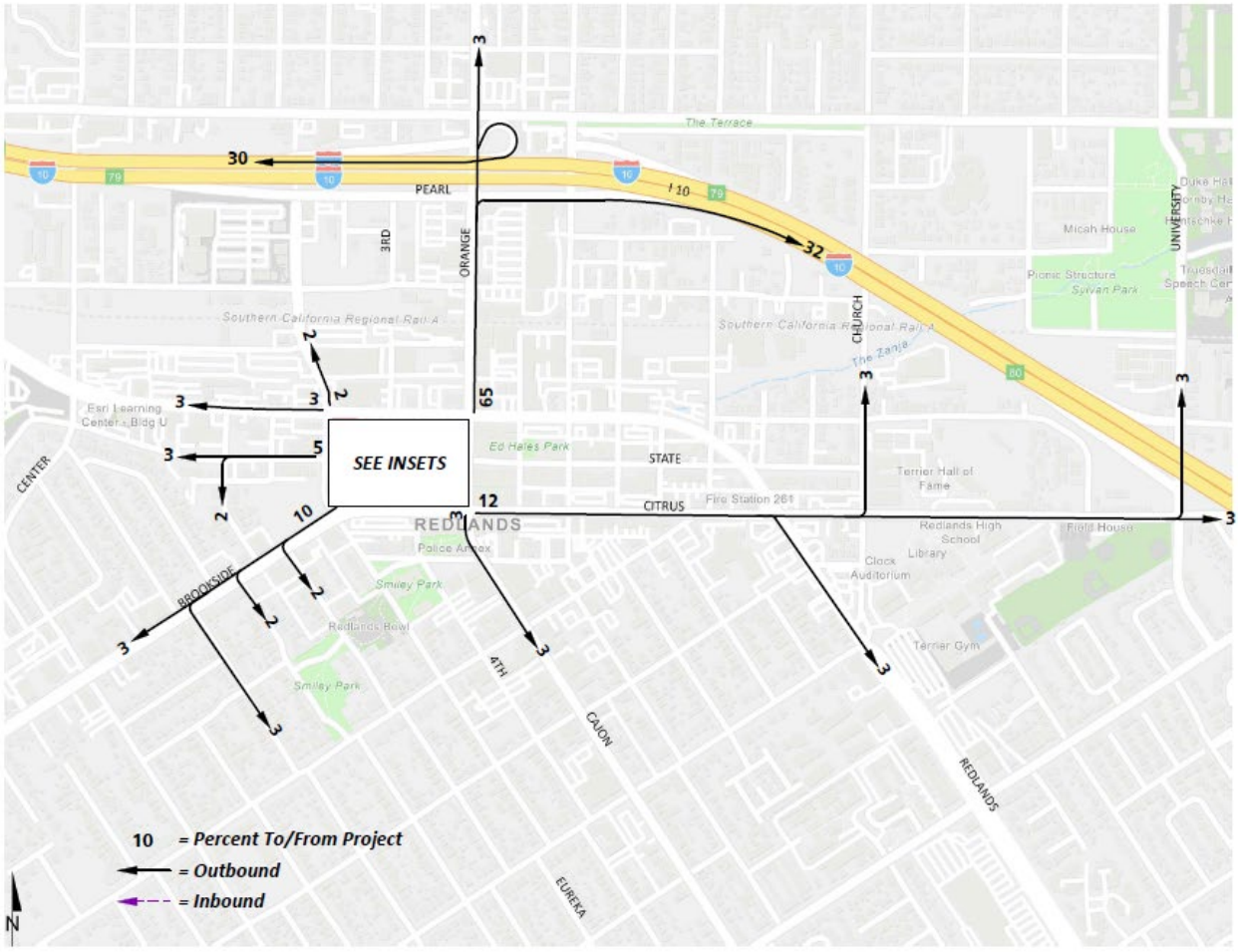

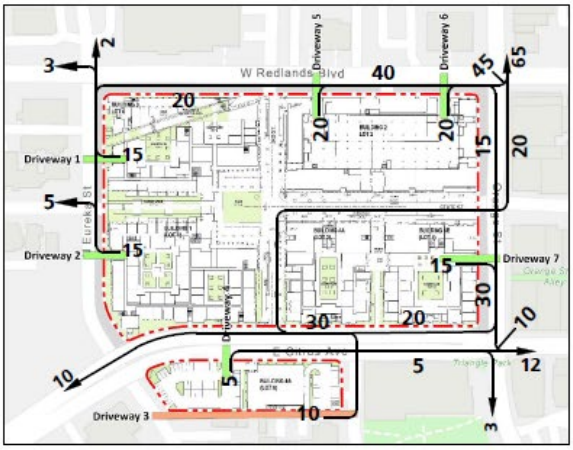

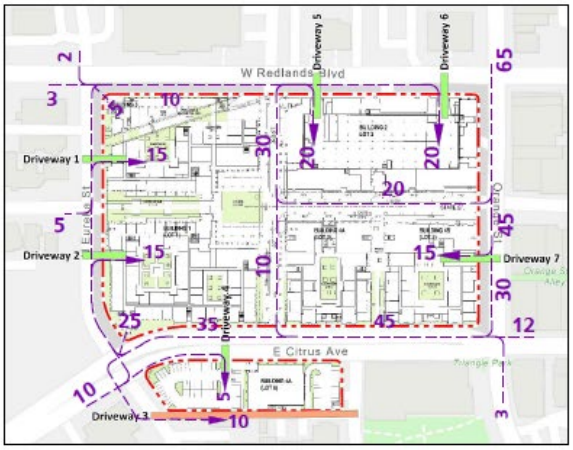

4.4 PROJECT TRIP ASSIGNMENT

The assignment of traffic from the Project area to the adjoining roadway system is based upon the Project trip generation, trip distribution, and the arterial highway and local street system improvements that would be in place by the time of initial occupancy of the Project. Based on the identified Project traffic generation and trip distribution patterns, Project ADT, AM, and PM peak hour volumes for the weekday are shown on Exhibit 4-3.

DRAFT

EXHIBIT 4-3: PROJECT ONLY TRAFFIC VOLUMES (PAGE 1 OF 2)

1 Center St. & Brookside Av.	2 Eureka St. & Redlands Bl.	3 Eureka St. & Driveway 1	4 Eureka St. & State St.	5 Eureka St. & Driveway 2
100	700	600 / 1,800	600	600 / 2,600
← 12(3)	← 8(4)	← 59(47)		← 112(74)
11(6) →	↰ 6(1)	↑ 96(43)	14(2) ↱	↑ 45(24)
	11(7) →	↱ 67(58)	↰ 10(-1)	↱ 90(96)
	↑ 6(0)		↑ 135(51)	
	↑ 4(0)			
	↱ 135(42)			
100	100 / 600	600	600	600

6 Eureka St. & Brookside Av./Citrus Av.	7 Eureka St. & Driveway 3	8 Driveway 4 & Citrus Av.	9 3rd St. & Redlands Bl.	10 3rd St. & Citrus Av.
600 / 600	150 / 150	600	1,300	1,500 / 450
← 101(66)	↰ 33(20)	← 178(144)	↱ 29(48)	↰ 37(52)
← 27(2)				↰ 8(4)
↱ 28(5)		↱ 11(7)		← 121(80)
17(8) ↱		17(10) ↱	137(42) →	← 142(92)
14(2) →			15(8) ↱	11(7) →
			↑ 8(4)	
			↱ 108(39)	
100		600 / 150	700 / 950	600

11 Driveway 5 & Redlands Bl.	12 4th St. & Citrus Av.	13 4th St. & Driveway 3	14 Driveway 6 & Redlands Bl.	15 Orange St. & I-10 WB On-Ramps
1,300	450	150	1,300	100 / 450
← 29(48)	← 209(54)		← 29(48)	↰ 11(6)
↱ 75(60)	↱ 20(-2)	23(15) ↱	↱ 75(60)	
186(101) →	17(3) →		172(86) →	↑ 12(3)
87(74) ↱			88(75) ↱	↱ 118(26)
1,300 / 2,300	450	150	1,300 / 2,300	500

##(##) AM(PM) Peak Hour Intersection Volumes

Average Daily Trips

EXHIBIT 4-3: PROJECT ONLY TRAFFIC VOLUMES (PAGE 2 OF 2)

16 Orange St. & Pearl Av.

500 / 600
11(6) ↓ | ↰ 108(48)
108(58) ↳ | ↑ 130(29) ↱ 107(18)
450 / 1,550

17 Orange St. & Redlands Bl.

1,600
29(48) ↳ 198(64) ↓
185(43) ⤻ | ↑ 53(5)
43(5) ⤳
1,300 / 450

18 Orange St. & State St.

450
62(21) ↳ 180(49) ↓
53(5) ⤻
18(13) ⤵
350 / 450

19 Orange St. & Driveway 7

450
77(74) ↳ 152(82) ↓
67(50) ⤳
2,000 / 350

20 Orange St./Cajon St. & Citrus Av.

350 / 300
158(31) ↳ | 34(6) ↳ ← 43(22)
11(4) → | ↰ 8(1)
6(0) ⤵
450

21 Redlands Bl. & Citrus Av.

200
← 31(15)
32(6) → | ↰ 11(6)
12(3) ⤵
300 / 100

22 Church St. & Citrus Av.

Nominal / 150
10(4) ↳ | ← 22(12)
9(1) ⤻
24(5) →
200

##(##) AM(PM) Peak Hour Intersection Volumes

Average Daily Trips

This Page Intentionally Left Blank

DRAFT

5 E+P TRAFFIC CONDITIONS

This section discusses the traffic forecasts for Existing Plus Project (E+P) conditions and the resulting intersection operations and traffic signal warrant analyses.

5.1 ROADWAY IMPROVEMENTS

The lane configurations and traffic controls assumed to be in place for E+P conditions are consistent with those shown previously on Exhibit 3-1, with the exception of the following:

- Project driveways and those facilities assumed to be constructed by the Project to provide site access are also assumed to be in place for E+P conditions only (e.g., intersection and roadway improvements at the Project's frontage and driveways).

5.2 E+P TRAFFIC VOLUME FORECASTS

This scenario includes Existing traffic volumes plus Project traffic. The ADT and peak hour intersection turning movement volumes (in actual vehicles), which can be expected for E+P traffic conditions are shown on Exhibit 5-1.

5.3 INTERSECTION OPERATIONS ANALYSIS

E+P peak hour traffic operations have been evaluated for the study area intersections based on the analysis methodologies presented in Section 2 *Methodologies* of this TA. The intersection analysis results are summarized in Table 5-1, which indicates that the following study area intersection is anticipated to operate at an unacceptable LOS during one or more of the peak hours:

- Orange St. & Redlands Bl. (#17) – LOS D AM peak hour only

The intersection operations analysis worksheets are included in Appendix 5.1 of this TA.

5.4 TRAFFIC SIGNAL WARRANTS ANALYSIS

There are no intersections that are anticipated to meet either peak hour or planning level (ADT) volume-based traffic signal warrants with the addition of Project traffic (see Appendix 5.2).

DRAFT

EXHIBIT 5-1: E+P TRAFFIC VOLUMES (PAGE 1 OF 2)

1 Center St. & Brookside Av.

9,350 | 13,350
15,650 | 8,700

121(102)	153(225)	19(29)
53(98)	58(58)	218(202)	44(28)
310(486)		
61(66)		
40(34)		
335(349)		
44(62)		

2 Eureka St. & Redlands Bl.

13,000 | 20,600
20,100 | 11,450

112(67)	405(377)	138(136)
29(98)	38(33)	112(247)	181(99)
317(962)		
25(96)		
35(65)		
580(332)		
34(40)		

3 Eureka St. & Driveway 1

11,450 | 1,800
11,450

464(513)	
	272(332)	67(58)
59(47)	

4 Eureka St. & State St.

11,500 | 350
2,100 | 11,750

63(28)	401(485)	
25(33)	55(46)	313(357)
2(0)		
26(45)		

5 Eureka St. & Driveway 2

11,750 | 2,600
11,750

426(530)	
	256(329)	90(96)
112(74)	

6 Eureka St. & Brookside Av./Citrus Av.

12,050 | 14,350
15,400 | 5,650

170(165)	203(282)	117(135)
94(141)	14(19)	66(66)	7(11)
388(479)		
28(38)		
176(167)		
400(354)		
40(24)		

7 Eureka St. & Driveway 3

5,800 | 150
5,650

239(324)	33(20)
	87(96)

8 Driveway 4 & Citrus Av.

14,350
14,350 | 150

495(615)	
17(10)	
	11(7)
617(546)	

9 3rd St. & Redlands Bl.

500 | 20,900
20,600 | 1,700

5(10)	6(11)	
2(8)	8(4)	108(39)
620(1180)		
15(8)		
6(5)		
635(423)		
29(48)		

10 3rd St. & Citrus Av.

1,500 | 14,200
14,350

37(52)	8(4)
506(622)	
121(80)	
580(494)	

11 Driveway 5 & Redlands Bl.

20,900
20,900 | 2,300

647(1156)
87(74)
75(60)
671(476)

12 4th St. & Citrus Av.

1,350 | 15,100
14,200 | 1,550

466(620)	28(11)	23(82)
47(6)		
673(563)		
40(8)		

13 4th St. & Driveway 3

1,750
150 | 1,550

90(18)	
23(15)	
	31(97)

14 Driveway 6 & Redlands Bl.

21,150
21,150 | 2,300

603(1142)
88(75)
75(60)
673(475)

15 Orange St. & I-10 WB On-Ramps

18,000 | 10,700
4,600 | 24,090

706(340)	327(414)	
	341(576)	875(783)
121(80)		
580(494)		

##(##) AM(PM) Peak Hour Intersection Volumes

Average Daily Trips

EXHIBIT 5-1: E+P TRAFFIC VOLUMES (PAGE 2 OF 2)

16 Orange St. & Pearl Av.

24,050 / 10,750 / 11,900 / 21,800

15(24)	288(338)	23(51)	188(174)	47(63)	121(76)
168(256)	283(351)	226(196)	6(14)	860(930)	135(98)

17 Orange St. & Redlands Bl.

22,750 / 21,700 / 21,150 / 15,100

76(118)	487(430)	62(136)	232(254)	558(317)	35(68)
243(196)	345(867)	90(139)	39(41)	537(536)	24(40)

18 Orange St. & State St.

15,100 / 3,150 / 2,500 / 14,350

62(21)	502(497)	48(117)		
53(5)	18(13)		547(612)	60(118)

19 Orange St. & Driveway 7

14,350 / 2,000 / 14,250

77(74)	442(437)		
67(50)		605(731)	

20 Orange St./Cajon St. & Citrus Av.

14,200 / 10,950 / 15,100 / 12,250

206(147)	251(267)	52(73)	48(166)	392(332)	13(31)
64(174)	276(336)	149(192)	116(92)	494(391)	30(21)

21 Redlands Bl. & Citrus Av.

20,700 / 13,450 / 17,150 / 19,200

24(151)	206(676)	84(151)	207(130)	331(249)	65(52)
23(142)	242(366)	103(271)	226(93)	611(276)	39(51)

22 Church St. & Citrus Av.

9,500 / 13,600 / 13,950 / 7,000

137(146)	175(177)	36(90)	42(23)	452(327)	72(65)
81(97)	303(430)	41(21)	43(14)	182(168)	96(70)

##(##) AM(PM) Peak Hour Intersection Volumes

Average Daily Trips

TABLE 5-1: INTERSECTION ANALYSIS FOR E+P CONDITIONS

#	Intersection	Traffic Control[1]	Existing (2021) Delay[2] (secs.) AM	PM	Level of Service AM	PM	Existing + Project Delay[2] (secs.) AM	PM	Level of Service AM	PM
1	Center St. & Brookside Av.	TS	14.6	21.5	B	C	14.8	21.8	B	C
2	Eureka St. & Redlands Bl.	TS	15.0	18.9	B	B	16.6	22.3	B	C
3	Eureka St. & Driveway 1	--/CSS	Future Intersection				9.7	9.9	A	A
4	Eureka St. & State St.	CSS	20.9	19.1	C	C	17.4	14.4	C	B
5	Eureka St. & Driveway 2	--/CSS	Future Intersection				10.1	10.2	B	B
6	Eureka St. & Brookside Av./Citrus Av.	TS	8.4	8.1	A	A	9.6	8.7	A	A
7	Eureka St. & Driveway 3	--/CSS	Future Intersection				7.5	7.5	A	A
8	Driveway 4 & Citrus Av.	--/CSS	Future Intersection				10.1	10.6	B	B
9	3rd St. & Redlands Bl.	TS	6.6	8.3	A	A	10.9	13.9	B	B
10	3rd St. & Citrus Av.	--/CSS	Future Intersection				13.2	11.5	A	A
11	Driveway 5 & Redlands Bl.	--/CSS	Future Intersection				11.9	15.7	B	C
12	4th St. & Citrus Av.	CSS	15.9	17.4	C	C	20.5	13.3	C	B
13	4th St. & Driveway 3	--/CSS	Future Intersection				9.3	9.2	A	A
14	Driveway 6 & Redlands Bl.	--/CSS	Future Intersection				11.7	15.6	B	C
15	Orange St. & I-10 WB On-Ramps	UC	0.0	0.0	A	A	0.0	0.0	A	A
16	Orange St. & Pearl Av.	TS	8.9	14.9	A	B	18.5	21.6	B	C
17	Orange St. & Redlands Bl.	TS	21.0	28.9	C	C	**36.5**	34.8	**D**	C
18	Orange St. & State St.	TS	3.8	5.4	A	A	5.1	3.4	A	A
19	Orange St. & Driveway 7	--/CSS	Future Intersection				10.6	10.4	B	B
20	Orange St./Cajon St. & Citrus Av.	TS	9.2	9.7	A	A	11.0	11.5	B	B
21	Redlands Bl. & Citrus Av.	TS	20.5	30.7	C	C	21.2	31.9	C	C
22	Church St. & Citrus Av.	TS	17.4	9.1	B	A	18.8	9.2	B	A

* BOLD = Level of Service (LOS) does not meet the applicable jurisdictional requirements (i.e., unacceptable LOS).

[1] CSS = Cross-street Stop; TS = Traffic Signal; UC = Uncontrolled; CSS = Improvement

[2] Per the Highway Capacity Manual (6th Edition), overall average intersection delay and level of service are shown for intersections with a traffic signal or all way stop control. For intersections with cross street stop control, the delay and level of service for the worst individual movement (or movements sharing a single lane) are shown.

5.5 RECOMMENDED IMPROVEMENTS

Improvement strategies have been recommended at intersections that have been identified as deficient under E+P traffic conditions in an effort to achieve an acceptable LOS (i.e., LOS C or better). The effectiveness of the recommended improvement strategies to address E+P traffic deficiencies are presented in Table 5-2. Worksheets for E+P conditions, with improvements, HCM calculation worksheets are provided in Appendix 5.3.

In conjunction with implementing the improvement identified in Table 5-2, the Project Applicant shall participate in the funding of other off-site improvements, including traffic signals that are needed to serve longer range cumulative traffic conditions through the payment of DIF fees (if the improvements are included in the DIF fee program) or on a fair share basis (if the improvements are not included in the DIF fee program). These fees shall be collected by the City of Redlands, with the proceeds solely used as part of a funding mechanism aimed at ensuring that regional highways and arterial expansions keep pace with the projected population increases.

TABLE 5-2: INTERSECTION ANALYSIS FOR E+P CONDITIONS WITH IMPROVEMENTS

			Intersection Approach Lanes[1]												Delay[2] (secs.)		Level of Service	
		Traffic	Northbound			Southbound			Eastbound			Westbound						
#	Intersection	Control[3]	L	T	R	L	T	R	L	T	R	L	T	R	AM	PM	AM	PM
17	Orange St. & Redlands Bl.																	
	-Without Improvements	TS	1	2	0	1	2	0	1	2	0	1	2	0	36.5	34.8	D	C
	-With Improvements	TS[4]	1	2	0	1	2	0	1	2	0	1	2	0	33.9	32.0	C	C

[1] When a right turn is designated, the lane can either be striped or unstriped. To function as a right turn lane there must be sufficient width for right turning vehicles to travel outside the through lanes.

L = Left; T = Through; R = Right

[2] Per the Highway Capacity Manual (6th Edition), overall average intersection delay and level of service are shown for intersections with a traffic signal or all way stop control. For intersections with cross street stop control, the delay and level of service for the worst individual movement (or movements sharing a single lane) is considered the delay and LOS for the intersection.

[3] TS = Traffic Signal; TS = Improvement

[4] Improvements include modifying the traffic signal to provide a 120 cycle length.

This Page Intentionally Left Blank

DRAFT

6 LOCAL AND REGIONAL FUNDING MECHANISMS

Transportation improvements within the City of Redlands are funded through a combination of direct project mitigation, development impact fee programs or fair share contributions, such as the City of Redlands Development Impact Fee (DIF) program. Identification and timing of needed improvements is generally determined through local jurisdictions based upon a variety of factors.

6.1 CITY OF REDLANDS DEVELOPMENT IMPACT FEE PROGRAM

The City of Redlands adopted the latest update to their DIF program in 2017. Fees from new residential, commercial, and industrial development are collected to fund Measure "I" compliant regional facilities as well as local facilities. Under the City's DIF program, the City may grant to developers a credit against specific components of fees when those developers construct certain facilities and landscaped medians identified in the list of improvements funded by the DIF program.

After the City's DIF fees are collected, they are placed in a separate restricted use account pursuant to the requirements of Government Code sections 66000 *et seq*. The timing to use the DIF fees is established through periodic capital improvement programs which are overseen by the City's Municipal Utilities and Engineering Department. Periodic traffic counts, review of traffic accidents, and a review of traffic trends throughout the City are also periodically performed by City staff and consultants. The City uses this data to determine the timing of the improvements listed in its facilities list. The City also uses this data to ensure that the improvements listed on the facilities list are constructed before the LOS falls below the LOS performance standards adopted by the City. In this way, the improvements are constructed before the LOS falls below the City's LOS performance thresholds. The City's DIF program establishes a timeline to fund, design, and build the improvements.

6.2 MEASURE "I" FUNDS

In 2004, the voters of San Bernardino County approved the 30-year extension of Measure "I," a one-half of one percent sales tax on retail transactions, through the year 2040, for transportation projects including, but not limited to, infrastructure improvements, commuter rail, public transit, and other identified improvements. The Measure "I" extension requires that a regional traffic impact fee be created to ensure development is paying its fair share. A regional Nexus study was prepared by San Bernardino County Transportation Authority (SBCTA) and concluded that each jurisdiction should include a regional fee component in their local programs in order to meet the Measure "I" requirement. The regional component assigns specific facilities and cost sharing formulas to each jurisdiction and was most recently updated in November 2011. Revenues collected through these programs are used in tandem with Measure "I" funds to deliver projects identified in the Nexus Study. While Measure "I" is a self-executing sales tax administered by SBCTA, it bears discussion here because the funds raised through Measure "I" have funded in the past and will continue to fund new transportation facilities in San Bernardino County.

DRAFT

6.3 MEASURE U

As stated by Measure U,

> *The purpose and intent of this initiative measure is to establish comprehensive and inviolable principles of managed development for the City of Redlands that will preserve, enhance, and maintain the special quality of life valued by this community. The principles of managed development established by this initiative measure assure that future development within the City of Redlands occurs in a way that promotes the social and economic well-being of the entire community.*

In order to comply with Measure U, the Project is required to maintain a minimum LOS C or better at all intersections presently at LOS C or better. Where the current level of service at a location within the City of Redlands is below the LOS C standard, no development project shall be approved that cannot be mitigated so that it does not reduce the existing level of service at that location (i.e., intersections in Redlands that are deficient to start out with are acceptable as long as they do not further degrade LOS). A LOS D standard is acceptable on a case-by-case basis upon approval by a four-fifths (4/5ths) vote of the total authorized members of the City Council.

DRAFT

7 REFERENCES

1. **Institute of Transportation Engineers.** *Trip Generation.* 10th Edition. 2017.
2. **San Bernardino County Transportation Authority.** *Congestion Management Program for County of San Bernardino.* County of San Bernardino : s.n., Updated December 2007.
3. **Transportation Research Board.** *Highway Capacity Manual (HCM).* s.l. : National Academy of Sciences, 6th Edition.
4. **Caltrans.** California Manual on Uniform Traffic Control Devices (MUTCD). [book auth.] California Department of Transportation. *California Manual on Uniform Traffic Control Devices (CAMUTCD).* 2017.

DRAFT

This Page Intentionally Left Blank

DRAFT

APPENDIX 1.1:

APPROVED TRAFFIC STUDY SCOPING AGREEMENT

This Page Intentionally Left Blank

urbanxroads.com

June 29, 2021

Mr. Don Young
City of Redlands
35 Cajon Street
Redlands, CA 92373

SUBJECT: STATE STREET VILLAGE - REDLANDS TRAFFIC ANALYSIS SCOPING AGREEMENT

Dear Mr. Don Young:

The firm of Urban Crossroads, Inc. is pleased to provide this letter documenting the recommended scoping / assumptions for the proposed State Street Village - Redlands redevelopment (**Project**), which is bounded by Redlands Boulevard, Orange Street, Citrus Avenue, and Eureka Street in the City of Redlands. The project location with respect to the surrounding area is illustrated on Exhibit 1 and the preliminary site plan is illustrated on Exhibit 2.

Our goal is to obtain comments from City of Redlands staff to ensure that the traffic study fully addresses the potential deficiencies of the proposed Project. The remainder of this letter describes the proposed analysis methodology, project trip generation, trip distribution, and project traffic assignment/project trips on the surrounding roadway network, which has been used, along with inputs from City staff to establish the proposed project study area. It should be noted that this scoping agreement has been prepared in accordance with the County of San Bernardino Congestion Management Program (CMP) traffic study guidelines (Appendix B) and the City's Traffic Performance Criteria & Thresholds of Significance.

PROPOSED PROJECT

The site is occupied by the Redlands Mall, which is currently vacant, in conjunction with a CVS Pharmacy, Union Bank, and Denny's restaurant (which were operational at the time the driveway counts were conducted for existing uses). The mall site is proposed to be redeveloped with mixed-use buildings with housing over retail, restaurants, and other services. Specifically, the proposed uses include 723 multifamily residential units (within six 3 to 5 story buildings), and include live/work units with studio, one/two/three-bedroom plans. 39,000 square feet of retail space, 32,000 square feet of restaurant space, 12,222 square feet of office space, and a 2,200 square foot rooftop restaurant. A drug store of approximately 14,500 square feet with drive-through window for the pharmacy is planned for the outparcel site on the south side of Citrus Avenue.

The Project is anticipated to be built out and occupied by the year 2025. The preliminary site plan is illustrated on Exhibit 2. The Project would have access to all surrounding streets in conjunction to an

extension of Third Street and State Street, which will improve connectivity through the site. Third Street will provide pedestrian connectivity including a pedestrian connection to the Arrow Line train station.

VMT ANALYSIS

Changes to California Environmental Quality Act (CEQA) Guidelines were adopted in December 2018, which requires all lead agencies to adopt VMT as a replacement for automobile delay-based level of service (LOS) as the new measure for identifying transportation impacts for land use projects. This statewide mandate took effect July 1, 2020. To aid in this transition, the Governor's Office of Planning and Research (OPR) released a Technical Advisory on Evaluating Transportation Impacts in CEQA (December of 2018). The VMT analysis prepared for this Project will be in accordance with the City's VMT guidelines (adopted June 2020). The VMT analysis will be prepared as a separate document from the LOS-based traffic study. The Project meets the Transit Priority Area (TPA) screening criteria and would therefore be presumed to result in a less than significant VMT impact. Additional VMT analysis is not required. A VMT letter report (separate from the LOS-based traffic study) will be provided to summarize the VMT results.

TRIP GENERATION ASSUMPTIONS

As noted previously, the site is currently occupied by an existing CVS Pharmacy, Union Bank, and Denny's restaurant. As such, driveway counts were conducted on April 14, 2021, to capture the vehicle trips associated with the existing uses. Table 1 summarizes the peak hour and daily traffic counts collected at each driveway and also provides a sum for all existing uses.

TABLE 1: EXISTING TRIP GENERATION

	Redlands Mall[2]						
	AM Peak Hour			PM Peak Hour			
Land Use	**In**	**Out**	**Total**	**In**	**Out**	**Total**	**Daily**
April 14, 2021							
Eureka North Driveway	1	2	3	0	7	7	122
Eureka South Driveway	2	0	2	6	0	6	118
Redlands West Driveway	10	4	14	44	13	57	539
Redlands East Driveway	3	5	8	7	16	23	347
Orange North Driveway	0	0	0	0	0	0	15
Orange South Driveway	27	12	39	61	75	136	1,503
Citrus Driveway	14	8	22	38	52	90	1,074
Total Trips[1]	**57**	**31**	**88**	**156**	**163**	**319**	**3,718**

[1] Trip generation represents the sum of all driveways.

Trip generation estimates for the proposed Project have been developed using data from the Institute of Transportation Engineers (ITE) Trip Generation Manual (10th Edition, 2017). The trip generation rates used to estimate Project traffic are summarized in Table 2.

TABLE 2: ITE TRIP GENERATION RATES

Land Use[1]	ITE Code	Units[2]	AM Peak Hour In	AM Peak Hour Out	AM Peak Hour Total	PM Peak Hour In	PM Peak Hour Out	PM Peak Hour Total	Daily
Multifamily Housing (Mid-Rise)	221	DU	0.09	0.27	0.36	0.27	0.17	0.44	5.44
Office	710	TSF	1.00	0.16	1.16	0.18	0.97	1.15	9.74
Shopping Center[3]	820	TSF	2.65	1.63	4.28	3.31	3.58	6.89	80.51
Pharmacy/Drugstore w/Drive-Thru window	881	TSF	2.04	1.80	3.84	5.15	5.14	10.29	109.16
Quality Restaurant	931	TSF	0.37	0.36	0.73	5.23	2.57	7.80	83.84
High Turnover (Sit-Down) Restaurant	932	TSF	5.47	4.47	9.94	6.06	3.71	9.77	112.18
Fast-Food Restaurant without Drive-Through Window	933	TSF	15.06	10.04	25.10	14.17	14.17	28.34	346.23

[1] Trip Generation Source: Institute of Transportation Engineers (ITE), Trip Generation Manual, Tenth Edition (2017).

[2] DU = Dwelling Units; TSF = thousand square feet

[3] Regression equation utilized to determine the trip generation rates as opposed to average trip rates.

Internal capture is a percentage reduction that can be applied to the trip generation estimates for individual land uses to account for trips internal to the site. In other words, trips may be made between individual retail uses on-site and can be made either by walking or using internal roadways without using external streets. For example, patrons of the retail may visit the restaurant uses or residents could visit retail/restaurant/office uses without leaving the site and are therefore considered as vehicle trips that are internal to the site. The internal capture rate for the retail, office, restaurant, and residential uses on-site are based on the NCHRP 684 Internal Trip Capture Estimation Tool.

Pass-by trips are defined as intermediate stops on the way from an origin to a primary trip destination without a route diversion. Pass-by trips are attracted from traffic passing the site on an adjacent street or roadway that offers direct access to the generator. These types of trips are many times associated with retail uses. As the Project is proposed to include retail and restaurant uses, pass-by percentages have been obtained and applied accordingly from the ITE Trip Generation Handbook, 3rd Edition (2017).

As shown on Table 3, the Project is anticipated to generate a net total of approximately 5,584 two-way trips per day with 770 AM peak hour trips and 536 PM peak hour trips.

TABLE 3: PROJECT TRIP GENERATION SUMMARY

Land Use	Quantity	Units[1]	AM Peak Hour In	AM Peak Hour Out	AM Peak Hour Total	PM Peak Hour In	PM Peak Hour Out	PM Peak Hour Total	Daily
Residential Land Use									
Multifamily Housing (Mid-Rise)	723	DU	68	193	260	194	124	318	3,934
Internal Capture:			-4	-41	-45	-87	-46	-133	-1,646
Multifamily Housing (Mid-Rise) Subtotal:			*64*	*152*	*215*	*107*	*78*	*185*	*2,288*
Retail Land Use									
Shopping Center	39.000	TSF	103	64	167	129	140	269	3,140
Internal Capture:			-9	-9	-17	-82	-78	-161	-1,878
Pass-By (34% PM/Daily):			0	0	0	-21	-21	-42	-430
Pharmacy/Drugstore w/Drive-Thru window	14.500	TSF	30	26	56	75	75	149	1,584
Internal Capture:			-4	-4	-9	-42	-40	-81	-862
Pass-By (49% PM/Daily):			0	0	0	-17	-17	-34	-778
Retail Subtotal:			*120*	*77*	*197*	*42*	*59*	*100*	*776*
Restaurant Land Use									
Quality Restaurant	2.200	TSF	1	1	2	11	6	17	186
Internal Capture:			0	-1	-1	-2	-1	-3	-36
Pass-By (41% PM/Daily):			0	0	0	-2	-2	-4	-62
High Turnover (Sit-Down) Restaurant	16.000	TSF	87	72	159	97	59	156	1,796
Internal Capture:			-12	-4	-16	-21	-32	-53	-608
Pass-By (43% PM/Daily):			0	0	0	-12	-12	-24	-512
Fast-Food Restaurant without Drive-Through Window	16.000	TSF	241	161	402	227	227	454	5,540
Internal Capture:			-40	-12	-52	-67	-101	-168	-2,054
Pass-By (49% AM; 50% PM/Daily):			-73	-73	-146	-63	-63	-126	-1,744
Restaurant Subtotal:			*203*	*144*	*347*	*161*	*78*	*239*	*2,418*
Office Land Use									
General Office	12.222	TSF	12	2	14	2	12	14	120
Internal Capture:			-2	-1	-3	0	-2	-2	-18
Office Subtotal:			*10*	*1*	*11*	*2*	*10*	*12*	*102*
Project Buildout Total:			**396**	**374**	**770**	**312**	**225**	**536**	**5,584**

[1] DU = Dwelling Units; TSF = thousand square feet

Table 4 provides a comparison of the existing land use trip generation and the proposed Project trip generation estimates. The development of the proposed Project is anticipated to generate a net increase of 1,866 two-way trips per day with 682 AM peak hour trips and 217 PM peak hour trips in comparison to the existing uses.

TABLE 4: TRIP GENERATION COMPARISON

Land Use	AM Peak Hour In	AM Peak Hour Out	AM Peak Hour Total	PM Peak Hour In	PM Peak Hour Out	PM Peak Hour Total	Daily
Existing Land Uses[1]	57	31	88	156	163	319	3,718
Proposed Project	396	374	770	312	225	536	5,584
Variance	**339**	**343**	**682**	**156**	**62**	**217**	**1,866**

[1] Based on existing driveway counts observed for the existing land uses.

TRIP DISTRIBUTION ASSUMPTIONS

Trip distribution is the process of identifying the probable destinations, directions or traffic routes that will be utilized by Project traffic. The potential interaction between the planned land uses and surrounding regional access routes are considered, to identify the route where the Project traffic would distribute. The Project trip distribution was developed based on anticipated travel patterns to and from the Project site and developed based on an understanding of existing travel patterns in the area, the geographical location of the site, and the site's proximity to the regional arterial and state highway system. Exhibit 3 illustrates the Project's residential trip distribution patterns while the retail, restaurant, and office use trip distribution patterns are reflected on Exhibit 4.

PROPOSED STUDY AREA INTERSECTIONS

The Project is anticipated to contribute at least 50 peak hour trips to the following study area intersections (see Exhibit 1 and Table 5):

TABLE 5: STUDY AREA INTERSECTIONS

#	Intersection
1	Center St. & Brookside Av.
2	Eureka St. & Redlands Bl.
3	Eureka St. & Driveway 1 – Future Intersection
4	Eureka St. & State St.
5	Eureka St. & Driveway 2 – Future Intersection
6	Eureka St. & Citrus Av.
7	Eureka St. & Driveway 3 – Future Intersection
8	Driveway 4 & Citrus Av. – Future Intersection
9	3rd St. & Redlands Bl.
10	Driveway 5 & Redlands Bl. – Future Intersection
11	4th St. & Citrus Av.
12	4th St. & Driveway 3 – Future Intersection
13	Driveway 6 & Redlands Bl. – Future Intersection
14	Orange St. & I-10 WB Ramps
15	Orange St. & Pearl Av.
16	Orange St. & Redlands Bl.
17	Orange St. & State St.
18	Orange St. & Driveway 7 – Future Intersection
19	Orange St. & Citrus Av.
20	Redlands Bl. & Citrus Av.
21	Church St. & Citrus Av.
22	University St. & Citrus Av.

In light of the current conditions, Urban Crossroads recommends that we either use historic data that we obtain from older traffic studies or use count data provided by the City. Traffic counts older than the

current year (2021) would be brought to current conditions through the application of a growth factor. The growth factor is recommended to be the average population, employment, and household growth per the RTP for the City of Redlands, which is 0.76%.

The adopted Southern California Association of Governments (SCAG) 2020 Regional Transportation Plan/Sustainable Communities Strategy (RTP/SCS) (September 2020) growth forecasts for the City of Redlands identifies projected growth in population of 69,500 in 2016 to 80,800 in 2045, or a 0.52% increase over the 29-year period. The change in population equates to roughly a 16.26% growth rate, compounded annually. Similarly, growth over the same 29-year period in households is projected to increase by 26.23%, or a 0.81% annual growth rate. Finally, growth in employment over the same 29-year period is projected to increase by 32.16%, or a 0.97% annual growth rate.

AMBIENT GROWTH ASSUMPTIONS

An ambient growth rate of 2% per year, compounded annually, is proposed for the study area intersections.

ANALYSIS SCENARIOS

Intersection analyses will be provided for AM and PM peak hours for the following analysis scenarios:

- Existing (2021) Conditions
- Opening Year Cumulative (2025) Without Project Conditions
- Opening Year Cumulative (2025) With Project Conditions
- Horizon Year (2040) Without Project
- Horizon Year (2040) With Project

METHODOLOGY

Intersection operations analysis will utilize the Highway Capacity Manual (6th Edition) to evaluate signalized and unsignalized intersections.

The California Manual on Uniform Traffic Control Devices (CA MUTCD) will be utilized to evaluate peak hour traffic signal warrants at the unsignalized study area intersections.

LEVEL OF SERVICE CRITERIA

The City of Redlands has established specific performance criteria for intersection operations. These performance criteria include standards related to determining the project deficiencies on the roadway system. The City of Redlands has established LOS C as the minimum level of service for its intersections. Therefore, any intersection operating at LOS D or worse will be considered deficient for the purposes of this analysis. Additionally, General Plan Policy 5.20c from the Redlands General Plan states that: Where

the current level of service at a location within the City of Redlands is below the Level of Service (LOS) C standard, no development project shall be approved that cannot be mitigated so that it does not reduce the existing level of service at that location (i.e. intersections in Redlands that are deficient to start out with are acceptable as long as they do not further degrade LOS) except as provided in Section 5.20b.

General Plan Policy 5.20b of Measure U states that within the area identified in GP Figure 5-1, including the "donut hole", maintain LOS C or better, however, accept a reduced LOS on a case-by-case basis upon approval by a four-fifths (4/5ths) vote of the total authorized membership of the City Council.

DEFICIENCY THRESHOLDS

The following thresholds will be utilized to determine whether the addition of Project traffic at a study intersection results in a project-related deficiency:

- A project deficiency occurs at a study intersection if the addition of project-generated trips reduces the peak hour level of service of the study intersection to change from acceptable operation (e.g., LOS A, B or C) to deficient operation (e.g., LOS D, E or F) and, if applicable, also causes an unsignalized intersection to satisfy a Caltrans traffic signal warrant; or
- A project deficiency occurs at a study intersection if the addition of project-generated trips worsens the pre-project level of service grade at a deficiently operating (e.g., LOS D, E or F) intersection and, if applicable, also causes an unsignalized intersection to satisfy a Caltrans traffic signal warrant.

Per 5.20c of Measure U, where the current LOS at a location within the City of Redlands is below the LOS C standard, no development project shall be approved that cannot be mitigated so that it does not reduce the existing LOS at that location except as provided in Section 5.20b.

CUMULATIVE DEVELOPMENTS

It is requested that the City of Redlands provide Urban Crossroads with cumulative development projects to be included in the traffic study for cumulative traffic conditions.

SPECIAL ISSUES

The following special issues will also be addressed as part of the traffic analysis:

- Conduct a queuing analysis at Project access points to determine adequate turn pocket storage to accommodate 95th percentile queues.
- Conduct traffic signal warrant analysis for all existing and future unsignalized study area intersections. Unsignalized intersections with restricted access will not be evaluated for signal warrants as they are not suitable locations for signalization.
- Conduct a comparison between the prior use (i.e., fully occupied Redlands Mall) and proposed Project. The comparison will include a land use and trip generation discussion.

- A qualitative discussion of pedestrian enhancements, bike lanes, pop-outs, functionality of proposed loading zones, etc. will be discussed in the Traffic Study for the site adjacent roadways/intersections.
- LOS-based Traffic Study and VMT Analysis will be provided under separate cover.

Please provide your approval or comments finalizing the study area and analysis assumptions. If you have any questions or comments, I can be reached at (949) 861-0177.

Regards,

URBAN CROSSROADS, INC.

Charlene So

Charlene So, PE
Associate Principal

EXHIBIT 1: LOCATION MAP

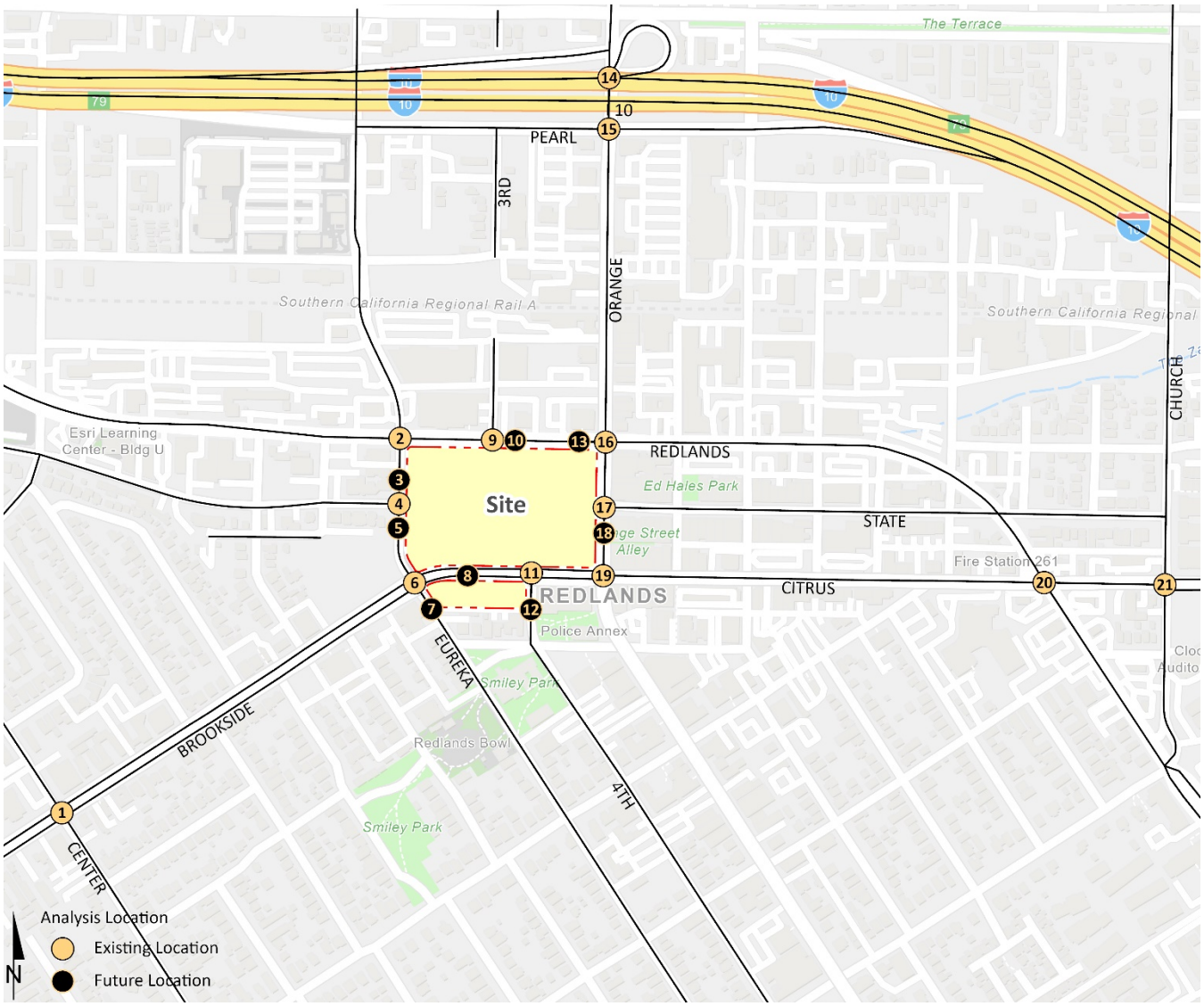

EXHIBIT 2: PRELIMINARY SITE PLAN

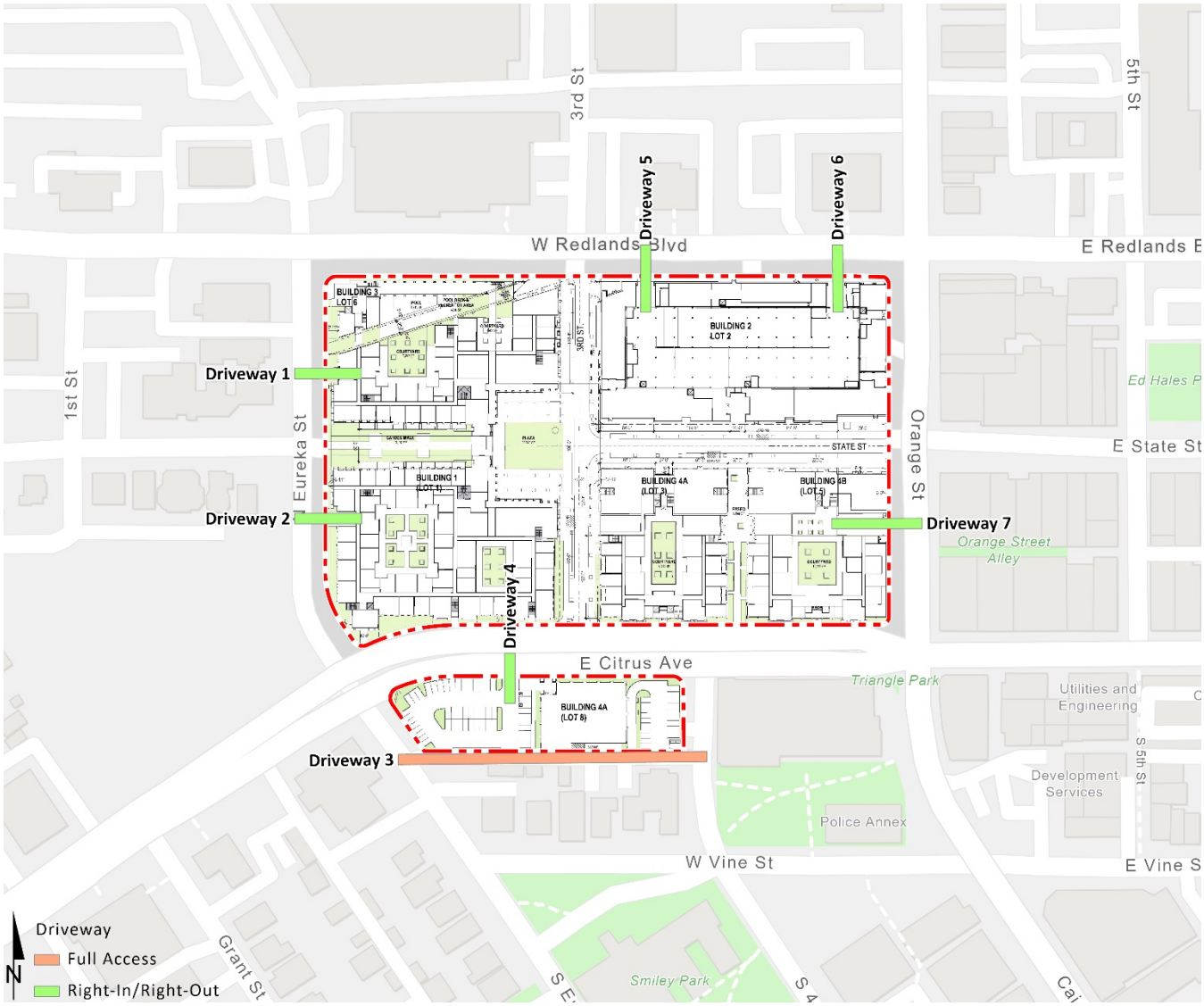

EXHIBIT 3: PROJECT (RESIDENTIAL) TRIP DISTRIBUTION

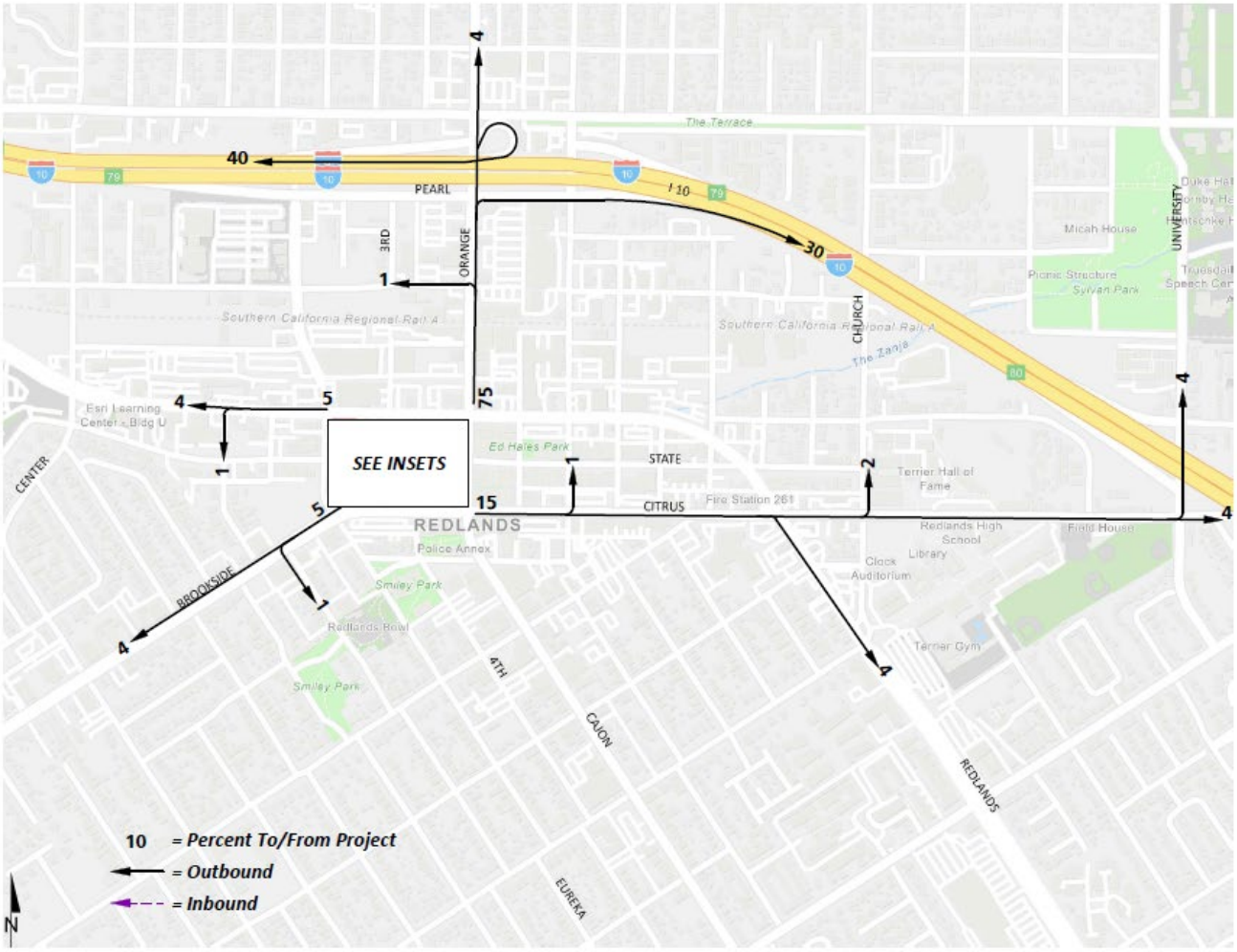

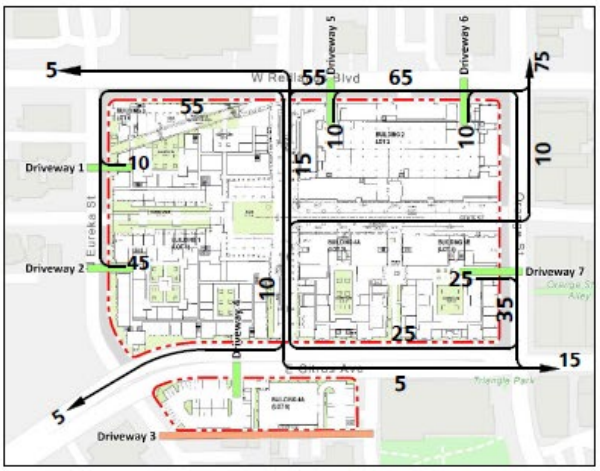

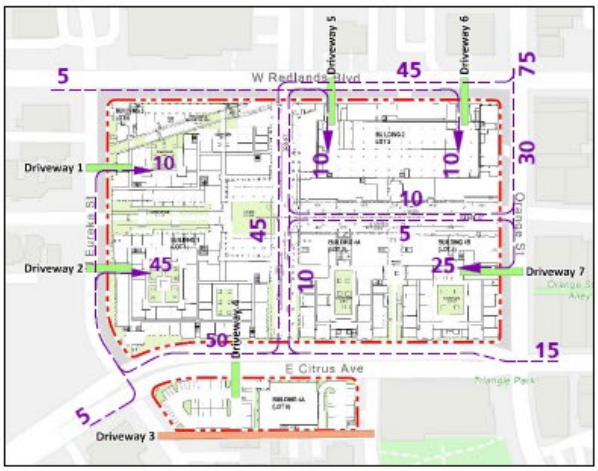

EXHIBIT 4: PROJECT (RETAIL/OFFICE) TRIP DISTRIBUTION

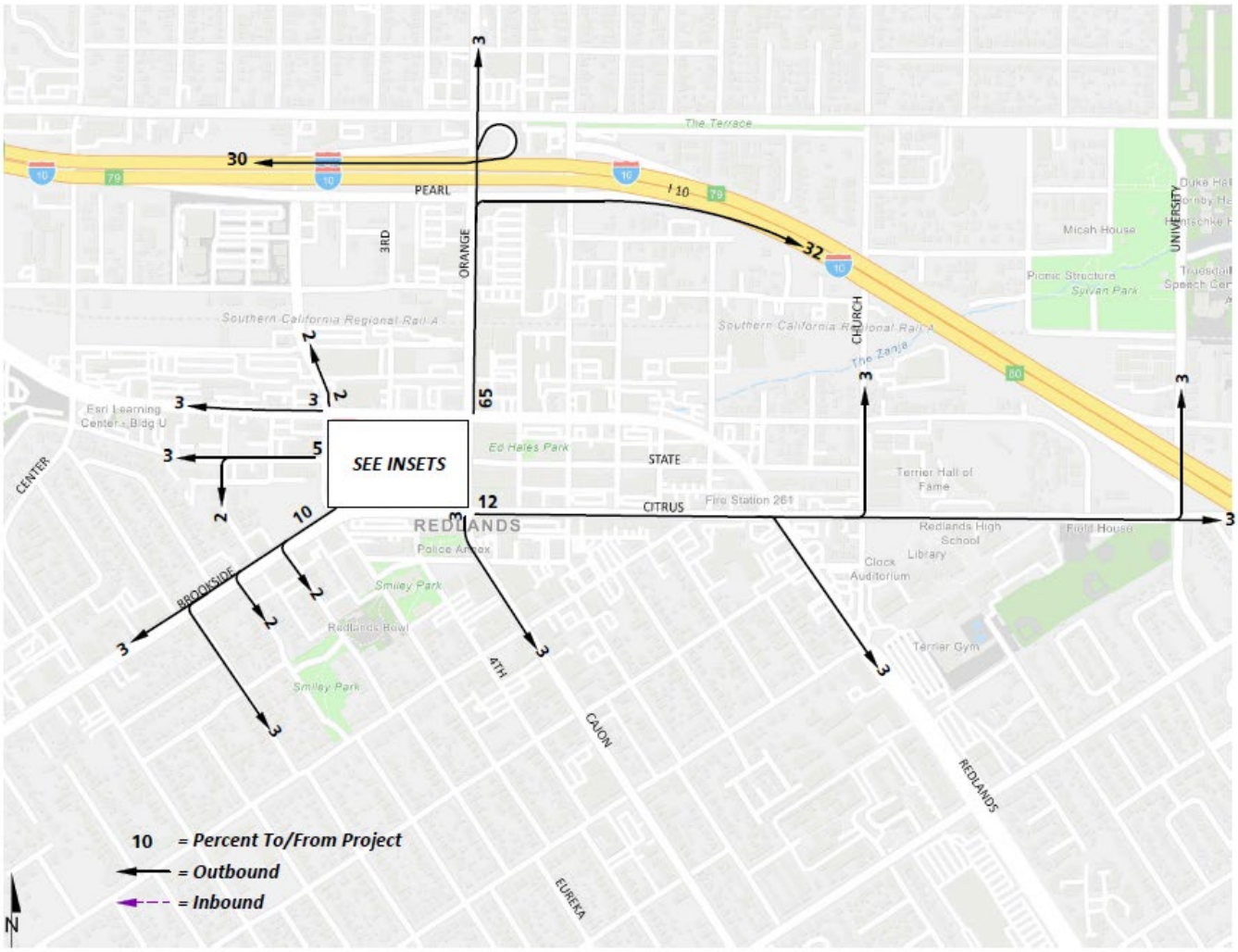

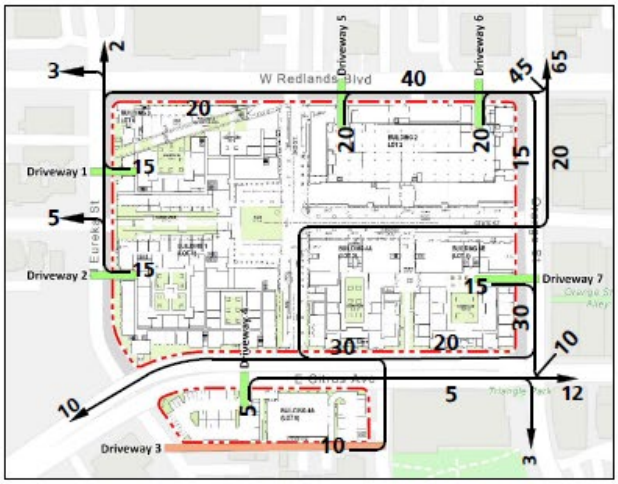

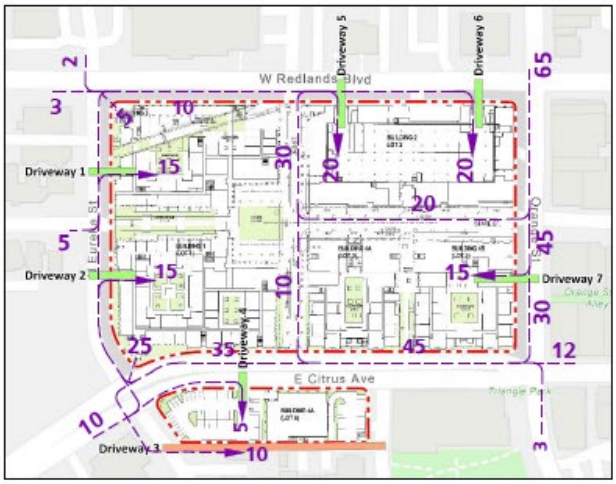

APPENDIX 1.2:

SITE ADJACENT QUEUES

This Page Intentionally Left Blank

Intersection: 3: Eureka St. & Driveway 1

Movement	WB	NB
Directions Served	R	TR
Maximum Queue (ft)	53	27
Average Queue (ft)	29	1
95th Queue (ft)	47	9
Link Distance (ft)	146	44
Upstream Blk Time (%)		0
Queuing Penalty (veh)		0
Storage Bay Dist (ft)		
Storage Blk Time (%)		
Queuing Penalty (veh)		

Intersection: 5: Eureka St. & Driveway 2

Movement	WB	SB
Directions Served	R	T
Maximum Queue (ft)	57	31
Average Queue (ft)	39	2
95th Queue (ft)	56	14
Link Distance (ft)	146	94
Upstream Blk Time (%)		
Queuing Penalty (veh)		
Storage Bay Dist (ft)		
Storage Blk Time (%)		
Queuing Penalty (veh)		

Intersection: 7: Eureka St. & Driveway 3

Movement	SB
Directions Served	LT
Maximum Queue (ft)	55
Average Queue (ft)	6
95th Queue (ft)	28
Link Distance (ft)	85
Upstream Blk Time (%)	
Queuing Penalty (veh)	
Storage Bay Dist (ft)	
Storage Blk Time (%)	
Queuing Penalty (veh)	

Intersection: 8: Driveway 4 & Citrus Av.

Movement	NB
Directions Served	R
Maximum Queue (ft)	53
Average Queue (ft)	12
95th Queue (ft)	38
Link Distance (ft)	70
Upstream Blk Time (%)	0
Queuing Penalty (veh)	0
Storage Bay Dist (ft)	
Storage Blk Time (%)	
Queuing Penalty (veh)	

Intersection: 9: 3rd St. & Redlands Bl.

Movement	EB	EB	WB	WB	WB	NB	SB
Directions Served	T	TR	L	T	TR	LTR	LTR
Maximum Queue (ft)	105	160	34	56	54	98	51
Average Queue (ft)	55	73	20	35	32	41	9
95th Queue (ft)	104	137	43	57	57	72	34
Link Distance (ft)	367	367		35	35	256	422
Upstream Blk Time (%)			9	11	14		
Queuing Penalty (veh)			0	38	48		
Storage Bay Dist (ft)			130				
Storage Blk Time (%)	2		9	11			
Queuing Penalty (veh)	0		29	3			

Intersection: 10: Citrus Av. & 3rd St.

Movement	SB
Directions Served	LR
Maximum Queue (ft)	50
Average Queue (ft)	25
95th Queue (ft)	46
Link Distance (ft)	210
Upstream Blk Time (%)	
Queuing Penalty (veh)	
Storage Bay Dist (ft)	
Storage Blk Time (%)	
Queuing Penalty (veh)	

Intersection: 11: Driveway 5 & Redlands Bl.

Movement	EB	EB	WB	WB	NB
Directions Served	T	TR	T	T	R
Maximum Queue (ft)	56	35	186	163	76
Average Queue (ft)	3	5	61	52	34
95th Queue (ft)	22	24	160	147	66
Link Distance (ft)	35	35	231	231	131
Upstream Blk Time (%)	1	0			
Queuing Penalty (veh)	5	1			
Storage Bay Dist (ft)					
Storage Blk Time (%)					
Queuing Penalty (veh)					

Intersection: 13: 4th St. & Driveway 3

Movement	EB
Directions Served	LR
Maximum Queue (ft)	31
Average Queue (ft)	20
95th Queue (ft)	44
Link Distance (ft)	376
Upstream Blk Time (%)	
Queuing Penalty (veh)	
Storage Bay Dist (ft)	
Storage Blk Time (%)	
Queuing Penalty (veh)	

Intersection: 14: Driveway 6 & Redlands Bl.

Movement	EB	EB	NB
Directions Served	T	TR	R
Maximum Queue (ft)	257	247	135
Average Queue (ft)	108	98	49
95th Queue (ft)	229	231	101
Link Distance (ft)	231	231	120
Upstream Blk Time (%)	1	1	1
Queuing Penalty (veh)	5	2	0
Storage Bay Dist (ft)			
Storage Blk Time (%)			
Queuing Penalty (veh)			

Intersection: 18: Orange St. & State St.

Movement	EB	NB	NB	SB	SB	SB
Directions Served	LTR	T	TR	L	T	TR
Maximum Queue (ft)	78	71	98	88	93	202
Average Queue (ft)	37	30	47	21	23	56
95th Queue (ft)	70	75	91	56	73	137
Link Distance (ft)	162	60	60		240	240
Upstream Blk Time (%)		1	4			
Queuing Penalty (veh)		4	13			
Storage Bay Dist (ft)				90		
Storage Blk Time (%)		1		0	0	
Queuing Penalty (veh)		0		0	0	

Intersection: 19: Orange St. & Driveway 7

Movement	EB	NB	NB	SB
Directions Served	R	T	T	TR
Maximum Queue (ft)	77	54	148	74
Average Queue (ft)	29	6	27	12
95th Queue (ft)	52	33	96	46
Link Distance (ft)	92	121	121	60
Upstream Blk Time (%)	0		1	0
Queuing Penalty (veh)	0		2	1
Storage Bay Dist (ft)				
Storage Blk Time (%)				
Queuing Penalty (veh)				

Zone Summary

Zone wide Queuing Penalty: 152

Intersection: 3: Eureka St. & Driveway 1

Movement	WB	NB
Directions Served	R	TR
Maximum Queue (ft)	56	54
Average Queue (ft)	21	5
95th Queue (ft)	48	28
Link Distance (ft)	146	44
Upstream Blk Time (%)		1
Queuing Penalty (veh)		3
Storage Bay Dist (ft)		
Storage Blk Time (%)		
Queuing Penalty (veh)		

Intersection: 5: Eureka St. & Driveway 2

Movement	WB	SB
Directions Served	R	T
Maximum Queue (ft)	72	31
Average Queue (ft)	35	1
95th Queue (ft)	54	10
Link Distance (ft)	146	94
Upstream Blk Time (%)		
Queuing Penalty (veh)		
Storage Bay Dist (ft)		
Storage Blk Time (%)		
Queuing Penalty (veh)		

Intersection: 7: Eureka St. & Driveway 3

Movement	SB
Directions Served	LT
Maximum Queue (ft)	78
Average Queue (ft)	6
95th Queue (ft)	36
Link Distance (ft)	85
Upstream Blk Time (%)	0
Queuing Penalty (veh)	0
Storage Bay Dist (ft)	
Storage Blk Time (%)	
Queuing Penalty (veh)	

Intersection: 8: Driveway 4 & Citrus Av.

Movement	WB	NB
Directions Served	T	R
Maximum Queue (ft)	31	29
Average Queue (ft)	1	5
95th Queue (ft)	10	23
Link Distance (ft)	65	70
Upstream Blk Time (%)		
Queuing Penalty (veh)		
Storage Bay Dist (ft)		
Storage Blk Time (%)		
Queuing Penalty (veh)		

Intersection: 9: 3rd St. & Redlands Bl.

Movement	EB	EB	EB	WB	WB	WB	NB	SB
Directions Served	L	T	TR	L	T	TR	LTR	LTR
Maximum Queue (ft)	130	409	394	31	54	48	55	56
Average Queue (ft)	18	378	379	27	33	25	26	14
95th Queue (ft)	82	398	398	42	49	51	57	41
Link Distance (ft)		367	367		35	35	256	422
Upstream Blk Time (%)		24	27	21	14	12		
Queuing Penalty (veh)		141	163	0	34	29		
Storage Bay Dist (ft)	90			130				
Storage Blk Time (%)		74		21	14			
Queuing Penalty (veh)		6		44	7			

Intersection: 10: Citrus Av. & 3rd St.

Movement	SB
Directions Served	LR
Maximum Queue (ft)	50
Average Queue (ft)	24
95th Queue (ft)	48
Link Distance (ft)	210
Upstream Blk Time (%)	
Queuing Penalty (veh)	
Storage Bay Dist (ft)	
Storage Blk Time (%)	
Queuing Penalty (veh)	

Intersection: 11: Driveway 5 & Redlands Bl.

Movement	EB	EB	WB	WB	NB
Directions Served	T	TR	T	T	R
Maximum Queue (ft)	50	55	99	117	99
Average Queue (ft)	36	36	47	39	46
95th Queue (ft)	42	43	105	101	87
Link Distance (ft)	35	35	231	231	131
Upstream Blk Time (%)	31	35			
Queuing Penalty (veh)	189	213			
Storage Bay Dist (ft)					
Storage Blk Time (%)					
Queuing Penalty (veh)					

Intersection: 13: 4th St. & Driveway 3

Movement	EB	NB
Directions Served	LR	LT
Maximum Queue (ft)	31	48
Average Queue (ft)	15	2
95th Queue (ft)	41	16
Link Distance (ft)	376	155
Upstream Blk Time (%)		
Queuing Penalty (veh)		
Storage Bay Dist (ft)		
Storage Blk Time (%)		
Queuing Penalty (veh)		

Intersection: 14: Driveway 6 & Redlands Bl.

Movement	EB	EB	NB
Directions Served	T	TR	R
Maximum Queue (ft)	255	272	154
Average Queue (ft)	243	245	126
95th Queue (ft)	257	262	137
Link Distance (ft)	231	231	120
Upstream Blk Time (%)	35	41	100
Queuing Penalty (veh)	214	251	0
Storage Bay Dist (ft)			
Storage Blk Time (%)			
Queuing Penalty (veh)			

Intersection: 18: Orange St. & State St.

Movement	EB	NB	NB	SB	SB	SB
Directions Served	LTR	T	TR	L	T	TR
Maximum Queue (ft)	56	71	93	89	108	216
Average Queue (ft)	13	43	60	44	35	65
95th Queue (ft)	40	83	95	78	84	160
Link Distance (ft)	162	60	60		240	240
Upstream Blk Time (%)		3	11			
Queuing Penalty (veh)		12	39			
Storage Bay Dist (ft)				90		
Storage Blk Time (%)		3		0	1	
Queuing Penalty (veh)		0		0	1	

Intersection: 19: Orange St. & Driveway 7

Movement	EB	NB	NB	SB
Directions Served	R	T	T	TR
Maximum Queue (ft)	56	120	144	74
Average Queue (ft)	30	17	43	8
95th Queue (ft)	48	80	131	40
Link Distance (ft)	92	121	121	60
Upstream Blk Time (%)		0	2	0
Queuing Penalty (veh)		0	7	1
Storage Bay Dist (ft)				
Storage Blk Time (%)				
Queuing Penalty (veh)				

Zone Summary

Zone wide Queuing Penalty: 1352

APPENDIX 3.1:

EXISTING TRAFFIC COUNTS

This Page Intentionally Left Blank

Counts Unlimited, Inc.

PO Box 1178
Corona, CA 92787
Phone: (951) 268-6268
email: counts@countsunlimited.com

City of Redlands
Citrus Avenue
E/ Orange Street
24 Hour Directional Volume Count

REDCIEOR
Site Code: 051-21330

Start Time	08-Jul-21 Thu	Eastbound Morning	Eastbound Afternoon	Hour Totals Morning	Hour Totals Afternoon	Westbound Morning	Westbound Afternoon	Hour Totals Morning	Hour Totals Afternoon	Combined Totals Morning	Combined Totals Afternoon
12:00		13	82			21	98				
12:15		8	73			17	93				
12:30		6	81			11	85				
12:45		10	62	37	298	24	105	73	381	110	679
01:00		11	68			13	90				
01:15		7	65			15	105				
01:30		6	73			8	90				
01:45		4	62	28	268	7	94	43	379	71	647
02:00		1	66			3	**95**				
02:15		2	64			6	**97**				
02:30		4	74			3	**107**				
02:45		1	62	8	266	2	**106**	14	405	22	671
03:00		1	60			2	77				
03:15		0	67			3	98				
03:30		2	79			3	104				
03:45		3	70	6	276	3	89	11	368	17	644
04:00		2	67			2	80				
04:15		1	69			2	81				
04:30		2	**88**			1	99				
04:45		6	**78**	11	302	5	88	10	348	21	650
05:00		5	**95**			5	98				
05:15		6	**80**			9	71				
05:30		8	86			8	87				
05:45		8	72	27	333	9	88	31	344	58	677
06:00		9	80			14	71				
06:15		9	76			20	71				
06:30		15	49			26	75				
06:45		17	58	50	263	32	76	92	293	142	556
07:00		24	55			57	73				
07:15		25	48			41	72				
07:30		44	51			45	61				
07:45		34	45	127	199	70	56	213	262	340	461
08:00		44	48			39	70				
08:15		42	26			45	69				
08:30		32	41			35	56				
08:45		45	30	163	145	47	56	166	251	329	396
09:00		45	39			66	42				
09:15		51	29			65	49				
09:30		52	20			62	43				
09:45		57	25	205	113	76	34	269	168	474	281
10:00		**66**	32			66	41				
10:15		**45**	27			82	44				
10:30		**61**	21			85	33				
10:45		**60**	26	232	106	78	19	311	137	543	243
11:00		41	16			**115**	19				
11:15		45	11			**113**	19				
11:30		66	22			**92**	16				
11:45		78	9	230	58	**95**	20	415	74	645	132
Total		1124	2627	1124	2627	1648	3410	1648	3410	2772	6037
Combined Total		3751		3751		5058		5058		8809	
AM Peak	-	10:00	-	-	-	11:00	-	-	-	-	-
Vol.	-	232	-	-	-	415	-	-	-	-	-
P.H.F.		0.879				0.902					
PM Peak	-	-	04:30	-	-	-	02:00	-	-	-	-
Vol.	-	-	341	-	-	-	405	-	-	-	-
P.H.F.			0.897				0.946				
Percentage		30.0%	70.0%			32.6%	67.4%				
ADT/AADT		ADT 8,809		AADT 8,809							

Counts Unlimited, Inc.

PO Box 1178
Corona, CA 92787
Phone: (951) 268-6268
email: counts@countsunlimited.com

City of Redlands
Orange Street
N/ Redlands Boulevard
24 Hour Directional Volume Count

RDEORNRE
Site Code: 051-21330

Start Time	07-Jul-21 Wed	Northbound Morning	Northbound Afternoon	Hour Totals Morning	Hour Totals Afternoon	Southbound Morning	Southbound Afternoon	Hour Totals Morning	Hour Totals Afternoon	Combined Totals Morning	Combined Totals Afternoon
12:00		25	236			13	131				
12:15		24	206			22	140				
12:30		36	181			11	148				
12:45		27	204	112	827	19	128	65	547	177	1374
01:00		19	173			10	138				
01:15		15	179			10	112				
01:30		25	179			8	134				
01:45		29	185	88	716	5	143	33	527	121	1243
02:00		29	177			11	128				
02:15		25	194			6	98				
02:30		18	184			6	116				
02:45		8	177	80	732	3	117	26	459	106	1191
03:00		7	189			0	123				
03:15		10	186			8	136				
03:30		8	196			11	132				
03:45		20	169	45	740	4	125	23	516	68	1256
04:00		17	189			10	117				
04:15		11	171			6	122				
04:30		26	197			9	127				
04:45		28	**206**	82	763	11	132	36	498	118	1261
05:00		24	**240**			8	**138**				
05:15		22	**233**			9	**153**				
05:30		31	**210**			19	**134**				
05:45		37	172	114	855	17	**136**	53	561	167	1416
06:00		43	175			23	111				
06:15		50	159			28	117				
06:30		73	154			56	87				
06:45		63	158	229	646	38	98	145	413	374	1059
07:00		92	159			42	105				
07:15		91	125			73	101				
07:30		133	132			89	90				
07:45		114	122	430	538	85	88	289	384	719	922
08:00		122	148			86	70				
08:15		115	128			80	82				
08:30		145	115			82	61				
08:45		116	112	498	503	100	0	348	213	846	716
09:00		122	98			85	0				
09:15		160	106			93	0				
09:30		160	88			103	0				
09:45		151	67	593	359	124	51	405	51	998	410
10:00		162	73			93	36				
10:15		**194**	60			91	33				
10:30		**179**	60			115	36				
10:45		**186**	40	721	233	121	30	420	135	1141	368
11:00		**165**	36			**127**	33				
11:15		169	29			**108**	39				
11:30		181	51			**128**	17				
11:45		201	31	716	147	**136**	16	499	105	1215	252
Total		3708	7059	3708	7059	2342	4409	2342	4409	6050	11468
Combined Total		10767		10767		6751		6751		17518	
AM Peak	-	10:15	-	-	-	11:00	-	-	-	-	-
Vol.	-	724	-	-	-	499	-	-	-	-	-
P.H.F.		0.933				0.917					
PM Peak	-	-	04:45	-	-	-	05:00	-	-	-	-
Vol.	-	-	889	-	-	-	561	-	-	-	-
P.H.F.			0.926				0.917				
Percentage		34.4%	65.6%			34.7%	65.3%				
ADT/AADT		ADT 17,518		AADT 17,518							

Counts Unlimited, Inc.
PO Box 1178
Corona, CA 92878
(951)268-6268

City of Redlands
N/S: Center Street
E/W: Brookside Avenue
Weather: Clear

File Name : 01_RED_Center_Brookside AM
Site Code : 05121330
Start Date : 7/7/2021
Page No : 1

Groups Printed- Total Volume

	Center Street Southbound					Brookside Avenue Westbound					Center Street Northbound					Brookside Avenue Eastbound							
Start Time	Left	Thru	Right	RTOR	App. Total	Left	Thru	Right	RTOR	App. Total	Left	Thru	Right	RTOR	App. Total	Left	Thru	Right	RTOR	App. Total	Exclu. Total	Inclu. Total	Int. Total
07:00 AM	2	20	11	4	33	1	39	5	2	45	7	28	3	0	38	2	23	3	1	28	7	144	151
07:15 AM	3	17	9	3	29	4	39	5	3	48	3	25	2	0	30	9	43	3	1	55	7	162	169
07:30 AM	3	24	16	8	43	5	47	9	2	61	12	36	12	5	60	11	59	9	3	79	18	243	261
07:45 AM	4	26	21	4	51	9	44	7	3	60	4	30	4	2	38	10	37	11	5	58	14	207	221
Total	12	87	57	19	156	19	169	26	10	214	26	119	21	7	166	32	162	26	10	220	46	756	802
08:00 AM	4	22	18	8	44	8	60	8	5	76	6	33	6	4	45	4	46	10	4	60	21	225	246
08:15 AM	1	23	20	13	44	5	49	1	0	55	14	36	5	3	55	8	43	8	5	59	21	213	234
08:30 AM	3	21	19	13	43	6	55	4	2	65	12	37	5	0	54	7	45	5	2	57	17	219	236
08:45 AM	7	21	11	6	39	2	54	6	1	62	17	30	6	3	53	9	51	12	5	72	15	226	241
Total	15	87	68	40	170	21	218	19	8	258	49	136	22	10	207	28	185	35	16	248	74	883	957
Grand Total	27	174	125	59	326	40	387	45	18	472	75	255	43	17	373	60	347	61	26	468	120	1639	1759
Apprch %	8.3	53.4	38.3			8.5	82	9.5			20.1	68.4	11.5			12.8	74.1	13					
Total %	1.6	10.6	7.6		19.9	2.4	23.6	2.7		28.8	4.6	15.6	2.6		22.8	3.7	21.2	3.7		28.6	6.8	93.2	

	Center Street Southbound				Brookside Avenue Westbound				Center Street Northbound				Brookside Avenue Eastbound				
Start Time	Left	Thru	Right	App. Total	Left	Thru	Right	App. Total	Left	Thru	Right	App. Total	Left	Thru	Right	App. Total	Int. Total
Peak Hour Analysis From 07:00 AM to 08:45 AM - Peak 1 of 1																	
Peak Hour for Entire Intersection Begins at 07:30 AM																	
07:30 AM	3	24	16	43	5	47	**9**	61	12	**36**	**12**	**60**	**11**	**59**	9	**79**	**243**
07:45 AM	**4**	**26**	**21**	**51**	**9**	44	7	60	4	30	4	38	10	37	**11**	58	207
08:00 AM	4	22	18	44	8	**60**	8	**76**	6	33	6	45	4	46	10	60	225
08:15 AM	1	23	20	44	5	49	1	55	**14**	36	5	55	8	43	8	59	213
Total Volume	12	95	75	182	27	200	25	252	36	135	27	198	33	185	38	256	888
% App. Total	6.6	52.2	41.2		10.7	79.4	9.9		18.2	68.2	13.6		12.9	72.3	14.8		
PHF	.750	.913	.893	.892	.750	.833	.694	.829	.643	.938	.563	.825	.750	.784	.864	.810	.914

Counts Unlimited, Inc.
PO Box 1178
Corona, CA 92878
(951)268-6268

City of Redlands
N/S: Center Street
E/W: Brookside Avenue
Weather: Clear

File Name : 01_RED_Center_Brookside AM
Site Code : 05121330
Start Date : 7/7/2021
Page No : 2

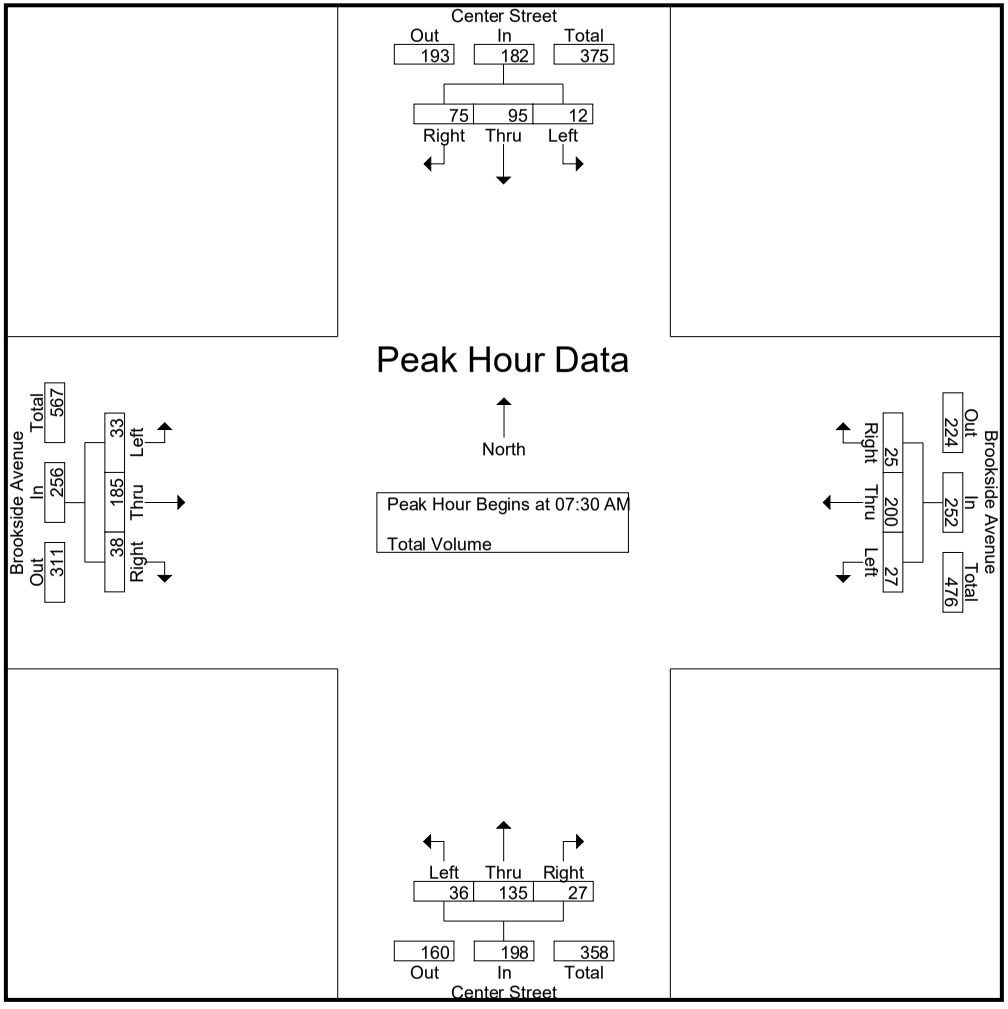

Counts Unlimited, Inc.
PO Box 1178
Corona, CA 92878
(951)268-6268

City of Redlands
N/S: Center Street
E/W: Brookside Avenue
Weather: Clear

File Name : 01_RED_Center_Brookside AM
Site Code : 05121330
Start Date : 7/7/2021
Page No : 3

	Center Street Southbound				Brookside Avenue Westbound				Center Street Northbound				Brookside Avenue Eastbound				
Start Time	Left	Thru	Right	App. Total	Left	Thru	Right	App. Total	Left	Thru	Right	App. Total	Left	Thru	Right	App. Total	Int. Total
Peak Hour Analysis From 07:00 AM to 08:45 AM - Peak 1 of 1																	
Peak Hour for Each Approach Begins at:																	
	07:30 AM				08:00 AM				08:00 AM				07:30 AM				
+0 mins.	3	24	16	43	**8**	**60**	**8**	**76**	6	33	**6**	45	**11**	**59**	9	**79**	
+15 mins.	**4**	**26**	**21**	**51**	5	49	1	55	14	36	5	**55**	10	37	**11**	58	
+30 mins.	4	22	18	44	6	55	4	65	12	**37**	5	54	4	46	10	60	
+45 mins.	1	23	20	44	2	54	6	62	**17**	30	6	53	8	43	8	59	
Total Volume	12	95	75	182	21	218	19	258	49	136	22	207	33	185	38	256	
% App. Total	6.6	52.2	41.2		8.1	84.5	7.4		23.7	65.7	10.6		12.9	72.3	14.8		
PHF	.750	.913	.893	.892	.656	.908	.594	.849	.721	.919	.917	.941	.750	.784	.864	.810	

Counts Unlimited, Inc.
PO Box 1178
Corona, CA 92878
(951)268-6268

City of Redlands
N/S: Center Street
E/W: Brookside Avenue
Weather: Clear

File Name : 01_RED_Center_Brookside PM
Site Code : 05121330
Start Date : 7/7/2021
Page No : 1

Groups Printed- Total Volume

	Center Street Southbound					Brookside Avenue Westbound					Center Street Northbound					Brookside Avenue Eastbound							
Start Time	Left	Thru	Right	RTOR	App. Total	Left	Thru	Right	RTOR	App. Total	Left	Thru	Right	RTOR	App. Total	Left	Thru	Right	RTOR	App. Total	Exclu. Total	Inclu. Total	Int. Total
04:00 PM	6	42	18	7	66	12	62	6	2	80	10	44	18	6	72	15	100	6	2	121	17	339	356
04:15 PM	8	40	16	7	64	14	57	4	1	75	7	33	8	2	48	17	91	12	2	120	12	307	319
04:30 PM	3	56	24	13	83	9	74	8	2	91	8	41	5	2	54	17	106	9	6	132	23	360	383
04:45 PM	7	35	13	9	55	14	56	6	2	76	8	40	7	0	55	16	101	10	4	127	15	313	328
Total	24	173	71	36	268	49	249	24	7	322	33	158	38	10	229	65	398	37	14	500	67	1319	1386
05:00 PM	4	48	20	13	72	13	68	11	2	92	12	32	9	6	53	14	101	15	7	130	28	347	375
05:15 PM	11	42	23	15	76	13	74	6	2	93	10	52	2	0	64	26	108	13	4	147	21	380	401
05:30 PM	3	47	22	13	72	10	74	5	1	89	14	44	8	2	66	18	104	15	8	137	24	364	388
05:45 PM	6	49	19	9	74	15	70	6	5	91	12	39	4	3	55	23	84	12	7	119	24	339	363
Total	24	186	84	50	294	51	286	28	10	365	48	167	23	11	238	81	397	55	26	533	97	1430	1527
Grand Total	48	359	155	86	562	100	535	52	17	687	81	325	61	21	467	146	795	92	40	1033	164	2749	2913
Apprch %	8.5	63.9	27.6			14.6	77.9	7.6			17.3	69.6	13.1			14.1	77	8.9					
Total %	1.7	13.1	5.6		20.4	3.6	19.5	1.9		25	2.9	11.8	2.2		17	5.3	28.9	3.3		37.6	5.6	94.4	

	Center Street Southbound				Brookside Avenue Westbound				Center Street Northbound				Brookside Avenue Eastbound				
Start Time	Left	Thru	Right	App. Total	Left	Thru	Right	App. Total	Left	Thru	Right	App. Total	Left	Thru	Right	App. Total	Int. Total
Peak Hour Analysis From 04:00 PM to 05:45 PM - Peak 1 of 1																	
Peak Hour for Entire Intersection Begins at 05:00 PM																	
05:00 PM	4	48	20	72	13	68	**11**	92	12	32	**9**	53	14	101	**15**	130	347
05:15 PM	**11**	42	**23**	**76**	13	**74**	6	**93**	10	**52**	2	64	**26**	**108**	13	**147**	**380**
05:30 PM	3	47	22	72	10	74	5	89	**14**	44	8	**66**	18	104	15	137	364
05:45 PM	6	**49**	19	74	**15**	70	6	91	12	39	4	55	23	84	12	119	339
Total Volume	24	186	84	294	51	286	28	365	48	167	23	238	81	397	55	533	1430
% App. Total	8.2	63.3	28.6		14	78.4	7.7		20.2	70.2	9.7		15.2	74.5	10.3		
PHF	.545	.949	.913	.967	.850	.966	.636	.981	.857	.803	.639	.902	.779	.919	.917	.906	.941

Counts Unlimited, Inc.
PO Box 1178
Corona, CA 92878
(951)268-6268

City of Redlands
N/S: Center Street
E/W: Brookside Avenue
Weather: Clear

File Name : 01_RED_Center_Brookside PM
Site Code : 05121330
Start Date : 7/7/2021
Page No : 2

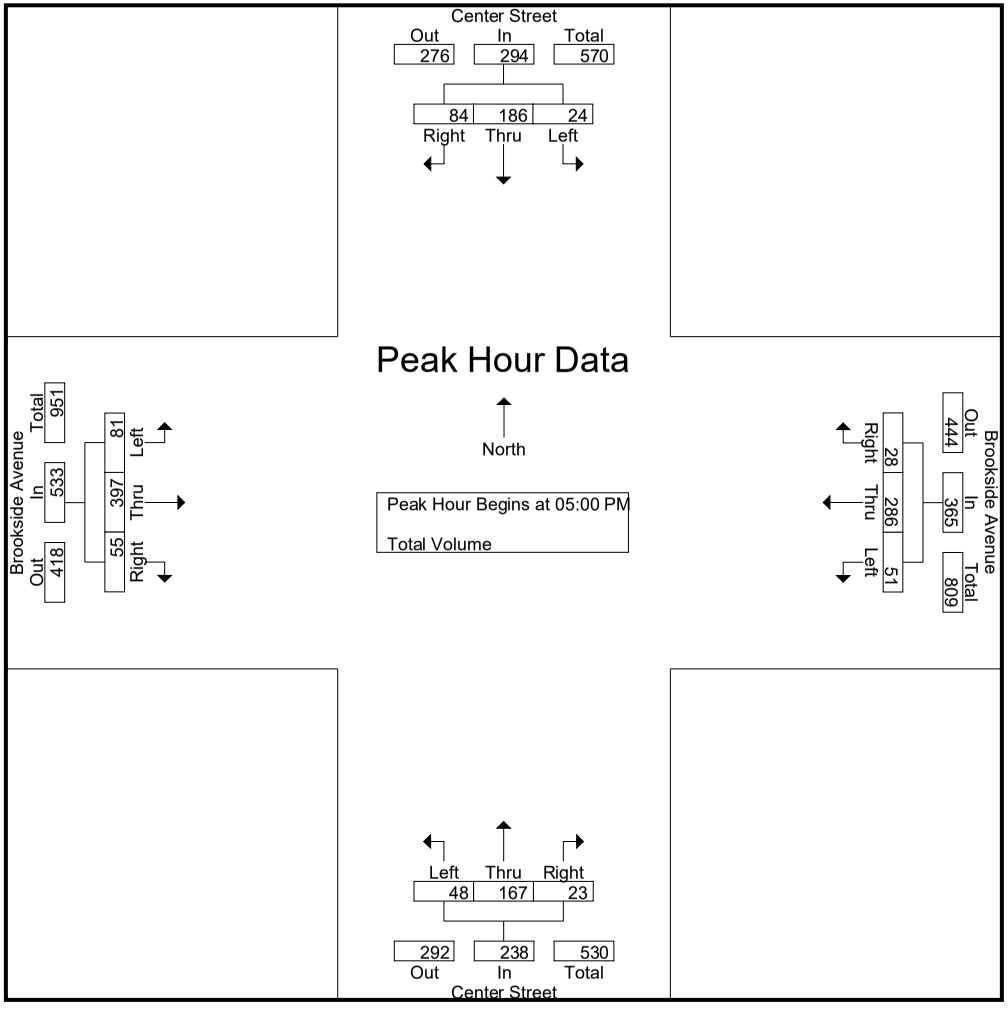

Counts Unlimited, Inc.
PO Box 1178
Corona, CA 92878
(951)268-6268

City of Redlands
N/S: Center Street
E/W: Brookside Avenue
Weather: Clear

File Name : 01_RED_Center_Brookside PM
Site Code : 05121330
Start Date : 7/7/2021
Page No : 3

	Center Street Southbound				Brookside Avenue Westbound				Center Street Northbound				Brookside Avenue Eastbound				
Start Time	Left	Thru	Right	App. Total	Left	Thru	Right	App. Total	Left	Thru	Right	App. Total	Left	Thru	Right	App. Total	Int. Total
Peak Hour Analysis From 04:00 PM to 05:45 PM - Peak 1 of 1																	
Peak Hour for Each Approach Begins at:																	
	05:00 PM				05:00 PM				04:45 PM				04:45 PM				
+0 mins.	4	48	20	72	13	68	**11**	92	8	40	7	55	16	101	10	127	
+15 mins.	**11**	42	**23**	**76**	13	**74**	6	**93**	12	32	**9**	53	14	101	**15**	130	
+30 mins.	3	47	22	72	10	74	5	89	10	**52**	2	64	**26**	**108**	13	**147**	
+45 mins.	6	**49**	19	74	**15**	70	6	91	**14**	44	8	**66**	18	104	15	137	
Total Volume	24	186	84	294	51	286	28	365	44	168	26	238	74	414	53	541	
% App. Total	8.2	63.3	28.6		14	78.4	7.7		18.5	70.6	10.9		13.7	76.5	9.8		
PHF	.545	.949	.913	.967	.850	.966	.636	.981	.786	.808	.722	.902	.712	.958	.883	.920	

Location: Redlands
N/S: Center Street
E/W: Brookside Avenue

Date: 7/7/2021
Day: Wednesday

PEDESTRIANS

	North Leg Center Street Pedestrians	East Leg Brookside Avenue Pedestrians	South Leg Center Street Pedestrians	West Leg Brookside Avenue Pedestrians	
7:00 AM	0	1	0	1	2
7:15 AM	1	1	3	0	5
7:30 AM	0	0	0	1	1
7:45 AM	0	0	0	0	0
8:00 AM	1	1	0	0	2
8:15 AM	1	0	0	0	1
8:30 AM	0	0	0	0	0
8:45 AM	1	2	1	1	5
TOTAL VOLUMES:	4	5	4	3	16

	North Leg Center Street Pedestrians	East Leg Brookside Avenue Pedestrians	South Leg Center Street Pedestrians	West Leg Brookside Avenue Pedestrians	
4:00 PM	2	0	0	0	2
4:15 PM	0	0	0	1	1
4:30 PM	0	0	0	0	0
4:45 PM	0	0	0	0	0
5:00 PM	0	0	0	0	0
5:15 PM	0	0	1	0	1
5:30 PM	2	0	0	0	2
5:45 PM	0	0	1	0	1
TOTAL VOLUMES:	4	0	2	1	7

Counts Unlimited, Inc.
PO Box 1178
Corona, CA 92878
951-268-6268

Location: Redlands
N/S: Center Street
E/W: Brookside Avenue

Date: 7/7/2021
Day: Wednesday

BICYCLES

	Southbound Center Street			Westbound Brookside Avenue			Northbound Center Street			Eastbound Brookside Avenue			
	Left	Thru	Right	Left	Thru	Right	Left	Thru	Right	Left	Thru	Right	
7:00 AM	1	1	0	0	1	0	0	1	0	0	0	0	4
7:15 AM	0	1	0	0	0	0	0	0	0	0	1	0	2
7:30 AM	0	0	0	0	1	0	0	0	0	0	1	0	2
7:45 AM	0	1	0	0	0	0	0	1	0	0	0	0	2
8:00 AM	0	0	0	0	0	0	0	0	0	0	0	0	0
8:15 AM	0	0	0	0	1	0	0	1	0	0	0	1	3
8:30 AM	0	0	0	0	2	0	0	0	0	0	1	2	5
8:45 AM	1	0	0	0	0	0	0	0	1	1	1	1	5
TOTAL VOLUMES:	2	3	0	0	5	0	0	3	1	1	4	4	23

	Southbound Center Street			Westbound Brookside Avenue			Northbound Center Street			Eastbound Brookside Avenue			
	Left	Thru	Right	Left	Thru	Right	Left	Thru	Right	Left	Thru	Right	
4:00 PM	0	0	0	0	0	0	0	0	0	0	0	0	0
4:15 PM	0	0	0	0	0	0	0	0	0	0	1	0	1
4:30 PM	0	0	0	0	1	0	0	0	0	0	0	0	1
4:45 PM	1	0	0	0	2	0	0	0	0	0	1	0	4
5:00 PM	0	0	0	0	0	0	0	0	0	0	1	0	1
5:15 PM	0	0	0	0	0	0	0	0	0	0	0	0	0
5:30 PM	0	1	0	1	0	0	0	0	0	0	1	1	4
5:45 PM	0	0	0	0	0	0	0	0	0	0	2	0	2
TOTAL VOLUMES:	1	1	0	1	3	0	0	0	0	0	6	1	13

Counts Unlimited, Inc.
PO Box 1178
Corona, CA 92878
951-268-6268

Counts Unlimited, Inc.
PO Box 1178
Corona, CA 92878
(951)268-6268

City of Redlands
N/S: Eureka Street
E/W: Redlands Boulevard
Weather: Clear

File Name : 02_RED_Eureka_Redlands AM
Site Code : 05121330
Start Date : 7/7/2021
Page No : 1

Groups Printed- Total Volume

	Eureka Street Southbound					Redlands Boulevard Westbound					Eureka Street Northbound					Redlands Boulevard Eastbound							
Start Time	Left	Thru	Right	RTOR	App. Total	Left	Thru	Right	RTOR	App. Total	Left	Thru	Right	RTOR	App. Total	Left	Thru	Right	RTOR	App. Total	Exclu. Total	Inclu. Total	Int. Total
07:00 AM	8	47	15	7	70	4	43	6	3	53	4	3	1	0	8	6	24	2	2	32	12	163	175
07:15 AM	13	54	11	5	78	3	33	4	1	40	3	12	2	1	17	1	29	1	0	31	7	166	173
07:30 AM	8	84	10	3	102	4	56	6	1	66	7	13	4	1	24	5	45	0	0	50	5	242	247
07:45 AM	16	119	13	2	148	5	70	9	3	84	3	13	5	2	21	6	33	9	4	48	11	301	312
Total	45	304	49	17	398	16	202	25	8	243	17	41	12	4	70	18	131	12	6	161	35	872	907
08:00 AM	18	71	16	5	105	6	56	9	1	71	2	13	5	3	20	7	45	4	3	56	12	252	264
08:15 AM	19	53	17	9	89	3	59	5	2	67	5	20	4	2	29	10	36	1	0	47	13	232	245
08:30 AM	15	61	17	6	93	4	47	8	2	59	5	17	7	3	29	7	55	11	5	73	16	254	270
08:45 AM	25	73	14	3	112	9	77	11	3	97	5	19	5	1	29	5	61	8	4	74	11	312	323
Total	77	258	64	23	399	22	239	33	8	294	17	69	21	9	107	29	197	24	12	250	52	1050	1102
Grand Total	122	562	113	40	797	38	441	58	16	537	34	110	33	13	177	47	328	36	18	411	87	1922	2009
Apprch %	15.3	70.5	14.2			7.1	82.1	10.8			19.2	62.1	18.6			11.4	79.8	8.8					
Total %	6.3	29.2	5.9		41.5	2	22.9	3		27.9	1.8	5.7	1.7		9.2	2.4	17.1	1.9		21.4	4.3	95.7	

	Eureka Street Southbound				Redlands Boulevard Westbound				Eureka Street Northbound				Redlands Boulevard Eastbound				
Start Time	Left	Thru	Right	App. Total	Left	Thru	Right	App. Total	Left	Thru	Right	App. Total	Left	Thru	Right	App. Total	Int. Total
Peak Hour Analysis From 07:00 AM to 08:45 AM - Peak 1 of 1																	
Peak Hour for Entire Intersection Begins at 08:00 AM																	
08:00 AM	18	71	16	105	6	56	9	71	2	13	5	20	7	45	4	56	252
08:15 AM	19	53	**17**	89	3	59	5	67	**5**	**20**	4	**29**	**10**	36	1	47	232
08:30 AM	15	61	17	93	4	47	8	59	5	17	**7**	29	7	55	**11**	73	254
08:45 AM	**25**	**73**	14	**112**	**9**	**77**	**11**	**97**	5	19	5	29	5	**61**	8	**74**	**312**
Total Volume	77	258	64	399	22	239	33	294	17	69	21	107	29	197	24	250	1050
% App. Total	19.3	64.7	16		7.5	81.3	11.2		15.9	64.5	19.6		11.6	78.8	9.6		
PHF	.770	.884	.941	.891	.611	.776	.750	.758	.850	.863	.750	.922	.725	.807	.545	.845	.841

Counts Unlimited, Inc.
PO Box 1178
Corona, CA 92878
(951)268-6268

City of Redlands
N/S: Eureka Street
E/W: Redlands Boulevard
Weather: Clear

File Name : 02_RED_Eureka_Redlands AM
Site Code : 05121330
Start Date : 7/7/2021
Page No : 2

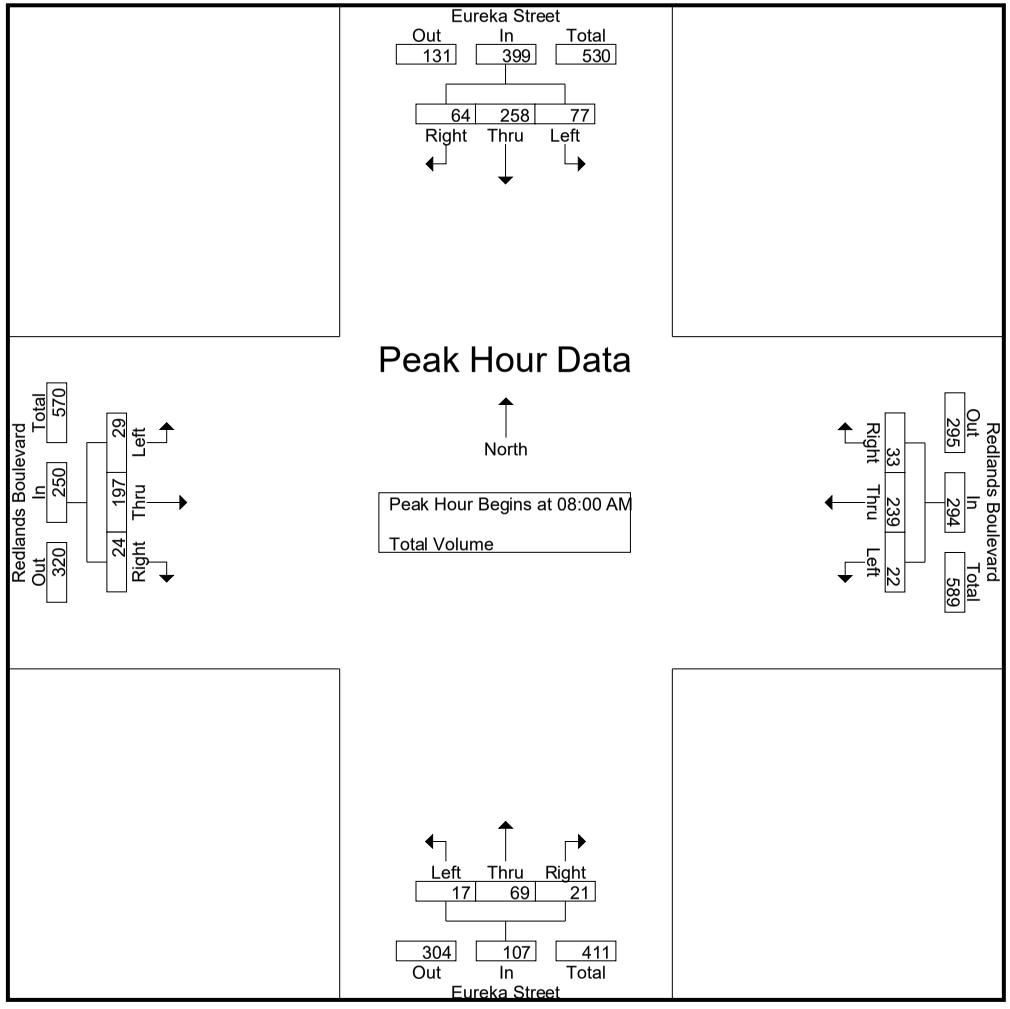

Counts Unlimited, Inc.
PO Box 1178
Corona, CA 92878
(951)268-6268

City of Redlands
N/S: Eureka Street
E/W: Redlands Boulevard
Weather: Clear

File Name : 02_RED_Eureka_Redlands AM
Site Code : 05121330
Start Date : 7/7/2021
Page No : 3

	Eureka Street Southbound				Redlands Boulevard Westbound				Eureka Street Northbound				Redlands Boulevard Eastbound				
Start Time	Left	Thru	Right	App. Total	Left	Thru	Right	App. Total	Left	Thru	Right	App. Total	Left	Thru	Right	App. Total	Int. Total
Peak Hour Analysis From 07:00 AM to 08:45 AM - Peak 1 of 1																	
Peak Hour for Each Approach Begins at:																	
	07:30 AM				08:00 AM				08:00 AM				08:00 AM				
+0 mins.	8	84	10	102	6	56	9	71	2	13	5	20	7	45	4	56	
+15 mins.	16	**119**	13	**148**	3	59	5	67	**5**	**20**	4	**29**	**10**	36	1	47	
+30 mins.	18	71	16	105	4	47	8	59	5	17	**7**	29	7	55	**11**	73	
+45 mins.	**19**	53	**17**	89	**9**	**77**	**11**	**97**	5	19	5	29	5	**61**	8	**74**	
Total Volume	61	327	56	444	22	239	33	294	17	69	21	107	29	197	24	250	
% App. Total	13.7	73.6	12.6		7.5	81.3	11.2		15.9	64.5	19.6		11.6	78.8	9.6		
PHF	.803	.687	.824	.750	.611	.776	.750	.758	.850	.863	.750	.922	.725	.807	.545	.845	

Counts Unlimited, Inc.
PO Box 1178
Corona, CA 92878
(951)268-6268

City of Redlands
N/S: Eureka Street
E/W: Redlands Boulevard
Weather: Clear

File Name : 02_RED_Eureka_Redlands PM
Site Code : 05121330
Start Date : 7/7/2021
Page No : 1

Groups Printed- Total Volume

	Eureka Street Southbound					Redlands Boulevard Westbound					Eureka Street Northbound					Redlands Boulevard Eastbound							
Start Time	Left	Thru	Right	RTOR	App. Total	Left	Thru	Right	RTOR	App. Total	Left	Thru	Right	RTOR	App. Total	Left	Thru	Right	RTOR	App. Total	Exclu. Total	Inclu. Total	Int. Total
04:00 PM	25	69	14	3	108	8	79	19	3	106	3	25	7	0	35	16	126	11	0	153	6	402	408
04:15 PM	36	63	10	5	109	8	63	14	4	85	12	29	7	5	48	13	120	13	4	146	18	388	406
04:30 PM	27	66	19	4	112	8	76	16	1	100	9	35	6	4	50	17	130	10	3	157	12	419	431
04:45 PM	34	79	21	6	134	5	66	15	5	86	4	34	6	2	44	14	136	5	1	155	14	419	433
Total	122	277	64	18	463	29	284	64	13	377	28	123	26	11	177	60	512	39	8	611	50	1628	1678
05:00 PM	38	74	11	5	123	4	66	13	1	83	4	50	7	2	61	22	145	7	1	174	9	441	450
05:15 PM	36	77	16	8	129	8	84	21	9	113	4	36	8	3	48	17	162	14	4	193	24	483	507
05:30 PM	25	75	9	3	109	4	52	8	3	64	8	39	8	6	55	12	146	7	2	165	14	393	407
05:45 PM	24	78	14	6	116	4	65	20	4	89	2	22	7	0	31	8	117	11	2	136	12	372	384
Total	123	304	50	22	477	20	267	62	17	349	18	147	30	11	195	59	570	39	9	668	59	1689	1748
Grand Total	245	581	114	40	940	49	551	126	30	726	46	270	56	22	372	119	1082	78	17	1279	109	3317	3426
Apprch %	26.1	61.8	12.1			6.7	75.9	17.4			12.4	72.6	15.1			9.3	84.6	6.1					
Total %	7.4	17.5	3.4		28.3	1.5	16.6	3.8		21.9	1.4	8.1	1.7		11.2	3.6	32.6	2.4		38.6	3.2	96.8	

	Eureka Street Southbound				Redlands Boulevard Westbound				Eureka Street Northbound				Redlands Boulevard Eastbound				
Start Time	Left	Thru	Right	App. Total	Left	Thru	Right	App. Total	Left	Thru	Right	App. Total	Left	Thru	Right	App. Total	Int. Total
Peak Hour Analysis From 04:00 PM to 05:45 PM - Peak 1 of 1																	
Peak Hour for Entire Intersection Begins at 04:30 PM																	
04:30 PM	27	66	19	112	**8**	76	16	100	**9**	35	6	50	17	130	10	157	419
04:45 PM	34	**79**	**21**	**134**	5	66	15	86	4	34	6	44	14	136	5	155	419
05:00 PM	**38**	74	11	123	4	66	13	83	4	**50**	7	**61**	**22**	145	7	174	441
05:15 PM	36	77	16	129	8	**84**	**21**	**113**	4	36	**8**	48	17	**162**	**14**	**193**	**483**
Total Volume	135	296	67	498	25	292	65	382	21	155	27	203	70	573	36	679	1762
% App. Total	27.1	59.4	13.5		6.5	76.4	17		10.3	76.4	13.3		10.3	84.4	5.3		
PHF	.888	.937	.798	.929	.781	.869	.774	.845	.583	.775	.844	.832	.795	.884	.643	.880	.912

Counts Unlimited, Inc.
PO Box 1178
Corona, CA 92878
(951)268-6268

City of Redlands
N/S: Eureka Street
E/W: Redlands Boulevard
Weather: Clear

File Name : 02_RED_Eureka_Redlands PM
Site Code : 05121330
Start Date : 7/7/2021
Page No : 2

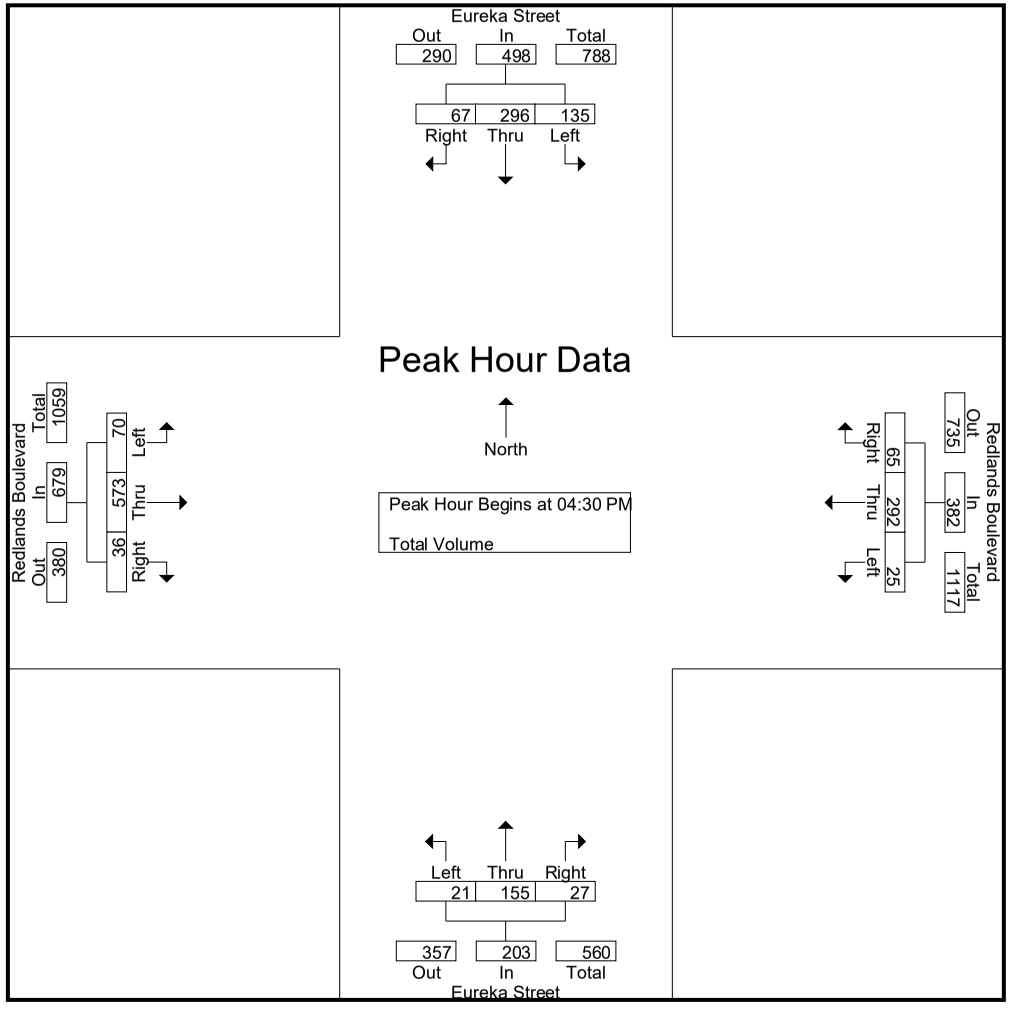

Counts Unlimited, Inc.
PO Box 1178
Corona, CA 92878
(951)268-6268

City of Redlands
N/S: Eureka Street
E/W: Redlands Boulevard
Weather: Clear

File Name : 02_RED_Eureka_Redlands PM
Site Code : 05121330
Start Date : 7/7/2021
Page No : 3

	Eureka Street Southbound				Redlands Boulevard Westbound				Eureka Street Northbound				Redlands Boulevard Eastbound				
Start Time	Left	Thru	Right	App. Total	Left	Thru	Right	App. Total	Left	Thru	Right	App. Total	Left	Thru	Right	App. Total	Int. Total
Peak Hour Analysis From 04:00 PM to 05:45 PM - Peak 1 of 1																	
Peak Hour for Each Approach Begins at:																	
	04:30 PM				04:30 PM				04:45 PM				04:45 PM				
+0 mins.	27	66	19	112	**8**	76	16	100	4	34	6	44	14	136	5	155	
+15 mins.	34	**79**	**21**	**134**	5	66	15	86	4	**50**	7	**61**	**22**	145	7	174	
+30 mins.	**38**	74	11	123	4	66	13	83	4	36	**8**	48	17	**162**	**14**	**193**	
+45 mins.	36	77	16	129	8	**84**	**21**	**113**	**8**	39	8	55	12	146	7	165	
Total Volume	135	296	67	498	25	292	65	382	20	159	29	208	65	589	33	687	
% App. Total	27.1	59.4	13.5		6.5	76.4	17		9.6	76.4	13.9		9.5	85.7	4.8		
PHF	.888	.937	.798	.929	.781	.869	.774	.845	.625	.795	.906	.852	.739	.909	.589	.890	

Location: Redlands
N/S: Eureka Street
E/W: Redlands Boulevard

Date: 7/7/2021
Day: Wednesday

PEDESTRIANS

	North Leg Eureka Street	East Leg Redlands Boulevard	South Leg Eureka Street	West Leg Redlands Boulevard	
	Pedestrians	Pedestrians	Pedestrians	Pedestrians	
7:00 AM	0	0	0	0	0
7:15 AM	0	0	1	0	1
7:30 AM	0	1	2	1	4
7:45 AM	0	1	0	0	1
8:00 AM	0	1	0	0	1
8:15 AM	2	1	1	1	5
8:30 AM	0	0	2	0	2
8:45 AM	0	0	1	0	1
TOTAL VOLUMES:	2	4	7	2	15

	North Leg Eureka Street	East Leg Redlands Boulevard	South Leg Eureka Street	West Leg Redlands Boulevard	
	Pedestrians	Pedestrians	Pedestrians	Pedestrians	
4:00 PM	0	0	0	3	3
4:15 PM	0	1	0	0	1
4:30 PM	1	0	0	0	1
4:45 PM	0	0	0	1	1
5:00 PM	0	0	0	0	0
5:15 PM	1	0	0	1	2
5:30 PM	0	0	0	0	0
5:45 PM	5	2	0	5	12
TOTAL VOLUMES:	7	3	0	10	20

Counts Unlimited, Inc.
PO Box 1178
Corona, CA 92878
951-268-6268

Location: Redlands
N/S: Eureka Street
E/W: Redlands Boulevard

Date: 7/7/2021
Day: Wednesday

BICYCLES

	Southbound Eureka Street			Westbound Redlands Boulevard			Northbound Eureka Street			Eastbound Redlands Boulevard			
	Left	Thru	Right	Left	Thru	Right	Left	Thru	Right	Left	Thru	Right	
7:00 AM	0	0	0	0	0	0	0	1	0	0	0	0	1
7:15 AM	0	0	0	0	0	0	0	0	0	0	0	0	0
7:30 AM	0	0	0	0	0	0	0	0	0	0	0	0	0
7:45 AM	0	0	0	0	0	0	0	0	0	0	1	0	1
8:00 AM	0	0	0	0	0	0	0	0	0	0	0	0	0
8:15 AM	0	0	0	0	0	0	0	0	0	0	0	0	0
8:30 AM	0	0	0	0	0	0	0	0	0	0	0	0	0
8:45 AM	0	0	0	0	0	0	0	0	1	0	0	0	1
TOTAL VOLUMES:	0	0	0	0	0	0	0	1	1	0	1	0	3

	Southbound Eureka Street			Westbound Redlands Boulevard			Northbound Eureka Street			Eastbound Redlands Boulevard			
	Left	Thru	Right	Left	Thru	Right	Left	Thru	Right	Left	Thru	Right	
4:00 PM	0	0	0	0	0	0	0	0	0	0	0	0	0
4:15 PM	0	1	0	0	0	0	0	0	0	0	0	0	1
4:30 PM	0	0	0	0	0	0	0	0	0	0	0	0	0
4:45 PM	0	1	0	0	0	0	0	0	0	0	0	0	1
5:00 PM	0	0	0	0	1	0	0	1	0	0	0	0	2
5:15 PM	0	0	0	0	2	0	0	0	0	0	0	0	2
5:30 PM	0	0	0	0	0	0	0	0	0	0	0	0	0
5:45 PM	0	0	0	0	0	0	0	1	0	0	0	0	1
TOTAL VOLUMES:	0	2	0	0	3	0	0	2	0	0	0	0	7

Counts Unlimited, Inc.
PO Box 1178
Corona, CA 92878
(951)268-6268

City of Redlands
N/S: Eureka Street
E/W: State Street
Weather: Clear

File Name : 04_RED_Eureka_State AM
Site Code : 05121330
Start Date : 7/7/2021
Page No : 1

Groups Printed- Total Volume

	Eureka Street Southbound					Parking Garage Entrance Westbound					Eureka Street Northbound					State Street Eastbound							
Start Time	Left	Thru	Right	RTOR	App. Total	Left	Thru	Right	RTOR	App. Total	Left	Thru	Right	RTOR	App. Total	Left	Thru	Right	RTOR	App. Total	Exclu. Total	Inclu. Total	Int. Total
07:00 AM	0	50	3	0	53	0	0	0	0	0	7	8	0	0	15	0	0	2	0	2	0	70	70
07:15 AM	0	59	1	0	60	1	0	1	0	2	4	15	2	0	21	0	0	1	0	1	0	84	84
07:30 AM	3	78	9	0	90	0	1	0	0	1	3	24	0	0	27	1	0	4	0	5	0	123	123
07:45 AM	2	115	18	0	135	0	0	0	0	0	7	17	1	0	25	1	0	7	0	8	0	168	168
Total	5	302	31	0	338	1	1	1	0	3	21	64	3	0	88	2	0	14	0	16	0	445	445
08:00 AM	2	70	9	0	81	0	0	0	0	0	7	18	1	0	26	3	0	2	0	5	0	112	112
08:15 AM	1	52	3	0	56	0	0	2	0	2	11	25	0	0	36	2	1	3	0	6	0	100	100
08:30 AM	0	68	7	0	75	0	0	2	0	2	5	19	0	0	24	6	0	8	0	14	0	115	115
08:45 AM	1	68	19	0	88	0	0	2	0	2	4	24	0	0	28	4	1	7	0	12	0	130	130
Total	4	258	38	0	300	0	0	6	0	6	27	86	1	0	114	15	2	20	0	37	0	457	457
Grand Total	9	560	69	0	638	1	1	7	0	9	48	150	4	0	202	17	2	34	0	53	0	902	902
Apprch %	1.4	87.8	10.8			11.1	11.1	77.8			23.8	74.3	2			32.1	3.8	64.2					
Total %	1	62.1	7.6		70.7	0.1	0.1	0.8		1	5.3	16.6	0.4		22.4	1.9	0.2	3.8		5.9	0	100	

	Eureka Street Southbound				Parking Garage Entrance Westbound				Eureka Street Northbound				State Street Eastbound				
Start Time	Left	Thru	Right	App. Total	Left	Thru	Right	App. Total	Left	Thru	Right	App. Total	Left	Thru	Right	App. Total	Int. Total
Peak Hour Analysis From 07:00 AM to 08:45 AM - Peak 1 of 1																	
Peak Hour for Entire Intersection Begins at 07:30 AM																	
07:30 AM	**3**	78	9	90	0	**1**	0	1	3	24	0	27	1	0	4	5	123
07:45 AM	2	**115**	**18**	**135**	0	0	0	0	7	17	**1**	25	1	0	**7**	**8**	**168**
08:00 AM	2	70	9	81	0	0	0	0	7	18	1	26	**3**	0	2	5	112
08:15 AM	1	52	3	56	0	0	**2**	**2**	**11**	**25**	0	**36**	2	**1**	3	6	100
Total Volume	8	315	39	362	0	1	2	3	28	84	2	114	7	1	16	24	503
% App. Total	2.2	87	10.8		0	33.3	66.7		24.6	73.7	1.8		29.2	4.2	66.7		
PHF	.667	.685	.542	.670	.000	.250	.250	.375	.636	.840	.500	.792	.583	.250	.571	.750	.749

Counts Unlimited, Inc.
PO Box 1178
Corona, CA 92878
(951)268-6268

City of Redlands
N/S: Eureka Street
E/W: State Street
Weather: Clear

File Name : 04_RED_Eureka_State AM
Site Code : 05121330
Start Date : 7/7/2021
Page No : 2

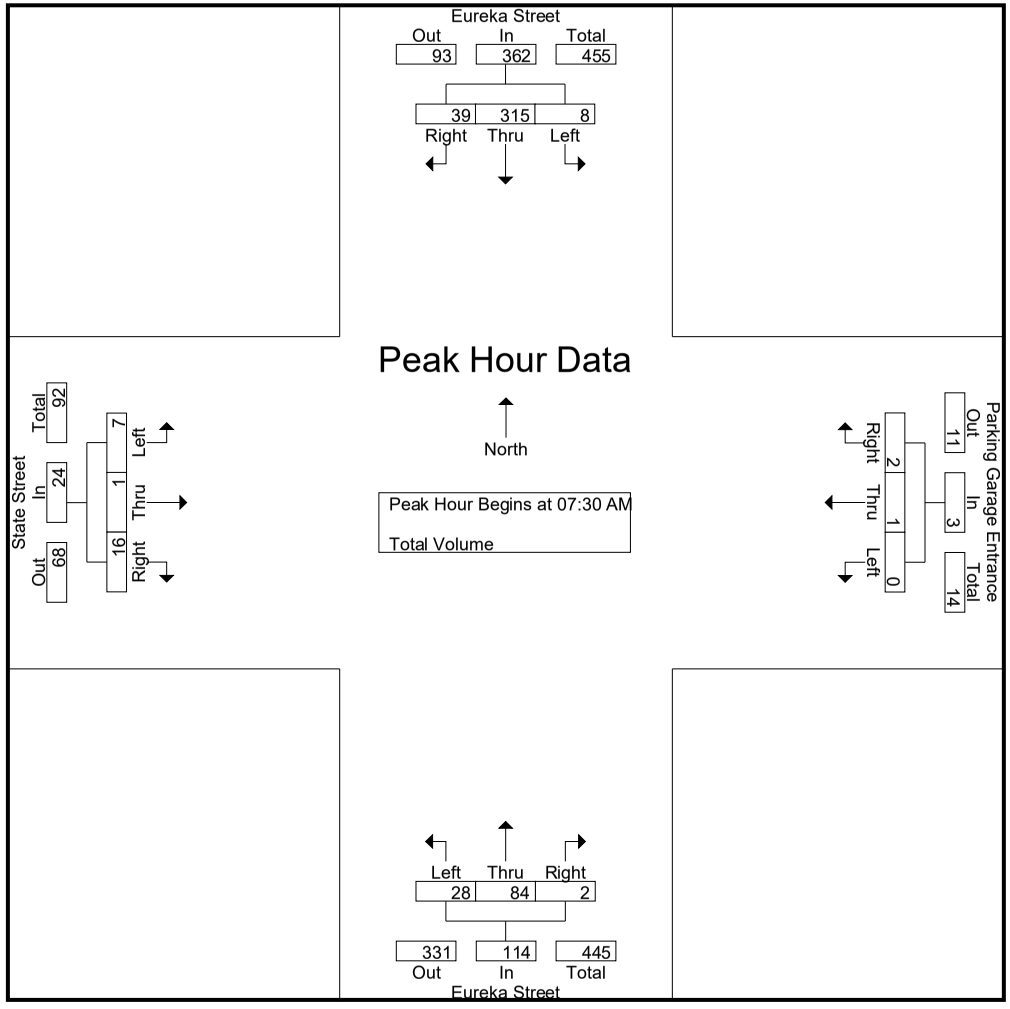

Counts Unlimited, Inc.
PO Box 1178
Corona, CA 92878
(951)268-6268

City of Redlands
N/S: Eureka Street
E/W: State Street
Weather: Clear

File Name : 04_RED_Eureka_State AM
Site Code : 05121330
Start Date : 7/7/2021
Page No : 3

	Eureka Street Southbound				Parking Garage Entrance Westbound				Eureka Street Northbound				State Street Eastbound				
Start Time	Left	Thru	Right	App. Total	Left	Thru	Right	App. Total	Left	Thru	Right	App. Total	Left	Thru	Right	App. Total	Int. Total
Peak Hour Analysis From 07:00 AM to 08:45 AM - Peak 1 of 1																	
Peak Hour for Each Approach Begins at:																	
	07:15 AM				08:00 AM				07:30 AM				08:00 AM				
+0 mins.	0	59	1	60	0	0	0	0	3	24	0	27	3	0	2	5	
+15 mins.	**3**	78	9	90	0	0	**2**	**2**	7	17	**1**	25	2	**1**	3	6	
+30 mins.	2	**115**	**18**	**135**	0	0	2	2	7	18	1	26	**6**	0	**8**	**14**	
+45 mins.	2	70	9	81	0	0	2	2	**11**	**25**	0	**36**	4	1	7	12	
Total Volume	7	322	37	366	0	0	6	6	28	84	2	114	15	2	20	37	
% App. Total	1.9	88	10.1		0	0	100		24.6	73.7	1.8		40.5	5.4	54.1		
PHF	.583	.700	.514	.678	.000	.000	.750	.750	.636	.840	.500	.792	.625	.500	.625	.661	

Counts Unlimited, Inc.
PO Box 1178
Corona, CA 92878
(951)268-6268

City of Redlands
N/S: Eureka Street
E/W: State Street
Weather: Clear

File Name : 04_RED_Eureka_State PM
Site Code : 05121330
Start Date : 7/7/2021
Page No : 1

Groups Printed- Total Volume

	Eureka Street Southbound					Parking Garage Entrance Westbound					Eureka Street Northbound					State Street Eastbound							
Start Time	Left	Thru	Right	RTOR	App. Total	Left	Thru	Right	RTOR	App. Total	Left	Thru	Right	RTOR	App. Total	Left	Thru	Right	RTOR	App. Total	Exclu. Total	Inclu. Total	Int. Total
04:00 PM	0	82	4	0	86	0	0	0	0	0	7	34	0	0	41	3	1	10	0	14	0	141	141
04:15 PM	1	74	8	0	83	0	0	1	0	1	4	43	0	0	47	3	1	9	0	13	0	144	144
04:30 PM	2	75	8	0	85	1	2	4	0	7	8	40	0	0	48	3	3	10	0	16	0	156	156
04:45 PM	1	80	5	0	86	0	1	1	0	2	12	43	1	0	56	5	1	9	0	15	0	159	159
Total	4	311	25	0	340	1	3	6	0	10	31	160	1	0	192	14	6	38	0	58	0	600	600
05:00 PM	3	79	6	0	88	0	1	2	0	3	8	48	1	0	57	7	1	12	0	20	0	168	168
05:15 PM	3	91	6	0	100	0	1	1	0	2	10	38	0	0	48	9	0	7	0	16	0	166	166
05:30 PM	1	78	6	0	85	0	0	1	0	1	9	49	1	0	59	5	0	9	0	14	0	159	159
05:45 PM	1	87	9	0	97	1	1	1	0	3	7	23	0	0	30	5	0	3	0	8	0	138	138
Total	8	335	27	0	370	1	3	5	0	9	34	158	2	0	194	26	1	31	0	58	0	631	631
Grand Total	12	646	52	0	710	2	6	11	0	19	65	318	3	0	386	40	7	69	0	116	0	1231	1231
Apprch %	1.7	91	7.3			10.5	31.6	57.9			16.8	82.4	0.8			34.5	6	59.5					
Total %	1	52.5	4.2		57.7	0.2	0.5	0.9		1.5	5.3	25.8	0.2		31.4	3.2	0.6	5.6		9.4	0	100	

	Eureka Street Southbound				Parking Garage Entrance Westbound				Eureka Street Northbound				State Street Eastbound				
Start Time	Left	Thru	Right	App. Total	Left	Thru	Right	App. Total	Left	Thru	Right	App. Total	Left	Thru	Right	App. Total	Int. Total
Peak Hour Analysis From 04:00 PM to 05:45 PM - Peak 1 of 1																	
Peak Hour for Entire Intersection Begins at 04:45 PM																	
04:45 PM	1	80	5	86	0	**1**	1	2	**12**	43	**1**	56	5	**1**	9	15	159
05:00 PM	**3**	79	**6**	88	0	1	**2**	**3**	8	48	1	57	7	1	**12**	**20**	**168**
05:15 PM	3	**91**	6	**100**	0	1	1	2	10	38	0	48	**9**	0	7	16	166
05:30 PM	1	78	6	85	0	0	1	1	9	**49**	1	**59**	5	0	9	14	159
Total Volume	8	328	23	359	0	3	5	8	39	178	3	220	26	2	37	65	652
% App. Total	2.2	91.4	6.4		0	37.5	62.5		17.7	80.9	1.4		40	3.1	56.9		
PHF	.667	.901	.958	.898	.000	.750	.625	.667	.813	.908	.750	.932	.722	.500	.771	.813	.970

Counts Unlimited, Inc.
PO Box 1178
Corona, CA 92878
(951)268-6268

City of Redlands
N/S: Eureka Street
E/W: State Street
Weather: Clear

File Name : 04_RED_Eureka_State PM
Site Code : 05121330
Start Date : 7/7/2021
Page No : 2

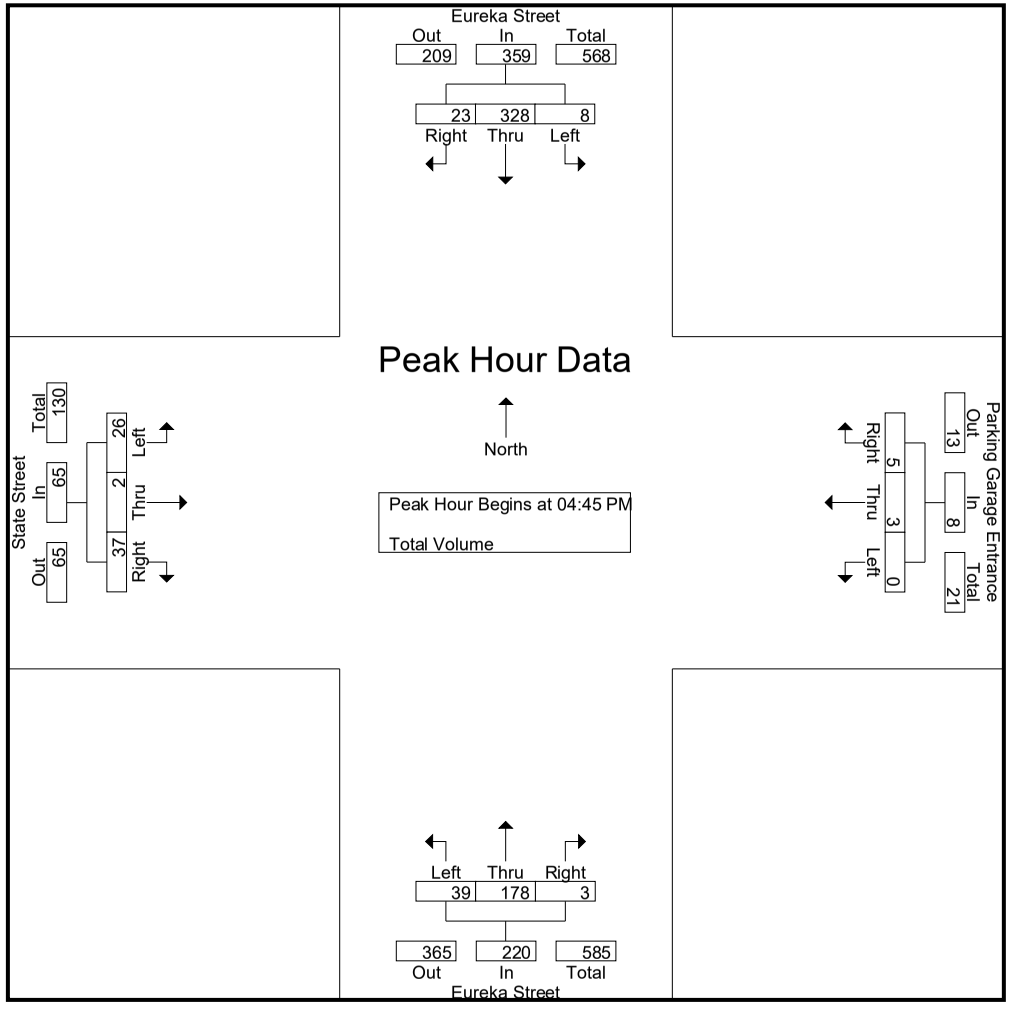

Counts Unlimited, Inc.
PO Box 1178
Corona, CA 92878
(951)268-6268

City of Redlands
N/S: Eureka Street
E/W: State Street
Weather: Clear

File Name : 04_RED_Eureka_State PM
Site Code : 05121330
Start Date : 7/7/2021
Page No : 3

	Eureka Street Southbound				Parking Garage Entrance Westbound				Eureka Street Northbound				State Street Eastbound				
Start Time	Left	Thru	Right	App. Total	Left	Thru	Right	App. Total	Left	Thru	Right	App. Total	Left	Thru	Right	App. Total	Int. Total
Peak Hour Analysis From 04:00 PM to 05:45 PM - Peak 1 of 1																	
Peak Hour for Each Approach Begins at:																	
	05:00 PM				04:30 PM				04:45 PM				04:30 PM				
+0 mins.	**3**	79	6	88	**1**	**2**	**4**	**7**	**12**	43	**1**	56	3	**3**	10	16	
+15 mins.	3	**91**	6	**100**	0	1	1	2	8	48	1	57	5	1	9	15	
+30 mins.	1	78	6	85	0	1	2	3	10	38	0	48	7	1	**12**	**20**	
+45 mins.	1	87	**9**	97	0	1	1	2	9	**49**	1	**59**	**9**	0	7	16	
Total Volume	8	335	27	370	1	5	8	14	39	178	3	220	24	5	38	67	
% App. Total	2.2	90.5	7.3		7.1	35.7	57.1		17.7	80.9	1.4		35.8	7.5	56.7		
PHF	.667	.920	.750	.925	.250	.625	.500	.500	.813	.908	.750	.932	.667	.417	.792	.838	

Location: Redlands
N/S: Eureka Street
E/W: State Street

Date: 7/7/2021
Day: Wednesday

PEDESTRIANS

	North Leg Eureka Street	East Leg State Street	South Leg Eureka Street	West Leg State Street	
	Pedestrians	Pedestrians	Pedestrians	Pedestrians	
7:00 AM	0	0	0	0	0
7:15 AM	0	0	0	1	1
7:30 AM	0	2	0	1	3
7:45 AM	0	1	0	0	1
8:00 AM	0	1	0	1	2
8:15 AM	0	0	0	0	0
8:30 AM	0	0	0	0	0
8:45 AM	0	1	0	0	1
TOTAL VOLUMES:	0	5	0	3	8

	North Leg Eureka Street	East Leg State Street	South Leg Eureka Street	West Leg State Street	
	Pedestrians	Pedestrians	Pedestrians	Pedestrians	
4:00 PM	0	0	0	2	2
4:15 PM	0	0	0	0	0
4:30 PM	0	0	0	0	0
4:45 PM	0	0	0	0	0
5:00 PM	0	0	0	0	0
5:15 PM	0	0	0	0	0
5:30 PM	0	0	1	0	1
5:45 PM	0	0	0	0	0
TOTAL VOLUMES:	0	0	1	2	3

Counts Unlimited, Inc.
PO Box 1178
Corona, CA 92878
951-268-6268

Location: Redlands
N/S: Eureka Street
E/W: State Street

Date: 7/7/2021
Day: Wednesday

BICYCLES

	Southbound Eureka Street			Westbound State Street			Northbound Eureka Street			Eastbound State Street			
	Left	Thru	Right	Left	Thru	Right	Left	Thru	Right	Left	Thru	Right	
7:00 AM	0	0	0	0	0	1	0	0	0	0	0	0	1
7:15 AM	0	0	0	0	0	0	0	0	0	0	0	0	0
7:30 AM	0	0	0	0	0	0	0	0	0	0	0	0	0
7:45 AM	0	0	0	0	0	0	0	0	0	0	0	0	0
8:00 AM	0	0	0	0	0	0	0	0	0	0	0	0	0
8:15 AM	0	0	0	0	0	0	0	0	0	0	0	0	0
8:30 AM	0	0	0	0	0	0	0	0	0	0	0	0	0
8:45 AM	0	0	0	0	0	0	0	1	0	0	0	0	1
TOTAL VOLUMES:	0	0	0	0	0	1	0	1	0	0	0	0	2

	Southbound Eureka Street			Westbound State Street			Northbound Eureka Street			Eastbound State Street			
	Left	Thru	Right	Left	Thru	Right	Left	Thru	Right	Left	Thru	Right	
4:00 PM	0	0	0	0	0	0	0	0	0	0	0	0	0
4:15 PM	0	1	0	0	0	0	0	0	0	0	0	0	1
4:30 PM	0	0	0	0	0	0	0	0	0	0	0	0	0
4:45 PM	0	0	0	0	0	0	0	0	0	0	0	0	0
5:00 PM	0	0	0	0	0	0	0	1	0	0	1	1	3
5:15 PM	0	0	0	0	0	0	1	0	0	0	0	1	2
5:30 PM	0	0	0	0	0	0	0	0	0	0	0	1	1
5:45 PM	0	0	0	0	0	0	0	1	0	0	1	0	2
TOTAL VOLUMES:	0	1	0	0	0	0	1	2	0	0	2	3	9

Counts Unlimited, Inc.
PO Box 1178
Corona, CA 92878
(951)268-6268

City of Redlands
N/S: Eureka Street
E/W: Brookside Avenue/Citrus Avenue
Weather: Clear

File Name : 06_RED_Eureka_Citrus AM
Site Code : 05121330
Start Date : 7/7/2021
Page No : 1

Groups Printed- Total Volume

	Eureka Street Southbound					Citrus Avenue Westbound					Eureka Street Northbound					Brookside Avenue Eastbound							
Start Time	Left	Thru	Right	RTOR	App. Total	Left	Thru	Right	RTOR	App. Total	Left	Thru	Right	RTOR	App. Total	Left	Thru	Right	RTOR	App. Total	Exclu. Total	Inclu. Total	Int. Total
07:00 AM	18	14	18	9	50	2	36	8	3	46	0	4	1	1	5	3	29	2	1	34	14	135	149
07:15 AM	21	19	20	9	60	0	35	9	2	44	0	4	1	1	5	9	32	0	0	41	12	150	162
07:30 AM	30	26	23	4	79	0	46	10	1	56	2	4	0	0	6	13	46	0	0	59	5	200	205
07:45 AM	36	51	35	9	122	2	47	7	4	56	2	8	0	0	10	13	56	4	1	73	14	261	275
Total	105	110	96	31	311	4	164	34	10	202	4	20	2	2	26	38	163	6	2	207	45	746	791
08:00 AM	21	25	25	10	71	0	48	12	4	60	2	6	1	0	9	7	42	3	1	52	15	192	207
08:15 AM	8	20	24	6	52	3	41	13	1	57	0	9	1	0	10	13	35	3	1	51	8	170	178
08:30 AM	21	24	28	10	73	3	44	8	2	55	2	4	0	0	6	12	41	6	2	59	14	193	207
08:45 AM	14	28	31	5	73	3	42	9	3	54	2	4	2	0	8	17	50	7	3	74	11	209	220
Total	64	97	108	31	269	9	175	42	10	226	6	23	4	0	33	49	168	19	7	236	48	764	812
Grand Total	169	207	204	62	580	13	339	76	20	428	10	43	6	2	59	87	331	25	9	443	93	1510	1603
Apprch %	29.1	35.7	35.2			3	79.2	17.8			16.9	72.9	10.2			19.6	74.7	5.6					
Total %	11.2	13.7	13.5		38.4	0.9	22.5	5		28.3	0.7	2.8	0.4		3.9	5.8	21.9	1.7		29.3	5.8	94.2	

	Eureka Street Southbound				Citrus Avenue Westbound				Eureka Street Northbound				Brookside Avenue Eastbound				
Start Time	Left	Thru	Right	App. Total	Left	Thru	Right	App. Total	Left	Thru	Right	App. Total	Left	Thru	Right	App. Total	Int. Total
Peak Hour Analysis From 07:00 AM to 08:45 AM - Peak 1 of 1																	
Peak Hour for Entire Intersection Begins at 07:30 AM																	
07:30 AM	30	26	23	79	0	46	10	56	**2**	4	0	6	**13**	46	0	59	200
07:45 AM	**36**	**51**	**35**	**122**	2	47	7	56	2	8	0	**10**	13	**56**	**4**	**73**	**261**
08:00 AM	21	25	25	71	0	**48**	12	**60**	2	6	**1**	9	7	42	3	52	192
08:15 AM	8	20	24	52	**3**	41	**13**	57	0	**9**	1	10	13	35	3	51	170
Total Volume	95	122	107	324	5	182	42	229	6	27	2	35	46	179	10	235	823
% App. Total	29.3	37.7	33		2.2	79.5	18.3		17.1	77.1	5.7		19.6	76.2	4.3		
PHF	.660	.598	.764	.664	.417	.948	.808	.954	.750	.750	.500	.875	.885	.799	.625	.805	.788

Counts Unlimited, Inc.
PO Box 1178
Corona, CA 92878
(951)268-6268

City of Redlands
N/S: Eureka Street
E/W: Brookside Avenue/Citrus Avenue
Weather: Clear

File Name : 06_RED_Eureka_Citrus AM
Site Code : 05121330
Start Date : 7/7/2021
Page No : 2

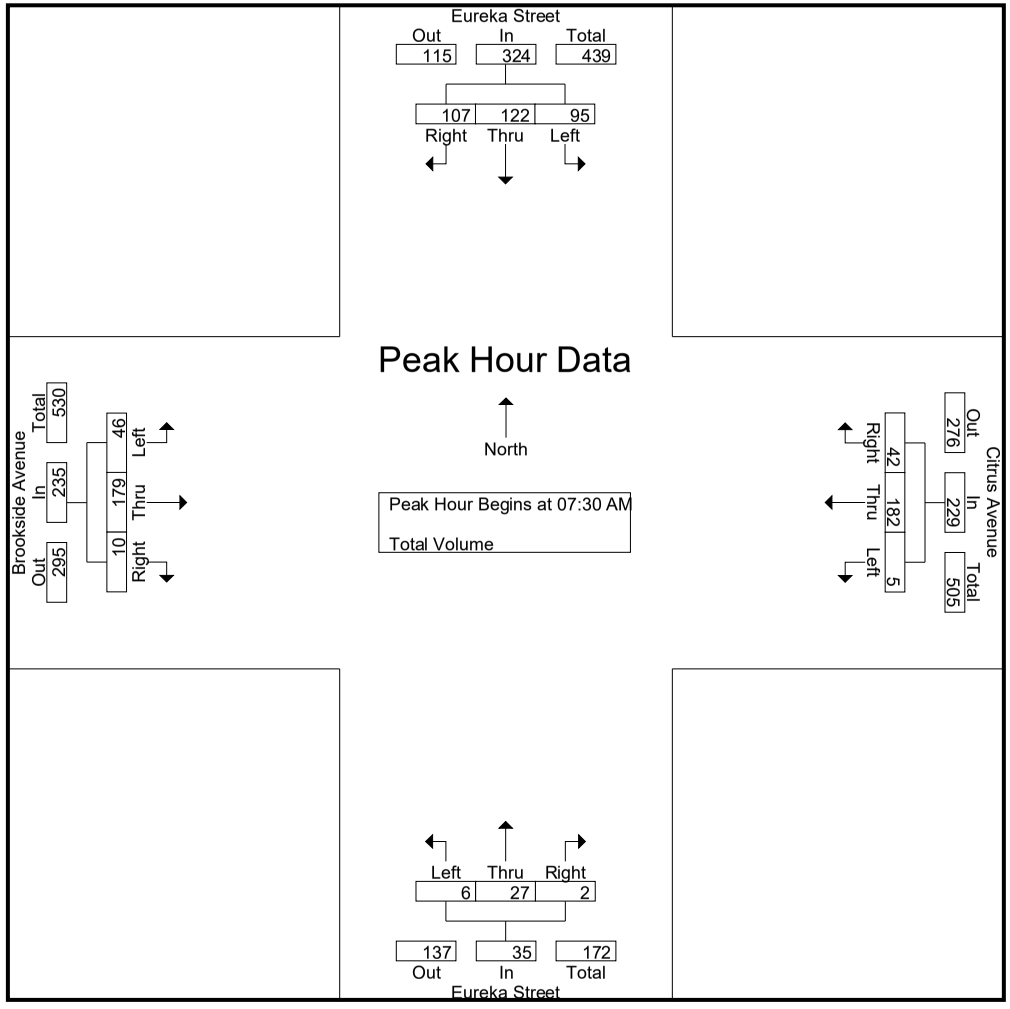

Counts Unlimited, Inc.
PO Box 1178
Corona, CA 92878
(951)268-6268

City of Redlands
N/S: Eureka Street
E/W: Brookside Avenue/Citrus Avenue
Weather: Clear

File Name : 06_RED_Eureka_Citrus AM
Site Code : 05121330
Start Date : 7/7/2021
Page No : 3

	Eureka Street Southbound				Citrus Avenue Westbound				Eureka Street Northbound				Brookside Avenue Eastbound				
Start Time	Left	Thru	Right	App. Total	Left	Thru	Right	App. Total	Left	Thru	Right	App. Total	Left	Thru	Right	App. Total	Int. Total
Peak Hour Analysis From 07:00 AM to 08:45 AM - Peak 1 of 1																	
Peak Hour for Each Approach Begins at:																	
	07:15 AM				07:30 AM				07:30 AM				08:00 AM				
+0 mins.	21	19	20	60	0	46	10	56	**2**	4	0	6	7	42	3	52	
+15 mins.	30	26	23	79	2	47	7	56	2	8	0	**10**	13	35	3	51	
+30 mins.	**36**	**51**	**35**	**122**	0	**48**	12	**60**	2	6	**1**	9	12	41	6	59	
+45 mins.	21	25	25	71	**3**	41	**13**	57	0	**9**	1	10	**17**	**50**	**7**	**74**	
Total Volume	108	121	103	332	5	182	42	229	6	27	2	35	49	168	19	236	
% App. Total	32.5	36.4	31		2.2	79.5	18.3		17.1	77.1	5.7		20.8	71.2	8.1		
PHF	.750	.593	.736	.680	.417	.948	.808	.954	.750	.750	.500	.875	.721	.840	.679	.797	

Counts Unlimited, Inc.
PO Box 1178
Corona, CA 92878
(951)268-6268

City of Redlands
N/S: Eureka Street
E/W: Brookside Avenue/Citrus Avenue
Weather: Clear

File Name : 06_RED_Eureka_Citrus PM
Site Code : 05121330
Start Date : 7/7/2021
Page No : 1

Groups Printed- Total Volume

	Eureka Street Southbound					Citrus Avenue Westbound					Eureka Street Northbound					Brookside Avenue Eastbound							
Start Time	Left	Thru	Right	RTOR	App. Total	Left	Thru	Right	RTOR	App. Total	Left	Thru	Right	RTOR	App. Total	Left	Thru	Right	RTOR	App. Total	Exclu. Total	Inclu. Total	Int. Total
04:00 PM	17	35	34	13	86	2	46	11	2	59	3	9	5	1	17	23	109	2	0	134	16	296	312
04:15 PM	22	44	25	9	91	4	50	13	1	67	4	10	0	0	14	21	100	8	1	129	11	301	312
04:30 PM	24	21	40	17	85	2	58	17	4	77	1	12	1	0	14	21	102	4	1	127	22	303	325
04:45 PM	26	33	33	13	92	2	57	17	7	76	2	12	3	1	17	26	97	8	1	131	22	316	338
Total	89	133	132	52	354	10	211	58	14	279	10	43	9	2	62	91	408	22	3	521	71	1216	1287
05:00 PM	20	38	31	11	89	1	63	16	1	80	4	21	1	1	26	20	101	8	3	129	16	324	340
05:15 PM	23	48	28	6	99	0	65	20	7	85	1	13	2	1	16	16	105	7	2	128	16	328	344
05:30 PM	17	41	26	15	84	2	62	25	5	89	5	7	2	2	14	29	98	6	0	133	22	320	342
05:45 PM	15	36	39	8	90	1	58	12	1	71	1	3	0	0	4	16	74	4	0	94	9	259	268
Total	75	163	124	40	362	4	248	73	14	325	11	44	5	4	60	81	378	25	5	484	63	1231	1294
Grand Total	164	296	256	92	716	14	459	131	28	604	21	87	14	6	122	172	786	47	8	1005	134	2447	2581
Apprch %	22.9	41.3	35.8			2.3	76	21.7			17.2	71.3	11.5			17.1	78.2	4.7					
Total %	6.7	12.1	10.5		29.3	0.6	18.8	5.4		24.7	0.9	3.6	0.6		5	7	32.1	1.9		41.1	5.2	94.8	

	Eureka Street Southbound				Citrus Avenue Westbound				Eureka Street Northbound				Brookside Avenue Eastbound				
Start Time	Left	Thru	Right	App. Total	Left	Thru	Right	App. Total	Left	Thru	Right	App. Total	Left	Thru	Right	App. Total	Int. Total
Peak Hour Analysis From 04:00 PM to 05:45 PM - Peak 1 of 1																	
Peak Hour for Entire Intersection Begins at 04:45 PM																	
04:45 PM	**26**	33	**33**	92	**2**	57	17	76	2	12	**3**	17	26	97	**8**	131	316
05:00 PM	20	38	31	89	1	63	16	80	4	**21**	1	**26**	20	101	8	129	324
05:15 PM	23	**48**	28	**99**	0	**65**	20	85	1	13	2	16	16	**105**	7	128	**328**
05:30 PM	17	41	26	84	2	62	**25**	**89**	**5**	7	2	14	**29**	98	6	**133**	320
Total Volume	86	160	118	364	5	247	78	330	12	53	8	73	91	401	29	521	1288
% App. Total	23.6	44	32.4		1.5	74.8	23.6		16.4	72.6	11		17.5	77	5.6		
PHF	.827	.833	.894	.919	.625	.950	.780	.927	.600	.631	.667	.702	.784	.955	.906	.979	.982

Counts Unlimited, Inc.
PO Box 1178
Corona, CA 92878
(951)268-6268

City of Redlands
N/S: Eureka Street
E/W: Brookside Avenue/Citrus Avenue
Weather: Clear

File Name : 06_RED_Eureka_Citrus PM
Site Code : 05121330
Start Date : 7/7/2021
Page No : 2

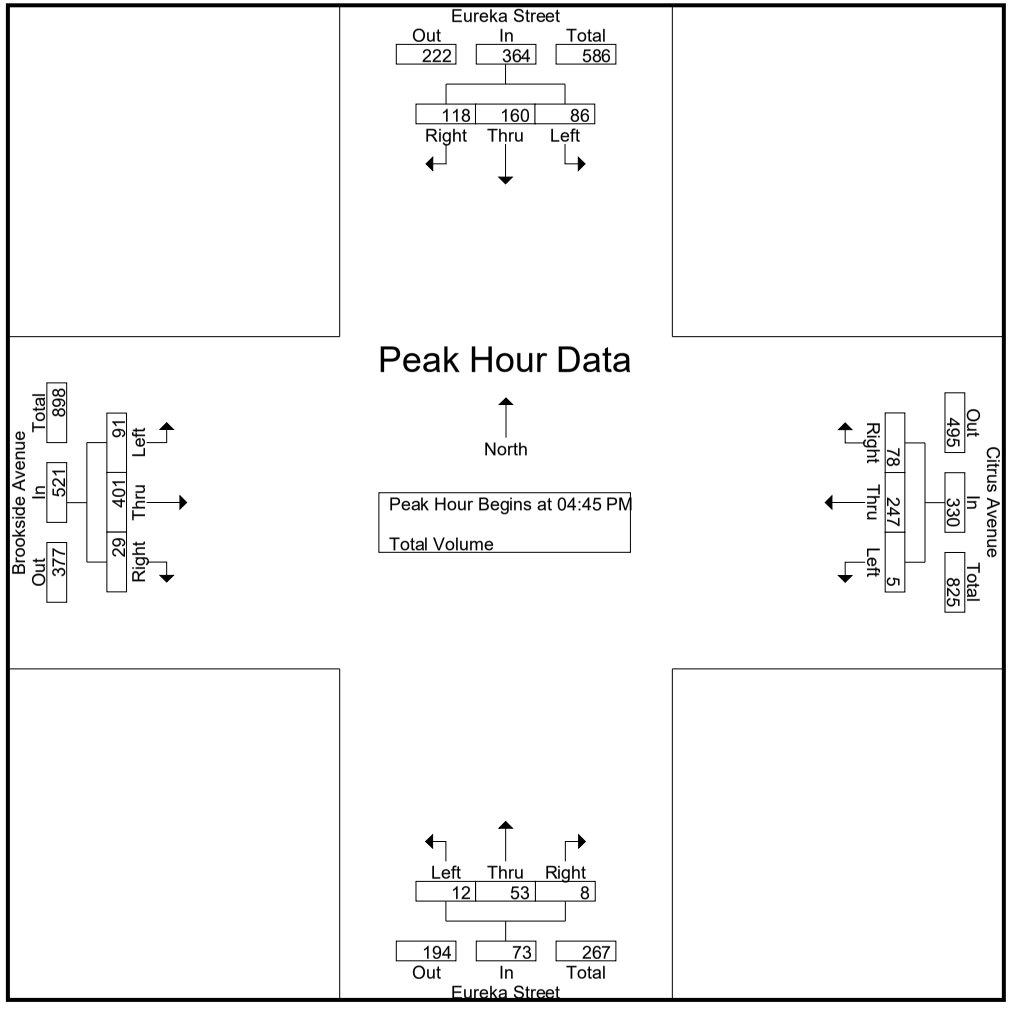

Counts Unlimited, Inc.
PO Box 1178
Corona, CA 92878
(951)268-6268

City of Redlands
N/S: Eureka Street
E/W: Brookside Avenue/Citrus Avenue
Weather: Clear

File Name : 06_RED_Eureka_Citrus PM
Site Code : 05121330
Start Date : 7/7/2021
Page No : 3

	Eureka Street Southbound				Citrus Avenue Westbound				Eureka Street Northbound				Brookside Avenue Eastbound				
Start Time	Left	Thru	Right	App. Total	Left	Thru	Right	App. Total	Left	Thru	Right	App. Total	Left	Thru	Right	App. Total	Int. Total
Peak Hour Analysis From 04:00 PM to 05:45 PM - Peak 1 of 1																	
Peak Hour for Each Approach Begins at:																	
	04:30 PM				04:45 PM				04:30 PM				04:00 PM				
+0 mins.	24	21	**40**	85	**2**	57	17	76	1	12	1	14	23	**109**	2	**134**	
+15 mins.	**26**	33	33	92	1	63	16	80	2	12	**3**	17	21	100	**8**	129	
+30 mins.	20	38	31	89	0	**65**	20	85	**4**	**21**	1	**26**	21	102	4	127	
+45 mins.	23	**48**	28	**99**	2	62	**25**	**89**	1	13	2	16	**26**	97	8	131	
Total Volume	93	140	132	365	5	247	78	330	8	58	7	73	91	408	22	521	
% App. Total	25.5	38.4	36.2		1.5	74.8	23.6		11	79.5	9.6		17.5	78.3	4.2		
PHF	.894	.729	.825	.922	.625	.950	.780	.927	.500	.690	.583	.702	.875	.936	.688	.972	

Location: Redlands
N/S: Eureka Street
E/W: Brookside Ave/Citrus Ave

Date: 7/7/2021
Day: Wednesday

PEDESTRIANS

	North Leg Eureka Street	East Leg Citrus Avenue	South Leg Eureka Street	West Leg Brookside Avenue	
	Pedestrians	Pedestrians	Pedestrians	Pedestrians	
7:00 AM	0	0	1	0	1
7:15 AM	2	0	3	3	8
7:30 AM	0	2	4	0	6
7:45 AM	0	1	2	3	6
8:00 AM	2	2	1	2	7
8:15 AM	2	0	7	2	11
8:30 AM	1	1	3	0	5
8:45 AM	4	1	1	1	7
TOTAL VOLUMES:	11	7	22	11	51

	North Leg Eureka Street	East Leg Citrus Avenue	South Leg Eureka Street	West Leg Brookside Avenue	
	Pedestrians	Pedestrians	Pedestrians	Pedestrians	
4:00 PM	0	0	2	0	2
4:15 PM	0	0	0	0	0
4:30 PM	0	1	1	0	2
4:45 PM	1	0	1	0	2
5:00 PM	2	0	0	1	3
5:15 PM	2	0	2	1	5
5:30 PM	0	0	2	0	2
5:45 PM	0	0	0	0	0
TOTAL VOLUMES:	5	1	8	2	16

Counts Unlimited, Inc.
PO Box 1178
Corona, CA 92878
951-268-6268

Location: Redlands
N/S: Eureka Street
E/W: Brookside Ave/Citrus Ave

Date: 7/7/2021
Day: Wednesday

BICYCLES

	Southbound Eureka Street			Westbound Citrus Avenue			Northbound Eureka Street			Eastbound Brookside Avenue			
	Left	Thru	Right	Left	Thru	Right	Left	Thru	Right	Left	Thru	Right	
7:00 AM	0	0	0	0	1	0	0	0	0	0	0	1	2
7:15 AM	0	0	0	0	0	0	0	0	0	0	1	0	1
7:30 AM	0	0	0	0	1	0	0	0	0	0	1	0	2
7:45 AM	0	0	0	0	0	0	0	0	0	0	1	0	1
8:00 AM	0	0	0	0	0	0	0	0	0	0	0	0	0
8:15 AM	0	0	0	0	2	0	0	0	0	0	0	0	2
8:30 AM	0	0	0	0	2	0	0	0	0	0	1	0	3
8:45 AM	0	0	0	0	0	0	0	0	0	0	1	0	1
TOTAL VOLUMES:	0	0	0	0	6	0	0	0	0	0	5	1	12

	Southbound Eureka Street			Westbound Citrus Avenue			Northbound Eureka Street			Eastbound Brookside Avenue			
	Left	Thru	Right	Left	Thru	Right	Left	Thru	Right	Left	Thru	Right	
4:00 PM	0	0	0	0	0	0	0	0	0	0	0	0	0
4:15 PM	0	0	1	0	0	0	0	0	0	0	1	0	2
4:30 PM	0	0	0	0	1	0	0	0	0	0	0	0	1
4:45 PM	0	0	0	0	2	0	0	0	0	0	1	0	3
5:00 PM	0	0	0	0	0	0	0	0	0	1	0	0	1
5:15 PM	0	0	1	0	0	1	0	0	0	0	0	0	2
5:30 PM	0	0	0	0	0	0	0	0	0	0	1	0	1
5:45 PM	0	0	0	0	0	0	0	0	0	1	1	0	2
TOTAL VOLUMES:	0	0	2	0	3	1	0	0	0	2	4	0	12

Counts Unlimited, Inc.
PO Box 1178
Corona, CA 92878
951-268-6268

Counts Unlimited, Inc.
PO Box 1178
Corona, CA 92878
(951)268-6268

City of Redlands
N/S: 3rd Street
E/W: Redlands Boulevard
Weather: Clear

File Name : 09_RED_3rd_Redlands AM
Site Code : 05121330
Start Date : 7/7/2021
Page No : 1

Groups Printed- Total Volume

	3rd Street Southbound					Redlands Boulevard Westbound					Redlands Mall Driveway Northbound					Redlands Boulevard Eastbound							
Start Time	Left	Thru	Right	RTOR	App. Total	Left	Thru	Right	RTOR	App. Total	Left	Thru	Right	RTOR	App. Total	Left	Thru	Right	RTOR	App. Total	Exclu. Total	Inclu. Total	Int. Total
07:00 AM	0	0	0	0	0	2	52	1	0	55	2	0	0	0	2	0	31	0	0	31	0	88	88
07:15 AM	0	0	0	0	0	2	38	0	0	40	0	0	0	0	0	0	42	2	0	44	0	84	84
07:30 AM	0	0	2	1	2	0	66	0	0	66	1	0	1	1	2	0	58	0	0	58	2	128	130
07:45 AM	0	0	2	2	2	1	83	1	0	85	0	0	0	0	0	1	51	2	0	54	2	141	143
Total	0	0	4	3	4	5	239	2	0	246	3	0	1	1	4	1	182	4	0	187	4	441	445
08:00 AM	1	0	0	0	1	0	69	2	0	71	0	0	0	0	0	0	65	2	0	67	0	139	139
08:15 AM	0	0	0	0	0	0	69	1	0	70	0	0	0	0	0	0	56	3	0	59	0	129	129
08:30 AM	2	1	3	2	6	0	54	1	0	55	0	0	1	1	1	0	74	2	1	76	4	138	142
08:45 AM	1	0	0	0	1	3	98	0	0	101	1	0	0	0	1	1	89	2	0	92	0	195	195
Total	4	1	3	2	8	3	290	4	0	297	1	0	1	1	2	1	284	9	1	294	4	601	605
Grand Total	4	1	7	5	12	8	529	6	0	543	4	0	2	2	6	2	466	13	1	481	8	1042	1050
Apprch %	33.3	8.3	58.3			1.5	97.4	1.1			66.7	0	33.3			0.4	96.9	2.7					
Total %	0.4	0.1	0.7		1.2	0.8	50.8	0.6		52.1	0.4	0	0.2		0.6	0.2	44.7	1.2		46.2	0.8	99.2	

	3rd Street Southbound				Redlands Boulevard Westbound				Redlands Mall Driveway Northbound				Redlands Boulevard Eastbound				
Start Time	Left	Thru	Right	App. Total	Left	Thru	Right	App. Total	Left	Thru	Right	App. Total	Left	Thru	Right	App. Total	Int. Total
Peak Hour Analysis From 07:00 AM to 08:45 AM - Peak 1 of 1																	
Peak Hour for Entire Intersection Begins at 08:00 AM																	
08:00 AM	1	0	0	1	0	69	**2**	71	0	0	0	0	0	65	2	67	139
08:15 AM	0	0	0	0	0	69	1	70	0	0	0	0	0	56	**3**	59	129
08:30 AM	**2**	**1**	**3**	**6**	0	54	1	55	0	0	**1**	**1**	0	74	2	76	138
08:45 AM	1	0	0	1	**3**	**98**	0	**101**	**1**	0	0	1	**1**	**89**	2	**92**	**195**
Total Volume	4	1	3	8	3	290	4	297	1	0	1	2	1	284	9	294	601
% App. Total	50	12.5	37.5		1	97.6	1.3		50	0	50		0.3	96.6	3.1		
PHF	.500	.250	.250	.333	.250	.740	.500	.735	.250	.000	.250	.500	.250	.798	.750	.799	.771

Counts Unlimited, Inc.
PO Box 1178
Corona, CA 92878
(951)268-6268

City of Redlands
N/S: 3rd Street
E/W: Redlands Boulevard
Weather: Clear

File Name : 09_RED_3rd_Redlands AM
Site Code : 05121330
Start Date : 7/7/2021
Page No : 2

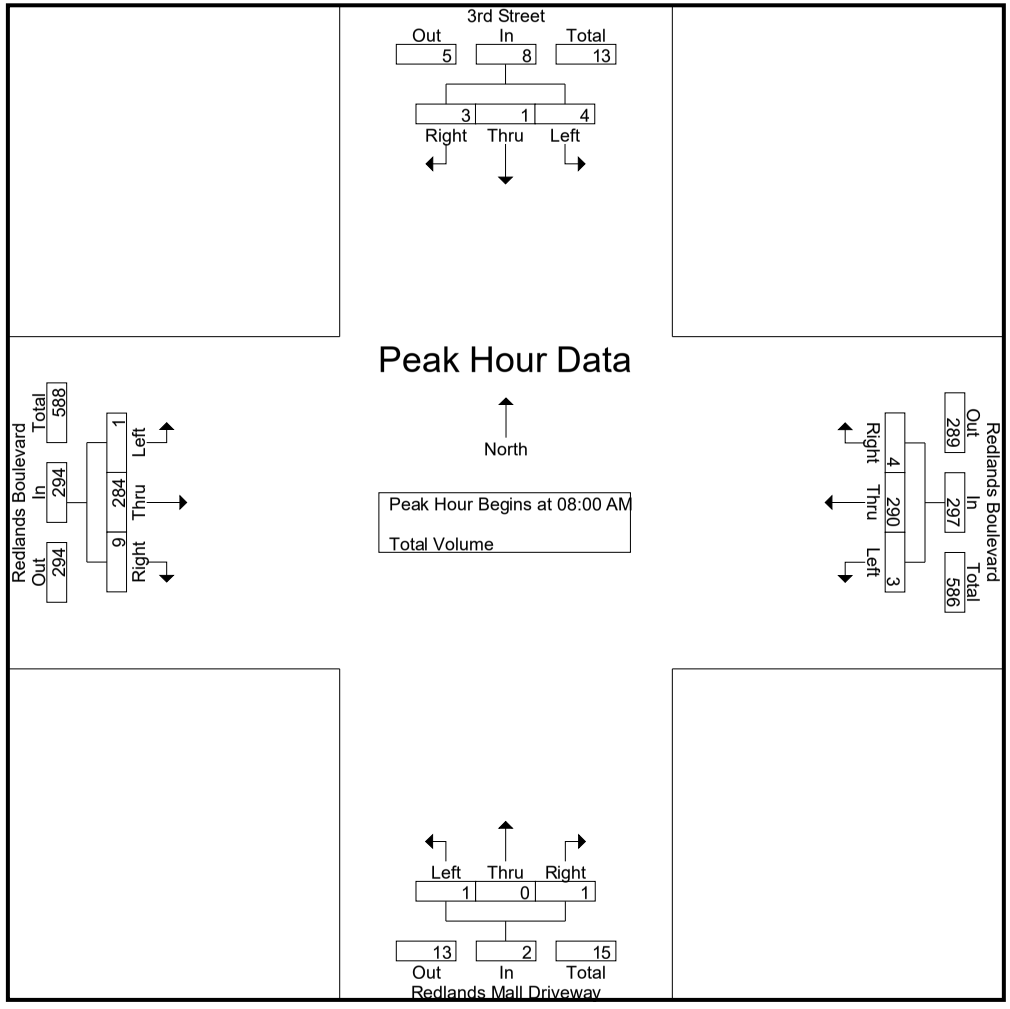

Counts Unlimited, Inc.
PO Box 1178
Corona, CA 92878
(951)268-6268

City of Redlands
N/S: 3rd Street
E/W: Redlands Boulevard
Weather: Clear

File Name : 09_RED_3rd_Redlands AM
Site Code : 05121330
Start Date : 7/7/2021
Page No : 3

	3rd Street Southbound				Redlands Boulevard Westbound				Redlands Mall Driveway Northbound				Redlands Boulevard Eastbound				
Start Time	Left	Thru	Right	App. Total	Left	Thru	Right	App. Total	Left	Thru	Right	App. Total	Left	Thru	Right	App. Total	Int. Total
Peak Hour Analysis From 07:00 AM to 08:45 AM - Peak 1 of 1																	
Peak Hour for Each Approach Begins at:																	
	07:45 AM				08:00 AM				07:00 AM				08:00 AM				
+0 mins.	0	0	2	2	0	69	**2**	71	**2**	0	0	**2**	0	65	2	67	
+15 mins.	1	0	0	1	0	69	1	70	0	0	0	0	0	56	**3**	59	
+30 mins.	0	0	0	0	0	54	1	55	1	0	**1**	2	0	74	2	76	
+45 mins.	**2**	**1**	**3**	**6**	**3**	**98**	0	**101**	0	0	0	0	**1**	**89**	2	**92**	
Total Volume	3	1	5	9	3	290	4	297	3	0	1	4	1	284	9	294	
% App. Total	33.3	11.1	55.6		1	97.6	1.3		75	0	25		0.3	96.6	3.1		
PHF	.375	.250	.417	.375	.250	.740	.500	.735	.375	.000	.250	.500	.250	.798	.750	.799	

Counts Unlimited, Inc.
PO Box 1178
Corona, CA 92878
(951)268-6268

City of Redlands
N/S: 3rd Street
E/W: Redlands Boulevard
Weather: Clear

File Name : 09_RED_3rd_Redlands PM
Site Code : 05121330
Start Date : 7/7/2021
Page No : 1

Groups Printed- Total Volume

	3rd Street Southbound					Redlands Boulevard Westbound					Redlands Mall Driveway Northbound					Redlands Boulevard Eastbound							
Start Time	Left	Thru	Right	RTOR	App. Total	Left	Thru	Right	RTOR	App. Total	Left	Thru	Right	RTOR	App. Total	Left	Thru	Right	RTOR	App. Total	Exclu. Total	Inclu. Total	Int. Total
04:00 PM	0	0	2	0	2	1	106	1	0	108	0	1	0	0	1	3	148	5	0	156	0	267	267
04:15 PM	0	0	1	1	1	2	85	0	0	87	1	0	1	0	2	0	160	4	0	164	1	254	255
04:30 PM	3	0	3	2	6	2	92	2	0	96	5	0	0	0	5	3	162	4	0	169	2	276	278
04:45 PM	3	0	3	3	6	2	78	0	0	80	4	0	1	1	5	1	167	5	0	173	4	264	268
Total	6	0	9	6	15	7	361	3	0	371	10	1	2	1	13	7	637	18	0	662	7	1061	1068
05:00 PM	1	0	1	0	2	3	76	2	0	81	1	1	3	1	5	2	179	5	1	186	2	274	276
05:15 PM	2	0	1	0	3	3	109	0	0	112	2	0	1	1	3	1	203	5	0	209	1	327	328
05:30 PM	2	0	1	1	3	1	68	2	0	71	0	0	1	1	1	1	174	6	0	181	2	256	258
05:45 PM	3	0	2	2	5	0	78	1	0	79	4	0	1	1	5	2	141	5	0	148	3	237	240
Total	8	0	5	3	13	7	331	5	0	343	7	1	6	4	14	6	697	21	1	724	8	1094	1102
Grand Total	14	0	14	9	28	14	692	8	0	714	17	2	8	5	27	13	1334	39	1	1386	15	2155	2170
Apprch %	50	0	50			2	96.9	1.1			63	7.4	29.6			0.9	96.2	2.8					
Total %	0.6	0	0.6		1.3	0.6	32.1	0.4		33.1	0.8	0.1	0.4		1.3	0.6	61.9	1.8		64.3	0.7	99.3	

	3rd Street Southbound				Redlands Boulevard Westbound				Redlands Mall Driveway Northbound				Redlands Boulevard Eastbound				
Start Time	Left	Thru	Right	App. Total	Left	Thru	Right	App. Total	Left	Thru	Right	App. Total	Left	Thru	Right	App. Total	Int. Total
Peak Hour Analysis From 04:00 PM to 05:45 PM - Peak 1 of 1																	
Peak Hour for Entire Intersection Begins at 04:30 PM																	
04:30 PM	**3**	0	**3**	**6**	2	92	**2**	96	**5**	0	0	**5**	**3**	162	4	169	276
04:45 PM	3	0	3	6	2	78	0	80	4	0	1	5	1	167	**5**	173	264
05:00 PM	1	0	1	2	**3**	76	2	81	1	**1**	**3**	5	2	179	5	186	274
05:15 PM	2	0	1	3	3	**109**	0	**112**	2	0	1	3	1	**203**	5	**209**	**327**
Total Volume	9	0	8	17	10	355	4	369	12	1	5	18	7	711	19	737	1141
% App. Total	52.9	0	47.1		2.7	96.2	1.1		66.7	5.6	27.8		0.9	96.5	2.6		
PHF	.750	.000	.667	.708	.833	.814	.500	.824	.600	.250	.417	.900	.583	.876	.950	.882	.872

Counts Unlimited, Inc.
PO Box 1178
Corona, CA 92878
(951)268-6268

City of Redlands
N/S: 3rd Street
E/W: Redlands Boulevard
Weather: Clear

File Name : 09_RED_3rd_Redlands PM
Site Code : 05121330
Start Date : 7/7/2021
Page No : 2

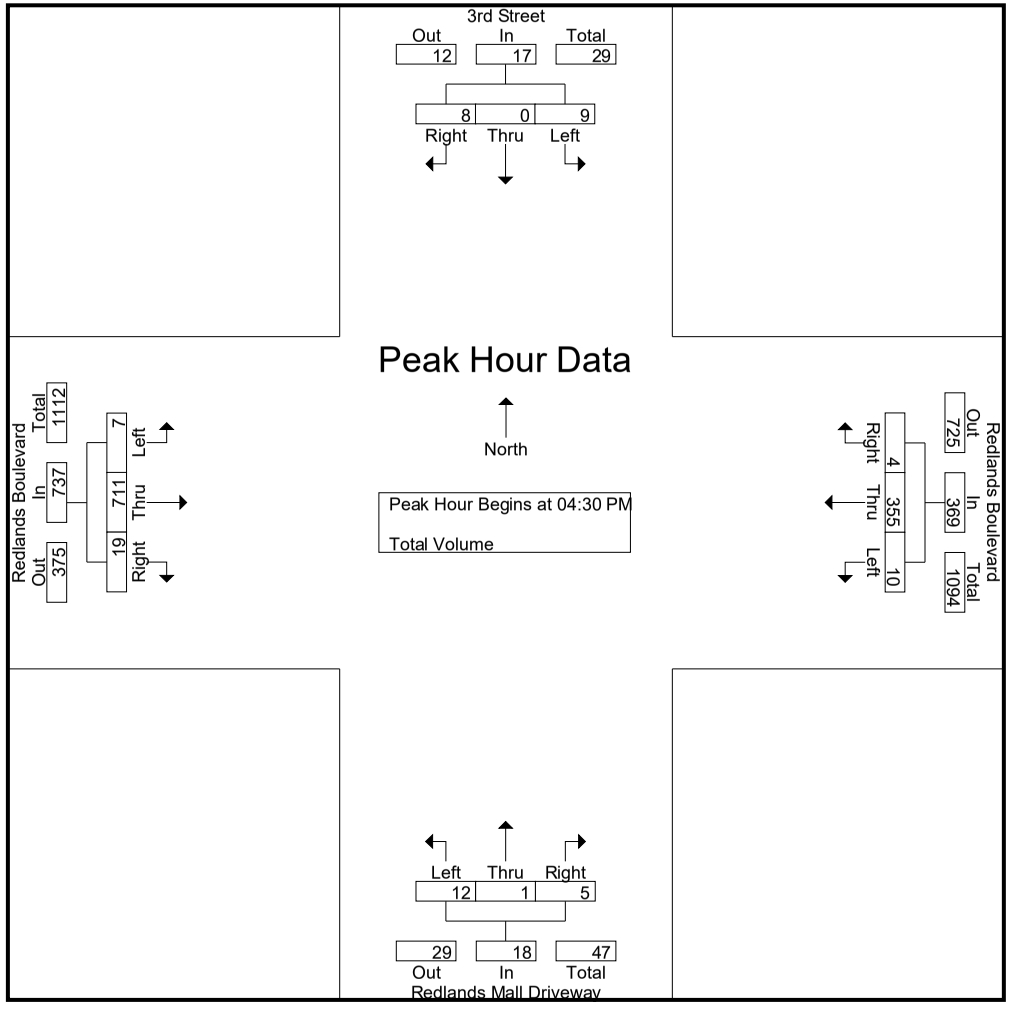

Counts Unlimited, Inc.
PO Box 1178
Corona, CA 92878
(951)268-6268

City of Redlands
N/S: 3rd Street
E/W: Redlands Boulevard
Weather: Clear

File Name : 09_RED_3rd_Redlands PM
Site Code : 05121330
Start Date : 7/7/2021
Page No : 3

	3rd Street Southbound				Redlands Boulevard Westbound				Redlands Mall Driveway Northbound				Redlands Boulevard Eastbound				
Start Time	Left	Thru	Right	App. Total	Left	Thru	Right	App. Total	Left	Thru	Right	App. Total	Left	Thru	Right	App. Total	Int. Total
Peak Hour Analysis From 04:00 PM to 05:45 PM - Peak 1 of 1																	
Peak Hour for Each Approach Begins at:																	
	04:30 PM				04:00 PM				04:30 PM				04:45 PM				
+0 mins.	**3**	0	**3**	**6**	1	**106**	1	**108**	**5**	0	0	**5**	1	167	5	173	
+15 mins.	3	0	3	6	**2**	85	0	87	4	0	1	5	**2**	179	5	186	
+30 mins.	1	0	1	2	2	92	**2**	96	1	**1**	**3**	5	1	**203**	5	**209**	
+45 mins.	2	0	1	3	2	78	0	80	2	0	1	3	1	174	**6**	181	
Total Volume	9	0	8	17	7	361	3	371	12	1	5	18	5	723	21	749	
% App. Total	52.9	0	47.1		1.9	97.3	0.8		66.7	5.6	27.8		0.7	96.5	2.8		
PHF	.750	.000	.667	.708	.875	.851	.375	.859	.600	.250	.417	.900	.625	.890	.875	.896	

Location: Redlands
N/S: 3rd Street
E/W: Redlands Boulevard

Date: 7/7/2021
Day: Wednesday

PEDESTRIANS

	North Leg 3rd Street	East Leg Redlands Boulevard	South Leg Redlands Mall Driveway	West Leg Redlands Boulevard	
	Pedestrians	Pedestrians	Pedestrians	Pedestrians	
7:00 AM	0	0	0	0	0
7:15 AM	0	1	1	0	2
7:30 AM	0	0	1	0	1
7:45 AM	0	3	0	0	3
8:00 AM	0	0	0	0	0
8:15 AM	2	0	0	1	3
8:30 AM	2	3	2	3	10
8:45 AM	0	0	0	0	0
TOTAL VOLUMES:	4	7	4	4	19

	North Leg 3rd Street	East Leg Redlands Boulevard	South Leg Redlands Mall Driveway	West Leg Redlands Boulevard	
	Pedestrians	Pedestrians	Pedestrians	Pedestrians	
4:00 PM	0	1	1	1	3
4:15 PM	0	0	1	1	2
4:30 PM	0	0	0	0	0
4:45 PM	0	0	0	0	0
5:00 PM	0	3	0	0	3
5:15 PM	0	0	0	0	0
5:30 PM	0	0	0	0	0
5:45 PM	7	1	0	0	8
TOTAL VOLUMES:	7	5	2	2	16

Counts Unlimited, Inc.
PO Box 1178
Corona, CA 92878
951-268-6268

Location: Redlands
N/S: 3rd Street
E/W: Redlands Boulevard

Date: 7/7/2021
Day: Wednesday

BICYCLES

	Southbound 3rd Street			Westbound Redlands Boulevard			Northbound Redlands Mall Driveway			Eastbound Redlands Boulevard			
	Left	Thru	Right	Left	Thru	Right	Left	Thru	Right	Left	Thru	Right	
7:00 AM	0	0	0	0	0	0	0	0	0	1	0	0	1
7:15 AM	0	0	0	0	0	0	0	0	0	0	0	0	0
7:30 AM	0	0	0	0	0	0	0	0	0	0	0	0	0
7:45 AM	0	0	0	0	0	0	0	0	0	0	0	1	1
8:00 AM	0	0	0	0	0	0	0	0	0	0	0	0	0
8:15 AM	0	0	0	0	0	0	0	0	0	0	0	0	0
8:30 AM	0	0	0	0	0	0	0	0	0	0	0	0	0
8:45 AM	0	0	0	0	0	0	0	0	0	1	0	0	1
TOTAL VOLUMES:	0	0	0	0	0	0	0	0	0	2	0	1	3

	Southbound 3rd Street			Westbound Redlands Boulevard			Northbound Redlands Mall Driveway			Eastbound Redlands Boulevard			
	Left	Thru	Right	Left	Thru	Right	Left	Thru	Right	Left	Thru	Right	
4:00 PM	0	0	0	0	0	0	0	0	0	0	0	0	0
4:15 PM	0	0	0	0	0	0	0	0	0	0	0	0	0
4:30 PM	0	0	0	0	0	0	0	0	0	0	0	0	0
4:45 PM	0	0	0	0	0	0	0	0	0	0	0	0	0
5:00 PM	0	0	0	0	0	0	0	0	1	0	0	0	1
5:15 PM	0	0	1	0	1	0	0	0	0	0	0	0	2
5:30 PM	0	0	0	0	0	0	0	0	0	0	0	0	0
5:45 PM	0	0	0	0	0	0	0	0	0	0	0	0	0
TOTAL VOLUMES:	0	0	1	0	1	0	0	0	1	0	0	0	3

Counts Unlimited, Inc.
PO Box 1178
Corona, CA 92878
951-268-6268

Counts Unlimited, Inc.
PO Box 1178
Corona, CA 92878
(951)268-6268

City of Redlands
N/S: 4th Street
E/W: Citrus Avenue
Weather: Clear

File Name : 11_RED_4th_Citrus AM
Site Code : 05121330
Start Date : 7/7/2021
Page No : 1

Groups Printed- Total Volume

	Redlands Mall Driveway Southbound					Citrus Avenue Westbound					4th Street Northbound					Citrus Avenue Eastbound							
Start Time	Left	Thru	Right	RTOR	App. Total	Left	Thru	Right	RTOR	App. Total	Left	Thru	Right	RTOR	App. Total	Left	Thru	Right	RTOR	App. Total	Exclu. Total	Inclu. Total	Int. Total
07:00 AM	0	0	2	0	2	2	45	2	0	49	0	0	2	0	2	0	44	4	0	48	0	101	101
07:15 AM	0	0	0	0	0	6	42	0	0	48	1	1	2	0	4	1	48	5	0	54	0	106	106
07:30 AM	0	0	1	0	1	11	54	2	0	67	0	0	1	0	1	1	63	12	0	76	0	145	145
07:45 AM	2	1	0	0	3	10	54	3	0	67	1	0	6	0	7	1	76	13	0	90	0	167	167
Total	2	1	3	0	6	29	195	7	0	231	2	1	11	0	14	3	231	34	0	268	0	519	519
08:00 AM	0	1	0	0	1	2	58	1	0	61	2	0	3	0	5	2	64	1	0	67	0	134	134
08:15 AM	0	0	5	0	5	2	53	1	0	56	2	0	4	0	6	4	37	3	0	44	0	111	111
08:30 AM	1	0	1	0	2	1	49	3	0	53	4	0	3	0	7	1	61	1	0	63	0	125	125
08:45 AM	2	1	2	0	5	1	50	6	0	57	0	0	4	0	4	4	61	1	0	66	0	132	132
Total	3	2	8	0	13	6	210	11	0	227	8	0	14	0	22	11	223	6	0	240	0	502	502
Grand Total	5	3	11	0	19	35	405	18	0	458	10	1	25	0	36	14	454	40	0	508	0	1021	1021
Apprch %	26.3	15.8	57.9			7.6	88.4	3.9			27.8	2.8	69.4			2.8	89.4	7.9					
Total %	0.5	0.3	1.1		1.9	3.4	39.7	1.8		44.9	1	0.1	2.4		3.5	1.4	44.5	3.9		49.8	0	100	

	Redlands Mall Driveway Southbound				Citrus Avenue Westbound				4th Street Northbound				Citrus Avenue Eastbound				
Start Time	Left	Thru	Right	App. Total	Left	Thru	Right	App. Total	Left	Thru	Right	App. Total	Left	Thru	Right	App. Total	Int. Total
Peak Hour Analysis From 07:00 AM to 08:45 AM - Peak 1 of 1																	
Peak Hour for Entire Intersection Begins at 07:30 AM																	
07:30 AM	0	0	1	1	**11**	54	2	**67**	0	0	1	1	1	63	12	76	145
07:45 AM	**2**	**1**	0	3	10	54	**3**	67	1	0	**6**	**7**	1	**76**	**13**	**90**	**167**
08:00 AM	0	1	0	1	2	**58**	1	61	**2**	0	3	5	2	64	1	67	134
08:15 AM	0	0	**5**	**5**	2	53	1	56	2	0	4	6	**4**	37	3	44	111
Total Volume	2	2	6	10	25	219	7	251	5	0	14	19	8	240	29	277	557
% App. Total	20	20	60		10	87.3	2.8		26.3	0	73.7		2.9	86.6	10.5		
PHF	.250	.500	.300	.500	.568	.944	.583	.937	.625	.000	.583	.679	.500	.789	.558	.769	.834

Counts Unlimited, Inc.
PO Box 1178
Corona, CA 92878
(951)268-6268

City of Redlands
N/S: 4th Street
E/W: Citrus Avenue
Weather: Clear

File Name : 11_RED_4th_Citrus AM
Site Code : 05121330
Start Date : 7/7/2021
Page No : 2

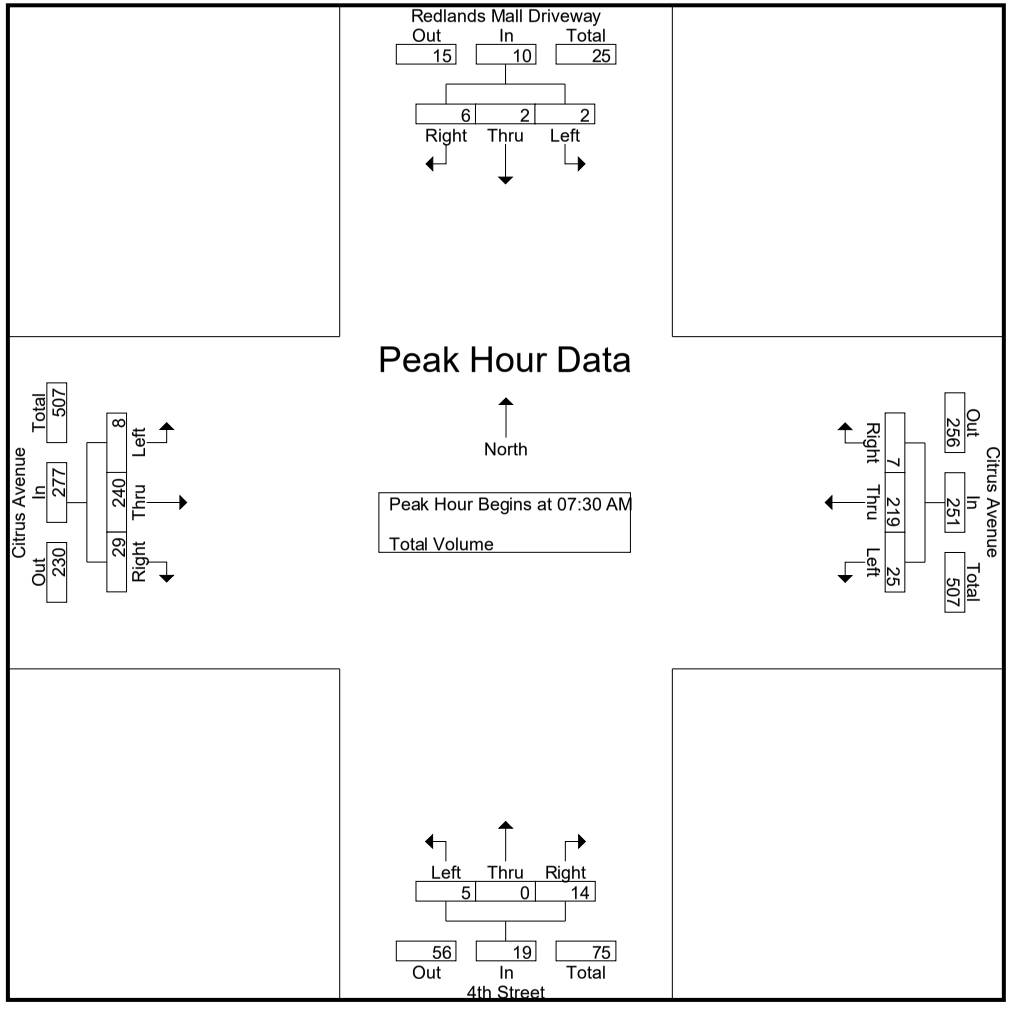

Counts Unlimited, Inc.
PO Box 1178
Corona, CA 92878
(951)268-6268

City of Redlands
N/S: 4th Street
E/W: Citrus Avenue
Weather: Clear

File Name : 11_RED_4th_Citrus AM
Site Code : 05121330
Start Date : 7/7/2021
Page No : 3

	Redlands Mall Driveway Southbound				Citrus Avenue Westbound				4th Street Northbound				Citrus Avenue Eastbound				
Start Time	Left	Thru	Right	App. Total	Left	Thru	Right	App. Total	Left	Thru	Right	App. Total	Left	Thru	Right	App. Total	Int. Total
Peak Hour Analysis From 07:00 AM to 08:45 AM - Peak 1 of 1																	
Peak Hour for Each Approach Begins at:																	
	08:00 AM				07:30 AM				07:45 AM				07:15 AM				
+0 mins.	0	**1**	0	1	**11**	54	2	**67**	1	0	**6**	**7**	1	48	5	54	
+15 mins.	0	0	**5**	**5**	10	54	**3**	67	2	0	3	5	1	63	12	76	
+30 mins.	1	0	1	2	2	**58**	1	61	2	0	4	6	1	**76**	**13**	**90**	
+45 mins.	**2**	1	2	5	2	53	1	56	**4**	0	3	7	**2**	64	1	67	
Total Volume	3	2	8	13	25	219	7	251	9	0	16	25	5	251	31	287	
% App. Total	23.1	15.4	61.5		10	87.3	2.8		36	0	64		1.7	87.5	10.8		
PHF	.375	.500	.400	.650	.568	.944	.583	.937	.563	.000	.667	.893	.625	.826	.596	.797	

Counts Unlimited, Inc.
PO Box 1178
Corona, CA 92878
(951)268-6268

City of Redlands
N/S: 4th Street
E/W: Citrus Avenue
Weather: Clear

File Name : 11_RED_4th_Citrus PM
Site Code : 05121330
Start Date : 7/7/2021
Page No : 1

Groups Printed- Total Volume

	Redlands Mall Driveway Southbound					Citrus Avenue Westbound					4th Street Northbound					Citrus Avenue Eastbound							
Start Time	Left	Thru	Right	RTOR	App. Total	Left	Thru	Right	RTOR	App. Total	Left	Thru	Right	RTOR	App. Total	Left	Thru	Right	RTOR	App. Total	Exclu. Total	Inclu. Total	Int. Total
04:00 PM	4	1	5	0	10	1	53	4	0	58	2	0	9	0	11	7	120	3	0	130	0	209	209
04:15 PM	9	0	6	0	15	2	60	3	0	65	0	1	9	0	10	11	113	1	0	125	0	215	215
04:30 PM	1	2	8	0	11	0	61	2	0	63	3	1	8	0	12	2	116	0	0	118	0	204	204
04:45 PM	4	0	4	0	8	1	72	6	0	79	1	0	8	0	9	3	123	2	0	128	0	224	224
Total	18	3	23	0	44	4	246	15	0	265	6	2	34	0	42	23	472	6	0	501	0	852	852
05:00 PM	3	1	6	0	10	2	68	7	0	77	7	0	35	0	42	7	118	0	0	125	0	254	254
05:15 PM	8	0	5	0	13	2	77	3	0	82	1	2	13	0	16	4	118	2	0	124	0	235	235
05:30 PM	4	2	7	0	13	2	72	1	0	75	2	1	10	0	13	4	104	1	0	109	0	210	210
05:45 PM	5	0	4	0	9	0	68	7	0	75	1	1	4	0	6	3	80	1	0	84	0	174	174
Total	20	3	22	0	45	6	285	18	0	309	11	4	62	0	77	18	420	4	0	442	0	873	873
Grand Total	38	6	45	0	89	10	531	33	0	574	17	6	96	0	119	41	892	10	0	943	0	1725	1725
Apprch %	42.7	6.7	50.6			1.7	92.5	5.7			14.3	5	80.7			4.3	94.6	1.1					
Total %	2.2	0.3	2.6		5.2	0.6	30.8	1.9		33.3	1	0.3	5.6		6.9	2.4	51.7	0.6		54.7	0	100	

	Redlands Mall Driveway Southbound				Citrus Avenue Westbound				4th Street Northbound				Citrus Avenue Eastbound				
Start Time	Left	Thru	Right	App. Total	Left	Thru	Right	App. Total	Left	Thru	Right	App. Total	Left	Thru	Right	App. Total	Int. Total
Peak Hour Analysis From 04:00 PM to 05:45 PM - Peak 1 of 1																	
Peak Hour for Entire Intersection Begins at 04:45 PM																	
04:45 PM	4	0	4	8	1	72	6	79	1	0	8	9	3	**123**	**2**	**128**	224
05:00 PM	3	1	6	10	**2**	68	**7**	77	**7**	0	**35**	**42**	**7**	118	0	125	**254**
05:15 PM	**8**	0	5	**13**	2	**77**	3	**82**	1	**2**	13	16	4	118	2	124	235
05:30 PM	4	**2**	**7**	13	2	72	1	75	2	1	10	13	4	104	1	109	210
Total Volume	19	3	22	44	7	289	17	313	11	3	66	80	18	463	5	486	923
% App. Total	43.2	6.8	50		2.2	92.3	5.4		13.8	3.8	82.5		3.7	95.3	1		
PHF	.594	.375	.786	.846	.875	.938	.607	.954	.393	.375	.471	.476	.643	.941	.625	.949	.908

Counts Unlimited, Inc.
PO Box 1178
Corona, CA 92878
(951)268-6268

City of Redlands
N/S: 4th Street
E/W: Citrus Avenue
Weather: Clear

File Name : 11_RED_4th_Citrus PM
Site Code : 05121330
Start Date : 7/7/2021
Page No : 2

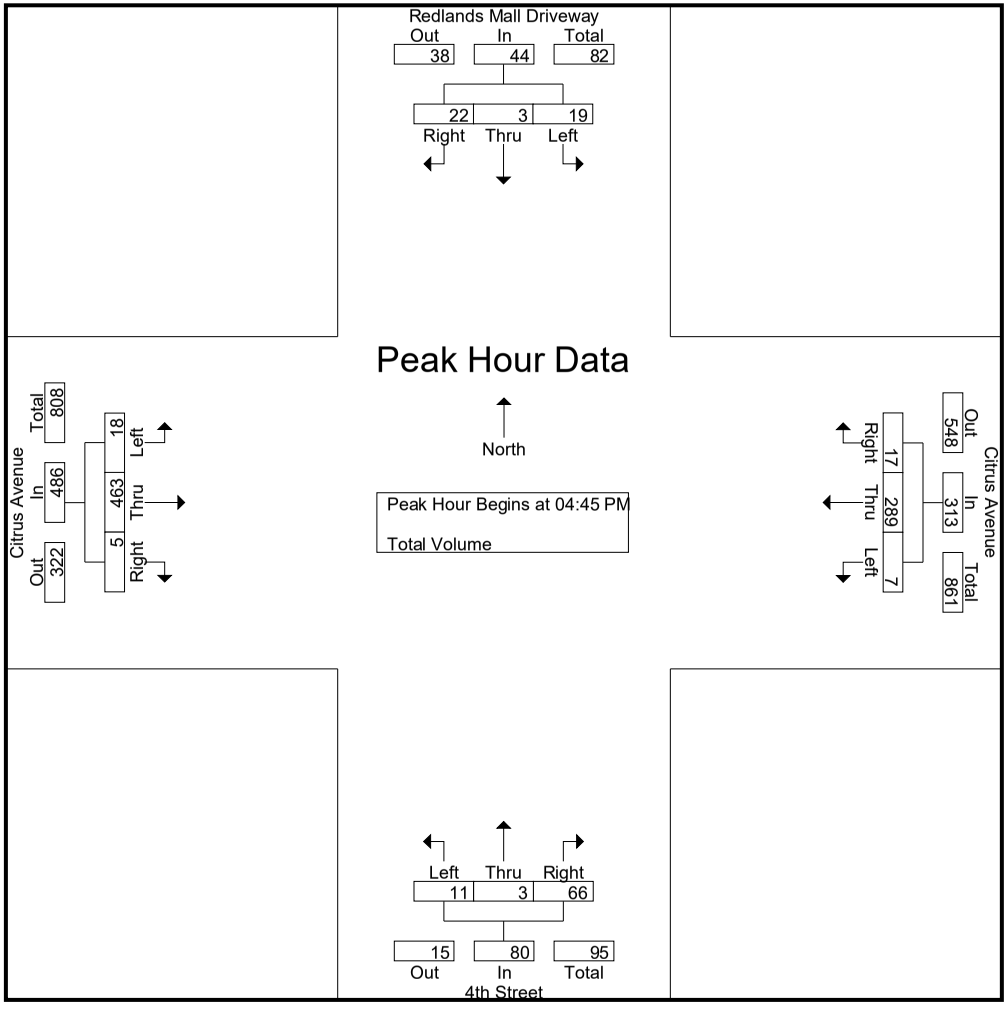

Counts Unlimited, Inc.
PO Box 1178
Corona, CA 92878
(951)268-6268

City of Redlands
N/S: 4th Street
E/W: Citrus Avenue
Weather: Clear

File Name : 11_RED_4th_Citrus PM
Site Code : 05121330
Start Date : 7/7/2021
Page No : 3

	Redlands Mall Driveway Southbound				Citrus Avenue Westbound				4th Street Northbound				Citrus Avenue Eastbound				
Start Time	Left	Thru	Right	App. Total	Left	Thru	Right	App. Total	Left	Thru	Right	App. Total	Left	Thru	Right	App. Total	Int. Total
Peak Hour Analysis From 04:00 PM to 05:45 PM - Peak 1 of 1																	
Peak Hour for Each Approach Begins at:																	
	05:00 PM				04:45 PM				04:45 PM				04:00 PM				
+0 mins.	3	1	6	10	1	72	6	79	1	0	8	9	7	120	**3**	**130**	
+15 mins.	**8**	0	5	**13**	**2**	68	**7**	77	**7**	0	**35**	**42**	**11**	113	1	125	
+30 mins.	4	**2**	**7**	13	2	**77**	3	**82**	1	**2**	13	16	2	116	0	118	
+45 mins.	5	0	4	9	2	72	1	75	2	1	10	13	3	**123**	2	128	
Total Volume	20	3	22	45	7	289	17	313	11	3	66	80	23	472	6	501	
% App. Total	44.4	6.7	48.9		2.2	92.3	5.4		13.8	3.8	82.5		4.6	94.2	1.2		
PHF	.625	.375	.786	.865	.875	.938	.607	.954	.393	.375	.471	.476	.523	.959	.500	.963	

Location: Redlands
N/S: 4th Street
E/W: Citrus Avenue

Date: 7/7/2021
Day: Wednesday

PEDESTRIANS

	North Leg Redlands Mall Driveway	East Leg Citrus Avenue	South Leg 4th Street	West Leg Citrus Avenue	
	Pedestrians	Pedestrians	Pedestrians	Pedestrians	
7:00 AM	0	0	1	0	1
7:15 AM	1	0	1	0	2
7:30 AM	1	0	3	0	4
7:45 AM	0	0	2	0	2
8:00 AM	3	1	2	0	6
8:15 AM	2	1	1	0	4
8:30 AM	4	1	2	2	9
8:45 AM	2	0	1	0	3
TOTAL VOLUMES:	13	3	13	2	31

	North Leg Redlands Mall Driveway	East Leg Citrus Avenue	South Leg 4th Street	West Leg Citrus Avenue	
	Pedestrians	Pedestrians	Pedestrians	Pedestrians	
4:00 PM	0	0	1	0	1
4:15 PM	0	1	0	0	1
4:30 PM	1	1	0	0	2
4:45 PM	0	0	1	0	1
5:00 PM	1	0	0	0	1
5:15 PM	0	0	2	0	2
5:30 PM	1	0	1	0	2
5:45 PM	0	0	0	0	0
TOTAL VOLUMES:	3	2	5	0	10

Counts Unlimited, Inc.
PO Box 1178
Corona, CA 92878
951-268-6268

Location: Redlands
N/S: 4th Street
E/W: Citrus Avenue

Date: 7/7/2021
Day: Wednesday

BICYCLES

	Southbound Redlands Mall Driveway			Westbound Citrus Avenue			Northbound 4th Street			Eastbound Citrus Avenue			
	Left	Thru	Right	Left	Thru	Right	Left	Thru	Right	Left	Thru	Right	
7:00 AM	0	0	0	0	1	0	0	0	0	0	0	0	1
7:15 AM	0	0	0	0	0	0	0	0	0	0	1	0	1
7:30 AM	0	0	0	0	1	0	0	0	0	0	1	0	2
7:45 AM	0	0	0	0	0	0	0	1	0	0	1	0	2
8:00 AM	0	0	0	0	0	0	0	0	0	0	0	0	0
8:15 AM	0	0	0	0	1	0	1	0	0	0	0	0	2
8:30 AM	0	0	0	0	2	0	0	0	0	0	1	0	3
8:45 AM	0	0	0	0	0	0	0	0	0	0	1	0	1
TOTAL VOLUMES:	0	0	0	0	5	0	1	1	0	0	5	0	12

	Southbound Redlands Mall Driveway			Westbound Citrus Avenue			Northbound 4th Street			Eastbound Citrus Avenue			
	Left	Thru	Right	Left	Thru	Right	Left	Thru	Right	Left	Thru	Right	
4:00 PM	0	0	0	0	0	0	0	0	0	0	0	0	0
4:15 PM	0	0	0	0	0	0	0	0	0	0	1	0	1
4:30 PM	0	0	0	0	1	0	0	0	0	0	0	0	1
4:45 PM	0	0	0	0	2	0	0	0	0	0	1	0	3
5:00 PM	0	0	0	0	0	0	0	0	0	0	0	0	0
5:15 PM	0	0	0	0	1	0	0	0	0	0	0	0	1
5:30 PM	0	0	0	0	0	0	0	0	0	0	1	0	1
5:45 PM	0	0	0	0	0	0	0	0	0	0	1	0	1
TOTAL VOLUMES:	0	0	0	0	4	0	0	0	0	0	4	0	8

Counts Unlimited, Inc.
PO Box 1178
Corona, CA 92878
951-268-6268

Counts Unlimited, Inc.
PO Box 1178
Corona, CA 92878
(951)268-6268

City of Redlands
N/S: Orange Street
E/W: I-10 Westbound On Ramps
Weather: Clear

File Name : 14_RED_Orange_10W AM
Site Code : 05121330
Start Date : 7/7/2021
Page No : 1

Groups Printed- Passenger Vehicles - Large 2 Axle Vehicles - 3 Axle Vehicles - 4+ Axle Trucks

	Orange Street Southbound				I-10 Westbound On Ramp Westbound				Orange Street Northbound				I-10 Westbound On Ramp Eastbound				
Start Time	Left	Thru	Right	App. Total	Left	Thru	Right	App. Total	Left	Thru	Right	App. Total	Left	Thru	Right	App. Total	Int. Total
07:00 AM	0	29	129	158	0	0	0	0	0	34	88	122	0	0	0	0	280
07:15 AM	0	32	95	127	0	0	0	0	0	55	69	124	0	0	0	0	251
07:30 AM	0	58	144	202	0	0	0	0	0	54	115	169	0	0	0	0	371
07:45 AM	0	68	119	187	0	0	0	0	0	43	107	150	0	0	0	0	337
Total	0	187	487	674	0	0	0	0	0	186	379	565	0	0	0	0	1239
08:00 AM	0	78	99	177	0	0	0	0	0	38	101	139	0	0	0	0	316
08:15 AM	0	51	75	126	0	0	0	0	0	52	108	160	0	0	0	0	286
08:30 AM	0	55	84	139	0	0	0	0	0	77	114	191	0	0	0	0	330
08:45 AM	0	69	75	144	0	0	0	0	0	57	86	143	0	0	0	0	287
Total	0	253	333	586	0	0	0	0	0	224	409	633	0	0	0	0	1219
Grand Total	0	440	820	1260	0	0	0	0	0	410	788	1198	0	0	0	0	2458
Apprch %	0	34.9	65.1		0	0	0		0	34.2	65.8		0	0	0		
Total %	0	17.9	33.4	51.3	0	0	0	0	0	16.7	32.1	48.7	0	0	0	0	
Passenger Vehicles	0	431	792	1223	0	0	0	0	0	389	758	1147	0	0	0	0	2370
% Passenger Vehicles	0	98	96.6	97.1	0	0	0	0	0	94.9	96.2	95.7	0	0	0	0	96.4
Large 2 Axle Vehicles	0	8	14	22	0	0	0	0	0	9	24	33	0	0	0	0	55
% Large 2 Axle Vehicles	0	1.8	1.7	1.7	0	0	0	0	0	2.2	3	2.8	0	0	0	0	2.2
3 Axle Vehicles	0	0	7	7	0	0	0	0	0	2	2	4	0	0	0	0	11
% 3 Axle Vehicles	0	0	0.9	0.6	0	0	0	0	0	0.5	0.3	0.3	0	0	0	0	0.4
4+ Axle Trucks	0	1	7	8	0	0	0	0	0	10	4	14	0	0	0	0	22
% 4+ Axle Trucks	0	0.2	0.9	0.6	0	0	0	0	0	2.4	0.5	1.2	0	0	0	0	0.9

	Orange Street Southbound				I-10 Westbound On Ramp Westbound				Orange Street Northbound				I-10 Westbound On Ramp Eastbound				
Start Time	Left	Thru	Right	App. Total	Left	Thru	Right	App. Total	Left	Thru	Right	App. Total	Left	Thru	Right	App. Total	Int. Total
Peak Hour Analysis From 07:00 AM to 08:45 AM - Peak 1 of 1																	
Peak Hour for Entire Intersection Begins at 07:30 AM																	
07:30 AM	0	58	**144**	**202**	0	0	0	0	0	**54**	**115**	**169**	0	0	0	0	**371**
07:45 AM	0	68	119	187	0	0	0	0	0	43	107	150	0	0	0	0	337
08:00 AM	0	**78**	99	177	0	0	0	0	0	38	101	139	0	0	0	0	316
08:15 AM	0	51	75	126	0	0	0	0	0	52	108	160	0	0	0	0	286
Total Volume	0	255	437	692	0	0	0	0	0	187	431	618	0	0	0	0	1310
% App. Total	0	36.8	63.2		0	0	0		0	30.3	69.7		0	0	0		
PHF	.000	.817	.759	.856	.000	.000	.000	.000	.000	.866	.937	.914	.000	.000	.000	.000	.883

Counts Unlimited, Inc.
PO Box 1178
Corona, CA 92878
(951)268-6268

City of Redlands
N/S: Orange Street
E/W: I-10 Westbound On Ramps
Weather: Clear

File Name : 14_RED_Orange_10W AM
Site Code : 05121330
Start Date : 7/7/2021
Page No : 2

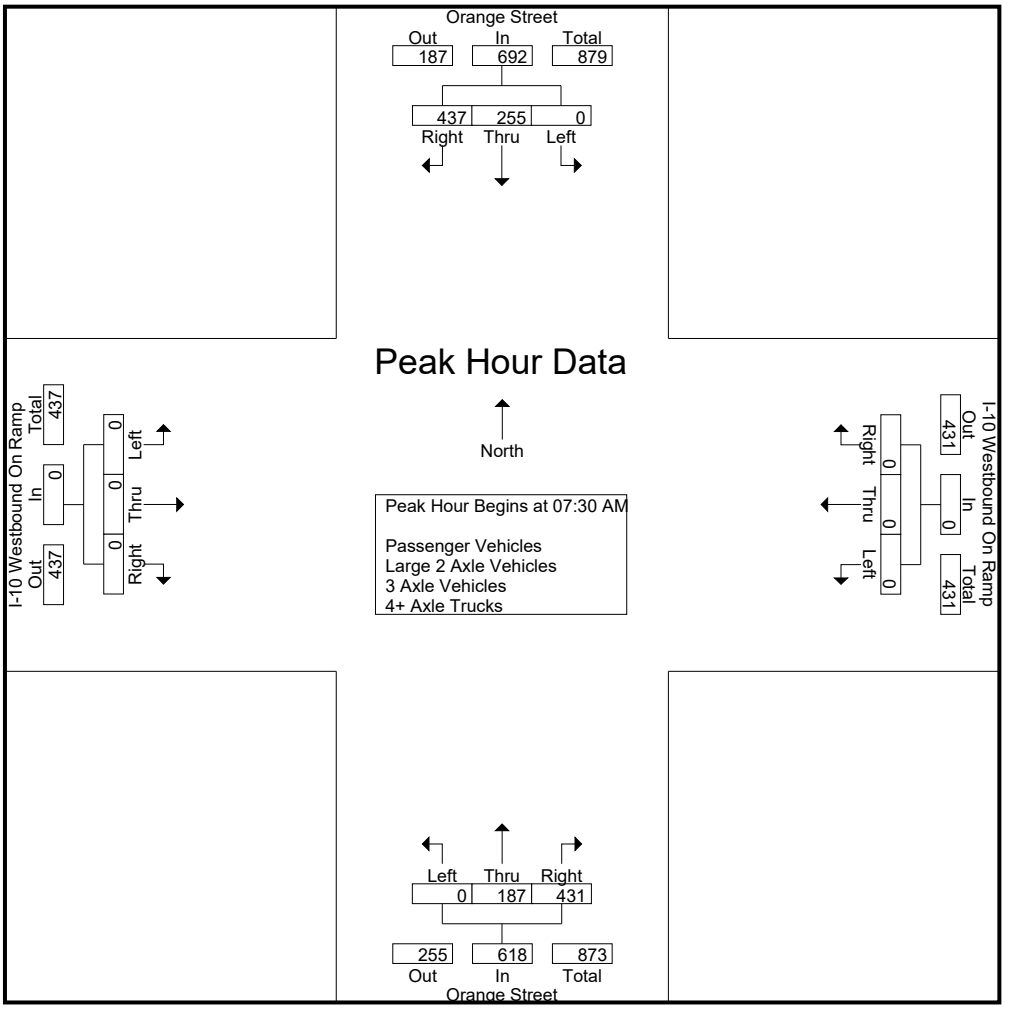

Peak Hour Analysis From 07:00 AM to 08:45 AM - Peak 1 of 1
Peak Hour for Each Approach Begins at:

	07:15 AM				07:00 AM				07:45 AM				07:00 AM			
+0 mins.	0	32	95	127	0	0	0	0	0	43	107	150	0	0	0	0
+15 mins.	0	58	**144**	**202**	0	0	0	0	0	38	101	139	0	0	0	0
+30 mins.	0	68	119	187	0	0	0	0	0	52	108	160	0	0	0	0
+45 mins.	0	**78**	99	177	0	0	0	0	0	**77**	**114**	**191**	0	0	0	0
Total Volume	0	236	457	693	0	0	0	0	0	210	430	640	0	0	0	0
% App. Total	0	34.1	65.9		0	0	0		0	32.8	67.2		0	0	0	
PHF	.000	.756	.793	.858	.000	.000	.000	.000	.000	.682	.943	.838	.000	.000	.000	.000

Counts Unlimited, Inc.
PO Box 1178
Corona, CA 92878
(951)268-6268

City of Redlands
N/S: Orange Street
E/W: I-10 Westbound On Ramps
Weather: Clear

File Name : 14_RED_Orange_10W AM
Site Code : 05121330
Start Date : 7/7/2021
Page No : 1

Groups Printed- Passenger Vehicles

	Orange Street Southbound				I-10 Westbound On Ramp Westbound				Orange Street Northbound				I-10 Westbound On Ramp Eastbound				
Start Time	Left	Thru	Right	App. Total	Left	Thru	Right	App. Total	Left	Thru	Right	App. Total	Left	Thru	Right	App. Total	Int. Total
07:00 AM	0	29	125	154	0	0	0	0	0	30	85	115	0	0	0	0	269
07:15 AM	0	30	93	123	0	0	0	0	0	52	66	118	0	0	0	0	241
07:30 AM	0	57	142	199	0	0	0	0	0	52	111	163	0	0	0	0	362
07:45 AM	0	67	112	179	0	0	0	0	0	42	104	146	0	0	0	0	325
Total	0	183	472	655	0	0	0	0	0	176	366	542	0	0	0	0	1197
08:00 AM	0	76	94	170	0	0	0	0	0	36	97	133	0	0	0	0	303
08:15 AM	0	49	74	123	0	0	0	0	0	49	102	151	0	0	0	0	274
08:30 AM	0	54	80	134	0	0	0	0	0	73	110	183	0	0	0	0	317
08:45 AM	0	69	72	141	0	0	0	0	0	55	83	138	0	0	0	0	279
Total	0	248	320	568	0	0	0	0	0	213	392	605	0	0	0	0	1173
Grand Total	0	431	792	1223	0	0	0	0	0	389	758	1147	0	0	0	0	2370
Apprch %	0	35.2	64.8		0	0	0		0	33.9	66.1		0	0	0		
Total %	0	18.2	33.4	51.6	0	0	0	0	0	16.4	32	48.4	0	0	0	0	

	Orange Street Southbound				I-10 Westbound On Ramp Westbound				Orange Street Northbound				I-10 Westbound On Ramp Eastbound				
Start Time	Left	Thru	Right	App. Total	Left	Thru	Right	App. Total	Left	Thru	Right	App. Total	Left	Thru	Right	App. Total	Int. Total
Peak Hour Analysis From 07:30 AM to 08:15 AM - Peak 1 of 1																	
Peak Hour for Entire Intersection Begins at 07:30 AM																	
07:30 AM	0	57	**142**	**199**	0	0	0	0	0	**52**	**111**	**163**	0	0	0	0	**362**
07:45 AM	0	67	112	179	0	0	0	0	0	42	104	146	0	0	0	0	325
08:00 AM	0	**76**	94	170	0	0	0	0	0	36	97	133	0	0	0	0	303
08:15 AM	0	49	74	123	0	0	0	0	0	49	102	151	0	0	0	0	274
Total Volume	0	249	422	671	0	0	0	0	0	179	414	593	0	0	0	0	1264
% App. Total	0	37.1	62.9		0	0	0		0	30.2	69.8		0	0	0		
PHF	.000	.819	.743	.843	.000	.000	.000	.000	.000	.861	.932	.910	.000	.000	.000	.000	.873

Counts Unlimited, Inc.
PO Box 1178
Corona, CA 92878
(951)268-6268

City of Redlands
N/S: Orange Street
E/W: I-10 Westbound On Ramps
Weather: Clear

File Name : 14_RED_Orange_10W AM
Site Code : 05121330
Start Date : 7/7/2021
Page No : 2

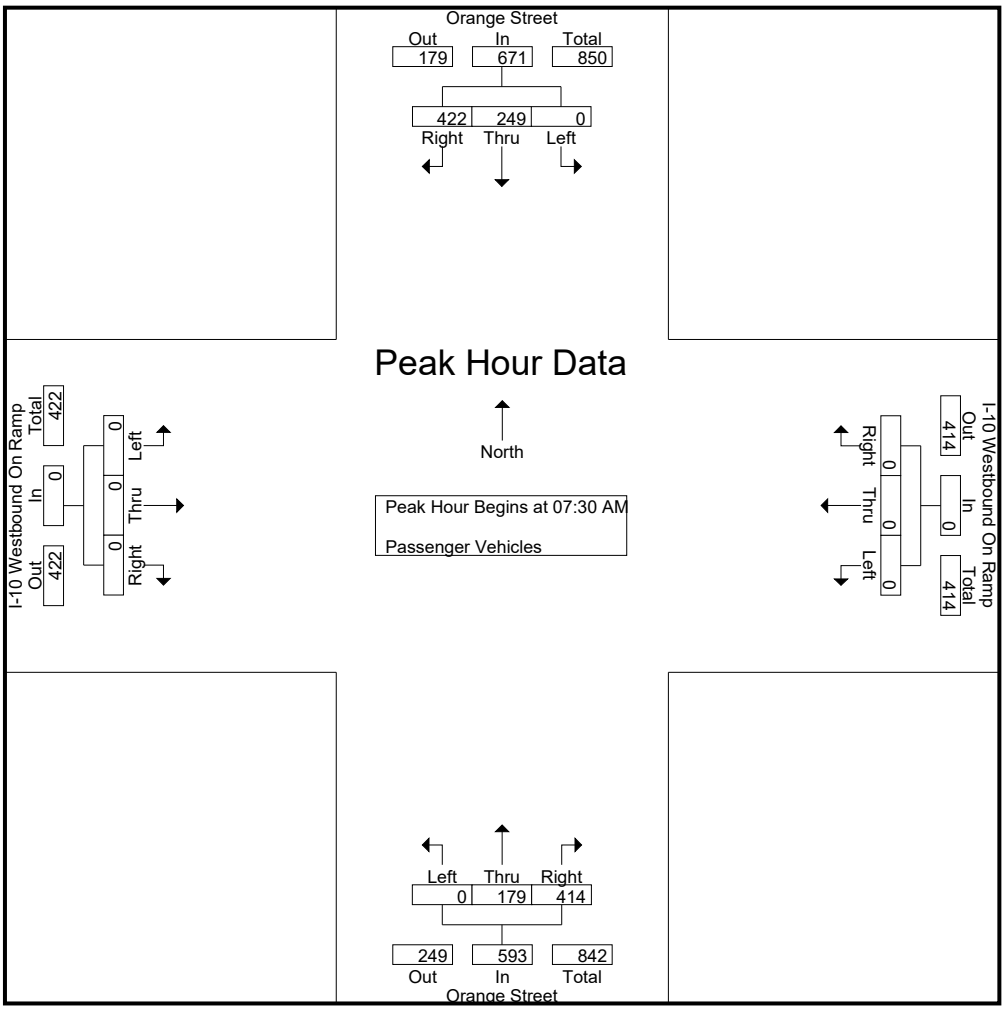

Peak Hour Analysis From 07:30 AM to 08:15 AM - Peak 1 of 1
Peak Hour for Each Approach Begins at:

	07:30 AM				07:30 AM				07:30 AM				07:30 AM			
+0 mins.	0	57	**142**	**199**	0	0	0	0	0	**52**	**111**	**163**	0	0	0	0
+15 mins.	0	67	112	179	0	0	0	0	0	42	104	146	0	0	0	0
+30 mins.	0	**76**	94	170	0	0	0	0	0	36	97	133	0	0	0	0
+45 mins.	0	49	74	123	0	0	0	0	0	49	102	151	0	0	0	0
Total Volume	0	249	422	671	0	0	0	0	0	179	414	593	0	0	0	0
% App. Total	0	37.1	62.9		0	0	0		0	30.2	69.8		0	0	0	
PHF	.000	.819	.743	.843	.000	.000	.000	.000	.000	.861	.932	.910	.000	.000	.000	.000

Counts Unlimited, Inc.
PO Box 1178
Corona, CA 92878
(951)268-6268

City of Redlands
N/S: Orange Street
E/W: I-10 Westbound On Ramps
Weather: Clear

File Name : 14_RED_Orange_10W AM
Site Code : 05121330
Start Date : 7/7/2021
Page No : 1

Groups Printed- Large 2 Axle Vehicles

	Orange Street Southbound				I-10 Westbound On Ramp Westbound				Orange Street Northbound				I-10 Westbound On Ramp Eastbound				
Start Time	Left	Thru	Right	App. Total	Left	Thru	Right	App. Total	Left	Thru	Right	App. Total	Left	Thru	Right	App. Total	Int. Total
07:00 AM	0	0	2	2	0	0	0	0	0	2	2	4	0	0	0	0	6
07:15 AM	0	2	1	3	0	0	0	0	0	2	3	5	0	0	0	0	8
07:30 AM	0	1	0	1	0	0	0	0	0	1	4	5	0	0	0	0	6
07:45 AM	0	1	5	6	0	0	0	0	0	0	2	2	0	0	0	0	8
Total	0	4	8	12	0	0	0	0	0	5	11	16	0	0	0	0	28
08:00 AM	0	2	1	3	0	0	0	0	0	1	3	4	0	0	0	0	7
08:15 AM	0	1	1	2	0	0	0	0	0	2	4	6	0	0	0	0	8
08:30 AM	0	1	2	3	0	0	0	0	0	1	3	4	0	0	0	0	7
08:45 AM	0	0	2	2	0	0	0	0	0	0	3	3	0	0	0	0	5
Total	0	4	6	10	0	0	0	0	0	4	13	17	0	0	0	0	27
Grand Total	0	8	14	22	0	0	0	0	0	9	24	33	0	0	0	0	55
Apprch %	0	36.4	63.6		0	0	0		0	27.3	72.7		0	0	0		
Total %	0	14.5	25.5	40	0	0	0	0	0	16.4	43.6	60	0	0	0	0	

	Orange Street Southbound				I-10 Westbound On Ramp Westbound				Orange Street Northbound				I-10 Westbound On Ramp Eastbound				
Start Time	Left	Thru	Right	App. Total	Left	Thru	Right	App. Total	Left	Thru	Right	App. Total	Left	Thru	Right	App. Total	Int. Total
Peak Hour Analysis From 07:30 AM to 08:15 AM - Peak 1 of 1																	
Peak Hour for Entire Intersection Begins at 07:30 AM																	
07:30 AM	0	1	0	1	0	0	0	0	0	1	**4**	5	0	0	0	0	6
07:45 AM	0	1	**5**	**6**	0	0	0	0	0	0	2	2	0	0	0	0	**8**
08:00 AM	0	**2**	1	3	0	0	0	0	0	1	3	4	0	0	0	0	7
08:15 AM	0	1	1	2	0	0	0	0	0	**2**	4	**6**	0	0	0	0	8
Total Volume	0	5	7	12	0	0	0	0	0	4	13	17	0	0	0	0	29
% App. Total	0	41.7	58.3		0	0	0		0	23.5	76.5		0	0	0		
PHF	.000	.625	.350	.500	.000	.000	.000	.000	.000	.500	.813	.708	.000	.000	.000	.000	.906

Counts Unlimited, Inc.
PO Box 1178
Corona, CA 92878
(951)268-6268

City of Redlands
N/S: Orange Street
E/W: I-10 Westbound On Ramps
Weather: Clear

File Name : 14_RED_Orange_10W AM
Site Code : 05121330
Start Date : 7/7/2021
Page No : 2

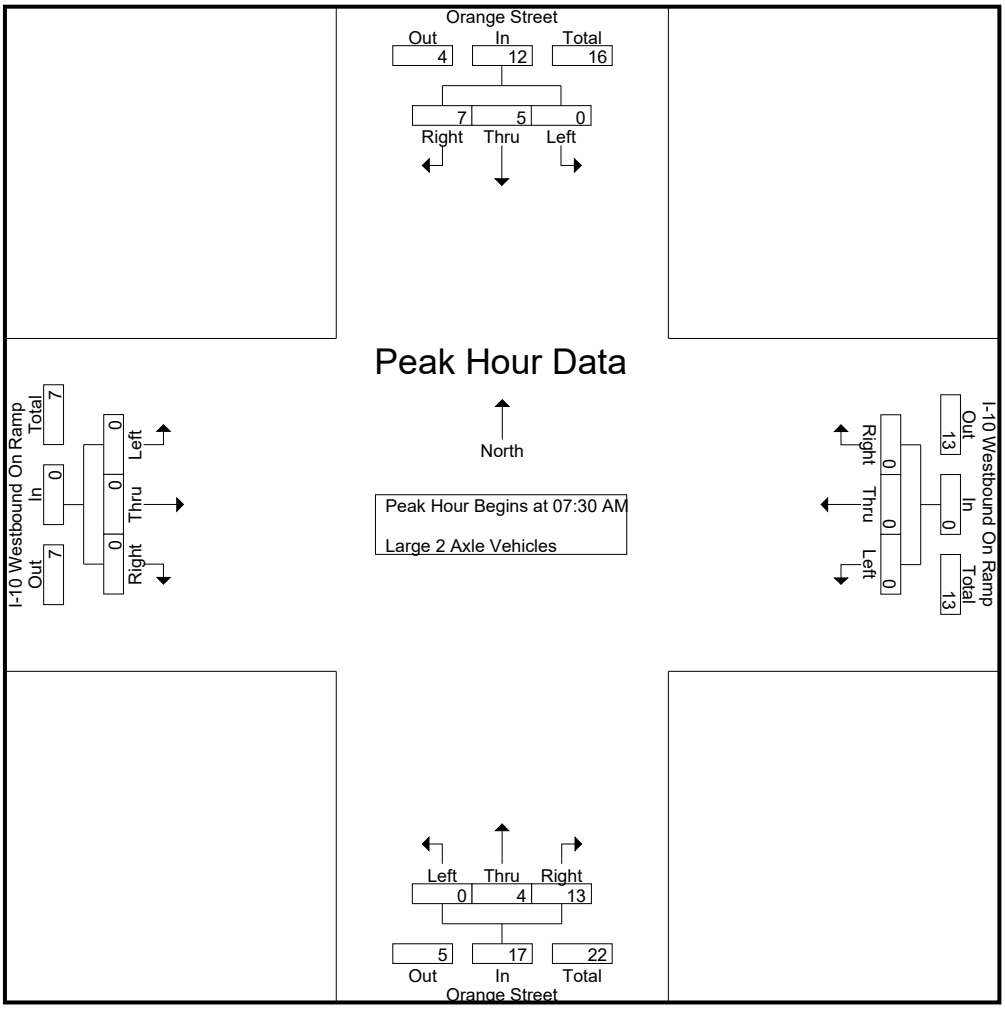

Peak Hour Analysis From 07:30 AM to 08:15 AM - Peak 1 of 1
Peak Hour for Each Approach Begins at:

	07:30 AM				07:30 AM				07:30 AM				07:30 AM			
+0 mins.	0	1	0	1	0	0	0	0	0	1	**4**	5	0	0	0	0
+15 mins.	0	1	**5**	**6**	0	0	0	0	0	0	2	2	0	0	0	0
+30 mins.	0	**2**	1	3	0	0	0	0	0	1	3	4	0	0	0	0
+45 mins.	0	1	1	2	0	0	0	0	0	**2**	4	**6**	0	0	0	0
Total Volume	0	5	7	12	0	0	0	0	0	4	13	17	0	0	0	0
% App. Total	0	41.7	58.3		0	0	0		0	23.5	76.5		0	0	0	
PHF	.000	.625	.350	.500	.000	.000	.000	.000	.000	.500	.813	.708	.000	.000	.000	.000

Counts Unlimited, Inc.
PO Box 1178
Corona, CA 92878
(951)268-6268

City of Redlands
N/S: Orange Street
E/W: I-10 Westbound On Ramps
Weather: Clear

File Name : 14_RED_Orange_10W AM
Site Code : 05121330
Start Date : 7/7/2021
Page No : 1

Groups Printed- 3 Axle Vehicles

	Orange Street Southbound				I-10 Westbound On Ramp Westbound				Orange Street Northbound				I-10 Westbound On Ramp Eastbound				
Start Time	Left	Thru	Right	App. Total	Left	Thru	Right	App. Total	Left	Thru	Right	App. Total	Left	Thru	Right	App. Total	Int. Total
07:00 AM	0	0	1	1	0	0	0	0	0	0	0	0	0	0	0	0	1
07:15 AM	0	0	1	1	0	0	0	0	0	0	0	0	0	0	0	0	1
07:30 AM	0	0	0	0	0	0	0	0	0	0	0	0	0	0	0	0	0
07:45 AM	0	0	0	0	0	0	0	0	0	1	1	2	0	0	0	0	2
Total	0	0	2	2	0	0	0	0	0	1	1	2	0	0	0	0	4
08:00 AM	0	0	3	3	0	0	0	0	0	0	0	0	0	0	0	0	3
08:15 AM	0	0	0	0	0	0	0	0	0	0	0	0	0	0	0	0	0
08:30 AM	0	0	1	1	0	0	0	0	0	0	1	1	0	0	0	0	2
08:45 AM	0	0	1	1	0	0	0	0	0	1	0	1	0	0	0	0	2
Total	0	0	5	5	0	0	0	0	0	1	1	2	0	0	0	0	7
Grand Total	0	0	7	7	0	0	0	0	0	2	2	4	0	0	0	0	11
Apprch %	0	0	100		0	0	0		0	50	50		0	0	0		
Total %	0	0	63.6	63.6	0	0	0	0	0	18.2	18.2	36.4	0	0	0	0	

	Orange Street Southbound				I-10 Westbound On Ramp Westbound				Orange Street Northbound				I-10 Westbound On Ramp Eastbound				
Start Time	Left	Thru	Right	App. Total	Left	Thru	Right	App. Total	Left	Thru	Right	App. Total	Left	Thru	Right	App. Total	Int. Total
Peak Hour Analysis From 07:30 AM to 08:15 AM - Peak 1 of 1																	
Peak Hour for Entire Intersection Begins at 07:30 AM																	
07:30 AM	0	0	0	0	0	0	0	0	0	0	0	0	0	0	0	0	0
07:45 AM	0	0	0	0	0	0	0	0	0	**1**	**1**	**2**	0	0	0	0	2
08:00 AM	0	0	**3**	**3**	0	0	0	0	0	0	0	0	0	0	0	0	**3**
08:15 AM	0	0	0	0	0	0	0	0	0	0	0	0	0	0	0	0	0
Total Volume	0	0	3	3	0	0	0	0	0	1	1	2	0	0	0	0	5
% App. Total	0	0	100		0	0	0		0	50	50		0	0	0		
PHF	.000	.000	.250	.250	.000	.000	.000	.000	.000	.250	.250	.250	.000	.000	.000	.000	.417

Counts Unlimited, Inc.
PO Box 1178
Corona, CA 92878
(951)268-6268

City of Redlands
N/S: Orange Street
E/W: I-10 Westbound On Ramps
Weather: Clear

File Name : 14_RED_Orange_10W AM
Site Code : 05121330
Start Date : 7/7/2021
Page No : 2

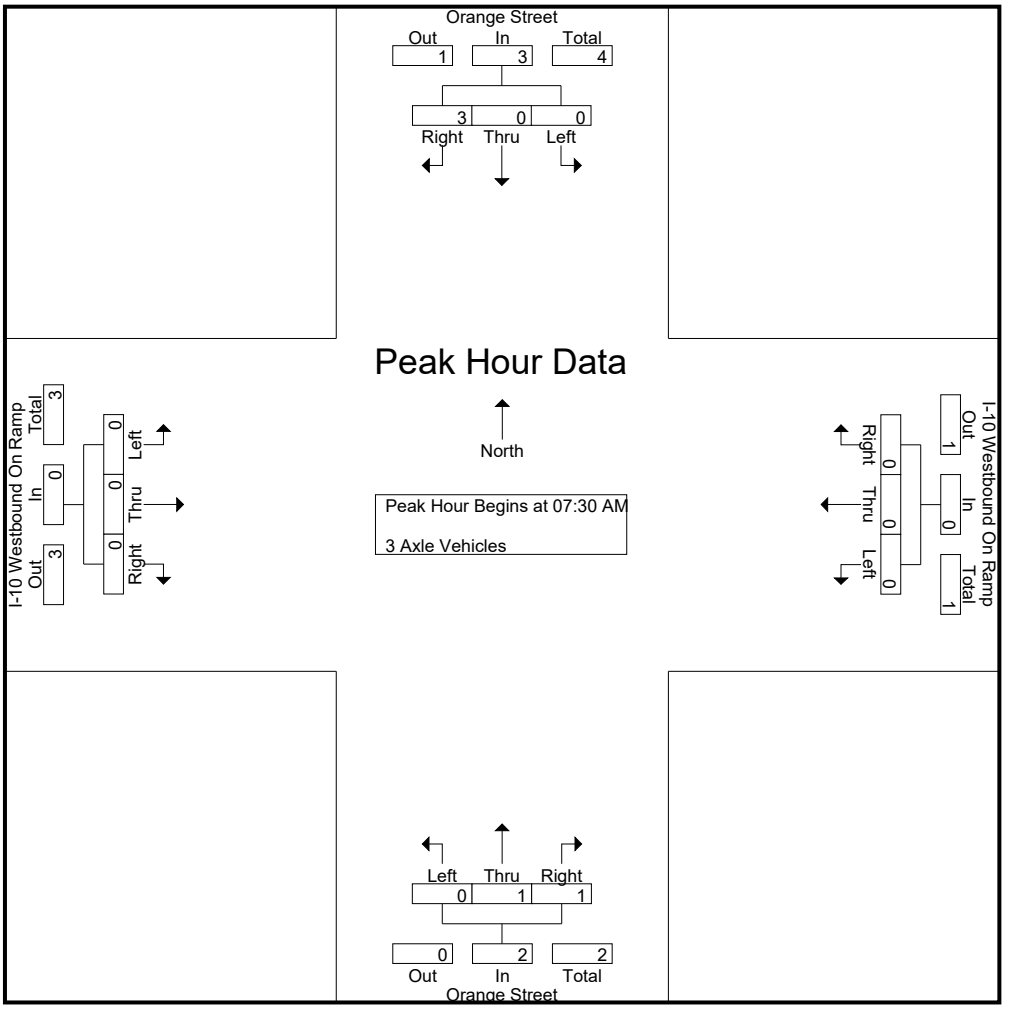

Peak Hour Analysis From 07:30 AM to 08:15 AM - Peak 1 of 1
Peak Hour for Each Approach Begins at:

	07:30 AM				07:30 AM				07:30 AM				07:30 AM			
+0 mins.	0	0	0	0	0	0	0	0	0	0	0	0	0	0	0	0
+15 mins.	0	0	0	0	0	0	0	0	0	**1**	**1**	**2**	0	0	0	0
+30 mins.	0	0	**3**	**3**	0	0	0	0	0	0	0	0	0	0	0	0
+45 mins.	0	0	0	0	0	0	0	0	0	0	0	0	0	0	0	0
Total Volume	0	0	3	3	0	0	0	0	0	1	1	2	0	0	0	0
% App. Total	0	0	100		0	0	0		0	50	50		0	0	0	
PHF	.000	.000	.250	.250	.000	.000	.000	.000	.000	.250	.250	.250	.000	.000	.000	.000

Counts Unlimited, Inc.
PO Box 1178
Corona, CA 92878
(951)268-6268

City of Redlands
N/S: Orange Street
E/W: I-10 Westbound On Ramps
Weather: Clear

File Name : 14_RED_Orange_10W AM
Site Code : 05121330
Start Date : 7/7/2021
Page No : 1

Groups Printed- 4+ Axle Trucks

	Orange Street Southbound				I-10 Westbound On Ramp Westbound				Orange Street Northbound				I-10 Westbound On Ramp Eastbound				
Start Time	Left	Thru	Right	App. Total	Left	Thru	Right	App. Total	Left	Thru	Right	App. Total	Left	Thru	Right	App. Total	Int. Total
07:00 AM	0	0	1	1	0	0	0	0	0	2	1	3	0	0	0	0	4
07:15 AM	0	0	0	0	0	0	0	0	0	1	0	1	0	0	0	0	1
07:30 AM	0	0	2	2	0	0	0	0	0	1	0	1	0	0	0	0	3
07:45 AM	0	0	2	2	0	0	0	0	0	0	0	0	0	0	0	0	2
Total	0	0	5	5	0	0	0	0	0	4	1	5	0	0	0	0	10
08:00 AM	0	0	1	1	0	0	0	0	0	1	1	2	0	0	0	0	3
08:15 AM	0	1	0	1	0	0	0	0	0	1	2	3	0	0	0	0	4
08:30 AM	0	0	1	1	0	0	0	0	0	3	0	3	0	0	0	0	4
08:45 AM	0	0	0	0	0	0	0	0	0	1	0	1	0	0	0	0	1
Total	0	1	2	3	0	0	0	0	0	6	3	9	0	0	0	0	12
Grand Total	0	1	7	8	0	0	0	0	0	10	4	14	0	0	0	0	22
Apprch %	0	12.5	87.5		0	0	0		0	71.4	28.6		0	0	0		
Total %	0	4.5	31.8	36.4	0	0	0	0	0	45.5	18.2	63.6	0	0	0	0	

	Orange Street Southbound				I-10 Westbound On Ramp Westbound				Orange Street Northbound				I-10 Westbound On Ramp Eastbound				
Start Time	Left	Thru	Right	App. Total	Left	Thru	Right	App. Total	Left	Thru	Right	App. Total	Left	Thru	Right	App. Total	Int. Total
Peak Hour Analysis From 07:30 AM to 08:15 AM - Peak 1 of 1																	
Peak Hour for Entire Intersection Begins at 07:30 AM																	
07:30 AM	0	0	**2**	**2**	0	0	0	0	0	**1**	0	1	0	0	0	0	3
07:45 AM	0	0	2	2	0	0	0	0	0	0	0	0	0	0	0	0	2
08:00 AM	0	0	1	1	0	0	0	0	0	1	1	2	0	0	0	0	3
08:15 AM	0	**1**	0	1	0	0	0	0	0	1	**2**	**3**	0	0	0	0	**4**
Total Volume	0	1	5	6	0	0	0	0	0	3	3	6	0	0	0	0	12
% App. Total	0	16.7	83.3		0	0	0		0	50	50		0	0	0		
PHF	.000	.250	.625	.750	.000	.000	.000	.000	.000	.750	.375	.500	.000	.000	.000	.000	.750

Counts Unlimited, Inc.
PO Box 1178
Corona, CA 92878
(951)268-6268

City of Redlands
N/S: Orange Street
E/W: I-10 Westbound On Ramps
Weather: Clear

File Name : 14_RED_Orange_10W AM
Site Code : 05121330
Start Date : 7/7/2021
Page No : 2

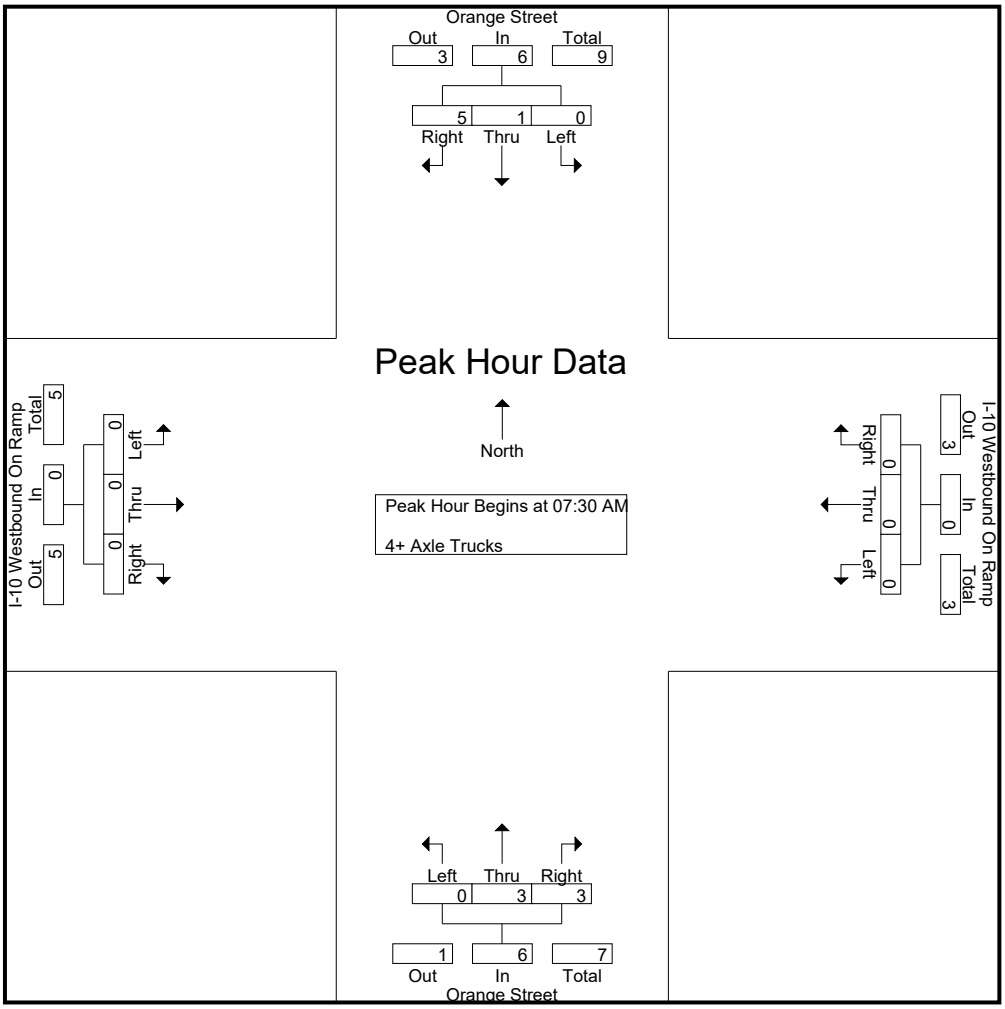

Peak Hour Analysis From 07:30 AM to 08:15 AM - Peak 1 of 1
Peak Hour for Each Approach Begins at:

	07:30 AM				07:30 AM				07:30 AM				07:30 AM			
+0 mins.	0	0	**2**	**2**	0	0	0	0	0	**1**	0	1	0	0	0	0
+15 mins.	0	0	2	2	0	0	0	0	0	0	0	0	0	0	0	0
+30 mins.	0	0	1	1	0	0	0	0	0	1	1	2	0	0	0	0
+45 mins.	0	**1**	0	1	0	0	0	0	0	1	**2**	**3**	0	0	0	0
Total Volume	0	1	5	6	0	0	0	0	0	3	3	6	0	0	0	0
% App. Total	0	16.7	83.3		0	0	0		0	50	50		0	0	0	
PHF	.000	.250	.625	.750	.000	.000	.000	.000	.000	.750	.375	.500	.000	.000	.000	.000

Counts Unlimited, Inc.
PO Box 1178
Corona, CA 92878
(951)268-6268

City of Redlands
N/S: Orange Street
E/W: I-10 Westbound On Ramps
Weather: Clear

File Name : 14_RED_Orange_10W PM
Site Code : 05121330
Start Date : 7/7/2021
Page No : 1

Groups Printed- Passenger Vehicles - Large 2 Axle Vehicles - 3 Axle Vehicles - 4+ Axle Trucks

	Orange Street Southbound				I-10 Westbound On Ramp Westbound				Orange Street Northbound				I-10 Westbound On Ramp Eastbound				
Start Time	Left	Thru	Right	App. Total	Left	Thru	Right	App. Total	Left	Thru	Right	App. Total	Left	Thru	Right	App. Total	Int. Total
04:00 PM	0	92	82	174	0	0	0	0	0	124	144	268	0	0	0	0	442
04:15 PM	0	102	74	176	0	0	0	0	0	118	142	260	0	0	0	0	436
04:30 PM	0	95	86	181	0	0	0	0	0	118	159	277	0	0	0	0	458
04:45 PM	0	105	63	168	0	0	0	0	0	134	163	297	0	0	0	0	465
Total	0	394	305	699	0	0	0	0	0	494	608	1102	0	0	0	0	1801
05:00 PM	0	100	64	164	0	0	0	0	0	127	195	322	0	0	0	0	486
05:15 PM	0	107	68	175	0	0	0	0	0	139	177	316	0	0	0	0	491
05:30 PM	0	89	86	175	0	0	0	0	0	137	174	311	0	0	0	0	486
05:45 PM	0	103	71	174	0	0	0	0	0	134	131	265	0	0	0	0	439
Total	0	399	289	688	0	0	0	0	0	537	677	1214	0	0	0	0	1902
Grand Total	0	793	594	1387	0	0	0	0	0	1031	1285	2316	0	0	0	0	3703
Apprch %	0	57.2	42.8		0	0	0		0	44.5	55.5		0	0	0		
Total %	0	21.4	16	37.5	0	0	0	0	0	27.8	34.7	62.5	0	0	0	0	
Passenger Vehicles	0	786	569	1355	0	0	0	0	0	1017	1274	2291	0	0	0	0	3646
% Passenger Vehicles	0	99.1	95.8	97.7	0	0	0	0	0	98.6	99.1	98.9	0	0	0	0	98.5
Large 2 Axle Vehicles	0	7	17	24	0	0	0	0	0	10	9	19	0	0	0	0	43
% Large 2 Axle Vehicles	0	0.9	2.9	1.7	0	0	0	0	0	1	0.7	0.8	0	0	0	0	1.2
3 Axle Vehicles	0	0	1	1	0	0	0	0	0	0	1	1	0	0	0	0	2
% 3 Axle Vehicles	0	0	0.2	0.1	0	0	0	0	0	0	0.1	0	0	0	0	0	0.1
4+ Axle Trucks	0	0	7	7	0	0	0	0	0	4	1	5	0	0	0	0	12
% 4+ Axle Trucks	0	0	1.2	0.5	0	0	0	0	0	0.4	0.1	0.2	0	0	0	0	0.3

	Orange Street Southbound				I-10 Westbound On Ramp Westbound				Orange Street Northbound				I-10 Westbound On Ramp Eastbound				
Start Time	Left	Thru	Right	App. Total	Left	Thru	Right	App. Total	Left	Thru	Right	App. Total	Left	Thru	Right	App. Total	Int. Total
Peak Hour Analysis From 04:00 PM to 05:45 PM - Peak 1 of 1																	
Peak Hour for Entire Intersection Begins at 04:45 PM																	
04:45 PM	0	105	63	168	0	0	0	0	0	134	163	297	0	0	0	0	465
05:00 PM	0	100	64	164	0	0	0	0	0	127	**195**	**322**	0	0	0	0	486
05:15 PM	0	**107**	68	**175**	0	0	0	0	0	**139**	177	316	0	0	0	0	**491**
05:30 PM	0	89	**86**	175	0	0	0	0	0	137	174	311	0	0	0	0	486
Total Volume	0	401	281	682	0	0	0	0	0	537	709	1246	0	0	0	0	1928
% App. Total	0	58.8	41.2		0	0	0		0	43.1	56.9		0	0	0		
PHF	.000	.937	.817	.974	.000	.000	.000	.000	.000	.966	.909	.967	.000	.000	.000	.000	.982

Counts Unlimited, Inc.
PO Box 1178
Corona, CA 92878
(951)268-6268

City of Redlands
N/S: Orange Street
E/W: I-10 Westbound On Ramps
Weather: Clear

File Name : 14_RED_Orange_10W PM
Site Code : 05121330
Start Date : 7/7/2021
Page No : 2

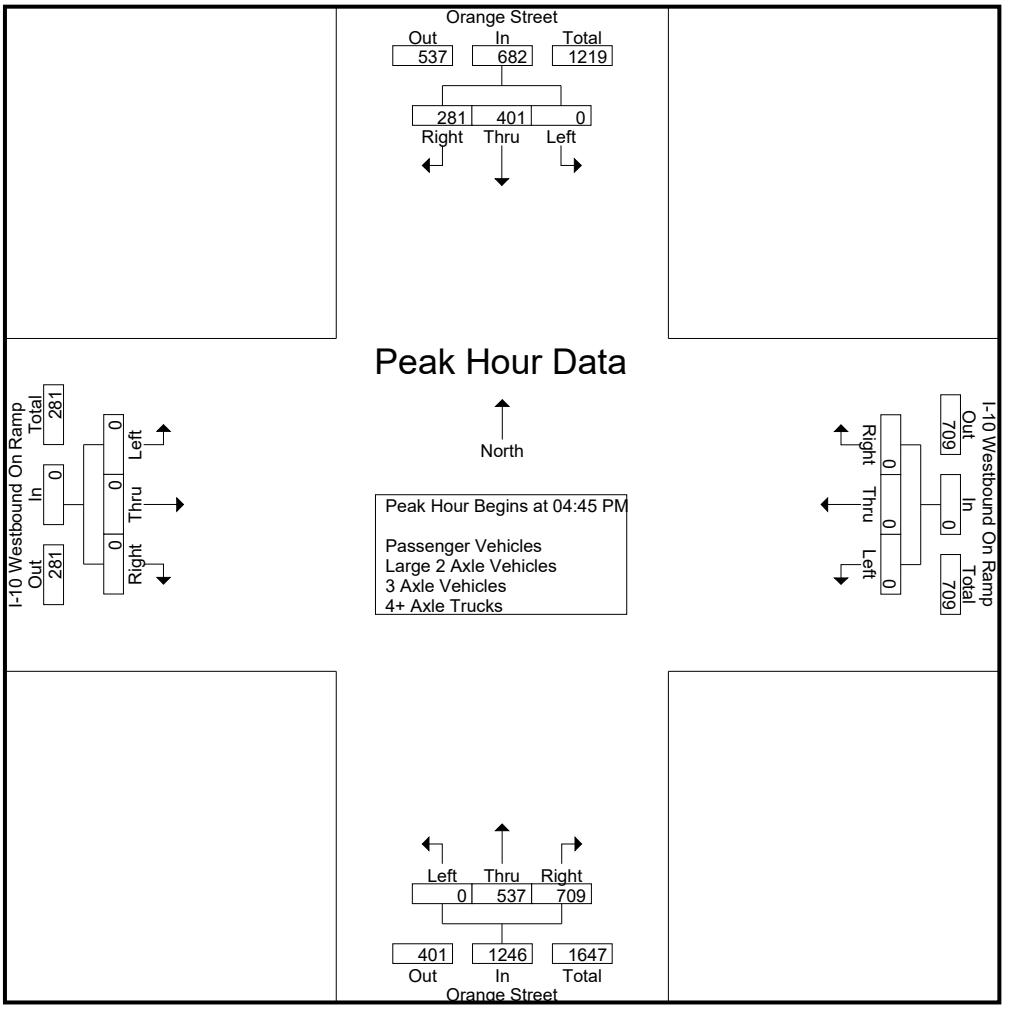

Peak Hour Analysis From 04:00 PM to 05:45 PM - Peak 1 of 1
Peak Hour for Each Approach Begins at:

	04:00 PM				04:00 PM				04:45 PM				04:00 PM			
+0 mins.	0	92	82	174	0	0	0	0	0	134	163	297	0	0	0	0
+15 mins.	0	102	74	176	0	0	0	0	0	127	**195**	**322**	0	0	0	0
+30 mins.	0	95	**86**	**181**	0	0	0	0	0	**139**	177	316	0	0	0	0
+45 mins.	0	**105**	63	168	0	0	0	0	0	137	174	311	0	0	0	0
Total Volume	0	394	305	699	0	0	0	0	0	537	709	1246	0	0	0	0
% App. Total	0	56.4	43.6		0	0	0		0	43.1	56.9		0	0	0	
PHF	.000	.938	.887	.965	.000	.000	.000	.000	.000	.966	.909	.967	.000	.000	.000	.000

Counts Unlimited, Inc.
PO Box 1178
Corona, CA 92878
(951)268-6268

City of Redlands
N/S: Orange Street
E/W: I-10 Westbound On Ramps
Weather: Clear

File Name : 14_RED_Orange_10W PM
Site Code : 05121330
Start Date : 7/7/2021
Page No : 1

Groups Printed- Passenger Vehicles

	Orange Street Southbound				I-10 Westbound On Ramp Westbound				Orange Street Northbound				I-10 Westbound On Ramp Eastbound				
Start Time	Left	Thru	Right	App. Total	Left	Thru	Right	App. Total	Left	Thru	Right	App. Total	Left	Thru	Right	App. Total	Int. Total
04:00 PM	0	92	79	171	0	0	0	0	0	122	141	263	0	0	0	0	434
04:15 PM	0	101	70	171	0	0	0	0	0	115	139	254	0	0	0	0	425
04:30 PM	0	95	82	177	0	0	0	0	0	118	158	276	0	0	0	0	453
04:45 PM	0	103	59	162	0	0	0	0	0	132	161	293	0	0	0	0	455
Total	0	391	290	681	0	0	0	0	0	487	599	1086	0	0	0	0	1767
05:00 PM	0	97	62	159	0	0	0	0	0	125	195	320	0	0	0	0	479
05:15 PM	0	107	66	173	0	0	0	0	0	137	176	313	0	0	0	0	486
05:30 PM	0	89	83	172	0	0	0	0	0	137	173	310	0	0	0	0	482
05:45 PM	0	102	68	170	0	0	0	0	0	131	131	262	0	0	0	0	432
Total	0	395	279	674	0	0	0	0	0	530	675	1205	0	0	0	0	1879
Grand Total	0	786	569	1355	0	0	0	0	0	1017	1274	2291	0	0	0	0	3646
Apprch %	0	58	42		0	0	0		0	44.4	55.6		0	0	0		
Total %	0	21.6	15.6	37.2	0	0	0	0	0	27.9	34.9	62.8	0	0	0	0	

	Orange Street Southbound				I-10 Westbound On Ramp Westbound				Orange Street Northbound				I-10 Westbound On Ramp Eastbound				
Start Time	Left	Thru	Right	App. Total	Left	Thru	Right	App. Total	Left	Thru	Right	App. Total	Left	Thru	Right	App. Total	Int. Total
Peak Hour Analysis From 04:45 PM to 05:30 PM - Peak 1 of 1																	
Peak Hour for Entire Intersection Begins at 04:45 PM																	
04:45 PM	0	103	59	162	0	0	0	0	0	132	161	293	0	0	0	0	455
05:00 PM	0	97	62	159	0	0	0	0	0	125	**195**	**320**	0	0	0	0	479
05:15 PM	0	**107**	66	**173**	0	0	0	0	0	**137**	176	313	0	0	0	0	**486**
05:30 PM	0	89	**83**	172	0	0	0	0	0	137	173	310	0	0	0	0	482
Total Volume	0	396	270	666	0	0	0	0	0	531	705	1236	0	0	0	0	1902
% App. Total	0	59.5	40.5		0	0	0		0	43	57		0	0	0		
PHF	.000	.925	.813	.962	.000	.000	.000	.000	.000	.969	.904	.966	.000	.000	.000	.000	.978

Counts Unlimited, Inc.
PO Box 1178
Corona, CA 92878
(951)268-6268

City of Redlands
N/S: Orange Street
E/W: I-10 Westbound On Ramps
Weather: Clear

File Name : 14_RED_Orange_10W PM
Site Code : 05121330
Start Date : 7/7/2021
Page No : 2

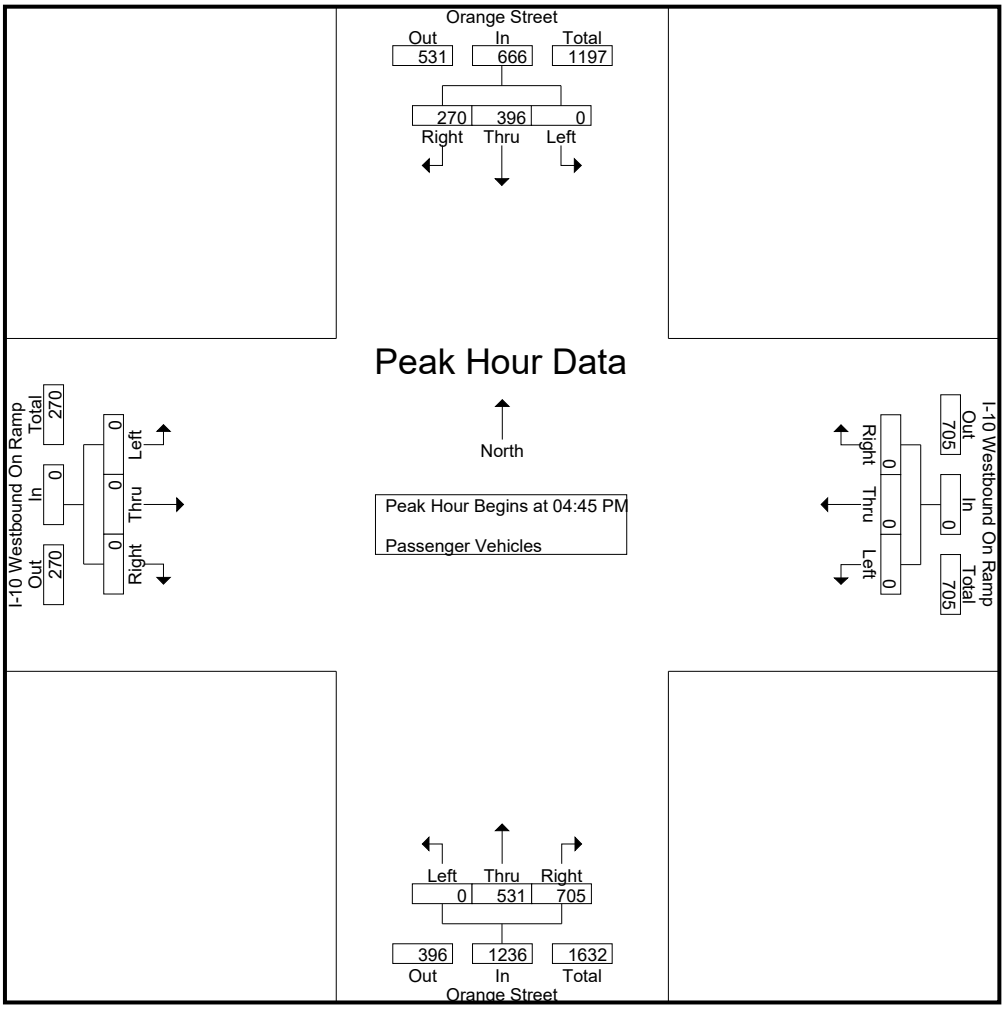

Peak Hour Analysis From 04:45 PM to 05:30 PM - Peak 1 of 1
Peak Hour for Each Approach Begins at:

	04:45 PM				04:45 PM				04:45 PM				04:45 PM			
+0 mins.	0	103	59	162	0	0	0	0	0	132	161	293	0	0	0	0
+15 mins.	0	97	62	159	0	0	0	0	0	125	**195**	**320**	0	0	0	0
+30 mins.	0	**107**	66	**173**	0	0	0	0	0	**137**	176	313	0	0	0	0
+45 mins.	0	89	**83**	172	0	0	0	0	0	137	173	310	0	0	0	0
Total Volume	0	396	270	666	0	0	0	0	0	531	705	1236	0	0	0	0
% App. Total	0	59.5	40.5		0	0	0		0	43	57		0	0	0	
PHF	.000	.925	.813	.962	.000	.000	.000	.000	.000	.969	.904	.966	.000	.000	.000	.000

Counts Unlimited, Inc.
PO Box 1178
Corona, CA 92878
(951)268-6268

City of Redlands
N/S: Orange Street
E/W: I-10 Westbound On Ramps
Weather: Clear

File Name : 14_RED_Orange_10W PM
Site Code : 05121330
Start Date : 7/7/2021
Page No : 1

Groups Printed- Large 2 Axle Vehicles

	Orange Street Southbound				I-10 Westbound On Ramp Westbound				Orange Street Northbound				I-10 Westbound On Ramp Eastbound				
Start Time	Left	Thru	Right	App. Total	Left	Thru	Right	App. Total	Left	Thru	Right	App. Total	Left	Thru	Right	App. Total	Int. Total
04:00 PM	0	0	3	3	0	0	0	0	0	2	2	4	0	0	0	0	7
04:15 PM	0	1	3	4	0	0	0	0	0	3	2	5	0	0	0	0	9
04:30 PM	0	0	2	2	0	0	0	0	0	0	1	1	0	0	0	0	3
04:45 PM	0	2	3	5	0	0	0	0	0	1	2	3	0	0	0	0	8
Total	0	3	11	14	0	0	0	0	0	6	7	13	0	0	0	0	27
05:00 PM	0	3	0	3	0	0	0	0	0	1	0	1	0	0	0	0	4
05:15 PM	0	0	1	1	0	0	0	0	0	2	1	3	0	0	0	0	4
05:30 PM	0	0	3	3	0	0	0	0	0	0	1	1	0	0	0	0	4
05:45 PM	0	1	2	3	0	0	0	0	0	1	0	1	0	0	0	0	4
Total	0	4	6	10	0	0	0	0	0	4	2	6	0	0	0	0	16
Grand Total	0	7	17	24	0	0	0	0	0	10	9	19	0	0	0	0	43
Apprch %	0	29.2	70.8		0	0	0		0	52.6	47.4		0	0	0		
Total %	0	16.3	39.5	55.8	0	0	0	0	0	23.3	20.9	44.2	0	0	0	0	

	Orange Street Southbound				I-10 Westbound On Ramp Westbound				Orange Street Northbound				I-10 Westbound On Ramp Eastbound				
Start Time	Left	Thru	Right	App. Total	Left	Thru	Right	App. Total	Left	Thru	Right	App. Total	Left	Thru	Right	App. Total	Int. Total
Peak Hour Analysis From 04:45 PM to 05:30 PM - Peak 1 of 1																	
Peak Hour for Entire Intersection Begins at 04:45 PM																	
04:45 PM	0	2	**3**	**5**	0	0	0	0	0	1	**2**	**3**	0	0	0	0	**8**
05:00 PM	0	**3**	0	3	0	0	0	0	0	1	0	1	0	0	0	0	4
05:15 PM	0	0	1	1	0	0	0	0	0	**2**	1	3	0	0	0	0	4
05:30 PM	0	0	3	3	0	0	0	0	0	0	1	1	0	0	0	0	4
Total Volume	0	5	7	12	0	0	0	0	0	4	4	8	0	0	0	0	20
% App. Total	0	41.7	58.3		0	0	0		0	50	50		0	0	0		
PHF	.000	.417	.583	.600	.000	.000	.000	.000	.000	.500	.500	.667	.000	.000	.000	.000	.625

Counts Unlimited, Inc.
PO Box 1178
Corona, CA 92878
(951)268-6268

City of Redlands
N/S: Orange Street
E/W: I-10 Westbound On Ramps
Weather: Clear

File Name : 14_RED_Orange_10W PM
Site Code : 05121330
Start Date : 7/7/2021
Page No : 2

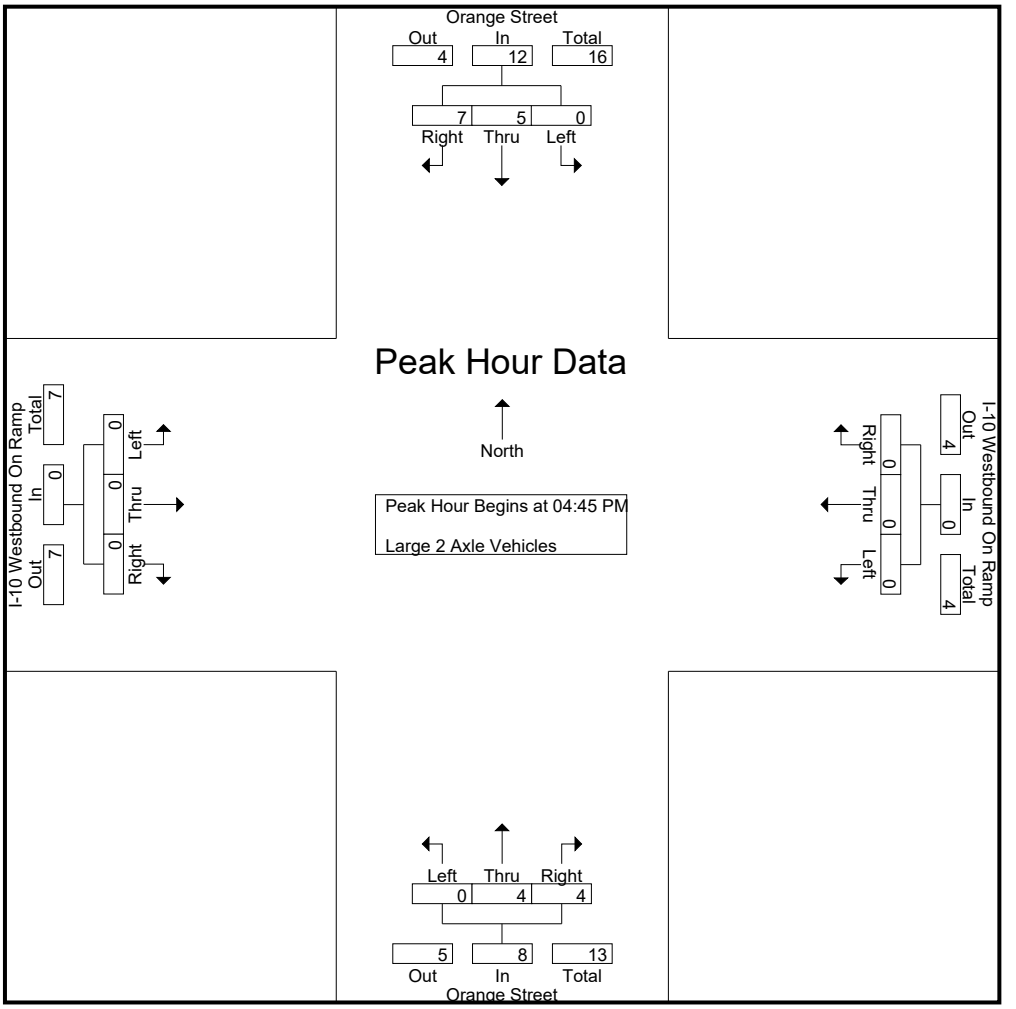

Peak Hour Analysis From 04:45 PM to 05:30 PM - Peak 1 of 1
Peak Hour for Each Approach Begins at:

	04:45 PM				04:45 PM				04:45 PM				04:45 PM			
+0 mins.	0	2	**3**	**5**	0	0	0	0	0	1	**2**	**3**	0	0	0	0
+15 mins.	0	**3**	0	3	0	0	0	0	0	1	0	1	0	0	0	0
+30 mins.	0	0	1	1	0	0	0	0	0	**2**	1	3	0	0	0	0
+45 mins.	0	0	3	3	0	0	0	0	0	0	1	1	0	0	0	0
Total Volume	0	5	7	12	0	0	0	0	0	4	4	8	0	0	0	0
% App. Total	0	41.7	58.3		0	0	0		0	50	50		0	0	0	
PHF	.000	.417	.583	.600	.000	.000	.000	.000	.000	.500	.500	.667	.000	.000	.000	.000

Counts Unlimited, Inc.
PO Box 1178
Corona, CA 92878
(951)268-6268

City of Redlands
N/S: Orange Street
E/W: I-10 Westbound On Ramps
Weather: Clear

File Name : 14_RED_Orange_10W PM
Site Code : 05121330
Start Date : 7/7/2021
Page No : 1

Groups Printed- 3 Axle Vehicles

	Orange Street Southbound				I-10 Westbound On Ramp Westbound				Orange Street Northbound				I-10 Westbound On Ramp Eastbound				
Start Time	Left	Thru	Right	App. Total	Left	Thru	Right	App. Total	Left	Thru	Right	App. Total	Left	Thru	Right	App. Total	Int. Total
04:00 PM	0	0	0	0	0	0	0	0	0	0	0	0	0	0	0	0	0
04:15 PM	0	0	1	1	0	0	0	0	0	0	1	1	0	0	0	0	2
04:30 PM	0	0	0	0	0	0	0	0	0	0	0	0	0	0	0	0	0
04:45 PM	0	0	0	0	0	0	0	0	0	0	0	0	0	0	0	0	0
Total	0	0	1	1	0	0	0	0	0	0	1	1	0	0	0	0	2
05:00 PM	0	0	0	0	0	0	0	0	0	0	0	0	0	0	0	0	0
05:15 PM	0	0	0	0	0	0	0	0	0	0	0	0	0	0	0	0	0
05:30 PM	0	0	0	0	0	0	0	0	0	0	0	0	0	0	0	0	0
05:45 PM	0	0	0	0	0	0	0	0	0	0	0	0	0	0	0	0	0
Total	0	0	0	0	0	0	0	0	0	0	0	0	0	0	0	0	0
Grand Total	0	0	1	1	0	0	0	0	0	0	1	1	0	0	0	0	2
Apprch %	0	0	100		0	0	0		0	0	100		0	0	0		
Total %	0	0	50	50	0	0	0	0	0	0	50	50	0	0	0	0	

	Orange Street Southbound				I-10 Westbound On Ramp Westbound				Orange Street Northbound				I-10 Westbound On Ramp Eastbound				
Start Time	Left	Thru	Right	App. Total	Left	Thru	Right	App. Total	Left	Thru	Right	App. Total	Left	Thru	Right	App. Total	Int. Total
Peak Hour Analysis From 04:45 PM to 05:30 PM - Peak 1 of 1																	
Peak Hour for Entire Intersection Begins at 04:45 PM																	
04:45 PM	0	0	0	0	0	0	0	0	0	0	0	0	0	0	0	0	0
05:00 PM	0	0	0	0	0	0	0	0	0	0	0	0	0	0	0	0	0
05:15 PM	0	0	0	0	0	0	0	0	0	0	0	0	0	0	0	0	0
05:30 PM	0	0	0	0	0	0	0	0	0	0	0	0	0	0	0	0	0
Total Volume	0	0	0	0	0	0	0	0	0	0	0	0	0	0	0	0	0
% App. Total	0	0	0		0	0	0		0	0	0		0	0	0		
PHF	.000	.000	.000	.000	.000	.000	.000	.000	.000	.000	.000	.000	.000	.000	.000	.000	.000

Counts Unlimited, Inc.
PO Box 1178
Corona, CA 92878
(951)268-6268

City of Redlands
N/S: Orange Street
E/W: I-10 Westbound On Ramps
Weather: Clear

File Name : 14_RED_Orange_10W PM
Site Code : 05121330
Start Date : 7/7/2021
Page No : 2

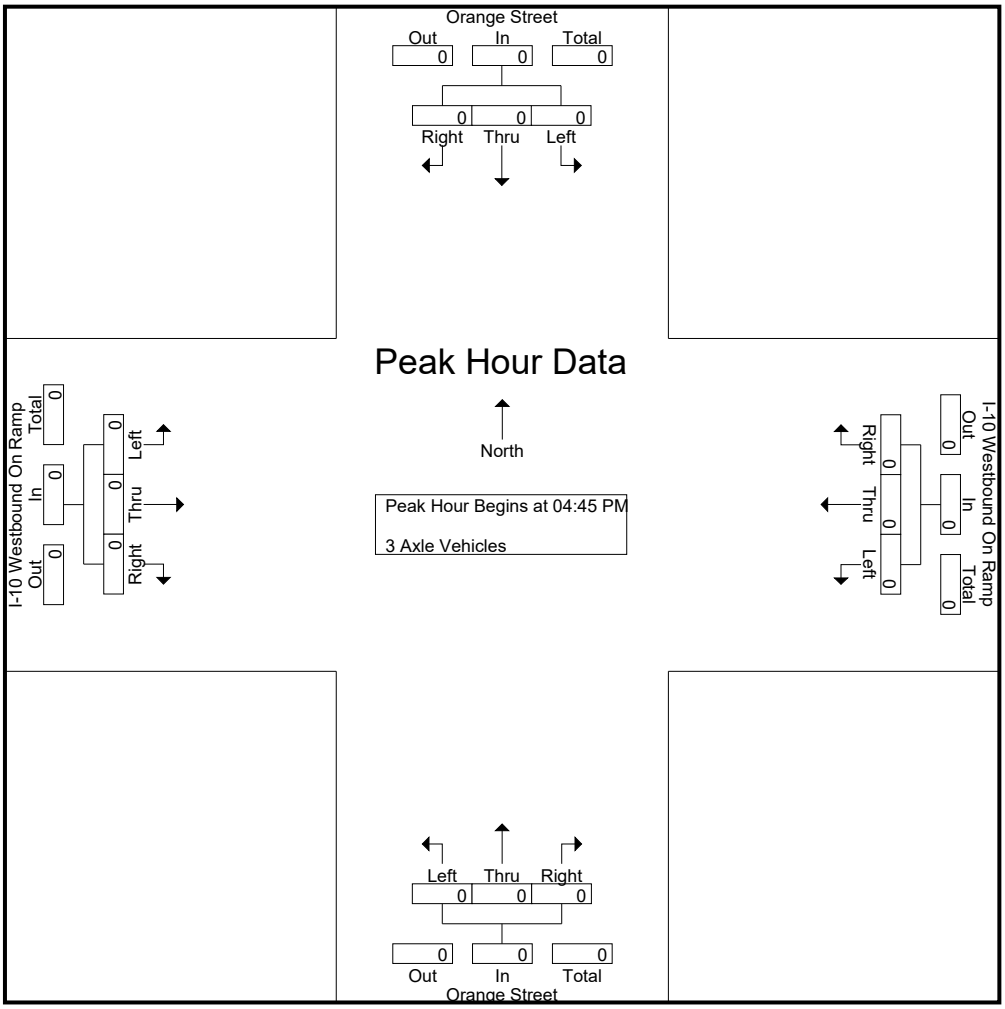

Peak Hour Analysis From 04:45 PM to 05:30 PM - Peak 1 of 1
Peak Hour for Each Approach Begins at:

	04:45 PM				04:45 PM				04:45 PM				04:45 PM			
+0 mins.	0	0	0	0	0	0	0	0	0	0	0	0	0	0	0	0
+15 mins.	0	0	0	0	0	0	0	0	0	0	0	0	0	0	0	0
+30 mins.	0	0	0	0	0	0	0	0	0	0	0	0	0	0	0	0
+45 mins.	0	0	0	0	0	0	0	0	0	0	0	0	0	0	0	0
Total Volume	0	0	0	0	0	0	0	0	0	0	0	0	0	0	0	0
% App. Total	0	0	0		0	0	0		0	0	0		0	0	0	
PHF	.000	.000	.000	.000	.000	.000	.000	.000	.000	.000	.000	.000	.000	.000	.000	.000

Counts Unlimited, Inc.
PO Box 1178
Corona, CA 92878
(951)268-6268

City of Redlands
N/S: Orange Street
E/W: I-10 Westbound On Ramps
Weather: Clear

File Name : 14_RED_Orange_10W PM
Site Code : 05121330
Start Date : 7/7/2021
Page No : 1

Groups Printed- 4+ Axle Trucks

	Orange Street Southbound				I-10 Westbound On Ramp Westbound				Orange Street Northbound				I-10 Westbound On Ramp Eastbound				
Start Time	Left	Thru	Right	App. Total	Left	Thru	Right	App. Total	Left	Thru	Right	App. Total	Left	Thru	Right	App. Total	Int. Total
04:00 PM	0	0	0	0	0	0	0	0	0	0	1	1	0	0	0	0	1
04:15 PM	0	0	0	0	0	0	0	0	0	0	0	0	0	0	0	0	0
04:30 PM	0	0	2	2	0	0	0	0	0	0	0	0	0	0	0	0	2
04:45 PM	0	0	1	1	0	0	0	0	0	1	0	1	0	0	0	0	2
Total	0	0	3	3	0	0	0	0	0	1	1	2	0	0	0	0	5
05:00 PM	0	0	2	2	0	0	0	0	0	1	0	1	0	0	0	0	3
05:15 PM	0	0	1	1	0	0	0	0	0	0	0	0	0	0	0	0	1
05:30 PM	0	0	0	0	0	0	0	0	0	0	0	0	0	0	0	0	0
05:45 PM	0	0	1	1	0	0	0	0	0	2	0	2	0	0	0	0	3
Total	0	0	4	4	0	0	0	0	0	3	0	3	0	0	0	0	7
Grand Total	0	0	7	7	0	0	0	0	0	4	1	5	0	0	0	0	12
Apprch %	0	0	100		0	0	0		0	80	20		0	0	0		
Total %	0	0	58.3	58.3	0	0	0	0	0	33.3	8.3	41.7	0	0	0	0	

	Orange Street Southbound				I-10 Westbound On Ramp Westbound				Orange Street Northbound				I-10 Westbound On Ramp Eastbound				
Start Time	Left	Thru	Right	App. Total	Left	Thru	Right	App. Total	Left	Thru	Right	App. Total	Left	Thru	Right	App. Total	Int. Total
Peak Hour Analysis From 04:45 PM to 05:30 PM - Peak 1 of 1																	
Peak Hour for Entire Intersection Begins at 04:45 PM																	
04:45 PM	0	0	1	1	0	0	0	0	0	**1**	0	**1**	0	0	0	0	2
05:00 PM	0	0	**2**	**2**	0	0	0	0	0	1	0	1	0	0	0	0	**3**
05:15 PM	0	0	1	1	0	0	0	0	0	0	0	0	0	0	0	0	1
05:30 PM	0	0	0	0	0	0	0	0	0	0	0	0	0	0	0	0	0
Total Volume	0	0	4	4	0	0	0	0	0	2	0	2	0	0	0	0	6
% App. Total	0	0	100		0	0	0		0	100	0		0	0	0		
PHF	.000	.000	.500	.500	.000	.000	.000	.000	.000	.500	.000	.500	.000	.000	.000	.000	.500

Counts Unlimited, Inc.
PO Box 1178
Corona, CA 92878
(951)268-6268

City of Redlands
N/S: Orange Street
E/W: I-10 Westbound On Ramps
Weather: Clear

File Name : 14_RED_Orange_10W PM
Site Code : 05121330
Start Date : 7/7/2021
Page No : 2

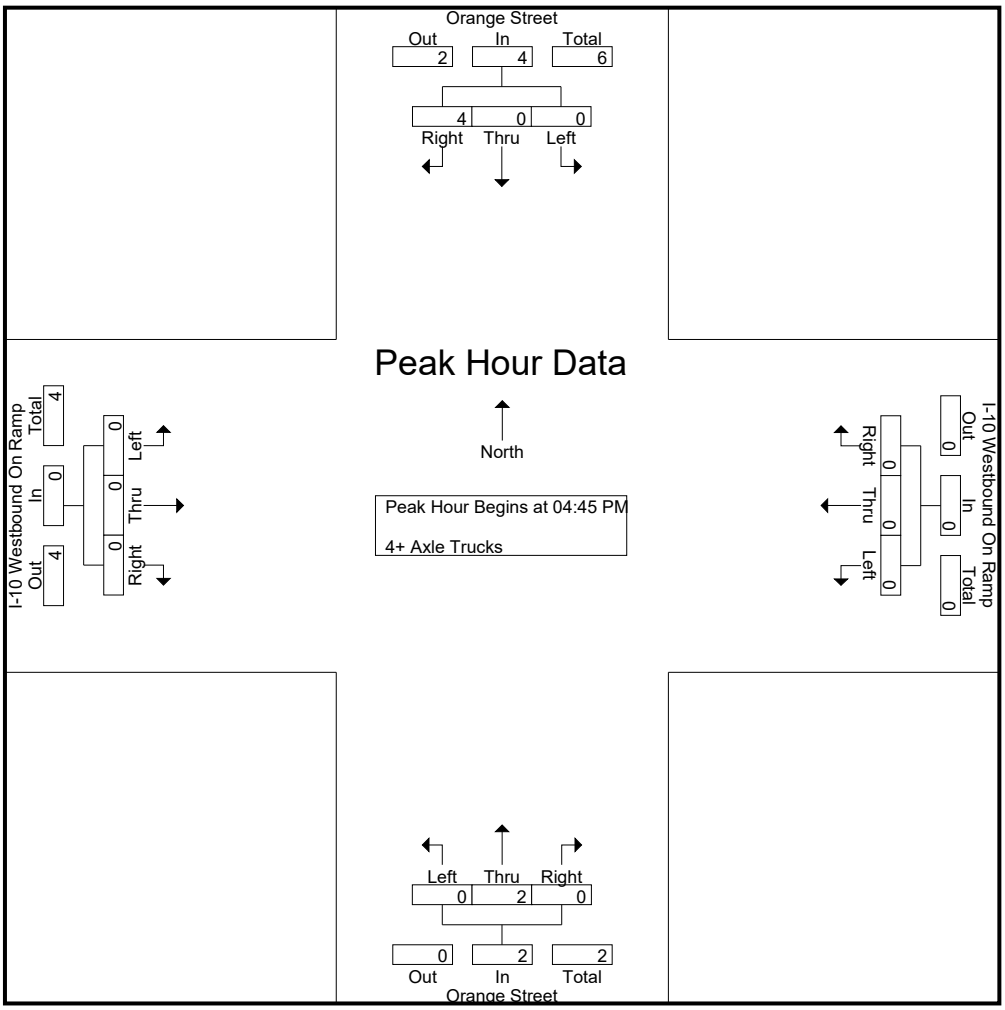

Peak Hour Analysis From 04:45 PM to 05:30 PM - Peak 1 of 1
Peak Hour for Each Approach Begins at:

	04:45 PM				04:45 PM				04:45 PM				04:45 PM			
+0 mins.	0	0	1	1	0	0	0	0	0	**1**	0	**1**	0	0	0	0
+15 mins.	0	0	**2**	**2**	0	0	0	0	0	1	0	1	0	0	0	0
+30 mins.	0	0	1	1	0	0	0	0	0	0	0	0	0	0	0	0
+45 mins.	0	0	0	0	0	0	0	0	0	0	0	0	0	0	0	0
Total Volume	0	0	4	4	0	0	0	0	0	2	0	2	0	0	0	0
% App. Total	0	0	100		0	0	0		0	100	0		0	0	0	
PHF	.000	.000	.500	.500	.000	.000	.000	.000	.000	.500	.000	.500	.000	.000	.000	.000

Location: Redlands
N/S: Orange Street
E/W: I-10 Westbound On Ramps

Date: 7/7/2021
Day: Wednesday

PEDESTRIANS

	North Leg Orange Street Pedestrians	East Leg I-10 Westbound On Ramps Pedestrians	South Leg Orange Street Pedestrians	West Leg I-10 Westbound On Ramps Pedestrians	
7:00 AM	0	0	0	3	3
7:15 AM	0	0	0	1	1
7:30 AM	0	0	0	1	1
7:45 AM	0	0	0	1	1
8:00 AM	0	0	0	0	0
8:15 AM	0	2	0	5	7
8:30 AM	0	2	0	1	3
8:45 AM	1	1	0	1	3
TOTAL VOLUMES:	1	5	0	13	19

	North Leg Orange Street Pedestrians	East Leg I-10 Westbound On Ramps Pedestrians	South Leg Orange Street Pedestrians	West Leg I-10 Westbound On Ramps Pedestrians	
4:00 PM	0	0	0	2	2
4:15 PM	0	0	0	1	1
4:30 PM	0	1	0	1	2
4:45 PM	0	1	0	1	2
5:00 PM	0	3	0	2	5
5:15 PM	0	0	0	2	2
5:30 PM	0	0	0	2	2
5:45 PM	0	1	0	4	5
TOTAL VOLUMES:	0	6	0	15	21

Counts Unlimited, Inc.
PO Box 1178
Corona, CA 92878
951-268-6268

Location: Redlands
N/S: Orange Street
E/W: I-10 Westbound On Ramps

Date: 7/7/2021
Day: Wednesday

BICYCLES

	Southbound Orange Street			Westbound I-10 Westbound On Ramps			Northbound Orange Street			Eastbound I-10 Westbound On Ramps			
	Left	Thru	Right	Left	Thru	Right	Left	Thru	Right	Left	Thru	Right	
7:00 AM	0	0	0	0	0	0	0	1	0	0	0	0	1
7:15 AM	0	0	0	0	0	0	0	0	0	0	0	0	0
7:30 AM	0	1	0	0	0	0	0	0	0	0	0	0	1
7:45 AM	0	0	0	0	0	0	0	0	0	0	0	0	0
8:00 AM	0	0	0	0	0	0	0	0	0	0	0	0	0
8:15 AM	0	1	0	0	0	0	0	0	0	0	0	0	1
8:30 AM	0	0	0	0	0	0	0	0	0	0	0	0	0
8:45 AM	0	0	0	0	0	0	0	0	0	0	0	0	0
TOTAL VOLUMES:	0	2	0	0	0	0	0	1	0	0	0	0	3

	Southbound Orange Street			Westbound I-10 Westbound On Ramps			Northbound Orange Street			Eastbound I-10 Westbound On Ramps			
	Left	Thru	Right	Left	Thru	Right	Left	Thru	Right	Left	Thru	Right	
4:00 PM	0	0	0	0	0	0	0	0	0	0	0	0	0
4:15 PM	0	0	0	0	0	0	0	0	0	0	0	0	0
4:30 PM	0	0	0	0	0	0	0	0	0	0	0	0	0
4:45 PM	0	0	0	0	0	0	0	1	0	0	0	0	1
5:00 PM	0	1	0	0	0	0	0	0	0	0	0	0	1
5:15 PM	0	0	0	0	0	0	0	0	0	0	0	0	0
5:30 PM	0	0	0	0	0	0	0	0	0	0	0	0	0
5:45 PM	0	0	0	0	0	0	0	0	0	0	0	0	0
TOTAL VOLUMES:	0	1	0	0	0	0	0	1	0	0	0	0	2

Counts Unlimited, Inc.
PO Box 1178
Corona, CA 92878
951-268-6268

Counts Unlimited, Inc.
PO Box 1178
Corona, CA 92878
(951)268-6268

City of Redlands
N/S: Orange Street
E/W: Pearl Avenue
Weather: Clear

File Name : 15_RED_Orange_Pearl AM
Site Code : 05121330
Start Date : 7/7/2021
Page No : 1

Groups Printed- Passenger Vehicles - Large 2 Axle Vehicles - 3 Axle Vehicles - 4+ Axle Trucks

	Orange Street Southbound					Pearl Avenue Westbound					Orange Street Northbound					Pearl Avenue Eastbound							
Start Time	Left	Thru	Right	RTOR	App. Total	Left	Thru	Right	RTOR	App. Total	Left	Thru	Right	RTOR	App. Total	Left	Thru	Right	RTOR	App. Total	Exclu. Total	Inclu. Total	Int. Total
07:00 AM	1	25	1	0	27	2	6	13	4	21	0	95	3	1	98	20	16	24	3	60	8	206	214
07:15 AM	1	34	1	1	36	2	16	13	6	31	1	89	8	1	98	22	40	26	8	88	16	253	269
07:30 AM	2	50	4	0	56	2	8	11	6	21	2	131	4	1	137	29	31	39	18	99	25	313	338
07:45 AM	6	58	1	0	65	0	8	14	2	22	0	107	2	0	109	28	37	33	6	98	8	294	302
Total	10	167	7	1	184	6	38	51	18	95	3	422	17	3	442	99	124	122	35	345	57	1066	1123
08:00 AM	5	67	5	1	77	5	13	7	4	25	1	112	5	0	118	23	37	29	12	89	17	309	326
08:15 AM	2	43	5	0	50	3	10	24	6	37	1	113	5	0	119	26	38	27	13	91	19	297	316
08:30 AM	6	43	3	1	52	2	5	20	5	27	1	144	9	3	154	32	43	29	14	104	23	337	360
08:45 AM	4	62	2	0	68	1	15	16	4	32	3	113	9	0	125	22	57	33	10	112	14	337	351
Total	17	215	15	2	247	11	43	67	19	121	6	482	28	3	516	103	175	118	49	396	73	1280	1353
Grand Total	27	382	22	3	431	17	81	118	37	216	9	904	45	6	958	202	299	240	84	741	130	2346	2476
Apprch %	6.3	88.6	5.1			7.9	37.5	54.6			0.9	94.4	4.7			27.3	40.4	32.4					
Total %	1.2	16.3	0.9		18.4	0.7	3.5	5		9.2	0.4	38.5	1.9		40.8	8.6	12.7	10.2		31.6	5.3	94.7	
Passenger Vehicles	24	376	21		424	16	79	107		236	9	874	43		932	189	286	233		787	0	0	2379
% Passenger Vehicles	88.9	98.4	95.5	100	97.7	94.1	97.5	90.7	91.9	93.3	100	96.7	95.6	100	96.7	93.6	95.7	97.1	94	95.4	0	0	96.1
Large 2 Axle Vehicles	3	5	1		9	1	2	9		15	0	23	2		25	4	8	5		20	0	0	69
% Large 2 Axle Vehicles	11.1	1.3	4.5	0	2.1	5.9	2.5	7.6	8.1	5.9	0	2.5	4.4	0	2.6	2	2.7	2.1	3.6	2.4	0	0	2.8
3 Axle Vehicles	0	0	0		0	0	0	0		0	0	3	0		3	3	2	0		5	0	0	8
% 3 Axle Vehicles	0	0	0	0	0	0	0	0	0	0	0	0.3	0	0	0.3	1.5	0.7	0	0	0.6	0	0	0.3
4+ Axle Trucks	0	1	0		1	0	0	2		2	0	4	0		4	6	3	2		13	0	0	20
% 4+ Axle Trucks	0	0.3	0	0	0.2	0	0	1.7	0	0.8	0	0.4	0	0	0.4	3	1	0.8	2.4	1.6	0	0	0.8

	Orange Street Southbound				Pearl Avenue Westbound				Orange Street Northbound				Pearl Avenue Eastbound				
Start Time	Left	Thru	Right	App. Total	Left	Thru	Right	App. Total	Left	Thru	Right	App. Total	Left	Thru	Right	App. Total	Int. Total
Peak Hour Analysis From 07:00 AM to 08:45 AM - Peak 1 of 1																	
Peak Hour for Entire Intersection Begins at 08:00 AM																	
08:00 AM	5	**67**	**5**	**77**	**5**	13	7	25	1	112	5	118	23	37	29	89	309
08:15 AM	2	43	5	50	3	10	**24**	**37**	1	113	5	119	26	38	27	91	297
08:30 AM	**6**	43	3	52	2	5	20	27	1	**144**	**9**	**154**	**32**	43	29	104	**337**
08:45 AM	4	62	2	68	1	**15**	16	32	**3**	113	9	125	22	**57**	**33**	**112**	337
Total Volume	17	215	15	247	11	43	67	121	6	482	28	516	103	175	118	396	1280
% App. Total	6.9	87	6.1		9.1	35.5	55.4		1.2	93.4	5.4		26	44.2	29.8		
PHF	.708	.802	.750	.802	.550	.717	.698	.818	.500	.837	.778	.838	.805	.768	.894	.884	.950

Counts Unlimited, Inc.
PO Box 1178
Corona, CA 92878
(951)268-6268

City of Redlands
N/S: Orange Street
E/W: Pearl Avenue
Weather: Clear

File Name : 15_RED_Orange_Pearl AM
Site Code : 05121330
Start Date : 7/7/2021
Page No : 2

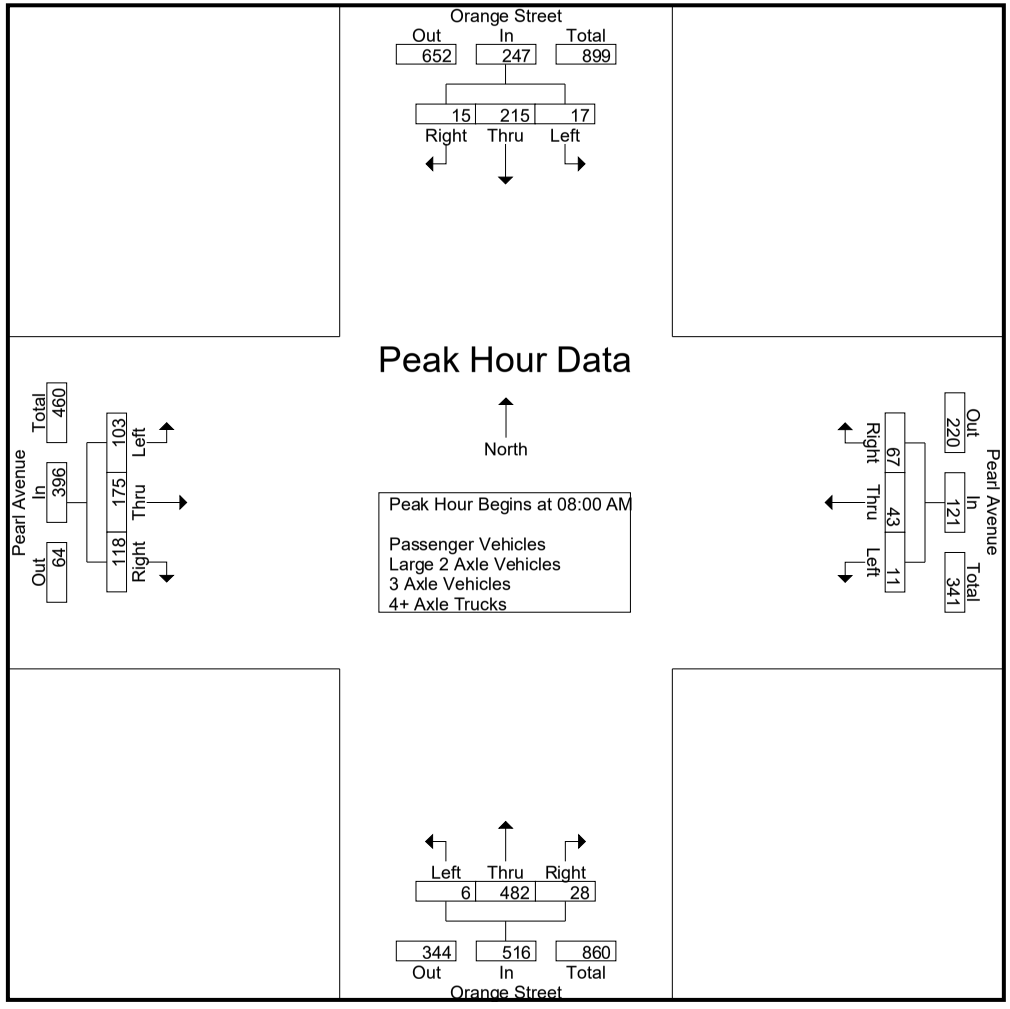

Counts Unlimited, Inc.
PO Box 1178
Corona, CA 92878
(951)268-6268

City of Redlands
N/S: Orange Street
E/W: Pearl Avenue
Weather: Clear

File Name : 15_RED_Orange_Pearl AM
Site Code : 05121330
Start Date : 7/7/2021
Page No : 3

	Orange Street Southbound				Pearl Avenue Westbound				Orange Street Northbound				Pearl Avenue Eastbound				
Start Time	Left	Thru	Right	App. Total	Left	Thru	Right	App. Total	Left	Thru	Right	App. Total	Left	Thru	Right	App. Total	Int. Total
Peak Hour Analysis From 07:00 AM to 08:45 AM - Peak 1 of 1																	
Peak Hour for Each Approach Begins at:																	
	07:30 AM				08:00 AM				08:00 AM				08:00 AM				
+0 mins.	2	50	4	56	**5**	13	7	25	1	112	5	118	23	37	29	89	
+15 mins.	**6**	58	1	65	3	10	**24**	**37**	1	113	5	119	26	38	27	91	
+30 mins.	5	**67**	**5**	**77**	2	5	20	27	1	**144**	**9**	**154**	**32**	43	29	104	
+45 mins.	2	43	5	50	1	**15**	16	32	**3**	113	9	125	22	**57**	**33**	**112**	
Total Volume	15	218	15	248	11	43	67	121	6	482	28	516	103	175	118	396	
% App. Total	6	87.9	6		9.1	35.5	55.4		1.2	93.4	5.4		26	44.2	29.8		
PHF	.625	.813	.750	.805	.550	.717	.698	.818	.500	.837	.778	.838	.805	.768	.894	.884	

Counts Unlimited, Inc.
PO Box 1178
Corona, CA 92878
(951)268-6268

City of Redlands
N/S: Orange Street
E/W: Pearl Avenue
Weather: Clear

File Name : 15_RED_Orange_Pearl AM
Site Code : 05121330
Start Date : 7/7/2021
Page No : 1

Groups Printed- Passenger Vehicles

	Orange Street Southbound					Pearl Avenue Westbound					Orange Street Northbound					Pearl Avenue Eastbound							
Start Time	Left	Thru	Right	RTOR	App. Total	Left	Thru	Right	RTOR	App. Total	Left	Thru	Right	RTOR	App. Total	Left	Thru	Right	RTOR	App. Total	Exclu. Total	Inclu. Total	Int. Total
07:00 AM	1	25	1	0	27	2	6	12	4	20	0	90	3	1	93	19	16	24	3	59	8	199	207
07:15 AM	1	32	1	1	34	2	16	11	4	29	1	86	8	1	95	21	37	25	7	83	13	241	254
07:30 AM	2	49	4	0	55	2	8	9	5	19	2	128	4	1	134	28	31	38	18	97	24	305	329
07:45 AM	5	58	1	0	64	0	8	14	2	22	0	106	2	0	108	26	36	32	5	94	7	288	295
Total	9	164	7	1	180	6	38	46	15	90	3	410	17	3	430	94	120	119	33	333	52	1033	1085
08:00 AM	5	66	4	1	75	5	13	7	4	25	1	109	5	0	115	20	33	27	11	80	16	295	311
08:15 AM	2	41	5	0	48	3	10	19	6	32	1	110	5	0	116	24	38	27	13	89	19	285	304
08:30 AM	4	43	3	1	50	1	4	19	5	24	1	136	8	3	145	31	42	29	14	102	23	321	344
08:45 AM	4	62	2	0	68	1	14	16	4	31	3	109	8	0	120	20	53	31	8	104	12	323	335
Total	15	212	14	2	241	10	41	61	19	112	6	464	26	3	496	95	166	114	46	375	70	1224	1294
Grand Total	24	376	21	3	421	16	79	107	34	202	9	874	43	6	926	189	286	233	79	708	122	2257	2379
Apprch %	5.7	89.3	5			7.9	39.1	53			1	94.4	4.6			26.7	40.4	32.9					
Total %	1.1	16.7	0.9		18.7	0.7	3.5	4.7		8.9	0.4	38.7	1.9		41	8.4	12.7	10.3		31.4	5.1	94.9	

	Orange Street Southbound				Pearl Avenue Westbound				Orange Street Northbound				Pearl Avenue Eastbound				
Start Time	Left	Thru	Right	App. Total	Left	Thru	Right	App. Total	Left	Thru	Right	App. Total	Left	Thru	Right	App. Total	Int. Total
Peak Hour Analysis From 08:00 AM to 08:45 AM - Peak 1 of 1																	
Peak Hour for Entire Intersection Begins at 08:00 AM																	
08:00 AM	**5**	**66**	4	**75**	**5**	13	7	25	1	109	5	115	20	33	27	80	295
08:15 AM	2	41	**5**	48	3	10	**19**	**32**	1	110	5	116	24	38	27	89	285
08:30 AM	4	43	3	50	1	4	19	24	1	**136**	**8**	**145**	**31**	42	29	102	321
08:45 AM	4	62	2	68	1	**14**	16	31	**3**	109	8	120	20	**53**	**31**	**104**	**323**
Total Volume	15	212	14	241	10	41	61	112	6	464	26	496	95	166	114	375	1224
% App. Total	6.2	88	5.8		8.9	36.6	54.5		1.2	93.5	5.2		25.3	44.3	30.4		
PHF	.750	.803	.700	.803	.500	.732	.803	.875	.500	.853	.813	.855	.766	.783	.919	.901	.947

Counts Unlimited, Inc.
PO Box 1178
Corona, CA 92878
(951)268-6268

City of Redlands
N/S: Orange Street
E/W: Pearl Avenue
Weather: Clear

File Name : 15_RED_Orange_Pearl AM
Site Code : 05121330
Start Date : 7/7/2021
Page No : 2

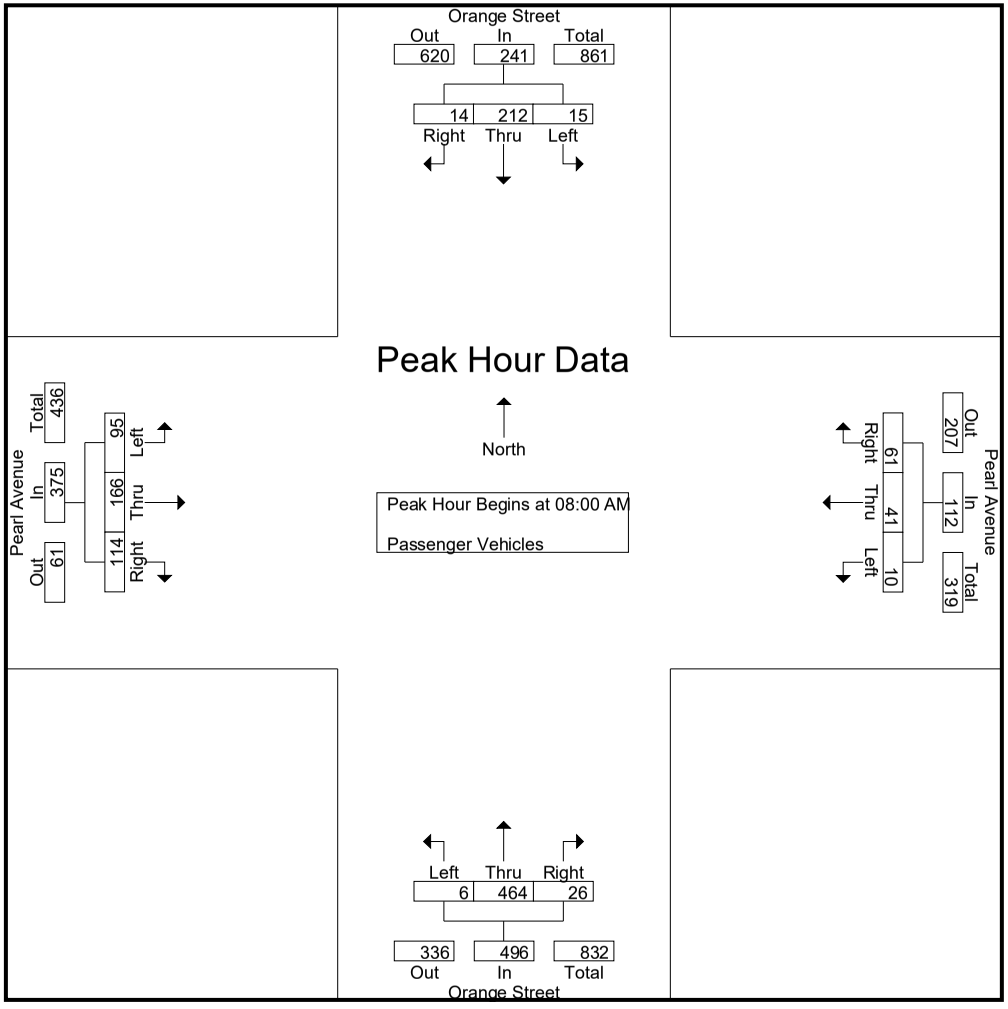

Counts Unlimited, Inc.
PO Box 1178
Corona, CA 92878
(951)268-6268

City of Redlands
N/S: Orange Street
E/W: Pearl Avenue
Weather: Clear

File Name : 15_RED_Orange_Pearl AM
Site Code : 05121330
Start Date : 7/7/2021
Page No : 3

	Orange Street Southbound				Pearl Avenue Westbound				Orange Street Northbound				Pearl Avenue Eastbound				
Start Time	Left	Thru	Right	App. Total	Left	Thru	Right	App. Total	Left	Thru	Right	App. Total	Left	Thru	Right	App. Total	Int. Total
Peak Hour Analysis From 08:00 AM to 08:45 AM - Peak 1 of 1																	
Peak Hour for Each Approach Begins at:																	
	08:00 AM				08:00 AM				08:00 AM				08:00 AM				
+0 mins.	**5**	**66**	4	**75**	**5**	13	7	25	1	109	5	115	20	33	27	80	
+15 mins.	2	41	**5**	48	3	10	**19**	**32**	1	110	5	116	24	38	27	89	
+30 mins.	4	43	3	50	1	4	19	24	1	**136**	**8**	**145**	**31**	42	29	102	
+45 mins.	4	62	2	68	1	**14**	16	31	**3**	109	8	120	20	**53**	**31**	**104**	
Total Volume	15	212	14	241	10	41	61	112	6	464	26	496	95	166	114	375	
% App. Total	6.2	88	5.8		8.9	36.6	54.5		1.2	93.5	5.2		25.3	44.3	30.4		
PHF	.750	.803	.700	.803	.500	.732	.803	.875	.500	.853	.813	.855	.766	.783	.919	.901	

Counts Unlimited, Inc.
PO Box 1178
Corona, CA 92878
(951)268-6268

City of Redlands
N/S: Orange Street
E/W: Pearl Avenue
Weather: Clear

File Name : 15_RED_Orange_Pearl AM
Site Code : 05121330
Start Date : 7/7/2021
Page No : 1

Groups Printed- Large 2 Axle Vehicles

	Orange Street Southbound					Pearl Avenue Westbound					Orange Street Northbound					Pearl Avenue Eastbound							
Start Time	Left	Thru	Right	RTOR	App. Total	Left	Thru	Right	RTOR	App. Total	Left	Thru	Right	RTOR	App. Total	Left	Thru	Right	RTOR	App. Total	Exclu. Total	Inclu. Total	Int. Total
07:00 AM	0	0	0	0	0	0	0	1	0	1	0	3	0	0	3	0	0	0	0	0	0	4	4
07:15 AM	0	2	0	0	2	0	0	2	2	2	0	2	0	0	2	1	1	0	0	2	2	8	10
07:30 AM	0	1	0	0	1	0	0	2	1	2	0	3	0	0	3	0	0	1	0	1	1	7	8
07:45 AM	1	0	0	0	1	0	0	0	0	0	0	1	0	0	1	0	1	1	1	2	1	4	5
Total	1	3	0	0	4	0	0	5	3	5	0	9	0	0	9	1	2	2	1	5	4	23	27
08:00 AM	0	1	1	0	2	0	0	0	0	0	0	2	0	0	2	2	3	2	1	7	1	11	12
08:15 AM	0	1	0	0	1	0	0	3	0	3	0	3	0	0	3	1	0	0	0	1	0	8	8
08:30 AM	2	0	0	0	2	1	1	1	0	3	0	6	1	0	7	0	0	0	0	0	0	12	12
08:45 AM	0	0	0	0	0	0	1	0	0	1	0	3	1	0	4	0	3	1	1	4	1	9	10
Total	2	2	1	0	5	1	2	4	0	7	0	14	2	0	16	3	6	3	2	12	2	40	42
Grand Total	3	5	1	0	9	1	2	9	3	12	0	23	2	0	25	4	8	5	3	17	6	63	69
Apprch %	33.3	55.6	11.1			8.3	16.7	75			0	92	8			23.5	47.1	29.4					
Total %	4.8	7.9	1.6		14.3	1.6	3.2	14.3		19	0	36.5	3.2		39.7	6.3	12.7	7.9		27	8.7	91.3	

	Orange Street Southbound				Pearl Avenue Westbound				Orange Street Northbound				Pearl Avenue Eastbound				
Start Time	Left	Thru	Right	App. Total	Left	Thru	Right	App. Total	Left	Thru	Right	App. Total	Left	Thru	Right	App. Total	Int. Total
Peak Hour Analysis From 08:00 AM to 08:45 AM - Peak 1 of 1																	
Peak Hour for Entire Intersection Begins at 08:00 AM																	
08:00 AM	0	**1**	**1**	**2**	0	0	0	0	0	2	0	2	**2**	**3**	**2**	**7**	11
08:15 AM	0	1	0	1	0	0	**3**	**3**	0	3	0	3	1	0	0	1	8
08:30 AM	**2**	0	0	2	**1**	**1**	1	3	0	**6**	**1**	**7**	0	0	0	0	**12**
08:45 AM	0	0	0	0	0	1	0	1	0	3	1	4	0	3	1	4	9
Total Volume	2	2	1	5	1	2	4	7	0	14	2	16	3	6	3	12	40
% App. Total	40	40	20		14.3	28.6	57.1		0	87.5	12.5		25	50	25		
PHF	.250	.500	.250	.625	.250	.500	.333	.583	.000	.583	.500	.571	.375	.500	.375	.429	.833

Counts Unlimited, Inc.
PO Box 1178
Corona, CA 92878
(951)268-6268

City of Redlands
N/S: Orange Street
E/W: Pearl Avenue
Weather: Clear

File Name : 15_RED_Orange_Pearl AM
Site Code : 05121330
Start Date : 7/7/2021
Page No : 2

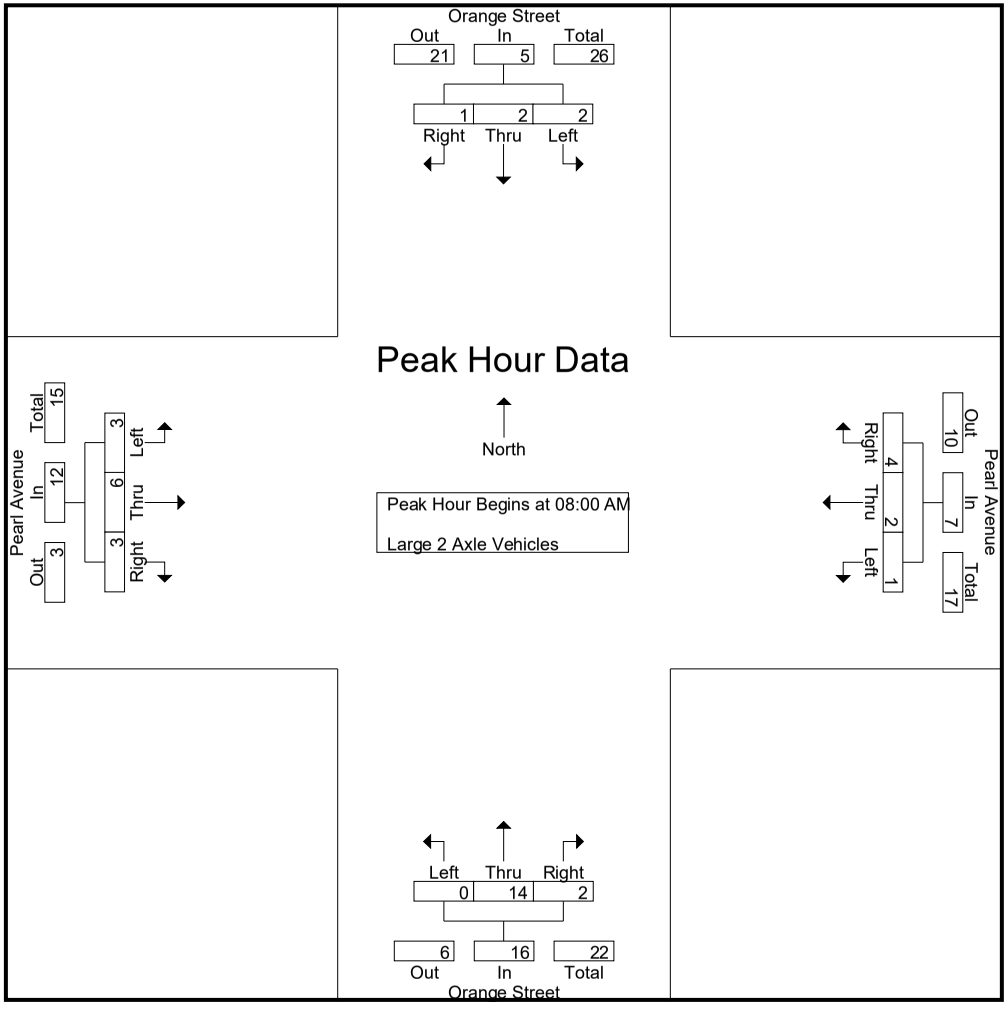

Counts Unlimited, Inc.
PO Box 1178
Corona, CA 92878
(951)268-6268

City of Redlands
N/S: Orange Street
E/W: Pearl Avenue
Weather: Clear

File Name : 15_RED_Orange_Pearl AM
Site Code : 05121330
Start Date : 7/7/2021
Page No : 3

	Orange Street Southbound				Pearl Avenue Westbound				Orange Street Northbound				Pearl Avenue Eastbound				
Start Time	Left	Thru	Right	App. Total	Left	Thru	Right	App. Total	Left	Thru	Right	App. Total	Left	Thru	Right	App. Total	Int. Total
Peak Hour Analysis From 08:00 AM to 08:45 AM - Peak 1 of 1																	
Peak Hour for Each Approach Begins at:																	
	08:00 AM				08:00 AM				08:00 AM				08:00 AM				
+0 mins.	0	**1**	**1**	**2**	0	0	0	0	0	2	0	2	**2**	**3**	**2**	**7**	
+15 mins.	0	1	0	1	0	0	**3**	**3**	0	3	0	3	1	0	0	1	
+30 mins.	**2**	0	0	2	**1**	**1**	1	3	0	**6**	**1**	**7**	0	0	0	0	
+45 mins.	0	0	0	0	0	1	0	1	0	3	1	4	0	3	1	4	
Total Volume	2	2	1	5	1	2	4	7	0	14	2	16	3	6	3	12	
% App. Total	40	40	20		14.3	28.6	57.1		0	87.5	12.5		25	50	25		
PHF	.250	.500	.250	.625	.250	.500	.333	.583	.000	.583	.500	.571	.375	.500	.375	.429	

Counts Unlimited, Inc.
PO Box 1178
Corona, CA 92878
(951)268-6268

City of Redlands
N/S: Orange Street
E/W: Pearl Avenue
Weather: Clear

File Name : 15_RED_Orange_Pearl AM
Site Code : 05121330
Start Date : 7/7/2021
Page No : 1

Groups Printed- 3 Axle Vehicles

	Orange Street Southbound					Pearl Avenue Westbound					Orange Street Northbound					Pearl Avenue Eastbound							
Start Time	Left	Thru	Right	RTOR	App. Total	Left	Thru	Right	RTOR	App. Total	Left	Thru	Right	RTOR	App. Total	Left	Thru	Right	RTOR	App. Total	Exclu. Total	Inclu. Total	Int. Total
07:00 AM	0	0	0	0	0	0	0	0	0	0	0	0	0	0	0	0	0	0	0	0	0	0	0
07:15 AM	0	0	0	0	0	0	0	0	0	0	0	0	0	0	0	0	1	0	0	1	0	1	1
07:30 AM	0	0	0	0	0	0	0	0	0	0	0	0	0	0	0	0	0	0	0	0	0	0	0
07:45 AM	0	0	0	0	0	0	0	0	0	0	0	0	0	0	0	2	0	0	0	2	0	2	2
Total	0	0	0	0	0	0	0	0	0	0	0	0	0	0	0	2	1	0	0	3	0	3	3
08:00 AM	0	0	0	0	0	0	0	0	0	0	0	0	0	0	0	0	0	0	0	0	0	0	0
08:15 AM	0	0	0	0	0	0	0	0	0	0	0	0	0	0	0	0	0	0	0	0	0	0	0
08:30 AM	0	0	0	0	0	0	0	0	0	0	0	2	0	0	2	0	0	0	0	0	0	2	2
08:45 AM	0	0	0	0	0	0	0	0	0	0	0	1	0	0	1	1	1	0	0	2	0	3	3
Total	0	0	0	0	0	0	0	0	0	0	0	3	0	0	3	1	1	0	0	2	0	5	5
Grand Total	0	0	0	0	0	0	0	0	0	0	0	3	0	0	3	3	2	0	0	5	0	8	8
Apprch %	0	0	0			0	0	0			0	100	0			60	40	0					
Total %	0	0	0		0	0	0	0		0	0	37.5	0		37.5	37.5	25	0		62.5	0	100	

	Orange Street Southbound				Pearl Avenue Westbound				Orange Street Northbound				Pearl Avenue Eastbound				
Start Time	Left	Thru	Right	App. Total	Left	Thru	Right	App. Total	Left	Thru	Right	App. Total	Left	Thru	Right	App. Total	Int. Total
Peak Hour Analysis From 08:00 AM to 08:45 AM - Peak 1 of 1																	
Peak Hour for Entire Intersection Begins at 08:00 AM																	
08:00 AM	0	0	0	0	0	0	0	0	0	0	0	0	0	0	0	0	0
08:15 AM	0	0	0	0	0	0	0	0	0	0	0	0	0	0	0	0	0
08:30 AM	0	0	0	0	0	0	0	0	0	**2**	0	**2**	0	0	0	0	2
08:45 AM	0	0	0	0	0	0	0	0	0	1	0	1	**1**	**1**	0	**2**	**3**
Total Volume	0	0	0	0	0	0	0	0	0	3	0	3	1	1	0	2	5
% App. Total	0	0	0		0	0	0		0	100	0		50	50	0		
PHF	.000	.000	.000	.000	.000	.000	.000	.000	.000	.375	.000	.375	.250	.250	.000	.250	.417

Counts Unlimited, Inc.
PO Box 1178
Corona, CA 92878
(951)268-6268

City of Redlands
N/S: Orange Street
E/W: Pearl Avenue
Weather: Clear

File Name : 15_RED_Orange_Pearl AM
Site Code : 05121330
Start Date : 7/7/2021
Page No : 2

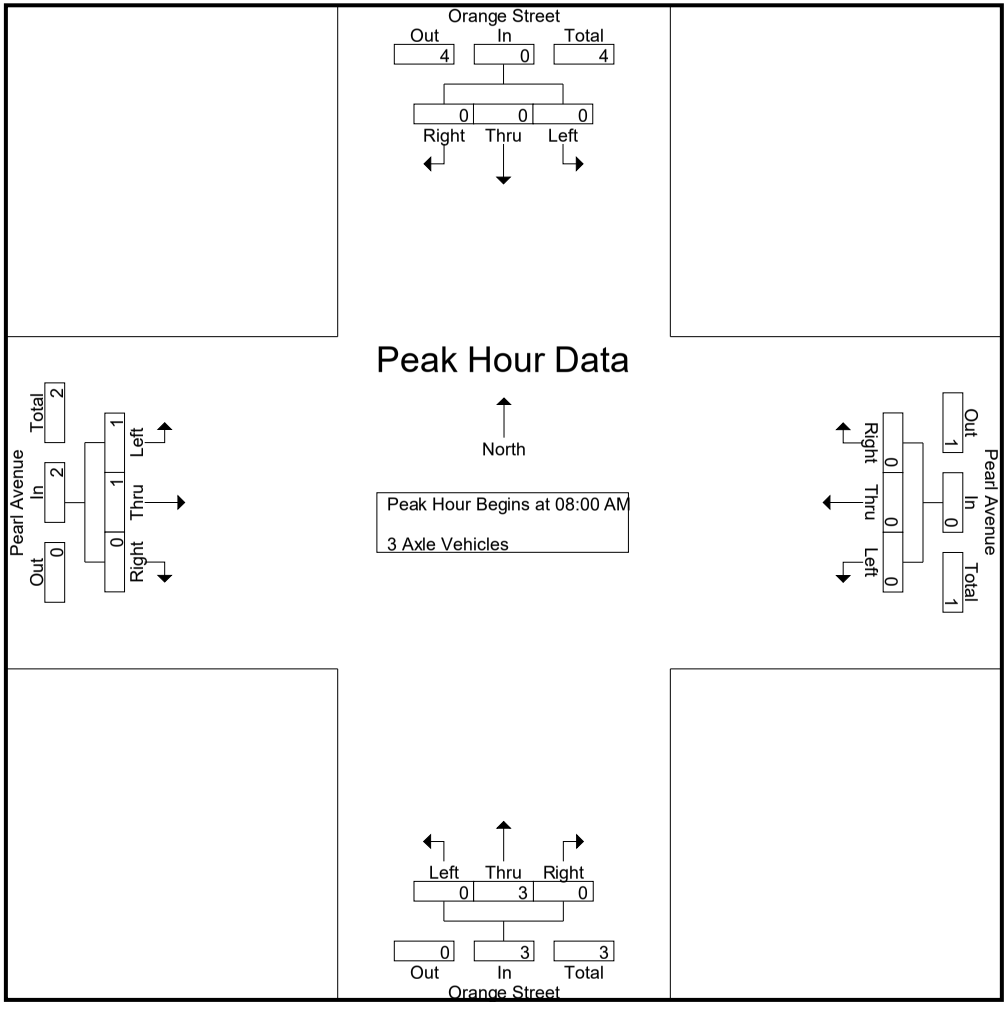

Counts Unlimited, Inc.
PO Box 1178
Corona, CA 92878
(951)268-6268

City of Redlands
N/S: Orange Street
E/W: Pearl Avenue
Weather: Clear

File Name : 15_RED_Orange_Pearl AM
Site Code : 05121330
Start Date : 7/7/2021
Page No : 3

	Orange Street Southbound				Pearl Avenue Westbound				Orange Street Northbound				Pearl Avenue Eastbound				
Start Time	Left	Thru	Right	App. Total	Left	Thru	Right	App. Total	Left	Thru	Right	App. Total	Left	Thru	Right	App. Total	Int. Total
Peak Hour Analysis From 08:00 AM to 08:45 AM - Peak 1 of 1																	
Peak Hour for Each Approach Begins at:																	
	08:00 AM				08:00 AM				08:00 AM				08:00 AM				
+0 mins.	0	0	0	0	0	0	0	0	0	0	0	0	0	0	0	0	
+15 mins.	0	0	0	0	0	0	0	0	0	0	0	0	0	0	0	0	
+30 mins.	0	0	0	0	0	0	0	0	0	**2**	0	**2**	0	0	0	0	
+45 mins.	0	0	0	0	0	0	0	0	0	1	0	1	**1**	**1**	0	**2**	
Total Volume	0	0	0	0	0	0	0	0	0	3	0	3	1	1	0	2	
% App. Total	0	0	0		0	0	0		0	100	0		50	50	0		
PHF	.000	.000	.000	.000	.000	.000	.000	.000	.000	.375	.000	.375	.250	.250	.000	.250	

Counts Unlimited, Inc.
PO Box 1178
Corona, CA 92878
(951)268-6268

City of Redlands
N/S: Orange Street
E/W: Pearl Avenue
Weather: Clear

File Name : 15_RED_Orange_Pearl AM
Site Code : 05121330
Start Date : 7/7/2021
Page No : 1

Groups Printed- 4+ Axle Trucks

	Orange Street Southbound					Pearl Avenue Westbound					Orange Street Northbound					Pearl Avenue Eastbound							
Start Time	Left	Thru	Right	RTOR	App. Total	Left	Thru	Right	RTOR	App. Total	Left	Thru	Right	RTOR	App. Total	Left	Thru	Right	RTOR	App. Total	Exclu. Total	Inclu. Total	Int. Total
07:00 AM	0	0	0	0	0	0	0	0	0	0	0	2	0	0	2	1	0	0	0	1	0	3	3
07:15 AM	0	0	0	0	0	0	0	0	0	0	0	1	0	0	1	0	1	1	1	2	1	3	4
07:30 AM	0	0	0	0	0	0	0	0	0	0	0	0	0	0	0	1	0	0	0	1	0	1	1
07:45 AM	0	0	0	0	0	0	0	0	0	0	0	0	0	0	0	0	0	0	0	0	0	0	0
Total	0	0	0	0	0	0	0	0	0	0	0	3	0	0	3	2	1	1	1	4	1	7	8
08:00 AM	0	0	0	0	0	0	0	0	0	0	0	1	0	0	1	1	1	0	0	2	0	3	3
08:15 AM	0	1	0	0	1	0	0	2	0	2	0	0	0	0	0	1	0	0	0	1	0	4	4
08:30 AM	0	0	0	0	0	0	0	0	0	0	0	0	0	0	0	1	1	0	0	2	0	2	2
08:45 AM	0	0	0	0	0	0	0	0	0	0	0	0	0	0	0	1	0	1	1	2	1	2	3
Total	0	1	0	0	1	0	0	2	0	2	0	1	0	0	1	4	2	1	1	7	1	11	12
Grand Total	0	1	0	0	1	0	0	2	0	2	0	4	0	0	4	6	3	2	2	11	2	18	20
Apprch %	0	100	0			0	0	100			0	100	0			54.5	27.3	18.2					
Total %	0	5.6	0		5.6	0	0	11.1		11.1	0	22.2	0		22.2	33.3	16.7	11.1		61.1	10	90	

	Orange Street Southbound				Pearl Avenue Westbound				Orange Street Northbound				Pearl Avenue Eastbound				
Start Time	Left	Thru	Right	App. Total	Left	Thru	Right	App. Total	Left	Thru	Right	App. Total	Left	Thru	Right	App. Total	Int. Total
Peak Hour Analysis From 08:00 AM to 08:45 AM - Peak 1 of 1																	
Peak Hour for Entire Intersection Begins at 08:00 AM																	
08:00 AM	0	0	0	0	0	0	0	0	0	**1**	0	**1**	**1**	**1**	0	**2**	3
08:15 AM	0	**1**	0	**1**	0	0	**2**	**2**	0	0	0	0	1	0	0	1	**4**
08:30 AM	0	0	0	0	0	0	0	0	0	0	0	0	1	1	0	2	2
08:45 AM	0	0	0	0	0	0	0	0	0	0	0	0	1	0	**1**	2	2
Total Volume	0	1	0	1	0	0	2	2	0	1	0	1	4	2	1	7	11
% App. Total	0	100	0		0	0	100		0	100	0		57.1	28.6	14.3		
PHF	.000	.250	.000	.250	.000	.000	.250	.250	.000	.250	.000	.250	1.00	.500	.250	.875	.688

Counts Unlimited, Inc.
PO Box 1178
Corona, CA 92878
(951)268-6268

City of Redlands
N/S: Orange Street
E/W: Pearl Avenue
Weather: Clear

File Name : 15_RED_Orange_Pearl AM
Site Code : 05121330
Start Date : 7/7/2021
Page No : 2

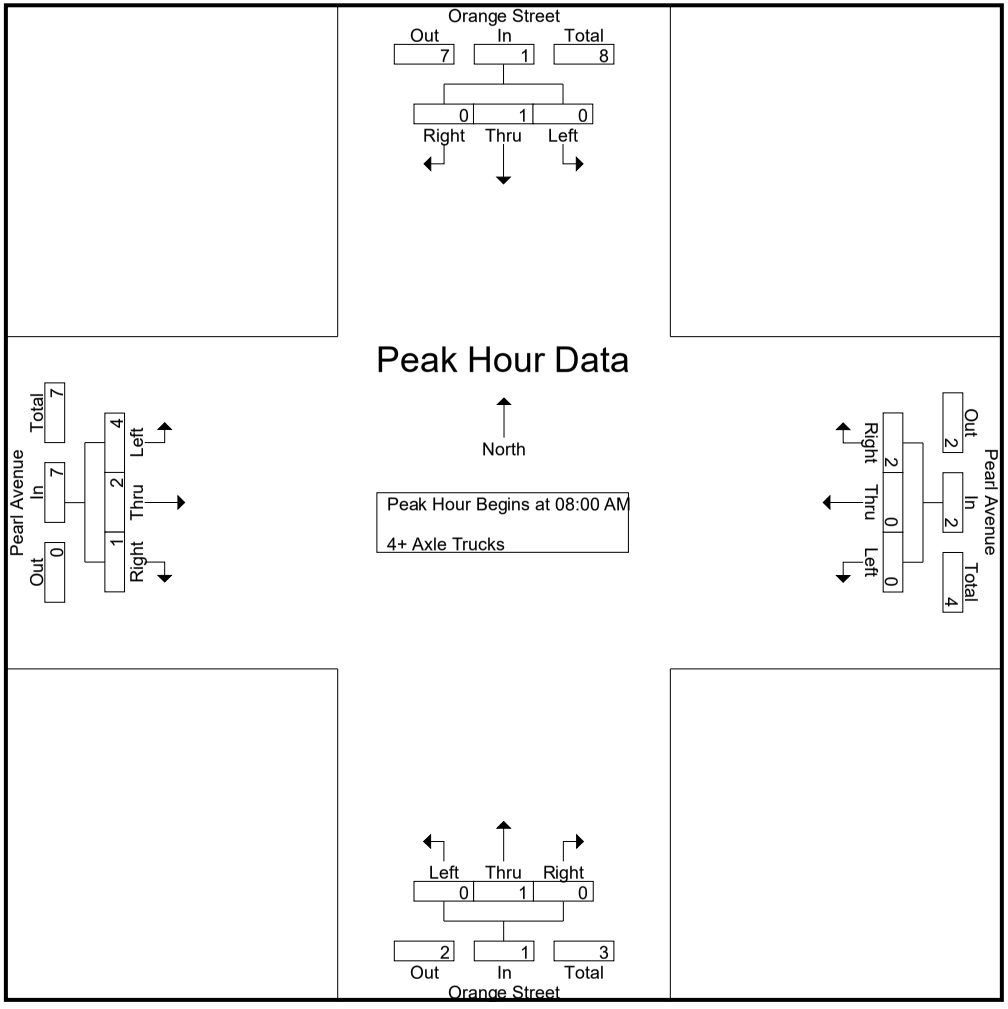

Counts Unlimited, Inc.
PO Box 1178
Corona, CA 92878
(951)268-6268

City of Redlands
N/S: Orange Street
E/W: Pearl Avenue
Weather: Clear

File Name : 15_RED_Orange_Pearl AM
Site Code : 05121330
Start Date : 7/7/2021
Page No : 3

	Orange Street Southbound				Pearl Avenue Westbound				Orange Street Northbound				Pearl Avenue Eastbound				
Start Time	Left	Thru	Right	App. Total	Left	Thru	Right	App. Total	Left	Thru	Right	App. Total	Left	Thru	Right	App. Total	Int. Total
Peak Hour Analysis From 08:00 AM to 08:45 AM - Peak 1 of 1																	
Peak Hour for Each Approach Begins at:																	
	08:00 AM				08:00 AM				08:00 AM				08:00 AM				
+0 mins.	0	0	0	0	0	0	0	0	0	**1**	0	**1**	**1**	**1**	0	**2**	
+15 mins.	0	**1**	0	**1**	0	0	**2**	**2**	0	0	0	0	1	0	0	1	
+30 mins.	0	0	0	0	0	0	0	0	0	0	0	0	1	1	0	2	
+45 mins.	0	0	0	0	0	0	0	0	0	0	0	0	1	0	**1**	2	
Total Volume	0	1	0	1	0	0	2	2	0	1	0	1	4	2	1	7	
% App. Total	0	100	0		0	0	100		0	100	0		57.1	28.6	14.3		
PHF	.000	.250	.000	.250	.000	.000	.250	.250	.000	.250	.000	.250	1.000	.500	.250	.875	

Counts Unlimited, Inc.
PO Box 1178
Corona, CA 92878
(951)268-6268

City of Redlands
N/S: Orange Street
E/W: Pearl Avenue
Weather: Clear

File Name : 15_RED_Orange_Pearl PM
Site Code : 05121330
Start Date : 7/7/2021
Page No : 1

Groups Printed- Passenger Vehicles - Large 2 Axle Vehicles - 3 Axle Vehicles - 4+ Axle Trucks

	Orange Street Southbound					Pearl Avenue Westbound					Orange Street Northbound					Pearl Avenue Eastbound							
Start Time	Left	Thru	Right	RTOR	App. Total	Left	Thru	Right	RTOR	App. Total	Left	Thru	Right	RTOR	App. Total	Left	Thru	Right	RTOR	App. Total	Exclu. Total	Inclu. Total	Int. Total
04:00 PM	14	76	6	0	96	6	7	31	11	44	2	189	19	2	210	50	58	32	6	140	19	490	509
04:15 PM	12	77	9	4	98	6	19	26	6	51	1	174	19	3	194	61	76	22	3	159	16	502	518
04:30 PM	9	80	9	1	98	8	10	42	8	60	2	185	15	2	202	52	66	41	12	159	23	519	542
04:45 PM	12	88	5	0	105	7	18	40	10	65	2	204	23	2	229	47	66	32	7	145	19	544	563
Total	47	321	29	5	397	27	54	139	35	220	7	752	76	9	835	210	266	127	28	603	77	2055	2132
05:00 PM	15	78	7	1	100	5	12	39	7	56	2	228	23	2	253	59	80	30	5	169	15	578	593
05:15 PM	14	90	3	0	107	7	15	41	8	63	0	231	16	0	247	52	74	42	8	168	16	585	601
05:30 PM	10	70	6	1	86	6	18	38	4	62	2	215	17	2	234	59	63	34	4	156	11	538	549
05:45 PM	9	94	4	0	107	5	16	28	9	49	3	183	15	2	201	56	60	41	4	157	15	514	529
Total	48	332	20	2	400	23	61	146	28	230	7	857	71	6	935	226	277	147	21	650	57	2215	2272
Grand Total	95	653	49	7	797	50	115	285	63	450	14	1609	147	15	1770	436	543	274	49	1253	134	4270	4404
Apprch %	11.9	81.9	6.1			11.1	25.6	63.3			0.8	90.9	8.3			34.8	43.3	21.9					
Total %	2.2	15.3	1.1		18.7	1.2	2.7	6.7		10.5	0.3	37.7	3.4		41.5	10.2	12.7	6.4		29.3	3	97	
Passenger Vehicles	93	647	49		796	50	114	283		509	14	1597	145		1770	424	542	272		1287	0	0	4362
% Passenger Vehicles	97.9	99.1	100	100	99	100	99.1	99.3	98.4	99.2	100	99.3	98.6	93.3	99.2	97.2	99.8	99.3	100	98.8	0	0	99
Large 2 Axle Vehicles	2	6	0		8	0	1	1		3	0	12	2		15	7	1	0		8	0	0	34
% Large 2 Axle Vehicles	2.1	0.9	0	0	1	0	0.9	0.4	1.6	0.6	0	0.7	1.4	6.7	0.8	1.6	0.2	0	0	0.6	0	0	0.8
3 Axle Vehicles	0	0	0		0	0	0	1		1	0	0	0		0	0	0	0		0	0	0	1
% 3 Axle Vehicles	0	0	0	0	0	0	0	0.4	0	0.2	0	0	0	0	0	0	0	0	0	0	0	0	0
4+ Axle Trucks	0	0	0		0	0	0	0		0	0	0	0		0	5	0	2		7	0	0	7
% 4+ Axle Trucks	0	0	0	0	0	0	0	0	0	0	0	0	0	0	0	1.1	0	0.7	0	0.5	0	0	0.2

	Orange Street Southbound				Pearl Avenue Westbound				Orange Street Northbound				Pearl Avenue Eastbound				
Start Time	Left	Thru	Right	App. Total	Left	Thru	Right	App. Total	Left	Thru	Right	App. Total	Left	Thru	Right	App. Total	Int. Total
Peak Hour Analysis From 04:00 PM to 05:45 PM - Peak 1 of 1																	
Peak Hour for Entire Intersection Begins at 04:45 PM																	
04:45 PM	12	88	5	105	**7**	**18**	40	**65**	**2**	204	**23**	229	47	66	32	145	544
05:00 PM	**15**	78	**7**	100	5	12	39	56	2	228	23	**253**	**59**	**80**	30	**169**	578
05:15 PM	14	**90**	3	**107**	7	15	**41**	63	0	**231**	16	247	52	74	**42**	168	**585**
05:30 PM	10	70	6	86	6	18	38	62	2	215	17	234	59	63	34	156	538
Total Volume	51	326	21	398	25	63	158	246	6	878	79	963	217	283	138	638	2245
% App. Total	12.8	81.9	5.3		10.2	25.6	64.2		0.6	91.2	8.2		34	44.4	21.6		
PHF	.850	.906	.750	.930	.893	.875	.963	.946	.750	.950	.859	.952	.919	.884	.821	.944	.959

Counts Unlimited, Inc.
PO Box 1178
Corona, CA 92878
(951)268-6268

City of Redlands
N/S: Orange Street
E/W: Pearl Avenue
Weather: Clear

File Name : 15_RED_Orange_Pearl PM
Site Code : 05121330
Start Date : 7/7/2021
Page No : 2

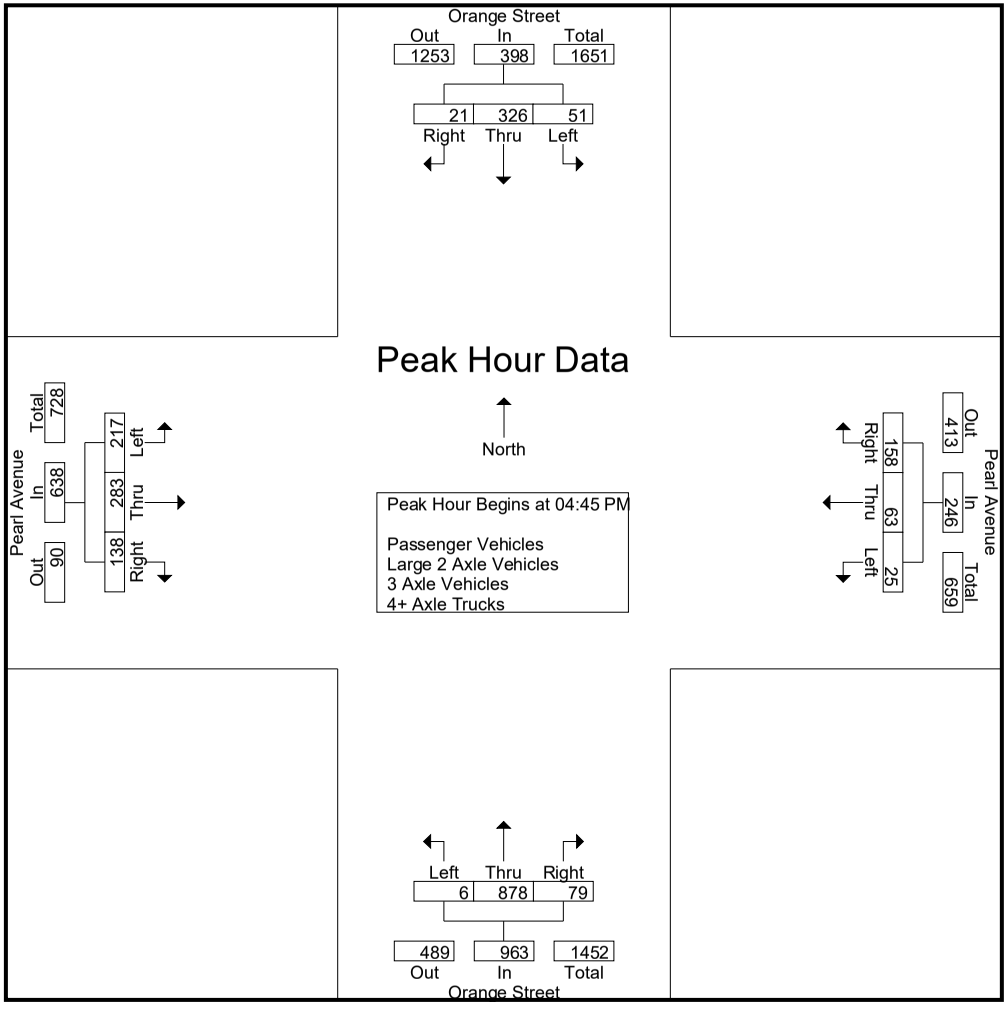

Counts Unlimited, Inc.
PO Box 1178
Corona, CA 92878
(951)268-6268

City of Redlands
N/S: Orange Street
E/W: Pearl Avenue
Weather: Clear

File Name : 15_RED_Orange_Pearl PM
Site Code : 05121330
Start Date : 7/7/2021
Page No : 3

	Orange Street Southbound				Pearl Avenue Westbound				Orange Street Northbound				Pearl Avenue Eastbound				
Start Time	Left	Thru	Right	App. Total	Left	Thru	Right	App. Total	Left	Thru	Right	App. Total	Left	Thru	Right	App. Total	Int. Total
Peak Hour Analysis From 04:00 PM to 05:45 PM - Peak 1 of 1																	
Peak Hour for Each Approach Begins at:																	
	04:30 PM				04:45 PM				04:45 PM				05:00 PM				
+0 mins.	9	80	**9**	98	**7**	**18**	40	**65**	**2**	204	**23**	229	**59**	**80**	30	**169**	
+15 mins.	12	88	5	105	5	12	39	56	2	228	23	**253**	52	74	**42**	168	
+30 mins.	**15**	78	7	100	7	15	**41**	63	0	**231**	16	247	59	63	34	156	
+45 mins.	14	**90**	3	**107**	6	18	38	62	2	215	17	234	56	60	41	157	
Total Volume	50	336	24	410	25	63	158	246	6	878	79	963	226	277	147	650	
% App. Total	12.2	82	5.9		10.2	25.6	64.2		0.6	91.2	8.2		34.8	42.6	22.6		
PHF	.833	.933	.667	.958	.893	.875	.963	.946	.750	.950	.859	.952	.958	.866	.875	.962	

Counts Unlimited, Inc.
PO Box 1178
Corona, CA 92878
(951)268-6268

City of Redlands
N/S: Orange Street
E/W: Pearl Avenue
Weather: Clear

File Name : 15_RED_Orange_Pearl PM
Site Code : 05121330
Start Date : 7/7/2021
Page No : 1

Groups Printed- Passenger Vehicles

	Orange Street Southbound					Pearl Avenue Westbound					Orange Street Northbound					Pearl Avenue Eastbound							
Start Time	Left	Thru	Right	RTOR	App. Total	Left	Thru	Right	RTOR	App. Total	Left	Thru	Right	RTOR	App. Total	Left	Thru	Right	RTOR	App. Total	Exclu. Total	Inclu. Total	Int. Total
04:00 PM	14	76	6	0	96	6	7	31	11	44	2	187	19	2	208	47	58	31	6	136	19	484	503
04:15 PM	12	76	9	4	97	6	19	25	6	50	1	171	19	3	191	59	76	22	3	157	16	495	511
04:30 PM	9	80	9	1	98	8	10	42	8	60	2	184	14	2	200	52	66	41	12	159	23	517	540
04:45 PM	11	86	5	0	102	7	18	40	10	65	2	203	23	2	228	44	65	32	7	141	19	536	555
Total	46	318	29	5	393	27	54	138	35	219	7	745	75	9	827	202	265	126	28	593	77	2032	2109
05:00 PM	14	76	7	1	97	5	11	39	7	55	2	228	23	2	253	57	80	30	5	167	15	572	587
05:15 PM	14	90	3	0	107	7	15	41	8	63	0	228	16	0	244	52	74	42	8	168	16	582	598
05:30 PM	10	70	6	1	86	6	18	38	4	62	2	214	16	1	232	59	63	34	4	156	10	536	546
05:45 PM	9	93	4	0	106	5	16	27	8	48	3	182	15	2	200	54	60	40	4	154	14	508	522
Total	47	329	20	2	396	23	60	145	27	228	7	852	70	5	929	222	277	146	21	645	55	2198	2253
Grand Total	93	647	49	7	789	50	114	283	62	447	14	1597	145	14	1756	424	542	272	49	1238	132	4230	4362
Apprch %	11.8	82	6.2			11.2	25.5	63.3			0.8	90.9	8.3			34.2	43.8	22					
Total %	2.2	15.3	1.2		18.7	1.2	2.7	6.7		10.6	0.3	37.8	3.4		41.5	10	12.8	6.4		29.3	3	97	

	Orange Street Southbound				Pearl Avenue Westbound				Orange Street Northbound				Pearl Avenue Eastbound				
Start Time	Left	Thru	Right	App. Total	Left	Thru	Right	App. Total	Left	Thru	Right	App. Total	Left	Thru	Right	App. Total	Int. Total
Peak Hour Analysis From 04:45 PM to 05:30 PM - Peak 1 of 1																	
Peak Hour for Entire Intersection Begins at 04:45 PM																	
04:45 PM	11	86	5	102	**7**	**18**	40	**65**	**2**	203	**23**	228	44	65	32	141	536
05:00 PM	**14**	76	**7**	97	5	11	39	55	2	**228**	23	**253**	57	**80**	30	167	572
05:15 PM	14	**90**	3	**107**	7	15	**41**	63	0	228	16	244	52	74	**42**	**168**	**582**
05:30 PM	10	70	6	86	6	18	38	62	2	214	16	232	**59**	63	34	156	536
Total Volume	49	322	21	392	25	62	158	245	6	873	78	957	212	282	138	632	2226
% App. Total	12.5	82.1	5.4		10.2	25.3	64.5		0.6	91.2	8.2		33.5	44.6	21.8		
PHF	.875	.894	.750	.916	.893	.861	.963	.942	.750	.957	.848	.946	.898	.881	.821	.940	.956

Counts Unlimited, Inc.
PO Box 1178
Corona, CA 92878
(951)268-6268

City of Redlands
N/S: Orange Street
E/W: Pearl Avenue
Weather: Clear

File Name : 15_RED_Orange_Pearl PM
Site Code : 05121330
Start Date : 7/7/2021
Page No : 2

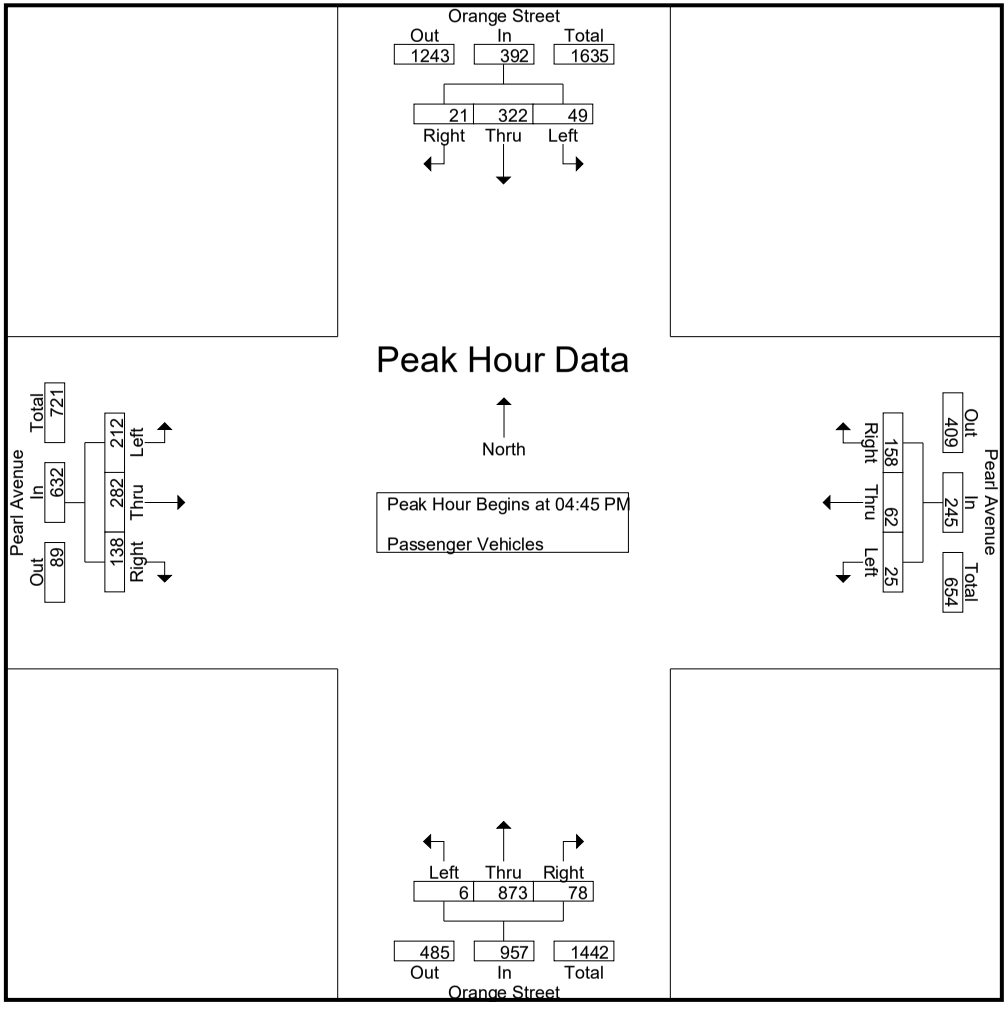

Counts Unlimited, Inc.
PO Box 1178
Corona, CA 92878
(951)268-6268

City of Redlands
N/S: Orange Street
E/W: Pearl Avenue
Weather: Clear

File Name : 15_RED_Orange_Pearl PM
Site Code : 05121330
Start Date : 7/7/2021
Page No : 3

	Orange Street Southbound				Pearl Avenue Westbound				Orange Street Northbound				Pearl Avenue Eastbound				
Start Time	Left	Thru	Right	App. Total	Left	Thru	Right	App. Total	Left	Thru	Right	App. Total	Left	Thru	Right	App. Total	Int. Total
Peak Hour Analysis From 04:45 PM to 05:30 PM - Peak 1 of 1																	
Peak Hour for Each Approach Begins at:																	
	04:45 PM				04:45 PM				04:45 PM				04:45 PM				
+0 mins.	11	86	5	102	**7**	**18**	40	**65**	**2**	203	**23**	228	44	65	32	141	
+15 mins.	**14**	76	**7**	97	5	11	39	55	2	**228**	23	**253**	57	**80**	30	167	
+30 mins.	14	**90**	3	**107**	7	15	**41**	63	0	228	16	244	52	74	**42**	**168**	
+45 mins.	10	70	6	86	6	18	38	62	2	214	16	232	**59**	63	34	156	
Total Volume	49	322	21	392	25	62	158	245	6	873	78	957	212	282	138	632	
% App. Total	12.5	82.1	5.4		10.2	25.3	64.5		0.6	91.2	8.2		33.5	44.6	21.8		
PHF	.875	.894	.750	.916	.893	.861	.963	.942	.750	.957	.848	.946	.898	.881	.821	.940	

Counts Unlimited, Inc.
PO Box 1178
Corona, CA 92878
(951)268-6268

City of Redlands
N/S: Orange Street
E/W: Pearl Avenue
Weather: Clear

File Name : 15_RED_Orange_Pearl PM
Site Code : 05121330
Start Date : 7/7/2021
Page No : 1

Groups Printed- Large 2 Axle Vehicles

	Orange Street Southbound					Pearl Avenue Westbound					Orange Street Northbound					Pearl Avenue Eastbound							
Start Time	Left	Thru	Right	RTOR	App. Total	Left	Thru	Right	RTOR	App. Total	Left	Thru	Right	RTOR	App. Total	Left	Thru	Right	RTOR	App. Total	Exclu. Total	Inclu. Total	Int. Total
04:00 PM	0	0	0	0	0	0	0	0	0	0	0	2	0	0	2	2	0	0	0	2	0	4	4
04:15 PM	0	1	0	0	1	0	0	0	0	0	0	3	0	0	3	2	0	0	0	2	0	6	6
04:30 PM	0	0	0	0	0	0	0	0	0	0	0	1	1	0	2	0	0	0	0	0	0	2	2
04:45 PM	1	2	0	0	3	0	0	0	0	0	0	1	0	0	1	2	1	0	0	3	0	7	7
Total	1	3	0	0	4	0	0	0	0	0	0	7	1	0	8	6	1	0	0	7	0	19	19
05:00 PM	1	2	0	0	3	0	1	0	0	1	0	0	0	0	0	1	0	0	0	1	0	5	5
05:15 PM	0	0	0	0	0	0	0	0	0	0	0	3	0	0	3	0	0	0	0	0	0	3	3
05:30 PM	0	0	0	0	0	0	0	0	0	0	0	1	1	1	2	0	0	0	0	0	1	2	3
05:45 PM	0	1	0	0	1	0	0	1	1	1	0	1	0	0	1	0	0	0	0	0	1	3	4
Total	1	3	0	0	4	0	1	1	1	2	0	5	1	1	6	1	0	0	0	1	2	13	15
Grand Total	2	6	0	0	8	0	1	1	1	2	0	12	2	1	14	7	1	0	0	8	2	32	34
Apprch %	25	75	0			0	50	50			0	85.7	14.3			87.5	12.5	0					
Total %	6.2	18.8	0		25	0	3.1	3.1		6.2	0	37.5	6.2		43.8	21.9	3.1	0		25	5.9	94.1	

	Orange Street Southbound				Pearl Avenue Westbound				Orange Street Northbound				Pearl Avenue Eastbound				
Start Time	Left	Thru	Right	App. Total	Left	Thru	Right	App. Total	Left	Thru	Right	App. Total	Left	Thru	Right	App. Total	Int. Total
Peak Hour Analysis From 04:45 PM to 05:30 PM - Peak 1 of 1																	
Peak Hour for Entire Intersection Begins at 04:45 PM																	
04:45 PM	**1**	**2**	0	**3**	0	0	0	0	0	1	0	1	**2**	**1**	0	**3**	**7**
05:00 PM	1	2	0	3	0	**1**	0	**1**	0	0	0	0	1	0	0	1	5
05:15 PM	0	0	0	0	0	0	0	0	0	**3**	0	**3**	0	0	0	0	3
05:30 PM	0	0	0	0	0	0	0	0	0	1	**1**	2	0	0	0	0	2
Total Volume	2	4	0	6	0	1	0	1	0	5	1	6	3	1	0	4	17
% App. Total	33.3	66.7	0		0	100	0		0	83.3	16.7		75	25	0		
PHF	.500	.500	.000	.500	.000	.250	.000	.250	.000	.417	.250	.500	.375	.250	.000	.333	.607

Counts Unlimited, Inc.
PO Box 1178
Corona, CA 92878
(951)268-6268

City of Redlands
N/S: Orange Street
E/W: Pearl Avenue
Weather: Clear

File Name : 15_RED_Orange_Pearl PM
Site Code : 05121330
Start Date : 7/7/2021
Page No : 2

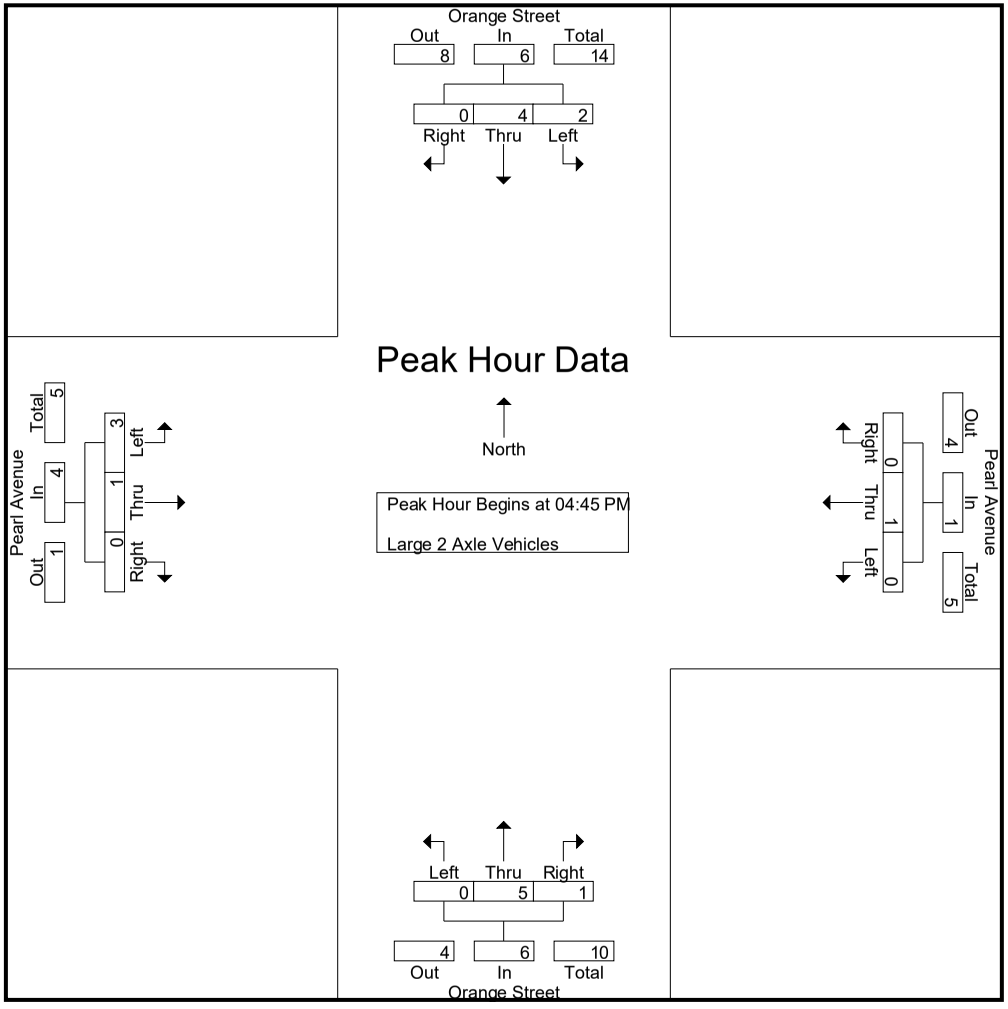

Counts Unlimited, Inc.
PO Box 1178
Corona, CA 92878
(951)268-6268

City of Redlands
N/S: Orange Street
E/W: Pearl Avenue
Weather: Clear

File Name : 15_RED_Orange_Pearl PM
Site Code : 05121330
Start Date : 7/7/2021
Page No : 3

	Orange Street Southbound				Pearl Avenue Westbound				Orange Street Northbound				Pearl Avenue Eastbound				
Start Time	Left	Thru	Right	App. Total	Left	Thru	Right	App. Total	Left	Thru	Right	App. Total	Left	Thru	Right	App. Total	Int. Total
Peak Hour Analysis From 04:45 PM to 05:30 PM - Peak 1 of 1																	
Peak Hour for Each Approach Begins at:																	
	04:45 PM				04:45 PM				04:45 PM				04:45 PM				
+0 mins.	**1**	**2**	0	**3**	0	0	0	0	0	1	0	1	**2**	**1**	0	**3**	
+15 mins.	1	2	0	3	0	**1**	0	**1**	0	0	0	0	1	0	0	1	
+30 mins.	0	0	0	0	0	0	0	0	0	**3**	0	**3**	0	0	0	0	
+45 mins.	0	0	0	0	0	0	0	0	0	1	**1**	2	0	0	0	0	
Total Volume	2	4	0	6	0	1	0	1	0	5	1	6	3	1	0	4	
% App. Total	33.3	66.7	0		0	100	0		0	83.3	16.7		75	25	0		
PHF	.500	.500	.000	.500	.000	.250	.000	.250	.000	.417	.250	.500	.375	.250	.000	.333	

Counts Unlimited, Inc.
PO Box 1178
Corona, CA 92878
(951)268-6268

City of Redlands
N/S: Orange Street
E/W: Pearl Avenue
Weather: Clear

File Name : 15_RED_Orange_Pearl PM
Site Code : 05121330
Start Date : 7/7/2021
Page No : 1

Groups Printed- 3 Axle Vehicles

	Orange Street Southbound					Pearl Avenue Westbound					Orange Street Northbound					Pearl Avenue Eastbound							
Start Time	Left	Thru	Right	RTOR	App. Total	Left	Thru	Right	RTOR	App. Total	Left	Thru	Right	RTOR	App. Total	Left	Thru	Right	RTOR	App. Total	Exclu. Total	Inclu. Total	Int. Total
04:00 PM	0	0	0	0	0	0	0	0	0	0	0	0	0	0	0	0	0	0	0	0	0	0	0
04:15 PM	0	0	0	0	0	0	0	1	0	1	0	0	0	0	0	0	0	0	0	0	0	1	1
04:30 PM	0	0	0	0	0	0	0	0	0	0	0	0	0	0	0	0	0	0	0	0	0	0	0
04:45 PM	0	0	0	0	0	0	0	0	0	0	0	0	0	0	0	0	0	0	0	0	0	0	0
Total	0	0	0	0	0	0	0	1	0	1	0	0	0	0	0	0	0	0	0	0	0	1	1
05:00 PM	0	0	0	0	0	0	0	0	0	0	0	0	0	0	0	0	0	0	0	0	0	0	0
05:15 PM	0	0	0	0	0	0	0	0	0	0	0	0	0	0	0	0	0	0	0	0	0	0	0
05:30 PM	0	0	0	0	0	0	0	0	0	0	0	0	0	0	0	0	0	0	0	0	0	0	0
05:45 PM	0	0	0	0	0	0	0	0	0	0	0	0	0	0	0	0	0	0	0	0	0	0	0
Total	0	0	0	0	0	0	0	0	0	0	0	0	0	0	0	0	0	0	0	0	0	0	0
Grand Total	0	0	0	0	0	0	0	1	0	1	0	0	0	0	0	0	0	0	0	0	0	1	1
Apprch %	0	0	0			0	0	100			0	0	0			0	0	0					
Total %	0	0	0		0	0	0	100		100	0	0	0		0	0	0	0		0	0	100	

	Orange Street Southbound				Pearl Avenue Westbound				Orange Street Northbound				Pearl Avenue Eastbound				
Start Time	Left	Thru	Right	App. Total	Left	Thru	Right	App. Total	Left	Thru	Right	App. Total	Left	Thru	Right	App. Total	Int. Total
Peak Hour Analysis From 04:45 PM to 05:30 PM - Peak 1 of 1																	
Peak Hour for Entire Intersection Begins at 04:45 PM																	
04:45 PM	0	0	0	0	0	0	0	0	0	0	0	0	0	0	0	0	0
05:00 PM	0	0	0	0	0	0	0	0	0	0	0	0	0	0	0	0	0
05:15 PM	0	0	0	0	0	0	0	0	0	0	0	0	0	0	0	0	0
05:30 PM	0	0	0	0	0	0	0	0	0	0	0	0	0	0	0	0	0
Total Volume	0	0	0	0	0	0	0	0	0	0	0	0	0	0	0	0	0
% App. Total	0	0	0		0	0	0		0	0	0		0	0	0		
PHF	.000	.000	.000	.000	.000	.000	.000	.000	.000	.000	.000	.000	.000	.000	.000	.000	.000

Counts Unlimited, Inc.
PO Box 1178
Corona, CA 92878
(951)268-6268

City of Redlands
N/S: Orange Street
E/W: Pearl Avenue
Weather: Clear

File Name : 15_RED_Orange_Pearl PM
Site Code : 05121330
Start Date : 7/7/2021
Page No : 2

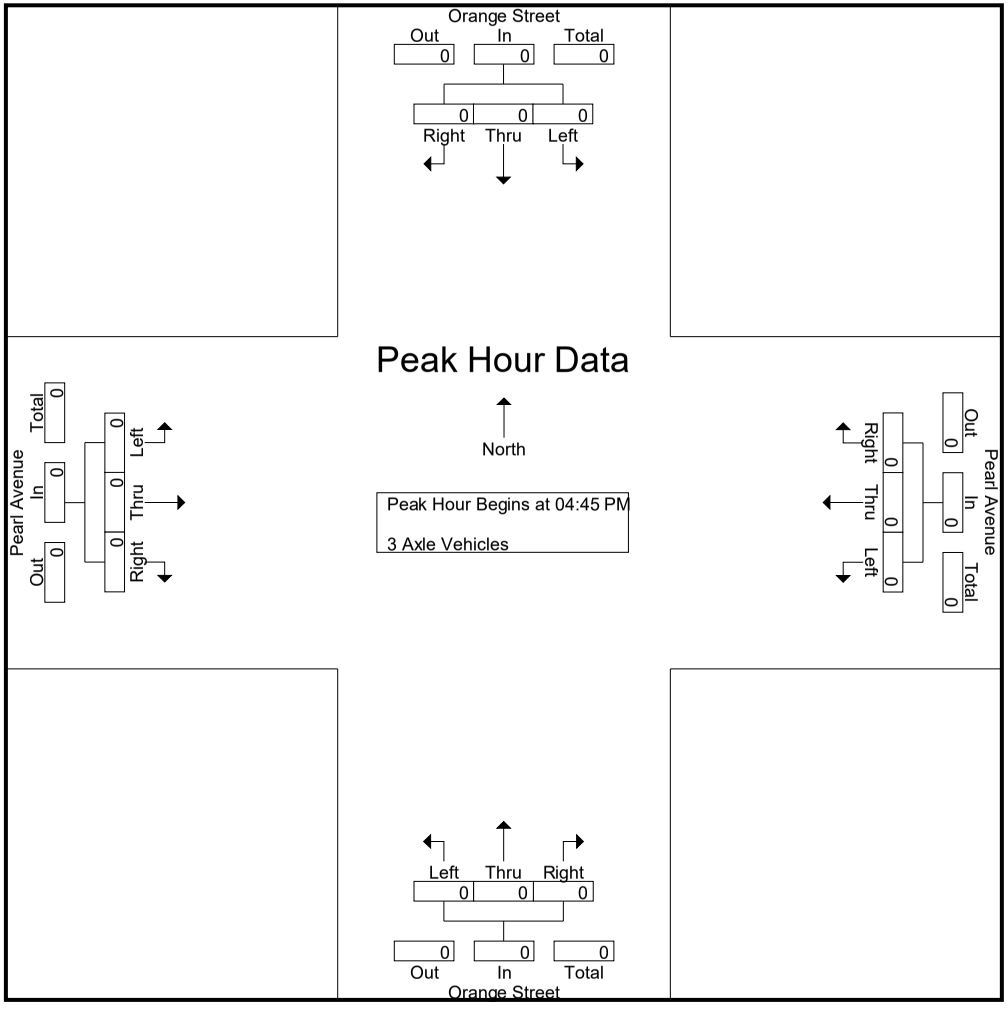

Counts Unlimited, Inc.
PO Box 1178
Corona, CA 92878
(951)268-6268

City of Redlands
N/S: Orange Street
E/W: Pearl Avenue
Weather: Clear

File Name : 15_RED_Orange_Pearl PM
Site Code : 05121330
Start Date : 7/7/2021
Page No : 3

	Orange Street Southbound				Pearl Avenue Westbound				Orange Street Northbound				Pearl Avenue Eastbound				
Start Time	Left	Thru	Right	App. Total	Left	Thru	Right	App. Total	Left	Thru	Right	App. Total	Left	Thru	Right	App. Total	Int. Total
Peak Hour Analysis From 04:45 PM to 05:30 PM - Peak 1 of 1																	
Peak Hour for Each Approach Begins at:																	
	04:45 PM				04:45 PM				04:45 PM				04:45 PM				
+0 mins.	0	0	0	0	0	0	0	0	0	0	0	0	0	0	0	0	
+15 mins.	0	0	0	0	0	0	0	0	0	0	0	0	0	0	0	0	
+30 mins.	0	0	0	0	0	0	0	0	0	0	0	0	0	0	0	0	
+45 mins.	0	0	0	0	0	0	0	0	0	0	0	0	0	0	0	0	
Total Volume	0	0	0	0	0	0	0	0	0	0	0	0	0	0	0	0	
% App. Total	0	0	0		0	0	0		0	0	0		0	0	0		
PHF	.000	.000	.000	.000	.000	.000	.000	.000	.000	.000	.000	.000	.000	.000	.000	.000	

Counts Unlimited, Inc.
PO Box 1178
Corona, CA 92878
(951)268-6268

City of Redlands
N/S: Orange Street
E/W: Pearl Avenue
Weather: Clear

File Name : 15_RED_Orange_Pearl PM
Site Code : 05121330
Start Date : 7/7/2021
Page No : 1

Groups Printed- 4+ Axle Trucks

	Orange Street Southbound					Pearl Avenue Westbound					Orange Street Northbound					Pearl Avenue Eastbound							
Start Time	Left	Thru	Right	RTOR	App. Total	Left	Thru	Right	RTOR	App. Total	Left	Thru	Right	RTOR	App. Total	Left	Thru	Right	RTOR	App. Total	Exclu. Total	Inclu. Total	Int. Total
04:00 PM	0	0	0	0	0	0	0	0	0	0	0	0	0	0	0	1	0	1	0	2	0	2	2
04:15 PM	0	0	0	0	0	0	0	0	0	0	0	0	0	0	0	0	0	0	0	0	0	0	0
04:30 PM	0	0	0	0	0	0	0	0	0	0	0	0	0	0	0	0	0	0	0	0	0	0	0
04:45 PM	0	0	0	0	0	0	0	0	0	0	0	0	0	0	0	1	0	0	0	1	0	1	1
Total	0	0	0	0	0	0	0	0	0	0	0	0	0	0	0	2	0	1	0	3	0	3	3
05:00 PM	0	0	0	0	0	0	0	0	0	0	0	0	0	0	0	1	0	0	0	1	0	1	1
05:15 PM	0	0	0	0	0	0	0	0	0	0	0	0	0	0	0	0	0	0	0	0	0	0	0
05:30 PM	0	0	0	0	0	0	0	0	0	0	0	0	0	0	0	0	0	0	0	0	0	0	0
05:45 PM	0	0	0	0	0	0	0	0	0	0	0	0	0	0	0	2	0	1	0	3	0	3	3
Total	0	0	0	0	0	0	0	0	0	0	0	0	0	0	0	3	0	1	0	4	0	4	4
Grand Total	0	0	0	0	0	0	0	0	0	0	0	0	0	0	0	5	0	2	0	7	0	7	7
Apprch %	0	0	0			0	0	0			0	0	0			71.4	0	28.6					
Total %	0	0	0		0	0	0	0		0	0	0	0		0	71.4	0	28.6		100	0	100	

	Orange Street Southbound				Pearl Avenue Westbound				Orange Street Northbound				Pearl Avenue Eastbound				
Start Time	Left	Thru	Right	App. Total	Left	Thru	Right	App. Total	Left	Thru	Right	App. Total	Left	Thru	Right	App. Total	Int. Total
Peak Hour Analysis From 04:45 PM to 05:30 PM - Peak 1 of 1																	
Peak Hour for Entire Intersection Begins at 04:45 PM																	
04:45 PM	0	0	0	0	0	0	0	0	0	0	0	0	**1**	0	0	**1**	**1**
05:00 PM	0	0	0	0	0	0	0	0	0	0	0	0	1	0	0	1	1
05:15 PM	0	0	0	0	0	0	0	0	0	0	0	0	0	0	0	0	0
05:30 PM	0	0	0	0	0	0	0	0	0	0	0	0	0	0	0	0	0
Total Volume	0	0	0	0	0	0	0	0	0	0	0	0	2	0	0	2	2
% App. Total	0	0	0		0	0	0		0	0	0		100	0	0		
PHF	.000	.000	.000	.000	.000	.000	.000	.000	.000	.000	.000	.000	.500	.000	.000	.500	.500

Counts Unlimited, Inc.
PO Box 1178
Corona, CA 92878
(951)268-6268

City of Redlands
N/S: Orange Street
E/W: Pearl Avenue
Weather: Clear

File Name : 15_RED_Orange_Pearl PM
Site Code : 05121330
Start Date : 7/7/2021
Page No : 2

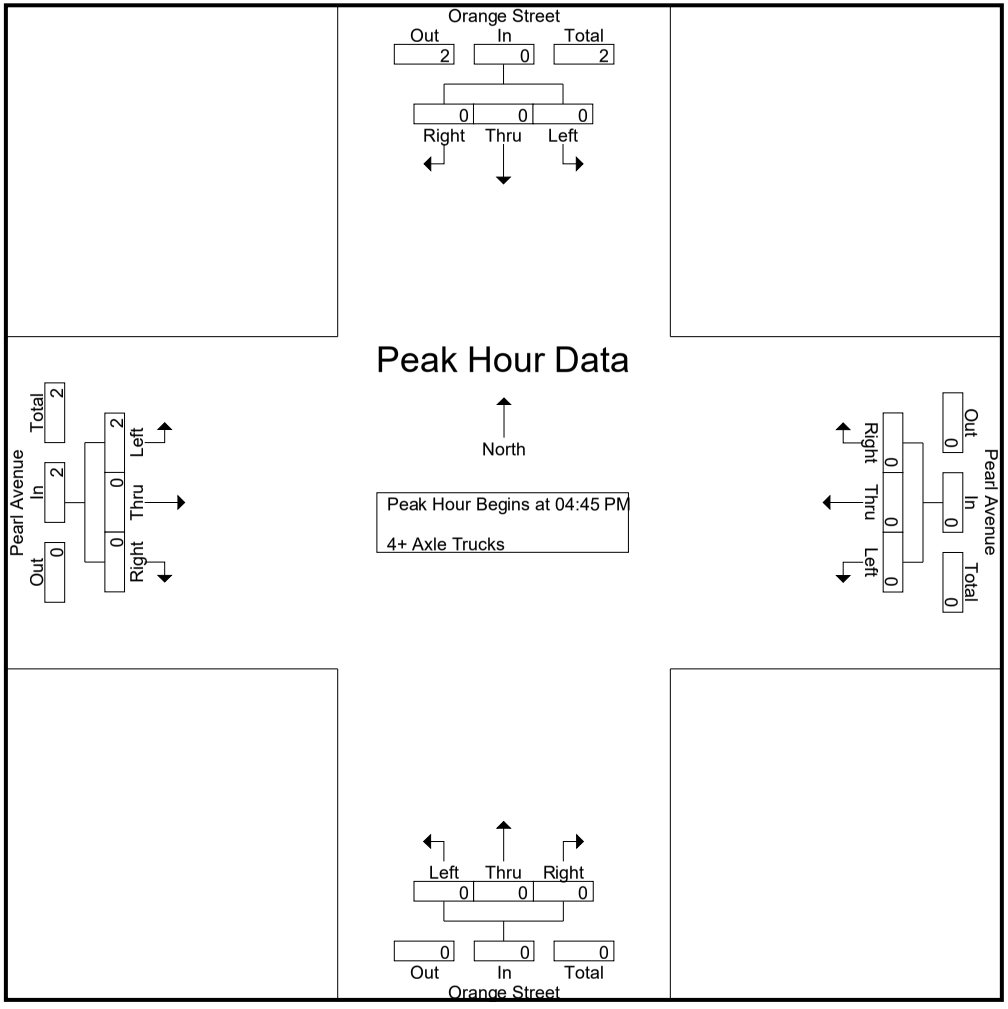

Counts Unlimited, Inc.
PO Box 1178
Corona, CA 92878
(951)268-6268

City of Redlands
N/S: Orange Street
E/W: Pearl Avenue
Weather: Clear

File Name : 15_RED_Orange_Pearl PM
Site Code : 05121330
Start Date : 7/7/2021
Page No : 3

	Orange Street Southbound				Pearl Avenue Westbound				Orange Street Northbound				Pearl Avenue Eastbound				
Start Time	Left	Thru	Right	App. Total	Left	Thru	Right	App. Total	Left	Thru	Right	App. Total	Left	Thru	Right	App. Total	Int. Total
Peak Hour Analysis From 04:45 PM to 05:30 PM - Peak 1 of 1																	
Peak Hour for Each Approach Begins at:																	
	04:45 PM				04:45 PM				04:45 PM				04:45 PM				
+0 mins.	0	0	0	0	0	0	0	0	0	0	0	0	**1**	0	0	**1**	
+15 mins.	0	0	0	0	0	0	0	0	0	0	0	0	1	0	0	1	
+30 mins.	0	0	0	0	0	0	0	0	0	0	0	0	0	0	0	0	
+45 mins.	0	0	0	0	0	0	0	0	0	0	0	0	0	0	0	0	
Total Volume	0	0	0	0	0	0	0	0	0	0	0	0	2	0	0	2	
% App. Total	0	0	0		0	0	0		0	0	0		100	0	0		
PHF	.000	.000	.000	.000	.000	.000	.000	.000	.000	.000	.000	.000	.500	.000	.000	.500	

Location: Redlands
N/S: Orange Street
E/W: Pearl Avenue

Date: 7/7/2021
Day: Wednesday

PEDESTRIANS

	North Leg Orange Street	East Leg Pearl Avenue	South Leg Orange Street	West Leg Pearl Avenue	
	Pedestrians	Pedestrians	Pedestrians	Pedestrians	
7:00 AM	0	0	0	2	2
7:15 AM	0	1	2	1	4
7:30 AM	0	0	0	1	1
7:45 AM	0	0	0	1	1
8:00 AM	0	1	0	0	1
8:15 AM	0	4	0	4	8
8:30 AM	0	3	0	1	4
8:45 AM	0	1	0	2	3
TOTAL VOLUMES:	0	10	2	12	24

	North Leg Orange Street	East Leg Pearl Avenue	South Leg Orange Street	West Leg Pearl Avenue	
	Pedestrians	Pedestrians	Pedestrians	Pedestrians	
4:00 PM	0	0	1	2	3
4:15 PM	0	1	0	1	2
4:30 PM	0	1	0	0	1
4:45 PM	0	1	0	1	2
5:00 PM	1	1	4	4	10
5:15 PM	0	0	0	0	0
5:30 PM	0	0	0	2	2
5:45 PM	0	0	0	2	2
TOTAL VOLUMES:	1	4	5	12	22

Counts Unlimited, Inc.
PO Box 1178
Corona, CA 92878
951-268-6268

Location: Redlands
N/S: Orange Street
E/W: Pearl Avenue

Date: 7/7/2021
Day: Wednesday

BICYCLES

	Southbound Orange Street			Westbound Pearl Avenue			Northbound Orange Street			Eastbound Pearl Avenue			
	Left	Thru	Right	Left	Thru	Right	Left	Thru	Right	Left	Thru	Right	
7:00 AM	0	0	0	0	0	0	0	1	0	0	0	0	1
7:15 AM	0	0	0	0	0	0	0	0	0	0	0	0	0
7:30 AM	0	1	0	0	0	0	0	0	0	0	0	0	1
7:45 AM	0	0	0	0	0	0	0	0	0	0	0	1	1
8:00 AM	0	0	0	0	0	0	0	0	0	0	0	0	0
8:15 AM	0	1	0	0	0	0	0	0	0	0	0	0	1
8:30 AM	0	0	0	0	0	0	0	0	0	0	0	0	0
8:45 AM	0	0	0	0	0	0	0	0	0	0	0	0	0
TOTAL VOLUMES:	0	2	0	0	0	0	0	1	0	0	0	1	4

	Southbound Orange Street			Westbound Pearl Avenue			Northbound Orange Street			Eastbound Pearl Avenue			
	Left	Thru	Right	Left	Thru	Right	Left	Thru	Right	Left	Thru	Right	
4:00 PM	0	0	0	0	0	0	0	0	0	0	0	0	0
4:15 PM	0	0	0	0	0	0	0	0	0	0	0	0	0
4:30 PM	0	0	0	0	0	0	0	0	0	0	0	0	0
4:45 PM	0	0	0	0	0	0	0	0	0	0	0	0	0
5:00 PM	0	1	0	0	0	0	0	0	0	0	0	0	1
5:15 PM	0	0	0	0	0	0	0	0	0	0	0	0	0
5:30 PM	0	0	0	0	0	0	0	0	0	0	0	0	0
5:45 PM	0	0	0	0	1	0	0	0	0	0	0	0	1
TOTAL VOLUMES:	0	1	0	0	1	0	0	0	0	0	0	0	2

Counts Unlimited, Inc.
PO Box 1178
Corona, CA 92878
951-268-6268

Counts Unlimited, Inc.
PO Box 1178
Corona, CA 92878
(951)268-6268

City of Redlands
N/S: Orange Street
E/W: Redlands Boulevard
Weather: Clear

File Name : 16_RED_Orange_Redlands AM
Site Code : 05121330
Start Date : 7/7/2021
Page No : 1

Groups Printed- Total Volume

	Orange Street Southbound					Redlands Boulevard Westbound					Orange Street Northbound					Redlands Boulevard Eastbound							
Start Time	Left	Thru	Right	RTOR	App. Total	Left	Thru	Right	RTOR	App. Total	Left	Thru	Right	RTOR	App. Total	Left	Thru	Right	RTOR	App. Total	Exclu. Total	Inclu. Total	Int. Total
07:00 AM	12	25	6	3	43	3	46	22	5	71	4	53	6	2	63	7	26	6	2	39	12	216	228
07:15 AM	15	42	5	0	62	5	34	26	11	65	0	48	4	3	52	11	23	8	2	42	16	221	237
07:30 AM	17	50	9	2	76	2	56	46	12	104	4	74	1	1	79	12	40	7	2	59	17	318	335
07:45 AM	15	67	9	2	91	2	69	27	9	98	5	76	7	1	88	7	34	10	5	51	17	328	345
Total	59	184	29	7	272	12	205	121	37	338	13	251	18	7	282	37	123	31	11	191	62	1083	1145
08:00 AM	14	51	12	3	77	8	55	37	18	100	3	75	4	1	82	7	47	13	6	67	28	326	354
08:15 AM	12	52	8	2	72	5	54	27	13	86	6	57	7	3	70	13	34	9	1	56	19	284	303
08:30 AM	15	56	6	1	77	5	43	37	22	85	7	95	6	3	108	19	41	14	5	74	31	344	375
08:45 AM	20	57	17	5	94	6	76	23	6	105	9	76	7	3	92	19	66	11	6	96	20	387	407
Total	61	216	43	11	320	24	228	124	59	376	25	303	24	10	352	58	188	47	18	293	98	1341	1439
Grand Total	120	400	72	18	592	36	433	245	96	714	38	554	42	17	634	95	311	78	29	484	160	2424	2584
Apprch %	20.3	67.6	12.2			5	60.6	34.3			6	87.4	6.6			19.6	64.3	16.1					
Total %	5	16.5	3		24.4	1.5	17.9	10.1		29.5	1.6	22.9	1.7		26.2	3.9	12.8	3.2		20	6.2	93.8	

	Orange Street Southbound				Redlands Boulevard Westbound				Orange Street Northbound				Redlands Boulevard Eastbound				
Start Time	Left	Thru	Right	App. Total	Left	Thru	Right	App. Total	Left	Thru	Right	App. Total	Left	Thru	Right	App. Total	Int. Total
Peak Hour Analysis From 07:00 AM to 08:45 AM - Peak 1 of 1																	
Peak Hour for Entire Intersection Begins at 08:00 AM																	
08:00 AM	14	51	12	77	**8**	55	**37**	100	3	75	4	82	7	47	13	67	326
08:15 AM	12	52	8	72	5	54	27	86	6	57	**7**	70	13	34	9	56	284
08:30 AM	15	56	6	77	5	43	37	85	7	**95**	6	**108**	**19**	41	**14**	74	344
08:45 AM	**20**	**57**	**17**	**94**	6	**76**	23	**105**	**9**	76	7	92	19	**66**	11	**96**	**387**
Total Volume	61	216	43	320	24	228	124	376	25	303	24	352	58	188	47	293	1341
% App. Total	19.1	67.5	13.4		6.4	60.6	33		7.1	86.1	6.8		19.8	64.2	16		
PHF	.763	.947	.632	.851	.750	.750	.838	.895	.694	.797	.857	.815	.763	.712	.839	.763	.866

Counts Unlimited, Inc.
PO Box 1178
Corona, CA 92878
(951)268-6268

City of Redlands
N/S: Orange Street
E/W: Redlands Boulevard
Weather: Clear

File Name : 16_RED_Orange_Redlands AM
Site Code : 05121330
Start Date : 7/7/2021
Page No : 2

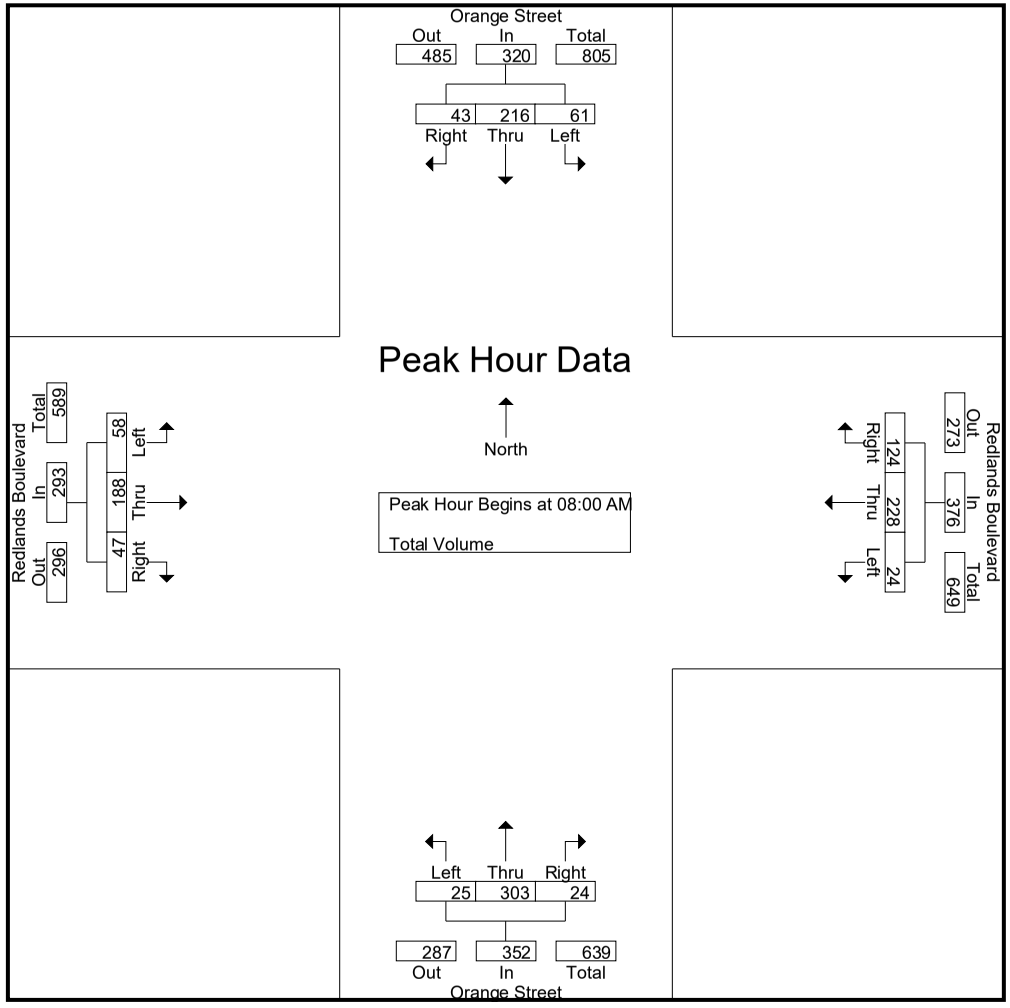

Counts Unlimited, Inc.
PO Box 1178
Corona, CA 92878
(951)268-6268

City of Redlands
N/S: Orange Street
E/W: Redlands Boulevard
Weather: Clear

File Name : 16_RED_Orange_Redlands AM
Site Code : 05121330
Start Date : 7/7/2021
Page No : 3

	Orange Street Southbound				Redlands Boulevard Westbound				Orange Street Northbound				Redlands Boulevard Eastbound				
Start Time	Left	Thru	Right	App. Total	Left	Thru	Right	App. Total	Left	Thru	Right	App. Total	Left	Thru	Right	App. Total	Int. Total
Peak Hour Analysis From 07:00 AM to 08:45 AM - Peak 1 of 1																	
Peak Hour for Each Approach Begins at:																	
	08:00 AM				07:30 AM				08:00 AM				08:00 AM				
+0 mins.	14	51	12	77	2	56	**46**	**104**	3	75	4	82	7	47	13	67	
+15 mins.	12	52	8	72	2	**69**	27	98	6	57	**7**	70	13	34	9	56	
+30 mins.	15	56	6	77	**8**	55	37	100	7	**95**	6	**108**	**19**	41	**14**	74	
+45 mins.	**20**	**57**	**17**	**94**	5	54	27	86	**9**	76	7	92	19	**66**	11	**96**	
Total Volume	61	216	43	320	17	234	137	388	25	303	24	352	58	188	47	293	
% App. Total	19.1	67.5	13.4		4.4	60.3	35.3		7.1	86.1	6.8		19.8	64.2	16		
PHF	.763	.947	.632	.851	.531	.848	.745	.933	.694	.797	.857	.815	.763	.712	.839	.763	

Counts Unlimited, Inc.
PO Box 1178
Corona, CA 92878
(951)268-6268

City of Redlands
N/S: Orange Street
E/W: Redlands Boulevard
Weather: Clear

File Name : 16_RED_Orange_Redlands PM
Site Code : 05121330
Start Date : 7/7/2021
Page No : 1

Groups Printed- Total Volume

	Orange Street Southbound					Redlands Boulevard Westbound					Orange Street Northbound					Redlands Boulevard Eastbound							
Start Time	Left	Thru	Right	RTOR	App. Total	Left	Thru	Right	RTOR	App. Total	Left	Thru	Right	RTOR	App. Total	Left	Thru	Right	RTOR	App. Total	Exclu. Total	Inclu. Total	Int. Total
04:00 PM	37	70	18	5	125	14	80	51	22	145	9	107	13	2	129	29	108	18	9	155	38	554	592
04:15 PM	20	70	14	3	104	8	64	51	25	123	9	98	10	3	117	19	126	16	8	161	39	505	544
04:30 PM	35	78	10	3	123	9	78	51	20	138	5	99	9	1	113	40	115	21	11	176	35	550	585
04:45 PM	34	79	17	3	130	12	59	57	21	128	3	122	10	2	135	23	126	19	6	168	32	561	593
Total	126	297	59	14	482	43	281	210	88	534	26	426	42	8	494	111	475	74	34	660	144	2170	2314
05:00 PM	36	65	18	7	119	19	56	49	19	124	7	151	11	3	169	37	107	20	9	164	38	576	614
05:15 PM	28	80	19	6	127	11	81	71	16	163	11	116	8	2	135	39	155	25	13	219	37	644	681
05:30 PM	33	81	12	5	126	16	48	54	18	118	7	122	11	2	140	38	122	14	8	174	33	558	591
05:45 PM	35	91	11	5	137	10	63	66	25	139	6	90	7	3	103	26	113	14	8	153	41	532	573
Total	132	317	60	23	509	56	248	240	78	544	31	479	37	10	547	140	497	73	38	710	149	2310	2459
Grand Total	258	614	119	37	991	99	529	450	166	1078	57	905	79	18	1041	251	972	147	72	1370	293	4480	4773
Apprch %	26	62	12			9.2	49.1	41.7			5.5	86.9	7.6			18.3	70.9	10.7					
Total %	5.8	13.7	2.7		22.1	2.2	11.8	10		24.1	1.3	20.2	1.8		23.2	5.6	21.7	3.3		30.6	6.1	93.9	

	Orange Street Southbound				Redlands Boulevard Westbound				Orange Street Northbound				Redlands Boulevard Eastbound				
Start Time	Left	Thru	Right	App. Total	Left	Thru	Right	App. Total	Left	Thru	Right	App. Total	Left	Thru	Right	App. Total	Int. Total
Peak Hour Analysis From 04:00 PM to 05:45 PM - Peak 1 of 1																	
Peak Hour for Entire Intersection Begins at 04:45 PM																	
04:45 PM	34	79	17	**130**	12	59	57	128	3	122	10	135	23	126	19	168	561
05:00 PM	**36**	65	18	119	**19**	56	49	124	7	**151**	**11**	**169**	37	107	20	164	576
05:15 PM	28	80	**19**	127	11	**81**	**71**	**163**	**11**	116	8	135	**39**	**155**	**25**	**219**	**644**
05:30 PM	33	**81**	12	126	16	48	54	118	7	122	11	140	38	122	14	174	558
Total Volume	131	305	66	502	58	244	231	533	28	511	40	579	137	510	78	725	2339
% App. Total	26.1	60.8	13.1		10.9	45.8	43.3		4.8	88.3	6.9		18.9	70.3	10.8		
PHF	.910	.941	.868	.965	.763	.753	.813	.817	.636	.846	.909	.857	.878	.823	.780	.828	.908

Counts Unlimited, Inc.
PO Box 1178
Corona, CA 92878
(951)268-6268

City of Redlands
N/S: Orange Street
E/W: Redlands Boulevard
Weather: Clear

File Name : 16_RED_Orange_Redlands PM
Site Code : 05121330
Start Date : 7/7/2021
Page No : 2

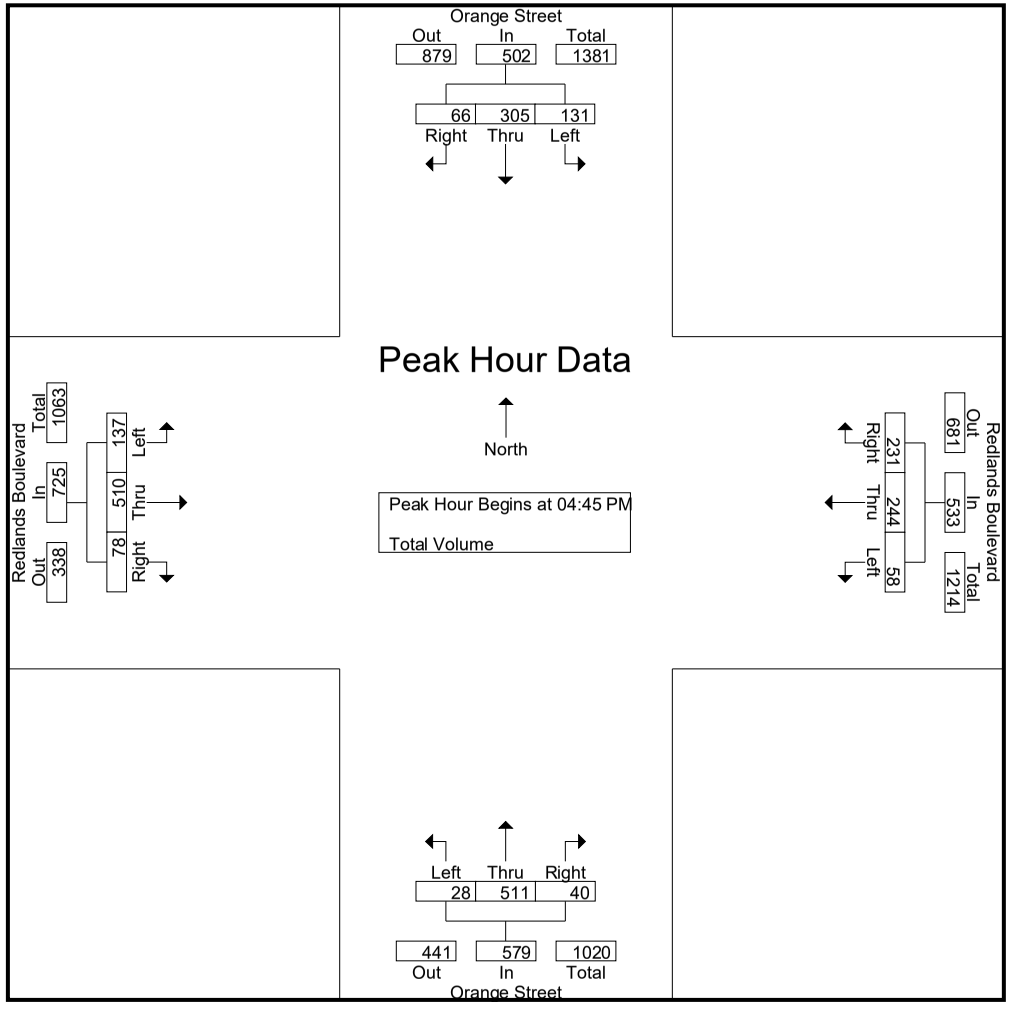

Counts Unlimited, Inc.
PO Box 1178
Corona, CA 92878
(951)268-6268

City of Redlands
N/S: Orange Street
E/W: Redlands Boulevard
Weather: Clear

File Name : 16_RED_Orange_Redlands PM
Site Code : 05121330
Start Date : 7/7/2021
Page No : 3

	Orange Street Southbound				Redlands Boulevard Westbound				Orange Street Northbound				Redlands Boulevard Eastbound				
Start Time	Left	Thru	Right	App. Total	Left	Thru	Right	App. Total	Left	Thru	Right	App. Total	Left	Thru	Right	App. Total	Int. Total
Peak Hour Analysis From 04:00 PM to 05:45 PM - Peak 1 of 1																	
Peak Hour for Each Approach Begins at:																	
	05:00 PM				04:30 PM				04:45 PM				04:30 PM				
+0 mins.	**36**	65	18	119	9	78	51	138	3	122	10	135	**40**	115	21	176	
+15 mins.	28	80	**19**	127	12	59	57	128	7	**151**	**11**	**169**	23	126	19	168	
+30 mins.	33	81	12	126	**19**	56	49	124	**11**	116	8	135	37	107	20	164	
+45 mins.	35	**91**	11	**137**	11	**81**	**71**	**163**	7	122	11	140	39	**155**	**25**	**219**	
Total Volume	132	317	60	509	51	274	228	553	28	511	40	579	139	503	85	727	
% App. Total	25.9	62.3	11.8		9.2	49.5	41.2		4.8	88.3	6.9		19.1	69.2	11.7		
PHF	.917	.871	.789	.929	.671	.846	.803	.848	.636	.846	.909	.857	.869	.811	.850	.830	

Location: Redlands
N/S: Orange Street
E/W: Redlands Boulevard

Date: 7/7/2021
Day: Wednesday

PEDESTRIANS

	North Leg Orange Street	East Leg Redlands Boulevard	South Leg Orange Street	West Leg Redlands Boulevard	
	Pedestrians	Pedestrians	Pedestrians	Pedestrians	
7:00 AM	0	0	0	0	0
7:15 AM	0	3	3	3	9
7:30 AM	1	2	2	1	6
7:45 AM	2	4	0	3	9
8:00 AM	1	0	0	0	1
8:15 AM	0	3	2	3	8
8:30 AM	0	2	1	3	6
8:45 AM	0	5	1	0	6
TOTAL VOLUMES:	4	19	9	13	45

	North Leg Orange Street	East Leg Redlands Boulevard	South Leg Orange Street	West Leg Redlands Boulevard	
	Pedestrians	Pedestrians	Pedestrians	Pedestrians	
4:00 PM	1	6	0	3	10
4:15 PM	2	9	4	0	15
4:30 PM	0	2	1	1	4
4:45 PM	1	7	1	0	9
5:00 PM	2	6	2	5	15
5:15 PM	0	9	4	6	19
5:30 PM	0	8	0	2	10
5:45 PM	9	6	2	0	17
TOTAL VOLUMES:	15	53	14	17	99

Counts Unlimited, Inc.
PO Box 1178
Corona, CA 92878
951-268-6268

Location: Redlands
N/S: Orange Street
E/W: Redlands Boulevard

Date: 7/7/2021
Day: Wednesday

BICYCLES

	Southbound Orange Street			Westbound Redlands Boulevard			Northbound Orange Street			Eastbound Redlands Boulevard			
	Left	Thru	Right	Left	Thru	Right	Left	Thru	Right	Left	Thru	Right	
7:00 AM	0	0	0	0	0	0	0	0	0	0	0	0	0
7:15 AM	0	0	0	0	0	0	0	0	0	0	0	0	0
7:30 AM	0	1	0	0	0	0	0	0	0	0	0	0	1
7:45 AM	0	0	0	0	0	0	0	0	0	0	0	0	0
8:00 AM	0	0	0	0	1	0	0	1	0	0	0	0	2
8:15 AM	1	0	0	0	0	0	0	0	0	0	0	0	1
8:30 AM	0	0	0	0	0	0	0	0	1	0	0	0	1
8:45 AM	0	0	0	0	0	0	0	0	0	0	0	0	0
TOTAL VOLUMES:	1	1	0	0	1	0	0	1	1	0	0	0	5

	Southbound Orange Street			Westbound Redlands Boulevard			Northbound Orange Street			Eastbound Redlands Boulevard			
	Left	Thru	Right	Left	Thru	Right	Left	Thru	Right	Left	Thru	Right	
4:00 PM	0	0	0	0	0	0	0	0	0	0	0	0	0
4:15 PM	0	0	0	0	0	0	0	0	0	0	0	0	0
4:30 PM	0	0	0	0	0	0	0	0	0	0	0	0	0
4:45 PM	0	0	0	0	0	0	0	1	0	0	0	0	1
5:00 PM	0	0	0	0	0	0	0	0	0	0	0	0	0
5:15 PM	0	0	0	0	0	0	0	1	0	0	0	0	1
5:30 PM	0	0	0	0	0	0	0	0	0	0	0	0	0
5:45 PM	0	0	0	0	0	0	0	0	0	0	0	0	0
TOTAL VOLUMES:	0	0	0	0	0	0	0	2	0	0	0	0	2

Counts Unlimited, Inc.
PO Box 1178
Corona, CA 92878
(951)268-6268

City of Redlands
N/S: Orange Street
E/W: State Street
Weather: Clear

File Name : 17_RED_Orange_State AM
Site Code : 05121330
Start Date : 7/7/2021
Page No : 1

Groups Printed- Total Volume

	Orange Street Southbound					State Street Westbound					Orange Street Northbound					Redlands Mall Driveway Eastbound							
Start Time	Left	Thru	Right	RTOR	App. Total	Left	Thru	Right	RTOR	App. Total	Left	Thru	Right	RTOR	App. Total	Left	Thru	Right	RTOR	App. Total	Exclu. Total	Inclu. Total	Int. Total
07:00 AM	3	30	1	0	34	0	0	0	0	0	0	66	5	0	71	3	0	0	0	3	0	108	108
07:15 AM	4	49	2	0	55	0	0	0	0	0	0	52	8	1	60	2	0	3	2	5	3	120	123
07:30 AM	5	52	2	0	59	0	0	0	0	0	3	79	6	0	88	0	0	1	1	1	1	148	149
07:45 AM	4	67	5	0	76	0	0	0	0	0	2	87	7	0	96	0	0	1	1	1	1	173	174
Total	16	198	10	0	224	0	0	0	0	0	5	284	26	1	315	5	0	5	4	10	5	549	554
08:00 AM	8	62	4	0	74	0	0	0	0	0	3	86	13	0	102	2	1	1	1	4	1	180	181
08:15 AM	7	55	3	0	65	0	0	0	0	0	2	68	6	0	76	3	1	2	1	6	1	147	148
08:30 AM	7	62	7	0	76	0	0	0	0	0	2	103	9	0	114	1	0	0	0	1	0	191	191
08:45 AM	17	53	4	0	74	0	0	0	0	0	2	88	9	0	99	4	1	0	0	5	0	178	178
Total	39	232	18	0	289	0	0	0	0	0	9	345	37	0	391	10	3	3	2	16	2	696	698
Grand Total	55	430	28	0	513	0	0	0	0	0	14	629	63	1	706	15	3	8	6	26	7	1245	1252
Apprch %	10.7	83.8	5.5			0	0	0			2	89.1	8.9			57.7	11.5	30.8					
Total %	4.4	34.5	2.2		41.2	0	0	0		0	1.1	50.5	5.1		56.7	1.2	0.2	0.6		2.1	0.6	99.4	

	Orange Street Southbound				State Street Westbound				Orange Street Northbound				Redlands Mall Driveway Eastbound				
Start Time	Left	Thru	Right	App. Total	Left	Thru	Right	App. Total	Left	Thru	Right	App. Total	Left	Thru	Right	App. Total	Int. Total
Peak Hour Analysis From 07:00 AM to 08:45 AM - Peak 1 of 1																	
Peak Hour for Entire Intersection Begins at 08:00 AM																	
08:00 AM	8	**62**	4	74	0	0	0	0	**3**	86	**13**	102	2	**1**	1	4	180
08:15 AM	7	55	3	65	0	0	0	0	2	68	6	76	3	1	**2**	**6**	147
08:30 AM	7	62	**7**	**76**	0	0	0	0	2	**103**	9	**114**	1	0	0	1	**191**
08:45 AM	**17**	53	4	74	0	0	0	0	2	88	9	99	**4**	1	0	5	178
Total Volume	39	232	18	289	0	0	0	0	9	345	37	391	10	3	3	16	696
% App. Total	13.5	80.3	6.2		0	0	0		2.3	88.2	9.5		62.5	18.8	18.8		
PHF	.574	.935	.643	.951	.000	.000	.000	.000	.750	.837	.712	.857	.625	.750	.375	.667	.911

Counts Unlimited, Inc.
PO Box 1178
Corona, CA 92878
(951)268-6268

City of Redlands
N/S: Orange Street
E/W: State Street
Weather: Clear

File Name : 17_RED_Orange_State AM
Site Code : 05121330
Start Date : 7/7/2021
Page No : 2

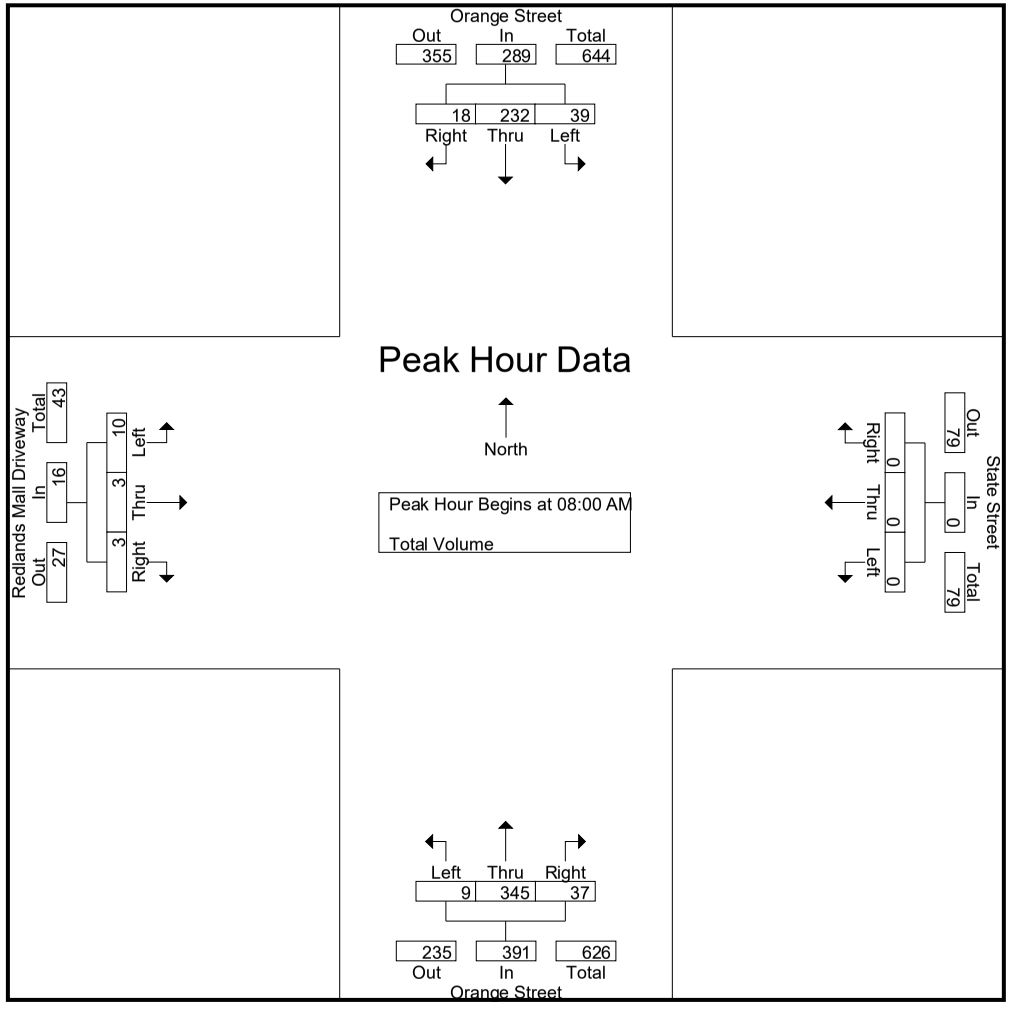

Counts Unlimited, Inc.
PO Box 1178
Corona, CA 92878
(951)268-6268

City of Redlands
N/S: Orange Street
E/W: State Street
Weather: Clear

File Name : 17_RED_Orange_State AM
Site Code : 05121330
Start Date : 7/7/2021
Page No : 3

	Orange Street Southbound				State Street Westbound				Orange Street Northbound				Redlands Mall Driveway Eastbound				
Start Time	Left	Thru	Right	App. Total	Left	Thru	Right	App. Total	Left	Thru	Right	App. Total	Left	Thru	Right	App. Total	Int. Total
Peak Hour Analysis From 07:00 AM to 08:45 AM - Peak 1 of 1																	
Peak Hour for Each Approach Begins at:																	
	07:45 AM				07:00 AM				08:00 AM				08:00 AM				
+0 mins.	4	**67**	5	**76**	0	0	0	0	**3**	86	**13**	102	2	**1**	1	4	
+15 mins.	**8**	62	4	74	0	0	0	0	2	68	6	76	3	1	**2**	**6**	
+30 mins.	7	55	3	65	0	0	0	0	2	**103**	9	**114**	1	0	0	1	
+45 mins.	7	62	**7**	76	0	0	0	0	2	88	9	99	**4**	1	0	5	
Total Volume	26	246	19	291	0	0	0	0	9	345	37	391	10	3	3	16	
% App. Total	8.9	84.5	6.5		0	0	0		2.3	88.2	9.5		62.5	18.8	18.8		
PHF	.813	.918	.679	.957	.000	.000	.000	.000	.750	.837	.712	.857	.625	.750	.375	.667	

Counts Unlimited, Inc.
PO Box 1178
Corona, CA 92878
(951)268-6268

City of Redlands
N/S: Orange Street
E/W: State Street
Weather: Clear

File Name : 17_RED_Orange_State PM
Site Code : 05121330
Start Date : 7/7/2021
Page No : 1

Groups Printed- Total Volume

	Orange Street Southbound					State Street Westbound					Orange Street Northbound					Redlands Mall Driveway Eastbound							
Start Time	Left	Thru	Right	RTOR	App. Total	Left	Thru	Right	RTOR	App. Total	Left	Thru	Right	RTOR	App. Total	Left	Thru	Right	RTOR	App. Total	Exclu. Total	Inclu. Total	Int. Total
04:00 PM	28	62	15	2	105	0	0	0	0	0	2	128	27	2	157	6	5	2	2	13	6	275	281
04:15 PM	18	61	14	1	93	0	0	0	0	0	4	95	20	4	119	16	2	5	2	23	7	235	242
04:30 PM	18	75	12	0	105	0	0	0	0	0	2	108	20	2	130	11	5	3	2	19	4	254	258
04:45 PM	22	68	21	3	111	0	0	0	0	0	5	124	30	2	159	12	3	3	1	18	6	288	294
Total	86	266	62	6	414	0	0	0	0	0	13	455	97	10	565	45	15	13	7	73	23	1052	1075
05:00 PM	22	69	17	2	108	0	0	0	0	0	2	157	20	0	179	10	3	6	1	19	3	306	309
05:15 PM	30	73	11	2	114	0	0	0	0	0	4	136	17	3	157	9	1	3	2	13	7	284	291
05:30 PM	23	80	6	0	109	0	0	0	0	0	3	132	31	1	166	10	4	4	1	18	2	293	295
05:45 PM	25	73	12	0	110	0	0	0	0	0	0	98	17	1	115	8	3	2	1	13	2	238	240
Total	100	295	46	4	441	0	0	0	0	0	9	523	85	5	617	37	11	15	5	63	14	1121	1135
Grand Total	186	561	108	10	855	0	0	0	0	0	22	978	182	15	1182	82	26	28	12	136	37	2173	2210
Apprch %	21.8	65.6	12.6			0	0	0			1.9	82.7	15.4			60.3	19.1	20.6					
Total %	8.6	25.8	5		39.3	0	0	0		0	1	45	8.4		54.4	3.8	1.2	1.3		6.3	1.7	98.3	

	Orange Street Southbound				State Street Westbound				Orange Street Northbound				Redlands Mall Driveway Eastbound				
Start Time	Left	Thru	Right	App. Total	Left	Thru	Right	App. Total	Left	Thru	Right	App. Total	Left	Thru	Right	App. Total	Int. Total
Peak Hour Analysis From 04:00 PM to 05:45 PM - Peak 1 of 1																	
Peak Hour for Entire Intersection Begins at 04:45 PM																	
04:45 PM	22	68	**21**	111	0	0	0	0	**5**	124	30	159	**12**	3	3	18	288
05:00 PM	22	69	17	108	0	0	0	0	2	**157**	20	**179**	10	3	**6**	**19**	**306**
05:15 PM	**30**	73	11	**114**	0	0	0	0	4	136	17	157	9	1	3	13	284
05:30 PM	23	**80**	6	109	0	0	0	0	3	132	**31**	166	10	**4**	4	18	293
Total Volume	97	290	55	442	0	0	0	0	14	549	98	661	41	11	16	68	1171
% App. Total	21.9	65.6	12.4		0	0	0		2.1	83.1	14.8		60.3	16.2	23.5		
PHF	.808	.906	.655	.969	.000	.000	.000	.000	.700	.874	.790	.923	.854	.688	.667	.895	.957

Counts Unlimited, Inc.
PO Box 1178
Corona, CA 92878
(951)268-6268

City of Redlands
N/S: Orange Street
E/W: State Street
Weather: Clear

File Name : 17_RED_Orange_State PM
Site Code : 05121330
Start Date : 7/7/2021
Page No : 2

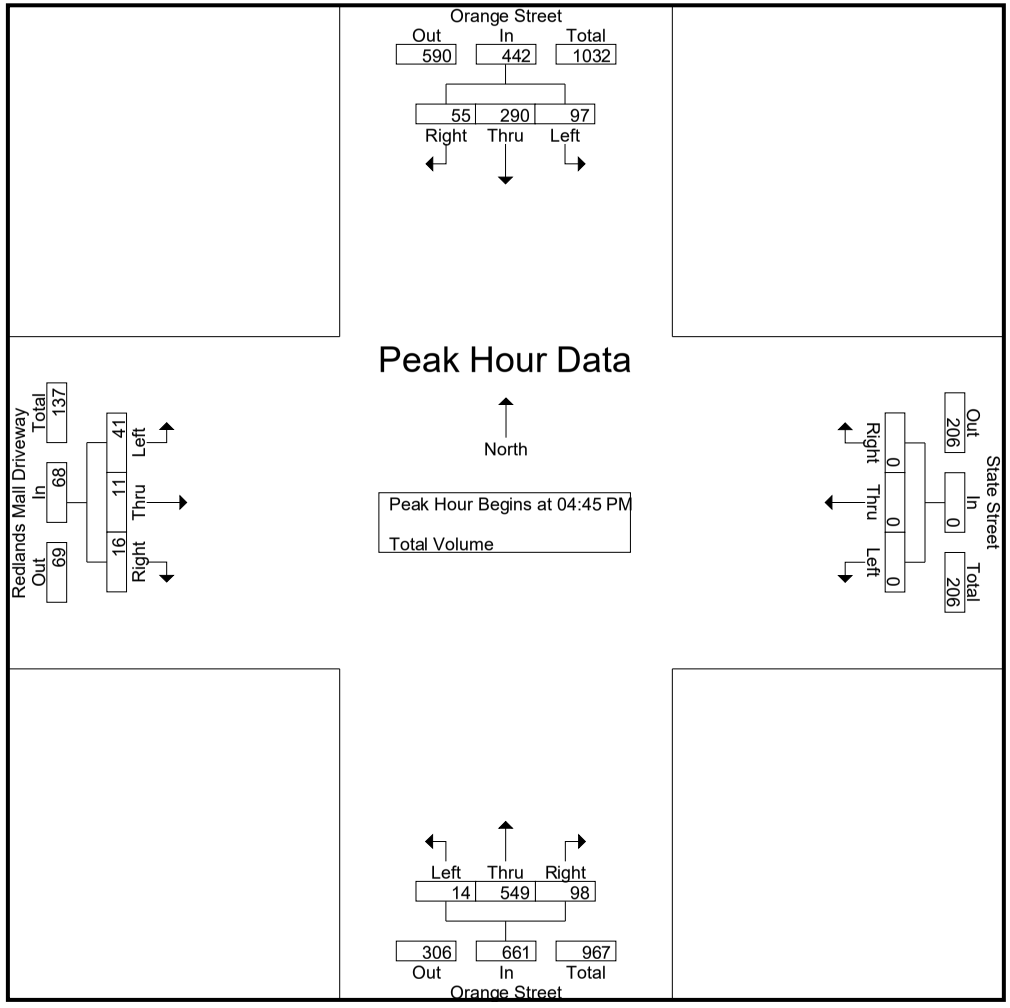

Counts Unlimited, Inc.
PO Box 1178
Corona, CA 92878
(951)268-6268

City of Redlands
N/S: Orange Street
E/W: State Street
Weather: Clear

File Name : 17_RED_Orange_State PM
Site Code : 05121330
Start Date : 7/7/2021
Page No : 3

	Orange Street Southbound				State Street Westbound				Orange Street Northbound				Redlands Mall Driveway Eastbound				
Start Time	Left	Thru	Right	App. Total	Left	Thru	Right	App. Total	Left	Thru	Right	App. Total	Left	Thru	Right	App. Total	Int. Total
Peak Hour Analysis From 04:00 PM to 05:45 PM - Peak 1 of 1																	
Peak Hour for Each Approach Begins at:																	
	04:45 PM				04:00 PM				04:45 PM				04:15 PM				
+0 mins.	22	68	**21**	111	0	0	0	0	**5**	124	30	159	**16**	2	5	**23**	
+15 mins.	22	69	17	108	0	0	0	0	2	**157**	20	**179**	11	**5**	3	19	
+30 mins.	**30**	73	11	**114**	0	0	0	0	4	136	17	157	12	3	3	18	
+45 mins.	23	**80**	6	109	0	0	0	0	3	132	**31**	166	10	3	**6**	19	
Total Volume	97	290	55	442	0	0	0	0	14	549	98	661	49	13	17	79	
% App. Total	21.9	65.6	12.4		0	0	0		2.1	83.1	14.8		62	16.5	21.5		
PHF	.808	.906	.655	.969	.000	.000	.000	.000	.700	.874	.790	.923	.766	.650	.708	.859	

Location: Redlands
N/S: Orange Street
E/W: State Street

Date: 7/7/2021
Day: Wednesday

PEDESTRIANS

	North Leg Orange Street	East Leg State Street	South Leg Orange Street	West Leg Redlands Mall Driveway	
	Pedestrians	Pedestrians	Pedestrians	Pedestrians	
7:00 AM	4	0	0	0	4
7:15 AM	0	2	0	2	4
7:30 AM	1	0	1	1	3
7:45 AM	1	0	4	4	9
8:00 AM	0	0	0	0	0
8:15 AM	3	0	6	1	10
8:30 AM	1	2	3	3	9
8:45 AM	1	2	0	2	5
TOTAL VOLUMES:	11	6	14	13	44

	North Leg Orange Street	East Leg State Street	South Leg Orange Street	West Leg Redlands Mall Driveway	
	Pedestrians	Pedestrians	Pedestrians	Pedestrians	
4:00 PM	23	5	8	3	39
4:15 PM	14	10	8	6	38
4:30 PM	26	8	7	13	54
4:45 PM	21	4	14	1	40
5:00 PM	21	13	7	7	48
5:15 PM	9	11	5	4	29
5:30 PM	8	3	14	1	26
5:45 PM	14	7	15	5	41
TOTAL VOLUMES:	136	61	78	40	315

Counts Unlimited, Inc.
PO Box 1178
Corona, CA 92878
951-268-6268

Location: Redlands
N/S: Orange Street
E/W: State Street

Date: 7/7/2021
Day: Wednesday

BICYCLES

	Southbound Orange Street			Westbound State Street			Northbound Orange Street			Eastbound Redlands Mall Driveway			
	Left	Thru	Right	Left	Thru	Right	Left	Thru	Right	Left	Thru	Right	
7:00 AM	0	0	0	0	0	0	0	0	0	0	0	0	0
7:15 AM	0	0	0	0	0	0	0	0	0	0	0	0	0
7:30 AM	0	1	0	0	0	0	0	0	0	0	0	0	1
7:45 AM	0	0	0	0	0	0	0	0	0	0	1	0	1
8:00 AM	0	0	0	0	0	0	0	0	0	1	0	0	1
8:15 AM	0	0	0	0	0	0	0	0	0	0	0	0	0
8:30 AM	0	0	0	0	0	0	0	0	0	0	0	0	0
8:45 AM	0	0	0	0	0	0	0	0	0	0	0	0	0
TOTAL VOLUMES:	0	1	0	0	0	0	0	0	0	1	1	0	3

	Southbound Orange Street			Westbound State Street			Northbound Orange Street			Eastbound Redlands Mall Driveway			
	Left	Thru	Right	Left	Thru	Right	Left	Thru	Right	Left	Thru	Right	
4:00 PM	0	0	0	0	0	0	0	1	0	0	0	0	1
4:15 PM	0	0	0	0	0	0	0	0	0	0	0	0	0
4:30 PM	0	0	0	0	0	0	0	0	0	0	0	0	0
4:45 PM	0	0	0	0	0	0	0	1	0	0	0	0	1
5:00 PM	0	0	0	0	0	0	0	0	0	0	0	0	0
5:15 PM	0	0	0	0	0	0	0	2	0	0	0	0	2
5:30 PM	0	0	0	0	0	0	0	0	0	0	1	0	1
5:45 PM	0	0	0	0	0	0	0	0	0	1	0	0	1
TOTAL VOLUMES:	0	0	0	0	0	0	0	4	0	1	1	0	6

Counts Unlimited, Inc.
PO Box 1178
Corona, CA 92878
951-268-6268

Counts Unlimited, Inc.
PO Box 1178
Corona, CA 92878
(951)268-6268

City of Redlands
N/S: Orange Street/Cajon Street
E/W: Citrus Avenue
Weather: Clear

File Name : 19_RED_Orange_Citrus AM
Site Code : 05121330
Start Date : 7/7/2021
Page No : 1

Groups Printed- Total Volume

	Orange Street Southbound					Citrus Avenue Westbound					Cajon Street Northbound					Citrus Avenue Eastbound							
Start Time	Left	Thru	Right	RTOR	App. Total	Left	Thru	Right	RTOR	App. Total	Left	Thru	Right	RTOR	App. Total	Left	Thru	Right	RTOR	App. Total	Exclu. Total	Inclu. Total	Int. Total
07:00 AM	2	24	6	0	32	2	33	8	4	43	8	53	7	2	68	9	19	19	8	47	14	190	204
07:15 AM	5	35	7	3	47	0	31	9	1	40	9	42	6	2	57	7	23	18	10	48	16	192	208
07:30 AM	6	42	7	3	55	1	48	9	3	58	12	67	2	1	81	15	30	17	5	62	12	256	268
07:45 AM	2	60	7	4	69	1	48	10	1	59	12	71	8	2	91	19	33	34	13	86	20	305	325
Total	15	161	27	10	203	4	160	36	9	200	41	233	23	7	297	50	105	88	36	243	62	943	1005
08:00 AM	6	53	5	1	64	5	43	13	6	61	15	75	5	2	95	12	28	26	14	66	23	286	309
08:15 AM	2	46	8	2	56	1	36	9	1	46	12	57	5	1	74	11	17	12	7	40	11	216	227
08:30 AM	2	51	9	3	62	2	27	6	3	35	17	87	5	1	109	20	27	18	12	65	19	271	290
08:45 AM	3	40	9	1	52	5	38	15	5	58	11	72	2	0	85	11	38	21	12	70	18	265	283
Total	13	190	31	7	234	13	144	43	15	200	55	291	17	4	363	54	110	77	45	241	71	1038	1109
Grand Total	28	351	58	17	437	17	304	79	24	400	96	524	40	11	660	104	215	165	81	484	133	1981	2114
Apprch %	6.4	80.3	13.3			4.2	76	19.8			14.5	79.4	6.1			21.5	44.4	34.1					
Total %	1.4	17.7	2.9		22.1	0.9	15.3	4		20.2	4.8	26.5	2		33.3	5.2	10.9	8.3		24.4	6.3	93.7	

	Orange Street Southbound				Citrus Avenue Westbound				Cajon Street Northbound				Citrus Avenue Eastbound				
Start Time	Left	Thru	Right	App. Total	Left	Thru	Right	App. Total	Left	Thru	Right	App. Total	Left	Thru	Right	App. Total	Int. Total
Peak Hour Analysis From 07:00 AM to 08:45 AM - Peak 1 of 1																	
Peak Hour for Entire Intersection Begins at 07:45 AM																	
07:45 AM	2	**60**	7	**69**	1	**48**	10	59	12	71	**8**	91	19	**33**	**34**	**86**	**305**
08:00 AM	**6**	53	5	64	**5**	43	**13**	**61**	15	75	5	95	12	28	26	66	286
08:15 AM	2	46	8	56	1	36	9	46	12	57	5	74	11	17	12	40	216
08:30 AM	2	51	**9**	62	2	27	6	35	**17**	**87**	5	**109**	**20**	27	18	65	271
Total Volume	12	210	29	251	9	154	38	201	56	290	23	369	62	105	90	257	1078
% App. Total	4.8	83.7	11.6		4.5	76.6	18.9		15.2	78.6	6.2		24.1	40.9	35		
PHF	.500	.875	.806	.909	.450	.802	.731	.824	.824	.833	.719	.846	.775	.795	.662	.747	.884

Counts Unlimited, Inc.
PO Box 1178
Corona, CA 92878
(951)268-6268

City of Redlands
N/S: Orange Street/Cajon Street
E/W: Citrus Avenue
Weather: Clear

File Name : 19_RED_Orange_Citrus AM
Site Code : 05121330
Start Date : 7/7/2021
Page No : 2

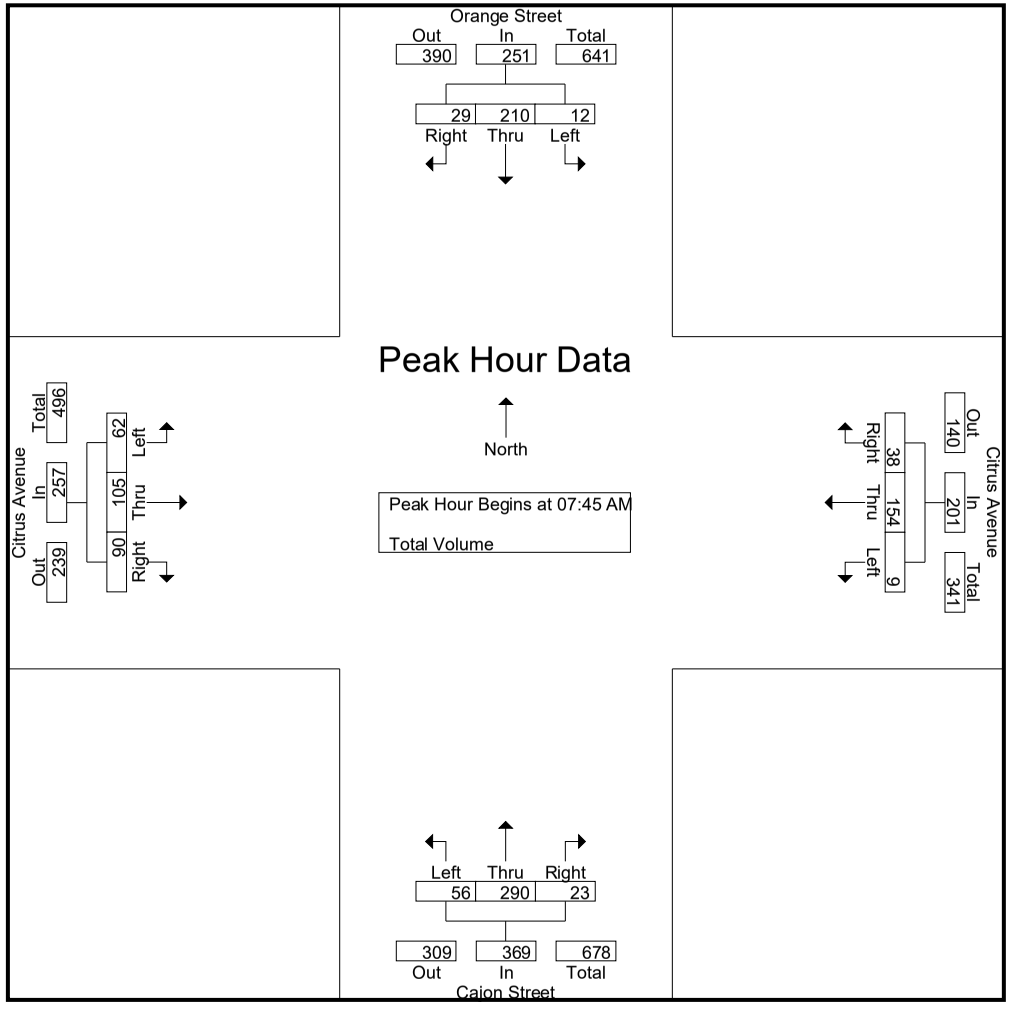

Counts Unlimited, Inc.
PO Box 1178
Corona, CA 92878
(951)268-6268

City of Redlands
N/S: Orange Street/Cajon Street
E/W: Citrus Avenue
Weather: Clear

File Name : 19_RED_Orange_Citrus AM
Site Code : 05121330
Start Date : 7/7/2021
Page No : 3

	Orange Street Southbound				Citrus Avenue Westbound				Cajon Street Northbound				Citrus Avenue Eastbound				
Start Time	Left	Thru	Right	App. Total	Left	Thru	Right	App. Total	Left	Thru	Right	App. Total	Left	Thru	Right	App. Total	Int. Total
Peak Hour Analysis From 07:00 AM to 08:45 AM - Peak 1 of 1																	
Peak Hour for Each Approach Begins at:																	
	07:45 AM				07:30 AM				07:45 AM				07:15 AM				
+0 mins.	2	**60**	7	**69**	1	**48**	9	58	12	71	**8**	91	7	23	18	48	
+15 mins.	**6**	53	5	64	1	48	10	59	15	75	5	95	15	30	17	62	
+30 mins.	2	46	8	56	**5**	43	**13**	**61**	12	57	5	74	**19**	**33**	**34**	**86**	
+45 mins.	2	51	**9**	62	1	36	9	46	**17**	**87**	5	**109**	12	28	26	66	
Total Volume	12	210	29	251	8	175	41	224	56	290	23	369	53	114	95	262	
% App. Total	4.8	83.7	11.6		3.6	78.1	18.3		15.2	78.6	6.2		20.2	43.5	36.3		
PHF	.500	.875	.806	.909	.400	.911	.788	.918	.824	.833	.719	.846	.697	.864	.699	.762	

Counts Unlimited, Inc.
PO Box 1178
Corona, CA 92878
(951)268-6268

City of Redlands
N/S: Orange Street/Cajon Street
E/W: Citrus Avenue
Weather: Clear

File Name : 19_RED_Orange_Citrus PM
Site Code : 05121330
Start Date : 7/7/2021
Page No : 1

Groups Printed- Total Volume

	Orange Street Southbound					Citrus Avenue Westbound					Cajon Street Northbound					Citrus Avenue Eastbound							
Start Time	Left	Thru	Right	RTOR	App. Total	Left	Thru	Right	RTOR	App. Total	Left	Thru	Right	RTOR	App. Total	Left	Thru	Right	RTOR	App. Total	Exclu. Total	Inclu. Total	Int. Total
04:00 PM	12	42	10	2	64	7	39	39	6	85	11	78	7	1	96	39	70	29	12	138	21	383	404
04:15 PM	6	51	11	3	68	6	39	28	13	73	16	66	4	1	86	26	69	30	13	125	30	352	382
04:30 PM	9	54	11	4	74	3	44	25	7	72	13	74	7	1	94	30	68	29	11	127	23	367	390
04:45 PM	12	52	10	2	74	8	44	39	4	91	22	84	6	1	112	34	74	32	9	140	16	417	433
Total	39	199	42	11	280	24	166	131	30	321	62	302	24	4	388	129	281	120	45	530	90	1519	1609
05:00 PM	10	54	12	3	76	6	50	37	6	93	18	96	4	1	118	46	76	27	9	149	19	436	455
05:15 PM	12	54	14	2	80	2	57	29	8	88	15	86	4	1	105	44	76	33	10	153	21	426	447
05:30 PM	17	51	17	4	85	2	46	51	10	99	16	76	7	2	99	39	54	33	11	126	27	409	436
05:45 PM	11	49	15	2	75	8	40	36	7	84	20	56	8	1	84	21	50	23	5	94	15	337	352
Total	50	208	58	11	316	18	193	153	31	364	69	314	23	5	406	150	256	116	35	522	82	1608	1690
Grand Total	89	407	100	22	596	42	359	284	61	685	131	616	47	9	794	279	537	236	80	1052	172	3127	3299
Apprch %	14.9	68.3	16.8			6.1	52.4	41.5			16.5	77.6	5.9			26.5	51	22.4					
Total %	2.8	13	3.2		19.1	1.3	11.5	9.1		21.9	4.2	19.7	1.5		25.4	8.9	17.2	7.5		33.6	5.2	94.8	

	Orange Street Southbound				Citrus Avenue Westbound				Cajon Street Northbound				Citrus Avenue Eastbound				
Start Time	Left	Thru	Right	App. Total	Left	Thru	Right	App. Total	Left	Thru	Right	App. Total	Left	Thru	Right	App. Total	Int. Total
Peak Hour Analysis From 04:00 PM to 05:45 PM - Peak 1 of 1																	
Peak Hour for Entire Intersection Begins at 04:45 PM																	
04:45 PM	12	52	10	74	**8**	44	39	91	**22**	84	6	112	34	74	32	140	417
05:00 PM	10	**54**	12	76	6	50	37	93	18	**96**	4	**118**	**46**	**76**	27	149	**436**
05:15 PM	12	54	14	80	2	**57**	29	88	15	86	4	105	44	76	**33**	**153**	426
05:30 PM	**17**	51	**17**	**85**	2	46	**51**	**99**	16	76	**7**	99	39	54	33	126	409
Total Volume	51	211	53	315	18	197	156	371	71	342	21	434	163	280	125	568	1688
% App. Total	16.2	67	16.8		4.9	53.1	42		16.4	78.8	4.8		28.7	49.3	22		
PHF	.750	.977	.779	.926	.563	.864	.765	.937	.807	.891	.750	.919	.886	.921	.947	.928	.968

Counts Unlimited, Inc.
PO Box 1178
Corona, CA 92878
(951)268-6268

City of Redlands
N/S: Orange Street/Cajon Street
E/W: Citrus Avenue
Weather: Clear

File Name : 19_RED_Orange_Citrus PM
Site Code : 05121330
Start Date : 7/7/2021
Page No : 2

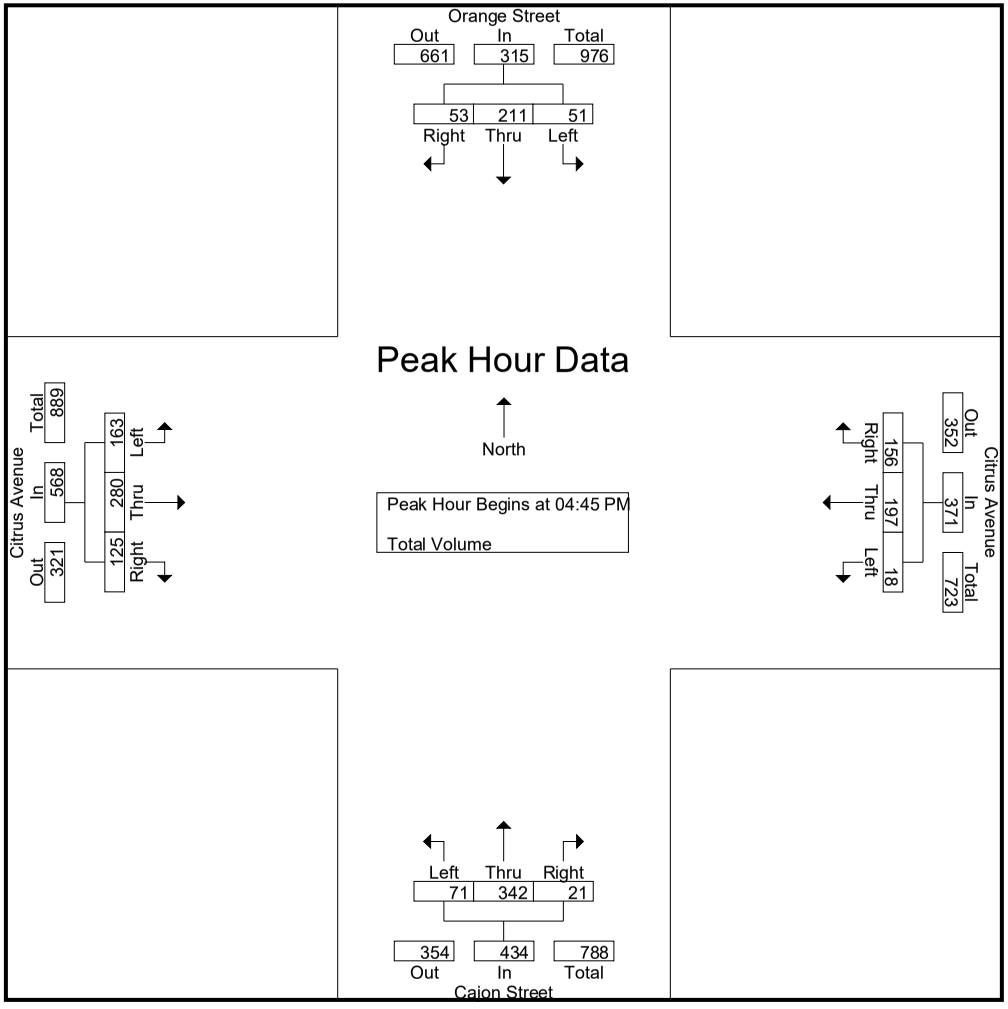

Counts Unlimited, Inc.
PO Box 1178
Corona, CA 92878
(951)268-6268

City of Redlands
N/S: Orange Street/Cajon Street
E/W: Citrus Avenue
Weather: Clear

File Name : 19_RED_Orange_Citrus PM
Site Code : 05121330
Start Date : 7/7/2021
Page No : 3

	Orange Street Southbound				Citrus Avenue Westbound				Cajon Street Northbound				Citrus Avenue Eastbound				
Start Time	Left	Thru	Right	App. Total	Left	Thru	Right	App. Total	Left	Thru	Right	App. Total	Left	Thru	Right	App. Total	Int. Total
Peak Hour Analysis From 04:00 PM to 05:45 PM - Peak 1 of 1																	
Peak Hour for Each Approach Begins at:																	
	05:00 PM				04:45 PM				04:45 PM				04:30 PM				
+0 mins.	10	**54**	12	76	**8**	44	39	91	**22**	84	6	112	30	68	29	127	
+15 mins.	12	54	14	80	6	50	37	93	18	**96**	4	**118**	34	74	32	140	
+30 mins.	**17**	51	**17**	**85**	2	**57**	29	88	15	86	4	105	**46**	**76**	27	149	
+45 mins.	11	49	15	75	2	46	**51**	**99**	16	76	**7**	99	44	76	**33**	**153**	
Total Volume	50	208	58	316	18	197	156	371	71	342	21	434	154	294	121	569	
% App. Total	15.8	65.8	18.4		4.9	53.1	42		16.4	78.8	4.8		27.1	51.7	21.3		
PHF	.735	.963	.853	.929	.563	.864	.765	.937	.807	.891	.750	.919	.837	.967	.917	.930	

Location: Redlands
N/S: Orange Street/Cajon Street
E/W: Citrus Avenue

Date: 7/7/2021
Day: Wednesday

PEDESTRIANS

	North Leg Orange Street	East Leg Citrus Avenue	South Leg Cajon Street	West Leg Citrus Avenue	
	Pedestrians	Pedestrians	Pedestrians	Pedestrians	
7:00 AM	0	0	0	0	0
7:15 AM	2	5	2	1	10
7:30 AM	2	0	3	2	7
7:45 AM	5	4	2	4	15
8:00 AM	3	2	1	0	6
8:15 AM	4	1	2	1	8
8:30 AM	4	4	2	1	11
8:45 AM	3	3	4	2	12
TOTAL VOLUMES:	23	19	16	11	69

	North Leg Orange Street	East Leg Citrus Avenue	South Leg Cajon Street	West Leg Citrus Avenue	
	Pedestrians	Pedestrians	Pedestrians	Pedestrians	
4:00 PM	12	7	4	4	27
4:15 PM	13	6	1	1	21
4:30 PM	6	1	1	0	8
4:45 PM	15	2	0	2	19
5:00 PM	17	3	0	3	23
5:15 PM	15	3	2	0	20
5:30 PM	15	2	0	2	19
5:45 PM	9	5	1	0	15
TOTAL VOLUMES:	102	29	9	12	152

Counts Unlimited, Inc.
PO Box 1178
Corona, CA 92878
951-268-6268

Location: Redlands
N/S: Orange Street/Cajon Street
E/W: Citrus Avenue

Date: 7/7/2021
Day: Wednesday

BICYCLES

	Southbound Orange Street			Westbound Citrus Avenue			Northbound Cajon Street			Eastbound Citrus Avenue			
	Left	Thru	Right	Left	Thru	Right	Left	Thru	Right	Left	Thru	Right	
7:00 AM	0	0	0	0	1	0	0	0	0	0	0	0	1
7:15 AM	0	0	0	0	0	0	0	0	0	0	1	0	1
7:30 AM	0	1	0	0	1	0	0	0	0	0	0	0	2
7:45 AM	0	0	0	0	0	0	0	0	0	0	1	0	1
8:00 AM	0	0	0	0	0	0	0	0	0	0	0	0	0
8:15 AM	0	0	0	0	1	0	0	0	0	0	0	0	1
8:30 AM	0	0	0	0	2	0	0	1	0	1	0	0	4
8:45 AM	0	1	0	0	0	0	0	0	0	0	1	1	3
TOTAL VOLUMES:	0	2	0	0	5	0	0	1	0	1	3	1	13

	Southbound Orange Street			Westbound Citrus Avenue			Northbound Cajon Street			Eastbound Citrus Avenue			
	Left	Thru	Right	Left	Thru	Right	Left	Thru	Right	Left	Thru	Right	
4:00 PM	0	0	0	0	0	0	0	0	0	0	0	0	0
4:15 PM	0	0	0	0	0	0	0	0	0	0	1	0	1
4:30 PM	0	0	0	0	1	0	0	0	0	0	0	0	1
4:45 PM	0	1	0	0	2	0	0	1	0	0	1	0	5
5:00 PM	0	0	0	0	0	0	0	0	0	0	0	0	0
5:15 PM	0	0	0	0	1	0	0	0	0	0	0	0	1
5:30 PM	0	0	0	0	0	0	0	0	0	0	0	1	1
5:45 PM	0	0	0	0	0	0	0	0	0	0	1	0	1
TOTAL VOLUMES:	0	1	0	0	4	0	0	1	0	0	3	1	10

Counts Unlimited, Inc.
PO Box 1178
Corona, CA 92878
(951)268-6268

City of Redlands
N/S: Redlands Boulevard
E/W: Citrus Avenue
Weather: Clear

File Name : 20_RED_Redlands_Citrus AM
Site Code : 05121330
Start Date : 7/7/2021
Page No : 1

Groups Printed- Total Volume

	Redlands Boulevard Southbound					Citrus Avenue Westbound					Redlands Boulevard Northbound					Citrus Avenue Eastbound							
Start Time	Left	Thru	Right	RTOR	App. Total	Left	Thru	Right	RTOR	App. Total	Left	Thru	Right	RTOR	App. Total	Left	Thru	Right	RTOR	App. Total	Exclu. Total	Inclu. Total	Int. Total
07:00 AM	7	18	2	0	27	5	32	13	4	50	17	41	6	3	64	2	7	17	8	26	15	167	182
07:15 AM	10	28	2	0	40	7	40	13	3	60	34	40	11	2	85	0	21	12	6	33	11	218	229
07:30 AM	12	36	0	0	48	6	47	20	7	73	34	72	7	5	113	6	21	15	6	42	18	276	294
07:45 AM	14	20	9	0	43	9	58	16	8	83	20	71	8	3	99	2	31	18	11	51	22	276	298
Total	43	102	13	0	158	27	177	62	22	266	105	224	32	13	361	10	80	62	31	152	66	937	1003
08:00 AM	12	31	3	0	46	14	54	21	7	89	33	53	10	6	96	5	27	21	8	53	21	284	305
08:15 AM	14	27	3	0	44	10	38	24	12	72	35	60	5	1	100	8	23	14	7	45	20	261	281
08:30 AM	11	31	6	0	48	10	29	21	13	60	25	47	8	3	80	3	17	8	2	28	18	216	234
08:45 AM	18	51	9	1	78	2	41	38	7	81	37	56	14	10	107	8	21	20	10	49	28	315	343
Total	55	140	21	1	216	36	162	104	39	302	130	216	37	20	383	24	88	63	27	175	87	1076	1163
Grand Total	98	242	34	1	374	63	339	166	61	568	235	440	69	33	744	34	168	125	58	327	153	2013	2166
Apprch %	26.2	64.7	9.1			11.1	59.7	29.2			31.6	59.1	9.3			10.4	51.4	38.2					
Total %	4.9	12	1.7		18.6	3.1	16.8	8.2		28.2	11.7	21.9	3.4		37	1.7	8.3	6.2		16.2	7.1	92.9	

	Redlands Boulevard Southbound				Citrus Avenue Westbound				Redlands Boulevard Northbound				Citrus Avenue Eastbound				
Start Time	Left	Thru	Right	App. Total	Left	Thru	Right	App. Total	Left	Thru	Right	App. Total	Left	Thru	Right	App. Total	Int. Total
Peak Hour Analysis From 07:00 AM to 08:45 AM - Peak 1 of 1																	
Peak Hour for Entire Intersection Begins at 07:30 AM																	
07:30 AM	12	**36**	0	**48**	6	47	20	73	34	**72**	7	**113**	6	21	15	42	276
07:45 AM	**14**	20	**9**	43	9	**58**	16	83	20	71	8	99	2	**31**	18	51	276
08:00 AM	12	31	3	46	**14**	54	21	**89**	33	53	**10**	96	5	27	**21**	**53**	**284**
08:15 AM	14	27	3	44	10	38	**24**	72	**35**	60	5	100	**8**	23	14	45	261
Total Volume	52	114	15	181	39	197	81	317	122	256	30	408	21	102	68	191	1097
% App. Total	28.7	63	8.3		12.3	62.1	25.6		29.9	62.7	7.4		11	53.4	35.6		
PHF	.929	.792	.417	.943	.696	.849	.844	.890	.871	.889	.750	.903	.656	.823	.810	.901	.966

Counts Unlimited, Inc.
PO Box 1178
Corona, CA 92878
(951)268-6268

City of Redlands
N/S: Redlands Boulevard
E/W: Citrus Avenue
Weather: Clear

File Name : 20_RED_Redlands_Citrus AM
Site Code : 05121330
Start Date : 7/7/2021
Page No : 2

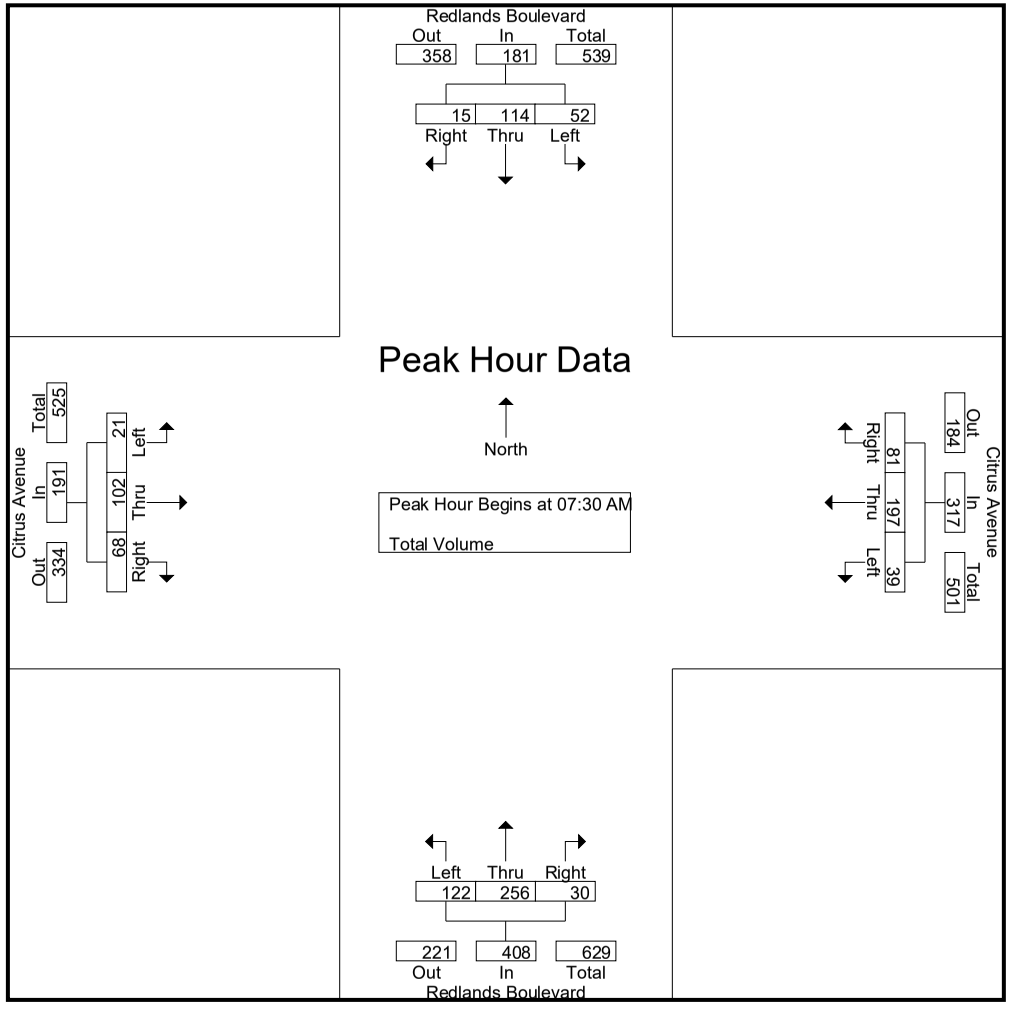

Counts Unlimited, Inc.
PO Box 1178
Corona, CA 92878
(951)268-6268

City of Redlands
N/S: Redlands Boulevard
E/W: Citrus Avenue
Weather: Clear

File Name : 20_RED_Redlands_Citrus AM
Site Code : 05121330
Start Date : 7/7/2021
Page No : 3

	Redlands Boulevard Southbound				Citrus Avenue Westbound				Redlands Boulevard Northbound				Citrus Avenue Eastbound				
Start Time	Left	Thru	Right	App. Total	Left	Thru	Right	App. Total	Left	Thru	Right	App. Total	Left	Thru	Right	App. Total	Int. Total
Peak Hour Analysis From 07:00 AM to 08:45 AM - Peak 1 of 1																	
Peak Hour for Each Approach Begins at:																	
	08:00 AM				07:30 AM				07:30 AM				07:30 AM				
+0 mins.	12	31	3	46	6	47	20	73	34	**72**	7	**113**	6	21	15	42	
+15 mins.	14	27	3	44	9	**58**	16	83	20	71	8	99	2	**31**	18	51	
+30 mins.	11	31	6	48	**14**	54	21	**89**	33	53	**10**	96	5	27	**21**	**53**	
+45 mins.	**18**	**51**	**9**	**78**	10	38	**24**	72	**35**	60	5	100	**8**	23	14	45	
Total Volume	55	140	21	216	39	197	81	317	122	256	30	408	21	102	68	191	
% App. Total	25.5	64.8	9.7		12.3	62.1	25.6		29.9	62.7	7.4		11	53.4	35.6		
PHF	.764	.686	.583	.692	.696	.849	.844	.890	.871	.889	.750	.903	.656	.823	.810	.901	

Counts Unlimited, Inc.
PO Box 1178
Corona, CA 92878
(951)268-6268

City of Redlands
N/S: Redlands Boulevard
E/W: Citrus Avenue
Weather: Clear

File Name : 20_RED_Redlands_Citrus PM
Site Code : 05121330
Start Date : 7/7/2021
Page No : 1

Groups Printed- Total Volume

	Redlands Boulevard Southbound					Citrus Avenue Westbound					Redlands Boulevard Northbound					Citrus Avenue Eastbound							
Start Time	Left	Thru	Right	RTOR	App. Total	Left	Thru	Right	RTOR	App. Total	Left	Thru	Right	RTOR	App. Total	Left	Thru	Right	RTOR	App. Total	Exclu. Total	Inclu. Total	Int. Total
04:00 PM	32	92	5	0	129	13	39	20	8	72	21	62	14	3	97	9	44	52	21	105	32	403	435
04:15 PM	40	87	5	0	132	10	46	27	13	83	17	62	10	3	89	5	51	39	22	95	38	399	437
04:30 PM	43	108	11	0	162	12	38	16	6	66	15	52	8	4	75	13	53	35	21	101	31	404	435
04:45 PM	44	118	6	0	168	10	37	27	13	74	14	52	12	3	78	8	69	52	28	129	44	449	493
Total	159	405	27	0	591	45	160	90	40	295	67	228	44	13	339	35	217	178	92	430	145	1655	1800
05:00 PM	37	111	8	0	156	4	47	23	15	74	17	59	10	1	86	14	68	43	23	125	39	441	480
05:15 PM	42	118	9	0	169	11	40	31	10	82	27	63	12	4	102	10	61	48	19	119	33	472	505
05:30 PM	28	111	7	0	146	13	37	18	12	68	19	48	11	3	78	17	69	51	28	137	43	429	472
05:45 PM	25	81	6	0	112	10	42	25	8	77	22	67	13	3	102	9	51	38	26	98	37	389	426
Total	132	421	30	0	583	38	166	97	45	301	85	237	46	11	368	50	249	180	96	479	152	1731	1883
Grand Total	291	826	57	0	1174	83	326	187	85	596	152	465	90	24	707	85	466	358	188	909	297	3386	3683
Apprch %	24.8	70.4	4.9			13.9	54.7	31.4			21.5	65.8	12.7			9.4	51.3	39.4					
Total %	8.6	24.4	1.7		34.7	2.5	9.6	5.5		17.6	4.5	13.7	2.7		20.9	2.5	13.8	10.6		26.8	8.1	91.9	

	Redlands Boulevard Southbound				Citrus Avenue Westbound				Redlands Boulevard Northbound				Citrus Avenue Eastbound				
Start Time	Left	Thru	Right	App. Total	Left	Thru	Right	App. Total	Left	Thru	Right	App. Total	Left	Thru	Right	App. Total	Int. Total
Peak Hour Analysis From 04:00 PM to 05:45 PM - Peak 1 of 1																	
Peak Hour for Entire Intersection Begins at 04:45 PM																	
04:45 PM	**44**	**118**	6	168	10	37	27	74	14	52	**12**	78	8	**69**	**52**	129	449
05:00 PM	37	111	8	156	4	**47**	23	74	17	59	10	86	14	68	43	125	441
05:15 PM	42	118	**9**	**169**	11	40	**31**	**82**	**27**	**63**	12	**102**	10	61	48	119	**472**
05:30 PM	28	111	7	146	**13**	37	18	68	19	48	11	78	**17**	69	51	**137**	429
Total Volume	151	458	30	639	38	161	99	298	77	222	45	344	49	267	194	510	1791
% App. Total	23.6	71.7	4.7		12.8	54	33.2		22.4	64.5	13.1		9.6	52.4	38		
PHF	.858	.970	.833	.945	.731	.856	.798	.909	.713	.881	.938	.843	.721	.967	.933	.931	.949

Counts Unlimited, Inc.
PO Box 1178
Corona, CA 92878
(951)268-6268

City of Redlands
N/S: Redlands Boulevard
E/W: Citrus Avenue
Weather: Clear

File Name : 20_RED_Redlands_Citrus PM
Site Code : 05121330
Start Date : 7/7/2021
Page No : 2

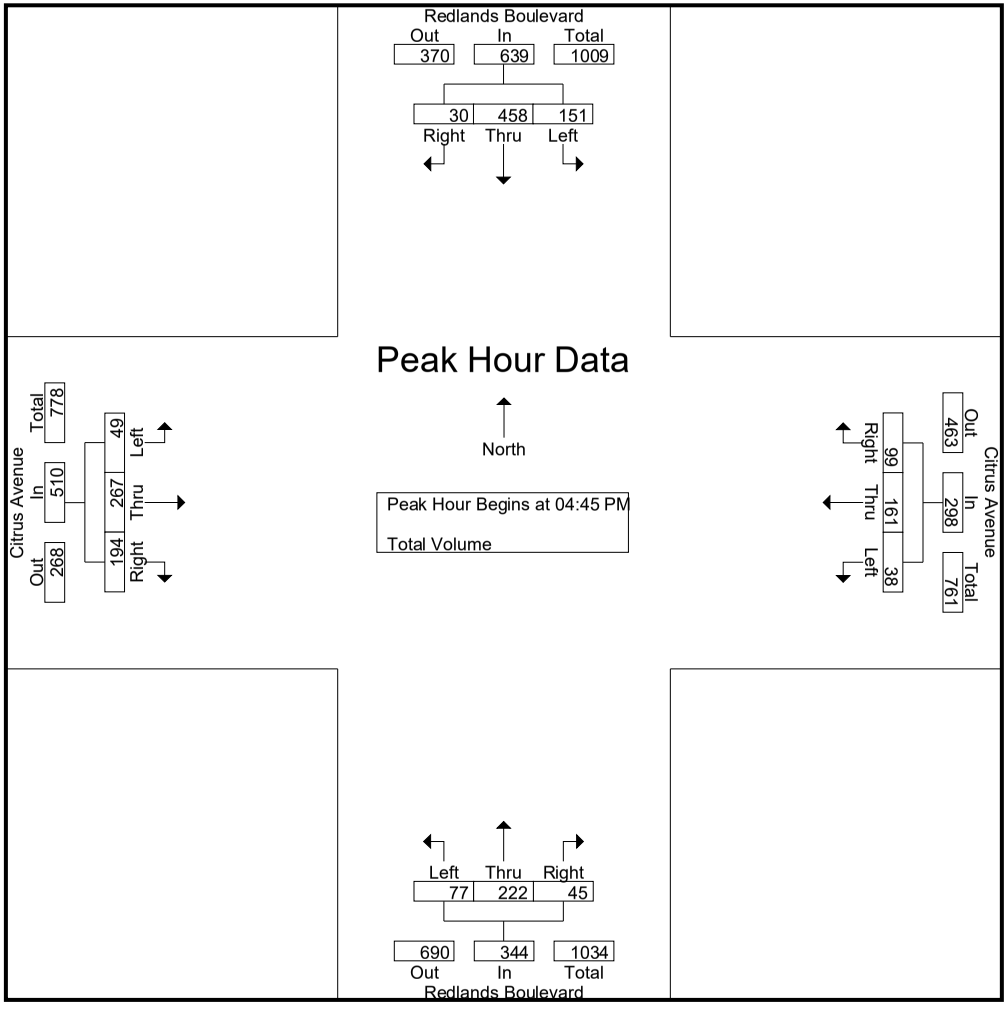

Counts Unlimited, Inc.
PO Box 1178
Corona, CA 92878
(951)268-6268

City of Redlands
N/S: Redlands Boulevard
E/W: Citrus Avenue
Weather: Clear

File Name : 20_RED_Redlands_Citrus PM
Site Code : 05121330
Start Date : 7/7/2021
Page No : 3

	Redlands Boulevard Southbound				Citrus Avenue Westbound				Redlands Boulevard Northbound				Citrus Avenue Eastbound				
Start Time	Left	Thru	Right	App. Total	Left	Thru	Right	App. Total	Left	Thru	Right	App. Total	Left	Thru	Right	App. Total	Int. Total
Peak Hour Analysis From 04:00 PM to 05:45 PM - Peak 1 of 1																	
Peak Hour for Each Approach Begins at:																	
	04:30 PM				05:00 PM				05:00 PM				04:45 PM				
+0 mins.	43	108	**11**	162	4	**47**	23	74	17	59	10	86	8	**69**	**52**	129	
+15 mins.	**44**	**118**	6	168	11	40	**31**	**82**	**27**	63	12	**102**	14	68	43	125	
+30 mins.	37	111	8	156	**13**	37	18	68	19	48	11	78	10	61	48	119	
+45 mins.	42	118	9	**169**	10	42	25	77	22	**67**	**13**	102	**17**	69	51	**137**	
Total Volume	166	455	34	655	38	166	97	301	85	237	46	368	49	267	194	510	
% App. Total	25.3	69.5	5.2		12.6	55.1	32.2		23.1	64.4	12.5		9.6	52.4	38		
PHF	.943	.964	.773	.969	.731	.883	.782	.918	.787	.884	.885	.902	.721	.967	.933	.931	

Location: Redlands
N/S: Redlands Boulevard
E/W: Citrus Avenue

Date: 7/7/2021
Day: Wednesday

PEDESTRIANS

	North Leg Orange Street	East Leg Citrus Avenue	South Leg Redlands Boulevard	West Leg Citrus Avenue	
	Pedestrians	Pedestrians	Pedestrians	Pedestrians	
7:00 AM	0	0	2	2	4
7:15 AM	2	0	1	0	3
7:30 AM	2	2	1	1	6
7:45 AM	0	0	0	1	1
8:00 AM	1	2	1	0	4
8:15 AM	0	0	2	0	2
8:30 AM	1	0	0	0	1
8:45 AM	1	1	0	1	3
TOTAL VOLUMES:	7	5	7	5	24

	North Leg Orange Street	East Leg Citrus Avenue	South Leg Redlands Boulevard	West Leg Citrus Avenue	
	Pedestrians	Pedestrians	Pedestrians	Pedestrians	
4:00 PM	0	0	1	1	2
4:15 PM	0	2	1	0	3
4:30 PM	1	1	1	0	3
4:45 PM	0	0	0	0	0
5:00 PM	0	4	4	0	8
5:15 PM	0	0	0	0	0
5:30 PM	3	0	1	2	6
5:45 PM	0	2	3	3	8
TOTAL VOLUMES:	4	9	11	6	30

Location: Redlands
N/S: Redlands Boulevard
E/W: Citrus Avenue

Date: 7/7/2021
Day: Wednesday

BICYCLES

	Southbound Orange Street			Westbound Citrus Avenue			Northbound Redlands Boulevard			Eastbound Citrus Avenue			
	Left	Thru	Right	Left	Thru	Right	Left	Thru	Right	Left	Thru	Right	
7:00 AM	0	0	0	0	0	0	1	0	0	0	0	0	1
7:15 AM	0	0	0	0	1	0	0	0	0	0	0	0	1
7:30 AM	1	0	0	0	1	0	0	0	0	0	1	0	3
7:45 AM	0	0	0	0	0	0	0	0	0	0	0	0	0
8:00 AM	0	0	0	0	1	0	0	0	0	0	1	0	2
8:15 AM	0	0	0	0	0	0	0	0	0	0	0	0	0
8:30 AM	0	0	0	0	3	0	1	0	0	0	0	0	4
8:45 AM	0	0	0	0	0	0	0	0	0	0	1	0	1
TOTAL VOLUMES:	1	0	0	0	6	0	2	0	0	0	3	0	12

	Southbound Orange Street			Westbound Citrus Avenue			Northbound Redlands Boulevard			Eastbound Citrus Avenue			
	Left	Thru	Right	Left	Thru	Right	Left	Thru	Right	Left	Thru	Right	
4:00 PM	1	0	0	0	0	0	0	0	0	0	0	0	1
4:15 PM	0	0	0	0	0	0	0	0	0	0	1	0	1
4:30 PM	0	0	0	0	0	0	0	0	0	0	0	0	0
4:45 PM	0	0	0	0	0	0	0	0	0	0	0	0	0
5:00 PM	1	1	0	0	0	0	0	0	0	0	1	0	3
5:15 PM	0	1	0	0	2	0	1	0	0	0	0	0	4
5:30 PM	0	1	0	0	0	1	0	0	0	0	0	0	2
5:45 PM	0	0	0	0	0	0	0	0	0	0	3	0	3
TOTAL VOLUMES:	2	3	0	0	2	1	1	0	0	0	5	0	14

Counts Unlimited, Inc.
PO Box 1178
Corona, CA 92878
951-268-6268

Counts Unlimited, Inc.
PO Box 1178
Corona, CA 92878
(951)268-6268

City of Redlands
N/S: Church Street
E/W: Citrus Avenue
Weather: Clear

File Name : 21_RED_Church_Citrus AM
Site Code : 05121330
Start Date : 7/7/2021
Page No : 1

Groups Printed- Total Volume

	Church Street Southbound					Citrus Avenue Westbound					Church Street Northbound					Citrus Avenue Eastbound							
Start Time	Left	Thru	Right	RTOR	App. Total	Left	Thru	Right	RTOR	App. Total	Left	Thru	Right	RTOR	App. Total	Left	Thru	Right	RTOR	App. Total	Exclu. Total	Inclu. Total	Int. Total
07:00 AM	5	24	26	11	55	7	35	3	0	45	4	12	9	3	25	6	13	1	0	20	14	145	159
07:15 AM	6	28	9	3	43	12	50	4	1	66	8	16	14	7	38	7	34	3	1	44	12	191	203
07:30 AM	6	21	14	3	41	10	51	4	0	65	11	27	19	5	57	3	34	5	1	42	9	205	214
07:45 AM	13	26	11	9	50	28	75	9	1	112	11	37	18	8	66	11	31	5	3	47	21	275	296
Total	30	99	60	26	189	57	211	20	2	288	34	92	60	23	186	27	112	14	5	153	56	816	872
08:00 AM	4	25	20	4	49	24	63	1	0	88	10	18	16	10	44	10	38	0	0	48	14	229	243
08:15 AM	7	25	18	9	50	10	53	3	1	66	11	26	17	5	54	7	35	3	1	45	16	215	231
08:30 AM	4	23	15	4	42	10	47	2	1	59	1	12	7	4	20	7	29	1	0	37	9	158	167
08:45 AM	2	23	17	7	42	13	72	5	2	90	3	13	8	3	24	10	40	6	0	56	12	212	224
Total	17	96	70	24	183	57	235	11	4	303	25	69	48	22	142	34	142	10	1	186	51	814	865
Grand Total	47	195	130	50	372	114	446	31	6	591	59	161	108	45	328	61	254	24	6	339	107	1630	1737
Apprch %	12.6	52.4	34.9			19.3	75.5	5.2			18	49.1	32.9			18	74.9	7.1					
Total %	2.9	12	8		22.8	7	27.4	1.9		36.3	3.6	9.9	6.6		20.1	3.7	15.6	1.5		20.8	6.2	93.8	

	Church Street Southbound				Citrus Avenue Westbound				Church Street Northbound				Citrus Avenue Eastbound				
Start Time	Left	Thru	Right	App. Total	Left	Thru	Right	App. Total	Left	Thru	Right	App. Total	Left	Thru	Right	App. Total	Int. Total
Peak Hour Analysis From 07:00 AM to 08:45 AM - Peak 1 of 1																	
Peak Hour for Entire Intersection Begins at 07:30 AM																	
07:30 AM	6	21	14	41	10	51	4	65	**11**	27	**19**	57	3	34	**5**	42	205
07:45 AM	**13**	**26**	11	**50**	**28**	**75**	**9**	**112**	11	**37**	18	**66**	**11**	31	5	47	**275**
08:00 AM	4	25	**20**	49	24	63	1	88	10	18	16	44	10	**38**	0	**48**	229
08:15 AM	7	25	18	50	10	53	3	66	11	26	17	54	7	35	3	45	215
Total Volume	30	97	63	190	72	242	17	331	43	108	70	221	31	138	13	182	924
% App. Total	15.8	51.1	33.2		21.8	73.1	5.1		19.5	48.9	31.7		17	75.8	7.1		
PHF	.577	.933	.788	.950	.643	.807	.472	.739	.977	.730	.921	.837	.705	.908	.650	.948	.840

Counts Unlimited, Inc.
PO Box 1178
Corona, CA 92878
(951)268-6268

City of Redlands
N/S: Church Street
E/W: Citrus Avenue
Weather: Clear

File Name : 21_RED_Church_Citrus AM
Site Code : 05121330
Start Date : 7/7/2021
Page No : 2

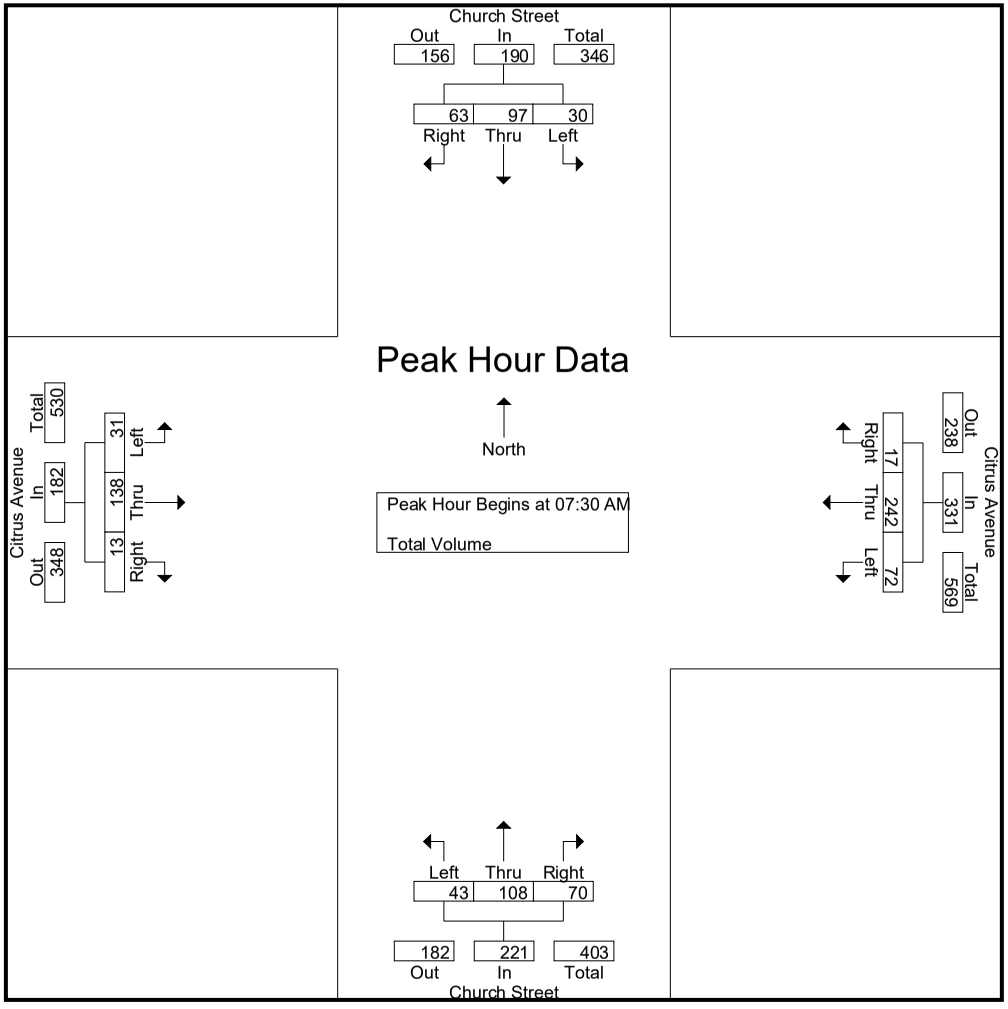

Counts Unlimited, Inc.
PO Box 1178
Corona, CA 92878
(951)268-6268

City of Redlands
N/S: Church Street
E/W: Citrus Avenue
Weather: Clear

File Name : 21_RED_Church_Citrus AM
Site Code : 05121330
Start Date : 7/7/2021
Page No : 3

	Church Street Southbound				Citrus Avenue Westbound				Church Street Northbound				Citrus Avenue Eastbound				
Start Time	Left	Thru	Right	App. Total	Left	Thru	Right	App. Total	Left	Thru	Right	App. Total	Left	Thru	Right	App. Total	Int. Total
Peak Hour Analysis From 07:00 AM to 08:45 AM - Peak 1 of 1																	
Peak Hour for Each Approach Begins at:																	
	07:45 AM				07:15 AM				07:30 AM				08:00 AM				
+0 mins.	**13**	**26**	11	**50**	12	50	4	66	**11**	27	**19**	57	**10**	38	0	48	
+15 mins.	4	25	**20**	49	10	51	4	65	11	**37**	18	**66**	7	35	3	45	
+30 mins.	7	25	18	50	**28**	**75**	**9**	**112**	10	18	16	44	7	29	1	37	
+45 mins.	4	23	15	42	24	63	1	88	11	26	17	54	10	**40**	**6**	**56**	
Total Volume	28	99	64	191	74	239	18	331	43	108	70	221	34	142	10	186	
% App. Total	14.7	51.8	33.5		22.4	72.2	5.4		19.5	48.9	31.7		18.3	76.3	5.4		
PHF	.538	.952	.800	.955	.661	.797	.500	.739	.977	.730	.921	.837	.850	.888	.417	.830	

Counts Unlimited, Inc.
PO Box 1178
Corona, CA 92878
(951)268-6268

City of Redlands
N/S: Church Street
E/W: Citrus Avenue
Weather: Clear

File Name : 21_RED_Church_Citrus PM
Site Code : 05121330
Start Date : 7/7/2021
Page No : 1

Groups Printed- Total Volume

	Church Street Southbound					Citrus Avenue Westbound					Church Street Northbound					Citrus Avenue Eastbound							
Start Time	Left	Thru	Right	RTOR	App. Total	Left	Thru	Right	RTOR	App. Total	Left	Thru	Right	RTOR	App. Total	Left	Thru	Right	RTOR	App. Total	Exclu. Total	Inclu. Total	Int. Total
04:00 PM	18	34	21	9	73	13	46	5	0	64	5	28	19	6	52	13	73	5	2	91	17	280	297
04:15 PM	24	25	21	9	70	12	65	3	0	80	2	16	28	14	46	17	85	3	1	105	24	301	325
04:30 PM	11	20	15	8	46	5	57	5	0	67	1	20	11	5	32	13	83	3	1	99	14	244	258
04:45 PM	14	32	16	8	62	8	64	2	1	74	1	36	7	2	44	24	99	3	1	126	12	306	318
Total	67	111	73	34	251	38	232	15	1	285	9	100	65	27	174	67	340	14	5	421	67	1131	1198
05:00 PM	9	28	21	15	58	5	62	1	0	68	2	28	10	4	40	20	101	2	1	123	20	289	309
05:15 PM	9	31	19	7	59	13	67	5	2	85	1	25	11	4	37	16	91	2	0	109	13	290	303
05:30 PM	15	30	21	13	66	9	50	5	1	64	1	29	8	5	38	18	83	3	0	104	19	272	291
05:45 PM	12	36	23	9	71	12	55	3	1	70	1	18	11	4	30	17	67	3	1	87	15	258	273
Total	45	125	84	44	254	39	234	14	4	287	5	100	40	17	145	71	342	10	2	423	67	1109	1176
Grand Total	112	236	157	78	505	77	466	29	5	572	14	200	105	44	319	138	682	24	7	844	134	2240	2374
Apprch %	22.2	46.7	31.1			13.5	81.5	5.1			4.4	62.7	32.9			16.4	80.8	2.8					
Total %	5	10.5	7		22.5	3.4	20.8	1.3		25.5	0.6	8.9	4.7		14.2	6.2	30.4	1.1		37.7	5.6	94.4	

	Church Street Southbound				Citrus Avenue Westbound				Church Street Northbound				Citrus Avenue Eastbound				
Start Time	Left	Thru	Right	App. Total	Left	Thru	Right	App. Total	Left	Thru	Right	App. Total	Left	Thru	Right	App. Total	Int. Total
Peak Hour Analysis From 04:00 PM to 05:45 PM - Peak 1 of 1																	
Peak Hour for Entire Intersection Begins at 04:45 PM																	
04:45 PM	14	**32**	16	62	8	64	2	74	1	**36**	7	**44**	**24**	99	**3**	**126**	**306**
05:00 PM	9	28	**21**	58	5	62	1	68	**2**	28	10	40	20	**101**	2	123	289
05:15 PM	9	31	19	59	**13**	**67**	**5**	**85**	1	25	**11**	37	16	91	2	109	290
05:30 PM	**15**	30	21	**66**	9	50	5	64	1	29	8	38	18	83	3	104	272
Total Volume	47	121	77	245	35	243	13	291	5	118	36	159	78	374	10	462	1157
% App. Total	19.2	49.4	31.4		12	83.5	4.5		3.1	74.2	22.6		16.9	81	2.2		
PHF	.783	.945	.917	.928	.673	.907	.650	.856	.625	.819	.818	.903	.813	.926	.833	.917	.945

Counts Unlimited, Inc.
PO Box 1178
Corona, CA 92878
(951)268-6268

City of Redlands
N/S: Church Street
E/W: Citrus Avenue
Weather: Clear

File Name : 21_RED_Church_Citrus PM
Site Code : 05121330
Start Date : 7/7/2021
Page No : 2

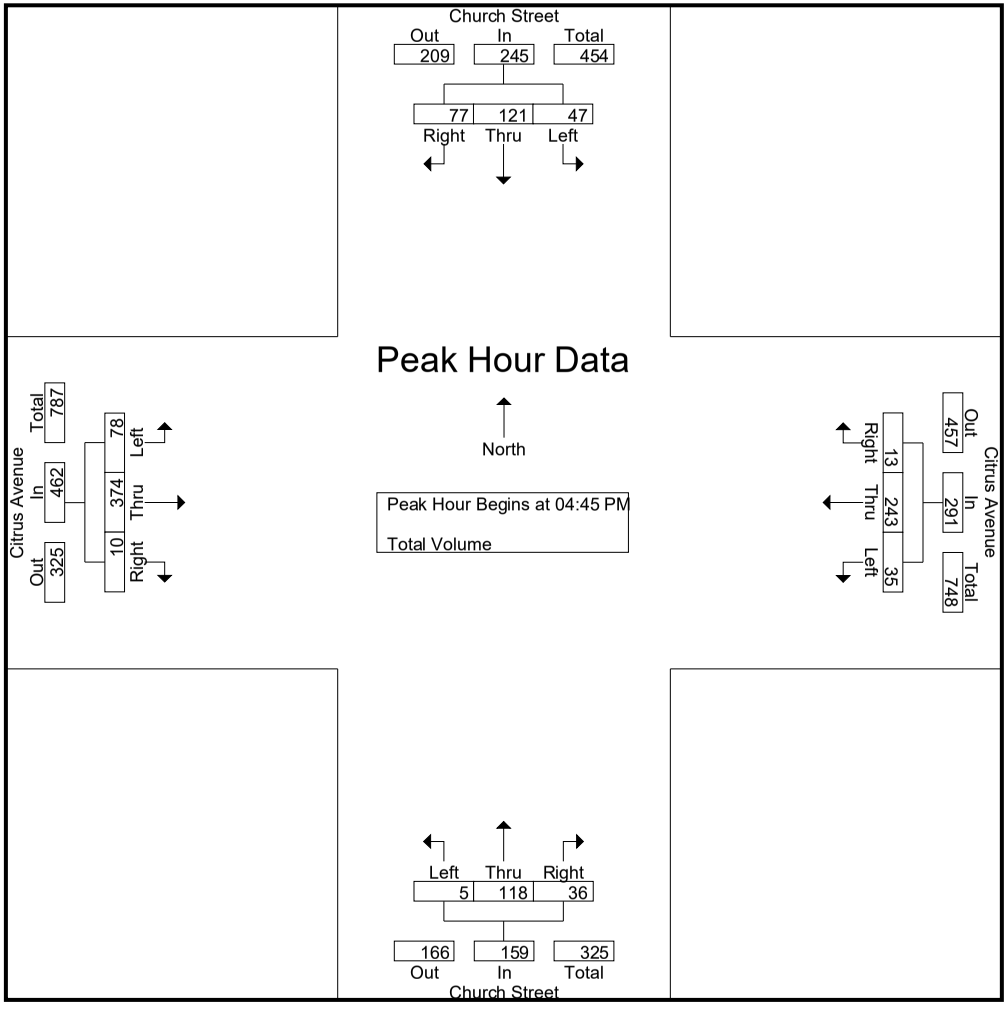

Counts Unlimited, Inc.
PO Box 1178
Corona, CA 92878
(951)268-6268

City of Redlands
N/S: Church Street
E/W: Citrus Avenue
Weather: Clear

File Name : 21_RED_Church_Citrus PM
Site Code : 05121330
Start Date : 7/7/2021
Page No : 3

	Church Street Southbound				Citrus Avenue Westbound				Church Street Northbound				Citrus Avenue Eastbound				
Start Time	Left	Thru	Right	App. Total	Left	Thru	Right	App. Total	Left	Thru	Right	App. Total	Left	Thru	Right	App. Total	Int. Total
Peak Hour Analysis From 04:00 PM to 05:45 PM - Peak 1 of 1																	
Peak Hour for Each Approach Begins at:																	
	05:00 PM				04:30 PM				04:00 PM				04:45 PM				
+0 mins.	9	28	21	58	5	57	**5**	67	**5**	28	19	**52**	**24**	99	**3**	**126**	
+15 mins.	9	31	19	59	8	64	2	74	2	16	**28**	46	20	**101**	2	123	
+30 mins.	**15**	30	21	66	5	62	1	68	1	20	11	32	16	91	2	109	
+45 mins.	12	**36**	**23**	**71**	**13**	**67**	5	**85**	1	**36**	7	44	18	83	3	104	
Total Volume	45	125	84	254	31	250	13	294	9	100	65	174	78	374	10	462	
% App. Total	17.7	49.2	33.1		10.5	85	4.4		5.2	57.5	37.4		16.9	81	2.2		
PHF	.750	.868	.913	.894	.596	.933	.650	.865	.450	.694	.580	.837	.813	.926	.833	.917	

Location: Redlands
N/S: Church Street
E/W: Citrus Avenue

Date: 7/7/2021
Day: Wednesday

PEDESTRIANS

	North Leg Orange Street	East Leg Citrus Avenue	South Leg Church Street	West Leg Citrus Avenue	
	Pedestrians	Pedestrians	Pedestrians	Pedestrians	
7:00 AM	0	0	1	4	5
7:15 AM	2	0	0	0	2
7:30 AM	1	1	0	0	2
7:45 AM	0	1	2	0	3
8:00 AM	1	1	4	0	6
8:15 AM	1	0	5	2	8
8:30 AM	0	1	1	1	3
8:45 AM	0	1	0	0	1
TOTAL VOLUMES:	5	5	13	7	30

	North Leg Orange Street	East Leg Citrus Avenue	South Leg Church Street	West Leg Citrus Avenue	
	Pedestrians	Pedestrians	Pedestrians	Pedestrians	
4:00 PM	2	0	0	1	3
4:15 PM	0	1	0	1	2
4:30 PM	0	0	3	1	4
4:45 PM	0	0	0	1	1
5:00 PM	0	0	2	3	5
5:15 PM	4	1	0	0	5
5:30 PM	0	1	1	0	2
5:45 PM	0	0	0	1	1
TOTAL VOLUMES:	6	3	6	8	23

Counts Unlimited, Inc.
PO Box 1178
Corona, CA 92878
951-268-6268

Location: Redlands
N/S: Church Street
E/W: Citrus Avenue

Date: 7/7/2021
Day: Wednesday

BICYCLES

	Southbound Orange Street			Westbound Citrus Avenue			Northbound Church Street			Eastbound Citrus Avenue			
	Left	Thru	Right	Left	Thru	Right	Left	Thru	Right	Left	Thru	Right	
7:00 AM	0	0	0	0	0	0	0	0	0	0	0	0	0
7:15 AM	0	0	0	0	1	0	0	0	0	0	0	0	1
7:30 AM	0	1	1	1	0	0	0	0	0	0	2	0	5
7:45 AM	0	0	0	0	0	0	0	0	0	0	0	0	0
8:00 AM	0	0	1	0	0	0	0	0	0	0	1	0	2
8:15 AM	0	0	0	0	0	0	0	0	0	0	0	0	0
8:30 AM	0	0	0	0	2	0	0	0	0	0	0	0	2
8:45 AM	0	0	0	0	0	0	0	1	0	0	1	0	2
TOTAL VOLUMES:	0	1	2	1	3	0	0	1	0	0	4	0	12

	Southbound Orange Street			Westbound Citrus Avenue			Northbound Church Street			Eastbound Citrus Avenue			
	Left	Thru	Right	Left	Thru	Right	Left	Thru	Right	Left	Thru	Right	
4:00 PM	0	0	0	0	0	0	0	0	0	0	0	0	0
4:15 PM	0	0	0	0	0	0	0	0	0	1	0	0	1
4:30 PM	1	1	0	0	0	0	0	0	0	0	0	0	2
4:45 PM	0	0	0	0	0	0	0	0	0	0	0	0	0
5:00 PM	0	0	0	0	1	0	1	0	0	0	1	0	3
5:15 PM	0	0	1	0	0	0	0	1	0	0	0	0	2
5:30 PM	0	0	0	0	1	0	0	2	0	0	0	0	3
5:45 PM	0	0	0	0	0	0	0	0	0	1	1	0	2
TOTAL VOLUMES:	1	1	1	0	2	0	1	3	0	2	2	0	13

Wednesday, December 07, 2016 Location: Redlands PROJECT: SC1151

TMC33 Church and Citrus. Suhsduhg#e|#DlpWG#who1#:47#586#:;;;

AM Period	NB		SB		EB	WB		PM Period	NB		SB		EB	WB	
0:00	28		11					12:00	218		126				
0:15	25		14					12:15	227		131				
0:30	19		9					12:30	170		132				
0:45	19	91	14	48			139	12:45	218	833	157	546			1379
1:00	19		9					13:00	233		152				
1:15	19		4					13:15	209		158				
1:30	16		3					13:30	185		127				
1:45	22	76	7	23			99	13:45	205	832	151	588			1420
2:00	11		7					14:00	189		141				
2:15	15		8					14:15	219		137				
2:30	12		7					14:30	213		150				
2:45	11	49	2	24			73	14:45	215	836	143	571			1407
3:00	9		4					15:00	192		136				
3:15	5		0					15:15	264		171				
3:30	7		6					15:30	209		147				
3:45	13	34	3	13			47	15:45	224	889	135	589			1478
4:00	9		4					16:00	271		135				
4:15	17		6					16:15	255		141				
4:30	20		10					16:30	234		160				
4:45	24	70	8	28			98	16:45	238	998	121	557			1555
5:00	24		15					17:00	179		147				
5:15	47		16					17:15	128		138				
5:30	36		17					17:30	136		138				
5:45	52	159	14	62			221	17:45	125	568	145	568			1136
6:00	45		17					18:00	102		119				
6:15	53		25					18:15	98		120				
6:30	87		35					18:30	98		126				
6:45	108	293	58	135			428	18:45	97	395	118	483			878
7:00	122		61					19:00	88		120				
7:15	184		92					19:15	97		104				
7:30	191		106					19:30	90		78				
7:45	189	686	106	365			1051	19:45	96	371	66	368			739
8:00	157		101					20:00	100		70				
8:15	142		84					20:15	93		57				
8:30	145		82					20:30	95		69				
8:45	136	580	114	381			961	20:45	100	388	54	250			638
9:00	156		96					21:00	87		47				
9:15	157		107					21:15	89		59				
9:30	149		117					21:30	107		44				
9:45	160	622	144	464			1086	21:45	79	362	48	198			560
10:00	167		112					22:00	62		37				
10:15	178		117					22:15	53		31				
10:30	173		117					22:30	48		36				
10:45	157	675	119	465			1140	22:45	47	210	36	140			350
11:00	203		123					23:00	55		33				
11:15	216		137					23:15	31		10				
11:30	206		182					23:30	41		22				
11:45	218	843	161	603			1446	23:45	27	154	12	77			231
Total Vol.		4178		2611			**6789**			6836		4935			**11771**

Daily Totals

NB	SB	EB	WB	**Combined**
11014	7546			**18560**

	AM			**PM**		
Split %	61.5%	38.5%	**36.6%**	58.1%	41.9%	**63.4%**
Peak Hour	11:30	11:15	**11:30**	16:00	14:30	**15:15**
Volume	869	606	**1469**	998	600	**1556**
P.H.F.	0.96	0.83	**0.95**	0.92	0.88	**0.89**

cs@aimtd.com Tell. 714 253 7888

Wednesday, December 07, 2016 Location: Redlands PROJECT: SC1151

TMC33 Church and Citrus. Suhsduhg#e|#DlpWG#who1#:47#586#:;;;

AM Period	NB	SB	EB		WB			PM Period	NB	SB	EB		WB		
0:30			7		6			12:00			59		75		
0:15			9		0			12:15			68		80		
0:30			5		3			12:30			71		96		
0:45			4	25	0	9	34	12:45			80	278	102	353	631
1:00			8		3			13:00			83		96		
1:15			5		3			13:15			79		87		
1:30			0		3			13:30			55		76		
1:45			4	17	0	9	26	13:45			75	292	86	345	637
2:00			3		0			14:00			70		79		
2:15			4		2			14:15			81		88		
2:30			2		0			14:30			103		103		
2:45			3	12	2	4	16	14:45			87	341	123	393	734
3:00			3		0			15:00			63		96		
3:15			0		0			15:15			78		89		
3:30			2		0			15:30			82		77		
3:45			0	5	3	3	8	15:45			97	320	96	358	678
4:00			0		0			16:00			85		70		
4:15			3		2			16:15			95		74		
4:30			0		3			16:30			109		64		
4:45			5	8	4	9	17	16:45			131	420	81	289	709
5:00			2		2			17:00			141		90		
5:15			8		8			17:15			122		88		
5:30			5		2			17:30			124		78		
5:45			11	26	14	26	52	17:45			122	509	61	317	826
6:00			9		15			18:00			106		67		
6:15			14		20			18:15			115		58		
6:30			20		33			18:30			89		60		
6:45			24	67	45	113	180	18:45			80	390	58	243	633
7:00			56		79			19:00			84		59		
7:15			98		117			19:15			65		53		
7:30			40		93			19:30			75		44		
7:45			41	235	98	387	622	19:45			55	279	55	211	490
8:00			41		71			20:00			53		76		
8:15			46		70			20:15			57		54		
8:30			37		76			20:30			38		37		
8:45			48	172	72	289	461	20:45			56	204	35	202	406
9:00			42		68			21:00			56		42		
9:15			38		64			21:15			56		30		
9:30			42		54			21:30			28		18		
9:45			36	158	83	269	427	21:45			25	165	23	113	278
10:00			43		70			22:00			19		24		
10:15			53		95			22:15			16		19		
10:30			58		62			22:30			25		13		
10:45			55	209	108	335	544	22:45			6	66	12	68	134
11:00			70		89			23:00			14		13		
11:15			59		116			23:15			10		7		
11:30			64		80			23:30			8		9		
11:45			67	260	99	384	644	23:45			4	36	10	39	75
Total Vol.				1194		1837	**3031**					3300		2931	**6231**

Daily Totals

NB	SB	EB	WB	**Combined**
		4494	4768	**9262**

			AM					**PM**		
Split %			39.4%	60.6%	**32.7%**			53.0%	47.0%	**67.3%**
Peak Hour	0:30	0:30	11:45	10:45	**11:00**			16:45	14:30	**16:45**
Volume			265	393	**644**			518	411	**855**
P.H.F.			0.93	0.85	**0.92**			0.92	0.84	**0.93**

cs@aimtd.com Tell. 714 253 7888

INTERSECTION TURNING MOVEMENT COUNTS

T816

PREPARED BY: AimTD LLC. tel: 714 253 7888 cs@aimtd.com

DATE:	LOCATION:	Redlands	PROJECT #:	SC1151
Thu, Dec 8, 16	NORTH & SOUTH:	Redlands	LOCATION #:	16
	EAST & WEST:	Citrus	CONTROL:	SIGNAL

NOTES:

AM / PM / MD / OTHER / OTHER — ▲ N / ◄ W / E ► / S ▼

☑ Add U-Turns to Left Turns

		NORTHBOUND Redlands			SOUTHBOUND Redlands			EASTBOUND Citrus			WESTBOUND Citrus				U-TURNS				
	LANES:	NL 0	NT 2	NR 0	SL 0	ST 2	SR 1	EL 1	ET 1	ER 1	WL 1	WT 1	WR 1	TOTAL	NB 0	SB 0	EB 0	WB 0	TTL
AM	7:00 AM	37	86	8	29	44	2	3	52	23	10	54	55	403	0	0	0	0	0
	7:15 AM	57	155	5	44	78	5	11	96	30	16	90	91	678	0	0	0	0	0
	7:30 AM	46	133	5	14	36	5	6	28	16	19	64	45	417	0	0	0	0	0
	7:45 AM	65	159	17	9	48	9	0	33	18	17	84	38	497	0	0	0	0	0
	8:00 AM	39	141	11	14	36	4	5	45	24	11	51	25	406	0	0	0	0	0
	8:15 AM	33	92	13	18	30	3	4	49	22	17	42	28	351	0	0	0	0	0
	8:30 AM	31	102	15	14	48	6	6	22	20	8	65	30	367	0	0	0	0	0
	8:45 AM	42	80	10	13	46	2	3	26	20	10	59	24	335	0	0	0	0	0
	VOLUMES	350	948	84	155	366	36	38	351	173	108	509	336	3,454	0	0	0	0	0
	APPROACH %	25%	69%	6%	28%	66%	6%	7%	62%	31%	11%	53%	35%						
	APP/DEPART	1,382	/	1,322	557	/	647	562	/	590	953	/	895	0					
	BEGIN PEAK HR		7:15 AM																
	VOLUMES	207	588	38	81	198	23	22	202	88	63	289	199	1,998					
	APPROACH %	25%	71%	5%	27%	66%	8%	7%	65%	28%	11%	52%	36%						
	PEAK HR FACTOR		0.864			0.594			0.569			0.699		0.737					
	APP/DEPART	833	/	809	302	/	349	312	/	321	551	/	519	0					
PM	4:00 PM	24	65	16	39	135	4	14	56	41	10	34	26	464	0	0	0	0	0
	4:15 PM	23	64	10	40	142	6	12	74	49	7	44	34	505	0	0	0	0	0
	4:30 PM	23	62	7	34	168	14	13	73	52	10	32	30	518	0	0	0	0	0
	4:45 PM	23	66	20	27	174	35	29	83	57	17	52	35	618	0	0	0	0	0
	5:00 PM	24	86	11	23	161	26	38	91	77	12	63	29	641	0	0	0	0	0
	5:15 PM	21	61	10	30	161	46	38	78	65	10	64	24	608	0	0	0	0	0
	5:30 PM	16	53	8	26	155	38	32	95	59	11	46	37	576	0	0	0	0	0
	5:45 PM	18	52	16	29	143	15	29	80	58	15	56	27	538	0	0	0	0	0
	VOLUMES	172	509	98	248	1,239	184	205	630	458	92	391	242	4,468	0	0	0	0	0
	APPROACH %	22%	65%	13%	15%	74%	11%	16%	49%	35%	13%	54%	33%						
	APP/DEPART	779	/	956	1,671	/	1,789	1,293	/	976	725	/	747	0					
	BEGIN PEAK HR		4:45 PM																
	VOLUMES	84	266	49	106	651	145	137	347	258	50	225	125	2,443					
	APPROACH %	21%	67%	12%	12%	72%	16%	18%	47%	35%	13%	56%	31%						
	PEAK HR FACTOR		0.824			0.951			0.900			0.962		0.953					
	APP/DEPART	399	/	528	902	/	959	742	/	502	400	/	454	0					

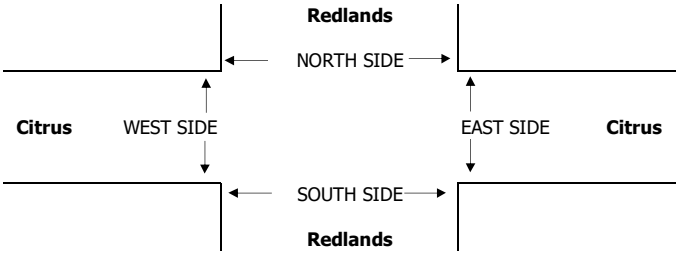

		PEDESTRIAN + BIKE CROSSINGS					PEDESTRIAN CROSSINGS					BICYCLE CROSSINGS				
		N SIDE	S SIDE	E SIDE	W SIDE	TOTAL	N SIDE	S SIDE	E SIDE	W SIDE	TOTAL	NS	SS	ES	WS	TOTAL
AM	7:00 AM	0	0	0	0	0	0	0	0	0	0	0	0	0	0	0
	7:15 AM	0	0	0	0	0	0	0	0	0	0	0	0	0	0	0
	7:30 AM	0	0	0	0	0	0	0	0	0	0	0	0	0	0	0
	7:45 AM	0	0	0	0	0	0	0	0	0	0	0	0	0	0	0
	8:00 AM	0	0	0	0	0	0	0	0	0	0	0	0	0	0	0
	8:15 AM	0	0	0	0	0	0	0	0	0	0	0	0	0	0	0
	8:30 AM	0	0	0	0	0	0	0	0	0	0	0	0	0	0	0
	8:45 AM	0	0	0	0	0	0	0	0	0	0	0	0	0	0	0
	TOTAL	0	0	0	0	0	0	0	0	0	0	0	0	0	0	0
PM	4:00 PM	0	0	0	0	0	0	0	0	0	0	0	0	0	0	0
	4:15 PM	0	0	0	0	0	0	0	0	0	0	0	0	0	0	0
	4:30 PM	0	0	0	0	0	0	0	0	0	0	0	0	0	0	0
	4:45 PM	0	0	0	0	0	0	0	0	0	0	0	0	0	0	0
	5:00 PM	0	0	0	0	0	0	0	0	0	0	0	0	0	0	0
	5:15 PM	0	0	0	0	0	0	0	0	0	0	0	0	0	0	0
	5:30 PM	0	0	0	0	0	0	0	0	0	0	0	0	0	0	0
	5:45 PM	0	0	0	0	0	0	0	0	0	0	0	0	0	0	0
	TOTAL	0	0	0	0	0	0	0	0	0	0	0	0	0	0	0

INTERSECTION TURNING MOVEMENT COUNTS

PREPARED BY: AimTD LLC. tel: 714 253 7888 cs@aimtd.com

DATE:				
Tue, Apr 16, 19	LOCATION:	Redlands	PROJECT #:	SC
	NORTH & SOUTH:	Eureka	LOCATION #:	19
	EAST & WEST:	Redlands	CONTROL:	SIGNAL

NOTES:

AM / PM / MD / OTHER / OTHER — ◄ W, ▲ N, S ▼, E ►

☑ Add U-Turns to Left Turns

		NORTHBOUND Eureka			SOUTHBOUND Eureka			EASTBOUND Redlands			WESTBOUND Redlands				U-TURNS				
	LANES:	NL 0	NT 2	NR 0	SL 0	ST 2	SR 0	EL 1	ET 2	ER 0	WL 1	WT 2	WR 0	TOTAL	NB 0	SB 0	EB 0	WB 0	TTL
AM	7:00 AM	3	17	2	16	72	10	0	32	8	2	73	5	240	0	0	0	0	0
	7:15 AM	4	13	2	16	87	18	2	45	4	7	97	3	298	0	0	0	0	0
	7:30 AM	6	20	2	23	108	19	4	41	3	2	103	6	337	0	0	0	0	0
	7:45 AM	6	21	8	18	124	29	5	68	6	4	157	7	453	0	0	0	0	0
	8:00 AM	7	37	11	43	110	29	3	89	6	8	140	8	491	0	0	0	0	0
	8:15 AM	7	23	13	46	84	25	3	64	5	12	168	8	458	0	0	0	0	0
	8:30 AM	11	22	7	23	81	27	9	66	8	9	95	11	369	0	0	0	0	0
	8:45 AM	4	24	7	26	80	20	5	59	5	9	74	14	327	0	0	0	0	0
	VOLUMES	48	177	52	211	746	177	31	464	45	53	907	62	2,973	0	0	0	0	0
	APPROACH %	17%	64%	19%	19%	66%	16%	6%	86%	8%	5%	89%	6%						
	APP/DEPART	277	/	270	1,134	/	844	540	/	727	1,022	/	1,132	0					
	BEGIN PEAK HR		7:45 AM																
	VOLUMES	31	103	39	130	399	110	20	287	25	33	560	34	1,771					
	APPROACH %	18%	60%	23%	20%	62%	17%	6%	86%	8%	5%	89%	5%						
	PEAK HR FACTOR		0.786			0.878			0.847			0.834		0.902					
	APP/DEPART	173	/	157	639	/	457	332	/	456	627	/	701	0					
PM	4:00 PM	9	35	10	38	58	21	12	180	17	9	83	19	491	0	0	0	1	1
	4:15 PM	9	41	8	38	75	8	21	183	16	9	90	13	511	0	0	0	0	0
	4:30 PM	7	41	16	30	84	15	23	182	18	10	71	14	511	0	0	0	0	0
	4:45 PM	8	44	9	32	79	14	18	194	21	7	83	16	525	0	0	0	0	0
	5:00 PM	6	61	11	37	94	9	30	216	19	11	74	17	585	0	0	0	0	0
	5:15 PM	8	60	14	29	106	10	24	227	37	13	69	14	611	0	0	0	1	1
	5:30 PM	7	48	9	31	92	13	25	222	18	8	80	14	567	0	0	0	0	0
	5:45 PM	3	36	9	28	83	9	20	189	21	9	71	13	491	0	0	0	0	0
	VOLUMES	57	366	86	263	671	99	173	1,593	167	76	621	120	4,292	0	0	0	2	2
	APPROACH %	11%	72%	17%	25%	65%	10%	9%	82%	9%	9%	76%	15%						
	APP/DEPART	509	/	659	1,033	/	912	1,933	/	1,944	817	/	777	0					
	BEGIN PEAK HR		4:45 PM																
	VOLUMES	29	213	43	129	371	46	97	859	95	39	306	61	2,288					
	APPROACH %	10%	75%	15%	24%	68%	8%	9%	82%	9%	10%	75%	15%						
	PEAK HR FACTOR		0.869			0.941			0.912			0.958		0.936					
	APP/DEPART	285	/	371	546	/	504	1,051	/	1,032	406	/	381	0					

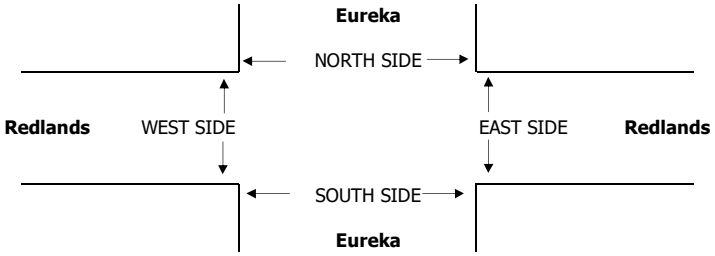

		PEDESTRIAN + BIKE CROSSINGS					PEDESTRIAN CROSSINGS					BICYCLE CROSSINGS				
		N SIDE	S SIDE	E SIDE	W SIDE	TOTAL	N SIDE	S SIDE	E SIDE	W SIDE	TOTAL	NS	SS	ES	WS	TOTAL
AM	7:00 AM	0	0	0	0	0	0	0	0	0	0	0	0	0	0	0
	7:15 AM	0	0	0	2	2	0	0	0	2	2	0	0	0	0	0
	7:30 AM	0	0	1	0	1	0	0	0	0	0	0	0	1	0	1
	7:45 AM	3	0	2	0	5	1	0	2	0	3	2	0	0	0	2
	8:00 AM	0	3	5	0	8	0	3	4	0	7	0	0	1	0	1
	8:15 AM	0	0	0	1	1	0	0	0	1	1	0	0	0	0	0
	8:30 AM	0	0	1	0	1	0	0	0	0	0	0	0	1	0	1
	8:45 AM	0	0	2	2	4	0	0	2	2	4	0	0	0	0	0
	TOTAL	3	3	11	5	22	1	3	8	5	17	2	0	3	0	5
	AM BEGIN PEAK HR			7:45 AM			1	3	6	1	11					
PM	4:00 PM	0	0	3	0	3	0	0	2	0	2	0	0	1	0	1
	4:15 PM	2	0	0	1	3	2	0	0	1	3	0	0	0	0	0
	4:30 PM	0	2	0	0	2	0	0	0	0	0	0	2	0	0	2
	4:45 PM	4	3	3	0	10	3	3	3	0	9	1	0	0	0	1
	5:00 PM	2	0	0	2	4	1	0	0	2	3	1	0	0	0	1
	5:15 PM	0	5	2	0	7	0	5	2	0	7	0	0	0	0	0
	5:30 PM	1	1	1	1	4	1	1	1	1	4	0	0	0	0	0
	5:45 PM	1	3	0	3	7	0	3	0	1	4	1	0	0	2	3
	TOTAL	10	14	9	7	40	7	12	8	5	32	3	2	1	2	8
	PM BEGIN PEAK HR			4:45 PM			5	9	6	3	23					

INTERSECTION TURNING MOVEMENT COUNTS

PREPARED BY: AimTD LLC. tel: 714 253 7888 cs@aimtd.com

DATE:			
Tue, Apr 16, 19	LOCATION:	Redlands	PROJECT #: SC
	NORTH & SOUTH:	Eureka	LOCATION #: 20
	EAST & WEST:	Citrus	CONTROL: SIGNAL

NOTES:

AM / PM / MD / OTHER / OTHER — ◄ W ▲ N S ▼ E ►

☑ Add U-Turns to Left Turns

		NORTHBOUND Eureka			SOUTHBOUND Eureka			EASTBOUND Citrus			WESTBOUND Citrus				U-TURNS				
	LANES:	NL 0	NT 2	NR 0	SL 0	ST 2	SR 0	EL 1	ET 2	ER 0	WL 1	WT 2	WR 0	TOTAL	NB 0	SB 0	EB 0	WB 0	TTL
AM	7:00 AM	2	12	2	23	20	15	10	46	0	1	37	9	177	0	0	0	0	0
	7:15 AM	2	8	0	34	27	33	8	48	3	0	62	6	231	0	0	0	0	0
	7:30 AM	1	8	1	31	49	31	15	59	2	0	79	5	281	0	0	0	0	0
	7:45 AM	7	17	2	31	55	35	13	70	9	2	81	17	339	0	0	0	0	0
	8:00 AM	4	18	2	21	66	45	27	123	8	2	72	17	405	0	0	0	0	0
	8:15 AM	1	15	1	26	39	45	19	95	4	5	113	22	385	0	0	0	0	0
	8:30 AM	2	15	2	25	35	42	17	41	7	3	79	18	286	0	0	0	0	0
	8:45 AM	4	13	1	13	35	31	21	57	9	3	56	13	256	0	0	1	0	1
	VOLUMES	23	106	11	204	326	277	130	539	42	16	579	107	2,360	0	0	1	0	1
	APPROACH %	16%	76%	8%	25%	40%	34%	18%	76%	6%	2%	82%	15%						
	APP/DEPART	140	/	342	807	/	384	711	/	754	702	/	880	0					
	BEGIN PEAK HR		7:45 AM																
	VOLUMES	14	65	7	103	195	167	76	329	28	12	345	74	1,415					
	APPROACH %	16%	76%	8%	22%	42%	36%	18%	76%	6%	3%	80%	17%						
	PEAK HR FACTOR		0.827			0.881			0.685			0.770		0.873					
	APP/DEPART	86	/	215	465	/	235	433	/	439	431	/	526	0					
PM	4:00 PM	1	17	5	31	54	38	24	98	5	1	61	13	348	0	0	0	0	0
	4:15 PM	4	15	3	27	43	33	27	114	9	6	56	20	357	0	0	0	0	0
	4:30 PM	7	15	2	16	48	42	28	123	5	1	73	14	374	0	0	2	0	2
	4:45 PM	6	12	2	33	48	32	32	120	8	2	75	19	389	0	0	1	0	1
	5:00 PM	8	19	3	34	66	37	33	100	5	8	73	16	402	0	0	0	0	0
	5:15 PM	4	26	5	43	69	46	36	116	8	0	72	29	454	0	0	0	0	0
	5:30 PM	5	8	1	20	62	41	33	110	12	1	79	19	391	0	0	0	0	0
	5:45 PM	2	12	2	30	66	39	29	116	12	7	67	14	396	0	0	0	0	0
	VOLUMES	37	124	23	234	456	308	242	897	64	26	556	144	3,111	0	0	3	0	3
	APPROACH %	20%	67%	13%	23%	46%	31%	20%	75%	5%	4%	77%	20%						
	APP/DEPART	184	/	507	998	/	546	1,203	/	1,154	726	/	904	0					
	BEGIN PEAK HR		5:00 PM																
	VOLUMES	19	65	11	127	263	163	131	442	37	16	291	78	1,643					
	APPROACH %	20%	68%	12%	23%	48%	29%	21%	72%	6%	4%	76%	20%						
	PEAK HR FACTOR		0.679			0.875			0.953			0.953		0.905					
	APP/DEPART	95	/	274	553	/	316	610	/	580	385	/	473	0					

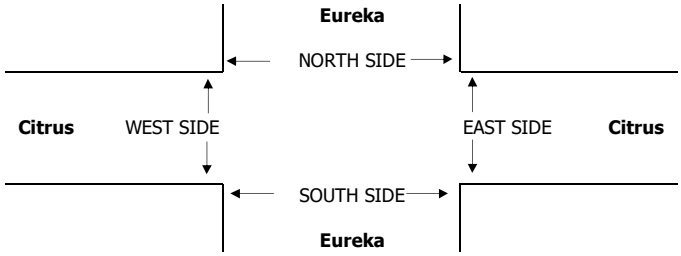

		PEDESTRIAN + BIKE CROSSINGS					PEDESTRIAN CROSSINGS					BICYCLE CROSSINGS				
		N SIDE	S SIDE	E SIDE	W SIDE	TOTAL	N SIDE	S SIDE	E SIDE	W SIDE	TOTAL	NS	SS	ES	WS	TOTAL
AM	7:00 AM	0	3	1	1	5	0	2	1	0	3	0	1	0	1	2
	7:15 AM	2	2	0	1	5	2	2	0	1	5	0	0	0	0	0
	7:30 AM	1	2	1	1	5	0	1	0	1	2	1	1	1	0	3
	7:45 AM	1	1	1	0	3	0	1	1	0	2	1	0	0	0	1
	8:00 AM	1	1	1	1	4	1	0	0	0	1	0	1	1	1	3
	8:15 AM	3	3	0	3	9	3	3	0	1	7	0	0	0	2	2
	8:30 AM	0	10	2	0	12	0	1	1	0	2	0	9	1	0	10
	8:45 AM	0	1	0	4	5	0	1	0	4	5	0	0	0	0	0
	TOTAL	8	23	6	11	48	6	11	3	7	27	2	12	3	4	21
	AM BEGIN PEAK HR			7:45 AM			4	5	2	1	12					
PM	4:00 PM	2	1	0	3	6	2	1	0	3	6	0	0	0	0	0
	4:15 PM	2	6	2	5	15	2	5	2	3	12	0	1	0	2	3
	4:30 PM	3	1	2	1	7	2	1	1	0	4	1	0	1	1	3
	4:45 PM	7	1	0	1	9	7	1	0	0	8	0	0	0	1	1
	5:00 PM	1	0	0	2	3	1	0	0	2	3	0	0	0	0	0
	5:15 PM	4	1	1	2	8	4	0	1	2	7	0	1	0	0	1
	5:30 PM	2	1	3	1	7	2	1	3	0	6	0	0	0	1	1
	5:45 PM	0	1	0	1	2	0	0	0	1	1	0	1	0	0	1
	TOTAL	21	12	8	16	57	20	9	7	11	47	1	3	1	5	10
	PM BEGIN PEAK HR			5:00 PM			7	1	4	5	17					

INTERSECTION TURNING MOVEMENT COUNTS

PREPARED BY: AimTD LLC. tel: 714 253 7888 cs@aimtd.com

DATE:				
Tue, Apr 16, 19	LOCATION:	Redlands	PROJECT #:	SC
	NORTH & SOUTH:	Orange	LOCATION #:	23
	EAST & WEST:	Pearl	CONTROL:	SIGNAL

NOTES:

AM / PM / MD / OTHER / OTHER — ▲ N ◄ W E ► S ▼

☑ Add U-Turns to Left Turns

		NORTHBOUND Orange			SOUTHBOUND Orange			EASTBOUND Pearl			WESTBOUND Pearl				U-TURNS				
	LANES:	NL 1	NT 2	NR 0	SL 1	ST 2	SR 0	EL 1	ET 0.5	ER 0.5	WL 0	WT 1	WR 0	TOTAL	NB 0	SB 0	EB 0	WB 0	TTL
AM	7:00 AM	0	139	8	4	41	4	40	43	16	3	3	25	326	0	1	0	0	1
	7:15 AM	1	162	4	2	63	4	38	36	17	0	3	38	368	0	0	0	0	0
	7:30 AM	0	157	4	4	75	3	45	48	26	1	2	40	405	0	0	0	0	0
	7:45 AM	3	167	3	3	79	4	35	64	23	2	9	38	430	0	0	0	0	0
	8:00 AM	0	178	5	7	67	0	50	81	24	3	16	43	474	0	0	0	0	0
	8:15 AM	1	223	6	4	58	2	39	77	33	8	12	59	522	0	0	0	0	0
	8:30 AM	1	151	4	9	69	1	41	57	33	0	9	45	420	0	0	0	0	0
	8:45 AM	1	131	5	6	59	5	36	77	37	1	10	34	402	0	0	0	0	0
	VOLUMES	7	1,308	39	39	511	23	324	483	209	18	64	322	3,347	0	1	0	0	1
	APPROACH %	1%	97%	3%	7%	89%	4%	32%	48%	21%	4%	16%	80%						
	APP/DEPART	1,354	/	1,955	573	/	738	1,016	/	560	404	/	94	0					
	BEGIN PEAK HR		7:45 AM																
	VOLUMES	5	719	18	23	273	7	165	279	113	13	46	185	1,846					
	APPROACH %	1%	97%	2%	8%	90%	2%	30%	50%	20%	5%	19%	76%						
	PEAK HR FACTOR		0.807			0.881			0.898			0.772		0.884					
	APP/DEPART	742	/	1,069	303	/	399	557	/	320	244	/	58	0					
PM	4:00 PM	6	188	19	10	89	5	53	80	30	2	12	52	546	0	0	0	0	0
	4:15 PM	4	202	17	14	86	5	55	59	34	7	21	35	539	1	0	0	0	1
	4:30 PM	3	193	15	16	83	6	65	87	34	7	9	42	560	0	0	0	0	0
	4:45 PM	6	172	21	11	97	9	53	74	24	7	15	35	524	0	1	0	0	1
	5:00 PM	7	239	18	8	60	9	71	96	35	6	14	50	613	0	0	0	0	0
	5:15 PM	2	240	12	12	89	2	59	86	35	6	15	51	609	0	0	0	0	0
	5:30 PM	4	217	19	13	88	5	62	82	33	6	20	39	588	0	0	0	0	0
	5:45 PM	1	191	30	14	90	8	60	82	30	10	11	31	558	0	0	0	0	0
	VOLUMES	33	1,642	151	98	682	49	478	646	255	51	117	335	4,537	1	1	0	0	2
	APPROACH %	2%	90%	8%	12%	82%	6%	35%	47%	18%	10%	23%	67%						
	APP/DEPART	1,826	/	2,456	829	/	989	1,379	/	894	503	/	198	0					
	BEGIN PEAK HR		5:00 PM																
	VOLUMES	14	887	79	47	327	24	252	346	133	28	60	171	2,368					
	APPROACH %	1%	91%	8%	12%	82%	6%	34%	47%	18%	11%	23%	66%						
	PEAK HR FACTOR		0.928			0.888			0.905			0.899		0.966					
	APP/DEPART	980	/	1,310	398	/	488	731	/	472	259	/	98	0					

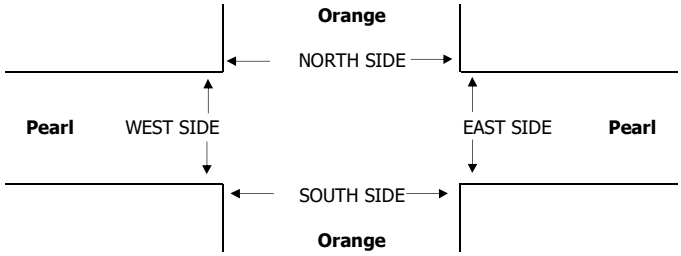

		PEDESTRIAN + BIKE CROSSINGS					PEDESTRIAN CROSSINGS					BICYCLE CROSSINGS				
		N SIDE	S SIDE	E SIDE	W SIDE	TOTAL	N SIDE	S SIDE	E SIDE	W SIDE	TOTAL	NS	SS	ES	WS	TOTAL
AM	7:00 AM	0	1	0	0	1	0	1	0	0	1	0	0	0	0	0
	7:15 AM	0	0	0	0	0	0	0	0	0	0	0	0	0	0	0
	7:30 AM	0	0	0	0	0	0	0	0	0	0	0	0	0	0	0
	7:45 AM	0	1	0	3	4	0	1	0	3	4	0	0	0	0	0
	8:00 AM	0	0	1	6	7	0	0	1	5	6	0	0	0	1	1
	8:15 AM	0	0	4	0	4	0	0	4	0	4	0	0	0	0	0
	8:30 AM	0	1	0	2	3	0	0	0	2	2	0	1	0	0	1
	8:45 AM	0	0	0	1	1	0	0	0	1	1	0	0	0	0	0
	TOTAL	0	3	5	12	20	0	2	5	11	18	0	1	0	1	2
	AM BEGIN PEAK HR			7:45 AM			0	1	5	10	16					
PM	4:00 PM	0	0	0	4	4	0	0	0	4	4	0	0	0	0	0
	4:15 PM	0	2	0	4	6	0	2	0	4	6	0	0	0	0	0
	4:30 PM	0	0	4	6	10	0	0	4	4	8	0	0	0	2	2
	4:45 PM	0	0	3	4	7	0	0	3	4	7	0	0	0	0	0
	5:00 PM	0	1	3	0	4	0	1	3	0	4	0	0	0	0	0
	5:15 PM	0	0	4	0	4	0	0	4	0	4	0	0	0	0	0
	5:30 PM	0	0	1	3	4	0	0	1	3	4	0	0	0	0	0
	5:45 PM	0	1	4	2	7	0	1	2	2	5	0	0	2	0	2
	TOTAL	0	4	19	23	46	0	4	17	21	42	0	0	2	2	4
	PM BEGIN PEAK HR			5:00 PM			0	2	10	5	17					

INTERSECTION TURNING MOVEMENT COUNTS

T218

PREPARED BY: AimTD LLC. tel: 714 253 7888 cs@aimtd.com

DATE:	LOCATION:	Redlands	PROJECT #:	SC
Tue, Apr 16, 19	NORTH & SOUTH:	Orange	LOCATION #:	25
	EAST & WEST:	Redlands	CONTROL:	SIGNAL

NOTES:

AM / PM / MD / OTHER / OTHER — ◄ W — ▲ N — S ▼ — E ►

☑ Add U-Turns to Left Turns

		NORTHBOUND Orange			SOUTHBOUND Orange			EASTBOUND Redlands			WESTBOUND Redlands				U-TURNS				
	LANES:	NL 1	NT 2	NR 0	SL 1	ST 2	SR 0	EL 1	ET 2	ER 0	WL 1	WT 2	WR 0	TOTAL	NB 0	SB 0	EB 0	WB 0	TTL
AM	7:00 AM	3	95	5	10	37	12	9	33	9	5	69	40	327	0	0	0	0	0
	7:15 AM	10	93	3	10	58	12	11	42	7	6	85	52	389	0	0	0	1	1
	7:30 AM	6	109	4	11	66	15	4	39	17	8	109	39	427	0	0	0	0	0
	7:45 AM	11	138	6	15	73	13	14	71	7	2	130	47	527	0	0	0	0	0
	8:00 AM	8	110	5	20	60	7	17	119	9	8	146	52	561	0	0	0	0	0
	8:15 AM	13	120	7	15	70	11	14	92	8	16	165	91	622	0	0	0	0	0
	8:30 AM	5	90	4	22	55	16	16	66	16	5	90	41	426	0	0	0	0	0
	8:45 AM	7	86	12	22	53	8	15	64	11	8	79	48	413	0	0	0	0	0
	VOLUMES	63	841	46	125	472	94	100	526	84	58	873	410	3,692	0	0	0	1	1
	APPROACH %	7%	89%	5%	18%	68%	14%	14%	74%	12%	4%	65%	31%						
	APP/DEPART	950	/	1,351	691	/	613	710	/	698	1,341	/	1,030	0					
	BEGIN PEAK HR		7:30 AM																
	VOLUMES	38	477	22	61	269	46	49	321	41	34	550	229	2,137					
	APPROACH %	7%	89%	4%	16%	72%	12%	12%	78%	10%	4%	68%	28%						
	PEAK HR FACTOR		0.866			0.931			0.709			0.747		0.859					
	APP/DEPART	537	/	755	376	/	344	411	/	404	813	/	634	0					
PM	4:00 PM	11	112	5	40	73	10	34	160	22	8	76	55	606	0	0	0	0	0
	4:15 PM	15	113	16	37	78	19	21	174	15	5	79	55	627	0	0	0	0	0
	4:30 PM	9	119	7	31	64	8	45	165	17	6	83	53	607	0	0	1	1	2
	4:45 PM	9	110	8	27	73	13	23	188	31	16	78	57	633	0	0	0	0	0
	5:00 PM	10	160	13	40	69	17	38	194	20	11	72	64	708	0	0	1	0	1
	5:15 PM	6	119	7	36	86	23	39	217	31	11	80	59	714	0	0	0	0	0
	5:30 PM	15	114	10	31	73	16	35	184	21	12	82	70	663	0	0	0	0	0
	5:45 PM	8	101	8	37	84	10	32	169	31	11	63	69	623	0	0	0	0	0
	VOLUMES	83	948	74	279	600	116	267	1,451	188	80	613	482	5,181	0	0	2	1	3
	APPROACH %	8%	86%	7%	28%	60%	12%	14%	76%	10%	7%	52%	41%						
	APP/DEPART	1,105	/	1,695	995	/	867	1,906	/	1,805	1,175	/	814	0					
	BEGIN PEAK HR		4:45 PM																
	VOLUMES	40	503	38	134	301	69	135	783	103	50	312	250	2,718					
	APPROACH %	7%	87%	7%	27%	60%	14%	13%	77%	10%	8%	51%	41%						
	PEAK HR FACTOR		0.794			0.869			0.889			0.933		0.952					
	APP/DEPART	581	/	887	504	/	454	1,021	/	955	612	/	422	0					

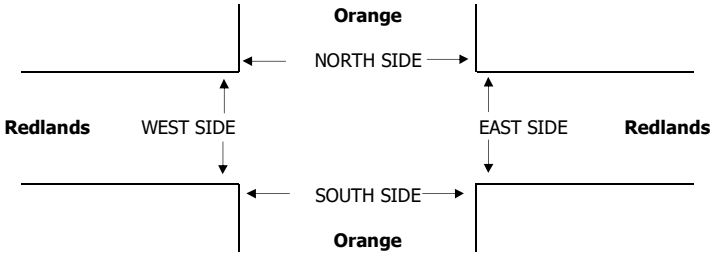

		PEDESTRIAN + BIKE CROSSINGS					PEDESTRIAN CROSSINGS					BICYCLE CROSSINGS				
		N SIDE	S SIDE	E SIDE	W SIDE	TOTAL	N SIDE	S SIDE	E SIDE	W SIDE	TOTAL	NS	SS	ES	WS	TOTAL
AM	7:00 AM	2	1	0	1	4	2	1	0	1	4	0	0	0	0	0
	7:15 AM	0	0	1	0	1	0	0	0	0	0	0	0	1	0	1
	7:30 AM	1	2	1	0	4	1	2	1	0	4	0	0	0	0	0
	7:45 AM	1	1	2	3	7	0	1	2	3	6	1	0	0	0	1
	8:00 AM	5	4	2	4	15	5	4	2	4	15	0	0	0	0	0
	8:15 AM	1	2	2	3	8	1	1	2	3	7	0	1	0	0	1
	8:30 AM	0	1	3	2	6	0	1	2	2	5	0	0	1	0	1
	8:45 AM	2	1	1	3	7	0	1	1	3	5	2	0	0	0	2
	TOTAL	12	12	12	16	52	9	11	10	16	46	3	1	2	0	6
	AM BEGIN PEAK HR			7:30 AM			7	8	7	10	32					
PM	4:00 PM	4	2	3	10	19	3	2	3	8	16	1	0	0	2	3
	4:15 PM	4	4	6	6	20	4	4	6	6	20	0	0	0	0	0
	4:30 PM	5	1	5	4	15	5	0	5	4	14	0	1	0	0	1
	4:45 PM	5	0	4	4	13	4	0	4	4	12	1	0	0	0	1
	5:00 PM	4	4	5	1	14	3	4	5	1	13	1	0	0	0	1
	5:15 PM	0	1	4	0	5	0	1	4	0	5	0	0	0	0	0
	5:30 PM	1	5	2	4	12	1	5	2	4	12	0	0	0	0	0
	5:45 PM	5	2	1	6	14	3	2	1	4	10	2	0	0	2	4
	TOTAL	28	19	30	35	112	23	18	30	31	102	5	1	0	4	10
	PM BEGIN PEAK HR			4:45 PM			8	10	15	9	42					

INTERSECTION TURNING MOVEMENT COUNTS

PREPARED BY: AimTD LLC. tel: 714 253 7888 cs@aimtd.com

DATE:			
Tue, Apr 16, 19	LOCATION:	Redlands	PROJECT #: SC
	NORTH & SOUTH:	Orange	LOCATION #: 26
	EAST & WEST:	Citrus	CONTROL: SIGNAL

NOTES:

AM / PM / MD / OTHER / OTHER — ▲ N ◄ W E ► S ▼

☑ Add U-Turns to Left Turns

		NORTHBOUND Orange			SOUTHBOUND Orange			EASTBOUND Citrus			WESTBOUND Citrus				U-TURNS				
	LANES:	NL 1	NT 2	NR 0	SL 1	ST 2	SR 0	EL 1	ET 1	ER 1	WL 1	WT 1	WR 0	TOTAL	NB 0	SB 0	EB 0	WB 0	TTL
AM	7:00 AM	9	87	0	8	31	5	15	29	21	1	35	8	249	0	0	0	0	0
	7:15 AM	13	93	4	6	53	10	9	31	28	2	56	2	307	0	0	0	0	0
	7:30 AM	13	108	7	6	63	6	15	40	33	7	68	9	375	0	0	0	0	0
	7:45 AM	21	127	8	1	63	9	13	49	40	3	75	8	417	0	0	0	0	0
	8:00 AM	23	107	8	4	50	12	16	99	33	3	71	13	439	0	0	0	0	0
	8:15 AM	33	114	7	7	45	20	19	65	31	0	84	17	442	0	0	0	0	0
	8:30 AM	22	86	5	5	47	10	12	33	20	7	62	9	318	0	0	0	0	0
	8:45 AM	18	87	4	5	36	14	21	46	20	6	37	18	312	0	0	0	0	0
	VOLUMES	152	809	43	42	388	86	120	392	226	29	488	84	2,859	0	0	0	0	0
	APPROACH %	15%	81%	4%	8%	75%	17%	16%	53%	31%	5%	81%	14%						
	APP/DEPART	1,004	/	1,013	516	/	643	738	/	477	601	/	726	0					
	BEGIN PEAK HR		7:30 AM																
	VOLUMES	90	456	30	18	221	47	63	253	137	13	298	47	1,673					
	APPROACH %	16%	79%	5%	6%	77%	16%	14%	56%	30%	4%	83%	13%						
	PEAK HR FACTOR		0.923			0.953			0.765			0.886		0.946					
	APP/DEPART	576	/	566	286	/	371	453	/	301	358	/	435	0					
PM	4:00 PM	15	76	5	14	48	9	27	76	43	9	54	43	419	0	0	0	0	0
	4:15 PM	17	78	3	9	60	13	32	73	35	7	62	37	426	0	0	0	0	0
	4:30 PM	14	83	6	12	48	13	36	93	28	7	53	21	414	0	0	0	0	0
	4:45 PM	21	101	5	12	43	23	34	89	42	6	39	35	450	0	0	0	0	0
	5:00 PM	17	104	4	15	49	10	32	72	48	6	66	32	455	0	0	0	0	0
	5:15 PM	16	75	5	16	62	19	37	82	60	11	67	36	486	0	0	0	0	0
	5:30 PM	18	83	7	8	46	10	34	84	39	8	79	35	451	0	0	0	0	0
	5:45 PM	8	73	9	16	59	22	29	80	42	7	51	37	433	0	0	0	0	0
	VOLUMES	126	673	44	102	415	119	261	649	337	61	471	276	3,534	0	0	0	0	0
	APPROACH %	15%	80%	5%	16%	65%	19%	21%	52%	27%	8%	58%	34%						
	APP/DEPART	843	/	1,210	636	/	813	1,247	/	795	808	/	716	0					
	BEGIN PEAK HR		4:45 PM																
	VOLUMES	72	363	21	51	200	62	137	327	189	31	251	138	1,842					
	APPROACH %	16%	80%	5%	16%	64%	20%	21%	50%	29%	7%	60%	33%						
	PEAK HR FACTOR		0.898			0.807			0.912			0.861		0.948					
	APP/DEPART	456	/	638	313	/	420	653	/	399	420	/	385	0					

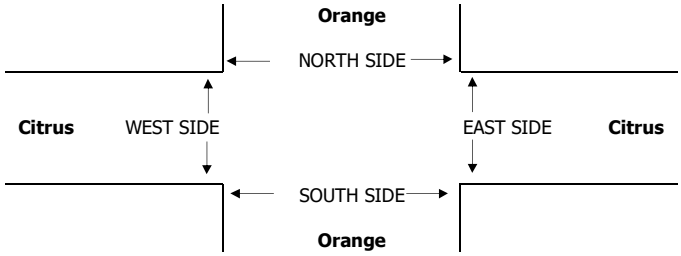

		PEDESTRIAN + BIKE CROSSINGS					PEDESTRIAN CROSSINGS					BICYCLE CROSSINGS				
		N SIDE	S SIDE	E SIDE	W SIDE	TOTAL	N SIDE	S SIDE	E SIDE	W SIDE	TOTAL	NS	SS	ES	WS	TOTAL
AM	7:00 AM	1	1	0	0	2	0	1	0	0	1	1	0	0	0	1
	7:15 AM	2	2	1	0	5	2	2	0	0	4	0	0	1	0	1
	7:30 AM	1	1	0	2	4	0	0	0	2	2	1	1	0	0	2
	7:45 AM	4	1	0	3	8	3	1	0	3	7	1	0	0	0	1
	8:00 AM	3	0	1	0	4	3	0	1	0	4	0	0	0	0	0
	8:15 AM	2	2	1	1	6	2	2	1	1	6	0	0	0	0	0
	8:30 AM	4	7	1	4	16	4	0	1	4	9	0	7	0	0	7
	8:45 AM	6	1	4	1	12	6	1	4	1	12	0	0	0	0	0
	TOTAL	23	15	8	11	57	20	7	7	11	45	3	8	1	0	12
	AM BEGIN PEAK HR			7:30 AM			8	3	2	6	19					
PM	4:00 PM	9	5	4	2	20	9	4	4	0	17	0	1	0	2	3
	4:15 PM	12	2	3	0	17	12	2	3	0	17	0	0	0	0	0
	4:30 PM	14	4	14	0	32	13	2	14	0	29	1	2	0	0	3
	4:45 PM	10	1	7	2	20	10	1	7	2	20	0	0	0	0	0
	5:00 PM	13	1	3	3	20	13	1	3	3	20	0	0	0	0	0
	5:15 PM	3	3	3	2	11	3	2	3	2	10	0	1	0	0	1
	5:30 PM	11	3	3	0	17	11	2	3	0	16	0	1	0	0	1
	5:45 PM	10	5	1	6	22	9	4	1	6	20	1	1	0	0	2
	TOTAL	82	24	38	15	159	80	18	38	13	149	2	6	0	2	10
	PM BEGIN PEAK HR			4:45 PM			37	6	16	7	66					

INTERSECTION TURNING MOVEMENT COUNTS

PREPARED BY: AimTD LLC. tel: 714 253 7888 cs@aimtd.com

DATE:				
Tue, Apr 16, 19	LOCATION:	Redlands	PROJECT #:	SC
	NORTH & SOUTH:	Church	LOCATION #:	33
	EAST & WEST:	Citrus	CONTROL:	SIGNAL

NOTES:

AM / PM / MD / OTHER / OTHER — ▲ N ◄ W E ► S ▼

☑ Add U-Turns to Left Turns

		NORTHBOUND Church			SOUTHBOUND Church			EASTBOUND Citrus			WESTBOUND Citrus				U-TURNS				
	LANES:	NL 0	NT 1	NR 0	SL 0	ST 1	SR 0	EL 1	ET 1	ER 0	WL 1	WT 0.5	WR 0.5	TOTAL	NB 0	SB 0	EB 0	WB 0	TTL
AM	7:00 AM	7	14	11	7	17	9	7	33	4	13	49	4	175	0	0	0	2	2
	7:15 AM	4	16	5	8	29	25	7	33	2	18	49	4	200	0	0	0	1	1
	7:30 AM	5	31	13	6	41	30	8	32	1	9	68	2	246	0	0	0	0	0
	7:45 AM	9	36	21	6	33	36	16	43	3	13	100	6	322	0	0	0	0	0
	8:00 AM	12	65	22	15	32	30	20	82	13	10	90	10	401	0	0	0	0	0
	8:15 AM	17	46	31	8	58	37	27	109	19	28	132	17	529	0	0	0	0	0
	8:30 AM	4	32	21	6	49	22	8	41	5	15	102	8	313	0	0	0	0	0
	8:45 AM	0	23	14	5	29	24	9	42	7	15	74	3	245	0	0	0	0	0
	VOLUMES	58	263	138	61	288	213	102	415	54	121	664	54	2,431	0	0	0	3	3
	APPROACH %	13%	57%	30%	11%	51%	38%	18%	73%	9%	14%	79%	6%						
	APP/DEPART	459	/	419	562	/	460	571	/	617	839	/	935	0					
	BEGIN PEAK HR		7:45 AM																
	VOLUMES	42	179	95	35	172	125	71	275	40	66	424	41	1,565					
	APPROACH %	13%	57%	30%	11%	52%	38%	18%	71%	10%	12%	80%	8%						
	PEAK HR FACTOR		0.798			0.806			0.623			0.750		0.740					
	APP/DEPART	316	/	291	332	/	278	386	/	405	531	/	591	0					
PM	4:00 PM	3	36	13	12	32	27	24	90	6	20	77	2	342	0	0	0	1	1
	4:15 PM	3	49	15	16	46	32	19	100	4	9	75	6	374	0	0	0	0	0
	4:30 PM	4	44	16	27	47	30	24	113	4	13	78	4	404	0	0	0	0	0
	4:45 PM	2	36	15	12	47	39	27	93	6	15	86	3	381	0	0	0	0	0
	5:00 PM	5	43	24	21	32	37	21	115	4	16	68	6	392	0	0	0	0	0
	5:15 PM	3	42	14	29	48	34	23	98	7	20	78	10	406	0	0	0	0	0
	5:30 PM	5	51	21	28	38	24	28	107	5	14	65	2	388	0	0	0	1	1
	5:45 PM	4	39	26	35	34	24	20	96	3	13	74	5	373	0	0	0	0	0
	VOLUMES	29	340	144	180	324	247	186	812	39	120	601	38	3,060	0	0	0	2	2
	APPROACH %	6%	66%	28%	24%	43%	33%	18%	78%	4%	16%	79%	5%						
	APP/DEPART	513	/	564	751	/	481	1,037	/	1,138	759	/	877	0					
	BEGIN PEAK HR		4:30 PM																
	VOLUMES	14	165	69	89	174	140	95	419	21	64	310	23	1,583					
	APPROACH %	6%	67%	28%	22%	43%	35%	18%	78%	4%	16%	78%	6%						
	PEAK HR FACTOR		0.861			0.908			0.949			0.919		0.975					
	APP/DEPART	248	/	283	403	/	259	535	/	577	397	/	464	0					

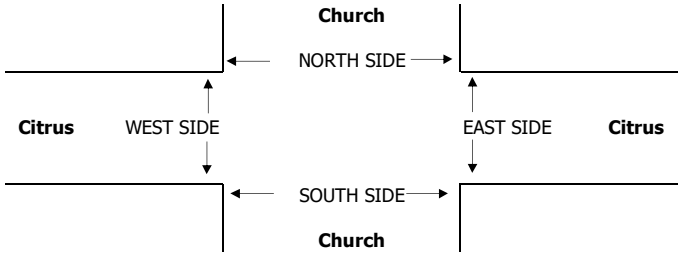

		PEDESTRIAN + BIKE CROSSINGS					PEDESTRIAN CROSSINGS					BICYCLE CROSSINGS				
		N SIDE	S SIDE	E SIDE	W SIDE	TOTAL	N SIDE	S SIDE	E SIDE	W SIDE	TOTAL	NS	SS	ES	WS	TOTAL
AM	7:00 AM	2	5	2	4	13	2	5	2	4	13	0	0	0	0	0
	7:15 AM	13	15	15	3	46	12	15	15	3	45	1	0	0	0	1
	7:30 AM	7	23	3	3	36	6	23	3	3	35	1	0	0	0	1
	7:45 AM	15	18	16	2	51	13	16	14	2	45	2	2	2	0	6
	8:00 AM	16	36	11	6	69	14	35	10	6	65	2	1	1	0	4
	8:15 AM	57	90	44	23	214	55	90	41	22	208	2	0	3	1	6
	8:30 AM	8	7	3	2	20	7	7	3	2	19	1	0	0	0	1
	8:45 AM	1	14	1	2	18	1	5	1	2	9	0	9	0	0	9
	TOTAL	119	208	95	45	467	110	196	89	44	439	9	12	6	1	28
	AM BEGIN PEAK HR			7:45 AM			89	148	68	32	337					
PM	4:00 PM	2	6	5	2	15	2	5	5	1	13	0	1	0	1	2
	4:15 PM	3	12	2	3	20	3	10	2	1	16	0	2	0	2	4
	4:30 PM	3	11	7	2	23	2	8	3	2	15	1	3	4	0	8
	4:45 PM	1	2	1	1	5	1	2	1	1	5	0	0	0	0	0
	5:00 PM	2	10	1	2	15	0	10	1	1	12	2	0	0	1	3
	5:15 PM	1	6	1	1	9	0	5	1	1	7	1	1	0	0	2
	5:30 PM	0	4	0	0	4	0	3	0	0	3	0	1	0	0	1
	5:45 PM	3	3	0	1	7	0	2	0	1	3	3	1	0	0	4
	TOTAL	15	54	17	12	98	8	45	13	8	74	7	9	4	4	24
	PM BEGIN PEAK HR			4:30 PM			3	25	6	5	39					

This Page Intentionally Left Blank

APPENDIX 3.2:

EXISTING (2021) CONDITIONS INTERSECTION OPERATIONS ANALYSIS WORKSHEETS

This Page Intentionally Left Blank

Lane Group	EBL	EBT	WBL	WBT	NBL	NBT	SBL	SBT	SBR
Lane Configurations									
Traffic Volume (vph)	53	299	44	323	58	218	19	153	121
Future Volume (vph)	53	299	44	323	58	218	19	153	121
Turn Type	Prot	NA	Prot	NA	Perm	NA	Perm	NA	Perm
Protected Phases	7	4	3	8		2		6	
Permitted Phases					2		6		6
Detector Phase	7	4	3	8	2	2	6	6	6
Switch Phase									
Minimum Initial (s)	5.0	10.0	5.0	10.0	10.0	10.0	10.0	10.0	10.0
Minimum Split (s)	9.6	23.1	9.6	23.1	26.1	26.1	26.1	26.1	26.1
Total Split (s)	9.7	23.2	9.6	23.1	27.2	27.2	27.2	27.2	27.2
Total Split (%)	16.2%	38.7%	16.0%	38.5%	45.3%	45.3%	45.3%	45.3%	45.3%
Yellow Time (s)	3.6	4.1	3.6	4.1	4.1	4.1	4.1	4.1	4.1
All-Red Time (s)	1.0	1.0	1.0	1.0	1.0	1.0	1.0	1.0	1.0
Lost Time Adjust (s)	0.0	0.0	0.0	0.0		0.0		0.0	0.0
Total Lost Time (s)	4.6	5.1	4.6	5.1		5.1		5.1	5.1
Lead/Lag	Lead	Lag	Lead	Lag					
Lead-Lag Optimize?	Yes	Yes	Yes	Yes					
Recall Mode	None	None	None	None	None	None	None	None	None

Intersection Summary
Cycle Length: 60
Actuated Cycle Length: 47.1
Natural Cycle: 60
Control Type: Actuated-Uncoordinated

Splits and Phases: 1: Center St. & Brookside Av.

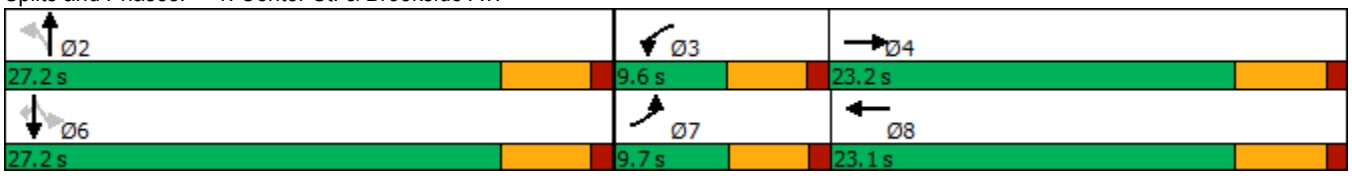

Movement	EBL	EBT	EBR	WBL	WBT	WBR	NBL	NBT	NBR	SBL	SBT	SBR
Lane Configurations												
Traffic Volume (veh/h)	53	299	61	44	323	40	58	218	44	19	153	121
Future Volume (veh/h)	53	299	61	44	323	40	58	218	44	19	153	121
Initial Q (Qb), veh	0	0	0	0	0	0	0	0	0	0	0	0
Ped-Bike Adj(A_pbT)	1.00		0.98	1.00		0.98	1.00		0.99	1.00		0.98
Parking Bus, Adj	1.00	1.00	1.00	1.00	1.00	1.00	1.00	1.00	1.00	1.00	1.00	1.00
Work Zone On Approach		No			No			No			No	
Adj Sat Flow, veh/h/ln	1673	1772	1772	1673	1772	1772	1772	1772	1772	1772	1772	1772
Adj Flow Rate, veh/h	58	329	48	48	355	33	64	240	33	21	168	97
Peak Hour Factor	0.91	0.91	0.91	0.91	0.91	0.91	0.91	0.91	0.91	0.91	0.91	0.91
Percent Heavy Veh, %	2	2	2	2	2	2	2	2	2	2	2	2
Cap, veh/h	95	449	65	82	462	43	164	351	44	124	460	408
Arrive On Green	0.06	0.30	0.30	0.05	0.29	0.29	0.28	0.28	0.28	0.28	0.28	0.28
Sat Flow, veh/h	1594	1506	220	1594	1593	148	202	1260	159	84	1650	1464
Grp Volume(v), veh/h	58	0	377	48	0	388	337	0	0	189	0	97
Grp Sat Flow(s),veh/h/ln	1594	0	1726	1594	0	1741	1621	0	0	1734	0	1464
Q Serve(g_s), s	1.4	0.0	7.8	1.2	0.0	8.1	3.8	0.0	0.0	0.0	0.0	2.0
Cycle Q Clear(g_c), s	1.4	0.0	7.8	1.2	0.0	8.1	7.4	0.0	0.0	3.4	0.0	2.0
Prop In Lane	1.00		0.13	1.00		0.09	0.19		0.10	0.11		1.00
Lane Grp Cap(c), veh/h	95	0	514	82	0	505	559	0	0	584	0	408
V/C Ratio(X)	0.61	0.00	0.73	0.58	0.00	0.77	0.60	0.00	0.00	0.32	0.00	0.24
Avail Cap(c_a), veh/h	204	0	785	200	0	787	992	0	0	1043	0	813
HCM Platoon Ratio	1.00	1.00	1.00	1.00	1.00	1.00	1.00	1.00	1.00	1.00	1.00	1.00
Upstream Filter(I)	1.00	0.00	1.00	1.00	0.00	1.00	1.00	0.00	0.00	1.00	0.00	1.00
Uniform Delay (d), s/veh	18.3	0.0	12.6	18.5	0.0	12.9	12.9	0.0	0.0	11.6	0.0	11.1
Incr Delay (d2), s/veh	2.4	0.0	2.0	2.4	0.0	2.5	1.0	0.0	0.0	0.3	0.0	0.3
Initial Q Delay(d3),s/veh	0.0	0.0	0.0	0.0	0.0	0.0	0.0	0.0	0.0	0.0	0.0	0.0
%ile BackOfQ(50%),veh/ln	0.5	0.0	2.5	0.4	0.0	2.7	2.2	0.0	0.0	1.1	0.0	0.5
Unsig. Movement Delay, s/veh												
LnGrp Delay(d),s/veh	20.6	0.0	14.6	20.9	0.0	15.4	14.0	0.0	0.0	11.9	0.0	11.4
LnGrp LOS	C	A	B	C	A	B	B	A	A	B	A	B
Approach Vol, veh/h		435			436			337			286	
Approach Delay, s/veh		15.4			16.0			14.0			11.7	
Approach LOS		B			B			B			B	

Timer - Assigned Phs		2	3	4		6	7	8				
Phs Duration (G+Y+Rc), s		16.2	6.7	17.0		16.2	7.0	16.7				
Change Period (Y+Rc), s		5.1	4.6	5.1		5.1	4.6	5.1				
Max Green Setting (Gmax), s		22.1	5.0	18.1		22.1	5.1	18.0				
Max Q Clear Time (g_c+I1), s		9.4	3.2	9.8		5.4	3.4	10.1				
Green Ext Time (p_c), s		1.6	0.0	1.4		1.2	0.0	1.4				

Intersection Summary	
HCM 6th Ctrl Delay	14.6
HCM 6th LOS	B

Lane Group	EBL	EBT	WBL	WBT	NBL	NBT	SBL	SBT
Lane Configurations								
Traffic Volume (vph)	29	291	34	569	31	105	132	405
Future Volume (vph)	29	291	34	569	31	105	132	405
Turn Type	Prot	NA	Prot	NA	Perm	NA	Perm	NA
Protected Phases	7	4	3	8		2		6
Permitted Phases					2		6	
Detector Phase	7	4	3	8	2	2	6	6
Switch Phase								
Minimum Initial (s)	5.0	10.0	5.0	10.0	10.0	10.0	10.0	10.0
Minimum Split (s)	9.6	25.7	9.6	25.7	28.6	28.6	28.6	28.6
Total Split (s)	11.0	33.0	12.0	34.0	45.0	45.0	45.0	45.0
Total Split (%)	12.2%	36.7%	13.3%	37.8%	50.0%	50.0%	50.0%	50.0%
Yellow Time (s)	3.6	3.7	3.6	3.7	3.6	3.6	3.6	3.6
All-Red Time (s)	1.0	1.0	1.0	1.0	1.0	1.0	1.0	1.0
Lost Time Adjust (s)	0.0	0.0	0.0	0.0		0.0		0.0
Total Lost Time (s)	4.6	4.7	4.6	4.7		4.6		4.6
Lead/Lag	Lead	Lag	Lead	Lag				
Lead-Lag Optimize?	Yes	Yes	Yes	Yes				
Recall Mode	None	None	None	None	None	None	None	None

Intersection Summary
Cycle Length: 90
Actuated Cycle Length: 61.1
Natural Cycle: 65
Control Type: Actuated-Uncoordinated

Splits and Phases: 2: Eureka St. & Redlands Bl.

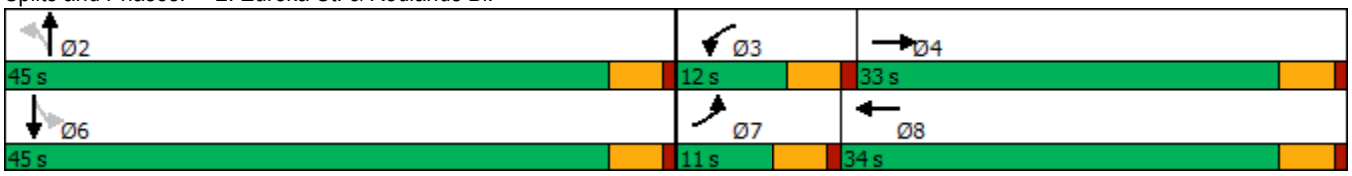

Movement	EBL	EBT	EBR	WBL	WBT	WBR	NBL	NBT	NBR	SBL	SBT	SBR
Lane Configurations												
Traffic Volume (veh/h)	29	291	25	34	569	35	31	105	40	132	405	112
Future Volume (veh/h)	29	291	25	34	569	35	31	105	40	132	405	112
Initial Q (Qb), veh	0	0	0	0	0	0	0	0	0	0	0	0
Ped-Bike Adj(A_pbT)	1.00		1.00	1.00		1.00	1.00		1.00	1.00		1.00
Parking Bus, Adj	1.00	1.00	1.00	1.00	1.00	1.00	1.00	1.00	1.00	1.00	1.00	1.00
Work Zone On Approach		No			No			No			No	
Adj Sat Flow, veh/h/ln	1673	1772	1772	1673	1772	1772	1772	1772	1772	1772	1772	1772
Adj Flow Rate, veh/h	35	346	16	40	677	32	37	125	37	157	482	106
Peak Hour Factor	0.84	0.84	0.84	0.84	0.84	0.84	0.84	0.84	0.84	0.84	0.84	0.84
Percent Heavy Veh, %	2	2	2	2	2	2	2	2	2	2	2	2
Cap, veh/h	61	996	46	68	1008	48	192	608	194	301	766	169
Arrive On Green	0.04	0.30	0.30	0.04	0.31	0.31	0.38	0.38	0.38	0.38	0.38	0.38
Sat Flow, veh/h	1594	3277	151	1594	3272	155	241	1621	519	531	2043	451
Grp Volume(v), veh/h	35	177	185	40	348	361	91	0	108	386	0	359
Grp Sat Flow(s),veh/h/ln	1594	1683	1745	1594	1683	1744	864	0	1517	1496	0	1530
Q Serve(g_s), s	1.1	4.1	4.1	1.2	9.0	9.0	0.5	0.0	2.4	8.5	0.0	9.6
Cycle Q Clear(g_c), s	1.1	4.1	4.1	1.2	9.0	9.0	10.1	0.0	2.4	10.9	0.0	9.6
Prop In Lane	1.00		0.09	1.00		0.09	0.41		0.34	0.41		0.29
Lane Grp Cap(c), veh/h	61	512	530	68	519	537	425	0	569	662	0	574
V/C Ratio(X)	0.57	0.35	0.35	0.59	0.67	0.67	0.21	0.00	0.19	0.58	0.00	0.63
Avail Cap(c_a), veh/h	204	954	988	236	987	1023	950	0	1227	1312	0	1238
HCM Platoon Ratio	1.00	1.00	1.00	1.00	1.00	1.00	1.00	1.00	1.00	1.00	1.00	1.00
Upstream Filter(I)	1.00	1.00	1.00	1.00	1.00	1.00	1.00	0.00	1.00	1.00	0.00	1.00
Uniform Delay (d), s/veh	23.6	13.5	13.5	23.5	15.1	15.1	10.8	0.0	10.5	13.1	0.0	12.7
Incr Delay (d2), s/veh	3.1	0.4	0.4	3.0	1.5	1.5	0.2	0.0	0.2	0.8	0.0	1.1
Initial Q Delay(d3),s/veh	0.0	0.0	0.0	0.0	0.0	0.0	0.0	0.0	0.0	0.0	0.0	0.0
%ile BackOfQ(50%),veh/ln	0.4	1.4	1.5	0.5	3.2	3.3	0.6	0.0	0.7	3.3	0.0	3.0
Unsig. Movement Delay, s/veh												
LnGrp Delay(d),s/veh	26.7	13.9	13.9	26.5	16.6	16.5	11.0	0.0	10.7	13.9	0.0	13.9
LnGrp LOS	C	B	B	C	B	B	B	A	B	B	A	B
Approach Vol, veh/h		397			749			199			745	
Approach Delay, s/veh		15.0			17.1			10.8			13.9	
Approach LOS		B			B			B			B	

Timer - Assigned Phs		2	3	4		6	7	8
Phs Duration (G+Y+Rc), s		23.3	6.7	19.9		23.3	6.5	20.1
Change Period (Y+Rc), s		4.6	4.6	* 4.7		4.6	4.6	* 4.7
Max Green Setting (Gmax), s		40.4	7.4	* 28		40.4	6.4	* 29
Max Q Clear Time (g_c+I1), s		12.1	3.2	6.1		12.9	3.1	11.0
Green Ext Time (p_c), s		1.4	0.0	2.1		5.7	0.0	4.2

Intersection Summary	
HCM 6th Ctrl Delay	15.0
HCM 6th LOS	B

Notes

* HCM 6th computational engine requires equal clearance times for the phases crossing the barrier.

Intersection	
Int Delay, s/veh	1.7

Movement	EBL	EBT	EBR	WBL	WBT	WBR	NBL	NBT	NBR	SBL	SBT	SBR
Lane Configurations												
Traffic Vol, veh/h	11	2	26	0	2	3	45	161	3	13	388	63
Future Vol, veh/h	11	2	26	0	2	3	45	161	3	13	388	63
Conflicting Peds, #/hr	0	0	0	0	0	0	0	0	0	0	0	0
Sign Control	Stop	Stop	Stop	Stop	Stop	Stop	Free	Free	Free	Free	Free	Free
RT Channelized	-	-	None	-	-	None	-	-	None	-	-	None
Storage Length	-	-	-	-	-	0	-	-	-	-	-	-
Veh in Median Storage, #	-	0	-	-	0	-	-	0	-	-	0	-
Grade, %	-	0	-	-	0	-	-	0	-	-	0	-
Peak Hour Factor	75	75	75	75	75	75	75	75	75	75	75	75
Heavy Vehicles, %	2	2	2	2	2	2	2	2	2	2	2	2
Mvmt Flow	15	3	35	0	3	4	60	215	4	17	517	84

Major/Minor	Minor2			Minor1			Major1			Major2		
Conflicting Flow All	822	932	301	631	972	110	601	0	0	219	0	0
Stage 1	593	593	-	337	337	-	-	-	-	-	-	-
Stage 2	229	339	-	294	635	-	-	-	-	-	-	-
Critical Hdwy	7.54	6.54	6.94	7.54	6.54	6.94	4.14	-	-	4.14	-	-
Critical Hdwy Stg 1	6.54	5.54	-	6.54	5.54	-	-	-	-	-	-	-
Critical Hdwy Stg 2	6.54	5.54	-	6.54	5.54	-	-	-	-	-	-	-
Follow-up Hdwy	3.52	4.02	3.32	3.52	4.02	3.32	2.22	-	-	2.22	-	-
Pot Cap-1 Maneuver	266	265	695	366	251	922	972	-	-	1348	-	-
Stage 1	459	492	-	651	640	-	-	-	-	-	-	-
Stage 2	753	638	-	690	471	-	-	-	-	-	-	-
Platoon blocked, %								-	-		-	-
Mov Cap-1 Maneuver	245	242	695	322	229	922	972	-	-	1348	-	-
Mov Cap-2 Maneuver	245	242	-	322	229	-	-	-	-	-	-	-
Stage 1	427	483	-	605	595	-	-	-	-	-	-	-
Stage 2	694	593	-	640	462	-	-	-	-	-	-	-

Approach	EB	WB	NB	SB
HCM Control Delay, s	14.5	13.7	2.1	0.3
HCM LOS	B	B		

Minor Lane/Major Mvmt	NBL	NBT	NBR	EBLn1	WBLn1	WBLn2	SBL	SBT	SBR
Capacity (veh/h)	972	-	-	431	229	922	1348	-	-
HCM Lane V/C Ratio	0.062	-	-	0.121	0.012	0.004	0.013	-	-
HCM Control Delay (s)	8.9	0.2	-	14.5	20.9	8.9	7.7	0.1	-
HCM Lane LOS	A	A	-	B	C	A	A	A	-
HCM 95th %tile Q(veh)	0.2	-	-	0.4	0	0	0	-	-

Lane Group	EBL	EBT	WBL	WBT	NBL2	NBL	SEL	SER
Lane Configurations								
Traffic Volume (vph)	77	371	12	350	14	66	117	198
Future Volume (vph)	77	371	12	350	14	66	117	198
Turn Type	Perm	NA	Perm	NA	Perm	Prot	Perm	Prot
Protected Phases		4		8		2		6
Permitted Phases	4		8		2		6	
Detector Phase	4	4	8	8	2	2	6	6
Switch Phase								
Minimum Initial (s)	10.0	10.0	10.0	10.0	10.0	10.0	10.0	10.0
Minimum Split (s)	23.6	23.6	23.6	23.6	27.6	27.6	27.6	27.6
Total Split (s)	28.0	28.0	28.0	28.0	32.0	32.0	32.0	32.0
Total Split (%)	46.7%	46.7%	46.7%	46.7%	53.3%	53.3%	53.3%	53.3%
Yellow Time (s)	3.6	3.6	3.6	3.6	3.6	3.6	3.6	3.6
All-Red Time (s)	1.0	1.0	1.0	1.0	1.0	1.0	1.0	1.0
Lost Time Adjust (s)	0.0	0.0	0.0	0.0		0.0		0.0
Total Lost Time (s)	4.6	4.6	4.6	4.6		4.6		4.6
Lead/Lag								
Lead-Lag Optimize?								
Recall Mode	None	None	None	None	None	None	None	None

Intersection Summary
Cycle Length: 60
Actuated Cycle Length: 51.8
Natural Cycle: 55
Control Type: Actuated-Uncoordinated

Splits and Phases: 6: Eureka St. & Brookside Av./Citrus Av.

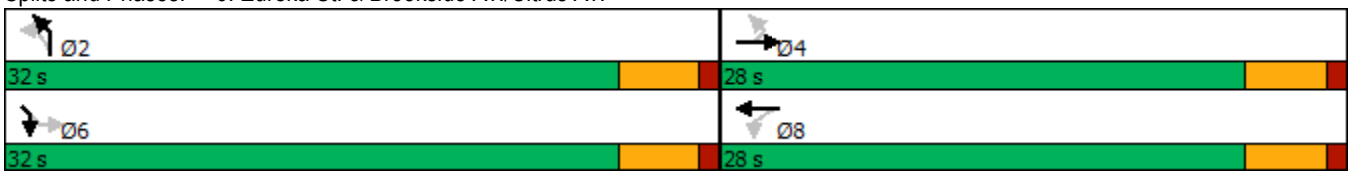

Movement	EBL	EBT	EBR	WBL	WBT	WBR	NBL2	NBL	NBR	SEL	SER	SER2
Lane Configurations												
Traffic Volume (veh/h)	77	371	28	12	350	75	14	66	7	117	198	170
Future Volume (veh/h)	77	371	28	12	350	75	14	66	7	117	198	170
Initial Q (Qb), veh	0	0	0	0	0	0	0	0	0	0	0	0
Ped-Bike Adj(A_pbT)	1.00		0.98	1.00		0.98	1.00	1.00	0.99	0.99	0.99	0.99
Parking Bus, Adj	1.00	1.00	1.00	1.00	1.00	1.00	1.00	1.00	1.00	1.00	1.00	1.00
Work Zone On Approach		No			No			No		No		
Adj Sat Flow, veh/h/ln	1673	1772	1772	1673	1772	1772	1772	1772	1772	1772	1772	1772
Adj Flow Rate, veh/h	97	470	31	15	443	82	18	18	9	148	178	178
Peak Hour Factor	0.79	0.79	0.79	0.79	0.79	0.79	0.79	0.79	0.79	0.79	0.79	0.79
Percent Heavy Veh, %	2	2	2	2	2	2	2	2	2	2	2	2
Cap, veh/h	439	1216	80	451	1075	198	229	229	89	361	333	333
Arrive On Green	0.38	0.38	0.38	0.38	0.38	0.38	0.34	0.34	0.34	0.34	0.34	0.34
Sat Flow, veh/h	828	3202	211	845	2831	520	248	248	264	591	987	987
Grp Volume(v), veh/h	97	246	255	15	262	263	58	58	53	319	258	258
Grp Sat Flow(s),veh/h/ln	828	1683	1729	845	1683	1667	1416	1416	1561	1551	1428	1428
Q Serve(g_s), s	3.2	3.5	3.5	0.4	3.7	3.8	0.0	0.0	0.8	3.7	4.8	4.8
Cycle Q Clear(g_c), s	7.0	3.5	3.5	3.9	3.7	3.8	4.8	4.8	0.8	5.4	4.8	4.8
Prop In Lane	1.00		0.12	1.00		0.31	0.31	0.31	0.17	0.46	0.69	0.69
Lane Grp Cap(c), veh/h	439	639	657	451	639	633	623	623	528	686	483	483
V/C Ratio(X)	0.22	0.39	0.39	0.03	0.41	0.42	0.09	0.09	0.10	0.47	0.53	0.53
Avail Cap(c_a), veh/h	719	1208	1241	737	1208	1197	1327	1327	1312	1444	1200	1200
HCM Platoon Ratio	1.00	1.00	1.00	1.00	1.00	1.00	1.00	1.00	1.00	1.00	1.00	1.00
Upstream Filter(I)	1.00	1.00	1.00	1.00	1.00	1.00	1.00	1.00	1.00	1.00	1.00	1.00
Uniform Delay (d), s/veh	10.0	7.3	7.4	8.8	7.4	7.4	7.4	7.4	7.4	8.9	8.7	8.7
Incr Delay (d2), s/veh	0.3	0.4	0.4	0.0	0.4	0.4	0.1	0.1	0.1	0.5	0.9	0.9
Initial Q Delay(d3),s/veh	0.0	0.0	0.0	0.0	0.0	0.0	0.0	0.0	0.0	0.0	0.0	0.0
%ile BackOfQ(50%),veh/ln	0.4	0.8	0.8	0.1	1.0	1.0	0.2	0.2	0.2	1.4	1.2	1.2
Unsig. Movement Delay, s/veh												
LnGrp Delay(d),s/veh	10.3	7.7	7.7	8.8	7.8	7.9	7.5	7.5	7.5	9.3	9.6	9.6
LnGrp LOS	B	A	A	A	A	A	A	A	A	A	A	A
Approach Vol, veh/h		598			540		111	111		577		
Approach Delay, s/veh		8.1			7.9		7.5	7.5		9.5		
Approach LOS		A			A		A	A		A		

Timer - Assigned Phs	2	4	6	8
Phs Duration (G+Y+Rc), s	15.6	17.0	15.6	17.0
Change Period (Y+Rc), s	4.6	4.6	4.6	4.6
Max Green Setting (Gmax), s	27.4	23.4	27.4	23.4
Max Q Clear Time (g_c+I1), s	6.8	9.0	7.4	5.9
Green Ext Time (p_c), s	0.3	3.0	1.9	3.2

Intersection Summary	
HCM 6th Ctrl Delay	8.4
HCM 6th LOS	A

Lane Group	EBL	EBT	WBL	WBT	NBL	NBT	SBL	SBT
Lane Configurations								
Traffic Volume (vph)	2	447	5	630	2	0	6	2
Future Volume (vph)	2	447	5	630	2	0	6	2
Turn Type	Prot	NA	Prot	NA	Perm	NA	Perm	NA
Protected Phases	7	4	3	8		2		6
Permitted Phases					2		6	
Detector Phase	7	4	3	8	2	2	6	6
Switch Phase								
Minimum Initial (s)	5.0	10.0	5.0	10.0	10.0	10.0	10.0	10.0
Minimum Split (s)	9.6	21.7	9.6	21.7	24.6	24.6	24.6	24.6
Total Split (s)	9.6	25.6	9.6	25.6	24.8	24.8	24.8	24.8
Total Split (%)	16.0%	42.7%	16.0%	42.7%	41.3%	41.3%	41.3%	41.3%
Yellow Time (s)	3.6	3.7	3.6	3.7	3.6	3.6	3.6	3.6
All-Red Time (s)	1.0	1.0	1.0	1.0	1.0	1.0	1.0	1.0
Lost Time Adjust (s)	0.0	0.0	0.0	0.0		0.0		0.0
Total Lost Time (s)	4.6	4.7	4.6	4.7		4.6		4.6
Lead/Lag	Lead	Lag	Lead	Lag				
Lead-Lag Optimize?	Yes	Yes	Yes	Yes				
Recall Mode	None	None	None	None	None	None	None	None

Intersection Summary
Cycle Length: 60
Actuated Cycle Length: 24.5
Natural Cycle: 60
Control Type: Actuated-Uncoordinated

Splits and Phases: 9: 3rd St. & Redlands Bl.

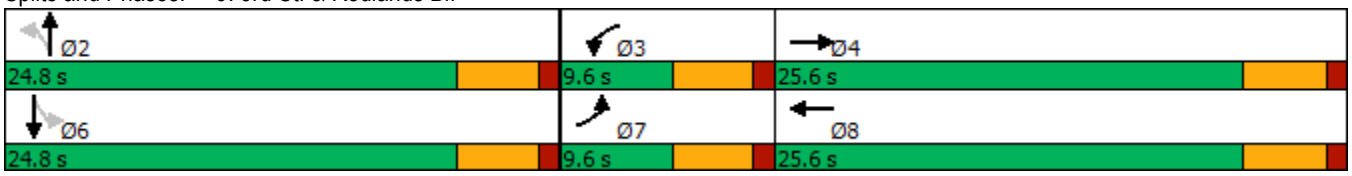

Movement	EBL	EBT	EBR	WBL	WBT	WBR	NBL	NBT	NBR	SBL	SBT	SBR
Lane Configurations												
Traffic Volume (veh/h)	2	447	15	5	630	6	2	0	2	6	2	5
Future Volume (veh/h)	2	447	15	5	630	6	2	0	2	6	2	5
Initial Q (Qb), veh	0	0	0	0	0	0	0	0	0	0	0	0
Ped-Bike Adj(A_pbT)	1.00		1.00	1.00		1.00	0.98		1.00	0.99		1.00
Parking Bus, Adj	1.00	1.00	1.00	1.00	1.00	1.00	1.00	1.00	1.00	1.00	1.00	1.00
Work Zone On Approach		No			No			No			No	
Adj Sat Flow, veh/h/ln	1673	1772	1772	1673	1772	1772	1772	1772	1772	1772	1772	1772
Adj Flow Rate, veh/h	3	581	18	6	818	8	3	0	2	8	3	3
Peak Hour Factor	0.77	0.77	0.77	0.77	0.77	0.77	0.77	0.77	0.77	0.77	0.77	0.77
Percent Heavy Veh, %	2	2	2	2	2	2	2	2	2	2	2	2
Cap, veh/h	7	1398	43	13	1447	14	267	0	38	262	21	21
Arrive On Green	0.00	0.42	0.42	0.01	0.42	0.42	0.06	0.00	0.06	0.06	0.06	0.06
Sat Flow, veh/h	1594	3333	103	1594	3416	33	879	0	586	856	321	321
Grp Volume(v), veh/h	3	293	306	6	403	423	5	0	0	14	0	0
Grp Sat Flow(s),veh/h/ln	1594	1683	1753	1594	1683	1766	1465	0	0	1498	0	0
Q Serve(g_s), s	0.1	3.4	3.4	0.1	5.0	5.0	0.0	0.0	0.0	0.2	0.0	0.0
Cycle Q Clear(g_c), s	0.1	3.4	3.4	0.1	5.0	5.0	0.1	0.0	0.0	0.2	0.0	0.0
Prop In Lane	1.00		0.06	1.00		0.02	0.60		0.40	0.57		0.21
Lane Grp Cap(c), veh/h	7	706	735	13	713	748	305	0	0	304	0	0
V/C Ratio(X)	0.46	0.42	0.42	0.46	0.57	0.57	0.02	0.00	0.00	0.05	0.00	0.00
Avail Cap(c_a), veh/h	291	1285	1338	291	1285	1348	1267	0	0	1305	0	0
HCM Platoon Ratio	1.00	1.00	1.00	1.00	1.00	1.00	1.00	1.00	1.00	1.00	1.00	1.00
Upstream Filter(I)	1.00	1.00	1.00	1.00	1.00	1.00	1.00	0.00	0.00	1.00	0.00	0.00
Uniform Delay (d), s/veh	13.6	5.6	5.6	13.5	6.0	6.0	12.0	0.0	0.0	12.1	0.0	0.0
Incr Delay (d2), s/veh	17.3	0.4	0.4	9.2	0.7	0.7	0.0	0.0	0.0	0.1	0.0	0.0
Initial Q Delay(d3),s/veh	0.0	0.0	0.0	0.0	0.0	0.0	0.0	0.0	0.0	0.0	0.0	0.0
%ile BackOfQ(50%),veh/ln	0.0	0.6	0.6	0.1	0.9	1.0	0.0	0.0	0.0	0.1	0.0	0.0
Unsig. Movement Delay, s/veh												
LnGrp Delay(d),s/veh	30.9	6.0	6.0	22.7	6.7	6.7	12.0	0.0	0.0	12.1	0.0	0.0
LnGrp LOS	C	A	A	C	A	A	B	A	A	B	A	A
Approach Vol, veh/h		602			832			5			14	
Approach Delay, s/veh		6.1			6.8			12.0			12.1	
Approach LOS		A			A			B			B	

Timer - Assigned Phs		2	3	4		6	7	8
Phs Duration (G+Y+Rc), s		6.4	4.8	16.2		6.4	4.7	16.3
Change Period (Y+Rc), s		4.6	4.6	* 4.7		4.6	4.6	* 4.7
Max Green Setting (Gmax), s		20.2	5.0	* 21		20.2	5.0	* 21
Max Q Clear Time (g_c+I1), s		2.1	2.1	5.4		2.2	2.1	7.0
Green Ext Time (p_c), s		0.0	0.0	3.3		0.0	0.0	4.5

Intersection Summary	
HCM 6th Ctrl Delay	6.6
HCM 6th LOS	A

Notes

* HCM 6th computational engine requires equal clearance times for the phases crossing the barrier.

Intersection	
Int Delay, s/veh	1.1

Movement	EBL	EBT	EBR	WBL	WBT	WBR	NBL	NBT	NBR	SBL	SBT	SBR
Lane Configurations												
Traffic Vol, veh/h	13	434	47	40	420	11	8	0	23	3	3	10
Future Vol, veh/h	13	434	47	40	420	11	8	0	23	3	3	10
Conflicting Peds, #/hr	0	0	0	0	0	0	0	0	0	0	0	0
Sign Control	Free	Free	Free	Free	Free	Free	Stop	Stop	Stop	Stop	Stop	Stop
RT Channelized	-	-	None	-	-	None	-	-	None	-	-	None
Storage Length	120	-	-	70	-	-	-	-	-	-	-	-
Veh in Median Storage, #	-	0	-	-	0	-	-	0	-	-	0	-
Grade, %	-	0	-	-	0	-	-	0	-	-	0	-
Peak Hour Factor	83	83	83	83	83	83	83	83	83	83	83	83
Heavy Vehicles, %	2	2	2	2	2	2	2	2	2	2	2	2
Mvmt Flow	16	523	57	48	506	13	10	0	28	4	4	12

Major/Minor	Major1			Major2			Minor1			Minor2		
Conflicting Flow All	519	0	0	580	0	0	935	1199	290	903	1221	260
Stage 1	-	-	-	-	-	-	584	584	-	609	609	-
Stage 2	-	-	-	-	-	-	351	615	-	294	612	-
Critical Hdwy	4.14	-	-	4.14	-	-	7.54	6.54	6.94	7.54	6.54	6.94
Critical Hdwy Stg 1	-	-	-	-	-	-	6.54	5.54	-	6.54	5.54	-
Critical Hdwy Stg 2	-	-	-	-	-	-	6.54	5.54	-	6.54	5.54	-
Follow-up Hdwy	2.22	-	-	2.22	-	-	3.52	4.02	3.32	3.52	4.02	3.32
Pot Cap-1 Maneuver	1043	-	-	990	-	-	220	184	707	232	179	739
Stage 1	-	-	-	-	-	-	465	496	-	449	484	-
Stage 2	-	-	-	-	-	-	639	480	-	690	482	-
Platoon blocked, %		-	-		-	-						
Mov Cap-1 Maneuver	1043	-	-	990	-	-	203	173	707	212	168	739
Mov Cap-2 Maneuver	-	-	-	-	-	-	203	173	-	212	168	-
Stage 1	-	-	-	-	-	-	458	489	-	442	461	-
Stage 2	-	-	-	-	-	-	593	457	-	653	475	-

Approach	EB	WB	NB	SB
HCM Control Delay, s	0.2	0.7	14.1	15.9
HCM LOS			B	C

Minor Lane/Major Mvmt	NBLn1	EBL	EBT	EBR	WBL	WBT	WBR	SBLn1
Capacity (veh/h)	431	1043	-	-	990	-	-	351
HCM Lane V/C Ratio	0.087	0.015	-	-	0.049	-	-	0.055
HCM Control Delay (s)	14.1	8.5	-	-	8.8	-	-	15.9
HCM Lane LOS	B	A	-	-	A	-	-	C
HCM 95th %tile Q(veh)	0.3	0	-	-	0.2	-	-	0.2

Lane Group	EBL	EBT	WBL	WBT	NBL	NBT	SBL	SBT
Lane Configurations								
Traffic Volume (vph)	168	283	13	47	6	730	23	277
Future Volume (vph)	168	283	13	47	6	730	23	277
Turn Type	Perm	NA	Perm	NA	Perm	NA	Perm	NA
Protected Phases		4		8		2		6
Permitted Phases	4		8		2		6	
Detector Phase	4	4	8	8	2	2	6	6
Switch Phase								
Minimum Initial (s)	5.0	5.0	5.0	5.0	5.0	5.0	5.0	5.0
Minimum Split (s)	30.0	30.0	30.0	30.0	40.0	40.0	40.0	40.0
Total Split (s)	46.0	46.0	46.0	46.0	44.0	44.0	44.0	44.0
Total Split (%)	51.1%	51.1%	51.1%	51.1%	48.9%	48.9%	48.9%	48.9%
Yellow Time (s)	3.0	3.0	3.0	3.0	3.0	3.0	3.0	3.0
All-Red Time (s)	1.0	1.0	1.0	1.0	1.0	1.0	1.0	1.0
Lost Time Adjust (s)	0.0	0.0		0.0	0.0	0.0	0.0	0.0
Total Lost Time (s)	4.0	4.0		4.0	4.0	4.0	4.0	4.0
Lead/Lag								
Lead-Lag Optimize?								
Recall Mode	None	None	None	None	None	None	None	None

Intersection Summary
Cycle Length: 90
Actuated Cycle Length: 49.8
Natural Cycle: 70
Control Type: Actuated-Uncoordinated

Splits and Phases: 16: Orange St. & Pearl Av.

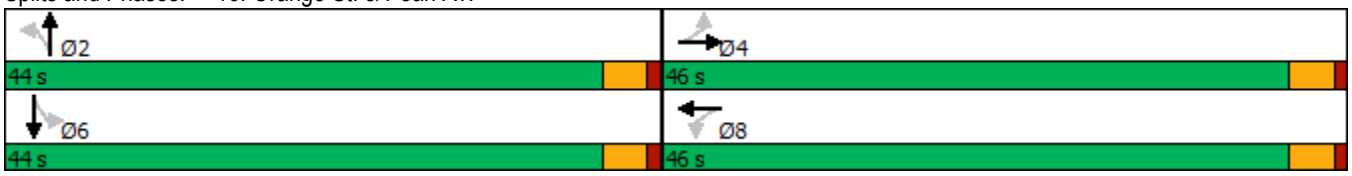

Movement	EBL	EBT	EBR	WBL	WBT	WBR	NBL	NBT	NBR	SBL	SBT	SBR
Lane Configurations												
Traffic Volume (veh/h)	168	283	118	13	47	188	6	730	28	23	277	15
Future Volume (veh/h)	168	283	118	13	47	188	6	730	28	23	277	15
Initial Q (Qb), veh	0	0	0	0	0	0	0	0	0	0	0	0
Ped-Bike Adj(A_pbT)	1.00		0.99	1.00		0.99	1.00		1.00	1.00		0.98
Parking Bus, Adj	1.00	1.00	1.00	1.00	1.00	1.00	1.00	1.00	1.00	1.00	1.00	1.00
Work Zone On Approach		No			No			No			No	
Adj Sat Flow, veh/h/ln	1673	1772	1772	1772	1772	1772	1673	1772	1772	1673	1772	1772
Adj Flow Rate, veh/h	177	298	72	14	49	178	6	768	26	24	292	14
Peak Hour Factor	0.95	0.95	0.95	0.95	0.95	0.95	0.95	0.95	0.95	0.95	0.95	0.95
Percent Heavy Veh, %	2	2	2	2	2	2	2	2	2	2	2	2
Cap, veh/h	619	493	119	115	132	405	569	1414	48	358	1390	66
Arrive On Green	0.36	0.36	0.36	0.36	0.36	0.36	0.43	0.43	0.43	0.43	0.43	0.43
Sat Flow, veh/h	1085	1377	333	33	368	1132	1014	3323	112	646	3267	156
Grp Volume(v), veh/h	177	0	370	241	0	0	6	389	405	24	150	156
Grp Sat Flow(s),veh/h/ln	1085	0	1710	1533	0	0	1014	1683	1752	646	1683	1740
Q Serve(g_s), s	0.0	0.0	6.5	0.0	0.0	0.0	0.1	6.4	6.4	1.1	2.1	2.1
Cycle Q Clear(g_c), s	3.5	0.0	6.5	4.3	0.0	0.0	2.2	6.4	6.4	7.4	2.1	2.1
Prop In Lane	1.00		0.19	0.06		0.74	1.00		0.06	1.00		0.09
Lane Grp Cap(c), veh/h	619	0	612	652	0	0	569	716	745	358	716	740
V/C Ratio(X)	0.29	0.00	0.60	0.37	0.00	0.00	0.01	0.54	0.54	0.07	0.21	0.21
Avail Cap(c_a), veh/h	1465	0	1945	1819	0	0	1236	1824	1898	783	1824	1885
HCM Platoon Ratio	1.00	1.00	1.00	1.00	1.00	1.00	1.00	1.00	1.00	1.00	1.00	1.00
Upstream Filter(I)	1.00	0.00	1.00	1.00	0.00	0.00	1.00	1.00	1.00	1.00	1.00	1.00
Uniform Delay (d), s/veh	8.7	0.0	9.7	9.0	0.0	0.0	7.4	7.9	7.9	10.7	6.7	6.7
Incr Delay (d2), s/veh	0.3	0.0	1.0	0.3	0.0	0.0	0.0	0.8	0.7	0.1	0.2	0.2
Initial Q Delay(d3),s/veh	0.0	0.0	0.0	0.0	0.0	0.0	0.0	0.0	0.0	0.0	0.0	0.0
%ile BackOfQ(50%),veh/ln	0.8	0.0	2.0	1.2	0.0	0.0	0.0	1.8	1.9	0.1	0.6	0.6
Unsig. Movement Delay, s/veh												
LnGrp Delay(d),s/veh	9.0	0.0	10.7	9.4	0.0	0.0	7.4	8.7	8.7	10.8	6.9	6.9
LnGrp LOS	A	A	B	A	A	A	A	A	A	B	A	A
Approach Vol, veh/h		547			241			800			330	
Approach Delay, s/veh		10.1			9.4			8.7			7.1	
Approach LOS		B			A			A			A	

Timer - Assigned Phs	2	4	6	8
Phs Duration (G+Y+Rc), s	19.7	17.2	19.7	17.2
Change Period (Y+Rc), s	4.0	4.0	4.0	4.0
Max Green Setting (Gmax), s	40.0	42.0	40.0	42.0
Max Q Clear Time (g_c+I1), s	8.4	8.5	9.4	6.3
Green Ext Time (p_c), s	7.3	3.5	2.6	1.8

Intersection Summary	
HCM 6th Ctrl Delay	8.9
HCM 6th LOS	A

Lane Group	EBL	EBT	WBL	WBT	NBL	NBT	SBL	SBT
Lane Configurations								
Traffic Volume (vph)	58	326	35	558	39	484	62	274
Future Volume (vph)	58	326	35	558	39	484	62	274
Turn Type	Prot	NA	Prot	NA	Prot	NA	Prot	NA
Protected Phases	7	4	3	8	5	2	1	6
Permitted Phases								
Detector Phase	7	4	3	8	5	2	1	6
Switch Phase								
Minimum Initial (s)	5.0	10.0	5.0	10.0	5.0	10.0	5.0	10.0
Minimum Split (s)	9.6	23.7	9.6	27.7	9.6	27.6	9.6	30.6
Total Split (s)	12.0	35.0	11.0	34.0	10.0	31.0	13.0	34.0
Total Split (%)	13.3%	38.9%	12.2%	37.8%	11.1%	34.4%	14.4%	37.8%
Yellow Time (s)	3.6	3.7	3.6	3.7	3.6	3.6	3.6	3.6
All-Red Time (s)	1.0	1.0	1.0	1.0	1.0	1.0	1.0	1.0
Lost Time Adjust (s)	0.0	0.0	0.0	0.0	0.0	0.0	0.0	0.0
Total Lost Time (s)	4.6	4.7	4.6	4.7	4.6	4.6	4.6	4.6
Lead/Lag	Lead	Lag	Lead	Lag	Lead	Lag	Lead	Lag
Lead-Lag Optimize?	Yes	Yes	Yes	Yes	Yes	Yes	Yes	Yes
Recall Mode	None	None	None	None	None	None	None	None

Intersection Summary
Cycle Length: 90
Actuated Cycle Length: 73.8
Natural Cycle: 80
Control Type: Actuated-Uncoordinated

Splits and Phases: 17: Orange St. & Redlands Bl.

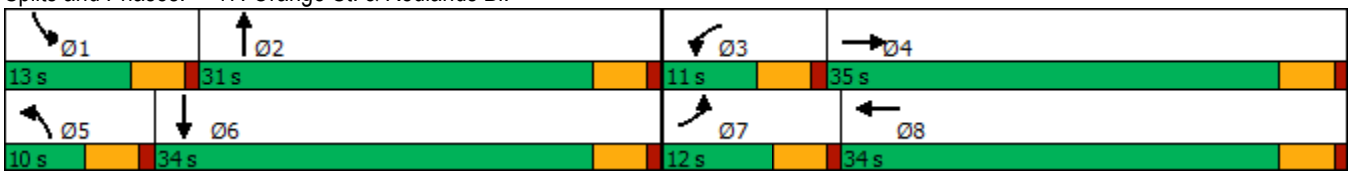

Movement	EBL	EBT	EBR	WBL	WBT	WBR	NBL	NBT	NBR	SBL	SBT	SBR
Lane Configurations												
Traffic Volume (veh/h)	58	326	47	35	558	232	39	484	24	62	274	47
Future Volume (veh/h)	58	326	47	35	558	232	39	484	24	62	274	47
Initial Q (Qb), veh	0	0	0	0	0	0	0	0	0	0	0	0
Ped-Bike Adj(A_pbT)	1.00		0.99	1.00		0.98	1.00		0.98	1.00		1.00
Parking Bus, Adj	1.00	1.00	1.00	1.00	1.00	1.00	1.00	1.00	1.00	1.00	1.00	1.00
Work Zone On Approach		No			No			No			No	
Adj Sat Flow, veh/h/ln	1673	1772	1772	1673	1772	1772	1673	1772	1772	1673	1772	1772
Adj Flow Rate, veh/h	67	375	33	40	641	199	45	556	17	71	315	41
Peak Hour Factor	0.87	0.87	0.87	0.87	0.87	0.87	0.87	0.87	0.87	0.87	0.87	0.87
Percent Heavy Veh, %	2	2	2	2	2	2	2	2	2	2	2	2
Cap, veh/h	89	1113	97	64	856	265	70	811	25	91	770	99
Arrive On Green	0.06	0.36	0.36	0.04	0.34	0.34	0.04	0.24	0.24	0.06	0.26	0.26
Sat Flow, veh/h	1594	3130	274	1594	2515	780	1594	3333	102	1594	2998	387
Grp Volume(v), veh/h	67	201	207	40	429	411	45	281	292	71	176	180
Grp Sat Flow(s),veh/h/ln	1594	1683	1721	1594	1683	1612	1594	1683	1751	1594	1683	1702
Q Serve(g_s), s	2.5	5.3	5.4	1.5	13.7	13.8	1.7	9.2	9.2	2.7	5.3	5.4
Cycle Q Clear(g_c), s	2.5	5.3	5.4	1.5	13.7	13.8	1.7	9.2	9.2	2.7	5.3	5.4
Prop In Lane	1.00		0.16	1.00		0.48	1.00		0.06	1.00		0.23
Lane Grp Cap(c), veh/h	89	599	612	64	573	548	70	410	426	91	432	437
V/C Ratio(X)	0.76	0.34	0.34	0.62	0.75	0.75	0.65	0.69	0.69	0.78	0.41	0.41
Avail Cap(c_a), veh/h	193	837	855	167	809	774	141	729	758	220	812	821
HCM Platoon Ratio	1.00	1.00	1.00	1.00	1.00	1.00	1.00	1.00	1.00	1.00	1.00	1.00
Upstream Filter(I)	1.00	1.00	1.00	1.00	1.00	1.00	1.00	1.00	1.00	1.00	1.00	1.00
Uniform Delay (d), s/veh	28.4	14.4	14.4	28.8	17.8	17.8	28.7	20.9	21.0	28.3	18.8	18.8
Incr Delay (d2), s/veh	4.8	0.3	0.3	3.6	2.4	2.5	3.7	2.0	2.0	5.2	0.6	0.6
Initial Q Delay(d3),s/veh	0.0	0.0	0.0	0.0	0.0	0.0	0.0	0.0	0.0	0.0	0.0	0.0
%ile BackOfQ(50%),veh/ln	1.0	1.9	1.9	0.6	5.2	5.0	0.7	3.7	3.8	1.1	2.0	2.1
Unsig. Movement Delay, s/veh												
LnGrp Delay(d),s/veh	33.2	14.7	14.7	32.4	20.2	20.4	32.4	23.0	22.9	33.6	19.4	19.5
LnGrp LOS	C	B	B	C	C	C	C	C	C	C	B	B
Approach Vol, veh/h		475			880			618			427	
Approach Delay, s/veh		17.3			20.8			23.6			21.8	
Approach LOS		B			C			C			C	

Timer - Assigned Phs	1	2	3	4	5	6	7	8
Phs Duration (G+Y+Rc), s	8.1	19.4	7.1	26.4	7.3	20.3	8.0	25.4
Change Period (Y+Rc), s	4.6	4.6	4.6	* 4.7	4.6	4.6	4.6	* 4.7
Max Green Setting (Gmax), s	8.4	26.4	6.4	* 30	5.4	29.4	7.4	* 29
Max Q Clear Time (g_c+I1), s	4.7	11.2	3.5	7.4	3.7	7.4	4.5	15.8
Green Ext Time (p_c), s	0.0	3.2	0.0	2.4	0.0	2.2	0.0	4.6

Intersection Summary	
HCM 6th Ctrl Delay	21.0
HCM 6th LOS	C

Notes

* HCM 6th computational engine requires equal clearance times for the phases crossing the barrier.

Lane Group	EBT	NBL	NBT	SBL	SBT
Lane Configurations					
Traffic Volume (vph)	5	15	531	48	286
Future Volume (vph)	5	15	531	48	286
Turn Type	NA	Perm	NA	Perm	NA
Protected Phases	4		2		6
Permitted Phases		2		6	
Detector Phase	4	2	2	6	6
Switch Phase					
Minimum Initial (s)	10.0	10.0	10.0	10.0	10.0
Minimum Split (s)	23.6	21.6	21.6	21.6	21.6
Total Split (s)	31.0	89.0	89.0	89.0	89.0
Total Split (%)	25.8%	74.2%	74.2%	74.2%	74.2%
Yellow Time (s)	3.6	3.6	3.6	3.6	3.6
All-Red Time (s)	1.0	1.0	1.0	1.0	1.0
Lost Time Adjust (s)	0.0	0.0	0.0	0.0	0.0
Total Lost Time (s)	4.6	4.6	4.6	4.6	4.6
Lead/Lag					
Lead-Lag Optimize?					
Recall Mode	None	None	None	None	None

Intersection Summary
Cycle Length: 120
Actuated Cycle Length: 22.6
Natural Cycle: 50
Control Type: Actuated-Uncoordinated

Splits and Phases: 18: Orange St. & State St.

Movement	EBL	EBT	EBR	WBL	WBT	WBR	NBL	NBT	NBR	SBL	SBT	SBR
Lane Configurations												
Traffic Volume (veh/h)	16	5	5	0	0	0	15	531	60	48	286	22
Future Volume (veh/h)	16	5	5	0	0	0	15	531	60	48	286	22
Initial Q (Qb), veh	0	0	0				0	0	0	0	0	0
Ped-Bike Adj(A_pbT)	1.00		1.00				1.00		0.99	1.00		0.99
Parking Bus, Adj	1.00	1.00	1.00				1.00	1.00	1.00	1.00	1.00	1.00
Work Zone On Approach		No						No			No	
Adj Sat Flow, veh/h/ln	1772	1772	1772				1673	1772	1772	1673	1772	1772
Adj Flow Rate, veh/h	18	5	3				16	584	66	53	314	24
Peak Hour Factor	0.91	0.91	0.91				0.91	0.91	0.91	0.91	0.91	0.91
Percent Heavy Veh, %	2	2	2				2	2	2	2	2	2
Cap, veh/h	95	26	16				759	1476	166	606	1535	117
Arrive On Green	0.08	0.08	0.08				0.48	0.48	0.48	0.48	0.48	0.48
Sat Flow, veh/h	1162	323	194				981	3047	344	737	3170	241
Grp Volume(v), veh/h	26	0	0				16	322	328	53	166	172
Grp Sat Flow(s),veh/h/ln	1678	0	0				981	1683	1708	737	1683	1727
Q Serve(g_s), s	0.3	0.0	0.0				0.2	2.6	2.6	1.0	1.2	1.2
Cycle Q Clear(g_c), s	0.3	0.0	0.0				1.4	2.6	2.6	3.6	1.2	1.2
Prop In Lane	0.69		0.12				1.00		0.20	1.00		0.14
Lane Grp Cap(c), veh/h	137	0	0				759	815	827	606	815	836
V/C Ratio(X)	0.19	0.00	0.00				0.02	0.39	0.40	0.09	0.20	0.21
Avail Cap(c_a), veh/h	2089	0	0				4190	6701	6798	3182	6701	6875
HCM Platoon Ratio	1.00	1.00	1.00				1.00	1.00	1.00	1.00	1.00	1.00
Upstream Filter(I)	1.00	0.00	0.00				1.00	1.00	1.00	1.00	1.00	1.00
Uniform Delay (d), s/veh	9.1	0.0	0.0				3.5	3.5	3.5	4.7	3.1	3.1
Incr Delay (d2), s/veh	0.7	0.0	0.0				0.0	0.3	0.3	0.1	0.1	0.1
Initial Q Delay(d3),s/veh	0.0	0.0	0.0				0.0	0.0	0.0	0.0	0.0	0.0
%ile BackOfQ(50%),veh/ln	0.1	0.0	0.0				0.0	0.2	0.2	0.1	0.1	0.1
Unsig. Movement Delay, s/veh												
LnGrp Delay(d),s/veh	9.7	0.0	0.0				3.5	3.8	3.8	4.7	3.2	3.3
LnGrp LOS	A	A	A				A	A	A	A	A	A
Approach Vol, veh/h		26						666			391	
Approach Delay, s/veh		9.7						3.8			3.4	
Approach LOS		A						A			A	

Timer - Assigned Phs		2		4		6
Phs Duration (G+Y+Rc), s		14.9		6.3		14.9
Change Period (Y+Rc), s		4.6		4.6		4.6
Max Green Setting (Gmax), s		84.4		26.4		84.4
Max Q Clear Time (g_c+I1), s		4.6		2.3		5.6
Green Ext Time (p_c), s		5.1		0.1		2.8

Intersection Summary			
HCM 6th Ctrl Delay		3.8	
HCM 6th LOS		A	

Lane Group	EBL	EBT	EBR	WBL	WBT	NBL	NBT	SBL	SBT
Lane Configurations									
Traffic Volume (vph)	64	257	139	13	324	100	494	18	224
Future Volume (vph)	64	257	139	13	324	100	494	18	224
Turn Type	Perm	NA	Perm	Perm	NA	Perm	NA	Perm	NA
Protected Phases		4			8		2		6
Permitted Phases	4		4	8		2		6	
Detector Phase	4	4	4	8	8	2	2	6	6
Switch Phase									
Minimum Initial (s)	10.0	10.0	10.0	10.0	10.0	10.0	10.0	10.0	10.0
Minimum Split (s)	21.6	21.6	21.6	21.6	21.6	21.6	21.6	22.6	22.6
Total Split (s)	33.0	33.0	33.0	33.0	33.0	27.0	27.0	27.0	27.0
Total Split (%)	55.0%	55.0%	55.0%	55.0%	55.0%	45.0%	45.0%	45.0%	45.0%
Yellow Time (s)	3.6	3.6	3.6	3.6	3.6	3.6	3.6	3.6	3.6
All-Red Time (s)	1.0	1.0	1.0	1.0	1.0	1.0	1.0	1.0	1.0
Lost Time Adjust (s)	0.0	0.0	0.0	0.0	0.0	0.0	0.0	0.0	0.0
Total Lost Time (s)	4.6	4.6	4.6	4.6	4.6	4.6	4.6	4.6	4.6
Lead/Lag									
Lead-Lag Optimize?									
Recall Mode	None	None	None	None	None	None	None	None	None

Intersection Summary
Cycle Length: 60
Actuated Cycle Length: 40.5
Natural Cycle: 45
Control Type: Actuated-Uncoordinated

Splits and Phases: 20: Cajon St./Orange St. & Citrus Av.

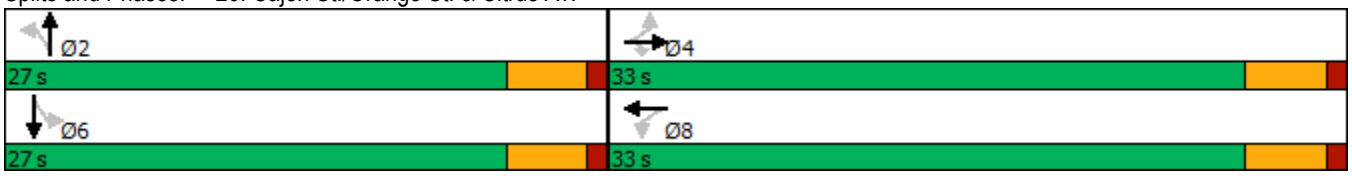

Movement	EBL	EBT	EBR	WBL	WBT	WBR	NBL	NBT	NBR	SBL	SBT	SBR
Lane Configurations												
Traffic Volume (veh/h)	64	257	139	13	324	48	100	494	30	18	224	48
Future Volume (veh/h)	64	257	139	13	324	48	100	494	30	18	224	48
Initial Q (Qb), veh	0	0	0	0	0	0	0	0	0	0	0	0
Ped-Bike Adj(A_pbT)	1.00		0.98	1.00		0.98	0.99		0.97	1.00		0.99
Parking Bus, Adj	1.00	1.00	1.00	1.00	1.00	1.00	1.00	1.00	1.00	1.00	1.00	1.00
Work Zone On Approach		No			No			No			No	
Adj Sat Flow, veh/h/ln	1673	1772	1772	1673	1772	1772	1673	1772	1772	1673	1772	1772
Adj Flow Rate, veh/h	73	292	106	15	368	43	114	561	27	20	255	44
Peak Hour Factor	0.88	0.88	0.88	0.88	0.88	0.88	0.88	0.88	0.88	0.88	0.88	0.88
Percent Heavy Veh, %	2	2	2	2	2	2	2	2	2	2	2	2
Cap, veh/h	395	696	580	461	610	71	488	1118	54	367	983	167
Arrive On Green	0.39	0.39	0.39	0.39	0.39	0.39	0.34	0.34	0.34	0.34	0.34	0.34
Sat Flow, veh/h	917	1772	1476	930	1553	181	1012	3264	157	779	2871	488
Grp Volume(v), veh/h	73	292	106	15	0	411	114	289	299	20	148	151
Grp Sat Flow(s),veh/h/ln	917	1772	1476	930	0	1734	1012	1683	1738	779	1683	1676
Q Serve(g_s), s	2.4	4.2	1.6	0.4	0.0	6.6	3.2	4.7	4.8	0.7	2.2	2.3
Cycle Q Clear(g_c), s	8.9	4.2	1.6	4.6	0.0	6.6	5.5	4.7	4.8	5.5	2.2	2.3
Prop In Lane	1.00		1.00	1.00		0.10	1.00		0.09	1.00		0.29
Lane Grp Cap(c), veh/h	395	696	580	461	0	681	488	576	595	367	576	574
V/C Ratio(X)	0.19	0.42	0.18	0.03	0.00	0.60	0.23	0.50	0.50	0.05	0.26	0.26
Avail Cap(c_a), veh/h	784	1448	1206	856	0	1417	793	1085	1120	603	1085	1080
HCM Platoon Ratio	1.00	1.00	1.00	1.00	1.00	1.00	1.00	1.00	1.00	1.00	1.00	1.00
Upstream Filter(I)	1.00	1.00	1.00	1.00	0.00	1.00	1.00	1.00	1.00	1.00	1.00	1.00
Uniform Delay (d), s/veh	12.0	7.7	6.9	9.3	0.0	8.4	10.2	9.1	9.1	11.3	8.2	8.3
Incr Delay (d2), s/veh	0.2	0.4	0.1	0.0	0.0	0.9	0.2	0.7	0.7	0.1	0.2	0.2
Initial Q Delay(d3),s/veh	0.0	0.0	0.0	0.0	0.0	0.0	0.0	0.0	0.0	0.0	0.0	0.0
%ile BackOfQ(50%),veh/ln	0.4	1.2	0.4	0.1	0.0	1.9	0.6	1.4	1.4	0.1	0.6	0.7
Unsig. Movement Delay, s/veh												
LnGrp Delay(d),s/veh	12.2	8.1	7.1	9.4	0.0	9.3	10.5	9.7	9.7	11.3	8.5	8.5
LnGrp LOS	B	A	A	A	A	A	B	A	A	B	A	A
Approach Vol, veh/h		471			426			702			319	
Approach Delay, s/veh		8.5			9.3			9.9			8.7	
Approach LOS		A			A			A			A	

Timer - Assigned Phs	2	4	6	8
Phs Duration (G+Y+Rc), s	16.5	18.3	16.5	18.3
Change Period (Y+Rc), s	4.6	4.6	4.6	4.6
Max Green Setting (Gmax), s	22.4	28.4	22.4	28.4
Max Q Clear Time (g_c+I1), s	7.5	10.9	7.5	8.6
Green Ext Time (p_c), s	3.8	2.4	1.7	2.7

Intersection Summary	
HCM 6th Ctrl Delay	9.2
HCM 6th LOS	A

Lane Group	EBL	EBT	EBR	WBL	WBT	WBR	NBT	SBT	SBR
Lane Configurations									
Traffic Volume (vph)	23	210	91	65	300	207	611	206	24
Future Volume (vph)	23	210	91	65	300	207	611	206	24
Turn Type	Perm	NA	Perm	Perm	NA	Perm	NA	NA	Perm
Protected Phases		4			8		2	6	
Permitted Phases	4		4	8		8			6
Detector Phase	4	4	4	8	8	8	2	6	6
Switch Phase									
Minimum Initial (s)	10.0	10.0	10.0	10.0	10.0	10.0	10.0	10.0	10.0
Minimum Split (s)	24.6	24.6	24.6	28.6	28.6	28.6	22.6	22.6	22.6
Total Split (s)	29.6	29.6	29.6	29.6	29.6	29.6	37.6	22.8	22.8
Total Split (%)	32.9%	32.9%	32.9%	32.9%	32.9%	32.9%	41.8%	25.3%	25.3%
Yellow Time (s)	3.6	3.6	3.6	3.6	3.6	3.6	3.6	3.6	3.6
All-Red Time (s)	1.0	1.0	1.0	1.0	1.0	1.0	1.0	1.0	1.0
Lost Time Adjust (s)	0.0	0.0	0.0	0.0	0.0	0.0	0.0	0.0	0.0
Total Lost Time (s)	4.6	4.6	4.6	4.6	4.6	4.6	4.6	4.6	4.6
Lead/Lag									
Lead-Lag Optimize?									
Recall Mode	None	None	None	None	None	None	None	None	None

Intersection Summary
Cycle Length: 90
Actuated Cycle Length: 72.6
Natural Cycle: 80
Control Type: Actuated-Uncoordinated

Splits and Phases: 21: Redlands Bl. & Citrus Av.

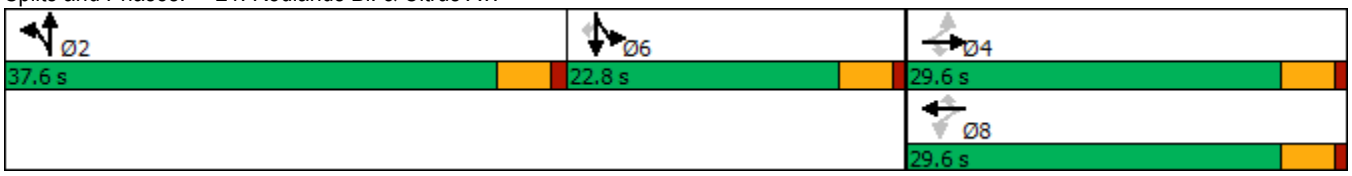

Movement	EBL	EBT	EBR	WBL	WBT	WBR	NBL	NBT	NBR	SBL	SBT	SBR
Lane Configurations												
Traffic Volume (veh/h)	23	210	91	65	300	207	215	611	39	84	206	24
Future Volume (veh/h)	23	210	91	65	300	207	215	611	39	84	206	24
Initial Q (Qb), veh	0	0	0	0	0	0	0	0	0	0	0	0
Ped-Bike Adj(A_pbT)	1.00		0.98	1.00		0.98	1.00		0.99	1.00		1.00
Parking Bus, Adj	1.00	1.00	1.00	1.00	1.00	1.00	1.00	1.00	1.00	1.00	1.00	1.00
Work Zone On Approach		No			No			No			No	
Adj Sat Flow, veh/h/ln	1673	1772	1772	1673	1772	1772	1772	1772	1772	1772	1772	1772
Adj Flow Rate, veh/h	24	216	61	67	309	178	222	630	25	87	212	0
Peak Hour Factor	0.97	0.97	0.97	0.97	0.97	0.97	0.97	0.97	0.97	0.97	0.97	0.97
Percent Heavy Veh, %	2	2	2	2	2	2	2	2	2	2	2	2
Cap, veh/h	195	436	363	267	436	362	298	899	37	159	417	
Arrive On Green	0.25	0.25	0.25	0.25	0.25	0.25	0.35	0.35	0.35	0.17	0.17	0.00
Sat Flow, veh/h	857	1772	1477	1040	1772	1474	842	2537	104	942	2466	1502
Grp Volume(v), veh/h	24	216	61	67	309	178	456	0	421	159	140	0
Grp Sat Flow(s),veh/h/ln	857	1772	1477	1040	1772	1474	1730	0	1752	1725	1683	1502
Q Serve(g_s), s	1.6	6.3	1.9	3.5	9.5	6.2	13.9	0.0	12.2	5.1	4.5	0.0
Cycle Q Clear(g_c), s	11.1	6.3	1.9	9.8	9.5	6.2	13.9	0.0	12.2	5.1	4.5	0.0
Prop In Lane	1.00		1.00	1.00		1.00	0.49		0.06	0.55		1.00
Lane Grp Cap(c), veh/h	195	436	363	267	436	362	613	0	621	292	285	
V/C Ratio(X)	0.12	0.50	0.17	0.25	0.71	0.49	0.74	0.00	0.68	0.55	0.49	
Avail Cap(c_a), veh/h	342	740	617	446	740	615	953	0	966	524	512	
HCM Platoon Ratio	1.00	1.00	1.00	1.00	1.00	1.00	1.00	1.00	1.00	1.00	1.00	1.00
Upstream Filter(I)	1.00	1.00	1.00	1.00	1.00	1.00	1.00	0.00	1.00	1.00	1.00	0.00
Uniform Delay (d), s/veh	25.7	19.4	17.8	23.6	20.6	19.4	17.0	0.0	16.4	22.8	22.5	0.0
Incr Delay (d2), s/veh	0.3	0.9	0.2	0.5	2.1	1.0	1.8	0.0	1.3	1.6	1.3	0.0
Initial Q Delay(d3),s/veh	0.0	0.0	0.0	0.0	0.0	0.0	0.0	0.0	0.0	0.0	0.0	0.0
%ile BackOfQ(50%),veh/ln	0.3	2.5	0.7	0.9	4.0	2.1	5.2	0.0	4.6	2.0	1.8	0.0
Unsig. Movement Delay, s/veh												
LnGrp Delay(d),s/veh	26.0	20.3	18.0	24.1	22.8	20.4	18.8	0.0	17.7	24.4	23.8	0.0
LnGrp LOS	C	C	B	C	C	C	B	A	B	C	C	
Approach Vol, veh/h		301			554			877			299	A
Approach Delay, s/veh		20.3			22.2			18.3			24.1	
Approach LOS		C			C			B			C	

Timer - Assigned Phs	2	4	6	8
Phs Duration (G+Y+Rc), s	25.8	19.3	14.7	19.3
Change Period (Y+Rc), s	4.6	4.6	4.6	4.6
Max Green Setting (Gmax), s	33.0	25.0	18.2	25.0
Max Q Clear Time (g_c+I1), s	15.9	13.1	7.1	11.8
Green Ext Time (p_c), s	5.4	1.2	1.2	2.4

Intersection Summary	
HCM 6th Ctrl Delay	20.5
HCM 6th LOS	C

Notes

Unsignalized Delay for [SBR] is excluded from calculations of the approach delay and intersection delay.

Lane Group	EBL	EBT	WBL	WBT	NBL	NBT	NBR	SBL	SBT	SBR
Lane Configurations										
Traffic Volume (vph)	72	279	72	430	43	182	96	36	175	127
Future Volume (vph)	72	279	72	430	43	182	96	36	175	127
Turn Type	Perm	NA	Perm	NA	Perm	NA	Perm	Perm	NA	Perm
Protected Phases		4		8		2			6	
Permitted Phases	4		8		2		2	6		6
Detector Phase	4	4	8	8	2	2	2	6	6	6
Switch Phase										
Minimum Initial (s)	10.0	10.0	10.0	10.0	10.0	10.0	10.0	10.0	10.0	10.0
Minimum Split (s)	22.6	22.6	24.6	24.6	26.7	26.7	26.7	25.7	25.7	25.7
Total Split (s)	33.0	33.0	33.0	33.0	27.0	27.0	27.0	27.0	27.0	27.0
Total Split (%)	55.0%	55.0%	55.0%	55.0%	45.0%	45.0%	45.0%	45.0%	45.0%	45.0%
Yellow Time (s)	3.6	3.6	3.6	3.6	3.7	3.7	3.7	3.7	3.7	3.7
All-Red Time (s)	1.0	1.0	1.0	1.0	1.0	1.0	1.0	1.0	1.0	1.0
Lost Time Adjust (s)	0.0	0.0	0.0	0.0		0.0	0.0		0.0	0.0
Total Lost Time (s)	4.6	4.6	4.6	4.6		4.7	4.7		4.7	4.7
Lead/Lag										
Lead-Lag Optimize?										
Recall Mode	None	None	None	None	None	None	None	None	None	None

Intersection Summary
Cycle Length: 60
Actuated Cycle Length: 43.4
Natural Cycle: 60
Control Type: Actuated-Uncoordinated

Splits and Phases: 22: Church St. & Citrus Av.

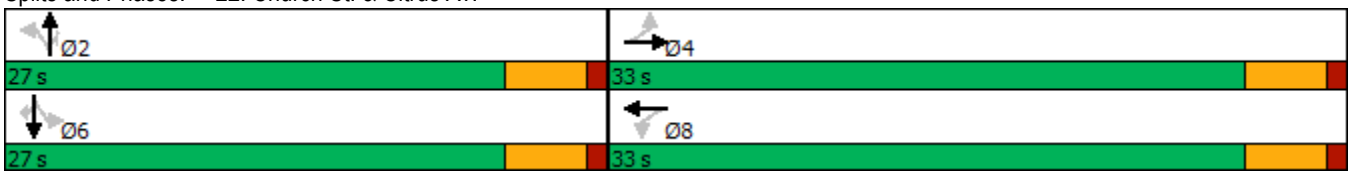

Movement	EBL	EBT	EBR	WBL	WBT	WBR	NBL	NBT	NBR	SBL	SBT	SBR
Lane Configurations												
Traffic Volume (veh/h)	72	279	41	72	430	42	43	182	96	36	175	127
Future Volume (veh/h)	72	279	41	72	430	42	43	182	96	36	175	127
Initial Q (Qb), veh	0	0	0	0	0	0	0	0	0	0	0	0
Ped-Bike Adj(A_pbT)	1.00		0.98	1.00		0.98	1.00		0.99	1.00		0.98
Parking Bus, Adj	1.00	1.00	1.00	1.00	1.00	1.00	1.00	1.00	1.00	1.00	1.00	1.00
Work Zone On Approach		No			No			No			No	
Adj Sat Flow, veh/h/ln	1673	1772	1772	1673	1772	1772	1772	1772	1772	1772	1772	1772
Adj Flow Rate, veh/h	86	332	43	86	512	48	51	217	81	43	208	121
Peak Hour Factor	0.84	0.84	0.84	0.84	0.84	0.84	0.84	0.84	0.84	0.84	0.84	0.84
Percent Heavy Veh, %	2	2	2	2	2	2	2	2	2	2	2	2
Cap, veh/h	257	661	86	386	687	64	78	249	594	77	274	587
Arrive On Green	0.43	0.43	0.43	0.43	0.43	0.43	0.40	0.40	0.40	0.40	0.40	0.40
Sat Flow, veh/h	802	1532	198	951	1591	149	2	621	1481	2	684	1465
Grp Volume(v), veh/h	86	0	375	86	0	560	268	0	81	251	0	121
Grp Sat Flow(s),veh/h/ln	802	0	1730	951	0	1741	623	0	1481	685	0	1465
Q Serve(g_s), s	5.6	0.0	8.7	4.0	0.0	15.0	0.1	0.0	1.9	0.1	0.0	3.0
Cycle Q Clear(g_c), s	20.8	0.0	8.7	13.0	0.0	15.0	22.3	0.0	1.9	22.3	0.0	3.0
Prop In Lane	1.00		0.11	1.00		0.09	0.19		1.00	0.17		1.00
Lane Grp Cap(c), veh/h	257	0	747	386	0	752	327	0	594	351	0	587
V/C Ratio(X)	0.33	0.00	0.50	0.22	0.00	0.75	0.82	0.00	0.14	0.72	0.00	0.21
Avail Cap(c_a), veh/h	321	0	885	462	0	890	328	0	595	352	0	588
HCM Platoon Ratio	1.00	1.00	1.00	1.00	1.00	1.00	1.00	1.00	1.00	1.00	1.00	1.00
Upstream Filter(I)	1.00	0.00	1.00	1.00	0.00	1.00	1.00	0.00	1.00	1.00	0.00	1.00
Uniform Delay (d), s/veh	22.0	0.0	11.4	16.3	0.0	13.2	13.7	0.0	10.5	13.3	0.0	10.9
Incr Delay (d2), s/veh	0.8	0.0	0.5	0.3	0.0	2.9	15.1	0.0	0.1	6.8	0.0	0.2
Initial Q Delay(d3),s/veh	0.0	0.0	0.0	0.0	0.0	0.0	0.0	0.0	0.0	0.0	0.0	0.0
%ile BackOfQ(50%),veh/ln	1.0	0.0	3.0	0.8	0.0	5.6	3.4	0.0	0.6	2.6	0.0	0.9
Unsig. Movement Delay, s/veh												
LnGrp Delay(d),s/veh	22.8	0.0	12.0	16.6	0.0	16.1	28.7	0.0	10.7	20.1	0.0	11.0
LnGrp LOS	C	A	B	B	A	B	C	A	B	C	A	B
Approach Vol, veh/h		461			646			349			372	
Approach Delay, s/veh		14.0			16.1			24.5			17.2	
Approach LOS		B			B			C			B	

Timer - Assigned Phs	2	4	6	8
Phs Duration (G+Y+Rc), s	27.0	28.7	27.0	28.7
Change Period (Y+Rc), s	* 4.7	4.6	* 4.7	4.6
Max Green Setting (Gmax), s	* 22	28.4	* 22	28.4
Max Q Clear Time (g_c+I1), s	24.3	22.8	24.3	17.0
Green Ext Time (p_c), s	0.0	1.4	0.0	3.4

Intersection Summary	
HCM 6th Ctrl Delay	17.4
HCM 6th LOS	B

Notes

* HCM 6th computational engine requires equal clearance times for the phases crossing the barrier.

Lane Group	EBL	EBT	WBL	WBT	NBL	NBT	SBL	SBT	SBR
Lane Configurations									
Traffic Volume (vph)	98	480	62	346	58	202	29	225	102
Future Volume (vph)	98	480	62	346	58	202	29	225	102
Turn Type	Prot	NA	Prot	NA	Perm	NA	Perm	NA	Perm
Protected Phases	7	4	3	8		2		6	
Permitted Phases					2		6		6
Detector Phase	7	4	3	8	2	2	6	6	6
Switch Phase									
Minimum Initial (s)	5.0	10.0	5.0	10.0	10.0	10.0	10.0	10.0	10.0
Minimum Split (s)	9.6	23.1	9.6	23.1	26.1	26.1	26.1	26.1	26.1
Total Split (s)	9.6	24.0	9.6	24.0	26.4	26.4	26.4	26.4	26.4
Total Split (%)	16.0%	40.0%	16.0%	40.0%	44.0%	44.0%	44.0%	44.0%	44.0%
Yellow Time (s)	3.6	4.1	3.6	4.1	4.1	4.1	4.1	4.1	4.1
All-Red Time (s)	1.0	1.0	1.0	1.0	1.0	1.0	1.0	1.0	1.0
Lost Time Adjust (s)	0.0	0.0	0.0	0.0		0.0		0.0	0.0
Total Lost Time (s)	4.6	5.1	4.6	5.1		5.1		5.1	5.1
Lead/Lag	Lead	Lag	Lead	Lag					
Lead-Lag Optimize?	Yes	Yes	Yes	Yes					
Recall Mode	None	None	None	None	None	None	None	None	None

Intersection Summary

Cycle Length: 60
Actuated Cycle Length: 51.2
Natural Cycle: 65
Control Type: Actuated-Uncoordinated

Splits and Phases: 1: Center St. & Brookside Av.

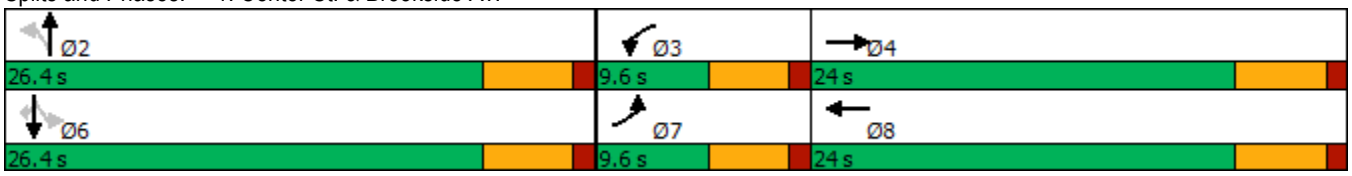

Movement	EBL	EBT	EBR	WBL	WBT	WBR	NBL	NBT	NBR	SBL	SBT	SBR
Lane Configurations												
Traffic Volume (veh/h)	98	480	66	62	346	34	58	202	28	29	225	102
Future Volume (veh/h)	98	480	66	62	346	34	58	202	28	29	225	102
Initial Q (Qb), veh	0	0	0	0	0	0	0	0	0	0	0	0
Ped-Bike Adj(A_pbT)	1.00		0.98	1.00		1.00	1.00		1.00	1.00		0.98
Parking Bus, Adj	1.00	1.00	1.00	1.00	1.00	1.00	1.00	1.00	1.00	1.00	1.00	1.00
Work Zone On Approach		No			No			No			No	
Adj Sat Flow, veh/h/ln	1673	1772	1772	1673	1772	1772	1772	1772	1772	1772	1772	1772
Adj Flow Rate, veh/h	104	511	42	66	368	25	62	215	18	31	239	56
Peak Hour Factor	0.94	0.94	0.94	0.94	0.94	0.94	0.94	0.94	0.94	0.94	0.94	0.94
Percent Heavy Veh, %	2	2	2	2	2	2	2	2	2	2	2	2
Cap, veh/h	127	575	47	97	555	38	138	310	23	111	455	406
Arrive On Green	0.08	0.36	0.36	0.06	0.34	0.34	0.28	0.28	0.28	0.28	0.28	0.28
Sat Flow, veh/h	1594	1612	132	1594	1640	111	173	1118	84	103	1640	1464
Grp Volume(v), veh/h	104	0	553	66	0	393	295	0	0	270	0	56
Grp Sat Flow(s),veh/h/ln	1594	0	1744	1594	0	1752	1375	0	0	1743	0	1464
Q Serve(g_s), s	3.1	0.0	14.5	2.0	0.0	9.3	3.8	0.0	0.0	0.0	0.0	1.4
Cycle Q Clear(g_c), s	3.1	0.0	14.5	2.0	0.0	9.3	10.1	0.0	0.0	6.3	0.0	1.4
Prop In Lane	1.00		0.08	1.00		0.06	0.21		0.06	0.11		1.00
Lane Grp Cap(c), veh/h	127	0	623	97	0	592	471	0	0	566	0	406
V/C Ratio(X)	0.82	0.00	0.89	0.68	0.00	0.66	0.63	0.00	0.00	0.48	0.00	0.14
Avail Cap(c_a), veh/h	164	0	679	164	0	682	721	0	0	836	0	643
HCM Platoon Ratio	1.00	1.00	1.00	1.00	1.00	1.00	1.00	1.00	1.00	1.00	1.00	1.00
Upstream Filter(I)	1.00	0.00	1.00	1.00	0.00	1.00	1.00	0.00	0.00	1.00	0.00	1.00
Uniform Delay (d), s/veh	22.0	0.0	14.7	22.3	0.0	13.7	16.1	0.0	0.0	15.0	0.0	13.2
Incr Delay (d2), s/veh	17.4	0.0	12.9	3.1	0.0	2.0	1.4	0.0	0.0	0.6	0.0	0.2
Initial Q Delay(d3),s/veh	0.0	0.0	0.0	0.0	0.0	0.0	0.0	0.0	0.0	0.0	0.0	0.0
%ile BackOfQ(50%),veh/ln	1.6	0.0	6.8	0.7	0.0	3.3	2.7	0.0	0.0	2.2	0.0	0.4
Unsig. Movement Delay, s/veh												
LnGrp Delay(d),s/veh	39.4	0.0	27.6	25.5	0.0	15.7	17.5	0.0	0.0	15.6	0.0	13.3
LnGrp LOS	D	A	C	C	A	B	B	A	A	B	A	B
Approach Vol, veh/h		657			459			295			326	
Approach Delay, s/veh		29.5			17.1			17.5			15.2	
Approach LOS		C			B			B			B	

Timer - Assigned Phs		2	3	4		6	7	8
Phs Duration (G+Y+Rc), s		18.6	7.5	22.4		18.6	8.5	21.5
Change Period (Y+Rc), s		5.1	4.6	5.1		5.1	4.6	5.1
Max Green Setting (Gmax), s		21.3	5.0	18.9		21.3	5.0	18.9
Max Q Clear Time (g_c+I1), s		12.1	4.0	16.5		8.3	5.1	11.3
Green Ext Time (p_c), s		1.1	0.0	0.8		1.4	0.0	1.4

Intersection Summary	
HCM 6th Ctrl Delay	21.5
HCM 6th LOS	C

Lane Group	EBL	EBT	WBL	WBT	NBL	NBT	SBL	SBT
Lane Configurations								
Traffic Volume (vph)	98	872	40	311	29	216	135	377
Future Volume (vph)	98	872	40	311	29	216	135	377
Turn Type	Prot	NA	Prot	NA	Perm	NA	Perm	NA
Protected Phases	7	4	3	8		2		6
Permitted Phases					2		6	
Detector Phase	7	4	3	8	2	2	6	6
Switch Phase								
Minimum Initial (s)	5.0	10.0	5.0	10.0	10.0	10.0	10.0	10.0
Minimum Split (s)	9.6	25.7	9.6	25.7	28.6	28.6	28.6	28.6
Total Split (s)	18.2	41.0	11.0	33.8	38.0	38.0	38.0	38.0
Total Split (%)	20.2%	45.6%	12.2%	37.6%	42.2%	42.2%	42.2%	42.2%
Yellow Time (s)	3.6	3.7	3.6	3.7	3.6	3.6	3.6	3.6
All-Red Time (s)	1.0	1.0	1.0	1.0	1.0	1.0	1.0	1.0
Lost Time Adjust (s)	0.0	0.0	0.0	0.0		0.0		0.0
Total Lost Time (s)	4.6	4.7	4.6	4.7		4.6		4.6
Lead/Lag	Lead	Lag	Lead	Lag				
Lead-Lag Optimize?	Yes	Yes	Yes	Yes				
Recall Mode	None	None	None	None	None	None	None	None

Intersection Summary
Cycle Length: 90
Actuated Cycle Length: 70
Natural Cycle: 65
Control Type: Actuated-Uncoordinated

Splits and Phases: 2: Eureka St. & Redlands Bl.

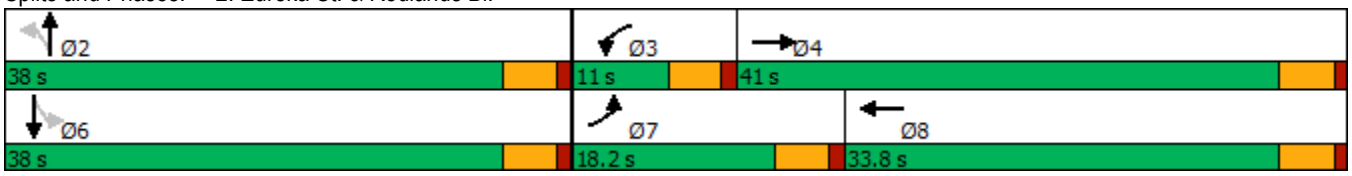

Movement	EBL	EBT	EBR	WBL	WBT	WBR	NBL	NBT	NBR	SBL	SBT	SBR
Lane Configurations												
Traffic Volume (veh/h)	98	872	96	40	311	65	29	216	44	135	377	67
Future Volume (veh/h)	98	872	96	40	311	65	29	216	44	135	377	67
Initial Q (Qb), veh	0	0	0	0	0	0	0	0	0	0	0	0
Ped-Bike Adj(A_pbT)	1.00		1.00	1.00		0.99	1.00		0.99	1.00		0.99
Parking Bus, Adj	1.00	1.00	1.00	1.00	1.00	1.00	1.00	1.00	1.00	1.00	1.00	1.00
Work Zone On Approach		No			No			No			No	
Adj Sat Flow, veh/h/ln	1673	1772	1772	1673	1772	1772	1772	1772	1772	1772	1772	1772
Adj Flow Rate, veh/h	108	958	98	44	342	53	32	237	36	148	414	49
Peak Hour Factor	0.91	0.91	0.91	0.91	0.91	0.91	0.91	0.91	0.91	0.91	0.91	0.91
Percent Heavy Veh, %	2	2	2	2	2	2	2	2	2	2	2	2
Cap, veh/h	134	1250	128	68	1062	163	121	783	121	258	665	83
Arrive On Green	0.08	0.41	0.41	0.04	0.36	0.36	0.33	0.33	0.33	0.33	0.33	0.33
Sat Flow, veh/h	1594	3083	315	1594	2919	448	158	2354	365	523	1999	248
Grp Volume(v), veh/h	108	523	533	44	196	199	153	0	152	302	0	309
Grp Sat Flow(s),veh/h/ln	1594	1683	1715	1594	1683	1684	1335	0	1541	1207	0	1563
Q Serve(g_s), s	4.2	17.0	17.0	1.7	5.3	5.4	0.4	0.0	4.6	10.6	0.0	10.4
Cycle Q Clear(g_c), s	4.2	17.0	17.0	1.7	5.3	5.4	10.8	0.0	4.6	15.2	0.0	10.4
Prop In Lane	1.00		0.18	1.00		0.27	0.21		0.24	0.49		0.16
Lane Grp Cap(c), veh/h	134	683	696	68	612	613	513	0	512	486	0	520
V/C Ratio(X)	0.80	0.77	0.77	0.65	0.32	0.33	0.30	0.00	0.30	0.62	0.00	0.59
Avail Cap(c_a), veh/h	342	965	983	161	773	774	803	0	813	752	0	824
HCM Platoon Ratio	1.00	1.00	1.00	1.00	1.00	1.00	1.00	1.00	1.00	1.00	1.00	1.00
Upstream Filter(I)	1.00	1.00	1.00	1.00	1.00	1.00	1.00	0.00	1.00	1.00	0.00	1.00
Uniform Delay (d), s/veh	28.5	16.2	16.2	29.9	14.5	14.5	15.6	0.0	15.7	19.9	0.0	17.6
Incr Delay (d2), s/veh	4.2	2.4	2.3	3.8	0.3	0.3	0.3	0.0	0.3	1.3	0.0	1.1
Initial Q Delay(d3),s/veh	0.0	0.0	0.0	0.0	0.0	0.0	0.0	0.0	0.0	0.0	0.0	0.0
%ile BackOfQ(50%),veh/ln	1.7	6.2	6.3	0.7	1.9	1.9	1.6	0.0	1.6	4.0	0.0	3.6
Unsig. Movement Delay, s/veh												
LnGrp Delay(d),s/veh	32.7	18.6	18.6	33.7	14.8	14.8	15.9	0.0	16.0	21.2	0.0	18.7
LnGrp LOS	C	B	B	C	B	B	B	A	B	C	A	B
Approach Vol, veh/h		1164			439			305			611	
Approach Delay, s/veh		19.9			16.7			15.9			19.9	
Approach LOS		B			B			B			B	

Timer - Assigned Phs		2	3	4		6	7	8
Phs Duration (G+Y+Rc), s		25.7	7.3	30.4		25.7	9.9	27.7
Change Period (Y+Rc), s		4.6	4.6	* 4.7		4.6	4.6	* 4.7
Max Green Setting (Gmax), s		33.4	6.4	* 36		33.4	13.6	* 29
Max Q Clear Time (g_c+I1), s		12.8	3.7	19.0		17.2	6.2	7.4
Green Ext Time (p_c), s		1.9	0.0	6.7		3.8	0.1	2.3

Intersection Summary	
HCM 6th Ctrl Delay	18.9
HCM 6th LOS	B

Notes

* HCM 6th computational engine requires equal clearance times for the phases crossing the barrier.

Intersection	
Int Delay, s/veh	2.1

Movement	EBL	EBT	EBR	WBL	WBT	WBR	NBL	NBT	NBR	SBL	SBT	SBR
Lane Configurations												
Traffic Vol, veh/h	31	2	45	0	4	6	47	252	4	10	475	28
Future Vol, veh/h	31	2	45	0	4	6	47	252	4	10	475	28
Conflicting Peds, #/hr	0	0	0	0	0	0	0	0	0	0	0	0
Sign Control	Stop	Stop	Stop	Stop	Stop	Stop	Free	Free	Free	Free	Free	Free
RT Channelized	-	-	None	-	-	None	-	-	None	-	-	None
Storage Length	-	-	-	-	-	0	-	-	-	-	-	-
Veh in Median Storage, #	-	0	-	-	0	-	-	0	-	-	0	-
Grade, %	-	0	-	-	0	-	-	0	-	-	0	-
Peak Hour Factor	97	97	97	97	97	97	97	97	97	97	97	97
Heavy Vehicles, %	2	2	2	2	2	2	2	2	2	2	2	2
Mvmt Flow	32	2	46	0	4	6	48	260	4	10	490	29

Major/Minor	Minor2			Minor1			Major1			Major2		
Conflicting Flow All	753	885	260	624	897	132	519	0	0	264	0	0
Stage 1	525	525	-	358	358	-	-	-	-	-	-	-
Stage 2	228	360	-	266	539	-	-	-	-	-	-	-
Critical Hdwy	7.54	6.54	6.94	7.54	6.54	6.94	4.14	-	-	4.14	-	-
Critical Hdwy Stg 1	6.54	5.54	-	6.54	5.54	-	-	-	-	-	-	-
Critical Hdwy Stg 2	6.54	5.54	-	6.54	5.54	-	-	-	-	-	-	-
Follow-up Hdwy	3.52	4.02	3.32	3.52	4.02	3.32	2.22	-	-	2.22	-	-
Pot Cap-1 Maneuver	298	282	739	370	278	893	1043	-	-	1297	-	-
Stage 1	504	528	-	633	626	-	-	-	-	-	-	-
Stage 2	754	625	-	716	520	-	-	-	-	-	-	-
Platoon blocked, %								-	-		-	-
Mov Cap-1 Maneuver	278	264	739	328	260	893	1043	-	-	1297	-	-
Mov Cap-2 Maneuver	278	264	-	328	260	-	-	-	-	-	-	-
Stage 1	477	522	-	599	592	-	-	-	-	-	-	-
Stage 2	703	591	-	661	514	-	-	-	-	-	-	-

Approach	EB	WB	NB	SB
HCM Control Delay, s	15.2	13.1	1.5	0.2
HCM LOS	C	B		

Minor Lane/Major Mvmt	NBL	NBT	NBR	EBLn1	WBLn1	WBLn2	SBL	SBT	SBR
Capacity (veh/h)	1043	-	-	433	260	893	1297	-	-
HCM Lane V/C Ratio	0.046	-	-	0.186	0.016	0.007	0.008	-	-
HCM Control Delay (s)	8.6	0.2	-	15.2	19.1	9.1	7.8	0	-
HCM Lane LOS	A	A	-	C	C	A	A	A	-
HCM 95th %tile Q(veh)	0.1	-	-	0.7	0	0	0	-	-

Lane Group	EBL	EBT	WBL	WBT	NBL2	NBL	SEL	SER
Lane Configurations								
Traffic Volume (vph)	133	469	16	306	19	66	135	267
Future Volume (vph)	133	469	16	306	19	66	135	267
Turn Type	Perm	NA	Perm	NA	Perm	Prot	Perm	Prot
Protected Phases		4		8		2		6
Permitted Phases	4		8		2		6	
Detector Phase	4	4	8	8	2	2	6	6
Switch Phase								
Minimum Initial (s)	10.0	10.0	10.0	10.0	10.0	10.0	10.0	10.0
Minimum Split (s)	23.6	23.6	23.6	23.6	27.6	27.6	27.6	27.6
Total Split (s)	28.0	28.0	28.0	28.0	32.0	32.0	32.0	32.0
Total Split (%)	46.7%	46.7%	46.7%	46.7%	53.3%	53.3%	53.3%	53.3%
Yellow Time (s)	3.6	3.6	3.6	3.6	3.6	3.6	3.6	3.6
All-Red Time (s)	1.0	1.0	1.0	1.0	1.0	1.0	1.0	1.0
Lost Time Adjust (s)	0.0	0.0	0.0	0.0		0.0		0.0
Total Lost Time (s)	4.6	4.6	4.6	4.6		4.6		4.6
Lead/Lag								
Lead-Lag Optimize?								
Recall Mode	None	None	None	None	None	None	None	None

Intersection Summary
Cycle Length: 60
Actuated Cycle Length: 52
Natural Cycle: 55
Control Type: Actuated-Uncoordinated

Splits and Phases: 6: Eureka St. & Brookside Av./Citrus Av.

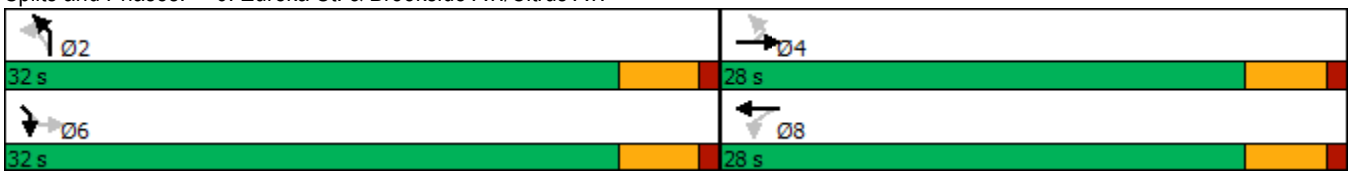

Movement	EBL	EBT	EBR	WBL	WBT	WBR	NBL2	NBL	NBR	SEL	SER	SER2
Lane Configurations												
Traffic Volume (veh/h)	133	469	38	16	306	79	19	66	11	135	267	165
Future Volume (veh/h)	133	469	38	16	306	79	19	66	11	135	267	165
Initial Q (Qb), veh	0	0	0	0	0	0	0	0	0	0	0	0
Ped-Bike Adj(A_pbT)	1.00		0.99	1.00		0.99	1.00	1.00	1.00	1.00	0.99	0.99
Parking Bus, Adj	1.00	1.00	1.00	1.00	1.00	1.00	1.00	1.00	1.00	1.00	1.00	1.00
Work Zone On Approach		No			No			No		No		
Adj Sat Flow, veh/h/ln	1673	1772	1772	1673	1772	1772	1772	1772	1772	1772	1772	1772
Adj Flow Rate, veh/h	136	479	33	16	312	61	19	19	6	138	122	122
Peak Hour Factor	0.98	0.98	0.98	0.98	0.98	0.98	0.98	0.98	0.98	0.98	0.98	0.98
Percent Heavy Veh, %	2	2	2	2	2	2	2	2	2	2	2	2
Cap, veh/h	506	1178	81	446	1036	200	272	272	72	368	253	253
Arrive On Green	0.37	0.37	0.37	0.37	0.37	0.37	0.34	0.34	0.34	0.34	0.34	0.34
Sat Flow, veh/h	953	3193	219	838	2808	541	331	331	214	591	752	752
Grp Volume(v), veh/h	136	252	260	16	185	188	48	48	44	294	238	238
Grp Sat Flow(s),veh/h/ln	953	1683	1729	838	1683	1666	1308	1308	1573	1571	1470	1470
Q Serve(g_s), s	3.7	3.5	3.5	0.5	2.4	2.5	0.0	0.0	0.6	2.7	4.0	4.0
Cycle Q Clear(g_c), s	6.2	3.5	3.5	3.9	2.4	2.5	4.1	4.1	0.6	4.6	4.0	4.0
Prop In Lane	1.00		0.13	1.00		0.33	0.40	0.40	0.14	0.47	0.51	0.51
Lane Grp Cap(c), veh/h	506	621	638	446	621	615	601	601	529	698	495	495
V/C Ratio(X)	0.27	0.41	0.41	0.04	0.30	0.31	0.08	0.08	0.08	0.42	0.48	0.48
Avail Cap(c_a), veh/h	868	1260	1294	764	1260	1247	1328	1328	1379	1523	1289	1289
HCM Platoon Ratio	1.00	1.00	1.00	1.00	1.00	1.00	1.00	1.00	1.00	1.00	1.00	1.00
Upstream Filter(I)	1.00	1.00	1.00	1.00	1.00	1.00	1.00	1.00	1.00	1.00	1.00	1.00
Uniform Delay (d), s/veh	9.2	7.3	7.3	8.8	7.0	7.0	7.1	7.1	7.1	8.3	8.2	8.2
Incr Delay (d2), s/veh	0.3	0.4	0.4	0.0	0.3	0.3	0.1	0.1	0.1	0.4	0.7	0.7
Initial Q Delay(d3),s/veh	0.0	0.0	0.0	0.0	0.0	0.0	0.0	0.0	0.0	0.0	0.0	0.0
%ile BackOfQ(50%),veh/ln	0.5	0.8	0.8	0.1	0.6	0.6	0.2	0.2	0.2	1.2	1.0	1.0
Unsig. Movement Delay, s/veh												
LnGrp Delay(d),s/veh	9.5	7.7	7.7	8.8	7.3	7.3	7.1	7.1	7.1	8.7	8.9	8.9
LnGrp LOS	A	A	A	A	A	A	A	A	A	A	A	A
Approach Vol, veh/h		648			389		92	92		532		
Approach Delay, s/veh		8.1			7.3		7.1	7.1		8.8		
Approach LOS		A			A		A	A		A		

Timer - Assigned Phs		2		4		6		8				
Phs Duration (G+Y+Rc), s		15.1		16.1		15.1		16.1				
Change Period (Y+Rc), s		4.6		4.6		4.6		4.6				
Max Green Setting (Gmax), s		27.4		23.4		27.4		23.4				
Max Q Clear Time (g_c+I1), s		6.1		8.2		6.6		5.9				
Green Ext Time (p_c), s		0.2		3.3		1.7		2.2				

Intersection Summary												
HCM 6th Ctrl Delay			8.1									
HCM 6th LOS			A									

Lane Group	EBL	EBT	WBL	WBT	NBL	NBT	SBL	SBT
Lane Configurations								
Traffic Volume (vph)	8	1019	12	391	15	1	11	0
Future Volume (vph)	8	1019	12	391	15	1	11	0
Turn Type	Prot	NA	Prot	NA	Perm	NA	Perm	NA
Protected Phases	7	4	3	8		2		6
Permitted Phases					2		6	
Detector Phase	7	4	3	8	2	2	6	6
Switch Phase								
Minimum Initial (s)	5.0	10.0	5.0	10.0	10.0	10.0	10.0	10.0
Minimum Split (s)	9.6	21.7	9.6	21.7	24.6	24.6	24.6	24.6
Total Split (s)	9.6	25.0	9.6	25.0	25.4	25.4	25.4	25.4
Total Split (%)	16.0%	41.7%	16.0%	41.7%	42.3%	42.3%	42.3%	42.3%
Yellow Time (s)	3.6	3.7	3.6	3.7	3.6	3.6	3.6	3.6
All-Red Time (s)	1.0	1.0	1.0	1.0	1.0	1.0	1.0	1.0
Lost Time Adjust (s)	0.0	0.0	0.0	0.0		0.0		0.0
Total Lost Time (s)	4.6	4.7	4.6	4.7		4.6		4.6
Lead/Lag	Lead	Lag	Lead	Lag				
Lead-Lag Optimize?	Yes	Yes	Yes	Yes				
Recall Mode	None	None	None	None	None	None	None	None

Intersection Summary
Cycle Length: 60
Actuated Cycle Length: 31.8
Natural Cycle: 65
Control Type: Actuated-Uncoordinated

Splits and Phases: 9: 3rd St. & Redlands Bl.

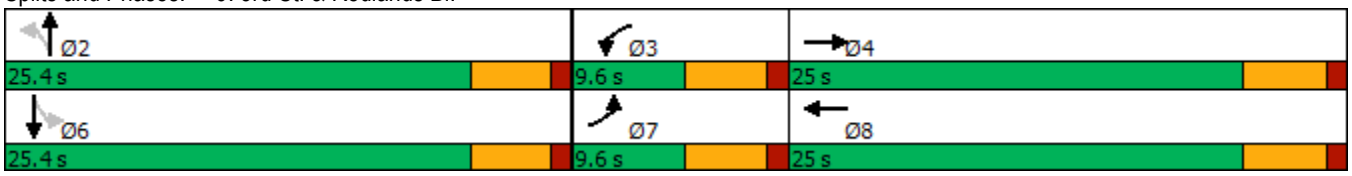

Movement	EBL	EBT	EBR	WBL	WBT	WBR	NBL	NBT	NBR	SBL	SBT	SBR
Lane Configurations												
Traffic Volume (veh/h)	8	1019	23	12	391	5	15	1	6	11	0	10
Future Volume (veh/h)	8	1019	23	12	391	5	15	1	6	11	0	10
Initial Q (Qb), veh	0	0	0	0	0	0	0	0	0	0	0	0
Ped-Bike Adj(A_pbT)	1.00		1.00	1.00		0.98	1.00		1.00	1.00		1.00
Parking Bus, Adj	1.00	1.00	1.00	1.00	1.00	1.00	1.00	1.00	1.00	1.00	1.00	1.00
Work Zone On Approach		No			No			No			No	
Adj Sat Flow, veh/h/ln	1673	1772	1772	1673	1772	1772	1772	1772	1772	1772	1772	1772
Adj Flow Rate, veh/h	9	1171	25	14	449	6	17	1	4	13	0	5
Peak Hour Factor	0.87	0.87	0.87	0.87	0.87	0.87	0.87	0.87	0.87	0.87	0.87	0.87
Percent Heavy Veh, %	2	2	2	2	2	2	2	2	2	2	2	2
Cap, veh/h	19	1624	35	29	1660	22	277	22	25	262	18	38
Arrive On Green	0.01	0.48	0.48	0.02	0.49	0.49	0.09	0.09	0.09	0.09	0.00	0.09
Sat Flow, veh/h	1594	3370	72	1594	3400	45	971	236	268	870	195	410
Grp Volume(v), veh/h	9	585	611	14	222	233	22	0	0	18	0	0
Grp Sat Flow(s),veh/h/ln	1594	1683	1759	1594	1683	1762	1475	0	0	1476	0	0
Q Serve(g_s), s	0.2	9.4	9.4	0.3	2.7	2.7	0.0	0.0	0.0	0.0	0.0	0.0
Cycle Q Clear(g_c), s	0.2	9.4	9.4	0.3	2.7	2.7	0.4	0.0	0.0	0.3	0.0	0.0
Prop In Lane	1.00		0.04	1.00		0.03	0.77		0.18	0.72		0.28
Lane Grp Cap(c), veh/h	19	811	848	29	822	860	323	0	0	318	0	0
V/C Ratio(X)	0.47	0.72	0.72	0.48	0.27	0.27	0.07	0.00	0.00	0.06	0.00	0.00
Avail Cap(c_a), veh/h	234	1001	1046	234	1001	1048	1068	0	0	1060	0	0
HCM Platoon Ratio	1.00	1.00	1.00	1.00	1.00	1.00	1.00	1.00	1.00	1.00	1.00	1.00
Upstream Filter(I)	1.00	1.00	1.00	1.00	1.00	1.00	1.00	0.00	0.00	1.00	0.00	0.00
Uniform Delay (d), s/veh	16.7	7.0	7.0	16.6	5.1	5.1	14.2	0.0	0.0	14.2	0.0	0.0
Incr Delay (d2), s/veh	6.6	2.0	1.9	4.5	0.2	0.2	0.1	0.0	0.0	0.1	0.0	0.0
Initial Q Delay(d3),s/veh	0.0	0.0	0.0	0.0	0.0	0.0	0.0	0.0	0.0	0.0	0.0	0.0
%ile BackOfQ(50%),veh/ln	0.1	2.2	2.3	0.1	0.5	0.6	0.1	0.0	0.0	0.1	0.0	0.0
Unsig. Movement Delay, s/veh												
LnGrp Delay(d),s/veh	23.3	9.0	8.9	21.1	5.3	5.3	14.3	0.0	0.0	14.3	0.0	0.0
LnGrp LOS	C	A	A	C	A	A	B	A	A	B	A	A
Approach Vol, veh/h		1205			469			22			18	
Approach Delay, s/veh		9.0			5.8			14.3			14.3	
Approach LOS		A			A			B			B	

Timer - Assigned Phs		2	3	4		6	7	8
Phs Duration (G+Y+Rc), s		7.8	5.2	21.1		7.8	5.0	21.4
Change Period (Y+Rc), s		4.6	4.6	* 4.7		4.6	4.6	* 4.7
Max Green Setting (Gmax), s		20.8	5.0	* 20		20.8	5.0	* 20
Max Q Clear Time (g_c+I1), s		2.4	2.3	11.4		2.3	2.2	4.7
Green Ext Time (p_c), s		0.0	0.0	5.0		0.0	0.0	2.4

Intersection Summary	
HCM 6th Ctrl Delay	8.3
HCM 6th LOS	A

Notes

* HCM 6th computational engine requires equal clearance times for the phases crossing the barrier.

Intersection	
Int Delay, s/veh	2.3

Movement	EBL	EBT	EBR	WBL	WBT	WBR	NBL	NBT	NBR	SBL	SBT	SBR
Lane Configurations												
Traffic Vol, veh/h	22	587	6	8	362	21	13	4	80	23	4	27
Future Vol, veh/h	22	587	6	8	362	21	13	4	80	23	4	27
Conflicting Peds, #/hr	0	0	0	0	0	0	0	0	0	0	0	0
Sign Control	Free	Free	Free	Free	Free	Free	Stop	Stop	Stop	Stop	Stop	Stop
RT Channelized	-	-	None	-	-	None	-	-	None	-	-	None
Storage Length	120	-	-	70	-	-	-	-	-	-	-	-
Veh in Median Storage, #	-	0	-	-	0	-	-	0	-	-	0	-
Grade, %	-	0	-	-	0	-	-	0	-	-	0	-
Peak Hour Factor	91	91	91	91	91	91	91	91	91	91	91	91
Heavy Vehicles, %	2	2	2	2	2	2	2	2	2	2	2	2
Mvmt Flow	24	645	7	9	398	23	14	4	88	25	4	30

Major/Minor	Major1			Major2			Minor1			Minor2		
Conflicting Flow All	421	0	0	652	0	0	916	1136	326	801	1128	211
Stage 1	-	-	-	-	-	-	697	697	-	428	428	-
Stage 2	-	-	-	-	-	-	219	439	-	373	700	-
Critical Hdwy	4.14	-	-	4.14	-	-	7.54	6.54	6.94	7.54	6.54	6.94
Critical Hdwy Stg 1	-	-	-	-	-	-	6.54	5.54	-	6.54	5.54	-
Critical Hdwy Stg 2	-	-	-	-	-	-	6.54	5.54	-	6.54	5.54	-
Follow-up Hdwy	2.22	-	-	2.22	-	-	3.52	4.02	3.32	3.52	4.02	3.32
Pot Cap-1 Maneuver	1135	-	-	930	-	-	227	201	670	276	203	794
Stage 1	-	-	-	-	-	-	398	441	-	575	583	-
Stage 2	-	-	-	-	-	-	763	576	-	620	440	-
Platoon blocked, %		-	-		-	-						
Mov Cap-1 Maneuver	1135	-	-	930	-	-	210	195	670	230	197	794
Mov Cap-2 Maneuver	-	-	-	-	-	-	210	195	-	230	197	-
Stage 1	-	-	-	-	-	-	390	432	-	563	577	-
Stage 2	-	-	-	-	-	-	722	570	-	522	431	-

Approach	EB	WB	NB	SB
HCM Control Delay, s	0.3	0.2	14.6	17.4
HCM LOS			B	C

Minor Lane/Major Mvmt	NBLn1	EBL	EBT	EBR	WBL	WBT	WBR	SBLn1
Capacity (veh/h)	481	1135	-	-	930	-	-	350
HCM Lane V/C Ratio	0.222	0.021	-	-	0.009	-	-	0.17
HCM Control Delay (s)	14.6	8.2	-	-	8.9	-	-	17.4
HCM Lane LOS	B	A	-	-	A	-	-	C
HCM 95th %tile Q(veh)	0.8	0.1	-	-	0	-	-	0.6

Lane Group	EBL	EBT	WBL	WBT	NBL	NBT	SBL	SBT
Lane Configurations								
Traffic Volume (vph)	256	351	28	63	14	901	51	332
Future Volume (vph)	256	351	28	63	14	901	51	332
Turn Type	Perm	NA	Perm	NA	Perm	NA	Perm	NA
Protected Phases		4		8		2		6
Permitted Phases	4		8		2		6	
Detector Phase	4	4	8	8	2	2	6	6
Switch Phase								
Minimum Initial (s)	5.0	5.0	5.0	5.0	5.0	5.0	5.0	5.0
Minimum Split (s)	30.0	30.0	30.0	30.0	40.0	40.0	40.0	40.0
Total Split (s)	46.0	46.0	46.0	46.0	44.0	44.0	44.0	44.0
Total Split (%)	51.1%	51.1%	51.1%	51.1%	48.9%	48.9%	48.9%	48.9%
Yellow Time (s)	3.0	3.0	3.0	3.0	3.0	3.0	3.0	3.0
All-Red Time (s)	1.0	1.0	1.0	1.0	1.0	1.0	1.0	1.0
Lost Time Adjust (s)	0.0	0.0		0.0	0.0	0.0	0.0	0.0
Total Lost Time (s)	4.0	4.0		4.0	4.0	4.0	4.0	4.0
Lead/Lag								
Lead-Lag Optimize?								
Recall Mode	None	None	None	None	None	None	None	None

Intersection Summary
Cycle Length: 90
Actuated Cycle Length: 66.9
Natural Cycle: 70
Control Type: Actuated-Uncoordinated

Splits and Phases: 16: Orange St. & Pearl Av.

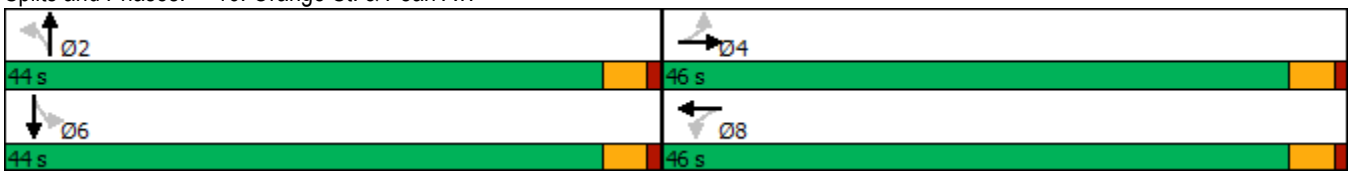

Movement	EBL	EBT	EBR	WBL	WBT	WBR	NBL	NBT	NBR	SBL	SBT	SBR
Lane Configurations												
Traffic Volume (veh/h)	256	351	138	28	63	174	14	901	80	51	332	24
Future Volume (veh/h)	256	351	138	28	63	174	14	901	80	51	332	24
Initial Q (Qb), veh	0	0	0	0	0	0	0	0	0	0	0	0
Ped-Bike Adj(A_pbT)	1.00		0.99	1.00		1.00	1.00		1.00	1.00		0.98
Parking Bus, Adj	1.00	1.00	1.00	1.00	1.00	1.00	1.00	1.00	1.00	1.00	1.00	1.00
Work Zone On Approach		No			No			No			No	
Adj Sat Flow, veh/h/ln	1673	1772	1772	1772	1772	1772	1673	1772	1772	1673	1772	1772
Adj Flow Rate, veh/h	267	366	119	29	66	151	15	939	77	53	346	23
Peak Hour Factor	0.96	0.96	0.96	0.96	0.96	0.96	0.96	0.96	0.96	0.96	0.96	0.96
Percent Heavy Veh, %	2	2	2	2	2	2	2	2	2	2	2	2
Cap, veh/h	473	569	185	103	209	393	457	1338	110	212	1360	90
Arrive On Green	0.44	0.44	0.44	0.44	0.44	0.44	0.43	0.43	0.43	0.43	0.43	0.43
Sat Flow, veh/h	1099	1279	416	85	471	884	956	3149	258	524	3200	212
Grp Volume(v), veh/h	267	0	485	246	0	0	15	502	514	53	181	188
Grp Sat Flow(s),veh/h/ln	1099	0	1694	1440	0	0	956	1683	1724	524	1683	1728
Q Serve(g_s), s	6.8	0.0	13.7	0.3	0.0	0.0	0.6	15.0	15.0	5.7	4.3	4.3
Cycle Q Clear(g_c), s	20.8	0.0	13.7	13.9	0.0	0.0	4.9	15.0	15.0	20.7	4.3	4.3
Prop In Lane	1.00		0.25	0.12		0.61	1.00		0.15	1.00		0.12
Lane Grp Cap(c), veh/h	473	0	753	706	0	0	457	715	733	212	715	734
V/C Ratio(X)	0.56	0.00	0.64	0.35	0.00	0.00	0.03	0.70	0.70	0.25	0.25	0.26
Avail Cap(c_a), veh/h	736	0	1159	1053	0	0	674	1097	1124	331	1097	1126
HCM Platoon Ratio	1.00	1.00	1.00	1.00	1.00	1.00	1.00	1.00	1.00	1.00	1.00	1.00
Upstream Filter(I)	1.00	0.00	1.00	1.00	0.00	0.00	1.00	1.00	1.00	1.00	1.00	1.00
Uniform Delay (d), s/veh	16.9	0.0	13.3	11.2	0.0	0.0	13.0	14.5	14.5	22.9	11.4	11.4
Incr Delay (d2), s/veh	1.1	0.0	0.9	0.3	0.0	0.0	0.0	1.5	1.5	0.7	0.2	0.2
Initial Q Delay(d3),s/veh	0.0	0.0	0.0	0.0	0.0	0.0	0.0	0.0	0.0	0.0	0.0	0.0
%ile BackOfQ(50%),veh/ln	3.3	0.0	4.8	2.0	0.0	0.0	0.1	5.4	5.5	0.7	1.5	1.5
Unsig. Movement Delay, s/veh												
LnGrp Delay(d),s/veh	18.0	0.0	14.2	11.5	0.0	0.0	13.0	16.0	15.9	23.7	11.6	11.6
LnGrp LOS	B	A	B	B	A	A	B	B	B	C	B	B
Approach Vol, veh/h		752			246			1031			422	
Approach Delay, s/veh		15.5			11.5			15.9			13.1	
Approach LOS		B			B			B			B	

Timer - Assigned Phs	2	4	6	8
Phs Duration (G+Y+Rc), s	30.1	31.3	30.1	31.3
Change Period (Y+Rc), s	4.0	4.0	4.0	4.0
Max Green Setting (Gmax), s	40.0	42.0	40.0	42.0
Max Q Clear Time (g_c+I1), s	17.0	22.8	22.7	15.9
Green Ext Time (p_c), s	9.1	4.5	3.1	1.8

Intersection Summary	
HCM 6th Ctrl Delay	14.9
HCM 6th LOS	B

Lane Group	EBL	EBT	WBL	WBT	NBL	NBT	SBL	SBT
Lane Configurations								
Traffic Volume (vph)	137	795	58	317	41	531	136	306
Future Volume (vph)	137	795	58	317	41	531	136	306
Turn Type	Prot	NA	Prot	NA	Prot	NA	Prot	NA
Protected Phases	7	4	3	8	5	2	1	6
Permitted Phases								
Detector Phase	7	4	3	8	5	2	1	6
Switch Phase								
Minimum Initial (s)	5.0	10.0	5.0	10.0	5.0	10.0	5.0	10.0
Minimum Split (s)	9.6	23.7	9.6	27.7	9.6	27.6	9.6	30.6
Total Split (s)	16.0	34.0	10.0	28.0	11.8	30.0	16.0	34.2
Total Split (%)	17.8%	37.8%	11.1%	31.1%	13.1%	33.3%	17.8%	38.0%
Yellow Time (s)	3.6	3.7	3.6	3.7	3.6	3.6	3.6	3.6
All-Red Time (s)	1.0	1.0	1.0	1.0	1.0	1.0	1.0	1.0
Lost Time Adjust (s)	0.0	0.0	0.0	0.0	0.0	0.0	0.0	0.0
Total Lost Time (s)	4.6	4.7	4.6	4.7	4.6	4.6	4.6	4.6
Lead/Lag	Lead	Lag	Lead	Lag	Lead	Lag	Lead	Lag
Lead-Lag Optimize?	Yes	Yes	Yes	Yes	Yes	Yes	Yes	Yes
Recall Mode	None	None	None	None	None	None	None	None

Intersection Summary
Cycle Length: 90
Actuated Cycle Length: 81.3
Natural Cycle: 90
Control Type: Actuated-Uncoordinated

Splits and Phases: 17: Orange St. & Redlands Bl.

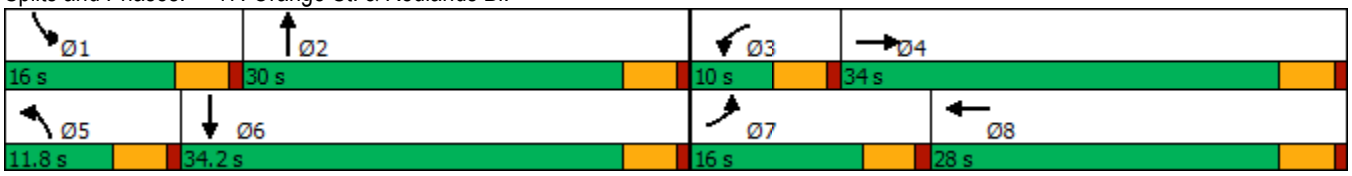

Movement	EBL	EBT	EBR	WBL	WBT	WBR	NBL	NBT	NBR	SBL	SBT	SBR
Lane Configurations												
Traffic Volume (veh/h)	137	795	105	58	317	254	41	531	40	136	306	70
Future Volume (veh/h)	137	795	105	58	317	254	41	531	40	136	306	70
Initial Q (Qb), veh	0	0	0	0	0	0	0	0	0	0	0	0
Ped-Bike Adj(A_pbT)	1.00		0.99	1.00		0.97	1.00		0.98	1.00		1.00
Parking Bus, Adj	1.00	1.00	1.00	1.00	1.00	1.00	1.00	1.00	1.00	1.00	1.00	1.00
Work Zone On Approach		No			No			No			No	
Adj Sat Flow, veh/h/ln	1673	1772	1772	1673	1772	1772	1673	1772	1772	1673	1772	1772
Adj Flow Rate, veh/h	151	874	79	64	348	198	45	584	34	149	336	54
Peak Hour Factor	0.91	0.91	0.91	0.91	0.91	0.91	0.91	0.91	0.91	0.91	0.91	0.91
Percent Heavy Veh, %	2	2	2	2	2	2	2	2	2	2	2	2
Cap, veh/h	183	1056	95	79	563	313	65	788	46	181	921	147
Arrive On Green	0.12	0.34	0.34	0.05	0.27	0.27	0.04	0.24	0.24	0.11	0.32	0.32
Sat Flow, veh/h	1594	3119	282	1594	2058	1145	1594	3229	188	1594	2908	463
Grp Volume(v), veh/h	151	472	481	64	283	263	45	304	314	149	193	197
Grp Sat Flow(s),veh/h/ln	1594	1683	1717	1594	1683	1520	1594	1683	1733	1594	1683	1687
Q Serve(g_s), s	6.8	18.8	18.8	2.9	10.7	11.1	2.0	12.1	12.2	6.7	6.5	6.6
Cycle Q Clear(g_c), s	6.8	18.8	18.8	2.9	10.7	11.1	2.0	12.1	12.2	6.7	6.5	6.6
Prop In Lane	1.00		0.16	1.00		0.75	1.00		0.11	1.00		0.27
Lane Grp Cap(c), veh/h	183	570	582	79	460	416	65	411	423	181	533	534
V/C Ratio(X)	0.82	0.83	0.83	0.81	0.62	0.63	0.69	0.74	0.74	0.82	0.36	0.37
Avail Cap(c_a), veh/h	249	677	690	118	538	486	157	587	604	249	684	685
HCM Platoon Ratio	1.00	1.00	1.00	1.00	1.00	1.00	1.00	1.00	1.00	1.00	1.00	1.00
Upstream Filter(I)	1.00	1.00	1.00	1.00	1.00	1.00	1.00	1.00	1.00	1.00	1.00	1.00
Uniform Delay (d), s/veh	31.5	22.1	22.1	34.3	23.1	23.3	34.5	25.4	25.4	31.6	19.2	19.3
Incr Delay (d2), s/veh	11.0	7.3	7.1	12.9	1.6	2.1	4.7	3.0	3.0	10.6	0.4	0.4
Initial Q Delay(d3),s/veh	0.0	0.0	0.0	0.0	0.0	0.0	0.0	0.0	0.0	0.0	0.0	0.0
%ile BackOfQ(50%),veh/ln	3.1	8.0	8.2	1.4	4.2	4.0	0.9	5.0	5.2	3.0	2.5	2.6
Unsig. Movement Delay, s/veh												
LnGrp Delay(d),s/veh	42.6	29.4	29.3	47.2	24.7	25.3	39.2	28.4	28.4	42.1	19.6	19.7
LnGrp LOS	D	C	C	D	C	C	D	C	C	D	B	B
Approach Vol, veh/h		1104			610			663			539	
Approach Delay, s/veh		31.2			27.3			29.1			25.9	
Approach LOS		C			C			C			C	

Timer - Assigned Phs	1	2	3	4	5	6	7	8
Phs Duration (G+Y+Rc), s	12.9	22.4	8.2	29.4	7.6	27.7	13.0	24.6
Change Period (Y+Rc), s	4.6	4.6	4.6	* 4.7	4.6	4.6	4.6	* 4.7
Max Green Setting (Gmax), s	11.4	25.4	5.4	* 29	7.2	29.6	11.4	* 23
Max Q Clear Time (g_c+I1), s	8.7	14.2	4.9	20.8	4.0	8.6	8.8	13.1
Green Ext Time (p_c), s	0.1	3.0	0.0	3.9	0.0	2.4	0.0	2.5

Intersection Summary	
HCM 6th Ctrl Delay	28.9
HCM 6th LOS	C

Notes

* HCM 6th computational engine requires equal clearance times for the phases crossing the barrier.

Lane Group	EBT	NBL	NBT	SBL	SBT
Lane Configurations					
Traffic Volume (vph)	13	17	562	102	307
Future Volume (vph)	13	17	562	102	307
Turn Type	NA	Perm	NA	Perm	NA
Protected Phases	4		2		6
Permitted Phases		2		6	
Detector Phase	4	2	2	6	6
Switch Phase					
Minimum Initial (s)	10.0	10.0	10.0	10.0	10.0
Minimum Split (s)	23.6	21.6	21.6	21.6	21.6
Total Split (s)	35.0	85.0	85.0	85.0	85.0
Total Split (%)	29.2%	70.8%	70.8%	70.8%	70.8%
Yellow Time (s)	3.6	3.6	3.6	3.6	3.6
All-Red Time (s)	1.0	1.0	1.0	1.0	1.0
Lost Time Adjust (s)	0.0	0.0	0.0	0.0	0.0
Total Lost Time (s)	4.6	4.6	4.6	4.6	4.6
Lead/Lag					
Lead-Lag Optimize?					
Recall Mode	None	None	None	None	None

Intersection Summary
Cycle Length: 120
Actuated Cycle Length: 29.9
Natural Cycle: 50
Control Type: Actuated-Uncoordinated

Splits and Phases: 18: Orange St. & State St.

Movement	EBL	EBT	EBR	WBL	WBT	WBR	NBL	NBT	NBR	SBL	SBT	SBR
Lane Configurations												
Traffic Volume (veh/h)	50	13	19	0	0	0	17	562	118	102	307	58
Future Volume (veh/h)	50	13	19	0	0	0	17	562	118	102	307	58
Initial Q (Qb), veh	0	0	0				0	0	0	0	0	0
Ped-Bike Adj(A_pbT)	1.00		0.98				0.97		0.98	0.99		0.94
Parking Bus, Adj	1.00	1.00	1.00				1.00	1.00	1.00	1.00	1.00	1.00
Work Zone On Approach		No						No			No	
Adj Sat Flow, veh/h/ln	1772	1772	1772				1673	1772	1772	1673	1772	1772
Adj Flow Rate, veh/h	52	14	15				18	585	117	106	320	53
Peak Hour Factor	0.96	0.96	0.96				0.96	0.96	0.96	0.96	0.96	0.96
Percent Heavy Veh, %	2	2	2				2	2	2	2	2	2
Cap, veh/h	202	55	58				642	1373	274	497	1415	231
Arrive On Green	0.19	0.19	0.19				0.49	0.49	0.49	0.49	0.49	0.49
Sat Flow, veh/h	1062	286	306				922	2784	555	698	2868	468
Grp Volume(v), veh/h	81	0	0				18	353	349	106	186	187
Grp Sat Flow(s),veh/h/ln	1655	0	0				922	1683	1656	698	1683	1653
Q Serve(g_s), s	1.2	0.0	0.0				0.3	3.9	3.9	3.3	1.8	1.9
Cycle Q Clear(g_c), s	1.2	0.0	0.0				2.2	3.9	3.9	7.3	1.8	1.9
Prop In Lane	0.64		0.19				1.00		0.34	1.00		0.28
Lane Grp Cap(c), veh/h	315	0	0				642	830	817	497	830	815
V/C Ratio(X)	0.26	0.00	0.00				0.03	0.43	0.43	0.21	0.22	0.23
Avail Cap(c_a), veh/h	1729	0	0				2735	4652	4575	2081	4652	4567
HCM Platoon Ratio	1.00	1.00	1.00				1.00	1.00	1.00	1.00	1.00	1.00
Upstream Filter(I)	1.00	0.00	0.00				1.00	1.00	1.00	1.00	1.00	1.00
Uniform Delay (d), s/veh	10.0	0.0	0.0				4.8	4.7	4.7	7.1	4.2	4.2
Incr Delay (d2), s/veh	0.4	0.0	0.0				0.0	0.3	0.4	0.2	0.1	0.1
Initial Q Delay(d3),s/veh	0.0	0.0	0.0				0.0	0.0	0.0	0.0	0.0	0.0
%ile BackOfQ(50%),veh/ln	0.4	0.0	0.0				0.0	0.7	0.7	0.3	0.3	0.3
Unsig. Movement Delay, s/veh												
LnGrp Delay(d),s/veh	10.4	0.0	0.0				4.9	5.1	5.1	7.3	4.3	4.4
LnGrp LOS	B	A	A				A	A	A	A	A	A
Approach Vol, veh/h		81						720			479	
Approach Delay, s/veh		10.4						5.1			5.0	
Approach LOS		B						A			A	

Timer - Assigned Phs	2	4	6
Phs Duration (G+Y+Rc), s	18.9	10.1	18.9
Change Period (Y+Rc), s	4.6	4.6	4.6
Max Green Setting (Gmax), s	80.4	30.4	80.4
Max Q Clear Time (g_c+I1), s	5.9	3.2	9.3
Green Ext Time (p_c), s	5.7	0.4	3.7

Intersection Summary	
HCM 6th Ctrl Delay	5.4
HCM 6th LOS	A

Lane Group	EBL	EBT	EBR	WBL	WBT	NBL	NBT	SBL	SBT
Lane Configurations									
Traffic Volume (vph)	166	332	192	31	255	73	374	52	212
Future Volume (vph)	166	332	192	31	255	73	374	52	212
Turn Type	Perm	NA	Perm	Perm	NA	Perm	NA	Perm	NA
Protected Phases		4			8		2		6
Permitted Phases	4		4	8		2		6	
Detector Phase	4	4	4	8	8	2	2	6	6
Switch Phase									
Minimum Initial (s)	10.0	10.0	10.0	10.0	10.0	10.0	10.0	10.0	10.0
Minimum Split (s)	21.6	21.6	21.6	21.6	21.6	21.6	21.6	22.6	22.6
Total Split (s)	33.0	33.0	33.0	33.0	33.0	27.0	27.0	27.0	27.0
Total Split (%)	55.0%	55.0%	55.0%	55.0%	55.0%	45.0%	45.0%	45.0%	45.0%
Yellow Time (s)	3.6	3.6	3.6	3.6	3.6	3.6	3.6	3.6	3.6
All-Red Time (s)	1.0	1.0	1.0	1.0	1.0	1.0	1.0	1.0	1.0
Lost Time Adjust (s)	0.0	0.0	0.0	0.0	0.0	0.0	0.0	0.0	0.0
Total Lost Time (s)	4.6	4.6	4.6	4.6	4.6	4.6	4.6	4.6	4.6
Lead/Lag									
Lead-Lag Optimize?									
Recall Mode	None	None	None	None	None	None	None	None	None

Intersection Summary
Cycle Length: 60
Actuated Cycle Length: 38.8
Natural Cycle: 50
Control Type: Actuated-Uncoordinated

Splits and Phases: 20: Cajon St./Orange St. & Citrus Av.

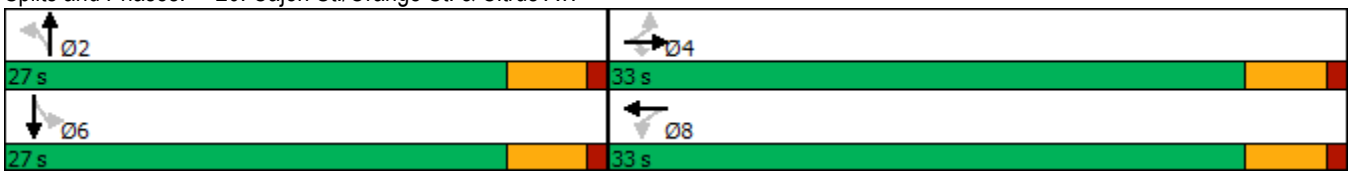

Movement	EBL	EBT	EBR	WBL	WBT	WBR	NBL	NBT	NBR	SBL	SBT	SBR
Lane Configurations												
Traffic Volume (veh/h)	166	332	192	31	255	158	73	374	21	52	212	63
Future Volume (veh/h)	166	332	192	31	255	158	73	374	21	52	212	63
Initial Q (Qb), veh	0	0	0	0	0	0	0	0	0	0	0	0
Ped-Bike Adj(A_pbT)	1.00		0.98	1.00		0.98	0.96		0.98	1.00		0.93
Parking Bus, Adj	1.00	1.00	1.00	1.00	1.00	1.00	1.00	1.00	1.00	1.00	1.00	1.00
Work Zone On Approach		No			No			No			No	
Adj Sat Flow, veh/h/ln	1673	1772	1772	1673	1772	1772	1673	1772	1772	1673	1772	1772
Adj Flow Rate, veh/h	171	342	158	32	263	134	75	386	17	54	219	54
Peak Hour Factor	0.97	0.97	0.97	0.97	0.97	0.97	0.97	0.97	0.97	0.97	0.97	0.97
Percent Heavy Veh, %	2	2	2	2	2	2	2	2	2	2	2	2
Cap, veh/h	448	813	677	459	504	257	428	1020	45	383	824	197
Arrive On Green	0.46	0.46	0.46	0.46	0.46	0.46	0.31	0.31	0.31	0.31	0.31	0.31
Sat Flow, veh/h	930	1772	1476	847	1098	560	1006	3281	144	926	2651	633
Grp Volume(v), veh/h	171	342	158	32	0	397	75	197	206	54	136	137
Grp Sat Flow(s),veh/h/ln	930	1772	1476	847	0	1658	1006	1683	1742	926	1683	1601
Q Serve(g_s), s	6.4	5.2	2.6	1.1	0.0	6.8	2.4	3.7	3.7	1.9	2.4	2.6
Cycle Q Clear(g_c), s	13.2	5.2	2.6	6.2	0.0	6.8	5.0	3.7	3.7	5.6	2.4	2.6
Prop In Lane	1.00		1.00	1.00		0.34	1.00		0.08	1.00		0.40
Lane Grp Cap(c), veh/h	448	813	677	459	0	761	428	523	542	383	523	498
V/C Ratio(X)	0.38	0.42	0.23	0.07	0.00	0.52	0.18	0.38	0.38	0.14	0.26	0.27
Avail Cap(c_a), veh/h	682	1259	1049	672	0	1178	679	943	976	614	943	897
HCM Platoon Ratio	1.00	1.00	1.00	1.00	1.00	1.00	1.00	1.00	1.00	1.00	1.00	1.00
Upstream Filter(I)	1.00	1.00	1.00	1.00	0.00	1.00	1.00	1.00	1.00	1.00	1.00	1.00
Uniform Delay (d), s/veh	12.4	7.3	6.6	9.3	0.0	7.7	12.3	10.8	10.8	13.0	10.3	10.4
Incr Delay (d2), s/veh	0.5	0.3	0.2	0.1	0.0	0.6	0.2	0.4	0.4	0.2	0.3	0.3
Initial Q Delay(d3),s/veh	0.0	0.0	0.0	0.0	0.0	0.0	0.0	0.0	0.0	0.0	0.0	0.0
%ile BackOfQ(50%),veh/ln	1.2	1.5	0.6	0.2	0.0	1.9	0.5	1.2	1.2	0.4	0.8	0.8
Unsig. Movement Delay, s/veh												
LnGrp Delay(d),s/veh	12.9	7.6	6.7	9.4	0.0	8.3	12.5	11.2	11.2	13.1	10.6	10.7
LnGrp LOS	B	A	A	A	A	A	B	B	B	B	B	B
Approach Vol, veh/h		671			429			478			327	
Approach Delay, s/veh		8.8			8.3			11.4			11.0	
Approach LOS		A			A			B			B	

Timer - Assigned Phs	2	4	6	8
Phs Duration (G+Y+Rc), s	17.0	22.9	17.0	22.9
Change Period (Y+Rc), s	4.6	4.6	4.6	4.6
Max Green Setting (Gmax), s	22.4	28.4	22.4	28.4
Max Q Clear Time (g_c+I1), s	7.0	15.2	7.6	8.8
Green Ext Time (p_c), s	2.5	3.1	1.7	2.8

Intersection Summary	
HCM 6th Ctrl Delay	9.7
HCM 6th LOS	A

Lane Group	EBL	EBT	EBR	WBL	WBT	WBR	NBT	SBT	SBR
Lane Configurations									
Traffic Volume (vph)	142	360	268	52	234	130	276	676	151
Future Volume (vph)	142	360	268	52	234	130	276	676	151
Turn Type	Perm	NA	Perm	Perm	NA	Perm	NA	NA	Perm
Protected Phases		4			8		2	6	
Permitted Phases	4		4	8		8			6
Detector Phase	4	4	4	8	8	8	2	6	6
Switch Phase									
Minimum Initial (s)	10.0	10.0	10.0	10.0	10.0	10.0	10.0	10.0	10.0
Minimum Split (s)	24.6	24.6	24.6	28.6	28.6	28.6	22.6	22.6	22.6
Total Split (s)	29.6	29.6	29.6	29.6	29.6	29.6	37.6	22.8	22.8
Total Split (%)	32.9%	32.9%	32.9%	32.9%	32.9%	32.9%	41.8%	25.3%	25.3%
Yellow Time (s)	3.6	3.6	3.6	3.6	3.6	3.6	3.6	3.6	3.6
All-Red Time (s)	1.0	1.0	1.0	1.0	1.0	1.0	1.0	1.0	1.0
Lost Time Adjust (s)	0.0	0.0	0.0	0.0	0.0	0.0	0.0	0.0	0.0
Total Lost Time (s)	4.6	4.6	4.6	4.6	4.6	4.6	4.6	4.6	4.6
Lead/Lag									
Lead-Lag Optimize?									
Recall Mode	None	None	None	None	None	None	None	None	None

Intersection Summary

Cycle Length: 90
Actuated Cycle Length: 67.4
Natural Cycle: 80
Control Type: Actuated-Uncoordinated

Splits and Phases: 21: Redlands Bl. & Citrus Av.

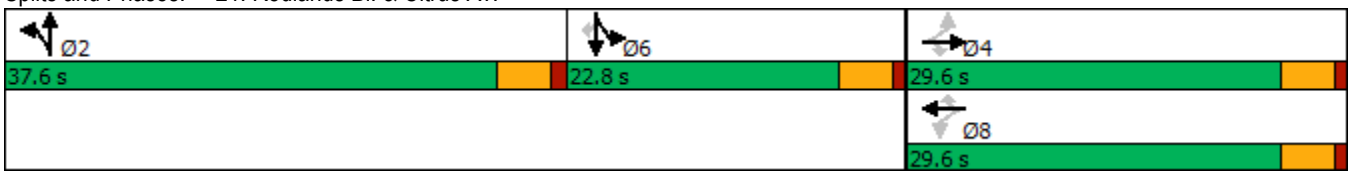

Movement	EBL	EBT	EBR	WBL	WBT	WBR	NBL	NBT	NBR	SBL	SBT	SBR
Lane Configurations												
Traffic Volume (veh/h)	142	360	268	52	234	130	87	276	51	151	676	151
Future Volume (veh/h)	142	360	268	52	234	130	87	276	51	151	676	151
Initial Q (Qb), veh	0	0	0	0	0	0	0	0	0	0	0	0
Ped-Bike Adj(A_pbT)	1.00		0.99	1.00		0.98	1.00		0.99	1.00		1.00
Parking Bus, Adj	1.00	1.00	1.00	1.00	1.00	1.00	1.00	1.00	1.00	1.00	1.00	1.00
Work Zone On Approach		No			No			No			No	
Adj Sat Flow, veh/h/ln	1673	1772	1772	1673	1772	1772	1772	1772	1772	1772	1772	1772
Adj Flow Rate, veh/h	149	379	179	55	246	84	92	291	42	159	712	0
Peak Hour Factor	0.95	0.95	0.95	0.95	0.95	0.95	0.95	0.95	0.95	0.95	0.95	0.95
Percent Heavy Veh, %	2	2	2	2	2	2	2	2	2	2	2	2
Cap, veh/h	313	559	467	214	559	465	138	458	69	167	790	
Arrive On Green	0.32	0.32	0.32	0.32	0.32	0.32	0.19	0.19	0.19	0.28	0.28	0.00
Sat Flow, veh/h	990	1772	1480	803	1772	1476	713	2370	356	598	2828	1502
Grp Volume(v), veh/h	149	379	179	55	246	84	224	0	201	464	407	0
Grp Sat Flow(s),veh/h/ln	990	1772	1480	803	1772	1476	1736	0	1702	1742	1683	1502
Q Serve(g_s), s	9.2	12.1	6.1	4.2	7.2	2.7	7.8	0.0	7.0	17.0	15.0	0.0
Cycle Q Clear(g_c), s	16.4	12.1	6.1	16.3	7.2	2.7	7.8	0.0	7.0	17.0	15.0	0.0
Prop In Lane	1.00		1.00	1.00		1.00	0.41		0.21	0.34		1.00
Lane Grp Cap(c), veh/h	313	559	467	214	559	465	336	0	329	487	470	
V/C Ratio(X)	0.48	0.68	0.38	0.26	0.44	0.18	0.67	0.00	0.61	0.95	0.87	
Avail Cap(c_a), veh/h	381	680	568	269	680	566	880	0	863	487	470	
HCM Platoon Ratio	1.00	1.00	1.00	1.00	1.00	1.00	1.00	1.00	1.00	1.00	1.00	1.00
Upstream Filter(I)	1.00	1.00	1.00	1.00	1.00	1.00	1.00	0.00	1.00	1.00	1.00	0.00
Uniform Delay (d), s/veh	24.2	19.4	17.4	26.5	17.7	16.2	24.3	0.0	24.0	23.0	22.3	0.0
Incr Delay (d2), s/veh	1.1	2.0	0.5	0.6	0.5	0.2	2.3	0.0	1.8	29.0	15.6	0.0
Initial Q Delay(d3),s/veh	0.0	0.0	0.0	0.0	0.0	0.0	0.0	0.0	0.0	0.0	0.0	0.0
%ile BackOfQ(50%),veh/ln	2.2	5.0	2.0	0.8	2.9	0.9	3.2	0.0	2.8	10.3	7.5	0.0
Unsig. Movement Delay, s/veh												
LnGrp Delay(d),s/veh	25.4	21.5	17.9	27.1	18.3	16.4	26.6	0.0	25.9	52.1	37.9	0.0
LnGrp LOS	C	C	B	C	B	B	C	A	C	D	D	
Approach Vol, veh/h		707			385			425			871	A
Approach Delay, s/veh		21.4			19.1			26.3			45.4	
Approach LOS		C			B			C			D	

Timer - Assigned Phs	2	4	6	8
Phs Duration (G+Y+Rc), s	17.2	25.1	22.8	25.1
Change Period (Y+Rc), s	4.6	4.6	4.6	4.6
Max Green Setting (Gmax), s	33.0	25.0	18.2	25.0
Max Q Clear Time (g_c+I1), s	9.8	18.4	19.0	18.3
Green Ext Time (p_c), s	2.6	2.2	0.0	1.2

Intersection Summary	
HCM 6th Ctrl Delay	30.7
HCM 6th LOS	C

Notes

Unsignalized Delay for [SBR] is excluded from calculations of the approach delay and intersection delay.

Lane Group	EBL	EBT	WBL	WBT	NBL	NBT	NBR	SBL	SBT	SBR
Lane Configurations										
Traffic Volume (vph)	96	425	65	315	14	168	70	90	177	142
Future Volume (vph)	96	425	65	315	14	168	70	90	177	142
Turn Type	Perm	NA	Perm	NA	Perm	NA	Perm	Perm	NA	Perm
Protected Phases		4		8		2			6	
Permitted Phases	4		8		2		2	6		6
Detector Phase	4	4	8	8	2	2	2	6	6	6
Switch Phase										
Minimum Initial (s)	10.0	10.0	10.0	10.0	10.0	10.0	10.0	10.0	10.0	10.0
Minimum Split (s)	22.6	22.6	24.6	24.6	26.7	26.7	26.7	25.7	25.7	25.7
Total Split (s)	31.0	31.0	31.0	31.0	29.0	29.0	29.0	29.0	29.0	29.0
Total Split (%)	51.7%	51.7%	51.7%	51.7%	48.3%	48.3%	48.3%	48.3%	48.3%	48.3%
Yellow Time (s)	3.6	3.6	3.6	3.6	3.7	3.7	3.7	3.7	3.7	3.7
All-Red Time (s)	1.0	1.0	1.0	1.0	1.0	1.0	1.0	1.0	1.0	1.0
Lost Time Adjust (s)	0.0	0.0	0.0	0.0		0.0	0.0		0.0	0.0
Total Lost Time (s)	4.6	4.6	4.6	4.6		4.7	4.7		4.7	4.7
Lead/Lag										
Lead-Lag Optimize?										
Recall Mode	None	None	None	None	None	None	None	None	None	None

Intersection Summary
Cycle Length: 60
Actuated Cycle Length: 41.9
Natural Cycle: 55
Control Type: Actuated-Uncoordinated

Splits and Phases: 22: Church St. & Citrus Av.

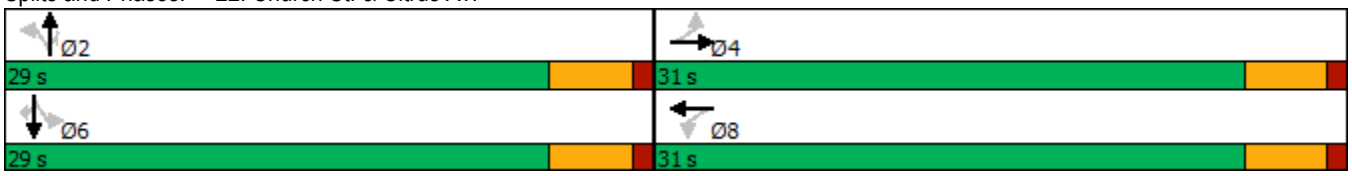

Movement	EBL	EBT	EBR	WBL	WBT	WBR	NBL	NBT	NBR	SBL	SBT	SBR
Lane Configurations												
Traffic Volume (veh/h)	96	425	21	65	315	23	14	168	70	90	177	142
Future Volume (veh/h)	96	425	21	65	315	23	14	168	70	90	177	142
Initial Q (Qb), veh	0	0	0	0	0	0	0	0	0	0	0	0
Ped-Bike Adj(A_pbT)	1.00		0.97	1.00		0.98	1.00		0.97	1.00		0.99
Parking Bus, Adj	1.00	1.00	1.00	1.00	1.00	1.00	1.00	1.00	1.00	1.00	1.00	1.00
Work Zone On Approach		No			No			No			No	
Adj Sat Flow, veh/h/ln	1673	1772	1772	1673	1772	1772	1772	1772	1772	1772	1772	1772
Adj Flow Rate, veh/h	102	452	20	69	335	20	15	179	58	96	188	105
Peak Hour Factor	0.94	0.94	0.94	0.94	0.94	0.94	0.94	0.94	0.94	0.94	0.94	0.94
Percent Heavy Veh, %	2	2	2	2	2	2	2	2	2	2	2	2
Cap, veh/h	473	701	31	389	689	41	131	519	449	255	355	459
Arrive On Green	0.42	0.42	0.42	0.42	0.42	0.42	0.31	0.31	0.31	0.31	0.31	0.31
Sat Flow, veh/h	968	1682	74	869	1653	99	51	1689	1459	365	1155	1492
Grp Volume(v), veh/h	102	0	472	69	0	355	194	0	58	284	0	105
Grp Sat Flow(s),veh/h/ln	968	0	1756	869	0	1751	1740	0	1459	1520	0	1492
Q Serve(g_s), s	2.9	0.0	7.2	2.3	0.0	5.0	0.0	0.0	1.0	2.4	0.0	1.8
Cycle Q Clear(g_c), s	7.9	0.0	7.2	9.6	0.0	5.0	2.9	0.0	1.0	5.3	0.0	1.8
Prop In Lane	1.00		0.04	1.00		0.06	0.08		1.00	0.34		1.00
Lane Grp Cap(c), veh/h	473	0	732	389	0	730	650	0	449	610	0	459
V/C Ratio(X)	0.22	0.00	0.64	0.18	0.00	0.49	0.30	0.00	0.13	0.47	0.00	0.23
Avail Cap(c_a), veh/h	828	0	1375	707	0	1371	1347	0	1051	1226	0	1075
HCM Platoon Ratio	1.00	1.00	1.00	1.00	1.00	1.00	1.00	1.00	1.00	1.00	1.00	1.00
Upstream Filter(I)	1.00	0.00	1.00	1.00	0.00	1.00	1.00	0.00	1.00	1.00	0.00	1.00
Uniform Delay (d), s/veh	10.1	0.0	7.8	11.7	0.0	7.2	9.1	0.0	8.4	9.8	0.0	8.7
Incr Delay (d2), s/veh	0.2	0.0	1.0	0.2	0.0	0.5	0.3	0.0	0.1	0.6	0.0	0.3
Initial Q Delay(d3),s/veh	0.0	0.0	0.0	0.0	0.0	0.0	0.0	0.0	0.0	0.0	0.0	0.0
%ile BackOfQ(50%),veh/ln	0.5	0.0	2.0	0.4	0.0	1.3	0.9	0.0	0.2	1.4	0.0	0.5
Unsig. Movement Delay, s/veh												
LnGrp Delay(d),s/veh	10.3	0.0	8.8	11.9	0.0	7.7	9.3	0.0	8.6	10.4	0.0	9.0
LnGrp LOS	B	A	A	B	A	A	A	A	A	B	A	A
Approach Vol, veh/h		574			424			252			389	
Approach Delay, s/veh		9.1			8.4			9.2			10.0	
Approach LOS		A			A			A			A	

Timer - Assigned Phs	2	4	6	8
Phs Duration (G+Y+Rc), s	15.1	18.7	15.1	18.7
Change Period (Y+Rc), s	* 4.7	4.6	* 4.7	4.6
Max Green Setting (Gmax), s	* 24	26.4	* 24	26.4
Max Q Clear Time (g_c+I1), s	4.9	9.9	7.3	11.6
Green Ext Time (p_c), s	1.3	3.4	2.0	2.3

Intersection Summary	
HCM 6th Ctrl Delay	9.1
HCM 6th LOS	A

Notes

* HCM 6th computational engine requires equal clearance times for the phases crossing the barrier.

APPENDIX 3.3:

EXISTING (2021) CONDITIONS TRAFFIC SIGNAL WARRANT ANALYSIS WORKSHEETS

This Page Intentionally Left Blank

Figure 4C-3. Warrant 3, Peak Hour

Traffic Conditions = **Existing (2021) Conditions - Weekday PM Peak Hour**

Major Street Name = **Eureka St.**

Total of Both Approaches (VPH) = **816**
Number of Approach Lanes on Major Street = **2**

Minor Street Name = **State St.**

High Volume Approach (VPH) = **78**
Number of Approach Lanes On Minor Street = **1**

SIGNAL WARRANT NOT SATISFIED

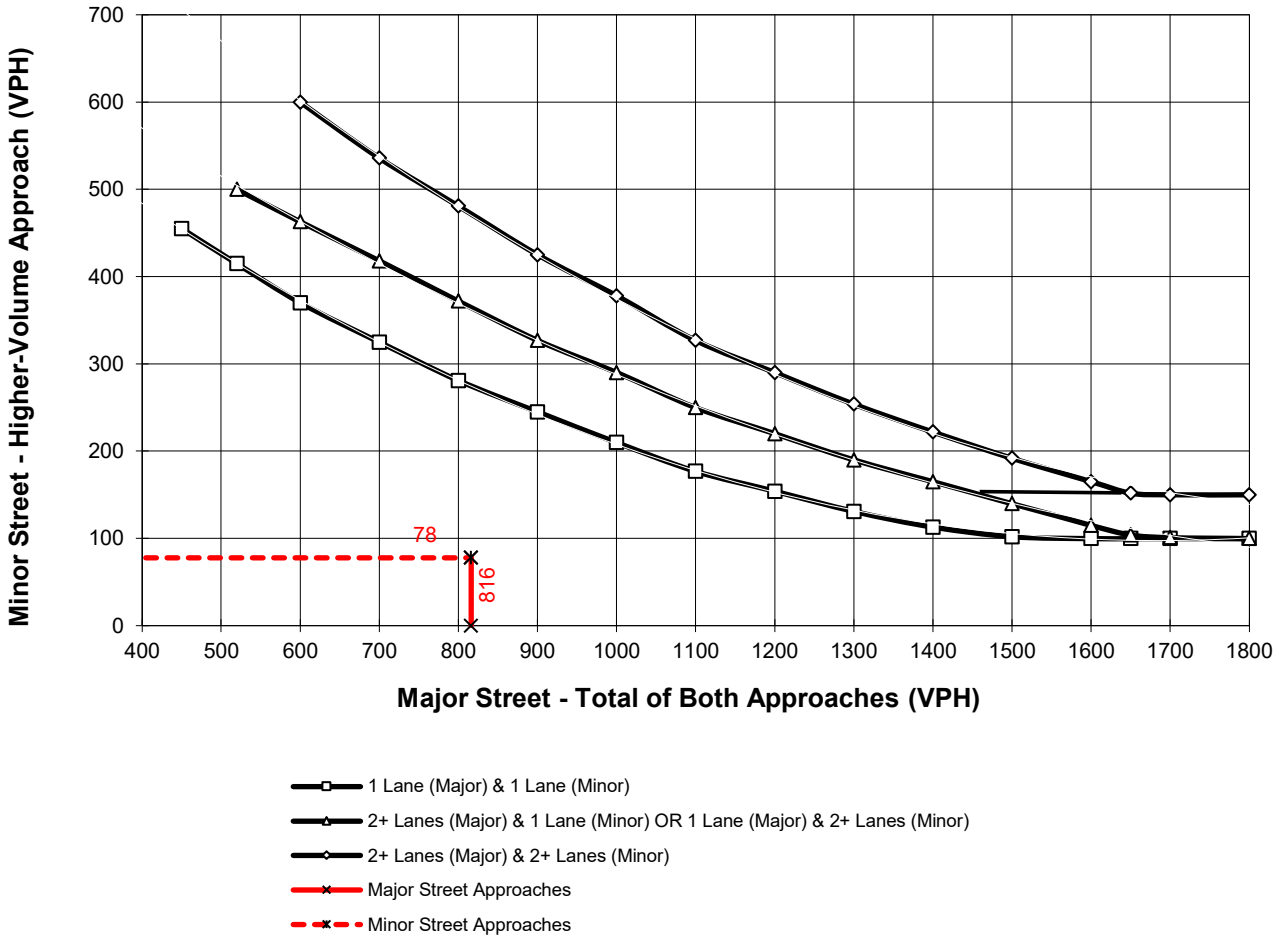

*Note: 150 vph applies as the lower threshold for a minor-street approach with two or more lanes and 100 vph applies as the lower threshold for a minor-street approach with one lane

Figure 4C-3. Warrant 3, Peak Hour

Traffic Conditions = **Existing (2021) Conditions - Weekday PM Peak Hour**

Major Street Name = **Citrus Av.**

Total of Both Approaches (VPH) = **1006**
Number of Approach Lanes on Major Street = **2**

Minor Street Name = **4th St.**

High Volume Approach (VPH) = **97**
Number of Approach Lanes On Minor Street = **1**

SIGNAL WARRANT NOT SATISFIED

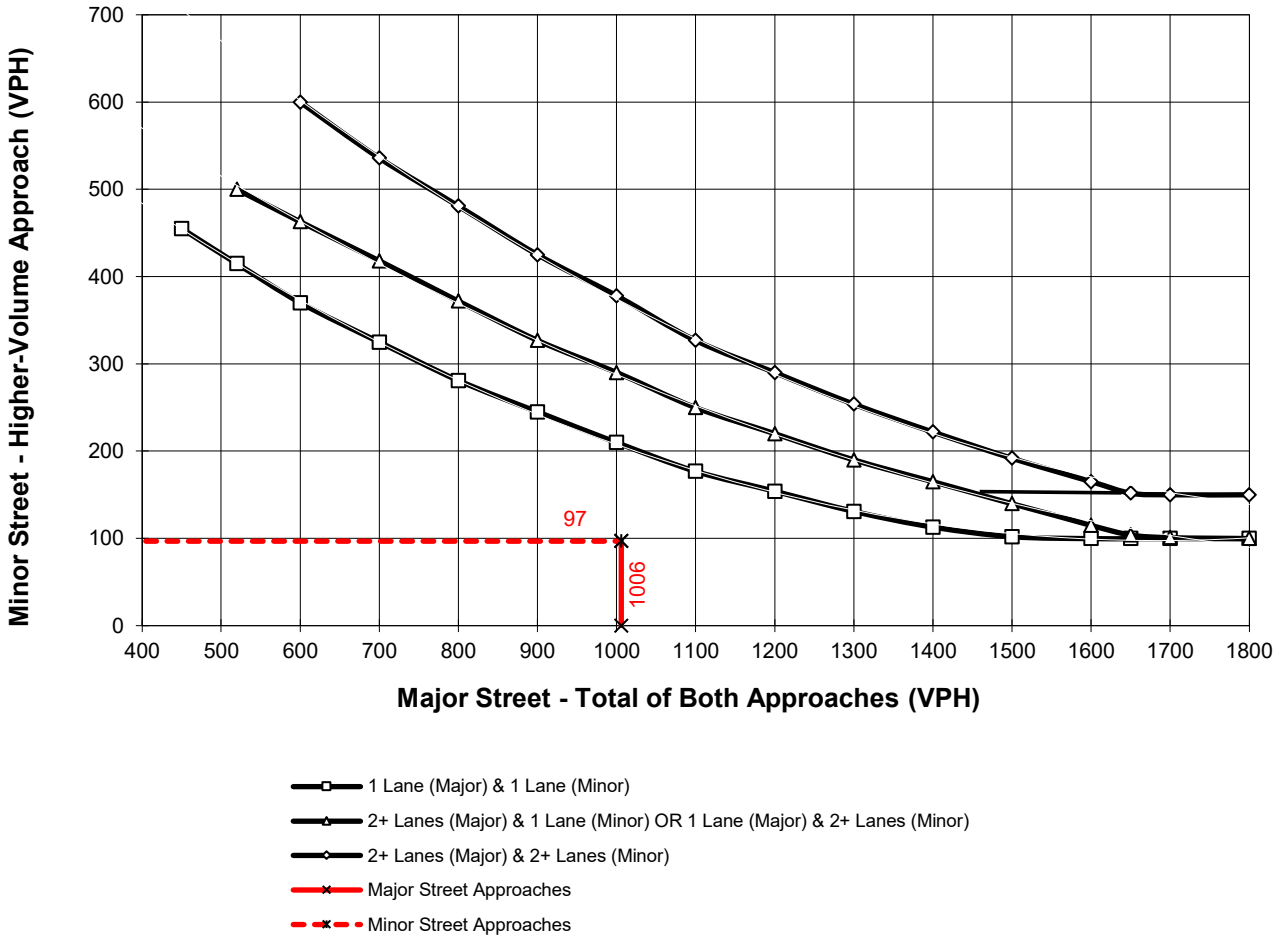

*Note: 150 vph applies as the lower threshold for a minor-street approach with two or more lanes and 100 vph applies as the lower threshold for a minor-street approach with one lane

APPENDIX 5.1:

E+P CONDITIONS INTERSECTION OPERATIONS ANALYSIS WORKSHEETS

This Page Intentionally Left Blank

Lane Group	EBL	EBT	WBL	WBT	NBL	NBT	SBL	SBT	SBR
Lane Configurations									
Traffic Volume (vph)	53	310	44	335	58	218	19	153	121
Future Volume (vph)	53	310	44	335	58	218	19	153	121
Turn Type	Prot	NA	Prot	NA	Perm	NA	Perm	NA	Perm
Protected Phases	7	4	3	8		2		6	
Permitted Phases					2		6		6
Detector Phase	7	4	3	8	2	2	6	6	6
Switch Phase									
Minimum Initial (s)	5.0	10.0	5.0	10.0	10.0	10.0	10.0	10.0	10.0
Minimum Split (s)	9.6	23.1	9.6	23.1	26.1	26.1	26.1	26.1	26.1
Total Split (s)	9.7	23.2	9.6	23.1	27.2	27.2	27.2	27.2	27.2
Total Split (%)	16.2%	38.7%	16.0%	38.5%	45.3%	45.3%	45.3%	45.3%	45.3%
Yellow Time (s)	3.6	4.1	3.6	4.1	4.1	4.1	4.1	4.1	4.1
All-Red Time (s)	1.0	1.0	1.0	1.0	1.0	1.0	1.0	1.0	1.0
Lost Time Adjust (s)	0.0	0.0	0.0	0.0		0.0		0.0	0.0
Total Lost Time (s)	4.6	5.1	4.6	5.1		5.1		5.1	5.1
Lead/Lag	Lead	Lag	Lead	Lag					
Lead-Lag Optimize?	Yes	Yes	Yes	Yes					
Recall Mode	None	None	None	None	None	None	None	None	None

Intersection Summary
Cycle Length: 60
Actuated Cycle Length: 47.3
Natural Cycle: 60
Control Type: Actuated-Uncoordinated

Splits and Phases: 1: Center St. & Brookside Av.

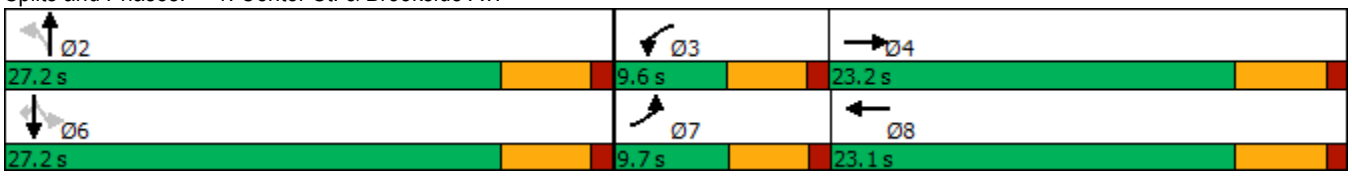

Movement	EBL	EBT	EBR	WBL	WBT	WBR	NBL	NBT	NBR	SBL	SBT	SBR
Lane Configurations												
Traffic Volume (veh/h)	53	310	61	44	335	40	58	218	44	19	153	121
Future Volume (veh/h)	53	310	61	44	335	40	58	218	44	19	153	121
Initial Q (Qb), veh	0	0	0	0	0	0	0	0	0	0	0	0
Ped-Bike Adj(A_pbT)	1.00		0.98	1.00		0.98	1.00		0.99	1.00		0.98
Parking Bus, Adj	1.00	1.00	1.00	1.00	1.00	1.00	1.00	1.00	1.00	1.00	1.00	1.00
Work Zone On Approach		No			No			No			No	
Adj Sat Flow, veh/h/ln	1673	1772	1772	1673	1772	1772	1772	1772	1772	1772	1772	1772
Adj Flow Rate, veh/h	58	341	48	48	368	33	64	240	33	21	168	97
Peak Hour Factor	0.91	0.91	0.91	0.91	0.91	0.91	0.91	0.91	0.91	0.91	0.91	0.91
Percent Heavy Veh, %	2	2	2	2	2	2	2	2	2	2	2	2
Cap, veh/h	94	460	65	82	473	42	162	350	44	122	458	407
Arrive On Green	0.06	0.30	0.30	0.05	0.30	0.30	0.28	0.28	0.28	0.28	0.28	0.28
Sat Flow, veh/h	1594	1514	213	1594	1599	143	202	1260	159	84	1650	1464
Grp Volume(v), veh/h	58	0	389	48	0	401	337	0	0	189	0	97
Grp Sat Flow(s),veh/h/ln	1594	0	1728	1594	0	1742	1621	0	0	1734	0	1464
Q Serve(g_s), s	1.4	0.0	8.2	1.2	0.0	8.5	3.9	0.0	0.0	0.0	0.0	2.1
Cycle Q Clear(g_c), s	1.4	0.0	8.2	1.2	0.0	8.5	7.5	0.0	0.0	3.5	0.0	2.1
Prop In Lane	1.00		0.12	1.00		0.08	0.19		0.10	0.11		1.00
Lane Grp Cap(c), veh/h	94	0	525	82	0	516	556	0	0	581	0	407
V/C Ratio(X)	0.61	0.00	0.74	0.58	0.00	0.78	0.61	0.00	0.00	0.33	0.00	0.24
Avail Cap(c_a), veh/h	202	0	775	198	0	777	979	0	0	1029	0	802
HCM Platoon Ratio	1.00	1.00	1.00	1.00	1.00	1.00	1.00	1.00	1.00	1.00	1.00	1.00
Upstream Filter(I)	1.00	0.00	1.00	1.00	0.00	1.00	1.00	0.00	0.00	1.00	0.00	1.00
Uniform Delay (d), s/veh	18.5	0.0	12.6	18.7	0.0	13.0	13.1	0.0	0.0	11.8	0.0	11.3
Incr Delay (d2), s/veh	2.4	0.0	2.1	2.4	0.0	2.9	1.1	0.0	0.0	0.3	0.0	0.3
Initial Q Delay(d3),s/veh	0.0	0.0	0.0	0.0	0.0	0.0	0.0	0.0	0.0	0.0	0.0	0.0
%ile BackOfQ(50%),veh/ln	0.5	0.0	2.7	0.4	0.0	2.9	2.3	0.0	0.0	1.1	0.0	0.5
Unsig. Movement Delay, s/veh												
LnGrp Delay(d),s/veh	20.9	0.0	14.7	21.1	0.0	15.8	14.2	0.0	0.0	12.1	0.0	11.6
LnGrp LOS	C	A	B	C	A	B	B	A	A	B	A	B
Approach Vol, veh/h		447			449			337			286	
Approach Delay, s/veh		15.5			16.4			14.2			11.9	
Approach LOS		B			B			B			B	

Timer - Assigned Phs		2	3	4		6	7	8
Phs Duration (G+Y+Rc), s		16.3	6.7	17.4		16.3	7.0	17.0
Change Period (Y+Rc), s		5.1	4.6	5.1		5.1	4.6	5.1
Max Green Setting (Gmax), s		22.1	5.0	18.1		22.1	5.1	18.0
Max Q Clear Time (g_c+I1), s		9.5	3.2	10.2		5.5	3.4	10.5
Green Ext Time (p_c), s		1.6	0.0	1.4		1.2	0.0	1.4

Intersection Summary	
HCM 6th Ctrl Delay	14.8
HCM 6th LOS	B

Lane Group	EBL	EBT	WBL	WBT	NBL	NBT	SBL	SBT
Lane Configurations								
Traffic Volume (vph)	29	317	34	580	38	112	138	405
Future Volume (vph)	29	317	34	580	38	112	138	405
Turn Type	Prot	NA	Prot	NA	Perm	NA	Perm	NA
Protected Phases	7	4	3	8		2		6
Permitted Phases					2		6	
Detector Phase	7	4	3	8	2	2	6	6
Switch Phase								
Minimum Initial (s)	5.0	10.0	5.0	10.0	10.0	10.0	10.0	10.0
Minimum Split (s)	9.6	25.7	9.6	25.7	28.6	28.6	28.6	28.6
Total Split (s)	11.0	33.0	12.0	34.0	45.0	45.0	45.0	45.0
Total Split (%)	12.2%	36.7%	13.3%	37.8%	50.0%	50.0%	50.0%	50.0%
Yellow Time (s)	3.6	3.7	3.6	3.7	3.6	3.6	3.6	3.6
All-Red Time (s)	1.0	1.0	1.0	1.0	1.0	1.0	1.0	1.0
Lost Time Adjust (s)	0.0	0.0	0.0	0.0		0.0		0.0
Total Lost Time (s)	4.6	4.7	4.6	4.7		4.6		4.6
Lead/Lag	Lead	Lag	Lead	Lag				
Lead-Lag Optimize?	Yes	Yes	Yes	Yes				
Recall Mode	None	None	None	None	None	None	None	None

Intersection Summary
Cycle Length: 90
Actuated Cycle Length: 66.3
Natural Cycle: 65
Control Type: Actuated-Uncoordinated

Splits and Phases: 2: Eureka St. & Redlands Bl.

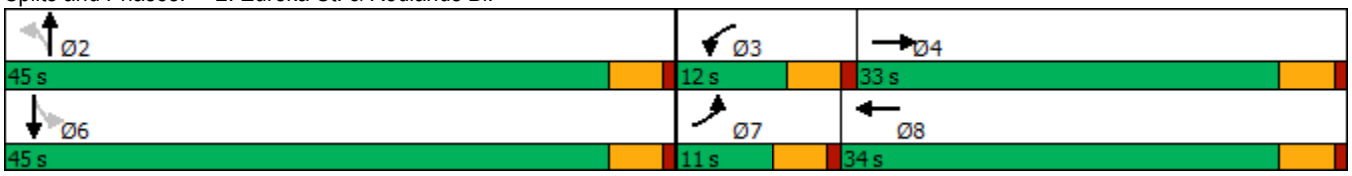

Movement	EBL	EBT	EBR	WBL	WBT	WBR	NBL	NBT	NBR	SBL	SBT	SBR
Lane Configurations												
Traffic Volume (veh/h)	29	317	25	34	580	35	38	112	181	138	405	112
Future Volume (veh/h)	29	317	25	34	580	35	38	112	181	138	405	112
Initial Q (Qb), veh	0	0	0	0	0	0	0	0	0	0	0	0
Ped-Bike Adj(A_pbT)	1.00		1.00	1.00		1.00	1.00		1.00	1.00		1.00
Parking Bus, Adj	1.00	1.00	1.00	1.00	1.00	1.00	1.00	1.00	1.00	1.00	1.00	1.00
Work Zone On Approach		No			No			No			No	
Adj Sat Flow, veh/h/ln	1673	1772	1772	1673	1772	1772	1772	1772	1772	1772	1772	1772
Adj Flow Rate, veh/h	35	377	16	40	690	32	45	133	204	164	482	106
Peak Hour Factor	0.84	0.84	0.84	0.84	0.84	0.84	0.84	0.84	0.84	0.84	0.84	0.84
Percent Heavy Veh, %	2	2	2	2	2	2	2	2	2	2	2	2
Cap, veh/h	59	966	41	66	975	45	159	414	574	283	776	180
Arrive On Green	0.04	0.29	0.29	0.04	0.30	0.30	0.42	0.42	0.42	0.42	0.42	0.42
Sat Flow, veh/h	1594	3291	139	1594	3276	152	190	983	1363	454	1841	426
Grp Volume(v), veh/h	35	192	201	40	354	368	178	0	204	370	0	382
Grp Sat Flow(s),veh/h/ln	1594	1683	1747	1594	1683	1744	1172	0	1363	1186	0	1535
Q Serve(g_s), s	1.2	5.2	5.2	1.4	10.7	10.7	0.8	0.0	5.8	10.7	0.0	10.9
Cycle Q Clear(g_c), s	1.2	5.2	5.2	1.4	10.7	10.7	11.7	0.0	5.8	16.5	0.0	10.9
Prop In Lane	1.00		0.08	1.00		0.09	0.25		1.00	0.44		0.28
Lane Grp Cap(c), veh/h	59	494	513	66	501	519	573	0	574	591	0	647
V/C Ratio(X)	0.59	0.39	0.39	0.61	0.71	0.71	0.31	0.00	0.36	0.63	0.00	0.59
Avail Cap(c_a), veh/h	179	835	866	207	864	896	967	0	965	978	0	1087
HCM Platoon Ratio	1.00	1.00	1.00	1.00	1.00	1.00	1.00	1.00	1.00	1.00	1.00	1.00
Upstream Filter(I)	1.00	1.00	1.00	1.00	1.00	1.00	1.00	0.00	1.00	1.00	0.00	1.00
Uniform Delay (d), s/veh	27.0	16.1	16.1	26.9	17.8	17.8	10.9	0.0	11.2	15.0	0.0	12.7
Incr Delay (d2), s/veh	3.4	0.5	0.5	3.4	1.9	1.8	0.3	0.0	0.4	1.1	0.0	0.9
Initial Q Delay(d3),s/veh	0.0	0.0	0.0	0.0	0.0	0.0	0.0	0.0	0.0	0.0	0.0	0.0
%ile BackOfQ(50%),veh/ln	0.5	1.9	2.0	0.6	4.0	4.1	1.3	0.0	1.6	3.9	0.0	3.5
Unsig. Movement Delay, s/veh												
LnGrp Delay(d),s/veh	30.5	16.6	16.6	30.3	19.7	19.6	11.2	0.0	11.6	16.1	0.0	13.6
LnGrp LOS	C	B	B	C	B	B	B	A	B	B	A	B
Approach Vol, veh/h		428			762			382			752	
Approach Delay, s/veh		17.7			20.2			11.4			14.8	
Approach LOS		B			C			B			B	

Timer - Assigned Phs		2	3	4		6	7	8
Phs Duration (G+Y+Rc), s		28.7	6.9	21.5		28.7	6.7	21.7
Change Period (Y+Rc), s		4.6	4.6	* 4.7		4.6	4.6	* 4.7
Max Green Setting (Gmax), s		40.4	7.4	* 28		40.4	6.4	* 29
Max Q Clear Time (g_c+I1), s		13.7	3.4	7.2		18.5	3.2	12.7
Green Ext Time (p_c), s		2.8	0.0	2.2		5.6	0.0	4.2

Intersection Summary	
HCM 6th Ctrl Delay	16.6
HCM 6th LOS	B

Notes

* HCM 6th computational engine requires equal clearance times for the phases crossing the barrier.

Intersection	
Int Delay, s/veh	0.7

Movement	WBL	WBR	NBT	NBR	SBL	SBT
Lane Configurations						
Traffic Vol, veh/h	0	59	272	67	0	464
Future Vol, veh/h	0	59	272	67	0	464
Conflicting Peds, #/hr	0	0	0	0	0	0
Sign Control	Stop	Stop	Free	Free	Free	Free
RT Channelized	-	None	-	None	-	None
Storage Length	-	0	-	-	-	-
Veh in Median Storage, #	0	-	0	-	-	0
Grade, %	0	-	0	-	-	0
Peak Hour Factor	92	92	92	92	92	92
Heavy Vehicles, %	2	2	2	2	2	2
Mvmt Flow	0	64	296	73	0	504

Major/Minor	Minor1		Major1		Major2	
Conflicting Flow All	-	185	0	0	-	-
Stage 1	-	-	-	-	-	-
Stage 2	-	-	-	-	-	-
Critical Hdwy	-	6.94	-	-	-	-
Critical Hdwy Stg 1	-	-	-	-	-	-
Critical Hdwy Stg 2	-	-	-	-	-	-
Follow-up Hdwy	-	3.32	-	-	-	-
Pot Cap-1 Maneuver	0	826	-	-	0	-
Stage 1	0	-	-	-	0	-
Stage 2	0	-	-	-	0	-
Platoon blocked, %			-	-		-
Mov Cap-1 Maneuver	-	826	-	-	-	-
Mov Cap-2 Maneuver	-	-	-	-	-	-
Stage 1	-	-	-	-	-	-
Stage 2	-	-	-	-	-	-

Approach	WB	NB	SB
HCM Control Delay, s	9.7	0	0
HCM LOS	A		

Minor Lane/Major Mvmt	NBT	NBR	WBLn1	SBT
Capacity (veh/h)	-	-	826	-
HCM Lane V/C Ratio	-	-	0.078	-
HCM Control Delay (s)	-	-	9.7	-
HCM Lane LOS	-	-	A	-
HCM 95th %tile Q(veh)	-	-	0.3	-

Intersection	
Int Delay, s/veh	1.7

Movement	EBL	EBR	NBL	NBT	SBT	SBR
Lane Configurations						
Traffic Vol, veh/h	25	26	55	313	401	63
Future Vol, veh/h	25	26	55	313	401	63
Conflicting Peds, #/hr	0	0	0	0	0	0
Sign Control	Stop	Stop	Free	Free	Free	Free
RT Channelized	-	None	-	None	-	None
Storage Length	0	-	-	-	-	-
Veh in Median Storage, #	0	-	-	0	0	-
Grade, %	0	-	-	0	0	-
Peak Hour Factor	75	75	75	75	75	75
Heavy Vehicles, %	2	2	2	2	2	2
Mvmt Flow	33	35	73	417	535	84

Major/Minor	Minor2		Major1		Major2	
Conflicting Flow All	932	310	619	0	-	0
Stage 1	577	-	-	-	-	-
Stage 2	355	-	-	-	-	-
Critical Hdwy	6.84	6.94	4.14	-	-	-
Critical Hdwy Stg 1	5.84	-	-	-	-	-
Critical Hdwy Stg 2	5.84	-	-	-	-	-
Follow-up Hdwy	3.52	3.32	2.22	-	-	-
Pot Cap-1 Maneuver	265	686	957	-	-	-
Stage 1	525	-	-	-	-	-
Stage 2	681	-	-	-	-	-
Platoon blocked, %				-	-	-
Mov Cap-1 Maneuver	239	686	957	-	-	-
Mov Cap-2 Maneuver	239	-	-	-	-	-
Stage 1	473	-	-	-	-	-
Stage 2	681	-	-	-	-	-

Approach	EB	NB	SB
HCM Control Delay, s	17.4	1.6	0
HCM LOS	C		

Minor Lane/Major Mvmt	NBL	NBT	EBLn1	SBT	SBR
Capacity (veh/h)	957	-	358	-	-
HCM Lane V/C Ratio	0.077	-	0.19	-	-
HCM Control Delay (s)	9.1	0.3	17.4	-	-
HCM Lane LOS	A	A	C	-	-
HCM 95th %tile Q(veh)	0.2	-	0.7	-	-

Intersection	
Int Delay, s/veh	1.3

Movement	WBL	WBR	NBT	NBR	SBL	SBT
Lane Configurations						
Traffic Vol, veh/h	0	112	256	90	0	426
Future Vol, veh/h	0	112	256	90	0	426
Conflicting Peds, #/hr	0	0	0	0	0	0
Sign Control	Stop	Stop	Free	Free	Free	Free
RT Channelized	-	None	-	None	-	None
Storage Length	-	0	-	-	-	-
Veh in Median Storage, #	0	-	0	-	-	0
Grade, %	0	-	0	-	-	0
Peak Hour Factor	92	92	92	92	92	92
Heavy Vehicles, %	2	2	2	2	2	2
Mvmt Flow	0	122	278	98	0	463

Major/Minor	Minor1		Major1		Major2	
Conflicting Flow All	-	188	0	0	-	-
Stage 1	-	-	-	-	-	-
Stage 2	-	-	-	-	-	-
Critical Hdwy	-	6.94	-	-	-	-
Critical Hdwy Stg 1	-	-	-	-	-	-
Critical Hdwy Stg 2	-	-	-	-	-	-
Follow-up Hdwy	-	3.32	-	-	-	-
Pot Cap-1 Maneuver	0	822	-	-	0	-
Stage 1	0	-	-	-	0	-
Stage 2	0	-	-	-	0	-
Platoon blocked, %			-	-		-
Mov Cap-1 Maneuver	-	822	-	-	-	-
Mov Cap-2 Maneuver	-	-	-	-	-	-
Stage 1	-	-	-	-	-	-
Stage 2	-	-	-	-	-	-

Approach	WB	NB	SB
HCM Control Delay, s	10.1	0	0
HCM LOS	B		

Minor Lane/Major Mvmt	NBT	NBR	WBLn1	SBT
Capacity (veh/h)	-	-	822	-
HCM Lane V/C Ratio	-	-	0.148	-
HCM Control Delay (s)	-	-	10.1	-
HCM Lane LOS	-	-	B	-
HCM 95th %tile Q(veh)	-	-	0.5	-

Lane Group	EBL	EBT	WBL	WBT	NBL	NBT	SBL	SBT
Lane Configurations								
Traffic Volume (vph)	94	388	40	400	14	66	117	203
Future Volume (vph)	94	388	40	400	14	66	117	203
Turn Type	Perm	NA	Perm	NA	Perm	NA	Perm	NA
Protected Phases		4		8		2		6
Permitted Phases	4		8		2		6	
Detector Phase	4	4	8	8	2	2	6	6
Switch Phase								
Minimum Initial (s)	10.0	10.0	10.0	10.0	10.0	10.0	10.0	10.0
Minimum Split (s)	23.6	23.6	23.6	23.6	27.6	27.6	27.6	27.6
Total Split (s)	28.0	28.0	28.0	28.0	32.0	32.0	32.0	32.0
Total Split (%)	46.7%	46.7%	46.7%	46.7%	53.3%	53.3%	53.3%	53.3%
Yellow Time (s)	3.6	3.6	3.6	3.6	3.6	3.6	3.6	3.6
All-Red Time (s)	1.0	1.0	1.0	1.0	1.0	1.0	1.0	1.0
Lost Time Adjust (s)	0.0	0.0	0.0	0.0		0.0		0.0
Total Lost Time (s)	4.6	4.6	4.6	4.6		4.6		4.6
Lead/Lag								
Lead-Lag Optimize?								
Recall Mode	None	None	None	None	None	None	None	None

Intersection Summary
Cycle Length: 60
Actuated Cycle Length: 41.5
Natural Cycle: 55
Control Type: Actuated-Uncoordinated

Splits and Phases: 6: Eureka St. & Brookside Av./Citrus Av.

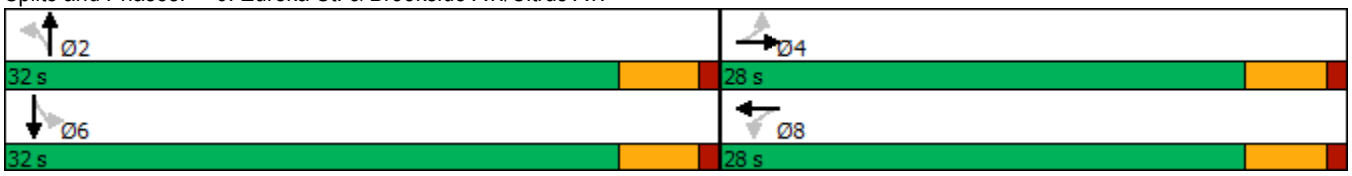

Movement	EBL	EBT	EBR	WBL	WBT	WBR	NBL	NBT	NBR	SBL	SBT	SBR
Lane Configurations												
Traffic Volume (veh/h)	94	388	28	40	400	176	14	66	7	117	203	170
Future Volume (veh/h)	94	388	28	40	400	176	14	66	7	117	203	170
Initial Q (Qb), veh	0	0	0	0	0	0	0	0	0	0	0	0
Ped-Bike Adj(A_pbT)	1.00		0.97	1.00		0.98	1.00		0.99	0.99		0.99
Parking Bus, Adj	1.00	1.00	1.00	1.00	1.00	1.00	1.00	1.00	1.00	1.00	1.00	1.00
Work Zone On Approach		No			No			No			No	
Adj Sat Flow, veh/h/ln	1673	1772	1772	1673	1772	1772	1772	1772	1772	1772	1772	1772
Adj Flow Rate, veh/h	119	491	31	51	506	210	18	84	9	148	257	178
Peak Hour Factor	0.79	0.79	0.79	0.79	0.79	0.79	0.79	0.79	0.79	0.79	0.79	0.79
Percent Heavy Veh, %	2	2	2	2	2	2	2	2	2	2	2	2
Cap, veh/h	368	1385	87	453	997	412	204	791	86	337	475	326
Arrive On Green	0.43	0.43	0.43	0.43	0.43	0.43	0.34	0.34	0.34	0.34	0.34	0.34
Sat Flow, veh/h	694	3210	202	828	2311	954	249	2341	254	606	1407	965
Grp Volume(v), veh/h	119	257	265	51	368	348	56	0	55	319	0	264
Grp Sat Flow(s),veh/h/ln	694	1683	1728	828	1683	1581	1281	0	1563	1545	0	1432
Q Serve(g_s), s	6.0	4.1	4.1	1.8	6.3	6.4	0.1	0.0	1.0	4.8	0.0	6.0
Cycle Q Clear(g_c), s	12.4	4.1	4.1	5.9	6.3	6.4	6.1	0.0	1.0	6.7	0.0	6.0
Prop In Lane	1.00		0.12	1.00		0.60	0.32		0.16	0.46		0.67
Lane Grp Cap(c), veh/h	368	726	746	453	726	682	552	0	528	654	0	484
V/C Ratio(X)	0.32	0.35	0.36	0.11	0.51	0.51	0.10	0.00	0.10	0.49	0.00	0.55
Avail Cap(c_a), veh/h	476	987	1014	581	987	927	1036	0	1073	1181	0	983
HCM Platoon Ratio	1.00	1.00	1.00	1.00	1.00	1.00	1.00	1.00	1.00	1.00	1.00	1.00
Upstream Filter(I)	1.00	1.00	1.00	1.00	1.00	1.00	1.00	0.00	1.00	1.00	0.00	1.00
Uniform Delay (d), s/veh	12.8	7.6	7.6	9.6	8.2	8.3	9.1	0.0	9.1	10.9	0.0	10.7
Incr Delay (d2), s/veh	0.5	0.3	0.3	0.1	0.5	0.6	0.1	0.0	0.1	0.6	0.0	1.0
Initial Q Delay(d3),s/veh	0.0	0.0	0.0	0.0	0.0	0.0	0.0	0.0	0.0	0.0	0.0	0.0
%ile BackOfQ(50%),veh/ln	0.8	1.0	1.1	0.3	1.8	1.7	0.3	0.0	0.3	2.0	0.0	1.6
Unsig. Movement Delay, s/veh												
LnGrp Delay(d),s/veh	13.3	7.9	7.9	9.7	8.8	8.9	9.2	0.0	9.2	11.4	0.0	11.7
LnGrp LOS	B	A	A	A	A	A	A	A	A	B	A	B
Approach Vol, veh/h		641			767			111			583	
Approach Delay, s/veh		8.9			8.9			9.2			11.5	
Approach LOS		A			A			A			B	

Timer - Assigned Phs	2	4	6	8
Phs Duration (G+Y+Rc), s	18.1	21.8	18.1	21.8
Change Period (Y+Rc), s	4.6	4.6	4.6	4.6
Max Green Setting (Gmax), s	27.4	23.4	27.4	23.4
Max Q Clear Time (g_c+I1), s	8.1	14.4	8.7	8.4
Green Ext Time (p_c), s	0.5	2.7	3.8	4.6

Intersection Summary	
HCM 6th Ctrl Delay	9.6
HCM 6th LOS	A

Intersection	
Int Delay, s/veh	0.7

Movement	WBL	WBR	NBT	NBR	SBL	SBT
Lane Configurations						
Traffic Vol, veh/h	0	0	87	0	33	239
Future Vol, veh/h	0	0	87	0	33	239
Conflicting Peds, #/hr	0	0	0	0	0	0
Sign Control	Stop	Stop	Free	Free	Free	Free
RT Channelized	-	None	-	None	-	None
Storage Length	-	0	-	-	-	-
Veh in Median Storage, #	0	-	0	-	-	0
Grade, %	0	-	0	-	-	0
Peak Hour Factor	92	92	92	92	92	92
Heavy Vehicles, %	2	2	2	2	2	2
Mvmt Flow	0	0	95	0	36	260

Major/Minor	Minor1		Major1		Major2	
Conflicting Flow All	-	95	0	0	95	0
Stage 1	-	-	-	-	-	-
Stage 2	-	-	-	-	-	-
Critical Hdwy	-	6.22	-	-	4.12	-
Critical Hdwy Stg 1	-	-	-	-	-	-
Critical Hdwy Stg 2	-	-	-	-	-	-
Follow-up Hdwy	-	3.318	-	-	2.218	-
Pot Cap-1 Maneuver	0	962	-	-	1499	-
Stage 1	0	-	-	-	-	-
Stage 2	0	-	-	-	-	-
Platoon blocked, %			-	-		-
Mov Cap-1 Maneuver	-	962	-	-	1499	-
Mov Cap-2 Maneuver	-	-	-	-	-	-
Stage 1	-	-	-	-	-	-
Stage 2	-	-	-	-	-	-

Approach	WB	NB	SB
HCM Control Delay, s	0	0	0.9
HCM LOS	A		

Minor Lane/Major Mvmt	NBT	NBR	WBLn1	SBL	SBT
Capacity (veh/h)	-	-	-	1499	-
HCM Lane V/C Ratio	-	-	-	0.024	-
HCM Control Delay (s)	-	-	0	7.5	0
HCM Lane LOS	-	-	A	A	A
HCM 95th %tile Q(veh)	-	-	-	0.1	-

Intersection	
Int Delay, s/veh	0.1

Movement	EBT	EBR	WBL	WBT	NBL	NBR
Lane Configurations						
Traffic Vol, veh/h	495	17	0	617	0	11
Future Vol, veh/h	495	17	0	617	0	11
Conflicting Peds, #/hr	0	0	0	0	0	0
Sign Control	Free	Free	Free	Free	Stop	Stop
RT Channelized	-	None	-	None	-	None
Storage Length	-	-	-	-	-	0
Veh in Median Storage, #	0	-	-	0	0	-
Grade, %	0	-	-	0	0	-
Peak Hour Factor	92	92	92	92	92	92
Heavy Vehicles, %	2	2	2	2	2	2
Mvmt Flow	538	18	0	671	0	12

Major/Minor	Major1		Major2		Minor1	
Conflicting Flow All	0	0	-	-	-	278
Stage 1	-	-	-	-	-	-
Stage 2	-	-	-	-	-	-
Critical Hdwy	-	-	-	-	-	6.94
Critical Hdwy Stg 1	-	-	-	-	-	-
Critical Hdwy Stg 2	-	-	-	-	-	-
Follow-up Hdwy	-	-	-	-	-	3.32
Pot Cap-1 Maneuver	-	-	0	-	0	719
Stage 1	-	-	0	-	0	-
Stage 2	-	-	0	-	0	-
Platoon blocked, %	-	-		-		
Mov Cap-1 Maneuver	-	-	-	-	-	719
Mov Cap-2 Maneuver	-	-	-	-	-	-
Stage 1	-	-	-	-	-	-
Stage 2	-	-	-	-	-	-

Approach	EB	WB	NB
HCM Control Delay, s	0	0	10.1
HCM LOS			B

Minor Lane/Major Mvmt	NBLn1	EBT	EBR	WBT
Capacity (veh/h)	719	-	-	-
HCM Lane V/C Ratio	0.017	-	-	-
HCM Control Delay (s)	10.1	-	-	-
HCM Lane LOS	B	-	-	-
HCM 95th %tile Q(veh)	0.1	-	-	-

Lane Group	EBL	EBT	WBL	WBT	NBL	NBT	SBL	SBT
Lane Configurations								
Traffic Volume (vph)	2	620	29	635	8	0	6	0
Future Volume (vph)	2	620	29	635	8	0	6	0
Turn Type	Prot	NA	Prot	NA	Perm	NA	Perm	NA
Protected Phases	7	4	3	8		2		6
Permitted Phases					2		6	
Detector Phase	7	4	3	8	2	2	6	6
Switch Phase								
Minimum Initial (s)	5.0	10.0	5.0	10.0	10.0	10.0	10.0	10.0
Minimum Split (s)	9.6	21.7	9.6	21.7	24.6	24.6	24.6	24.6
Total Split (s)	9.6	25.6	9.6	25.6	24.8	24.8	24.8	24.8
Total Split (%)	16.0%	42.7%	16.0%	42.7%	41.3%	41.3%	41.3%	41.3%
Yellow Time (s)	3.6	3.7	3.6	3.7	3.6	3.6	3.6	3.6
All-Red Time (s)	1.0	1.0	1.0	1.0	1.0	1.0	1.0	1.0
Lost Time Adjust (s)	0.0	0.0	0.0	0.0		0.0		0.0
Total Lost Time (s)	4.6	4.7	4.6	4.7		4.6		4.6
Lead/Lag	Lead	Lag	Lead	Lag				
Lead-Lag Optimize?	Yes	Yes	Yes	Yes				
Recall Mode	None	None	None	None	None	None	None	None

Intersection Summary
Cycle Length: 60
Actuated Cycle Length: 38.4
Natural Cycle: 60
Control Type: Actuated-Uncoordinated

Splits and Phases: 9: 3rd St. & Redlands Bl.

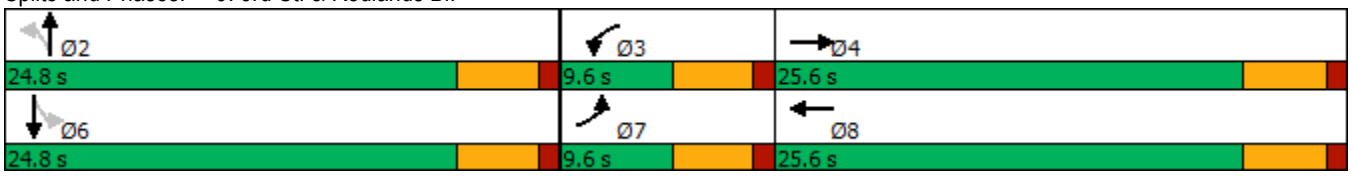

Movement	EBL	EBT	EBR	WBL	WBT	WBR	NBL	NBT	NBR	SBL	SBT	SBR
Lane Configurations												
Traffic Volume (veh/h)	2	620	15	29	635	6	8	0	108	6	0	5
Future Volume (veh/h)	2	620	15	29	635	6	8	0	108	6	0	5
Initial Q (Qb), veh	0	0	0	0	0	0	0	0	0	0	0	0
Ped-Bike Adj(A_pbT)	1.00		0.99	1.00		1.00	0.99		1.00	1.00		1.00
Parking Bus, Adj	1.00	1.00	1.00	1.00	1.00	1.00	1.00	1.00	1.00	1.00	1.00	1.00
Work Zone On Approach		No			No			No			No	
Adj Sat Flow, veh/h/ln	1673	1772	1772	1673	1772	1772	1772	1772	1772	1772	1772	1772
Adj Flow Rate, veh/h	3	805	18	38	825	8	10	0	139	8	0	3
Peak Hour Factor	0.77	0.77	0.77	0.77	0.77	0.77	0.77	0.77	0.77	0.77	0.77	0.77
Percent Heavy Veh, %	2	2	2	2	2	2	2	2	2	2	2	2
Cap, veh/h	7	1220	27	69	1373	13	111	13	316	379	24	89
Arrive On Green	0.00	0.36	0.36	0.04	0.40	0.40	0.23	0.00	0.23	0.23	0.00	0.23
Sat Flow, veh/h	1594	3366	75	1594	3416	33	42	59	1404	951	108	397
Grp Volume(v), veh/h	3	403	420	38	407	426	149	0	0	11	0	0
Grp Sat Flow(s),veh/h/ln	1594	1683	1758	1594	1683	1766	1505	0	0	1455	0	0
Q Serve(g_s), s	0.1	7.6	7.6	0.9	7.2	7.2	0.0	0.0	0.0	0.0	0.0	0.0
Cycle Q Clear(g_c), s	0.1	7.6	7.6	0.9	7.2	7.2	3.2	0.0	0.0	0.2	0.0	0.0
Prop In Lane	1.00		0.04	1.00		0.02	0.07		0.93	0.73		0.27
Lane Grp Cap(c), veh/h	7	610	637	69	677	710	441	0	0	493	0	0
V/C Ratio(X)	0.46	0.66	0.66	0.55	0.60	0.60	0.34	0.00	0.00	0.02	0.00	0.00
Avail Cap(c_a), veh/h	211	933	974	211	933	978	903	0	0	898	0	0
HCM Platoon Ratio	1.00	1.00	1.00	1.00	1.00	1.00	1.00	1.00	1.00	1.00	1.00	1.00
Upstream Filter(I)	1.00	1.00	1.00	1.00	1.00	1.00	1.00	0.00	0.00	1.00	0.00	0.00
Uniform Delay (d), s/veh	18.7	10.1	10.1	17.7	8.9	8.9	12.6	0.0	0.0	11.4	0.0	0.0
Incr Delay (d2), s/veh	17.5	1.2	1.2	2.5	0.9	0.8	0.4	0.0	0.0	0.0	0.0	0.0
Initial Q Delay(d3),s/veh	0.0	0.0	0.0	0.0	0.0	0.0	0.0	0.0	0.0	0.0	0.0	0.0
%ile BackOfQ(50%),veh/ln	0.1	2.2	2.3	0.3	2.0	2.1	1.0	0.0	0.0	0.1	0.0	0.0
Unsig. Movement Delay, s/veh												
LnGrp Delay(d),s/veh	36.2	11.3	11.2	20.2	9.8	9.7	13.0	0.0	0.0	11.4	0.0	0.0
LnGrp LOS	D	B	B	C	A	A	B	A	A	B	A	A
Approach Vol, veh/h		826			871			149			11	
Approach Delay, s/veh		11.4			10.2			13.0			11.4	
Approach LOS		B			B			B			B	

Timer - Assigned Phs		2	3	4		6	7	8
Phs Duration (G+Y+Rc), s		13.1	6.2	18.4		13.1	4.8	19.9
Change Period (Y+Rc), s		4.6	4.6	* 4.7		4.6	4.6	* 4.7
Max Green Setting (Gmax), s		20.2	5.0	* 21		20.2	5.0	* 21
Max Q Clear Time (g_c+I1), s		5.2	2.9	9.6		2.2	2.1	9.2
Green Ext Time (p_c), s		0.7	0.0	4.0		0.0	0.0	4.1

Intersection Summary	
HCM 6th Ctrl Delay	10.9
HCM 6th LOS	B

Notes

* HCM 6th computational engine requires equal clearance times for the phases crossing the barrier.

Intersection	
Int Delay, s/veh	0.5

Movement	EBL	EBT	WBT	WBR	SBL	SBR
Lane Configurations						
Traffic Vol, veh/h	0	506	580	121	8	37
Future Vol, veh/h	0	506	580	121	8	37
Conflicting Peds, #/hr	0	0	0	0	0	0
Sign Control	Free	Free	Free	Free	Stop	Stop
RT Channelized	-	None	-	None	-	None
Storage Length	100	-	-	-	0	-
Veh in Median Storage, #	-	0	0	-	0	-
Grade, %	-	0	0	-	0	-
Peak Hour Factor	92	92	92	92	92	92
Heavy Vehicles, %	2	2	2	2	2	2
Mvmt Flow	0	550	630	132	9	40

Major/Minor	Major1		Major2		Minor2	
Conflicting Flow All	762	0	-	0	971	381
Stage 1	-	-	-	-	696	-
Stage 2	-	-	-	-	275	-
Critical Hdwy	4.14	-	-	-	6.84	6.94
Critical Hdwy Stg 1	-	-	-	-	5.84	-
Critical Hdwy Stg 2	-	-	-	-	5.84	-
Follow-up Hdwy	2.22	-	-	-	3.52	3.32
Pot Cap-1 Maneuver	846	-	-	-	250	617
Stage 1	-	-	-	-	456	-
Stage 2	-	-	-	-	747	-
Platoon blocked, %		-	-	-		
Mov Cap-1 Maneuver	846	-	-	-	250	617
Mov Cap-2 Maneuver	-	-	-	-	250	-
Stage 1	-	-	-	-	456	-
Stage 2	-	-	-	-	747	-

Approach	EB	WB	SB
HCM Control Delay, s	0	0	13.2
HCM LOS			B

Minor Lane/Major Mvmt	EBL	EBT	WBT	WBR	SBLn1
Capacity (veh/h)	846	-	-	-	489
HCM Lane V/C Ratio	-	-	-	-	0.1
HCM Control Delay (s)	0	-	-	-	13.2
HCM Lane LOS	A	-	-	-	B
HCM 95th %tile Q(veh)	0	-	-	-	0.3

Intersection	
Int Delay, s/veh	0.6

Movement	EBT	EBR	WBL	WBT	NBL	NBR
Lane Configurations						
Traffic Vol, veh/h	647	87	0	671	0	75
Future Vol, veh/h	647	87	0	671	0	75
Conflicting Peds, #/hr	0	0	0	0	0	0
Sign Control	Free	Free	Free	Free	Stop	Stop
RT Channelized	-	None	-	None	-	None
Storage Length	-	-	-	-	-	0
Veh in Median Storage, #	0	-	-	0	0	-
Grade, %	0	-	-	0	0	-
Peak Hour Factor	92	92	92	92	92	92
Heavy Vehicles, %	2	2	2	2	2	2
Mvmt Flow	703	95	0	729	0	82

Major/Minor	Major1		Major2		Minor1	
Conflicting Flow All	0	0	-	-	-	399
Stage 1	-	-	-	-	-	-
Stage 2	-	-	-	-	-	-
Critical Hdwy	-	-	-	-	-	6.94
Critical Hdwy Stg 1	-	-	-	-	-	-
Critical Hdwy Stg 2	-	-	-	-	-	-
Follow-up Hdwy	-	-	-	-	-	3.32
Pot Cap-1 Maneuver	-	-	0	-	0	601
Stage 1	-	-	0	-	0	-
Stage 2	-	-	0	-	0	-
Platoon blocked, %	-	-		-		
Mov Cap-1 Maneuver	-	-	-	-	-	601
Mov Cap-2 Maneuver	-	-	-	-	-	-
Stage 1	-	-	-	-	-	-
Stage 2	-	-	-	-	-	-

Approach	EB	WB	NB
HCM Control Delay, s	0	0	11.9
HCM LOS			B

Minor Lane/Major Mvmt	NBLn1	EBT	EBR	WBT
Capacity (veh/h)	601	-	-	-
HCM Lane V/C Ratio	0.136	-	-	-
HCM Control Delay (s)	11.9	-	-	-
HCM Lane LOS	B	-	-	-
HCM 95th %tile Q(veh)	0.5	-	-	-

Intersection	
Int Delay, s/veh	1.1

Movement	EBT	EBR	WBL	WBT	NBL	NBR
Lane Configurations						
Traffic Vol, veh/h	466	47	40	673	28	23
Future Vol, veh/h	466	47	40	673	28	23
Conflicting Peds, #/hr	0	0	0	0	0	0
Sign Control	Free	Free	Free	Free	Stop	Stop
RT Channelized	-	None	-	None	-	None
Storage Length	-	-	70	-	0	-
Veh in Median Storage, #	0	-	-	0	0	-
Grade, %	0	-	-	0	0	-
Peak Hour Factor	83	83	83	83	83	83
Heavy Vehicles, %	2	2	2	2	2	2
Mvmt Flow	561	57	48	811	34	28

Major/Minor	Major1		Major2		Minor1	
Conflicting Flow All	0	0	618	0	1092	309
Stage 1	-	-	-	-	590	-
Stage 2	-	-	-	-	502	-
Critical Hdwy	-	-	4.14	-	6.84	6.94
Critical Hdwy Stg 1	-	-	-	-	5.84	-
Critical Hdwy Stg 2	-	-	-	-	5.84	-
Follow-up Hdwy	-	-	2.22	-	3.52	3.32
Pot Cap-1 Maneuver	-	-	958	-	209	687
Stage 1	-	-	-	-	517	-
Stage 2	-	-	-	-	573	-
Platoon blocked, %	-	-		-		
Mov Cap-1 Maneuver	-	-	958	-	199	687
Mov Cap-2 Maneuver	-	-	-	-	199	-
Stage 1	-	-	-	-	517	-
Stage 2	-	-	-	-	544	-

Approach	EB	WB	NB
HCM Control Delay, s	0	0.5	20.5
HCM LOS			C

Minor Lane/Major Mvmt	NBLn1	EBT	EBR	WBL	WBT
Capacity (veh/h)	293	-	-	958	-
HCM Lane V/C Ratio	0.21	-	-	0.05	-
HCM Control Delay (s)	20.5	-	-	9	-
HCM Lane LOS	C	-	-	A	-
HCM 95th %tile Q(veh)	0.8	-	-	0.2	-

Intersection	
Int Delay, s/veh	1.5

Movement	EBL	EBR	NBL	NBT	SBT	SBR
Lane Configurations						
Traffic Vol, veh/h	23	0	0	31	90	0
Future Vol, veh/h	23	0	0	31	90	0
Conflicting Peds, #/hr	0	0	0	0	0	0
Sign Control	Stop	Stop	Free	Free	Free	Free
RT Channelized	-	None	-	None	-	None
Storage Length	0	-	-	-	-	-
Veh in Median Storage, #	0	-	-	0	0	-
Grade, %	0	-	-	0	0	-
Peak Hour Factor	92	92	92	92	92	92
Heavy Vehicles, %	2	2	2	2	2	2
Mvmt Flow	25	0	0	34	98	0

Major/Minor	Minor2		Major1		Major2	
Conflicting Flow All	132	98	98	0	-	0
Stage 1	98	-	-	-	-	-
Stage 2	34	-	-	-	-	-
Critical Hdwy	6.42	6.22	4.12	-	-	-
Critical Hdwy Stg 1	5.42	-	-	-	-	-
Critical Hdwy Stg 2	5.42	-	-	-	-	-
Follow-up Hdwy	3.518	3.318	2.218	-	-	-
Pot Cap-1 Maneuver	862	958	1495	-	-	-
Stage 1	926	-	-	-	-	-
Stage 2	988	-	-	-	-	-
Platoon blocked, %				-	-	-
Mov Cap-1 Maneuver	862	958	1495	-	-	-
Mov Cap-2 Maneuver	862	-	-	-	-	-
Stage 1	926	-	-	-	-	-
Stage 2	988	-	-	-	-	-

Approach	EB	NB	SB
HCM Control Delay, s	9.3	0	0
HCM LOS	A		

Minor Lane/Major Mvmt	NBL	NBT	EBLn1	SBT	SBR
Capacity (veh/h)	1495	-	862	-	-
HCM Lane V/C Ratio	-	-	0.029	-	-
HCM Control Delay (s)	0	-	9.3	-	-
HCM Lane LOS	A	-	A	-	-
HCM 95th %tile Q(veh)	0	-	0.1	-	-

Intersection	
Int Delay, s/veh	0.6

Movement	EBT	EBR	WBL	WBT	NBL	NBR
Lane Configurations						
Traffic Vol, veh/h	603	88	0	673	0	75
Future Vol, veh/h	603	88	0	673	0	75
Conflicting Peds, #/hr	0	0	0	0	0	0
Sign Control	Free	Free	Free	Free	Stop	Stop
RT Channelized	-	None	-	None	-	None
Storage Length	-	-	-	-	-	0
Veh in Median Storage, #	0	-	-	0	0	-
Grade, %	0	-	-	0	0	-
Peak Hour Factor	92	92	92	92	92	92
Heavy Vehicles, %	2	2	2	2	2	2
Mvmt Flow	655	96	0	732	0	82

Major/Minor	Major1		Major2		Minor1	
Conflicting Flow All	0	0	-	-	-	376
Stage 1	-	-	-	-	-	-
Stage 2	-	-	-	-	-	-
Critical Hdwy	-	-	-	-	-	6.94
Critical Hdwy Stg 1	-	-	-	-	-	-
Critical Hdwy Stg 2	-	-	-	-	-	-
Follow-up Hdwy	-	-	-	-	-	3.32
Pot Cap-1 Maneuver	-	-	0	-	0	622
Stage 1	-	-	0	-	0	-
Stage 2	-	-	0	-	0	-
Platoon blocked, %	-	-		-		
Mov Cap-1 Maneuver	-	-	-	-	-	622
Mov Cap-2 Maneuver	-	-	-	-	-	-
Stage 1	-	-	-	-	-	-
Stage 2	-	-	-	-	-	-

Approach	EB	WB	NB
HCM Control Delay, s	0	0	11.7
HCM LOS			B

Minor Lane/Major Mvmt	NBLn1	EBT	EBR	WBT
Capacity (veh/h)	622	-	-	-
HCM Lane V/C Ratio	0.131	-	-	-
HCM Control Delay (s)	11.7	-	-	-
HCM Lane LOS	B	-	-	-
HCM 95th %tile Q(veh)	0.5	-	-	-

Lane Group	EBL	EBT	WBL	WBT	NBL	NBT	SBL	SBT
Lane Configurations								
Traffic Volume (vph)	168	283	121	47	6	860	23	288
Future Volume (vph)	168	283	121	47	6	860	23	288
Turn Type	Perm	NA	Perm	NA	Perm	NA	Perm	NA
Protected Phases		4		8		2		6
Permitted Phases	4		8		2		6	
Detector Phase	4	4	8	8	2	2	6	6
Switch Phase								
Minimum Initial (s)	5.0	5.0	5.0	5.0	5.0	5.0	5.0	5.0
Minimum Split (s)	30.0	30.0	30.0	30.0	40.0	40.0	40.0	40.0
Total Split (s)	46.0	46.0	46.0	46.0	44.0	44.0	44.0	44.0
Total Split (%)	51.1%	51.1%	51.1%	51.1%	48.9%	48.9%	48.9%	48.9%
Yellow Time (s)	3.0	3.0	3.0	3.0	3.0	3.0	3.0	3.0
All-Red Time (s)	1.0	1.0	1.0	1.0	1.0	1.0	1.0	1.0
Lost Time Adjust (s)	0.0	0.0		0.0	0.0	0.0	0.0	0.0
Total Lost Time (s)	4.0	4.0		4.0	4.0	4.0	4.0	4.0
Lead/Lag								
Lead-Lag Optimize?								
Recall Mode	None	None	None	None	None	None	None	None

Intersection Summary
Cycle Length: 90
Actuated Cycle Length: 79.8
Natural Cycle: 80
Control Type: Actuated-Uncoordinated

Splits and Phases: 16: Orange St. & Pearl Av.

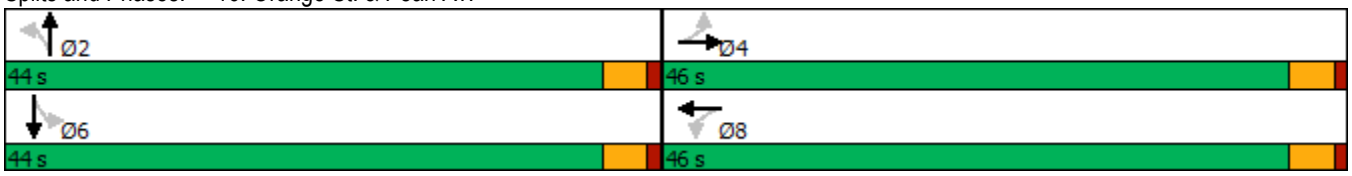

Movement	EBL	EBT	EBR	WBL	WBT	WBR	NBL	NBT	NBR	SBL	SBT	SBR
Lane Configurations												
Traffic Volume (veh/h)	168	283	226	121	47	188	6	860	135	23	288	15
Future Volume (veh/h)	168	283	226	121	47	188	6	860	135	23	288	15
Initial Q (Qb), veh	0	0	0	0	0	0	0	0	0	0	0	0
Ped-Bike Adj(A_pbT)	1.00		1.00	1.00		0.99	1.00		1.00	1.00		0.98
Parking Bus, Adj	1.00	1.00	1.00	1.00	1.00	1.00	1.00	1.00	1.00	1.00	1.00	1.00
Work Zone On Approach		No			No			No			No	
Adj Sat Flow, veh/h/ln	1673	1772	1772	1772	1772	1772	1673	1772	1772	1673	1772	1772
Adj Flow Rate, veh/h	177	298	186	127	49	178	6	905	139	24	303	14
Peak Hour Factor	0.95	0.95	0.95	0.95	0.95	0.95	0.95	0.95	0.95	0.95	0.95	0.95
Percent Heavy Veh, %	2	2	2	2	2	2	2	2	2	2	2	2
Cap, veh/h	420	485	303	184	85	202	453	1204	185	176	1347	62
Arrive On Green	0.48	0.48	0.48	0.48	0.48	0.48	0.41	0.41	0.41	0.41	0.41	0.41
Sat Flow, veh/h	1090	1018	636	242	178	425	1004	2925	449	510	3274	151
Grp Volume(v), veh/h	177	0	484	354	0	0	6	521	523	24	155	162
Grp Sat Flow(s),veh/h/ln	1090	0	1654	844	0	0	1004	1683	1691	510	1683	1741
Q Serve(g_s), s	0.0	0.0	15.5	14.6	0.0	0.0	0.3	18.8	18.8	3.0	4.3	4.3
Cycle Q Clear(g_c), s	15.1	0.0	15.5	30.1	0.0	0.0	4.6	18.8	18.8	21.8	4.3	4.3
Prop In Lane	1.00		0.38	0.36		0.50	1.00		0.27	1.00		0.09
Lane Grp Cap(c), veh/h	420	0	788	471	0	0	453	693	696	176	693	717
V/C Ratio(X)	0.42	0.00	0.61	0.75	0.00	0.00	0.01	0.75	0.75	0.14	0.22	0.23
Avail Cap(c_a), veh/h	542	0	974	610	0	0	603	944	948	253	944	976
HCM Platoon Ratio	1.00	1.00	1.00	1.00	1.00	1.00	1.00	1.00	1.00	1.00	1.00	1.00
Upstream Filter(I)	1.00	0.00	1.00	1.00	0.00	0.00	1.00	1.00	1.00	1.00	1.00	1.00
Uniform Delay (d), s/veh	13.7	0.0	13.8	20.2	0.0	0.0	15.1	17.9	17.9	27.2	13.6	13.6
Incr Delay (d2), s/veh	0.7	0.0	0.8	3.8	0.0	0.0	0.0	2.6	2.6	0.4	0.2	0.2
Initial Q Delay(d3),s/veh	0.0	0.0	0.0	0.0	0.0	0.0	0.0	0.0	0.0	0.0	0.0	0.0
%ile BackOfQ(50%),veh/ln	2.0	0.0	5.4	5.8	0.0	0.0	0.1	7.3	7.3	0.4	1.6	1.6
Unsig. Movement Delay, s/veh												
LnGrp Delay(d),s/veh	14.4	0.0	14.6	24.0	0.0	0.0	15.1	20.5	20.5	27.6	13.8	13.8
LnGrp LOS	B	A	B	C	A	A	B	C	C	C	B	B
Approach Vol, veh/h		661			354			1050			341	
Approach Delay, s/veh		14.6			24.0			20.4			14.8	
Approach LOS		B			C			C			B	

Timer - Assigned Phs	2	4	6	8
Phs Duration (G+Y+Rc), s	33.4	38.0	33.4	38.0
Change Period (Y+Rc), s	4.0	4.0	4.0	4.0
Max Green Setting (Gmax), s	40.0	42.0	40.0	42.0
Max Q Clear Time (g_c+I1), s	20.8	17.5	23.8	32.1
Green Ext Time (p_c), s	8.6	4.5	2.3	1.9

Intersection Summary	
HCM 6th Ctrl Delay	18.5
HCM 6th LOS	B

Lane Group	EBL	EBT	WBL	WBT	NBL	NBT	SBL	SBT
Lane Configurations								
Traffic Volume (vph)	243	345	35	558	39	537	62	487
Future Volume (vph)	243	345	35	558	39	537	62	487
Turn Type	Prot	NA	Prot	NA	Prot	NA	Prot	NA
Protected Phases	7	4	3	8	5	2	1	6
Permitted Phases								
Detector Phase	7	4	3	8	5	2	1	6
Switch Phase								
Minimum Initial (s)	5.0	10.0	5.0	10.0	5.0	10.0	5.0	10.0
Minimum Split (s)	9.6	23.7	9.6	27.7	9.6	27.6	9.6	30.6
Total Split (s)	20.8	37.9	11.5	28.6	9.6	29.0	11.6	31.0
Total Split (%)	23.1%	42.1%	12.8%	31.8%	10.7%	32.2%	12.9%	34.4%
Yellow Time (s)	3.6	3.7	3.6	3.7	3.6	3.6	3.6	3.6
All-Red Time (s)	1.0	1.0	1.0	1.0	1.0	1.0	1.0	1.0
Lost Time Adjust (s)	0.0	0.0	0.0	0.0	0.0	0.0	0.0	0.0
Total Lost Time (s)	4.6	4.7	4.6	4.7	4.6	4.6	4.6	4.6
Lead/Lag	Lead	Lag	Lead	Lag	Lead	Lag	Lead	Lag
Lead-Lag Optimize?	Yes	Yes	Yes	Yes	Yes	Yes	Yes	Yes
Recall Mode	None	None	None	None	None	None	None	None

Intersection Summary
Cycle Length: 90
Actuated Cycle Length: 84.8
Natural Cycle: 90
Control Type: Actuated-Uncoordinated

Splits and Phases: 17: Orange St. & Redlands Bl.

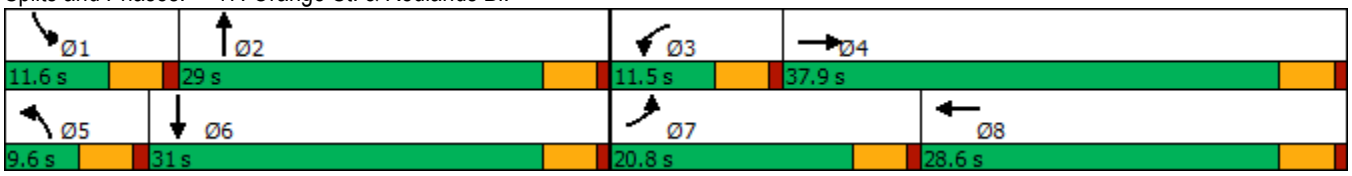

Movement	EBL	EBT	EBR	WBL	WBT	WBR	NBL	NBT	NBR	SBL	SBT	SBR
Lane Configurations												
Traffic Volume (veh/h)	243	345	90	35	558	232	39	537	24	62	487	76
Future Volume (veh/h)	243	345	90	35	558	232	39	537	24	62	487	76
Initial Q (Qb), veh	0	0	0	0	0	0	0	0	0	0	0	0
Ped-Bike Adj(A_pbT)	1.00		1.00	1.00		0.98	1.00		0.98	1.00		1.00
Parking Bus, Adj	1.00	1.00	1.00	1.00	1.00	1.00	1.00	1.00	1.00	1.00	1.00	1.00
Work Zone On Approach		No			No			No			No	
Adj Sat Flow, veh/h/ln	1673	1772	1772	1673	1772	1772	1673	1772	1772	1673	1772	1772
Adj Flow Rate, veh/h	279	397	82	40	641	199	45	617	17	71	560	74
Peak Hour Factor	0.87	0.87	0.87	0.87	0.87	0.87	0.87	0.87	0.87	0.87	0.87	0.87
Percent Heavy Veh, %	2	2	2	2	2	2	2	2	2	2	2	2
Cap, veh/h	312	1234	253	59	716	222	63	783	22	88	746	98
Arrive On Green	0.20	0.44	0.44	0.04	0.28	0.28	0.04	0.23	0.23	0.05	0.25	0.25
Sat Flow, veh/h	1594	2781	569	1594	2514	779	1594	3345	92	1594	2990	394
Grp Volume(v), veh/h	279	239	240	40	429	411	45	310	324	71	315	319
Grp Sat Flow(s),veh/h/ln	1594	1683	1667	1594	1683	1610	1594	1683	1753	1594	1683	1700
Q Serve(g_s), s	13.7	7.4	7.5	2.0	19.6	19.7	2.2	13.9	13.9	3.5	13.8	13.9
Cycle Q Clear(g_c), s	13.7	7.4	7.5	2.0	19.6	19.7	2.2	13.9	13.9	3.5	13.8	13.9
Prop In Lane	1.00		0.34	1.00		0.48	1.00		0.05	1.00		0.23
Lane Grp Cap(c), veh/h	312	747	740	59	480	459	63	394	410	88	420	424
V/C Ratio(X)	0.90	0.32	0.32	0.68	0.89	0.90	0.72	0.79	0.79	0.81	0.75	0.75
Avail Cap(c_a), veh/h	322	747	740	137	501	479	99	512	533	139	554	559
HCM Platoon Ratio	1.00	1.00	1.00	1.00	1.00	1.00	1.00	1.00	1.00	1.00	1.00	1.00
Upstream Filter(I)	1.00	1.00	1.00	1.00	1.00	1.00	1.00	1.00	1.00	1.00	1.00	1.00
Uniform Delay (d), s/veh	31.5	14.5	14.5	38.2	27.5	27.5	38.1	28.9	28.9	37.5	27.8	27.8
Incr Delay (d2), s/veh	24.5	0.2	0.3	5.1	17.9	18.7	5.5	6.1	5.9	8.1	4.0	4.1
Initial Q Delay(d3),s/veh	0.0	0.0	0.0	0.0	0.0	0.0	0.0	0.0	0.0	0.0	0.0	0.0
%ile BackOfQ(50%),veh/ln	7.2	2.7	2.7	0.8	9.9	9.6	1.0	6.2	6.4	1.6	5.9	6.0
Unsig. Movement Delay, s/veh												
LnGrp Delay(d),s/veh	56.0	14.7	14.8	43.3	45.4	46.3	43.6	35.0	34.8	45.6	31.8	31.9
LnGrp LOS	E	B	B	D	D	D	D	C	C	D	C	C
Approach Vol, veh/h		758			880			679			705	
Approach Delay, s/veh		29.9			45.7			35.5			33.2	
Approach LOS		C			D			D			C	

Timer - Assigned Phs	1	2	3	4	5	6	7	8
Phs Duration (G+Y+Rc), s	9.0	23.4	7.6	40.3	7.8	24.6	20.3	27.6
Change Period (Y+Rc), s	4.6	4.6	4.6	* 4.7	4.6	4.6	4.6	* 4.7
Max Green Setting (Gmax), s	7.0	24.4	6.9	* 33	5.0	26.4	16.2	* 24
Max Q Clear Time (g_c+I1), s	5.5	15.9	4.0	9.5	4.2	15.9	15.7	21.7
Green Ext Time (p_c), s	0.0	2.6	0.0	3.0	0.0	3.0	0.0	1.2

Intersection Summary	
HCM 6th Ctrl Delay	36.5
HCM 6th LOS	D

Notes

* HCM 6th computational engine requires equal clearance times for the phases crossing the barrier.

Lane Group	EBT	NBT	SBL	SBT
Lane Configurations				
Traffic Volume (vph)	0	547	48	502
Future Volume (vph)	0	547	48	502
Turn Type	NA	NA	Perm	NA
Protected Phases	4	2		6
Permitted Phases			6	
Detector Phase	4	2	6	6
Switch Phase				
Minimum Initial (s)	10.0	10.0	10.0	10.0
Minimum Split (s)	23.6	21.6	21.6	21.6
Total Split (s)	31.0	89.0	89.0	89.0
Total Split (%)	25.8%	74.2%	74.2%	74.2%
Yellow Time (s)	3.6	3.6	3.6	3.6
All-Red Time (s)	1.0	1.0	1.0	1.0
Lost Time Adjust (s)	0.0	0.0	0.0	0.0
Total Lost Time (s)	4.6	4.6	4.6	4.6
Lead/Lag				
Lead-Lag Optimize?				
Recall Mode	None	None	None	None

Intersection Summary
Cycle Length: 120
Actuated Cycle Length: 26.1
Natural Cycle: 50
Control Type: Actuated-Uncoordinated

Splits and Phases: 18: Orange St. & State St.

Movement	EBL	EBT	EBR	WBL	WBT	WBR	NBL	NBT	NBR	SBL	SBT	SBR
Lane Configurations												
Traffic Volume (veh/h)	53	0	18	0	0	0	0	547	60	48	502	62
Future Volume (veh/h)	53	0	18	0	0	0	0	547	60	48	502	62
Initial Q (Qb), veh	0	0	0				0	0	0	0	0	0
Ped-Bike Adj(A_pbT)	1.00		1.00				1.00		0.99	1.00		0.99
Parking Bus, Adj	1.00	1.00	1.00				1.00	1.00	1.00	1.00	1.00	1.00
Work Zone On Approach		No						No			No	
Adj Sat Flow, veh/h/ln	1772	1772	1772				1673	1772	1772	1673	1772	1772
Adj Flow Rate, veh/h	58	0	18				0	601	66	53	552	68
Peak Hour Factor	0.91	0.91	0.91				0.91	0.91	0.91	0.91	0.91	0.91
Percent Heavy Veh, %	2	2	2				2	2	2	2	2	2
Cap, veh/h	219	0	68				277	1440	158	525	1421	175
Arrive On Green	0.17	0.00	0.17				0.00	0.47	0.47	0.47	0.47	0.47
Sat Flow, veh/h	1250	0	388				759	3058	335	725	3016	370
Grp Volume(v), veh/h	76	0	0				0	330	337	53	307	313
Grp Sat Flow(s),veh/h/ln	1637	0	0				759	1683	1709	725	1683	1703
Q Serve(g_s), s	1.0	0.0	0.0				0.0	3.4	3.4	1.3	3.1	3.1
Cycle Q Clear(g_c), s	1.0	0.0	0.0				0.0	3.4	3.4	4.7	3.1	3.1
Prop In Lane	0.76		0.24				1.00		0.20	1.00		0.22
Lane Grp Cap(c), veh/h	286	0	0				277	793	805	525	793	802
V/C Ratio(X)	0.27	0.00	0.00				0.00	0.42	0.42	0.10	0.39	0.39
Avail Cap(c_a), veh/h	1663	0	0				2385	5467	5551	2538	5467	5531
HCM Platoon Ratio	1.00	1.00	1.00				1.00	1.00	1.00	1.00	1.00	1.00
Upstream Filter(I)	1.00	0.00	0.00				0.00	1.00	1.00	1.00	1.00	1.00
Uniform Delay (d), s/veh	9.3	0.0	0.0				0.0	4.5	4.5	6.1	4.4	4.5
Incr Delay (d2), s/veh	0.5	0.0	0.0				0.0	0.3	0.3	0.1	0.3	0.3
Initial Q Delay(d3),s/veh	0.0	0.0	0.0				0.0	0.0	0.0	0.0	0.0	0.0
%ile BackOfQ(50%),veh/ln	0.3	0.0	0.0				0.0	0.6	0.6	0.1	0.5	0.5
Unsig. Movement Delay, s/veh												
LnGrp Delay(d),s/veh	9.8	0.0	0.0				0.0	4.9	4.9	6.2	4.8	4.8
LnGrp LOS	A	A	A				A	A	A	A	A	A
Approach Vol, veh/h		76						667			673	
Approach Delay, s/veh		9.8						4.9			4.9	
Approach LOS		A						A			A	

Timer - Assigned Phs		2		4		6
Phs Duration (G+Y+Rc), s		16.8		9.1		16.8
Change Period (Y+Rc), s		4.6		4.6		4.6
Max Green Setting (Gmax), s		84.4		26.4		84.4
Max Q Clear Time (g_c+I1), s		5.4		3.0		6.7
Green Ext Time (p_c), s		5.2		0.4		5.3

Intersection Summary		
HCM 6th Ctrl Delay		5.1
HCM 6th LOS		A

Intersection	
Int Delay, s/veh	0.6

Movement	EBL	EBR	NBL	NBT	SBT	SBR
Lane Configurations						
Traffic Vol, veh/h	0	67	0	605	442	77
Future Vol, veh/h	0	67	0	605	442	77
Conflicting Peds, #/hr	0	0	0	0	0	0
Sign Control	Stop	Stop	Free	Free	Free	Free
RT Channelized	-	None	-	None	-	None
Storage Length	-	0	-	-	-	-
Veh in Median Storage, #	0	-	-	0	0	-
Grade, %	0	-	-	0	0	-
Peak Hour Factor	92	92	92	92	92	92
Heavy Vehicles, %	2	2	2	2	2	2
Mvmt Flow	0	73	0	658	480	84

Major/Minor	Minor2		Major1		Major2	
Conflicting Flow All	-	282	-	0	-	0
Stage 1	-	-	-	-	-	-
Stage 2	-	-	-	-	-	-
Critical Hdwy	-	6.94	-	-	-	-
Critical Hdwy Stg 1	-	-	-	-	-	-
Critical Hdwy Stg 2	-	-	-	-	-	-
Follow-up Hdwy	-	3.32	-	-	-	-
Pot Cap-1 Maneuver	0	715	0	-	-	-
Stage 1	0	-	0	-	-	-
Stage 2	0	-	0	-	-	-
Platoon blocked, %				-	-	-
Mov Cap-1 Maneuver	-	715	-	-	-	-
Mov Cap-2 Maneuver	-	-	-	-	-	-
Stage 1	-	-	-	-	-	-
Stage 2	-	-	-	-	-	-

Approach	EB	NB	SB
HCM Control Delay, s	10.6	0	0
HCM LOS	B		

Minor Lane/Major Mvmt	NBT	EBLn1	SBT	SBR
Capacity (veh/h)	-	715	-	-
HCM Lane V/C Ratio	-	0.102	-	-
HCM Control Delay (s)	-	10.6	-	-
HCM Lane LOS	-	B	-	-
HCM 95th %tile Q(veh)	-	0.3	-	-

Lane Group	EBL	EBT	EBR	WBL	WBT	NBL	NBT	SBL	SBT
Lane Configurations									
Traffic Volume (vph)	64	276	149	13	392	116	494	52	251
Future Volume (vph)	64	276	149	13	392	116	494	52	251
Turn Type	Perm	NA	Perm	Perm	NA	Perm	NA	Perm	NA
Protected Phases		4			8		2		6
Permitted Phases	4		4	8		2		6	
Detector Phase	4	4	4	8	8	2	2	6	6
Switch Phase									
Minimum Initial (s)	10.0	10.0	10.0	10.0	10.0	10.0	10.0	10.0	10.0
Minimum Split (s)	21.6	21.6	21.6	21.6	21.6	21.6	21.6	22.6	22.6
Total Split (s)	33.0	33.0	33.0	33.0	33.0	27.0	27.0	27.0	27.0
Total Split (%)	55.0%	55.0%	55.0%	55.0%	55.0%	45.0%	45.0%	45.0%	45.0%
Yellow Time (s)	3.6	3.6	3.6	3.6	3.6	3.6	3.6	3.6	3.6
All-Red Time (s)	1.0	1.0	1.0	1.0	1.0	1.0	1.0	1.0	1.0
Lost Time Adjust (s)	0.0	0.0	0.0	0.0	0.0	0.0	0.0	0.0	0.0
Total Lost Time (s)	4.6	4.6	4.6	4.6	4.6	4.6	4.6	4.6	4.6
Lead/Lag									
Lead-Lag Optimize?									
Recall Mode	None	None	None	None	None	None	None	None	None

Intersection Summary
Cycle Length: 60
Actuated Cycle Length: 44.3
Natural Cycle: 45
Control Type: Actuated-Uncoordinated

Splits and Phases: 20: Cajon St./Orange St. & Citrus Av.

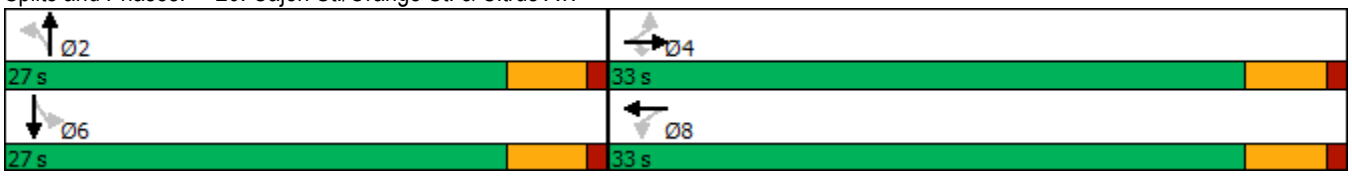

Movement	EBL	EBT	EBR	WBL	WBT	WBR	NBL	NBT	NBR	SBL	SBT	SBR
Lane Configurations												
Traffic Volume (veh/h)	64	276	149	13	392	48	116	494	30	52	251	206
Future Volume (veh/h)	64	276	149	13	392	48	116	494	30	52	251	206
Initial Q (Qb), veh	0	0	0	0	0	0	0	0	0	0	0	0
Ped-Bike Adj(A_pbT)	1.00		0.98	1.00		0.98	0.99		0.97	1.00		0.99
Parking Bus, Adj	1.00	1.00	1.00	1.00	1.00	1.00	1.00	1.00	1.00	1.00	1.00	1.00
Work Zone On Approach		No			No			No			No	
Adj Sat Flow, veh/h/ln	1673	1772	1772	1673	1772	1772	1673	1772	1772	1673	1772	1772
Adj Flow Rate, veh/h	73	314	117	15	445	43	132	561	27	59	285	223
Peak Hour Factor	0.88	0.88	0.88	0.88	0.88	0.88	0.88	0.88	0.88	0.88	0.88	0.88
Percent Heavy Veh, %	2	2	2	2	2	2	2	2	2	2	2	2
Cap, veh/h	318	723	602	419	648	63	383	1238	60	361	688	521
Arrive On Green	0.41	0.41	0.41	0.41	0.41	0.41	0.38	0.38	0.38	0.38	0.38	0.38
Sat Flow, veh/h	855	1772	1476	902	1587	153	838	3264	157	779	1814	1374
Grp Volume(v), veh/h	73	314	117	15	0	488	132	289	299	59	264	244
Grp Sat Flow(s),veh/h/ln	855	1772	1476	902	0	1740	838	1683	1738	779	1683	1504
Q Serve(g_s), s	3.3	5.5	2.2	0.5	0.0	10.0	6.0	5.6	5.6	2.7	5.0	5.2
Cycle Q Clear(g_c), s	13.3	5.5	2.2	6.0	0.0	10.0	11.2	5.6	5.6	8.2	5.0	5.2
Prop In Lane	1.00		1.00	1.00		0.09	1.00		0.09	1.00		0.91
Lane Grp Cap(c), veh/h	318	723	602	419	0	710	383	639	659	361	639	571
V/C Ratio(X)	0.23	0.43	0.19	0.04	0.00	0.69	0.34	0.45	0.45	0.16	0.41	0.43
Avail Cap(c_a), veh/h	530	1163	969	643	0	1142	499	871	900	469	871	779
HCM Platoon Ratio	1.00	1.00	1.00	1.00	1.00	1.00	1.00	1.00	1.00	1.00	1.00	1.00
Upstream Filter(I)	1.00	1.00	1.00	1.00	0.00	1.00	1.00	1.00	1.00	1.00	1.00	1.00
Uniform Delay (d), s/veh	16.0	9.2	8.2	11.4	0.0	10.5	14.1	10.1	10.1	13.2	9.9	9.9
Incr Delay (d2), s/veh	0.4	0.4	0.2	0.0	0.0	1.2	0.5	0.5	0.5	0.2	0.4	0.5
Initial Q Delay(d3),s/veh	0.0	0.0	0.0	0.0	0.0	0.0	0.0	0.0	0.0	0.0	0.0	0.0
%ile BackOfQ(50%),veh/ln	0.6	1.8	0.6	0.1	0.0	3.3	1.0	1.8	1.8	0.4	1.6	1.5
Unsig. Movement Delay, s/veh												
LnGrp Delay(d),s/veh	16.4	9.6	8.4	11.4	0.0	11.7	14.6	10.6	10.6	13.4	10.3	10.5
LnGrp LOS	B	A	A	B	A	B	B	B	B	B	B	B
Approach Vol, veh/h		504			503			720			567	
Approach Delay, s/veh		10.3			11.7			11.3			10.7	
Approach LOS		B			B			B			B	

Timer - Assigned Phs	2	4	6	8
Phs Duration (G+Y+Rc), s	21.0	22.3	21.0	22.3
Change Period (Y+Rc), s	4.6	4.6	4.6	4.6
Max Green Setting (Gmax), s	22.4	28.4	22.4	28.4
Max Q Clear Time (g_c+I1), s	13.2	15.3	10.2	12.0
Green Ext Time (p_c), s	3.1	2.4	3.0	3.1

Intersection Summary	
HCM 6th Ctrl Delay	11.0
HCM 6th LOS	B

Lane Group	EBL	EBT	EBR	WBL	WBT	WBR	NBT	SBT	SBR
Lane Configurations									
Traffic Volume (vph)	23	242	103	65	331	207	611	206	24
Future Volume (vph)	23	242	103	65	331	207	611	206	24
Turn Type	Perm	NA	Perm	Perm	NA	Perm	NA	NA	Perm
Protected Phases		4			8		2	6	
Permitted Phases	4		4	8		8			6
Detector Phase	4	4	4	8	8	8	2	6	6
Switch Phase									
Minimum Initial (s)	10.0	10.0	10.0	10.0	10.0	10.0	10.0	10.0	10.0
Minimum Split (s)	24.6	24.6	24.6	28.6	28.6	28.6	22.6	22.6	22.6
Total Split (s)	29.6	29.6	29.6	29.6	29.6	29.6	37.6	22.8	22.8
Total Split (%)	32.9%	32.9%	32.9%	32.9%	32.9%	32.9%	41.8%	25.3%	25.3%
Yellow Time (s)	3.6	3.6	3.6	3.6	3.6	3.6	3.6	3.6	3.6
All-Red Time (s)	1.0	1.0	1.0	1.0	1.0	1.0	1.0	1.0	1.0
Lost Time Adjust (s)	0.0	0.0	0.0	0.0	0.0	0.0	0.0	0.0	0.0
Total Lost Time (s)	4.6	4.6	4.6	4.6	4.6	4.6	4.6	4.6	4.6
Lead/Lag									
Lead-Lag Optimize?									
Recall Mode	None	None	None	None	None	None	None	None	None

Intersection Summary
Cycle Length: 90
Actuated Cycle Length: 74.2
Natural Cycle: 80
Control Type: Actuated-Uncoordinated

Splits and Phases: 21: Redlands Bl. & Citrus Av.

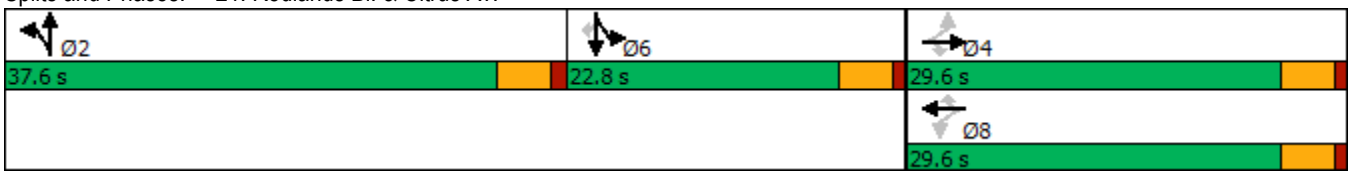

Movement	EBL	EBT	EBR	WBL	WBT	WBR	NBL	NBT	NBR	SBL	SBT	SBR
Lane Configurations												
Traffic Volume (veh/h)	23	242	103	65	331	207	226	611	39	84	206	24
Future Volume (veh/h)	23	242	103	65	331	207	226	611	39	84	206	24
Initial Q (Qb), veh	0	0	0	0	0	0	0	0	0	0	0	0
Ped-Bike Adj(A_pbT)	1.00		0.98	1.00		0.98	1.00		0.99	1.00		1.00
Parking Bus, Adj	1.00	1.00	1.00	1.00	1.00	1.00	1.00	1.00	1.00	1.00	1.00	1.00
Work Zone On Approach		No			No			No			No	
Adj Sat Flow, veh/h/ln	1673	1772	1772	1673	1772	1772	1772	1772	1772	1772	1772	1772
Adj Flow Rate, veh/h	24	249	73	67	341	178	233	630	25	87	212	0
Peak Hour Factor	0.97	0.97	0.97	0.97	0.97	0.97	0.97	0.97	0.97	0.97	0.97	0.97
Percent Heavy Veh, %	2	2	2	2	2	2	2	2	2	2	2	2
Cap, veh/h	187	463	386	256	463	385	308	886	36	154	403	
Arrive On Green	0.26	0.26	0.26	0.26	0.26	0.26	0.35	0.35	0.35	0.16	0.16	0.00
Sat Flow, veh/h	832	1772	1478	998	1772	1474	872	2506	103	942	2466	1502
Grp Volume(v), veh/h	24	249	73	67	341	178	462	0	426	159	140	0
Grp Sat Flow(s),veh/h/ln	832	1772	1478	998	1772	1474	1728	0	1753	1725	1683	1502
Q Serve(g_s), s	1.7	7.5	2.4	3.8	10.9	6.3	14.7	0.0	12.9	5.3	4.7	0.0
Cycle Q Clear(g_c), s	12.6	7.5	2.4	11.4	10.9	6.3	14.7	0.0	12.9	5.3	4.7	0.0
Prop In Lane	1.00		1.00	1.00		1.00	0.50		0.06	0.55		1.00
Lane Grp Cap(c), veh/h	187	463	386	256	463	385	611	0	620	282	275	
V/C Ratio(X)	0.13	0.54	0.19	0.26	0.74	0.46	0.76	0.00	0.69	0.57	0.51	
Avail Cap(c_a), veh/h	304	712	594	396	712	592	917	0	930	505	492	
HCM Platoon Ratio	1.00	1.00	1.00	1.00	1.00	1.00	1.00	1.00	1.00	1.00	1.00	1.00
Upstream Filter(I)	1.00	1.00	1.00	1.00	1.00	1.00	1.00	0.00	1.00	1.00	1.00	0.00
Uniform Delay (d), s/veh	26.8	19.7	17.8	24.6	21.0	19.3	17.7	0.0	17.2	24.0	23.8	0.0
Incr Delay (d2), s/veh	0.3	1.0	0.2	0.5	2.3	0.9	2.0	0.0	1.4	1.8	1.5	0.0
Initial Q Delay(d3),s/veh	0.0	0.0	0.0	0.0	0.0	0.0	0.0	0.0	0.0	0.0	0.0	0.0
%ile BackOfQ(50%),veh/ln	0.3	3.1	0.8	0.9	4.6	2.1	5.6	0.0	4.9	2.2	1.9	0.0
Unsig. Movement Delay, s/veh												
LnGrp Delay(d),s/veh	27.1	20.7	18.1	25.2	23.3	20.2	19.7	0.0	18.5	25.8	25.2	0.0
LnGrp LOS	C	C	B	C	C	C	B	A	B	C	C	
Approach Vol, veh/h		346			586			888			299	A
Approach Delay, s/veh		20.6			22.6			19.2			25.5	
Approach LOS		C			C			B			C	

Timer - Assigned Phs	2	4	6	8
Phs Duration (G+Y+Rc), s	26.6	20.9	14.8	20.9
Change Period (Y+Rc), s	4.6	4.6	4.6	4.6
Max Green Setting (Gmax), s	33.0	25.0	18.2	25.0
Max Q Clear Time (g_c+I1), s	16.7	14.6	7.3	13.4
Green Ext Time (p_c), s	5.3	1.4	1.2	2.5

Intersection Summary	
HCM 6th Ctrl Delay	21.2
HCM 6th LOS	C

Notes

Unsignalized Delay for [SBR] is excluded from calculations of the approach delay and intersection delay.

Lane Group	EBL	EBT	WBL	WBT	NBL	NBT	NBR	SBL	SBT	SBR
Lane Configurations										
Traffic Volume (vph)	81	303	72	452	43	182	96	36	175	137
Future Volume (vph)	81	303	72	452	43	182	96	36	175	137
Turn Type	Perm	NA	Perm	NA	Perm	NA	Perm	Perm	NA	Perm
Protected Phases		4		8		2			6	
Permitted Phases	4		8		2		2	6		6
Detector Phase	4	4	8	8	2	2	2	6	6	6
Switch Phase										
Minimum Initial (s)	10.0	10.0	10.0	10.0	10.0	10.0	10.0	10.0	10.0	10.0
Minimum Split (s)	22.6	22.6	24.6	24.6	26.7	26.7	26.7	25.7	25.7	25.7
Total Split (s)	33.0	33.0	33.0	33.0	27.0	27.0	27.0	27.0	27.0	27.0
Total Split (%)	55.0%	55.0%	55.0%	55.0%	45.0%	45.0%	45.0%	45.0%	45.0%	45.0%
Yellow Time (s)	3.6	3.6	3.6	3.6	3.7	3.7	3.7	3.7	3.7	3.7
All-Red Time (s)	1.0	1.0	1.0	1.0	1.0	1.0	1.0	1.0	1.0	1.0
Lost Time Adjust (s)	0.0	0.0	0.0	0.0		0.0	0.0		0.0	0.0
Total Lost Time (s)	4.6	4.6	4.6	4.6		4.7	4.7		4.7	4.7
Lead/Lag										
Lead-Lag Optimize?										
Recall Mode	None	None	None	None	None	None	None	None	None	None

Intersection Summary
Cycle Length: 60
Actuated Cycle Length: 44.1
Natural Cycle: 60
Control Type: Actuated-Uncoordinated

Splits and Phases: 22: Church St. & Citrus Av.

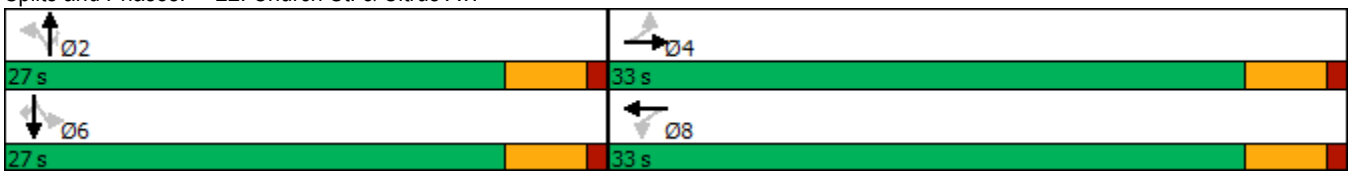

Movement	EBL	EBT	EBR	WBL	WBT	WBR	NBL	NBT	NBR	SBL	SBT	SBR
Lane Configurations												
Traffic Volume (veh/h)	81	303	41	72	452	42	43	182	96	36	175	137
Future Volume (veh/h)	81	303	41	72	452	42	43	182	96	36	175	137
Initial Q (Qb), veh	0	0	0	0	0	0	0	0	0	0	0	0
Ped-Bike Adj(A_pbT)	1.00		0.98	1.00		0.98	1.00		0.99	1.00		0.98
Parking Bus, Adj	1.00	1.00	1.00	1.00	1.00	1.00	1.00	1.00	1.00	1.00	1.00	1.00
Work Zone On Approach		No			No			No			No	
Adj Sat Flow, veh/h/ln	1673	1772	1772	1673	1772	1772	1772	1772	1772	1772	1772	1772
Adj Flow Rate, veh/h	96	361	43	86	538	48	51	217	81	43	208	133
Peak Hour Factor	0.84	0.84	0.84	0.84	0.84	0.84	0.84	0.84	0.84	0.84	0.84	0.84
Percent Heavy Veh, %	2	2	2	2	2	2	2	2	2	2	2	2
Cap, veh/h	259	697	83	387	719	64	75	238	575	73	262	569
Arrive On Green	0.45	0.45	0.45	0.45	0.45	0.45	0.39	0.39	0.39	0.39	0.39	0.39
Sat Flow, veh/h	783	1549	184	926	1599	143	0	612	1480	0	674	1464
Grp Volume(v), veh/h	96	0	404	86	0	586	268	0	81	251	0	133
Grp Sat Flow(s),veh/h/ln	783	0	1733	926	0	1742	612	0	1480	675	0	1464
Q Serve(g_s), s	6.7	0.0	9.6	4.2	0.0	16.0	0.0	0.0	2.0	0.0	0.0	3.5
Cycle Q Clear(g_c), s	22.7	0.0	9.6	13.8	0.0	16.0	22.3	0.0	2.0	22.3	0.0	3.5
Prop In Lane	1.00		0.11	1.00		0.08	0.19		1.00	0.17		1.00
Lane Grp Cap(c), veh/h	259	0	780	387	0	784	312	0	575	335	0	569
V/C Ratio(X)	0.37	0.00	0.52	0.22	0.00	0.75	0.86	0.00	0.14	0.75	0.00	0.23
Avail Cap(c_a), veh/h	294	0	857	429	0	861	312	0	575	335	0	569
HCM Platoon Ratio	1.00	1.00	1.00	1.00	1.00	1.00	1.00	1.00	1.00	1.00	1.00	1.00
Upstream Filter(I)	1.00	0.00	1.00	1.00	0.00	1.00	1.00	0.00	1.00	1.00	0.00	1.00
Uniform Delay (d), s/veh	22.5	0.0	11.3	16.3	0.0	13.1	14.5	0.0	11.4	14.2	0.0	11.8
Incr Delay (d2), s/veh	0.9	0.0	0.5	0.3	0.0	3.3	20.5	0.0	0.1	9.0	0.0	0.2
Initial Q Delay(d3),s/veh	0.0	0.0	0.0	0.0	0.0	0.0	0.0	0.0	0.0	0.0	0.0	0.0
%ile BackOfQ(50%),veh/ln	1.2	0.0	3.3	0.9	0.0	6.1	4.0	0.0	0.6	2.9	0.0	1.1
Unsig. Movement Delay, s/veh												
LnGrp Delay(d),s/veh	23.4	0.0	11.9	16.6	0.0	16.4	35.0	0.0	11.5	23.1	0.0	12.0
LnGrp LOS	C	A	B	B	A	B	D	A	B	C	A	B
Approach Vol, veh/h		500			672			349			384	
Approach Delay, s/veh		14.1			16.4			29.5			19.3	
Approach LOS		B			B			C			B	

Timer - Assigned Phs	2	4	6	8
Phs Duration (G+Y+Rc), s	27.0	30.4	27.0	30.4
Change Period (Y+Rc), s	* 4.7	4.6	* 4.7	4.6
Max Green Setting (Gmax), s	* 22	28.4	* 22	28.4
Max Q Clear Time (g_c+I1), s	24.3	24.7	24.3	18.0
Green Ext Time (p_c), s	0.0	1.1	0.0	3.4

Intersection Summary	
HCM 6th Ctrl Delay	18.8
HCM 6th LOS	B

Notes

* HCM 6th computational engine requires equal clearance times for the phases crossing the barrier.

Lane Group	EBL	EBT	WBL	WBT	NBL	NBT	SBL	SBT	SBR
Lane Configurations									
Traffic Volume (vph)	98	486	62	349	58	202	29	225	102
Future Volume (vph)	98	486	62	349	58	202	29	225	102
Turn Type	Prot	NA	Prot	NA	Perm	NA	Perm	NA	Perm
Protected Phases	7	4	3	8		2		6	
Permitted Phases					2		6		6
Detector Phase	7	4	3	8	2	2	6	6	6
Switch Phase									
Minimum Initial (s)	5.0	10.0	5.0	10.0	10.0	10.0	10.0	10.0	10.0
Minimum Split (s)	9.6	23.1	9.6	23.1	26.1	26.1	26.1	26.1	26.1
Total Split (s)	9.6	24.0	9.6	24.0	26.4	26.4	26.4	26.4	26.4
Total Split (%)	16.0%	40.0%	16.0%	40.0%	44.0%	44.0%	44.0%	44.0%	44.0%
Yellow Time (s)	3.6	4.1	3.6	4.1	4.1	4.1	4.1	4.1	4.1
All-Red Time (s)	1.0	1.0	1.0	1.0	1.0	1.0	1.0	1.0	1.0
Lost Time Adjust (s)	0.0	0.0	0.0	0.0		0.0		0.0	0.0
Total Lost Time (s)	4.6	5.1	4.6	5.1		5.1		5.1	5.1
Lead/Lag	Lead	Lag	Lead	Lag					
Lead-Lag Optimize?	Yes	Yes	Yes	Yes					
Recall Mode	None	None	None	None	None	None	None	None	None

Intersection Summary
Cycle Length: 60
Actuated Cycle Length: 51.2
Natural Cycle: 65
Control Type: Actuated-Uncoordinated

Splits and Phases: 1: Center St. & Brookside Av.

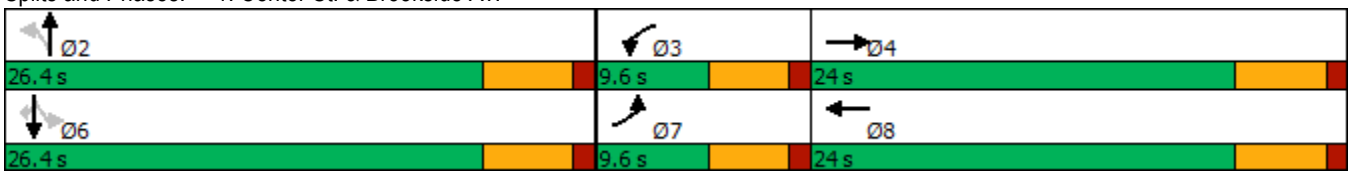

Movement	EBL	EBT	EBR	WBL	WBT	WBR	NBL	NBT	NBR	SBL	SBT	SBR
Lane Configurations												
Traffic Volume (veh/h)	98	486	66	62	349	34	58	202	28	29	225	102
Future Volume (veh/h)	98	486	66	62	349	34	58	202	28	29	225	102
Initial Q (Qb), veh	0	0	0	0	0	0	0	0	0	0	0	0
Ped-Bike Adj(A_pbT)	1.00		0.98	1.00		1.00	1.00		1.00	1.00		0.98
Parking Bus, Adj	1.00	1.00	1.00	1.00	1.00	1.00	1.00	1.00	1.00	1.00	1.00	1.00
Work Zone On Approach		No			No			No			No	
Adj Sat Flow, veh/h/ln	1673	1772	1772	1673	1772	1772	1772	1772	1772	1772	1772	1772
Adj Flow Rate, veh/h	104	517	42	66	371	25	62	215	18	31	239	56
Peak Hour Factor	0.94	0.94	0.94	0.94	0.94	0.94	0.94	0.94	0.94	0.94	0.94	0.94
Percent Heavy Veh, %	2	2	2	2	2	2	2	2	2	2	2	2
Cap, veh/h	127	579	47	97	558	38	137	310	23	111	454	406
Arrive On Green	0.08	0.36	0.36	0.06	0.34	0.34	0.28	0.28	0.28	0.28	0.28	0.28
Sat Flow, veh/h	1594	1613	131	1594	1641	111	173	1117	84	104	1640	1464
Grp Volume(v), veh/h	104	0	559	66	0	396	295	0	0	270	0	56
Grp Sat Flow(s),veh/h/ln	1594	0	1745	1594	0	1752	1373	0	0	1743	0	1464
Q Serve(g_s), s	3.1	0.0	14.7	2.0	0.0	9.4	3.8	0.0	0.0	0.0	0.0	1.4
Cycle Q Clear(g_c), s	3.1	0.0	14.7	2.0	0.0	9.4	10.2	0.0	0.0	6.3	0.0	1.4
Prop In Lane	1.00		0.08	1.00		0.06	0.21		0.06	0.11		1.00
Lane Grp Cap(c), veh/h	127	0	626	97	0	596	470	0	0	565	0	406
V/C Ratio(X)	0.82	0.00	0.89	0.68	0.00	0.66	0.63	0.00	0.00	0.48	0.00	0.14
Avail Cap(c_a), veh/h	163	0	676	163	0	679	717	0	0	831	0	639
HCM Platoon Ratio	1.00	1.00	1.00	1.00	1.00	1.00	1.00	1.00	1.00	1.00	1.00	1.00
Upstream Filter(I)	1.00	0.00	1.00	1.00	0.00	1.00	1.00	0.00	0.00	1.00	0.00	1.00
Uniform Delay (d), s/veh	22.1	0.0	14.8	22.5	0.0	13.7	16.2	0.0	0.0	15.0	0.0	13.3
Incr Delay (d2), s/veh	17.7	0.0	13.6	3.2	0.0	2.1	1.4	0.0	0.0	0.6	0.0	0.2
Initial Q Delay(d3),s/veh	0.0	0.0	0.0	0.0	0.0	0.0	0.0	0.0	0.0	0.0	0.0	0.0
%ile BackOfQ(50%),veh/ln	1.7	0.0	6.9	0.7	0.0	3.3	2.8	0.0	0.0	2.2	0.0	0.4
Unsig. Movement Delay, s/veh												
LnGrp Delay(d),s/veh	39.8	0.0	28.4	25.6	0.0	15.8	17.6	0.0	0.0	15.7	0.0	13.4
LnGrp LOS	D	A	C	C	A	B	B	A	A	B	A	B
Approach Vol, veh/h		663			462			295			326	
Approach Delay, s/veh		30.2			17.2			17.6			15.3	
Approach LOS		C			B			B			B	

Timer - Assigned Phs		2	3	4		6	7	8
Phs Duration (G+Y+Rc), s		18.6	7.6	22.6		18.6	8.5	21.7
Change Period (Y+Rc), s		5.1	4.6	5.1		5.1	4.6	5.1
Max Green Setting (Gmax), s		21.3	5.0	18.9		21.3	5.0	18.9
Max Q Clear Time (g_c+I1), s		12.2	4.0	16.7		8.3	5.1	11.4
Green Ext Time (p_c), s		1.1	0.0	0.8		1.4	0.0	1.4

Intersection Summary	
HCM 6th Ctrl Delay	21.8
HCM 6th LOS	C

Lane Group	EBL	EBT	WBL	WBT	NBL	NBT	SBL	SBT
Lane Configurations								
Traffic Volume (vph)	98	962	40	332	33	247	136	377
Future Volume (vph)	98	962	40	332	33	247	136	377
Turn Type	Prot	NA	Prot	NA	Perm	NA	Perm	NA
Protected Phases	7	4	3	8		2		6
Permitted Phases					2		6	
Detector Phase	7	4	3	8	2	2	6	6
Switch Phase								
Minimum Initial (s)	5.0	10.0	5.0	10.0	10.0	10.0	10.0	10.0
Minimum Split (s)	9.6	25.7	9.6	25.7	28.6	28.6	28.6	28.6
Total Split (s)	18.2	41.0	11.0	33.8	38.0	38.0	38.0	38.0
Total Split (%)	20.2%	45.6%	12.2%	37.6%	42.2%	42.2%	42.2%	42.2%
Yellow Time (s)	3.6	3.7	3.6	3.7	3.6	3.6	3.6	3.6
All-Red Time (s)	1.0	1.0	1.0	1.0	1.0	1.0	1.0	1.0
Lost Time Adjust (s)	0.0	0.0	0.0	0.0		0.0		0.0
Total Lost Time (s)	4.6	4.7	4.6	4.7		4.6		4.6
Lead/Lag	Lead	Lag	Lead	Lag				
Lead-Lag Optimize?	Yes	Yes	Yes	Yes				
Recall Mode	None	None	None	None	None	None	None	None

Intersection Summary
Cycle Length: 90
Actuated Cycle Length: 73.6
Natural Cycle: 70
Control Type: Actuated-Uncoordinated

Splits and Phases: 2: Eureka St. & Redlands Bl.

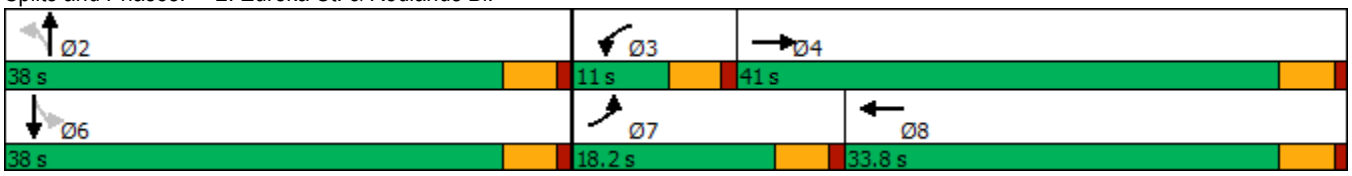

Movement	EBL	EBT	EBR	WBL	WBT	WBR	NBL	NBT	NBR	SBL	SBT	SBR
Lane Configurations												
Traffic Volume (veh/h)	98	962	96	40	332	65	33	247	99	136	377	67
Future Volume (veh/h)	98	962	96	40	332	65	33	247	99	136	377	67
Initial Q (Qb), veh	0	0	0	0	0	0	0	0	0	0	0	0
Ped-Bike Adj(A_pbT)	1.00		1.00	1.00		0.99	1.00		0.99	1.00		0.99
Parking Bus, Adj	1.00	1.00	1.00	1.00	1.00	1.00	1.00	1.00	1.00	1.00	1.00	1.00
Work Zone On Approach		No			No			No			No	
Adj Sat Flow, veh/h/ln	1673	1772	1772	1673	1772	1772	1772	1772	1772	1772	1772	1772
Adj Flow Rate, veh/h	108	1057	98	44	365	53	36	271	97	149	414	49
Peak Hour Factor	0.91	0.91	0.91	0.91	0.91	0.91	0.91	0.91	0.91	0.91	0.91	0.91
Percent Heavy Veh, %	2	2	2	2	2	2	2	2	2	2	2	2
Cap, veh/h	134	1293	120	65	1095	158	107	708	256	240	665	84
Arrive On Green	0.08	0.42	0.42	0.04	0.37	0.37	0.35	0.35	0.35	0.35	0.35	0.35
Sat Flow, veh/h	1594	3114	289	1594	2948	424	139	2016	730	470	1893	240
Grp Volume(v), veh/h	108	571	584	44	207	211	209	0	195	292	0	320
Grp Sat Flow(s),veh/h/ln	1594	1683	1719	1594	1683	1689	1415	0	1470	1037	0	1565
Q Serve(g_s), s	4.8	21.6	21.6	2.0	6.3	6.5	0.5	0.0	7.2	12.9	0.0	12.0
Cycle Q Clear(g_c), s	4.8	21.6	21.6	2.0	6.3	6.5	12.5	0.0	7.2	20.0	0.0	12.0
Prop In Lane	1.00		0.17	1.00		0.25	0.17		0.50	0.51		0.15
Lane Grp Cap(c), veh/h	134	699	714	65	625	627	556	0	516	440	0	550
V/C Ratio(X)	0.80	0.82	0.82	0.68	0.33	0.34	0.38	0.00	0.38	0.66	0.00	0.58
Avail Cap(c_a), veh/h	301	849	867	142	681	683	729	0	682	584	0	726
HCM Platoon Ratio	1.00	1.00	1.00	1.00	1.00	1.00	1.00	1.00	1.00	1.00	1.00	1.00
Upstream Filter(I)	1.00	1.00	1.00	1.00	1.00	1.00	1.00	0.00	1.00	1.00	0.00	1.00
Uniform Delay (d), s/veh	32.4	18.6	18.6	34.1	16.2	16.2	17.3	0.0	17.5	23.2	0.0	19.0
Incr Delay (d2), s/veh	4.2	5.3	5.2	4.6	0.3	0.3	0.4	0.0	0.5	1.7	0.0	1.0
Initial Q Delay(d3),s/veh	0.0	0.0	0.0	0.0	0.0	0.0	0.0	0.0	0.0	0.0	0.0	0.0
%ile BackOfQ(50%),veh/ln	1.9	8.7	8.8	0.8	2.3	2.4	2.5	0.0	2.4	4.6	0.0	4.3
Unsig. Movement Delay, s/veh												
LnGrp Delay(d),s/veh	36.6	23.9	23.9	38.6	16.5	16.6	17.7	0.0	17.9	24.9	0.0	20.0
LnGrp LOS	D	C	C	D	B	B	B	A	B	C	A	C
Approach Vol, veh/h		1263			462			404			612	
Approach Delay, s/veh		25.0			18.6			17.8			22.3	
Approach LOS		C			B			B			C	

Timer - Assigned Phs		2	3	4		6	7	8				
Phs Duration (G+Y+Rc), s		29.9	7.5	34.6		29.9	10.7	31.4				
Change Period (Y+Rc), s		4.6	4.6	* 4.7		4.6	4.6	* 4.7				
Max Green Setting (Gmax), s		33.4	6.4	* 36		33.4	13.6	* 29				
Max Q Clear Time (g_c+I1), s		14.5	4.0	23.6		22.0	6.8	8.5				
Green Ext Time (p_c), s		2.5	0.0	6.2		3.3	0.1	2.4				

Intersection Summary	
HCM 6th Ctrl Delay	22.3
HCM 6th LOS	C

Notes

* HCM 6th computational engine requires equal clearance times for the phases crossing the barrier.

Intersection	
Int Delay, s/veh	0.5

Movement	WBL	WBR	NBT	NBR	SBL	SBT
Lane Configurations						
Traffic Vol, veh/h	0	47	332	58	0	513
Future Vol, veh/h	0	47	332	58	0	513
Conflicting Peds, #/hr	0	0	0	0	0	0
Sign Control	Stop	Stop	Free	Free	Free	Free
RT Channelized	-	None	-	None	-	None
Storage Length	-	0	-	-	-	-
Veh in Median Storage, #	0	-	0	-	-	0
Grade, %	0	-	0	-	-	0
Peak Hour Factor	92	92	92	92	92	92
Heavy Vehicles, %	2	2	2	2	2	2
Mvmt Flow	0	51	361	63	0	558

Major/Minor	Minor1		Major1		Major2	
Conflicting Flow All	-	212	0	0	-	-
Stage 1	-	-	-	-	-	-
Stage 2	-	-	-	-	-	-
Critical Hdwy	-	6.94	-	-	-	-
Critical Hdwy Stg 1	-	-	-	-	-	-
Critical Hdwy Stg 2	-	-	-	-	-	-
Follow-up Hdwy	-	3.32	-	-	-	-
Pot Cap-1 Maneuver	0	793	-	-	0	-
Stage 1	0	-	-	-	0	-
Stage 2	0	-	-	-	0	-
Platoon blocked, %			-	-		-
Mov Cap-1 Maneuver	-	793	-	-	-	-
Mov Cap-2 Maneuver	-	-	-	-	-	-
Stage 1	-	-	-	-	-	-
Stage 2	-	-	-	-	-	-

Approach	WB	NB	SB
HCM Control Delay, s	9.9	0	0
HCM LOS	A		

Minor Lane/Major Mvmt	NBT	NBR	WBLn1	SBT
Capacity (veh/h)	-	-	793	-
HCM Lane V/C Ratio	-	-	0.064	-
HCM Control Delay (s)	-	-	9.9	-
HCM Lane LOS	-	-	A	-
HCM 95th %tile Q(veh)	-	-	0.2	-

Intersection	
Int Delay, s/veh	1.6

Movement	EBL	EBR	NBL	NBT	SBT	SBR
Lane Configurations						
Traffic Vol, veh/h	33	45	46	357	485	28
Future Vol, veh/h	33	45	46	357	485	28
Conflicting Peds, #/hr	0	0	0	0	0	0
Sign Control	Stop	Stop	Free	Free	Free	Free
RT Channelized	-	None	-	None	-	None
Storage Length	0	-	-	-	-	-
Veh in Median Storage, #	0	-	-	0	0	-
Grade, %	0	-	-	0	0	-
Peak Hour Factor	97	97	97	97	97	97
Heavy Vehicles, %	2	2	2	2	2	2
Mvmt Flow	34	46	47	368	500	29

Major/Minor	Minor2		Major1		Major2	
Conflicting Flow All	793	265	529	0	-	0
Stage 1	515	-	-	-	-	-
Stage 2	278	-	-	-	-	-
Critical Hdwy	6.84	6.94	4.14	-	-	-
Critical Hdwy Stg 1	5.84	-	-	-	-	-
Critical Hdwy Stg 2	5.84	-	-	-	-	-
Follow-up Hdwy	3.52	3.32	2.22	-	-	-
Pot Cap-1 Maneuver	326	733	1034	-	-	-
Stage 1	565	-	-	-	-	-
Stage 2	744	-	-	-	-	-
Platoon blocked, %				-	-	-
Mov Cap-1 Maneuver	307	733	1034	-	-	-
Mov Cap-2 Maneuver	307	-	-	-	-	-
Stage 1	533	-	-	-	-	-
Stage 2	744	-	-	-	-	-

Approach	EB	NB	SB
HCM Control Delay, s	14.4	1.2	0
HCM LOS	B		

Minor Lane/Major Mvmt	NBL	NBT	EBLn1	SBT	SBR
Capacity (veh/h)	1034	-	462	-	-
HCM Lane V/C Ratio	0.046	-	0.174	-	-
HCM Control Delay (s)	8.6	0.2	14.4	-	-
HCM Lane LOS	A	A	B	-	-
HCM 95th %tile Q(veh)	0.1	-	0.6	-	-

Intersection	
Int Delay, s/veh	0.7

Movement	WBL	WBR	NBT	NBR	SBL	SBT
Lane Configurations						
Traffic Vol, veh/h	0	74	329	96	0	530
Future Vol, veh/h	0	74	329	96	0	530
Conflicting Peds, #/hr	0	0	0	0	0	0
Sign Control	Stop	Stop	Free	Free	Free	Free
RT Channelized	-	None	-	None	-	None
Storage Length	-	0	-	-	-	-
Veh in Median Storage, #	0	-	0	-	-	0
Grade, %	0	-	0	-	-	0
Peak Hour Factor	92	92	92	92	92	92
Heavy Vehicles, %	2	2	2	2	2	2
Mvmt Flow	0	80	358	104	0	576

Major/Minor	Minor1		Major1		Major2	
Conflicting Flow All	-	231	0	0	-	-
Stage 1	-	-	-	-	-	-
Stage 2	-	-	-	-	-	-
Critical Hdwy	-	6.94	-	-	-	-
Critical Hdwy Stg 1	-	-	-	-	-	-
Critical Hdwy Stg 2	-	-	-	-	-	-
Follow-up Hdwy	-	3.32	-	-	-	-
Pot Cap-1 Maneuver	0	771	-	-	0	-
Stage 1	0	-	-	-	0	-
Stage 2	0	-	-	-	0	-
Platoon blocked, %			-	-		-
Mov Cap-1 Maneuver	-	771	-	-	-	-
Mov Cap-2 Maneuver	-	-	-	-	-	-
Stage 1	-	-	-	-	-	-
Stage 2	-	-	-	-	-	-

Approach	WB	NB	SB
HCM Control Delay, s	10.2	0	0
HCM LOS	B		

Minor Lane/Major Mvmt	NBT	NBR	WBLn1	SBT
Capacity (veh/h)	-	-	771	-
HCM Lane V/C Ratio	-	-	0.104	-
HCM Control Delay (s)	-	-	10.2	-
HCM Lane LOS	-	-	B	-
HCM 95th %tile Q(veh)	-	-	0.3	-

Lane Group	EBL	EBT	WBL	WBT	NBL	NBT	SBL	SBT
Lane Configurations								
Traffic Volume (vph)	141	479	24	354	19	66	135	282
Future Volume (vph)	141	479	24	354	19	66	135	282
Turn Type	Perm	NA	Perm	NA	Perm	NA	Perm	NA
Protected Phases		4		8		2		6
Permitted Phases	4		8		2		6	
Detector Phase	4	4	8	8	2	2	6	6
Switch Phase								
Minimum Initial (s)	10.0	10.0	10.0	10.0	10.0	10.0	10.0	10.0
Minimum Split (s)	23.6	23.6	23.6	23.6	27.6	27.6	27.6	27.6
Total Split (s)	28.0	28.0	28.0	28.0	32.0	32.0	32.0	32.0
Total Split (%)	46.7%	46.7%	46.7%	46.7%	53.3%	53.3%	53.3%	53.3%
Yellow Time (s)	3.6	3.6	3.6	3.6	3.6	3.6	3.6	3.6
All-Red Time (s)	1.0	1.0	1.0	1.0	1.0	1.0	1.0	1.0
Lost Time Adjust (s)	0.0	0.0	0.0	0.0		0.0		0.0
Total Lost Time (s)	4.6	4.6	4.6	4.6		4.6		4.6
Lead/Lag								
Lead-Lag Optimize?								
Recall Mode	None	None	None	None	None	None	None	None

Intersection Summary
Cycle Length: 60
Actuated Cycle Length: 39.3
Natural Cycle: 55
Control Type: Actuated-Uncoordinated

Splits and Phases: 6: Eureka St. & Brookside Av./Citrus Av.

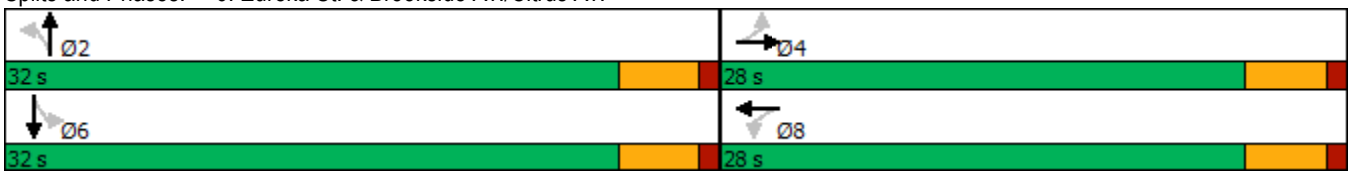

Movement	EBL	EBT	EBR	WBL	WBT	WBR	NBL	NBT	NBR	SBL	SBT	SBR
Lane Configurations												
Traffic Volume (veh/h)	141	479	38	24	354	167	19	66	11	135	282	165
Future Volume (veh/h)	141	479	38	24	354	167	19	66	11	135	282	165
Initial Q (Qb), veh	0	0	0	0	0	0	0	0	0	0	0	0
Ped-Bike Adj(A_pbT)	1.00		0.98	1.00		0.99	1.00		1.00	1.00		0.99
Parking Bus, Adj	1.00	1.00	1.00	1.00	1.00	1.00	1.00	1.00	1.00	1.00	1.00	1.00
Work Zone On Approach		No			No			No			No	
Adj Sat Flow, veh/h/ln	1673	1772	1772	1673	1772	1772	1772	1772	1772	1772	1772	1772
Adj Flow Rate, veh/h	144	489	33	24	361	150	19	67	6	138	288	122
Peak Hour Factor	0.98	0.98	0.98	0.98	0.98	0.98	0.98	0.98	0.98	0.98	0.98	0.98
Percent Heavy Veh, %	2	2	2	2	2	2	2	2	2	2	2	2
Cap, veh/h	455	1301	88	455	945	386	250	741	68	345	569	239
Arrive On Green	0.41	0.41	0.41	0.41	0.41	0.41	0.33	0.33	0.33	0.33	0.33	0.33
Sat Flow, veh/h	840	3195	215	830	2322	948	319	2253	208	589	1731	726
Grp Volume(v), veh/h	144	257	265	24	260	251	46	0	46	300	0	248
Grp Sat Flow(s),veh/h/ln	840	1683	1727	830	1683	1586	1205	0	1574	1571	0	1475
Q Serve(g_s), s	5.1	3.7	3.7	0.7	3.8	3.9	0.1	0.0	0.7	3.5	0.0	4.7
Cycle Q Clear(g_c), s	9.0	3.7	3.7	4.5	3.8	3.9	4.8	0.0	0.7	5.3	0.0	4.7
Prop In Lane	1.00		0.12	1.00		0.60	0.41		0.13	0.46		0.49
Lane Grp Cap(c), veh/h	455	686	703	455	686	646	542	0	518	667	0	485
V/C Ratio(X)	0.32	0.37	0.38	0.05	0.38	0.39	0.09	0.00	0.09	0.45	0.00	0.51
Avail Cap(c_a), veh/h	677	1130	1159	675	1130	1065	1148	0	1237	1368	0	1159
HCM Platoon Ratio	1.00	1.00	1.00	1.00	1.00	1.00	1.00	1.00	1.00	1.00	1.00	1.00
Upstream Filter(I)	1.00	1.00	1.00	1.00	1.00	1.00	1.00	0.00	1.00	1.00	0.00	1.00
Uniform Delay (d), s/veh	10.4	7.2	7.2	8.8	7.2	7.3	8.1	0.0	8.1	9.6	0.0	9.4
Incr Delay (d2), s/veh	0.4	0.3	0.3	0.0	0.3	0.4	0.1	0.0	0.1	0.5	0.0	0.8
Initial Q Delay(d3),s/veh	0.0	0.0	0.0	0.0	0.0	0.0	0.0	0.0	0.0	0.0	0.0	0.0
%ile BackOfQ(50%),veh/ln	0.7	0.9	0.9	0.1	1.0	1.0	0.2	0.0	0.2	1.5	0.0	1.2
Unsig. Movement Delay, s/veh												
LnGrp Delay(d),s/veh	10.8	7.6	7.6	8.8	7.6	7.7	8.2	0.0	8.2	10.0	0.0	10.3
LnGrp LOS	B	A	A	A	A	A	A	A	A	B	A	B
Approach Vol, veh/h		666			535			92			548	
Approach Delay, s/veh		8.3			7.7			8.2			10.1	
Approach LOS		A			A			A			B	

Timer - Assigned Phs	2	4	6	8
Phs Duration (G+Y+Rc), s	16.1	18.8	16.1	18.8
Change Period (Y+Rc), s	4.6	4.6	4.6	4.6
Max Green Setting (Gmax), s	27.4	23.4	27.4	23.4
Max Q Clear Time (g_c+I1), s	6.8	11.0	7.3	6.5
Green Ext Time (p_c), s	0.4	3.2	3.6	3.2

Intersection Summary	
HCM 6th Ctrl Delay	8.7
HCM 6th LOS	A

Intersection	
Int Delay, s/veh	0.3

Movement	WBL	WBR	NBT	NBR	SBL	SBT
Lane Configurations						
Traffic Vol, veh/h	0	0	96	0	20	324
Future Vol, veh/h	0	0	96	0	20	324
Conflicting Peds, #/hr	0	0	0	0	0	0
Sign Control	Stop	Stop	Free	Free	Free	Free
RT Channelized	-	None	-	None	-	None
Storage Length	-	0	-	-	-	-
Veh in Median Storage, #	0	-	0	-	-	0
Grade, %	0	-	0	-	-	0
Peak Hour Factor	92	92	92	92	92	92
Heavy Vehicles, %	2	2	2	2	2	2
Mvmt Flow	0	0	104	0	22	352

Major/Minor	Minor1		Major1		Major2	
Conflicting Flow All	-	104	0	0	104	0
Stage 1	-	-	-	-	-	-
Stage 2	-	-	-	-	-	-
Critical Hdwy	-	6.22	-	-	4.12	-
Critical Hdwy Stg 1	-	-	-	-	-	-
Critical Hdwy Stg 2	-	-	-	-	-	-
Follow-up Hdwy	-	3.318	-	-	2.218	-
Pot Cap-1 Maneuver	0	951	-	-	1488	-
Stage 1	0	-	-	-	-	-
Stage 2	0	-	-	-	-	-
Platoon blocked, %			-	-		-
Mov Cap-1 Maneuver	-	951	-	-	1488	-
Mov Cap-2 Maneuver	-	-	-	-	-	-
Stage 1	-	-	-	-	-	-
Stage 2	-	-	-	-	-	-

Approach	WB	NB	SB
HCM Control Delay, s	0	0	0.4
HCM LOS	A		

Minor Lane/Major Mvmt	NBT	NBR	WBLn1	SBL	SBT
Capacity (veh/h)	-	-	-	1488	-
HCM Lane V/C Ratio	-	-	-	0.015	-
HCM Control Delay (s)	-	-	0	7.5	0
HCM Lane LOS	-	-	A	A	A
HCM 95th %tile Q(veh)	-	-	-	0	-

Intersection	
Int Delay, s/veh	0.1

Movement	EBT	EBR	WBL	WBT	NBL	NBR
Lane Configurations						
Traffic Vol, veh/h	615	10	0	546	0	7
Future Vol, veh/h	615	10	0	546	0	7
Conflicting Peds, #/hr	0	0	0	0	0	0
Sign Control	Free	Free	Free	Free	Stop	Stop
RT Channelized	-	None	-	None	-	None
Storage Length	-	-	-	-	-	0
Veh in Median Storage, #	0	-	-	0	0	-
Grade, %	0	-	-	0	0	-
Peak Hour Factor	92	92	92	92	92	92
Heavy Vehicles, %	2	2	2	2	2	2
Mvmt Flow	668	11	0	593	0	8

Major/Minor	Major1		Major2		Minor1	
Conflicting Flow All	0	0	-	-	-	340
Stage 1	-	-	-	-	-	-
Stage 2	-	-	-	-	-	-
Critical Hdwy	-	-	-	-	-	6.94
Critical Hdwy Stg 1	-	-	-	-	-	-
Critical Hdwy Stg 2	-	-	-	-	-	-
Follow-up Hdwy	-	-	-	-	-	3.32
Pot Cap-1 Maneuver	-	-	0	-	0	656
Stage 1	-	-	0	-	0	-
Stage 2	-	-	0	-	0	-
Platoon blocked, %	-	-		-		
Mov Cap-1 Maneuver	-	-	-	-	-	656
Mov Cap-2 Maneuver	-	-	-	-	-	-
Stage 1	-	-	-	-	-	-
Stage 2	-	-	-	-	-	-

Approach	EB	WB	NB
HCM Control Delay, s	0	0	10.6
HCM LOS			B

Minor Lane/Major Mvmt	NBLn1	EBT	EBR	WBT
Capacity (veh/h)	656	-	-	-
HCM Lane V/C Ratio	0.012	-	-	-
HCM Control Delay (s)	10.6	-	-	-
HCM Lane LOS	B	-	-	-
HCM 95th %tile Q(veh)	0	-	-	-

Lane Group	EBL	EBT	WBL	WBT	NBL	NBT	SBL	SBT
Lane Configurations								
Traffic Volume (vph)	8	1180	48	423	4	0	11	0
Future Volume (vph)	8	1180	48	423	4	0	11	0
Turn Type	Prot	NA	Prot	NA	Perm	NA	Perm	NA
Protected Phases	7	4	3	8		2		6
Permitted Phases					2		6	
Detector Phase	7	4	3	8	2	2	6	6
Switch Phase								
Minimum Initial (s)	5.0	10.0	5.0	10.0	10.0	10.0	10.0	10.0
Minimum Split (s)	9.6	21.7	9.6	21.7	24.6	24.6	24.6	24.6
Total Split (s)	9.6	25.0	9.6	25.0	25.4	25.4	25.4	25.4
Total Split (%)	16.0%	41.7%	16.0%	41.7%	42.3%	42.3%	42.3%	42.3%
Yellow Time (s)	3.6	3.7	3.6	3.7	3.6	3.6	3.6	3.6
All-Red Time (s)	1.0	1.0	1.0	1.0	1.0	1.0	1.0	1.0
Lost Time Adjust (s)	0.0	0.0	0.0	0.0		0.0		0.0
Total Lost Time (s)	4.6	4.7	4.6	4.7		4.6		4.6
Lead/Lag	Lead	Lag	Lead	Lag				
Lead-Lag Optimize?	Yes	Yes	Yes	Yes				
Recall Mode	None	None	None	None	None	None	None	None

Intersection Summary
Cycle Length: 60
Actuated Cycle Length: 36.7
Natural Cycle: 70
Control Type: Actuated-Uncoordinated

Splits and Phases: 9: 3rd St. & Redlands Bl.

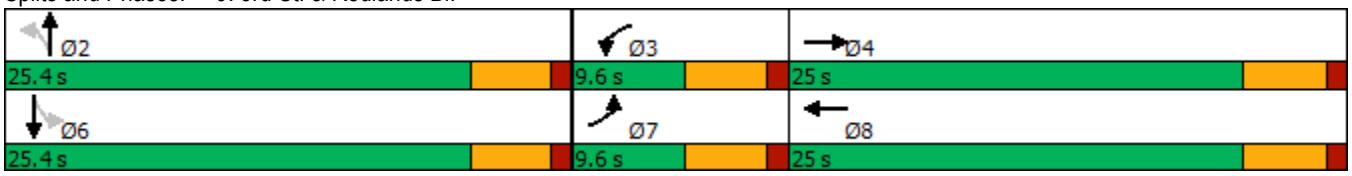

Movement	EBL	EBT	EBR	WBL	WBT	WBR	NBL	NBT	NBR	SBL	SBT	SBR
Lane Configurations												
Traffic Volume (veh/h)	8	1180	8	48	423	5	4	0	39	11	0	10
Future Volume (veh/h)	8	1180	8	48	423	5	4	0	39	11	0	10
Initial Q (Qb), veh	0	0	0	0	0	0	0	0	0	0	0	0
Ped-Bike Adj(A_pbT)	1.00		1.00	1.00		0.98	1.00		1.00	1.00		1.00
Parking Bus, Adj	1.00	1.00	1.00	1.00	1.00	1.00	1.00	1.00	1.00	1.00	1.00	1.00
Work Zone On Approach		No			No			No			No	
Adj Sat Flow, veh/h/ln	1673	1772	1772	1673	1772	1772	1772	1772	1772	1772	1772	1772
Adj Flow Rate, veh/h	9	1356	8	55	486	6	5	0	42	13	0	5
Peak Hour Factor	0.87	0.87	0.87	0.87	0.87	0.87	0.87	0.87	0.87	0.87	0.87	0.87
Percent Heavy Veh, %	2	2	2	2	2	2	2	2	2	2	2	2
Cap, veh/h	19	1618	10	91	1759	22	109	10	173	266	22	52
Arrive On Green	0.01	0.47	0.47	0.06	0.52	0.52	0.13	0.00	0.13	0.13	0.00	0.13
Sat Flow, veh/h	1594	3431	20	1594	3404	42	82	78	1348	883	174	407
Grp Volume(v), veh/h	9	665	699	55	240	252	47	0	0	18	0	0
Grp Sat Flow(s),veh/h/ln	1594	1683	1768	1594	1683	1763	1508	0	0	1464	0	0
Q Serve(g_s), s	0.2	14.0	14.0	1.4	3.3	3.3	0.0	0.0	0.0	0.0	0.0	0.0
Cycle Q Clear(g_c), s	0.2	14.0	14.0	1.4	3.3	3.3	1.1	0.0	0.0	0.4	0.0	0.0
Prop In Lane	1.00		0.01	1.00		0.02	0.11		0.89	0.72		0.28
Lane Grp Cap(c), veh/h	19	794	834	91	870	911	292	0	0	341	0	0
V/C Ratio(X)	0.47	0.84	0.84	0.61	0.28	0.28	0.16	0.00	0.00	0.05	0.00	0.00
Avail Cap(c_a), veh/h	197	844	887	197	870	911	867	0	0	881	0	0
HCM Platoon Ratio	1.00	1.00	1.00	1.00	1.00	1.00	1.00	1.00	1.00	1.00	1.00	1.00
Upstream Filter(I)	1.00	1.00	1.00	1.00	1.00	1.00	1.00	0.00	0.00	1.00	0.00	0.00
Uniform Delay (d), s/veh	19.9	9.3	9.3	18.6	5.5	5.5	15.9	0.0	0.0	15.5	0.0	0.0
Incr Delay (d2), s/veh	6.7	7.1	6.8	2.4	0.2	0.2	0.3	0.0	0.0	0.1	0.0	0.0
Initial Q Delay(d3),s/veh	0.0	0.0	0.0	0.0	0.0	0.0	0.0	0.0	0.0	0.0	0.0	0.0
%ile BackOfQ(50%),veh/ln	0.1	4.9	5.1	0.5	0.8	0.8	0.4	0.0	0.0	0.1	0.0	0.0
Unsig. Movement Delay, s/veh												
LnGrp Delay(d),s/veh	26.6	16.5	16.2	21.0	5.7	5.7	16.1	0.0	0.0	15.6	0.0	0.0
LnGrp LOS	C	B	B	C	A	A	B	A	A	B	A	A
Approach Vol, veh/h		1373			547			47			18	
Approach Delay, s/veh		16.4			7.2			16.1			15.6	
Approach LOS		B			A			B			B	

Timer - Assigned Phs		2	3	4		6	7	8				
Phs Duration (G+Y+Rc), s		9.8	6.9	23.8		9.8	5.1	25.6				
Change Period (Y+Rc), s		4.6	4.6	* 4.7		4.6	4.6	* 4.7				
Max Green Setting (Gmax), s		20.8	5.0	* 20		20.8	5.0	* 20				
Max Q Clear Time (g_c+I1), s		3.1	3.4	16.0		2.4	2.2	5.3				
Green Ext Time (p_c), s		0.2	0.0	3.1		0.0	0.0	2.6				

Intersection Summary	
HCM 6th Ctrl Delay	13.9
HCM 6th LOS	B

Notes

* HCM 6th computational engine requires equal clearance times for the phases crossing the barrier.

Intersection	
Int Delay, s/veh	0.5

Movement	EBL	EBT	WBT	WBR	SBL	SBR
Lane Configurations						
Traffic Vol, veh/h	0	622	494	80	4	52
Future Vol, veh/h	0	622	494	80	4	52
Conflicting Peds, #/hr	0	0	0	0	0	0
Sign Control	Free	Free	Free	Free	Stop	Stop
RT Channelized	-	None	-	None	-	None
Storage Length	100	-	-	-	0	-
Veh in Median Storage, #	-	0	0	-	0	-
Grade, %	-	0	0	-	0	-
Peak Hour Factor	92	92	92	92	92	92
Heavy Vehicles, %	2	2	2	2	2	2
Mvmt Flow	0	676	537	87	4	57

Major/Minor	Major1		Major2		Minor2	
Conflicting Flow All	624	0	-	0	919	312
Stage 1	-	-	-	-	581	-
Stage 2	-	-	-	-	338	-
Critical Hdwy	4.14	-	-	-	6.84	6.94
Critical Hdwy Stg 1	-	-	-	-	5.84	-
Critical Hdwy Stg 2	-	-	-	-	5.84	-
Follow-up Hdwy	2.22	-	-	-	3.52	3.32
Pot Cap-1 Maneuver	953	-	-	-	270	684
Stage 1	-	-	-	-	522	-
Stage 2	-	-	-	-	694	-
Platoon blocked, %		-	-	-		
Mov Cap-1 Maneuver	953	-	-	-	270	684
Mov Cap-2 Maneuver	-	-	-	-	270	-
Stage 1	-	-	-	-	522	-
Stage 2	-	-	-	-	694	-

Approach	EB	WB	SB
HCM Control Delay, s	0	0	11.5
HCM LOS			B

Minor Lane/Major Mvmt	EBL	EBT	WBT	WBR	SBLn1
Capacity (veh/h)	953	-	-	-	616
HCM Lane V/C Ratio	-	-	-	-	0.099
HCM Control Delay (s)	0	-	-	-	11.5
HCM Lane LOS	A	-	-	-	B
HCM 95th %tile Q(veh)	0	-	-	-	0.3

Intersection	
Int Delay, s/veh	0.5

Movement	EBT	EBR	WBL	WBT	NBL	NBR
Lane Configurations						
Traffic Vol, veh/h	1156	74	0	476	0	60
Future Vol, veh/h	1156	74	0	476	0	60
Conflicting Peds, #/hr	0	0	0	0	0	0
Sign Control	Free	Free	Free	Free	Stop	Stop
RT Channelized	-	None	-	None	-	None
Storage Length	-	-	-	-	-	0
Veh in Median Storage, #	0	-	-	0	0	-
Grade, %	0	-	-	0	0	-
Peak Hour Factor	92	92	92	92	92	92
Heavy Vehicles, %	2	2	2	2	2	2
Mvmt Flow	1257	80	0	517	0	65

Major/Minor	Major1		Major2		Minor1	
Conflicting Flow All	0	0	-	-	-	669
Stage 1	-	-	-	-	-	-
Stage 2	-	-	-	-	-	-
Critical Hdwy	-	-	-	-	-	6.94
Critical Hdwy Stg 1	-	-	-	-	-	-
Critical Hdwy Stg 2	-	-	-	-	-	-
Follow-up Hdwy	-	-	-	-	-	3.32
Pot Cap-1 Maneuver	-	-	0	-	0	400
Stage 1	-	-	0	-	0	-
Stage 2	-	-	0	-	0	-
Platoon blocked, %	-	-		-		
Mov Cap-1 Maneuver	-	-	-	-	-	400
Mov Cap-2 Maneuver	-	-	-	-	-	-
Stage 1	-	-	-	-	-	-
Stage 2	-	-	-	-	-	-

Approach	EB	WB	NB
HCM Control Delay, s	0	0	15.7
HCM LOS			C

Minor Lane/Major Mvmt	NBLn1	EBT	EBR	WBT
Capacity (veh/h)	400	-	-	-
HCM Lane V/C Ratio	0.163	-	-	-
HCM Control Delay (s)	15.7	-	-	-
HCM Lane LOS	C	-	-	-
HCM 95th %tile Q(veh)	0.6	-	-	-

Intersection	
Int Delay, s/veh	1

Movement	EBT	EBR	WBL	WBT	NBL	NBR
Lane Configurations						
Traffic Vol, veh/h	620	6	8	563	11	82
Future Vol, veh/h	620	6	8	563	11	82
Conflicting Peds, #/hr	0	0	0	0	0	0
Sign Control	Free	Free	Free	Free	Stop	Stop
RT Channelized	-	None	-	None	-	None
Storage Length	-	-	70	-	0	-
Veh in Median Storage, #	0	-	-	0	0	-
Grade, %	0	-	-	0	0	-
Peak Hour Factor	91	91	91	91	91	91
Heavy Vehicles, %	2	2	2	2	2	2
Mvmt Flow	681	7	9	619	12	90

Major/Minor	Major1		Major2		Minor1	
Conflicting Flow All	0	0	688	0	1013	344
Stage 1	-	-	-	-	685	-
Stage 2	-	-	-	-	328	-
Critical Hdwy	-	-	4.14	-	6.84	6.94
Critical Hdwy Stg 1	-	-	-	-	5.84	-
Critical Hdwy Stg 2	-	-	-	-	5.84	-
Follow-up Hdwy	-	-	2.22	-	3.52	3.32
Pot Cap-1 Maneuver	-	-	902	-	235	652
Stage 1	-	-	-	-	462	-
Stage 2	-	-	-	-	702	-
Platoon blocked, %	-	-		-		
Mov Cap-1 Maneuver	-	-	902	-	233	652
Mov Cap-2 Maneuver	-	-	-	-	233	-
Stage 1	-	-	-	-	462	-
Stage 2	-	-	-	-	695	-

Approach	EB	WB	NB
HCM Control Delay, s	0	0.1	13.3
HCM LOS			B

Minor Lane/Major Mvmt	NBLn1	EBT	EBR	WBL	WBT
Capacity (veh/h)	538	-	-	902	-
HCM Lane V/C Ratio	0.19	-	-	0.01	-
HCM Control Delay (s)	13.3	-	-	9	-
HCM Lane LOS	B	-	-	A	-
HCM 95th %tile Q(veh)	0.7	-	-	0	-

Intersection	
Int Delay, s/veh	1.1

Movement	EBL	EBR	NBL	NBT	SBT	SBR
Lane Configurations						
Traffic Vol, veh/h	15	0	0	97	18	0
Future Vol, veh/h	15	0	0	97	18	0
Conflicting Peds, #/hr	0	0	0	0	0	0
Sign Control	Stop	Stop	Free	Free	Free	Free
RT Channelized	-	None	-	None	-	None
Storage Length	0	-	-	-	-	-
Veh in Median Storage, #	0	-	-	0	0	-
Grade, %	0	-	-	0	0	-
Peak Hour Factor	92	92	92	92	92	92
Heavy Vehicles, %	2	2	2	2	2	2
Mvmt Flow	16	0	0	105	20	0

Major/Minor	Minor2		Major1		Major2	
Conflicting Flow All	125	20	20	0	-	0
Stage 1	20	-	-	-	-	-
Stage 2	105	-	-	-	-	-
Critical Hdwy	6.42	6.22	4.12	-	-	-
Critical Hdwy Stg 1	5.42	-	-	-	-	-
Critical Hdwy Stg 2	5.42	-	-	-	-	-
Follow-up Hdwy	3.518	3.318	2.218	-	-	-
Pot Cap-1 Maneuver	870	1058	1596	-	-	-
Stage 1	1003	-	-	-	-	-
Stage 2	919	-	-	-	-	-
Platoon blocked, %				-	-	-
Mov Cap-1 Maneuver	870	1058	1596	-	-	-
Mov Cap-2 Maneuver	870	-	-	-	-	-
Stage 1	1003	-	-	-	-	-
Stage 2	919	-	-	-	-	-

Approach	EB	NB	SB
HCM Control Delay, s	9.2	0	0
HCM LOS	A		

Minor Lane/Major Mvmt	NBL	NBT	EBLn1	SBT	SBR
Capacity (veh/h)	1596	-	870	-	-
HCM Lane V/C Ratio	-	-	0.019	-	-
HCM Control Delay (s)	0	-	9.2	-	-
HCM Lane LOS	A	-	A	-	-
HCM 95th %tile Q(veh)	0	-	0.1	-	-

Intersection	
Int Delay, s/veh	0.5

Movement	EBT	EBR	WBL	WBT	NBL	NBR
Lane Configurations						
Traffic Vol, veh/h	1142	75	0	475	0	60
Future Vol, veh/h	1142	75	0	475	0	60
Conflicting Peds, #/hr	0	0	0	0	0	0
Sign Control	Free	Free	Free	Free	Stop	Stop
RT Channelized	-	None	-	None	-	None
Storage Length	-	-	-	-	-	0
Veh in Median Storage, #	0	-	-	0	0	-
Grade, %	0	-	-	0	0	-
Peak Hour Factor	92	92	92	92	92	92
Heavy Vehicles, %	2	2	2	2	2	2
Mvmt Flow	1241	82	0	516	0	65

Major/Minor	Major1		Major2		Minor1	
Conflicting Flow All	0	0	-	-	-	662
Stage 1	-	-	-	-	-	-
Stage 2	-	-	-	-	-	-
Critical Hdwy	-	-	-	-	-	6.94
Critical Hdwy Stg 1	-	-	-	-	-	-
Critical Hdwy Stg 2	-	-	-	-	-	-
Follow-up Hdwy	-	-	-	-	-	3.32
Pot Cap-1 Maneuver	-	-	0	-	0	404
Stage 1	-	-	0	-	0	-
Stage 2	-	-	0	-	0	-
Platoon blocked, %	-	-		-		
Mov Cap-1 Maneuver	-	-	-	-	-	404
Mov Cap-2 Maneuver	-	-	-	-	-	-
Stage 1	-	-	-	-	-	-
Stage 2	-	-	-	-	-	-

Approach	EB	WB	NB
HCM Control Delay, s	0	0	15.6
HCM LOS			C

Minor Lane/Major Mvmt	NBLn1	EBT	EBR	WBT
Capacity (veh/h)	404	-	-	-
HCM Lane V/C Ratio	0.161	-	-	-
HCM Control Delay (s)	15.6	-	-	-
HCM Lane LOS	C	-	-	-
HCM 95th %tile Q(veh)	0.6	-	-	-

Lane Group	EBL	EBT	WBL	WBT	NBL	NBT	SBL	SBT
Lane Configurations								
Traffic Volume (vph)	256	351	76	63	14	930	51	338
Future Volume (vph)	256	351	76	63	14	930	51	338
Turn Type	Perm	NA	Perm	NA	Perm	NA	Perm	NA
Protected Phases		4		8		2		6
Permitted Phases	4		8		2		6	
Detector Phase	4	4	8	8	2	2	6	6
Switch Phase								
Minimum Initial (s)	5.0	5.0	5.0	5.0	5.0	5.0	5.0	5.0
Minimum Split (s)	30.0	30.0	30.0	30.0	40.0	40.0	40.0	40.0
Total Split (s)	46.0	46.0	46.0	46.0	44.0	44.0	44.0	44.0
Total Split (%)	51.1%	51.1%	51.1%	51.1%	48.9%	48.9%	48.9%	48.9%
Yellow Time (s)	3.0	3.0	3.0	3.0	3.0	3.0	3.0	3.0
All-Red Time (s)	1.0	1.0	1.0	1.0	1.0	1.0	1.0	1.0
Lost Time Adjust (s)	0.0	0.0		0.0	0.0	0.0	0.0	0.0
Total Lost Time (s)	4.0	4.0		4.0	4.0	4.0	4.0	4.0
Lead/Lag								
Lead-Lag Optimize?								
Recall Mode	None	None	None	None	None	None	None	None

Intersection Summary
Cycle Length: 90
Actuated Cycle Length: 71.7
Natural Cycle: 70
Control Type: Actuated-Uncoordinated

Splits and Phases: 16: Orange St. & Pearl Av.

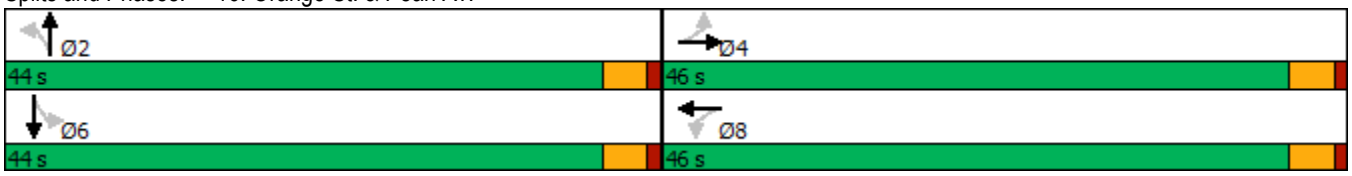

Movement	EBL	EBT	EBR	WBL	WBT	WBR	NBL	NBT	NBR	SBL	SBT	SBR
Lane Configurations												
Traffic Volume (veh/h)	256	351	196	76	63	174	14	930	98	51	338	24
Future Volume (veh/h)	256	351	196	76	63	174	14	930	98	51	338	24
Initial Q (Qb), veh	0	0	0	0	0	0	0	0	0	0	0	0
Ped-Bike Adj(A_pbT)	1.00		1.00	1.00		1.00	1.00		1.00	1.00		0.98
Parking Bus, Adj	1.00	1.00	1.00	1.00	1.00	1.00	1.00	1.00	1.00	1.00	1.00	1.00
Work Zone On Approach		No			No			No			No	
Adj Sat Flow, veh/h/ln	1673	1772	1772	1772	1772	1772	1673	1772	1772	1673	1772	1772
Adj Flow Rate, veh/h	267	366	179	79	66	151	15	969	96	53	352	23
Peak Hour Factor	0.96	0.96	0.96	0.96	0.96	0.96	0.96	0.96	0.96	0.96	0.96	0.96
Percent Heavy Veh, %	2	2	2	2	2	2	2	2	2	2	2	2
Cap, veh/h	396	545	266	137	121	211	415	1288	128	163	1334	87
Arrive On Green	0.49	0.49	0.49	0.49	0.49	0.49	0.42	0.42	0.42	0.42	0.42	0.42
Sat Flow, veh/h	1100	1121	548	167	250	435	951	3092	306	500	3204	208
Grp Volume(v), veh/h	267	0	545	296	0	0	15	527	538	53	184	191
Grp Sat Flow(s),veh/h/ln	1100	0	1670	852	0	0	951	1683	1715	500	1683	1729
Q Serve(g_s), s	5.7	0.0	20.4	9.6	0.0	0.0	0.9	21.7	21.8	8.2	5.9	5.9
Cycle Q Clear(g_c), s	35.7	0.0	20.4	30.0	0.0	0.0	6.8	21.7	21.8	30.0	5.9	5.9
Prop In Lane	1.00		0.33	0.27		0.51	1.00		0.18	1.00		0.12
Lane Grp Cap(c), veh/h	396	0	811	469	0	0	415	701	714	163	701	720
V/C Ratio(X)	0.67	0.00	0.67	0.63	0.00	0.00	0.04	0.75	0.75	0.32	0.26	0.27
Avail Cap(c_a), veh/h	427	0	859	507	0	0	485	825	840	200	825	847
HCM Platoon Ratio	1.00	1.00	1.00	1.00	1.00	1.00	1.00	1.00	1.00	1.00	1.00	1.00
Upstream Filter(I)	1.00	0.00	1.00	1.00	0.00	0.00	1.00	1.00	1.00	1.00	1.00	1.00
Uniform Delay (d), s/veh	22.4	0.0	16.0	19.2	0.0	0.0	17.9	20.2	20.2	33.0	15.6	15.6
Incr Delay (d2), s/veh	3.8	0.0	1.9	2.2	0.0	0.0	0.0	3.5	3.5	1.4	0.2	0.2
Initial Q Delay(d3),s/veh	0.0	0.0	0.0	0.0	0.0	0.0	0.0	0.0	0.0	0.0	0.0	0.0
%ile BackOfQ(50%),veh/ln	5.2	0.0	7.7	5.2	0.0	0.0	0.2	8.8	9.0	1.0	2.2	2.3
Unsig. Movement Delay, s/veh												
LnGrp Delay(d),s/veh	26.2	0.0	18.0	21.5	0.0	0.0	17.9	23.8	23.7	34.4	15.8	15.9
LnGrp LOS	C	A	B	C	A	A	B	C	C	C	B	B
Approach Vol, veh/h		812			296			1080			428	
Approach Delay, s/veh		20.7			21.5			23.7			18.1	
Approach LOS		C			C			C			B	

Timer - Assigned Phs	2	4	6	8
Phs Duration (G+Y+Rc), s	38.0	43.7	38.0	43.7
Change Period (Y+Rc), s	4.0	4.0	4.0	4.0
Max Green Setting (Gmax), s	40.0	42.0	40.0	42.0
Max Q Clear Time (g_c+I1), s	23.8	37.7	32.0	32.0
Green Ext Time (p_c), s	8.0	2.0	2.0	1.5

Intersection Summary	
HCM 6th Ctrl Delay	21.6
HCM 6th LOS	C

Lane Group	EBL	EBT	WBL	WBT	NBL	NBT	SBL	SBT
Lane Configurations								
Traffic Volume (vph)	196	867	68	317	41	536	136	430
Future Volume (vph)	196	867	68	317	41	536	136	430
Turn Type	Prot	NA	Prot	NA	Prot	NA	Prot	NA
Protected Phases	7	4	3	8	5	2	1	6
Permitted Phases								
Detector Phase	7	4	3	8	5	2	1	6
Switch Phase								
Minimum Initial (s)	5.0	10.0	5.0	10.0	5.0	10.0	5.0	10.0
Minimum Split (s)	9.6	23.7	9.6	27.7	9.6	27.6	9.6	30.6
Total Split (s)	18.0	36.0	10.2	28.2	11.8	28.8	15.0	32.0
Total Split (%)	20.0%	40.0%	11.3%	31.3%	13.1%	32.0%	16.7%	35.6%
Yellow Time (s)	3.6	3.7	3.6	3.7	3.6	3.6	3.6	3.6
All-Red Time (s)	1.0	1.0	1.0	1.0	1.0	1.0	1.0	1.0
Lost Time Adjust (s)	0.0	0.0	0.0	0.0	0.0	0.0	0.0	0.0
Total Lost Time (s)	4.6	4.7	4.6	4.7	4.6	4.6	4.6	4.6
Lead/Lag	Lead	Lag	Lead	Lag	Lead	Lag	Lead	Lag
Lead-Lag Optimize?	Yes	Yes	Yes	Yes	Yes	Yes	Yes	Yes
Recall Mode	None	None	None	None	None	None	None	None

Intersection Summary
Cycle Length: 90
Actuated Cycle Length: 83.4
Natural Cycle: 90
Control Type: Actuated-Uncoordinated

Splits and Phases: 17: Orange St. & Redlands Bl.

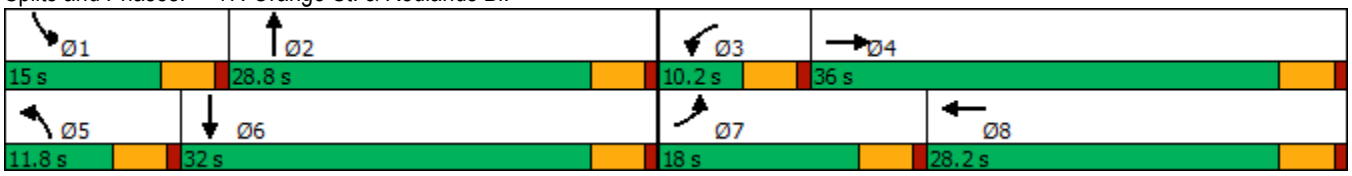

Movement	EBL	EBT	EBR	WBL	WBT	WBR	NBL	NBT	NBR	SBL	SBT	SBR
Lane Configurations												
Traffic Volume (veh/h)	196	867	139	68	317	254	41	536	40	136	430	118
Future Volume (veh/h)	196	867	139	68	317	254	41	536	40	136	430	118
Initial Q (Qb), veh	0	0	0	0	0	0	0	0	0	0	0	0
Ped-Bike Adj(A_pbT)	1.00		0.99	1.00		0.97	1.00		0.98	1.00		1.00
Parking Bus, Adj	1.00	1.00	1.00	1.00	1.00	1.00	1.00	1.00	1.00	1.00	1.00	1.00
Work Zone On Approach		No			No			No			No	
Adj Sat Flow, veh/h/ln	1673	1772	1772	1673	1772	1772	1673	1772	1772	1673	1772	1772
Adj Flow Rate, veh/h	215	953	117	75	348	198	45	589	34	149	473	107
Peak Hour Factor	0.91	0.91	0.91	0.91	0.91	0.91	0.91	0.91	0.91	0.91	0.91	0.91
Percent Heavy Veh, %	2	2	2	2	2	2	2	2	2	2	2	2
Cap, veh/h	248	1090	134	92	543	302	63	760	44	179	841	189
Arrive On Green	0.16	0.36	0.36	0.06	0.26	0.26	0.04	0.24	0.24	0.11	0.31	0.31
Sat Flow, veh/h	1594	3014	370	1594	2057	1144	1594	3230	186	1594	2729	613
Grp Volume(v), veh/h	215	532	538	75	283	263	45	307	316	149	291	289
Grp Sat Flow(s),veh/h/ln	1594	1683	1701	1594	1683	1518	1594	1683	1733	1594	1683	1659
Q Serve(g_s), s	10.5	23.5	23.5	3.7	11.8	12.3	2.2	13.5	13.6	7.3	11.5	11.6
Cycle Q Clear(g_c), s	10.5	23.5	23.5	3.7	11.8	12.3	2.2	13.5	13.6	7.3	11.5	11.6
Prop In Lane	1.00		0.22	1.00		0.75	1.00		0.11	1.00		0.37
Lane Grp Cap(c), veh/h	248	609	615	92	444	401	63	396	408	179	519	511
V/C Ratio(X)	0.87	0.87	0.87	0.81	0.64	0.66	0.71	0.77	0.78	0.83	0.56	0.57
Avail Cap(c_a), veh/h	268	662	669	112	497	449	144	512	527	208	580	572
HCM Platoon Ratio	1.00	1.00	1.00	1.00	1.00	1.00	1.00	1.00	1.00	1.00	1.00	1.00
Upstream Filter(I)	1.00	1.00	1.00	1.00	1.00	1.00	1.00	1.00	1.00	1.00	1.00	1.00
Uniform Delay (d), s/veh	32.8	23.7	23.7	37.0	25.9	26.1	37.8	28.4	28.5	34.6	23.0	23.1
Incr Delay (d2), s/veh	21.8	11.8	11.7	25.2	2.3	2.9	5.5	5.5	5.4	18.7	1.0	1.0
Initial Q Delay(d3),s/veh	0.0	0.0	0.0	0.0	0.0	0.0	0.0	0.0	0.0	0.0	0.0	0.0
%ile BackOfQ(50%),veh/ln	5.4	10.7	10.8	2.1	4.8	4.6	1.0	5.9	6.1	3.7	4.6	4.6
Unsig. Movement Delay, s/veh												
LnGrp Delay(d),s/veh	54.5	35.4	35.4	62.2	28.2	29.0	43.2	33.9	33.9	53.3	24.0	24.1
LnGrp LOS	D	D	D	E	C	C	D	C	C	D	C	C
Approach Vol, veh/h		1285			621			668			729	
Approach Delay, s/veh		38.6			32.7			34.5			30.0	
Approach LOS		D			C			C			C	

Timer - Assigned Phs	1	2	3	4	5	6	7	8
Phs Duration (G+Y+Rc), s	13.6	23.3	9.2	33.5	7.8	29.1	17.0	25.7
Change Period (Y+Rc), s	4.6	4.6	4.6	* 4.7	4.6	4.6	4.6	* 4.7
Max Green Setting (Gmax), s	10.4	24.2	5.6	* 31	7.2	27.4	13.4	* 24
Max Q Clear Time (g_c+I1), s	9.3	15.6	5.7	25.5	4.2	13.6	12.5	14.3
Green Ext Time (p_c), s	0.0	2.6	0.0	3.3	0.0	3.2	0.0	2.3

Intersection Summary	
HCM 6th Ctrl Delay	34.8
HCM 6th LOS	C

Notes

* HCM 6th computational engine requires equal clearance times for the phases crossing the barrier.

Lane Group	EBT	NBT	SBL	SBT
Lane Configurations				
Traffic Volume (vph)	0	612	117	497
Future Volume (vph)	0	612	117	497
Turn Type	NA	NA	Perm	NA
Protected Phases	4	2		6
Permitted Phases			6	
Detector Phase	4	2	6	6
Switch Phase				
Minimum Initial (s)	10.0	10.0	10.0	10.0
Minimum Split (s)	23.6	21.6	21.6	21.6
Total Split (s)	35.0	85.0	85.0	85.0
Total Split (%)	29.2%	70.8%	70.8%	70.8%
Yellow Time (s)	3.6	3.6	3.6	3.6
All-Red Time (s)	1.0	1.0	1.0	1.0
Lost Time Adjust (s)	0.0	0.0	0.0	0.0
Total Lost Time (s)	4.6	4.6	4.6	4.6
Lead/Lag				
Lead-Lag Optimize?				
Recall Mode	None	None	None	None

Intersection Summary
Cycle Length: 120
Actuated Cycle Length: 24.2
Natural Cycle: 55
Control Type: Actuated-Uncoordinated

Splits and Phases: 18: Orange St. & State St.

Movement	EBL	EBT	EBR	WBL	WBT	WBR	NBL	NBT	NBR	SBL	SBT	SBR
Lane Configurations												
Traffic Volume (veh/h)	5	0	13	0	0	0	0	612	118	117	497	21
Future Volume (veh/h)	5	0	13	0	0	0	0	612	118	117	497	21
Initial Q (Qb), veh	0	0	0				0	0	0	0	0	0
Ped-Bike Adj(A_pbT)	1.00		0.98				1.00		0.98	0.99		0.95
Parking Bus, Adj	1.00	1.00	1.00				1.00	1.00	1.00	1.00	1.00	1.00
Work Zone On Approach		No						No			No	
Adj Sat Flow, veh/h/ln	1772	1772	1772				1673	1772	1772	1673	1772	1772
Adj Flow Rate, veh/h	5	0	9				0	638	117	122	518	15
Peak Hour Factor	0.96	0.96	0.96				0.96	0.96	0.96	0.96	0.96	0.96
Percent Heavy Veh, %	2	2	2				2	2	2	2	2	2
Cap, veh/h	38	0	69				280	1621	297	578	1910	55
Arrive On Green	0.07	0.00	0.07				0.00	0.57	0.57	0.57	0.57	0.57
Sat Flow, veh/h	550	0	990				823	2831	518	665	3335	96
Grp Volume(v), veh/h	14	0	0				0	379	376	122	261	272
Grp Sat Flow(s),veh/h/ln	1540	0	0				823	1683	1666	665	1683	1748
Q Serve(g_s), s	0.2	0.0	0.0				0.0	3.2	3.2	3.2	2.0	2.0
Cycle Q Clear(g_c), s	0.2	0.0	0.0				0.0	3.2	3.2	6.4	2.0	2.0
Prop In Lane	0.36		0.64				1.00		0.31	1.00		0.06
Lane Grp Cap(c), veh/h	107	0	0				280	964	954	578	964	1001
V/C Ratio(X)	0.13	0.00	0.00				0.00	0.39	0.39	0.21	0.27	0.27
Avail Cap(c_a), veh/h	1821	0	0				2383	5266	5210	2278	5266	5469
HCM Platoon Ratio	1.00	1.00	1.00				1.00	1.00	1.00	1.00	1.00	1.00
Upstream Filter(I)	1.00	0.00	0.00				0.00	1.00	1.00	1.00	1.00	1.00
Uniform Delay (d), s/veh	11.2	0.0	0.0				0.0	3.0	3.0	4.8	2.8	2.8
Incr Delay (d2), s/veh	0.5	0.0	0.0				0.0	0.3	0.3	0.2	0.1	0.1
Initial Q Delay(d3),s/veh	0.0	0.0	0.0				0.0	0.0	0.0	0.0	0.0	0.0
%ile BackOfQ(50%),veh/ln	0.1	0.0	0.0				0.0	0.3	0.3	0.2	0.2	0.2
Unsig. Movement Delay, s/veh												
LnGrp Delay(d),s/veh	11.8	0.0	0.0				0.0	3.3	3.3	5.0	2.9	2.9
LnGrp LOS	B	A	A				A	A	A	A	A	A
Approach Vol, veh/h		14						755			655	
Approach Delay, s/veh		11.8						3.3			3.3	
Approach LOS		B						A			A	

Timer - Assigned Phs	2	4	6
Phs Duration (G+Y+Rc), s	19.3	6.4	19.3
Change Period (Y+Rc), s	4.6	4.6	4.6
Max Green Setting (Gmax), s	80.4	30.4	80.4
Max Q Clear Time (g_c+I1), s	5.2	2.2	8.4
Green Ext Time (p_c), s	6.1	0.0	5.3

Intersection Summary	
HCM 6th Ctrl Delay	3.4
HCM 6th LOS	A

Intersection	
Int Delay, s/veh	0.4

Movement	EBL	EBR	NBL	NBT	SBT	SBR
Lane Configurations						
Traffic Vol, veh/h	0	50	0	731	437	74
Future Vol, veh/h	0	50	0	731	437	74
Conflicting Peds, #/hr	0	0	0	0	0	0
Sign Control	Stop	Stop	Free	Free	Free	Free
RT Channelized	-	None	-	None	-	None
Storage Length	-	0	-	-	-	-
Veh in Median Storage, #	0	-	-	0	0	-
Grade, %	0	-	-	0	0	-
Peak Hour Factor	92	92	92	92	92	92
Heavy Vehicles, %	2	2	2	2	2	2
Mvmt Flow	0	54	0	795	475	80

Major/Minor	Minor2		Major1		Major2	
Conflicting Flow All	-	278	-	0	-	0
Stage 1	-	-	-	-	-	-
Stage 2	-	-	-	-	-	-
Critical Hdwy	-	6.94	-	-	-	-
Critical Hdwy Stg 1	-	-	-	-	-	-
Critical Hdwy Stg 2	-	-	-	-	-	-
Follow-up Hdwy	-	3.32	-	-	-	-
Pot Cap-1 Maneuver	0	719	0	-	-	-
Stage 1	0	-	0	-	-	-
Stage 2	0	-	0	-	-	-
Platoon blocked, %				-	-	-
Mov Cap-1 Maneuver	-	719	-	-	-	-
Mov Cap-2 Maneuver	-	-	-	-	-	-
Stage 1	-	-	-	-	-	-
Stage 2	-	-	-	-	-	-

Approach	EB	NB	SB
HCM Control Delay, s	10.4	0	0
HCM LOS	B		

Minor Lane/Major Mvmt	NBT	EBLn1	SBT	SBR
Capacity (veh/h)	-	719	-	-
HCM Lane V/C Ratio	-	0.076	-	-
HCM Control Delay (s)	-	10.4	-	-
HCM Lane LOS	-	B	-	-
HCM 95th %tile Q(veh)	-	0.2	-	-

Lane Group	EBL	EBT	EBR	WBL	WBT	NBL	NBT	SBL	SBT
Lane Configurations									
Traffic Volume (vph)	174	336	192	31	332	92	391	73	267
Future Volume (vph)	174	336	192	31	332	92	391	73	267
Turn Type	Perm	NA	Perm	Perm	NA	Perm	NA	Perm	NA
Protected Phases		4			8		2		6
Permitted Phases	4		4	8		2		6	
Detector Phase	4	4	4	8	8	2	2	6	6
Switch Phase									
Minimum Initial (s)	10.0	10.0	10.0	10.0	10.0	10.0	10.0	10.0	10.0
Minimum Split (s)	21.6	21.6	21.6	21.6	21.6	21.6	21.6	22.6	22.6
Total Split (s)	33.0	33.0	33.0	33.0	33.0	27.0	27.0	27.0	27.0
Total Split (%)	55.0%	55.0%	55.0%	55.0%	55.0%	45.0%	45.0%	45.0%	45.0%
Yellow Time (s)	3.6	3.6	3.6	3.6	3.6	3.6	3.6	3.6	3.6
All-Red Time (s)	1.0	1.0	1.0	1.0	1.0	1.0	1.0	1.0	1.0
Lost Time Adjust (s)	0.0	0.0	0.0	0.0	0.0	0.0	0.0	0.0	0.0
Total Lost Time (s)	4.6	4.6	4.6	4.6	4.6	4.6	4.6	4.6	4.6
Lead/Lag									
Lead-Lag Optimize?									
Recall Mode	None	None	None	None	None	None	None	None	None

Intersection Summary

Cycle Length: 60
Actuated Cycle Length: 43.2
Natural Cycle: 55
Control Type: Actuated-Uncoordinated

Splits and Phases: 20: Cajon St./Orange St. & Citrus Av.

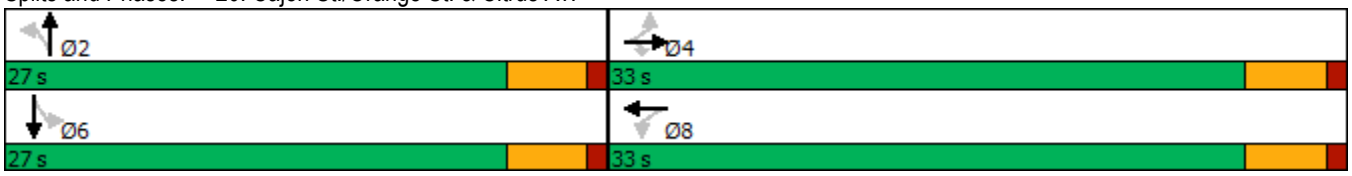

Movement	EBL	EBT	EBR	WBL	WBT	WBR	NBL	NBT	NBR	SBL	SBT	SBR
Lane Configurations												
Traffic Volume (veh/h)	174	336	192	31	332	166	92	391	21	73	267	147
Future Volume (veh/h)	174	336	192	31	332	166	92	391	21	73	267	147
Initial Q (Qb), veh	0	0	0	0	0	0	0	0	0	0	0	0
Ped-Bike Adj(A_pbT)	1.00		0.98	1.00		0.98	0.97		0.98	1.00		0.93
Parking Bus, Adj	1.00	1.00	1.00	1.00	1.00	1.00	1.00	1.00	1.00	1.00	1.00	1.00
Work Zone On Approach		No			No			No			No	
Adj Sat Flow, veh/h/ln	1673	1772	1772	1673	1772	1772	1673	1772	1772	1673	1772	1772
Adj Flow Rate, veh/h	179	346	158	32	342	142	95	403	17	75	275	141
Peak Hour Factor	0.97	0.97	0.97	0.97	0.97	0.97	0.97	0.97	0.97	0.97	0.97	0.97
Percent Heavy Veh, %	2	2	2	2	2	2	2	2	2	2	2	2
Cap, veh/h	394	868	723	461	579	240	339	1039	44	353	672	331
Arrive On Green	0.49	0.49	0.49	0.49	0.49	0.49	0.32	0.32	0.32	0.32	0.32	0.32
Sat Flow, veh/h	859	1772	1477	844	1182	491	891	3288	138	912	2128	1046
Grp Volume(v), veh/h	179	346	158	32	0	484	95	206	214	75	215	201
Grp Sat Flow(s),veh/h/ln	859	1772	1477	844	0	1672	891	1683	1743	912	1683	1490
Q Serve(g_s), s	8.9	5.9	2.9	1.2	0.0	9.8	4.5	4.5	4.5	3.3	4.7	5.0
Cycle Q Clear(g_c), s	18.8	5.9	2.9	7.0	0.0	9.8	9.5	4.5	4.5	7.8	4.7	5.0
Prop In Lane	1.00		1.00	1.00		0.29	1.00		0.08	1.00		0.70
Lane Grp Cap(c), veh/h	394	868	723	461	0	819	339	532	551	353	532	471
V/C Ratio(X)	0.45	0.40	0.22	0.07	0.00	0.59	0.28	0.39	0.39	0.21	0.40	0.43
Avail Cap(c_a), veh/h	489	1063	886	554	0	1003	479	796	825	496	796	705
HCM Platoon Ratio	1.00	1.00	1.00	1.00	1.00	1.00	1.00	1.00	1.00	1.00	1.00	1.00
Upstream Filter(I)	1.00	1.00	1.00	1.00	0.00	1.00	1.00	1.00	1.00	1.00	1.00	1.00
Uniform Delay (d), s/veh	15.4	7.7	6.9	9.9	0.0	8.7	16.6	12.6	12.6	15.7	12.7	12.8
Incr Delay (d2), s/veh	0.8	0.3	0.2	0.1	0.0	0.7	0.4	0.5	0.4	0.3	0.5	0.6
Initial Q Delay(d3),s/veh	0.0	0.0	0.0	0.0	0.0	0.0	0.0	0.0	0.0	0.0	0.0	0.0
%ile BackOfQ(50%),veh/ln	1.6	1.8	0.7	0.2	0.0	2.9	0.9	1.5	1.6	0.6	1.6	1.5
Unsig. Movement Delay, s/veh												
LnGrp Delay(d),s/veh	16.2	8.0	7.1	10.0	0.0	9.4	17.0	13.1	13.1	16.0	13.2	13.4
LnGrp LOS	B	A	A	A	A	A	B	B	B	B	B	B
Approach Vol, veh/h		683			516			515			491	
Approach Delay, s/veh		9.9			9.4			13.8			13.7	
Approach LOS		A			A			B			B	

Timer - Assigned Phs	2	4	6	8
Phs Duration (G+Y+Rc), s	19.6	27.8	19.6	27.8
Change Period (Y+Rc), s	4.6	4.6	4.6	4.6
Max Green Setting (Gmax), s	22.4	28.4	22.4	28.4
Max Q Clear Time (g_c+I1), s	11.5	20.8	9.8	11.8
Green Ext Time (p_c), s	2.4	2.4	2.5	3.3

Intersection Summary	
HCM 6th Ctrl Delay	11.5
HCM 6th LOS	B

Lane Group	EBL	EBT	EBR	WBL	WBT	WBR	NBT	SBT	SBR
Lane Configurations									
Traffic Volume (vph)	142	366	271	52	249	130	276	676	151
Future Volume (vph)	142	366	271	52	249	130	276	676	151
Turn Type	Perm	NA	Perm	Perm	NA	Perm	NA	NA	Perm
Protected Phases		4			8		2	6	
Permitted Phases	4		4	8		8			6
Detector Phase	4	4	4	8	8	8	2	6	6
Switch Phase									
Minimum Initial (s)	10.0	10.0	10.0	10.0	10.0	10.0	10.0	10.0	10.0
Minimum Split (s)	24.6	24.6	24.6	28.6	28.6	28.6	22.6	22.6	22.6
Total Split (s)	29.6	29.6	29.6	29.6	29.6	29.6	37.6	22.8	22.8
Total Split (%)	32.9%	32.9%	32.9%	32.9%	32.9%	32.9%	41.8%	25.3%	25.3%
Yellow Time (s)	3.6	3.6	3.6	3.6	3.6	3.6	3.6	3.6	3.6
All-Red Time (s)	1.0	1.0	1.0	1.0	1.0	1.0	1.0	1.0	1.0
Lost Time Adjust (s)	0.0	0.0	0.0	0.0	0.0	0.0	0.0	0.0	0.0
Total Lost Time (s)	4.6	4.6	4.6	4.6	4.6	4.6	4.6	4.6	4.6
Lead/Lag									
Lead-Lag Optimize?									
Recall Mode	None	None	None	None	None	None	None	None	None

Intersection Summary
Cycle Length: 90
Actuated Cycle Length: 67.8
Natural Cycle: 80
Control Type: Actuated-Uncoordinated

Splits and Phases: 21: Redlands Bl. & Citrus Av.

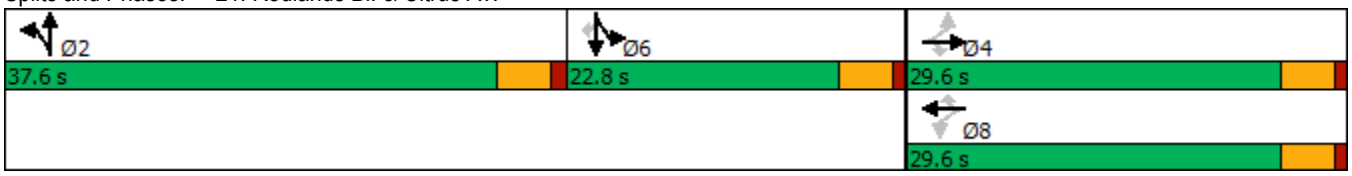

Movement	EBL	EBT	EBR	WBL	WBT	WBR	NBL	NBT	NBR	SBL	SBT	SBR
Lane Configurations												
Traffic Volume (veh/h)	142	366	271	52	249	130	93	276	51	151	676	151
Future Volume (veh/h)	142	366	271	52	249	130	93	276	51	151	676	151
Initial Q (Qb), veh	0	0	0	0	0	0	0	0	0	0	0	0
Ped-Bike Adj(A_pbT)	1.00		0.99	1.00		0.98	1.00		0.99	1.00		1.00
Parking Bus, Adj	1.00	1.00	1.00	1.00	1.00	1.00	1.00	1.00	1.00	1.00	1.00	1.00
Work Zone On Approach		No			No			No			No	
Adj Sat Flow, veh/h/ln	1673	1772	1772	1673	1772	1772	1772	1772	1772	1772	1772	1772
Adj Flow Rate, veh/h	149	385	182	55	262	84	98	291	42	159	712	0
Peak Hour Factor	0.95	0.95	0.95	0.95	0.95	0.95	0.95	0.95	0.95	0.95	0.95	0.95
Percent Heavy Veh, %	2	2	2	2	2	2	2	2	2	2	2	2
Cap, veh/h	308	570	476	215	570	475	146	455	68	164	778	
Arrive On Green	0.32	0.32	0.32	0.32	0.32	0.32	0.19	0.19	0.19	0.28	0.28	0.00
Sat Flow, veh/h	975	1772	1480	797	1772	1476	749	2338	351	598	2828	1502
Grp Volume(v), veh/h	149	385	182	55	262	84	227	0	204	464	407	0
Grp Sat Flow(s),veh/h/ln	975	1772	1480	797	1772	1476	1734	0	1703	1742	1683	1502
Q Serve(g_s), s	9.5	12.5	6.3	4.2	7.8	2.7	8.0	0.0	7.2	17.4	15.3	0.0
Cycle Q Clear(g_c), s	17.3	12.5	6.3	16.7	7.8	2.7	8.0	0.0	7.2	17.4	15.3	0.0
Prop In Lane	1.00		1.00	1.00		1.00	0.43		0.21	0.34		1.00
Lane Grp Cap(c), veh/h	308	570	476	215	570	475	337	0	331	479	463	
V/C Ratio(X)	0.48	0.68	0.38	0.26	0.46	0.18	0.67	0.00	0.62	0.97	0.88	
Avail Cap(c_a), veh/h	363	670	559	260	670	558	866	0	850	479	463	
HCM Platoon Ratio	1.00	1.00	1.00	1.00	1.00	1.00	1.00	1.00	1.00	1.00	1.00	1.00
Upstream Filter(I)	1.00	1.00	1.00	1.00	1.00	1.00	1.00	0.00	1.00	1.00	1.00	0.00
Uniform Delay (d), s/veh	24.7	19.4	17.4	26.7	17.9	16.1	24.7	0.0	24.4	23.7	22.9	0.0
Incr Delay (d2), s/veh	1.2	2.2	0.5	0.6	0.6	0.2	2.3	0.0	1.9	32.6	17.4	0.0
Initial Q Delay(d3),s/veh	0.0	0.0	0.0	0.0	0.0	0.0	0.0	0.0	0.0	0.0	0.0	0.0
%ile BackOfQ(50%),veh/ln	2.2	5.2	2.1	0.8	3.1	0.9	3.3	0.0	2.9	10.9	7.9	0.0
Unsig. Movement Delay, s/veh												
LnGrp Delay(d),s/veh	25.9	21.6	17.9	27.3	18.4	16.3	27.0	0.0	26.2	56.2	40.3	0.0
LnGrp LOS	C	C	B	C	B	B	C	A	C	E	D	
Approach Vol, veh/h		716			401			431			871	A
Approach Delay, s/veh		21.5			19.2			26.6			48.8	
Approach LOS		C			B			C			D	

Timer - Assigned Phs	2	4	6	8
Phs Duration (G+Y+Rc), s	17.5	25.9	22.8	25.9
Change Period (Y+Rc), s	4.6	4.6	4.6	4.6
Max Green Setting (Gmax), s	33.0	25.0	18.2	25.0
Max Q Clear Time (g_c+I1), s	10.0	19.3	19.4	18.7
Green Ext Time (p_c), s	2.6	2.0	0.0	1.2

Intersection Summary	
HCM 6th Ctrl Delay	31.9
HCM 6th LOS	C

Notes

Unsignalized Delay for [SBR] is excluded from calculations of the approach delay and intersection delay.

Lane Group	EBL	EBT	WBL	WBT	NBL	NBT	NBR	SBL	SBT	SBR
Lane Configurations										
Traffic Volume (vph)	97	430	65	327	14	168	70	90	177	146
Future Volume (vph)	97	430	65	327	14	168	70	90	177	146
Turn Type	Perm	NA	Perm	NA	Perm	NA	Perm	Perm	NA	Perm
Protected Phases		4		8		2			6	
Permitted Phases	4		8		2		2	6		6
Detector Phase	4	4	8	8	2	2	2	6	6	6
Switch Phase										
Minimum Initial (s)	10.0	10.0	10.0	10.0	10.0	10.0	10.0	10.0	10.0	10.0
Minimum Split (s)	22.6	22.6	24.6	24.6	26.7	26.7	26.7	25.7	25.7	25.7
Total Split (s)	31.0	31.0	31.0	31.0	29.0	29.0	29.0	29.0	29.0	29.0
Total Split (%)	51.7%	51.7%	51.7%	51.7%	48.3%	48.3%	48.3%	48.3%	48.3%	48.3%
Yellow Time (s)	3.6	3.6	3.6	3.6	3.7	3.7	3.7	3.7	3.7	3.7
All-Red Time (s)	1.0	1.0	1.0	1.0	1.0	1.0	1.0	1.0	1.0	1.0
Lost Time Adjust (s)	0.0	0.0	0.0	0.0		0.0	0.0		0.0	0.0
Total Lost Time (s)	4.6	4.6	4.6	4.6		4.7	4.7		4.7	4.7
Lead/Lag										
Lead-Lag Optimize?										
Recall Mode	None	None	None	None	None	None	None	None	None	None

Intersection Summary
Cycle Length: 60
Actuated Cycle Length: 42.2
Natural Cycle: 55
Control Type: Actuated-Uncoordinated

Splits and Phases: 22: Church St. & Citrus Av.

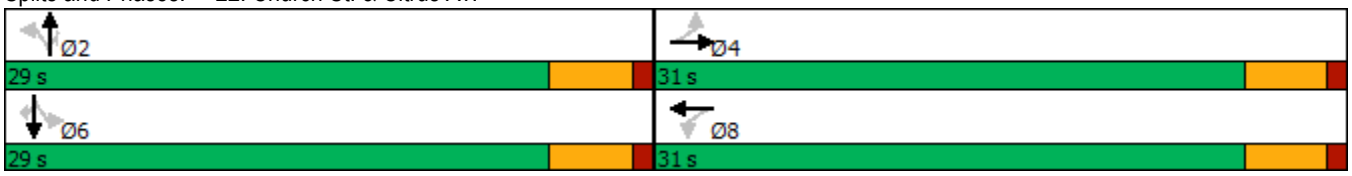

Movement	EBL	EBT	EBR	WBL	WBT	WBR	NBL	NBT	NBR	SBL	SBT	SBR
Lane Configurations												
Traffic Volume (veh/h)	97	430	21	65	327	23	14	168	70	90	177	146
Future Volume (veh/h)	97	430	21	65	327	23	14	168	70	90	177	146
Initial Q (Qb), veh	0	0	0	0	0	0	0	0	0	0	0	0
Ped-Bike Adj(A_pbT)	1.00		0.97	1.00		0.98	1.00		0.97	1.00		0.99
Parking Bus, Adj	1.00	1.00	1.00	1.00	1.00	1.00	1.00	1.00	1.00	1.00	1.00	1.00
Work Zone On Approach		No			No			No			No	
Adj Sat Flow, veh/h/ln	1673	1772	1772	1673	1772	1772	1772	1772	1772	1772	1772	1772
Adj Flow Rate, veh/h	103	457	20	69	348	20	15	179	58	96	188	109
Peak Hour Factor	0.94	0.94	0.94	0.94	0.94	0.94	0.94	0.94	0.94	0.94	0.94	0.94
Percent Heavy Veh, %	2	2	2	2	2	2	2	2	2	2	2	2
Cap, veh/h	467	707	31	389	696	40	130	516	446	253	352	456
Arrive On Green	0.42	0.42	0.42	0.42	0.42	0.42	0.31	0.31	0.31	0.31	0.31	0.31
Sat Flow, veh/h	957	1683	74	865	1657	95	51	1689	1459	364	1150	1492
Grp Volume(v), veh/h	103	0	477	69	0	368	194	0	58	284	0	109
Grp Sat Flow(s),veh/h/ln	957	0	1756	865	0	1752	1739	0	1459	1514	0	1492
Q Serve(g_s), s	3.0	0.0	7.3	2.3	0.0	5.2	0.0	0.0	1.0	2.5	0.0	1.9
Cycle Q Clear(g_c), s	8.2	0.0	7.3	9.7	0.0	5.2	2.9	0.0	1.0	5.4	0.0	1.9
Prop In Lane	1.00		0.04	1.00		0.05	0.08		1.00	0.34		1.00
Lane Grp Cap(c), veh/h	467	0	738	389	0	736	646	0	446	605	0	456
V/C Ratio(X)	0.22	0.00	0.65	0.18	0.00	0.50	0.30	0.00	0.13	0.47	0.00	0.24
Avail Cap(c_a), veh/h	809	0	1366	698	0	1363	1339	0	1045	1217	0	1068
HCM Platoon Ratio	1.00	1.00	1.00	1.00	1.00	1.00	1.00	1.00	1.00	1.00	1.00	1.00
Upstream Filter(I)	1.00	0.00	1.00	1.00	0.00	1.00	1.00	0.00	1.00	1.00	0.00	1.00
Uniform Delay (d), s/veh	10.2	0.0	7.8	11.7	0.0	7.2	9.2	0.0	8.5	9.9	0.0	8.8
Incr Delay (d2), s/veh	0.2	0.0	1.0	0.2	0.0	0.5	0.3	0.0	0.1	0.6	0.0	0.3
Initial Q Delay(d3),s/veh	0.0	0.0	0.0	0.0	0.0	0.0	0.0	0.0	0.0	0.0	0.0	0.0
%ile BackOfQ(50%),veh/ln	0.5	0.0	2.0	0.4	0.0	1.4	0.9	0.0	0.2	1.4	0.0	0.5
Unsig. Movement Delay, s/veh												
LnGrp Delay(d),s/veh	10.5	0.0	8.8	11.9	0.0	7.7	9.4	0.0	8.6	10.5	0.0	9.1
LnGrp LOS	B	A	A	B	A	A	A	A	A	B	A	A
Approach Vol, veh/h		580			437			252			393	
Approach Delay, s/veh		9.1			8.4			9.3			10.1	
Approach LOS		A			A			A			B	

Timer - Assigned Phs	2	4	6	8
Phs Duration (G+Y+Rc), s	15.1	18.9	15.1	18.9
Change Period (Y+Rc), s	* 4.7	4.6	* 4.7	4.6
Max Green Setting (Gmax), s	* 24	26.4	* 24	26.4
Max Q Clear Time (g_c+I1), s	4.9	10.2	7.4	11.7
Green Ext Time (p_c), s	1.3	3.4	2.1	2.4

Intersection Summary	
HCM 6th Ctrl Delay	9.2
HCM 6th LOS	A

Notes

* HCM 6th computational engine requires equal clearance times for the phases crossing the barrier.

APPENDIX 5.2:

E+P CONDITIONS TRAFFIC SIGNAL WARRANT ANALYSIS WORKSHEETS

This Page Intentionally Left Blank

Figure 4C-3. Warrant 3, Peak Hour

Traffic Conditions = **E+P Conditions - Weekday PM Peak Hour**

Major Street Name = **Eureka St.**

Total of Both Approaches (VPH) = **916**
Number of Approach Lanes on Major Street = **2**

Minor Street Name = **State St.**

High Volume Approach (VPH) = **78**
Number of Approach Lanes On Minor Street = **1**

SIGNAL WARRANT NOT SATISFIED

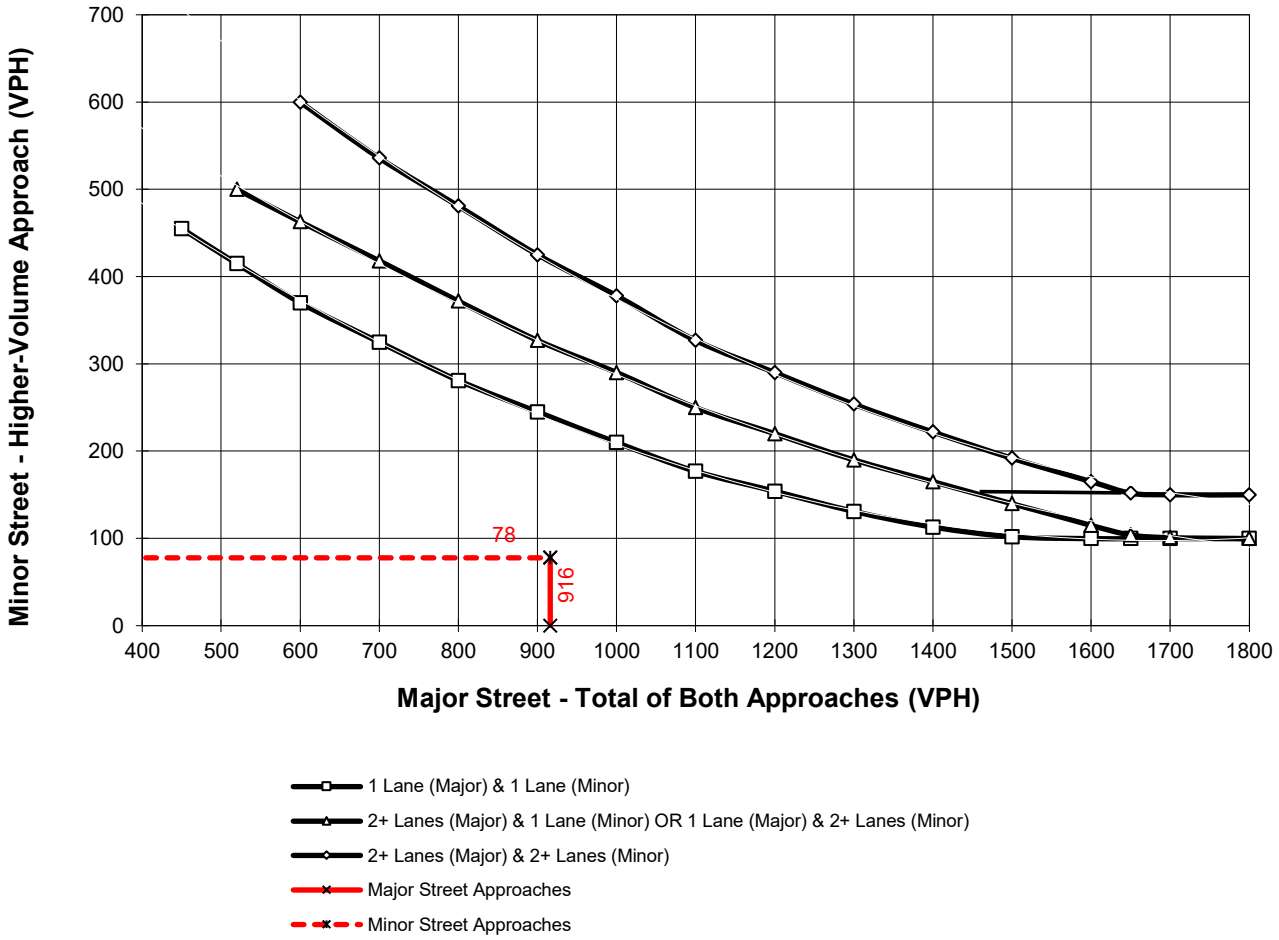

*Note: 150 vph applies as the lower threshold for a minor-street approach with two or more lanes and 100 vph applies as the lower threshold for a minor-street approach with one lane

Figure 4C-103 (CA). Traffic Signal Warrants Worksheet
(Average Traffic Estimate Form)

DIST	CO	RTE	PM	TRAFFIC CONDITIONS			E+P
				CALC	RV	DATE	07/30/21
Jurisdiction:	City of Redlands			CHK	RV	DATE	07/30/21
Major Street:	Eureka St.			Critical Approach Speed (Major)			25 mph
Minor Street:	Driveway 3			Critical Approach Speed (Minor)			25 mph

Major Street Approach Lanes = **1** lane Minor Street Approach Lanes **1** lane

Major Street Future ADT = **5,740** vpd Minor Street Future ADT = **83** vpd

Speed limit or critical speed on major street traffic > 64 km/h (40 mph); …….. [ ]

or **URBAN (U)**

In built up area of isolated community of < 10,000 population …….. [ ]

(Based on Estimated Average Daily Traffic - See Note)

URBAN	RURAL	Minimum Requirements EADT			
XX					
CONDITION A - Minimum Vehicular Volume					
Satisfied	Not Satisfied	Vehicles Per Day on Major Street (Total of Both Approaches)		Vehicles Per Day on Higher-Volume Minor Street Approach (One Direction Only)	
	XX				
Number of lanes for moving traffic on each approach					
Major Street	Minor Street	Urban	Rural	Urban	Rural
1 **5,740**	*1* **83**	8,000	5,600	2,400	1,680
2 +	*1*	9,600	6,720	2,400	1,680
2 +	*2 +*	9,600	6,720	3,200	2,240
1	*2 +*	8,000	5,600	3,200	2,240
CONDITION B - Interruption of Continuous Traffic					
Satisfied	Not Satisfied	Vehicles Per Day on Major Street (Total of Both Approaches)		Vehicles Per Day on Higher-Volume Minor Street Approach (One Direction Only)	
	XX				
Number of lanes for moving traffic on each approach					
Major Street	Minor Street	Urban	Rural	Urban	Rural
1 **5,740**	*1* **83**	12,000	8,400	1,200	850
2 +	*1*	14,400	10,080	1,200	850
2 +	*2 +*	14,400	10,080	1,600	1,120
1	*2 +*	12,000	8,400	1,600	1,120
Combination of CONDITIONS A + B					
Satisfied	Not Satisfied	2 CONDITIONS 80%		2 CONDITIONS 80%	
	XX				
No one condition satisfied, but following conditions fulfilled 80% of more …..	**A** 3% / **B** 7%				

Note: To be used only for NEW INTERSECTIONS or other locations where it is not reasonable to count actual traffic volumes.

The satisfaction of a traffic signal warrant or warrants shall not in itself require the installation of a traffic control signal.

Figure 4C-103 (CA). Traffic Signal Warrants Worksheet
(Average Traffic Estimate Form)

DIST	CO	RTE	PM	TRAFFIC CONDITIONS			E+P
				CALC	RV	DATE	07/30/21
Jurisdiction:	City of Redlands			CHK	RV	DATE	07/30/21
Major Street:	Citrus Av.			Critical Approach Speed (Major)			25 mph
Minor Street:	3rd St.			Critical Approach Speed (Minor)			25 mph

Major Street Approach Lanes = **1** lane Minor Street Approach Lanes **1** lane

Major Street Future ADT = **14,290** vpd Minor Street Future ADT = **761** vpd

Speed limit or critical speed on major street traffic > 64 km/h (40 mph); …….. [ ]

or **URBAN (U)**

In built up area of isolated community of < 10,000 population …….. [ ]

(Based on Estimated Average Daily Traffic - See Note)

URBAN	RURAL	Minimum Requirements EADT			
XX					
CONDITION A - Minimum Vehicular Volume					
Satisfied	Not Satisfied	Vehicles Per Day on Major Street (Total of Both Approaches)		Vehicles Per Day on Higher-Volume Minor Street Approach (One Direction Only)	
	XX				
Number of lanes for moving traffic on each approach					
Major Street	Minor Street	Urban	Rural	Urban	Rural
1 **14,290**	*1* **761**	8,000 *	5,600	2,400	1,680
2 +	*1*	9,600	6,720	2,400	1,680
2 +	*2 +*	9,600	6,720	3,200	2,240
1	*2 +*	8,000	5,600	3,200	2,240
CONDITION B - Interruption of Continuous Traffic					
Satisfied	Not Satisfied	Vehicles Per Day on Major Street (Total of Both Approaches)		Vehicles Per Day on Higher-Volume Minor Street Approach (One Direction Only)	
	XX				
Number of lanes for moving traffic on each approach					
Major Street	Minor Street	Urban	Rural	Urban	Rural
1 **14,290**	*1* **761**	12,000 *	8,400	1,200	850
2 +	*1*	14,400	10,080	1,200	850
2 +	*2 +*	14,400	10,080	1,600	1,120
1	*2 +*	12,000	8,400	1,600	1,120
Combination of CONDITIONS A + B					
Satisfied	Not Satisfied	2 CONDITIONS 80%		2 CONDITIONS 80%	
	XX				
No one condition satisfied, but following conditions fulfilled 80% of more …..	**A** 32% / **B** 63%				

Note: To be used only for NEW INTERSECTIONS or other locations where it is not reasonable to count actual traffic volumes.

The satisfaction of a traffic signal warrant or warrants shall not in itself require the installation of a traffic control signal.

URBAN CROSSROADS

Figure 4C-3. Warrant 3, Peak Hour

Traffic Conditions = **E+P Conditions - Weekday PM Peak Hour**

Major Street Name = **Citrus Av.**

Total of Both Approaches (VPH) = **1197**
Number of Approach Lanes on Major Street = **2**

Minor Street Name = **4th St.**

High Volume Approach (VPH) = **92**
Number of Approach Lanes On Minor Street = **1**

SIGNAL WARRANT NOT SATISFIED

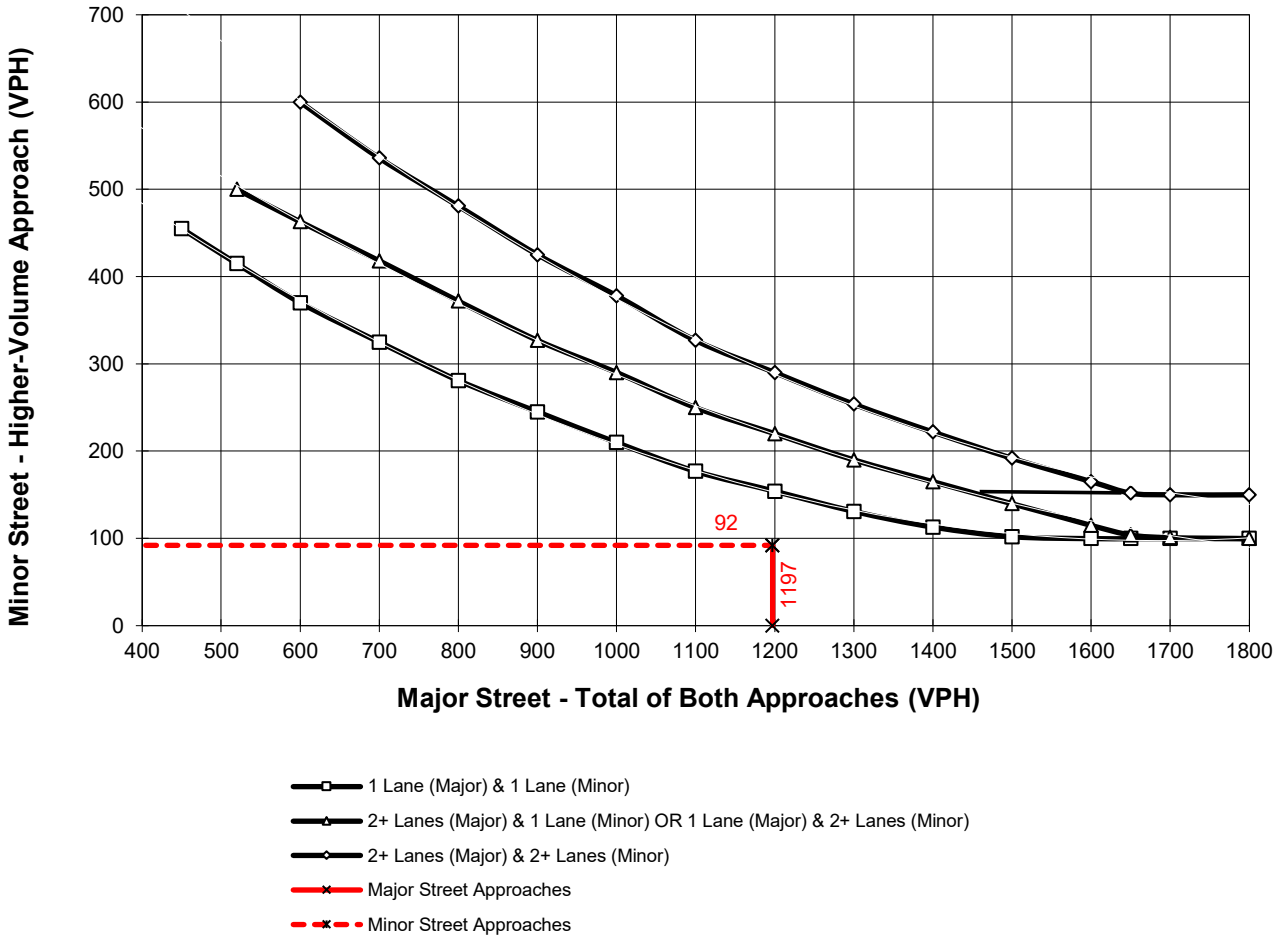

*Note: 150 vph applies as the lower threshold for a minor-street approach with two or more lanes and 100 vph applies as the lower threshold for a minor-street approach with one lane

Figure 4C-103 (CA). Traffic Signal Warrants Worksheet
(Average Traffic Estimate Form)

DIST	CO	RTE	PM	TRAFFIC CONDITIONS			E+P
				CALC	RV	DATE	07/30/21
Jurisdiction:	City of Redlands			CHK	RV	DATE	07/30/21
Major Street:	4th St.			Critical Approach Speed (Major)			25 mph
Minor Street:	Driveway 3			Critical Approach Speed (Minor)			25 mph

Major Street Approach Lanes = **1** lane Minor Street Approach Lanes **1** lane

Major Street Future ADT = **1,641** vpd Minor Street Future ADT = **85** vpd

Speed limit or critical speed on major street traffic > 64 km/h (40 mph); …….. [ ]

or **URBAN (U)**

In built up area of isolated community of < 10,000 population …….. [ ]

(Based on Estimated Average Daily Traffic - See Note)

URBAN	RURAL	Minimum Requirements EADT			
XX					
CONDITION A - Minimum Vehicular Volume					
Satisfied	Not Satisfied XX	Vehicles Per Day on Major Street (Total of Both Approaches)		Vehicles Per Day on Higher-Volume Minor Street Approach (One Direction Only)	
Number of lanes for moving traffic on each approach					
Major Street	Minor Street	Urban	Rural	Urban	Rural
1 **1,641**	*1* **85**	8,000	5,600	2,400	1,680
2 +	*1*	9,600	6,720	2,400	1,680
2 +	*2 +*	9,600	6,720	3,200	2,240
1	*2 +*	8,000	5,600	3,200	2,240
CONDITION B - Interruption of Continuous Traffic					
Satisfied	Not Satisfied XX	Vehicles Per Day on Major Street (Total of Both Approaches)		Vehicles Per Day on Higher-Volume Minor Street Approach (One Direction Only)	
Number of lanes for moving traffic on each approach					
Major Street	Minor Street	Urban	Rural	Urban	Rural
1 **1,641**	*1* **85**	12,000	8,400	1,200	850
2 +	*1*	14,400	10,080	1,200	850
2 +	*2 +*	14,400	10,080	1,600	1,120
1	*2 +*	12,000	8,400	1,600	1,120
Combination of CONDITIONS A + B					
Satisfied	Not Satisfied XX	2 CONDITIONS 80%		2 CONDITIONS 80%	
No one condition satisfied, but following conditions fulfilled 80% of more …..	**A** 4% **B** 7%				

Note: To be used only for NEW INTERSECTIONS or other locations where it is not reasonable to count actual traffic volumes.

The satisfaction of a traffic signal warrant or warrants shall not in itself require the installation of a traffic control signal.

URBAN CROSSROADS

This Page Intentionally Left Blank

APPENDIX 5.3:

E+P CONDITIONS INTERSECTION OPERATIONS ANALYSIS WORKSHEETS WITH IMPROVEMENTS

This Page Intentionally Left Blank

Lane Group	EBL	EBT	WBL	WBT	NBL	NBT	SBL	SBT
Lane Configurations								
Traffic Volume (vph)	243	345	35	558	39	537	62	487
Future Volume (vph)	243	345	35	558	39	537	62	487
Turn Type	Prot	NA	Prot	NA	Prot	NA	Prot	NA
Protected Phases	7	4	3	8	5	2	1	6
Permitted Phases								
Detector Phase	7	4	3	8	5	2	1	6
Switch Phase								
Minimum Initial (s)	5.0	10.0	5.0	10.0	5.0	10.0	5.0	10.0
Minimum Split (s)	9.6	23.7	9.6	27.7	9.6	27.6	9.6	30.6
Total Split (s)	31.4	60.6	12.4	41.6	11.2	33.8	13.2	35.8
Total Split (%)	26.2%	50.5%	10.3%	34.7%	9.3%	28.2%	11.0%	29.8%
Yellow Time (s)	3.6	3.7	3.6	3.7	3.6	3.6	3.6	3.6
All-Red Time (s)	1.0	1.0	1.0	1.0	1.0	1.0	1.0	1.0
Lost Time Adjust (s)	0.0	0.0	0.0	0.0	0.0	0.0	0.0	0.0
Total Lost Time (s)	4.6	4.7	4.6	4.7	4.6	4.6	4.6	4.6
Lead/Lag	Lead	Lag	Lead	Lag	Lead	Lag	Lead	Lag
Lead-Lag Optimize?	Yes	Yes	Yes	Yes	Yes	Yes	Yes	Yes
Recall Mode	None	None	None	None	None	None	None	None

Intersection Summary
Cycle Length: 120
Actuated Cycle Length: 106.6
Natural Cycle: 90
Control Type: Actuated-Uncoordinated

Splits and Phases: 17: Orange St. & Redlands Bl.

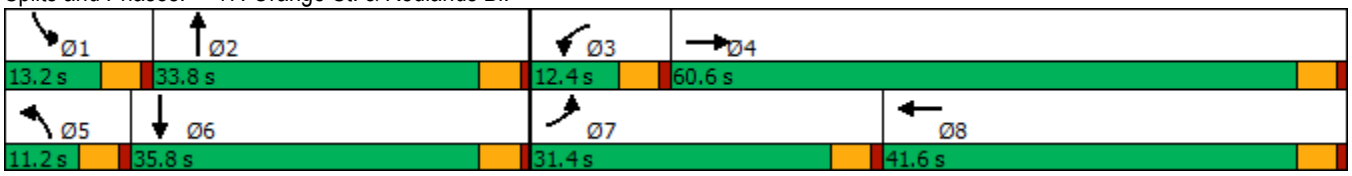

Movement	EBL	EBT	EBR	WBL	WBT	WBR	NBL	NBT	NBR	SBL	SBT	SBR
Lane Configurations												
Traffic Volume (veh/h)	243	345	90	35	558	232	39	537	24	62	487	76
Future Volume (veh/h)	243	345	90	35	558	232	39	537	24	62	487	76
Initial Q (Qb), veh	0	0	0	0	0	0	0	0	0	0	0	0
Ped-Bike Adj(A_pbT)	1.00		1.00	1.00		0.98	1.00		0.98	1.00		1.00
Parking Bus, Adj	1.00	1.00	1.00	1.00	1.00	1.00	1.00	1.00	1.00	1.00	1.00	1.00
Work Zone On Approach		No			No			No			No	
Adj Sat Flow, veh/h/ln	1673	1772	1772	1673	1772	1772	1673	1772	1772	1673	1772	1772
Adj Flow Rate, veh/h	279	397	82	40	641	199	45	617	17	71	560	74
Peak Hour Factor	0.87	0.87	0.87	0.87	0.87	0.87	0.87	0.87	0.87	0.87	0.87	0.87
Percent Heavy Veh, %	2	2	2	2	2	2	2	2	2	2	2	2
Cap, veh/h	312	1311	268	56	780	242	60	778	21	88	748	99
Arrive On Green	0.20	0.47	0.47	0.04	0.31	0.31	0.04	0.23	0.23	0.06	0.25	0.25
Sat Flow, veh/h	1594	2781	569	1594	2514	780	1594	3345	92	1594	2990	394
Grp Volume(v), veh/h	279	239	240	40	429	411	45	310	324	71	315	319
Grp Sat Flow(s),veh/h/ln	1594	1683	1667	1594	1683	1611	1594	1683	1753	1594	1683	1700
Q Serve(g_s), s	15.3	7.9	8.0	2.2	21.2	21.2	2.5	15.6	15.6	4.0	15.5	15.6
Cycle Q Clear(g_c), s	15.3	7.9	8.0	2.2	21.2	21.2	2.5	15.6	15.6	4.0	15.5	15.6
Prop In Lane	1.00		0.34	1.00		0.48	1.00		0.05	1.00		0.23
Lane Grp Cap(c), veh/h	312	793	786	56	522	500	60	392	408	88	421	426
V/C Ratio(X)	0.89	0.30	0.31	0.71	0.82	0.82	0.75	0.79	0.79	0.81	0.75	0.75
Avail Cap(c_a), veh/h	475	1047	1037	138	691	661	117	547	570	152	584	590
HCM Platoon Ratio	1.00	1.00	1.00	1.00	1.00	1.00	1.00	1.00	1.00	1.00	1.00	1.00
Upstream Filter(I)	1.00	1.00	1.00	1.00	1.00	1.00	1.00	1.00	1.00	1.00	1.00	1.00
Uniform Delay (d), s/veh	35.2	14.6	14.7	42.9	28.7	28.7	42.8	32.5	32.5	42.0	31.1	31.1
Incr Delay (d2), s/veh	9.7	0.2	0.2	6.2	6.0	6.3	6.9	5.3	5.2	6.4	3.4	3.5
Initial Q Delay(d3),s/veh	0.0	0.0	0.0	0.0	0.0	0.0	0.0	0.0	0.0	0.0	0.0	0.0
%ile BackOfQ(50%),veh/ln	6.6	2.9	2.9	1.0	9.1	8.8	1.1	6.9	7.1	1.7	6.6	6.7
Unsig. Movement Delay, s/veh												
LnGrp Delay(d),s/veh	44.9	14.9	14.9	49.1	34.6	35.0	49.7	37.8	37.6	48.4	34.5	34.6
LnGrp LOS	D	B	B	D	C	C	D	D	D	D	C	C
Approach Vol, veh/h		758			880			679			705	
Approach Delay, s/veh		25.9			35.5			38.5			35.9	
Approach LOS		C			D			D			D	

Timer - Assigned Phs	1	2	3	4	5	6	7	8
Phs Duration (G+Y+Rc), s	9.6	25.5	7.8	47.1	8.0	27.1	22.2	32.6
Change Period (Y+Rc), s	4.6	4.6	4.6	* 4.7	4.6	4.6	4.6	* 4.7
Max Green Setting (Gmax), s	8.6	29.2	7.8	* 56	6.6	31.2	26.8	* 37
Max Q Clear Time (g_c+I1), s	6.0	17.6	4.2	10.0	4.5	17.6	17.3	23.2
Green Ext Time (p_c), s	0.0	3.2	0.0	3.2	0.0	3.5	0.3	4.7

Intersection Summary	
HCM 6th Ctrl Delay	33.9
HCM 6th LOS	C

Notes

* HCM 6th computational engine requires equal clearance times for the phases crossing the barrier.

Lane Group	EBL	EBT	WBL	WBT	NBL	NBT	SBL	SBT
Lane Configurations								
Traffic Volume (vph)	196	867	68	317	41	536	136	430
Future Volume (vph)	196	867	68	317	41	536	136	430
Turn Type	Prot	NA	Prot	NA	Prot	NA	Prot	NA
Protected Phases	7	4	3	8	5	2	1	6
Permitted Phases								
Detector Phase	7	4	3	8	5	2	1	6
Switch Phase								
Minimum Initial (s)	5.0	10.0	5.0	10.0	5.0	10.0	5.0	10.0
Minimum Split (s)	9.6	23.7	9.6	27.7	9.6	27.6	9.6	30.6
Total Split (s)	26.2	50.0	14.0	37.8	14.2	35.0	21.0	41.8
Total Split (%)	21.8%	41.7%	11.7%	31.5%	11.8%	29.2%	17.5%	34.8%
Yellow Time (s)	3.6	3.7	3.6	3.7	3.6	3.6	3.6	3.6
All-Red Time (s)	1.0	1.0	1.0	1.0	1.0	1.0	1.0	1.0
Lost Time Adjust (s)	0.0	0.0	0.0	0.0	0.0	0.0	0.0	0.0
Total Lost Time (s)	4.6	4.7	4.6	4.7	4.6	4.6	4.6	4.6
Lead/Lag	Lead	Lag	Lead	Lag	Lead	Lag	Lead	Lag
Lead-Lag Optimize?	Yes	Yes	Yes	Yes	Yes	Yes	Yes	Yes
Recall Mode	None	None	None	None	None	None	None	None

Intersection Summary
Cycle Length: 120
Actuated Cycle Length: 105.7
Natural Cycle: 90
Control Type: Actuated-Uncoordinated

Splits and Phases: 17: Orange St. & Redlands Bl.

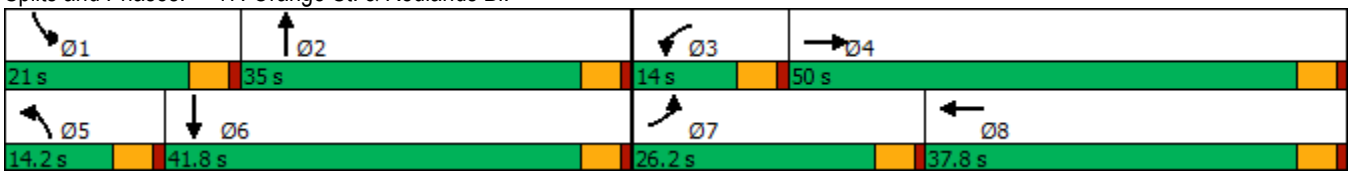

Movement	EBL	EBT	EBR	WBL	WBT	WBR	NBL	NBT	NBR	SBL	SBT	SBR
Lane Configurations												
Traffic Volume (veh/h)	196	867	139	68	317	254	41	536	40	136	430	118
Future Volume (veh/h)	196	867	139	68	317	254	41	536	40	136	430	118
Initial Q (Qb), veh	0	0	0	0	0	0	0	0	0	0	0	0
Ped-Bike Adj(A_pbT)	1.00		0.99	1.00		0.97	1.00		0.98	1.00		1.00
Parking Bus, Adj	1.00	1.00	1.00	1.00	1.00	1.00	1.00	1.00	1.00	1.00	1.00	1.00
Work Zone On Approach		No			No			No			No	
Adj Sat Flow, veh/h/ln	1673	1772	1772	1673	1772	1772	1673	1772	1772	1673	1772	1772
Adj Flow Rate, veh/h	215	953	117	75	348	198	45	589	34	149	473	107
Peak Hour Factor	0.91	0.91	0.91	0.91	0.91	0.91	0.91	0.91	0.91	0.91	0.91	0.91
Percent Heavy Veh, %	2	2	2	2	2	2	2	2	2	2	2	2
Cap, veh/h	248	1163	143	93	594	331	60	758	44	179	844	190
Arrive On Green	0.16	0.39	0.39	0.06	0.29	0.29	0.04	0.23	0.23	0.11	0.31	0.31
Sat Flow, veh/h	1594	3014	370	1594	2060	1146	1594	3230	186	1594	2729	613
Grp Volume(v), veh/h	215	532	538	75	283	263	45	307	316	149	291	289
Grp Sat Flow(s),veh/h/ln	1594	1683	1701	1594	1683	1522	1594	1683	1733	1594	1683	1659
Q Serve(g_s), s	11.7	25.1	25.2	4.1	12.7	13.2	2.5	15.1	15.1	8.1	12.8	12.9
Cycle Q Clear(g_c), s	11.7	25.1	25.2	4.1	12.7	13.2	2.5	15.1	15.1	8.1	12.8	12.9
Prop In Lane	1.00		0.22	1.00		0.75	1.00		0.11	1.00		0.37
Lane Grp Cap(c), veh/h	248	649	656	93	486	439	60	395	407	179	520	513
V/C Ratio(X)	0.87	0.82	0.82	0.81	0.58	0.60	0.75	0.78	0.78	0.83	0.56	0.56
Avail Cap(c_a), veh/h	389	861	870	169	629	569	173	578	595	295	707	697
HCM Platoon Ratio	1.00	1.00	1.00	1.00	1.00	1.00	1.00	1.00	1.00	1.00	1.00	1.00
Upstream Filter(I)	1.00	1.00	1.00	1.00	1.00	1.00	1.00	1.00	1.00	1.00	1.00	1.00
Uniform Delay (d), s/veh	36.5	24.4	24.4	41.2	26.9	27.1	42.2	31.7	31.7	38.5	25.5	25.6
Incr Delay (d2), s/veh	7.5	4.8	4.7	6.0	1.1	1.3	6.7	4.0	4.0	4.2	0.9	1.0
Initial Q Delay(d3),s/veh	0.0	0.0	0.0	0.0	0.0	0.0	0.0	0.0	0.0	0.0	0.0	0.0
%ile BackOfQ(50%),veh/ln	5.0	10.4	10.5	1.8	5.1	4.8	1.1	6.5	6.7	3.4	5.2	5.2
Unsig. Movement Delay, s/veh												
LnGrp Delay(d),s/veh	43.9	29.2	29.2	47.2	28.1	28.4	48.9	35.7	35.7	42.7	26.5	26.6
LnGrp LOS	D	C	C	D	C	C	D	D	D	D	C	C
Approach Vol, veh/h		1285			621			668			729	
Approach Delay, s/veh		31.6			30.5			36.6			29.8	
Approach LOS		C			C			D			C	

Timer - Assigned Phs	1	2	3	4	5	6	7	8
Phs Duration (G+Y+Rc), s	14.5	25.4	9.8	38.9	7.9	32.0	18.4	30.2
Change Period (Y+Rc), s	4.6	4.6	4.6	* 4.7	4.6	4.6	4.6	* 4.7
Max Green Setting (Gmax), s	16.4	30.4	9.4	* 45	9.6	37.2	21.6	* 33
Max Q Clear Time (g_c+I1), s	10.1	17.1	6.1	27.2	4.5	14.9	13.7	15.2
Green Ext Time (p_c), s	0.1	3.3	0.0	7.0	0.0	3.8	0.2	3.3

Intersection Summary	
HCM 6th Ctrl Delay	32.0
HCM 6th LOS	C

Notes

* HCM 6th computational engine requires equal clearance times for the phases crossing the barrier.