SALEM engineering group, inc.

8711 Monroe Court, Suite A
Rancho Cucamonga, CA 91730
(909) 980-6455 Office
(909) 980-6435 Fax

October 2019 **Job No. 3-418-0671**

Mr. Oscar Etemadian
Fuel Express, LLC
10995 Indiana Avenue
Riverside, CA 92503

Subject: **NOISE STUDY**
Proposed Commercial Development
SEC Chicago Avenue and Iris Avenue
Riverside, California

Dear Mr. Etemadian:

A Noise Study for the above-referenced project located on the southeast corner of Chicago Avenue and Iris Avenue in Riverside, California (subject property) was conducted in October 2019. The proposed project involves an approximate 3,800-square foot convenience store with a sixteen-pump fueling station, and a 1,700-square foot car-wash drive-thru. Additionally, a total of 28 parking spaces are included in the development.

The Noise Study is an analysis of the proposed project's temporary noise associated with the construction of the project, as well as long-term noise and impacts associated with the operation of the proposed project. The Noise Study was prepared utilizing the County of Riverside's General Plan Noise Element and County of Riverside's Noise Ordinance, codified in Section 9.52 of the Riverside Municipal Code (RMC).

Please refer to Section 4: Impacts and Section 5: Conclusions for detailed information pertaining to the proposed project noise and impacts and noise control recommendations. However, in short, construction noise impacts and operation noise impacts are determined to be less than significant. Additionally, project-related traffic noise is also determined to be less than significate.

We appreciate the opportunity to assist you with this project. If you have any questions, or if we may be of further assistance, please do not hesitate to contact our office at (909) 980-6455.

Respectfully submitted,

SALEM Engineering Group, Inc.

Maria G. Ruvalcaba, EP
Project Manager

Chicago Avenue and Van Buren Boulevard Commercial Project

Noise Study

prepared for

Salem Engineering Group
13355 Noel Road, Suite 1100
Dallas, Texas 75240
Contact: Maria Ruvalcaba

prepared by

Rincon Consultants, Inc.
301 9th Street, Suite 109
Redlands, California 92374

October 2019

RINCON CONSULTANTS, INC.
Environmental Scientists | Planners | Engineers
rinconconsultants.com

Table of Contents

1 Project Description and Impact Summary 1
1.1 Introduction 1
1.2 Project Summary 1
2 Background 5
2.1 Overview of Sound Measurement 5
2.2 Sensitive Receivers 6
2.3 Project Noise Setting 6
2.4 Regulatory Setting 9
3 Methodology and Significance Thresholds 13
3.1 Methodology 13
3.2 Significance Thresholds 16
4 Impact Analysis 17
4.1 Construction Noise 17
4.2 Operational Noise 17
4.3 Airport-Related Noise 21
4.4 Land Use Compatibility 21
5 Conclusions 23
6 References 24

Tables

Table 1 Summary of Impacts 1
Table 2 Project Site Noise Monitoring Results 7
Table 3 County of Riverside Land Use Compatibility for Community Noise Exposure 9
Table 4 County of Riverside Noise Standards for Stationary Noise Sources 10
Table 5 City of Riverside Exterior Noise Standards 11
Table 6 HVAC Noise Levels 14
Table 7 Estimated Traffic Volumes 15
Table 8 Daytime Operational Noise Levels at Off-site Receivers 18
Table 9 Nighttime Operational Noise Levels at Off-site Receivers 19
Table 10 Existing plus Project Traffic Volumes 21

Figures

Figure 1 Regional Location 2
Figure 2 Project Site 3
Figure 3 Noise Measurement Locations 8

Figure 4 Modeled Receivers and Daytime Noise Level Contours..... 20

Appendices

Appendix A Project Plans

Appendix B Noise Measurement Data

Appendix C Roadway Construction Noise Model (RCNM) Results

Appendix D Car Wash Specifications

Appendix E HVAC Specifications

Appendix F FHWA Traffic Noise Model Results

1 Project Description and Impact Summary

1.1 Introduction

This study analyzes the potential noise impacts of the proposed Chicago Avenue and Van Buren Boulevard Commercial Project (project) in the unincorporated community of Woodcrest in Riverside County, California (Assessor's Parcel Number 266-020-001). Rincon Consultants, Inc. (Rincon) prepared this study under contract to Salem Engineering Group. The purpose of this study is to analyze the project's noise impacts related to both temporary construction activity and long-term operation of the project. Table 1 provides a summary of project impacts.

Table 1 Summary of Impacts

Topic	Level of Significance	Applicable Recommendations
Would the project result in generation of a substantial temporary or permanent increase in ambient noise levels in the vicinity of the project in excess of standards established in the local general plan or noise ordinance, or applicable standards of other agencies?	Less Than Significant Impact (Construction) Less Than Significant Impact (Operation)	None
For a project located within the vicinity of a private airstrip or an airport land use plan or, where such a plan has not been adopted, within two miles of a public airport or public use airport, would the project expose people residing or working in the project area to excessive noise levels?	No Impact	None
Would the project conflict with land use compatibility guidelines for noise?	No conflict	None

1.2 Project Summary

The project site is an approximately 2.7-acre undeveloped site at the northeast corner of the intersection of Chicago Avenue and Van Buren Boulevard in the unincorporated community of Woodcrest in Riverside County, California (Figure 1 and Figure 2). The project site is adjacent to residential land uses to the north and west across Iris Avenue and Chicago Avenue, respectively, and commercial land uses further west across Chicago Avenue. The project site is also located adjacent to undeveloped land zoned Scenic Highway Commercial (C-P-S) to the east and Commercial Retail (CR) to the south in the city of Riverside.

The project would include construction of an approximately 3,800-square foot convenience store, a 16-pump gas station, and a 1,700-square foot drive-through car wash (detailed project plans are included as Appendix A). Approximately 28 surface parking spaces would be provided. The car wash would be open from 7:00 a.m. to 10:00 p.m., and it was assumed the gas station and convenience store would be open 24 hours a day.

Figure 1 Regional Location

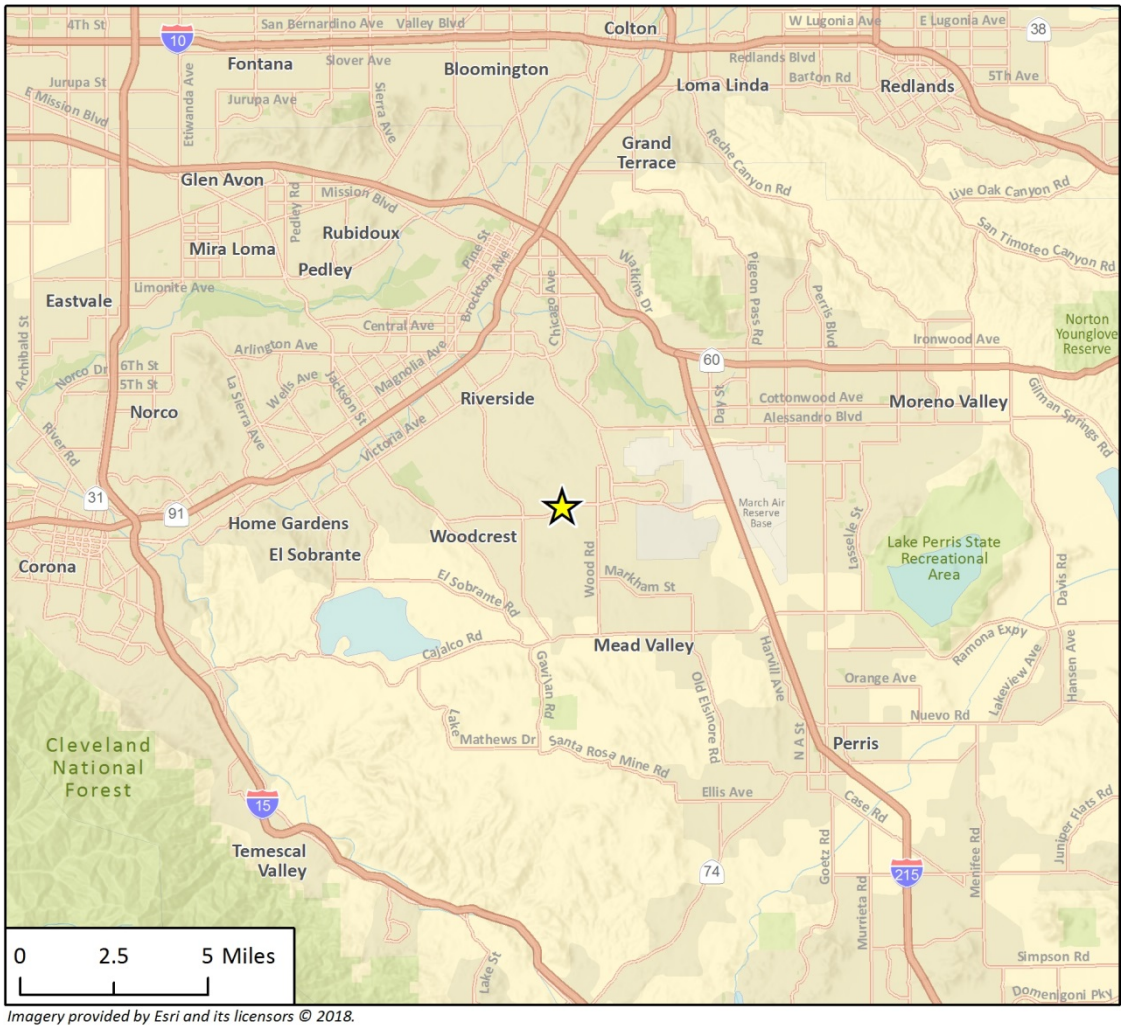

Imagery provided by Esri and its licensors © 2018.

Project Location

N

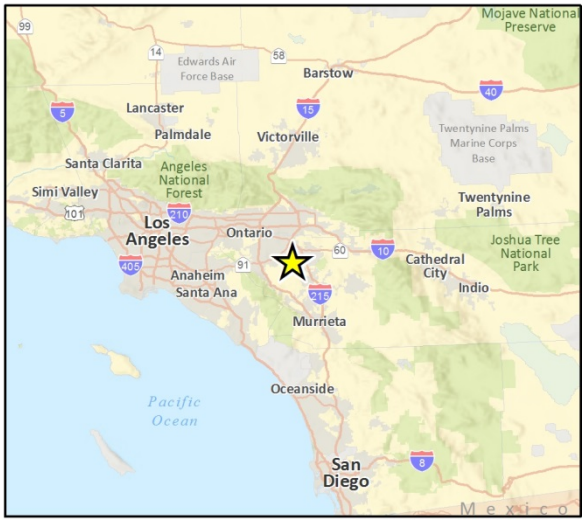

Figure 2 Project Site

Imagery provided by Microsoft Bing and its licensors © 2018.

Fig 2 Project Location

The project site has a General Plan land use designation of Commercial Retail (CR) and is zoned Scenic Highway Commercial (C-P-S). The project site is located within the region of Riverside County governed by the Lake Mathews/Woodcrest Area Plan.

2 Background

2.1 Overview of Sound Measurement

Sound is a vibratory disturbance created by a moving or vibrating source, which is capable of being detected by the hearing organs. Noise is defined as sound that is loud, unpleasant, unexpected, or undesired and may therefore be classified as a more specific group of sounds. The effects of noise on people can include general annoyance, interference with speech communication, sleep disturbance, and, in the extreme, hearing impairment (Caltrans 2013).

Noise levels are commonly measured in decibels (dB) using the A-weighted sound pressure level (dBA). The A-weighting scale is an adjustment to the actual sound pressure levels so that they are consistent with the human hearing response, which is most sensitive to frequencies around 4,000 Hertz and less sensitive to frequencies around and below 100 Hertz (Kinsler, et. al. 1999). Decibels are measured on a logarithmic scale that quantifies sound intensity in a manner similar to the Richter scale used to measure earthquake magnitudes. A doubling of the energy of a noise source, such as doubling of traffic volume, would increase the noise level by 3 dBA; reducing the energy in half would result in a 3 dBA decrease (Crocker 2007).

Human perception of noise has no simple correlation with sound energy: the perception of sound is not linear in terms of dBA or in terms of sound energy. Two sources do not “sound twice as loud” as one source. It is widely accepted that the average healthy ear can barely perceive changes of 3 dBA (twice the sound energy); that a change of 5 dBA (8 times the sound energy) is readily perceptible; and that an increase (or decrease) of 10 dBA (10.5 times the sound energy) sounds twice (or half) as loud (Crocker 2007).

Sound changes in both level and frequency spectrum as it travels from the source to the receiver. The most obvious change is the decrease in sound level as the distance from the source increases. The manner in which noise reduces with distance depends on factors such as the type of sources (e.g., point or line, the path the sound will travel, site conditions, and obstructions). Noise levels from a point source typically attenuate, or drop off, at a rate of 6 dBA per doubling of distance (e.g., construction, industrial machinery, ventilation units). Noise from a line source (e.g., roadway, pipeline, railroad) typically attenuates at about 3 dBA per doubling of distance (Caltrans 2013). The propagation of noise is also affected by the intervening ground, known as ground absorption. A hard site, such as a parking lot or smooth body of water, receives no additional ground attenuation and the changes in noise levels with distance (i.e., the drop-off rate) result simply from the geometric spreading of the source. An additional ground attenuation value of 1.5 dBA per doubling of distance applies to a soft site (e.g., soft dirt, grass, or scattered bushes and trees) (Caltrans 2013). Noise levels may also be reduced by intervening structures; the amount of attenuation provided by this “shielding” depends on the size of the object and the frequencies of the noise levels. Natural terrain features such as hills and dense woods, and man-made features such as buildings and walls, can significantly alter noise levels. Generally, any large structure blocking the line of sight will provide at least a 5-dBA reduction in source noise levels at the receiver (Federal Highway Administration [FHWA] 2017). Structures can substantially reduce exposure to noise as well. The FHWA’s guidelines

indicate that modern building construction generally provides an exterior-to-interior noise level reduction of 20 to 35 dBA with closed windows.

The impact of noise is not a function of loudness alone. The time of day when noise occurs and the duration of the noise are also important factors of project noise impact. Most noise that lasts for more than a few seconds is variable in its intensity. Consequently, a variety of noise descriptors have been developed. One of the most frequently-used noise metrics is the equivalent noise level (L_{eq}); it considers both duration and sound power level. L_{eq} is defined as the single steady A-weighted level equivalent to the same amount of energy as that contained in the actual fluctuating levels over time. Typically, L_{eq} is summed over a one-hour period. L_{max} is the highest RMS sound pressure level within the sampling period, and L_{min} is the lowest RMS sound pressure level within the measuring period (Crocker 2007).

Noise that occurs at night tends to be more disturbing than that occurring during the day. Community noise is usually measured using the Day-Night Average Level (L_{dn}), which is the 24-hour average noise level with a +10 dBA penalty for noise occurring during nighttime hour (10:00 p.m. to 7:00 a.m.), Community noise is also measured using the Community Noise Equivalent Level (CNEL), which is the 24-hour average noise level with a +5 dBA penalty for noise occurring from 7:00 p.m. to 10:00 p.m. and a +10 dBA penalty for noise occurring from 10:00 p.m. to 7:00 a.m. (Caltrans 2013). Noise levels described by L_{dn} and CNEL usually differ by about 1 dBA. The relationship between the peak-hour L_{eq} value and the L_{dn}/CNEL depends on the distribution of traffic during the day, evening, and night. Quiet suburban areas typically have CNEL noise levels in the range of 40 to 50 dBA, while areas near arterial streets are in the 50 to 60-plus CNEL range. Normal conversational levels are in the 60 to 65 dBA L_{eq} range; ambient noise levels greater than 65 dBA L_{eq} can interrupt conversations (Federal Transit Administration [FTA] 2018).

2.2 Sensitive Receivers

Noise exposure goals for various types of land uses reflect the varying noise sensitivities associated with those uses. The County of Riverside General Plan Noise Element identifies noise-sensitive receivers as schools, hospitals, rest homes, long-term care facilities, mental care facilities, residential uses, places of worship, libraries, and passive recreation areas.

2.3 Project Noise Setting

The most common source of noise in the project site vicinity is vehicular traffic along Van Buren Boulevard. Ambient noise levels are generally highest during the daytime and rush hours. The nearest sensitive receivers to the project site are single-family residences located to the north across Iris Avenue and to the west across Chicago Avenue

To characterize ambient sound levels at and near the project site, two 15-minute sound level measurements were conducted on December 7, 2018. Noise Measurement (NM) 1 was at the southern boundary of the property; measured noise levels are representative of existing noise levels on the project site and along Van Buren Boulevard. NM 2 was taken at the northwest portion of the project site; measured noise levels are representative of existing ambient noise levels on the project site and along Chicago Avenue. Figure 3 shows the noise measurement locations. Table 1 summarizes noise measurement activities and results. Average noise levels are provided in L_{eq} for a 15-minute measurement period (L_{eq}[15]); L_{min} and L_{max} are also provided.

Table 2 Project Site Noise Monitoring Results

Measurement Location	Measurement Location	Sample Times	Approximate Distance to Primary Noise Source	L_{eq}[15] (dBA)	L_{min} (dBA)	L_{max} (dBA)
1	Southern boundary of project site along Van Buren Boulevard	7:36 – 7:51 a.m.	50 feet[1]	76.0	57.0	87.5
2	Northwest boundary of project site along Chicago Avenue	8:06 – 8:21 a.m.	15 feet[2]	54.9	42.8	67.7

See Appendix B for noise monitoring data.

[1] Distance to centerline of Van Buren Boulevard

[2] Distance to centerline of Chicago Avenue

Source: Rincon field measurements on December 7, 2018, using ANSI Type II integrating sound level meter.

Figure 3 Noise Measurement Locations

Imagery provided by Microsoft Bing and its licensors © 2018.

Fig 3 Noise

2.4 Regulatory Setting

County of Riverside General Plan Noise Element

The County of Riverside General Plan Noise Element includes policies, standards, criteria, and action items to protect public health and welfare from excessive noise. It provides an approach to identify and assess noise problems in the County of Riverside, quantify existing and projected noise levels, and address excessive noise exposure. Additionally, the Noise Element provides an approach to regulate noise through community planning. The County of Riverside Noise Element includes recommended noise compatibility standards for land uses within the County, shown in Table 3.

Table 3 County of Riverside Land Use Compatibility for Community Noise Exposure

	Day-Night Noise Level (dBA L_{dn})			
Land Use Category	**Normally Acceptable[1]**	**Conditionally Acceptable[2]**	**Normally Unacceptable[3]**	**Clearly Unacceptable[4]**
Residential – Low Density Single Family, Duplex, Mobile Homes	< 60	55 - 70	70 - 75	> 75
Residential – Multiple Family	< 65	60 - 70	70 - 75	> 75
Transient Lodging – Motels, Hotels	< 65	60 - 70	70 - 80	> 80
Schools, Libraries, Churches, Hospitals, Nursing Homes	< 70	60 - 70	70 - 80	> 80
Auditoriums, Concert Halls, Amphitheaters	N/A	< 70	> 65	N/A
Sports Arena, Outdoor Spectator Sports	N/A	< 75	> 70	N/A
Playgrounds, Neighborhood Parks	< 70	N/A	67 - 75	> 74
Golf Courses, Riding Stables, Water Recreation, Cemeteries	< 75	N/A	70 - 80	> 80
Office Buildings, Businesses, Commercial, and Professional	< 70	67 - 77	N/A	> 75
Industrial, Manufacturing, Utilities, Agriculture	< 75	70 - 80	N/A	> 75

[1] Specified land use is satisfactory based upon the assumption that any buildings involved are of normal conventional construction, without any special insulation requirements.
[2] New construction or development should be undertaken only after a detailed analysis of the noise reduction requirements is made and needed noise insulation features included in the design. Conventional construction, but with closed windows and fresh air supply systems or air conditioning will normally suffice. Outdoor environment will seem noisy.
[3] New construction or development should generally be discouraged. If new construction or development does proceed, a detailed analysis of the noise reduction requirements must be made with needed noise insulation features included in the design. Outdoor areas must be shielded.
[4] New construction or development should generally not be undertaken. Construction costs to make the indoor environment acceptable would be prohibitive and the outdoor environment would not be usable.
Source: County of Riverside 2015

The County of Riverside General Plan also includes policies to protect noise-sensitive land uses from noise emitted by off-site sources and prevent new projects from generating adverse noise impacts on adjacent properties. Applicable policies are listed below.

Policy N 1.1 Protect noise-sensitive land uses from high levels of noise by restricting noise-producing land uses from these areas. If the noise-producing land use cannot be relocated, then noise buffers such as setbacks, landscaping, or block walls shall be used.

Policy N 1.4 Determine if existing land uses will present noise compatibility issues with proposed projects by undertaking site surveys.

Policy N 1.5 Prevent and mitigate the adverse impacts of excessive noise exposure on the residents, employees, visitors, and noise-sensitive uses of Riverside County.

Policy N 1.6 Minimize noise spillover or encroachment from commercial and industrial land uses into adjoining residential neighborhoods or noise-sensitive uses.

Policy N 1.8 Limit the maximum permitted noise levels that cross property lines and impact adjacent land uses, except when dealing with noise emissions from wind turbines. Please see the Wind Energy Conversion Systems section for more information.

Policy N 2.3 Mitigate exterior and interior noises to the levels listed in Table N-2 (reproduced herein as Table 4), for stationary sources.

Table 4 County of Riverside Noise Standards for Stationary Noise Sources[1, 2]

Hours	Interior Standard (dBA Leq_{10})	Exterior Standard (dBA Leq_{10})
Residential Land Use		
10:00 p.m. to 7:00 a.m.	40	45
7:00 a.m. to 10:00 p.m.	55	65

Source: County of Riverside 2015

[1] These are only preferred standards; final decision will be made by the Riverside County Planning Department and Office of Public Health.

[2] Stationary noise sources are defined as entities in fixed locations that emit noise, including motors, appliances, air conditioners, lawn and garden equipment, power tools, generators, industrial and manufacturing facilities, truck terminals, and warehousing facilities.

Policy N 3.5 Require that a noise analysis be conducted by an acoustical specialist for all proposed projects that are noise producers. Include recommendations for design mitigation if the project is to be located either within proximity of a noise-sensitive land use, or land designated for noise-sensitive land uses.

Policy N 3.6 Discourage projects that are incapable of successfully mitigating excessive noise.

Policy N 3.7 Encourage noise-tolerant land uses such as commercial or industrial, to locate in areas already committed to land uses that are noise-producing.

Policy N 4.8 Require that the parking structures, terminals, and loading docks of commercial or industrial land uses be designed to minimize the potential noise impacts of vehicles on the site as well as on adjacent land uses.

County of Riverside Code of Ordinances

The County's Noise Ordinance is codified in Section 9.52 of the Riverside Municipal Code (RMC). Per RMC Section 9.52.020(H), private construction projects located 0.25 mile or more from an inhabited dwelling are exempt from County noise standards. Per RMC Section 9.52.020(I), private construction projects located within 0.25 mile of an inhabited dwelling are also exempt, provided that

construction does not occur between the hours of 6:00 p.m. and 6:00 a.m. during the months of June through September and construction does not occur between the hours of 6:00 p.m. and 7:00 a.m. during the months of October through May.

Although construction activity is exempt from the County's noise standards shown above, for purposes of this analysis, the FTA *Transit Noise and Vibration Impact Assessment Manual* (2018) criteria will be used. The FTA provides reasonable criteria for assessing construction noise impacts based on the potential for adverse community reaction. The daytime noise thresholds for an 8-hour period are 80 dBA L_{eq} for residential uses and 85 dBA L_{eq} for commercial uses.

City of Riverside Code of Ordinances

Because the two undeveloped commercial properties located immediately south of the project site across Van Buren Boulevard are located in the City of Riverside, noise impacts to these properties are evaluated using the City of Riverside's Noise Ordinance. The Noise Ordinance is codified in Title 7 of the City of Riverside Municipal Code and states that noise control within the City must be consistent with Title 24 of the Health and Safety Code of California (Section 7.23.010 of the City's Municipal Code). The City has incorporated the measures in its Municipal Code to control loud, unnecessary, and unusual nuisance noise. Section 7.25.010 of the City's Municipal Code includes exterior sound level limits as for different land use categories, as shown in Table 5. The City's Municipal Code also includes interior noise level limits for residential school, and hospital uses; however, these would not apply to the commercial property south of the project site.

Table 5 City of Riverside Exterior Noise Standards

Land Use Category	Time Period	Noise Level (dBA L_{eq})
Residential	10:00 p.m. to 7:00 a.m.	45
	7:00 a.m. to 10:00 p.m.	55
Office/Commercial	Any Time	65
Industrial	Any Time	70
Community Support	Any Time	60
Public Recreation Facility	Any Time	65
Nonurban	Any Time	70

Source: City of Riverside Municipal Code Table 7.25.010A

Criteria for violation of City standards are related to both duration and intensity of the noise disturbance. Per Section 7.25.010 of the City's Municipal Code, it is unlawful for any person to cause or allow the creation of any exterior noise that exceeds the following unless a variance has been granted:

- The exterior noise standard of the applicable land use category (see Table 5) plus up to 5 dB for a cumulative period of more than 30 minutes in an hour; or
- The exterior noise standard of the applicable land use category plus 5 dB for a cumulative period of more than 15 minutes in any hour; or
- The exterior noise standard of the applicable land use category plus 10 dB for a cumulative period of more than 5 minutes in any hour; or
- The exterior noise standard of the applicable land use category plus 15 dB for a cumulative period of more than 1 minute in any hour; or
- The exterior noise standard of the applicable land use category plus 20 dB or the maximum measured ambient noise level, for any period of time

However, per Section 7.25.010(B) of the City's Municipal Code, if the measured ambient noise level exceeds that permissible within any of the first four noise limit categories, the allowable noise exposure standard shall be increased in five decibel increments in each category as appropriate to encompass the ambient noise level. In the event that the ambient noise level exceeds the fifth noise limit category, the maximum allowable noise level under the fifth noise limit category shall be increased to reflect the maximum ambient noise level.

3 Methodology and Significance Thresholds

3.1 Methodology

Construction Noise

Construction noise was estimated using the FHWA Roadway Construction Noise Model (RCNM) (FHWA 2006). RCNM predicts construction noise levels for a variety of construction operations based on empirical data and the application of acoustical propagation formulas. Using RCNM, construction noise levels were estimated at noise-sensitive receivers near the project site. RCNM provides reference noise levels for standard construction equipment, with an attenuation rate of 6 dBA per doubling of distance for stationary equipment.

Variation in power imposes additional complexity in characterizing the noise source level from construction equipment. Power variation is accounted for by describing the noise at a reference distance from the equipment operating at full power and adjusting it based on the duty cycle of the activity to determine the L_{eq} of the operation (FHWA 2018). Each phase of construction has a specific equipment mix, depending on the work to be accomplished during that phase. Each phase also has its own noise characteristics; some will have higher continuous noise levels than others, and some have high-impact noise levels.

Construction activity would result in temporary noise in the project site vicinity, exposing surrounding sensitive receivers to increased noise levels. Construction noise would typically be higher during the heavier periods of initial construction (i.e., site preparation and grading) and would be lower during the later construction phases (i.e., building construction and paving). Typical heavy construction equipment during project grading could include dozers, excavators, loaders, and dump trucks. It is assumed that diesel engines would power all construction equipment. Construction equipment would not all operate at the same time or location. In addition, construction equipment would not be in constant use during the 8-hour operating day.

Project construction would occur nearest to existing residential uses to the north and west and existing commercial uses to the west. Over the course of a typical construction day, construction equipment would be located as close as 45 feet from the residential properties and 65 feet from the commercial properties but would typically be located at an average distance farther away due to the nature of construction and the large lot size of the project. For example, during a typical construction day, the equipment may operate throughout the site. Construction activities would occur between 25 feet and 290 feet from the nearest residential property and between 35 feet and 650 feet from the nearest commercial property. Therefore, it is assumed that over the course of a typical construction day, construction equipment would operate at an average distance of 145 feet (290 feet divided by 2) from the nearest residential property lines and 325 feet (650 feet divided by 2) from the nearest commercial property lines.

A potential construction scenario includes use of a grader, dozer, and backhoe working to grade the site. At average distances of 145 feet and 325 feet, simultaneous operation of these three pieces of equipment would generate a noise level of 74 dBA L_{eq} and 67 dBA L_{eq}, respectively (see Appendix C for RCNM calculations).

Operational Noise Sources

Stationary Noise Sources

Noise levels generated by the proposed car wash (e.g., dryers) and heating, ventilation, and air conditioning (HVAC) units at the convenience store were modeled with SoundPLAN. Propagation of modeled stationary noise sources was based on ISO Standard 9613-2, "Attenuation of Sound during Propagation Outdoors, Part 2: General Method of Calculation." The assessment methodology assumes that all receivers would be downwind of stationary sources. This is a worst-case assumption for total noise impacts, since, in reality, only some receivers would be downwind at any one time. Details of each source are provided below.

CAR WASH

The project would include a drive-through car wash that would generate noise primarily from operation of drying fans at the exit of the car wash. Mechanical equipment would be located within the car wash building, which would dampen and block noise. Based on information supplied by the project applicant, the project would use dryers similar or equivalent to MacNeil Wash Systems Tech 21 dryers with four 10 horsepower producers. According to MacNeil Wash Systems, each 10 horsepower producer would generate a noise level of 92 dB at 1 meter (see Appendix D for specifications). The car wash was assumed to operate from 7:00 a.m. to 10:00 p.m. Although the dryers would occasionally not be in operation when the car wash is open in real-life conditions, the car wash was conservatively assumed to operate continuously for the duration of an hour when open.

HVAC UNITS

The project applicant identified a Carrier 50HCQA06 as a potential HVAC unit for the proposed project. Therefore, this HVAC unit was used for the operational noise analysis. The noise specifications for a Carrier 50HCQA06 are shown in Table 6. Detailed specifications are included in Appendix E.

Table 6 HVAC Noise Levels

Noise Levels in dB[1] Measured at Octave Frequencies							Overall Noise Level in A-weighted Scale (dBA)[1]
125 Hz	250 Hz	500 Hz	1 KHz	2 KHz	4 KHz	8 KHz	
66.6	68.7	72.9	74.5	71.1	67.6	62.6	79

[1] Noise Levels for a Carrier 50HCQA06 split system condenser (see Appendix E for specification sheets).
Hz = Hertz; KHz = kilohertz

HVAC units would be located on the rooftop of the convenience store. A general rule of thumb is that a building would need one ton of HVAC per 600 square feet of building space. HVAC units identified by the project applicant would be five tons. Therefore, given that the proposed convenience store would be 3,800 square feet, it would require approximately six tons of HVAC, or two HVAC units. This analysis conservatively assumes that HVAC units would operate continuously and would not include any type of screening.

COMBINED

This noise analysis assumes that the car wash equipment and HVAC units would operate simultaneously during the operational hours of the car wash; outside of those hours, only HVAC

units would be operational. This is a conservative assumption because the sources would not always be operating simultaneously, especially during evening hours when less traffic is anticipated at the car wash.

Traffic Noise

Trips generated by the proposed project would utilize Van Buren Boulevard and Chicago Avenue to travel to and from the project site. Traffic noise was modeled with the FHWA RD-77-108 Traffic Noise Prediction Model. Average daily traffic (ADT) volumes were estimated based on 15-minute traffic counts taken during the AM peak hour on December 7, 2018, which are shown in Table 7.

Table 7 Estimated Traffic Volumes

		15-Minute Traffic Count					
Roadway	Segment	Automobiles	Medium-Duty Trucks	Heavy-Duty Trucks	Total Vehicles	Estimated Peak Hour Traffic Volume[1]	Estimated ADT[2]
Van Buren Boulevard	Between Little Court and Chicago Avenue	776	2	6	784	3,136	31,360
Chicago Avenue	Between Van Buren Boulevard and Iris Avenue	4	0	0	4	16	160

[1] Peak hour traffic volume is calculated by multiplying the 15-minute traffic count by 4.
[2] ADT is calculated by multiplying the peak hour traffic volume by 10 (Precision Traffic & Safety Systems 2018).
Source: Rincon 15-minute traffic counts on December 7, 2018 during the AM peak hour.

The Institute of Traffic Engineers' (ITE) trip generation rate for "Gasoline/Service Station with Convenience Market" (Land Use Code 945) of 205.36 trips per fueling pump was used to estimate project-related traffic (ITE 2017a). The project would include 16 fueling pumps; therefore, the project would generate approximately 3,286 daily trips (205.36 x 16). Approximately 62 percent of these trips would be pass-by trips (i.e., trips that would stop at the project site on their way from their origin to their primary destination without a route diversion) (ITE 2017b). The remaining 38 percent of vehicle trips would be primary trips (i.e., trips with a primary destination of the project site). Therefore, the project would generate approximately 1,249 new daily vehicle trips (3,286 x 0.38). It is assumed that 80 percent of vehicle trips would use the primary access driveway on Van Buren Boulevard and 20 percent of vehicle trips would use the secondary access driveway on Chicago Avenue. Accordingly, the project would generate approximately 999 new daily trips on Van Buren Boulevard and approximately 250 new daily trips on Chicago Avenue.

The posted speed limit on Van Buren Boulevard is 50 miles per hour (mph), and the posted speed limit on Chicago Avenue is 25 mph. However, vehicles entering and exiting the project site via Chicago Avenue would be travelling slower than the posted speed limit as they pull into and out of the driveway located immediately west of the nearest sensitive receiver. Therefore, this analysis assumes that vehicles would be travelling at a speed of 15 mph on Chicago Avenue. The vehicle classification mix for modeling was based on the observed mix from the 15-minute traffic counts, which observed 99 percent automobiles, 0.2 percent medium trucks, and 0.8 percent heavy trucks on Van Buren Boulevard and 100 percent automobiles on Chicago Avenue. Peak hour traffic was assumed to be approximately 10 percent of the roadways' total ADT. The methods described in Section 2.2.3 of the Caltrans' *Technical Noise Supplement* were used to convert the project peak hour L_{eq} to Ldn (Caltrans 2013). While traffic distribution throughout the daytime, evening, and

nighttime periods is unknown, the example breakdown used in the Caltrans' *Technical Noise Supplement* of 80 percent daytime, 5 percent evening, and 15 percent nighttime was used for the project in the conversion (Caltrans 2013).

3.2 Significance Thresholds

The following thresholds are based on County of Riverside noise standards, City of Riverside noise standards, and Appendix G of the *CEQA Guidelines*. Noise impacts would be considered significant if:

- The project would result in the generation of a substantial temporary or permanent increase in ambient noise levels in the vicinity of the project in excess of standards established in the local general plan or noise ordinance, or applicable standards of other agencies.
  - **Construction Noise**: Based on RMC Section 9.25.020, construction noise generated by projects within 0.25 mile of inhabited dwellings would be significant if construction occurs between the hours of 6:00 p.m. and 6:00 a.m. during the months of June through September or between the hours of 6:00 p.m. and 7:00 a.m. during the months of October through May. In addition, this analysis uses the FTA daytime construction noise threshold of 80 dBA L_{eq} for an 8-hour period.
  - **Operational Noise**: Operational noise would be significant if the project would generate noise levels at nearby residential properties in unincorporated Riverside County that exceed the exterior or interior noise standards set forth in the County's General Plan Noise Element (see Table 4). In addition, operational noise would be significant if the project would generate exterior noise levels at nearby commercial properties in the city of Riverside that exceed the exterior noise standards set forth in the City's Municipal Code (see Table 5).
  - **Off-site Roadway Noise**: For traffic-related noise, impacts would be considered significant if project-generated traffic would result in exposure of sensitive receivers to an unacceptable increase in noise levels. For purposes of this analysis, a significant impact would occur if project-related traffic increases the ambient noise environment of noise-sensitive locations by 3 dBA or more if the locations are subject to noise levels in excess of 60 dBA L_{dn} for exterior areas (the County's "normally acceptable" land use compatibility standard for single-family residential areas), or by 5 dBA or more if the locations are not subject to noise levels in excess of the aforementioned standards.
- **Airport-Related Noise**: For a project located within the vicinity of a private airstrip or an airport land use plan or, where such a plan has not been adopted, within two miles of a public airport or public use airport, a significant impact would result if the project exposes people residing or working in the project area to excessive noise levels.
- **Land Use Compatibility:** The project's on-site uses would be potentially inconsistent with the County's land use compatibility standards if exterior areas of the project are subject to noise levels in excess of 70 dBA L_{dn}, the normally acceptable noise level for a commercial use such as a convenience store and car wash (see Table 3).

4 Impact Analysis

4.1 Construction Noise

As described in Section 3.1, *Methodology*, project construction would generate an average noise level of approximately 67 dBA L_{eq} at the nearest commercial property and 74 dBA L_{eq} at the nearest residential property. As shown in Table 2, ambient noise levels in the project site vicinity range between 55 dBA L_{eq} along Chicago Avenue and 76 dBA L_{eq} along Van Buren Boulevard. Therefore, construction noise would generate a temporary increase in ambient noise levels at the nearest residential and commercial properties along Chicago Avenue and Iris Avenue. However, construction noise levels at the nearest residential and commercial properties would not exceed the FTA daytime 8-hour construction noise thresholds of 80 dBA L_{eq} for residential uses and 85 dBA L_{eq} for commercial uses. In addition, construction would not occur during the RMC's prohibited hours of 6:00 p.m. and 6:00 a.m. during the months of June through September and 6:00 p.m. and 7:00 a.m. during the months of October through May. Therefore, impacts from construction noise would be less than significant.

4.2 Operational Noise

On-site Stationary Sources

The project would introduce on-site stationary sources of operational noise, including HVAC equipment and a car wash. Assumptions for these sources are discussed in Section 3.1, *Methodology*. Daytime and nighttime noise levels at the nearest properties from each of the noise sources and their combined noise levels are shown in Table 8 and Table 9, respectively. Receiver locations and noise level contours are shown on Figure 4.

Table 8 Daytime Operational Noise Levels at Off-site Receivers

Receiver	Land Use Designation	Exterior Noise Level (dBA L_{eq})		Combined Daytime Exterior Noise Level (dBA L_{eq})	Daytime Exterior Noise Threshold (dBA L_{eq})[1]	Threshold Exceeded?	Combined Daytime Interior Noise Level (dBA L_{eq})[2]	Daytime Interior Noise Threshold (dBA L_{eq})[3]	Threshold Exceeded?
		HVAC	Car Wash						
R1	Retail Commercial	11.6	19.2	33.5	N/A	N/A	8.5	N/A	N/A
R2	Retail Commercial	13.7	20.8	34.9	N/A	N/A	9.9	N/A	N/A
R3	Rural Community – Very Low Density Residential	16.3	21.5	24.8	57.2	No	< 1.0	47.2	No
R4	Rural Community – Very Low Density Residential	20.6	45.4	45.6	57.2	No	20.6	47.2	No
R5	Rural Community – Very Low Density Residential	16.9	31.5	34.6	57.2	No	9.6	47.2	No
R6	Rural Community – Very Low Density Residential	8.0	23.2	25.3	57.2	No	< 1.0	47.2	No
R7	Retail Commercial	4.3	35.0	35.6	N/A	N/A	10.3	N/A	N/A
R8*	Commercial	4.7	16.8	21.7	65	No	< 1.0	N/A	No
R9*	Commercial	10.8	21.9	25.7	65	No	< 1.0	N/A	No

* = City of Riverside, N/A = not applicable

[1] Based on the County's exterior sound level standards in Table 4 for R1 through R7 and the City's exterior noise standards shown in Table 5 for R8 and R9. The County's exterior sound level standards were converted from L_{eq}[10] to L_{eq}[1h] to provide an appropriate comparison with the modeled noise levels.

[2] Standard construction techniques for wood-frame construction buildings required under the California Building Code typically achieve a minimum 25-dBA reduction from exterior sources at interior locations when the windows are in a closed position. Therefore, interior noise levels assumed a 25 dB reduction from the building facades.

[3] Based on the County's interior noise standards shown in Table 4. The County's interior sound level standards were converted from L_{eq}[10] to L_{eq}[1h] to provide an appropriate comparison with the modeled noise levels.

Note: Daytime hours are defined as 7:00 a.m. to 10:00 p.m. Daytime noise levels assumed operation of the HVAC units and car wash.

See Figure 4 for receiver locations.

Table 9 Nighttime Operational Noise Levels at Off-site Receivers

Receiver	Land Use Designation	HVAC Exterior Noise Level (dBA L_{eq})	Nighttime Exterior Noise Threshold (dBA L_{eq})[1]	Threshold Exceeded?	Nighttime Interior Noise Level (dBA L_{eq})[1]	Nighttime Interior Noise Threshold (dBA L_{eq})[2]	Threshold Exceeded?
R1	Retail Commercial	11.6	N/A	No	< 1.0	N/A	No
R2	Retail Commercial	13.7	N/A	No	< 1.0	N/A	No
R3	Rural Community – Very Low Density Residential	16.3	37.2	No	< 1.0	32.2	No
R4	Rural Community – Very Low Density Residential	20.6	37.2	No	< 1.0	32.2	No
R5	Rural Community – Very Low Density Residential	16.9	37.2	No	< 1.0	32.2	No
R6	Rural Community – Very Low Density Residential	8.0	37.2	No	< 1.0	32.2	No
R7	Retail Commercial	4.3	55	No	< 1.0	N/A	No
R8*	Commercial	4.7	55	No	< 1.0	N/A	No
R9*	Commercial	10.8	55	No	< 1.0	N/A	No

* = City of Riverside, N/A = not applicable

[1] Based on the County's exterior sound level standards in Table 4 for R1 through R7 and the City's exterior noise standards shown in Table 5 for R8 and R9. The County's exterior sound level standards were converted from L_{eq}[10] to L_{eq}[1h] to provide an appropriate comparison with the modeled noise levels.

[2] Standard construction techniques for wood-frame construction buildings required under the California Building Code typically achieve a minimum 25-dBA reduction from exterior sources at interior locations when the windows are in a closed position. Therefore, interior noise levels assumed a 25 dB reduction from the building facades.

[3] Based on the County's interior noise standards shown in Table 4. The County's interior sound level standards were converted from L_{eq}[10] to L_{eq}[1h] to provide an appropriate comparison with the modeled noise levels.

Note: Nighttime hours are defined as 10:00 p.m. to 7:00 a.m. Nighttime noise levels assumed operation of HVAC units only.

See Figure 4 for receiver locations.

Figure 4 Modeled Receivers and Daytime Noise Level Contours

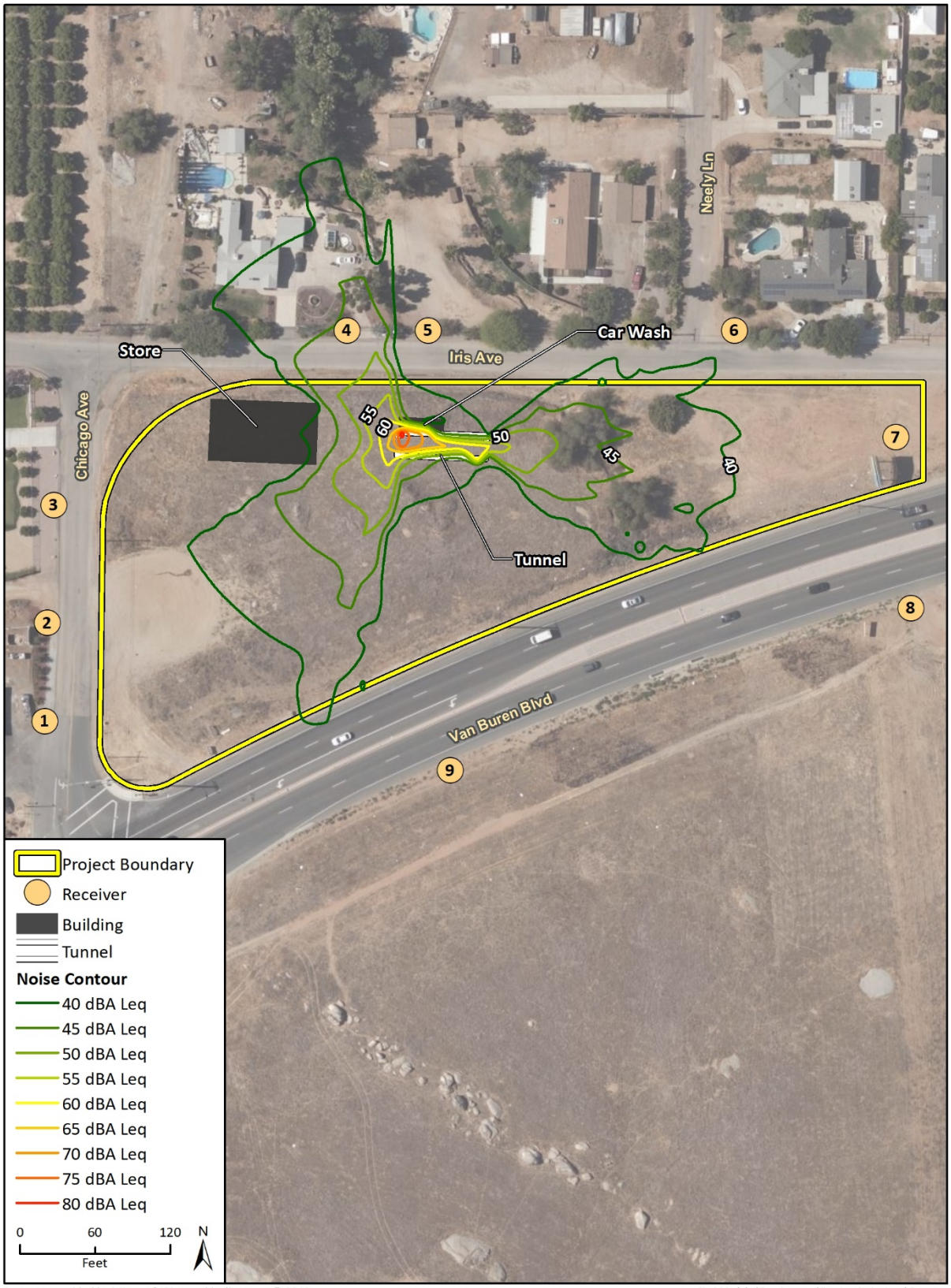

Imagery provided by Microsoft Bing and its licensors © 2019.

Fig 4 Modeled Receivers and Daytime Noise Level Contours

As shown in Table 8, combined operational activities on the project site would generate daytime noise levels up to 45.6 dBA L_{eq} at nearby residential properties and 35.6 dBA L_{eq} at nearby commercial properties. The combined operational noise from the HVAC units and the car wash would not exceed the County's daytime exterior and interior noise standards at R1 through R7 or the City of Riverside daytime exterior noise standards at R8 and R9. In addition, as shown in Table 9, the combined operational noise from the HVAC units would not exceed the County's nighttime exterior and interior noise standards at R1 through R7 or the City of Riverside nighttime exterior noise standards at R8 and R9. Therefore, operational noise impacts would be less than significant.

Off-site Traffic Noise

The project would generate new vehicle trips that would increase noise levels on nearby roadways, which would occur primarily on Chicago Avenue and Van Buren Boulevard. The increase in roadway noise with the addition of project traffic is shown in Table 10. Existing noise levels along Van Buren Boulevard currently exceed the County's 60 dBA L_{dn} exterior land use compatibility standard; however, existing noise levels along Chicago Avenue do not exceed the County's standard. Project-related traffic would generate a noise level increase of approximately 0.1 dBA L_{dn} on Van Buren Boulevard and 4.0 dBA L_{dn} along Chicago Avenue. Therefore, the project's traffic noise level increase along Van Buren Boulevard (a location in excess of 60 dBA L_{dn} for exterior areas) would not exceed 3 dBA, and the project's traffic noise level increase along Chicago Avenue (a location not subject to noise levels in excess of 60 dBA L_{dn} for exterior areas) would not exceed 5 dBA. Therefore, impacts would be less than significant.

Table 10 Existing plus Project Traffic Volumes

		Noise Level at Residences on Iris Avenue (dBA L_{dn})[1]				
Roadway	**Segment**	**Existing**	**Existing plus Project**	**Change**	**Threshold**	**Threshold Exceeded?**
Van Buren Boulevard	Between Little Court and Chicago Avenue	69.3	69.4	0.1	3	No
Chicago Avenue	Between Van Buren Boulevard and Iris Avenue	40.0	44.0	4.0	5	No

[1] Noise levels were estimated at distances of 150 feet from Van Buren Boulevard (the distance from the nearest residential property on Iris Avenue to the centerline of Van Buren Boulevard) and 20 feet from Chicago Avenue (the distance from the nearest residential property to the centerline of Chicago Avenue).
See Appendix F for calculations.

4.3 Airport-Related Noise

The March Air Reserve Base is located approximately 4.4 miles east the project site, and the project is located outside the boundaries of the airport land use plan (Riverside County Airport Land Use Commission 2004). There are no private airstrips within two miles of the project site. Therefore, no substantial noise exposure from airport noise would occur to construction workers, users, or employees of the project, and no impacts would occur.

4.4 Land Use Compatibility

Noise levels at the project site were estimated following the methodology and traffic volumes discussed in Section 3.4. Per the County's Land Use Compatibility Standards (Table 3), the normally

acceptable noise level for a commercial use such as a gas station and car wash is 70 dBA L_{dn}, and the conditionally acceptable noise level for a commercial use ranges from 67 to 77 dBA L_{dn}.

The edge of the project site is approximately 25 feet from the centerline of Chicago Avenue and 50 feet from the centerline of Van Buren Boulevard. At these distances, noise levels at the edge of the project site under existing plus project conditions would reach 43 dBA L_{dn} from Chicago Avenue and 74 dBA L_{dn} from Van Buren Boulevard (see Appendix F for calculations). Therefore, the ambient noise level at the project site would exceed the County's normally acceptable noise level of 70 dBA L_{dn} for commercial uses due to roadway noise along Van Buren Boulevard and would fall within the conditionally acceptable range of 67 to 77 dBA L_{dn} for commercial uses. The County's General Plan specifies that in areas with ambient noise levels in the conditionally acceptable range, conventional construction but with closed windows and fresh air supply systems or air conditioning will normally suffice to reduce the adverse impacts of a noisy outdoor environment. The project would include air conditioning that would allow windows to remain closed. Therefore, the project would be compatible with the County's land use noise compatibility standards.

5 Conclusions

The project would generate both temporary construction-related noise and long-term noise associated with operation of the project. Construction noise not would exceed the FTA daytime construction noise thresholds for residential and commercial land uses, and the project would comply with the construction hours allowed by RMC Section 9.52.020(I); therefore, impacts from construction noise would be less than significant.

Combined operational activities on the project site would generate noise levels up to 45.6 dBA L_{eq} at nearby residential properties and 35.6 dBA L_{eq} at nearby commercial properties. The combined operational noise from the HVAC units and the car wash would not exceed the County's daytime exterior and interior noise standards or the City's daytime exterior noise standards. In addition, the combined operational noise from the HVAC units would not exceed the County's nighttime exterior and interior noise standards or the City's nighttime exterior noise standards. Operational noise impacts would be less than significant.

Project-generated traffic would generate an increase of up to 0.1 dBA L_{dn} on Van Buren Boulevard and 4.0 dBA L_{dn} along Chicago Avenue. This is below the thresholds of 3 dBA and 5 dBA, respectively. Off-site traffic noise increase would be less than significant.

The project site is outside the noise contours for the March Air Reserve Base. Therefore, no substantial noise exposure would occur to construction workers, employees, or users of the project from aircraft noise.

The project's exterior noise levels from traffic noise would fall within the County's conditionally acceptable range for commercial land uses and would include the recommended features to reduce impacts from elevated ambient noise levels.

Given the aforementioned discussion, the project as designed would result in less than significant impacts, and no noise reduction recommendations are necessary.

6 References

California Department of Transportation (Caltrans). 2013. *Technical Noise Supplement to the Traffic Noise Analysis Protocol*. (CT-HWANP-RT-13-069.25.2) September. http://www.dot.ca.gov/hq/env/noise/pub/TeNS_Sept_2013B.pdf (accessed October 2019).

Charles M. Salter Associates, Inc. 2017. Midpoint at 237 Loading Dock Noise Study. https://www.sanjoseca.gov/DocumentCenter/View/28907 (accessed October 2019).

Crocker, Malcom J. 2007. *Handbook of Noise and Vibration Control Book*, ISBN: 978-0-471-39599-7, Wiley-VCH, October.

Federal Highway Administration (FHWA). 2006. *FHWA Highway Construction Noise Handbook*. (FHWAHEP-06-015; DOT-VNTSC-FHWA-06-02). http://www.fhwa.dot.gov/environment/construction_noise/handbook (accessed October 2019).

_____. 2011. *Highway Traffic Noise: Analysis and Abatement Guidance* (FHWA-HEP-10-025). https://www.fhwa.dot.gov/environment/noise/regulations_and_guidance/analysis_and_abatement_guidance/revguidance.pdf (accessed October 2019).

_____. 2018. Noise Measurement Handbook – Final Report. June 1. Available at: https://www.fhwa.dot.gov/ENVIRonment/noise/measurement/handbook.cfm (accessed October 2019).

Federal Transit Administration (FTA). 2018. *Transit Noise and Vibration Impact Assessment*. November. https://www.transit.dot.gov/sites/fta.dot.gov/files/docs/research-innovation/118131/transit-noise-and-vibration-impact-assessment-manual-fta-report-no-0123_0.pdf (accessed October 2019).

Institute of Transportation Engineers (ITE). 2017a. *Trip Generation Manual*, 10th Edition. September 2017.

____. 2017b. *Trip Generation Handbook*, 3rd Edition. September 2017.

Kinsler, Lawrence E. and R. Frey, Austin and B. Coppens, Alan and V. Sanders, James. 1999. *Fundamentals of Acoustics*, 4th Edition. ISBN 0-471-84789-5. Wiley-VCH, December 1999.

Precision Traffic & Safety Systems. 2018. "Traffic Studies." Last modified: 2018. http://www.precisiontrafficsafety.com/solutions/traffic-studies/ (accessed October 2019).

Riverside, County of. 2015. County of Riverside General Plan Noise Element. December 8, 2015. https://planning.rctlma.org/Zoning-Information/General-Plan (accessed October 2019).

Riverside County Airport Land Use Commission. 2004. Riverside County Airport Land Use Compatibility Plan. October 14, 2004. http://www.rcaluc.org/Plans/New-Compatibility-Plan (accessed October 2019).

Appendix A

Project Plans

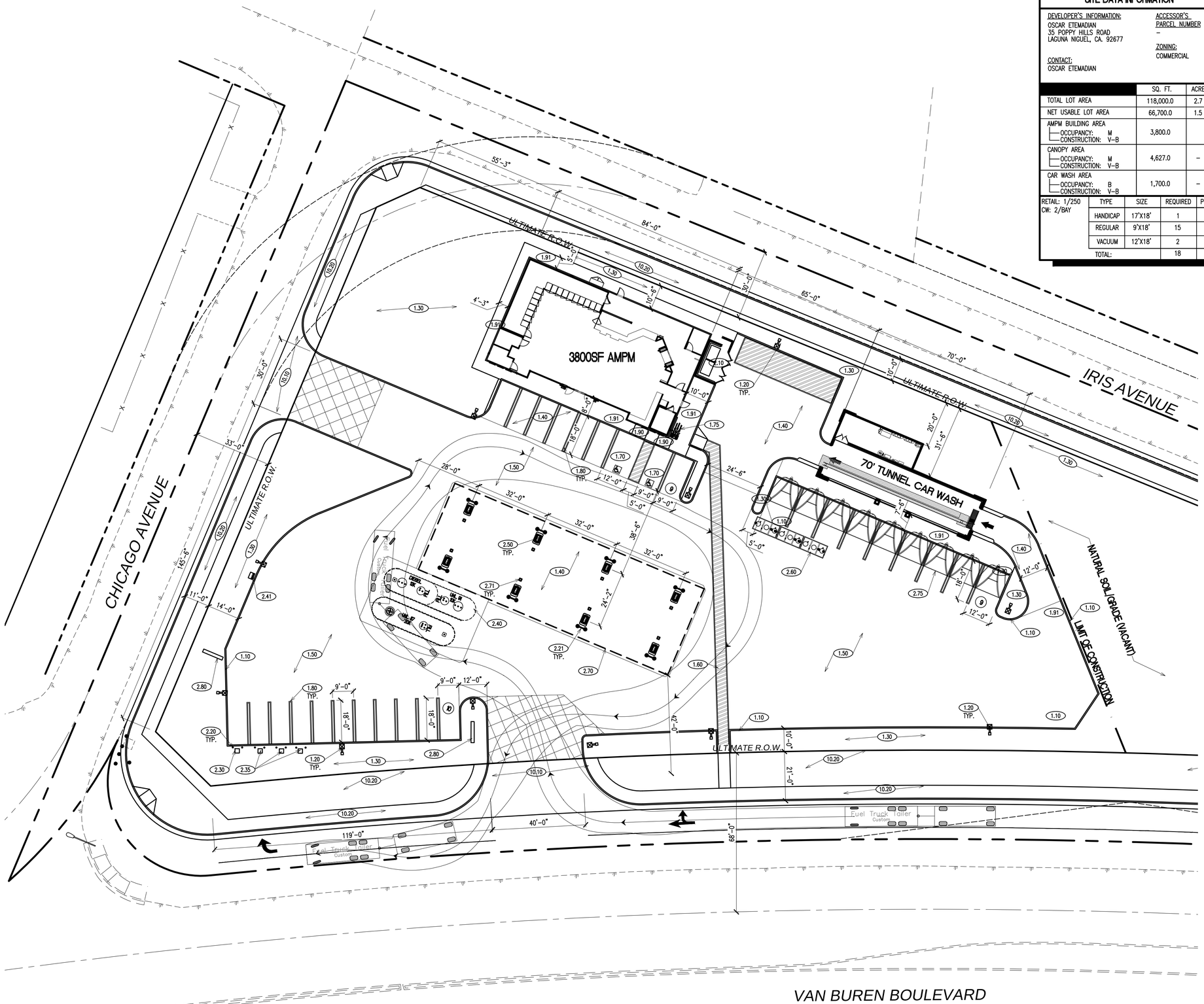

SITE PLAN

SCALE: 1"=20'-0"

SITE DATA INFORMATION

DEVELOPER'S INFORMATION:
OSCAR ETEMADIAN
35 POPPY HILLS ROAD
LAGUNA NIGUEL, CA. 92677

CONTACT:
OSCAR ETEMADIAN

ACCESSOR'S PARCEL NUMBER
–

ZONING:
COMMERCIAL

	SQ. FT.	ACRE	RATIO
TOTAL LOT AREA	118,000.0	2.7	–
NET USABLE LOT AREA	66,700.0	1.5	–
AMPM BUILDING AREA OCCUPANCY: M CONSTRUCTION: V–B	3,800.0		6%
CANOPY AREA OCCUPANCY: M CONSTRUCTION: V–B	4,627.0	–	7%
CAR WASH AREA OCCUPANCY: B CONSTRUCTION: V–B	1,700.0	–	3%

RETAIL: 1/250
CW: 2/BAY

TYPE	SIZE	REQUIRED	PROVIDED
HANDICAP	17'X18'	1	2
REGULAR	9'X18'	15	17
VACUUM	12'X18'	2	9
TOTAL:		18	28

GRAPHIC SCALE

VICINITY MAP

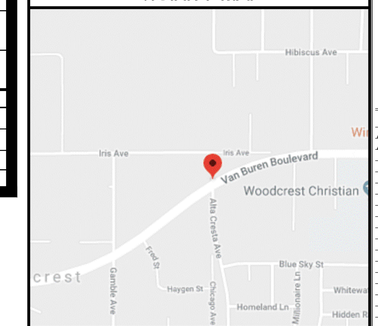

CONSTRUCTION NOTES

1.10 6" CONCRETE CURB
1.20 20'H LED AREA LIGHT WITH PHOTO–CELL AND TIME CLOCK SWITCHING PER "CALGREEN" AND TITLE 24 REQUIREMENTS. HOOD AND ARRANGE SO AS NOT TO CAUSE A NUISANCE TO ADJACENT STREET TRAFFIC OR TO LIVING ENVIRONMENT. THE AMOUNT OF LIGHT THAT SHALL BE PROVIDED DSHALL BE PER THE PUBLIC WORKS STANDARDS AND CALGREEN
1.30 LANDSCAPING WITH AUTOMATIC IRRIGATION
1.40 6" CONCRETE DRIVE SLAB WITH #3 BARS @ 18" O.C. OR AS SPECIFIED IN SOILS REPORT IF AVAILABLE.
1.45 COLORED CONCRETE WITH 8X8 SCORE LINES
1.50 6" OVER 4" A.B. ASPHALT PAVING OR AS SPECIFIED IN SOILS REPORT IF AVAILABLE.
1.60 HANDICAP PATH OF TRAVEL (MIN. 48" WIDE AND SLOPE NOT TO EXCEED 2% EACH WAY)
1.70 HANDICAP PARKING SPACE WITH ALL RELATED SIGNAGE (SLOPE NOT TO EXCEED 2% E.W.)
1.75 BICYCLE PARKING (MIN. 6) PER CAL GREEN CODE
1.80 9'X18' STANDARD PARKING SPACES
1.90 CONCRETE HANDICAP RAMP (SLOPE 8.33%)
1.91 CONCRETE SIDEWALK (MIN. 48" WIDE WITH 2% CROSS SLOPE WHERE HANDICAP PATH OF TRAVEL OCCURS)
2.10 TRASH ENCLOSURE PUBLIC WORKS STANDARD
2.17 2'X2'X6'H PILASTER AT 20' O.C. WITH WROGHT IRON FENCE ALONG SIDE PROPERTY LINE
2.18 32"H CMU WALL WITH DEEPENED FOOTING ALONG REAR PROPERTY LINE WITH 6'HX12"X12" PILASTERS AT 20' O.C. INSTALL 40"HIGH (6'A.F.G.) WROGHT IRON FENCE ABOVE 32" CMU WALL
2.20 6" CONCRETE FILLED STEEL GUARD POSTS
2.30 AIR/WATER UNIT
2.35 ELECTRIC CHARGING STATION
2.40 UNDER GROUND STORAGE TANKS (2) 20,000 GALLON UNDER REINFORCED CONCRETE SLAB
2.41 TANK VENT RISERS CARBON CANISTER
2.50 CONCRETE ISLAND W/ (1) MULTI PRODUCT DISPENSER (6" MIN. & 8" MAX. HEIGHT)
2.60 3,000 GALLON CLARIFIER FOR CAR WASH
2.70 FUELING CANOPY
2.71 FUELING CANOPY COLUMNS
2.75 VACUUM UNITS WITH ARCH FABRIC CANOPY
2.80 ID SIGNAGE
2.90 ELECTRICAL PANELS
3.10 ADA PARKING LOT ENTY SIGN PER CHAPTER 11B OF CBC
10.10 CONCRETE DRIVEWAY PER CITY OF RIALTO PUBLIC WORKS STANDARD
10.20 CONCRETE SIDEWALK PER CITY OF RIALTO PUBLIC WORKS STANDARD

DATE SIGNED: _____

SEAL

ISSUES / REVISIONS

1	02/15/19	REVISED PER ARCO
2	05/02/19	REVISED PER DED.
3	05/16/19	REMOVED (2) DISPENSERS.
4	08/06/19	REVISED PER COUNTY
5		
6		

DATE DESCRIPTION

DRAWN BY: G. DE VERA
CHK'D BY: F. COHEN

3800 AM/PM - Q.S.R./CAR WASH
APN: 266-020-001
N.E. COR VAN BUREN
@ CHICAGO,
WOODCREST, CA 92508
PROJECT NAME AND ADDRESS

CJC Design, Inc.
Design Planning Permitting
22465 La Palma Avenue, Suite 202, Yorba Linda, CA 92887
Tel: (714) 920-9643
Fax: (714) 917-0250
www.cjcarp.com

ARCO

SHEET TITLE

SITE PLAN

PROJECT NO: 19001

C.1.1

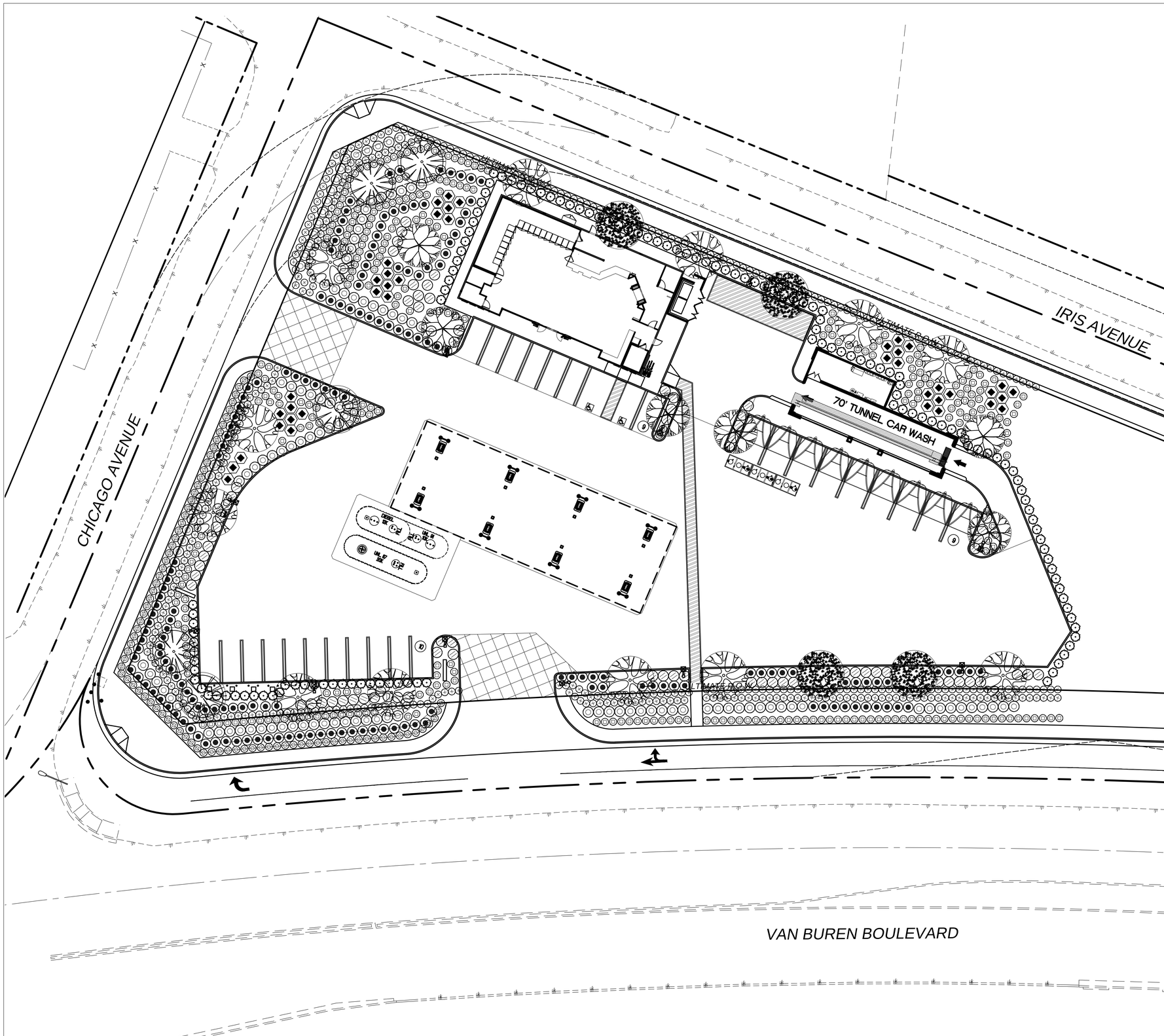

CONCEPTUAL LANDSCAPING

SCALE: 1"=20'-0"

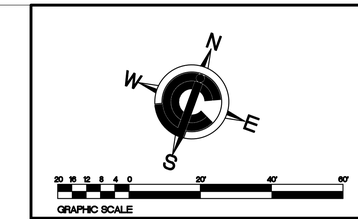

VICINITY MAP

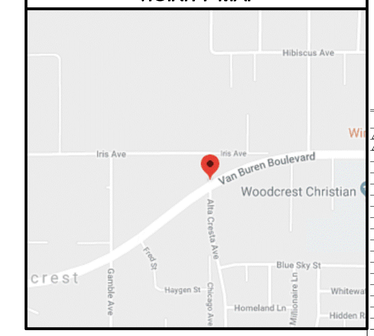

PLANT LEGEND

KEY	BOTANICAL NAMES	COMMON NAMES	WULCOS	SIZE	SPACING
	LAGESTROEMIA SPP.	CRAPE MYRTLE WATER MELON RED	LOW	48" BOX	20' O.C.
	GLEDITSIA TRIACANTHOS	HONEY LOCUST	LOW	24" BOX	30' O.C.
	CERCIS OCCIDENTALIS FOREST PAN	WESTERN REDBUD	LOW	15 GALLON	20' O.C.
	PLATANUS RACEMOSA	CALIFORNIA SYCAMORE	MEDIUM	24" BOX	30' O.C.
	LEUCOTHOE AXILLARIS	COAST LEUCOTHOA	LOW	5 GAL	3' O.C.
	ANIGO ZANTHOS	KANGAROO PAW "BIG RED"	LOW	5 GAL	3' O.C.
	CISTUS SPP.	ROCK ROSE	LOW	5 GAL	3' O.C.
	HESPERALOE PARVIFLORA	RED YUCCA	LOW	5 GAL	3' O.C.
	FESTUCA CALIFONICA	CALIFORNIA FESCUE	LOW	5 GAL	3' O.C.
	ROSEMARINUS OFFICINALIS	ROSEMARY	LOW	1 GAL	2' O.C.
	DROSANTHEMUM FLORIBUNDA	ROSEA ICE PLANT	LOW	1 GAL	2' O.C.
	BOUGAINVILLEA RED	BOUGAINVILLEA	LOW	1 GAL	10' O.C.

**IRRIGATION CONCEPT: DRIP IRRIGATION WITH SINGLE HYDROZONE

PLANTING NOTES

A. PLANTING PITS SHALL BE DUG WITH LEVEL BOTTOMS, THE WIDTH TWICE THE DIAMETER OF THE ROOTBALL AND 6" DEEPER THAN THE LENGTH OF THE ROOTBALL. EACH PLANT PIT SHALL BE BACKFILLED WITH THE FOLLOWING PREPARED SOIL MIX:

2 PARTS NITROLIZED REDWOOD SHAVINGS
1 PART 'NITROHUMUS'
3 PARTS EXCAVATED SOIL
21 GRAM 'AGRIFORM' PLANTING TABLET

PLANTING TABLETS SHALL BE APPLIED AS FOLLOWS:
1 TABLET PER 1 GALLON SIZE PLANT
2 TABLETS PER 5 GALLON SIZE PLANT
3 TABLETS PER 15 GALLON SIZE PLANT

LARGER PLANT MATERIAL WILL BE GIVEN ONE (1) TABLET PER 1/2 " DIAMETER OF TRUNK CALIPER

B. PREPARED SOIL SHALL BE TAMPED FIRMLY AT BOTTOM OF PLANT PIT. FILL PREPARED SOIL AROUND BALL OF PLANT 1/2 WAY AND INSERT PLANT TABLETS. COMPLETE BACKFILLING AND WATER IN THOROUGHLY.

C. TURF AREAS SHALL BE ROTOTILLED 3" DEEP WITH 3 CUBIC YARDS NITROLIZED REDWOOD SHAVINGS PER 100 SQ FT AFTER ROTOTILL SOIL SHALL BE GRADED SMOOTH

NOTE:

ALL SHRUB AND GROUNDCOVER AREAS TO RECEIVE 3" DEPTH SHREDDED BARK MULCH. SUBMIT SAMPLE TO CITY INSPECTOR FOR APPROVAL PRIOR TO INSTALLATION

CONTRACTOR TO CONDUCT THEIR OWN PLANT MATERIAL QUANTITY TAKEOFFS

CONTRACTOR TO CONDUCT AGRONOMIC SOIL TEST REPORT AND CONVEY RESULTS TO OWNER. TO BE PROVIDED WITH CONSTRUCTION DOCUMENTS SUBMITTAL.

DATE SIGNED: _____

SEAL

ISSUES / REVISIONS

1	
2	
3	
4	
5	
6	

DATE	DESCRIPTION

DRAWN BY: G. DE VERA

CHK'D BY: F. COHEN

800 AM/PM - Q.S.R./CAR WASH
APN: 266-020-001
N.E. COR VAN BUREN
@ CHICAGO,
WOODCREST, CA 92508
PROJECT NAME AND ADDRESS

CJC Design, Inc.
Design Planning Permitting
22455 La Palma Avenue, Suite 202, Yorba Linda, CA 92887
Tel: (714) 920-9643
Fax: (714) 917-0250
www.cjcdesign.com

ARCO

SHEET TITLE

CONCEPTUAL LANDSCAPING

PROJECT NO: 19001

L.1.1

Appendix B

Noise Measurement Data

Noise Measurement 1

- Freq Weight : A
- Time Weight : FAST
- Level Range : 40-100
- Max dB : 87.5 - 2018/12/07 08:33:39
- Level Range : 40-100
- SEL : 105.5
- Leq : 76.0
-

No.s	Date Time	(dB)
1	2018/12/07 08:33:36	75.7
2	2018/12/07 08:33:37	79.5
3	2018/12/07 08:33:38	86.2
4	2018/12/07 08:33:39	79.9
5	2018/12/07 08:33:40	75.9
6	2018/12/07 08:33:41	76.4
7	2018/12/07 08:33:42	80.1
8	2018/12/07 08:33:43	82.5
9	2018/12/07 08:33:44	77.8
10	2018/12/07 08:33:45	77.4
11	2018/12/07 08:33:46	82.0
12	2018/12/07 08:33:47	79.4
13	2018/12/07 08:33:48	80.7
14	2018/12/07 08:33:49	80.3
15	2018/12/07 08:33:50	80.8
16	2018/12/07 08:33:51	81.7
17	2018/12/07 08:33:52	76.3
18	2018/12/07 08:33:53	78.2
19	2018/12/07 08:33:54	78.7
20	2018/12/07 08:33:55	82.8
21	2018/12/07 08:33:56	81.4
22	2018/12/07 08:33:57	79.4
23	2018/12/07 08:33:58	77.8
24	2018/12/07 08:33:59	75.7
25	2018/12/07 08:34:00	81.1
26	2018/12/07 08:34:01	73.8
27	2018/12/07 08:34:02	75.4
28	2018/12/07 08:34:03	78.3
29	2018/12/07 08:34:04	75.8
30	2018/12/07 08:34:05	76.8
31	2018/12/07 08:34:06	76.5
32	2018/12/07 08:34:07	74.2
33	2018/12/07 08:34:08	78.7
34	2018/12/07 08:34:09	78.6
35	2018/12/07 08:34:10	80.8
36	2018/12/07 08:34:11	78.3
37	2018/12/07 08:34:12	80.1
38	2018/12/07 08:34:13	78.8
39	2018/12/07 08:34:14	77.4
40	2018/12/07 08:34:15	80.2
41	2018/12/07 08:34:16	78.8
42	2018/12/07 08:34:17	78.4
43	2018/12/07 08:34:18	80.2
44	2018/12/07 08:34:19	80.3
45	2018/12/07 08:34:20	79.4
46	2018/12/07 08:34:21	80.7
47	2018/12/07 08:34:22	78.2
48	2018/12/07 08:34:23	80.0
49	2018/12/07 08:34:24	81.0
50	2018/12/07 08:34:25	77.0
51	2018/12/07 08:34:26	74.9
52	2018/12/07 08:34:27	74.1
53	2018/12/07 08:34:28	74.8
54	2018/12/07 08:34:29	75.2
55	2018/12/07 08:34:30	75.4
56	2018/12/07 08:34:31	77.0
57	2018/12/07 08:34:32	75.4
58	2018/12/07 08:34:33	71.5
59	2018/12/07 08:34:34	69.6
60	2018/12/07 08:34:35	72.3
61	2018/12/07 08:34:36	74.9
62	2018/12/07 08:34:37	74.0
63	2018/12/07 08:34:38	71.7
64	2018/12/07 08:34:39	74.6
65	2018/12/07 08:34:40	74.8
66	2018/12/07 08:34:41	72.4
67	2018/12/07 08:34:42	72.8
68	2018/12/07 08:34:43	75.4
69	2018/12/07 08:34:44	72.9
70	2018/12/07 08:34:45	73.1
71	2018/12/07 08:34:46	70.5
72	2018/12/07 08:34:47	70.7
73	2018/12/07 08:34:48	72.8
74	2018/12/07 08:34:49	72.4
75	2018/12/07 08:34:50	70.1
76	2018/12/07 08:34:51	72.0
77	2018/12/07 08:34:52	70.4
78	2018/12/07 08:34:53	68.8
79	2018/12/07 08:34:54	69.9
80	2018/12/07 08:34:55	71.4
81	2018/12/07 08:34:56	71.3
82	2018/12/07 08:34:57	70.8
83	2018/12/07 08:34:58	69.6
84	2018/12/07 08:34:59	69.0
85	2018/12/07 08:35:00	68.0

86	2018/12/07 08:35:01	66.6
87	2018/12/07 08:35:02	67.5
88	2018/12/07 08:35:03	66.9
89	2018/12/07 08:35:04	67.0
90	2018/12/07 08:35:05	66.6
91	2018/12/07 08:35:06	75.7
92	2018/12/07 08:35:07	80.4
93	2018/12/07 08:35:08	83.5
94	2018/12/07 08:35:09	69.0
95	2018/12/07 08:35:10	72.8
96	2018/12/07 08:35:11	78.7
97	2018/12/07 08:35:12	81.7
98	2018/12/07 08:35:13	79.3
99	2018/12/07 08:35:14	71.9
100	2018/12/07 08:35:15	72.7
101	2018/12/07 08:35:16	72.6
102	2018/12/07 08:35:17	73.0
103	2018/12/07 08:35:18	72.0
104	2018/12/07 08:35:19	70.4
105	2018/12/07 08:35:20	69.4
106	2018/12/07 08:35:21	69.4
107	2018/12/07 08:35:22	69.2
108	2018/12/07 08:35:23	70.3
109	2018/12/07 08:35:24	78.4
110	2018/12/07 08:35:25	77.6
111	2018/12/07 08:35:26	76.2
112	2018/12/07 08:35:27	74.6
113	2018/12/07 08:35:28	77.6
114	2018/12/07 08:35:29	74.6
115	2018/12/07 08:35:30	76.8
116	2018/12/07 08:35:31	77.1
117	2018/12/07 08:35:32	76.4
118	2018/12/07 08:35:33	73.8
119	2018/12/07 08:35:34	77.6
120	2018/12/07 08:35:35	80.0
121	2018/12/07 08:35:36	76.6
122	2018/12/07 08:35:37	76.7
123	2018/12/07 08:35:38	78.8
124	2018/12/07 08:35:39	74.5
125	2018/12/07 08:35:40	76.9
126	2018/12/07 08:35:41	76.4
127	2018/12/07 08:35:42	76.6
128	2018/12/07 08:35:43	75.6
129	2018/12/07 08:35:44	74.8
130	2018/12/07 08:35:45	73.4
131	2018/12/07 08:35:46	72.0
132	2018/12/07 08:35:47	72.1
133	2018/12/07 08:35:48	76.2
134	2018/12/07 08:35:49	77.5
135	2018/12/07 08:35:50	78.0
136	2018/12/07 08:35:51	77.0
137	2018/12/07 08:35:52	78.6
138	2018/12/07 08:35:53	79.8
139	2018/12/07 08:35:54	80.1
140	2018/12/07 08:35:55	82.6
141	2018/12/07 08:35:56	79.2
142	2018/12/07 08:35:57	77.8
143	2018/12/07 08:35:58	77.8
144	2018/12/07 08:35:59	74.0
145	2018/12/07 08:36:00	77.5
146	2018/12/07 08:36:01	78.9
147	2018/12/07 08:36:02	75.8
148	2018/12/07 08:36:03	78.9
149	2018/12/07 08:36:04	78.3
150	2018/12/07 08:36:05	79.3
151	2018/12/07 08:36:06	77.5
152	2018/12/07 08:36:07	75.7
153	2018/12/07 08:36:08	78.4
154	2018/12/07 08:36:09	80.9
155	2018/12/07 08:36:10	75.3
156	2018/12/07 08:36:11	75.9
157	2018/12/07 08:36:12	77.1
158	2018/12/07 08:36:13	71.6
159	2018/12/07 08:36:14	72.2
160	2018/12/07 08:36:15	82.2
161	2018/12/07 08:36:16	81.8
162	2018/12/07 08:36:17	78.2
163	2018/12/07 08:36:18	77.8
164	2018/12/07 08:36:19	74.1
165	2018/12/07 08:36:20	75.2
166	2018/12/07 08:36:21	78.9
167	2018/12/07 08:36:22	77.8
168	2018/12/07 08:36:23	80.8
169	2018/12/07 08:36:24	76.9
170	2018/12/07 08:36:25	74.9
171	2018/12/07 08:36:26	76.0
172	2018/12/07 08:36:27	79.5
173	2018/12/07 08:36:28	76.5
174	2018/12/07 08:36:29	73.6
175	2018/12/07 08:36:30	73.9
176	2018/12/07 08:36:31	73.7
177	2018/12/07 08:36:32	74.7
178	2018/12/07 08:36:33	73.4
179	2018/12/07 08:36:34	74.2
180	2018/12/07 08:36:35	73.7
181	2018/12/07 08:36:36	72.6
182	2018/12/07 08:36:37	72.8
183	2018/12/07 08:36:38	73.6
184	2018/12/07 08:36:39	72.5

185	2018/12/07 08:36:40	72.9
186	2018/12/07 08:36:41	73.1
187	2018/12/07 08:36:42	73.9
188	2018/12/07 08:36:43	79.8
189	2018/12/07 08:36:44	80.1
190	2018/12/07 08:36:45	76.2
191	2018/12/07 08:36:46	74.8
192	2018/12/07 08:36:47	77.8
193	2018/12/07 08:36:48	72.5
194	2018/12/07 08:36:49	68.5
195	2018/12/07 08:36:50	69.7
196	2018/12/07 08:36:51	76.3
197	2018/12/07 08:36:52	73.1
198	2018/12/07 08:36:53	72.6
199	2018/12/07 08:36:54	71.4
200	2018/12/07 08:36:55	72.3
201	2018/12/07 08:36:56	71.4
202	2018/12/07 08:36:57	71.8
203	2018/12/07 08:36:58	63.2
204	2018/12/07 08:36:59	60.4
205	2018/12/07 08:37:00	61.9
206	2018/12/07 08:37:01	64.6
207	2018/12/07 08:37:02	68.2
208	2018/12/07 08:37:03	70.5
209	2018/12/07 08:37:04	72.0
210	2018/12/07 08:37:05	74.4
211	2018/12/07 08:37:06	74.8
212	2018/12/07 08:37:07	73.2
213	2018/12/07 08:37:08	76.7
214	2018/12/07 08:37:09	75.0
215	2018/12/07 08:37:10	74.0
216	2018/12/07 08:37:11	72.0
217	2018/12/07 08:37:12	74.9
218	2018/12/07 08:37:13	75.4
219	2018/12/07 08:37:14	73.9
220	2018/12/07 08:37:15	73.5
221	2018/12/07 08:37:16	77.1
222	2018/12/07 08:37:17	74.1
223	2018/12/07 08:37:18	77.6
224	2018/12/07 08:37:19	77.7
225	2018/12/07 08:37:20	74.8
226	2018/12/07 08:37:21	77.3
227	2018/12/07 08:37:22	72.1
228	2018/12/07 08:37:23	66.9
229	2018/12/07 08:37:24	65.7
230	2018/12/07 08:37:25	67.1
231	2018/12/07 08:37:26	68.6
232	2018/12/07 08:37:27	68.8
233	2018/12/07 08:37:28	67.6
234	2018/12/07 08:37:29	67.1
235	2018/12/07 08:37:30	74.6
236	2018/12/07 08:37:31	78.5
237	2018/12/07 08:37:32	71.3
238	2018/12/07 08:37:33	70.5
239	2018/12/07 08:37:34	72.4
240	2018/12/07 08:37:35	77.0
241	2018/12/07 08:37:36	76.2
242	2018/12/07 08:37:37	75.2
243	2018/12/07 08:37:38	80.5
244	2018/12/07 08:37:39	80.0
245	2018/12/07 08:37:40	76.8
246	2018/12/07 08:37:41	80.6
247	2018/12/07 08:37:42	82.6
248	2018/12/07 08:37:43	74.2
249	2018/12/07 08:37:44	73.1
250	2018/12/07 08:37:45	69.9
251	2018/12/07 08:37:46	70.6
252	2018/12/07 08:37:47	77.7
253	2018/12/07 08:37:48	71.6
254	2018/12/07 08:37:49	71.3
255	2018/12/07 08:37:50	78.7
256	2018/12/07 08:37:51	77.4
257	2018/12/07 08:37:52	76.8
258	2018/12/07 08:37:53	80.0
259	2018/12/07 08:37:54	71.3
260	2018/12/07 08:37:55	69.3
261	2018/12/07 08:37:56	68.2
262	2018/12/07 08:37:57	67.9
263	2018/12/07 08:37:58	68.7
264	2018/12/07 08:37:59	68.7
265	2018/12/07 08:38:00	66.8
266	2018/12/07 08:38:01	69.7
267	2018/12/07 08:38:02	81.4
268	2018/12/07 08:38:03	76.0
269	2018/12/07 08:38:04	71.7
270	2018/12/07 08:38:05	70.3
271	2018/12/07 08:38:06	68.2
272	2018/12/07 08:38:07	70.5
273	2018/12/07 08:38:08	77.8
274	2018/12/07 08:38:09	81.0
275	2018/12/07 08:38:10	79.3
276	2018/12/07 08:38:11	81.8
277	2018/12/07 08:38:12	74.7
278	2018/12/07 08:38:13	73.8
279	2018/12/07 08:38:14	73.1
280	2018/12/07 08:38:15	74.0
281	2018/12/07 08:38:16	74.8
282	2018/12/07 08:38:17	83.1
283	2018/12/07 08:38:18	80.2

284	2018/12/07 08:38:19	76.4
285	2018/12/07 08:38:20	78.4
286	2018/12/07 08:38:21	78.5
287	2018/12/07 08:38:22	78.3
288	2018/12/07 08:38:23	85.9
289	2018/12/07 08:38:24	79.8
290	2018/12/07 08:38:25	76.5
291	2018/12/07 08:38:26	78.4
292	2018/12/07 08:38:27	78.7
293	2018/12/07 08:38:28	76.8
294	2018/12/07 08:38:29	76.8
295	2018/12/07 08:38:30	79.2
296	2018/12/07 08:38:31	79.2
297	2018/12/07 08:38:32	79.0
298	2018/12/07 08:38:33	79.0
299	2018/12/07 08:38:34	78.6
300	2018/12/07 08:38:35	78.5
301	2018/12/07 08:38:36	78.8
302	2018/12/07 08:38:37	77.9
303	2018/12/07 08:38:38	79.0
304	2018/12/07 08:38:39	74.0
305	2018/12/07 08:38:40	72.6
306	2018/12/07 08:38:41	73.0
307	2018/12/07 08:38:42	78.2
308	2018/12/07 08:38:43	82.7
309	2018/12/07 08:38:44	79.4
310	2018/12/07 08:38:45	81.7
311	2018/12/07 08:38:46	80.9
312	2018/12/07 08:38:47	74.7
313	2018/12/07 08:38:48	75.2
314	2018/12/07 08:38:49	76.8
315	2018/12/07 08:38:50	81.5
316	2018/12/07 08:38:51	77.9
317	2018/12/07 08:38:52	79.9
318	2018/12/07 08:38:53	83.4
319	2018/12/07 08:38:54	76.0
320	2018/12/07 08:38:55	75.1
321	2018/12/07 08:38:56	72.3
322	2018/12/07 08:38:57	72.0
323	2018/12/07 08:38:58	71.1
324	2018/12/07 08:38:59	68.7
325	2018/12/07 08:39:00	69.0
326	2018/12/07 08:39:01	67.3
327	2018/12/07 08:39:02	66.9
328	2018/12/07 08:39:03	68.1
329	2018/12/07 08:39:04	72.1
330	2018/12/07 08:39:05	73.0
331	2018/12/07 08:39:06	76.9
332	2018/12/07 08:39:07	77.1
333	2018/12/07 08:39:08	72.3
334	2018/12/07 08:39:09	75.2
335	2018/12/07 08:39:10	79.1
336	2018/12/07 08:39:11	77.9
337	2018/12/07 08:39:12	77.6
338	2018/12/07 08:39:13	71.2
339	2018/12/07 08:39:14	73.8
340	2018/12/07 08:39:15	75.1
341	2018/12/07 08:39:16	69.4
342	2018/12/07 08:39:17	70.8
343	2018/12/07 08:39:18	75.2
344	2018/12/07 08:39:19	75.3
345	2018/12/07 08:39:20	69.6
346	2018/12/07 08:39:21	67.0
347	2018/12/07 08:39:22	67.0
348	2018/12/07 08:39:23	66.9
349	2018/12/07 08:39:24	67.3
350	2018/12/07 08:39:25	71.8
351	2018/12/07 08:39:26	73.4
352	2018/12/07 08:39:27	73.3
353	2018/12/07 08:39:28	71.1
354	2018/12/07 08:39:29	71.0
355	2018/12/07 08:39:30	68.7
356	2018/12/07 08:39:31	67.7
357	2018/12/07 08:39:32	67.7
358	2018/12/07 08:39:33	66.5
359	2018/12/07 08:39:34	64.7
360	2018/12/07 08:39:35	69.0
361	2018/12/07 08:39:36	69.1
362	2018/12/07 08:39:37	68.0
363	2018/12/07 08:39:38	69.0
364	2018/12/07 08:39:39	68.9
365	2018/12/07 08:39:40	70.6
366	2018/12/07 08:39:41	72.5
367	2018/12/07 08:39:42	72.1
368	2018/12/07 08:39:43	69.8
369	2018/12/07 08:39:44	67.2
370	2018/12/07 08:39:45	66.7
371	2018/12/07 08:39:46	65.6
372	2018/12/07 08:39:47	66.0
373	2018/12/07 08:39:48	66.9
374	2018/12/07 08:39:49	70.2
375	2018/12/07 08:39:50	77.4
376	2018/12/07 08:39:51	76.0
377	2018/12/07 08:39:52	76.5
378	2018/12/07 08:39:53	83.9
379	2018/12/07 08:39:54	73.8
380	2018/12/07 08:39:55	78.5
381	2018/12/07 08:39:56	82.0
382	2018/12/07 08:39:57	79.2

383	2018/12/07 08:39:58	73.7
384	2018/12/07 08:39:59	70.6
385	2018/12/07 08:40:00	69.8
386	2018/12/07 08:40:01	67.1
387	2018/12/07 08:40:02	69.1
388	2018/12/07 08:40:03	69.6
389	2018/12/07 08:40:04	72.3
390	2018/12/07 08:40:05	80.2
391	2018/12/07 08:40:06	74.5
392	2018/12/07 08:40:07	78.2
393	2018/12/07 08:40:08	73.5
394	2018/12/07 08:40:09	70.6
395	2018/12/07 08:40:10	70.3
396	2018/12/07 08:40:11	72.0
397	2018/12/07 08:40:12	72.6
398	2018/12/07 08:40:13	76.2
399	2018/12/07 08:40:14	80.9
400	2018/12/07 08:40:15	75.9
401	2018/12/07 08:40:16	75.9
402	2018/12/07 08:40:17	82.0
403	2018/12/07 08:40:18	75.5
404	2018/12/07 08:40:19	73.4
405	2018/12/07 08:40:20	81.9
406	2018/12/07 08:40:21	77.9
407	2018/12/07 08:40:22	79.6
408	2018/12/07 08:40:23	78.0
409	2018/12/07 08:40:24	79.1
410	2018/12/07 08:40:25	78.5
411	2018/12/07 08:40:26	78.6
412	2018/12/07 08:40:27	79.8
413	2018/12/07 08:40:28	82.0
414	2018/12/07 08:40:29	71.4
415	2018/12/07 08:40:30	69.0
416	2018/12/07 08:40:31	74.1
417	2018/12/07 08:40:32	78.3
418	2018/12/07 08:40:33	78.1
419	2018/12/07 08:40:34	78.1
420	2018/12/07 08:40:35	82.3
421	2018/12/07 08:40:36	80.8
422	2018/12/07 08:40:37	80.4
423	2018/12/07 08:40:38	80.9
424	2018/12/07 08:40:39	78.6
425	2018/12/07 08:40:40	80.4
426	2018/12/07 08:40:41	77.6
427	2018/12/07 08:40:42	75.0
428	2018/12/07 08:40:43	79.6
429	2018/12/07 08:40:44	80.4
430	2018/12/07 08:40:45	79.6
431	2018/12/07 08:40:46	83.1
432	2018/12/07 08:40:47	80.3
433	2018/12/07 08:40:48	78.2
434	2018/12/07 08:40:49	81.1
435	2018/12/07 08:40:50	76.2
436	2018/12/07 08:40:51	75.5
437	2018/12/07 08:40:52	78.4
438	2018/12/07 08:40:53	80.3
439	2018/12/07 08:40:54	77.9
440	2018/12/07 08:40:55	78.7
441	2018/12/07 08:40:56	82.8
442	2018/12/07 08:40:57	80.4
443	2018/12/07 08:40:58	83.0
444	2018/12/07 08:40:59	77.1
445	2018/12/07 08:41:00	77.4
446	2018/12/07 08:41:01	77.0
447	2018/12/07 08:41:02	83.2
448	2018/12/07 08:41:03	74.3
449	2018/12/07 08:41:04	73.5
450	2018/12/07 08:41:05	80.8
451	2018/12/07 08:41:06	76.0
452	2018/12/07 08:41:07	80.2
453	2018/12/07 08:41:08	78.2
454	2018/12/07 08:41:09	76.1
455	2018/12/07 08:41:10	75.7
456	2018/12/07 08:41:11	78.2
457	2018/12/07 08:41:12	80.0
458	2018/12/07 08:41:13	77.8
459	2018/12/07 08:41:14	78.3
460	2018/12/07 08:41:15	75.6
461	2018/12/07 08:41:16	75.7
462	2018/12/07 08:41:17	73.4
463	2018/12/07 08:41:18	68.7
464	2018/12/07 08:41:19	68.1
465	2018/12/07 08:41:20	73.2
466	2018/12/07 08:41:21	75.5
467	2018/12/07 08:41:22	71.0
468	2018/12/07 08:41:23	72.2
469	2018/12/07 08:41:24	70.0
470	2018/12/07 08:41:25	64.9
471	2018/12/07 08:41:26	63.1
472	2018/12/07 08:41:27	64.7
473	2018/12/07 08:41:28	70.8
474	2018/12/07 08:41:29	71.5
475	2018/12/07 08:41:30	65.1
476	2018/12/07 08:41:31	61.8
477	2018/12/07 08:41:32	61.0
478	2018/12/07 08:41:33	63.8
479	2018/12/07 08:41:34	66.0
480	2018/12/07 08:41:35	68.1
481	2018/12/07 08:41:36	69.1

482	2018/12/07 08:41:37	71.4
483	2018/12/07 08:41:38	72.5
484	2018/12/07 08:41:39	74.3
485	2018/12/07 08:41:40	74.7
486	2018/12/07 08:41:41	74.1
487	2018/12/07 08:41:42	72.4
488	2018/12/07 08:41:43	71.8
489	2018/12/07 08:41:44	70.7
490	2018/12/07 08:41:45	69.4
491	2018/12/07 08:41:46	71.4
492	2018/12/07 08:41:47	77.8
493	2018/12/07 08:41:48	78.0
494	2018/12/07 08:41:49	73.4
495	2018/12/07 08:41:50	77.1
496	2018/12/07 08:41:51	71.3
497	2018/12/07 08:41:52	66.5
498	2018/12/07 08:41:53	65.1
499	2018/12/07 08:41:54	65.4
500	2018/12/07 08:41:55	63.6
501	2018/12/07 08:41:56	63.0
502	2018/12/07 08:41:57	64.3
503	2018/12/07 08:41:58	65.8
504	2018/12/07 08:41:59	72.8
505	2018/12/07 08:42:00	77.3
506	2018/12/07 08:42:01	70.2
507	2018/12/07 08:42:02	66.6
508	2018/12/07 08:42:03	67.1
509	2018/12/07 08:42:04	71.2
510	2018/12/07 08:42:05	79.9
511	2018/12/07 08:42:06	79.3
512	2018/12/07 08:42:07	79.2
513	2018/12/07 08:42:08	76.1
514	2018/12/07 08:42:09	71.7
515	2018/12/07 08:42:10	73.7
516	2018/12/07 08:42:11	79.5
517	2018/12/07 08:42:12	80.9
518	2018/12/07 08:42:13	72.7
519	2018/12/07 08:42:14	75.7
520	2018/12/07 08:42:15	78.5
521	2018/12/07 08:42:16	77.3
522	2018/12/07 08:42:17	75.4
523	2018/12/07 08:42:18	71.5
524	2018/12/07 08:42:19	74.9
525	2018/12/07 08:42:20	77.8
526	2018/12/07 08:42:21	78.8
527	2018/12/07 08:42:22	81.5
528	2018/12/07 08:42:23	73.7
529	2018/12/07 08:42:24	69.9
530	2018/12/07 08:42:25	69.2
531	2018/12/07 08:42:26	73.3
532	2018/12/07 08:42:27	82.4
533	2018/12/07 08:42:28	83.4
534	2018/12/07 08:42:29	83.8
535	2018/12/07 08:42:30	78.6
536	2018/12/07 08:42:31	77.3
537	2018/12/07 08:42:32	78.6
538	2018/12/07 08:42:33	79.9
539	2018/12/07 08:42:34	76.3
540	2018/12/07 08:42:35	75.9
541	2018/12/07 08:42:36	77.7
542	2018/12/07 08:42:37	84.1
543	2018/12/07 08:42:38	80.1
544	2018/12/07 08:42:39	83.3
545	2018/12/07 08:42:40	77.7
546	2018/12/07 08:42:41	78.3
547	2018/12/07 08:42:42	83.0
548	2018/12/07 08:42:43	79.4
549	2018/12/07 08:42:44	80.7
550	2018/12/07 08:42:45	81.4
551	2018/12/07 08:42:46	79.5
552	2018/12/07 08:42:47	79.7
553	2018/12/07 08:42:48	79.6
554	2018/12/07 08:42:49	80.9
555	2018/12/07 08:42:50	80.5
556	2018/12/07 08:42:51	80.9
557	2018/12/07 08:42:52	78.5
558	2018/12/07 08:42:53	80.1
559	2018/12/07 08:42:54	82.2
560	2018/12/07 08:42:55	80.2
561	2018/12/07 08:42:56	78.2
562	2018/12/07 08:42:57	77.4
563	2018/12/07 08:42:58	81.5
564	2018/12/07 08:42:59	81.5
565	2018/12/07 08:43:00	75.0
566	2018/12/07 08:43:01	74.4
567	2018/12/07 08:43:02	74.8
568	2018/12/07 08:43:03	77.0
569	2018/12/07 08:43:04	77.8
570	2018/12/07 08:43:05	76.9
571	2018/12/07 08:43:06	80.7
572	2018/12/07 08:43:07	80.3
573	2018/12/07 08:43:08	77.6
574	2018/12/07 08:43:09	79.9
575	2018/12/07 08:43:10	76.0
576	2018/12/07 08:43:11	82.3
577	2018/12/07 08:43:12	82.2
578	2018/12/07 08:43:13	77.7
579	2018/12/07 08:43:14	75.6
580	2018/12/07 08:43:15	77.5

581	2018/12/07 08:43:16	78.9
582	2018/12/07 08:43:17	76.0
583	2018/12/07 08:43:18	78.2
584	2018/12/07 08:43:19	82.1
585	2018/12/07 08:43:20	77.5
586	2018/12/07 08:43:21	79.9
587	2018/12/07 08:43:22	79.2
588	2018/12/07 08:43:23	78.2
589	2018/12/07 08:43:24	76.9
590	2018/12/07 08:43:25	74.9
591	2018/12/07 08:43:26	76.5
592	2018/12/07 08:43:27	75.3
593	2018/12/07 08:43:28	77.0
594	2018/12/07 08:43:29	74.4
595	2018/12/07 08:43:30	73.4
596	2018/12/07 08:43:31	72.7
597	2018/12/07 08:43:32	71.3
598	2018/12/07 08:43:33	71.6
599	2018/12/07 08:43:34	73.7
600	2018/12/07 08:43:35	76.4
601	2018/12/07 08:43:36	70.6
602	2018/12/07 08:43:37	73.1
603	2018/12/07 08:43:38	78.0
604	2018/12/07 08:43:39	73.6
605	2018/12/07 08:43:40	71.0
606	2018/12/07 08:43:41	63.5
607	2018/12/07 08:43:42	60.7
608	2018/12/07 08:43:43	60.2
609	2018/12/07 08:43:44	64.3
610	2018/12/07 08:43:45	66.9
611	2018/12/07 08:43:46	69.0
612	2018/12/07 08:43:47	67.8
613	2018/12/07 08:43:48	68.5
614	2018/12/07 08:43:49	74.4
615	2018/12/07 08:43:50	71.5
616	2018/12/07 08:43:51	65.2
617	2018/12/07 08:43:52	61.8
618	2018/12/07 08:43:53	63.8
619	2018/12/07 08:43:54	68.0
620	2018/12/07 08:43:55	74.8
621	2018/12/07 08:43:56	77.3
622	2018/12/07 08:43:57	68.0
623	2018/12/07 08:43:58	62.1
624	2018/12/07 08:43:59	60.7
625	2018/12/07 08:44:00	59.7
626	2018/12/07 08:44:01	61.3
627	2018/12/07 08:44:02	63.1
628	2018/12/07 08:44:03	65.7
629	2018/12/07 08:44:04	66.6
630	2018/12/07 08:44:05	68.3
631	2018/12/07 08:44:06	68.2
632	2018/12/07 08:44:07	68.7
633	2018/12/07 08:44:08	69.5
634	2018/12/07 08:44:09	69.2
635	2018/12/07 08:44:10	70.2
636	2018/12/07 08:44:11	70.0
637	2018/12/07 08:44:12	71.3
638	2018/12/07 08:44:13	72.1
639	2018/12/07 08:44:14	73.3
640	2018/12/07 08:44:15	77.4
641	2018/12/07 08:44:16	73.6
642	2018/12/07 08:44:17	71.1
643	2018/12/07 08:44:18	78.1
644	2018/12/07 08:44:19	76.8
645	2018/12/07 08:44:20	73.3
646	2018/12/07 08:44:21	72.8
647	2018/12/07 08:44:22	76.4
648	2018/12/07 08:44:23	76.2
649	2018/12/07 08:44:24	70.6
650	2018/12/07 08:44:25	73.5
651	2018/12/07 08:44:26	79.9
652	2018/12/07 08:44:27	74.4
653	2018/12/07 08:44:28	80.8
654	2018/12/07 08:44:29	79.7
655	2018/12/07 08:44:30	77.9
656	2018/12/07 08:44:31	75.7
657	2018/12/07 08:44:32	78.4
658	2018/12/07 08:44:33	73.4
659	2018/12/07 08:44:34	72.4
660	2018/12/07 08:44:35	80.4
661	2018/12/07 08:44:36	75.3
662	2018/12/07 08:44:37	73.0
663	2018/12/07 08:44:38	73.8
664	2018/12/07 08:44:39	76.1
665	2018/12/07 08:44:40	78.9
666	2018/12/07 08:44:41	73.0
667	2018/12/07 08:44:42	70.9
668	2018/12/07 08:44:43	71.7
669	2018/12/07 08:44:44	76.1
670	2018/12/07 08:44:45	77.1
671	2018/12/07 08:44:46	73.4
672	2018/12/07 08:44:47	78.2
673	2018/12/07 08:44:48	74.1
674	2018/12/07 08:44:49	71.8
675	2018/12/07 08:44:50	74.8
676	2018/12/07 08:44:51	76.5
677	2018/12/07 08:44:52	72.4
678	2018/12/07 08:44:53	73.9
679	2018/12/07 08:44:54	80.4

680	2018/12/07 08:44:55	76.4
681	2018/12/07 08:44:56	80.1
682	2018/12/07 08:44:57	82.3
683	2018/12/07 08:44:58	80.6
684	2018/12/07 08:44:59	77.2
685	2018/12/07 08:45:00	73.3
686	2018/12/07 08:45:01	76.9
687	2018/12/07 08:45:02	79.4
688	2018/12/07 08:45:03	79.6
689	2018/12/07 08:45:04	78.9
690	2018/12/07 08:45:05	81.0
691	2018/12/07 08:45:06	82.2
692	2018/12/07 08:45:07	77.8
693	2018/12/07 08:45:08	82.3
694	2018/12/07 08:45:09	79.1
695	2018/12/07 08:45:10	81.8
696	2018/12/07 08:45:11	83.0
697	2018/12/07 08:45:12	77.8
698	2018/12/07 08:45:13	78.8
699	2018/12/07 08:45:14	79.6
700	2018/12/07 08:45:15	80.6
701	2018/12/07 08:45:16	78.1
702	2018/12/07 08:45:17	76.3
703	2018/12/07 08:45:18	80.7
704	2018/12/07 08:45:19	79.3
705	2018/12/07 08:45:20	83.6
706	2018/12/07 08:45:21	80.0
707	2018/12/07 08:45:22	78.9
708	2018/12/07 08:45:23	81.2
709	2018/12/07 08:45:24	81.1
710	2018/12/07 08:45:25	80.9
711	2018/12/07 08:45:26	76.0
712	2018/12/07 08:45:27	76.4
713	2018/12/07 08:45:28	79.2
714	2018/12/07 08:45:29	77.6
715	2018/12/07 08:45:30	78.6
716	2018/12/07 08:45:31	78.3
717	2018/12/07 08:45:32	78.3
718	2018/12/07 08:45:33	75.7
719	2018/12/07 08:45:34	79.2
720	2018/12/07 08:45:35	81.5
721	2018/12/07 08:45:36	76.9
722	2018/12/07 08:45:37	81.0
723	2018/12/07 08:45:38	75.7
724	2018/12/07 08:45:39	77.3
725	2018/12/07 08:45:40	76.2
726	2018/12/07 08:45:41	75.5
727	2018/12/07 08:45:42	74.7
728	2018/12/07 08:45:43	74.0
729	2018/12/07 08:45:44	72.6
730	2018/12/07 08:45:45	71.1
731	2018/12/07 08:45:46	72.0
732	2018/12/07 08:45:47	67.4
733	2018/12/07 08:45:48	69.1
734	2018/12/07 08:45:49	71.2
735	2018/12/07 08:45:50	67.8
736	2018/12/07 08:45:51	66.5
737	2018/12/07 08:45:52	68.0
738	2018/12/07 08:45:53	70.2
739	2018/12/07 08:45:54	69.3
740	2018/12/07 08:45:55	67.2
741	2018/12/07 08:45:56	65.7
742	2018/12/07 08:45:57	66.1
743	2018/12/07 08:45:58	67.6
744	2018/12/07 08:45:59	69.6
745	2018/12/07 08:46:00	68.4
746	2018/12/07 08:46:01	64.7
747	2018/12/07 08:46:02	64.4
748	2018/12/07 08:46:03	61.9
749	2018/12/07 08:46:04	59.6
750	2018/12/07 08:46:05	59.3
751	2018/12/07 08:46:06	58.9
752	2018/12/07 08:46:07	60.3
753	2018/12/07 08:46:08	60.9
754	2018/12/07 08:46:09	60.3
755	2018/12/07 08:46:10	58.4
756	2018/12/07 08:46:11	59.6
757	2018/12/07 08:46:12	59.2
758	2018/12/07 08:46:13	59.8
759	2018/12/07 08:46:14	59.5
760	2018/12/07 08:46:15	59.5
761	2018/12/07 08:46:16	60.6
762	2018/12/07 08:46:17	60.1
763	2018/12/07 08:46:18	58.5
764	2018/12/07 08:46:19	59.7
765	2018/12/07 08:46:20	58.5
766	2018/12/07 08:46:21	60.7
767	2018/12/07 08:46:22	61.0
768	2018/12/07 08:46:23	59.5
769	2018/12/07 08:46:24	58.9
770	2018/12/07 08:46:25	59.8
771	2018/12/07 08:46:26	60.8
772	2018/12/07 08:46:27	60.8
773	2018/12/07 08:46:28	61.0
774	2018/12/07 08:46:29	60.5
775	2018/12/07 08:46:30	61.5
776	2018/12/07 08:46:31	61.7
777	2018/12/07 08:46:32	62.5
778	2018/12/07 08:46:33	64.5

779	2018/12/07	08:46:34	65.2
780	2018/12/07	08:46:35	69.7
781	2018/12/07	08:46:36	74.9
782	2018/12/07	08:46:37	75.2
783	2018/12/07	08:46:38	73.5
784	2018/12/07	08:46:39	68.9
785	2018/12/07	08:46:40	73.3
786	2018/12/07	08:46:41	80.7
787	2018/12/07	08:46:42	76.7
788	2018/12/07	08:46:43	71.9
789	2018/12/07	08:46:44	78.2
790	2018/12/07	08:46:45	74.1
791	2018/12/07	08:46:46	73.2
792	2018/12/07	08:46:47	77.9
793	2018/12/07	08:46:48	78.5
794	2018/12/07	08:46:49	75.7
795	2018/12/07	08:46:50	69.7
796	2018/12/07	08:46:51	68.0
797	2018/12/07	08:46:52	66.7
798	2018/12/07	08:46:53	66.2
799	2018/12/07	08:46:54	65.4
800	2018/12/07	08:46:55	64.8
801	2018/12/07	08:46:56	66.6
802	2018/12/07	08:46:57	66.4
803	2018/12/07	08:46:58	68.5
804	2018/12/07	08:46:59	70.2
805	2018/12/07	08:47:00	71.1
806	2018/12/07	08:47:01	72.4
807	2018/12/07	08:47:02	72.1
808	2018/12/07	08:47:03	69.5
809	2018/12/07	08:47:04	68.7
810	2018/12/07	08:47:05	68.8
811	2018/12/07	08:47:06	69.5
812	2018/12/07	08:47:07	74.8
813	2018/12/07	08:47:08	77.6
814	2018/12/07	08:47:09	80.3
815	2018/12/07	08:47:10	81.5
816	2018/12/07	08:47:11	75.7
817	2018/12/07	08:47:12	81.5
818	2018/12/07	08:47:13	76.4
819	2018/12/07	08:47:14	77.7
820	2018/12/07	08:47:15	81.5
821	2018/12/07	08:47:16	80.2
822	2018/12/07	08:47:17	80.2
823	2018/12/07	08:47:18	79.9
824	2018/12/07	08:47:19	77.2
825	2018/12/07	08:47:20	75.3
826	2018/12/07	08:47:21	80.9
827	2018/12/07	08:47:22	77.8
828	2018/12/07	08:47:23	81.3
829	2018/12/07	08:47:24	80.6
830	2018/12/07	08:47:25	79.3
831	2018/12/07	08:47:26	79.0
832	2018/12/07	08:47:27	81.6
833	2018/12/07	08:47:28	78.5
834	2018/12/07	08:47:29	78.9
835	2018/12/07	08:47:30	80.9
836	2018/12/07	08:47:31	81.7
837	2018/12/07	08:47:32	79.3
838	2018/12/07	08:47:33	80.3
839	2018/12/07	08:47:34	79.3
840	2018/12/07	08:47:35	75.8
841	2018/12/07	08:47:36	75.2
842	2018/12/07	08:47:37	79.1
843	2018/12/07	08:47:38	81.5
844	2018/12/07	08:47:39	80.9
845	2018/12/07	08:47:40	80.2
846	2018/12/07	08:47:41	79.7
847	2018/12/07	08:47:42	79.2
848	2018/12/07	08:47:43	81.3
849	2018/12/07	08:47:44	77.8
850	2018/12/07	08:47:45	82.8
851	2018/12/07	08:47:46	77.8
852	2018/12/07	08:47:47	76.9
853	2018/12/07	08:47:48	79.8
854	2018/12/07	08:47:49	78.3
855	2018/12/07	08:47:50	80.3
856	2018/12/07	08:47:51	78.2
857	2018/12/07	08:47:52	83.3
858	2018/12/07	08:47:53	77.2
859	2018/12/07	08:47:54	78.0
860	2018/12/07	08:47:55	75.1
861	2018/12/07	08:47:56	73.6
862	2018/12/07	08:47:57	74.0
863	2018/12/07	08:47:58	72.5
864	2018/12/07	08:47:59	72.4
865	2018/12/07	08:48:00	74.9
866	2018/12/07	08:48:01	78.7
867	2018/12/07	08:48:02	72.7
868	2018/12/07	08:48:03	68.1
869	2018/12/07	08:48:04	65.5
870	2018/12/07	08:48:05	61.9
871	2018/12/07	08:48:06	62.2
872	2018/12/07	08:48:07	62.0
873	2018/12/07	08:48:08	62.7
874	2018/12/07	08:48:09	62.8
875	2018/12/07	08:48:10	63.4
876	2018/12/07	08:48:11	64.6
877	2018/12/07	08:48:12	71.8

878	2018/12/07	08:48:13	75.4
879	2018/12/07	08:48:14	74.1
880	2018/12/07	08:48:15	73.7
881	2018/12/07	08:48:16	73.3
882	2018/12/07	08:48:17	70.8
883	2018/12/07	08:48:18	75.8
884	2018/12/07	08:48:19	70.9
885	2018/12/07	08:48:20	71.8
886	2018/12/07	08:48:21	69.3
887	2018/12/07	08:48:22	71.5
888	2018/12/07	08:48:23	76.7
889	2018/12/07	08:48:24	75.8
890	2018/12/07	08:48:25	78.5
891	2018/12/07	08:48:26	73.0
892	2018/12/07	08:48:27	71.7
893	2018/12/07	08:48:28	75.5
894	2018/12/07	08:48:29	75.5
895	2018/12/07	08:48:30	73.4
896	2018/12/07	08:48:31	77.6
897	2018/12/07	08:48:32	82.8
898	2018/12/07	08:48:33	79.2
899	2018/12/07	08:48:34	74.6
900	2018/12/07	08:48:35	76.0

Noise Measurement 2

- Freq Weight : A
- Time Weight : FAST
- Level Range : 40-100
- Max dB : 67.7 - 2018/12/07 09:17:47
- Level Range : 40-100
- SEL : 84.4
- Leq : 54.9
-

No.s	Date Time	(dB)
1	2018/12/07 09:04:40	51.1
2	2018/12/07 09:04:41	52.4
3	2018/12/07 09:04:42	54.3
4	2018/12/07 09:04:43	54.9
5	2018/12/07 09:04:44	55.7
6	2018/12/07 09:04:45	56.4
7	2018/12/07 09:04:46	55.1
8	2018/12/07 09:04:47	56.6
9	2018/12/07 09:04:48	55.4
10	2018/12/07 09:04:49	53.3
11	2018/12/07 09:04:50	52.1
12	2018/12/07 09:04:51	53.1
13	2018/12/07 09:04:52	55.0
14	2018/12/07 09:04:53	55.4
15	2018/12/07 09:04:54	55.1
16	2018/12/07 09:04:55	54.0
17	2018/12/07 09:04:56	54.2
18	2018/12/07 09:04:57	54.6
19	2018/12/07 09:04:58	54.6
20	2018/12/07 09:04:59	53.5
21	2018/12/07 09:05:00	51.9
22	2018/12/07 09:05:01	53.0
23	2018/12/07 09:05:02	52.1
24	2018/12/07 09:05:03	52.3
25	2018/12/07 09:05:04	52.2
26	2018/12/07 09:05:05	55.1
27	2018/12/07 09:05:06	58.4
28	2018/12/07 09:05:07	59.5
29	2018/12/07 09:05:08	60.1
30	2018/12/07 09:05:09	58.8
31	2018/12/07 09:05:10	57.4
32	2018/12/07 09:05:11	53.8
33	2018/12/07 09:05:12	53.2
34	2018/12/07 09:05:13	55.1
35	2018/12/07 09:05:14	55.1
36	2018/12/07 09:05:15	54.9
37	2018/12/07 09:05:16	53.5
38	2018/12/07 09:05:17	56.4
39	2018/12/07 09:05:18	55.4
40	2018/12/07 09:05:19	55.2
41	2018/12/07 09:05:20	57.1
42	2018/12/07 09:05:21	55.9
43	2018/12/07 09:05:22	56.3
44	2018/12/07 09:05:23	57.8
45	2018/12/07 09:05:24	56.7
46	2018/12/07 09:05:25	57.4
47	2018/12/07 09:05:26	56.5
48	2018/12/07 09:05:27	56.0
49	2018/12/07 09:05:28	56.8
50	2018/12/07 09:05:29	56.8
51	2018/12/07 09:05:30	54.4
52	2018/12/07 09:05:31	53.6
53	2018/12/07 09:05:32	54.4
54	2018/12/07 09:05:33	54.8
55	2018/12/07 09:05:34	54.0
56	2018/12/07 09:05:35	53.5
57	2018/12/07 09:05:36	55.1
58	2018/12/07 09:05:37	56.0
59	2018/12/07 09:05:38	54.2
60	2018/12/07 09:05:39	54.2
61	2018/12/07 09:05:40	55.3
62	2018/12/07 09:05:41	53.3
63	2018/12/07 09:05:42	54.6
64	2018/12/07 09:05:43	55.0
65	2018/12/07 09:05:44	55.8
66	2018/12/07 09:05:45	55.9
67	2018/12/07 09:05:46	55.7
68	2018/12/07 09:05:47	57.7
69	2018/12/07 09:05:48	56.8
70	2018/12/07 09:05:49	55.1
71	2018/12/07 09:05:50	55.8
72	2018/12/07 09:05:51	54.9
73	2018/12/07 09:05:52	56.0
74	2018/12/07 09:05:53	55.9
75	2018/12/07 09:05:54	56.6
76	2018/12/07 09:05:55	57.3
77	2018/12/07 09:05:56	58.1
78	2018/12/07 09:05:57	54.9
79	2018/12/07 09:05:58	55.1
80	2018/12/07 09:05:59	53.9
81	2018/12/07 09:06:00	51.5
82	2018/12/07 09:06:01	50.4
83	2018/12/07 09:06:02	49.4
84	2018/12/07 09:06:03	49.1
85	2018/12/07 09:06:04	49.7

86	2018/12/07 09:06:05	49.4
87	2018/12/07 09:06:06	49.5
88	2018/12/07 09:06:07	49.7
89	2018/12/07 09:06:08	49.5
90	2018/12/07 09:06:09	48.9
91	2018/12/07 09:06:10	49.5
92	2018/12/07 09:06:11	48.7
93	2018/12/07 09:06:12	48.1
94	2018/12/07 09:06:13	48.1
95	2018/12/07 09:06:14	49.0
96	2018/12/07 09:06:15	48.6
97	2018/12/07 09:06:16	49.0
98	2018/12/07 09:06:17	49.2
99	2018/12/07 09:06:18	49.6
100	2018/12/07 09:06:19	50.4
101	2018/12/07 09:06:20	50.2
102	2018/12/07 09:06:21	53.2
103	2018/12/07 09:06:22	52.5
104	2018/12/07 09:06:23	53.0
105	2018/12/07 09:06:24	52.0
106	2018/12/07 09:06:25	53.3
107	2018/12/07 09:06:26	50.1
108	2018/12/07 09:06:27	50.3
109	2018/12/07 09:06:28	50.3
110	2018/12/07 09:06:29	50.7
111	2018/12/07 09:06:30	52.3
112	2018/12/07 09:06:31	53.6
113	2018/12/07 09:06:32	56.5
114	2018/12/07 09:06:33	53.9
115	2018/12/07 09:06:34	55.2
116	2018/12/07 09:06:35	55.5
117	2018/12/07 09:06:36	57.8
118	2018/12/07 09:06:37	57.2
119	2018/12/07 09:06:38	56.0
120	2018/12/07 09:06:39	56.7
121	2018/12/07 09:06:40	56.9
122	2018/12/07 09:06:41	54.9
123	2018/12/07 09:06:42	55.2
124	2018/12/07 09:06:43	54.8
125	2018/12/07 09:06:44	53.0
126	2018/12/07 09:06:45	52.2
127	2018/12/07 09:06:46	52.3
128	2018/12/07 09:06:47	51.1
129	2018/12/07 09:06:48	50.8
130	2018/12/07 09:06:49	52.2
131	2018/12/07 09:06:50	52.4
132	2018/12/07 09:06:51	52.7
133	2018/12/07 09:06:52	52.9
134	2018/12/07 09:06:53	54.0
135	2018/12/07 09:06:54	51.3
136	2018/12/07 09:06:55	51.3
137	2018/12/07 09:06:56	51.2
138	2018/12/07 09:06:57	51.4
139	2018/12/07 09:06:58	52.3
140	2018/12/07 09:06:59	51.1
141	2018/12/07 09:07:00	51.7
142	2018/12/07 09:07:01	53.0
143	2018/12/07 09:07:02	53.7
144	2018/12/07 09:07:03	53.3
145	2018/12/07 09:07:04	54.0
146	2018/12/07 09:07:05	53.8
147	2018/12/07 09:07:06	55.2
148	2018/12/07 09:07:07	54.9
149	2018/12/07 09:07:08	52.9
150	2018/12/07 09:07:09	55.3
151	2018/12/07 09:07:10	53.4
152	2018/12/07 09:07:11	54.3
153	2018/12/07 09:07:12	55.0
154	2018/12/07 09:07:13	56.1
155	2018/12/07 09:07:14	55.3
156	2018/12/07 09:07:15	55.9
157	2018/12/07 09:07:16	59.6
158	2018/12/07 09:07:17	59.2
159	2018/12/07 09:07:18	57.4
160	2018/12/07 09:07:19	58.3
161	2018/12/07 09:07:20	55.0
162	2018/12/07 09:07:21	53.1
163	2018/12/07 09:07:22	50.7
164	2018/12/07 09:07:23	50.5
165	2018/12/07 09:07:24	49.7
166	2018/12/07 09:07:25	50.5
167	2018/12/07 09:07:26	51.5
168	2018/12/07 09:07:27	53.5
169	2018/12/07 09:07:28	51.7
170	2018/12/07 09:07:29	52.6
171	2018/12/07 09:07:30	53.2
172	2018/12/07 09:07:31	52.6
173	2018/12/07 09:07:32	50.0
174	2018/12/07 09:07:33	50.9
175	2018/12/07 09:07:34	50.5
176	2018/12/07 09:07:35	50.7
177	2018/12/07 09:07:36	52.4
178	2018/12/07 09:07:37	52.6
179	2018/12/07 09:07:38	54.5
180	2018/12/07 09:07:39	56.0
181	2018/12/07 09:07:40	54.1
182	2018/12/07 09:07:41	53.7
183	2018/12/07 09:07:42	54.3
184	2018/12/07 09:07:43	55.8

185	2018/12/07 09:07:44	54.1
186	2018/12/07 09:07:45	54.9
187	2018/12/07 09:07:46	56.2
188	2018/12/07 09:07:47	56.7
189	2018/12/07 09:07:48	58.1
190	2018/12/07 09:07:49	60.1
191	2018/12/07 09:07:50	59.6
192	2018/12/07 09:07:51	62.2
193	2018/12/07 09:07:52	55.3
194	2018/12/07 09:07:53	53.0
195	2018/12/07 09:07:54	54.4
196	2018/12/07 09:07:55	54.1
197	2018/12/07 09:07:56	53.7
198	2018/12/07 09:07:57	55.5
199	2018/12/07 09:07:58	54.7
200	2018/12/07 09:07:59	54.7
201	2018/12/07 09:08:00	53.9
202	2018/12/07 09:08:01	54.7
203	2018/12/07 09:08:02	54.8
204	2018/12/07 09:08:03	53.5
205	2018/12/07 09:08:04	53.1
206	2018/12/07 09:08:05	53.2
207	2018/12/07 09:08:06	53.6
208	2018/12/07 09:08:07	52.5
209	2018/12/07 09:08:08	52.4
210	2018/12/07 09:08:09	53.3
211	2018/12/07 09:08:10	52.5
212	2018/12/07 09:08:11	52.1
213	2018/12/07 09:08:12	50.5
214	2018/12/07 09:08:13	52.1
215	2018/12/07 09:08:14	49.9
216	2018/12/07 09:08:15	49.5
217	2018/12/07 09:08:16	50.4
218	2018/12/07 09:08:17	49.2
219	2018/12/07 09:08:18	50.3
220	2018/12/07 09:08:19	52.1
221	2018/12/07 09:08:20	52.0
222	2018/12/07 09:08:21	51.5
223	2018/12/07 09:08:22	50.3
224	2018/12/07 09:08:23	51.3
225	2018/12/07 09:08:24	51.4
226	2018/12/07 09:08:25	50.6
227	2018/12/07 09:08:26	51.6
228	2018/12/07 09:08:27	52.4
229	2018/12/07 09:08:28	52.3
230	2018/12/07 09:08:29	52.0
231	2018/12/07 09:08:30	52.7
232	2018/12/07 09:08:31	52.5
233	2018/12/07 09:08:32	52.1
234	2018/12/07 09:08:33	50.3
235	2018/12/07 09:08:34	51.3
236	2018/12/07 09:08:35	51.8
237	2018/12/07 09:08:36	52.4
238	2018/12/07 09:08:37	51.6
239	2018/12/07 09:08:38	52.4
240	2018/12/07 09:08:39	52.3
241	2018/12/07 09:08:40	53.9
242	2018/12/07 09:08:41	52.9
243	2018/12/07 09:08:42	54.3
244	2018/12/07 09:08:43	54.3
245	2018/12/07 09:08:44	52.7
246	2018/12/07 09:08:45	52.9
247	2018/12/07 09:08:46	53.7
248	2018/12/07 09:08:47	52.4
249	2018/12/07 09:08:48	53.2
250	2018/12/07 09:08:49	52.9
251	2018/12/07 09:08:50	53.7
252	2018/12/07 09:08:51	54.7
253	2018/12/07 09:08:52	54.4
254	2018/12/07 09:08:53	54.2
255	2018/12/07 09:08:54	55.0
256	2018/12/07 09:08:55	54.5
257	2018/12/07 09:08:56	55.8
258	2018/12/07 09:08:57	55.8
259	2018/12/07 09:08:58	55.6
260	2018/12/07 09:08:59	55.4
261	2018/12/07 09:09:00	55.3
262	2018/12/07 09:09:01	54.0
263	2018/12/07 09:09:02	55.6
264	2018/12/07 09:09:03	55.0
265	2018/12/07 09:09:04	54.5
266	2018/12/07 09:09:05	55.1
267	2018/12/07 09:09:06	57.3
268	2018/12/07 09:09:07	55.8
269	2018/12/07 09:09:08	55.7
270	2018/12/07 09:09:09	55.9
271	2018/12/07 09:09:10	56.3
272	2018/12/07 09:09:11	55.5
273	2018/12/07 09:09:12	56.0
274	2018/12/07 09:09:13	56.1
275	2018/12/07 09:09:14	55.2
276	2018/12/07 09:09:15	54.0
277	2018/12/07 09:09:16	53.1
278	2018/12/07 09:09:17	54.0
279	2018/12/07 09:09:18	52.8
280	2018/12/07 09:09:19	52.5
281	2018/12/07 09:09:20	51.8
282	2018/12/07 09:09:21	50.0
283	2018/12/07 09:09:22	50.5

284	2018/12/07 09:09:23	49.2
285	2018/12/07 09:09:24	48.4
286	2018/12/07 09:09:25	49.9
287	2018/12/07 09:09:26	49.0
288	2018/12/07 09:09:27	48.2
289	2018/12/07 09:09:28	46.4
290	2018/12/07 09:09:29	46.8
291	2018/12/07 09:09:30	48.8
292	2018/12/07 09:09:31	50.8
293	2018/12/07 09:09:32	52.8
294	2018/12/07 09:09:33	54.2
295	2018/12/07 09:09:34	54.7
296	2018/12/07 09:09:35	55.3
297	2018/12/07 09:09:36	55.3
298	2018/12/07 09:09:37	56.9
299	2018/12/07 09:09:38	54.8
300	2018/12/07 09:09:39	55.8
301	2018/12/07 09:09:40	56.4
302	2018/12/07 09:09:41	57.3
303	2018/12/07 09:09:42	56.0
304	2018/12/07 09:09:43	55.3
305	2018/12/07 09:09:44	54.7
306	2018/12/07 09:09:45	53.5
307	2018/12/07 09:09:46	54.1
308	2018/12/07 09:09:47	54.4
309	2018/12/07 09:09:48	55.7
310	2018/12/07 09:09:49	54.6
311	2018/12/07 09:09:50	54.9
312	2018/12/07 09:09:51	56.8
313	2018/12/07 09:09:52	53.9
314	2018/12/07 09:09:53	53.0
315	2018/12/07 09:09:54	52.5
316	2018/12/07 09:09:55	52.6
317	2018/12/07 09:09:56	52.5
318	2018/12/07 09:09:57	53.1
319	2018/12/07 09:09:58	54.2
320	2018/12/07 09:09:59	53.3
321	2018/12/07 09:10:00	53.0
322	2018/12/07 09:10:01	52.9
323	2018/12/07 09:10:02	53.0
324	2018/12/07 09:10:03	53.5
325	2018/12/07 09:10:04	53.3
326	2018/12/07 09:10:05	53.1
327	2018/12/07 09:10:06	53.9
328	2018/12/07 09:10:07	54.3
329	2018/12/07 09:10:08	53.7
330	2018/12/07 09:10:09	52.8
331	2018/12/07 09:10:10	51.8
332	2018/12/07 09:10:11	53.1
333	2018/12/07 09:10:12	53.0
334	2018/12/07 09:10:13	53.7
335	2018/12/07 09:10:14	53.5
336	2018/12/07 09:10:15	53.2
337	2018/12/07 09:10:16	52.2
338	2018/12/07 09:10:17	53.0
339	2018/12/07 09:10:18	55.5
340	2018/12/07 09:10:19	54.4
341	2018/12/07 09:10:20	54.9
342	2018/12/07 09:10:21	54.8
343	2018/12/07 09:10:22	55.3
344	2018/12/07 09:10:23	54.6
345	2018/12/07 09:10:24	53.9
346	2018/12/07 09:10:25	55.4
347	2018/12/07 09:10:26	55.1
348	2018/12/07 09:10:27	55.8
349	2018/12/07 09:10:28	55.5
350	2018/12/07 09:10:29	54.7
351	2018/12/07 09:10:30	55.1
352	2018/12/07 09:10:31	55.9
353	2018/12/07 09:10:32	57.2
354	2018/12/07 09:10:33	57.6
355	2018/12/07 09:10:34	57.4
356	2018/12/07 09:10:35	57.4
357	2018/12/07 09:10:36	58.0
358	2018/12/07 09:10:37	57.4
359	2018/12/07 09:10:38	56.4
360	2018/12/07 09:10:39	57.2
361	2018/12/07 09:10:40	56.3
362	2018/12/07 09:10:41	56.2
363	2018/12/07 09:10:42	58.0
364	2018/12/07 09:10:43	57.2
365	2018/12/07 09:10:44	56.3
366	2018/12/07 09:10:45	55.4
367	2018/12/07 09:10:46	56.0
368	2018/12/07 09:10:47	55.2
369	2018/12/07 09:10:48	55.1
370	2018/12/07 09:10:49	54.8
371	2018/12/07 09:10:50	55.2
372	2018/12/07 09:10:51	55.5
373	2018/12/07 09:10:52	56.6
374	2018/12/07 09:10:53	56.4
375	2018/12/07 09:10:54	55.9
376	2018/12/07 09:10:55	55.6
377	2018/12/07 09:10:56	55.8
378	2018/12/07 09:10:57	57.2
379	2018/12/07 09:10:58	57.4
380	2018/12/07 09:10:59	58.8
381	2018/12/07 09:11:00	58.4
382	2018/12/07 09:11:01	60.0

383	2018/12/07 09:11:02	64.3
384	2018/12/07 09:11:03	63.3
385	2018/12/07 09:11:04	65.5
386	2018/12/07 09:11:05	66.5
387	2018/12/07 09:11:06	66.2
388	2018/12/07 09:11:07	63.2
389	2018/12/07 09:11:08	60.6
390	2018/12/07 09:11:09	59.1
391	2018/12/07 09:11:10	58.3
392	2018/12/07 09:11:11	57.0
393	2018/12/07 09:11:12	57.8
394	2018/12/07 09:11:13	56.7
395	2018/12/07 09:11:14	55.6
396	2018/12/07 09:11:15	53.1
397	2018/12/07 09:11:16	54.3
398	2018/12/07 09:11:17	53.4
399	2018/12/07 09:11:18	52.9
400	2018/12/07 09:11:19	54.0
401	2018/12/07 09:11:20	53.3
402	2018/12/07 09:11:21	51.0
403	2018/12/07 09:11:22	50.8
404	2018/12/07 09:11:23	51.7
405	2018/12/07 09:11:24	50.2
406	2018/12/07 09:11:25	49.1
407	2018/12/07 09:11:26	53.3
408	2018/12/07 09:11:27	52.5
409	2018/12/07 09:11:28	52.2
410	2018/12/07 09:11:29	53.3
411	2018/12/07 09:11:30	52.4
412	2018/12/07 09:11:31	51.9
413	2018/12/07 09:11:32	53.2
414	2018/12/07 09:11:33	53.7
415	2018/12/07 09:11:34	53.9
416	2018/12/07 09:11:35	53.8
417	2018/12/07 09:11:36	53.5
418	2018/12/07 09:11:37	52.5
419	2018/12/07 09:11:38	52.5
420	2018/12/07 09:11:39	52.5
421	2018/12/07 09:11:40	51.7
422	2018/12/07 09:11:41	52.6
423	2018/12/07 09:11:42	53.5
424	2018/12/07 09:11:43	51.6
425	2018/12/07 09:11:44	53.5
426	2018/12/07 09:11:45	52.2
427	2018/12/07 09:11:46	53.6
428	2018/12/07 09:11:47	53.6
429	2018/12/07 09:11:48	55.2
430	2018/12/07 09:11:49	54.7
431	2018/12/07 09:11:50	53.6
432	2018/12/07 09:11:51	55.3
433	2018/12/07 09:11:52	54.5
434	2018/12/07 09:11:53	54.9
435	2018/12/07 09:11:54	56.0
436	2018/12/07 09:11:55	57.1
437	2018/12/07 09:11:56	58.4
438	2018/12/07 09:11:57	56.2
439	2018/12/07 09:11:58	54.9
440	2018/12/07 09:11:59	54.6
441	2018/12/07 09:12:00	52.0
442	2018/12/07 09:12:01	53.0
443	2018/12/07 09:12:02	53.3
444	2018/12/07 09:12:03	53.6
445	2018/12/07 09:12:04	55.2
446	2018/12/07 09:12:05	56.9
447	2018/12/07 09:12:06	55.3
448	2018/12/07 09:12:07	55.9
449	2018/12/07 09:12:08	57.0
450	2018/12/07 09:12:09	57.3
451	2018/12/07 09:12:10	57.1
452	2018/12/07 09:12:11	56.6
453	2018/12/07 09:12:12	55.2
454	2018/12/07 09:12:13	55.6
455	2018/12/07 09:12:14	56.2
456	2018/12/07 09:12:15	58.9
457	2018/12/07 09:12:16	57.9
458	2018/12/07 09:12:17	56.1
459	2018/12/07 09:12:18	59.1
460	2018/12/07 09:12:19	57.8
461	2018/12/07 09:12:20	55.5
462	2018/12/07 09:12:21	54.1
463	2018/12/07 09:12:22	53.2
464	2018/12/07 09:12:23	50.9
465	2018/12/07 09:12:24	52.4
466	2018/12/07 09:12:25	51.7
467	2018/12/07 09:12:26	54.4
468	2018/12/07 09:12:27	54.6
469	2018/12/07 09:12:28	53.4
470	2018/12/07 09:12:29	53.0
471	2018/12/07 09:12:30	54.1
472	2018/12/07 09:12:31	57.7
473	2018/12/07 09:12:32	55.5
474	2018/12/07 09:12:33	54.6
475	2018/12/07 09:12:34	54.6
476	2018/12/07 09:12:35	54.6
477	2018/12/07 09:12:36	54.8
478	2018/12/07 09:12:37	55.6
479	2018/12/07 09:12:38	56.9
480	2018/12/07 09:12:39	55.1
481	2018/12/07 09:12:40	54.6

482	2018/12/07 09:12:41	53.9
483	2018/12/07 09:12:42	51.8
484	2018/12/07 09:12:43	51.9
485	2018/12/07 09:12:44	51.0
486	2018/12/07 09:12:45	51.3
487	2018/12/07 09:12:46	52.5
488	2018/12/07 09:12:47	53.0
489	2018/12/07 09:12:48	52.6
490	2018/12/07 09:12:49	52.2
491	2018/12/07 09:12:50	50.3
492	2018/12/07 09:12:51	49.6
493	2018/12/07 09:12:52	50.6
494	2018/12/07 09:12:53	50.5
495	2018/12/07 09:12:54	51.2
496	2018/12/07 09:12:55	51.9
497	2018/12/07 09:12:56	51.9
498	2018/12/07 09:12:57	51.9
499	2018/12/07 09:12:58	52.4
500	2018/12/07 09:12:59	51.8
501	2018/12/07 09:13:00	53.6
502	2018/12/07 09:13:01	52.6
503	2018/12/07 09:13:02	53.5
504	2018/12/07 09:13:03	55.1
505	2018/12/07 09:13:04	51.0
506	2018/12/07 09:13:05	50.0
507	2018/12/07 09:13:06	49.6
508	2018/12/07 09:13:07	52.1
509	2018/12/07 09:13:08	49.8
510	2018/12/07 09:13:09	49.6
511	2018/12/07 09:13:10	48.6
512	2018/12/07 09:13:11	50.2
513	2018/12/07 09:13:12	49.1
514	2018/12/07 09:13:13	51.5
515	2018/12/07 09:13:14	52.4
516	2018/12/07 09:13:15	51.5
517	2018/12/07 09:13:16	51.7
518	2018/12/07 09:13:17	51.8
519	2018/12/07 09:13:18	51.6
520	2018/12/07 09:13:19	51.4
521	2018/12/07 09:13:20	53.0
522	2018/12/07 09:13:21	53.3
523	2018/12/07 09:13:22	52.9
524	2018/12/07 09:13:23	51.6
525	2018/12/07 09:13:24	52.0
526	2018/12/07 09:13:25	51.5
527	2018/12/07 09:13:26	51.2
528	2018/12/07 09:13:27	50.3
529	2018/12/07 09:13:28	49.7
530	2018/12/07 09:13:29	48.9
531	2018/12/07 09:13:30	49.2
532	2018/12/07 09:13:31	49.6
533	2018/12/07 09:13:32	52.8
534	2018/12/07 09:13:33	52.8
535	2018/12/07 09:13:34	51.3
536	2018/12/07 09:13:35	51.0
537	2018/12/07 09:13:36	52.9
538	2018/12/07 09:13:37	51.1
539	2018/12/07 09:13:38	51.8
540	2018/12/07 09:13:39	47.1
541	2018/12/07 09:13:40	47.7
542	2018/12/07 09:13:41	47.9
543	2018/12/07 09:13:42	47.4
544	2018/12/07 09:13:43	47.4
545	2018/12/07 09:13:44	47.9
546	2018/12/07 09:13:45	48.6
547	2018/12/07 09:13:46	48.6
548	2018/12/07 09:13:47	50.3
549	2018/12/07 09:13:48	50.3
550	2018/12/07 09:13:49	50.1
551	2018/12/07 09:13:50	50.1
552	2018/12/07 09:13:51	48.5
553	2018/12/07 09:13:52	50.1
554	2018/12/07 09:13:53	48.4
555	2018/12/07 09:13:54	48.9
556	2018/12/07 09:13:55	49.0
557	2018/12/07 09:13:56	49.2
558	2018/12/07 09:13:57	46.9
559	2018/12/07 09:13:58	43.4
560	2018/12/07 09:13:59	43.5
561	2018/12/07 09:14:00	43.3
562	2018/12/07 09:14:01	44.6
563	2018/12/07 09:14:02	45.7
564	2018/12/07 09:14:03	46.9
565	2018/12/07 09:14:04	48.5
566	2018/12/07 09:14:05	50.4
567	2018/12/07 09:14:06	51.4
568	2018/12/07 09:14:07	51.7
569	2018/12/07 09:14:08	49.4
570	2018/12/07 09:14:09	49.4
571	2018/12/07 09:14:10	48.9
572	2018/12/07 09:14:11	49.7
573	2018/12/07 09:14:12	50.7
574	2018/12/07 09:14:13	49.1
575	2018/12/07 09:14:14	51.3
576	2018/12/07 09:14:15	49.5
577	2018/12/07 09:14:16	51.3
578	2018/12/07 09:14:17	52.3
579	2018/12/07 09:14:18	53.7
580	2018/12/07 09:14:19	53.8

581	2018/12/07 09:14:20	54.0
582	2018/12/07 09:14:21	55.1
583	2018/12/07 09:14:22	55.2
584	2018/12/07 09:14:23	55.8
585	2018/12/07 09:14:24	57.0
586	2018/12/07 09:14:25	55.8
587	2018/12/07 09:14:26	58.3
588	2018/12/07 09:14:27	59.5
589	2018/12/07 09:14:28	59.1
590	2018/12/07 09:14:29	57.6
591	2018/12/07 09:14:30	57.8
592	2018/12/07 09:14:31	57.5
593	2018/12/07 09:14:32	56.3
594	2018/12/07 09:14:33	56.1
595	2018/12/07 09:14:34	55.3
596	2018/12/07 09:14:35	55.6
597	2018/12/07 09:14:36	56.3
598	2018/12/07 09:14:37	56.4
599	2018/12/07 09:14:38	55.2
600	2018/12/07 09:14:39	54.7
601	2018/12/07 09:14:40	56.3
602	2018/12/07 09:14:41	55.9
603	2018/12/07 09:14:42	54.6
604	2018/12/07 09:14:43	54.9
605	2018/12/07 09:14:44	55.2
606	2018/12/07 09:14:45	55.5
607	2018/12/07 09:14:46	54.9
608	2018/12/07 09:14:47	55.9
609	2018/12/07 09:14:48	55.3
610	2018/12/07 09:14:49	56.1
611	2018/12/07 09:14:50	54.9
612	2018/12/07 09:14:51	55.8
613	2018/12/07 09:14:52	54.9
614	2018/12/07 09:14:53	54.2
615	2018/12/07 09:14:54	54.9
616	2018/12/07 09:14:55	53.9
617	2018/12/07 09:14:56	54.3
618	2018/12/07 09:14:57	53.5
619	2018/12/07 09:14:58	51.7
620	2018/12/07 09:14:59	53.0
621	2018/12/07 09:15:00	52.0
622	2018/12/07 09:15:01	51.6
623	2018/12/07 09:15:02	52.5
624	2018/12/07 09:15:03	49.0
625	2018/12/07 09:15:04	47.1
626	2018/12/07 09:15:05	47.3
627	2018/12/07 09:15:06	48.0
628	2018/12/07 09:15:07	45.5
629	2018/12/07 09:15:08	46.1
630	2018/12/07 09:15:09	47.4
631	2018/12/07 09:15:10	47.1
632	2018/12/07 09:15:11	47.1
633	2018/12/07 09:15:12	47.9
634	2018/12/07 09:15:13	47.4
635	2018/12/07 09:15:14	47.7
636	2018/12/07 09:15:15	48.1
637	2018/12/07 09:15:16	50.1
638	2018/12/07 09:15:17	50.8
639	2018/12/07 09:15:18	51.0
640	2018/12/07 09:15:19	51.7
641	2018/12/07 09:15:20	52.3
642	2018/12/07 09:15:21	54.9
643	2018/12/07 09:15:22	56.5
644	2018/12/07 09:15:23	60.8
645	2018/12/07 09:15:24	63.1
646	2018/12/07 09:15:25	65.1
647	2018/12/07 09:15:26	59.0
648	2018/12/07 09:15:27	57.1
649	2018/12/07 09:15:28	54.6
650	2018/12/07 09:15:29	52.8
651	2018/12/07 09:15:30	52.0
652	2018/12/07 09:15:31	52.3
653	2018/12/07 09:15:32	51.4
654	2018/12/07 09:15:33	52.4
655	2018/12/07 09:15:34	51.7
656	2018/12/07 09:15:35	51.1
657	2018/12/07 09:15:36	51.9
658	2018/12/07 09:15:37	52.1
659	2018/12/07 09:15:38	54.8
660	2018/12/07 09:15:39	53.7
661	2018/12/07 09:15:40	55.2
662	2018/12/07 09:15:41	54.0
663	2018/12/07 09:15:42	54.6
664	2018/12/07 09:15:43	53.9
665	2018/12/07 09:15:44	53.2
666	2018/12/07 09:15:45	54.0
667	2018/12/07 09:15:46	53.1
668	2018/12/07 09:15:47	53.3
669	2018/12/07 09:15:48	52.5
670	2018/12/07 09:15:49	51.8
671	2018/12/07 09:15:50	52.6
672	2018/12/07 09:15:51	52.3
673	2018/12/07 09:15:52	52.3
674	2018/12/07 09:15:53	53.2
675	2018/12/07 09:15:54	52.1
676	2018/12/07 09:15:55	52.6
677	2018/12/07 09:15:56	53.2
678	2018/12/07 09:15:57	53.6
679	2018/12/07 09:15:58	53.6

680	2018/12/07 09:15:59	53.8
681	2018/12/07 09:16:00	54.2
682	2018/12/07 09:16:01	53.2
683	2018/12/07 09:16:02	53.9
684	2018/12/07 09:16:03	54.1
685	2018/12/07 09:16:04	52.9
686	2018/12/07 09:16:05	54.0
687	2018/12/07 09:16:06	52.8
688	2018/12/07 09:16:07	53.7
689	2018/12/07 09:16:08	51.9
690	2018/12/07 09:16:09	52.3
691	2018/12/07 09:16:10	52.8
692	2018/12/07 09:16:11	53.8
693	2018/12/07 09:16:12	55.7
694	2018/12/07 09:16:13	54.8
695	2018/12/07 09:16:14	53.6
696	2018/12/07 09:16:15	52.2
697	2018/12/07 09:16:16	53.5
698	2018/12/07 09:16:17	53.2
699	2018/12/07 09:16:18	51.5
700	2018/12/07 09:16:19	49.5
701	2018/12/07 09:16:20	49.4
702	2018/12/07 09:16:21	50.0
703	2018/12/07 09:16:22	51.7
704	2018/12/07 09:16:23	53.2
705	2018/12/07 09:16:24	56.1
706	2018/12/07 09:16:25	55.1
707	2018/12/07 09:16:26	55.9
708	2018/12/07 09:16:27	54.9
709	2018/12/07 09:16:28	53.5
710	2018/12/07 09:16:29	53.4
711	2018/12/07 09:16:30	54.2
712	2018/12/07 09:16:31	54.4
713	2018/12/07 09:16:32	55.0
714	2018/12/07 09:16:33	56.2
715	2018/12/07 09:16:34	56.0
716	2018/12/07 09:16:35	56.0
717	2018/12/07 09:16:36	54.9
718	2018/12/07 09:16:37	54.5
719	2018/12/07 09:16:38	54.0
720	2018/12/07 09:16:39	55.2
721	2018/12/07 09:16:40	53.9
722	2018/12/07 09:16:41	54.2
723	2018/12/07 09:16:42	53.4
724	2018/12/07 09:16:43	53.8
725	2018/12/07 09:16:44	54.5
726	2018/12/07 09:16:45	55.4
727	2018/12/07 09:16:46	56.7
728	2018/12/07 09:16:47	55.7
729	2018/12/07 09:16:48	56.5
730	2018/12/07 09:16:49	59.4
731	2018/12/07 09:16:50	56.2
732	2018/12/07 09:16:51	55.5
733	2018/12/07 09:16:52	55.7
734	2018/12/07 09:16:53	55.6
735	2018/12/07 09:16:54	55.1
736	2018/12/07 09:16:55	55.1
737	2018/12/07 09:16:56	55.6
738	2018/12/07 09:16:57	55.9
739	2018/12/07 09:16:58	56.2
740	2018/12/07 09:16:59	56.2
741	2018/12/07 09:17:00	55.0
742	2018/12/07 09:17:01	55.9
743	2018/12/07 09:17:02	55.2
744	2018/12/07 09:17:03	55.1
745	2018/12/07 09:17:04	54.1
746	2018/12/07 09:17:05	55.0
747	2018/12/07 09:17:06	57.3
748	2018/12/07 09:17:07	57.2
749	2018/12/07 09:17:08	55.5
750	2018/12/07 09:17:09	54.3
751	2018/12/07 09:17:10	55.3
752	2018/12/07 09:17:11	56.6
753	2018/12/07 09:17:12	55.7
754	2018/12/07 09:17:13	54.5
755	2018/12/07 09:17:14	54.2
756	2018/12/07 09:17:15	54.3
757	2018/12/07 09:17:16	54.9
758	2018/12/07 09:17:17	54.7
759	2018/12/07 09:17:18	56.7
760	2018/12/07 09:17:19	53.5
761	2018/12/07 09:17:20	55.0
762	2018/12/07 09:17:21	57.0
763	2018/12/07 09:17:22	56.8
764	2018/12/07 09:17:23	55.6
765	2018/12/07 09:17:24	54.7
766	2018/12/07 09:17:25	51.9
767	2018/12/07 09:17:26	51.5
768	2018/12/07 09:17:27	50.4
769	2018/12/07 09:17:28	47.5
770	2018/12/07 09:17:29	45.9
771	2018/12/07 09:17:30	46.6
772	2018/12/07 09:17:31	47.0
773	2018/12/07 09:17:32	46.2
774	2018/12/07 09:17:33	46.5
775	2018/12/07 09:17:34	47.9
776	2018/12/07 09:17:35	48.4
777	2018/12/07 09:17:36	46.9
778	2018/12/07 09:17:37	48.3

779	2018/12/07 09:17:38	47.9
780	2018/12/07 09:17:39	48.3
781	2018/12/07 09:17:40	49.1
782	2018/12/07 09:17:41	51.8
783	2018/12/07 09:17:42	53.6
784	2018/12/07 09:17:43	57.2
785	2018/12/07 09:17:44	58.4
786	2018/12/07 09:17:45	61.7
787	2018/12/07 09:17:46	65.1
788	2018/12/07 09:17:47	66.6
789	2018/12/07 09:17:48	60.8
790	2018/12/07 09:17:49	55.0
791	2018/12/07 09:17:50	55.6
792	2018/12/07 09:17:51	53.5
793	2018/12/07 09:17:52	53.5
794	2018/12/07 09:17:53	53.9
795	2018/12/07 09:17:54	51.9
796	2018/12/07 09:17:55	53.3
797	2018/12/07 09:17:56	55.0
798	2018/12/07 09:17:57	54.7
799	2018/12/07 09:17:58	53.9
800	2018/12/07 09:17:59	55.8
801	2018/12/07 09:18:00	56.2
802	2018/12/07 09:18:01	54.4
803	2018/12/07 09:18:02	53.1
804	2018/12/07 09:18:03	52.5
805	2018/12/07 09:18:04	54.2
806	2018/12/07 09:18:05	55.3
807	2018/12/07 09:18:06	53.6
808	2018/12/07 09:18:07	54.9
809	2018/12/07 09:18:08	54.9
810	2018/12/07 09:18:09	55.0
811	2018/12/07 09:18:10	55.8
812	2018/12/07 09:18:11	55.4
813	2018/12/07 09:18:12	56.0
814	2018/12/07 09:18:13	55.9
815	2018/12/07 09:18:14	57.1
816	2018/12/07 09:18:15	56.6
817	2018/12/07 09:18:16	55.7
818	2018/12/07 09:18:17	56.2
819	2018/12/07 09:18:18	56.2
820	2018/12/07 09:18:19	54.8
821	2018/12/07 09:18:20	54.2
822	2018/12/07 09:18:21	53.8
823	2018/12/07 09:18:22	53.9
824	2018/12/07 09:18:23	53.6
825	2018/12/07 09:18:24	52.5
826	2018/12/07 09:18:25	53.0
827	2018/12/07 09:18:26	52.8
828	2018/12/07 09:18:27	54.8
829	2018/12/07 09:18:28	56.2
830	2018/12/07 09:18:29	58.0
831	2018/12/07 09:18:30	58.4
832	2018/12/07 09:18:31	55.3
833	2018/12/07 09:18:32	53.4
834	2018/12/07 09:18:33	54.2
835	2018/12/07 09:18:34	54.8
836	2018/12/07 09:18:35	55.0
837	2018/12/07 09:18:36	54.4
838	2018/12/07 09:18:37	56.1
839	2018/12/07 09:18:38	55.3
840	2018/12/07 09:18:39	54.3
841	2018/12/07 09:18:40	53.5
842	2018/12/07 09:18:41	54.7
843	2018/12/07 09:18:42	55.4
844	2018/12/07 09:18:43	55.0
845	2018/12/07 09:18:44	55.8
846	2018/12/07 09:18:45	57.0
847	2018/12/07 09:18:46	57.2
848	2018/12/07 09:18:47	57.2
849	2018/12/07 09:18:48	56.5
850	2018/12/07 09:18:49	56.8
851	2018/12/07 09:18:50	56.1
852	2018/12/07 09:18:51	56.7
853	2018/12/07 09:18:52	57.1
854	2018/12/07 09:18:53	56.3
855	2018/12/07 09:18:54	56.6
856	2018/12/07 09:18:55	56.1
857	2018/12/07 09:18:56	56.7
858	2018/12/07 09:18:57	56.0
859	2018/12/07 09:18:58	55.5
860	2018/12/07 09:18:59	56.1
861	2018/12/07 09:19:00	57.3
862	2018/12/07 09:19:01	56.7
863	2018/12/07 09:19:02	57.4
864	2018/12/07 09:19:03	58.3
865	2018/12/07 09:19:04	55.8
866	2018/12/07 09:19:05	55.9
867	2018/12/07 09:19:06	56.4
868	2018/12/07 09:19:07	55.9
869	2018/12/07 09:19:08	54.7
870	2018/12/07 09:19:09	56.1
871	2018/12/07 09:19:10	55.2
872	2018/12/07 09:19:11	55.7
873	2018/12/07 09:19:12	55.2
874	2018/12/07 09:19:13	54.4
875	2018/12/07 09:19:14	54.8
876	2018/12/07 09:19:15	54.0
877	2018/12/07 09:19:16	55.0

878	2018/12/07	09:19:17	56.8
879	2018/12/07	09:19:18	57.2
880	2018/12/07	09:19:19	56.7
881	2018/12/07	09:19:20	56.8
882	2018/12/07	09:19:21	57.0
883	2018/12/07	09:19:22	56.3
884	2018/12/07	09:19:23	56.5
885	2018/12/07	09:19:24	56.2
886	2018/12/07	09:19:25	53.0
887	2018/12/07	09:19:26	51.7
888	2018/12/07	09:19:27	51.8
889	2018/12/07	09:19:28	52.4
890	2018/12/07	09:19:29	53.0
891	2018/12/07	09:19:30	54.9
892	2018/12/07	09:19:31	55.0
893	2018/12/07	09:19:32	53.4
894	2018/12/07	09:19:33	52.3
895	2018/12/07	09:19:34	51.6
896	2018/12/07	09:19:35	53.2
897	2018/12/07	09:19:36	52.3
898	2018/12/07	09:19:37	52.6
899	2018/12/07	09:19:38	52.6
900	2018/12/07	09:19:39	54.0

Appendix C

Roadway Construction Noise Model (RCNM) Results

Roadway Construction Noise Model (RCNM),Version 1.1

Report date: 10/10/2019
Case Description: Chicago and Van Buren Car Wash - Grading

**** Receptor #1 ****

Description	Land Use	Baselines (dBA) Daytime	Evening	Night
Residences	Residential	65.0	45.0	45.0

Equipment

Description	Impact Device	Usage (%)	Spec Lmax (dBA)	Actual Lmax (dBA)	Receptor Distance (feet)	Estimated Shielding (dBA)
Grader	No	40	85.0		145.0	0.0
Dozer	No	40		81.7	145.0	0.0
Backhoe	No	40		77.6	145.0	0.0

Results

	Calculated (dBA)		Noise Limits (dBA) Day		Evening		Night		Noise Limit Exceedance (dBA) Day		Evening		Night	
Equipment	Lmax	Leq	Lmax	Leq	Lmax	Leq	Lmax	Leq	Lmax	Leq	Lmax	Leq	Lmax	Leq
Grader	75.8	71.8	N/A	N/A	N/A	N/A	N/A	N/A	N/A	N/A	N/A	N/A	N/A	N/A
Dozer	72.4	68.4	N/A	N/A	N/A	N/A	N/A	N/A	N/A	N/A	N/A	N/A	N/A	N/A
Backhoe	68.3	64.3	N/A	N/A	N/A	N/A	N/A	N/A	N/A	N/A	N/A	N/A	N/A	N/A
Total	75.8	73.9	N/A	N/A	N/A	N/A	N/A	N/A	N/A	N/A	N/A	N/A	N/A	N/A

**** Receptor #2 ****

Description	Land Use	Baselines (dBA) Daytime	Evening	Night
Commercial	Commercial	65.0	45.0	45.0

Equipment

Description	Impact Device	Usage (%)	Spec Lmax (dBA)	Actual Lmax (dBA)	Receptor Distance (feet)	Estimated Shielding (dBA)

Grader	No	40	85.0	325.0	0.0
Dozer	No	40	81.7	325.0	0.0
Backhoe	No	40	77.6	325.0	0.0

Results

			Noise Limits (dBA)						Noise Limit Exceedance (dBA)					
	Calculated (dBA)		Day		Evening		Night		Day		Evening		Night	
Equipment	Lmax	Leq	Lmax	Leq	Lmax	Leq	Lmax	Leq	Lmax	Leq	Lmax	Leq	Lmax	Leq
Grader	68.7	64.8	N/A	N/A	N/A	N/A	N/A	N/A	N/A	N/A	N/A	N/A	N/A	N/A
Dozer	65.4	61.4	N/A	N/A	N/A	N/A	N/A	N/A	N/A	N/A	N/A	N/A	N/A	N/A
Backhoe	61.3	57.3	N/A	N/A	N/A	N/A	N/A	N/A	N/A	N/A	N/A	N/A	N/A	N/A
Total	68.7	66.9	N/A	N/A	N/A	N/A	N/A	N/A	N/A	N/A	N/A	N/A	N/A	N/A

Appendix D

Car Wash Specifications

OCT / 07

POWERLOCK SOUND PRESSURE LEVELS
Individual Fan Study

10HP Tech 21 Dryer

10HP at 1 meter **without** PowerLock	=	92DB
10HP at 1 meter with PowerLock **open**	=	88DB
10HP at 1 meter with PowerLock **closed**	=	85DB

15HP Tech 21 Dryer

15HP at 1 meter **without** PowerLock	=	96DB
15HP at 1 meter with PowerLock **open**	=	92DB
15HP at 1 meter with PowerLock **closed**	=	87DB

On average, a site will appreciate a 30-50% sound reduction, depending on its dryer package, valve cycling, and wash area.

Bob MacNeil
R&D

Appendix E

HVAC Specifications

Product Data

WeatherMaster®
Single Packaged Rooftop Heat Pump Units

3 to 10 Nominal Tons

50HCQ 04, 05, 06, 07, 08, 09, 12
with Puron® (R-410) Refrigerant

© Carrier Corporation 2017

Carrier WeatherMaster® 3 to 10 Ton rooftop unit (RTU) was designed by customers for customers. With "no-strip" screw collars, handled access panels, and more we've made your unit easy to install, easy to maintain, easy to use and reliable.

Features/Benefits

Easy to install:

All WeatherMaster® units are field-convertible to horizontal air flow; no special kit required on 04-09 models. Supply duct kit required for size 12 only. Convertible airflow design makes it easy to adjust to unexpected job site complications. Lighter units make easy replacement. Carrier 3 - 10 ton 50HCQ rooftops fit on existing Carrier curbs dating back to 1989. Also, our large control box gives you room to work and room to mount Carrier accessory controls.

Easy to maintain:

Easy access handles by Carrier provide quick and easy access to all normally serviced components. Our "no-strip" screw system has superior holding power and guides screws into position while preventing the screw from stripping the unit's metal.

Easy to use:

The central terminal board puts all your connections and troubleshooting points in one convenient place, standard. Most low voltage connections are made to the same board and make it easy to find what you're looking for and easy to access it.

Reliable:

Each unit comes with precision sized and tested scroll compressor that is internally protected from over temperature and pressures. Each refrigerant circuit is further protected with a high pressure, loss of charge and freeze protection switch. In addition, a liquid line filter drier and suction line accumulator protects each circuit. Each unit is factory tested prior to shipment to help ensure units operation once properly installed.

Key features:

Key features are:

- Up to 28% lighter than similar industry units. Lighter rooftops make easier replacement jobs.
- SEER up to 15.8, EER up to 12.8.
- IEER up to 14.0 with single speed indoor fan motor and up to 15.6 with 2-speed/VFD indoor fan motor.
- 3 - 10 ton units fit on existing Carrier rooftop curbs which saves time and money on replacement jobs.
- Standardized components and layout. Standardized components and controls make service and stocking parts easier.
- Scroll compressors on all units. This makes service, stocking parts, replacement, and troubleshooting easier.
- Crankcase heater on all models (except 04 size) provides added protection in all applications.
- Precision-sized refrigerant suction line accumulator provides high reliability by preventing liquid from entering the compressor during low ambient conditions and reverse cycle switch over.
- Field convertible from vertical to horizontal airflow on all models. No special kits required on 04-09 models. Supply duct kit required for 12 size model only.
- 4-way reversing valve rapidly changes the flow of refrigerant to quickly changeover from cooling to heating and heating to cooling.
- Easy-adjust, belt drive motor available on all sizes. Carrier provides a factory-solution for most points in the fan performance table. There's no need for field-supplied drives or motors.
- 3-5 ton models come standard with a Direct Drive X13, 5 speed/torque motor to provide exact performance in many applications. Belt drive motor optional on all three phase voltage models.
- Provisions for bottom or side condensate drain.
- Capable of thru-the-base or thru-the-curb electrical routing.
- Dependable time/temperature defrost logic provides a defrost cycle, if needed, every 30, 60, 90 or 120 minutes and is adjustable.
- Single-point electrical connection.
- Sloped, composite drain pan sheds water; and won't rust.
- Standardized controls and control box layout. Standardized components and controls make stocking parts and service easier.
- Clean, large, easy to use control box.
- Standard coils are copper round tube, aluminum plate fin with optional coil coatings and copper fin design.
- Large, laminated wiring and power wiring drawings which are affixed to unit make troubleshooting easy.
- Single, central terminal board for test and wiring connections.
- Fast-access, handled, panels for easy access to the blower and blower motor, control box, and compressors.
- "No-strip" screw system guides screws into the panel and captures them tightly without stripping the screw, the panel, or the unit.
- Exclusive, newly-designed indoor refrigerant header for easier maintenance and replacement.
- Standard mechanical cooling (125°F to 30°F or 52°C to -1°C).
- 2-in. (51mm) disposable filters on all units.
- High capacity refrigerant filter drier and TXV metering device on each circuit.
- High pressure switch, loss of charge switch and freeze protection adds greater unit reliability.
- Optional Staged Air Volume (SAV™) system utilizes a Variable Frequency Drive (VFD) to automatically adjust the indoor fan motor speed between cooling stages. Available on 2-stage cooling model sizes 07-12 with electro-mechanical controls or RTU Open controller.

Table of contents

	Page
Features/Benefits	2
Model Number Nomenclature	3
Capacity Ratings	4,5
Physical Data	6,7
Options and Accessories	8-11
Dimensions	12-26
Application Data	27
Performance Data	28-54
Typical Wiring Schematics	55-58
Electrical Data	59-103
Controls	104-106
Guide Specifications	107-117

Model number nomenclature

50HCQ MODEL NUMBER NOMENCLATURE (EXAMPLE)

Position:	1	2	3	4	5	6	7	8	9	10	11	12	13	14	15	16	17	18
Example:	5	0	H	C	Q	A	0	6	A	0	A	6	–	0	B	2	A	0

Series - WeatherMaster®
50HC - Packaged Rooftop - High Efficiency

Q = Heat Pump

Refrig. Systems Options
A = One Stage Cooling Models
D = Two Stage Cooling Models

Cooling Tons
04 - 3 ton
05 - 4 ton
06 - 5 ton
07 - 6 ton
08 - 7.5 ton
09 - 8.5 ton
12 - 10 ton

Sensor Options
A = None
B = RA Smoke Detector
C = SA Smoke Detector
D = RA + SA Smoke Detector
E = CO_2
F = RA Smoke Detector and CO_2
G = SA Smoke Detector and CO_2
H = RA + SA Smoke Detector and CO_2
J = Condensate Overflow Switch
K = Condensate Overflow Switch and RA Smoke Detectors
L = Condensate Overflow Switch and RA + SA Smoke Detectors

Indoor Fan Options
0 = Electric Drive X13 Motor (04-06)
1 = Standard Static Option - Belt Drive
2 = Medium Static Option - Belt Drive
3 = High Static Option - Belt Drive
C = High Static Option with High Efficiency Motor- Belt Drive (size 12 only)

Coil Options - Round Tube/Plate Fin Condenser Coil (Outdoor - Indoor - Hail Guard)
A = Al/Cu - Al/Cu
B = Precoat Al/Cu - Al/Cu
C = E-coat Al/Cu - Al/Cu
D = E-coat Al/Cu - E-coat Al/Cu
E = Cu/Cu - Al/Cu
F = Cu/Cu - Cu/Cu
M = Al/Cu -Al/Cu — Louvered Hail Guard
N = Precoat Al/Cu - Al/Cu — Louvered Hail Guard
P = E-coat Al/Cu - Al/Cu — Louvered Hail Guard
Q = E-coat Al/Cu - E-coat Al/Cu — Louvered Hail Guard
R = Cu/Cu - Al/Cu — Louvered Hail Guard
S = Cu/Cu - Cu/Cu — Louvered Hail Guard

Note: On single phase (-3 voltage code) models, the following are not available as a factory-installed option:
- Coated Coils or Cu Fin Coils
- Louvered Hail Guards
- Economizer or 2 Position Damper
- Powered 115 Volt Convenience Outlet

Factory Assigned
0 = Standard
1 = LTL

Electrical Options
A = None
C = Non-Fused Disconnect
D = Thru-The-Base Connections
F = Non-Fused Disconnect and Thru-The-Base Connections
G = 2-Speed Indoor Fan Controller (VFD)
J = 2-Speed Indoor Fan Controller (VFD) and Non-Fused Disconnect
K = 2-Speed Indoor Fan Controller (VFD) and Thru-The-Base Connections
M = 2-Speed Indoor Fan Controller (VFD) with Non-Fused Disconnect and Thru-The-Base Connections

Service Options
0 = None
1 = Unpowered Convenience Outlet
2 = Powered Convenience Outlet
3 = Hinged Access Panels
4 = Hinged Access Panels and Unpowered Convenience Outlet
5 = Hinged Panels and Powered Convenience Outlet

Intake / Exhaust Options
A = None
B = Temperature Economizer w/ Barometric Relief
F = Enthalpy Economizer w/ Barometric Relief
K = 2-Position Damper
U = Temperature Ultra Low Leak Economizer w/ Barometric Relief
W= Enthalpy Ultra Low Leak Economizer w/ Barometric Relief

Base Unit Controls
0 = Electro-mechanical Controls can be used with W7212 EconoMi$er IV (Non-Fault Detection and Diagnostic)
1 = PremierLink™ Controller
2 = RTU Open Multi-Protocol Controller
6 = Electro-mechanical w/ 2-speed fan and W7220 Economizer controller Controls. Can be used with W7220 EconoMi$er X (with Fault Detection and Diagnostic)

Design Revision
– = Factory Design Revision

Voltage
1 = 575/3/60
3 = 208-230/1/60
5 = 208-230/3/60
6 = 460/3/60

Capacity ratings

AHRI COOLING RATINGS

50HCQ UNIT	COOLING STAGES	NOM. CAPACITY (TONS)	NET COOLING CAPACITY (MBH)	TOTAL POWER (kW)	SEER	EER	IEER
A04	1	3.0	36,400	2.8	15.60	12.70	N/A
A05	1	4.0	47,000	3.6	15.80	12.80	N/A
A06	1	5.0	58,500	4.6	15.00	11.70	N/A
A07	1	6.0	72,000	6.0	N/A	12.00	12.8

50HCQ UNIT	COOLING STAGES	NOM. CAPACITY (TONS)	NET COOLING CAPACITY (MBH)	TOTAL POWER (kW)	SEER	EER	IEER WITH SINGLE SPEED INDOOR FAN MOTOR	IEER WITH 2-SPEED INDOOR FAN MOTOR
D07	2	6.0	70,000	5.8	N/A	12.00	14.0	15.6
D08	2	7.5	90,000	7.4	N/A	12.10	12.8	13.7
D09	2	8.5	100,000	8.3	N/A	12.00	12.5	12.9
D12	2	10.0	119,000	9.6	N/A	12.30	13.0	13.6

HEATING RATINGS

50HCQ UNIT	HSPF	HEATING, LOW AT 17°F (-8°C) AMBIENT		HEATING, HIGH AT 47°F (8°C) AMBIENT	
		CAPACITY (BTUH)	COP	CAPACITY (BTUH)	COP
A04	8.00	18,400	N/A	34,000	N/A
A05	8.10	23,800	N/A	46,000	N/A
A06	8.20	28,600	N/A	55,000	N/A
A07	N/A	39,000	2.40	70,000	3.40
D07	N/A	38,000	2.40	69,000	3.40
D08	N/A	47,000	2.40	84,000	3.50
D09	N/A	56,000	2.26	100,000	3.40
D12	N/A	65,000	2.40	116,000	3.50

LEGEND

AHRI — Air-Conditioning, Heating and Refrigeration Institute
ASHRAE — American Society of Heating, Refrigerating and Air-Conditioning Engineers
COP — Coefficient of Performance
EER — Energy Efficiency Ratio
HSPF — Heating Seasonal Performance Factor
IECC — International Energy Conservation Code
IEER — Integrated Energy Efficiency Ratio
N/A — Not applicable
SEER — Seasonal Energy Efficiency Ratio

NOTES:

1. Rated and certified under AHRI Standard 210/240 or 340/360, as appropriate.
2. Ratings are based on:
   Cooling Standard: 80°F (27°C) dB, 67°F (19°C) wb indoor air temp and 95°F db outdoor air temp.
   IEER Standard: A measure that expresses cooling partload EER efficiency for commercial unitary air conditioning and heat pump equipment on the basis of weighted operation at variable load capacities.
3. All 50HCQ units comply with ASHRAE 90.1-2016, DOE-2018 and IECC[1] 2015 minimum efficiency requirements when equipped with the SAV (staged air volume) option.

1. IECC is a registered trademark of International Code Council, Inc.

MINIMUM - MAXIMUM AIRFLOWS (CFM) COOLING AND ELECTRIC HEAT

UNIT	COOLING			ELECTRIC HEATERS		
	Minimum CFM	Minimum CFM 2-Speed Fan Motor (at High Speed)	Minimum CFM 2-Speed Fan Motor (at Low Speed)	Maximum CFM	Minimum CFM	Maximum CFM
50HCQA04	900	N/A	N/A	1500	900	1500
50HCQA05	1200	N/A	N/A	2000	1200	2000
50HCQA06	1500	N/A	N/A	2500	1500	2500
50HCQA07	1800	N/A	N/A	3000	1800	3000
50HCQD07	1800	1800	1200	3000	1800	3000
50HCQD08	2250	2250	1500	3750	2250*	3750
50HCQD09	2550	2873	1915	4250	2252*	4250
50HCQD12	3000	3380	2253	5000	3000*	5000

* - Minimum electric heat CFM exceptions:

UNIT	UNIT VOLTAGE	HEATER kW	UNIT CONFIGURATION	REQUIRED MINIMUM CFM
50HCQD08 50HCQD09	575	17.0	Horizontal or Vertical	2800
		34.0		2350
50HCQD12	230	50.0	Vertical	3550
		50.0	Horizontal	3420
		43.5	Horizontal or Vertical	3040
	575	50.0	Vertical	3150
		33.5	Vertical	3520
		33.5	Horizontal	3420
		26.5	Vertical	3610

SOUND PERFORMANCE

50HCQ UNIT	OUTDOOR SOUND (dB) AT 60Hz								
	A–Weighted	63	125	250	500	1000	2000	4000	8000
A04	76	51.8	69	64.6	67.8	70.7	63.8	60.9	59
A05	79	56.1	69.6	68.7	72.5	72.8	68.9	65	61.2
A06	79	57.7	66.6	68.7	72.9	74.5	71.1	67.6	62.6
A07	81	86.7	82.7	79.1	78.4	75.4	71.2	67.8	62.9
D07	81	86.7	82.7	79.1	78.4	75.4	71.2	67.8	62.9
D08	83	87.3	81.6	79.7	80.6	79	73.5	69.2	66.1
D09	87	61.7	74.7	77.4	82.6	84.9	81.9	78.8	75.9
D12	83	61.0	67.3	75.1	77.7	78.1	75.5	71.2	66.7

LEGEND:

dB — Decibel

NOTES:

1. Outdoor sound data is measure in accordance with AHRI standard 270.
2. Measurements are expressed in terms of sound power. Do not compare these values to sound pressure values because sound pressure depends on specific environmental factors which normally do not match individual applications. Sound power values are independent of the environment and therefore more accurate.
3. A-weighted sound ratings filter out very high and very low frequencies, to better approximate the response of "average" human ear. A-weighted measurements for Carrier units are taken in accordance with AHRI standard 270.

Physical data

PHYSICAL DATA (COOLING) — 3-6 TONS

		50HCQA04	50HCQA05	50HCQA06	50HCQA07	50HCQD07
REFRIGERATION SYSTEM						
	# Circuits / # Comp. / Type	1 / 1 / Scroll	1 / 1 / Scroll	1 / 1 / 1-Stage Scroll	1 / 1 / 1-Stage Scroll	1 / 1 / 2-Stage Scroll
	Puron® (R-410A) Refrigerant Charge per circuit A/B (lbs-oz)	12 - 8 / -	15 - 8 / -	17 - 8 / -	15 - 8/ -	15 - 8 / -
	Metering device	TXV	TXV	TXV	TXV	TXV
	High-press. Trip / Reset (psig)	630 / 505	630 / 505	630 / 505	630 / 505	630 / 505
	Loss of Charge Press. Trip / Reset (psig)	27 / 44	27 / 44	27 / 44	27 / 44	27 / 44
EVAP. COIL						
	Material - Tube / Fin	Cu / Al	Cu / Al	Cu / Al	Cu / Al	Cu / Al
	Coil Type (Tube Dia.)	3/8-in. RTPF	3/8-in. RTPF	3/8-in. RTPF	3/8-in. RTPF	3/8-in. RTPF
	Rows / FPI	3 / 15	3 / 15	3 / 15	3 / 15	3 / 15
	Total face area (ft^2)	5.5	7.3	7.3	8.9	8.9
	Condensate drain conn. size	3/4-in.	3/4-in.	3/4-in.	3/4-in.	3/4-in.
EVAPORATOR FAN AND MOTOR						
Standard Static 1-Phase	Motor Qty. / Driver Type	1 / Direct	1 / Direct	1 / Direct	N/A	N/A
	Max BHP	1.0	1.0	1.0	N/A	N/A
	RPM range	600-1200	600-1200	600-1200	N/A	N/A
	Motor frame size	48	48	48	N/A	N/A
	Fan Qty. / Type	1 / Centrifugal	1 / Centrifugal	1 / Centrifugal	N/A	N/A
	Fan Dia. x Length (in.)	10 x 10	10 x 10	10 x 11	N/A	N/A
Standard Static 3-Phase	Motor Qty. / Driver Type	1 / Direct	1 / Direct	1 / Direct	1 / Belt	1 / Belt
	Max BHP	1.0	1.0	1.0	1.2	1.2
	RPM range	600-1200	600-1200	600-1200	489-747	489-652
	Motor frame size	48	48	48	56	56
	Fan Qty. / Type	1 / Centrifugal	1 / Centrifugal	1 / Centrifugal	1 / Centrifugal	1 / Centrifugal
	Fan Dia. x Length (in.)	10 x 10	10 x 10	11 x 10	15 x 15	15 x 15
Medium Static 3-Phase	Motor Qty. / Driver Type	1 / Belt	1 / Belt	1 / Belt	1 / Belt	1 / Belt
	Max BHP	1.5	1.5	2.0	2.9	2.9
	RPM range	819-1251	920-1303	1066-1380	733-949	591-838
	Motor frame size	56	56	56	56	56
	Fan Qty. / Type	1 / Centrifugal	1 / Centrifugal	1 / Centrifugal	1 / Centrifugal	1 / Centrifugal
	Fan Dia. x Length (in.)	10 x 10	10 x 10	10 x 10	15 x 15	15 x 15
High Static 3-Phase	Motor Qty. / Driver Type	1 / Belt	1 / Belt	1 / Belt	1 / Belt	1 / Belt
	Max BHP	2.0	2.0	2.9	4.0	2.9
	RPM range	1035-1466	1035-1466	1208-1550	909-1102	838-1084
	Motor frame size	56	56	56	45	145
	Fan Qty. / Type	1 / Centrifugal	1 / Centrifugal	1 / Centrifugal	1 / Centrifugal	1 / Centrifugal
	Fan Dia. x Length (in.)	10 x 10	10 x 10	10 x 10	15 x 15	15 x 15
CONDENSER COIL						
	Material (Tube/Fin)	Cu / Al	Cu / Al	Cu / Al	Cu / Al	Cu / Al
	Coil type	3/8-in RTPF	3/8-in RTPF	3/8-in RTPF	3/8-in RTPF	3/8-in RTPF
	Rows / FPI	2 / 17	2 / 17	2 / 17	2 / 17	2 / 17
	Total Face Area (ft^2)	16.5	21.3	21.3	20.5	20.5
COND. FAN / MOTOR						
	Qty / Motor Drive Type	1 / direct	1 / direct	1 / direct	2 / direct	2 / direct
	Motor HP / RPM	1/8 / 825	1/4 / 1100	1/4 / 1100	1/4 / 1100	1/4 / 1100
	Fan diameter (in.)	22	22	22	22	22
FILTERS						
	RA Filter # / Size (in.)	2 / 16 x 25 x 2	4 / 16 x 16 x 2	4 / 16 x 16 x 2	4 / 16 x 20 x 2	4 / 16 x 20 x 2
	OA inlet screen # / Size (in.)	1 / 20 x 24 x 1	1 / 20 x 24 x 1	1 / 20 x 24 x 1	1 / 20 x 36 x 1	1 / 20 x 36 x 1

PHYSICAL DATA (COOLING) — 7.5-10 TONS

		50HCQD08	50HCQD09	50HCQD12
REFRIGERATION SYSTEM				
	# Circuits / # Comp. / Type	2 / 2 / Scroll	2 / 2 / Scroll	2 / 2 / Scroll
	Puron® (R-410A) Refrigerant Charge per circuit A/B (lbs-oz)	11 - 12 / 11 - 12	14-1/14-4	16-3/17-3
	Metering device	TXV	TXV	TXV
	High-press. Trip / Reset (psig)	630 / 505	630 / 505	630 / 505
	Loss of Charge Press. Trip / Reset (psig)	27 / 44	27 / 44	27 / 44
	Compressor Capacity Staging (%)	50 / 100	50 / 100	50 / 100
EVAP. COIL				
	Material - Tube / Fin	Cu / Al	Cu / Al	Cu / Al
	Coil Type (Tube Dia.)	3/8-in. RTPF	3/8-in. RTPF	3/8-in. RTPF
	Rows / FPI	4 / 15	4 / 15	3 / 15
	Total face area (ft^2)	11.1	11.1	17.3
	Condensate drain conn. size	3/4-in.	3/4-in.	3/4-in.
EVAPORATOR FAN AND MOTOR				
Standard Static 3-Phase	Motor Qty. / Driver Type	1 / Belt	1 / Belt	1 / Belt
	Max BHP	1.2	1.7	1.9
	RPM range	518-733	460-652	440-609
	Motor frame size	56	56	56
	Fan Qty. / Type	1 / Centrifugal	1 / Centrifugal	1 / Centrifugal
	Fan Dia. x Length (in.)	15 x 15	15 x 15	18 x 18
Medium Static 3-Phase	Motor Qty. / Driver Type	1 / Belt	1 / Belt	1 / Belt
	Max BHP	1.7	2.9	2.9
	RPM range	690-936	591-838	547-757
	Motor frame size	56	56	56
	Fan Qty. / Type	1 / Centrifugal	1 / Centrifugal	1 / Centrifugal
	Fan Dia. x Length (in.)	15 X 15	15 X 15	18 x 18
High Static 3-Phase	Motor Qty. / Driver Type	1 / Belt	1 / Belt	1 / Belt
	Max BHP	2.8	2.8	6.1
	RPM range	838-1084	838-1084	762-963
	Motor frame size	56	56	S184T
	Fan Qty. / Type	1 / Centrifugal	1 / Centrifugal	1 / Centrifugal
	Fan Dia. x Length (in.)	15 X 15	15 X 15	18 x 18
High Static High Efficiency 3-Phase	Motor Qty. / Driver Type	—	—	1 / Belt
	Max BHP	—	—	6.5/6.9/7.0/8.3*
	RPM range	—	—	762-963
	Motor frame size	—	—	S184T
	Fan Qty. / Type	—	—	1 / Centrifugal
	Fan Dia. x Length (in.)	—	—	18 x 18
CONDENSER COIL				
	Material (Tube/Fin)	Cu / Al	Cu / Al	Cu / Al
	Coil type	3/8-in RTPF	3/8-in RTPF	3/8-in RTPF
	Rows / FPI	2 / 17	3 / 17	2 / 17
	Total Face Area (ft^2)	25.1	25.1	46.2
COND. FAN / MOTOR				
	Qty / Motor Drive Type	2 / direct	1 / direct	3 / direct
	Motor HP / RPM	1/4 / 1100	1 / 1175	1 / 1100
	Fan diameter (in.)	22	30	22
FILTERS				
	RA Filter # / Size (in.)	4 / 20 x 20 x 2	4 / 20 x 20 x 2	6 / 18 x 24 x 2
	OA inlet screen # / Size (in.)	1 / 20 x 24 x 1	1 / 20 x 24 x 1	2 / 24 x 27 x 1 (Vert) 1 / 30 x 39 x 1 (Horiz)

* On Size 12 units, Max BHP for the High Static motor varies with the motor's voltage; see the table below.

Voltage	BHP
208	6.5
230	6.9
460	7.0
575	8.3

Options and accessories

FACTORY-INSTALLED AND FIELD-INSTALLED ACCESSORIES

CATEGORY	ITEM	FACTORY INSTALLED OPTION	FIELD INSTALLED ACCESSORY
CABINET	Hinged access doors	X	
	Thru-the-base electrical connections	X	X
	Supply duct kit-Horizontal air applications (size 12 only)		X
COIL OPTIONS	Cu/Cu indoor and/or outdoor coils [5]	X	
	Pre-coated outdoor coils [5]	X	
	Premium, E-coated outdoor coils [5]	X	
CONDENSER PROTECTION	Condenser coil hail guard (louvered design) [5]	X	X
CONTROLS	Thermostats, temperature sensors, and subbases		X
	PremierLink™ DDC communicating controller [9]	X	X
	RTU Open Multi-protocol controller	X	
	Smoke detector (supply and/or return air)	X	
	Horn/Strobe Annunciator [8]		X
	Time Guard II compressor delay control circuit		X
	Phase Monitor		X
	Condensate Overflow switch	X	X
ECONOMIZERS & OUTDOOR AIR DAMPERS	EconoMi$er IV for electro–mechanical controls – Non FDD (Standard air leak damper models) [5, 6]	X	X
	EconoMi$er2 for DDC controls, complies with FDD (Standard and Ultra Low Leak air damper models) [5, 7]	X	X
	Motorized 2 position outdoor air damper [5, 9]	X	X
	Manual outdoor air damper (25% and 50%) [9]		X
	Barometric relief [1]	X	X
	Power exhaust		X
	EconoMi$er X for electro–mechanical controls, complies with FDD (Standard and Ultra Low Leak air damper models) [5, 6]	X	X
ECONOMIZER SENSORS & IAQ DEVICES	Single dry bulb temperature sensors [2]	X	X
	Differential dry bulb temperature sensors [2]		X
	Single enthalpy sensors [2]	X	X
	Differential enthalpy sensors [2]		X
	CO_2 sensor (wall, duct, or unit mounted) [2]	X	X
ELECTRIC HEAT	Electric Resistance Heaters		X
	Single Point Kit		X
INDOOR MOTOR & DRIVE	Multiple motor and belt drive packages	X	
	Electric Drive, X13, 5-speed/torque (3-5 ton)	X	
	Staged Air Vol (SAV) system with VFD controller (2-stage cool only with electrical mechanical and RTU Open controls)	X	
	Display Kit for SAV system with VFD		X
LOW AMBIENT CONTROL	Motormaster® head pressure controller [3]		X
POWER OPTIONS	Convenience outlet (powered) [5]	X	
	Convenience outlet (unpowered): 15 amp factory-installed 20 amp field-installed	X	X
	Non–fused disconnect [4]	X	
ROOF CURBS	Roof curb 14-in. (356 mm)		X
	Roof curb 24-in. (610 mm)		X

NOTES:
1. Included with economizer.
2. Sensors for optimizing economizer.
3. See application data for assistance.
4. Non-fused disconnect switch cannot be used when unit electrical rating exceeds:
   04-09 sizes: 208-230/1/60 and 208-230/3/60 = 80 amps (FLA)
   460/3/60 and 575/3/60 = 80 amps (FLA)
   12 size: 208-230/3/60 = 115 amps (MCA)
   460/3/60 and 575/3/60 = 100 amps (FLA)
   Carrier RTUBuilder automatically selects the amps limitations.
5. Not available as a factory-installed option on single phase (208-230/1/60) models. Use field-install accessory where available.
6. FDD (Fault Detection and Diagnostic) capability per California Title 24 section 120.2.
7. Models with RTU Open DDC controller comply with California Title 24 Fault Detection and Diagnostic (FDD). PremierLink controller is not FDD.
8. Requires a field-supplied 24V transformer for each application. See price pages for details.
9. Not available with SAV.

Economizer

Economizers can reduce operating costs. They bring in fresh, outside air for ventilation; and provide cool outside air to cool your building. This also is the preferred method of low ambient cooling. When coupled to CO_2 sensors, economizers can limit the ventilation air to only that amount required.

Economizers are available, installed and tested by the factory, with either enthalpy or temperature dry-bulb inputs. There are also models for electro-mechanical, direct digital controllers and single speed fan or 2-speed indoor fan motors. Additional sensors are available as accessories to optimize the economizer.

Economizers include gravity controlled barometric relief that helps equalize building pressure and ambient air pressures. This can be a cost effective solution to prevent building pressurization. Economizers are available in Ultra Low Leak and standard low leak versions.

CO_2 sensor

The CO_2 sensor works with the economizer to intake only the correct amount of outside air for ventilation. As occupants fill your building, the CO_2 sensor detects their presence through increasing CO_2 levels, and opens the economizer appropriately.

When the occupants leave, the CO_2 levels decrease, and the sensor appropriately closes the economizer. This intelligent control of the ventilation air, called Demand Controlled Ventilation (DCV) reduces the overall load on the rooftop, saving money.

Smoke detectors

Trust the experts. Smoke detectors make your application safer and your job easier. Carrier smoke detectors immediately shut down the rooftop unit when smoke is detected. They are available, installed by the factory, for supply air, return air, or both.

Louvered hail guards

Sleek, louvered panels protect the condenser coil from hail damage, foreign objects, and incidental contact.

Convenience outlet (powered or unpowered)

Reduce service and/or installation costs by including a convenience outlet in your specification. Carrier will install this service feature at our factory. Provides a convenient, 15 amp, 115v GFCI receptacle with "Wet in Use" cover. The "powered" option allows the installer to power the outlet from the line side of the disconnect or load side as required by code. The "unpowered" option is to be powered from a separate (non-unit) 115/120v power source. The unpowered convenience outlet is available as a 15 amp factory-installed option or a 20 amp field-installed accessory.

The 20 amp unpowered convenience outlet kit provides a flexible installation method which allows code compliance for height requirements of the GFCI outlet from the finished roof surface as well as the capability to relocate the outlet to a more convenient location, if necessary.

Non-fused disconnect

This OSHA-compliant, factory-installed, safety switch allows a service technician to locally secure power to the rooftop. When selecting a factory-installed non-fused disconnect, note they are sized for the unit as ordered from the factory. The sizing of these do not accommodate field-installed items such as power exhaust devices, etc.

Power exhaust pressure relief

Superior internal building pressure control. This field-installed accessory may eliminate the need for costly, external pressure control fans.

PremierLink™ DDC controller

This CCN (Carrier Comfort Network®) controller regulates the rooftop's performance to tighter tolerances and expanded limits, as well as facilitates zoning systems and digital accessories. It also unites a Carrier HVAC equipment together on one, coherent CCN network. The PremierLink controller can be factory-installed, or easily field-installed.

RTU Open, multi-protocol controller

Connect the rooftop to an existing BAS (building automation system) without needing complicated translators or adapter modules using the RTU Open controller. The RTU Open controller speaks the 4 most common building automation system languages (BACnet*, Modbus†, N2, and LonWorks**). Use this controller when you have an existing BAS. Besides the 4 protocols, it also communicates with a Carrier Open system (i-Vu® and VVT®).

Time guard II control circuit

This accessory protects your compressor by preventing short-cycling in the event of some other failure, prevents the compressor from restarting for 30 seconds after stopping. Not required with PremierLink™ controller, RTU Open controller, or authorized commercial thermostats.

Motorized 2-position damper

The new Carrier 2-position, motorized outdoor air damper admits up to 100% outside air. Using reliable, gear-driven technology, the 2-position damper opens to allow ventilation air and closes when the rooftop stops, stopping unwanted infiltration. Not available with Staged Air Volume (SAV™) models.

Manual OA damper

Manual outdoor air dampers are an economical way to bring in ventilation air. The dampers are available in 25% and 50% versions. Not available with Staged Air Volume (SAV) models.

Electric heaters

Carrier offers a full line of field-installed accessory heaters. The heaters are very easy to use and install. All are pre-engineered and certified.

* BACnet is a registered trademark of ASHRAE (American Society of Heating, Refrigerating and Air-Conditioning Engineers).
† Modbus is a registered trademark of Schneider Electric.
** LonWorks is a registered trademark of Echelon Corporation.

Hinged access panels

Allows access to unit's major components with specifically designed hinged access panels. Panels are: filter, control box, fan motor and compressor.

Staged air volume (SAV™) indoor fan speed system

Carrier's Staged Air Volume (SAV) system saves energy and installation time by utilizing a Variable Frequency Drive (VFD) to automatically adjust the indoor fan motor speed in sequence with the units cooling operation. Per ASHRAE 90.1-2016 and IECC-2015 standards, during the first stage of cooling operation the VFD will adjust the fan motor to provide 66% of the total cfm established for the unit. When a call for the second stage of cooling is required, the VFD will allow the total cfm for the unit established (100%). During the heating mode the VFD will allow total design cfm (100%) operation and during the ventilation mode the VFD will allow operation to 66% of total cfm.

Compared to single speed indoor fan motor systems, Carrier's SAV system can save substantial energy, 25%+, versus single speed indoor fan motor systems.

IMPORTANT: Data based on .10 ($/kWh) in an office application utilizing Carrier's HAP 4.6 simulation software program.

The VFD used in Carrier's SAV system has soft start capabilities to slowly ramp up the speeds, thus eliminating any high inrush air volume during initial start-up. It also has internal over current protection for the fan motor and a field-installed display kit that allows adjustment and in depth diagnostics of the VFD.

This SAV system is available on models with 2-stage cooling operation with electrical mechanical or RTU Open (multi protocol) controls. Both space sensor and conventional thermostats controls can be used to provide accurate control in any application.

The SAV system is very flexible for initial fan performance set up and adjustment. The standard factory shipped VFD is pre-programmed to automatically stage the fan speed between the first and second stage of cooling. The unit fan performance static pressure and cfm can be easily adjusted using the traditional means of pulley adjustments. The other means to adjust the unit static and cfm performance is to utilize the field-installed Display Kit and adjust the frequency and voltage in the VFD to required performance requirements. In either case, once set up, the VFD will automatically adjust the speed between the cooling stage operations.

Motormaster® head pressure controller

The Motormaster motor controller is a low ambient, head pressure controller kit that is designed to maintain the unit's condenser head pressure during periods of low ambient cooling operation. This device should be used as an alternative to economizer free cooling when economizer usage is either not appropriate or desired. The Motormaster will either cycle the outdoor fan motors or operate them at reduced speed to maintain the unit operation, depending on the model.

Alternate motors and drives

Some applications need larger horsepower motors, some need more airflow, and some need both. Regardless of the case, your Carrier expert has a factory-installed combination to meet your application. A wide selection of motors and pulleys (drives) are available, factory-installed, to handle nearly any application.

Thru-the-base connections

Thru-the-base connections, available as either an accessory or as a factory option, are necessary to ensure proper connection and seal when routing wire and piping through the rooftop's basepan and curb. These couplings eliminate roof penetration and should be considered for main power lines, as well as control power.

Condenser overflow switch (factory-installed option)

This sensor and related controller monitors the condensate level in the drain pan and shuts down compression operation when overflow conditions occur. It includes:

- Indicator light - solid red (more than 10 seconds on water contact - compressors disabled), blinking red (sensor disconnected)
- 10 second delay to break - eliminates nuisance trips from splashing or waves in pan (sensor needs 10 seconds of constant water contact before tripping)
- Disables the compressor(s) operation when condensate plug is detected, but still allows fans to run for Economizer.

OPTIONS AND ACCESSORIES — WEIGHT ADDERS

BASE UNIT WITH OPTIONS AND ACCESSORIES (WEIGHT ADDERS)	50HCQ MAX WEIGHT ADDER													
	04		05		06		07		08		09		12	
	lb	kg	lb	kg	lb	kg	lb	kg	lb	kg	lb	kg	lb	kg
Power Exhaust - vertical	50	23	50	23	50	23	50	23	75	34	75	34	85	39
Power Exhaust - horizontal	30	14	30	14	30	14	30	14	30	14	30	14	75	34
EconoMi$er® (IV, X, or 2)	50	23	50	23	50	23	50	23	75	34	75	34	115	52
Two Position damper	39	18	39	18	39	18	39	18	58	26	58	26	65	29
Manual Dampers	12	5	12	5	12	5	12	5	18	8	18	8	25	11
Hail Guard (louvered)	16	7	16	7	16	7	16	7	34	15	34	15	45	20
Cu/Cu Condenser Coil	35	16	35	16	35	16	95	43	95	43	95	43	160	73
Cu/Cu Cond. and Evaporator Coils	60	27	60	27	90	41	165	75	140	64	195	88	280	127
Roof Curb 14-in. (356 mm)	115	52	115	52	115	52	143	65	143	65	143	65	180	82
Roof Curb 24-in. (610 mm)	197	89	197	89	197	89	245	111	245	111	245	111	255	116
CO_2 sensor	5	2	5	2	5	2	5	2	5	2	5	2	5	2
Electric Heater	30	14	30	14	30	14	30	14	45	20	45	20	25	11
Single Point Kit	10	5	10	5	10	5	10	5	12	5	12	5	25	11
Optional Indoor Motor / Drive	10	5	10	5	10	5	10	5	15	7	15	7	45	20
Motormaster® Controller	35	16	35	16	35	16	35	16	35	16	35	16	35	16
Return Smoke Detector	5	2	5	2	5	2	5	2	5	2	5	2	5	2
Supply Smoke Detector	5	2	5	2	5	2	5	2	5	2	5	2	5	2
Non-Fused Disconnect	15	7	15	7	15	7	15	7	15	7	15	7	15	7
Powered Convenience Outlet	35	16	35	16	35	16	35	16	35	16	35	16	35	16
Non-Powered Convenience Outlet	5	2	5	2	5	2	5	2	5	2	5	2	5	2
Enthalpy Sensor	2	1	2	1	2	1	2	1	2	1	2	1	2	1
Differential Enthalpy Sensor	3	1	3	1	3	1	3	1	3	1	3	1	3	1
SAV™ System with VFD	—	—	—	—	—	—	20	9	20	9	20	9	20	9

NOTE: Where multiple variations are available, the heaviest combination is listed.

UNIT DIMENSIONAL DRAWING - UNIT SIZES 04-06

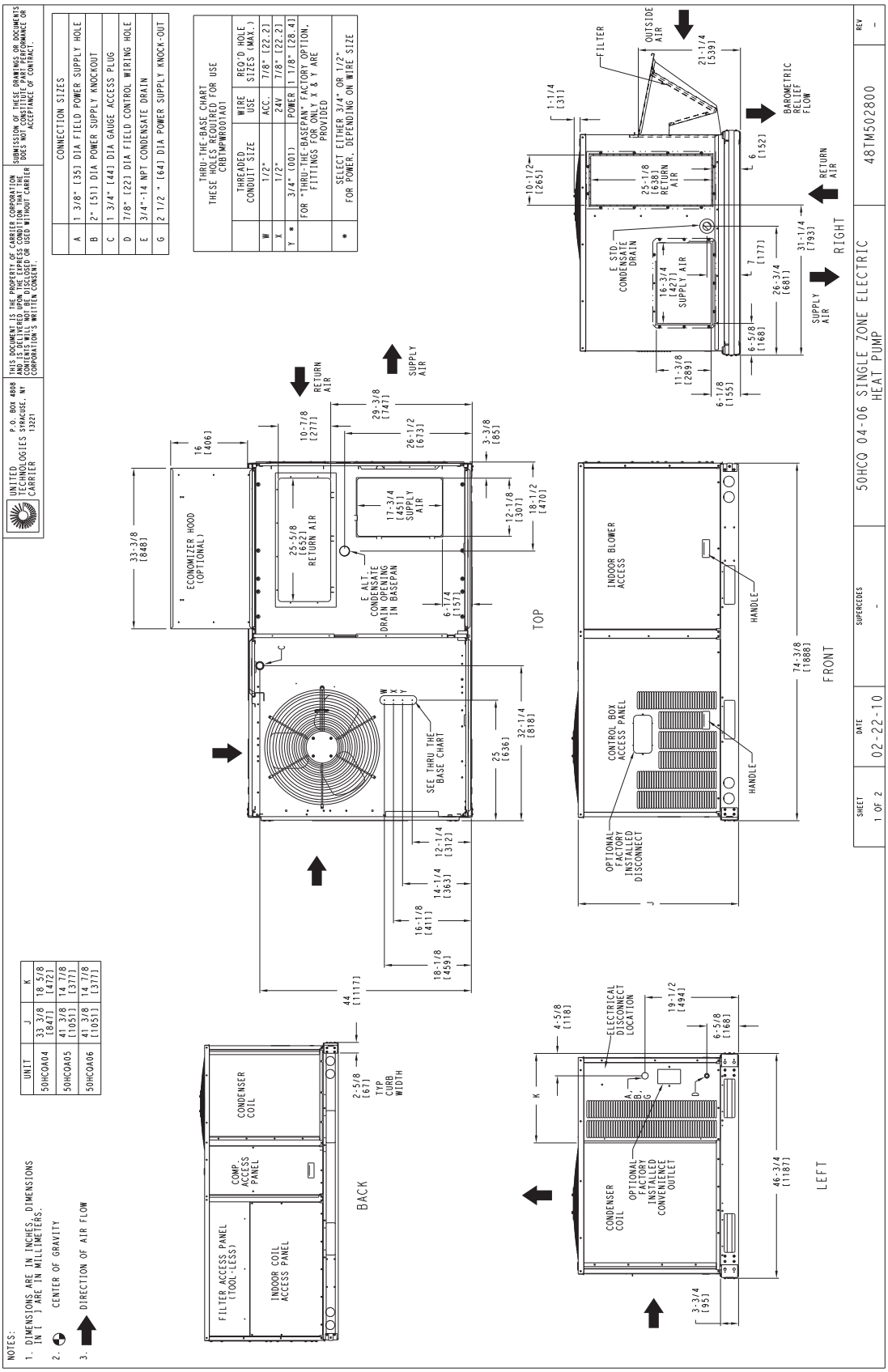

UNIT DIMENSIONAL DRAWING - UNIT SIZES 04-06 (cont)

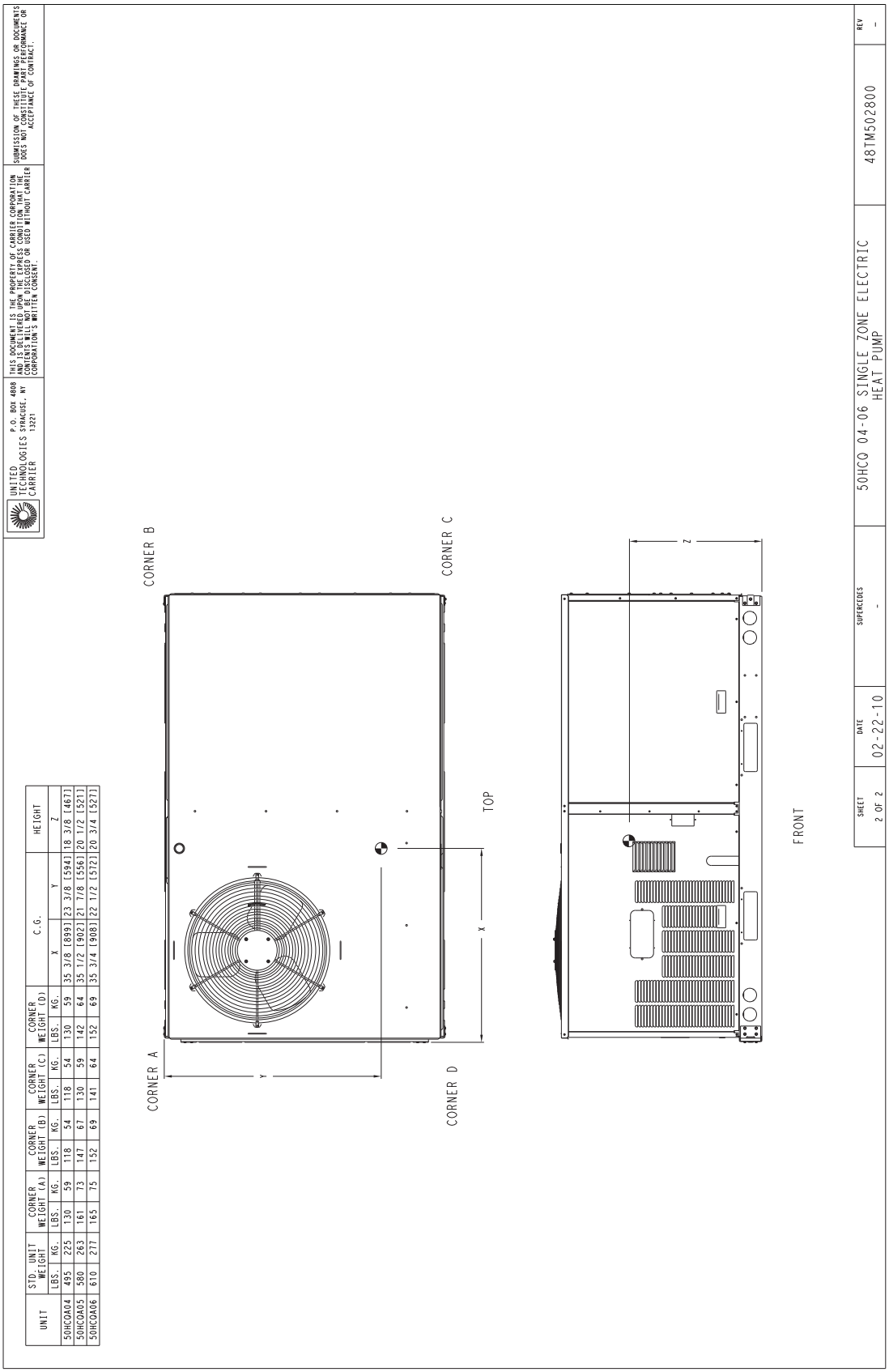

UNIT	STD. UNIT WEIGHT		CORNER WEIGHT (A)		CORNER WEIGHT (B)		CORNER WEIGHT (C)		CORNER WEIGHT (D)		C.G.		HEIGHT
	LBS.	KG.	LBS.	KG.	LBS.	KG.	LBS.	KG.	LBS.	KG.	X	Y	Z
50HCQA04	495	225	130	59	118	54	118	54	130	59	35 3/8 [899]	23 3/8 [594]	18 3/8 [467]
50HCQA05	580	263	161	73	147	67	130	59	142	64	35 1/2 [902]	21 7/8 [556]	20 1/2 [521]
50HCQA06	610	277	165	75	152	69	141	64	152	69	35 3/4 [908]	22 1/2 [572]	20 3/4 [527]

SERVICE CLEARANCE DIMENSIONAL DRAWING - UNIT SIZES 04-06

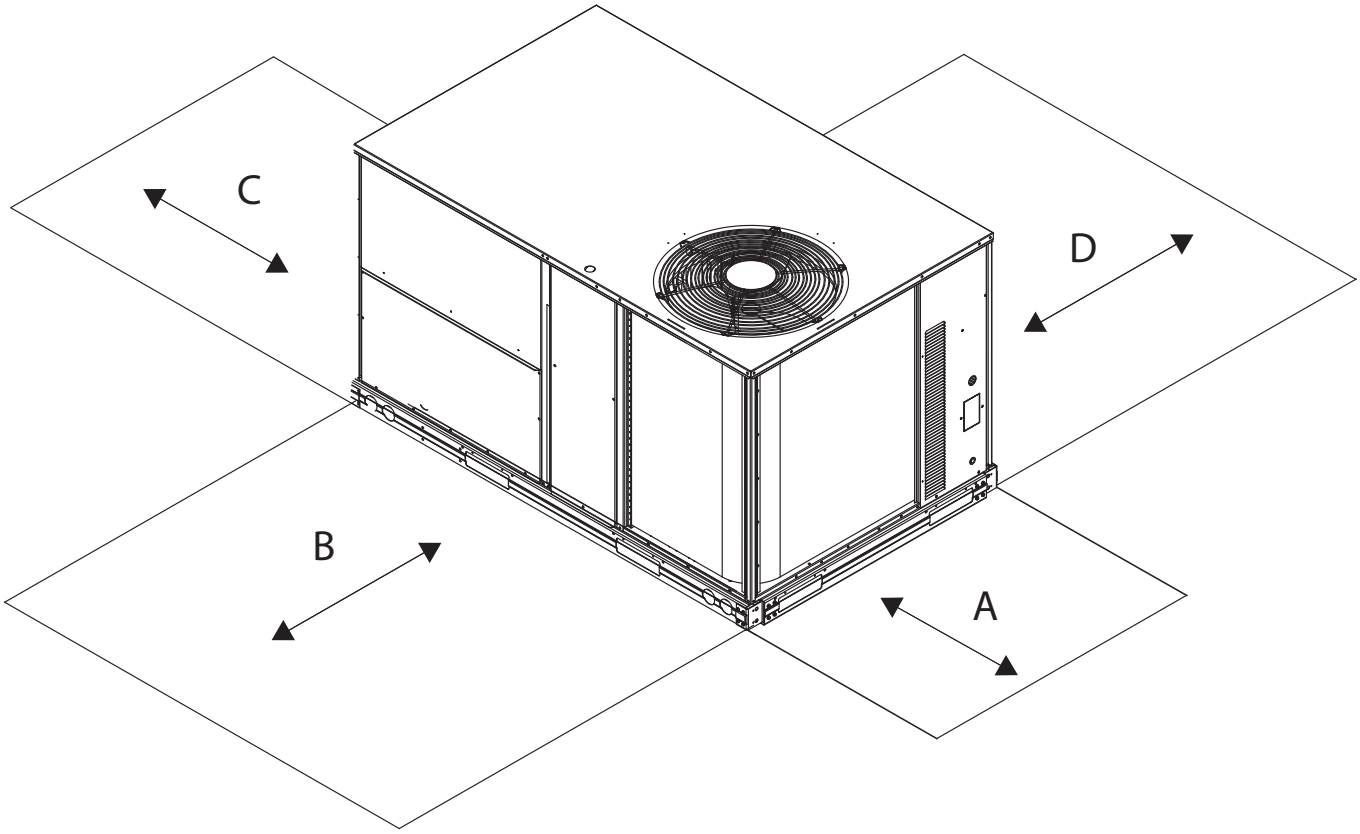

LOCATION	DIMENSION	CONDITION
A	48-in. (1219 mm) 18-in. (457 mm) 18-in. (457 mm) 12-in. (305 mm)	• Unit disconnect is mounted on panel • No disconnect, convenience outlet option • Recommended service clearance • Minimum clearance
B	42-in. (1067 mm) 36-in. (914 mm) Special	• Surface behind servicer is grounded (e.g., metal, masonry wall) • Surface behind servicer is electrically non-conductive (e.g., wood, fiberglass) • Check for sources of flue products within 10-ft of unit fresh air intake hood
C	36-in. (914 mm) 18-in. (457 mm)	• Side condensate drain is used • Minimum clearance
D	42-in. (1067 mm) 36-in. (914 mm)	• Surface behind servicer is grounded (e.g., metal, masonry wall, another unit) • Surface behind servicer is electrically non-conductive (e.g., wood, fiberglass)

NOTE: Unit not designed to have overhead obstruction. Contact Application Engineering for guidance on any application planning overhead obstruction or for vertical clearances.

ROOF CURB DETAILS - UNIT SIZES 04-06

ROOF CURB ACCESSORY #	A
CRRFCURB001A01	14" [356]
CRRFCURB002A01	24" [610]

NOTES:
1. ROOFCURB ACCESSORY IS SHIPPED DISASSEMBLED.
2. INSULATED PANELS: 25.4 [1"] THK. POLYURETHANE FOAM, 44.5 [1-3/4] # DENSITY.
3. DIMENSIONS IN [ ] ARE IN MILLIMETERS.
4. ROOFCURB: 18 GAGE STEEL.
5. ATTACH DUCTWORK TO CURB. (FLANGES OF DUCT REST ON CURB).
6. SERVICE CLEARANCE 4 FEET ON EACH SIDE.
7. ▨ DIRECTION OF AIR FLOW.
8. CONNECTOR PACKAGE CRBTMPWR001A01 IS FOR THRU-THE-CURB GAS TYPE PACKAGE CRBTMPWR003A01 IS FOR THRU-THE-BOTTOM TYPE GAS CONNECTIONS.

CONNECTOR PKG. ACC.	GAS CONNECTION TYPE	GAS FITTING	POWER WIRING FITTING	CONTROL WIRING FITTING	ACCESSORY CONVENIENCE OUTLET WIRING CONNECTOR
CRBTMPWR001A01	THRU THE CURB	3/4" [19] NPT	3/4" [19] NPT	1/2" [12.7] NPT	1/2" [12.7] NPT
CRBTMPWR003A01	THRU THE BOTTOM	1/2" [12.7] NPT			

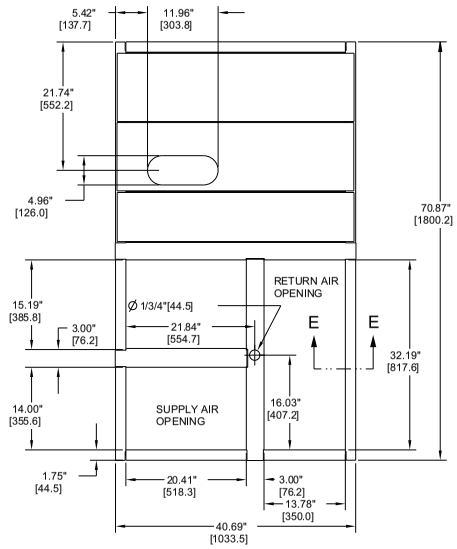

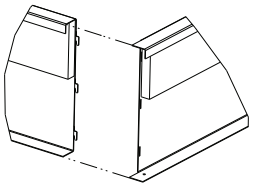

VIEW "B"
CORNER DETAIL

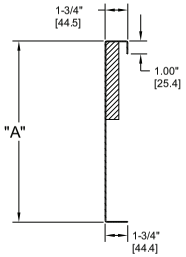

SECTION E-E
SCALE 0.250

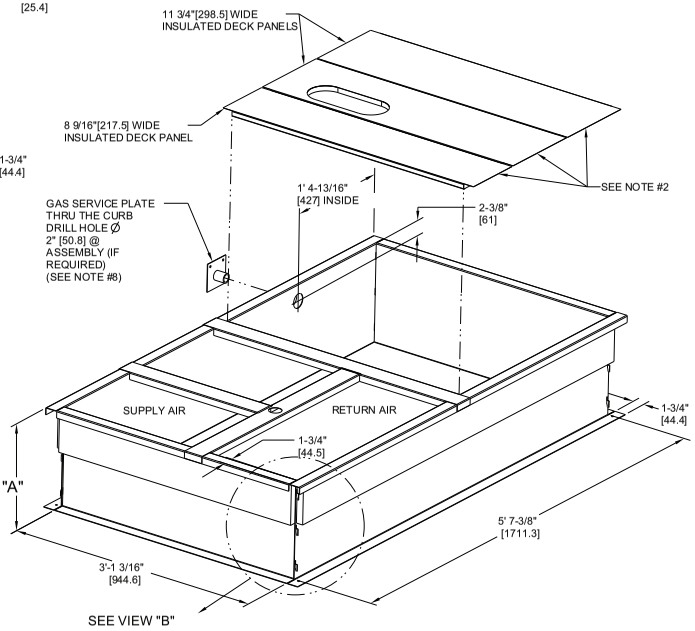

CERTIFIED DRAWING

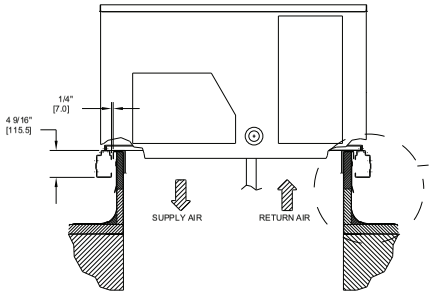

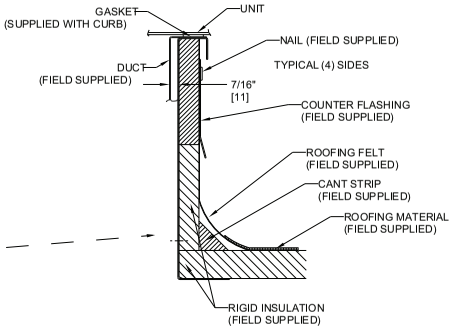

REV	REVISION RECORD	DATE	BY	CHK'D	APP'D	ECN NO.
A	OVERALL DIM. 5'-7 3/8" WAS 5'-7 7/8; 18GA MATERIAL WA 16 GA.; NAIL FIELD SUPPLIED WAS WITH CURB	04/22/13	MMC	-	-	1067898

DRAWING RELEASE LEVEL: PRODUCTION				
THIRD ANGLE PROJECTION	UNLESS OTHERWISE SPECIFIED DIMENSIONS ARE IN INCHES TOLERANCES ON: 1 DEC ± - 2 DEC ± - 3 DEC ± - ANG ± -			
MATERIAL - - -	AUTHORIZATION NUMBER 1041738		TITLE CURB ASY, ROOF	
ENGINEERING REQUIREMENTS T-005, Y-002	ENGINEERING -	MANUFACTURING -	SIZE D	DRAWING NUMBER 48TC400427 SHEET 5 OF 5 / REV B
WEIGHT: -	DRAFTER MMC 06/17/11	CHECKER -		
SURFACE FINISH - / MFG/PURCH PURCH	MODEL (INTERNAL USE ONLY)		NEXT DRAWING -	SCALE N/A / DISTRIBUTION MMC

UNIT DIMENSIONAL DRAWING - UNIT SIZES 07-08

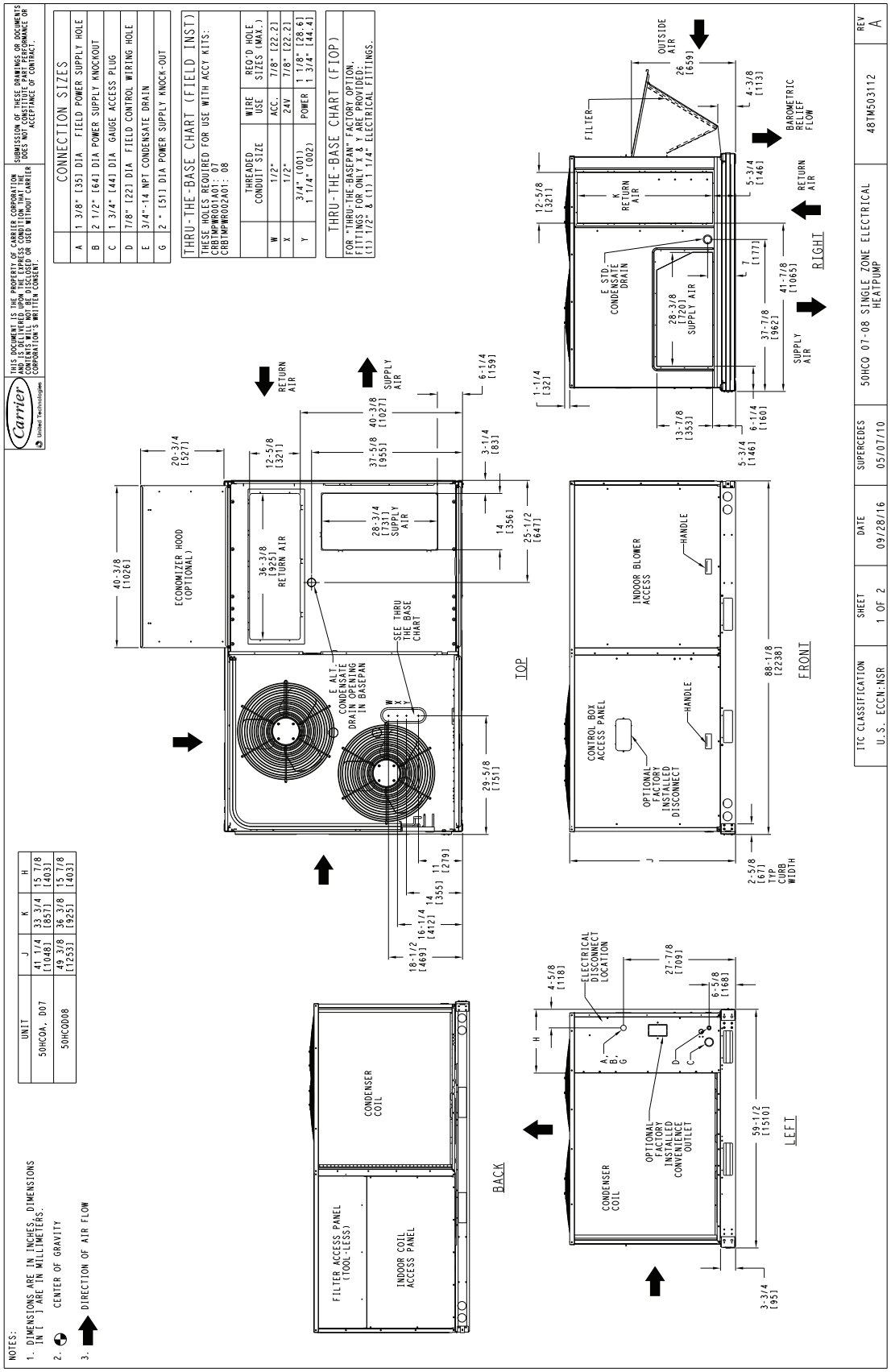

UNIT DIMENSIONAL DRAWING - UNIT SIZE 07-08 (cont)

UNIT	STD. UNIT WEIGHT *		CORNER WEIGHT (A)		CORNER WEIGHT (B)		CORNER WEIGHT (C)		CORNER WEIGHT (D)		C.G.		
	LBS.	KG.	LBS.	KG.	LBS.	KG.	LBS.	KG.	LBS.	KG.	X	Y	Z
50HCQA, D07	710	322	162	73.5	129	58.5	186	84.4	234	106	38 5/8 [981]	34 1/8 [867]	21 1/4 [540]
50HCQD08	875	397	190	86.2	160	72.6	253	114.8	284	128.8	40 [1016]	34 5/8 [879]	24 3/8 [619]

Carrier United Technologies

THIS DOCUMENT IS THE PROPERTY OF CARRIER CORPORATION AND IS DELIVERED UPON THE EXPRESS CONDITION THAT THE CONTENTS WILL NOT BE DISCLOSED OR USED WITHOUT CARRIER CORPORATION'S WRITTEN CONSENT.

SUBMISSION OF THESE DRAWINGS OR DOCUMENTS DOES NOT CONSTITUTE PART PERFORMANCE OR ACCEPTANCE OF CONTRACT.

* STANDARD UNIT WEIGHT IS WITHOUT ELECTRIC HEAT AND WITHOUT PACKAGING.
FOR OTHER OPTIONS AND ACCESSORIES, REFER TO THE PRODUCT DATA CATALOG.

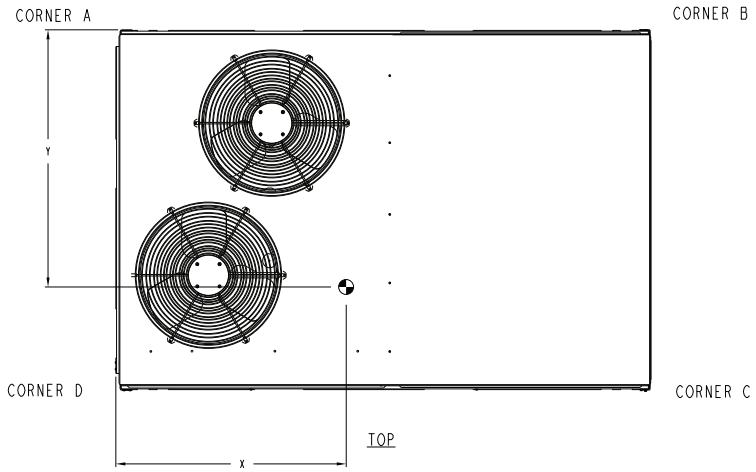

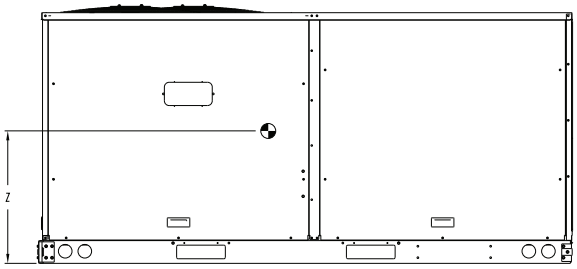

ITC CLASSIFICATION	SHEET	DATE	SUPERCEDES			REV
U.S. ECCN:NSR	2 OF 2	09/28/16	05/07/10	50HCQ 07-08 SINGLE ZONE ELECTRICAL HEATPUMP	48TM503112	A

SERVICE CLEARANCE DIMENSIONAL DRAWING - UNIT SIZES 07-08

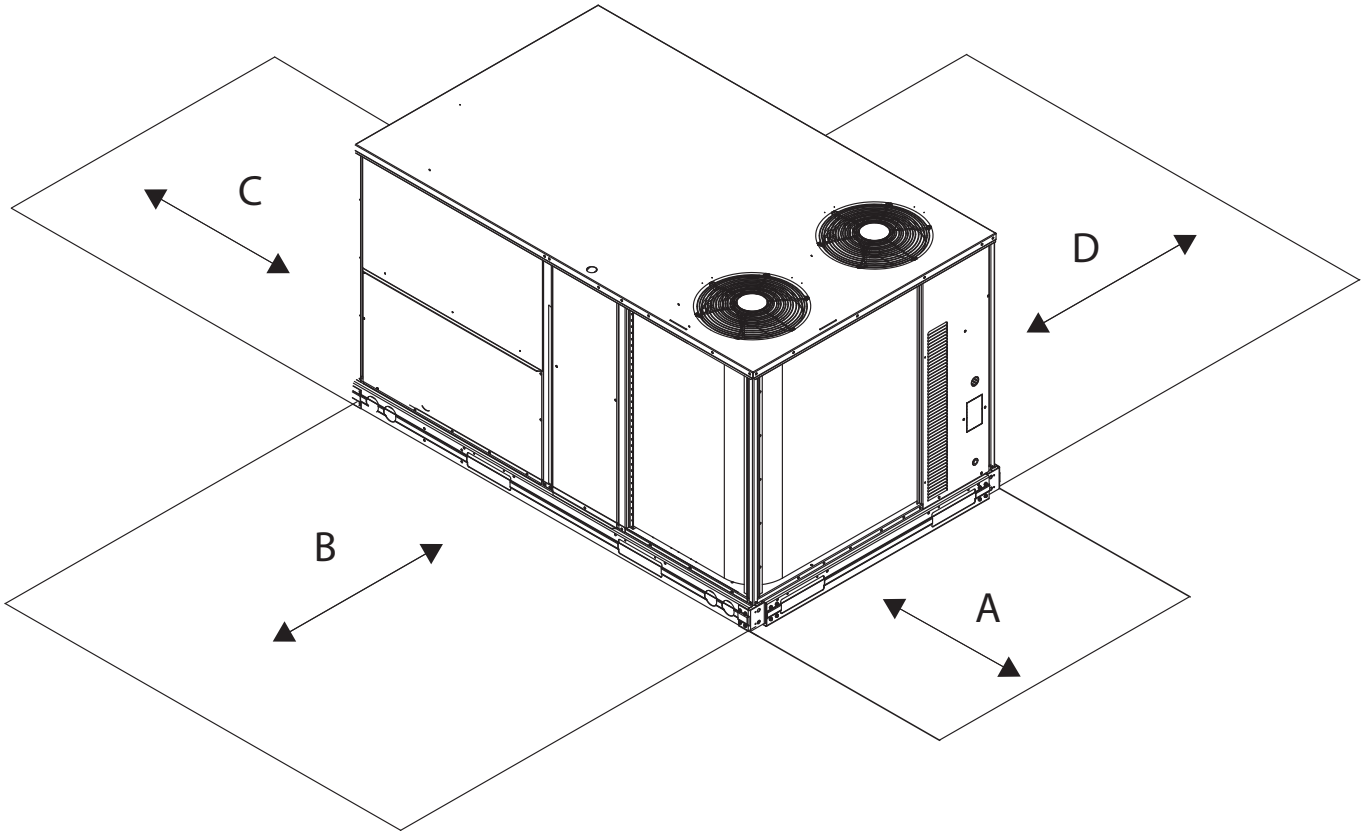

LOCATION	DIMENSION	CONDITION
A	48-in. (1219 mm) 18-in. (457 mm) 18-in. (457 mm) 12-in. (305 mm)	• Unit disconnect is mounted on panel • No disconnect, convenience outlet option • Recommended service clearance • Minimum clearance
B	42-in. (1067 mm) 36-in. (914 mm) Special	• Surface behind servicer is grounded (e.g., metal, masonry wall) • Surface behind servicer is electrically non-conductive (e.g., wood, fiberglass) • Check for sources of flue products within 10-ft of unit fresh air intake hood
C	36-in. (914 mm) 18-in. (457 mm)	• Side condensate drain is used • Minimum clearance
D	42-in. (1067 mm) 36-in. (914 mm)	• Surface behind servicer is grounded (e.g., metal, masonry wall, another unit) • Surface behind servicer is electrically non-conductive (e.g., wood, fiberglass)

NOTE: Unit not designed to have overhead obstruction. Contact Application Engineering for guidance on any application planning overhead obstruction or for vertical clearances.

UNIT DIMENSIONAL DRAWING - UNIT SIZE 09

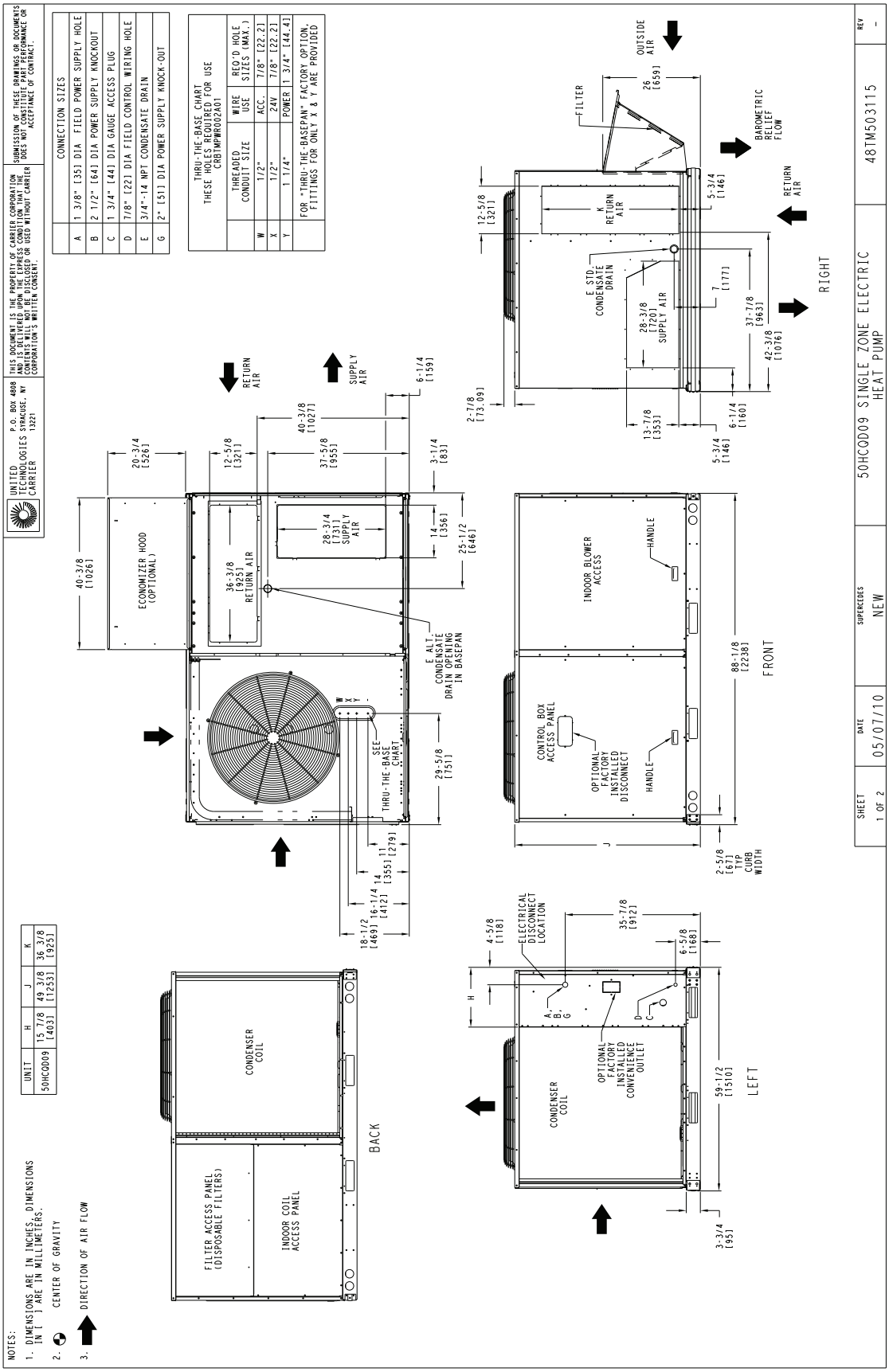

UNIT DIMENSIONAL DRAWING - UNIT SIZE 09 (cont)

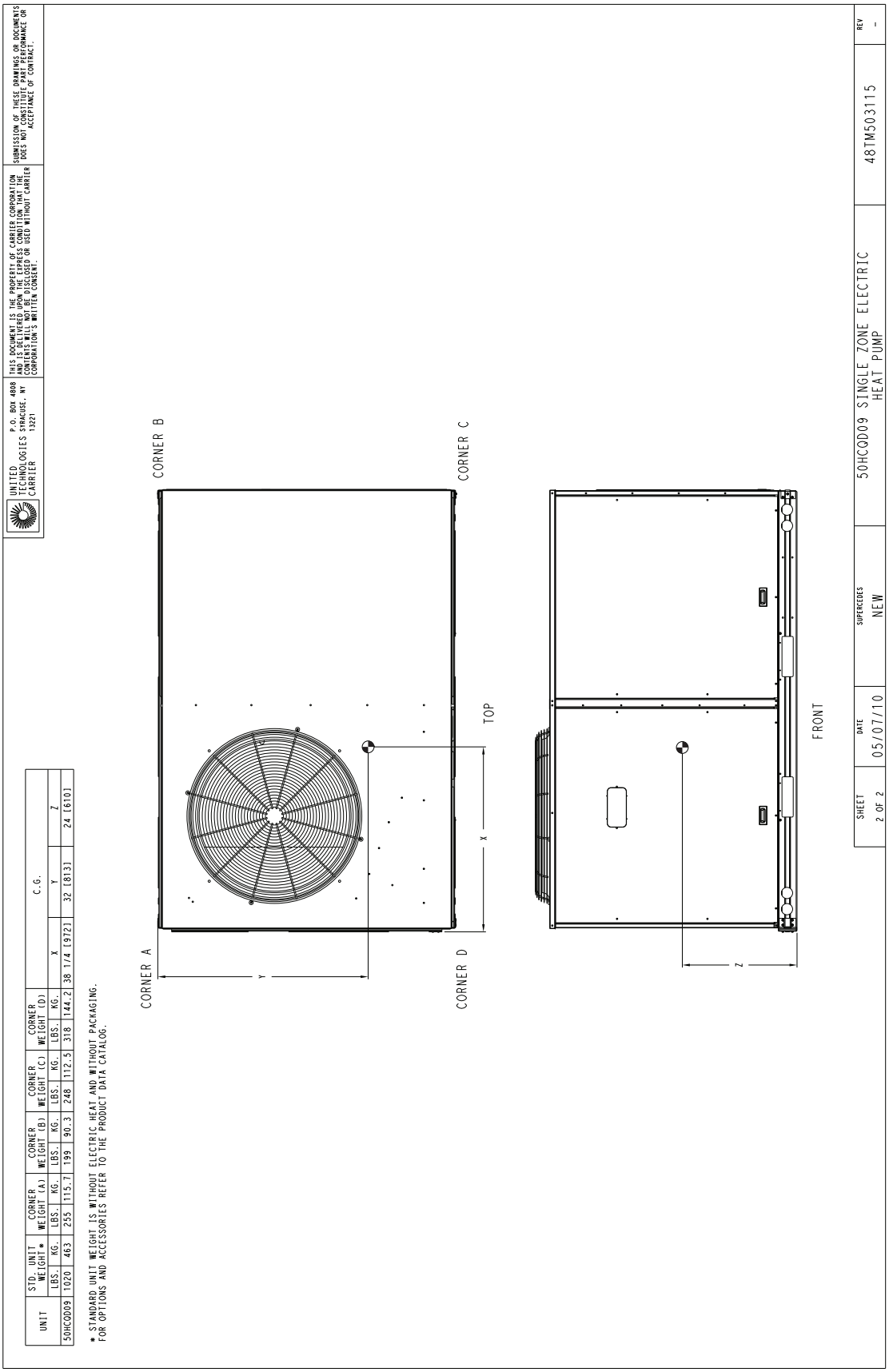

UNIT	STD. UNIT WEIGHT*		CORNER WEIGHT (A)		CORNER WEIGHT (B)		CORNER WEIGHT (C)		CORNER WEIGHT (D)		C.G.		
	LBS.	KG.	LBS.	KG.	LBS.	KG.	LBS.	KG.	LBS.	KG.	X	Y	Z
50HCQD09	1020	463	255	115.7	199	90.3	248	112.5	318	144.2	38 1/4 [972]	32 [813]	24 [610]

* STANDARD UNIT WEIGHT IS WITHOUT ELECTRIC HEAT AND WITHOUT PACKAGING. FOR OPTIONS AND ACCESSORIES REFER TO THE PRODUCT DATA CATALOG.

SERVICE CLEARANCE DIMENSIONAL DRAWING - UNIT SIZES 09

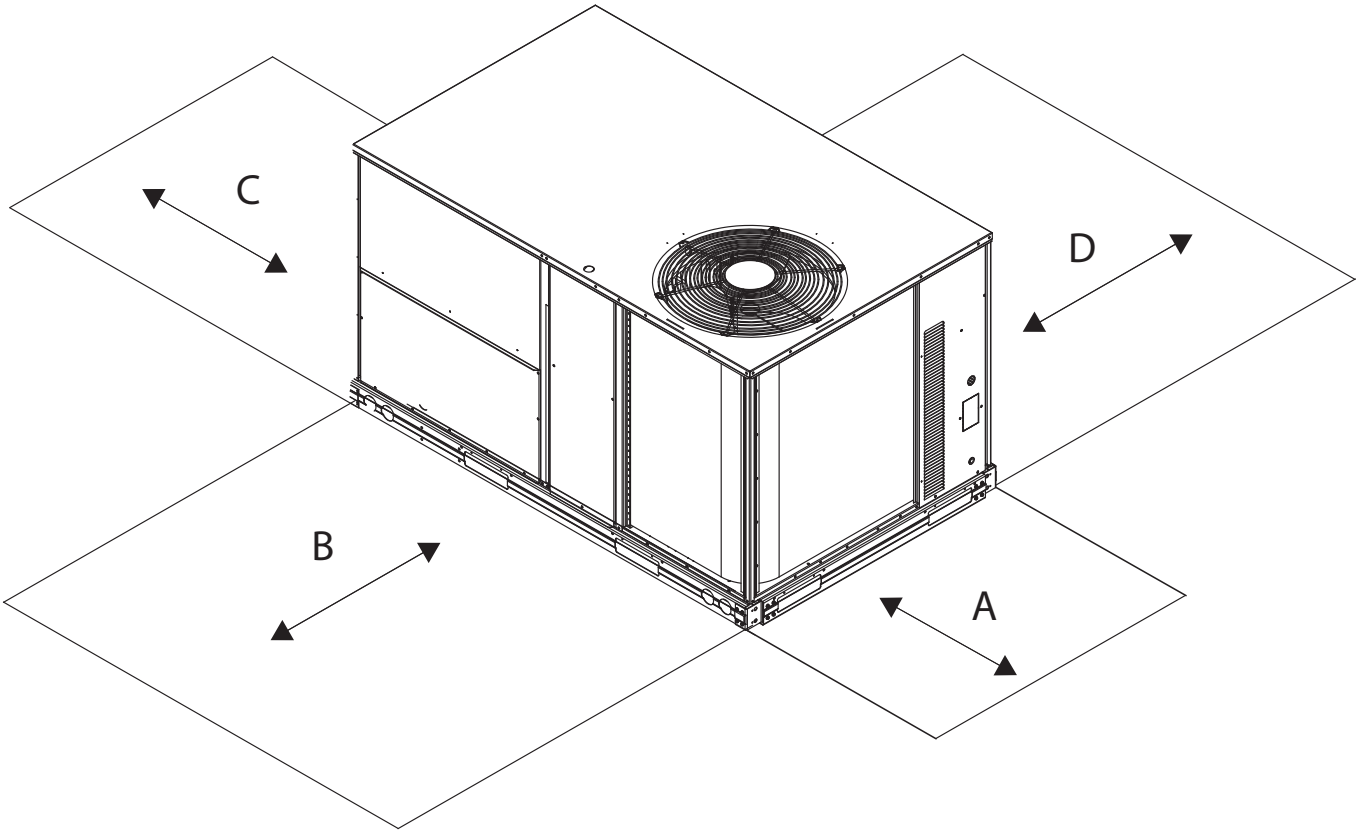

LOCATION	DIMENSION	CONDITION
A	48-in. (1219 mm) 18-in. (457 mm) 18-in. (457 mm) 12-in. (305 mm)	• Unit disconnect is mounted on panel • No disconnect, convenience outlet option • Recommended service clearance • Minimum clearance
B	42-in. (1067 mm) 36-in. (914 mm) Special	• Surface behind servicer is grounded (e.g., metal, masonry wall) • Surface behind servicer is electrically non-conductive (e.g., wood, fiberglass) • Check for sources of flue products within 10-ft of unit fresh air intake hood
C	36-in. (914 mm) 18-in. (457 mm)	• Side condensate drain is used • Minimum clearance
D	42-in. (1067 mm) 36-in. (914 mm)	• Surface behind servicer is grounded (e.g., metal, masonry wall, another unit) • Surface behind servicer is electrically non-conductive (e.g., wood, fiberglass)

NOTE: Unit not designed to have overhead obstruction. Contact Application Engineering for guidance on any application planning overhead obstruction or for vertical clearances.

ROOF CURB DETAILS - UNIT SIZES 07-09

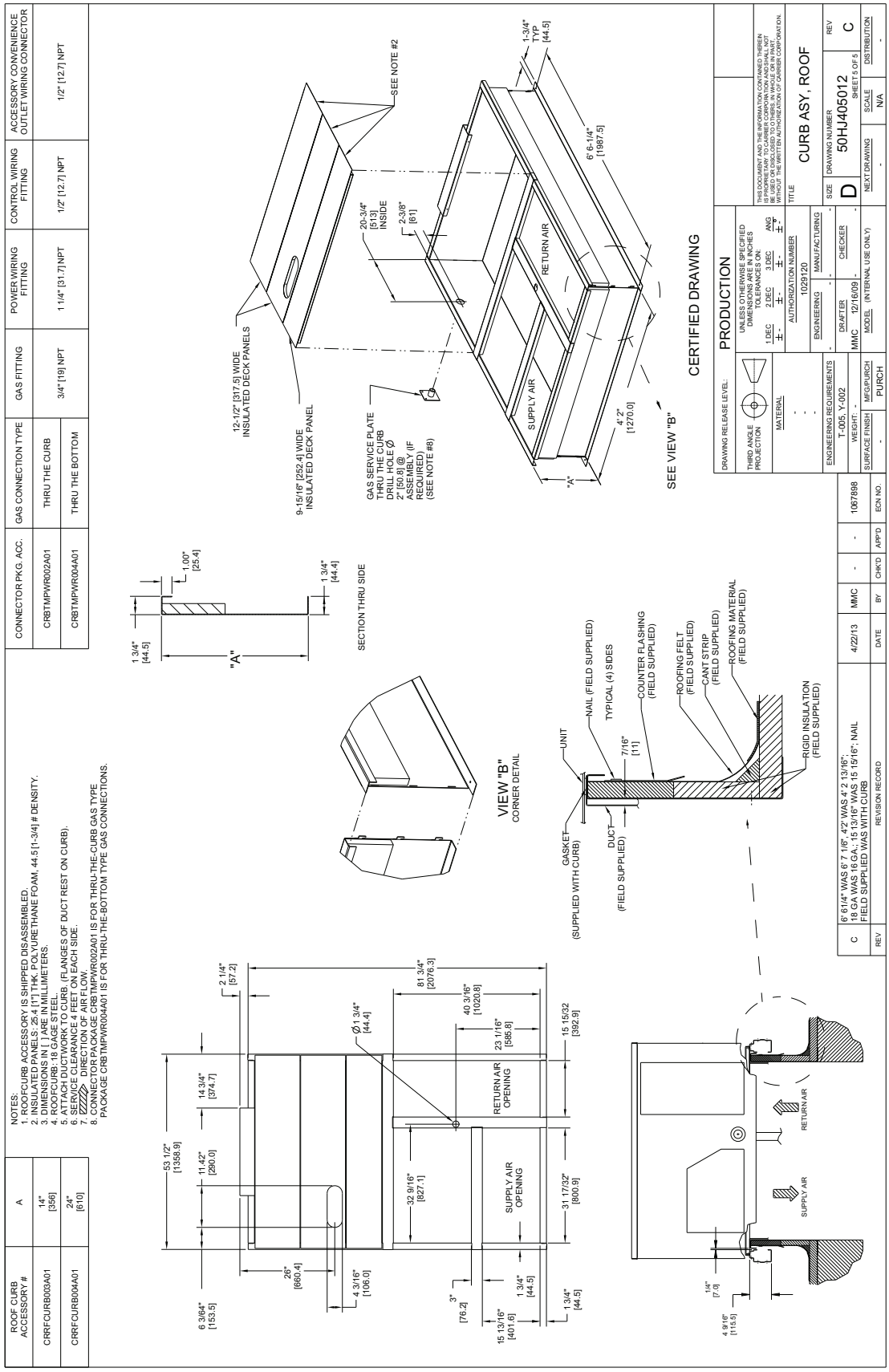

UNIT DIMENSIONAL DRAWING - UNIT SIZE 12

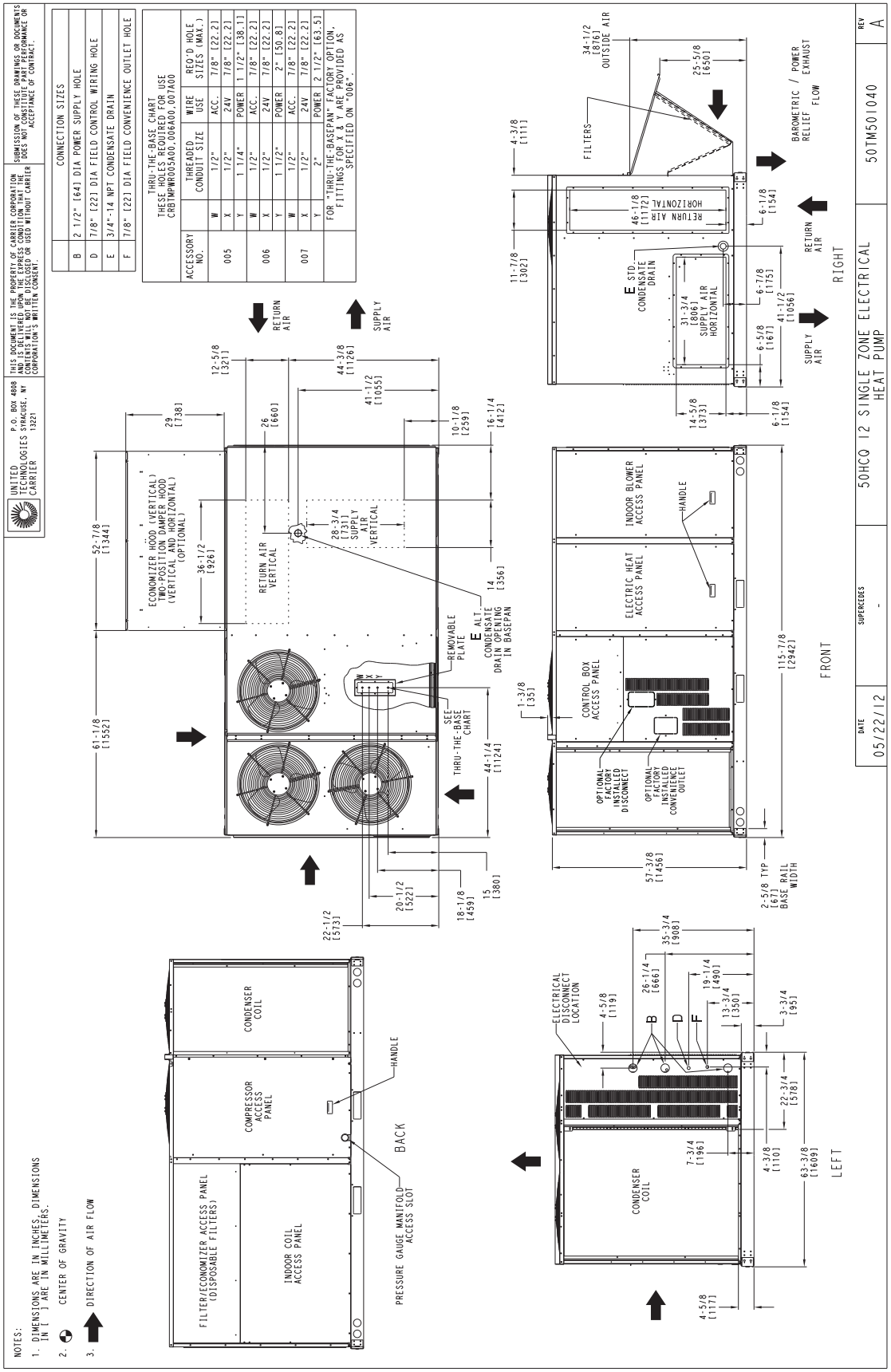

UNIT DIMENSIONAL DRAWING - UNIT SIZE 12 (cont)

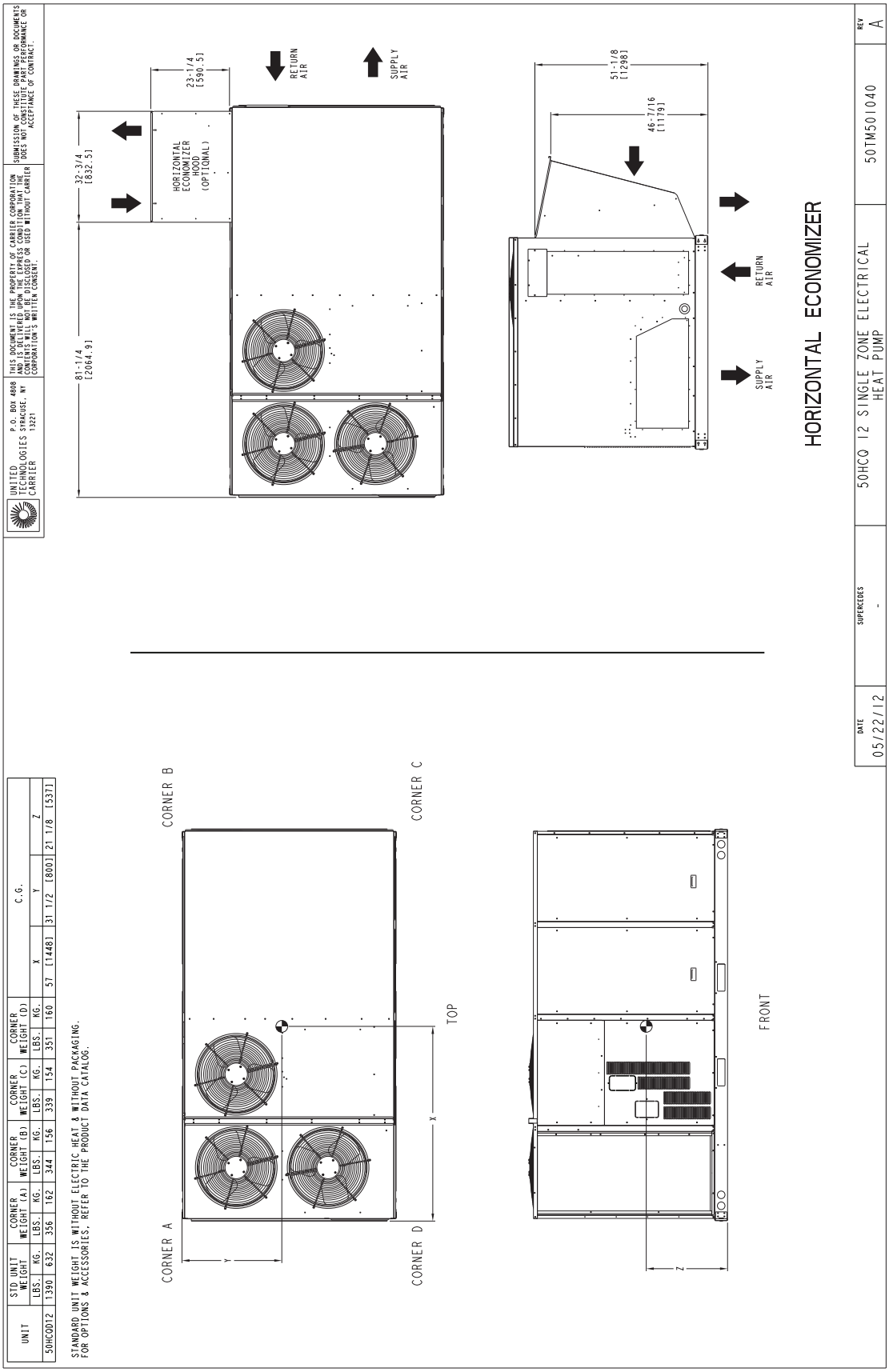

UNIT	STD UNIT WEIGHT		CORNER WEIGHT (A)		CORNER WEIGHT (B)		CORNER WEIGHT (C)		CORNER WEIGHT (D)		C.G.		
	LBS.	KG.	LBS.	KG.	LBS.	KG.	LBS.	KG.	LBS.	KG.	X	Y	Z
50HCQD12	1390	632	356	162	344	156	339	154	351	160	57 [1448]	31 1/2 [800]	21 1/8 [537]

STANDARD UNIT WEIGHT IS WITHOUT ELECTRIC HEAT & WITHOUT PACKAGING.
FOR OPTIONS & ACCESSORIES, REFER TO THE PRODUCT DATA CATALOG.

SERVICE CLEARANCE DIMENSIONAL DRAWING - UNIT SIZES 12

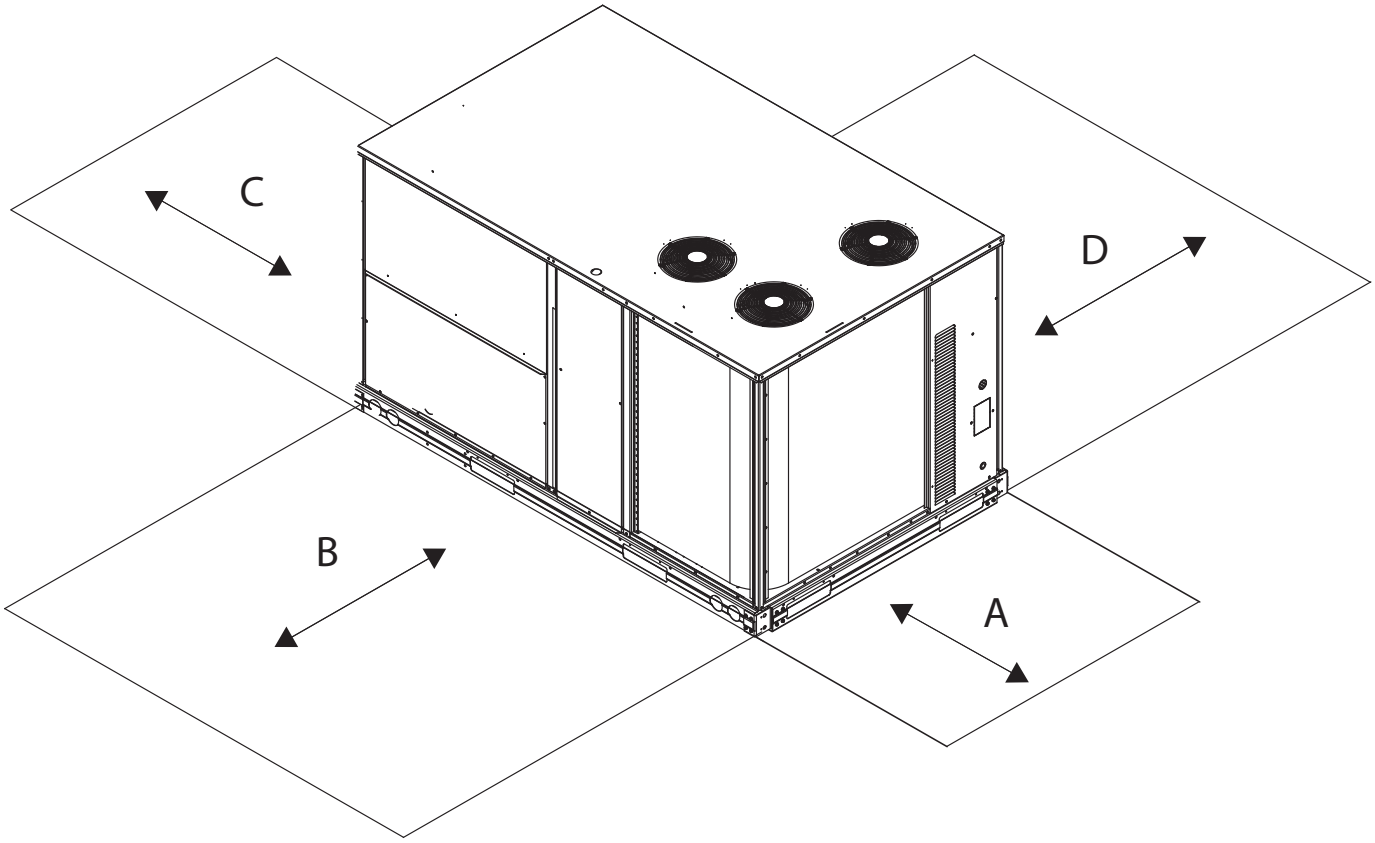

LOCATION	DIMENSION	CONDITION
A	48-in. (1219 mm) 18-in. (457 mm) 18-in. (457 mm) 12-in. (305 mm)	• Unit disconnect is mounted on panel • No disconnect, convenience outlet option • Recommended service clearance • Minimum clearance
B	42-in. (1067 mm) 36-in. (914 mm) Special	• Surface behind servicer is grounded (e.g., metal, masonry wall) • Surface behind servicer is electrically non-conductive (e.g., wood, fiberglass) • Check for sources of flue products within 10-ft of unit fresh air intake hood
C	36-in. (914 mm) 18-in. (457 mm)	• Side condensate drain is used • Minimum clearance
D	42-in. (1067 mm) 36-in. (914 mm)	• Surface behind servicer is grounded (e.g., metal, masonry wall, another unit) • Surface behind servicer is electrically non-conductive (e.g., wood, fiberglass)

NOTE: Unit not designed to have overhead obstruction. Contact Application Engineering for guidance on any application planning overhead obstruction or for vertical clearances.

ROOF CURB DETAILS - UNIT SIZES 12

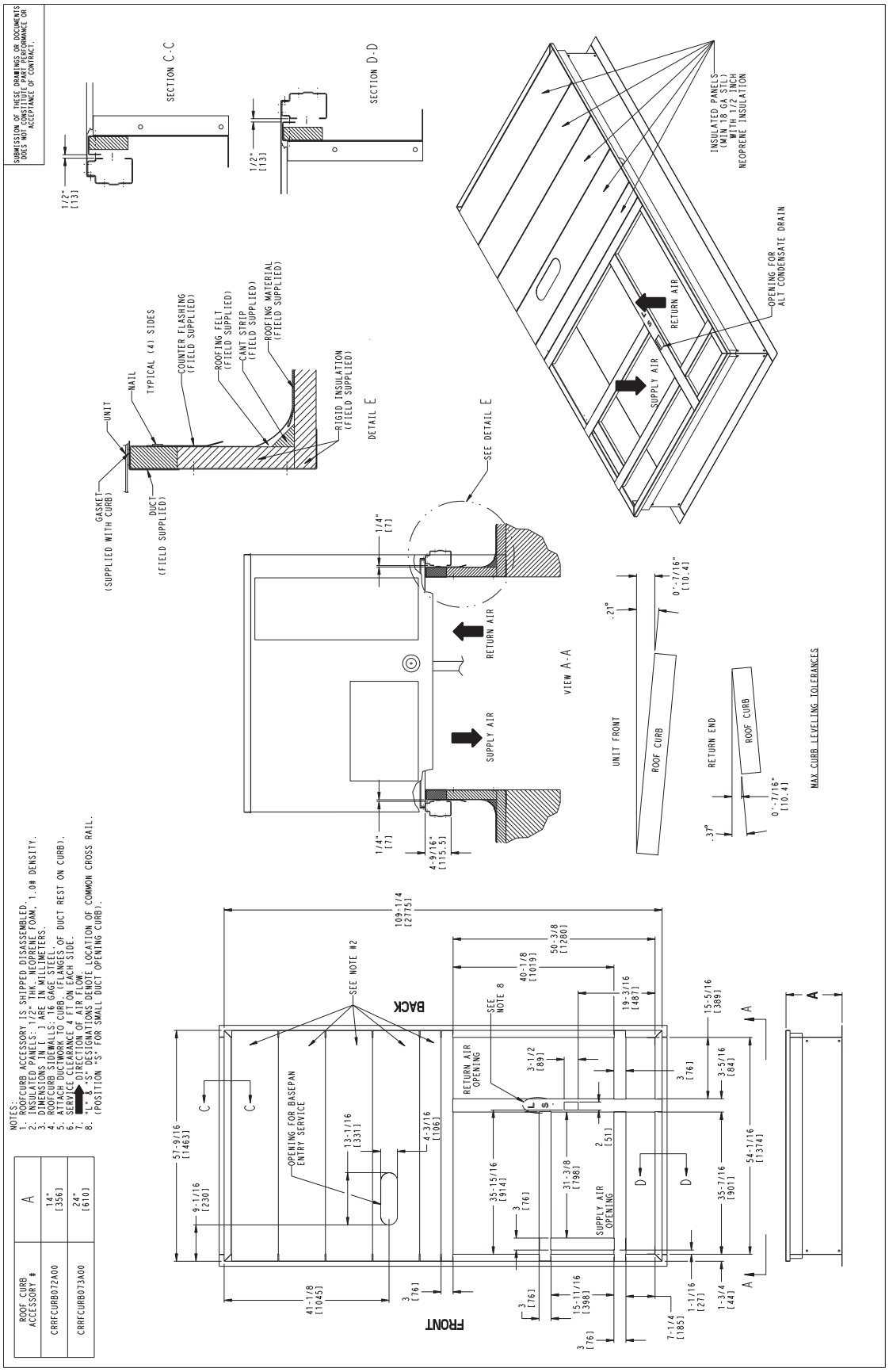

Application data

Min operating ambient temp (cooling)

In mechanical cooling mode, your Carrier rooftop can safely operate down to an outdoor ambient temperature of 30°F (-1°C). It is possible to provide cooling at lower outdoor ambient temperatures by using less outside air, economizers, and/or accessory low ambient kits.

Max operating ambient temp (cooling)

The maximum operating ambient temperature for cooling mode is 125°F (52°C). While cooling operation above 125°F (52°C) may be possible, it could cause either a reduction in performance, reliability, or a protective action by the unit's internal safety devices.

Min and max airflow (cooling and heating mode)

To maintain safe and reliable operation of your rooftop, operate within the cooling airflow limits. Operating above the max may cause blow-off, undesired airflow noise, or airflow related problems with the rooftop unit. Operating below the min may cause problems with coil freeze-up. For proper minimum-maximum CFM values see the table on page 5.

Airflow

All units are draw-though in cooling mode.

Outdoor air application strategies

Economizers reduce operating expenses and compressor run time by providing a free source of cooling and a means of ventilation to match application changing needs. In fact, they should be considered for most applications. Also, consider the various economizer control methods and their benefits, as well as sensors required to accomplish your application goals. Please contact your local Carrier representative for assistance.

Motor limits, break horsepower (BHP)

Due to Carrier's internal unit design, air path, and specially designed motors, the full horsepower (maximum continuous BHP) band, as listed in this manual, can be used with the utmost confidence. There is no need for extra safety factors, as Carrier's motors are designed and rigorously tested to use the entire, listed BHP range without either nuisance tripping or premature motor failure.

Sizing a rooftop

Bigger isn't necessarily better. While an air conditioner needs to have enough capacity to meet the load, it doesn't need excess capacity. In fact, having excess capacity typically results in very poor part load performance and humidity control.

Using higher design temperatures than ASHRAE recommends for your location, adding "safety factors" to the calculated load, and rounding up to the next largest unit, are all signs of oversizing air conditioners. Oversizing can cause short-cycling, and short cycling leads to poor humidity control, reduced efficiency, higher utility bills, drastic indoor temperature swings, excessive noise, and increased wear and tear on the air conditioner.

Rather than oversizing an air conditioner, wise contractors and engineers "right-size" or even slightly undersize air conditioners. Correctly sizing an air conditioner controls humidity better; promotes efficiency; reduces utility bills; extends equipment life, and maintains even, comfortable temperatures.

Low ambient applications

When equipped with a Carrier economizer, your rooftop unit can cool your space by bringing in fresh, cool outside air. In fact, when so equipped, accessory low ambient kit may not be necessary. In low ambient conditions, unless the outdoor air is excessively humid or contaminated, economizer-based "free cooling" is the preferred less costly and energy conscious method.

In low ambient applications where outside air might not be desired (such as contaminated or excessively humid outdoor environments), your Carrier rooftop can operate at ambient temperatures down to -20°F (-29°C) using the recommended accessory Motormaster® low ambient controller.

Application/Selection Option

Selection software by Carrier saves time by calculating performance in the selection process. Contact your Carrier sales representative for assistance.

Staged Air Volume (SAV™) with Variable Frequency Drive (VFD)

Carrier's Staged Air Volume (SAV) system utilizes a Variable Frequency Drive (VFD) to automatically adjust the indoor fan motor speed in sequence with the units cooling operation. Per ASHRAE 90.1-2016 and IECC-2015 standards, during the first stage of cooling operation the VFD will adjust the fan motor to provide 66% of the total cfm established for the unit. When a call for the second stage of cooling is required, the VFD will allow the total cfm for the unit established (100%). During the heating mode, the VFD will allow total design cfm (100%) operation and during the ventilation mode the VFD will allow operation to 66% of total cfm.

The VFD used in Carrier's SAV system has soft start capabilities to slowly ramp up the speeds, thus eliminating any high inrush air volume during initial start-up. It also has internal over current protection for the fan motor and a field-installed display kit that allows adjustment and in depth diagnostics of the VFD.

This SAV system is available on models with 2-stage cooling operation with electrical mechanical or RTU Open (multi Protocol) controls. Both space sensor and conventional thermostat controls can be used to provide accurate control in any application.

The SAV system is very flexible for initial fan performance set up and adjustment. The standard factory shipped VFD is pre-programmed to automatically stage the fan speed between the first and second stage of cooling. The unit fan performance static pressure and cfm can be easily adjusted using the traditional means of pulley adjustments. The other means to adjust the unit static and cfm performance is to utilize the field-installed display module and adjust the frequency and voltage in the VFD to required performance requirements. In either case, once set up the VFD will automatically adjust the speed between the cooling stage operations.

50HCQ - STAGED AIR VOLUME (SAV) - VARIABLE FREQUENCY DRIVE (VFD) HP RATING

UNIT SIZE	VOLTAGE	STATIC OPTION	VFD HP RATING
07	208/230, 460, 575	STD	3
	208/230, 460	MED	3
	575	MED	5
	208/230, 460, 575	HIGH	7.5
08	208/230, 460, 575	STD	3
	208/230, 460, 575	MED	3
	208/230, 460, 575	HIGH	5
09	208/230, 460, 575	STD	3
	208/230, 460	MED	3
	575	MED	5
	208/230, 460, 575	HIGH	5
12	208/230, 460, 575	STD	3
	208/230, 460	MED	3
	575	MED	5
	208/230, 460, 575	HIGH	7.5

COOLING CAPACITIES 1-STAGE COOLING, 3 TONS

50HCQA04				AMBIENT TEMPERATURE (F)														
				85			95			105			115			125		
				EAT (db)			EAT (db)			EAT (db)			EAT (db)			EAT (db)		
				75	80	85	75	80	85	75	80	85	75	80	85	75	80	85
900 Cfm	EAT (wb)	58	TC	31.8	31.8	36.0	30.5	30.5	34.5	29.0	29.0	32.9	27.5	27.5	31.1	25.7	25.7	29.2
			SHC	27.5	31.8	36.0	26.4	30.5	34.5	25.2	29.0	32.9	23.8	27.5	31.1	22.3	25.7	29.2
		62	TC	33.5	33.5	34.2	31.8	31.8	33.4	30.0	30.0	32.5	28.0	28.0	31.4	25.9	25.9	30.2
			SHC	24.9	29.5	34.2	24.0	28.7	33.4	23.2	27.8	32.5	22.2	26.8	31.4	21.1	25.7	30.2
		67	TC	36.8	36.8	36.8	34.9	34.9	34.9	32.9	32.9	32.9	30.8	30.8	30.8	28.4	28.4	28.4
			SHC	20.6	25.2	29.9	19.8	24.4	29.1	18.9	23.6	28.3	18.0	22.7	27.4	17.0	21.7	26.4
		72	TC	40.4	40.4	40.4	38.4	38.4	38.4	36.2	36.2	36.2	33.8	33.8	33.8	31.3	31.3	31.3
			SHC	16.1	20.9	25.6	15.4	20.1	24.8	14.5	19.2	24.0	13.6	18.3	23.0	12.7	17.4	22.1
		76	TC	—	43.4	43.4	—	41.2	41.2	—	38.9	38.9	—	36.4	36.4	—	33.7	33.7
			SHC	—	17.3	22.2	—	16.5	21.5	—	15.7	20.6	—	14.8	19.6	—	13.9	18.7
1050 Cfm	EAT (wb)	58	TC	33.5	33.5	38.0	32.1	32.1	36.4	30.6	30.6	34.7	28.9	28.9	32.7	27.0	27.0	30.6
			SHC	29.0	33.5	38.0	27.8	32.1	36.4	26.5	30.6	34.7	25.0	28.9	32.7	23.4	27.0	30.6
		62	TC	34.6	34.6	37.4	32.8	32.8	36.5	30.9	30.9	35.5	28.9	28.9	34.1	27.0	27.0	31.9
			SHC	26.7	32.1	37.4	25.9	31.2	36.5	24.9	30.2	35.5	23.8	28.9	34.1	22.2	27.0	31.9
		67	TC	37.9	37.9	37.9	35.9	35.9	35.9	33.8	33.8	33.8	31.5	31.5	31.5	29.0	29.0	29.0
			SHC	21.8	27.2	32.6	21.0	26.4	31.8	20.1	25.5	30.9	19.2	24.6	29.9	18.2	23.6	28.9
		72	TC	41.5	41.5	41.5	39.4	39.4	39.4	37.1	37.1	37.1	34.6	34.6	34.6	31.9	31.9	31.9
			SHC	16.7	22.1	27.6	15.9	21.3	26.7	15.0	20.4	25.9	14.1	19.5	24.9	13.1	18.6	24.0
		76	TC	—	44.6	44.6	—	42.3	42.3	—	39.8	39.8	—	37.2	37.2	—	34.4	34.4
			SHC	—	18.0	23.6	—	17.2	22.8	—	16.3	21.9	—	15.4	21.0	—	14.5	20.0
1200 Cfm	EAT (wb)	58	TC	35.0	35.0	39.7	33.5	33.5	38.0	31.8	31.8	36.1	30.0	30.0	34.0	28.1	28.1	31.8
			SHC	30.3	35.0	39.7	29.0	33.5	38.0.	27.6	31.8	36.1	26.0	30.0	34.0	24.3	28.1	31.8
		62	TC	35.5	35.5	40.4	33.7	33.7	39.3	31.9	31.9	37.6	30.1	30.1	35.4	28.1	28.1	33.1
			SHC	28.4	34.4	40.4	27.4	33.3	39.3	26.2	31.9	37.6	24.7	30.1	35.4	23.1	28.1	33.1
		67	TC	38.7	38.7	38.7	36.7	36.7	36.7	34.5	34.5	34.5	32.1	32.1	32.4	29.5	29.5	31.4
			SHC	22.9	29.0	35.1	22.1	28.2	34.3	21.2	27.3	33.4	20.3	26.3	32.4	19.2	25.3	31.4
		72	TC	42.4	42.4	42.4	40.2	40.2	40.2	37.8	37.8	37.8	35.2	35.2	35.2	32.5	32.5	32.5
			SHC	17.1	23.3	29.4	16.3	22.5	28.6	15.5	21.6	27.7	14.5	20.7	26.8	13.6	19.7	25.8
		76	TC	—	45.5	45.5	—	43.1	43.1	—	40.6	40.6	—	37.8	37.8	—	34.9	34.9
			SHC	—	18.6	25.0	—	17.8	24.1	—	17.0	23.2	—	16.0	22.3	—	15.1	21.3
1350 Cfm	EAT (wb)	58	TC	36.2	36.2	41.1	34.6	34.6	39.3	32.9	32.9	37.3	31.0	31.0	35.1	28.9	28.9	32.8
			SHC	31.4	36.2	41.1	30.0	34.6	39.3	28.5	32.9	37.3	26.9	31.0	35.1	25.1	28.9	32.8
		62	TC	36.3	36.3	42.8	34.7	34.7	40.9	32.9	32.9	38.8	31.0	31.0	36.6	29.0	29.0	34.1
			SHC	29.8	36.3	42.8	28.5	34.7	40.9	27.1	32.9	38.8	25.5	31.0	36.6	23.8	29.0	34.1
		67	TC	39.4	39.4	39.4	37.3	37.3	37.3	35.0	35.0	35.8	32.5	32.5	34.8	29.9	29.9	33.7
			SHC	24.0	30.8	37.6	23.2	30.0	36.8	22.3	29.1	35.8	21.3	28.1	34.8	20.3	27.0	33.7
		72	TC	43.1	43.1	43.1	40.8	40.8	40.8	38.3	38.3	38.3	35.7	35.7	35.7	32.9	32.9	32.9
			SHC	17.6	24.4	31.3	16.8	23.6	30.4	15.9	22.7	29.5	14.9	21.8	28.6	14.0	20.8	27.6
		76	TC	—	46.2	46.2	—	43.8	43.8	—	41.1	41.1	—	38.3	38.3	—	35.3	35.3
			SHC	—	19.2	26.2	—	18.4	25.4	—	17.5	24.5	—	16.6	23.5	—	15.6	22.5
1500 Cfm	EAT (wb)	58	TC	37.3	37.3	42.3	35.6	35.6	40.4	33.8	33.8	38.3	31.8	31.8	36.1	29.7	29.7	33.6
			SHC	32.3	37.3	42.3	30.9	35.6	40.4	29.3	33.8	38.3	27.6	31.8	36.1	25.7	29.7	33.6
		62	TC	37.3	37.3	44.0	35.7	35.7	42.0	33.9	33.9	39.9	31.9	31.9	37.5	29.7	29.7	35.0
			SHC	30.7	37.3	44.0	29.3	35.7	42.0	27.8	33.9	39.9	26.2	31.9	37.5	24.4	29.7	35.0
		67	TC	39.9	39.9	40.0	37.8	37.8	39.1	35.4	35.4	38.1	32.9	32.9	37.1	30.3	30.3	35.9
			SHC	25.1	32.5	40.0	24.2	31.7	39.1	23.3	30.7	38.1	22.3	29.7	37.1	21.2	28.5	35.9
		72	TC	43.7	43.7	43.7	41.3	41.3	41.3	38.8	38.8	38.8	36.1	36.1	36.1	33.2	33.2	33.2
			SHC	18.0	25.5	33.0	17.2	24.7	32.1	16.3	23.8	31.2	15.3	22.8	30.3	14.3	21.8	29.3
		76	TC	—	46.8	46.8	—	44.3	44.3	—	41.6	41.6	—	38.7	38.7	—	35.6	35.6
			SHC	—	19.8	27.4	—	19.0	26.6	—	18.1	25.7	—	17.1	24.7	—	16.1	23.7

LEGEND

— — Do not operate
Cfm — Cubic feet per minute (supply air)
EAT (db) — Entering Air Temperature (dry bulb)
EAT (wb) — Entering Air Temperature (wet bulb)
SHC — Sensible Heat Capacity (1000 Btuh) Gross
TC — Total Capacity (1000 Btuh) Gross

COOLING CAPACITIES 1-STAGE COOLING, 4 TONS

50HCQA05				AMBIENT TEMPERATURE (F)														
				85			95			105			115			125		
				EAT (db)			EAT (db)			EAT (db)			EAT (db)			EAT (db)		
				75	80	85	75	80	85	75	80	85	75	80	85	75	80	85
1200 Cfm	EAT (wb)	58	TC	41.1	41.1	46.6	39.5	39.5	44.8	37.7	37.7	42.7	35.8	35.8	40.6	33.7	33.7	38.2
			SHC	35.6	41.1	46.6	34.2	39.5	44.8	32.7	37.7	42.7	31.0	35.8	40.6	29.2	33.7	38.2
		62	TC	43.1	43.1	44.7	41.0	41.0	43.6	38.7	38.7	42.5	36.3	36.3	41.2	33.8	33.8	39.8
			SHC	32.3	38.5	44.7	31.3	37.5	43.6	30.2	36.3	42.5	29.0	35.1	41.2	27.8	33.8	39.8
		67	TC	47.4	47.4	47.4	45.1	45.1	45.1	42.6	42.6	42.6	39.9	39.9	39.9	37.1	37.1	37.1
			SHC	26.7	32.9	39.1	25.7	31.9	38.0	24.6	30.8	37.0	23.5	29.7	35.9	22.4	28.5	34.7
		72	TC	52.1	52.1	52.1	49.6	49.6	49.6	46.8	46.8	46.8	43.9	43.9	43.9	40.8	40.8	40.8
			SHC	20.8	27.1	33.4	19.9	26.1	32.3	18.8	25.1	31.3	17.7	24.0	30.2	16.6	22.8	29.0
		76	TC	—	56.1	56.1	—	53.3	53.3	—	50.4	50.4	—	47.3	47.3	—	44.0	44.0
			SHC	—	22.4	29.0	—	21.4	28.0	—	20.4	26.9	—	19.3	25.7	—	18.2	24.6
1400 Cfm	EAT (wb)	58	TC	43.3	43.3	49.1	41.6	41.6	47.1	39.6	39.6	44.9	37.6	37.6	42.6	35.4	35.4	40.1
			SHC	37.5	43.3	49.1	36.0	41.6	47.1	34.4	39.6	44.9	32.6	37.6	42.6	30.6	35.4	40.1
		62	TC	44.5	44.5	48.9	42.3	42.3	47.7	39.9	39.9	46.3	37.7	37.7	44.4	35.4	35.4	41.7
			SHC	34.7	41.8	48.9	33.6	40.7	47.7	32.4	39.4	46.3	30.9	37.7	44.4	29.1	35.4	41.7
		67	TC	48.8	48.8	48.8	46.3	46.3	46.3	43.7	43.7	43.7	40.9	40.9	40.9	37.9	37.9	38.1
			SHC	28.3	35.4	42.5	27.2	34.4	41.5	26.2	33.3	40.4	25.0	32.2	39.3	23.8	31.0	38.1
		72	TC	53.6	53.6	53.6	50.9	50.9	50.9	48.0	48.0	48.0	45.0	45.0	45.0	41.7	41.7	41.7
			SHC	21.6	28.7	35.9	20.5	27.7	34.9	19.5	26.6	33.8	18.4	25.5	32.7	17.2	24.3	31.5
		76	TC	—	57.6	57.6	—	54.7	54.7	—	51.6	51.6	—	48.4	48.4	—	44.9	44.9
			SHC	—	23.3	30.9	—	22.3	29.8	—	21.3	28.7	—	20.1	27.5	—	19.0	26.3
1600 Cfm	EAT (wb)	58	TC	45.2	45.2	51.3	43.3	43.3	49.1	41.3	41.3	46.8	39.1	39.1	44.3	36.7	36.7	41.6
			SHC	39.2	45.2	51.3	37.5	43.3	49.1	35.8	41.3	46.8	33.9	39.1	44.3	31.8	36.7	41.6
		62	TC	46.1	46.1	50.5	43.4	43.4	51.1	41.3	41.3	48.7	39.1	39.1	46.1	36.7	36.7	43.3
			SHC	36.0	43.3	50.5	35.7	43.4	51.1	33.9	41.3	48.7	32.1	39.1	46.1	30.2	36.7	43.3
		67	TC	49.9	49.9	49.9	47.3	47.3	47.3	44.6	44.6	44.6	41.6	41.6	42.6	38.6	38.6	41.3
			SHC	29.8	37.8	45.9	28.7	36.8	44.8	27.6	35.7	43.7	26.5	34.5	42.6	25.2	33.3	41.3
		72	TC	54.7	54.7	54.7	51.9	51.9	51.9	48.9	48.9	48.9	45.7	45.7	45.7	42.4	42.4	42.4
			SHC	22.2	30.3	38.4	21.2	29.2	37.3	20.1	28.2	36.2	18.9	27.0	35.1	17.7	25.8	33.9
		76	TC	—	58.8	58.8	—	55.8	55.8	—	52.6	52.6	—	49.2	49.2	—	45.6	45.6
			SHC	—	24.2	32.6	—	23.1	31.5	—	22.1	30.3	—	20.9	29.1	—	19.7	27.9
1800 Cfm	EAT (wb)	58	TC	46.8	46.8	53.1	44.8	44.8	50.8	42.7	42.7	48.3	40.3	40.3	45.7	37.8	37.8	42.9
			SHC	40.6	46.8	53.1	38.8	44.8	50.8	37.0	42.7	48.3	34.9	40.3	45.7	32.8	37.8	42.9
		62	TC	46.9	46.9	55.2	44.8	44.8	52.8	42.7	42.7	50.3	40.4	40.4	47.6	37.9	37.9	44.6
			SHC	38.5	46.9	55.2	36.8	44.8	52.8	35.1	42.7	50.3	33.2	40.4	47.6	31.1	37.9	44.6
		67	TC	50.8	50.8	50.8	48.1	48.1	48.1	45.2	45.2	46.9	42.2	42.2	45.7	39.1	39.1	44.3
			SHC	31.2	40.2	49.1	30.1	39.1	48.0	29.0	37.9	46.9	27.8	36.7	45.7	26.6	35.4	44.3
		72	TC	55.7	55.7	55.7	52.7	52.7	52.7	49.6	49.6	49.6	46.4	46.4	46.4	42.9	42.9	42.9
			SHC	22.8	31.8	40.8	21.7	30.7	39.7	20.6	29.6	38.6	19.5	28.4	37.4	18.3	27.2	36.2
		76	TC	—	59.7	59.7	—	56.6	56.6	—	53.3	53.3	—	49.8	49.8	—	46.1	46.1
			SHC	—	25.0	34.2	—	23.9	33.1	—	22.8	31.9	—	21.6	30.7	—	20.4	29.5
2000 Cfm	EAT (wb)	58	TC	48.2	48.2	54.6	46.1	46.1	52.2	43.8	43.8	49.7	41.4	41.4	46.9	38.8	38.8	44.0
			SHC	41.8	48.2	54.6	39.9	46.1	52.2	38.0	43.8	49.7	35.9	41.4	46.9	33.6	38.8	44.0
		62	TC	48.2	48.2	56.8	46.1	46.1	54.4	43.9	43.9	51.7	41.4	41.4	48.8	38.8	38.8	45.7
			SHC	39.6	48.2	56.8	37.9	46.1	54.4	36.0	43.9	51.7	34.0	41.4	48.8	31.9	38.8	45.7
		67	TC	51.4	51.4	52.2	48.7	48.7	51.1	45.8	45.8	49.9	42.7	42.7	48.6	39.5	39.5	47.1
			SHC	32.6	42.4	52.2	31.5	41.3	51.1	30.3	40.1	49.9	29.1	38.8	48.6	27.8	37.4	47.1
		72	TC	56.4	56.4	56.4	53.4	53.4	53.4	50.2	50.2	50.2	46.9	46.9	46.9	43.3	43.3	43.3
			SHC	23.3	33.2	43.0	22.2	32.1	41.9	21.1	31.0	40.8	20.0	29.8	39.6	18.8	28.6	38.4
		76	TC	—	60.4	60.4	—	57.2	57.2	—	53.9	53.9	—	50.3	50.3	—	46.5	46.5
			SHC	—	25.7	35.7	—	24.6	34.6	—	23.5	33.5	—	22.3	32.2	—	21.1	31.0

LEGEND

— — Do not operate
Cfm — Cubic feet per minute (supply air)
EAT (db) — Entering Air Temperature (dry bulb)
EAT (wb) — Entering Air Temperature (wet bulb)
SHC — Sensible Heat Capacity (1000 Btuh) Gross
TC — Total Capacity (1000 Btuh) Gross

COOLING CAPACITIES 1-STAGE COOLING, 5 TONS

50HCQA06				AMBIENT TEMPERATURE (F)														
				85			95			105			115			125		
				EAT (db)			EAT (db)			EAT (db)			EAT (db)			EAT (db)		
				75	80	85	75	80	85	75	80	85	75	80	85	75	80	85
1500 Cfm	EAT (wb)	58	TC	53.8	53.8	60.7	51.7	51.7	58.3	49.4	49.4	55.8	46.9	46.9	53.0	44.2	44.2	49.9
			SHC	46.9	53.8	60.7	45.0	51.7	58.3	43.0	49.4	55.8	40.9	46.9	53.0	38.5	44.2	49.9
		62	TC	56.2	56.2	58.3	53.5	53.5	57.0	50.6	50.6	55.5	47.5	47.5	53.9	44.2	44.2	51.8
			SHC	42.6	50.5	58.3	41.3	49.1	57.0	39.9	47.7	55.5	38.4	46.2	53.9	36.6	44.2	51.8
		67	TC	61.7	61.7	61.7	58.7	58.7	58.7	55.5	55.5	55.5	52.0	52.0	52.0	48.2	48.2	48.2
			SHC	35.1	43.0	50.9	33.8	41.7	49.6	32.5	40.4	48.3	31.1	38.9	46.8	29.5	37.4	45.3
		72	TC	67.7	67.7	67.7	64.4	64.4	64.4	60.9	60.9	60.9	57.1	57.1	57.1	53.0	53.0	53.0
			SHC	27.4	35.3	43.3	26.1	34.1	42.0	24.8	32.7	40.7	23.4	31.3	39.2	21.9	29.8	37.7
		76	TC	—	72.7	72.7	—	69.2	69.2	—	65.4	65.4	—	61.3	61.3	—	56.9	56.9
			SHC	—	29.0	37.3	—	27.8	36.1	—	26.5	34.7	—	25.1	33.2	—	23.5	31.6
1750 Cfm	EAT (wb)	58	TC	56.7	56.7	64.0	54.4	54.4	61.4	51.9	51.9	58.6	49.2	49.2	55.6	46.2	46.2	52.2
			SHC	49.4	56.7	64.0	47.4	54.4	61.4	45.2	51.9	58.6	42.9	49.2	55.6	40.3	46.2	52.2
		62	TC	58.0	58.0	63.8	55.2	55.2	62.3	52.2	52.2	60.5	49.3	49.3	57.8	46.3	46.3	54.2
			SHC	45.9	54.8	63.8	44.5	53.4	62.3	42.9	51.7	60.5	40.8	49.3	57.8	38.3	46.3	54.2
		67	TC	63.4	63.4	63.4	60.3	60.3	60.3	56.9	56.9	56.9	53.2	53.2	53.2	49.3	49.3	49.7
			SHC	37.3	46.4	55.5	36.0	45.1	54.2	34.6	43.7	52.8	33.1	42.2	51.3	31.5	40.6	49.7
		72	TC	69.5	69.5	69.5	66.0	66.0	66.0	62.4	62.4	62.4	58.3	58.3	58.3	54.0	54.0	54.0
			SHC	28.3	37.5	46.7	27.0	36.2	45.4	25.7	34.8	44.0	24.2	33.4	42.5	22.7	31.8	41.0
		76	TC	—	74.5	74.5	—	70.9	70.9	—	66.9	66.9	—	62.6	62.6	—	58.0	58.0
			SHC	—	30.2	39.7	—	29.0	38.4	—	27.6	37.0	—	26.2	35.5	—	24.6	33.9
2000 Cfm	EAT (wb)	58	TC	59.1	59.1	66.7	56.7	56.7	64.0	54.0	54.0	61.0	51.1	51.1	57.7	48.0	48.0	54.1
			SHC	51.5	59.1	66.7	49.4	56.7	64.0	47.1	54.0	61.0	44.5	51.1	57.7	41.8	48.0	54.1
		62	TC	59.5	59.5	68.7	56.7	56.7	66.5	54.1	54.1	63.4	51.2	51.2	60.0	48.0	48.0	56.2
			SHC	48.7	58.7	68.7	47.0	56.7	66.5	44.8	54.1	63.4	42.4	51.2	60.0	39.7	48.0	56.2
		67	TC	64.7	64.7	64.7	61.5	61.5	61.5	57.9	57.9	57.9	54.1	54.1	55.6	50.1	50.1	53.9
			SHC	39.3	49.6	59.9	38.0	48.3	58.6	36.6	46.9	57.2	35.0	45.3	55.6	33.4	43.7	53.9
		72	TC	70.9	70.9	70.9	67.3	67.3	67.3	63.4	63.4	63.4	59.3	59.3	59.3	54.8	54.8	54.8
			SHC	29.2	39.5	49.9	27.9	38.2	48.6	26.5	36.8	47.2	25.0	35.3	45.7	23.4	33.8	44.1
		76	TC	—	75.9	75.9	—	72.1	72.1	—	68.0	68.0	—	63.6	63.6	—	58.8	58.8
			SHC	—	31.3	41.9	—	30.0	40.6	—	28.7	39.2	—	27.2	37.6	—	25.6	36.0
2250 Cfm	EAT (wb)	58	TC	61.2	61.2	69.1	58.6	58.6	66.1	55.8	55.8	63.0	52.7	52.7	59.5	49.4	49.4	55.7
			SHC	53.3	61.2	69.1	51.0	58.6	66.1	48.6	55.8	63.0	45.9	52.7	59.5	43.0	49.4	55.7
		62	TC	61.2	61.2	71.8	58.6	58.6	68.7	55.8	55.8	65.4	52.8	52.8	61.9	49.4	49.4	57.9
			SHC	50.7	61.2	71.8	48.6	58.6	68.7	46.2	55.8	65.4	43.7	52.8	61.9	40.9	49.4	57.9
		67	TC	65.8	65.8	65.8	62.4	62.4	62.8	58.8	58.8	61.3	54.9	54.9	59.7	50.7	50.7	57.9
			SHC	41.2	52.7	64.2	39.9	51.3	62.8	38.4	49.9	61.3	36.9	48.3	59.7	35.2	46.5	57.9
		72	TC	72.0	72.0	72.0	68.3	68.3	68.3	64.3	64.3	64.3	60.0	60.0	60.0	55.4	55.4	55.4
			SHC	30.0	41.5	53.0	28.6	40.1	51.6	27.2	38.7	50.2	25.8	37.2	48.7	24.2	35.6	47.1
		76	TC	—	77.0	77.0	—	73.1	73.1	—	68.9	68.9	—	64.3	64.3	—	59.5	59.5
			SHC	—	32.3	44.1	—	31.0	42.7	—	29.6	41.3	—	28.1	39.7	—	26.6	38.1
2500 Cfm	EAT (wb)	58	TC	62.9	62.9	71.1	60.2	60.2	68.0	57.3	57.3	64.7	54.1	54.1	61.1	50.6	50.6	57.1
			SHC	54.8	62.9	71.1	52.5	60.2	68.0	49.9	57.3	64.7	47.1	54.1	61.1	44.1	50.6	57.1
		62	TC	63.0	63.0	73.8	60.3	60.3	70.6	57.3	57.3	67.2	54.1	54.1	63.4	50.6	50.6	59.3
			SHC	52.2	63.0	73.8	49.9	60.3	70.6	47.5	57.3	67.2	44.8	54.1	63.4	41.9	50.6	59.3
		67	TC	66.6	66.6	68.2	63.2	63.2	66.8	59.5	59.5	65.2	55.5	55.5	63.5	51.3	51.3	61.5
			SHC	43.1	55.6	68.2	41.7	54.2	66.8	40.2	52.7	65.2	38.6	51.0	63.5	36.8	49.1	61.5
		72	TC	72.8	72.8	72.8	69.0	69.0	69.0	65.0	65.0	65.0	60.6	60.6	60.6	55.9	55.9	55.9
			SHC	30.7	43.3	56.0	29.4	42.0	54.6	28.0	40.6	53.2	26.5	39.1	51.7	24.9	37.5	50.1
		76	TC	—	77.9	77.9	—	73.9	73.9	—	69.5	69.5	—	64.9	64.9	—	59.9	59.9
			SHC	—	33.3	46.1	—	32.0	44.7	—	30.6	43.3	—	29.1	41.7	—	27.5	40.1

LEGEND

— — Do not operate
Cfm — Cubic feet per minute (supply air)
EAT (db) — Entering Air Temperature (dry bulb)
EAT (wb) — Entering Air Temperature (wet bulb)
SHC — Sensible Heat Capacity (1000 Btuh) Gross
TC — Total Capacity (1000 Btuh) Gross

Performance data (cont)

COOLING CAPACITIES 1-STAGE COOLING, 6 TONS

50HCQA07				AMBIENT TEMPERATURE (F)														
				85			95			105			115			125		
				EAT (db)			EAT (db)			EAT (db)			EAT (db)			EAT (db)		
				75	80	85	75	80	85	75	80	85	75	80	85	75	80	85
1800 Cfm	EAT (wb)	58	TC	63.5	63.5	71.7	60.1	60.1	67.9	56.4	56.4	63.7	52.3	52.3	59.1	47.8	47.8	54.0
			SHC	55.2	63.5	71.7	52.3	60.1	67.9	49.1	56.4	63.7	45.5	52.3	59.1	41.6	47.8	54.0
		62	TC	66.5	66.5	68.9	62.1	62.1	66.9	57.4	57.4	64.6	52.4	52.4	61.4	47.9	47.9	56.2
			SHC	50.2	59.5	68.9	48.1	57.5	66.9	45.9	55.2	64.6	43.3	52.4	61.4	39.6	47.9	56.2
		67	TC	73.9	73.9	73.9	69.9	69.9	69.9	64.6	64.6	64.6	59.0	59.0	59.0	52.8	52.8	52.8
			SHC	40.7	50.0	59.4	39.2	48.7	58.1	37.2	46.6	56.0	35.0	44.5	53.9	32.7	42.1	51.6
		72	TC	78.2	78.2	78.2	76.9	76.9	76.9	73.1	73.1	73.1	67.5	67.5	67.5	61.0	61.0	61.0
			SHC	29.8	38.9	47.9	29.4	38.7	48.0	28.0	37.4	46.8	26.1	35.5	44.9	23.9	33.3	42.7
		76	TC	—	79.5	79.5	—	79.9	79.9	—	78.1	78.1	—	74.0	74.0	—	68.1	68.1
			SHC	—	29.8	39.7	—	29.9	39.8	—	29.3	39.1	—	27.9	37.5	—	26.1	35.5
2100 Cfm	EAT (wb)	58	TC	67.7	67.7	76.4	64.0	64.0	72.3	60.1	60.1	67.9	55.8	55.8	63.0	51.0	51.0	57.7
			SHC	58.9	67.7	76.4	55.7	64.0	72.3	52.3	60.1	67.9	48.5	55.8	63.0	44.4	51.0	57.7
		62	TC	69.2	69.2	75.6	64.7	64.7	73.5	60.2	60.2	70.5	55.8	55.8	65.5	51.1	51.1	60.0
			SHC	54.2	64.9	75.6	52.2	62.8	73.5	49.7	60.1	70.5	46.2	55.8	65.5	42.2	51.1	60.0
		67	TC	75.6	75.6	75.6	72.1	72.1	72.1	66.9	66.9	66.9	60.9	60.9	60.9	54.5	54.5	56.9
			SHC	42.8	53.4	63.9	41.8	52.6	63.3	39.9	50.7	61.6	37.6	48.5	59.3	35.3	46.1	56.9
		72	TC	78.9	78.9	78.9	78.2	78.2	78.2	75.0	75.0	75.0	69.6	69.6	69.6	63.0	63.0	63.0
			SHC	30.2	40.2	50.2	30.1	40.6	51.0	29.1	39.8	50.5	27.3	38.1	48.9	25.1	35.9	46.7
		76	TC	—	79.7	79.7	—	80.5	80.5	—	79.1	79.1	—	75.5	75.5	—	69.8	69.8
			SHC	—	30.7	42.3	—	30.8	42.1	—	30.3	41.4	—	29.1	40.1	—	27.4	38.3
2400 Cfm	EAT (wb)	58	TC	70.8	70.8	80.0	67.3	67.3	76.1	63.1	63.1	71.3	58.6	58.6	66.2	53.7	53.7	60.7
			SHC	61.6	70.8	80.0	58.6	67.3	76.1	54.9	63.1	71.3	51.0	58.6	66.2	46.7	53.7	60.7
		62	TC	71.3	71.3	81.4	67.4	67.4	79.0	63.1	63.1	74.1	58.7	58.7	68.9	53.7	53.7	63.1
			SHC	57.7	69.6	81.4	55.7	67.4	79.0	52.2	63.1	74.1	48.5	58.7	68.9	44.4	53.7	63.1
		67	TC	76.7	76.7	76.7	73.7	73.7	73.7	68.5	68.5	68.5	62.4	62.4	64.4	56.0	56.0	62.0
			SHC	44.7	56.2	67.8	44.1	56.1	68.1	42.3	54.5	66.7	40.1	52.2	64.4	37.8	49.9	62.0
		72	TC	79.3	79.3	79.3	79.0	79.0	79.0	76.3	76.3	76.3	71.1	71.1	71.1	64.4	64.4	64.4
			SHC	30.5	41.3	52.1	30.7	42.1	53.6	29.9	41.8	53.8	28.3	40.4	52.5	26.2	38.3	50.5
		76	TC	—	80.0	80.0	—	80.8	80.8	—	79.8	79.8	—	76.5	76.5	—	71.0	71.0
			SHC	—	31.2	43.5	—	31.4	43.6	—	31.1	43.3	—	30.2	42.4	—	28.6	40.8
2700 Cfm	EAT (wb)	58	TC	73.3	73.3	82.8	70.0	70.0	79.1	65.8	65.8	74.3	61.0	61.0	68.9	55.9	55.9	63.2
			SHC	63.7	73.3	82.8	60.9	70.0	79.1	57.2	65.8	74.3	53.1	61.0	68.9	48.7	55.9	63.2
		62	TC	73.3	73.3	85.8	70.1	70.1	82.3	65.8	65.8	77.3	61.1	61.1	71.7	56.0	56.0	65.7
			SHC	60.5	73.2	85.8	58.0	70.1	82.3	54.4	65.8	77.3	50.5	61.1	71.7	46.3	56.0	65.7
		67	TC	77.5	77.5	77.5	74.9	74.9	74.9	70.0	70.0	71.5	63.7	63.7	69.2	57.2	57.2	66.6
			SHC	46.1	58.6	71.1	46.1	59.3	72.5	44.7	58.1	71.5	42.4	55.8	69.2	40.0	53.3	66.6
		72	TC	79.6	79.6	79.6	79.5	79.5	79.5	77.2	77.2	77.2	72.3	72.3	72.3	65.6	65.6	65.6
			SHC	30.8	42.3	53.7	31.1	43.4	55.8	30.7	43.7	56.7	29.2	42.5	55.9	27.2	40.6	54.1
		76	TC	—	80.1	80.1	—	81.1	81.1	—	80.3	80.3	—	77.1	77.1	—	71.9	71.9
			SHC	—	31.6	44.5	—	32.0	44.9	—	31.8	44.9	—	31.0	44.3	—	29.6	43.0
3000 Cfm	EAT (wb)	58	TC	75.0	75.0	84.8	72.2	72.2	81.6	68.1	68.1	76.9	63.1	63.1	71.2	57.8	57.8	65.3
			SHC	65.3	75.0	84.8	62.9	72.2	81.6	59.2	68.1	76.9	54.9	63.1	71.2	50.3	57.8	65.3
		62	TC	75.1	75.1	88.1	72.3	72.3	84.8	68.1	68.1	79.9	63.1	63.1	74.1	57.9	57.9	67.9
			SHC	62.1	75.1	88.1	59.8	72.3	84.8	56.3	68.1	79.9	52.2	63.1	74.1	47.8	57.9	67.9
		67	TC	77.9	77.9	77.9	75.9	75.9	76.5	71.1	71.1	76.0	65.0	65.0	73.8	58.4	58.4	70.9
			SHC	47.3	60.6	73.8	48.0	62.2	76.5	46.8	61.4	76.0	44.6	59.2	73.8	42.1	56.5	70.9
		72	TC	79.3	79.3	79.3	79.9	79.9	79.9	77.9	77.9	77.9	73.2	73.2	73.2	66.5	66.5	66.5
			SHC	30.9	42.8	54.6	31.6	44.6	57.7	31.3	45.3	59.3	30.0	44.5	59.0	28.1	42.7	57.4
		76	TC	—	80.1	80.1	—	81.2	81.2	—	80.6	80.6	—	77.6	77.6	—	72.5	72.5
			SHC	—	32.0	45.4	—	32.4	46.0	—	32.5	46.4	—	31.8	46.1	—	30.6	45.1

LEGEND

— — Do not operate
Cfm — Cubic feet per minute (supply air)
EAT (db) — Entering Air Temperature (dry bulb)
EAT (wb) — Entering Air Temperature (wet bulb)
SHC — Sensible Heat Capacity (1000 Btuh) Gross
TC — Total Capacity (1000 Btuh) Gross

COOLING CAPACITIES 2-STAGE COOLING, 6 TONS

50HCQD07				AMBIENT TEMPERATURE (F)														
				85			95			105			115			125		
				EAT (db)			EAT (db)			EAT (db)			EAT (db)			EAT (db)		
				75	80	85	75	80	85	75	80	85	75	80	85	75	80	85
1800 Cfm	EAT (wb)	58	TC	64.5	64.5	72.8	61.9	61.9	69.9	59.1	59.1	66.7	56.0	56.0	63.3	52.7	52.7	59.6
			SHC	56.1	64.5	72.8	53.8	61.9	69.9	51.4	59.1	66.7	48.7	56.0	63.3	45.8	52.7	59.6
		62	TC	67.4	67.4	69.3	64.1	64.1	67.5	60.6	60.6	65.7	56.9	56.9	63.7	53.0	53.0	61.4
			SHC	50.7	60.0	69.3	49.0	58.3	67.5	47.2	56.5	65.7	45.3	54.5	63.7	43.2	52.3	61.4
		67	TC	73.7	73.7	73.7	70.0	70.0	70.0	66.2	66.2	66.2	62.2	62.2	62.2	57.8	57.8	57.8
			SHC	41.7	51.0	60.3	40.0	49.3	58.6	38.3	47.6	56.9	36.5	45.8	55.1	34.6	43.9	53.2
		72	TC	80.6	80.6	80.6	76.8	76.8	76.8	72.7	72.7	72.7	68.3	68.3	68.3	63.6	63.6	63.6
			SHC	32.4	41.8	51.2	30.8	40.2	49.6	29.1	38.5	47.9	27.4	36.7	46.1	25.5	34.9	44.2
		76	TC	—	86.6	86.6	—	82.4	82.4	—	78.1	78.1	—	73.4	73.4	—	68.4	68.4
			SHC	—	34.4	44.3	—	32.8	42.7	—	31.2	40.9	—	29.4	39.1	—	27.6	37.2
2100 Cfm	EAT (wb)	58	TC	67.9	67.9	76.7	65.0	65.0	73.5	62.0	62.0	70.1	58.8	58.8	66.4	55.2	55.2	62.5
			SHC	59.1	67.9	76.7	56.6	65.0	73.5	53.9	62.0	70.1	51.1	58.8	66.4	48.0	55.2	62.5
		62	TC	69.3	69.3	75.5	66.0	66.0	73.6	62.4	62.4	71.5	58.8	58.8	69.1	55.3	55.3	65.0
			SHC	54.3	64.9	75.5	52.6	63.1	73.6	50.7	61.1	71.5	48.6	58.8	69.1	45.6	55.3	65.0
		67	TC	75.6	75.6	75.6	71.7	71.7	71.7	67.7	67.7	67.7	63.5	63.5	63.5	59.0	59.0	59.0
			SHC	44.0	54.7	65.3	42.3	53.0	63.6	40.6	51.2	61.9	38.7	49.4	60.0	36.8	47.5	58.1
		72	TC	82.6	82.6	82.6	78.6	78.6	78.6	74.3	74.3	74.3	69.7	69.7	69.7	64.8	64.8	64.8
			SHC	33.5	44.2	54.9	31.8	42.5	53.2	30.1	40.8	51.5	28.3	39.0	49.7	26.5	37.1	47.7
		76	TC	—	88.5	88.5	—	84.3	84.3	—	79.7	79.7	—	74.8	74.8	—	69.6	69.6
			SHC	—	35.7	46.9	—	34.1	45.2	—	32.4	43.5	—	30.6	41.6	—	28.7	39.6
2400 Cfm	EAT (wb)	58	TC	70.6	70.6	79.7	67.6	67.6	76.3	64.4	64.4	72.7	60.9	60.9	68.9	57.2	57.2	64.7
			SHC	61.5	70.6	79.7	58.8	67.6	76.3	56.0	64.4	72.7	53.0	60.9	68.9	49.7	57.2	64.7
		62	TC	71.1	71.1	81.0	67.9	67.9	78.2	64.4	64.4	75.6	61.0	61.0	71.6	57.3	57.3	67.3
			SHC	57.6	69.3	81.0	55.4	66.8	78.2	53.3	64.4	75.6	50.4	61.0	71.6	47.3	57.3	67.3
		67	TC	77.0	77.0	77.0	73.0	73.0	73.0	68.9	68.9	68.9	64.5	64.5	64.6	59.9	59.9	62.6
			SHC	46.2	58.1	70.0	44.5	56.4	68.3	42.7	54.6	66.5	40.9	52.7	64.6	38.9	50.8	62.6
		72	TC	84.1	84.1	84.1	79.9	79.9	79.9	75.5	75.5	75.5	70.8	70.8	70.8	65.8	65.8	65.8
			SHC	34.4	46.4	58.3	32.7	44.7	56.6	31.0	42.9	54.9	29.2	41.1	53.0	27.3	39.2	51.0
		76	TC	—	90.1	90.1	—	85.6	85.6	—	80.9	80.9	—	75.9	75.9	—	70.5	70.5
			SHC	—	36.9	49.3	—	35.3	47.6	—	33.5	45.8	—	31.7	43.9	—	29.8	41.9
2700 Cfm	EAT (wb)	58	TC	72.8	72.8	82.1	69.6	69.6	78.6	66.3	66.3	74.9	62.7	62.7	70.9	58.8	58.8	66.5
			SHC	63.4	72.8	82.1	60.6	69.6	78.6	57.7	66.3	74.9	54.5	62.7	70.9	51.2	58.8	66.5
		62	TC	72.8	72.8	85.3	69.7	69.7	81.7	66.4	66.4	77.9	62.8	62.8	73.7	58.9	58.9	69.2
			SHC	60.3	72.8	85.3	57.7	69.7	81.7	54.9	66.4	77.9	51.9	62.8	73.7	48.6	58.9	69.2
		67	TC	78.0	78.0	78.0	74.0	74.0	74.0	69.8	69.8	70.9	65.4	65.4	69.0	60.7	60.7	66.9
			SHC	48.2	61.3	74.4	46.5	59.6	72.7	44.7	57.8	70.9	42.8	55.9	69.0	40.8	53.9	66.9
		72	TC	85.2	85.2	85.2	81.0	81.0	81.0	76.4	76.4	76.4	71.6	71.6	71.6	66.5	66.5	66.5
			SHC	35.2	48.4	61.5	33.6	46.7	59.8	31.8	44.9	58.0	30.0	43.0	56.1	28.1	41.1	54.1
		76	TC	—	91.2	91.2	—	86.6	86.6	—	81.8	81.8	—	76.7	76.7	—	71.2	71.2
			SHC	—	38.0	51.5	—	36.3	49.8	—	34.6	47.9	—	32.7	46.0	—	30.8	44.0
3000 Cfm	EAT (wb)	58	TC	74.8	74.8	84.4	71.4	71.4	80.7	68.0	68.0	76.8	64.2	64.2	72.6	60.2	60.2	68.1
			SHC	65.1	74.8	84.4	62.2	71.4	80.7	59.1	68.0	76.8	55.9	64.2	72.6	52.4	60.2	68.1
		62	TC	74.8	74.8	87.7	71.5	71.5	83.8	68.0	68.0	79.8	64.3	64.3	75.4	60.3	60.3	70.8
			SHC	62.0	74.8	87.7	59.2	71.5	83.8	56.2	68.0	79.8	53.1	64.3	75.4	49.8	60.3	70.8
		67	TC	78.9	78.9	78.9	74.9	74.9	76.9	70.6	70.6	75.0	66.1	66.1	73.0	61.4	61.4	70.8
			SHC	50.1	64.4	78.6	48.4	62.6	76.9	46.6	60.8	75.0	44.7	58.8	73.0	42.6	56.7	70.8
		72	TC	86.2	86.2	86.2	81.8	81.8	81.8	77.2	77.2	77.2	72.3	72.3	72.3	67.1	67.1	67.1
			SHC	36.0	50.3	64.5	34.3	48.6	62.8	32.6	46.8	60.9	30.7	44.9	59.0	28.8	42.9	57.0
		76	TC	—	92.1	92.1	—	87.4	87.4	—	82.5	82.5	—	77.3	77.3	—	71.8	71.8
			SHC	—	39.0	53.6	—	37.3	51.8	—	35.5	49.9	—	33.6	48.0	—	31.7	45.9

LEGEND

— — Do not operate
Cfm — Cubic feet per minute (supply air)
EAT (db) — Entering Air Temperature (dry bulb)
EAT (wb) — Entering Air Temperature (wet bulb)
SHC — Sensible Heat Capacity (1000 Btuh) Gross
TC — Total Capacity (1000 Btuh) Gross

COOLING CAPACITIES 2-STAGE COOLING, 7.5 TONS

50HCQD08				AMBIENT TEMPERATURE (F)														
				85			95			105			115			125		
				EAT (db)			EAT (db)			EAT (db)			EAT (db)			EAT (db)		
				75	80	85	75	80	85	75	80	85	75	80	85	75	80	85
2250 Cfm	EAT (wb)	58	TC	81.1	81.1	92.1	76.4	76.4	86.8	73.0	73.0	82.9	69.3	69.3	78.7	65.2	65.2	74.1
			SHC	70.1	81.1	92.1	66.0	76.4	86.8	63.1	73.0	82.9	59.8	69.3	78.7	56.4	65.2	74.1
		62	TC	86.2	86.2	86.2	80.1	80.1	83.0	75.6	75.6	80.9	70.8	70.8	78.6	65.9	65.9	76.1
			SHC	62.5	74.2	85.9	59.7	71.3	83.0	57.6	69.3	80.9	55.4	67.0	78.6	53.0	64.5	76.1
		67	TC	94.3	94.3	94.3	87.6	87.6	87.6	82.8	82.8	82.8	77.6	77.6	77.6	72.1	72.1	72.1
			SHC	51.3	63.0	74.6	48.5	60.1	71.8	46.5	58.1	69.8	44.4	56.0	67.7	42.2	53.8	65.5
		72	TC	102.9	102.9	102.9	95.6	95.6	95.6	90.3	90.3	90.3	84.7	84.7	84.7	78.7	78.7	78.7
			SHC	39.6	51.4	63.1	36.9	48.6	60.3	34.9	46.6	58.3	32.9	44.5	56.2	30.7	42.4	54.1
		76	TC	—	109.9	109.9	—	102.1	102.1	—	96.4	96.4	—	90.5	90.5	—	84.1	84.1
			SHC	—	41.8	54.2	—	39.1	51.4	—	37.2	49.4	—	35.2	47.2	—	33.1	45.0
2625 Cfm	EAT (wb)	58	TC	85.7	85.7	97.3	80.6	80.6	91.5	76.9	76.9	87.3	72.8	72.8	82.7	68.5	68.5	77.8
			SHC	74.0	85.7	97.3	69.6	80.6	91.5	66.4	76.9	87.3	62.9	72.8	82.7	59.2	68.5	77.8
		62	TC	89.0	89.0	94.2	82.6	82.6	91.1	78.0	78.0	88.7	73.3	73.3	85.3	68.5	68.5	81.0
			SHC	67.3	80.7	94.2	64.3	77.7	91.1	62.1	75.4	88.7	59.3	72.3	85.3	56.1	68.5	81.0
		67	TC	97.2	97.2	97.2	90.1	90.1	90.1	85.0	85.0	85.0	79.6	79.6	79.6	73.8	73.8	73.8
			SHC	54.3	67.8	81.2	51.4	64.9	78.3	49.4	62.8	76.3	47.3	60.7	74.1	45.0	58.5	71.9
		72	TC	105.8	105.8	105.8	98.1	98.1	98.1	92.6	92.6	92.6	86.7	86.7	86.7	80.5	80.5	80.5
			SHC	40.9	54.4	67.9	38.1	51.5	65.0	36.1	49.5	63.0	34.0	47.4	60.9	31.8	45.3	58.7
		76	TC	—	112.7	112.7	—	104.5	104.5	—	98.6	98.6	—	92.4	92.4	—	85.8	85.8
			SHC	—	43.5	57.6	—	40.7	54.6	—	38.7	52.5	—	36.7	50.4	—	34.5	48.1
3000 Cfm	EAT (wb)	58	TC	89.5	89.5	101.6	84.1	84.1	95.5	80.1	80.1	90.9	75.7	75.7	86.0	71.2	71.2	80.8
			SHC	77.3	89.5	101.6	72.6	84.1	95.5	69.2	80.1	90.9	65.5	75.7	86.0	61.5	71.2	80.8
		62	TC	91.3	91.3	101.9	84.8	84.8	97.7	80.3	80.3	94.3	75.8	75.8	89.5	71.2	71.2	84.1
			SHC	71.7	86.8	101.9	68.2	83.0	97.7	65.5	79.9	94.3	62.1	75.8	89.5	58.3	71.2	84.1
		67	TC	99.5	99.5	99.5	92.1	92.1	92.1	86.8	86.8	86.8	81.1	81.1	81.1	75.1	75.1	78.2
			SHC	57.2	72.4	87.5	54.2	69.4	84.6	52.2	67.4	82.6	50.0	65.2	80.4	47.8	63.0	78.2
		72	TC	108.1	108.1	108.1	100.0	100.0	100.0	94.3	94.3	94.3	88.2	88.2	88.2	81.8	81.8	81.8
			SHC	42.0	57.2	72.4	39.1	54.3	69.5	37.1	52.3	67.4	35.0	50.2	65.3	32.9	48.0	63.1
		76	TC	—	114.8	114.8	—	106.3	106.3	—	100.3	100.3	—	93.8	93.8	—	87.0	87.0
			SHC	—	44.9	60.6	—	42.0	57.6	—	40.1	55.5	—	38.0	53.3	—	35.8	51.0
3375 Cfm	EAT (wb)	58	TC	92.8	92.8	105.4	87.0	87.0	98.8	82.8	82.8	94.0	78.2	78.2	88.9	73.4	73.4	83.4
			SHC	80.2	92.8	105.4	75.2	87.0	98.8	71.5	82.8	94.0	67.6	78.2	88.9	63.4	73.4	83.4
		62	TC	93.6	93.6	108.0	87.1	87.1	102.8	82.8	82.8	97.8	78.3	78.3	92.5	73.5	73.5	86.8
			SHC	75.3	91.6	108.0	71.3	87.1	102.8	67.9	82.8	97.8	64.1	78.3	92.5	60.1	73.5	86.8
		67	TC	101.3	101.3	101.3	93.6	93.6	93.6	88.1	88.1	88.6	82.3	82.3	86.4	76.2	76.2	84.0
			SHC	59.9	76.8	93.6	56.9	73.8	90.7	54.8	71.7	88.6	52.6	69.5	86.4	50.3	67.2	84.0
		72	TC	109.8	109.8	109.8	101.5	101.5	101.5	95.6	95.6	95.6	89.3	89.3	89.3	82.8	82.8	82.8
			SHC	43.0	59.9	76.7	40.1	56.9	73.8	38.1	54.9	71.7	36.0	52.8	69.6	33.8	50.6	67.4
		76	TC	—	116.4	116.4	—	107.6	107.6	—	101.4	101.4	—	94.8	94.8	—	87.9	87.9
			SHC	—	46.1	63.3	—	43.2	60.2	—	41.2	58.1	—	39.1	55.9	—	37.0	53.6
3750 Cfm	EAT (wb)	58	TC	95.6	95.6	108.6	89.5	89.5	101.7	85.1	85.1	96.7	80.4	80.4	91.3	75.3	75.3	85.5
			SHC	82.6	95.6	108.6	77.4	89.5	101.7	73.6	85.1	96.7	69.4	80.4	91.3	65.1	75.3	85.5
		62	TC	95.7	95.7	113.0	89.6	89.6	105.8	85.2	85.2	100.6	80.4	80.4	95.0	75.4	75.4	89.0
			SHC	78.3	95.7	113.0	73.4	89.6	105.8	69.7	85.2	100.6	65.8	80.4	95.0	61.7	75.4	89.0
		67	TC	102.7	102.7	102.7	94.8	94.8	96.6	89.2	89.2	94.4	83.3	83.3	92.1	77.1	77.1	89.6
			SHC	62.5	81.0	99.6	59.5	78.0	96.6	57.4	75.9	94.4	55.1	73.6	92.1	52.8	71.2	89.6
		72	TC	111.3	111.3	111.3	102.8	102.8	102.8	96.7	96.7	96.7	90.3	90.3	90.3	83.6	83.6	83.6
			SHC	44.0	62.4	80.8	41.1	59.5	77.9	39.0	57.4	75.8	36.9	55.3	73.7	34.7	53.1	71.5
		76	TC	—	117.5	117.5	—	108.6	108.6	—	102.3	102.3	—	95.6	95.6	—	88.6	88.6
			SHC	—	47.2	65.7	—	44.3	62.6	—	42.3	60.5	—	40.2	58.2	—	38.0	55.9

LEGEND

— — Do not operate
Cfm — Cubic feet per minute (supply air)
EAT (db) — Entering Air Temperature (dry bulb)
EAT (wb) — Entering Air Temperature (wet bulb)
SHC — Sensible Heat Capacity (1000 Btuh) Gross
TC — Total Capacity (1000 Btuh) Gross

COOLING CAPACITIES 2-STAGE COOLING, 8.5 TONS

50HCQD09				AMBIENT TEMPERATURE (F)														
				85			95			105			115			125		
				EAT (db)			EAT (db)			EAT (db)			EAT (db)			EAT (db)		
				75	80	85	75	80	85	75	80	85	75	80	85	75	80	85
2550 Cfm	EAT (wb)	58	TC	85.8	85.8	97.8	80.9	80.9	91.8	75.7	75.7	85.9	70.2	70.2	79.7	64.4	64.4	73.1
			SHC	73.9	85.8	97.8	70.0	80.9	91.8	65.5	75.7	85.9	60.7	70.2	79.7	55.7	64.4	73.1
		62	TC	90.4	90.4	94.5	83.8	83.8	91.4	76.8	76.8	88.0	70.5	70.5	82.7	64.5	64.5	76.1
			SHC	67.8	81.1	94.5	64.8	78.1	91.4	61.6	74.8	88.0	57.6	70.1	82.7	52.8	64.5	76.1
		67	TC	101.6	101.6	101.6	95.0	95.0	95.0	87.4	87.4	87.4	79.3	79.3	79.3	71.0	71.0	71.0
			SHC	55.5	68.7	81.9	52.9	66.3	79.7	49.9	63.3	76.7	46.9	60.3	73.7	43.8	57.2	70.6
		72	TC	109.3	109.3	109.3	106.0	106.0	106.0	99.6	99.6	99.6	91.4	91.4	91.4	82.7	82.7	82.7
			SHC	41.1	54.1	67.2	39.9	53.3	66.6	37.7	51.1	64.6	34.9	48.3	61.7	32.0	45.4	58.8
		76	TC	—	114.5	114.5	—	111.2	111.2	—	107.7	107.7	—	101.0	101.0	—	92.6	92.6
			SHC	—	42.6	56.7	—	41.6	55.6	—	40.5	54.5	—	38.3	51.9	—	35.6	49.2
2975 Cfm	EAT (wb)	58	TC	91.8	91.8	104.5	86.4	86.4	98.0	80.7	80.7	91.6	74.7	74.7	84.8	68.6	68.6	77.8
			SHC	79.1	91.8	104.5	74.7	86.4	98.0	69.8	80.7	91.6	64.6	74.7	84.8	59.3	68.6	77.8
		62	TC	94.4	94.4	104.4	87.5	87.5	100.5	81.0	81.0	95.1	74.8	74.8	88.3	68.7	68.7	81.0
			SHC	73.8	89.1	104.4	70.3	85.4	100.5	66.1	80.6	95.1	61.3	74.8	88.3	56.3	68.7	81.0
		67	TC	104.3	104.3	104.3	98.6	98.6	98.6	90.6	90.6	90.6	82.1	82.1	82.1	73.4	73.4	78.4
			SHC	58.7	73.7	88.6	56.8	72.3	87.8	53.8	69.3	84.8	50.7	66.1	81.6	47.5	62.9	78.4
		72	TC	111.3	111.3	111.3	108.0	108.0	108.0	102.7	102.7	102.7	94.5	94.5	94.5	85.5	85.5	85.5
			SHC	42.2	56.7	71.3	41.0	56.1	71.3	39.3	54.8	70.3	36.6	52.1	67.6	33.7	49.2	64.7
		76	TC	—	116.3	116.3	—	112.7	112.7	—	109.2	109.2	—	103.5	103.5	—	95.4	95.4
			SHC	—	44.3	60.6	—	43.1	59.0	—	41.9	57.7	—	40.2	56.0	—	37.7	53.4
3400 Cfm	EAT (wb)	58	TC	96.6	96.6	109.9	91.1	91.1	103.4	85.1	85.1	96.6	78.7	78.7	89.3	72.1	72.1	81.8
			SHC	83.3	96.6	109.9	78.8	91.1	103.4	73.6	85.1	96.6	68.1	78.7	89.3	62.4	72.1	81.8
		62	TC	97.7	97.7	112.8	91.7	91.7	106.8	85.3	85.3	100.7	78.8	78.8	93.0	72.2	72.2	85.2
			SHC	78.6	95.7	112.8	74.4	90.6	106.8	69.9	85.3	100.7	64.6	78.8	93.0	59.2	72.2	85.2
		67	TC	106.0	106.0	106.0	101.2	101.2	101.2	93.0	93.0	93.0	84.4	84.4	89.2	75.5	75.5	85.8
			SHC	61.6	78.1	94.7	60.2	77.7	95.1	57.4	74.9	92.4	54.2	71.7	89.2	50.9	68.4	85.8
		72	TC	112.7	112.7	112.7	109.3	109.3	109.3	104.8	104.8	104.8	96.8	96.8	96.8	87.7	87.7	87.7
			SHC	43.1	59.0	75.0	41.9	58.5	75.2	40.7	58.0	75.4	38.1	55.7	73.2	35.2	52.8	70.4
		76	TC	—	117.6	117.6	—	113.9	113.9	—	110.2	110.2	—	105.2	105.2	—	97.2	97.2
			SHC	—	45.4	63.0	—	44.2	61.5	—	43.1	60.5	—	41.8	59.4	—	39.5	57.2
3825 Cfm	EAT (wb)	58	TC	100.5	100.5	114.2	95.1	95.1	107.9	88.9	88.9	100.8	82.2	82.2	93.3	75.3	75.3	85.5
			SHC	86.7	100.5	114.2	82.3	95.1	107.9	76.9	88.9	100.8	71.1	82.2	93.3	65.2	75.3	85.5
		62	TC	100.6	100.6	119.0	95.4	95.4	112.5	89.0	89.0	105.0	82.3	82.3	97.1	75.4	75.4	89.0
			SHC	82.3	100.6	119.0	78.2	95.4	112.5	72.9	89.0	105.0	67.5	82.3	97.1	61.8	75.4	89.0
		67	TC	107.3	107.3	107.3	103.1	103.1	103.1	95.1	95.1	99.8	86.3	86.3	96.4	77.3	77.3	92.6
			SHC	64.1	82.2	100.2	63.4	82.7	102.0	60.8	80.3	99.8	57.6	77.0	96.4	54.2	73.4	92.6
		72	TC	113.8	113.8	113.8	110.3	110.3	110.3	106.3	106.3	106.3	98.5	98.5	98.5	89.3	89.3	89.3
			SHC	44.0	61.2	78.3	42.7	60.8	78.9	41.8	61.0	80.1	39.5	59.0	78.5	36.6	56.2	75.7
		76	TC	—	118.6	118.6	—	114.8	114.8	—	110.9	110.9	—	106.3	106.3	—	98.5	98.5
			SHC	—	46.4	65.1	—	45.2	63.9	—	44.2	63.0	—	43.2	62.5	—	41.1	60.7
4250 Cfm	EAT (wb)	58	TC	103.2	103.2	117.2	98.5	98.5	111.8	92.2	92.2	104.6	85.3	85.3	96.8	78.1	78.1	88.7
			SHC	89.1	103.2	117.2	85.2	98.5	111.8	79.7	92.2	104.6	73.8	85.3	96.8	67.6	78.1	88.7
		62	TC	103.2	103.2	121.8	98.6	98.6	116.3	92.3	92.3	108.9	85.4	85.4	100.7	78.2	78.2	92.3
			SHC	84.6	103.2	121.8	80.8	98.6	116.3	75.6	92.3	108.9	70.0	85.4	100.7	64.1	78.2	92.3
		67	TC	108.3	108.3	108.3	104.5	104.5	108.3	96.8	96.8	106.7	88.0	88.0	103.2	79.3	79.3	97.6
			SHC	66.5	86.0	105.5	66.3	87.3	108.3	64.0	85.3	106.7	60.7	82.0	103.2	56.6	77.1	97.6
		72	TC	114.7	114.7	114.7	111.1	111.1	111.1	107.3	107.3	107.3	99.9	99.9	99.9	90.6	90.6	90.6
			SHC	44.8	63.1	81.5	43.5	62.9	82.3	42.8	63.5	84.2	40.7	62.1	83.5	37.9	59.4	81.0
		76	TC	—	119.4	119.4	—	115.5	115.5	—	111.4	111.4	—	107.1	107.1	—	99.5	99.5
			SHC	—	47.3	67.0	—	46.2	66.0	—	45.2	65.3	—	44.5	65.3	—	42.6	63.9

LEGEND

— — Do not operate
Cfm — Cubic feet per minute (supply air)
EAT (db) — Entering Air Temperature (dry bulb)
EAT (wb) — Entering Air Temperature (wet bulb)
SHC — Sensible Heat Capacity (1000 Btuh) Gross
TC — Total Capacity (1000 Btuh) Gross

COOLING CAPACITIES 2-STAGE COOLING, 10 TONS

50HCQD12				AMBIENT TEMPERATURE (F)														
				85			95			105			115			125		
				EAT (db)			EAT (db)			EAT (db)			EAT (db)			EAT (db)		
				75	80	85	75	80	85	75	80	85	75	80	85	75	80	85
3000 Cfm	EAT (wb)	58	TC	106.0	106.0	119.9	102.0	102.0	115.3	97.6	97.6	110.4	92.9	92.9	105.0	87.5	87.5	98.9
			SHC	92.2	106.0	119.9	88.6	102.0	115.3	84.9	97.6	110.4	80.7	92.9	105.0	76.1	87.5	98.9
		62	TC	112.3	112.3	113.3	107.1	107.1	110.7	101.5	101.5	107.9	95.4	95.4	104.7	88.9	88.9	100.5
			SHC	83.4	98.3	113.3	80.8	95.8	110.7	78.1	93.0	107.9	75.1	89.9	104.7	71.5	86.0	100.5
		67	TC	123.3	123.3	123.3	117.6	117.6	117.6	111.4	111.4	111.4	104.5	104.5	104.5	97.0	97.0	97.0
			SHC	69.2	84.3	99.3	66.7	81.7	96.8	64.1	79.1	94.1	61.2	76.2	91.2	58.0	73.0	88.0
		72	TC	135.2	135.2	135.2	128.8	128.8	128.8	121.9	121.9	121.9	114.4	114.4	114.4	106.2	106.2	106.2
			SHC	54.5	69.8	85.0	52.0	67.3	82.5	49.4	64.6	79.8	46.5	61.7	76.8	43.4	58.5	73.6
		76	TC	—	145.1	145.1	—	138.2	138.2	—	130.7	130.7	—	122.6	122.6	—	113.7	113.7
			SHC	—	57.9	74.3	—	55.4	71.8	—	52.8	69.1	—	50.0	66.1	—	46.9	62.8
3500 Cfm	EAT (wb)	58	TC	111.6	111.6	126.2	107.3	107.3	121.4	102.6	102.6	116.0	97.4	97.4	110.2	91.6	91.6	103.6
			SHC	97.1	111.6	126.2	93.3	107.3	121.4	89.2	102.6	116.0	84.7	97.4	110.2	79.6	91.6	103.6
		62	TC	115.9	115.9	123.6	110.5	110.5	120.7	104.6	104.6	117.4	98.6	98.6	112.5	92.1	92.1	106.9
			SHC	89.4	106.5	123.6	86.7	103.7	120.7	83.7	100.5	117.4	79.8	96.1	112.5	75.4	91.2	106.9
		67	TC	127.0	127.0	127.0	120.9	120.9	120.9	114.3	114.3	114.3	107.1	107.1	107.1	99.2	99.2	99.2
			SHC	73.2	90.5	107.8	70.7	87.9	105.2	67.9	85.1	102.4	64.9	82.2	99.4	61.7	78.9	96.1
		72	TC	139.1	139.1	139.1	132.3	132.3	132.3	125.0	125.0	125.0	117.0	117.0	117.0	108.4	108.4	108.4
			SHC	56.4	73.8	91.3	53.8	71.2	88.6	51.1	68.4	85.8	48.1	65.4	82.8	44.9	62.2	79.5
		76	TC	—	149.0	149.0	—	141.7	141.7	—	133.8	133.8	—	125.2	125.2	—	—	—
			SHC	—	60.3	79.1	—	57.7	76.3	—	54.9	73.3	—	52.0	70.1	—	—	—
4000 Cfm	EAT (wb)	58	TC	116.5	116.5	131.7	111.8	111.8	126.5	106.8	106.8	120.7	101.2	101.2	114.4	95.0	95.0	107.4
			SHC	101.2	116.5	131.7	97.2	111.8	126.5	92.8	106.8	120.7	88.0	101.2	114.4	82.5	95.0	107.4
		62	TC	118.9	118.9	133.1	113.5	113.5	128.6	107.8	107.8	123.8	101.7	101.7	118.4	95.1	95.1	111.7
			SHC	94.9	114.0	133.1	91.4	110.0	128.6	87.6	105.7	123.8	83.4	100.9	118.4	78.5	95.1	111.7
		67	TC	129.9	129.9	129.9	123.5	123.5	123.5	116.6	116.6	116.6	109.1	109.1	109.1	100.9	100.9	103.8
			SHC	77.0	96.4	115.9	74.4	93.8	113.2	71.5	90.9	110.3	68.5	87.8	107.2	65.2	84.5	103.8
		72	TC	142.0	142.0	142.0	135.0	135.0	135.0	127.3	127.3	127.3	119.1	119.1	119.1	110.1	110.1	110.1
			SHC	58.0	77.6	97.2	55.4	74.9	94.5	52.6	72.1	91.6	49.6	69.0	88.5	46.3	65.7	85.1
		76	TC	—	152.0	152.0	—	144.4	144.4	—	136.2	136.2	—	—	—	—	—	—
			SHC	—	62.4	83.1	—	59.7	80.2	—	56.9	77.2	—	—	—	—	—	—
4500 Cfm	EAT (wb)	58	TC	120.6	120.6	136.3	115.7	115.7	130.8	110.3	110.3	124.7	104.4	104.4	118.0	97.8	97.8	110.5
			SHC	104.8	120.6	136.3	100.5	115.7	130.8	95.9	110.3	124.7	90.7	104.4	118.0	85.0	97.8	110.5
		62	TC	122.1	122.1	139.4	116.6	116.6	134.6	110.6	110.6	129.9	104.4	104.4	122.7	97.8	97.8	114.9
			SHC	98.8	119.1	139.4	95.1	114.9	134.6	91.3	110.6	129.9	86.2	104.4	122.7	80.7	97.8	114.9
		67	TC	132.2	132.2	132.2	125.5	125.5	125.5	118.4	118.4	118.4	110.6	110.6	114.6	102.2	102.2	111.0
			SHC	80.6	102.1	123.7	77.8	99.4	120.9	74.9	96.4	117.9	71.8	93.2	114.6	68.4	89.7	111.0
		72	TC	144.4	144.4	144.4	137.1	137.1	137.1	129.2	129.2	129.2	120.7	120.7	120.7	111.4	111.4	111.4
			SHC	59.5	81.2	102.8	56.8	78.4	100.1	54.0	75.5	97.1	50.9	72.4	93.9	47.6	69.1	90.5
		76	TC	—	154.4	154.4	—	146.5	146.5	—	138.0	138.0	—	—	—	—	—	—
			SHC	—	64.2	86.9	—	61.5	84.0	—	58.7	81.0	—	—	—	—	—	—
5000 Cfm	EAT (wb)	58	TC	124.1	124.1	140.4	119.0	119.0	134.5	113.3	113.3	128.1	107.1	107.1	121.1	100.1	100.1	113.2
			SHC	107.9	124.1	140.4	103.4	119.0	134.5	98.5	113.3	128.1	93.1	107.1	121.1	87.0	100.1	113.2
		62	TC	124.9	124.9	144.9	119.2	119.2	140.0	113.4	113.4	133.2	107.1	107.1	125.8	100.2	100.2	117.7
			SHC	102.2	123.6	144.9	98.4	119.2	140.0	93.6	113.4	133.2	88.4	107.1	125.8	82.7	100.2	117.7
		67	TC	134.0	134.0	134.0	127.2	127.2	128.2	119.8	119.8	125.1	111.9	111.9	121.6	103.3	103.3	117.6
			SHC	83.9	107.5	131.1	81.1	104.7	128.2	78.2	101.6	125.1	74.9	98.3	121.6	71.3	94.5	117.6
		72	TC	146.3	146.3	146.3	138.8	138.8	138.8	130.7	130.7	130.7	121.9	121.9	121.9	112.5	112.5	112.5
			SHC	60.9	84.6	108.3	58.1	81.8	105.4	55.2	78.8	102.4	52.2	75.6	99.1	48.8	72.2	95.6
		76	TC	—	156.4	156.4	—	148.2	148.2	—	—	—	—	—	—	—	—	—
			SHC	—	66.0	90.6	—	63.3	87.6	—	—	—	—	—	—	—	—	—

LEGEND

— — Do not operate
Cfm — Cubic feet per minute (supply air)
EAT (db) — Entering Air Temperature (dry bulb)
EAT (wb) — Entering Air Temperature (wet bulb)
SHC — Sensible Heat Capacity (1000 Btuh) Gross
TC — Total Capacity (1000 Btuh) Gross

HEATING CAPACITIES, 3 TONS

50HCQA04											
RETURN AIR (°F db)	CFM (STANDARD AIR)		TEMPERATURE AIR ENTERING OUTDOOR COIL (°F db at 70% RH)								
			–10	0	10	17	30	40	47	50	60
55	900	Capacity		13.3	17.2	20	26	31.3	35.6	37.0	42.7
		Int. Cap		12.3	15.8	18.3	22.8	31.3	35.6	37.0	42.7
	1200	Capacity		13.8	17.8	20.8	27.0	32.8	36.9	38.3	44.1
		Int. Cap		12.7	16.3	18.9	23.6	32.8	36.9	38.3	45.1
	1500	Capacity			18.7	21.8	28.2	34.0	38.1	39.4	45.1
		Int. Cap			17.2	19.8	24.7	34.0	38.1	39.4	45.1
70	900	Capacity	7.5	11	14.9	17.8	23.6	28.5	32.7	34.2	40.4
		Int. Cap	6.9	10.2	13.7	16.2	20.7	28.5	32.7	34.2	40.4
	1200	Capacity	7.9	11.6	15.6	18.6	24.7	29.9	34.6	36.0	41.9
		Int. Cap	7.3	10.7	14.3	16.9	21.6	29.9	34.6	36.0	41.9
	1500	Capacity	8.7	12.4	16.5	19.6	25.8	31.3	35.9	37.3	43.1
		Int. Cap	8.0	11.4	15.1	17.8	22.6	31.3	35.9	37.3	43.1
80	900	Capacity	5.7	9.3	13.2	16.1	21.9	26.8	30.5	32.1	38.4
		Int. Cap	5.3	8.5	12.1	14.7	19.2	26.8	30.5	32.1	38.4
	1200	Capacity	6.1	9.8	13.9	16.9	22.9	28.1	32.3	33.9	40.3
		Int. Cap	5.6	9.0	12.7	15.4	20.1	28.1	32.3	33.9	40.3
	1500	Capacity	6.8	10.6	14.8	17.9	24.1	29.4	34.0	35.6	41.6
		Int. Cap	6.3	9.8	13.6	16.3	21.1	29.4	34.0	35.6	41.6

LEGEND

Indicates operation not permissible
Capacity — Instantaneous Capacity (1000 Btuh) includes indoor fan motor heat at AHRI static conditions
db — Dry Bulb
Int. Cap. — Integrated Capacity is Instantaneous Capacity minus the effects of frost on the outdoor coil and the heat required to defrost
RH — Relative Humidity

HEATING CAPACITIES, 4 TONS

50HCQA05											
RETURN AIR (°F db)	CFM (STANDARD AIR)		TEMPERATURE AIR ENTERING OUTDOOR COIL (°F db at 70% RH)								
			–10	0	10	17	30	40	47	50	60
55	1200	Capacity		18.5	23.8	27.7	35.3	41.9	47.6	49.3	56.5
		Int. Cap		17.1	21.8	25.2	30.9	41.9	47.6	49.3	56.5
	1600	Capacity		18.8	24.3	28.4	36.1	43.6	48.7	50.4	57.4
		Int. Cap		17.3	22.3	25.9	31.6	43.6	48.7	50.4	57.4
	2000	Capacity		19.8	25.3	29.7	37.5	44.9	49.8	51.4	58.0
		Int. Cap		18.2	23.2	27.1	32.9	44.9	49.8	51.4	58.0
70	1200	Capacity	10.9	16.2	21.4	25.2	32.8	38.9	44.0	46.0	54.0
		Int. Cap	10.1	14.9	19.7	23.0	28.7	38.9	44.0	46.1	54.0
	1600	Capacity	11.2	16.6	22.0	25.9	34.0	40.0	46.1	48.0	55.2
		Int. Cap	10.3	15.3	20.2	23.6	29.8	40.0	46.1	48.0	55.2
	2000	Capacity	12.1	17.7	23.2	27.1	35.2	41.8	47.7	49.4	56.2
		Int. Cap	11.2	16.2	21.2	24.7	30.9	41.8	47.7	49.4	56.2
80	1200	Capacity	8.9	14.3	19.6	23.3	30.8	37.4	41.8	43.6	51.8
		Int. Cap	8.2	13.1	18.0	21.3	27.0	37.4	41.8	43.6	51.8
	1600	Capacity	9.2	14.7	20.2	24.1	31.9	38.4	43.4	45.5	53.5
		Int. Cap	8.5	13.6	18.6	22.0	28.0	38.4	43.4	45.5	53.5
	2000	Capacity	10.1	15.8	21.4	25.3	33.4	39.8	45.4	47.4	54.7
		Int. Cap	9.4	14.5	19.6	23.1	29.2	39.8	45.4	47.4	54.7

LEGEND

Indicates operation not permissible
Capacity — Instantaneous Capacity (1000 Btuh) includes indoor fan motor heat at AHRI static conditions
db — Dry Bulb
Int. Cap. — Integrated Capacity is Instantaneous Capacity minus the effects of frost on the outdoor coil and the heat required to defrost
RH — Relative Humidity

HEATING CAPACITIES, 5 TONS

50HCQA06											
RETURN AIR (°F db)	CFM (STANDARD AIR)		TEMPERATURE AIR ENTERING OUTDOOR COIL (°F db at 70% RH)								
			–10	0	10	17	30	40	47	50	60
55	1500	Capacity		22.0	28.5	33.3	43.5	51.4	58.0	60.1	68.6
		Int. Cap		20.3	26.1	30.4	38.1	51.4	58.0	60.1	68.6
	2000	Capacity		23.9	30.5	35.5	45.7	54.1	60.4	62.3	69.9
		Int. Cap		22.0	28.0	32.4	40.1	54.1	60.4	62.3	69.9
	2500	Capacity		25.0	31.7	36.9	47.1	55.2	60.7	62.3	68.8
		Int. Cap		23.0	29.1	33.6	41.3	55.2	60.7	62.3	68.8
70	1500	Capacity		18.9	25.3	30.1	40.1	48.4	54.8	56.8	65.4
		Int. Cap		17.4	23.3	27.5	35.2	48.4	54.8	56.8	65.4
	2000	Capacity		20.7	27.4	32.3	43.0	50.9	57.4	59.3	67.4
		Int. Cap		19.1	25.1	29.4	37.7	50.9	57.4	59.3	67.4
	2500	Capacity		21.9	28.6	33.6	44.4	52.5	58.5	60.3	67.3
		Int. Cap		20.1	26.3	30.7	38.9	52.5	58.5	60.3	67.3
80	1500	Capacity	10.3	16.5	23.1	27.8	37.4	46.2	52.4	54.7	63.2
		Int. Cap	9.5	15.2	21.2	25.4	32.8	46.2	52.4	54.7	63.2
	2000	Capacity	12.0	18.4	25.1	30.0	40.1	48.9	55.2	57.4	65.4
		Int. Cap	11.1	16.9	23.0	27.4	35.2	48.9	55.2	57.4	65.4
	2500	Capacity	13.0	19.5	26.3	31.4	41.9	50.5	56.6	58.4	65.7
		Int. Cap	12.0	18.0	24.2	28.6	36.7	50.5	56.6	58.4	65.7

LEGEND

Indicates operation not permissible
Capacity — Instantaneous Capacity (1000 Btuh) includes indoor fan motor heat at AHRI static conditions
db — Dry Bulb
Int. Cap. — Integrated Capacity is Instantaneous Capacity minus the effects of frost on the outdoor coil and the heat required to defrost
RH — Relative Humidity

HEATING CAPACITIES, 6 TONS

50HCQA07											
RETURN AIR (°F db)	CFM (STANDARD AIR)		TEMPERATURE AIR ENTERING OUTDOOR COIL (°F db at 70% RH)								
			–10	0	10	17	30	40	47	50	60
55	1800	Capacity	20.5	28.2	36.0	41.6	52.8	62.7	71.0	73.5	83.8
		Int. Cap	19.0	25.9	33.0	38.0	46.3	62.7	71.0	73.5	83.8
	2400	Capacity	21.2	29.0	37.0	42.8	54.4	65.4	73.0	75.4	86.1
		Int. Cap	19.6	26.7	34.0	39.1	47.7	65.4	73.0	75.4	86.1
	3000	Capacity	21.5	29.5	37.6	43.5	55.4	66.4	73.9	76.4	87.2
		Int. Cap	19.9	27.1	34.5	39.7	48.5	66.4	73.9	76.4	87.2
70	1800	Capacity	15.8	23.6	31.6	37.3	48.5	57.7	65.5	68.5	79.7
		Int. Cap	14.6	21.7	29.0	34.0	42.5	57.7	65.5	68.5	79.7
	2400	Capacity	16.4	24.6	32.8	38.7	50.2	60.1	68.9	71.7	82.3
		Int. Cap	15.1	22.6	30.1	35.3	44.0	60.1	68.9	71.7	82.3
	3000	Capacity	16.8	25.1	33.5	39.5	51.3	61.6	70.5	73.0	83.6
		Int. Cap	15.5	23.1	30.8	36.1	44.9	61.6	70.5	73.0	83.6
80	1800	Capacity	11.9	20.0	28.1	33.9	45.2	54.3	61.5	64.5	76.1
		Int. Cap	11.0	18.4	25.8	30.9	39.6	54.3	61.5	64.5	76.1
	2400	Capacity	12.5	20.9	29.3	35.4	47.0	56.7	64.6	67.7	79.4
		Int. Cap	11.5	19.2	26.9	32.3	41.2	56.7	64.6	67.7	79.4
	3000	Capacity	12.8	21.4	30.1	36.2	48.1	57.9	66.5	69.6	80.9
		Int. Cap	11.8	19.7	27.6	33.0	42.1	57.9	66.5	69.6	80.9

LEGEND

Indicates standard rating point
Capacity — Instantaneous Capacity (1000 Btuh) includes indoor fan motor heat at AHRI static conditions
db — Dry Bulb
Int. Cap. — Integrated Capacity is Instantaneous Capacity minus the effects of frost on the outdoor coil and the heat required to defrost
RH — Relative Humidity

HEATING CAPACITIES, 6 TONS

50HCQD07											
RETURN AIR (°F db)	CFM (STANDARD AIR)		TEMPERATURE AIR ENTERING OUTDOOR COIL (°F db at 70% RH)								
			–10	0	10	17	30	40	47	50	60
55	1500	Capacity	25.6	31.8	39.0	44.4	54.8	63.2	70.0	73.1	83.7
		Int. Cap	23.7	29.3	35.8	40.5	48.0	63.2	70.0	73.1	83.7
	2000	Capacity	26.2	32.6	40.3	45.3	55.8	65.1	72.1	75.1	85.0
		Int. Cap	24.2	30.0	37.0	41.3	48.9	65.1	72.1	75.1	85.0
	2500	Capacity	26.6	33.0	40.8	45.9	56.7	66.1	72.6	75.3	83.9
		Int. Cap	24.6	30.4	37.5	41.9	49.7	66.1	72.6	75.3	83.9
70	1500	Capacity	22.5	28.8	35.5	41.0	51.5	59.8	66.2	69.2	79.8
		Int. Cap	20.8	26.5	32.6	37.4	45.1	59.8	66.2	69.2	79.8
	2000	Capacity	23.1	29.6	36.5	42.7	52.9	61.6	68.3	71.5	81.5
		Int. Cap	21.4	27.2	33.5	39.0	46.3	61.6	68.3	71.5	81.5
	2500	Capacity	23.5	30.1	37.2	43.4	53.7	62.6	69.4	72.3	81.3
		Int. Cap	21.8	27.7	34.1	39.6	47.0	62.6	69.4	72.3	81.3
80	1500	Capacity	20.0	26.3	33.1	38.2	49.4	57.5	63.8	66.5	77.0
		Int. Cap	18.5	24.2	30.4	34.8	43.3	57.5	63.8	66.5	77.0
	2000	Capacity	20.7	27.2	34.2	39.6	50.7	59.2	65.7	68.7	78.8
		Int. Cap	19.1	25.0	31.4	36.1	44.4	59.2	65.7	68.7	78.8
	2500	Capacity	21.1	27.7	34.8	40.5	51.6	60.3	66.9	69.9	79.1
		Int. Cap	19.5	25.5	31.9	36.9	45.2	60.3	66.9	69.9	79.1

LEGEND

Indicates standard rating point
Capacity — Instantaneous Capacity (1000 Btuh) includes indoor fan motor heat at AHRI static conditions
db — Dry Bulb
Int. Cap. — Integrated Capacity is Instantaneous Capacity minus the effects of frost on the outdoor coil and the heat required to defrost
RH — Relative Humidity

HEATING CAPACITIES, 7.5 TONS

50HCQD08											
RETURN AIR (°F db)	CFM (STANDARD AIR)		TEMPERATURE AIR ENTERING OUTDOOR COIL (°F db at 70% RH)								
			–10	0	10	17	30	40	47	50	60
55	2250	Capacity	24.3	33.6	43.4	50.6	66.3	78.0	87.4	90.4	102.6
		Int. Cap	22.4	30.9	39.8	46.2	58.1	78.0	87.4	90.4	102.6
	3000	Capacity	24.7	34.2	44.3	51.8	67.8	80.2	89.6	92.5	104.6
		Int. Cap	22.8	31.5	40.7	47.3	59.4	80.2	89.6	92.5	104.6
	3750	Capacity	24.9	34.6	44.9	52.6	68.7	81.3	90.4	93.1	104.3
		Int. Cap	23.1	31.9	41.2	48.0	60.2	81.3	90.4	93.1	104.3
70	2250	Capacity	20.3	29.6	39.3	46.5	60.8	73.8	82.7	85.9	98.3
		Int. Cap	18.7	27.2	36.1	42.4	53.3	73.8	82.7	85.9	98.3
	3000	Capacity	20.8	30.4	40.5	47.9	63.4	75.9	85.4	88.5	100.6
		Int. Cap	19.3	28.0	37.2	43.6	55.6	75.9	85.4	88.5	100.6
	3750	Capacity	21.2	31.0	41.2	48.7	64.8	77.2	86.8	89.8	101.4
		Int. Cap	19.6	28.5	37.8	44.4	56.7	77.2	86.8	89.8	101.4
80	2250	Capacity	16.8	26.2	36.0	43.2	57.2	70.2	79.5	82.8	95.2
		Int. Cap	15.5	24.1	33.0	39.4	50.1	70.2	79.5	82.8	95.2
	3000	Capacity	17.4	27.1	37.2	44.6	59.3	73.0	82.1	85.4	97.7
		Int. Cap	16.1	24.9	34.2	40.7	52.0	73.0	82.1	85.4	97.7
	3750	Capacity	17.7	27.6	38.0	45.5	60.6	74.3	83.7	87.0	98.8
		Int. Cap	16.4	25.4	34.9	41.5	53.1	74.3	83.7	87.0	98.8

LEGEND

Indicates standard rating point
Capacity — Instantaneous Capacity (1000 Btuh) includes indoor fan motor heat at AHRI static conditions
db — Dry Bulb
Int. Cap. — Integrated Capacity is Instantaneous Capacity minus the effects of frost on the outdoor coil and the heat required to defrost
RH — Relative Humidity

HEATING CAPACITIES, 8.5 TONS

50HCQD09											
RETURN AIR (°F db)	CFM (STANDARD AIR)		TEMPERATURE AIR ENTERING OUTDOOR COIL (°F db at 70% RH)								
			–10	0	10	17	30	40	47	50	60
55	2250	Capacity	35.1	37.7	49.0	57.4	74.4	87.8	98.9	102.6	118.3
		Int. Cap	32.5	34.7	45.0	52.3	65.2	87.8	98.9	102.6	118.3
	3400	Capacity	32.6	39.1	50.8	59.4	76.8	90.8	102.1	105.7	121.3
		Int. Cap	30.1	36.0	46.6	54.1	67.3	90.8	102.1	105.7	121.3
	4250	Capacity	34.4	42.6	54.4	63.3	80.9	95.1	106.1	109.6	125.0
		Int. Cap	31.8	39.2	50.0	57.7	70.9	95.1	106.1	109.6	125.0
70	2250	Capacity	35.2	33.3	44.5	52.8	69.3	83.1	93.6	97.3	112.9
		Int. Cap	32.6	30.6	40.9	48.1	60.7	83.1	93.6	97.3	112.9
	3400	Capacity	35.6	34.9	46.5	55.0	72.5	86.1	97.1	100.8	116.2
		Int. Cap	32.9	32.1	42.7	50.1	63.5	86.1	97.1	100.8	116.2
	4250	Capacity	38.2	38.6	50.3	59.0	76.7	90.5	101.6	105.2	120.2
		Int. Cap	35.3	35.5	46.2	53.7	67.2	90.5	101.6	105.2	120.2
80	2250	Capacity	34.6	29.6	40.9	49.1	65.4	79.8	89.9	93.8	109.1
		Int. Cap	32.0	27.2	37.5	44.8	57.3	79.8	89.9	93.8	109.1
	3400	Capacity	35.2	31.2	42.8	51.4	68.2	82.7	93.4	97.2	112.5
		Int. Cap	32.5	28.7	39.3	46.8	59.8	82.7	93.4	97.2	112.5
	4250	Capacity	38.2	34.9	46.7	55.4	72.7	87.1	98.2	101.8	116.8
		Int. Cap	35.3	32.1	42.9	50.5	63.7	87.1	98.2	101.8	116.8

LEGEND

Indicates standard rating point
Capacity — Instantaneous Capacity (1000 Btuh) includes indoor fan motor heat at AHRI static conditions
db — Dry Bulb
Int. Cap. — Integrated Capacity is Instantaneous Capacity minus the effects of frost on the outdoor coil and the heat required to defrost
RH — Relative Humidity

HEATING CAPACITIES, 10 TONS

50HCQD12											
RETURN AIR (°F db)	CFM (STANDARD AIR)		TEMPERATURE AIR ENTERING OUTDOOR COIL (°F db at 70% RH)								
			–10	0	10	17	30	40	47	50	60
55	3000	Capacity		50.9	62.9	72.7	91.4	106.1	117.2	121.0	136.2
		Int. Cap		46.8	57.8	66.3	80.1	106.1	117.2	121.0	136.2
	4000	Capacity		53.5	66.0	75.9	94.8	109.6	120.7	124.3	139.4
		Int. Cap		49.2	60.6	69.2	83.0	109.6	120.7	124.3	139.4
	5000	Capacity		56.0	69.1	79.1	97.5	112.3	123.0	126.3	140.9
		Int. Cap		51.5	63.4	72.1	85.4	112.3	123.0	126.3	140.9
70	3000	Capacity		45.8	57.9	66.9	86.4	101.6	112.2	116.3	131.2
		Int. Cap		42.1	53.1	61.0	75.7	101.6	112.2	116.3	131.2
	4000	Capacity		48.5	60.9	70.4	90.4	105.1	116.1	120.0	134.8
		Int. Cap		44.6	55.9	64.2	79.3	105.1	116.1	120.0	134.8
	5000	Capacity		51.1	63.7	73.6	93.5	108.0	118.9	122.5	137.0
		Int. Cap		47.0	58.4	67.1	81.9	108.0	118.9	122.5	137.0
80	3000	Capacity	30.4	41.9	54.1	63.1	82.6	98.5	108.9	113.1	127.9
		Int. Cap	28.1	38.6	49.6	57.6	72.3	98.5	108.9	113.1	127.9
	4000	Capacity	32.8	44.6	57.1	66.5	86.5	102.1	112.7	116.9	131.5
		Int. Cap	30.4	41.1	52.4	60.6	75.8	102.1	112.7	116.9	131.5
	5000	Capacity	35.2	47.2	59.9	69.4	89.8	105.1	115.8	119.6	134.0
		Int. Cap	32.6	43.5	55.0	63.3	78.7	105.1	115.8	119.6	134.0

LEGEND

Indicates operation not permissible
Indicates standard rating point
Capacity — Instantaneous Capacity (1000 Btuh) includes indoor fan motor heat at AHRI static conditions
db — Dry Bulb
Int. Cap. — Integrated Capacity is Instantaneous Capacity minus the effects of frost on the outdoor coil and the heat required to defrost
RH — Relative Humidity

STATIC PRESSURE ADDERS (IN WG.) — FACTORY OPTIONS AND/OR ACCESSORIES

Economizer

3-5 TONS											
CFM (in. wg)	600	800	1000	1250	1500	1750	2000	2250	2500	2750	3000
Vertical Economizer	0.01	0.02	0.04	0.05	0.07	0.09	0.12	0.15	0.18	0.22	0.26
Horizontal Economizer	0.02	0.03	0.04	0.06	0.08	0.10	0.13	0.15	0.18	0.23	0.28

6-8.5 TONS																
CFM (in. wg)	2250	2500	2750	3000	3250	3500	3750	4000	4250	4500	4750	5000	5250	5500	5750	6000
Vertical Economizer	0.06	0.08	0.09	0.12	0.13	0.15	0.17	0.20	0.22	0.25	0.29	0.33	0.36	0.40	0.44	0.48
Horizontal Economizer	0.08	0.10	0.13	0.15	0.18	0.21	0.25	0.28	0.30	0.34	0.39	0.43	0.47	0.51	0.56	0.60

10 TONS																
CFM (in. wg)	2250	2500	2750	3000	3250	3500	3750	4000	4250	4500	4750	5000	5250	5500	5750	6000
Vertical Economizer	0.01	0.01	0.01	0.01	0.01	0.02	0.02	0.02	0.03	0.03	0.03	0.04	0.04	0.04	0.05	0.06
Horizontal Economizer	0.04	0.04	0.05	0.07	0.08	0.09	0.10	0.12	0.13	0.15	0.17	0.19	0.21	0.23	0.25	0.27

Electric Heaters

3-5 TONS										
CFM (in. wg)	600	900	1200	1400	1600	1800	2000	2200	2400	2600
1 Electric Heater Module	0.03	0.05	0.07	0.09	0.09	0.10	0.11	0.11	0.12	0.13
2 Electric Heater Modules	0.13	0.15	0.16	0.16	0.16	0.17	0.17	0.17	0.18	0.18

6-8.5 TONS																
CFM (in. wg)	2250	2500	2750	3000	3250	3500	3750	4000	4250	4500	4750	5000	5250	5500	5750	6000
1 Electric Heater Module	0.03	0.04	0.04	0.05	0.06	0.07	0.08	0.09	0.10	0.11	0.12	0.13	0.14	0.15	0.16	0.18
2 Electric Heater Modules	0.04	0.05	0.05	0.06	0.07	0.08	0.09	0.10	0.11	0.12	0.13	0.15	0.16	0.17	0.19	0.20

10 TONS																
CFM (in. wg)	2250	2500	2750	3000	3250	3500	3750	4000	4250	4500	4750	5000	5250	5500	5750	6000
Vertical 1 Electric Heater Module	0.01	0.01	0.01	0.01	0.02	0.02	0.02	0.02	0.02	0.02	0.03	0.03	0.03	0.03	0.03	0.04
Vertical 2 Electric Heater Modules	0.02	0.02	0.02	0.02	0.03	0.03	0.03	0.04	0.04	0.04	0.05	0.05	0.06	0.06	0.07	0.07
Horizontal 1 Electric Heater Module	0.02	0.02	0.03	0.03	0.03	0.04	0.04	0.05	0.05	0.05	0.06	0.06	0.07	0.07	0.08	0.08
Horizontal 2 Electric Heater Modules	0.02	0.02	0.02	0.03	0.03	0.03	0.04	0.04	0.04	0.05	0.05	0.05	0.06	0.06	0.07	0.07

GENERAL FAN PERFORMANCE NOTES

1. Interpolation is permissible. Do not extrapolate.
2. External static pressure is the static pressure difference between the return duct and the supply duct plus the static pressure caused by any FIOPs or accessories.
3. Tabular data accounts for pressure loss due to clean filters, unit casing, and wet coils. Factory options and accessories may add static pressure losses, as shown on page 41. Selection software is available, through your salesperson, to help you select the best motor/drive combination for your application.
4. The Fan Performance tables offer motor/drive recommendations. In cases when two motor/drive combinations would work, Carrier recommended the lower horsepower option.
5. For information on the electrical properties of Carrier motors, please see the Electrical information section of this book.
6. For more information on the performance limits of Carrier motors, see the application data section of this book.

3 TON UNIT DIRECT DRIVE

SPEED (TORQUE) TAP	HORIZONTAL			VERTICAL		
	CFM	ESP	BHP	CFM	ESP	BHP
1	900	0.57	0.25	900	0.44	0.19
	975	0.47	0.24	975	0.34	0.18
	1050	0.37	0.22	1050	0.24	0.17
	1125	0.27	0.21	1125	0.15	0.16
	1200	0.18	0.20	1200	0.07	0.16
	1275	0.09	0.20	1275	—	—
	1350	—	—	1350	—	—
	1425	—	—	1425	—	—
	1500	—	—	1500	—	—
2	900	0.73	0.30	900	0.60	0.24
	975	0.62	0.29	975	0.49	0.23
	1050	0.51	0.28	1050	0.38	0.22
	1125	0.41	0.27	1125	0.28	0.21
	1200	0.30	0.25	1200	0.18	0.20
	1275	0.19	0.24	1275	0.09	0.19
	1350	0.08	0.22	1350	—	—
	1425	—	—	1425	—	—
	1500	—	—	1500	—	—
3	900	1.04	0.41	900	0.93	0.36
	975	0.93	0.40	975	0.81	0.35
	1050	0.82	0.39	1050	0.70	0.34
	1125	0.70	0.38	1125	0.58	0.33
	1200	0.58	0.36	1200	0.47	0.31
	1275	0.46	0.35	1275	0.36	0.30
	1350	0.34	0.33	1350	0.25	0.29
	1425	0.23	0.31	1425	0.14	0.27
	1500	0.12	0.30	1500	—	—
4	900	1.26	0.49	900	1.15	0.44
	975	1.18	0.50	975	1.07	0.45
	1050	1.09	0.50	1050	0.97	0.46
	1125	0.99	0.50	1125	0.86	0.46
	1200	0.88	0.49	1200	0.74	0.43
	1275	0.76	0.47	1275	0.61	0.41
	1350	0.63	0.46	1350	0.48	0.40
	1425	0.50	0.44	1425	0.35	0.39
	1500	0.37	0.42	1500	0.23	0.37
5	900	1.35	0.52	900	1.24	0.51
	975	1.30	0.54	975	1.19	0.52
	1050	1.26	0.57	1050	1.24	0.54
	1125	1.21	0.59	1125	1.24	0.57
	1200	1.16	0.62	1200	1.03	0.59
	1275	1.12	0.64	1275	0.98	0.61
	1350	1.07	0.67	1350	0.93	0.64
	1425	1.02	0.70	1425	0.88	0.67
	1500	0.97	0.73	1500	0.82	0.69

4 TON UNIT DIRECT DRIVE

SPEED (TORQUE) TAP	HORIZONTAL			VERTICAL		
	CFM	ESP	BHP	CFM	ESP	BHP
1	1200	0.93	0.48	1200	0.87	0.43
	1300	0.80	0.46	1300	0.73	0.41
	1400	0.66	0.44	1400	0.59	0.39
	1500	0.51	0.41	1500	0.43	0.37
	1600	0.36	0.39	1600	0.27	0.34
	1700	0.22	0.36	1700	0.12	0.33
	1800	0.08	0.33	1800	—	—
	1900	—	—	1900	—	—
	2000	—	—	2000	—	—
2	1200	1.04	0.53	1200	0.96	0.48
	1300	0.91	0.51	1300	0.84	0.46
	1400	0.76	0.48	1400	0.69	0.44
	1500	0.61	0.46	1500	0.53	0.41
	1600	0.45	0.43	1600	0.37	0.39
	1700	0.30	0.40	1700	0.21	0.36
	1800	0.16	0.38	1800	0.06	0.34
	1900	0.04	0.35	1900	—	—
	2000	—	—	2000	—	—
3	1200	1.18	0.58	1200	1.13	0.53
	1300	1.09	0.59	1300	1.06	0.53
	1400	0.98	0.60	1400	0.98	0.54
	1500	0.86	0.60	1500	0.88	0.56
	1600	0.72	0.57	1600	0.76	0.54
	1700	0.57	0.54	1700	0.62	0.52
	1800	0.42	0.51	1800	0.47	0.50
	1900	0.28	0.48	1900	0.31	0.47
	2000	0.15	0.45	2000	0.15	0.45
4	1200	1.24	0.60	1200	1.16	0.57
	1300	1.18	0.63	1300	1.12	0.59
	1400	1.12	0.66	1400	1.07	0.62
	1500	1.04	0.71	1500	1.00	0.67
	1600	0.95	0.70	1600	0.91	0.66
	1700	0.85	0.71	1700	0.80	0.67
	1800	0.73	0.71	1800	0.67	0.67
	1900	0.60	0.69	1900	0.52	0.63
	2000	0.45	0.65	2000	0.35	0.61
5	1200	1.25	0.61	1200	1.16	0.59
	1300	1.20	0.65	1300	1.11	0.63
	1400	1.12	0.68	1400	1.01	0.67
	1500	1.04	0.68	1500	0.91	0.67
	1600	1.05	0.76	1600	0.96	0.75
	1700	1.01	0.76	1700	0.91	0.75
	1800	0.96	0.84	1800	0.86	0.83
	1900	0.91	0.89	1900	0.80	0.87
	2000	0.87	0.93	2000	0.74	0.91

Performance data (cont)

5 TON UNIT DIRECT DRIVE

SPEED (TORQUE) TAP	HORIZONTAL			VERTICAL		
	CFM	ESP	BHP	CFM	ESP	BHP
1	1500	0.37	0.35	1500	0.27	0.32
	1625	0.22	0.33	1625	0.13	0.30
	1750	0.08	0.31	1750	—	—
	1875	—	—	1875	—	—
	2000	—	—	2000	—	—
	2125	—	—	2125	—	—
	2250	—	—	2250	—	—
	2375	—	—	2375	—	—
	2500	—	—	2500	—	—
2	1500	0.54	0.44	1500	0.42	0.40
	1625	0.37	0.41	1625	0.25	0.37
	1750	0.20	0.38	1750	0.08	0.34
	1875	0.04	0.35	1875	—	—
	2000	—	—	2000	—	—
	2125	—	—	2125	—	—
	2250	—	—	2250	—	—
	2375	—	—	2375	—	—
	2500	—	—	2500	—	—
3	1500	1.28	0.83	1500	1.11	0.79
	1625	1.10	0.81	1625	0.91	0.76
	1750	0.90	0.78	1750	0.70	0.74
	1875	0.68	0.74	1875	0.50	0.70
	2000	0.47	0.70	2000	0.30	0.67
	2125	0.27	0.66	2125	0.12	0.63
	2250	0.10	0.62	2250	—	—
	2375	—	—	2375	—	—
	2500	—	—	2500	—	—
4	1500	1.46	0.94	1500	1.29	0.90
	1625	1.32	0.92	1625	1.13	0.88
	1750	1.16	0.96	1750	0.95	0.91
	1875	0.96	0.95	1875	0.74	0.88
	2000	0.76	0.91	2000	0.52	0.84
	2125	0.54	0.86	2125	0.30	0.80
	2250	0.33	0.82	2250	0.11	0.77
	2375	0.14	0.78	2375	—	—
	2500	0.00	0.72	2500	—	—
5	1500	1.52	0.97	1500	1.36	0.94
	1625	1.42	1.01	1625	1.24	0.99
	1750	1.16	1.05	1750	0.95	1.02
	1875	0.96	1.09	1875	0.74	1.05
	2000	1.00	1.09	2000	0.74	1.03
	2125	0.82	1.06	2125	0.53	0.99
	2250	0.62	1.02	2250	0.31	0.94
	2375	0.40	0.98	2375	0.08	0.90
	2500	0.16	0.93	2500	-0.14	0.86

50HCQA04 — 3 TON HORIZONTAL SUPPLY

CFM	Available External Static Pressure (in. wg)																			
	0.2		0.4		0.6		0.8		1.0		1.2		1.4		1.6		1.8		2.0	
	RPM	BHP	RPM	BHP	RPM	BHP	RPM	BHP	RPM	BHP	RPM	BHP	RPM	BHP	RPM	BHP	RPM	BHP	RPM	BHP
900	574	0.13	707	0.23	817	0.34	913	0.47	999	0.61	1078	0.77	1151	0.93	1220	1.11	1284	1.30	1346	1.49
975	597	0.15	727	0.25	835	0.37	929	0.50	1015	0.64	1093	0.80	1165	0.97	1233	1.15	1297	1.33	1358	1.53
1050	621	0.18	747	0.28	853	0.40	946	0.53	1030	0.68	1108	0.84	1180	1.01	1247	1.19	1311	1.38	1371	1.58
1125	646	0.20	768	0.31	872	0.43	964	0.57	1047	0.72	1123	0.88	1195	1.05	1261	1.23	1325	1.42	1385	1.62
1200	671	0.23	790	0.34	892	0.47	982	0.61	1064	0.76	1140	0.92	1210	1.10	1276	1.28	1339	1.47	1399	1.68
1275	696	0.26	812	0.38	912	0.51	1001	0.65	1082	0.81	1157	0.97	1226	1.15	1292	1.33	1354	1.53	1414	1.73
1350	723	0.30	835	0.42	933	0.55	1020	0.70	1100	0.86	1174	1.02	1243	1.20	1308	1.39	1370	1.59	1429	1.80
1425	749	0.34	859	0.46	955	0.60	1040	0.75	1119	0.91	1192	1.08	1260	1.26	1325	1.45	1386	1.65	1444	1.86
1500	776	0.38	883	0.51	977	0.65	1061	0.80	1138	0.97	1210	1.14	1278	1.33	1342	1.52	1403	1.72	1461	1.93

LEGEND

— Med Static Motor and Drive - 819-1251 RPM, Max BHP 1.5 (motor is new 1.7 HP)
— High Static Motor and Drive - 1035-1466 RPM, Max BHP 2.0 (motor is 2.4 HP)

50HCQA04 — 3 TON VERTICAL SUPPLY

CFM	Available External Static Pressure (in. wg)																			
	0.2		0.4		0.6		0.8		1.0		1.2		1.4		1.6		1.8		2.0	
	RPM	BHP	RPM	BHP	RPM	BHP	RPM	BHP	RPM	BHP	RPM	BHP	RPM	BHP	RPM	BHP	RPM	BHP	RPM	BHP
900	594	0.15	740	0.25	867	0.37	981	0.52	1084	0.68	1180	0.86	1269	1.05	1354	1.25	1434	1.47	**1511**	**1.70**
975	618	0.17	758	0.28	881	0.40	991	0.55	1092	0.71	1186	0.89	1275	1.08	1358	1.29	1437	1.51	**1513**	**1.74**
1050	642	0.19	777	0.30	896	0.43	1003	0.58	1102	0.75	1194	0.92	1281	1.12	1363	1.32	1441	1.54	**1516**	**1.78**
1125	668	0.22	797	0.34	912	0.47	1017	0.62	1113	0.79	1204	0.97	1289	1.16	1370	1.37	1447	1.59	**1520**	**1.82**
1200	695	0.25	818	0.37	930	0.51	1032	0.66	1126	0.83	1215	1.01	1298	1.21	1378	1.42	1454	1.64	**1526**	**1.87**
1275	722	0.29	841	0.41	949	0.55	1048	0.71	1140	0.88	1227	1.06	1309	1.26	1387	1.47	1462	1.69	**1533**	**1.92**
1350	750	0.33	864	0.46	968	0.60	1065	0.76	1155	0.93	1240	1.12	1321	1.32	1397	1.53	**1471**	**1.75**	**1541**	**1.99**
1425	778	0.37	888	0.50	989	0.65	1083	0.81	1171	0.99	1254	1.18	1333	1.38	1409	1.59	**1481**	**1.82**	—	—
1500	807	0.42	913	0.56	1011	0.71	1103	0.87	1188	1.05	1270	1.24	1347	1.45	1421	1.66	**1492**	**1.89**	—	—

LEGEND

— Med Static Motor and Drive - 819-1251 RPM, Max BHP 1.5 (motor is new 1.7 HP)
— High Static Motor and Drive - 1035-1466 RPM, Max BHP 2.0 (motor is 2.4 HP)
BOLD — Field-supplied drive recommended using field supplied fan pulley (part no. KR11AZ606) motor pulley (part no. KR11HY191), and belt (KR29AF043)

Performance data (cont)

50HCQA05 — 4 TON HORIZONTAL SUPPLY

CFM	Available External Static Pressure (in. wg)																			
	0.2		0.4		0.6		0.8		1.0		1.2		1.4		1.6		1.8		2.0	
	RPM	BHP	RPM	BHP	RPM	BHP	RPM	BHP	RPM	BHP	RPM	BHP	RPM	BHP	RPM	BHP	RPM	BHP	RPM	BHP
1200	630	0.20	755	0.31	859	0.43	949	0.56	1030	0.70	1104	0.84	1173	0.99	1237	1.15	1298	1.32	1356	1.49
1300	659	0.24	781	0.36	883	0.48	972	0.61	1052	0.76	1125	0.91	1194	1.06	1258	1.23	1318	1.40	1375	1.58
1400	689	0.28	808	0.40	908	0.53	995	0.67	1075	0.82	1147	0.98	1215	1.14	1278	1.31	1338	1.48	1395	1.67
1500	720	0.33	836	0.46	933	0.59	1020	0.74	1098	0.89	1170	1.05	1237	1.22	1299	1.39	1359	1.57	1416	1.76
1600	752	0.38	864	0.52	960	0.66	1044	0.81	1121	0.97	1193	1.13	1259	1.31	1321	1.49	1380	1.67	1437	1.86
1700	784	0.44	893	0.58	986	0.73	1070	0.89	1146	1.05	1216	1.22	1282	1.40	1344	1.59	1402	1.78	1458	1.97
1800	816	0.50	922	0.65	1014	0.81	1096	0.97	1171	1.14	1240	1.32	1305	1.50	1366	1.69	1424	1.89	*1480*	*2.09*
1900	849	0.58	952	0.73	1042	0.90	1122	1.07	1196	1.24	1265	1.43	1329	1.61	1390	1.81	*1447*	*2.01*	*1502*	*2.22*
2000	882	0.66	982	0.82	1070	0.99	1149	1.17	1222	1.35	1290	1.54	1353	1.73	1413	1.93	*1470*	*2.14*	*1525*	*2.35*

LEGEND

— Med Static Motor and Drive - 920-1303 RPM, Max BHP 1.5 (motor is new 1.7 HP)

— High Static Motor and Drive - 1035-1466 RPM, Max BHP 2.0 (motor is 2.4 HP)

Italics — Field-supplied motor and drive required recommend using field supplied motor (HD58FE651-230v and 460v, HD58FE576-575 volt), fan pulley (part no. KR11AZ606), motor pulley (part no. KR11HY213), and belt (KR29AF043)

50HCQA05 — 4 TON VERTICAL SUPPLY

CFM	Available External Static Pressure (in. wg)																			
	0.2		0.4		0.6		0.8		1.0		1.2		1.4		1.6		1.8		2.0	
	RPM	BHP	RPM	BHP	RPM	BHP	RPM	BHP	RPM	BHP	RPM	BHP	RPM	BHP	RPM	BHP	RPM	BHP	RPM	BHP
900	682	0.25	800	0.36	897	0.48	982	0.61	1058	0.75	1128	0.89	1192	1.03	1252	1.18	1309	1.34	1363	1.50
975	717	0.29	832	0.42	928	0.55	1011	0.68	1086	0.82	1155	0.97	1219	1.12	1279	1.28	1336	1.44	1389	1.61
1050	753	0.34	865	0.48	958	0.61	1041	0.76	1115	0.91	1183	1.06	1247	1.22	1306	1.38	1362	1.55	1416	1.72
1125	789	0.40	898	0.54	990	0.69	1071	0.84	1144	1.00	1212	1.16	1275	1.32	1334	1.49	1389	1.67	1443	1.85
1200	826	0.47	932	0.62	1022	0.77	1102	0.93	1174	1.09	1241	1.26	1303	1.43	1362	1.61	1417	1.79	1470	1.98
1275	863	0.54	966	0.70	1055	0.86	1133	1.03	1205	1.20	1271	1.37	1332	1.55	1390	1.74	1445	1.93	*1498*	*2.12*
1350	901	0.62	1001	0.79	1088	0.96	1165	1.13	1235	1.31	1301	1.50	1362	1.68	1419	1.87	*1474*	*2.07*	*1526*	*2.27*
1425	939	0.71	1037	0.89	1121	1.07	1197	1.25	1267	1.44	1331	1.63	1392	1.82	*1449*	*2.02*	*1503*	*2.22*	—	—
1500	978	0.81	1073	0.99	1156	1.18	1230	1.37	1299	1.57	1362	1.77	1422	1.97	*1478*	*2.18*	*1532*	*2.38*	—	—

LEGEND

— Med Static Motor and Drive - 920-1303 RPM, Max BHP 1.5 (motor is new 1.7 HP)

— High Static Motor and Drive - 1035-1466 RPM, Max BHP 2.0 (motor is 2.4 HP)

Italics — Field-supplied motor and drive required recommend using field supplied motor (HD58FE651-230v and 460v, HD58FE576-575 volt), fan pulley (part no. KR11AZ606), motor pulley (part no. KR11HY213), and belt (KR29AF043)

50HCQA06 — 5 TON HORIZONTAL SUPPLY

CFM	Available External Static Pressure (in. wg)																			
	0.2		0.4		0.6		0.8		1.0		1.2		1.4		1.6		1.8		2.0	
	RPM	BHP	RPM	BHP	RPM	BHP	RPM	BHP	RPM	BHP	RPM	BHP	RPM	BHP	RPM	BHP	RPM	BHP	RPM	BHP
1500	725	0.33	840	0.46	937	0.60	1023	0.75	1101	0.90	1172	1.06	1239	1.23	1302	1.40	1361	1.58	1418	1.77
1625	765	0.40	876	0.54	970	0.68	1054	0.84	1131	1.00	1201	1.16	1267	1.34	1329	1.52	1388	1.71	1444	1.90
1750	806	0.48	912	0.63	1004	0.78	1087	0.94	1162	1.11	1231	1.28	1296	1.46	1358	1.65	1416	1.84	1472	2.04
1875	847	0.57	950	0.72	1039	0.88	1120	1.05	1194	1.23	1262	1.41	1326	1.60	1387	1.79	1445	1.99	1499	2.20
2000	889	0.66	988	0.83	1075	1.00	1154	1.18	1226	1.36	1294	1.55	1357	1.74	1417	1.95	1474	2.15	1528	2.36
2125	931	0.78	1027	0.95	1112	1.13	1189	1.31	1260	1.50	1326	1.70	1388	1.90	1447	2.11	1504	2.33	—	—
2250	974	0.90	1067	1.08	1149	1.27	1224	1.46	1294	1.66	1359	1.87	1420	2.08	1479	2.29	1534	2.51	—	—
2375	1018	1.03	1107	1.23	1187	1.43	1261	1.63	1329	1.84	1393	2.05	1453	2.27	1511	2.49	—	—	—	—
2500	1061	1.19	1148	1.39	1226	1.59	1297	1.81	1364	2.02	1427	2.24	1487	2.47	1543	2.70	—	—	—	—

LEGEND

— Med Static - 1066-1380 RPM, Max BHP 2.0 (motor is new 2.4 HP)
— High Static - 1208-1550 RPM, Max BHP 2.9 (motor is 2.9 HP)

50HCQA06 — 5 TON VERTICAL SUPPLY

CFM	Available External Static Pressure (in. wg)																			
	0.2		0.4		0.6		0.8		1.0		1.2		1.4		1.6		1.8		2.0	
	RPM	BHP	RPM	BHP	RPM	BHP	RPM	BHP	RPM	BHP	RPM	BHP	RPM	BHP	RPM	BHP	RPM	BHP	RPM	BHP
1500	794	0.41	902	0.55	993	0.69	1074	0.85	1147	1.00	1214	1.16	1277	1.33	1336	1.50	1392	1.67	1445	1.85
1625	840	0.49	945	0.64	1034	0.80	1113	0.96	1185	1.13	1251	1.30	1313	1.47	1371	1.65	1427	1.83	1479	2.02
1750	888	0.59	988	0.75	1075	0.92	1153	1.09	1223	1.26	1289	1.44	1350	1.63	1407	1.81	1462	2.01	1514	2.20
1875	936	0.70	1033	0.87	1117	1.05	1193	1.23	1263	1.41	1327	1.60	1387	1.80	1444	1.99	1498	2.19	1550	2.40
2000	984	0.82	1078	1.00	1160	1.19	1235	1.39	1303	1.58	1366	1.78	1426	1.98	1482	2.19	1535	2.40	—	—
2125	1033	0.96	1124	1.15	1204	1.35	1277	1.56	1343	1.76	1406	1.97	1464	2.18	1520	2.40	—	—	—	—
2250	1083	1.11	1170	1.32	1248	1.53	1319	1.74	1385	1.96	1446	2.18	1504	2.40	—	—	—	—	—	—
2375	1133	1.28	1217	1.50	1293	1.72	1363	1.95	1427	2.17	1487	2.40	1544	2.63	—	—	—	—	—	—
2500	1183	1.47	1265	1.70	1339	1.93	1406	2.17	1470	2.41	1529	2.64	—	—	—	—	—	—	—	—

LEGEND

— Med Static - 1066-1380 RPM, Max BHP 2.0 (motor is new 2.4 HP)
— High Static - 1208-1550 RPM, Max BHP 2.9 (motor is 2.9 HP)

Performance data (cont)

50HCQA/D07 — 6 TON HORIZONTAL SUPPLY

CFM	Available External Static Pressure (in. wg)																			
	0.2		0.4		0.6		0.8		1.0		1.2		1.4		1.6		1.8		2.0	
	RPM	BHP	RPM	BHP	RPM	BHP	RPM	BHP	RPM	BHP	RPM	BHP	RPM	BHP	RPM	BHP	RPM	BHP	RPM	BHP
1800	415	0.28	510	0.46	588	0.65	655	0.85	715	1.08	770	1.31	821	1.56	868	1.82	913	2.09	955	2.36
1950	431	0.32	525	0.51	601	0.71	668	0.93	727	1.16	782	1.40	832	1.66	879	1.92	924	2.20	966	2.49
2100	448	0.38	540	0.57	615	0.78	681	1.01	740	1.25	794	1.50	844	1.76	891	2.03	935	2.32	977	2.61
2250	465	0.43	555	0.64	629	0.86	694	1.10	753	1.34	806	1.60	856	1.87	903	2.15	947	2.45	988	2.75
2400	483	0.49	571	0.71	644	0.94	708	1.19	766	1.45	819	1.71	868	1.99	915	2.28	958	2.58	1000	2.89
2550	501	0.56	587	0.79	659	1.04	722	1.29	779	1.56	832	1.83	881	2.12	927	2.42	971	2.73	1012	3.05
2700	519	0.64	603	0.88	674	1.14	737	1.40	793	1.68	845	1.96	894	2.26	940	2.57	983	2.88	1024	3.21
2850	538	0.72	620	0.98	689	1.24	751	1.52	807	1.80	859	2.10	907	2.41	953	2.72	995	3.05	1036	3.38
3000	557	0.82	637	1.08	705	1.36	766	1.64	822	1.94	873	2.24	921	2.56	966	2.89	1008	3.22	1049	3.56

LEGEND

— Std Static - 489-747 RPM, Max BHP 1.2 (motor is 1.7 HP)
— Med Static - 733-949 RPM, Max BHP 2.9 (motor is 2.9 HP)
— High Static - 909-1102 RPM, Max BHP 4.0 (motor is 4.9 HP)

50HCQA/D07 — 6 TON VERTICAL SUPPLY

CFM	Available External Static Pressure (in. wg)																			
	0.2		0.4		0.6		0.8		1.0		1.2		1.4		1.6		1.8		2.0	
	RPM	BHP	RPM	BHP	RPM	BHP	RPM	BHP	RPM	BHP	RPM	BHP	RPM	BHP	RPM	BHP	RPM	BHP	RPM	BHP
1800	446	0.33	534	0.50	609	0.70	676	0.91	736	1.14	791	1.39	843	1.65	892	1.93	938	2.22	981	2.53
1950	467	0.39	552	0.57	625	0.77	690	0.99	750	1.23	804	1.49	855	1.76	903	2.04	949	2.34	992	2.65
2100	489	0.45	571	0.64	642	0.86	706	1.08	764	1.33	818	1.59	868	1.87	915	2.16	961	2.46	1003	2.78
2250	511	0.53	591	0.73	660	0.95	722	1.19	779	1.44	832	1.71	882	1.99	928	2.29	973	2.59	1015	2.92
2400	534	0.61	611	0.82	678	1.05	739	1.30	795	1.56	847	1.83	896	2.12	942	2.43	986	2.74	1028	3.07
2550	558	0.71	631	0.93	697	1.17	756	1.42	811	1.69	862	1.97	910	2.27	956	2.58	999	2.90	1041	3.23
2700	581	0.81	652	1.04	716	1.29	774	1.55	828	1.83	878	2.12	926	2.42	971	2.74	1013	3.07	1055	3.41
2850	605	0.93	674	1.17	736	1.43	792	1.70	845	1.98	895	2.28	941	2.59	986	2.92	1028	3.25	1069	3.60
3000	630	1.06	696	1.31	756	1.58	811	1.86	863	2.15	912	2.46	958	2.78	1001	3.11	1043	3.45	1083	3.80

LEGEND

— Std Static - 489-747 RPM, Max BHP 1.2 (motor is 1.7 HP)
— Med Static - 733-949 RPM, Max BHP 2.9 (motor is 2.9 HP)
— High Static - 909-1102 RPM, Max BHP 4.0 (motor is 4.9 HP)

50HCQD08 — 7.5 TON HORIZONTAL SUPPLY

CFM	Available External Static Pressure (in. wg)																			
	0.2		0.4		0.6		0.8		1.0		1.2		1.4		1.6		1.8		2.0	
	RPM	BHP	RPM	BHP	RPM	BHP	RPM	BHP	RPM	BHP	RPM	BHP	RPM	BHP	RPM	BHP	RPM	BHP	RPM	BHP
2250	433	0.29	518	0.41	596	0.54	667	0.67	733	0.81	795	0.96	854	1.11	910	1.27	963	1.43	1014	1.60
2438	454	0.35	535	0.48	609	0.61	677	0.75	741	0.90	802	1.05	859	1.21	913	1.38	966	1.55	1016	1.72
2625	477	0.42	553	0.55	624	0.69	689	0.84	751	1.00	810	1.16	865	1.32	919	1.49	970	1.67	1019	1.85
2813	500	0.49	572	0.64	640	0.78	703	0.94	763	1.10	819	1.27	874	1.44	925	1.62	975	1.80	1023	1.99
3000	523	0.58	592	0.73	657	0.88	718	1.05	775	1.22	830	1.39	883	1.57	934	1.76	982	1.95	1029	2.14
3188	547	0.68	613	0.83	675	1.00	733	1.17	789	1.34	843	1.53	894	1.71	943	1.90	990	2.10	1036	2.30
3375	571	0.78	634	0.95	694	1.12	750	1.30	804	1.48	856	1.67	905	1.86	953	2.06	1000	2.27	1045	2.48
3563	596	0.90	656	1.07	713	1.25	768	1.44	820	1.63	870	1.83	918	2.03	965	2.23	1010	2.44	1054	2.66
3750	621	1.03	679	1.21	734	1.40	786	1.59	837	1.79	885	1.99	932	2.20	978	2.42	1022	2.64	1065	2.86

LEGEND

— Std Static - 518-733 RPM, Max BHP 1.2 (motor is 1.7 HP)
— Med Static - 690-936 RPM, Max BHP 1.7 (motor is 2.4 HP)
— High Static - 838-1084 RPM, Max BHP 2.8 (motor is 3.7 HP)

50HCQD08 — 7.5 TON VERTICAL SUPPLY

CFM	Available External Static Pressure (in. wg)																			
	0.2		0.4		0.6		0.8		1.0		1.2		1.4		1.6		1.8		2.0	
	RPM	BHP	RPM	BHP	RPM	BHP	RPM	BHP	RPM	BHP	RPM	BHP	RPM	BHP	RPM	BHP	RPM	BHP	RPM	BHP
2250	457	0.32	536	0.44	604	0.55	664	0.67	719	0.79	770	0.91	817	1.03	861	1.15	903	1.28	943	1.40
2438	481	0.39	557	0.51	623	0.64	682	0.77	735	0.89	785	1.02	832	1.15	876	1.28	917	1.41	957	1.55
2625	505	0.47	578	0.60	642	0.73	700	0.87	753	1.00	802	1.14	847	1.28	891	1.42	932	1.56	971	1.70
2813	530	0.55	601	0.70	663	0.84	719	0.98	771	1.13	819	1.27	864	1.42	907	1.57	947	1.72	986	1.87
3000	556	0.65	623	0.80	684	0.95	738	1.11	789	1.26	836	1.42	881	1.57	923	1.73	963	1.89	1001	2.05
3188	582	0.76	647	0.92	705	1.08	759	1.25	808	1.41	855	1.57	898	1.74	940	1.90	979	2.07	1017	2.24
3375	608	0.88	671	1.05	727	1.22	779	1.40	828	1.57	873	1.74	916	1.91	957	2.09	996	2.26	1034	2.44
3563	634	1.01	695	1.19	750	1.38	801	1.56	848	1.74	893	1.92	935	2.11	975	2.29	1014	2.47	1051	2.66
3750	661	1.16	719	1.35	773	1.54	822	1.73	869	1.93	912	2.12	954	2.31	994	2.50	1031	2.70	1068	2.89

LEGEND

— Std Static - 518-733 RPM, Max BHP 1.2 (motor is 1.7 HP)
— Med Static - 690-936 RPM, Max BHP 1.7 (motor is 2.4 HP)
— High Static - 838-1084 RPM, Max BHP 2.8 (motor is 3.7 HP)

Performance data (cont)

50HCQD09 — 8.5 TON HORIZONTAL SUPPLY

CFM	Available External Static Pressure (in. wg)																			
	0.2		0.4		0.6		0.8		1.0		1.2		1.4		1.6		1.8		2.0	
	RPM	BHP	RPM	BHP	RPM	BHP	RPM	BHP	RPM	BHP	RPM	BHP	RPM	BHP	RPM	BHP	RPM	BHP	RPM	BHP
2550	468	0.39	546	0.52	618	0.66	684	0.80	747	0.96	806	1.11	863	1.28	916	1.45	968	1.62	1018	1.80
2763	493	0.47	567	0.61	635	0.76	699	0.91	760	1.07	817	1.24	871	1.41	924	1.59	974	1.77	1022	1.95
2975	520	0.57	589	0.72	654	0.87	716	1.03	774	1.20	829	1.37	882	1.55	932	1.74	981	1.93	1028	2.12
3188	547	0.68	613	0.83	675	1.00	733	1.17	789	1.34	843	1.53	894	1.71	943	1.90	990	2.10	1036	2.30
3400	575	0.80	637	0.96	696	1.14	752	1.31	806	1.50	858	1.69	907	1.88	955	2.09	1001	2.29	1046	2.50
3613	603	0.94	662	1.11	719	1.29	773	1.48	824	1.67	874	1.87	922	2.07	968	2.28	1013	2.49	1057	2.71
3825	631	1.09	688	1.27	742	1.46	794	1.66	843	1.86	891	2.07	938	2.28	983	2.49	1027	2.71	—	—
4038	660	1.26	714	1.45	766	1.65	816	1.85	864	2.06	910	2.28	955	2.50	999	2.72	—	—	—	—
4250	689	1.45	741	1.65	790	1.86	838	2.07	885	2.29	930	2.51	973	2.74	—	—	—	—	—	—

LEGEND

— Std static - 440-609 RPM, Max BHP 1.7 (motor is 2.4 HP)
— Med static - 591-838 RPM, Max BHP 2.9 (motor is 2.9 HP)
— High static - 838-1084 RPM, Max BHP 2.8 (motor is 3.7 HP)

50HCQD09 — 8.5 TON VERTICAL SUPPLY

CFM	Available External Static Pressure (in. wg)																			
	0.2		0.4		0.6		0.8		1.0		1.2		1.4		1.6		1.8		2.0	
	RPM	BHP	RPM	BHP	RPM	BHP	RPM	BHP	RPM	BHP	RPM	BHP	RPM	BHP	RPM	BHP	RPM	BHP	RPM	BHP
2550	495	0.43	570	0.56	634	0.70	693	0.83	746	0.96	795	1.09	841	1.23	885	1.36	926	1.50	965	1.64
2763	524	0.53	595	0.67	657	0.81	714	0.95	766	1.09	814	1.24	859	1.38	902	1.53	943	1.68	982	1.82
2975	552	0.63	620	0.79	681	0.94	736	1.09	787	1.24	834	1.40	878	1.55	921	1.71	961	1.86	999	2.02
3188	582	0.76	647	0.92	705	1.08	759	1.25	808	1.41	855	1.57	898	1.74	940	1.90	979	2.07	1017	2.24
3400	611	0.89	674	1.07	730	1.24	782	1.42	831	1.59	876	1.76	919	1.94	960	2.12	998	2.29	1036	2.47
3613	641	1.05	701	1.23	756	1.42	806	1.60	854	1.79	898	1.97	940	2.16	980	2.34	1018	2.53	1055	2.72
3825	672	1.22	729	1.42	782	1.61	831	1.81	877	2.00	921	2.20	962	2.40	1001	2.59	1039	2.79	—	—
4038	702	1.41	758	1.62	809	1.83	857	2.03	901	2.24	944	2.45	984	2.65	—	—	—	—	—	—
4250	733	1.62	787	1.84	836	2.06	883	2.28	926	2.49	968	2.71	1007	2.93	—	—	—	—	—	—

LEGEND

— Std static - 440-609 RPM, Max BHP 1.7 (motor is 2.4 HP)
— Med static - 591-838 RPM, Max BHP 2.9 (motor is 2.9 HP)
— High static - 838-1084 RPM, Max BHP 2.8 (motor is 3.7 HP)

50HCQD12 — 10 TON HORIZONTAL SUPPLY

CFM	Available External Static Pressure (in. wg)																			
	0.2		0.4		0.6		0.8		1.0		1.2		1.4		1.6		1.8		2.0	
	RPM	BHP	RPM	BHP	RPM	BHP	RPM	BHP	RPM	BHP	RPM	BHP	RPM	BHP	RPM	BHP	RPM	BHP	RPM	BHP
3000	335	0.32	**421**	**0.51**	500	0.74	572	1.00	637	1.29	697	1.59	751	1.91	801	2.24	847	2.59	891	2.94
3250	**350**	**0.38**	**430**	**0.58**	505	0.81	575	1.08	640	1.37	699	1.68	753	2.01	803	2.35	850	2.71	895	3.08
3500	**365**	**0.45**	441	0.65	512	0.89	579	1.16	642	1.46	701	1.78	755	2.12	806	2.47	853	2.84	898	3.22
3750	**381**	**0.53**	452	0.74	520	0.98	584	1.26	645	1.56	703	1.88	757	2.23	808	2.59	855	2.97	900	3.36
4000	**397**	**0.61**	464	0.83	529	1.08	590	1.36	650	1.67	706	2.00	*759*	*2.35*	809	2.72	857	3.11	902	3.51
4250	**413**	**0.70**	477	0.93	538	1.19	598	1.47	655	1.78	709	2.12	*761*	*2.48*	811	2.86	858	3.25	903	3.66
4500	**429**	**0.81**	491	1.05	549	1.31	606	1.60	661	1.91	714	2.25	765	2.62	813	3.00	860	3.40	905	3.82
4750	445	0.92	505	1.17	561	1.44	615	1.73	667	2.05	719	2.40	768	2.77	816	3.15	862	3.56	906	3.99
5000	462	1.04	519	1.30	573	1.58	625	1.88	675	2.21	725	2.55	773	2.93	820	3.32	865	3.73	908	4.16

LEGEND

— Std Static - 440-609 RPM, Max BHP 1.9 (motor is 2.4 HP)
— Med Static - 547-757 RPM, Max BHP 2.9 (motor is 2.9 HP)
— High Static - 762-963 RPM, Max BHP 6.5* (motor is 5.0 HP)
BOLD — Field-supplied drive (motor pulley = KR11HY151, use belt and blower pulley from standard static), rpm range = 338-507
Italics — Field-supplied drive (motor pulley = KR11HY186, blower pulley = KR51BJ413, belt = KR30BE072, use medium static motor), rpm range = 684-864
Underline — Field-supplied (motor pulley = KR11HY194, blower pulley = KR51BJ413, belt = KR30BE072, use high static motor), rpm range = 846-1061

* On Size 12 units, Max BHP for the High-Static High-Efficiency motor varies with the motor's voltage; see the table below.

Voltage	BHP
208	6.5
230	6.9
460	7.0
575	8.3

50HCQD12 — 10 TON VERTICAL SUPPLY

CFM	Available External Static Pressure (in. wg)																			
	0.2		0.4		0.6		0.8		1.0		1.2		1.4		1.6		1.8		2.0	
	RPM	BHP	RPM	BHP	RPM	BHP	RPM	BHP	RPM	BHP	RPM	BHP	RPM	BHP	RPM	BHP	RPM	BHP	RPM	BHP
3000	**383**	**0.39**	470	0.60	549	0.85	620	1.13	684	1.42	742	1.73	795	2.05	845	2.38	891	2.73	935	3.08
3250	**402**	**0.47**	483	0.68	559	0.94	629	1.22	692	1.53	749	1.85	802	2.19	852	2.54	899	2.89	943	3.26
3500	**421**	**0.55**	498	0.78	570	1.04	637	1.33	699	1.65	756	1.98	809	2.33	859	2.69	906	3.06	950	3.45
3750	441	0.65	513	0.88	582	1.15	647	1.45	707	1.78	764	2.12	816	2.48	866	2.86	912	3.24	956	3.64
4000	461	0.75	529	0.99	594	1.27	657	1.58	716	1.91	771	2.27	824	2.64	873	3.03	919	3.42	963	3.83
4250	481	0.87	545	1.12	608	1.41	668	1.72	725	2.06	780	2.43	831	2.81	880	3.21	926	3.62	970	4.04
4500	502	1.01	563	1.26	622	1.55	680	1.88	735	2.22	788	2.60	839	2.99	887	3.40	933	3.82	976	4.25
4750	522	1.15	581	1.42	637	1.72	693	2.05	746	2.40	798	2.78	847	3.18	895	3.60	940	4.03	983	4.47
5000	543	1.31	599	1.59	653	1.90	706	2.23	*758*	*2.59*	808	2.98	856	3.38	903	3.81	947	4.25	990	4.71

LEGEND

— Std Static - 440-609 RPM, Max BHP 1.9 (motor is 2.4 HP)
— Med Static - 547-757 RPM, Max BHP 2.9 (motor is 2.9 HP)
— High Static - 762-963 RPM, Max BHP 6.5* (motor is 5.0 HP)
BOLD — Field-supplied drive (motor pulley = KR11HY151, use belt and blower pulley from standard static), rpm range = 338-507
Italics — Field-supplied drive (motor pulley = KR11HY186, blower pulley = KR51BJ413, belt = KR30BE072, use medium static motor), rpm range = 684-864
Underline — Field-supplied (motor pulley = KR11HY194, blower pulley = KR51BJ413, belt = KR30BE072, use high static motor), rpm range = 846-1061

* On Size 12 units, Max BHP for the High-Static High-Efficiency motor varies with the motor's voltage; see the table below.

Voltage	BHP
208	6.5
230	6.9
460	7.0
575	8.3

PULLEY ADJUSTMENT — BELT DRIVE

50HCQ UNIT		MOTOR/DRIVE COMBO	MOTOR PULLEY TURNS OPEN (RPM)										
			0.0	0.5	1.0	1.5	2.0	2.5	3.0	3.5	4.0	4.5	5.0
04	3 Phase	Medium Static	1251	1208	1165	1121	1078	1035	992	949	905	862	819
		High Static	1466	1423	1380	1337	1294	1251	1207	1164	1121	1078	1035
05	3 Phase	Medium Static	1303	1265	1226	1188	1150	1112	1073	1035	997	958	920
		High Static	1466	1423	1380	1337	1294	1251	1207	1164	1121	1078	1035
06	3 Phase	Medium Static	1380	1349	1317	1286	1254	1223	1192	1160	1129	1097	1066
		High Static	1639	1596	1553	1510	1467	1424	1380	1337	1294	1251	1208
07	3 Phase	Standard Static	747	721	695	670	644	618	592	566	541	515	489
		Medium Static	949	927	906	884	863	841	819	798	776	755	733
		High Static	1102	1083	1063	1044	1025	1006	986	967	948	928	909
08	3 Phase	Standard Static	733	712	690	669	647	626	604	583	561	540	518
		Medium Static	936	911	887	862	838	813	788	764	739	715	690
		High Static	1084	1059	1035	1010	986	961	936	912	887	863	838
09	3 Phase	Standard Static	652	633	614	594	575	556	537	518	498	479	460
		Medium Static	838	813	789	764	739	715	690	665	640	616	591
		High Static	1084	1059	1035	1010	986	961	936	912	887	863	838
12	3 Phase	Standard Static	609	592	575	558	541	525	508	491	474	457	440
		Medium Static	757	736	715	694	673	652	631	610	589	568	547
		High Static	963	943	923	903	883	863	842	822	802	782	762

LEGEND

— Factory settings

NOTE: Do not adjust pulley further than 5 turns open.

ECONOMIZER, BAROMETRIC RELIEF AND PE PERFORMACE

Barometric Relief Flow Capacity

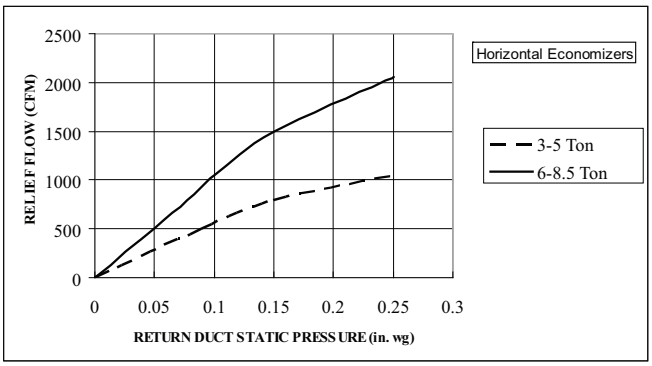

Barometric Relief Flow Capacity

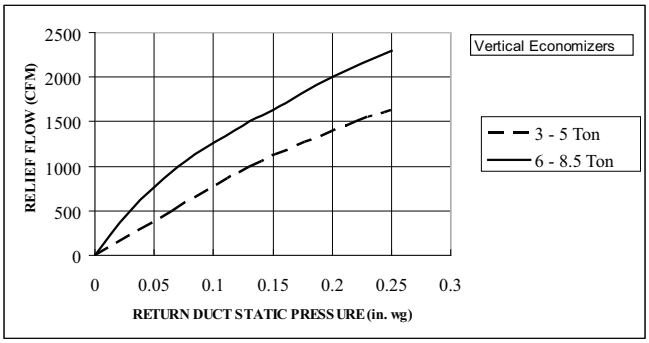

Return Air Pressure Drop

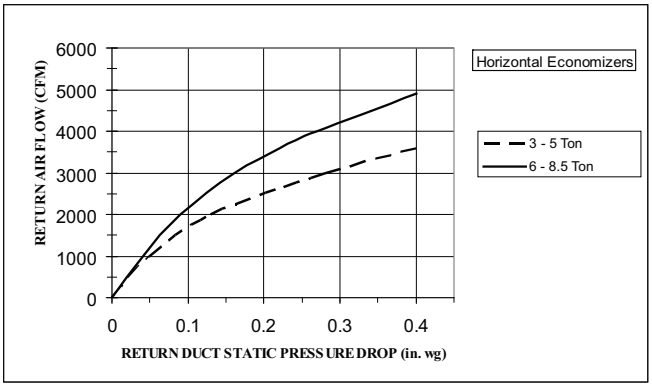

Return Air Pressure Drop

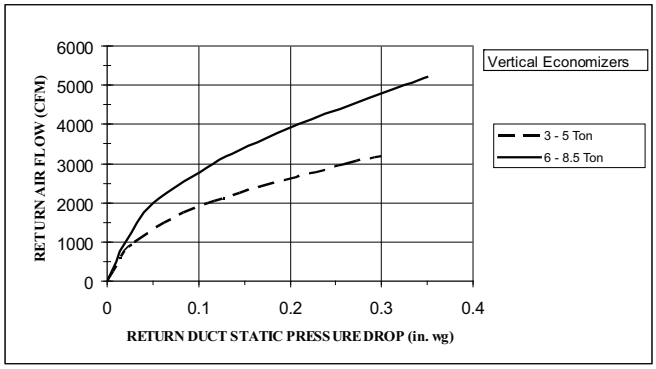

Horizontal Power Exhaust Performance

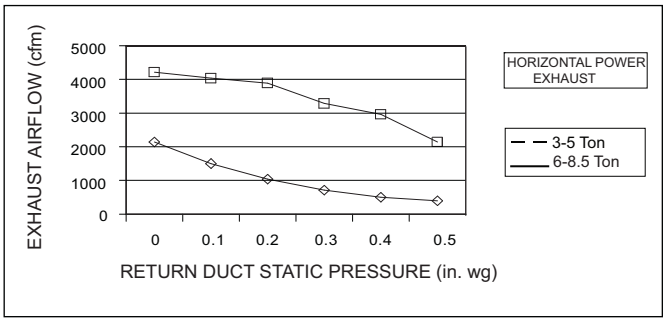

Vertical Power Exhaust Performance

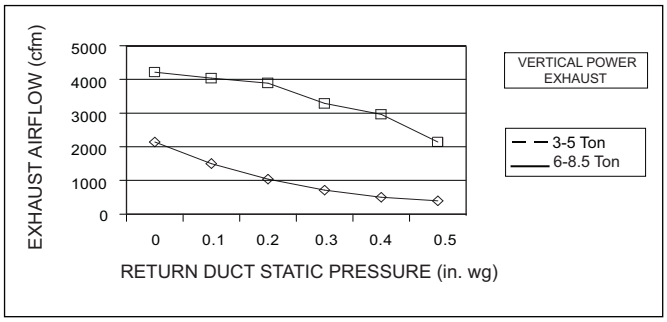

ECONOMIZER, BAROMETRIC RELIEF AND PE PERFORMACE (CONT)

Barometric Relief Flow Capacity

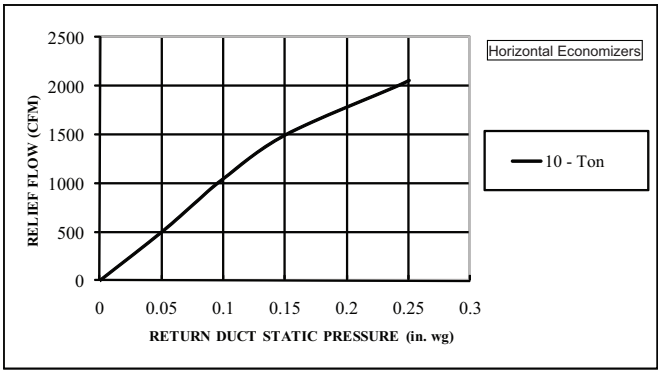

Barometric Relief Flow Capacity

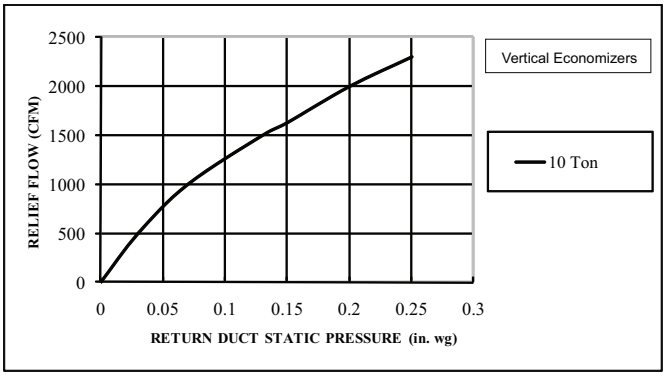

Return Air Pressure Drop

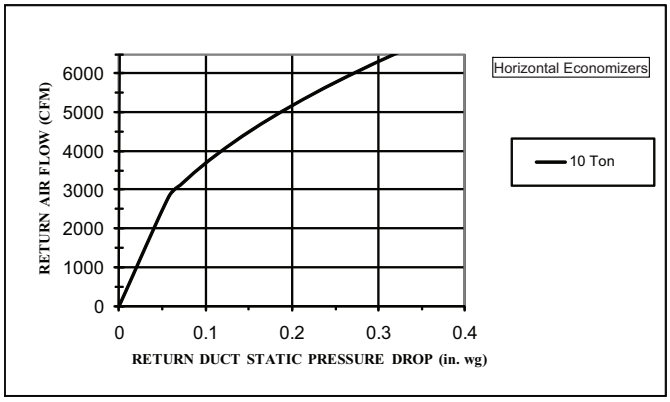

Return Air Pressure Drop

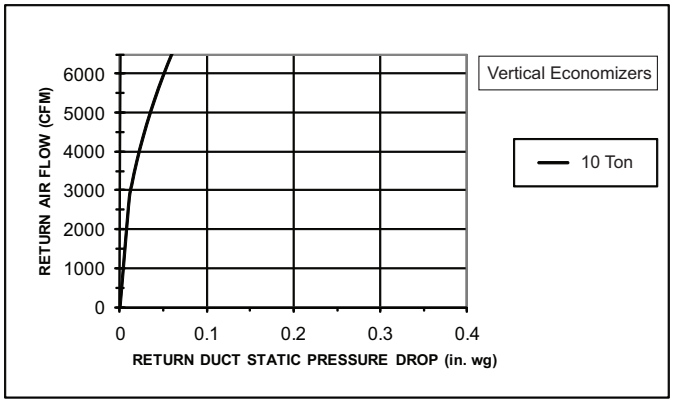

Horizontal Power Exhaust Performance

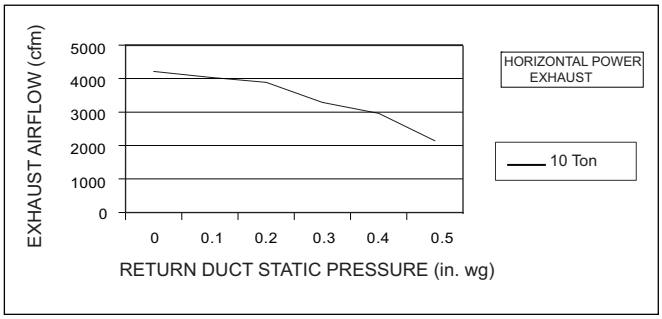

Vertical Power Exhaust Performance

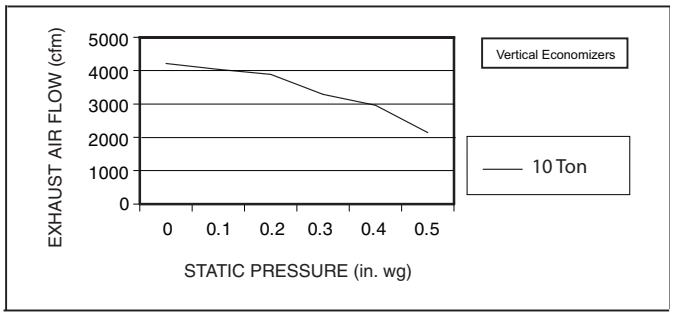

TYPICAL POWER WIRING DIAGRAM: 1-STAGE COOLING UNIT SHOWN

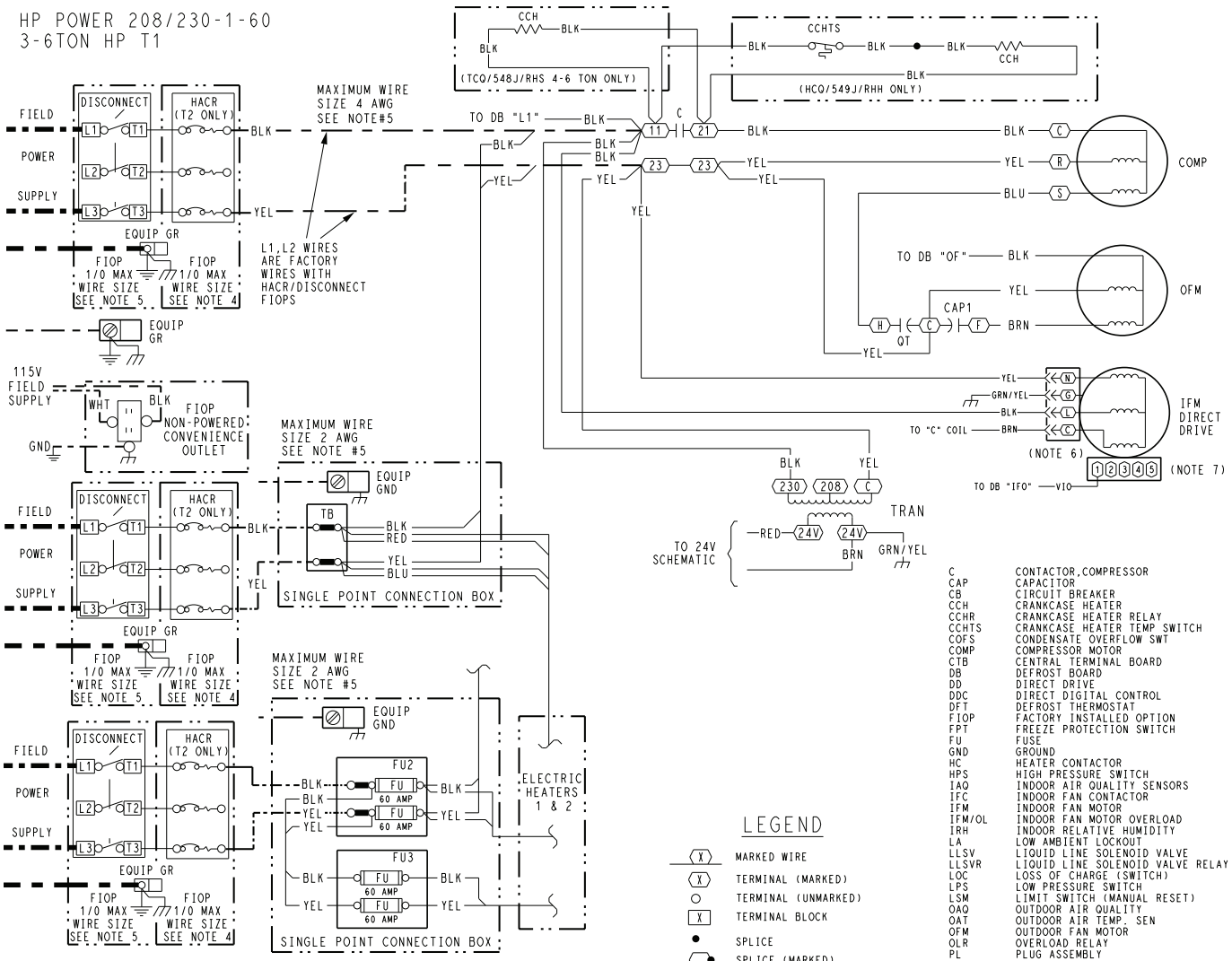

NOTES

1. IF REQUIRED, ORIGINAL UNIT WIRING MUST BE REPLACED WITH TYPE 90 C WIRE OR EQUIVALENT.
2. COMPRESSOR AND FAN MOTORS ARE THERMALLY PROTECTED.
3. 208/230V UNIT TRAN IS WIRED FOR 230V UNIT. IF UNIT IS TO BE RUN WITH 208V POWER SUPPLY DISCONNECT BLK WIRE FROM 230V TAP AND CONNECT TO 200V TAP.
4. USE COPPER, COPPER CLAD ALUMINUM OR ALUMINUM CONDUCTORS.
5. USE COPPER CONDUCTOR ONLY.
6. DO NOT DISCONNECT POWER PLUG OR SIGNAL WIRE WHILE UNDER LOAD.
7. FACTORY WIRING FOR SIGNAL CONNECTION: 3 - 6 TON =1. RELOCATION OF SIGNAL CONNECTION MAY BE REQUIRED WHEN USING FIELD INSTALLED ACCESSORIES - CONSULT INSTALLATION INSTRUCTION FOR PROPER SELECTION.

LEGEND

- MARKED WIRE
- TERMINAL (MARKED)
- TERMINAL (UNMARKED)
- TERMINAL BLOCK
- SPLICE
- SPLICE (MARKED)
- FACTORY WIRING
- FIELD CONTROL WIRING
- FIELD POWER WIRING
- CIRCUIT BOARD TRACE
- ACCESSORY OR FIOP OR ALTERNATE UNIT
- TO INDICATE COMMON POTENTIAL ONLY: NOT TO REPRESENT WIRING

C	CONTACTOR,COMPRESSOR
CAP	CAPACITOR
CB	CIRCUIT BREAKER
CCH	CRANKCASE HEATER
CCHR	CRANKCASE HEATER RELAY
CCHTS	CRANKCASE HEATER TEMP SWITCH
COFS	CONDENSATE OVERFLOW SWT
COMP	COMPRESSOR MOTOR
CTB	CENTRAL TERMINAL BOARD
DB	DEFROST BOARD
DD	DIRECT DRIVE
DDC	DIRECT DIGITAL CONTROL
DFT	DEFROST THERMOSTAT
FIOP	FACTORY INSTALLED OPTION
FPT	FREEZE PROTECTION SWITCH
FU	FUSE
GND	GROUND
HC	HEATER CONTACTOR
HPS	HIGH PRESSURE SWITCH
IAQ	INDOOR AIR QUALITY SENSORS
IFC	INDOOR FAN CONTACTOR
IFM	INDOOR FAN MOTOR
IFM/OL	INDOOR FAN MOTOR OVERLOAD
IRH	INDOOR RELATIVE HUMIDITY
LA	LOW AMBIENT LOCKOUT
LLSV	LIQUID LINE SOLENOID VALVE
LLSVR	LIQUID LINE SOLENOID VALVE RELAY
LOC	LOSS OF CHARGE (SWITCH)
LPS	LOW PRESSURE SWITCH
LSM	LIMIT SWITCH (MANUAL RESET)
OAQ	OUTDOOR AIR QUALITY
OAT	OUTDOOR AIR TEMP. SEN
OFM	OUTDOOR FAN MOTOR
OLR	OVERLOAD RELAY
PL	PLUG ASSEMBLY
PMR	PHASE MONITOR RELAY
QT	QUADRUPLE TERMINAL
R	RELAY
RAT	RETURN AIR TEMP. SEN
RMT OCC	REMOTE OCCUPANCY
RVS	REVERSING VALVE SOLENOID
SAT	SUPPLY AIR TEMP. SENSOR
SEN	SENSOR
SET	SET POINT OFFSET
TB	TERMINAL BOARD
TDR	TIME DELAY RELAY(WINTER START)
TRAN	TRANSFORMER

48TM501435 | I

TYPICAL CONTROL WIRING DIAGRAM: 1-STAGE UNIT WITH ELECTRO-MECHANICAL CONTROL SHOWN

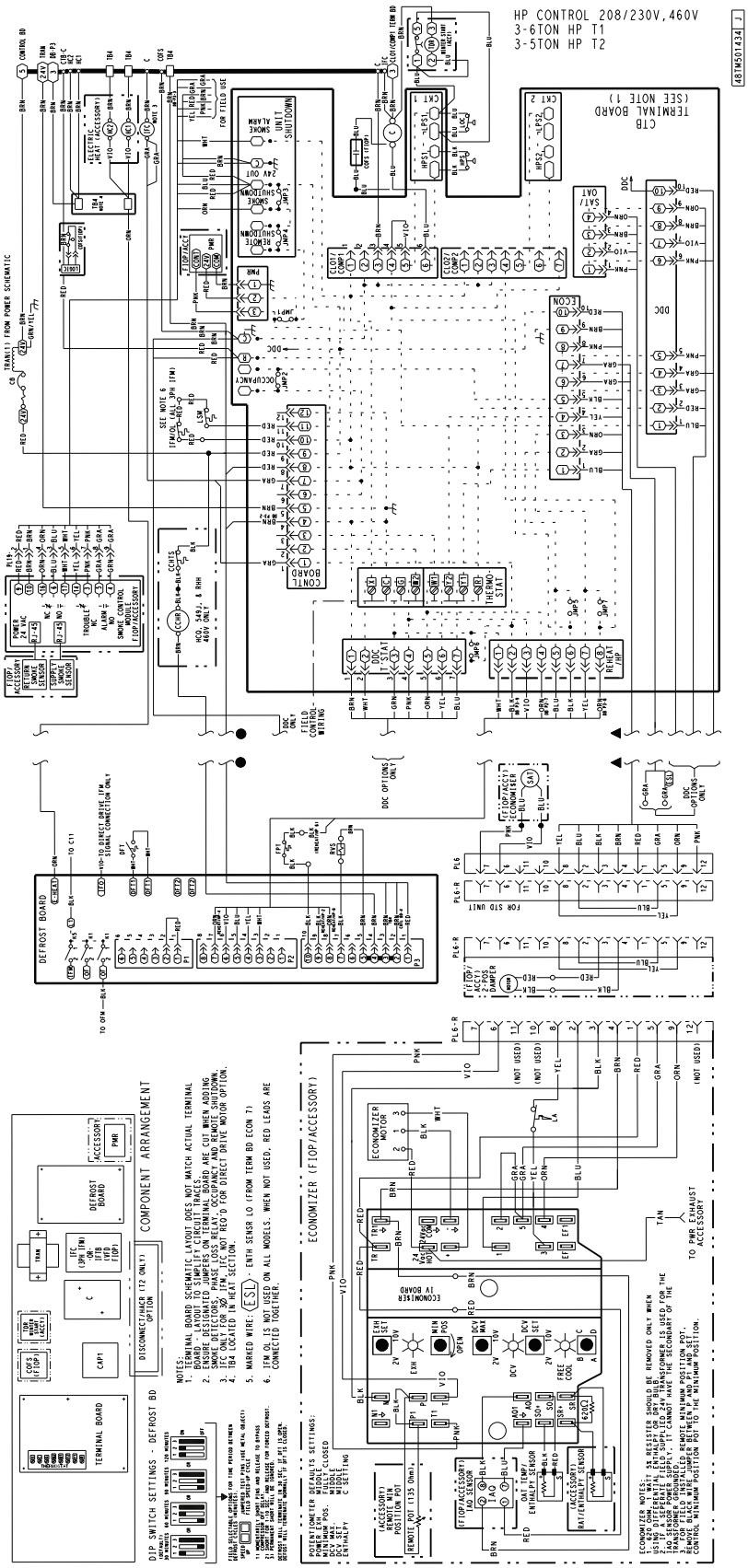

TYPICAL POWER WIRING DIAGRAM: 2-STAGE UNIT WITH 2-SPEED INDOOR FAN MOTOR AND VFD SHOWN

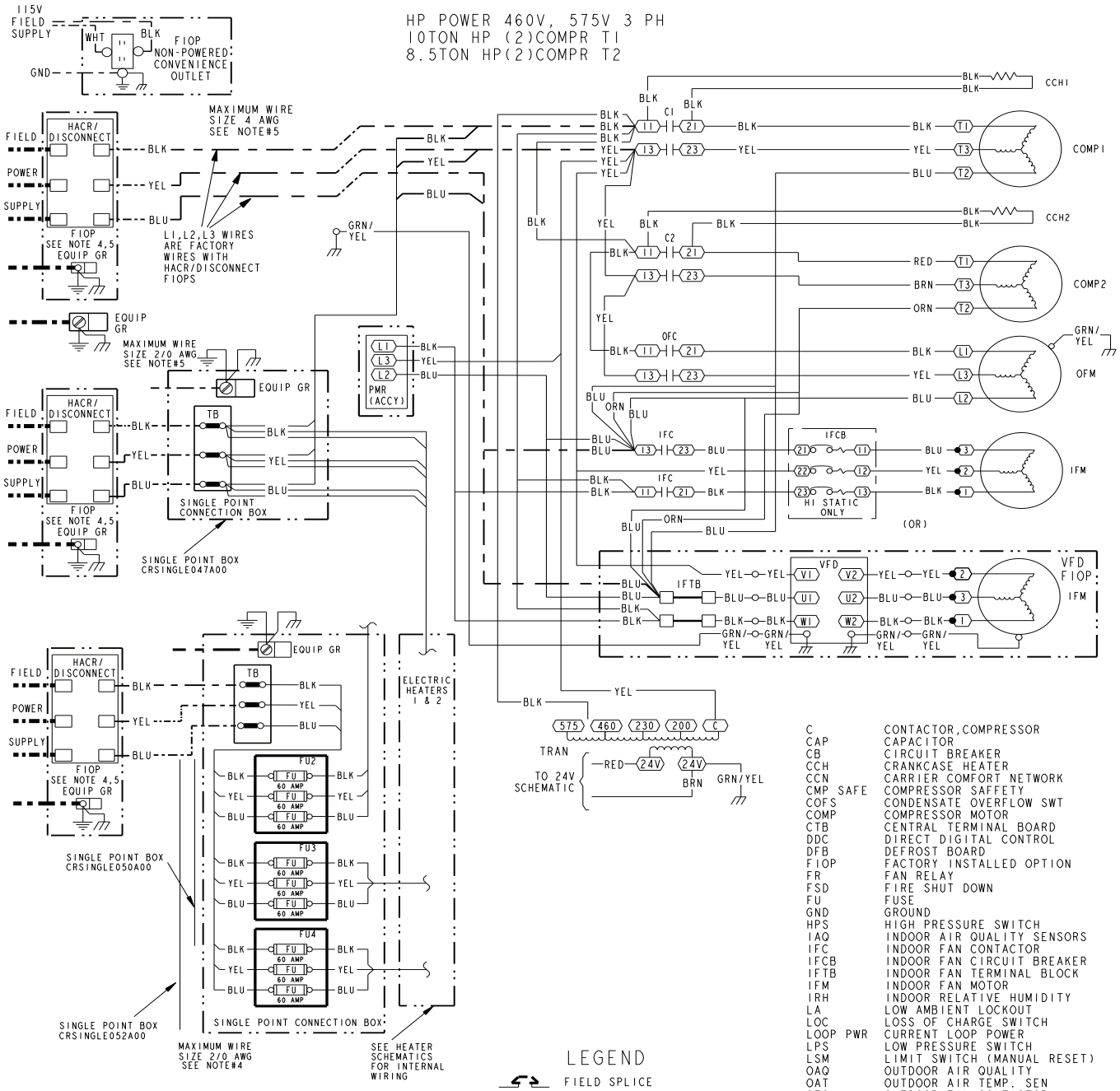

NOTES:

1. IF ANY OF THE ORIGINAL WIRE FURNISHED MUST BE REPLACED. IT MUST BE REPLACED WITH TYPE 90 C WIRE OR ITS EQUIVALENT.
2. COMPRESSOR AND FAN MOTORS ARE THERMALLY PROTECTED. THREE PHASE MOTORS ARE PROTECTED AGAINST PRIMARY SINGLE PHASING CONDITIONS.
4. USE COPPER, COPPER CLAD ALUMINUM OR ALUMINUM CONDUCTORS. MAX 1/0 FOR HACR (T2 ONLY)
5. USE COPPER CONDUCTOR ONLY. MAX 1/0 FOR DISCONNECT.

LEGEND

- FIELD SPLICE
- MARKED WIRE
- TERMINAL (MARKED)
- TERMINAL (UNMARKED)
- TERMINAL BLOCK
- FACTORY WIRING
- FIELD CONTROL WIRING
- FIELD POWER WIRING
- CIRCUIT BOARD TRACE
- ACCESSORY OR FIOP
- TO INDICATE COMMON POTENTIAL ONLY: NOT TO REPRESENT WIRING

C	CONTACTOR,COMPRESSOR
CAP	CAPACITOR
CB	CIRCUIT BREAKER
CCH	CRANKCASE HEATER
CCN	CARRIER COMFORT NETWORK
CMP SAFE	COMPRESSOR SAFFETY
COFS	CONDENSATE OVERFLOW SWT
COMP	COMPRESSOR MOTOR
CTB	CENTRAL TERMINAL BOARD
DDC	DIRECT DIGITAL CONTROL
DFB	DEFROST BOARD
FIOP	FACTORY INSTALLED OPTION
FR	FAN RELAY
FSD	FIRE SHUT DOWN
FU	FUSE
GND	GROUND
HPS	HIGH PRESSURE SWITCH
IAQ	INDOOR AIR QUALITY SENSORS
IFC	INDOOR FAN CONTACTOR
IFCB	INDOOR FAN CIRCUIT BREAKER
IFTB	INDOOR FAN TERMINAL BLOCK
IFM	INDOOR FAN MOTOR
IRH	INDOOR RELATIVE HUMIDITY
LA	LOW AMBIENT LOCKOUT
LOC	LOSS OF CHARGE SWITCH
LOOP PWR	CURRENT LOOP POWER
LPS	LOW PRESSURE SWITCH
LSM	LIMIT SWITCH (MANUAL RESET)
OAQ	OUTDOOR AIR QUALITY
OAT	OUTDOOR AIR TEMP. SEN
OFC	OUTDOOR FAN CONTACTOR
OFM	OUTDOOR FAN MOTOR
OL	OVERLOAD
PL	PLUG ASSEMBLY
POT	POTENTIOMETER
PMR	PHASE MONITOR RELAY
QT	QUADRUPLE TERMINAL
R	RELAY
RAT	RETURN AIR TEMP. SEN
RMT OCC	REMOTE OCCUPANCY
SAT	SUPPLY AIR TEMP. SENSOR
SEN	SENSOR
SET	SET POINT OFFSET
SFS	SUPPLY FAN STATUS
TDR	TIME DELAY RELAY(WINTER START)
TRAN	TRANSFORMER
VFD	VARIABLE FREQUENCY DRIVE

48TM501958 | G

TYPICAL CONTROL WIRING DIAGRAM: 2-STAGE UNIT WITH ELECTRO-MECHANICAL CONTROL SHOWN

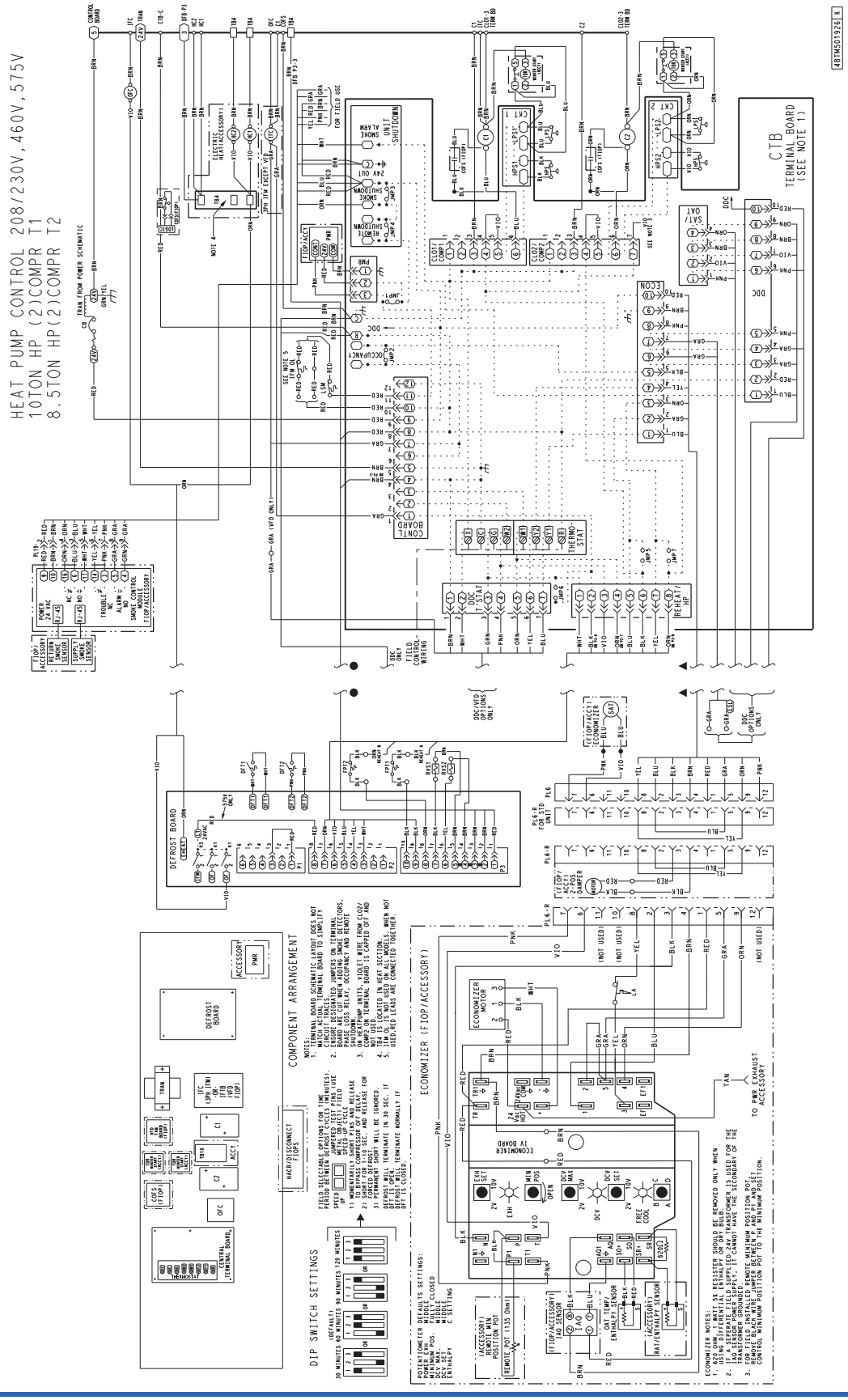

ELECTRIC HEAT - ELECTRICAL DATA
SINGLE STAGE COOLING SINGLE SPEED INDOOR FAN MOTOR

UNIT SIZE	NOM. V-Ph-Hz	IFM TYPE	ELECTRIC HEATER PART NUMBER CRHEATER ****00	NOM PWR (kW)	APP PWR (kW)	SINGLE POINT KIT PART NUMBER CRSINGLE***A00			
						WITHOUT C.O. or UNPWRD C.O.		WITH PWRD C.O.	
						WITHOUT P.E.	WITH P.E. (pwrd fr/unit)	WITHOUT P.E.	WITH P.E. (pwrd fr/unit)
50HCQA04	208/230-1-60	DD-STD	101A00	4.4	3.3/4.0	037A00	037A00	—	—
			102A00	6.5	4.9/6.0	040A00	040A00	—	—
			103B00	8.7	6.5/8.0	040A00	040A00	—	—
			104B00	10.5	7.9/9.6	040A00	040A00	—	—
			102A00,102A00	13.0	9.8/11.9	041A00	041A00	—	—
	208/230-3-60	DD-STD	101A00	4.4	3.3/4.0	—	—	—	—
			102A00	6.5	4.9/6.0	—	—	—	—
			103B00	8.7	6.5/8.0	—	—	037A00	037A00
			104B00	10.5	7.9/9.6	037A00	037A00	037A00	037A00
			105A00	16.0	12.0/14.7	038A00	038A00	038A00	038A00
		MED	101A00	4.4	3.3/4.0	—	—	—	—
			102A00	6.5	4.9/6.0	—	—	—	—
			103B00	8.7	6.5/8.0	—	—	—	037A00
			104B00	10.5	7.9/9.6	037A00	037A00	037A00	037A00
			105A00	16.0	12.0/14.7	038A00	038A00	038A00	038A00
		HIGH	101A00	4.4	3.3/4.0	—	—	—	—
			102A00	6.5	4.9/6.0	—	—	—	—
			103B00	8.7	6.5/8.0	—	—	037A00	037A00
			104B00	10.5	7.9/9.6	037A00	037A00	037A00	037A00
			105A00	16.0	12.0/14.7	038A00	038A00	038A00	038A00
	460-3-60	DD-STD	106A00	6.0	5.5	—	—	—	—
			107A00	8.8	8.1	—	—	—	—
			108A00	11.5	10.6	—	—	—	—
			109A00	14.0	12.9	—	—	—	—
		MED	106A00	6.0	5.5	—	—	—	—
			107A00	8.8	8.1	—	—	—	—
			108A00	11.5	10.6	—	—	—	—
			109A00	14.0	12.9	—	—	—	—
		HIGH	106A00	6.0	5.5	—	—	—	—
			107A00	8.8	8.1	—	—	—	—
			108A00	11.5	10.6	—	—	—	—
			109A00	14.0	12.9	—	—	—	—
	575-3-60	DD-STD	297A00	10.0	9.2	—	—	—	—
			298A00	15.0	13.8	—	—	—	—
		MED	297A00	10.0	9.2	—	—	—	—
			298A00	15.0	13.8	—	—	—	—
		HIGH	297A00	10.0	9.2	—	—	—	—
			298A00	15.0	13.8	—	—	—	—

LEGEND

— — No Single Point Kit required
APP PWR — 208 / 230V / 460V / 575V
C.O. — Convenience outlet
DD — Electric Drive X13 5 speed/torque motor
IFM — Indoor fan motor
NOM PWR — 240V / 480V / 600V
P.E. — Power exhaust
PWRD — Powered convenience outlet
pwrd fr/unit — Powered from unit
UNPWRD — Unpowered convenience outlet

ELECTRIC HEAT - ELECTRICAL DATA
SINGLE STAGE COOLING SINGLE SPEED INDOOR FAN AND FACTORY-INSTALLED NON-FUSED DISCONNECT SWITCH

UNIT SIZE	NOM. V-Ph-Hz	IFM TYPE	ELECTRIC HEATER PART NUMBER CRHEATER ****00	NOM PWR (kW)	APP PWR (kW)	SINGLE POINT KIT PART NUMBER CRSINGLE***A00			
						WITHOUT C.O. or UNPWRD C.O.		WITH PWRD C.O.	
						WITHOUT P.E.	WITH P.E. (pwrd fr/unit)	WITHOUT P.E.	WITH P.E. (pwrd fr/unit)
50HCQA04	208/230-1-60	DD-STD	101A00	4.4	3.3/4.0	037A00	037A00	—	—
			102A00	6.5	4.9/6.0	040A00	040A00	—	—
			103B00	8.7	6.5/8.0	040A00	040A00	—	—
			104B00	10.5	7.9/9.6	040A00	040A00	—	—
			102A00,102A00	13.0	9.8/11.9	041A00	041A00	—	—
	208/230-3-60	DD-STD	101A00	4.4	3.3/4.0	037A00	037A00	037A00	037A00
			102A00	6.5	4.9/6.0	037A00	037A00	037A00	037A00
			103B00	8.7	6.5/8.0	037A00	037A00	037A00	037A00
			104B00	10.5	7.9/9.6	037A00	037A00	037A00	037A00
			105A00	16.0	12.0/14.7	038A00	038A00	038A00	038A00
		MED	101A00	4.4	3.3/4.0	049A00	037A00	037A00	037A00
			102A00	6.5	4.9/6.0	049A00	037A00	037A00	037A00
			103B00	8.7	6.5/8.0	051A00	037A00	037A00	037A00
			104B00	10.5	7.9/9.6	051A00	037A00	037A00	037A00
			105A00	16.0	12.0/14.7	038A00	038A00	038A00	038A00
		HIGH	101A00	4.4	3.3/4.0	049A00	037A00	037A00	037A00
			102A00	6.5	4.9/6.0	049A00	037A00	037A00	037A00
			103B00	8.7	6.5/8.0	051A00	037A00	037A00	037A00
			104B00	10.5	7.9/9.6	051A00	037A00	037A00	037A00
			105A00	16.0	12.0/14.7	038A00	038A00	038A00	038A00
	460-3-60	DD-STD	106A00	6.0	5.5	—	—	—	—
			107A00	8.8	8.1	—	—	—	—
			108A00	11.5	10.6	—	—	—	—
			109A00	14.0	12.9	—	—	—	—
		MED	106A00	6.0	5.5	—	—	—	—
			107A00	8.8	8.1	—	—	—	—
			108A00	11.5	10.6	—	—	—	—
			109A00	14.0	12.9	—	—	—	—
		HIGH	106A00	6.0	5.5	—	—	—	—
			107A00	16.5	8.1	—	—	—	—
			108A00	11.5	10.6	—	—	—	—
			109A00	14.0	12.9	—	—	—	—
	575-3-60	DD-STD	297A00	10.0	9.2	—	—	—	—
			298A00	15.0	13.8	—	—	—	—
		MED	297A00	10.0	9.2	—	—	—	—
			298A00	15.0	13.8	—	—	—	—
		HIGH	297A00	10.0	9.2	—	—	—	—
			298A00	15.0	13.8	—	—	—	—

LEGEND

—	— No Single Point Kit required
APP PWR	— 208 / 230V / 460V / 575V
C.O.	— Convenience outlet
DD	— Electric Drive X13 5 speed/torque motor
IFM	— Indoor fan motor
NOM PWR	— 240V / 480V / 600V
P.E.	— Power exhaust
PWRD	— Powered convenience outlet
pwrd fr/unit	— Powered from unit
UNPWRD	— Unpowered convenience outlet

ELECTRIC HEAT - ELECTRICAL DATA
SINGLE STAGE COOLING SINGLE SPEED INDOOR FAN MOTOR

UNIT SIZE	NOM. V-Ph-Hz	IFM TYPE	ELECTRIC HEATER PART NUMBER CRHEATER ****00	NOM PWR (kW)	APP PWR (kW)	SINGLE POINT KIT PART NUMBER CRSINGLE***A00			
						WITHOUT C.O. or UNPWRD C.O.		WITH PWRD C.O.	
						WITHOUT P.E.	WITH P.E. (pwrd fr/unit)	WITHOUT P.E.	WITH P.E. (pwrd fr/unit)
50HCQA05	208/ 230-1-60	DD-STD	101A00	4.4	3.3/4.0	037A00	037A00	—	—
			103B00	8.7	6.5/8.0	040A00	040A00	—	—
			102A00,102A00	13	9.8/11.9	041A00	041A00	—	—
			103B00,103B00	17.4	13.1/16.0	041A00	041A00	—	—
			104B00,104B00	21	15.8/19.3	041A00	041A00	—	—
	208/ 230-3-60	DD-STD	102A00	6.5	4.9/6.0	—	—	—	037A00
			103B00	8.7	6.5/8.0	037A00	037A00	037A00	037A00
			105A00	16	12.0/14.7	038A00	038A00	038A00	038A00
			104B00,104B00	21	15.8/19.3	039A00	039A00	039A00	039A00
		MED	102A00	6.5	4.9/6.0	—	—	—	—
			103B00	8.7	6.5/8.0	—	037A00	037A00	037A00
			105A00	16	12.0/14.7	038A00	038A00	038A00	038A00
			104B00,104B00	21	15.8/19.3	039A00	039A00	039A00	039A00
		HIGH	102A00	6.5	4.9/6.0	—	—	—	037A00
			103B00	8.7	6.5/8.0	037A00	037A00	037A00	037A00
			105A00	16	12.0/14.7	038A00	038A00	038A00	038A00
			104B00,104B00	21	15.8/19.3	039A00	039A00	039A00	039A00
	460-3-60	DD-STD	106A00	6	5.5	—	—	—	—
			108A00	11.5	10.6	—	—	—	—
			109A00	14	12.9	—	—	—	—
			108A00,108A00	23	21.1	037A00	037A00	037A00	037A00
		MED	106A00	6	5.5	—	—	—	—
			108A00	11.5	10.6	—	—	—	—
			109A00	14	12.9	—	—	—	—
			108A00,108A00	23	21.1	037A00	037A00	037A00	037A00
		HIGH	106A00	6	5.5	—	—	—	—
			108A00	11.5	10.6	—	—	—	—
			109A00	14	12.9	—	—	—	—
			108A00,108A00	23	21.1	037A00	037A00	037A00	037A00
	575-3-60	DD-STD	297A00	10	9.2	—	—	—	—
			298A00	15	13.8	—	—	—	—
		MED	297A00	10	9.2	—	—	—	—
			298A00	15	13.8	—	—	—	—
		HIGH	297A00	10	9.2	—	—	—	—
			298A00	15	13.8	—	—	—	—

LEGEND

— — No Single Point Kit required
APP PWR — 208 / 230V / 460V / 575V
C.O. — Convenience outlet
DD — Electric Drive X13 5 speed/torque motor
IFM — Indoor fan motor
NOM PWR — 240V / 480V / 600V
P.E. — Power exhaust
PWRD — Powered convenience outlet
pwrd fr/unit — Powered from unit
UNPWRD — Unpowered convenience outlet

ELECTRIC HEAT - ELECTRICAL DATA
SINGLE STAGE COOLING SINGLE SPEED INDOOR FAN AND FACTORY-INSTALLED NON-FUSED DISCONNECT SWITCH

UNIT SIZE	NOM. V-Ph-Hz	IFM TYPE	ELECTRIC HEATER PART NUMBER CRHEATER ****00	NOM PWR (kW)	APP PWR (kW)	SINGLE POINT KIT PART NUMBER CRSINGLE***A00			
						WITHOUT C.O. or UNPWRD C.O.		WITH PWRD C.O.	
						WITHOUT P.E.	WITH P.E. (pwrd fr/unit)	WITHOUT P.E.	WITH P.E. (pwrd fr/unit)
50HCQA05	208/ 230-1-60	DD-STD	101A00	4.4	3.3/4.0	037A00	037A00	—	—
			103B00	8.7	6.5/8.0	040A00	040A00	—	—
			102A00,102A00	13	9.8/11.9	041A00	041A00	—	—
			103B00,103B00	17.4	13.1/16.0	041A00	041A00	—	—
			104B00,104B00	21	15.8/19.3	041A00	041A00	—	—
	208/ 230-3-60	DD-STD	102A00	6.5	4.9/6.0	037A00	037A00	037A00	037A00
			103B00	8.7	6.5/8.0	037A00	037A00	037A00	037A00
			105A00	16	12.0/14.7	038A00	038A00	038A00	038A00
			104B00,104B00	21	15.8/19.3	039A00	039A00	039A00	039A00
		MED	102A00	6.5	4.9/6.0	037A00	037A00	037A00	037A00
			103B00	8.7	6.5/8.0	037A00	037A00	037A00	037A00
			105A00	16	12.0/14.7	038A00	038A00	038A00	038A00
			104B00,104B00	21	15.8/19.3	039A00	039A00	039A00	039A00
		HIGH	102A00	6.5	4.9/6.0	037A00	037A00	037A00	037A00
			103B00	8.7	6.5/8.0	037A00	037A00	037A00	037A00
			105A00	16	12.0/14.7	038A00	038A00	038A00	038A00
			104B00,104B00	21	15.8/19.3	039A00	039A00	039A00	039A00
	460-3-60	DD-STD	106A00	6	5.5	—	—	—	—
			108A00	11.5	10.6	—	—	—	—
			109A00	14	12.9	—	—	—	—
			108A00,108A00	23	21.1	037A00	037A00	037A00	037A00
		MED	106A00	6	5.5	—	—	—	—
			108A00	11.5	10.6	—	—	—	—
			109A00	14	12.9	—	—	—	—
			108A00,108A00	23	21.1	037A00	037A00	037A00	037A00
		HIGH	106A00	6	5.5	—	—	—	—
			108A00	11.5	10.6	—	—	—	—
			109A00	14	12.9	—	—	—	—
			108A00,108A00	23	21.1	037A00	037A00	037A00	037A00
	575-3-60	DD-STD	297A00	10	9.2	—	—	—	—
			298A00	15	13.8	—	—	—	—
		MED	297A00	10	9.2	—	—	—	—
			298A00	15	13.8	—	—	—	—
		HIGH	297A00	10	9.2	—	—	—	—
			298A00	15	13.8	—	—	—	—

LEGEND

— — No Single Point Kit required
APP PWR — 208 / 230V / 460V / 575V
C.O. — Convenience outlet
DD — Electric Drive X13 5 speed/torque motor
IFM — Indoor fan motor
NOM PWR — 240V / 480V / 600V
P.E. — Power exhaust
PWRD — Powered convenience outlet
pwrd fr/unit — Powered from unit
UNPWRD — Unpowered convenience outlet

ELECTRIC HEAT - ELECTRICAL DATA
SINGLE STAGE COOLING SINGLE SPEED INDOOR FAN MOTOR

UNIT SIZE	NOM. V-Ph-Hz	IFM TYPE	ELECTRIC HEATER PART NUMBER CRHEATER ****00	NOM PWR (kW)	APP PWR (kW)	SINGLE POINT KIT PART NUMBER CRSINGLE***A00			
						WITHOUT C.O. or UNPWRD C.O.		WITH PWRD C.O.	
						WITHOUT P.E.	WITH P.E. (pwrd fr/unit)	WITHOUT P.E.	WITH P.E. (pwrd fr/unit)
50HCQA06	208/230-1-60	DD-STD	102A00	6.5	4.9/6.0	040A00	040A00	—	—
			103B00	8.7	6.5/8.0	040A00	040A00	—	—
			102A00,102A00	13	9.8/11.9	041A00	041A00	—	—
			103B00,103B00	17.4	13.1/16.0	041A00	041A00	—	—
			104B00,104B00	21	15.8/19.3	041A00	041A00	—	—
	208/230-3-60	DD-STD	102A00	6.5	4.9/6.0	—	037A00	037A00	037A00
			104B00	10.5	7.9/9.6	038A00	038A00	038A00	038A00
			105A00	16	12.0/14.7	038A00	038A00	038A00	038A00
			104B00,104B00	21	15.8/19.3	039A00	039A00	039A00	039A00
			104B00,105A00	26.5	19.9/24.3	039A00	039A00	039A00	039A00
		MED	102A00	6.5	4.9/6.0	—	038A00	037A00	037A00
			104B00	10.5	7.9/9.6	037A00	037A00	038A00	038A00
			105A00	16	12.0/14.7	038A00	038A00	038A00	038A00
			104B00,104B00	21	15.8/19.3	039A00	039A00	039A00	039A00
			104B00,105A00	26.5	19.9/24.3	039A00	039A00	039A00	039A00
		HIGH	102A00	6.5	4.9/6.0	—	037A00	037A00	037A00
			104B00	10.5	7.9/9.6	038A00	038A00	038A00	038A00
			105A00	16	12.0/14.7	038A00	038A00	038A00	038A00
			104B00,104B00	21	15.8/19.3	039A00	039A00	039A00	039A00
			104B00,105A00	26.5	19.9/24.3	039A00	039A00	039A00	039A00
	460-3-60	DD-STD	106A00	6	5.5	—	—	—	—
			108A00	11.5	10.6	—	—	—	—
			109A00	14	12.9	—	—	—	—
			108A00,108A00	23	21.1	037A00	037A00	037A00	037A00
			108A00,109A00	25.5	23.4	037A00	037A00	037A00	037A00
		MED	106A00	6	5.5	—	—	—	—
			108A00	11.5	10.6	—	—	—	—
			109A00	14	12.9	—	—	—	—
			108A00,108A00	23	21.1	037A00	037A00	037A00	037A00
			108A00,109A00	25.5	23.4	037A00	037A00	037A00	037A00
		HIGH	106A00	6	5.5	—	—	—	—
			108A00	11.5	10.6	—	—	—	—
			109A00	14	12.9	—	—	—	—
			108A00,108A00	23	21.1	037A00	037A00	037A00	037A00
			108A00,109A00	25.5	23.4	037A00	037A00	037A00	037A00
	575-3-60	DD-STD	298A00	15	13.8	—	—	—	—
			301A00	25	23	—	—	—	—
		MED	298A00	15	13.8	—	—	—	—
			301A00	25	23	—	—	—	—
		HIGH	298A00	15	13.8	—	—	—	—
			301A00	25	23	—	—	—	—

LEGEND

—	— No Single Point Kit required
APP PWR	— 208 / 230V / 460V / 575V
C.O.	— Convenience outlet
DD	— Electric Drive X13 5 speed/torque motor
IFM	— Indoor fan motor
NOM PWR	— 240V / 480V / 600V
P.E.	— Power exhaust
PWRD	— Powered convenience outlet
pwrd fr/unit	— Powered from unit
UNPWRD	— Unpowered convenience outlet

ELECTRIC HEAT - ELECTRICAL DATA
SINGLE STAGE COOLING SINGLE SPEED INDOOR FAN AND FACTORY-INSTALLED NON-FUSED DISCONNECT SWITCH

UNIT SIZE	NOM. V-Ph-Hz	IFM TYPE	ELECTRIC HEATER PART NUMBER CRHEATER ****00	NOM PWR (kW)	APP PWR (kW)	SINGLE POINT KIT PART NUMBER CRSINGLE***A00			
						WITHOUT C.O. or UNPWRD C.O.		WITH PWRD C.O.	
						WITHOUT P.E.	WITH P.E. (pwrd fr/unit)	WITHOUT P.E.	WITH P.E. (pwrd fr/unit)
50HCQA06	208/230-1-60	DD-STD	102A00	6.5	4.9/6.0	040A00	040A00	—	—
			103B00	8.7	6.5/8.0	040A00	040A00	—	—
			102A00,102A00	13	9.8/11.9	041A00	041A00	—	—
			103B00,103B00	17.4	13.1/16.0	041A00	041A00	—	—
			104B00,104B00	21	15.8/19.3	041A00	041A00	—	—
	208/230-3-60	DD-STD	102A00	6.5	4.9/6.0	037A00	037A00	037A00	037A00
			104B00	10.5	7.9/9.6	038A00	038A00	038A00	038A00
			105A00	16	12.0/14.7	038A00	038A00	038A00	038A00
			104B00,104B00	21	15.8/19.3	039A00	039A00	039A00	039A00
			104B00,105A00	26.5	19.9/24.3	039A00	039A00	039A00	039A00
		MED	102A00	6.5	4.9/6.0	037A00	037A00	037A00	037A00
			104B00	10.5	7.9/9.6	038A00	038A00	038A00	038A00
			105A00	16	12.0/14.7	038A00	038A00	038A00	038A00
			104B00,104B00	21	15.8/19.3	039A00	039A00	039A00	039A00
			104B00,105A00	26.5	19.9/24.3	039A00	039A00	039A00	039A00
		HIGH	102A00	6.5	4.9/6.0	037A00	037A00	037A00	037A00
			104B00	10.5	7.9/9.6	038A00	038A00	038A00	038A00
			105A00	16	12.0/14.7	038A00	038A00	038A00	038A00
			104B00,104B00	21	15.8/19.3	039A00	039A00	039A00	039A00
			104B00,105A00	26.5	19.9/24.3	039A00	039A00	039A00	039A00
	460-3-60	DD-STD	106A00	6	5.5	—	—	—	—
			108A00	11.5	10.6	—	—	—	—
			109A00	14	12.9	—	—	—	—
			108A00,108A00	23	21.1	037A00	037A00	037A00	037A00
			108A00,109A00	25.5	23.4	037A00	037A00	037A00	037A00
		MED	106A00	6	5.5	—	—	—	—
			108A00	11.5	10.6	—	—	—	—
			109A00	14	12.9	—	—	—	—
			108A00,108A00	23	21.1	037A00	037A00	037A00	037A00
			108A00,109A00	25.5	23.4	037A00	037A00	037A00	037A00
		HIGH	106A00	6	5.5	—	—	—	—
			108A00	11.5	10.6	—	—	—	—
			109A00	14	12.9	—	—	—	—
			108A00,108A00	23	21.1	037A00	037A00	037A00	037A00
			108A00,109A00	25.5	23.4	037A00	037A00	037A00	037A00
	575-3-60	DD-STD	298A00	15	13.8	—	—	—	—
			301A00	25	23	037A00	037A00	037A00	037A00
		MED	298A00	15	13.8	—	—	—	—
			301A00	25	23	037A00	037A00	037A00	037A00
		HIGH	298A00	15	13.8	—	—	—	—
			301A00	25	23	037A00	037A00	037A00	037A00

LEGEND

—	— No Single Point Kit required
APP PWR	— 208 / 230V / 460V / 575V
C.O.	— Convenience outlet
DD	— Electric Drive X13 5 speed/torque motor
IFM	— Indoor fan motor
NOM PWR	— 240V / 480V / 600V
P.E.	— Power exhaust
PWRD	— Powered convenience outlet
pwrd fr/unit	— Powered from unit
UNPWRD	— Unpowered convenience outlet

ELECTRIC HEAT - ELECTRICAL DATA
SINGLE STAGE COOLING SINGLE SPEED INDOOR FAN MOTOR
WITH AND WITHOUT FACTORY-INSTALLED NON-FUSED DISCONNECT SWITCH

UNIT SIZE	NOM. V-Ph-Hz	IFM TYPE	ELECTRIC HEATER PART NUMBER CRHEATER ****00	NOM PWR (kW)	APP PWR (kW)	SINGLE POINT KIT PART NUMBER CRSINGLE***A00			
						WITHOUT C.O. or UNPWRD C.O.		WITH PWRD C.O.	
						WITHOUT P.E.	WITH P.E. (pwrd fr/unit)	WITHOUT P.E.	WITH P.E. (pwrd fr/unit)
50HCQA07	208/ 230-3-60	STD	264A00	6.5	4.9/6.0	042A00	042A00	042A00	045A00
			117A00	10.4	7.8/9.6	043A00	043A00	043A00	043A00
			110A00	16	12.0/14.7	043A00	043A00	043A00	043A00
			117A00,117A00	21	15.8/19.3	045A00	045A00	045A00	045A00
			110A00,117A00	26.5	19.9/24.3	045A00	045A00	045A00	045A00
		MED	264A00	6.5	4.9/6.0	042A00	042A00	045A00	045A00
			117A00	10.4	7.8/9.6	043A00	043A00	043A00	043A00
			110A00	16	12.0/14.7	043A00	043A00	043A00	043A00
			117A00,117A00	21	15.8/19.3	045A00	045A00	045A00	045A00
			110A00,117A00	26.5	19.9/24.3	045A00	045A00	045A00	045A00
		HIGH	264A00	6.5	4.9/6.0	042A00	045A00	045A00	045A00
			117A00	10.4	7.8/9.6	043A00	043A00	043A00	043A00
			110A00	16	12.0/14.7	043A00	043A00	043A00	043A00
			117A00,117A00	21	15.8/19.3	045A00	045A00	045A00	045A00
			110A00,117A00	26.5	19.9/24.3	045A00	045A00	045A00	045A00
	460-3-60	STD	265A00	6	5.5	042A00	042A00	042A00	042A00
			266A00	11.5	10.6	042A00	042A00	042A00	042A00
			267A00	14	12.9	042A00	042A00	042A00	042A00
			268A00	23	21.1	042A00	042A00	042A00	042A00
			269A00	25.5	23.4	042A00	042A00	042A00	042A00
		MED	265A00	6	5.5	042A00	042A00	042A00	042A00
			266A00	11.5	10.6	042A00	042A00	042A00	042A00
			267A00	14	12.9	042A00	042A00	042A00	042A00
			268A00	23	21.1	042A00	042A00	042A00	042A00
			269A00	25.5	23.4	042A00	042A00	042A00	048A00
		HIGH	265A00	6	5.5	042A00	042A00	042A00	042A00
			266A00	11.5	10.6	042A00	042A00	042A00	042A00
			267A00	14	12.9	042A00	042A00	042A00	042A00
			268A00	23	21.1	042A00	042A00	042A00	042A00
			269A00	25.5	23.4	042A00	048A00	048A00	048A00
	575-3-60	DD-STD	118A00	18	16.5	042A00	042A00	042A00	042A00
			299A00	28	25.7	042A00	042A00	042A00	042A00
		MED	118A00	18	16.5	042A00	042A00	042A00	042A00
			299A00	28	25.7	042A00	042A00	042A00	042A00
		HIGH	118A00	18	16.5	042A00	042A00	042A00	042A00
			299A00	28	25.7	042A00	042A00	042A00	042A00

LEGEND

—	— No Single Point Kit required
APP PWR	— 208 / 230V / 460V / 575V
C.O.	— Convenience outlet
DD	— Electric Drive X13 5 speed/torque motor
IFM	— Indoor fan motor
NOM PWR	— 240V / 480V / 600V
P.E.	— Power exhaust
PWRD	— Powered convenience outlet
pwrd fr/unit	— Powered from unit
UNPWRD	— Unpowered convenience outlet

ELECTRIC HEAT - ELECTRICAL DATA
2-STAGE COOLING SINGLE SPEED INDOOR FAN MOTOR
WITH AND WITHOUT FACTORY-INSTALLED NON-FUSED DISCONNECT SWITCH

UNIT SIZE	NOM. V-Ph-Hz	IFM TYPE	ELECTRIC HEATER PART NUMBER CRHEATER ****00	NOM PWR (kW)	APP PWR (kW)	SINGLE POINT KIT PART NUMBER CRSINGLE***A00			
						WITHOUT C.O. or UNPWRD C.O.		WITH PWRD C.O.	
						WITHOUT P.E.	WITH P.E. (pwrd fr/unit)	WITHOUT P.E.	WITH P.E. (pwrd fr/unit)
50HCQD07	208/ 230-3-60	STD	264A00	6.5	4.9/6.0	042A00	042A00	042A00	045A00
			117A00	10.4	7.8/9.6	043A00	043A00	043A00	043A00
			110A00	16	12.0/14.7	043A00	043A00	043A00	043A00
			117A00,117A00	21	15.8/19.3	045A00	045A00	045A00	045A00
			110A00,117A00	26.5	19.9/24.3	045A00	045A00	045A00	045A00
		MED	264A00	6.5	4.9/6.0	042A00	042A00	042A00	045A00
			117A00	10.4	7.8/9.6	043A00	043A00	043A00	043A00
			110A00	16	12.0/14.7	043A00	043A00	043A00	043A00
			117A00,117A00	21	15.8/19.3	045A00	045A00	045A00	045A00
			110A00,117A00	26.5	19.9/24.3	045A00	045A00	045A00	045A00
		HIGH	264A00	6.5	4.9/6.0	042A00	045A00	045A00	045A00
			117A00	10.4	7.8/9.6	043A00	043A00	043A00	043A00
			110A00	16	12.0/14.7	043A00	043A00	043A00	043A00
			117A00,117A00	21	15.8/19.3	045A00	045A00	045A00	045A00
			110A00,117A00	26.5	19.9/24.3	045A00	045A00	045A00	045A00
	460-3-60	STD	265A00	6	5.5	042A00	042A00	042A00	042A00
			266A00	11.5	10.6	042A00	042A00	042A00	042A00
			267A00	14	12.9	042A00	042A00	042A00	042A00
			268A00	23	21.1	042A00	042A00	042A00	042A00
			269A00	25.5	23.4	042A00	042A00	042A00	042A00
		MED	265A00	6	5.5	042A00	042A00	042A00	042A00
			266A00	11.5	10.6	042A00	042A00	042A00	042A00
			267A00	14	12.9	042A00	042A00	042A00	042A00
			268A00	23	21.1	042A00	042A00	042A00	042A00
			269A00	25.5	23.4	042A00	042A00	042A00	042A00
		HIGH	265A00	6	5.5	042A00	042A00	042A00	042A00
			266A00	11.5	10.6	042A00	042A00	042A00	042A00
			267A00	14	12.9	042A00	042A00	042A00	042A00
			268A00	23	21.1	042A00	042A00	042A00	042A00
			269A00	25.5	23.4	042A00	048A00	048A00	048A00
	575-3-60	STD	118A00	18	16.5	042A00	042A00	042A00	042A00
			299A00	28	25.7	042A00	042A00	042A00	042A00
		MED	118A00	18	16.5	042A00	042A00	042A00	042A00
			299A00	28	25.7	042A00	042A00	042A00	042A00
		HIGH	118A00	18	16.5	042A00	042A00	042A00	042A00
			299A00	28	25.7	042A00	042A00	042A00	042A00

LEGEND

—	— No Single Point Kit required
APP PWR	— 208 / 230V / 460V / 575V
C.O.	— Convenience outlet
DD	— Electric Drive X13 5 speed/torque motor
IFM	— Indoor fan motor
NOM PWR	— 240V / 480V / 600V
P.E.	— Power exhaust
PWRD	— Powered convenience outlet
pwrd fr/unit	— Powered from unit
UNPWRD	— Unpowered convenience outlet

ELECTRIC HEAT - ELECTRICAL DATA
2-STAGE COOLING 2-SPEED INDOOR FAN WITH AND WITHOUT FACTORY-INSTALLED NON-FUSED DISCONNECT SWITCH

UNIT SIZE	NOM. V-Ph-Hz	IFM TYPE	ELECTRIC HEATER PART NUMBER CRHEATER ****00	NOM PWR (kW)	APP PWR (kW)	SINGLE POINT KIT PART NUMBER CRSINGLE***A00			
						WITHOUT C.O. or UNPWRD C.O.		WITH PWRD C.O.	
						WITHOUT P.E.	WITH P.E. (pwrd fr/unit)	WITHOUT P.E.	WITH P.E. (pwrd fr/unit)
50HCQD07	208/ 230-3-60	STD	264A00	6.5	4.9/6.0	042A00	042A00	042A00	045A00
			117A00	10.4	7.8/9.6	043A00	043A00	043A00	043A00
			110A00	16	12.0/14.7	043A00	043A00	043A00	043A00
			117A00,117A00	21	15.8/19.3	045A00	045A00	045A00	045A00
			110A00,117A00	26.5	19.9/24.3	045A00	045A00	045A00	045A00
		MED	264A00	6.5	4.9/6.0	042A00	042A00	042A00	045A00
			117A00	10.4	7.8/9.6	043A00	043A00	043A00	043A00
			110A00	16	12.0/14.7	043A00	043A00	043A00	043A00
			117A00,117A00	21	15.8/19.3	045A00	045A00	045A00	045A00
			110A00,117A00	26.5	19.9/24.3	045A00	045A00	045A00	045A00
		HIGH	264A00	6.5	4.9/6.0	042A00	045A00	045A00	045A00
			117A00	10.4	7.8/9.6	043A00	043A00	043A00	043A00
			110A00	16	12.0/14.7	043A00	043A00	043A00	043A00
			117A00,117A00	21	15.8/19.3	045A00	045A00	045A00	045A00
			110A00,117A00	26.5	19.9/24.3	045A00	045A00	045A00	045A00
	460-3-60	STD	265A00	6	5.5	042A00	042A00	042A00	042A00
			266A00	11.5	10.6	042A00	042A00	042A00	042A00
			267A00	14	12.9	042A00	042A00	042A00	042A00
			268A00	23	21.1	042A00	042A00	042A00	042A00
			269A00	25.5	23.4	042A00	042A00	042A00	042A00
		MED	265A00	6	5.5	042A00	042A00	042A00	042A00
			266A00	11.5	10.6	042A00	042A00	042A00	042A00
			267A00	14	12.9	042A00	042A00	042A00	042A00
			268A00	23	21.1	042A00	042A00	042A00	042A00
			269A00	25.5	23.4	042A00	042A00	042A00	042A00
		HIGH	265A00	6	5.5	042A00	042A00	042A00	042A00
			266A00	11.5	10.6	042A00	042A00	042A00	042A00
			267A00	14	12.9	042A00	042A00	042A00	042A00
			268A00	23	21.1	042A00	042A00	042A00	042A00
			269A00	25.5	23.4	042A00	048A00	048A00	048A00
	575-3-60	STD	118A00	18	16.5	042A00	042A00	042A00	042A00
			299A00	28	25.7	042A00	042A00	042A00	042A00
		MED	118A00	18	16.5	042A00	042A00	042A00	042A00
			299A00	28	25.7	042A00	042A00	042A00	042A00
		HIGH	118A00	18	16.5	042A00	042A00	042A00	042A00
			299A00	28	25.7	042A00	042A00	042A00	042A00

LEGEND

—	— No Single Point Kit required
APP PWR	— 208 / 230V / 460V / 575V
C.O.	— Convenience outlet
DD	— Electric Drive X13 5 speed/torque motor
IFM	— Indoor fan motor
NOM PWR	— 240V / 480V / 600V
P.E.	— Power exhaust
PWRD	— Powered convenience outlet
pwrd fr/unit	— Powered from unit
UNPWRD	— Unpowered convenience outlet

ELECTRIC HEAT - ELECTRICAL DATA
2-STAGE COOLING SINGLE SPEED INDOOR FAN WITH AND WITHOUT FACTORY-INSTALLED NON-FUSED DISCONNECT SWITCH

UNIT SIZE	NOM. V-Ph-Hz	IFM TYPE	ELECTRIC HEATER PART NUMBER CRHEATER ****00	NOM PWR (kW)	APP PWR (kW)	SINGLE POINT KIT PART NUMBER CRSINGLE***A00			
						WITHOUT C.O. or UNPWRD C.O.		WITH PWRD C.O.	
						WITHOUT P.E.	WITH P.E. (pwrd fr/unit)	WITHOUT P.E.	WITH P.E. (pwrd fr/unit)
50HCQD08	208/ 230-3-60	STD	117A00	10.4	7.8/9.6	049A00	049A00	049A00	049A00
			110A00	16.0	12.0/14.7	049A00	049A00	049A00	049A00
			111A00	24.8	18.6/22.8	051A00	051A00	051A00	051A00
			112A00	32.0	24.0/29.4	051A00	051A00	051A00	051A00
			112A00,117A00	42.4	31.8/38.9	053A00	053A00	053A00	053A00
		MED	117A00	10.4	7.8/9.6	049A00	049A00	049A00	049A00
			110A00	16.0	12.0/14.7	049A00	049A00	049A00	049A00
			111A00	24.8	18.6/22.8	051A00	051A00	051A00	051A00
			112A00	32.0	24.0/29.4	051A00	051A00	051A00	051A00
			112A00,117A00	42.4	31.8/38.9	053A00	053A00	053A00	053A00
		HIGH	117A00	10.4	7.8/9.6	049A00	049A00	049A00	049A00
			110A00	16.0	12.0/14.7	049A00	049A00	049A00	049A00
			111A00	24.8	18.6/22.8	051A00	051A00	051A00	051A00
			112A00	32.0	24.0/29.4	051A00	051A00	051A00	051A00
			112A00,117A00	42.4	31.8/38.9	053A00	053A00	053A00	053A00
	460-3-60	STD	116B00	13.9	12.8	047A00	047A00	047A00	047A00
			113B00	16.5	15.2	047A00	047A00	047A00	047A00
			114B00	27.8	25.5	047A00	050A00	050A00	050A00
			115B00	33.0	30.3	050A00	050A00	050A00	050A00
		MED	116B00	13.9	12.8	047A00	047A00	047A00	047A00
			113B00	16.5	15.2	047A00	047A00	047A00	047A00
			114B00	27.8	25.5	050A00	050A00	050A00	050A00
			115B00	33.0	30.3	050A00	050A00	050A00	050A00
		HIGH	116B00	13.9	12.8	047A00	047A00	047A00	047A00
			113B00	16.5	15.2	047A00	047A00	047A00	047A00
			114B00	27.8	25.5	050A00	050A00	050A00	050A00
			115B00	33.0	30.3	050A00	050A00	050A00	050A00
	575-3-60	STD	118A00	18.0	16.5	047A00	047A00	047A00	047A00
			119A00	36.0	33.1	050A00	050A00	050A00	050A00
		MED	118A00	18.0	16.5	047A00	047A00	047A00	047A00
			119A00	36.0	33.1	050A00	050A00	050A00	050A00
		HIGH	118A00	18.0	16.5	047A00	047A00	047A00	047A00
			119A00	36.0	33.1	050A00	050A00	050A00	050A00

LEGEND

—	— No Single Point Kit required
APP PWR	— 208 / 230V / 460V / 575V
C.O.	— Convenience outlet
DD	— Electric Drive X13 5 speed/torque motor
IFM	— Indoor fan motor
NOM PWR	— 240V / 480V / 600V
P.E.	— Power exhaust
PWRD	— Powered convenience outlet
pwrd fr/unit	— Powered from unit
UNPWRD	— Unpowered convenience outlet

ELECTRIC HEAT - ELECTRICAL DATA
2-STAGE COOLING 2-SPEED INDOOR FAN WITH AND WITHOUT FACTORY-INSTALLED NON-FUSED DISCONNECT SWITCH

UNIT SIZE	NOM. V-Ph-Hz	IFM TYPE	ELECTRIC HEATER PART NUMBER CRHEATER ****00	NOM PWR (kW)	APP PWR (kW)	SINGLE POINT KIT PART NUMBER CRSINGLE***A00			
						WITHOUT C.O. or UNPWRD C.O.		WITH PWRD C.O.	
						WITHOUT P.E.	WITH P.E. (pwrd fr/unit)	WITHOUT P.E.	WITH P.E. (pwrd fr/unit)
50HCQD08	208/ 230-3-60	STD	117A00	10.4	7.8/9.6	049A00	049A00	049A00	049A00
			110A00	16.0	12.0/14.7	049A00	049A00	049A00	049A00
			111A00	24.8	18.6/22.8	051A00	051A00	051A00	051A00
			112A00	32.0	24.0/29.4	051A00	051A00	051A00	051A00
			112A00,117A00	42.4	31.8/38.9	053A00	053A00	053A00	053A00
		MED	117A00	10.4	7.8/9.6	049A00	049A00	049A00	049A00
			110A00	16.0	12.0/14.7	049A00	049A00	049A00	049A00
			111A00	24.8	18.6/22.8	051A00	051A00	051A00	051A00
			112A00	32.0	24.0/29.4	051A00	051A00	051A00	051A00
			112A00,117A00	42.4	31.8/38.9	053A00	053A00	053A00	053A00
		HIGH	117A00	10.4	7.8/9.6	049A00	049A00	049A00	049A00
			110A00	16.0	12.0/14.7	049A00	049A00	049A00	049A00
			111A00	24.8	18.6/22.8	051A00	051A00	051A00	051A00
			112A00	32.0	24.0/29.4	051A00	051A00	051A00	051A00
			112A00,117A00	42.4	31.8/38.9	053A00	053A00	053A00	053A00
	460-3-60	STD	116B00	13.9	12.8	047A00	047A00	047A00	047A00
			113B00	16.5	15.2	047A00	047A00	047A00	047A00
			114B00	27.8	25.5	047A00	050A00	050A00	050A00
			115B00	33.0	30.3	050A00	050A00	050A00	050A00
		MED	116B00	13.9	12.8	047A00	047A00	047A00	047A00
			113B00	16.5	15.2	047A00	047A00	047A00	047A00
			114B00	27.8	25.5	050A00	050A00	050A00	050A00
			115B00	33.0	30.3	050A00	050A00	050A00	050A00
		HIGH	116B00	13.9	12.8	047A00	047A00	047A00	047A00
			113B00	16.5	15.2	047A00	047A00	047A00	047A00
			114B00	27.8	25.5	050A00	050A00	050A00	050A00
			115B00	33.0	30.3	050A00	050A00	050A00	050A00
	575-3-60	STD	118A00	18.0	16.5	047A00	047A00	047A00	047A00
			119A00	36.0	33.1	050A00	050A00	050A00	050A00
		MED	118A00	18.0	16.5	047A00	047A00	047A00	047A00
			119A00	36.0	33.1	050A00	050A00	050A00	050A00
		HIGH	118A00	18.0	16.5	047A00	047A00	047A00	047A00
			119A00	36.0	33.1	050A00	050A00	050A00	050A00

LEGEND

—	— No Single Point Kit required
APP PWR	— 208 / 230V / 460V / 575V
C.O.	— Convenience outlet
DD	— Electric Drive X13 5 speed/torque motor
IFM	— Indoor fan motor
NOM PWR	— 240V / 480V / 600V
P.E.	— Power exhaust
PWRD	— Powered convenience outlet
pwrd fr/unit	— Powered from unit
UNPWRD	— Unpowered convenience outlet

ELECTRIC HEAT - ELECTRICAL DATA
2-STAGE COOLING SINGLE SPEED INDOOR FAN WITH AND WITHOUT FACTORY-INSTALLED NON-FUSED DISCONNECT SWITCH

UNIT SIZE	NOM. V-Ph-Hz	IFM TYPE	ELECTRIC HEATER PART NUMBER CRHEATER ****00	NOM PWR (kW)	APP PWR (kW)	SINGLE POINT KIT PART NUMBER CRSINGLE***A00			
						WITHOUT C.O. or UNPWRD C.O.		WITH PWRD C.O.	
						WITHOUT P.E.	WITH P.E. (pwrd fr/unit)	WITHOUT P.E.	WITH P.E. (pwrd fr/unit)
50HCQD09	208/ 230-3-60	STD	117A00	10.4	7.8/9.6	049A00	049A00	049A00	049A00
			110A00	16.0	12.0/14.7	049A00	049A00	049A00	049A00
			111A00	24.8	18.6/22.8	051A00	051A00	051A00	051A00
			112A00	32.0	24.0/29.4	051A00	051A00	051A00	051A00
			112A00,117A00	42.4	31.8/38.9	053A00	053A00	053A00	053A00
		MED	117A00	10.4	7.8/9.6	049A00	049A00	049A00	051A00
			110A00	16.0	12.0/14.7	049A00	049A00	049A00	051A00
			111A00	24.8	18.6/22.8	051A00	051A00	051A00	053A00
			112A00	32.0	24.0/29.4	051A00	051A00	051A00	053A00
			112A00,117A00	42.4	31.8/38.9	053A00	053A00	053A00	054A00
		HIGH	117A00	10.4	7.8/9.6	049A00	049A00	049A00	051A00
			110A00	16.0	12.0/14.7	049A00	049A00	049A00	051A00
			111A00	24.8	18.6/22.8	051A00	051A00	051A00	053A00
			112A00	32.0	24.0/29.4	051A00	051A00	051A00	053A00
			112A00,117A00	42.4	31.8/38.9	053A00	053A00	053A00	054A00
	460-3-60	STD	116B00	13.9	12.8	047A00	047A00	047A00	047A00
			113B00	16.5	15.2	047A00	047A00	047A00	047A00
			114B00	27.8	25.5	050A00	050A00	050A00	050A00
			115B00	33.0	30.3	050A00	050A00	050A00	050A00
		MED	116B00	13.9	12.8	047A00	047A00	047A00	047A00
			113B00	16.5	15.2	047A00	047A00	047A00	047A00
			114B00	27.8	25.5	050A00	050A00	050A00	050A00
			115B00	33.0	30.3	050A00	050A00	050A00	050A00
		HIGH	116B00	13.9	12.8	047A00	047A00	047A00	047A00
			113B00	16.5	15.2	047A00	047A00	047A00	047A00
			114B00	27.8	25.5	050A00	050A00	050A00	050A00
			115B00	33.0	30.3	050A00	050A00	050A00	050A00
	575-3-60	STD	118A00	18.0	16.5	047A00	047A00	047A00	047A00
			119A00	36.0	33.1	050A00	050A00	050A00	050A00
		MED	118A00	18.0	16.5	047A00	047A00	047A00	047A00
			119A00	36.0	33.1	050A00	050A00	050A00	050A00
		HIGH	118A00	18.0	16.5	047A00	047A00	047A00	047A00
			119A00	36.0	33.1	050A00	050A00	050A00	050A00

LEGEND

—	— No Single Point Kit required
APP PWR	— 208 / 230V / 460V / 575V
C.O.	— Convenience outlet
DD	— Electric Drive X13 5 speed/torque motor
IFM	— Indoor fan motor
NOM PWR	— 240V / 480V / 600V
P.E.	— Power exhaust
PWRD	— Powered convenience outlet
pwrd fr/unit	— Powered from unit
UNPWRD	— Unpowered convenience outlet

ELECTRIC HEAT - ELECTRICAL DATA
2-STAGE COOLING 2-SPEED INDOOR FAN WITH AND WITHOUT FACTORY-INSTALLED NON-FUSED DISCONNECT SWITCH

UNIT SIZE	NOM. V-Ph-Hz	IFM TYPE	ELECTRIC HEATER PART NUMBER CRHEATER ****00	NOM PWR (kW)	APP PWR (kW)	SINGLE POINT KIT PART NUMBER CRSINGLE***A00			
						WITHOUT C.O. or UNPWRD C.O.		WITH PWRD C.O.	
						WITHOUT P.E.	WITH P.E. (pwrd fr/unit)	WITHOUT P.E.	WITH P.E. (pwrd fr/unit)
50HCQD09	208/ 230-3-60	STD	117A00	10.4	7.8/9.6	049A00	049A00	049A00	049A00
			110A00	16.0	12.0/14.7	049A00	049A00	049A00	049A00
			111A00	24.8	18.6/22.8	051A00	051A00	051A00	051A00
			112A00	32.0	24.0/29.4	051A00	051A00	051A00	051A00
			112A00,117A00	42.4	31.8/38.9	053A00	053A00	053A00	053A00
		MED	117A00	10.4	7.8/9.6	049A00	049A00	049A00	051A00
			110A00	16.0	12.0/14.7	049A00	049A00	049A00	051A00
			111A00	24.8	18.6/22.8	051A00	051A00	051A00	053A00
			112A00	32.0	24.0/29.4	051A00	051A00	051A00	053A00
			112A00,117A00	42.4	31.8/38.9	053A00	053A00	053A00	054A00
		HIGH	117A00	10.4	7.8/9.6	049A00	049A00	049A00	051A00
			110A00	16.0	12.0/14.7	049A00	049A00	049A00	051A00
			111A00	24.8	18.6/22.8	051A00	051A00	051A00	053A00
			112A00	32.0	24.0/29.4	051A00	051A00	051A00	053A00
			112A00,117A00	42.4	31.8/38.9	053A00	053A00	053A00	054A00
	460-3-60	STD	116B00	13.9	12.8	047A00	047A00	047A00	047A00
			113B00	16.5	15.2	047A00	047A00	047A00	047A00
			114B00	27.8	25.5	050A00	050A00	050A00	050A00
			115B00	33.0	30.3	050A00	050A00	050A00	050A00
		MED	116B00	13.9	12.8	047A00	047A00	047A00	047A00
			113B00	16.5	15.2	047A00	047A00	047A00	047A00
			114B00	27.8	25.5	050A00	050A00	050A00	050A00
			115B00	33.0	30.3	050A00	050A00	050A00	050A00
		HIGH	116B00	13.9	12.8	047A00	047A00	047A00	047A00
			113B00	16.5	15.2	047A00	047A00	047A00	047A00
			114B00	27.8	25.5	050A00	050A00	050A00	050A00
			115B00	33.0	30.3	050A00	050A00	050A00	050A00
	575-3-60	STD	118A00	18.0	16.5	047A00	047A00	047A00	047A00
			119A00	36.0	33.1	050A00	050A00	050A00	050A00
		MED	118A00	18.0	16.5	047A00	047A00	047A00	047A00
			119A00	36.0	33.1	050A00	050A00	050A00	050A00
		HIGH	118A00	18.0	16.5	047A00	047A00	047A00	047A00
			119A00	36.0	33.1	050A00	050A00	050A00	050A00

LEGEND

— — No Single Point Kit required
APP PWR — 208 / 230V / 460V / 575V
C.O. — Convenience outlet
DD — Electric Drive X13 5 speed/torque motor
IFM — Indoor fan motor
NOM PWR — 240V / 480V / 600V
P.E. — Power exhaust
PWRD — Powered convenience outlet
pwrd fr/unit — Powered from unit
UNPWRD — Unpowered convenience outlet

ELECTRIC HEAT - ELECTRICAL DATA
2-STAGE COOLING SINGLE SPEED INDOOR FAN WITH AND WITHOUT FACTORY-INSTALLED NON-FUSED DISCONNECT SWITCH

UNIT SIZE	NOM. V-Ph-Hz	IFM TYPE	ELECTRIC HEATER PART NUMBER CRHEATER ****00	NOM PWR (kW)	APP PWR (kW)	SINGLE POINT KIT PART NUMBER CRSINGLE***A00			
						WITHOUT C.O. or UNPWRD C.O.		WITH PWRD C.O.	
						WITHOUT P.E.	WITH P.E. (pwrd fr/unit)	WITHOUT P.E.	WITH P.E. (pwrd fr/unit)
50HCQD12	208/ 230-3-60	STD	288A00	10.0	7.5/9.2	049A00	049A00	049A00	049A00
			291A00	16.5	12.4/15.2	049A00	049A00	049A00	049A00
			294A00	33.5	25.2/30.8	051A00	051A00	051A00	051A00
			288A00,294A00	43.5	32.7/40.0	053A00	053A00	053A00	053A00
			291A00,294A00	50.0	37.6/45.9	053A00	053A00	053A00	053A00
		MED	288A00	10.0	7.5/9.2	049A00	049A00	049A00	051A00
			291A00	16.5	12.4/15.2	049A00	049A00	049A00	051A00
			294A00	33.5	25.2/30.8	051A00	051A00	051A00	053A00
			288A00,294A00	43.5	32.7/40.0	053A00	053A00	053A00	054A00
			291A00,294A00	50.0	37.6/45.9	053A00	053A00	053A00	054A00
		HIGH	288A00	10.0	7.5/9.2	051A00	051A00	051A00	051A00
			291A00	16.5	12.4/15.2	051A00	051A00	051A00	051A00
			294A00	33.5	25.2/30.8	053A00	053A00	053A00	053A00
			288A00,294A00	43.5	32.7/40.0	054A00	054A00	054A00	054A00
			291A00,294A00	50.0	37.6/45.9	054A00	054A00	054A00	054A00
	460-3-60	STD	289A00	10.0	9.2	047A00	047A00	047A00	047A00
			292A00	16.5	15.2	047A00	047A00	047A00	047A00
			295A00	33.5	30.8	050A00	050A00	050A00	050A00
			289A00,295A00	43.5	40.0	052A00	052A00	052A00	052A00
			292A00,295A00	50.0	45.9	052A00	052A00	052A00	052A00
		MED	289A00	10.0	9.2	047A00	047A00	047A00	047A00
			292A00	16.5	15.2	047A00	047A00	047A00	047A00
			295A00	33.5	30.8	050A00	050A00	050A00	050A00
			289A00,295A00	43.5	40.0	052A00	052A00	052A00	052A00
			292A00,295A00	50.0	45.9	052A00	052A00	052A00	052A00
		HIGH	289A00	10.0	9.2	047A00	047A00	047A00	047A00
			292A00	16.5	15.2	047A00	047A00	047A00	047A00
			295A00	33.5	30.8	050A00	050A00	050A00	050A00
			289A00,295A00	43.5	40.0	052A00	052A00	052A00	052A00
			292A00,295A00	50.0	45.9	052A00	052A00	052A00	052A00
	575-3-60	STD	290A00	10.0	9.2	047A00	047A00	047A00	047A00
			293A00	16.5	15.2	047A00	047A00	047A00	047A00
			296A00	33.5	30.8	047A00	050A00	047A00	050A00
			290A00,296A00	43.5	40.0	052A00	052A00	052A00	052A00
			293A00,296A00	50.0	45.9	052A00	052A00	052A00	052A00
		MED	290A00	10.0	9.2	047A00	047A00	047A00	047A00
			293A00	16.5	15.2	047A00	047A00	047A00	047A00
			296A00	33.5	30.8	047A00	050A00	047A00	050A00
			290A00,296A00	43.5	40.0	052A00	052A00	052A00	052A00
			293A00,296A00	50.0	45.9	052A00	052A00	052A00	052A00
		HIGH	290A00	10.0	9.2	047A00	047A00	047A00	047A00
			293A00	16.5	15.2	047A00	047A00	047A00	047A00
			296A00	33.5	30.8	050A00	050A00	050A00	050A00
			290A00,296A00	43.5	40.0	052A00	052A00	052A00	052A00
			293A00,296A00	50.0	45.9	052A00	052A00	052A00	052A00

LEGEND

—	— No Single Point Kit required
APP PWR	— 208 / 230V / 460V / 575V
C.O.	— Convenience outlet
DD	— Electric Drive X13 5 speed/torque motor
IFM	— Indoor fan motor
NOM PWR	— 240V / 480V / 600V
P.E.	— Power exhaust
PWRD	— Powered convenience outlet
pwrd fr/unit	— Powered from unit
UNPWRD	— Unpowered convenience outlet

ELECTRIC HEAT - ELECTRICAL DATA
2-STAGE COOLING 2-SPEED INDOOR FAN WITH AND WITHOUT FACTORY-INSTALLED NON-FUSED DISCONNECT SWITCH

UNIT SIZE	NOM. V-Ph-Hz	IFM TYPE	ELECTRIC HEATER PART NUMBER CRHEATER ****00	NOM PWR (kW)	APP PWR (kW)	SINGLE POINT KIT PART NUMBER CRSINGLE***A00			
						WITHOUT C.O. or UNPWRD C.O.		WITH PWRD C.O.	
						WITHOUT P.E.	WITH P.E. (pwrd fr/unit)	WITHOUT P.E.	WITH P.E. (pwrd fr/unit)
50HCQD12	208/ 230-3-60	STD	288A00	10.0	7.5/9.2	049A00	049A00	049A00	049A00
			291A00	16.5	12.4/15.2	049A00	049A00	049A00	049A00
			294A00	33.5	25.2/30.8	051A00	051A00	051A00	051A00
			288A00,294A00	43.5	32.7/40.0	053A00	053A00	053A00	053A00
			291A00,294A00	50.0	37.6/45.9	053A00	053A00	053A00	053A00
		MED	288A00	10.0	7.5/9.2	049A00	049A00	049A00	051A00
			291A00	16.5	12.4/15.2	049A00	049A00	049A00	051A00
			294A00	33.5	25.2/30.8	051A00	051A00	051A00	053A00
			288A00,294A00	43.5	32.7/40.0	053A00	053A00	053A00	054A00
			291A00,294A00	50.0	37.6/45.9	053A00	053A00	053A00	054A00
		HIGH	288A00	10.0	7.5/9.2	051A00	051A00	051A00	051A00
			291A00	16.5	12.4/15.2	051A00	051A00	051A00	051A00
			294A00	33.5	25.2/30.8	053A00	053A00	053A00	053A00
			288A00,294A00	43.5	32.7/40.0	054A00	054A00	054A00	054A00
			291A00,294A00	50.0	37.6/45.9	054A00	054A00	054A00	054A00
	460-3-60	STD	289A00	10.0	9.2	047A00	047A00	047A00	047A00
			292A00	16.5	15.2	047A00	047A00	047A00	047A00
			295A00	33.5	30.8	050A00	050A00	050A00	050A00
			289A00,295A00	43.5	40.0	052A00	052A00	052A00	052A00
			292A00,295A00	50.0	45.9	052A00	052A00	052A00	052A00
		MED	289A00	10.0	9.2	047A00	047A00	047A00	047A00
			292A00	16.5	15.2	047A00	047A00	047A00	047A00
			295A00	33.5	30.8	050A00	050A00	050A00	050A00
			289A00,295A00	43.5	40.0	052A00	052A00	052A00	052A00
			292A00,295A00	50.0	45.9	052A00	052A00	052A00	052A00
		HIGH	289A00	10.0	9.2	047A00	047A00	047A00	047A00
			292A00	16.5	15.2	047A00	047A00	047A00	047A00
			295A00	33.5	30.8	050A00	050A00	050A00	050A00
			289A00,295A00	43.5	40.0	052A00	052A00	052A00	052A00
			292A00,295A00	50.0	45.9	052A00	052A00	052A00	052A00
	575-3-60	STD	290A00	10.0	9.2	047A00	047A00	047A00	047A00
			293A00	16.5	15.2	047A00	047A00	047A00	047A00
			296A00	33.5	30.8	047A00	050A00	050A00	050A00
			290A00,296A00	43.5	40.0	052A00	052A00	052A00	052A00
			293A00,296A00	50.0	45.9	052A00	052A00	052A00	052A00
		MED	290A00	10.0	9.2	047A00	047A00	047A00	047A00
			293A00	16.5	15.2	047A00	047A00	047A00	047A00
			296A00	33.5	30.8	047A00	050A00	050A00	050A00
			290A00,296A00	43.5	40.0	052A00	052A00	052A00	052A00
			293A00,296A00	50.0	45.9	052A00	052A00	052A00	052A00
		HIGH	290A00	10.0	9.2	047A00	047A00	047A00	047A00
			293A00	16.5	15.2	047A00	047A00	047A00	047A00
			296A00	33.5	30.8	050A00	050A00	050A00	050A00
			290A00,296A00	43.5	40.0	052A00	052A00	052A00	052A00
			293A00,296A00	50.0	45.9	052A00	052A00	052A00	052A00

LEGEND

— — No Single Point Kit required
APP PWR — 208 / 230V / 460V / 575V
C.O. — Convenience outlet
DD — Electric Drive X13 5 speed/torque motor
IFM — Indoor fan motor
NOM PWR — 240V / 480V / 600V
P.E. — Power exhaust
PWRD — Powered convenience outlet
pwrd fr/unit — Powered from unit
UNPWRD — Unpowered convenience outlet

50HCQA04 — SINGLE STAGE COOLING WITH SINGLE SPEED INDOOR FAN MOTOR

V-Ph-Hz	VOLTAGE RANGE		COMP (ea)		OFM (ea)		IFM		
	MIN	MAX	RLA	LRA	WATTS	FLA	TYPE	EFF at Full Load	FLA
208-1-60	187	253	16.6	79	190	1.0	DD-STD	78%	7.4
230-1-60	187	253	16.6	79	190	1.0	DD-STD	78%	7.4
208-3-60	187	253	10.4	73	190	1.0	DD-STD	78%	7.4
							MED	87%	5.2
							HIGH	89%	8.4
230-3-60	187	253	10.4	73	190	1.0	DD-STD	78%	7.4
							MED	87%	4.9
							HIGH	89%	8.3
460-3-60	414	506	5.8	38	190	0.5	DD-STD	78%	4.0
							MED	87%	2.5
							HIGH	89%	4.2
575-3-60	518	633	3.8	37	190	0.5	DD-STD	78%	4.0
							MED	72%	1.6
							HIGH	78%	2.0

50HCQA05 — SINGLE STAGE COOLING WITH SINGLE SPEED INDOOR FAN MOTOR

V-Ph-Hz	VOLTAGE RANGE		COMP (ea)		OFM (ea)		IFM		
	MIN	MAX	RLA	LRA	WATTS	FLA	TYPE	EFF at Full Load	FLA
208-1-60	187	253	19.8	109	325	1.4	DD-STD	78%	7.4
230-1-60	187	253	19.8	109	325	1.4	DD-STD	78%	7.4
208-3-60	187	253	13.1	83	325	1.4	DD-STD	78%	7.4
							MED	87%	5.2
							HIGH	89%	8.4
230-3-60	187	253	13.1	83	325	1.4	DD-STD	78%	7.4
							MED	87%	4.9
							HIGH	89%	8.3
460-3-60	414	506	6.1	41	325	0.8	DD-STD	78%	4.0
							MED	87%	2.5
							HIGH	89%	4.2
575-3-60	518	633	4.4	33	325	0.8	DD-STD	78%	4.0
							MED	72%	1.6
							HIGH	78%	2.0

50HCQA06 — SINGLE STAGE COOLING WITH SINGLE SPEED INDOOR FAN MOTOR

V-Ph-Hz	VOLTAGE RANGE		COMP (ea)		OFM (ea)		IFM		
	MIN	MAX	RLA	LRA	WATTS	FLA	TYPE	EFF at Full Load	FLA
208-1-60	187	253	25.0	134	325	1.4	DD-STD	78%	7.4
230-1-60	187	253	25.0	134	325	1.4	DD-STD	78%	7.4
208-3-60	187	253	15.9	110	325	1.4	DD-STD	78%	7.4
							MED	89%	8.4
							HIGH	89%	8.4
230-3-60	187	253	15.9	110	325	1.4	DD-STD	78%	7.4
							MED	89%	8.3
							HIGH	89%	8.3
460-3-60	414	506	7.0	52	325	0.8	DD-STD	78%	4.0
							MED	89%	4.2
							HIGH	89%	4.2
575-3-60	518	633	5.1	40	325	0.8	DD-STD	78%	4.0
							MED	78%	2.0
							HIGH	77%	2.8

LEGEND

EFF — Efficiency
FLA — Full load amps
IFM — Indoor fan motor
LRA — Locked rotor amps
RLA — Rated load amps

→ **50HCQA07 — SINGLE STAGE COOLING WITH SINGLE SPEED INDOOR FAN MOTOR**

V-Ph-Hz	VOLTAGE RANGE		COMP (ea)		OFM (ea)		IFM		
	MIN	MAX	RLA	LRA	WATTS	FLA	TYPE	EFF at Full Load	FLA
208-3-60	187	253	19.6	136	325	1.5	STD	75%	5.2
							MED	79%	7.5
							HIGH	83%	13.6
230-3-60	187	253	19.6	136	325	1.5	STD	75%	5.2
							MED	79%	7.5
							HIGH	83%	12.7
460-3-60	414	506	8.2	66	325	0.8	STD	75%	2.6
							MED	79%	3.4
							HIGH	83%	6.4
575-3-60	518	633	6.6	55	325	0.6	STD	72%	1.6
							MED	77%	2.8
							HIGH	81%	5.6

→ **50HCQD07 — 2-STAGE COOLING WITH SINGLE SPEED INDOOR FAN MOTOR**

V-Ph-Hz	VOLTAGE RANGE		COMP (ea)		OFM (ea)		IFM		
	MIN	MAX	RLA	LRA	WATTS	FLA	TYPE	EFF at Full Load	FLA
208-3-60	187	253	18.9	136	325	1.5	STD	75%	5.2
							MED	79%	7.5
							HIGH	83%	13.6
230-3-60	187	253	18.9	136	325	1.5	STD	75%	5.2
							MED	79%	7.5
							HIGH	83%	12.7
460-3-60	414	506	9.7	66	325	0.8	STD	75%	2.6
							MED	79%	3.4
							HIGH	83%	6.4
575-3-60	518	633	7.7	55	325	0.6	STD	72%	1.6
							MED	77%	2.8
							HIGH	81%	5.6

→ **50HCQD07 — 2-STAGE COOLING WITH 2-SPEED INDOOR FAN MOTOR**

V-Ph-Hz	VOLTAGE RANGE		COMP (ea)		OFM (ea)		IFM		
	MIN	MAX	RLA	LRA	WATTS	FLA	TYPE	EFF at Full Load	FLA
208-3-60	187	253	18.9	136	325	1.5	STD	84%	5.8
							MED	85%	8.6
							HIGH	84%	13.6
230-3-60	187	253	18.9	136	325	1.5	STD	84%	5.6
							MED	85%	7.8
							HIGH	84%	12.7
460-3-60	414	506	9.7	66	325	0.8	STD	79%	2.9
							MED	85%	3.8
							HIGH	84%	6.4
575-3-60	518	633	7.7	55	325	0.6	STD	81%	2.8
							MED	84%	4.5
							HIGH	83%	6.2

LEGEND

EFF — Efficiency
FLA — Full load amps
IFM — Indoor fan motor
LRA — Locked rotor amps
RLA — Rated load amps

Electrical data (cont)

→ **50HCQD08 — 2-STAGE COOLING WITH SINGLE SPEED INDOOR FAN MOTOR**

V-Ph-Hz	VOLTAGE RANGE		COMP (Cir 1)		COMP (Cir 2)		OFM (ea)		IFM		
	MIN	MAX	RLA	LRA	RLA	LRA	WATTS	FLA	TYPE	EFF at Full Load	FLA
208-3-60	187	253	13.1	83	13.1	83	325	1.5	STD	75%	5.2
									MED	87%	6.9
									HIGH	87%	10.6
230-3-60	187	253	13.1	83	13.1	83	325	1.5	STD	75%	5.2
									MED	87%	6.7
									HIGH	87%	10.6
460-3-60	414	506	6.1	41	6.1	41	325	0.8	STD	75%	2.6
									MED	87%	3.4
									HIGH	87%	5.3
575-3-60	518	633	4.4	33	4.4	33	325	0.6	STD	72%	1.6
									MED	78%	2.0
									HIGH	77%	2.8

→ **50HCQD08 — 2-STAGE COOLING WITH 2-SPEED INDOOR FAN MOTOR**

V-Ph-Hz	VOLTAGE RANGE		COMP 1		COMP 2		OFM (ea)		IFM		
	MIN	MAX	RLA	LRA	RLA	LRA	WATTS	FLA	TYPE	EFF at Full Load	FLA
208-3-60	187	253	13.1	83	13.1	83	325	1.5	STD	84%	5.8
									MED	77%	7.1
									HIGH	82%	10.8
230-3-60	187	253	13.1	83	13.1	83	325	1.5	STD	84%	5.6
									MED	77%	6.8
									HIGH	82%	9.8
460-3-60	414	506	6.1	41	6.1	41	325	0.8	STD	79%	2.9
									MED	77%	3.4
									HIGH	82%	4.9
575-3-60	518	633	4.4	33	4.4	33	325	0.6	STD	81%	2.8
									MED	80%	3.5
									HIGH	84%	4.5

LEGEND

EFF — Efficiency
FLA — Full load amps
IFM — Indoor fan motor
LRA — Locked rotor amps
RLA — Rated load amps

→ 50HCQD09 — 2-STAGE COOLING WITH SINGLE SPEED INDOOR FAN MOTOR

V-Ph-Hz	VOLTAGE RANGE		COMP (Cir 1)		COMP (Cir 2)		OFM (ea)		IFM		
	MIN	MAX	RLA	LRA	RLA	LRA	WATTS	FLA	TYPE	EFF at Full Load	FLA
208-3-60	187	253	16.0	91	13.7	83	1070	6.2	STD	69%	5.2
									MED	89%	8.4
									HIGH	87%	10.6
230-3-60	187	253	16.0	91	13.7	83	1070	6.2	STD	69%	5.2
									MED	89%	8.3
									HIGH	87%	10.6
460-3-60	414	506	7.0	46	6.2	41	1070	3.1	STD	69%	2.6
									MED	89%	4.2
									HIGH	87%	5.3
575-3-60	518	633	5.6	37	4.8	33	1070	2.5	STD	78%	2.0
									MED	77%	2.8
									HIGH	77%	2.8

→ 50HCQD09 — 2-STAGE COOLING WITH 2-SPEED INDOOR FAN MOTOR

V-Ph-Hz	VOLTAGE RANGE		COMP 1		COMP 2		OFM (ea)		IFM		
	MIN	MAX	RLA	LRA	RLA	LRA	WATTS	FLA	TYPE	EFF at Full Load	FLA
208-3-60	187	253	16.0	91	13.7	83	1070	6.2	STD	77%	7.1
									MED	85%	8.6
									HIGH	82%	10.8
230-3-60	187	253	16.0	91	13.7	83	1070	6.2	STD	77%	6.8
									MED	85%	7.8
									HIGH	82%	9.8
460-3-60	414	506	7.0	46	6.2	41	1070	3.1	STD	77%	3.4
									MED	85%	3.8
									HIGH	82%	4.9
575-3-60	518	633	5.6	37	4.8	33	1070	2.5	STD	80%	3.5
									MED	84%	4.5
									HIGH	84%	4.5

LEGEND

EFF — Efficiency
FLA — Full load amps
IFM — Indoor fan motor
LRA — Locked rotor amps
RLA — Rated load amps

→ **50HCQD12 — 2-STAGE COOLING WITH SINGLE SPEED INDOOR FAN MOTOR**

V-Ph-Hz	VOLTAGE RANGE		COMP (Cir 1)		COMP (Cir 2)		OFM (ea)		IFM		
	MIN	MAX	RLA	LRA	RLA	LRA	WATTS	FLA	TYPE	EFF at Full Load	FLA
208-3-60	187	253	15.6	110	15.9	110	280	1.5	STD	69%	5.2
									MED	89%	8.4
									HIGH	90%	20.4
230-3-60	187	253	15.6	110	15.9	110	280	1.5	STD	69%	5.2
									MED	89%	8.3
									HIGH	90%	20.46
460-3-60	414	506	7.7	52	7.7	52	280	0.8	STD	69%	2.6
									MED	89%	4.2
									HIGH	90%	10.2
575-3-60	518	633	5.8	39	5.7	39	280	0.7	STD	78%	2.0
									MED	77%	2.8
									HIGH	94%	9.0

→ **50HCQD12 — 2-STAGE COOLING WITH 2-SPEED INDOOR FAN MOTOR**

V-Ph-Hz	VOLTAGE RANGE		COMP 1		COMP 2		OFM (ea)		IFM		
	MIN	MAX	RLA	LRA	RLA	LRA	WATTS	FLA	TYPE	EFF at Full Load	FLA
208-3-60	187	253	15.6	110	15.9	110	280	1.5	STD	77%	7.1
									MED	85%	8.6
									HIGH	90%	20.4
230-3-60	187	253	15.6	110	15.9	110	280	1.5	STD	77%	6.8
									MED	85%	7.8
									HIGH	90%	20.4
460-3-60	414	506	7.7	52	7.7	52	280	0.8	STD	77%	3.4
									MED	85%	3.8
									HIGH	90%	10.2
575-3-60	518	633	5.8	39	5.7	39	280	0.7	STD	80%	3.5
									MED	84%	4.5
									HIGH	94%	9.0

LEGEND

EFF — Efficiency
FLA — Full load amps
IFM — Indoor fan motor
LRA — Locked rotor amps
RLA — Rated load amps

LEGEND AND NOTES

Applicable for Electrical Data Tables on pages 80-103

LEGEND

BRKR	— Circuit breaker
C.O.	— Convenience outlet
DISC	— Disconnect
EFF	— Efficiency
FLA	— Full load amps
LRA	— Locked rotor amps
MCA	— Minimum circuit amps
P.E.	— Power exhaust
Pwrd fr/unit	— Powered from unit
PWRD C.O.	— Powered convenience outlet
UNPWR C.O.	— Unpowered convenience outlet

NOTES:

1. In compliance with NEC requirements for multi-motor and combination load equipment (refer to NEC Articles 430 and 440), the overcurrent protective device for the unit shall be fuse or HACR breaker. Canadian units may be fuse or circuit breaker.
2. For 208/230 v units, where one value is shown it is the same for either 208 or 230 volts.
3. Unbalanced 3-Phase Supply Voltage
   Never operate a motor where a phase imbalance in supply voltage is greater than 2%. Use the following formula to determine the percentage of voltage imbalance.

$$\%\ \text{Voltage Imbalance} = 100 \times \frac{\text{max voltage deviation from average voltage}}{\text{average voltage}}$$

Example: Supply voltage is 230-3-60

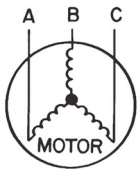

AB = 224 v

BC = 231 v

AC = 226 v

$$\text{Average Voltage} = \frac{(224 + 231 + 226)}{3} = \frac{681}{3}$$

$$= 227$$

Determine maximum deviation from average voltage.
(AB) 227 – 224 = 3 v
(BC) 231 – 227 = 4 v
(AC) 227 – 226 = 1 v
Maximum deviation is 4 v.
Determine percent of voltage imbalance.

$$\%\ \text{Voltage Imbalance} = 100 \times \frac{4}{227}$$

$$= 1.76\%$$

This amount of phase imbalance is satisfactory as it is below the maximum allowable 2%.

IMPORTANT: If the supply voltage phase imbalance is more than 2%, contact your local electric utility company immediately.

→ 50HCQA04 UNIT WIRE/FUSE OR HACR BREAKER SIZING DATA
SINGLE STAGE COOLING WITH SINGLE SPEED INDOOR FAN MOTOR

NOM. V-Ph-Hz	IFM TYPE	ELEC. HTR			NO C.O. or UNPWR C.O.							
					NO P.E.				WITH P.E. (pwrd fr/ unit)			
		CRHEATER ****00	Nom (kW)	FLA	MCA	MAX FUSE OR HACR	DISC. SIZE FLA	DISC. SIZE LRA	MCA	MAX FUSE OR HACR	DISC. SIZE FLA	DISC. SIZE LRA
208/230-1-60	DD-STD	NONE	—	—	30	45	29	88	32	45	31	90
		101A	3.3/4.4	15.9/18.3	49/52	60/60	47/50	104/106	51/54	60/60	49/52	106/108
		102A	4.9/6.5	23.5/27.1	59/63	60/70	56/60	112/115	61/65	70/70	58/62	114/117
		103B	6.5/8.7	31.4/36.3	69/75	70/80	65/70	119/124	71/77	80/80	67/73	121/126
		104B	7.9/10.5	37.9/43.8	77/84	80/90	72/79	126/132	79/86	80/90	75/81	128/134
		102A+102A	9.8/13.0	46.9/54.2	88/97	90/100	83/91	182/196	90/99	90/100	85/93	184/198
208/230-3-60	DD-STD	NONE	—	—	22	30	22	82	24	30	24	84
		101A	3.3/4.4	9.2/10.6	33/35	40/40	32/34	91/93	35/37	40/40	34/36	93/95
		102A	4.9/6.5	13.6/15.6	39/41	45/45	37/40	96/98	41/43	45/45	39/42	98/100
		103B	6.5/8.7	18.1/20.9	44/48	45/50	42/46	100/103	46/50	50/50	45/48	102/105
		104B	7.9/10.5	21.9/25.3	49/53	50/60	47/51	104/107	51/55	60/60	49/53	106/109
		105A	12.0/16.0	33.4/38.5	64/70	70/70	60/66	115/121	66/72	70/80	62/68	117/123
	MED	NONE	—	—	20/19	25/25	19/19	111	22/21	30/30	21/21	113
		101A	3.3/4.4	9.2/10.6	31/33	35/35	30/31	120/122	33/35	40/40	32/33	122/124
		102A	4.9/6.5	13.6/15.6	37/39	40/40	35/37	125/127	39/41	45/45	37/39	127/129
		103B	6.5/8.7	18.1/20.9	42/45	45/50	40/43	129/132	44/47	45/50	42/45	131/134
		104B	7.9/10.5	21.9/25.3	47/51	50/60	44/48	133/136	49/53	50/60	46/50	135/138
		105A	12.0/16.0	33.4/38.5	61/67	70/70	58/63	144/150	63/69	70/70	60/65	146/152
	HIGH	NONE	—	—	23/23	30/30	23/23	147	25/25	30/30	25/25	149
		101A	3.3/4.4	9.2/10.6	34/36	40/40	33/35	156/158	36/38	40/45	36/37	158/160
		102A	4.9/6.5	13.6/15.6	40/42	45/45	38/41	161/163	42/44	45/50	41/43	163/165
		103B	6.5/8.7	18.1/20.9	45/49	50/50	44/47	165/168	47/51	50/60	46/49	167/170
		104B	7.9/10.5	21.9/25.3	50/54	50/60	48/52	169/172	52/56	60/60	50/54	171/174
		105A	12.0/16.0	33.4/38.5	65/71	70/80	61/67	180/186	67/73	70/80	63/69	182/188
460-3-60	DD-STD	NONE	—	—	12	15	12	43	13	15	13	44
		106A	6.0	7.2	21	25	20	50	22	25	21	51
		107A	8.8	10.6	25	25	24	54	26	30	25	55
		108A	11.5	13.8	29	30	28	57	30	30	29	58
		109A	14.0	16.8	33	35	31	60	34	35	32	61
	MED	NONE	—	—	11	15	10	57	12	15	11	58
		106A	6.0	7.2	20	20	18	64	21	25	20	65
		107A	8.8	10.6	24	25	22	68	25	25	23	69
		108A	11.5	13.8	28	30	26	71	29	30	27	72
		109A	14.0	16.8	32	35	29	74	33	35	31	75
	HIGH	NONE	—	—	12	15	12	75	13	15	13	76
		106A	6.0	7.2	21	25	20	82	22	25	22	83
		107A	8.8	10.6	26	30	24	86	27	30	25	87
		108A	11.5	13.8	30	30	28	89	31	35	29	90
		109A	14.0	16.8	33	35	31	92	34	35	33	93
575-3-60	DD-STD	NONE	—	—	10	15	10	42	12	15	12	44
		297A	10.0	9.6	22	25	21	52	24	25	23	54
		298A	15.0	14.4	28	30	26	56	30	30	28	58
	MED	NONE	—	—	7	15	7	45	9	15	9	47
		297A	10.0	9.6	19	20	18	55	21	25	20	57
		298A	15.0	14.4	25	25	23	59	27	30	26	61
	HIGH	NONE	—	—	8	15	7	49	10	15	9	51
		297A	10.0	9.6	20	20	18	59	22	25	20	61
		298A	15.0	14.4	26	30	24	63	28	30	26	65

See Legend and Notes on page 79.

→ 50HCQA04 UNIT WIRE/FUSE OR HACR BREAKER SIZING DATA
SINGLE STAGE COOLING WITH SINGLE SPEED INDOOR FAN MOTOR (cont)

NOM. V-Ph-Hz	IFM TYPE	ELEC. HTR			WITH PWRD C.O.							
					NO P.E.				WITH P.E. (pwrd fr/ unit)			
		CRHEATER ****00	Nom (kW)	FLA	MCA	MAX FUSE OR HACR	DISC. SIZE FLA	DISC. SIZE LRA	MCA	MAX FUSE OR HACR	DISC. SIZE FLA	DISC. SIZE LRA
208/230-1-60	DD-STD	NONE	—	—	34	50	34	93	36	50	36	95
		101A	3.3/4.4	15.9/18.3	54/57	60/60	53/55	109/111	56/59	60/60	55/58	111/113
		102A	4.9/6.5	23.5/27.1	64/68	70/70	61/65	117/120	66/70	70/70	63/68	119/122
		103B	6.5/8.7	31.4/36.3	74/80	80/80	70/76	124/129	76/82	80/90	73/78	126/131
		104B	7.9/10.5	37.9/43.8	82/89	90/90	78/85	131/137	84/91	90/100	80/87	133/139
		102A+102A	9.8/13.0	46.9/54.2	93/102	100/110	88/97	187/201	95/104	100/110	90/99	189/203
208/230-3-60	DD-STD	NONE	—	—	27	30	27	87	29	35	29	89
		101A	3.3/4.4	9.2/10.6	38/40	45/45	38/39	96/98	40/42	45/45	40/42	98/100
		102A	4.9/6.5	13.6/15.6	44/46	50/50	43/45	101/103	46/48	50/50	45/47	103/105
		103B	6.5/8.7	18.1/20.9	49/53	50/60	48/51	105/108	51/55	60/60	50/53	107/110
		104B	7.9/10.5	21.9/25.3	54/58	60/60	52/56	109/112	56/60	60/60	55/58	111/114
		105A	12.0/16.0	33.4/38.5	68/75	70/80	66/71	120/126	70/77	70/80	68/74	122/128
	MED	NONE	—	—	24/24	30/30	25/24	116	26/26	30/30	27/26	118
		101A	3.3/4.4	9.2/10.6	36/37	40/40	35/36	125/127	38/39	45/45	37/39	127/129
		102A	4.9/6.5	13.6/15.6	41/44	45/45	40/42	130/132	43/46	45/50	42/44	132/134
		103B	6.5/8.7	18.1/20.9	47/50	50/50	45/48	134/137	49/52	50/60	48/50	136/139
		104B	7.9/10.5	21.9/25.3	52/56	60/60	50/53	138/141	54/58	60/60	52/56	140/143
		105A	12.0/16.0	33.4/38.5	66/72	70/80	63/69	149/155	68/74	70/80	65/71	151/157
	HIGH	NONE	—	—	28/28	30/30	28/28	152	30/29	35/35	30/30	154
		101A	3.3/4.4	9.2/10.6	39/41	45/45	39/40	161/163	41/43	45/45	41/43	163/165
		102A	4.9/6.5	13.6/15.6	45/47	50/50	44/46	166/168	47/49	50/50	46/48	168/170
		103B	6.5/8.7	18.1/20.9	50/54	50/60	49/52	170/173	52/56	60/60	51/54	172/175
		104B	7.9/10.5	21.9/25.3	55/59	60/60	53/57	174/177	57/61	60/70	56/59	176/179
		105A	12.0/16.0	33.4/38.5	69/76	70/80	67/72	185/191	71/78	80/80	69/75	187/193
460-3-60	DD-STD	NONE	—	—	14	20	14	45	15	20	16	46
		106A	6.0	7.2	23	25	23	52	24	25	24	53
		107A	8.8	10.6	28	30	27	56	29	30	28	57
		108A	11.5	13.8	32	35	30	59	33	35	31	60
		109A	14.0	16.8	35	35	34	62	36	40	35	63
	MED	NONE	—	—	13	15	13	59	14	15	14	60
		106A	6.0	7.2	22	25	21	66	23	25	22	67
		107A	8.8	10.6	26	30	25	70	27	30	26	71
		108A	11.5	13.8	30	30	29	73	31	35	30	74
		109A	14.0	16.8	34	35	32	76	35	35	33	77
	HIGH	NONE	—	—	15	20	15	77	16	20	16	78
		106A	6.0	7.2	24	25	23	84	25	25	24	85
		107A	8.8	10.6	28	30	27	88	29	30	28	89
		108A	11.5	13.8	32	35	30	91	33	35	32	92
		109A	14.0	16.8	36	40	34	94	37	40	35	95
575-3-60	DD-STD	NONE	—	—	11	15	12	44	13	15	14	46
		297A	10.0	9.6	23	25	23	54	25	25	25	56
		298A	15.0	14.4	29	30	28	58	31	35	30	60
	MED	NONE	—	—	9	15	9	47	11	15	11	49
		297A	10.0	9.6	21	25	20	57	23	25	22	59
		298A	15.0	14.4	27	30	25	61	29	30	27	63
	HIGH	NONE	—	—	9	15	9	51	11	15	11	53
		297A	10.0	9.6	21	25	20	61	23	25	22	63
		298A	15.0	14.4	27	30	26	65	29	30	28	67

See Legend and Notes on page 79.

→ 50HCQA05 UNIT WIRE/FUSE OR HACR BREAKER SIZING DATA
SINGLE STAGE COOLING WITH SINGLE SPEED INDOOR FAN MOTOR

NOM. V-Ph-Hz	IFM TYPE	ELEC. HTR			NO C.O. or UNPWR C.O.							
					NO P.E.				WITH P.E. (pwrd fr/ unit)			
		CRHEATER ****00	Nom (kW)	FLA	MCA	MAX FUSE OR HACR	DISC. SIZE FLA	DISC. SIZE LRA	MCA	MAX FUSE OR HACR	DISC. SIZE FLA	DISC. SIZE LRA
208/230-1-60	DD-STD	NONE	—	—	34	50	33	119	36	50	35	121
		101A	3.3/4.4	15.9/18.3	54/57	60/60	51/54	135/137	56/59	60/60	53/56	137/139
		103B	6.5/8.7	31.4/36.3	73/79	80/80	69/75	150/155	75/81	80/90	71/77	152/157
		102A+102A	9.8/13.0	46.9/54.2	93/102	100/110	87/95	213/227	95/104	100/110	89/97	215/229
		103B+103B	13.1/17.4	62.8/72.5	113/125	125/125	105/116	245/264	114/127	125/150	107/118	247/266
		104B+104B	15.8/21.0	75.8/87.5	129/143	150/150	120/134	271/294	131/145	150/150	122/136	273/296
208/230-3-60	DD-STD	NONE	—	—	26	30	25	93	28	40	27	95
		102A	4.9/6.5	13.6/15.6	43/45	50/50	41/43	107/109	45/47	50/50	43/45	109/111
		103B	6.5/8.7	18.1/20.9	48/52	50/60	46/49	111/114	50/54	50/60	48/51	113/116
		105A	12.0/16.0	33.4/38.5	67/74	70/80	64/69	126/132	69/76	70/80	66/72	128/134
		104B+104B	15.8/21.0	43.8/50.5	80/89	80/90	76/83	181/194	82/91	90/100	78/85	183/196
	MED	NONE	—	—	23/23	30/30	23/22	122	25/25	30/30	25/24	124
		102A	4.9/6.5	13.6/15.6	40/43	45/50	38/40	136/138	42/45	50/50	40/42	138/140
		103B	6.5/8.7	18.1/20.9	46/49	50/50	43/46	140/143	48/51	50/60	46/49	142/145
		105A	12.0/16.0	33.4/38.5	65/71	70/80	61/67	155/161	67/73	70/80	63/69	157/163
		104B+104B	15.8/21.0	43.8/50.5	78/86	80/90	73/80	210/223	80/88	80/90	75/83	212/225
	HIGH	NONE	—	—	27/27	30/30	26/26	158	29/28	40/40	29/28	160
		102A	4.9/6.5	13.6/15.6	44/46	50/50	42/44	172/174	46/48	50/50	44/46	174/176
		103B	6.5/8.7	18.1/20.9	49/53	50/60	47/50	176/179	51/55	60/60	49/52	178/181
		105A	12.0/16.0	33.4/38.5	68/75	70/80	65/70	191/197	70/77	70/80	67/73	193/199
		104B+104B	15.8/21.0	43.8/50.5	81/90	90/90	77/84	246/259	83/92	90/100	79/86	248/261
460-3-60	DD-STD	NONE	—	—	13	15	13	47	14	15	14	48
		106A	6.0	7.2	22	25	21	54	23	25	22	55
		108A	11.5	13.8	30	30	28	61	31	35	30	62
		109A	14.0	16.8	34	35	32	64	35	35	33	65
		108A+108A	23.0	27.7	48	50	44	102	49	50	46	103
	MED	NONE	—	—	11	15	11	61	12	15	12	62
		106A	6.0	7.2	20	20	19	68	21	25	20	69
		108A	11.5	13.8	29	30	27	75	30	30	28	76
		109A	14.0	16.8	32	35	30	78	33	35	31	79
		108A+108A	23.0	27.7	46	50	43	116	47	50	44	117
	HIGH	NONE	—	—	13	15	13	79	14	20	14	80
		106A	6.0	7.2	22	25	21	86	23	25	22	87
		108A	11.5	13.8	30	30	29	93	31	35	30	94
		109A	14.0	16.8	34	35	32	96	35	35	33	97
		108A+108A	23.0	27.7	48	50	45	134	49	50	46	135
575-3-60	DD-STD	NONE	—	—	11	15	11	39	13	15	13	41
		297A	10.0	9.6	23	25	22	49	25	25	24	51
		298A	15.0	14.4	29	30	27	53	31	35	29	55
	MED	NONE	—	—	8	15	8	42	10	15	10	44
		297A	10.0	9.6	20	20	19	52	22	25	21	54
		298A	15.0	14.4	26	30	24	56	28	30	27	58
	HIGH	NONE	—	—	9	15	8	46	11	15	10	48
		297A	10.0	9.6	21	25	19	56	23	25	22	58
		298A	15.0	14.4	27	30	25	60	29	30	27	62

See Legend and Notes on page 79.

→ 50HCQA05 UNIT WIRE/FUSE OR HACR BREAKER SIZING DATA
SINGLE STAGE COOLING WITH SINGLE SPEED INDOOR FAN MOTOR (cont)

NOM. V-Ph-Hz	IFM TYPE	ELEC. HTR			WITH PWRD C.O.							
					NO P.E.				WITH P.E. (pwrd fr/ unit)			
		CRHEATER ****00	Nom (kW)	FLA	MCA	MAX FUSE OR HACR	DISC. SIZE FLA	DISC. SIZE LRA	MCA	MAX FUSE OR HACR	DISC. SIZE FLA	DISC. SIZE LRA
208/230-1-60	DD-STD	NONE	—	—	39	50	38	124	41	60	41	126
		101A	3.3/4.4	15.9/18.3	59/62	60/70	57/59	140/142	61/64	70/70	59/62	142/144
		103B	6.5/8.7	31.4/36.3	78/84	80/90	75/80	155/160	80/86	80/90	77/82	157/162
		102A+102A	9.8/13.0	46.9/54.2	97/107	100/110	92/101	218/232	99/108	100/110	95/103	220/234
		103B+103B	13.1/17.4	62.8/72.5	117/129	125/150	111/122	250/269	119/131	125/150	113/124	252/271
		104B+104B	15.8/21.0	75.8/87.5	134/148	150/150	126/139	276/299	135/150	150/150	128/141	278/301
208/230-3-60	DD-STD	NONE	—	—	30	40	31	98	32	40	33	100
		102A	4.9/6.5	13.6/15.6	47/50	50/50	46/49	112/114	49/52	50/60	49/51	114/116
		103B	6.5/8.7	18.1/20.9	53/57	60/60	52/55	116/119	55/58	60/60	54/57	118/121
		105A	12.0/16.0	33.4/38.5	72/79	80/80	69/75	131/137	74/80	80/90	71/77	133/139
		104B+104B	15.8/21.0	43.8/50.5	85/94	90/100	81/89	186/199	87/95	90/100	83/91	188/201
	MED	NONE	—	—	28/28	40/40	28/28	127	30/30	40/40	30/30	129
		102A	4.9/6.5	13.6/15.6	45/47	50/50	44/46	141/143	47/49	50/50	46/48	143/145
		103B	6.5/8.7	18.1/20.9	51/54	60/60	49/52	145/148	53/56	60/60	51/54	147/150
		105A	12.0/16.0	33.4/38.5	70/76	70/80	67/72	160/166	72/78	80/80	69/74	162/168
		104B+104B	15.8/21.0	43.8/50.5	83/91	90/100	79/86	215/228	85/93	90/100	81/88	217/230
	HIGH	NONE	—	—	31/31	40/40	32/32	163	33/33	45/45	34/34	165
		102A	4.9/6.5	13.6/15.6	48/51	50/60	47/50	177/179	50/53	50/60	50/52	179/181
		103B	6.5/8.7	18.1/20.9	54/57	60/60	53/56	181/184	56/59	60/60	55/58	183/186
		105A	12.0/16.0	33.4/38.5	73/79	80/80	70/76	196/202	75/81	80/90	72/78	198/204
		104B+104B	15.8/21.0	43.8/50.5	86/94	90/100	82/90	251/264	88/96	90/100	84/92	253/266
460-3-60	DD-STD	NONE	—	—	15	20	15	49	16	20	16	50
		106A	6.0	7.2	24	25	23	56	25	25	24	57
		108A	11.5	13.8	32	35	31	63	33	35	32	64
		109A	14.0	16.8	36	40	34	66	37	40	36	67
		108A+108A	23.0	27.7	50	50	47	104	51	60	48	105
	MED	NONE	—	—	14	15	13	63	15	20	14	64
		106A	6.0	7.2	23	25	22	70	24	25	23	71
		108A	11.5	13.8	31	35	29	77	32	35	30	78
		109A	14.0	16.8	35	35	33	80	36	40	34	81
		108A+108A	23.0	27.7	48	50	45	118	49	50	46	119
	HIGH	NONE	—	—	15	20	15	81	16	20	16	82
		106A	6.0	7.2	24	25	24	88	25	25	25	89
		108A	11.5	13.8	33	35	31	95	34	35	32	96
		109A	14.0	16.8	36	40	35	98	37	40	36	99
		108A+108A	23.0	27.7	50	50	47	136	51	60	48	137
575-3-60	DD-STD	NONE	—	—	12	15	13	41	14	20	15	43
		297A	10.0	9.6	24	25	24	51	26	30	26	53
		298A	15.0	14.4	30	30	29	55	32	35	31	57
	MED	NONE	—	—	10	15	10	44	12	15	12	46
		297A	10.0	9.6	22	25	21	54	24	25	23	56
		298A	15.0	14.4	28	30	26	58	30	30	29	60
	HIGH	NONE	—	—	10	15	10	48	12	15	12	50
		297A	10.0	9.6	22	25	21	58	24	25	23	60
		298A	15.0	14.4	28	30	27	62	30	30	29	64

See Legend and Notes on page 79.

→ 50HCQA06 UNIT WIRE/FUSE OR HACR BREAKER SIZING DATA
SINGLE STAGE COOLING WITH SINGLE SPEED INDOOR FAN MOTOR

NOM. V-Ph-Hz	IFM TYPE	ELEC. HTR			NO C.O. or UNPWR C.O.							
					NO P.E.				WITH P.E. (pwrd fr/ unit)			
		CRHEATER ****00	Nom (kW)	FLA	MCA	MAX FUSE OR HACR	DISC. SIZE FLA	DISC. SIZE LRA	MCA	MAX FUSE OR HACR	DISC. SIZE FLA	DISC. SIZE LRA
208/230-1-60	DD-STD	NONE	—	—	41	60	39	144	42	60	41	146
		102A	4.9/6.5	23.5/27.1	70/74	80/80	66/70	168/171	72/76	80/80	68/72	170/173
		103B	6.5/8.7	31.4/36.3	80/86	80/100	75/81	175/180	82/88	90/100	77/83	177/182
		102A+102A	9.8/13.0	46.9/54.2	99/108	100/110	93/101	238/252	101/110	110/110	95/103	240/254
		103B+103B	13.1/17.4	62.8/72.5	119/131	125/150	111/122	270/289	121/133	125/150	113/124	272/291
		104B+104B	15.8/21.0	75.8/87.5	135/150	150/150	126/139	296/319	137/152	150/175	128/142	298/321
208/230-3-60	DD-STD	NONE	—	—	29	40	28	120	31	45	31	122
		102A	4.9/6.5	13.6/15.6	46/49	50/60	44/46	134/136	48/51	60/60	46/49	136/138
		104B	7.9/10.5	21.9/25.3	57/61	60/70	54/58	142/145	58/63	60/70	56/60	144/147
		105A	12.0/16.0	33.4/38.5	71/77	80/80	67/73	153/159	73/79	80/80	69/75	155/161
		104B+104B	15.8/21.0	43.8/50.5	84/92	90/100	79/86	208/221	86/94	90/100	81/89	210/223
		104B+105A	19.9/26.5	55.2/63.8	98/109	100/110	92/102	230/248	100/111	100/125	94/104	232/250
	MED	NONE	—	—	30/30	45/45	30/29	185	32/32	45/45	32/32	187
		102A	4.9/6.5	13.6/15.6	47/50	50/60	45/47	199/201	49/51	60/60	47/50	201/203
		104B	7.9/10.5	21.9/25.3	58/62	60/70	55/59	207/210	59/64	60/70	57/61	209/212
		105A	12.0/16.0	33.4/38.5	72/78	80/80	68/74	218/224	74/80	80/80	70/76	220/226
		104B+104B	15.8/21.0	43.8/50.5	85/93	90/100	80/88	273/286	87/95	90/100	82/90	275/288
		104B+105A	19.9/26.5	55.2/63.8	99/110	100/110	93/103	295/313	101/112	110/125	95/105	297/315
	HIGH	NONE	—	—	30/30	45/45	30/29	185	32/32	45/45	32/32	187
		102A	4.9/6.5	13.6/15.6	47/50	50/60	45/47	199/201	49/51	60/60	47/50	201/203
		104B	7.9/10.5	21.9/25.3	58/62	60/70	55/59	207/210	59/64	60/70	57/61	209/212
		105A	12.0/16.0	33.4/38.5	72/78	80/80	68/74	218/224	74/80	80/80	70/76	220/226
		104B+104B	15.8/21.0	43.8/50.5	85/93	90/100	80/88	273/286	87/95	90/100	82/90	275/288
		104B+105A	19.9/26.5	55.2/63.8	99/110	100/110	93/103	295/313	101/112	110/125	95/105	297/315
460-3-60	DD-STD	NONE	—	—	14	20	14	58	15	20	15	59
		106A	6.0	7.2	23	25	22	65	24	25	23	66
		108A	11.5	13.8	31	35	29	72	32	35	31	73
		109A	14.0	16.8	35	35	33	75	36	40	34	76
		108A+108A	23.0	27.7	49	50	45	113	50	50	47	114
		108A+109A	25.5	30.7	52	60	49	119	53	60	50	120
	MED	NONE	—	—	14	20	14	90	15	20	15	91
		106A	6.0	7.2	23	25	22	97	24	25	23	98
		108A	11.5	13.8	31	35	30	104	32	35	31	105
		109A	14.0	16.8	35	35	33	107	36	40	34	108
		108A+108A	23.0	27.7	49	50	46	145	50	50	47	146
		108A+109A	25.5	30.7	53	60	49	151	54	60	50	152
	HIGH	NONE	—	—	14	20	14	90	15	20	15	91
		106A	6.0	7.2	23	25	22	97	24	25	23	98
		108A	11.5	13.8	31	35	30	104	32	35	31	105
		109A	14.0	16.8	35	35	33	107	36	40	34	108
		108A+108A	23.0	27.7	49	50	46	145	50	50	47	146
		108A+109A	25.5	30.7	53	60	49	151	54	60	50	152
575-3-60	DD-STD	NONE	—	—	12	15	11	46	14	15	14	48
		298A	15.0	14.4	30	30	28	60	32	35	30	62
		301A	25.0	24.1	42	45	39	94	44	45	41	96
	MED	NONE	—	—	10	15	9	53	12	15	11	55
		298A	15.0	14.4	28	30	26	67	30	30	28	69
		301A	25.0	24.1	40	40	37	101	42	45	39	103
	HIGH	NONE	—	—	10	15	10	64	12	15	12	66
		298A	15.0	14.4	28	30	27	78	30	30	29	80
		301A	25.0	24.1	41	45	38	112	42	45	40	114

See Legend and Notes on page 79.

→ 50HCQA06 UNIT WIRE/FUSE OR HACR BREAKER SIZING DATA
SINGLE STAGE COOLING WITH SINGLE SPEED INDOOR FAN MOTOR (cont)

NOM. V-Ph-Hz	IFM TYPE	ELEC. HTR			WITH PWRD C.O.							
					NO P.E.				WITH P.E. (pwrd fr/ unit)			
		CRHEATER ****00	Nom (kW)	FLA	MCA	MAX FUSE OR HACR	DISC. SIZE FLA	DISC. SIZE LRA	MCA	MAX FUSE OR HACR	DISC. SIZE FLA	DISC. SIZE LRA
208/230-1-60	DD-STD	NONE	—	—	45	60	44	149	47	60	47	151
		102A	4.9/6.5	23.5/27.1	75/79	80/80	71/76	173/176	77/81	80/90	74/78	175/178
		103B	6.5/8.7	31.4/36.3	85/91	100/100	81/86	180/185	86/93	100/100	83/88	182/187
		102A+102A	9.8/13.0	46.9/54.2	104/113	110/125	98/107	243/257	106/115	110/125	101/109	245/259
		103B+103B	13.1/17.4	62.8/72.5	124/136	125/150	117/128	275/294	126/138	150/150	119/130	277/296
		104B+104B	15.8/21.0	75.8/87.5	140/155	150/175	132/145	301/324	142/157	150/175	134/147	303/326
208/230-3-60	DD-STD	NONE	—	—	34	45	34	125	36	50	36	127
		102A	4.9/6.5	13.6/15.6	51/53	60/60	50/52	139/141	53/55	60/60	52/54	141/143
		104B	7.9/10.5	21.9/25.3	61/66	70/70	59/63	147/150	63/67	70/70	61/65	149/152
		105A	12.0/16.0	33.4/38.5	76/82	80/90	72/78	158/164	78/84	80/90	75/80	160/166
		104B+104B	15.8/21.0	43.8/50.5	89/97	90/100	84/92	213/226	91/99	100/100	86/94	215/228
		104B+105A	19.9/26.5	55.2/63.8	103/114	110/125	97/107	235/253	105/116	110/125	100/109	237/255
	MED	NONE	—	—	35/35	50/50	35/35	190	37/37	50/50	37/37	192
		102A	4.9/6.5	13.6/15.6	52/54	60/60	51/53	204/206	54/56	60/60	53/55	206/208
		104B	7.9/10.5	21.9/25.3	62/66	70/70	60/64	212/215	64/68	70/70	62/66	214/217
		105A	12.0/16.0	33.4/38.5	77/83	80/90	73/79	223/229	79/85	80/90	76/81	225/231
		104B+104B	15.8/21.0	43.8/50.5	90/98	90/100	85/93	278/291	92/100	100/100	88/95	280/293
		104B+105A	19.9/26.5	55.2/63.8	104/115	110/125	99/108	300/318	106/116	110/125	101/111	302/320
	HIGH	NONE	—	—	35/35	50/50	35/35	190	37/37	50/50	37/37	192
		102A	4.9/6.5	13.6/15.6	52/54	60/60	51/53	204/206	54/56	60/60	53/55	206/208
		104B	7.9/10.5	21.9/25.3	62/66	70/70	60/64	212/215	64/68	70/70	62/66	214/217
		105A	12.0/16.0	33.4/38.5	77/83	80/90	73/79	223/229	79/85	80/90	76/81	225/231
		104B+104B	15.8/21.0	43.8/50.5	90/98	90/100	85/93	278/291	92/100	100/100	88/95	280/293
		104B+105A	19.9/26.5	55.2/63.8	104/115	110/125	99/108	300/318	106/116	110/125	101/111	302/320
460-3-60	DD-STD	NONE	—	—	16	20	16	60	17	20	17	61
		106A	6.0	7.2	25	25	24	67	26	30	26	68
		108A	11.5	13.8	33	35	32	74	34	35	33	75
		109A	14.0	16.8	37	40	35	77	38	40	37	78
		108A+108A	23.0	27.7	51	60	48	115	52	60	49	116
		108A+109A	25.5	30.7	55	60	51	121	56	60	53	122
	MED	NONE	—	—	16	20	16	92	17	20	17	93
		106A	6.0	7.2	25	30	25	99	26	30	26	100
		108A	11.5	13.8	34	35	32	106	35	35	33	107
		109A	14.0	16.8	37	40	36	109	38	40	37	110
		108A+108A	23.0	27.7	51	60	48	147	52	60	49	148
		108A+109A	25.5	30.7	55	60	52	153	56	60	53	154
	HIGH	NONE	—	—	16	20	16	92	17	20	17	93
		106A	6.0	7.2	25	30	25	99	26	30	26	100
		108A	11.5	13.8	34	35	32	106	35	35	33	107
		109A	14.0	16.8	37	40	36	109	38	40	37	110
		108A+108A	23.0	27.7	51	60	48	147	52	60	49	148
		108A+109A	25.5	30.7	55	60	52	153	56	60	53	154
575-3-60	DD-STD	NONE	—	—	13	15	13	48	15	20	16	50
		298A	15.0	14.4	31	35	30	62	33	35	32	64
		301A	25.0	24.1	43	45	41	96	45	45	43	98
	MED	NONE	—	—	11	15	11	55	13	15	13	57
		298A	15.0	14.4	29	30	28	69	31	35	30	71
		301A	25.0	24.1	41	45	39	103	43	45	41	105
	HIGH	NONE	—	—	12	15	12	66	14	15	14	68
		298A	15.0	14.4	30	30	29	80	32	35	31	82
		301A	25.0	24.1	42	45	40	114	44	45	42	116

See Legend and Notes on page 79.

→ 50HCQA07 UNIT WIRE/FUSE OR HACR BREAKER SIZING DATA
SINGLE STAGE COOLING WITH SINGLE SPEED INDOOR FAN MOTOR

NOM. V-Ph-Hz	IFM TYPE	ELEC. HTR			NO C.O. or UNPWR C.O.							
					NO P.E.				WITH P.E. (pwrd fr/ unit)			
		CRHEATER ****00	Nom (kW)	FLA	MCA	MAX FUSE OR HACR	DISC. SIZE FLA	DISC. SIZE LRA	MCA	MAX FUSE OR HACR	DISC. SIZE FLA	DISC. SIZE LRA
208/230-3-60	STD	NONE	—	—	33	50	32	161	37	50	36	165
		264A	4.9/6.5	13.6/15.6	50/53	60/60	48/50	175/177	54/56	60/60	52/54	179/181
		117A	7.8/10.4	21.7/25.0	60/64	60/70	57/61	183/186	64/68	70/80	61/65	187/190
		110A	12.0/16.0	33.4/38.5	75/81	80/90	70/76	194/200	79/85	80/90	75/81	198/204
		117A+117A	15.8/21.0	43.8/50.5	88/96	90/100	82/90	249/262	92/100	100/100	87/94	253/266
		110A+117A	19.9/26.5	55.2/63.8	102/113	110/125	95/105	271/289	106/117	110/125	100/110	275/293
	MED	NONE	—	—	35	50	35	198	39	50	39	202
		264A	4.9/6.5	13.6/15.6	52/55	60/60	50/53	212/214	56/59	60/60	55/57	216/218
		117A	7.8/10.4	21.7/25.0	63/67	70/70	60/63	220/223	66/71	80/80	64/68	224/227
		110A	12.0/16.0	33.4/38.5	77/84	80/90	73/79	231/237	81/87	90/90	77/83	235/241
		117A+117A	15.8/21.0	43.8/50.5	90/99	90/100	85/93	286/299	94/102	100/110	89/97	290/303
		110A+117A	19.9/26.5	55.2/63.8	104/115	110/125	98/108	308/326	108/119	110/125	102/112	312/330
	HIGH	NONE	—	—	42/41	60/50	42/41	230	45/44	60/60	46/45	234
		264A	4.9/6.5	13.6/15.6	59/60	60/70	57/59	244/246	62/64	70/70	62/63	248/250
		117A	7.8/10.4	21.7/25.0	69/72	80/80	67/69	252/255	72/76	80/80	71/74	256/259
		110A	12.0/16.0	33.4/38.5	83/89	90/90	80/85	263/269	87/93	90/100	84/89	267/273
		117A+117A	15.8/21.0	43.8/50.5	96/104	100/110	92/99	318/331	100/108	100/110	96/103	322/335
		110A+117A	19.9/26.5	55.2/63.8	111/120	125/125	105/114	340/358	114/124	125/125	109/118	344/362
460-3-60	STD	NONE	—	—	15	20	14	79	17	20	16	81
		265A	6.0	7.2	24	25	23	86	26	30	25	88
		266A	11.5	13.8	32	35	30	93	34	35	32	95
		267A	14.0	16.8	36	40	34	96	38	40	36	98
		268A	23.0	27.7	50	50	46	107	51	60	48	109
		269A	25.5	30.7	53	60	50	110	55	60	52	112
	MED	NONE	—	—	16	20	15	98	18	25	17	100
		265A	6.0	7.2	25	30	23	105	27	30	26	107
		266A	11.5	13.8	33	35	31	112	35	35	33	114
		267A	14.0	16.8	37	40	35	115	39	40	37	117
		268A	23.0	27.7	50	50	47	126	52	60	49	128
		269A	25.5	30.7	54	60	50	129	56	60	53	131
	HIGH	NONE	—	—	19	25	19	114	21	25	21	116
		265A	6.0	7.2	28	30	27	121	30	30	29	123
		266A	11.5	13.8	36	40	35	128	38	40	37	130
		267A	14.0	16.8	40	40	38	131	42	45	40	133
		268A	23.0	27.7	53	60	50	142	55	60	53	144
		269A	25.5	30.7	57	60	54	145	59	60	56	147
575-3-60	STD	NONE	—	—	12	15	11	66	15	20	15	70
		118A	18.0	17.3	33	35	31	83	37	40	35	87
		299A	28.0	26.9	45	45	42	93	49	50	46	97
	MED	NONE	—	—	13	15	12	81	17	20	17	85
		118A	18.0	17.3	34	35	32	98	38	40	36	102
		299A	28.0	26.9	46	50	43	108	50	50	47	112
	HIGH	NONE	—	—	16	20	15	95	19	25	20	99
		118A	18.0	17.3	37	40	35	112	41	45	40	116
		299A	28.0	26.9	49	50	46	122	53	60	51	126

See Legend and Notes on page 79.

→ 50HCQA07 UNIT WIRE/FUSE OR HACR BREAKER SIZING DATA
SINGLE STAGE COOLING WITH SINGLE SPEED INDOOR FAN MOTOR (cont)

NOM. V-Ph-Hz	IFM TYPE	ELEC. HTR			WITH PWRD C.O.							
					NO P.E.				WITH P.E. (pwrd fr/ unit)			
		CRHEATER ****00	Nom (kW)	FLA	MCA	MAX FUSE OR HACR	DISC. SIZE FLA	DISC. SIZE LRA	MCA	MAX FUSE OR HACR	DISC. SIZE FLA	DISC. SIZE LRA
208/230-3-60	STD	NONE	—	—	38	50	37	166	42	60	42	170
		264A	4.9/6.5	13.6/15.6	55/57	60/60	53/55	180/182	59/61	60/70	58/60	184/186
		117A	7.8/10.4	21.7/25.0	65/69	70/80	62/66	188/191	69/73	80/80	67/71	192/195
		110A	12.0/16.0	33.4/38.5	80/86	80/90	76/82	199/205	84/90	90/90	80/86	203/209
		117A+117A	15.8/21.0	43.8/50.5	93/101	100/110	88/96	254/267	97/105	100/110	92/100	258/271
		110A+117A	19.9/26.5	55.2/63.8	107/118	110/125	101/111	276/294	111/122	125/125	105/115	280/298
	MED	NONE	—	—	40	50	40	203	44	60	45	207
		264A	4.9/6.5	13.6/15.6	57/60	60/70	56/58	217/219	61/64	70/70	60/62	221/223
		117A	7.8/10.4	21.7/25.0	67/72	80/80	65/69	225/228	71/75	80/80	69/73	229/232
		110A	12.0/16.0	33.4/38.5	82/88	90/90	79/84	236/242	86/92	90/100	83/89	240/246
		117A+117A	15.8/21.0	43.8/50.5	95/103	100/110	91/98	291/304	99/107	100/110	95/103	295/308
		110A+117A	19.9/26.5	55.2/63.8	109/120	110/125	104/114	313/331	113/124	125/125	108/118	317/335
	HIGH	NONE	—	—	46/45	60/60	47/46	235	50/49	60/60	52/50	239
		264A	4.9/6.5	13.6/15.6	63/65	70/80	63/64	249/251	67/69	80/80	67/68	253/255
		117A	7.8/10.4	21.7/25.0	73/77	80/80	72/75	257/260	77/81	80/90	76/79	261/264
		110A	12.0/16.0	33.4/38.5	88/94	90/100	86/90	268/274	92/97	100/100	90/95	272/278
		117A+117A	15.8/21.0	43.8/50.5	101/109	110/110	98/104	323/336	105/112	110/125	102/109	327/340
		110A+117A	19.9/26.5	55.2/63.8	115/125	125/125	111/119	345/363	119/129	125/150	115/124	349/367
460-3-60	STD	NONE	—	—	17	20	17	81	19	25	19	83
		265A	6.0	7.2	26	30	25	88	28	30	27	90
		266A	11.5	13.8	34	35	33	95	36	40	35	97
		267A	14.0	16.8	38	40	36	98	40	40	38	100
		268A	23.0	27.7	52	60	49	109	54	60	51	111
		269A	25.5	30.7	55	60	52	112	57	60	54	114
	MED	NONE	—	—	18	25	18	100	20	25	20	102
		265A	6.0	7.2	27	30	26	107	29	30	28	109
		266A	11.5	13.8	35	35	34	114	37	40	36	116
		267A	14.0	16.8	39	40	37	117	41	45	39	119
		268A	23.0	27.7	53	60	50	128	54	60	52	130
		269A	25.5	30.7	56	60	53	131	58	60	55	133
	HIGH	NONE	—	—	21	25	21	116	23	30	23	118
		265A	6.0	7.2	30	30	29	123	32	35	32	125
		266A	11.5	13.8	38	40	37	130	40	40	39	132
		267A	14.0	16.8	42	45	40	133	44	45	43	135
		268A	23.0	27.7	56	60	53	144	57	60	55	146
		269A	25.5	30.7	59	60	56	147	61	70	59	149
575-3-60	STD	NONE	—	—	13	15	13	68	17	20	17	72
		118A	18.0	17.3	35	35	33	85	39	40	37	89
		299A	28.0	26.9	47	50	44	95	51	60	48	99
	MED	NONE	—	—	14	20	14	83	18	20	19	87
		118A	18.0	17.3	36	40	34	100	40	40	38	104
		299A	28.0	26.9	48	50	45	110	52	60	49	114
	HIGH	NONE	—	—	17	20	17	97	21	25	22	101
		118A	18.0	17.3	39	40	37	114	43	45	42	118
		299A	28.0	26.9	51	60	48	124	55	60	53	128

See Legend and Notes on page 79.

→ 50HCQD07 UNIT WIRE/FUSE OR HACR BREAKER SIZING DATA
TWO STAGE COOLING WITH SINGLE SPEED INDOOR FAN MOTOR

NOM. V-Ph-Hz	IFM TYPE	ELEC. HTR			NO C.O. or UNPWR C.O.							
					NO P.E.				WITH P.E. (pwrd fr/ unit)			
		CRHEATER ****00	Nom (kW)	FLA	MCA	MAX FUSE OR HACR	DISC. SIZE FLA	DISC. SIZE LRA	MCA	MAX FUSE OR HACR	DISC. SIZE FLA	DISC. SIZE LRA
208/230-3-60	STD	NONE	—	—	32	50	31	161	36	50	36	165
		264A	4.9/6.5	13.6/15.6	49/52	60/60	47/49	175/177	53/56	60/60	51/53	179/181
		117A	7.8/10.4	21.7/25.0	59/64	60/70	56/60	183/186	63/67	70/70	60/64	187/190
		110A	12.0/16.0	33.4/38.5	74/80	80/80	70/75	194/200	78/84	80/90	74/80	198/204
		117A+117A	15.8/21.0	43.8/50.5	87/95	90/100	82/89	249/262	91/99	100/100	86/94	253/266
		110A+117A	19.9/26.5	55.2/63.8	101/112	110/125	95/105	271/289	105/116	110/125	99/109	275/293
	MED	NONE	—	—	35	50	34	198	38	50	38	202
		264A	4.9/6.5	13.6/15.6	52/54	60/60	49/52	212/214	55/58	60/60	54/56	216/218
		117A	7.8/10.4	21.7/25.0	62/66	70/70	59/63	220/223	66/70	70/80	63/67	224/227
		110A	12.0/16.0	33.4/38.5	76/83	80/90	72/78	231/237	80/87	80/90	77/82	235/241
		117A+117A	15.8/21.0	43.8/50.5	89/98	90/100	84/92	286/299	93/102	100/110	89/96	290/303
		110A+117A	19.9/26.5	55.2/63.8	104/114	110/125	97/107	308/326	107/118	110/125	102/112	312/330
	HIGH	NONE	—	—	41/40	50/50	41/40	230	44/44	60/60	45/44	234
		264A	4.9/6.5	13.6/15.6	58/59	60/60	56/58	244/246	61/63	70/70	61/62	248/250
		117A	7.8/10.4	21.7/25.0	68/71	80/80	66/69	252/255	72/75	80/80	70/73	256/259
		110A	12.0/16.0	33.4/38.5	82/88	90/90	79/84	263/269	86/92	90/100	84/88	267/273
		117A+117A	15.8/21.0	43.8/50.5	95/103	100/110	91/98	318/331	99/107	100/110	96/102	322/335
		110A+117A	19.9/26.5	55.2/63.8	110/120	110/125	104/113	340/358	113/123	125/125	109/118	344/362
460-3-60	STD	NONE	—	—	17	25	16	79	19	25	18	81
		265A	6.0	7.2	26	30	24	86	28	30	26	88
		266A	11.5	13.8	34	35	32	93	36	40	34	95
		267A	14.0	16.8	38	40	35	96	40	40	37	98
		268A	23.0	27.7	51	60	48	107	53	60	50	109
		269A	25.5	30.7	55	60	51	110	57	60	53	112
	MED	NONE	—	—	18	25	17	98	19	25	19	100
		265A	6.0	7.2	27	30	25	105	28	30	27	107
		266A	11.5	13.8	35	40	33	112	37	40	35	114
		267A	14.0	16.8	39	40	36	115	40	45	38	117
		268A	23.0	27.7	52	60	49	126	54	60	51	128
		269A	25.5	30.7	56	60	52	129	58	60	54	131
	HIGH	NONE	—	—	21	25	20	114	22	30	22	116
		265A	6.0	7.2	30	30	29	121	31	35	31	123
		266A	11.5	13.8	38	40	36	128	40	45	38	130
		267A	14.0	16.8	42	45	40	131	43	45	42	133
		268A	23.0	27.7	55	60	52	142	57	60	54	144
		269A	25.5	30.7	59	60	56	145	61	70	58	147
575-3-60	STD	NONE	—	—	13	20	12	66	17	20	16	70
		118A	18.0	17.3	35	35	32	83	38	40	36	87
		299A	28.0	26.9	47	50	43	93	50	50	47	97
	MED	NONE	—	—	14	20	13	81	18	25	18	85
		118A	18.0	17.3	36	40	33	98	40	40	38	102
		299A	28.0	26.9	48	50	44	108	52	60	49	112
	HIGH	NONE	—	—	17	20	17	95	21	25	21	99
		118A	18.0	17.3	39	40	37	112	42	45	41	116
		299A	28.0	26.9	51	60	48	122	54	60	52	126

See Legend and Notes on page 79.

→ 50HCQD07 UNIT WIRE/FUSE OR HACR BREAKER SIZING DATA
TWO STAGE COOLING WITH SINGLE SPEED INDOOR FAN MOTOR (cont)

NOM. V-Ph-Hz	IFM TYPE	ELEC. HTR			WITH PWRD C.O.							
					NO P.E.				WITH P.E. (pwrd fr/ unit)			
		CRHEATER ****00	Nom (kW)	FLA	MCA	MAX FUSE OR HACR	DISC. SIZE FLA	DISC. SIZE LRA	MCA	MAX FUSE OR HACR	DISC. SIZE FLA	DISC. SIZE LRA
208/230-3-60	STD	NONE	—	—	37	50	37	166	41	50	41	170
		264A	4.9/6.5	13.6/15.6	54/57	60/60	52/55	180/182	58/60	60/70	57/59	184/186
		117A	7.8/10.4	21.7/25.0	64/68	70/80	62/65	188/191	68/72	80/80	66/70	192/195
		110A	12.0/16.0	33.4/38.5	79/85	80/90	75/81	199/205	83/89	90/90	79/85	203/209
		117A+117A	15.8/21.0	43.8/50.5	92/100	100/100	87/95	254/267	96/104	100/110	91/99	258/271
		110A+117A	19.9/26.5	55.2/63.8	106/117	110/125	100/110	276/294	110/121	110/125	105/114	280/298
	MED	NONE	—	—	39	50	39	203	43	60	44	207
		264A	4.9/6.5	13.6/15.6	56/59	60/60	55/57	217/219	60/63	70/70	59/62	221/223
		117A	7.8/10.4	21.7/25.0	67/71	70/80	64/68	225/228	70/74	80/80	69/72	229/232
		110A	12.0/16.0	33.4/38.5	81/88	90/90	78/84	236/242	85/91	90/100	82/88	240/246
		117A+117A	15.8/21.0	43.8/50.5	94/103	100/110	90/97	291/304	98/106	100/110	94/102	295/308
		110A+117A	19.9/26.5	55.2/63.8	108/119	110/125	103/113	313/331	112/123	125/125	107/117	317/335
	HIGH	NONE	—	—	45/45	60/60	46/45	235	49/48	60/60	51/50	239
		264A	4.9/6.5	13.6/15.6	62/64	70/70	62/63	249/251	66/68	80/80	66/68	253/255
		117A	7.8/10.4	21.7/25.0	73/76	80/80	71/74	257/260	76/80	80/80	76/78	261/264
		110A	12.0/16.0	33.4/38.5	87/93	90/100	85/90	268/274	91/97	100/100	89/94	272/278
		117A+117A	15.8/21.0	43.8/50.5	100/108	100/110	97/103	323/336	104/112	110/125	101/108	327/340
		110A+117A	19.9/26.5	55.2/63.8	114/124	125/125	110/119	345/363	118/128	125/150	114/123	349/367
460-3-60	STD	NONE	—	—	19	25	19	81	21	30	21	83
		265A	6.0	7.2	28	30	27	88	30	30	29	90
		266A	11.5	13.8	36	40	34	95	38	40	36	97
		267A	14.0	16.8	40	45	38	98	42	45	40	100
		268A	23.0	27.7	54	60	50	109	55	60	52	111
		269A	25.5	30.7	57	60	54	112	59	60	56	114
	MED	NONE	—	—	20	25	19	100	22	30	22	102
		265A	6.0	7.2	29	30	28	107	31	35	30	109
		266A	11.5	13.8	37	40	35	114	39	40	37	116
		267A	14.0	16.8	41	45	39	117	43	45	41	119
		268A	23.0	27.7	54	60	51	128	56	60	53	130
		269A	25.5	30.7	58	60	55	131	60	60	57	133
	HIGH	NONE	—	—	23	30	23	116	25	30	25	118
		265A	6.0	7.2	32	35	31	123	34	40	33	125
		266A	11.5	13.8	40	45	39	130	42	45	41	132
		267A	14.0	16.8	44	45	42	133	46	50	44	135
		268A	23.0	27.7	57	60	55	144	59	60	57	146
		269A	25.5	30.7	61	70	58	147	63	70	60	149
575-3-60	STD	NONE	—	—	15	20	14	68	18	25	18	72
		118A	18.0	17.3	36	40	34	85	40	40	38	89
		299A	28.0	26.9	48	50	45	95	52	60	49	99
	MED	NONE	—	—	16	20	15	83	20	25	20	87
		118A	18.0	17.3	37	40	35	100	41	45	40	104
		299A	28.0	26.9	49	50	46	110	53	60	51	114
	HIGH	NONE	—	—	19	25	19	97	22	25	23	101
		118A	18.0	17.3	40	40	39	114	44	45	43	118
		299A	28.0	26.9	52	60	50	124	56	60	54	128

See Legend and Notes on page 79.

→ 50HCQD08 UNIT WIRE/FUSE OR HACR BREAKER SIZING DATA
TWO STAGE COOLING WITH SINGLE SPEED INDOOR FAN MOTOR

NOM. V-Ph-Hz	IFM TYPE	ELEC. HTR			NO C.O. or UNPWR C.O.							
					NO P.E.				WITH P.E. (pwrd fr/ unit)			
		CRHEATER ****00	Nom (kW)	FLA	MCA	MAX FUSE OR HACR	DISC. SIZE FLA	DISC. SIZE LRA	MCA	MAX FUSE OR HACR	DISC. SIZE FLA	DISC. SIZE LRA
208/230-3-60	STD	NONE	—	—	38	50	40	191	42	50	44	195
		117A	7.8/10.4	21.7/25.0	65/69	70/70	65/68	213/216	69/73	70/80	69/73	217/220
		110A	12.0/16.0	33.4/38.5	80/86	80/90	78/84	224/230	84/90	90/90	82/88	228/234
		111A	18.6/24.8	51.7/59.7	103/113	110/125	99/108	243/251	107/117	110/125	103/113	247/255
		112A	24.0/32.0	66.7/77.0	122/134	125/150	116/128	258/268	125/138	125/150	121/132	262/272
		112A+117A	31.8/42.4	88.4/102.0	149/166	150/175	141/157	368/395	152/169	175/175	146/161	372/399
	MED	NONE	—	—	40/40	50/50	42/41	229	44/43	50/50	46/46	233
		117A	7.8/10.4	21.7/25.0	67/71	70/80	66/70	251/254	71/75	80/80	71/74	255/258
		110A	12.0/16.0	33.4/38.5	82/88	90/90	80/86	262/268	85/92	90/100	84/90	266/272
		111A	18.6/24.8	51.7/59.7	104/114	110/125	101/110	281/289	108/118	110/125	105/114	285/293
		112A	24.0/32.0	66.7/77.0	123/136	125/150	118/130	296/306	127/140	150/150	123/134	300/310
		112A+117A	31.8/42.4	88.4/102.0	150/167	150/175	143/159	406/433	154/171	175/175	148/163	410/437
	HIGH	NONE	—	—	44	50	46	258	47	60	50	262
		117A	7.8/10.4	21.7/25.0	71/75	80/80	71/75	280/283	74/79	80/80	75/79	284/287
		110A	12.0/16.0	33.4/38.5	85/92	90/100	84/90	291/297	89/95	90/100	89/94	295/301
		111A	18.6/24.8	51.7/59.7	108/118	110/125	105/114	310/318	112/122	125/125	110/119	314/322
		112A	24.0/32.0	66.7/77.0	127/140	150/150	122/134	325/335	131/144	150/150	127/139	329/339
		112A+117A	31.8/42.4	88.4/102.0	154/171	175/175	147/163	435/462	158/175	175/175	152/167	439/466
460-3-60	STD	NONE	—	—	18	20	19	95	20	25	21	97
		116B	13.9	16.7	39	40	38	112	41	45	40	114
		113B	16.5	19.8	43	45	42	115	45	45	44	117
		114B	27.8	33.4	60	60	57	128	62	70	59	130
		115B	33.0	39.7	68	70	65	135	70	70	67	137
		128B	41.7	50.2	81	90	77	145	83	90	79	147
	MED	NONE	—	—	19	25	20	114	21	25	22	116
		116B	13.9	16.7	40	40	39	131	42	45	41	133
		113B	16.5	19.8	44	45	43	134	46	50	45	136
		114B	27.8	33.4	61	70	58	147	63	70	60	149
		115B	33.0	39.7	69	70	65	154	71	80	68	156
		128B	41.7	50.2	82	90	78	164	84	90	80	166
	HIGH	NONE	—	—	21	25	22	129	23	25	24	131
		116B	13.9	16.7	42	45	41	146	44	45	43	148
		113B	16.5	19.8	46	50	45	149	48	50	47	151
		114B	27.8	33.4	63	70	60	162	65	70	62	164
		115B	33.0	39.7	71	80	68	169	73	80	70	171
		128B	41.7	50.2	84	90	80	179	86	90	82	181
575-3-60	STD	NONE	—	—	13	15	13	77	17	20	18	81
		118A	18.0	17.3	35	35	33	94	39	40	38	98
		119A	36.0	34.6	56	60	53	112	60	60	58	116
	MED	NONE	—	—	14	15	14	81	17	20	18	85
		118A	18.0	17.3	35	35	34	98	39	40	38	102
		119A	36.0	34.6	57	60	54	116	61	70	58	120
	HIGH	NONE	—	—	14	20	15	92	18	20	19	96
		118A	18.0	17.3	36	40	35	109	40	40	39	113
		119A	36.0	34.6	58	60	55	127	61	70	59	131

See Legend and Notes on page 79.

→ 50HCQD08 UNIT WIRE/FUSE OR HACR BREAKER SIZING DATA
TWO STAGE COOLING WITH SINGLE SPEED INDOOR FAN MOTOR (cont)

NOM. V-Ph-Hz	IFM TYPE	ELEC. HTR			WITH PWRD C.O.							
					NO P.E.				WITH P.E. (pwrd fr/ unit)			
		CRHEATER ****00	Nom (kW)	FLA	MCA	MAX FUSE OR HACR	DISC. SIZE FLA	DISC. SIZE LRA	MCA	MAX FUSE OR HACR	DISC. SIZE FLA	DISC. SIZE LRA
208/230-3-60	STD	NONE	—	—	43	50	45	196	47	50	49	200
		117A	7.8/10.4	21.7/25.0	70/74	70/80	70/74	218/221	74/78	80/80	74/78	222/225
		110A	12.0/16.0	33.4/38.5	85/91	90/100	83/89	229/235	88/95	90/100	88/94	233/239
		111A	18.6/24.8	51.7/59.7	108/118	110/125	105/114	248/256	111/121	125/125	109/118	252/260
		112A	24.0/32.0	66.7/77.0	126/139	150/150	122/134	263/273	130/143	150/150	126/138	267/277
		112A+117A	31.8/42.4	88.4/102.0	153/170	175/175	147/162	373/400	157/174	175/175	151/167	377/404
	MED	NONE	—	—	45/44	50/50	47/47	234	48/48	60/60	51/51	238
		117A	7.8/10.4	21.7/25.0	72/76	80/80	72/76	256/259	76/79	80/80	76/80	260/263
		110A	12.0/16.0	33.4/38.5	86/93	90/100	85/91	267/273	90/96	90/100	90/95	271/277
		111A	18.6/24.8	51.7/59.7	109/119	110/125	106/115	286/294	113/123	125/125	111/120	290/298
		112A	24.0/32.0	66.7/77.0	128/141	150/150	124/135	301/311	132/144	150/150	128/140	305/315
		112A+117A	31.8/42.4	88.4/102.0	155/172	175/175	149/164	411/438	159/176	175/200	153/168	415/442
	HIGH	NONE	—	—	48	60	51	263	52	60	56	267
		117A	7.8/10.4	21.7/25.0	75/80	80/80	76/80	285/288	79/83	80/90	81/84	289/292
		110A	12.0/16.0	33.4/38.5	90/96	90/100	90/96	296/302	94/100	100/100	94/100	300/306
		111A	18.6/24.8	51.7/59.7	113/123	125/125	111/120	315/323	117/127	125/150	115/124	319/327
		112A	24.0/32.0	66.7/77.0	132/145	150/150	128/140	330/340	136/148	150/150	132/144	334/344
		112A+117A	31.8/42.4	88.4/102.0	159/176	175/200	153/169	440/467	163/180	175/200	157/173	444/471
460-3-60	STD	NONE	—	—	21	25	21	97	22	25	23	99
		116B	13.9	16.7	41	45	41	114	43	45	43	116
		113B	16.5	19.8	45	45	44	117	47	50	46	119
		114B	27.8	33.4	62	70	60	130	64	70	62	132
		115B	33.0	39.7	70	70	67	137	72	80	69	139
		128B	41.7	50.2	83	90	79	147	85	90	81	149
	MED	NONE	—	—	21	25	22	116	23	25	24	118
		116B	13.9	16.7	42	45	42	133	44	45	44	135
		113B	16.5	19.8	46	50	45	136	48	50	47	138
		114B	27.8	33.4	63	70	61	149	65	70	63	151
		115B	33.0	39.7	71	80	68	156	73	80	70	158
		128B	41.7	50.2	84	90	80	166	86	90	82	168
	HIGH	NONE	—	—	23	25	24	131	25	30	27	133
		116B	13.9	16.7	44	45	44	148	46	50	46	150
		113B	16.5	19.8	48	50	47	151	50	50	49	153
		114B	27.8	33.4	65	70	63	164	67	70	65	166
		115B	33.0	39.7	73	80	70	171	75	80	72	173
		128B	41.7	50.2	86	90	82	181	88	90	84	183
575-3-60	STD	NONE	—	—	15	20	15	79	19	20	20	83
		118A	18.0	17.3	36	40	35	96	40	40	40	100
		119A	36.0	34.6	58	60	55	114	62	70	59	118
	MED	NONE	—	—	15	20	16	83	19	20	20	87
		118A	18.0	17.3	37	40	36	100	41	45	40	104
		119A	36.0	34.6	59	60	56	118	62	70	60	122
	HIGH	NONE	—	—	16	20	17	94	20	25	21	98
		118A	18.0	17.3	38	40	37	111	41	45	41	115
		119A	36.0	34.6	59	60	56	129	63	70	61	133

See Legend and Notes on page 79.

→ 50HCQD09 UNIT WIRE/FUSE OR HACR BREAKER SIZING DATA
TWO STAGE COOLING WITH SINGLE SPEED INDOOR FAN MOTOR

NOM. V-Ph-Hz	IFM TYPE	ELEC. HTR			NO C.O. or UNPWR C.O.							
					NO P.E.				WITH P.E. (pwrd fr/ unit)			
		CRHEATER ****00	Nom (kW)	FLA	MCA	MAX FUSE OR HACR	DISC. SIZE FLA	DISC. SIZE LRA	MCA	MAX FUSE OR HACR	DISC. SIZE FLA	DISC. SIZE LRA
208/230-3-60	STD	NONE	—	—	46	60	47	236	49	60	52	240
		117A	7.8/10.4	21.7/25.0	73/77	80/80	72/76	258/261	76/81	80/90	77/80	262/265
		110A	12.0/16.0	33.4/38.5	87/94	90/100	86/92	269/275	91/97	100/100	90/96	273/279
		111A	18.6/24.8	51.7/59.7	110/120	110/125	107/116	288/296	114/124	125/125	111/120	292/300
		112A	24.0/32.0	66.7/77.0	129/142	150/150	124/136	303/313	133/146	150/150	128/140	307/317
		112A+117A	31.8/42.4	88.4/102.0	156/173	175/175	149/165	413/440	160/177	175/200	153/169	417/444
	MED	NONE	—	—	49/49	60/60	51/51	278	53/52	60/60	55/55	282
		117A	7.8/10.4	21.7/25.0	76/80	80/80	76/80	300/303	80/84	80/90	80/84	304/307
		110A	12.0/16.0	33.4/38.5	91/97	100/100	89/95	311/317	94/101	100/110	94/99	315/321
		111A	18.6/24.8	51.7/59.7	113/123	125/125	110/119	330/338	117/127	125/150	115/124	334/342
		112A	24.0/32.0	66.7/77.0	132/145	150/150	128/139	345/355	136/149	150/150	132/144	349/359
		112A+117A	31.8/42.4	88.4/102.0	159/176	175/200	153/168	455/482	163/180	175/200	157/173	459/486
	HIGH	NONE	—	—	51	60	53	292	55	60	58	296
		117A	7.8/10.4	21.7/25.0	78/82	80/90	78/82	314/317	82/86	90/90	83/87	318/321
		110A	12.0/16.0	33.4/38.5	93/99	100/100	92/98	325/331	97/103	100/110	96/102	329/335
		111A	18.6/24.8	51.7/59.7	116/126	125/150	113/122	344/352	119/129	125/150	117/127	348/356
		112A	24.0/32.0	66.7/77.0	134/147	150/150	130/142	359/369	138/151	150/175	135/146	363/373
		112A+117A	31.8/42.4	88.4/102.0	161/178	175/200	155/171	469/496	165/182	175/200	160/175	473/500
460-3-60	STD	NONE	—	—	21	25	22	118	23	25	24	120
		116B	13.9	16.7	42	45	41	135	44	45	43	137
		113B	16.5	19.8	46	50	45	138	48	50	47	140
		114B	27.8	33.4	63	70	60	151	65	70	62	153
		115B	33.0	39.7	71	80	67	158	73	80	69	160
		128B	41.7	50.2	84	90	79	168	86	90	82	170
	MED	NONE	—	—	23	25	24	139	25	30	26	141
		116B	13.9	16.7	44	45	43	156	45	45	45	158
		113B	16.5	19.8	47	50	46	159	49	50	48	161
		114B	27.8	33.4	64	70	62	172	66	70	64	174
		115B	33.0	39.7	72	80	69	179	74	80	71	181
		128B	41.7	50.2	85	90	81	189	87	90	83	191
	HIGH	NONE	—	—	24	30	25	146	26	30	27	148
		116B	13.9	16.7	45	45	44	163	46	50	46	165
		113B	16.5	19.8	49	50	48	166	50	50	50	168
		114B	27.8	33.4	66	70	63	179	67	70	65	181
		115B	33.0	39.7	73	80	70	186	75	80	73	188
		128B	41.7	50.2	87	90	83	196	88	90	85	198
575-3-60	STD	NONE	—	—	17	20	17	97	21	25	22	101
		118A	18.0	17.3	38	40	37	114	42	45	41	118
		119A	36.0	34.6	60	60	57	132	64	70	61	136
	MED	NONE	—	—	18	20	18	108	21	25	22	112
		118A	18.0	17.3	39	40	38	125	43	45	42	129
		119A	36.0	34.6	61	70	58	143	65	70	62	147
	HIGH	NONE	—	—	18	20	18	108	21	25	22	112
		118A	18.0	17.3	39	40	38	125	43	45	42	129
		119A	36.0	34.6	61	70	58	143	65	70	62	147

See Legend and Notes on page 79.

→ 50HCQD09 UNIT WIRE/FUSE OR HACR BREAKER SIZING DATA
TWO STAGE COOLING WITH SINGLE SPEED INDOOR FAN MOTOR (cont)

NOM. V-Ph-Hz	IFM TYPE	ELEC. HTR			WITH PWRD C.O.							
					NO P.E.				WITH P.E. (pwrd fr/ unit)			
		CRHEATER ****00	Nom (kW)	FLA	MCA	MAX FUSE OR HACR	DISC. SIZE FLA	DISC. SIZE LRA	MCA	MAX FUSE OR HACR	DISC. SIZE FLA	DISC. SIZE LRA
208/230-3-60	STD	NONE	—	—	50	60	53	241	54	60	57	245
		117A	7.8/10.4	21.7/25.0	77/82	80/90	78/82	263/266	81/85	90/90	82/86	267/270
		110A	12.0/16.0	33.4/38.5	92/98	100/100	91/97	274/280	96/102	100/110	96/101	278/284
		111A	18.6/24.8	51.7/59.7	115/125	125/125	112/121	293/301	119/129	125/150	117/126	297/305
		112A	24.0/32.0	66.7/77.0	134/147	150/150	129/141	308/318	138/150	150/150	134/146	312/322
		112A+117A	31.8/42.4	88.4/102.0	161/178	175/200	154/170	418/445	165/182	175/200	159/174	422/449
	MED	NONE	—	—	54/53	60/60	56/56	283	57/57	70/70	61/61	287
		117A	7.8/10.4	21.7/25.0	81/85	90/90	81/85	305/308	84/89	90/90	86/89	309/312
		110A	12.0/16.0	33.4/38.5	95/102	100/110	95/101	316/322	99/105	100/110	99/105	320/326
		111A	18.6/24.8	51.7/59.7	118/128	125/150	116/125	335/343	122/132	125/150	120/129	339/347
		112A	24.0/32.0	66.7/77.0	137/150	150/150	133/145	350/360	141/154	150/175	138/149	354/364
		112A+117A	31.8/42.4	88.4/102.0	164/181	175/200	158/174	460/487	168/185	175/200	162/178	464/491
	HIGH	NONE	—	—	56	60	59	297	60	70	63	301
		117A	7.8/10.4	21.7/25.0	83/87	90/90	84/88	319/322	87/91	90/100	88/92	323/326
		110A	12.0/16.0	33.4/38.5	98/104	100/110	97/103	330/336	101/108	110/110	102/108	334/340
		111A	18.6/24.8	51.7/59.7	120/130	125/150	118/128	349/357	124/134	125/150	123/132	353/361
		112A	24.0/32.0	66.7/77.0	139/152	150/175	136/148	364/374	143/156	150/175	140/152	368/378
		112A+117A	31.8/42.4	88.4/102.0	166/183	175/200	161/176	474/501	170/187	175/200	165/181	478/505
460-3-60	STD	NONE	—	—	23	25	24	120	25	30	26	122
		116B	13.9	16.7	44	45	43	137	46	50	46	139
		113B	16.5	19.8	48	50	47	140	50	50	49	142
		114B	27.8	33.4	65	70	63	153	67	70	65	155
		115B	33.0	39.7	73	80	70	160	75	80	72	162
		128B	41.7	50.2	86	90	82	170	88	90	84	172
	MED	NONE	—	—	25	30	26	141	27	30	28	143
		116B	13.9	16.7	46	50	45	158	48	50	47	160
		113B	16.5	19.8	50	50	49	161	51	60	51	163
		114B	27.8	33.4	67	70	65	174	68	70	67	176
		115B	33.0	39.7	75	80	72	181	76	80	74	183
		128B	41.7	50.2	88	90	84	191	89	90	86	193
	HIGH	NONE	—	—	26	30	27	148	28	30	29	150
		116B	13.9	16.7	47	50	47	165	49	50	49	167
		113B	16.5	19.8	51	60	50	168	53	60	52	170
		114B	27.8	33.4	68	70	66	181	70	70	68	183
		115B	33.0	39.7	76	80	73	188	77	80	75	190
		128B	41.7	50.2	89	90	85	198	91	100	87	200
575-3-60	STD	NONE	—	—	18	20	19	99	22	25	23	103
		118A	18.0	17.3	40	40	39	116	44	45	43	120
		119A	36.0	34.6	62	70	59	134	66	70	63	138
	MED	NONE	—	—	19	25	20	110	23	25	24	114
		118A	18.0	17.3	41	45	40	127	45	45	44	131
		119A	36.0	34.6	63	70	60	145	66	70	64	149
	HIGH	NONE	—	—	19	25	20	110	23	25	24	114
		118A	18.0	17.3	41	45	40	127	45	45	44	131
		119A	36.0	34.6	63	70	60	145	66	70	64	149

See Legend and Notes on page 79.

→ 50HCQD12 UNIT WIRE/FUSE OR HACR BREAKER SIZING DATA
TWO STAGE COOLING WITH SINGLE SPEED INDOOR FAN MOTOR

NOM. V-Ph-Hz	IFM TYPE	ELEC. HTR			NO C.O. or UNPWR C.O.							
					NO P.E.				WITH P.E. (pwrd fr/ unit)			
		CRHEATER ****00	Nom (kW)	FLA	MCA	MAX FUSE OR HACR	DISC. SIZE FLA	DISC. SIZE LRA	MCA	MAX FUSE OR HACR BRKR	DISC. SIZE FLA	DISC. SIZE LRA
208/230-3-60	STD	NONE	—	—	46	60	47	262	49	60	52	266
		288A	7.5/10.0	20.9/24.1	72/76	80/80	71/75	283/286	76/80	80/80	76/79	287/290
		291A	12.4/16.5	34.4/39.7	89/95	90/100	87/93	296/302	92/99	100/100	91/97	300/306
		294A	25.2/33.5	69.9/80.6	133/146	150/150	128/140	332/343	137/150	150/150	132/144	336/347
		288A+294A	32.7/43.5	90.7/104.7	159/177	175/200	152/168	443/471	163/180	175/200	156/172	447/475
		291A+294A	37.6/50.0	104.3/120.3	176/166	200/175	167/186	471/503	180/170	200/175	172/190	475/507
	MED	NONE	—	—	49/49	60/60	51/51	304	53/53	60/60	55/55	308
		288A	7.5/10.0	20.9/24.1	75/79	80/80	75/79	325/328	79/83	80/90	79/83	329/332
		291A	12.4/16.5	34.4/39.7	92/98	100/100	91/97	338/344	96/102	100/110	95/101	342/348
		294A	25.2/33.5	69.9/80.6	136/149	150/150	131/144	374/385	140/153	150/175	136/148	378/389
		288A+294A	32.7/43.5	90.7/104.7	162/180	175/200	155/171	485/513	166/183	175/200	160/176	489/517
		291A+294A	37.6/50.0	104.3/120.3	179/169	200/175	171/189	513/545	183/173	200/200	175/194	517/549
	HIGH	NONE	—	—	62	80	65	324	66	80	69	328
		288A	7.5/10.0	20.9/24.1	88/92	100/100	89/93	345/348	92/96	100/100	93/97	349/352
		291A	12.4/16.5	34.4/39.7	105/112	110/125	104/111	358/364	109/115	110/125	109/115	362/368
		294A	25.2/33.5	69.9/80.6	149/163	150/175	145/158	394/405	153/167	175/175	150/162	398/409
		288A+294A	32.7/43.5	90.7/104.7	175/193	175/200	169/185	505/533	179/197	200/200	174/190	509/537
		291A+294A	37.6/50.0	104.3/120.3	192/182	200/200	185/203	533/565	196/186	200/200	189/208	537/569
460-3-60	STD	NONE	—	—	23	30	23	125	25	30	26	127
		289A	10.0	12.0	38	40	37	137	40	40	39	139
		292A	16.5	19.9	48	50	46	145	49	50	48	147
		295A	33.5	40.3	73	80	70	165	75	80	72	167
		289A+295A	43.5	52.3	88	90	84	230	90	90	86	232
		292A+295A	50.0	60.2	83	90	93	245	85	90	95	247
	MED	NONE	—	—	24	30	25	146	26	30	27	148
		289A	10.0	12.0	39	40	39	158	41	45	41	160
		292A	16.5	19.9	49	50	48	166	51	60	50	168
		295A	33.5	40.3	75	80	72	186	77	80	74	188
		289A+295A	43.5	52.3	90	90	85	251	92	100	88	253
		292A+295A	50.0	60.2	85	90	95	266	86	90	97	268
	HIGH	NONE	—	—	31	40	32	156	33	40	34	158
		289A	10.0	12.0	46	50	46	168	48	50	48	170
		292A	16.5	19.9	56	60	55	176	58	60	57	178
		295A	33.5	40.3	81	90	79	196	83	90	81	198
		289A+295A	43.5	52.3	96	100	92	261	98	100	94	263
		292A+295A	50.0	60.2	91	100	101	276	93	100	104	278
575-3-60	STD	NONE	—	—	18	20	18	95	21	25	22	99
		290A	10.0	9.6	30	30	29	105	33	35	33	109
		293A	16.5	15.9	37	40	36	111	41	45	41	115
		296A	33.5	32.2	58	60	55	127	62	70	59	131
		290A+296A	43.5	41.9	70	70	66	179	74	80	70	183
		293A+296A	50.0	48.1	66	70	73	191	69	80	78	195
	MED	NONE	—	—	18	20	19	106	22	25	23	110
		290A	10.0	9.6	30	30	30	116	34	35	34	120
		293A	16.5	15.9	38	40	37	122	42	45	42	126
		296A	33.5	32.2	59	60	56	138	62	70	60	142
		290A+296A	43.5	41.9	71	80	67	190	74	80	71	194
		293A+296A	50.0	48.1	66	70	74	202	70	80	79	206
	HIGH	NONE	—	—	25	30	26	118	29	35	30	122
		290A	10.0	9.6	37	40	37	128	41	45	41	132
		293A	16.5	15.9	45	45	44	134	49	50	49	138
		296A	33.5	32.2	66	70	63	150	69	70	67	154
		290A+296A	43.5	41.9	78	80	74	202	81	90	79	206
		293A+296A	50.0	48.1	73	80	81	214	77	80	86	218

See Legend and Notes on page 79.

→ 50HCQD12 UNIT WIRE/FUSE OR HACR BREAKER SIZING DATA
TWO STAGE COOLING WITH SINGLE SPEED INDOOR FAN MOTOR (cont)

NOM. V-Ph-Hz	IFM TYPE	ELEC. HTR			WITH PWRD C.O.							
					NO P.E.				WITH P.E. (pwrd fr/ unit)			
		CRHEATER ****00	Nom (kW)	FLA	MCA	MAX FUSE OR HACR	DISC. SIZE FLA	DISC. SIZE LRA	MCA	MAX FUSE OR HACR BRKR	DISC. SIZE FLA	DISC. SIZE LRA
208/230-3-60	STD	NONE	—	—	50	60	53	267	54	60	57	271
		288A	7.5/10.0	20.9/24.1	77/81	80/90	77/81	288/291	80/84	80/90	81/85	292/295
		291A	12.4/16.5	34.4/39.7	93/100	100/100	92/99	301/307	97/104	100/110	97/103	305/311
		294A	25.2/33.5	69.9/80.6	138/151	150/175	133/146	337/348	142/155	150/175	138/150	341/352
		288A+294A	32.7/43.5	90.7/104.7	164/181	175/200	157/173	448/476	168/185	175/200	162/178	452/480
		291A+294A	37.6/50.0	104.3/120.3	181/171	200/175	173/191	476/508	185/175	200/200	177/196	480/512
	MED	NONE	—	—	54/54	60/60	57/56	309	57/57	70/70	61/61	313
		288A	7.5/10.0	20.9/24.1	80/84	80/90	81/84	330/333	84/87	90/90	85/89	334/337
		291A	12.4/16.5	34.4/39.7	97/103	100/110	96/102	343/349	100/107	100/110	101/106	347/353
		294A	25.2/33.5	69.9/80.6	141/154	150/175	137/149	379/390	145/158	150/175	141/154	383/394
		288A+294A	32.7/43.5	90.7/104.7	167/184	175/200	161/177	490/518	171/188	175/200	165/181	494/522
		291A+294A	37.6/50.0	104.3/120.3	184/174	200/200	177/195	518/550	188/178	200/200	181/199	522/554
	HIGH	NONE	—	—	67	80	70	329	71	80	75	333
		288A	7.5/10.0	20.9/24.1	93/97	100/100	94/98	350/353	97/101	100/110	99/102	354/357
		291A	12.4/16.5	34.4/39.7	110/116	110/125	110/116	363/369	114/120	125/125	114/120	367/373
		294A	25.2/33.5	69.9/80.6	154/168	175/175	151/163	399/410	158/171	175/175	155/167	403/414
		288A+294A	32.7/43.5	90.7/104.7	180/198	200/200	175/191	510/538	184/201	200/225	179/195	514/542
		291A+294A	37.6/50.0	104.3/120.3	197/187	200/200	190/209	538/570	201/191	225/200	195/213	542/574
460-3-60	STD	NONE	—	—	25	30	26	127	27	30	28	129
		289A	10.0	12.0	40	40	40	139	42	45	42	141
		292A	16.5	19.9	50	50	49	147	52	60	51	149
		295A	33.5	40.3	75	80	72	167	77	80	74	169
		289A+295A	43.5	52.3	90	90	86	232	92	100	88	234
		292A+295A	50.0	60.2	85	90	95	247	87	90	97	249
	MED	NONE	—	—	27	30	28	148	28	30	30	150
		289A	10.0	12.0	42	45	42	160	43	45	44	162
		292A	16.5	19.9	51	60	51	168	53	60	53	170
		295A	33.5	40.3	77	80	74	188	79	80	76	190
		289A+295A	43.5	52.3	92	100	88	253	94	100	90	255
		292A+295A	50.0	60.2	87	90	97	268	89	100	99	270
	HIGH	NONE	—	—	33	40	35	158	35	40	37	160
		289A	10.0	12.0	48	50	49	170	50	50	51	172
		292A	16.5	19.9	58	60	58	178	60	60	60	180
		295A	33.5	40.3	84	90	81	198	85	90	83	200
		289A+295A	43.5	52.3	99	100	95	263	100	100	97	265
		292A+295A	50.0	60.2	93	100	104	278	95	100	106	280
575-3-60	STD	NONE	—	—	19	25	20	97	23	25	24	101
		290A	10.0	9.6	31	35	31	107	35	35	35	111
		293A	16.5	15.9	39	40	38	113	43	45	43	117
		296A	33.5	32.2	59	60	57	129	63	70	61	133
		290A+296A	43.5	41.9	72	80	68	181	75	80	72	185
		293A+296A	50.0	48.1	67	70	75	193	71	80	80	197
	MED	NONE	—	—	20	25	21	108	24	25	25	112
		290A	10.0	9.6	32	35	32	118	36	40	36	122
		293A	16.5	15.9	40	40	39	124	44	45	43	128
		296A	33.5	32.2	60	60	58	140	64	70	62	144
		290A+296A	43.5	41.9	72	80	69	192	76	80	73	196
		293A+296A	50.0	48.1	68	70	76	204	72	80	81	208
	HIGH	NONE	—	—	27	30	28	120	31	35	32	124
		290A	10.0	9.6	39	45	39	130	43	45	43	134
		293A	16.5	15.9	47	50	46	136	51	60	51	140
		296A	33.5	32.2	67	70	65	152	71	80	69	156
		290A+296A	43.5	41.9	79	80	76	204	83	90	81	208
		293A+296A	50.0	48.1	75	80	83	216	79	90	88	220

See Legend and Notes on page 79.

→ 50HCQD07 UNIT WIRE/FUSE OR HACR BREAKER SIZING DATA
TWO STAGE COOLING WITH TWO SPEED INDOOR FAN MOTOR

NOM. V-Ph-Hz	IFM TYPE	ELEC. HTR			NO C.O. or UNPWR C.O.							
					NO P.E.				WITH P.E. (pwrd fr/ unit)			
		CRHEATER ****00	Nom (kW)	FLA	MCA	MAX FUSE OR HACR	DISC. SIZE FLA	DISC. SIZE LRA	MCA	MAX FUSE OR HACR	DISC. SIZE FLA	DISC. SIZE LRA
208/230-3-60	STD	NONE	—	—	33/33	50/50	32/32	165	37/36	50/50	36/36	169
		264A	4.9/6.5	13.6/15.6	50/52	60/60	47/50	179/181	54/56	60/60	52/54	183/185
		117A	7.8/10.4	21.7/25.0	60/64	60/70	57/60	187/190	64/68	70/70	61/65	191/194
		110A	12.0/16.0	33.4/38.5	75/81	80/90	70/76	198/204	78/85	80/90	75/80	202/208
		117A+117A	15.8/21.0	43.8/50.5	88/96	90/100	82/90	253/266	91/100	100/100	87/94	257/270
		110A+117A	19.9/26.5	55.2/63.8	102/112	110/125	95/105	275/293	106/116	110/125	100/109	279/297
	MED	NONE	—	—	36/35	50/50	35/34	195	39/39	50/50	39/39	199
		264A	4.9/6.5	13.6/15.6	53/54	60/60	51/52	209/211	56/58	60/60	55/56	213/215
		117A	7.8/10.4	21.7/25.0	63/66	70/70	60/63	217/220	67/70	70/80	64/67	221/224
		110A	12.0/16.0	33.4/38.5	77/83	80/90	73/78	228/234	81/87	90/90	78/83	232/238
		117A+117A	15.8/21.0	43.8/50.5	90/98	90/100	85/92	283/296	94/102	100/110	90/97	287/300
		110A+117A	19.9/26.5	55.2/63.8	105/115	110/125	99/108	305/323	108/118	110/125	103/112	309/327
	HIGH	NONE	—	—	41/40	50/50	41/40	230	44/44	60/60	45/44	234
		264A	4.9/6.5	13.6/15.6	58/59	60/60	56/58	244/246	61/63	70/70	61/62	248/250
		117A	7.8/10.4	21.7/25.0	68/71	80/80	66/69	252/255	72/75	80/80	70/73	256/259
		110A	12.0/16.0	33.4/38.5	82/88	90/90	79/84	263/269	86/92	90/100	84/88	267/273
		117A+117A	15.8/21.0	43.8/50.5	95/103	100/110	91/98	318/331	99/107	100/110	96/102	322/335
		110A+117A	19.9/26.5	55.2/63.8	110/120	110/125	104/113	340/358	113/123	125/125	109/118	344/362
460-3-60	STD	NONE	—	—	17	25	16	81	19	25	18	83
		265A	6.0	7.2	26	30	25	88	28	30	27	90
		266A	11.5	13.8	34	40	32	95	36	40	34	97
		267A	14.0	16.8	38	40	36	98	40	40	38	100
		268A	23.0	27.7	52	60	48	109	54	60	50	111
		269A	25.5	30.7	55	60	52	112	57	60	54	114
	MED	NONE	—	—	18	25	17	97	20	25	19	99
		265A	6.0	7.2	27	30	26	104	29	30	28	106
		266A	11.5	13.8	35	40	33	111	37	40	35	113
		267A	14.0	16.8	39	40	37	114	41	45	39	116
		268A	23.0	27.7	53	60	49	125	54	60	51	127
		269A	25.5	30.7	56	60	53	128	58	60	55	130
	HIGH	NONE	—	—	21	25	20	114	22	30	22	116
		265A	6.0	7.2	30	30	29	121	31	35	31	123
		266A	11.5	13.8	38	40	36	128	40	45	38	130
		267A	14.0	16.8	42	45	40	131	43	45	42	133
		268A	23.0	27.7	55	60	52	142	57	60	54	144
		269A	25.5	30.7	59	60	56	145	61	70	58	147
575-3-60	STD	NONE	—	—	14	20	13	68	18	25	18	72
		118A	18.0	17.3	36	40	33	85	40	40	38	89
		299A	28.0	26.9	48	50	44	95	52	60	49	99
	MED	NONE	—	—	16	20	15	81	20	25	20	85
		118A	18.0	17.3	37	40	35	98	41	45	40	102
		299A	28.0	26.9	49	50	46	108	53	60	51	112
	HIGH	NONE	—	—	17	20	17	95	21	25	22	99
		118A	18.0	17.3	39	40	37	112	43	45	42	116
		299A	28.0	26.9	51	60	48	122	55	60	53	126

See Legend and Notes on page 79.

→ 50HCQD07 UNIT WIRE/FUSE OR HACR BREAKER SIZING DATA
TWO STAGE COOLING WITH TWO SPEED INDOOR FAN MOTOR (cont)

NOM. V-Ph-Hz	IFM TYPE	ELEC. HTR			WITH PWRD C.O.							
					NO P.E.				WITH P.E. (pwrd fr/ unit)			
		CRHEATER ****00	Nom (kW)	FLA	MCA	MAX FUSE OR HACR	DISC. SIZE FLA	DISC. SIZE LRA	MCA	MAX FUSE OR HACR	DISC. SIZE FLA	DISC. SIZE LRA
208/230-3-60	STD	NONE	—	—	38/37	50/50	37/37	170	41/41	50/50	42/42	174
		264A	4.9/6.5	13.6/15.6	55/57	60/60	53/55	184/186	58/61	60/70	57/59	188/190
		117A	7.8/10.4	21.7/25.0	65/69	70/80	62/66	192/195	69/73	80/80	67/70	196/199
		110A	12.0/16.0	33.4/38.5	79/86	80/90	76/81	203/209	83/89	90/90	80/86	207/213
		117A+117A	15.8/21.0	43.8/50.5	92/101	100/110	88/95	258/271	96/104	100/110	92/100	262/275
		110A+117A	19.9/26.5	55.2/63.8	107/117	110/125	101/111	280/298	110/121	125/125	105/115	284/302
	MED	NONE	—	—	40/40	50/50	41/40	200	44/43	60/60	45/44	204
		264A	4.9/6.5	13.6/15.6	57/59	60/60	56/58	214/216	61/63	70/70	61/62	218/220
		117A	7.8/10.4	21.7/25.0	68/71	80/80	66/68	222/225	71/75	80/80	70/73	226/229
		110A	12.0/16.0	33.4/38.5	82/88	90/90	79/84	233/239	86/92	90/100	83/88	237/243
		117A+117A	15.8/21.0	43.8/50.5	95/103	100/110	91/98	288/301	99/107	100/110	95/102	292/305
		110A+117A	19.9/26.5	55.2/63.8	109/119	110/125	104/113	310/328	113/123	125/125	108/117	314/332
	HIGH	NONE	—	—	45/45	60/60	46/45	235	49/48	60/60	51/50	239
		264A	4.9/6.5	13.6/15.6	62/64	70/70	62/63	249/251	66/68	80/80	66/68	253/255
		117A	7.8/10.4	21.7/25.0	73/76	80/80	71/74	257/260	76/80	80/80	76/78	261/264
		110A	12.0/16.0	33.4/38.5	87/93	90/100	85/90	268/274	91/97	100/100	89/94	272/278
		117A+117A	15.8/21.0	43.8/50.5	100/108	100/110	97/103	323/336	104/112	110/125	101/108	327/340
		110A+117A	19.9/26.5	55.2/63.8	114/124	125/125	110/119	345/363	118/128	125/150	114/123	349/367
460-3-60	STD	NONE	—	—	19	25	19	83	21	30	21	85
		265A	6.0	7.2	28	30	27	90	30	35	29	92
		266A	11.5	13.8	37	40	35	97	38	40	37	99
		267A	14.0	16.8	40	45	38	100	42	45	40	102
		268A	23.0	27.7	54	60	51	111	56	60	53	113
		269A	25.5	30.7	58	60	54	114	59	60	56	116
	MED	NONE	—	—	20	25	20	99	22	30	22	101
		265A	6.0	7.2	29	30	28	106	31	35	30	108
		266A	11.5	13.8	37	40	36	113	39	45	38	115
		267A	14.0	16.8	41	45	39	116	43	45	41	118
		268A	23.0	27.7	55	60	52	127	57	60	54	129
		269A	25.5	30.7	59	60	55	130	60	60	57	132
	HIGH	NONE	—	—	23	30	23	116	25	30	25	118
		265A	6.0	7.2	32	35	31	123	34	40	33	125
		266A	11.5	13.8	40	45	39	130	42	45	41	132
		267A	14.0	16.8	44	45	42	133	46	50	44	135
		268A	23.0	27.7	57	60	55	144	59	60	57	146
		269A	25.5	30.7	61	70	58	147	63	70	60	149
575-3-60	STD	NONE	—	—	16	20	15	70	20	25	20	74
		118A	18.0	17.3	37	40	35	87	41	45	40	91
		299A	28.0	26.9	49	50	46	97	53	60	51	101
	MED	NONE	—	—	17	20	17	83	21	25	22	87
		118A	18.0	17.3	39	40	37	100	43	45	42	104
		299A	28.0	26.9	51	60	48	110	55	60	53	114
	HIGH	NONE	—	—	19	25	19	97	23	30	24	101
		118A	18.0	17.3	41	45	39	114	45	45	44	118
		299A	28.0	26.9	53	60	50	124	57	60	55	128

See Legend and Notes on page 79.

→ **50HCQD08 UNIT WIRE/FUSE OR HACR BREAKER SIZING DATA**
TWO STAGE COOLING WITH TWO SPEED INDOOR FAN MOTOR

NOM. V-Ph-Hz	IFM TYPE	ELEC. HTR			NO C.O. or UNPWR C.O.							
					NO P.E.				WITH P.E. (pwrd fr/ unit)			
		CRHEATER ****00	Nom (kW)	FLA	MCA	MAX FUSE OR HACR	DISC. SIZE FLA	DISC. SIZE LRA	MCA	MAX FUSE OR HACR	DISC. SIZE FLA	DISC. SIZE LRA
208/230-3-60	STD	NONE	—	—	39/39	50/50	40/40	195	43/42	50/50	45/44	199
		117A	7.8/10.4	21.7/25.0	66/70	70/70	65/69	217/220	70/74	70/80	70/73	221/224
		110A	12.0/16.0	33.4/38.5	80/87	90/90	79/84	228/234	84/90	90/90	83/89	232/238
		111A	18.6/24.8	51.7/59.7	103/113	110/125	100/109	247/255	107/117	110/125	104/113	251/259
		112A	24.0/32.0	66.7/77.0	122/135	125/150	117/129	262/272	126/139	150/150	121/133	266/276
		112A+117A	31.8/42.4	88.4/102.0	149/166	150/175	142/157	372/399	153/170	175/175	146/162	376/403
	MED	NONE	—	—	40/40	50/50	42/41	199	44/44	50/50	46/46	203
		117A	7.8/10.4	21.7/25.0	67/71	70/80	67/70	221/224	71/75	80/80	71/75	225/228
		110A	12.0/16.0	33.4/38.5	82/88	90/90	80/86	232/238	86/92	90/100	85/90	236/242
		111A	18.6/24.8	51.7/59.7	105/114	110/125	101/110	251/259	108/118	110/125	106/114	255/263
		112A	24.0/32.0	66.7/77.0	123/136	125/150	118/130	266/276	127/140	150/150	123/134	270/280
		112A+117A	31.8/42.4	88.4/102.0	151/167	175/175	143/159	376/403	154/171	175/175	148/163	380/407
	HIGH	NONE	—	—	44/43	50/50	46/45	249	48/47	60/50	50/49	253
		117A	7.8/10.4	21.7/25.0	71/74	80/80	71/74	271/274	75/78	80/80	75/78	275/278
		110A	12.0/16.0	33.4/38.5	85/91	90/100	84/89	282/288	89/95	90/100	89/93	286/292
		111A	18.6/24.8	51.7/59.7	108/117	110/125	105/114	301/309	112/121	125/125	110/118	305/313
		112A	24.0/32.0	66.7/77.0	127/139	150/150	123/133	316/326	131/143	150/150	127/138	320/330
		112A+117A	31.8/42.4	88.4/102.0	154/170	175/175	148/162	426/453	158/174	175/175	152/167	430/457
460-3-60	STD	NONE	—	—	19	20	19	97	20	25	21	99
		116B	13.9	16.7	40	40	38	114	41	45	40	116
		113B	16.5	19.8	43	45	42	117	45	45	44	119
		114B	27.8	33.4	60	60	58	130	62	70	60	132
		115B	33.0	39.7	68	70	65	137	70	70	67	139
		128B	41.7	50.2	81	90	77	147	83	90	79	149
	MED	NONE	—	—	19	25	20	100	21	25	22	102
		116B	13.9	16.7	40	40	39	117	42	45	41	119
		113B	16.5	19.8	44	45	43	120	46	50	45	122
		114B	27.8	33.4	61	70	58	133	63	70	60	135
		115B	33.0	39.7	69	70	65	140	71	80	68	142
		128B	41.7	50.2	82	90	78	150	84	90	80	152
	HIGH	NONE	—	—	21	25	22	125	22	25	24	127
		116B	13.9	16.7	42	45	41	142	43	45	43	144
		113B	16.5	19.8	45	45	44	145	47	50	46	147
		114B	27.8	33.4	62	70	60	158	64	70	62	160
		115B	33.0	39.7	70	70	67	165	72	80	69	167
		128B	41.7	50.2	83	90	79	175	85	90	81	177
575-3-60	STD	NONE	—	—	14	20	15	79	18	20	19	83
		118A	18.0	17.3	36	40	35	96	40	40	39	100
		119A	36.0	34.6	58	60	55	114	61	70	59	118
	MED	NONE	—	—	15	20	16	83	19	20	20	87
		118A	18.0	17.3	37	40	35	100	40	45	40	104
		119A	36.0	34.6	58	60	55	118	62	70	60	122
	HIGH	NONE	—	—	16	20	17	92	20	25	21	96
		118A	18.0	17.3	38	40	37	109	42	45	41	113
		119A	36.0	34.6	59	60	56	127	63	70	61	131

See Legend and Notes on page 79.

→ 50HCQD08 UNIT WIRE/FUSE OR HACR BREAKER SIZING DATA
TWO STAGE COOLING WITH TWO SPEED INDOOR FAN MOTOR (cont)

NOM. V-Ph-Hz	IFM TYPE	ELEC. HTR			WITH PWRD C.O.							
					NO P.E.				WITH P.E. (pwrd fr/ unit)			
		CRHEATER ****00	Nom (kW)	FLA	MCA	MAX FUSE OR HACR	DISC. SIZE FLA	DISC. SIZE LRA	MCA	MAX FUSE OR HACR	DISC. SIZE FLA	DISC. SIZE LRA
208/230-3-60	STD	NONE	—	—	44/43	50/50	46/46	200	47/47	60/50	50/50	204
		117A	7.8/10.4	21.7/25.0	71/75	80/80	71/74	222/225	74/78	80/80	75/79	226/229
		110A	12.0/16.0	33.4/38.5	85/91	90/100	84/90	233/239	89/95	90/100	89/94	237/243
		111A	18.6/24.8	51.7/59.7	108/118	110/125	105/114	252/260	112/122	125/125	110/119	256/264
		112A	24.0/32.0	66.7/77.0	127/140	150/150	122/134	267/277	131/143	150/150	127/138	271/281
		112A+117A	31.8/42.4	88.4/102.0	154/171	175/175	147/163	377/404	158/175	175/175	152/167	381/408
	MED	NONE	—	—	45/45	50/50	47/47	204	49/48	60/60	52/51	208
		117A	7.8/10.4	21.7/25.0	72/76	80/80	72/76	226/229	76/80	80/80	77/80	230/233
		110A	12.0/16.0	33.4/38.5	87/93	90/100	86/91	237/243	90/96	90/100	90/96	241/247
		111A	18.6/24.8	51.7/59.7	109/119	110/125	107/116	256/264	113/123	125/125	111/120	260/268
		112A	24.0/32.0	66.7/77.0	128/141	150/150	124/135	271/281	132/145	150/150	128/140	275/285
		112A+117A	31.8/42.4	88.4/102.0	155/172	175/175	149/164	381/408	159/176	175/200	153/169	385/412
	HIGH	NONE	—	—	49/48	60/60	52/50	254	52/51	60/60	56/55	258
		117A	7.8/10.4	21.7/25.0	76/79	80/80	76/79	276/279	79/83	80/90	81/83	280/283
		110A	12.0/16.0	33.4/38.5	90/96	90/100	90/95	287/293	94/99	100/100	94/99	291/297
		111A	18.6/24.8	51.7/59.7	113/122	125/125	111/119	306/314	117/126	125/150	115/123	310/318
		112A	24.0/32.0	66.7/77.0	132/144	150/150	128/139	321/331	136/148	150/150	133/143	325/335
		112A+117A	31.8/42.4	88.4/102.0	159/175	175/175	153/168	431/458	163/179	175/200	158/172	435/462
460-3-60	STD	NONE	—	—	21	25	22	99	23	25	24	101
		116B	13.9	16.7	42	45	41	116	44	45	43	118
		113B	16.5	19.8	46	50	45	119	47	50	47	121
		114B	27.8	33.4	63	70	60	132	64	70	62	134
		115B	33.0	39.7	71	80	67	139	72	80	69	141
		128B	41.7	50.2	84	90	79	149	85	90	82	151
	MED	NONE	—	—	21	25	22	102	23	25	24	104
		116B	13.9	16.7	42	45	42	119	44	45	44	121
		113B	16.5	19.8	46	50	45	122	48	50	47	124
		114B	27.8	33.4	63	70	61	135	65	70	63	137
		115B	33.0	39.7	71	80	68	142	73	80	70	144
		128B	41.7	50.2	84	90	80	152	86	90	82	154
	HIGH	NONE	—	—	23	25	24	127	25	30	26	129
		116B	13.9	16.7	44	45	43	144	46	50	45	146
		113B	16.5	19.8	48	50	47	147	49	50	49	149
		114B	27.8	33.4	65	70	62	160	66	70	65	162
		115B	33.0	39.7	73	80	70	167	74	80	72	169
		128B	41.7	50.2	86	90	82	177	87	90	84	179
575-3-60	STD	NONE	—	—	16	20	17	81	20	25	21	85
		118A	18.0	17.3	38	40	37	98	41	45	41	102
		119A	36.0	34.6	59	60	56	116	63	70	61	120
	MED	NONE	—	—	17	20	17	85	21	25	22	89
		118A	18.0	17.3	38	40	37	102	42	45	42	106
		119A	36.0	34.6	60	60	57	120	64	70	62	124
	HIGH	NONE	—	—	18	20	19	94	22	25	23	98
		118A	18.0	17.3	39	40	39	111	43	45	43	115
		119A	36.0	34.6	61	70	58	129	65	70	63	133

See Legend and Notes on page 79.

→ **50HCQD09 UNIT WIRE/FUSE OR HACR BREAKER SIZING DATA**
TWO STAGE COOLING WITH TWO SPEED INDOOR FAN MOTOR

NOM. V-Ph-Hz	IFM TYPE	ELEC. HTR			NO C.O. or UNPWR C.O.							
					NO P.E.				WITH P.E. (pwrd fr/ unit)			
		CRHEATER ****00	Nom (kW)	FLA	MCA	MAX FUSE OR HACR	DISC. SIZE FLA	DISC. SIZE LRA	MCA	MAX FUSE OR HACR	DISC. SIZE FLA	DISC. SIZE LRA
208/230-3-60	STD	NONE	—	—	47/47	60/60	49/49	233	51/51	60/60	54/53	237
		117A	7.8/10.4	21.7/25.0	75/78	80/80	74/78	255/258	78/82	80/90	79/82	259/262
		110A	12.0/16.0	33.4/38.5	89/95	90/100	88/93	266/272	93/99	100/100	92/98	270/276
		111A	18.6/24.8	51.7/59.7	112/122	125/125	109/118	285/293	116/126	125/150	113/122	289/297
		112A	24.0/32.0	66.7/77.0	131/143	150/150	126/138	300/310	135/147	150/150	131/142	304/314
		112A+117A	31.8/42.4	88.4/102.0	158/175	175/175	151/166	410/437	162/178	175/200	155/171	414/441
	MED	NONE	—	—	49/48	60/60	51/50	259	53/52	60/60	56/55	263
		117A	7.8/10.4	21.7/25.0	76/79	80/80	76/79	281/284	80/83	80/90	81/83	285/288
		110A	12.0/16.0	33.4/38.5	91/96	100/100	90/95	292/298	95/100	100/100	94/99	296/302
		111A	18.6/24.8	51.7/59.7	114/123	125/125	111/119	311/319	117/127	125/150	115/123	315/323
		112A	24.0/32.0	66.7/77.0	132/144	150/150	128/139	326/336	136/148	150/150	132/143	330/340
		112A+117A	31.8/42.4	88.4/102.0	159/176	175/200	153/168	436/463	163/179	175/200	157/172	440/467
	HIGH	NONE	—	—	51/50	60/60	54/53	283	55/54	60/60	58/57	287
		117A	7.8/10.4	21.7/25.0	78/81	80/90	79/81	305/308	82/85	90/90	83/86	309/312
		110A	12.0/16.0	33.4/38.5	93/98	100/100	92/97	316/322	97/102	100/110	96/101	320/326
		111A	18.6/24.8	51.7/59.7	116/125	125/125	113/121	335/343	120/129	125/150	118/126	339/347
		112A	24.0/32.0	66.7/77.0	135/146	150/150	130/141	350/360	138/150	150/150	135/145	354/364
		112A+117A	31.8/42.4	88.4/102.0	162/178	175/200	155/170	460/487	165/181	175/200	160/174	464/491
460-3-60	STD	NONE	—	—	22	25	23	117	24	30	25	119
		116B	13.9	16.7	43	45	42	134	45	45	44	136
		113B	16.5	19.8	47	50	45	137	48	50	47	139
		114B	27.8	33.4	64	70	61	150	65	70	63	152
		115B	33.0	39.7	72	80	68	157	73	80	70	159
		128B	41.7	50.2	85	90	80	167	86	90	82	169
	MED	NONE	—	—	22	25	23	130	24	30	25	132
		116B	13.9	16.7	43	45	42	147	45	45	44	149
		113B	16.5	19.8	47	50	46	150	49	50	48	152
		114B	27.8	33.4	64	70	62	163	66	70	64	165
		115B	33.0	39.7	72	80	69	170	74	80	71	172
		128B	41.7	50.2	85	90	81	180	87	90	83	182
	HIGH	NONE	—	—	23	25	24	142	25	30	26	144
		116B	13.9	16.7	44	45	44	159	46	50	46	161
		113B	16.5	19.8	48	50	47	162	50	50	49	164
		114B	27.8	33.4	65	70	63	175	67	70	65	177
		115B	33.0	39.7	73	80	70	182	75	80	72	184
		128B	41.7	50.2	86	90	82	192	88	90	84	194
575-3-60	STD	NONE	—	—	18	20	19	99	22	25	23	103
		118A	18.0	17.3	40	40	39	116	44	45	43	120
		119A	36.0	34.6	62	70	59	134	65	70	63	138
	MED	NONE	—	—	19	25	20	108	23	25	24	112
		118A	18.0	17.3	41	45	40	125	45	45	44	129
		119A	36.0	34.6	63	70	60	143	66	70	64	147
	HIGH	NONE	—	—	19	25	20	108	23	25	24	112
		118A	18.0	17.3	41	45	40	125	45	45	44	129
		119A	36.0	34.6	63	70	60	143	66	70	64	147

See Legend and Notes on page 79.

→ 50HCQD09 UNIT WIRE/FUSE OR HACR BREAKER SIZING DATA
TWO STAGE COOLING WITH TWO SPEED INDOOR FAN MOTOR (cont)

NOM. V-Ph-Hz	IFM TYPE	ELEC. HTR			WITH PWRD C.O.							
					NO P.E.				WITH P.E. (pwrd fr/ unit)			
		CRHEATER ****00	Nom (kW)	FLA	MCA	MAX FUSE OR HACR	DISC. SIZE FLA	DISC. SIZE LRA	MCA	MAX FUSE OR HACR	DISC. SIZE FLA	DISC. SIZE LRA
208/230-3-60	STD	NONE	—	—	52/52	60/60	55/55	238	56/56	60/60	59/59	242
		117A	7.8/10.4	21.7/25.0	79/83	80/90	80/83	260/263	83/87	90/90	84/88	264/267
		110A	12.0/16.0	33.4/38.5	94/100	100/100	93/99	271/277	98/104	100/110	98/103	275/281
		111A	18.6/24.8	51.7/59.7	117/127	125/150	114/123	290/298	121/130	125/150	119/128	294/302
		112A	24.0/32.0	66.7/77.0	136/148	150/150	132/143	305/315	139/152	150/175	136/148	309/319
		112A+117A	31.8/42.4	88.4/102.0	163/179	175/200	157/172	415/442	167/183	175/200	161/176	419/446
	MED	NONE	—	—	54/53	60/60	57/56	264	58/57	70/70	61/60	268
		117A	7.8/10.4	21.7/25.0	81/84	90/90	82/85	286/289	85/88	90/90	86/89	290/293
		110A	12.0/16.0	33.4/38.5	96/101	100/110	95/100	297/303	99/105	100/110	99/104	301/307
		111A	18.6/24.8	51.7/59.7	118/128	125/150	116/124	316/324	122/131	125/150	121/129	320/328
		112A	24.0/32.0	66.7/77.0	137/149	150/150	133/144	331/341	141/153	150/175	138/149	335/345
		112A+117A	31.8/42.4	88.4/102.0	164/180	175/200	158/173	441/468	168/184	175/200	163/177	445/472
	HIGH	NONE	—	—	56/55	60/60	59/58	288	60/59	70/70	64/62	292
		117A	7.8/10.4	21.7/25.0	83/86	90/90	84/87	310/313	87/90	90/90	89/91	314/317
		110A	12.0/16.0	33.4/38.5	98/103	100/110	98/102	321/327	102/107	110/110	102/107	325/331
		111A	18.6/24.8	51.7/59.7	121/130	125/150	119/127	340/348	124/133	125/150	123/131	344/352
		112A	24.0/32.0	66.7/77.0	139/151	150/175	136/147	355/365	143/155	150/175	140/151	359/369
		112A+117A	31.8/42.4	88.4/102.0	166/182	175/200	161/175	465/492	170/186	175/200	165/180	469/496
460-3-60	STD	NONE	—	—	24	30	25	119	26	30	27	121
		116B	13.9	16.7	45	45	44	136	47	50	46	138
		113B	16.5	19.8	49	50	48	139	51	60	50	141
		114B	27.8	33.4	66	70	64	152	68	70	66	154
		115B	33.0	39.7	74	80	71	159	76	80	73	161
		128B	41.7	50.2	87	90	83	169	89	90	85	171
	MED	NONE	—	—	25	30	26	132	26	30	28	134
		116B	13.9	16.7	45	45	45	149	47	50	47	151
		113B	16.5	19.8	49	50	48	152	51	60	50	154
		114B	27.8	33.4	66	70	64	165	68	70	66	167
		115B	33.0	39.7	74	80	71	172	76	80	73	174
		128B	41.7	50.2	87	90	83	182	89	90	85	184
	HIGH	NONE	—	—	26	30	27	144	27	30	29	146
		116B	13.9	16.7	46	50	46	161	48	50	48	163
		113B	16.5	19.8	50	50	50	164	52	60	52	166
		114B	27.8	33.4	67	70	65	177	69	70	67	179
		115B	33.0	39.7	75	80	73	184	77	80	75	186
		128B	41.7	50.2	88	90	85	194	90	90	87	196
575-3-60	STD	NONE	—	—	20	25	21	101	24	25	25	105
		118A	18.0	17.3	42	45	41	118	45	45	45	122
		119A	36.0	34.6	63	70	61	136	67	70	65	140
	MED	NONE	—	—	21	25	22	110	25	30	26	114
		118A	18.0	17.3	43	45	42	127	46	50	46	131
		119A	36.0	34.6	64	70	62	145	68	70	66	149
	HIGH	NONE	—	—	21	25	22	110	25	30	26	114
		118A	18.0	17.3	43	45	42	127	46	50	46	131
		119A	36.0	34.6	64	70	62	145	68	70	66	149

See Legend and Notes on page 79.

→ 50HCQD12 UNIT WIRE/FUSE OR HACR BREAKER SIZING DATA
TWO STAGE COOLING WITH TWO SPEED INDOOR FAN MOTOR

NOM. V-Ph-Hz	IFM TYPE	ELEC. HTR			NO C.O. or UNPWR C.O.							
					NO P.E.				WITH P.E. (pwrd fr/ unit)			
		CRHEATER ****00	Nom (kW)	FLA	MCA	MAX FUSE OR HACR	DISC. SIZE FLA	DISC. SIZE LRA	MCA	MAX FUSE OR HACR BRKR	DISC. SIZE FLA	DISC. SIZE LRA
208/230-3-60	STD	NONE	—	—	48/47	60/60	50/49	259	51/51	60/60	54/54	263
		288A	7.5/10.0	20.9/24.1	74/77	80/80	74/77	280/283	77/81	80/90	78/81	284/287
		291A	12.4/16.5	34.4/39.7	91/97	100/100	89/95	293/299	94/101	100/110	93/99	297/303
		294A	25.2/33.5	69.9/80.6	135/148	150/150	130/142	329/340	139/152	150/175	134/146	333/344
		288A+294A	32.7/43.5	90.7/104.7	161/178	175/200	154/170	440/468	165/182	175/200	158/174	444/472
		291A+294A	37.6/50.0	104.3/120.3	178/168	200/175	170/188	468/500	182/171	200/175	174/192	472/504
	MED	NONE	—	—	49/48	60/60	51/50	285	53/52	60/60	56/55	289
		288A	7.5/10.0	20.9/24.1	75/78	80/80	75/78	306/309	79/82	80/90	80/82	310/313
		291A	12.4/16.5	34.4/39.7	92/98	100/100	91/96	319/325	96/102	100/110	95/100	323/329
		294A	25.2/33.5	69.9/80.6	136/149	150/150	132/143	355/366	140/153	150/175	136/147	359/370
		288A+294A	32.7/43.5	90.7/104.7	162/179	175/200	156/171	466/494	166/183	175/200	160/175	470/498
		291A+294A	37.6/50.0	104.3/120.3	179/169	200/175	171/189	494/526	183/172	200/200	176/193	498/530
	HIGH	NONE	—	—	62	80	65	324	66	80	69	328
		288A	7.5/10.0	20.9/24.1	88/92	100/100	89/93	345/348	92/96	100/100	93/97	349/352
		291A	12.4/16.5	34.4/39.7	105/112	110/125	104/111	358/364	109/115	110/125	109/115	362/368
		294A	25.2/33.5	69.9/80.6	149/163	150/175	145/158	394/405	153/167	175/175	150/162	398/409
		288A+294A	32.7/43.5	90.7/104.7	175/193	175/200	169/185	505/533	179/197	200/200	174/190	509/537
		291A+294A	37.6/50.0	104.3/120.3	192/182	200/200	185/203	533/565	196/186	200/200	189/208	537/569
460-3-60	STD	NONE	—	—	24	30	24	124	25	30	26	126
		289A	10.0	12.0	39	40	38	136	40	40	40	138
		292A	16.5	19.9	48	50	47	144	50	50	49	146
		295A	33.5	40.3	74	80	71	164	76	80	73	166
		289A+295A	43.5	52.3	89	90	85	229	91	100	87	231
		292A+295A	50.0	60.2	84	90	94	244	86	90	96	246
	MED	NONE	—	—	24	30	25	137	26	30	27	139
		289A	10.0	12.0	39	40	39	149	41	45	41	151
		292A	16.5	19.9	49	50	48	157	51	60	50	159
		295A	33.5	40.3	74	80	71	177	76	80	73	179
		289A+295A	43.5	52.3	89	90	85	242	91	100	87	244
		292A+295A	50.0	60.2	84	90	94	257	86	90	96	259
	HIGH	NONE	—	—	31	40	32	156	33	40	34	158
		289A	10.0	12.0	46	50	46	168	48	50	48	170
		292A	16.5	19.9	56	60	55	176	58	60	57	178
		295A	33.5	40.3	81	90	79	196	83	90	81	198
		289A+295A	43.5	52.3	96	100	92	261	98	100	94	263
		292A+295A	50.0	60.2	91	100	101	276	93	100	104	278
575-3-60	LOW	NONE	—	—	19	25	20	97	23	25	24	101
		290A	10.0	9.6	31	35	31	107	35	35	35	111
		293A	16.5	15.9	39	40	38	113	43	45	42	117
		296A	33.5	32.2	59	60	57	129	63	70	61	133
		290A+296A	43.5	41.9	71	80	68	181	75	80	72	185
		293A+296A	50.0	48.1	67	70	75	193	71	80	79	197
	MED	NONE	—	—	20	25	21	106	24	25	25	110
		290A	10.0	9.6	32	35	32	116	36	40	36	120
		293A	16.5	15.9	40	40	39	122	44	45	43	126
		296A	33.5	32.2	60	60	58	138	64	70	62	142
		290A+296A	43.5	41.9	72	80	69	190	76	80	73	194
		293A+296A	50.0	48.1	68	70	76	202	72	80	81	206
	HIGH	NONE	—	—	25	30	26	118	29	35	30	122
		290A	10.0	9.6	37	40	37	128	41	45	41	132
		293A	16.5	15.9	45	45	44	134	49	50	49	138
		296A	33.5	32.2	66	70	63	150	69	70	67	154
		290A+296A	43.5	41.9	78	80	74	202	81	90	79	206
		293A+296A	50.0	48.1	73	80	81	214	77	80	86	218

See Legend and Notes on page 79.

→ 50HCQD12 UNIT WIRE/FUSE OR HACR BREAKER SIZING DATA
TWO STAGE COOLING WITH TWO SPEED INDOOR FAN MOTOR (cont)

NOM. V-Ph-Hz	IFM TYPE	ELEC. HTR			WITH PWRD C.O.							
					NO P.E.				WITH P.E. (pwrd fr/ unit)			
		CRHEATER ****00	Nom (kW)	FLA	MCA	MAX FUSE OR HACR	DISC. SIZE FLA	DISC. SIZE LRA	MCA	MAX FUSE OR HACR BRKR	DISC. SIZE FLA	DISC. SIZE LRA
208/230-3-60	STD	NONE	—	—	52/52	60/60	55/55	264	56/56	60/60	59/59	268
		288A	7.5/10.0	20.9/24.1	78/82	80/90	79/82	285/288	82/86	90/90	83/87	289/292
		291A	12.4/16.5	34.4/39.7	95/102	100/110	95/100	298/304	99/105	100/110	99/105	302/308
		294A	25.2/33.5	69.9/80.6	140/153	150/175	135/147	334/345	144/157	150/175	140/152	338/349
		288A+294A	32.7/43.5	90.7/104.7	166/183	175/200	159/175	445/473	170/187	175/200	164/180	449/477
		291A+294A	37.6/50.0	104.3/120.3	183/172	200/200	175/193	473/505	187/176	200/200	179/197	477/509
	MED	NONE	—	—	54/53	60/60	57/56	290	58/57	70/70	61/60	294
		288A	7.5/10.0	20.9/24.1	80/83	80/90	81/84	311/314	84/87	90/90	85/88	315/318
		291A	12.4/16.5	34.4/39.7	97/103	100/110	96/102	324/330	101/106	110/110	101/106	328/334
		294A	25.2/33.5	69.9/80.6	141/154	150/175	137/149	360/371	145/158	150/175	142/153	364/375
		288A+294A	32.7/43.5	90.7/104.7	167/184	175/200	161/176	471/499	171/188	175/200	165/181	475/503
		291A+294A	37.6/50.0	104.3/120.3	184/173	200/200	177/194	499/531	188/177	200/200	181/199	503/535
	HIGH	NONE	—	—	67	80	70	329	71	80	75	333
		288A	7.5/10.0	20.9/24.1	93/97	100/100	94/98	350/353	97/101	100/110	99/102	354/357
		291A	12.4/16.5	34.4/39.7	110/116	110/125	110/116	363/369	114/120	125/125	114/120	367/373
		294A	25.2/33.5	69.9/80.6	154/168	175/175	151/163	399/410	158/171	175/175	155/167	403/414
		288A+294A	32.7/43.5	90.7/104.7	180/198	200/200	175/191	510/538	184/201	200/225	179/195	514/542
		291A+294A	37.6/50.0	104.3/120.3	197/187	200/200	190/209	538/570	201/191	225/200	195/213	542/574
460-3-60	STD	NONE	—	—	26	30	27	126	28	30	29	128
		289A	10.0	12.0	41	45	41	138	43	45	43	140
		292A	16.5	19.9	51	60	50	146	52	60	52	148
		295A	33.5	40.3	76	80	73	166	78	80	75	168
		289A+295A	43.5	52.3	91	100	87	231	93	100	89	233
		292A+295A	50.0	60.2	86	90	96	246	88	90	98	248
	MED	NONE	—	—	26	30	27	139	28	30	29	141
		289A	10.0	12.0	41	45	41	151	43	45	43	153
		292A	16.5	19.9	51	60	50	159	53	60	52	161
		295A	33.5	40.3	77	80	74	179	78	80	76	181
		289A+295A	43.5	52.3	92	100	88	244	93	100	90	246
		292A+295A	50.0	60.2	86	90	97	259	88	90	99	261
	HIGH	NONE	—	—	33	40	35	158	35	40	37	160
		289A	10.0	12.0	48	50	49	170	50	50	51	172
		292A	16.5	19.9	58	60	58	178	60	60	60	180
		295A	33.5	40.3	84	90	81	198	85	90	83	200
		289A+295A	43.5	52.3	99	100	95	263	100	100	97	265
		292A+295A	50.0	60.2	93	100	104	278	95	100	106	280
575-3-60	LOW	NONE	—	—	21	25	22	99	25	30	26	103
		290A	10.0	9.6	33	35	33	109	37	40	37	113
		293A	16.5	15.9	41	45	40	115	44	45	44	119
		296A	33.5	32.2	61	70	59	131	65	70	63	135
		290A+296A	43.5	41.9	73	80	70	183	77	80	74	187
		293A+296A	50.0	48.1	69	70	77	195	73	80	81	199
	MED	NONE	—	—	22	25	23	108	26	30	27	112
		290A	10.0	9.6	34	35	34	118	38	40	38	122
		293A	16.5	15.9	42	45	41	124	45	45	45	128
		296A	33.5	32.2	62	70	60	140	66	70	64	144
		290A+296A	43.5	41.9	74	80	71	192	78	80	75	196
		293A+296A	50.0	48.1	70	80	78	204	74	80	82	208
	HIGH	NONE	—	—	27	30	28	120	31	35	32	124
		290A	10.0	9.6	39	45	39	130	43	45	43	134
		293A	16.5	15.9	47	50	46	136	51	60	51	140
		296A	33.5	32.2	67	70	65	152	71	80	69	156
		290A+296A	43.5	41.9	79	80	76	204	83	90	81	208
		293A+296A	50.0	48.1	75	80	83	216	79	90	88	220

See Legend and Notes on page 79.

Cooling, unit without economizer

Cooling (single speed indoor fan motor) — When thermostat calls for cooling, terminals G and Y1 are energized. The indoor fan contactor (IFC), reversing valve solenoid (RVS) and compressor contactor are energized and indoor fan motor, compressor, and outdoor fan starts. On 2-Stage 07 units, Y1 allows compressor to operate unloaded at 67% of unit capacity. For all units, the outdoor fan motor runs continuously while unit is cooling.

Two-stage models: If Stage 1 cooling does not satisfy the space load, the space temperature will rise until thermostat calls for Stage 2 cooling (Y2 closes). On two compressor units, Defrost Board activates Stage 2 Compressor. Reversing valve 2 switches to Cooling position. Compressor 2 contactor is energized; Compressor 2 starts and Circuit 2 operates in Cooling mode. On 2-Stage 07 units, Y2 energizes the loader plug, allowing compressor to operate at 100% in cooling mode.

On two compressor units when Cooling Stage 2 is satisfied, thermostat Y2 opens. Compressor 2 contactor is de-energized; Compressor 2 stops. Reversing Valve 2 remains energized. On 2-Stage 07 units, the loader plug is de-energized and compressor operates at 67%. Reversing Valve remains energized.

When Cooling Stage 1 is satisfied, thermostat Y1 opens. Compressor 1 contactor is de-energized; Compressor 1 stops. Outdoor fan relay is de-energized; outdoor fans stop. After the Fan Delay period, the Indoor fan contactor is de-energized; indoor fan stops (unless Continuous Fan operation has been selected). Reversing Valve 1 remains energized.

Reversing valve solenoids are energized in Cooling modes. Each solenoid will remain energized until the next Heating mode is initiated for this circuit.

Cooling (2-speed indoor fan motor) — Per ASHRAE 90.1-2016 and IECC-2015 standards, during the first stage of cooling operation the VFD will adjust the fan motor to provide 66% of the total cfm established for the unit. When a call for the second stage of cooling is required, the VFD will allow the total cfm established for the unit (100%).

Heating, unit without economizer

Upon a request for heating from the space thermostat, terminal W1 will be energized with 24V. The IFC, outdoor fan contactor (OFC), C1, and C2 will be energized. The indoor fan, outdoor fans, and compressor no. 1, and compressor no. 2 are energized and reversing valves are de-energized and switch position.

If the space temperature continues to fall while W1 is energized, W2 will be energized with 24V, and the heater contactor(s) (HC) will be energized, which will energize the electric heater(s).

When the space thermostat is satisfied, W2 will be de-energized first, and the electric heater(s) will be de-energized.

Upon a further rise in space temperature, W1 will be de-energized.

Two compressor models: When the thermostat calls for heating, terminal W1 is energized. Defrost Board de-energizes both reversing valve solenoids and reversing valves move to Heating position. The indoor fan contactor is energized; indoor fan motor starts. Outdoor fan relay is energized; both outdoor fan motors run. Compressor contactors C1 and C2 are energized; both refrigeration circuits operate in Heating mode.

If Stage 1 heating does not satisfy the space load, the space temperature will fall until thermostat calls for Stage 2 heating (W2 closes). Terminal W2 is energized. Defrost Board issues an output at EHEAT. Heater contactor 1 and heater contactor 2 (if installed) are energized; all electric heaters are energized.

When space heating load is partially satisfied, thermostat terminal W2 is de-energized; heater contactors are de-energized and all electric heat is terminated. Stage 1 heating continues.

When the space heating load is fully satisfied, thermostat terminal W1 is also de-energized.

Reversing valve solenoids remain de-energized until the next call for Cooling mode is initiated.

Cooling, unit with EconoMi$er® IV, X

When free cooling is not available, the compressors will be controlled by the zone thermostat. When free cooling is available, the outdoor air damper is modulated by the EconoMi$er IV, X control to provide a 50 to 55°F (10° to 13°C) mixed air temperature into the zone. As the mixed air temperature fluctuates above 55 or below 50°F (13° to 10°C), the dampers will be modulated (open or close) to bring the mixed air temperature back within control.

If mechanical cooling is utilized with free cooling, the outdoor-air damper will maintain its current position at the time the compressor is started. If the increase in cooling capacity causes the mixed-air temperature to drop below 45°F (7°C), then the outdoor-air damper position will be decreased to the minimum position. If the mixed-air temperature continues to fall, the outdoor-air damper will close. Control returns to normal once the mixed-air temperature rises above 48°F (9°C).

If optional power exhaust is installed, as the outdoor air damper opens and closes, the power exhaust fans will be energized and de-energized.

If field-installed accessory CO_2 sensors are connected to the EconoMi$er IV, X control, a demand controlled ventilation strategy will begin to operate. As the CO_2 level in the zone increases above the CO_2 setpoint, the minimum position of the damper will be increased proportionally. As the CO_2 level decreases because of the increase in fresh air, the outdoor air damper will be proportionally closed.

For EconoMi$er IV, X operation, there must be a thermostat call for the fan (G). If the unit is occupied and the fan is on, the damper will operate at minimum position. Otherwise, the damper will be closed.

When the EconoMi$er IV, X control is in the occupied mode and a call for cooling exists (Y1 on the thermostat), the control will first check for indoor fan operation. If the fan is not on, then cooling will not be activated. If the fan is

on, then the control will open the EconoMi$er IV, X damper to the minimum position.

On the initial power to the EconoMi$er IV, X control, it will take the damper up to $2^1/_2$ minutes before it begins to position itself. Any change in damper position will take up to 30 seconds to initiate. Damper movement from full closed to full open (or vice versa) will take between $1^1/_2$ and $2^1/_2$ minutes.

If free cooling can be used as determined from the appropriate changeover command (switch, dry bulb, enthalpy curve, differential dry bulb, or differential enthalpy), then the control will modulate the dampers open to maintain the mixed air temperature setpoint at 50° to 55°F (10° to 13°C).

If there is a further demand for cooling (cooling second stage — Y2 is energized), then the control will bring on compressor stage 1 to maintain the mixed air temperature setpoint. The EconoMi$er IV, X damper will be open at maximum position. EconoMi$er IV, X controller operation is limited to a single compressor.

2-Speed Note: When operating in ventilation mode only, the indoor fan motor will automatically adjust to 66% of the total cfm established.

Heating, unit with EconoMi$er controller

When the room temperature calls for heat through terminal W1, the indoor (evaporator) fan contactor (IFC) and heater contactor no. 1 (HC1) are energized and the reversing valve(s) de-energize and switches position. On units equipped for 2 stages of heat, when additional heat is needed, heater contactor no. 2 is energized through W2. The economizer damper moves to the minimum position. When the thermostat is satisfied, the damper moves to the fully closed position.

Cooling, unit with EconoMi$er2 controller, PremierLink™ controller and a thermostat

When free cooling is not available, the compressors will be controlled by the PremierLink controller in response to the Y1 and Y2 inputs from the thermostat.

The PremierLink controller will use the following information to determine if free cooling is available:

- Indoor fan has been on for at least 30 seconds.
- The SPT, SAT, and OAT inputs must have valid readings.
- OAT must be less than 75°F (24°C).
- OAT must be less than SPT.
- Enthalpy must be LOW (may be jumpered if an enthalpy sensor not available).
- Economizer position is NOT forced.

Pre-cooling occurs when there is no call from the thermostat except G. Pre-cooling is defined as the economizer modulates to provide 70°F (21°C) supply air.

When free cooling is available the PremierLink controller will control the compressors, energize the reversing valve(s) and economizer to provide a supply air temperature determined to meet the Y1 and Y2 calls from the thermostat.

If optional power exhaust is installed, as the outdoor air damper opens and closes, the power exhaust fans will be energized and de-energized.

If field-installed accessory CO_2 sensors are connected to the PremierLink controller, a PID controlled demand ventilation strategy will begin to operate. As the CO_2 level in the zone increases above the CO_2 setpoint, the minimum position of the damper will be increased proportionally. As the CO_2 level decreases because of the increase in fresh air, the outdoor air damper will be proportionally closed.

Heating, unit with EconoMi$er2 controller, PremierLink controller and a thermostat

When the thermostat calls for heating, terminal W1 is energized. The PremierLink controller will move the economizer damper to the minimum position if there is a call for G and closed if there is a call for W1 without G. In order to prevent thermostat from short cycling, the unit is locked into the heating mode for at least 10 minutes when W1 is energized. The reversing valve solenoid(s) de-energizes and switches position.

On units equipped for two stages of heat, when additional heat is needed, W2 is energized and the electric heat (if used) comes on. When the thermostat is satisfied and W1 is de-energized, the IFM stops.

Cooling, unit with EconoMi$er2 controller, PremierLink controller and a room sensor

When free cooling is not available, the compressors will be controlled by the PremierLink controller using a PID Error reduction calculation.

The PremierLink controller will use the following information to determine if free cooling is available:

- Indoor fan has been on for at least 30 seconds.
- The SPT, SAT, and OAT inputs must have valid readings.
- OAT must be less than 75°F (24°C).
- OAT must be less than SPT.
- Enthalpy must be LOW (may be jumpered if an enthalpy sensor is not available).
- Economizer position is NOT forced.

When free cooling is available, the outdoor air damper is positioned through the use of a Proportional Integral (PID) control process to provide a calculated supply air temperature into the zone. The supply air will maintain the space temperature between the heating and cooling setpoints.

The PremierLink™ controller will integrate the compressors stages with the economizer based on similar logic as the three routines listed in the previous section. The supply air set point (SASP) will float up and down based on the error reduction calculations that compare space temperature and space setpoint. The reversing valves will be energized.

If an optional power exhaust is installed, as the outdoor air damper opens and closes, the power exhaust fans will be energized and de-energized.

If field-installed accessory CO_2 sensors are connected to the PremierLink controller, a PID-controlled demand ventilation strategy will begin to operate. As the CO_2 level in the zone increases above the CO_2 setpoint, the minimum position of the damper will be increased proportionally. As the CO_2 level decreases because of the increase in fresh air, the outdoor air damper will be proportionally closed.

Heating, unit with EconoMi$er2, PremierLink controller and a room sensor

Every 40 seconds the controller will calculate the required heat stages (maximum of 3) to maintain Supply Air Temperature (SAT) if the following qualifying conditions are met:

- Indoor fan has been on for at least 30 seconds.
- COOL mode is not active.
- OCCUPIED, TEMP.COMPENSATED START or HEAT mode is active.
- SAT reading is available.
- Fire shutdown mode is not active.

If all of the above conditions are met, the number of heat stages is calculated; otherwise the required number of heat stages will be set to 0.

If the PremierLink controller determines that heat stages are required, the economizer damper will be moved to minimum position if occupied and closed if unoccupied.

Defrost

When the temperature of the outdoor coil drops below 28°F (-2°C) as sensed by the defrost thermostat (DFT2) and the defrost timer is at the end of a timed period (adjustable at 30, 60, 90 or 120 minutes), reversing valve solenoids (RVS1 and RVS2) are energized and the OFC is de-energized. This switches the position of the reversing valves and shuts off the outdoor fan. The electric heaters (if installed) will be energized.

The unit continues to defrost until the coil temperature as measured by DFT2 reaches 65°F (18°C), or the duration of defrost cycle completes a 10-minute period.

During the Defrost mode, if circuit 1 defrosts first, RVS1 will oscillate between Heating and Cooling modes until the Defrost mode is complete.

At the end of the defrost cycle, the electric heaters (if installed) will be de-energized; the reversing valves switch and the outdoor fan motor will be energized. The unit will now operate in the Heating mode.

If the space thermostat is satisfied during a defrost cycle, the unit will continue in the Defrost mode until the time or temperature constraints are satisfied.

Automatic changeover

When the system selection switch is set at AUTO. position, unit automatically changes from heating operation to cooling operation when the temperature of the conditioned space rises to the cooling level setting. When the temperature of the conditioned space falls to the heating level setting, unit automatically changes from cooling to heating operation (with a 3°F deadband in between).

Continuous air circulation

Turn unit power on. Set system control at OFF position. Set fan switch at ON position. The indoor fan contactor is energized through the thermostat switch and the indoor fan runs continuously.

Emergency heat

When the switch is on (thermostat is set to the EM HT position), compressor circuit and outdoor thermostats are bypassed, and the second stage of thermostat energizes the indoor blower and the electric resistance heaters.

RTU Open Controller (Factory Option) — For details on operating 50HCQ units equipped with the factory-installed RTU Open controller option refer to *Factory Installed RTU Open Multi-Protocol Controller Controls, Start-Up, Operation and Troubleshooting* manual.

Guide specifications

Note about this specification: These specifications are written in "Masterformat" as published by the Construction Specification Institute. Please feel free to copy this specification directly into your building spec.

Rooftop Packaged Heat Pump

HVAC guide specifications

Size range: **3 TO 10 Nominal Tons**

Carrier Model Number: **50HCQ*04-12**

Part 1 — (23 06 80) Schedules for decentralized HVAC equipment

1.01 (23 06 80.13) Decentralized Unitary HVAC Equipment Schedule

A. (23 06 80.13.A.) Rooftop unit (RTU) schedule

1. Schedule is per the project specification requirements.

Part 2 — (23 07 16) HVAC equipment insulation

2.01 (23 07 16.13) Decentralized, Rooftop Units:

A. (23 07 16.13.A.) Evaporator fan compartment:

1. Interior cabinet surfaces shall be insulated with a minimum $^1/_2$-in. thick, minimum $1^1/_2$-lb density, flexible fiberglass insulation bonded with a phenolic binder, neoprene coated on the air side.
2. Insulation and adhesive shall meet NFPA 90A requirements for flame spread and smoke generation.
3. Unit internal insulation linings shall be resistant to mold growth in accordance with "mold growth and humidity" test in ASTM C1338, G21, and UL 181 or comparable test method. Air stream surfaces shall be evaluated in accordance with the "Erosion Test" in UL 181, as part of ASTM C1071.

Part 3 — (23 09 13) Instrumentation and control devices for HVAC

3.01 (23 09 13.23) Sensors and Transmitters:

A. (23 09 13.23.A.) Thermostats:

1. Thermostat must:
   a. have capability to energize 2 different stages of cooling, and 2 different stages of heating.
   b. include capability for occupancy scheduling.

Part 4 — (23 09 13) Direct-digital control system for HVAC

4.01 (23 09 23.13) Decentralized, Rooftop Units:

A. (23 09 23.13.A.) PremierLink™ controller:

1. Shall be ASHRAE 62 compliant.
2. Shall accept 18-32 VAC input power.
3. Shall have an operating temperature range from -40°F (-40°C) to 158°F (70°C), 10% to 95% RH (non-condensing).
4. Shall include an integrated economizer controller to support an economizer with 4 to 20 mA actuator input and no microprocessor controller.
5. Controller shall accept the following inputs: space temperature, setpoint adjustment, outdoor air temperature, indoor air quality, outdoor air quality, indoor relative humidity, compressor lock-out, fire shutdown, enthalpy, fan status, remote time clock/door switch.
6. Shall accept a CO_2 sensor in the conditioned space, and be Demand Controlled Ventilation (DCV) ready.
7. Shall provide the following outputs: economizer, fan, cooling stage 1, cooling stage 2, heat stage 1, heat stage 2, heat stage 3/exhaust/ reversing valve/ dehumidify/ occupied.
8. Unit shall provide surge protection for the controller through a circuit breaker.
9. Shall be Internet capable, and communicate at a Baud rate of 38.4K or faster.
10. Shall have an LED display independently showing the status of activity on the communication bus, and processor operation.
11. Shall include an EIA-485 protocol communication port, an access port for connection of either a computer or a Carrier technician tool, an EIA-485 port for network communication to intelligent space sensors and displays, and a port to connect an optional LonWorks* plug-in communications card.
12. Shall have built-in Carrier Comfort Network® (CCN) protocol, and be compatible with other CCN devices, including *Comfort*Link and ComfortVIEW™ controllers.
13. Shall have built-in support for Carrier technician tool.
14. Software upgrades will be accomplished by local download. Software upgrades through chip replacements are not allowed.
15. Shall be shock resistant in all planes to 5G peak, 11ms during operation, and 100G peak, 11ms during storage.
16. Shall be vibration resistant in all planes to 1.5G at 20-300 Hz.

* LonWorks is a registered trademark of Echelon Corporation.

17. Shall support a bus length of 4000 ft (1219 m) max, 60 devices per 1000 ft (305 m) section, and 1 RS-485 repeater per 1000 ft (305 m) sections.

B. (23 09 23.13.B.) RTU Open protocol, direct digital controller:

1. Shall be ASHRAE 62 compliant.
2. Shall accept 18-30VAC, 50-60Hz, and consume 15VA or less power.
3. Shall have an operating temperature range from -40°F (-40°C) to 130°F (54°C), 10% to 90% RH (non-condensing).
4. Shall include built-in protocol for BACnet† (MS/TP and PTP modes), Modbus** (RTU and ASCII), Johnson N2 and LonWorks. LonWorks Echelon processor required for all Lon applications shall be contained in separate communication board.
5. Shall allow access of up to 62 network variables (SNVT). Shall be compatible with all open controllers.
6. Baud rate controller shall be selectable using a dip switch.
7. Shall have an LED display independently showing the status of serial communication, running, errors, power, all digital outputs, and all analog inputs.
8. Shall accept the following inputs: space temperature, setpoint adjustment, outdoor air temperature, indoor air quality, outdoor air quality, compressor lockout, fire shutdown, enthalpy switch, and fan status / filter status / humidity / remote occupancy.
9. Shall provide the following outputs: economizer, variable frequency drive, fan, cooling stage 1, cooling stage 2, heat stage 1, heat stage 2, exhaust reversing valve/high fan speed.
10. Shall have built-in surge protection circuitry through solid-state polyswitches. Polyswitches shall be used on incoming power and network connections. Polyswitches will return to normal when the "trip" condition clears.
11. Shall have a battery backup capable of a minimum of 10,000 hours of data and time clock retention during power outages.
12. Shall have built-in support for Carrier technician tool.
13. Shall include an RS-485 protocol communication port, an access port for connection of either a computer or a Carrier technician tool, an RS-485 port for network communication to intelligent space sensors and displays, and a port to connect an optional LonWorks communications card.
14. Software upgrades will be accomplished by either local or remote download. No software upgrades through chip replacements are allowed.

Part 5 — (23 09 33) Electric and electronic control system for HVAC

5.01 (23 09 33.13) Decentralized, rooftop units:

A. (23 09 33.13.A) General:

1. Shall be complete with self-contained low-voltage control circuit protected by a resettable circuit breaker on the 24-v transformer side. Transformer shall have 75VA capability.
2. Shall utilize color-coded wiring.
3. Shall include a central control terminal board to conveniently and safely provide connection points for vital control functions such as: smoke detectors, phase monitor, economizer, thermostat, DDC control options, loss of charge, freeze switch, high pressure switches.
4. Unit shall include a minimum of one 8-pin screw terminal connection board for connection of control wiring.
5. Shall include integrated defrost system to prevent excessive frost accumulation during heating duty, and shall be controlled as follows:
   a. Defrost shall be initiated on the basis of time and coil temperature.
   b. A 30, 60, 90, 120 minute timer shall activate the defrost cycle only if the coil temperature is low enough to indicate a heavy frost condition.
   c. Defrost cycle shall terminate when defrost thermostat is satisfied and shall have a positive termination time of 10 minutes.
6. Defrost system shall also include:
   a. Defrost Cycle Indicator LED.
   b. Dip switch selectable defrost time between 30, 60, 90 and 120 minutes. Factory set at 30 minutes.
   c. Molded plug connection to insure proper connection.

B. (23 09 33.23.B) Safeties:

1. Compressor over-temperature, over-current.
2. Low-pressure switch:
   a. Units with 2 compressors shall have different sized connectors for the circuit 1 and circuit 2 loss of charge switches. They shall physically prevent the cross-wiring of the safety switches between circuits 1 and 2.
   b. Loss of charge switch shall use different color wire than the high pressure switch. The purpose is to assist the installer and service technician to correctly wire and/or troubleshoot the rooftop unit.

* LonWorks is a registered trademark of the Echelon Corporation.
† BACnet is a registered trademark of ASHRAE (American Society of Heating, Refrigerating and Air-Conditioning Engineers).
** Modbus is a registered trademark of Schneider Electric.

3. High-pressure switch:
   a. Units with 2 compressors shall have different sized connectors for the circuit 1 and circuit 2 high-pressure switches. They shall physically prevent the cross-wiring of the safety switches between circuits 1 and 2.
   b. High-pressure switch shall use different color wire than the low-pressure switch. The purpose is to assist the installer and service technician to correctly wire and/or troubleshoot the rooftop unit.
4. Freeze protection thermostat, evaporator coil.
5. Automatic reset, motor thermal overload protector.

Part 6 — (23 09 93) Sequence of operations for HVAC controls

6.01 (23 09 93.13) Decentralized, Rooftop Units:

A. (23 09 93.13.A) INSERT SEQUENCE OF OPERATION

Part 7 — (23 40 13) Panel air filters

7.01 (23 40 13 13) Decentralized rooftop units:

A. (23 40 13 13.A) Standard filter section:
   1. Shall consist of factory-installed, low velocity, throwaway 2-in. thick fiberglass filters of commercially available sizes.
   2. Unit shall use only one filter size. Multiple sizes are not acceptable.
   3. Filters shall be accessible through an access panel with "no-tool" removal as described in the unit cabinet section of this specification (23 81 19.13.G).

Part 8 — (23 81 19) Self-contained air conditioners

8.01 (23 81 19.13) Small-Capacity Self-Contained Air Conditioners (50HCQ*04-12):

A. (23 81 19.13.A) General:
   1. Outdoor, rooftop mounted, electrically controlled, heating and cooling unit utilizing hermetic scroll compressor(s) for cooling duty and heat pump for heating duty.
   2. Factory assembled, single piece heating and cooling rooftop unit. Contained within the unit enclosure shall be all factory wiring, piping, controls, and special features required prior to field start-up.
   3. Unit shall use Puron® (R-410A) refrigerant.
   4. Unit shall be installed in accordance with the manufacturer's instructions.
   5. Unit must be selected and installed in compliance with local, state, and federal codes.

B. (23 81 19.13.B.) Quality Assurance:
   1. Unit meets ASHRAE 90.1-2016 and IECC-2015 minimum efficiency requirements.
   2. Units are ENERGY STAR* certified (except for 04 single phase models).
   3. Unit shall be rated in accordance with AHRI Standards 210/240 and 340/360.
   4. Unit shall be designed to conform to ASHRAE 15.
   5. Unit shall be UL-tested and certified in accordance with ANSI Z21.47 Standards and UL or ETL-listed and certified under Canadian standards as a total package for safety requirements.
   6. Insulation and adhesive shall meet NFPA 90A requirements for flame spread and smoke generation.
   7. Unit internal insulation linings shall be resistant to mold growth in accordance with "mold growth and humidity" test in ASTM C1338, G21, and UL 181 or comparable test method. Air stream surfaces shall be evaluated in accordance with the "Erosion Test" in UL 181, as part of ASTM C1071.
   8. Unit casing shall be capable of withstanding 500-hour salt spray exposure per ASTM B117 (scribed specimen).
   9. Roof curb shall be designed to conform to NRCA Standards.
   10. Unit shall be subjected to a completely automated run test on the assembly line. The data for each unit will be stored at the factory, and must be available upon request.
   11. Unit shall be designed in accordance with UL Standard 1995, including tested to withstand rain.
   12. Unit shall be constructed to prevent intrusion of snow and tested to prevent snow intrusion into the control box up to 40 mph.
   13. Unit shake tested to assurance level 1, ASTM D4169 to ensure shipping reliability.
   14. High Efficiency Motors listed shall meet section 313 of the Energy Independence and Security Act of 2007 (EISA 2007).

8.02 (23 81 19.13.C) Delivery, storage, and handling:

A. Unit shall be stored and handled per manufacturer's recommendations.

B. Lifted by crane requires either shipping top panel or spreader bars.

C. Unit shall only be stored or positioned in the upright position.

8.03 (23 81 19.13.D) Project conditions:

As specified in the contract.

8.04 (23 81 19.13.D) Operating characteristics:

A. Unit shall be capable of starting and running at 125°F (52°C) ambient outdoor temperature, meeting maximum load criteria of AHRI Standard 210/240 or 340/360 at ± 10% voltage.

* ENERGY STAR is a registered trademark of the U.S. Environmental Protection Agency.

B. Compressor with standard controls shall be capable of operation down to 30°F (–1°C), ambient outdoor temperatures. Accessory Low Ambient controls are available if mechanically cooling at ambient temperatures below 30°F (–1°C).

C. Unit shall be capable of simultaneous heating duty and defrost cycle operation when using accessory electric heaters.

D. Unit shall discharge supply air vertically or horizontally as shown on contract drawings.

E. Unit shall be factory configured for vertical supply and return configurations.

F. Unit shall be field convertible from vertical to horizontal configuration. No special kits on 04-09 sizes. Size 12 model shall require a supply duct kit for field installation.

G. Unit shall be capable of mixed operation: vertical supply with horizontal return or horizontal supply with vertical return.

8.05 (23 81 19.13.F) Electrical Requirements:

A. Main power supply voltage, phase, and frequency must match those required by the manufacturer.

B. Control Panel SCCR (short circuit current rating): 5kA RMS at Rated Symmetrical Voltage.

8.06 (23 81 19.13.G) Unit cabinet:

A. Unit cabinet shall be constructed of galvanized steel, and shall be bonderized and coated with a prepainted baked enamel finish on all externally exposed surfaces.

B. Unit cabinet exterior paint shall be: film thickness, (dry) 0.003 inches minimum, gloss (per ASTM D523, 60°F): 60, Hardness: H-2H Pencil hardness.

C. Evaporator fan compartment interior cabinet insulation shall conform to AHRI Standards 210/240 or 340/360 minimum exterior sweat criteria. Interior surfaces shall be insulated with a minimum 1/2-in. thick, 1 lb density, flexible fiberglass insulation, neoprene coated on the air side. Aluminum foil-faced fiberglass insulation shall be used in the heat compartment.

D. Unit internal insulation linings shall be resistant to mold growth in accordance with "mold growth and humidity" test in ASTM C1338, G21, and UL 181 or comparable test method. Air stream surfaces shall be evaluated in accordance with the "Erosion Test" in UL 181, as part of ASTM C1071.

E. Base of unit shall have a minimum of three locations for thru-the-base electrical connections (factory-installed or field-installed), standard.

F. Base rail:

1. Unit shall have base rails on a minimum of 2 sides.
2. Holes shall be provided in the base rails for rigging shackles to facilitate maneuvering and overhead rigging.
3. Holes shall be provided in the base rail for moving the rooftop by fork truck.
4. Base rail shall be a minimum of 16-gauge thickness.

G. Condensate pan and connections:

1. Shall be a sloped condensate drain pan made of a non-corrosive material.
2. Shall comply with ASHRAE Standard 62.
3. Shall use a $^3/_4$-in. -14 NPT drain connection, possible either through the bottom or end of the drain pan. Connection shall be made per manufacturer's recommendations.

H. Top panel:

1. Shall be a single piece on all 04 to 09 models. Two piece on size 12 models.

I. Electrical connections:

1. All unit power wiring shall enter unit cabinet at a single, factory prepared, knockout location.
2. Thru-the-base capability.
   a. Standard unit shall have a thru-the-base electrical location(s) using a raised, embossed portion of the unit basepan.
   b. Optional, factory approved, watertight connection method must be used for thru-the-base electrical connections.
   c. No basepan penetration, other than those authorized by the manufacturer, is permitted.

J. Component access panels (standard):

1. Cabinet panels shall be easily removable for servicing.
2. Unit shall have one factory-installed, tool-less, removable, filter access panel.
3. Panels covering control box, indoor fan, indoor fan motor, and compressors shall have molded composite handles.
4. Handles shall be UV modified, composite, permanently attached, and recessed into the panel.
5. Screws on the vertical portion of all removable access panels shall engage into heat resistant, molded composite collars.
6. Collars shall be removable and easily replaceable using manufacturer recommended parts.

8.07 (23 81 19.13.H.) Coils:

A. Standard Aluminum/Copper Coils on all models:

1. Standard evaporator and condenser coils shall have aluminum lanced plate fins mechanically bonded to seamless internally grooved copper tubes with all joints brazed.
2. Evaporator coils shall be leak tested to 150 psig. Pressure tested to 450 psig and qualified to UL 1995 burst test at 1775 psig.
3. Condenser coils shall be leak tested to 150 psig. Pressure tested to 650 psig and qualified to UL 1995 burst test at 1980 psig.

B. Optional Pre-coated aluminum fin condenser coils on all models:
   1. Shall have a durable epoxy-phenolic coating to provide protection in mildly corrosive coastal environments.
   2. Coating shall be applied to the aluminum fin stock prior to the fin stamping process to create an inert barrier between the aluminum fin and copper tube.
   3. Epoxy-phenolic barrier shall minimize galvanic action between dissimilar metals.
   4. Corrosion durability of fin stock shall be confirmed through testing to be no less than 6000 hours salt spray per ASTM B117-90.
   5. Corrosion durability of fin stock shall be confirmed through testing to have no visible corrosion after 48 hour immersion in a room temperature solution of 5% salt, 1% acetic acid.
   6. Fin stock coating shall pass 2000 hours of the following: one week exposure in the prohesion chamber followed by one week of accelerated ultraviolet light testing. Prohesion chamber: the solution shall contain 3.5% sodium chloride and 0.35% ammonium sulfate. The exposure cycle is one hour of salt fog application at ambient followed by one hour drying at 95°F (35°C).

C. Optional Copper-fin evaporator and condenser coils on all models:
   1. Heat exchanger shall be of the tubular-section type constructed of a minimum of 20-gauge steel coated with a nominal 1.2-mil aluminum-silicone alloy to aid with corrosion resistance.
   2. Burners shall be of the inshot type constructed of aluminum-coated steel.
   3. Burners shall incorporate orifices for rated heat output up to 2000 ft (610 m) elevation. Additional accessory kits may be required for applications above 2000 ft (610 m) elevation, depending on local gas supply conditions.
   4. Each heat exchanger tube shall contain multiple dimples for increased heating effectiveness.

D. (23 81 19.13.I.) Coils:
   1. Standard aluminum fin/copper tube coils:
      a. Standard evaporator and condenser coils shall have aluminum lanced plate fins mechanically bonded to seamless internally grooved copper tubes with all joints brazed.
      b. Evaporator coils shall be leak tested to 150 psig, pressure tested to 450 psig, and qualified to UL 1995 burst test at 1775 psig.
      c. Condenser coils shall be leak tested to 150 psig, pressure tested to 650 psig, and qualified to UL 1995 burst test at 1980 psig.
   2. Optional Pre-coated aluminum fin condenser coils on all models:
      a. Shall have a durable epoxy-phenolic coating to provide protection in mildly corrosive coastal environments.
      b. Coating shall be applied to the aluminum fin stock prior to the fin stamping process to create an inert barrier between the aluminum fin and copper tube.
      c. Epoxy-phenolic barrier shall minimize galvanic action between dissimilar metals.
      d. Corrosion durability of fin stock shall be confirmed through testing to be no less than 6000 hours salt spray per ASTM B117-90.
      e. Corrosion durability of fin stock shall be confirmed through testing to have no visible corrosion after 48 hour immersion in a room temperature solution of 5% salt, 1% acetic acid.
      f. Fin stock coating shall pass 2000 hours of the following: one week exposure in the prohesion chamber followed by one week of accelerated ultraviolet light testing. Prohesion chamber: the solution shall contain 3.5% sodium chloride and 0.35% ammonium sulfate. The exposure cycle is one hour of salt fog application at ambient followed by one hour drying at 95°F (35°C).
   3. Optional Copper-fin evaporator and condenser coils on all models:
      a. Shall be constructed of copper fins mechanically bonded to copper tubes and copper tube sheets.
      b. Galvanized steel tube sheets shall not be acceptable.
      c. A polymer strip shall prevent coil assembly from contacting the sheet metal coil pan to minimize potential for galvanic corrosion between coil and pan.
   4. Optional E-coated aluminum-fin evaporator and condenser coils on all models:
      a. Shall have a flexible epoxy polymer coating uniformly applied to all coil surface areas without material bridging between fins.
      b. Coating process shall ensure complete coil encapsulation of tubes, fins and headers.
      c. Color shall be high gloss black with gloss per ASTM D523-89.
      d. Uniform dry film thickness from 0.8 to 1.2 mil on all surface areas including fin edges.
      e. Superior hardness characteristics of 2H per ASTM D3363-92A and cross-hatch adhesion of 4B-5B per ASTM D3359-93.
      f. Impact resistance shall be up to 160 in.-lb (ASTM D2794-93).
      g. Humidity and water immersion resistance shall be up to minimum 1000 and 250

hours respectively (ASTM D2247-92 and ASTM D870-92).

h. Corrosion durability shall be confirmed through testing to be no less than 6000 hours salt spray per ASTM B117-90.

E. (23 81 19.13.I) Refrigerant components:

1. Refrigerant circuit shall include the following control, safety, and maintenance features:
   a. Thermostatic Expansion Valve (TXV) shall help provide optimum performance across the entire operating range. Shall contain removable power element to allow change out of power element and bulb without removing the valve body.
   b. Refrigerant filter drier on each refrigerant circuit.
   c. Service gauge connections on suction and discharge lines.
   d. Pressure gauge access through a specially designed access port in the top panel of the unit.
   e. Suction line accumulator to provide protection in all operating modes from cooling, heating and reverse cycle switching. Standard on each refrigerant circuit.
2. There shall be gauge line access port in the top of the rooftop, covered by a black, removable plug.
   a. The plug shall be easy to remove and replace.
   b. When the plug is removed, the gauge access port shall enable maintenance personnel to route their pressure gauge lines.
   c. This gauge access port shall facilitate correct and accurate condenser pressure readings by enabling the reading with the compressor access panel on.
   d. The plug shall be made of a leak proof, UV-resistant, composite material.
3. Compressors:
   a. Unit shall use one fully hermetic, scroll compressor for each independent refrigeration circuit.
   b. Models shall be available with single compressor/single stage cooling designs on 04-07 models, single compressor/2-stage cooling on 07 size, and 2 compressor/2-stage cooling models on 08-12 sizes.
   c. Compressor motors shall be cooled by refrigerant gas passing through motor windings.
   d. Compressors shall be internally protected from high discharge temperature conditions.
   e. Compressors shall be protected from an overtemperature and over-amperage conditions by an internal, motor overload device.
   f. Compressor shall be factory mounted on rubber grommets.
   g. Compressor motors shall have internal line break thermal, current overload and high pressure differential protection.
   h. Crankcase heaters shall be utilized on all models to protect compressor with specific refrigerant charge.

F. (23 81 19.13.J) Filter section

1. Filters access is specified in the unit cabinet section of this specification.
2. Filters shall be held in place by a pivoting filter tray, facilitating easy removal and installation.
3. Shall consist of factory-installed, low velocity, throw-away 2-in. thick fiberglass filters.
4. Filters shall be standard, commercially available sizes.
5. Only one size filter per unit is allowed.

G. (23 81 19.13.K) Evaporator fan and motor:

1. Evaporator fan motor:
   a. Shall have permanently lubricated bearings.
   b. Shall have inherent automatic-reset thermal overload protection or circuit breaker.
   c. Shall have a maximum continuous bhp rating for continuous duty operation; no safety factors above that rating shall be required.
2. Electric Drive (Direct Drive) X13 – 5 Speed/ Torque Evaporator Fan:
   a. Multi-speed motor with easy quick adjustment settings.
   b. Blower fan shall be double- inlet type with forward-curved blades.
   c. Shall be constructed from steel with a corrosion resistant finish and dynamically balanced.
   d. Standard on all 04-06 models.
3. Belt-driven evaporator fan:
   a. Belt drive shall include an adjustable pitch motor pulley.
   b. Shall use sealed, permanently lubricated ball-bearing type.
   c. Blower fan shall be double inlet type with forward curved blades.
   d. Shall be constructed from steel with a corrosion resistant finish and dynamically balanced.
   e. Standard on all 07-12 size models. Optional on all 04-06 3-phase models.

H. (23 81 19.13.L) Condenser Fans and Motors:

1. Condenser fan motors:
   a. Shall be a totally enclosed motor.
   b. Shall use permanently lubricated bearings.
   c. Shall have inherent thermal overload protection with an automatic reset feature.

d. Shall use a shaft down design on all sizes.

2. Condenser fans:

a. Shall be a direct driven propeller type fan.

b. Shall have aluminum blades riveted to corrosion resistant steel spiders and shall be dynamically balanced.

I. (23 81 19.13.M.) Special features, options, and accessories:

1. Staged Air Volume System (SAV™) for 2-stage cooling models only:

a. Evaporator fan motor:

1) Shall have permanently lubricated bearings.

2) Shall have a maximum continuous bhp rating for continuous duty operation; no safety factors above that rating.

3) Shall be Variable Frequency duty and 2-speed control.

4) Shall contain motor shaft grounding ring to prevent electrical bearing fluting damage by safely diverting harmful shaft voltages and bearing currents to ground.

2. Variable frequency drive (VFD). Only available on 2-speed indoor fan motor option (SAV):

a. Factory-supplied VFDs qualify, through ABB for a 12-month warranty from date of commissioning or 18 months from date of sale, whichever occurs first.

b. Shall be installed inside the unit cabinet, mounted, wired and tested.

c. Shall contain Electromagnetic Interference (EMI) frequency protection.

d. Insulated Gate Bi-Polar Transistors (IGBT) used to produce the output pulse width modulated (PWM) waveform, allowing for quiet motor operation.

e. Self diagnostics with fault and power code LED indicator. Field accessory Display Kit available for further diagnostics and special setup applications.

f. RS485 capability standard.

g. Electronic thermal overload protection.

h. 5% swinging chokes for harmonic reduction and improved power factor.

i. All printed circuit boards shall be conformal coated.

3. Integrated EconoMi$er® IV, EconoMi$er 2, and EconoMi$er X standard leak rate models. (Factory-installed on 3-phase models only. Field installed on all 3 and 1-phase models):

a. Integrated, gear driven opposing modulating blade design type capable of simultaneous economizer and compressor operation.

b. Independent modules for vertical or horizontal return configuration shall be available. Vertical return modules shall be available as a factory-installed option.

c. Damper blades shall be galvanized steel with composite gears. Plastic or composite blades on intake or return shall not be acceptable.

d. Shall include all hardware and controls to provide free cooling with outdoor air when temperature and/or humidity are below setpoints.

e. Shall be equipped with gear driven dampers for both the outdoor ventilation air and the return air for positive air stream control.

f. Standard leak rate models shall be equipped with dampers not to exceed 2% leakage at 1 in. wg pressure differential.

g. Economizer controller on EconoMi$er IV models shall be Honeywell W7212 that provides:

1) Combined minimum and DCV maximum damper position potentiometers with compressor staging relay.

2) Functions with solid state analog enthalpy or dry bulb changeover control sensing.

3) LED indicators for: when free cooling is available, when module is in DCV mode, when exhaust fan contact is closed.

h. Economizer controller on EconoMi$er X models shall be the Honeywell W7220 that provides:

1) 2-line LCD interface screen for setup, configuration and troubleshooting.

2) On-board Fault Detection and Diagnostics (FDD) that senses and alerts when the economizer is not operating properly, per California Title 24.

3) Sensor failure loss of communication identification.

4) Automatic sensor detection.

5) Capabilities for use with multiple-speed indoor fan systems.

6) Utilize digital sensors: Dry bulb and Enthalpy.

i. Economizer controller on EconoMi$er 2 models with PremierLink™ controller shall be 4 to 20mA design and controlled by the PremierLink controller. PremierLink does not comply with California Title 24 Fault Detection and Diagnostic (FDD) requirements.

j. Economizer controller on EconoMi$er 2 models with RTU Open controller shall be a 4 to 20mA design controlled directly by the RTU Open controller. RTU Open controller meets California Title 24 Fault Detection and Diagnostic (FDD) requirements.

k. Shall be capable of introducing up to 100% outdoor air.

l. Shall be equipped with a barometric relief damper capable of relieving up to 100%

return air and contain seals that meet ASHRAE 90.1-2016 and IECC-2015 requirements.

m. Shall be designed to close damper(s) during loss-of-power situations with spring return built into motor.

n. Dry bulb outdoor air temperature sensor shall be provided as standard. Enthalpy sensor is also available on factory-installed only. Outdoor air sensor setpoint shall be adjustable and shall range from 40 to 100°F (4 to 38°C). Additional sensor options shall be available as accessories.

o. The economizer controller shall also provide control of an accessory power exhaust unit function. Factory set at 100%, with a range of 0% to 100%.

p. The economizer shall maintain minimum airflow into the building during occupied period and provide design ventilation rate for full occupancy.

q. Dampers shall be completely closed when the unit is in the unoccupied mode.

r. Economizer controller shall accept a 2 to 10 Vdc CO_2 sensor input for IAQ/DCV control. In this mode, dampers shall modulate the outdoor air damper to provide ventilation based on the sensor input.

s. Compressor lockout temperature on W7220 is adjustable from -45°F to 80°F, set at a factory default of 32°F. Others shall open at 35°F (2°C) and close at 50°F (10°C).

t. Actuator shall be direct coupled to economizer gear. No linkage arms or control rods shall be acceptable.

u. Economizer controller shall provide indications when in free cooling mode, in the DCV mode, or the exhaust fan contact is closed.

4. Integrated EconoMi$er2, and EconoMi$er X Ultra Low Leak rate models.(Factory-installed on 3 phase models only. Field-installed on all 3 and 1 phase models):

a. Integrated, gear driven opposing modulating blade design type capable of simultaneous economizer and compressor operation.

b. Independent modules for vertical or horizontal return configuration shall be available. Vertical return modules shall be available as a factory-installed option.

c. Damper blades shall be galvanized steel with composite gears. Plastic or composite blades on intake or return shall not be acceptable.

d. Shall include all hardware and controls to provide free cooling with outdoor air when temperature and/or humidity are below setpoints.

e. Shall be equipped with gear driven dampers for both the outdoor ventilation air and the return air for positive air stream control.

f. Ultra Low Leak design meets California Title 24 section 140.4 and, ASHRAE 90.1-2016 and IECC-2015 requirements for 4 cfm per sq ft on the outside air dampers and 10 cfm per sq ft on the return dampers.

g. Economizer controller on EconoMi$er X models shall be the Honeywell W7220 that provides:

1) 2-line LCD interface screen for setup, configuration and troubleshooting.
2) On-board Fault Detection and Diagnostics (FDD) that senses and alerts when the economizer is not operating properly, per California Title 24.
3) Sensor failure loss of communication identification.
4) Automatic sensor detection.
5) Capabilities for use with multiple-speed indoor fan systems.
6) Utilize digital sensors: Dry bulb and Enthalpy.

h. Economizer controller on EconoMi$er 2 models with RTU Open controller shall be a 4 to 20mA design controlled directly by the RTU Open controller. RTU Open controller meets California Title 24 Fault Detection and Diagnostic (FDD) requirements.

i. Shall be capable of introducing up to 100% outdoor air.

j. Shall be equipped with a barometric relief damper capable of relieving up to 100% return air and contain seals that meet ASHRAE 90.1-2016 and IECC-2015 requirements.

k. Shall be designed to close damper(s) during loss-of-power situations with spring return built into motor.

l. Dry bulb outdoor air temperature sensor shall be provided as standard. Enthalpy sensor is also available on factory-installed only. Outdoor air sensor setpoint shall be adjustable and shall range from 40 to 100°F (4 to 38°C). Additional sensor options shall be available as accessories.

m. The economizer controller shall also provide control of an accessory power exhaust unit function. Factory set at 100%, with a range of 0% to 100%.

n. The economizer shall maintain minimum airflow into the building during occupied period and provide design ventilation rate for full occupancy.

o. Dampers shall be completely closed when the unit is in the unoccupied mode.

p. Economizer controller shall accept a 2 to 10 Vdc CO_2 sensor input for IAQ/DCV control. In this mode, dampers shall modulate the outdoor air damper to provide ventilation based on the sensor input.

q. Compressor lockout temperature on W7220 is adjustable from -45°F to 80°F, set at a factory default of 32°F. Others shall open at 35°F (2°C) and closes at 50°F (10°C).

r. Actuator shall be direct coupled to economizer gear. No linkage arms or control rods shall be acceptable.

s. Economizer controller shall provide indications when in free cooling mode, in the DCV mode, or the exhaust fan contact is closed.

5. Two-Position Damper (Factory-installed on 3 Phase Models Only. Field-installed on all 3 and 1 Phase Models):

   a. Damper shall be a Two-Position Motorized Damper. Damper travel shall be from the full closed position to the field adjustable %-open setpoint.

   b. Damper shall include adjustable damper travel from 25% to 100% (full open).

   c. Damper shall include single or dual blade, gear driven dampers and actuator motor.

   d. Actuator shall be direct coupled to damper gear. No linkage arms or control rods shall be acceptable.

   e. Damper will admit up to 100% outdoor air for applicable rooftop units.

   f. Damper shall close upon indoor (evaporator) fan shutoff and/or loss of power.

   g. The damper actuator shall plug into the rooftop unit's wiring harness plug. No hard wiring shall be required.

   h. Outside air hood shall include aluminum water entrainment filter.

   i. Not available with Staged Air Volume (SAV™) models.

6. Manual damper:

   a. Manual damper package shall consist of damper, air inlet screen, and rain hood which can be preset to admit up to 50% outdoor air for year round ventilation.

   b. Not available with Staged Air Volume (SAV).

7. Head pressure control package (Motormaster®):

   a. Controller shall control coil head pressure by condenser fan speed modulation or condenser fan cycling and wind baffles.

   b. Shall consist of solid state control and condenser coil temperature sensor to maintain condensing temperature between 90°F (32°C) and 110°F (43°C) at outdoor ambient temperatures down to –20°F (–29°C).

8. Condenser Coil Hail Guard Assembly (Factory-installed option on 3 phase models. Field-installed on all 3 and 1 phase models):

   a. Shall protect against damage from hail.

   b. Shall be louvered style design.

9. Unit-mounted, non-fused disconnect switch:

   a. Switch shall be factory-installed, internally mounted.

   b. National Electric Code (NEC) and UL approved non-fused switch shall provide unit power shutoff.

   c. Shall be accessible from outside the unit.

   d. Shall provide local shutdown and lockout capability.

   e. Sized only for the unit as ordered from the factory. Does not accommodate field-installed devices.

10. Convenience outlet:

   a. Powered convenience outlet. (Not available on single phase models):

      1) Outlet shall be powered from main line power to the rooftop unit.
      2) Outlet shall be powered from line side or load side of disconnect by installing contractor, as required by code. If outlet is powered from load side of disconnect, unit electrical ratings shall be UL certified and rated for additional outlet amperage.
      3) Outlet shall be factory-installed and internally mounted with easily accessible 115-v female receptacle.
      4) Outlet shall include 15 amp GFI receptacles with independent fuse protection.
      5) Voltage required to operate convenience outlet shall be provided by a factory-installed step down transformer.
      6) Outlet shall be accessible from outside the unit.
      7) Outlet shall include a field-installed "Wet in Use" cover.

   b. Factory-Installed Non-powered convenience outlet.

      1) Outlet shall be powered from a separate 115-120v power source.
      2) A transformer shall not be included.
      3) Outlet shall be factory-installed and internally mounted with easily accessible 115-v female receptacle.
      4) Outlet shall include 15 amp GFI receptacles.
      5) Outlet shall be accessible from outside the unit.
      6) Outlet shall include a field-installed "Wet in Use" cover.

c. Field-Installed Non-powered convenience outlet.
   1) Outlet shall be powered from a separate 115-120v power source.
   2) A transformer shall not be included.
   3) Outlet shall be factory-installed and internally mounted with easily accessible 115-v female receptacle.
   4) Outlet shall include 20 amp GFI receptacles. This kit provides a flexible installation method which allows code compliance for height requirements of the GFCI outlet from the finished roof surface as well as the capability to relocate the outlet to a more convenient location.
   5) Outlet shall be accessible from outside the unit.
   6) Outlet shall include a field-installed "Wet in Use" cover.

11. Thru- the-base connectors:
    a. Kits shall provide connectors to permit electrical connections to be brought to the unit through the unit basepan.
    b. Minimum of three connection locations per unit.
12. Propeller power exhaust:
    a. Power exhaust shall be used in conjunction with an integrated economizer.
    b. Independent modules for vertical or horizontal return configurations shall be available.
    c. Horizontal power exhaust shall be mounted in return ductwork.
    d. Power exhaust shall be controlled by economizer controller operation. Exhaust fans shall be energized when dampers open past the 0 to 100% adjustable setpoint on the economizer control.
13. Roof curbs (vertical):
    a. Full perimeter roof curb with exhaust capability providing separate air streams for energy recovery from the exhaust air without supply air contamination.
    b. Formed galvanized steel with wood nailer strip and shall be capable of supporting entire unit weight.
    c. Permits installation and securing of ductwork to curb prior to mounting unit on the curb.
14. Medium and High Static Indoor Fan Motor(s) and Drive(s) (04-12):
    a. Medium and high static motor(s) and drive(s) shall be factory-installed to provide additional performance range.
15. Outdoor air enthalpy sensor:
    a. The outdoor air enthalpy sensor shall be used to provide single enthalpy control. When used in conjunction with a return air enthalpy sensor, the unit will provide differential enthalpy control. The sensor allows the unit to determine if outside air is suitable for free cooling.
16. Return air enthalpy sensor:
    a. The return air enthalpy sensor shall be used in conjunction with an outdoor air enthalpy sensor to provide differential enthalpy control.
17. Indoor air quality (CO_2) sensor:
    a. Shall be able to provide demand ventilation indoor air quality (IAQ) control.
    b. The IAQ sensor shall be available in duct mount, wall mount, or wall mount with LED display. The setpoint shall have adjustment capability.
18. Smoke detectors (factory-installed only):
    a. Shall be a four-wire controller and detector.
    b. Shall be environmental compensated with differential sensing for reliable, stable, and drift-free sensitivity.
    c. Shall use magnet-activated test/reset sensor switches.
    d. Shall have tool-less connection terminal access.
    e. Shall have a recessed momentary switch for testing and resetting the detector.
    f. Controller shall include:
       1) One set of normally open alarm initiation contacts for connection to an initiating device circuit on a fire alarm control panel.
       2) Two Form-C auxiliary alarm relays for interface with rooftop unit or other equipment.
       3) One Form-C supervision (trouble) relay to control the operation of the Trouble LED on a remote test/reset station.
       4) Capable of direct connection to two individual detector modules.
       5) Can be wired to up to 14 other duct smoke detectors for multiple fan shutdown applications.
19. Horn/Strobe Annunciator:
    a. Provides an audible/visual signaling device for use with factory-installed option or field-installed accessory smoke detectors.
       1) Requires installation of a field-supplied 24-v transformer suitable for 4.2 VA (AC) or 3.0 VA (DC) per horn/strobe accessory.
       2) Requires field-supplied electrical box, North American 1-gang box, 2-in. (51 mm) x 4-in. (102 mm).
       3) Shall have a clear colored lens.

20. Time guard compressor delay control circuit:
    a. Shall prevent compressor short cycling by providing a 5-minute delay (±2 minutes) before restarting a compressor after shut-down for any reason.
    b. One device shall be required per compressor.
21. Condensate Overflow Switch (for units with electro-mechanical controls only):
    a. This sensor and related controller monitors the condensate level in the drain pan and shuts down compression operation when overflow conditions occur. It includes:
        1) Indicator light - solid red (more than 10 seconds on water contact - compressors disabled), blinking red (sensor disconnected).
        2) 10 second delay to break - eliminates nuisance trips from splashing or waves in pan (sensor needs 10 seconds of constant water contact before tripping).
        3) Disables the compressor(s) operation when condensate plug is detected, but still allows fans to run for economizer.
22. Electric Heat:
    a. Heating Section
        1) Heater element open coil resistance wire, nickel-chrome alloy, 0.29 inches inside diameter, strung through ceramic insulators mounted on metal frame. Coil ends are staked and welded to terminal screw slots.
        2) Heater assemblies are provided with integral fusing in the single point box (if applicable) for protection of internal heater circuits not exceeding 48 amps each. Electric heaters other than CRHEATER113B00-116B00 use 24v control side break/auto-reset or line-break/auto-reset limit switches to protect the unit against over-temperature situations. CRHEATER113B00-116B00 electric heater applications use a combination of 24v control side break/auto-reset, line-break/non-resettable "one shot" limit switches to protect the unit against over-temperature situations. All heaters use magnetic heater contactors (24 v coil) and terminal block all mounted in electric heater control box (minimum 18 ga galvanized steel) attached to end of heater assembly.
23. Hinged Access panels:
    a. Shall provide easy access through integrated quarter turn latches.
    b. Shall be on major panels of filter, control box, fan motor and compressor.
24. Display kit for variable frequency drive:
    a. Kit allows the ability to access the VFD controller programs to provide special setup capabilities and diagnostics.
    b. Kit contains display module and communication cable.
    c. Display kit can be permanently installed in the unit or used on any SAV system VFD controller as needed.

Appendix F

FHWA Traffic Noise Model Results

FHWA RD-77-108

Traffic Noise Prediction Model

Predicted Noise Levels

Project Name : Chicago and Van Buren Commercial Development
Project Number : 18-06640
Modeled Condition : Existing plus Project
Assessment Metric: Hard

		Segment		Noise Levels, dBA Hard				Distance to Traffic Noise Level Contours, Feet					
Segment	Roadway	From	To	Auto	MT	HT	Total	75 dB	70 dB	65 dB	60 dB	55 dB	50 dB
1	Van Buren Boulevard (Existing)	Chicago Avenue	Little Court	74.5	55.2	65.5	75	41	129	409	1,294	4,093	12,944
2	Chicago Avenue (Existing)	Van Buren Boulevard	Iris Avenue	39.6	0.0	0.0	40	0	0	0	0	1	2
3	Van Buren Boulevard (Existing+Project)	Chicago Avenue	Little Court	74.7	55.4	65.6	75	42	132	419	1,325	4,189	13,245
4	Chicago Avenue (Existing+Project)	Van Buren Boulevard	Iris Avenue	43.7	0.0	0.0	44	0	0	0	0	1	5