Appendix H

Preliminary Drainage Report
(November 12, 2020)

DRAINAGE REPORT

For

Encompass Health Hospital

517 Shinohara Lane

Chula Vista, CA 91911

Prepared for:

Encompass Health

9001 Liberty Parkway

Birmingham, Alabama 35242

Prepared by:

APD Consultants, Inc.

22362 Gilberto, Suite # 245

Rancho Santa Margarita, CA 92688

(949) 336-6336

Robbie Mahmood, P.E.

Principal

Prepared date:

June 30, 2019

Revised date: November 12, 2020

Page Number

Section 1 – Executive Summary **1**

1.1 Introduction
1.2 Summary of Existing Condition
1.3 Summary of Proposed Condition
1.4 Off-site Drainage
1.5 Flood Zone
1.6 Summary of Results

Section 2 – 100 Year Peak Flow Results (Q_{100}) **7**

2.1 Q_{100} for Existing Condition
2.2 Q_{100} for Proposed Development

Section 3 – Detention Basin Requirements and Calculations **8**

Section 4 – Hydrology Maps **9**

4.1 Existing Condition Hydrology Map
4.2 Proposed Development Hydrology Map

Section 5 – 3' Wide Concrete Channel Hydraulics **10**

Section 6 – Catch Basin and Piping Hydraulics **11**

Section 7 – References **12**

7.1 Soil's Report
7.2 100-year 6-hr Precipitation Map

Section 1 – Executive Summary

1.1 Introduction

The proposed Encompass Health Hospital development site is located in an undeveloped parcel in Chula Vista, CA. The property lot is somewhat rectangular in shape and surrounded by existing Commercial buildings to the east and south, and existing residential development to the north and west of the property.

The owner plans to construct a one story Hospital building of roughly 130,000 sf building footprint, parking lots, loading docks, wet and dry utilities and other related construction.

The purpose of this report is to 1) quantify the onsite storm water discharge rate for 100-year storm event, 2) quantify the 100-year 6-hr peak flow and storm volume using the synthetic unit hydrograph, 3) attenuate the peak flow of the developed to that of the existing condition 4) confirm that the storm drain system are capable of intercepting and conveying the 100-year storm.

1.2 Summary of Existing Condition

Project site is undeveloped. Figure 1 presents the project site and location of the site. Figure 2 presents the existing condition of the site and the existing site condition surrounding the project site. Historical information gathered as shown in the Geotechnical Report, Page 5, dated March 25, 2019, by Partner Engineering, shows that the property has some site improvements such has grading, drainage and hydroseeding.

The Project site generally drains in the southeast direction. Based on the geotechnical report, page 7, the groundwater is anticipated to be 40-85 feet below ground surface.

There are 2 existing concrete brow ditch. The 1st brow ditch is located off-site of the southerly boundary. It is a semi-circle about 1foot deep and it presently intercepts on-site flow. The stormwater conveyed in the semi-circle brow ditch will continue to flow to an existing brow ditch running north-south parallel to the

alley located south of the project. For the proposed condition of the project, new channels will be constructed to intercept and convey onsite flow. The 2nd brow ditch is located around the middle of the project and will be removed and disposed.

Figure 1

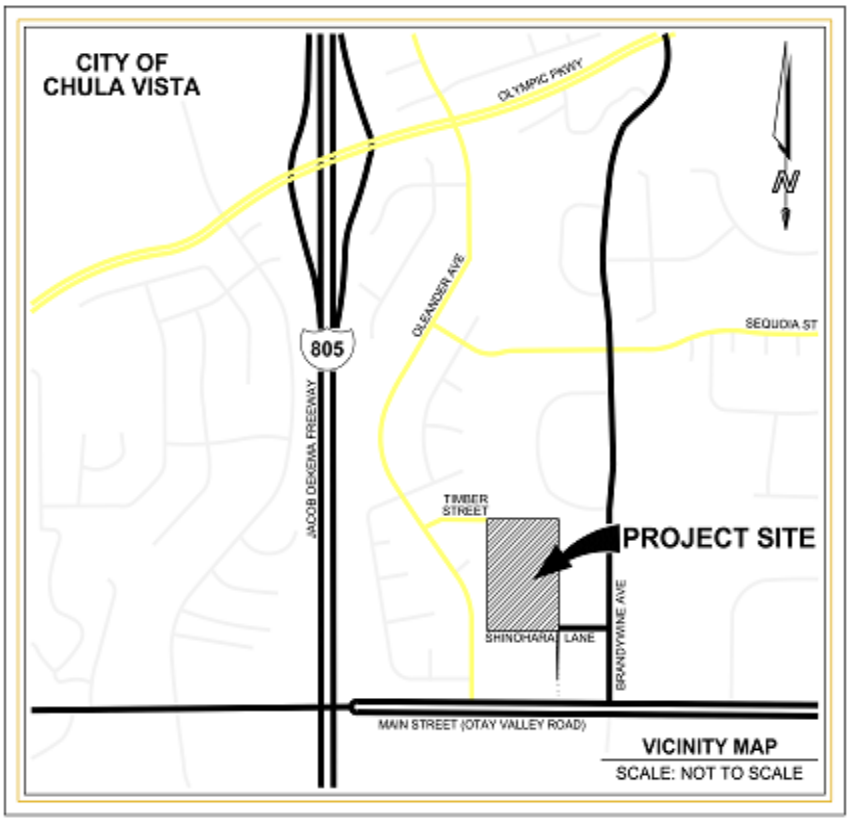

Vicinity Map

Figure 2

N.T.S.

LOCATION MAP

1.3 Summary of Proposed Condition

The Developed Condition of the project will generally match the existing drainage condition of the project site. The runoff for the site will discharge southeast of the site through proposed local storm drain system.

In the proposed condition, the off-site brow ditch will not be utilized. Instead, a proposed brow ditch type A SDR SD D-75 will be constructed on-site to intercept and convey flow from the site out to a proposed 176 ft of concrete rectangular channel, 3ft wide x 4.5 ft maximum height, along the alley. The channel is private and located between our property and the property to the east. Access and maintenance easement agreement will be prepared with adjacent property owner.

Outletting the proposed private channel, the stormwater will then continue to flow to Main St. thru existing concrete channel. An existing catch basin will capture flow from Main St. and stormwater will be conveyed via Storm drain pipe until it reaches Otay River.

Per preliminary discussion with the City, the project will match the existing 100 year storm for the site. This will be accomplished through proposed underground storage which will detail the flow to existing.

The site is found to be not favorable for infiltration structures. The project proposes to treat runoff through proposed Modular Wetland System. A separate report will be submitted to show compliance to Stormwater Treatment requirements.

1.4 Off-site Drainage

An existing off-site area of approximately 10,000 sf drains onto an existing on-site concrete ditch. The storm runoff from offsite area will then be conveyed through the proposed on-site storm drain system.

1.5 Flood Zone

Per Flood Insurance Rate Map No. 06073C2156G and 06073C2157G, Project Site lies in Flood Zone “X”. Flood Zone “X” designation is defined as, “Areas determined to be outside the 0.2% Annual Chance Flood Plan.” per FEMA website.

1.6 Summary of Results

Table 1 below summarized existing and proposed peak flows from the site.

The table shows the Pre and Post Development values generated from the Rational Analysis for the Peak Flows for 100-yeak storm. The Total post development results for the combined Upper and Lower Drainage Areas show a Total Peak flow of 32.7 cfs and the Pre Development Peak flow for the same area is 19.4 cfs. The Project will need to detain 13.3 cfs or greater Peak flow to match the Pre-developed Peak flow for 100 year storm.

The Unit Hydrograph for the Pre and Post Development shows a higher Storm Volume generated for Post Development. An excess of 9,480 cu-ft of storm water will need to be either infiltrated on-site or detained on-site. The project site is found to be infeasible for infiltration. Therefore, detention will be accomplished using underground storage with flow control.

Table 2 below shows the summary of pre development condition vs routed condition

The project site will need to match the pre-developed peak flow of 19.4 cfs. After providing an underground storage facilities with flow controls located at the parking lot, the project site was able to detain flow, decreasing the total flow of the site to 12.3 cfs. The orifice, 8”w x 7”H rectangular opening, will control flow out to less than the pre-developed condition. See detail of the Orifice Outlet at Junction Structure Detail in Section 3.

The project will provide Stormtech MC4500 underground storage. A total of 103 chambers, 22 end caps, 12” of rocks above and 36” rocks below will be provided for the MC4500 system. The bottom elevation of rocks is at 168.89 elevation and the bottom elevation of chambers will be at 171.59 elevation. The MC4500 will also hold the 1.5DCV of the site for treatment. A total of 9,372 cu-ft of 1.5DCV will be provided at a depth of 4.39 ft. A 12” pipe, along with the sub-drains, will be provided to convey the 1.5 DCV to the proposed Modular Wetland System for cleansing.

At a depth of 8.83 ft elevation, the orifice will begin to discharge at a maximum rate of 4.25 cfs which is less than the pre-development peak flow for 100-year storm. The Water Surface Elevation for the 100-year storm reaches 177.42 ft. elevation. A stage discharge table and MC4500 underground chamber details is provided in Section 3.

Table 1 – Summary of 100 –Year Peak Flows and Unit Hydrograph Volumes

	Pre Development	**Post Development**			**Required Detention**
		Upper Drainage Area	Lower Drainage Area	Total	
Q Peak flow (cfs)	19.4	24.7	8.0	32.7	13.3
Storm Volume (cu-ft)	63,501	45,963	27,018	72,981	9,480

Table 2 – Summary of 100 –Year Peak flows for pre development and routed flows

	Pre Development	**Post Development**		
		Routed Upper Drainage Area	Lower Drainage Area	Total
Q Peak flow (cfs)	19.4	4.3	8.0	12.3
Storm Volume (cu-ft)	63,501	-	-	-

Section 2 – 100 Year Peak Flow Results (Q_{100})

2.1 Q_{100} for Existing Development
2.2 Q_{100} for Proposed Development

```
____________________________________________________________________________
****************************************************************************

            RATIONAL METHOD HYDROLOGY COMPUTER PROGRAM PACKAGE
            Reference: SAN DIEGO COUNTY FLOOD CONTROL DISTRICT
                          2003,1985,1981 HYDROLOGY MANUAL
         (c) Copyright 1982-2003 Advanced Engineering Software (aes)





 ************************* DESCRIPTION OF STUDY *************************
* Encompass Health Chula Vista                                           *
* existing condition                                                     *
* 100 year storm                                                         *
 ************************************************************************

  FILE NAME: VISTAX.DAT
  TIME/DATE OF STUDY: 12:38 07/19/2020
----------------------------------------------------------------------------
  USER SPECIFIED HYDROLOGY AND HYDRAULIC MODEL INFORMATION:
----------------------------------------------------------------------------
  2003 SAN DIEGO MANUAL CRITERIA

  USER SPECIFIED STORM EVENT(YEAR) = 100.00
  6-HOUR DURATION PRECIPITATION (INCHES) =   2.500
  SPECIFIED MINIMUM PIPE SIZE(INCH) =  18.00
  SPECIFIED PERCENT OF GRADIENTS(DECIMAL) TO USE FOR FRICTION SLOPE = 0.95
  SAN DIEGO HYDROLOGY MANUAL "C"-VALUES USED FOR RATIONAL METHOD
  NOTE: CONSIDER ALL CONFLUENCE STREAM COMBINATIONS
        FOR ALL DOWNSTREAM ANALYSES
  *USER-DEFINED STREET-SECTIONS FOR COUPLED PIPEFLOW AND STREETFLOW MODEL*
     HALF-  CROWN TO   STREET-CROSSFALL:   CURB  GUTTER-GEOMETRIES:  MANNING
     WIDTH  CROSSFALL  IN-  / OUT-/PARK-  HEIGHT  WIDTH  LIP   HIKE  FACTOR
NO.   (FT)     (FT)    SIDE / SIDE/ WAY    (FT)    (FT)  (FT)  (FT)    (n)
===  =====  =========  =================  ======  ===== ====== ===== =======
  1   30.0     20.0    0.018/0.018/0.020   0.67    2.00 0.0313 0.167 0.0150

  GLOBAL STREET FLOW-DEPTH CONSTRAINTS:
    1. Relative Flow-Depth =  0.00 FEET
       as (Maximum Allowable Street Flow D00epth) - (Top-of-Curb)
    2. (Depth)*(Velocity) Constraint =  6.0 (FT*FT/S)
  *SIZE PIPE WITH A FLOW CAPACITY GREATER THAN
   OR EQUAL TO THE UPSTREAM TRIBUTARY PIPE.*

****************************************************************************
  FLOW PROCESS FROM NODE      1.00 TO NODE      2.00 IS CODE =  21
----------------------------------------------------------------------------
  >>>>>RATIONAL METHOD INITIAL SUBAREA ANALYSIS<<<<<
============================================================================
  OPEN BRUSH FAIR COVER RUNOFF COEFFICIENT = .3500
  SOIL CLASSIFICATION IS "D"
  S.C.S. CURVE NUMBER (AMC II) =  83
  INITIAL SUBAREA FLOW-LENGTH(FEET) =   998.00
  UPSTREAM ELEVATION(FEET) =    254.00
  DOWNSTREAM ELEVATION(FEET) =    152.00
  ELEVATION DIFFERENCE(FEET) =    102.00
  SUBAREA OVERLAND TIME OF FLOW(MIN.) =    6.267
  WARNING: INITIAL SUBAREA FLOW PATH LENGTH IS GREATER THAN
           THE MAXIMUM OVERLAND FLOW LENGTH =   100.00
           (Reference: Table 3-1B of Hydrology Manual)
           THE MAXIMUM OVERLAND FLOW LENGTH IS USED IN Tc CALCULATION!
   100 YEAR RAINFALL INTENSITY(INCH/HOUR) =  5.694
  SUBAREA RUNOFF(CFS) =     19.13
  TOTAL AREA(ACRES) =      9.60   TOTAL RUNOFF(CFS) =     19.13
============================================================================
  END OF STUDY SUMMARY:
  TOTAL AREA(ACRES)     =      9.60  TC(MIN.) =      6.27
```

```
  PEAK FLOW RATE(CFS)   =     19.13
============================================================================
============================================================================
  END OF RATIONAL METHOD ANALYSIS
```

```
****************************************************************************

            RATIONAL METHOD HYDROLOGY COMPUTER PROGRAM PACKAGE
            Reference: SAN DIEGO COUNTY FLOOD CONTROL DISTRICT
                          2003,1985,1981 HYDROLOGY MANUAL
        (c) Copyright 1982-2003 Advanced Engineering Software (aes)




 ************************** DESCRIPTION OF STUDY **************************
* Encompass Health Chula Vista                                             *
* 100-year storm                                                           *
*                                                                          *
 ****************************************************************************

  FILE NAME: VISTA.DAT
  TIME/DATE OF STUDY: 19:29 07/18/2020
----------------------------------------------------------------------------
  USER SPECIFIED HYDROLOGY AND HYDRAULIC MODEL INFORMATION:
----------------------------------------------------------------------------
  2003 SAN DIEGO MANUAL CRITERIA

  USER SPECIFIED STORM EVENT(YEAR) = 100.00
  6-HOUR DURATION PRECIPITATION (INCHES) =   2.300
  SPECIFIED MINIMUM PIPE SIZE(INCH) =  18.00
  SPECIFIED PERCENT OF GRADIENTS(DECIMAL) TO USE FOR FRICTION SLOPE = 0.95
  SAN DIEGO HYDROLOGY MANUAL "C"-VALUES USED FOR RATIONAL METHOD
  NOTE: CONSIDER ALL CONFLUENCE STREAM COMBINATIONS
        FOR ALL DOWNSTREAM ANALYSES
  *USER-DEFINED STREET-SECTIONS FOR COUPLED PIPEFLOW AND STREETFLOW MODEL*
     HALF-  CROWN TO   STREET-CROSSFALL:   CURB  GUTTER-GEOMETRIES:  MANNING
     WIDTH  CROSSFALL  IN-  / OUT-/PARK-  HEIGHT  WIDTH  LIP   HIKE  FACTOR
NO.   (FT)     (FT)    SIDE / SIDE/ WAY    (FT)    (FT)  (FT)  (FT)    (n)
===  =====  =========  =================  ======  ===== ====== ===== =======
  1   30.0     20.0    0.018/0.018/0.020   0.67    2.00 0.0313 0.167 0.0150

  GLOBAL STREET FLOW-DEPTH CONSTRAINTS:
    1. Relative Flow-Depth =  0.00 FEET
       as (Maximum Allowable Street Flow Depth) - (Top-of-Curb)
    2. (Depth)*(Velocity) Constraint =  6.0 (FT*FT/S)
  *SIZE PIPE WITH A FLOW CAPACITY GREATER THAN
   OR EQUAL TO THE UPSTREAM TRIBUTARY PIPE.*

****************************************************************************
  FLOW PROCESS FROM NODE      1.00 TO NODE      2.00 IS CODE =  21
----------------------------------------------------------------------------
  >>>>>RATIONAL METHOD INITIAL SUBAREA ANALYSIS<<<<<
============================================================================
  OPEN BRUSH FAIR COVER RUNOFF COEFFICIENT = .3500
  SOIL CLASSIFICATION IS "D"
  S.C.S. CURVE NUMBER (AMC II) =  83
  INITIAL SUBAREA FLOW-LENGTH(FEET) =   283.00
  UPSTREAM ELEVATION(FEET) =    257.00
  DOWNSTREAM ELEVATION(FEET) =    223.00
  ELEVATION DIFFERENCE(FEET) =     34.00
  SUBAREA OVERLAND TIME OF FLOW(MIN.) =    6.267
  WARNING: INITIAL SUBAREA FLOW PATH LENGTH IS GREATER THAN
           THE MAXIMUM OVERLAND FLOW LENGTH =   100.00
           (Reference: Table 3-1B of Hydrology Manual)
           THE MAXIMUM OVERLAND FLOW LENGTH IS USED IN Tc CALCULATION!
   100 YEAR RAINFALL INTENSITY(INCH/HOUR) =  5.239
  SUBAREA RUNOFF(CFS) =      0.48
  TOTAL AREA(ACRES) =      0.26   TOTAL RUNOFF(CFS) =      0.48

****************************************************************************
  FLOW PROCESS FROM NODE      2.00 TO NODE      5.00 IS CODE =  51
----------------------------------------------------------------------------
  >>>>>COMPUTE TRAPEZOIDAL CHANNEL FLOW<<<<<
```

```
  >>>>>TRAVELTIME THRU SUBAREA (EXISTING ELEMENT)<<<<<
============================================================================
  ELEVATION DATA: UPSTREAM(FEET) =    223.00  DOWNSTREAM(FEET) =    194.50
  CHANNEL LENGTH THRU SUBAREA(FEET) =    64.00   CHANNEL SLOPE =  0.4453
  CHANNEL BASE(FEET) =    0.00   "Z" FACTOR =   2.000
  MANNING'S FACTOR = 0.015   MAXIMUM DEPTH(FEET) =   2.00
  CHANNEL FLOW THRU SUBAREA(CFS) =      0.48
  FLOW VELOCITY(FEET/SEC.) =  10.91   FLOW DEPTH(FEET) =   0.15
  TRAVEL TIME(MIN.) =   0.10   Tc(MIN.) =   6.36
  LONGEST FLOWPATH FROM NODE      1.00 TO NODE      5.00 =   347.00 FEET.

****************************************************************************
  FLOW PROCESS FROM NODE      5.00 TO NODE      5.00 IS CODE =   1
----------------------------------------------------------------------------
  >>>>>DESIGNATE INDEPENDENT STREAM FOR CONFLUENCE<<<<<
============================================================================
  TOTAL NUMBER OF STREAMS =  2
  CONFLUENCE VALUES USED FOR INDEPENDENT STREAM  1 ARE:
  TIME OF CONCENTRATION(MIN.) =   6.36
  RAINFALL INTENSITY(INCH/HR) =   5.19
  TOTAL STREAM AREA(ACRES) =     0.26
  PEAK FLOW RATE(CFS) AT CONFLUENCE =      0.48

****************************************************************************
  FLOW PROCESS FROM NODE      5.10 TO NODE      5.00 IS CODE =  21
----------------------------------------------------------------------------
  >>>>>RATIONAL METHOD INITIAL SUBAREA ANALYSIS<<<<<
============================================================================
  OPEN BRUSH FAIR COVER RUNOFF COEFFICIENT = .3500
  SOIL CLASSIFICATION IS "D"
  S.C.S. CURVE NUMBER (AMC II) =  83
  INITIAL SUBAREA FLOW-LENGTH(FEET) =   253.00
  UPSTREAM ELEVATION(FEET) =    234.00
  DOWNSTREAM ELEVATION(FEET) =    194.50
  ELEVATION DIFFERENCE(FEET) =     39.50
  SUBAREA OVERLAND TIME OF FLOW(MIN.) =    6.267
  WARNING: INITIAL SUBAREA FLOW PATH LENGTH IS GREATER THAN
           THE MAXIMUM OVERLAND FLOW LENGTH =   100.00
           (Reference: Table 3-1B of Hydrology Manual)
           THE MAXIMUM OVERLAND FLOW LENGTH IS USED IN Tc CALCULATION!
   100 YEAR RAINFALL INTENSITY(INCH/HOUR) =  5.239
  SUBAREA RUNOFF(CFS) =      0.48
  TOTAL AREA(ACRES) =      0.26   TOTAL RUNOFF(CFS) =      0.48

****************************************************************************
  FLOW PROCESS FROM NODE      5.00 TO NODE      5.00 IS CODE =   1
----------------------------------------------------------------------------
  >>>>>DESIGNATE INDEPENDENT STREAM FOR CONFLUENCE<<<<<
  >>>>>AND COMPUTE VARIOUS CONFLUENCED STREAM VALUES<<<<<
============================================================================
  TOTAL NUMBER OF STREAMS =  2
  CONFLUENCE VALUES USED FOR INDEPENDENT STREAM  2 ARE:
  TIME OF CONCENTRATION(MIN.) =   6.27
  RAINFALL INTENSITY(INCH/HR) =   5.24
  TOTAL STREAM AREA(ACRES) =     0.26
  PEAK FLOW RATE(CFS) AT CONFLUENCE =      0.48

  ** CONFLUENCE DATA **
  STREAM     RUNOFF      Tc      INTENSITY      AREA
  NUMBER      (CFS)    (MIN.)   (INCH/HOUR)    (ACRE)
      1        0.48     6.36        5.187          0.26
      2        0.48     6.27        5.239          0.26

  RAINFALL INTENSITY AND TIME OF CONCENTRATION RATIO
  CONFLUENCE FORMULA USED FOR  2 STREAMS.

  ** PEAK FLOW RATE TABLE **
  STREAM     RUNOFF      Tc      INTENSITY
  NUMBER      (CFS)    (MIN.)   (INCH/HOUR)
      1        0.95     6.27       5.239
      2        0.95     6.36       5.187
```

```
  COMPUTED CONFLUENCE ESTIMATES ARE AS FOLLOWS:
  PEAK FLOW RATE(CFS) =      0.95   Tc(MIN.) =    6.36
  TOTAL AREA(ACRES) =      0.52
  LONGEST FLOWPATH FROM NODE      1.00 TO NODE      5.00 =   347.00 FEET.

****************************************************************************
  FLOW PROCESS FROM NODE      5.00 TO NODE      6.00 IS CODE =  31
----------------------------------------------------------------------------
  >>>>>COMPUTE PIPE-FLOW TRAVEL TIME THRU SUBAREA<<<<<
  >>>>>USING COMPUTER-ESTIMATED PIPESIZE (NON-PRESSURE FLOW)<<<<<
============================================================================
  ELEVATION DATA: UPSTREAM(FEET) =   190.00  DOWNSTREAM(FEET) =   188.09
  FLOW LENGTH(FEET) =    19.00   MANNING'S N =  0.013
  ESTIMATED PIPE DIAMETER(INCH) INCREASED TO 18.000
  DEPTH OF FLOW IN  18.0 INCH PIPE IS   2.1 INCHES
  PIPE-FLOW VELOCITY(FEET/SEC.) =   8.18
  ESTIMATED PIPE DIAMETER(INCH) =  18.00    NUMBER OF PIPES =   1
  PIPE-FLOW(CFS) =      0.95
  PIPE TRAVEL TIME(MIN.) =   0.04    Tc(MIN.) =   6.40
  LONGEST FLOWPATH FROM NODE      1.00 TO NODE      6.00 =   366.00 FEET.

****************************************************************************
  FLOW PROCESS FROM NODE      6.00 TO NODE      6.00 IS CODE =   1
----------------------------------------------------------------------------
  >>>>>DESIGNATE INDEPENDENT STREAM FOR CONFLUENCE<<<<<
============================================================================
  TOTAL NUMBER OF STREAMS =  2
  CONFLUENCE VALUES USED FOR INDEPENDENT STREAM  1 ARE:
  TIME OF CONCENTRATION(MIN.) =   6.40
  RAINFALL INTENSITY(INCH/HR) =   5.17
  TOTAL STREAM AREA(ACRES) =     0.52
  PEAK FLOW RATE(CFS) AT CONFLUENCE =      0.95

****************************************************************************
  FLOW PROCESS FROM NODE      6.10 TO NODE      6.20 IS CODE =  21
----------------------------------------------------------------------------
  >>>>>RATIONAL METHOD INITIAL SUBAREA ANALYSIS<<<<<
============================================================================
  OPEN BRUSH FAIR COVER RUNOFF COEFFICIENT = .3500
  SOIL CLASSIFICATION IS "D"
  S.C.S. CURVE NUMBER (AMC II) =  83
  INITIAL SUBAREA FLOW-LENGTH(FEET) =   185.00
  UPSTREAM ELEVATION(FEET) =    240.00
  DOWNSTREAM ELEVATION(FEET) =    206.50
  ELEVATION DIFFERENCE(FEET) =     33.50
  SUBAREA OVERLAND TIME OF FLOW(MIN.) =    6.267
  WARNING: INITIAL SUBAREA FLOW PATH LENGTH IS GREATER THAN
           THE MAXIMUM OVERLAND FLOW LENGTH =   100.00
           (Reference: Table 3-1B of Hydrology Manual)
           THE MAXIMUM OVERLAND FLOW LENGTH IS USED IN Tc CALCULATION!
   100 YEAR RAINFALL INTENSITY(INCH/HOUR) =  5.239
  SUBAREA RUNOFF(CFS) =      0.26
  TOTAL AREA(ACRES) =      0.14   TOTAL RUNOFF(CFS) =      0.26

****************************************************************************
  FLOW PROCESS FROM NODE      6.20 TO NODE      6.00 IS CODE =  31
----------------------------------------------------------------------------
  >>>>>COMPUTE PIPE-FLOW TRAVEL TIME THRU SUBAREA<<<<<
  >>>>>USING COMPUTER-ESTIMATED PIPESIZE (NON-PRESSURE FLOW)<<<<<
============================================================================
  ELEVATION DATA: UPSTREAM(FEET) =   204.00  DOWNSTREAM(FEET) =   188.09
  FLOW LENGTH(FEET) =   130.00   MANNING'S N =  0.013
  ESTIMATED PIPE DIAMETER(INCH) INCREASED TO 18.000
  DEPTH OF FLOW IN  18.0 INCH PIPE IS   1.1 INCHES
  PIPE-FLOW VELOCITY(FEET/SEC.) =   5.92
  ESTIMATED PIPE DIAMETER(INCH) =  18.00    NUMBER OF PIPES =   1
  PIPE-FLOW(CFS) =      0.26
  PIPE TRAVEL TIME(MIN.) =   0.37    Tc(MIN.) =   6.63
  LONGEST FLOWPATH FROM NODE      6.10 TO NODE      6.00 =   315.00 FEET.
```

```
****************************************************************************
  FLOW PROCESS FROM NODE      6.00 TO NODE      6.00 IS CODE =   1
----------------------------------------------------------------------------
  >>>>>DESIGNATE INDEPENDENT STREAM FOR CONFLUENCE<<<<<
  >>>>>AND COMPUTE VARIOUS CONFLUENCED STREAM VALUES<<<<<
============================================================================
  TOTAL NUMBER OF STREAMS =  2
  CONFLUENCE VALUES USED FOR INDEPENDENT STREAM  2 ARE:
  TIME OF CONCENTRATION(MIN.) =   6.63
  RAINFALL INTENSITY(INCH/HR) =   5.05
  TOTAL STREAM AREA(ACRES) =     0.14
  PEAK FLOW RATE(CFS) AT CONFLUENCE =      0.26

  ** CONFLUENCE DATA **
  STREAM     RUNOFF      Tc      INTENSITY      AREA
  NUMBER      (CFS)    (MIN.)   (INCH/HOUR)    (ACRE)
      1        0.95     6.31        5.218          0.52
      1        0.95     6.40        5.166          0.52
      2        0.26     6.63        5.050          0.14

  RAINFALL INTENSITY AND TIME OF CONCENTRATION RATIO
  CONFLUENCE FORMULA USED FOR  2 STREAMS.

  ** PEAK FLOW RATE TABLE **
  STREAM     RUNOFF      Tc      INTENSITY
  NUMBER      (CFS)    (MIN.)   (INCH/HOUR)
      1        1.19     6.31       5.218
      2        1.20     6.40       5.166
      3        1.18     6.63       5.050

  COMPUTED CONFLUENCE ESTIMATES ARE AS FOLLOWS:
  PEAK FLOW RATE(CFS) =      1.20   Tc(MIN.) =    6.40
  TOTAL AREA(ACRES) =      0.66
  LONGEST FLOWPATH FROM NODE      1.00 TO NODE      6.00 =   366.00 FEET.

****************************************************************************
  FLOW PROCESS FROM NODE      6.00 TO NODE      9.00 IS CODE =  31
----------------------------------------------------------------------------
  >>>>>COMPUTE PIPE-FLOW TRAVEL TIME THRU SUBAREA<<<<<
  >>>>>USING COMPUTER-ESTIMATED PIPESIZE (NON-PRESSURE FLOW)<<<<<
============================================================================
  ELEVATION DATA: UPSTREAM(FEET) =   188.09  DOWNSTREAM(FEET) =   182.82
  FLOW LENGTH(FEET) =    78.00   MANNING'S N =  0.013
  ESTIMATED PIPE DIAMETER(INCH) INCREASED TO 18.000
  DEPTH OF FLOW IN  18.0 INCH PIPE IS   2.6 INCHES
  PIPE-FLOW VELOCITY(FEET/SEC.) =   7.61
  ESTIMATED PIPE DIAMETER(INCH) =  18.00    NUMBER OF PIPES =   1
  PIPE-FLOW(CFS) =      1.20
  PIPE TRAVEL TIME(MIN.) =   0.17    Tc(MIN.) =   6.57
  LONGEST FLOWPATH FROM NODE      1.00 TO NODE      9.00 =   444.00 FEET.

****************************************************************************
  FLOW PROCESS FROM NODE      9.00 TO NODE      9.00 IS CODE =  10
----------------------------------------------------------------------------
  >>>>>MAIN-STREAM MEMORY COPIED ONTO MEMORY BANK # 1 <<<<<
============================================================================

****************************************************************************
  FLOW PROCESS FROM NODE      8.10 TO NODE      8.20 IS CODE =  21
----------------------------------------------------------------------------
  >>>>>RATIONAL METHOD INITIAL SUBAREA ANALYSIS<<<<<
============================================================================
  OPEN BRUSH FAIR COVER RUNOFF COEFFICIENT = .3500
  SOIL CLASSIFICATION IS "D"
  S.C.S. CURVE NUMBER (AMC II) =  83
  INITIAL SUBAREA FLOW-LENGTH(FEET) =   275.00
  UPSTREAM ELEVATION(FEET) =    257.27
  DOWNSTREAM ELEVATION(FEET) =    190.33
  ELEVATION DIFFERENCE(FEET) =     66.94
  SUBAREA OVERLAND TIME OF FLOW(MIN.) =    6.267
  WARNING: INITIAL SUBAREA FLOW PATH LENGTH IS GREATER THAN
```

```
          THE MAXIMUM OVERLAND FLOW LENGTH =   100.00
          (Reference: Table 3-1B of Hydrology Manual)
          THE MAXIMUM OVERLAND FLOW LENGTH IS USED IN Tc CALCULATION!
   100 YEAR RAINFALL INTENSITY(INCH/HOUR) =  5.239
  SUBAREA RUNOFF(CFS) =      0.79
  TOTAL AREA(ACRES) =      0.43   TOTAL RUNOFF(CFS) =      0.79

****************************************************************************
  FLOW PROCESS FROM NODE      8.20 TO NODE      8.00 IS CODE =  91
----------------------------------------------------------------------------
  >>>>>COMPUTE "V" GUTTER FLOW TRAVEL TIME THRU SUBAREA<<<<<
============================================================================
  UPSTREAM NODE ELEVATION(FEET) =    190.33
  DOWNSTREAM NODE ELEVATION(FEET) =    188.88
  CHANNEL LENGTH THRU SUBAREA(FEET) =   147.00
  "V" GUTTER WIDTH(FEET) =   3.00   GUTTER HIKE(FEET) =  0.120
  PAVEMENT LIP(FEET) =  0.030   MANNING'S N = .0150
  PAVEMENT CROSSFALL(DECIMAL NOTATION) = 0.01800
  MAXIMUM DEPTH(FEET) =   0.50
   100 YEAR RAINFALL INTENSITY(INCH/HOUR) =  4.717
  OFFICE PROFESSIONAL/COMMERCIAL RUNOFF COEFFICIENT = .8500
  SOIL CLASSIFICATION IS "D"
  S.C.S. CURVE NUMBER (AMC II) =  96
  TRAVEL TIME COMPUTED USING ESTIMATED FLOW(CFS) =      1.71
  TRAVEL TIME THRU SUBAREA BASED ON VELOCITY(FEET/SEC.) =   2.21
  AVERAGE FLOW DEPTH(FEET) =   0.22   FLOOD WIDTH(FEET) =   10.98
  "V" GUTTER FLOW TRAVEL TIME(MIN.) =   1.11   Tc(MIN.) =   7.37
  SUBAREA AREA(ACRES) =    0.46       SUBAREA RUNOFF(CFS) =    1.84
  AREA-AVERAGE RUNOFF COEFFICIENT =  0.608
  TOTAL AREA(ACRES) =      0.89         PEAK FLOW RATE(CFS) =       2.55

  END OF SUBAREA "V" GUTTER HYDRAULICS:
  DEPTH(FEET) =  0.25   FLOOD WIDTH(FEET) =   14.01
  FLOW VELOCITY(FEET/SEC.) =   2.29   DEPTH*VELOCITY(FT*FT/SEC) =   0.57
  LONGEST FLOWPATH FROM NODE      8.10 TO NODE      8.00 =   422.00 FEET.

****************************************************************************
  FLOW PROCESS FROM NODE      8.00 TO NODE      8.00 IS CODE =   1
----------------------------------------------------------------------------
  >>>>>DESIGNATE INDEPENDENT STREAM FOR CONFLUENCE<<<<<
============================================================================
  TOTAL NUMBER OF STREAMS =  2
  CONFLUENCE VALUES USED FOR INDEPENDENT STREAM  1 ARE:
  TIME OF CONCENTRATION(MIN.) =   7.37
  RAINFALL INTENSITY(INCH/HR) =   4.72
  TOTAL STREAM AREA(ACRES) =     0.89
  PEAK FLOW RATE(CFS) AT CONFLUENCE =      2.55

****************************************************************************
  FLOW PROCESS FROM NODE      8.30 TO NODE      8.00 IS CODE =  21
----------------------------------------------------------------------------
  >>>>>RATIONAL METHOD INITIAL SUBAREA ANALYSIS<<<<<
============================================================================
  OFFICE PROFESSIONAL/COMMERCIAL RUNOFF COEFFICIENT = .8500
  SOIL CLASSIFICATION IS "D"
  S.C.S. CURVE NUMBER (AMC II) =  96
  INITIAL SUBAREA FLOW-LENGTH(FEET) =   235.00
  UPSTREAM ELEVATION(FEET) =    201.70
  DOWNSTREAM ELEVATION(FEET) =    188.88
  ELEVATION DIFFERENCE(FEET) =     12.82
  SUBAREA OVERLAND TIME OF FLOW(MIN.) =    2.437
  WARNING: INITIAL SUBAREA FLOW PATH LENGTH IS GREATER THAN
          THE MAXIMUM OVERLAND FLOW LENGTH =    90.91
          (Reference: Table 3-1B of Hydrology Manual)
          THE MAXIMUM OVERLAND FLOW LENGTH IS USED IN Tc CALCULATION!
   100 YEAR RAINFALL INTENSITY(INCH/HOUR) =  6.060
  NOTE: RAINFALL INTENSITY IS BASED ON Tc = 5-MINUTE.
  SUBAREA RUNOFF(CFS) =      2.68
  TOTAL AREA(ACRES) =      0.52   TOTAL RUNOFF(CFS) =      2.68

****************************************************************************
```

```
  FLOW PROCESS FROM NODE      8.00 TO NODE      8.00 IS CODE =   1
----------------------------------------------------------------------------
  >>>>>DESIGNATE INDEPENDENT STREAM FOR CONFLUENCE<<<<<
  >>>>>AND COMPUTE VARIOUS CONFLUENCED STREAM VALUES<<<<<
============================================================================
  TOTAL NUMBER OF STREAMS =  2
  CONFLUENCE VALUES USED FOR INDEPENDENT STREAM  2 ARE:
  TIME OF CONCENTRATION(MIN.) =   2.44
  RAINFALL INTENSITY(INCH/HR) =   6.06
  TOTAL STREAM AREA(ACRES) =     0.52
  PEAK FLOW RATE(CFS) AT CONFLUENCE =      2.68

  ** CONFLUENCE DATA **
  STREAM     RUNOFF      Tc      INTENSITY      AREA
  NUMBER      (CFS)    (MIN.)   (INCH/HOUR)    (ACRE)
      1        2.55     7.37        4.717          0.89
      2        2.68     2.44        6.060          0.52

  RAINFALL INTENSITY AND TIME OF CONCENTRATION RATIO
  CONFLUENCE FORMULA USED FOR  2 STREAMS.

  ** PEAK FLOW RATE TABLE **
  STREAM     RUNOFF      Tc      INTENSITY
  NUMBER      (CFS)    (MIN.)   (INCH/HOUR)
      1        3.52     2.44       6.060
      2        4.64     7.37       4.717

  COMPUTED CONFLUENCE ESTIMATES ARE AS FOLLOWS:
  PEAK FLOW RATE(CFS) =      4.64   Tc(MIN.) =    7.37
  TOTAL AREA(ACRES) =      1.41
  LONGEST FLOWPATH FROM NODE      8.10 TO NODE      8.00 =   422.00 FEET.

****************************************************************************
  FLOW PROCESS FROM NODE      8.00 TO NODE      8.00 IS CODE =  81
----------------------------------------------------------------------------
  >>>>>ADDITION OF SUBAREA TO MAINLINE PEAK FLOW<<<<<
============================================================================
   100 YEAR RAINFALL INTENSITY(INCH/HOUR) =  4.717
  NEIGHBORHOOD COMMERCIAL RUNOFF COEFFICIENT = .7900
  SOIL CLASSIFICATION IS "D"
  S.C.S. CURVE NUMBER (AMC II) =  94
  AREA-AVERAGE RUNOFF COEFFICIENT = 0.7370
  SUBAREA AREA(ACRES) =    1.05   SUBAREA RUNOFF(CFS) =    3.91
  TOTAL AREA(ACRES) =      2.46   TOTAL RUNOFF(CFS) =    8.55
  TC(MIN.) =   7.37
  ** PEAK FLOW RATE TABLE **
  STREAM   RUNOFF       Tc
  NUMBER    (CFS)     (MIN.)
     1       10.99       2.44
     2        8.55       7.37
  NEW PEAK FLOW DATA ARE:
  PEAK FLOW RATE(CFS) =    10.99  Tc(MIN.) =   2.44

****************************************************************************
  FLOW PROCESS FROM NODE      8.00 TO NODE      9.00 IS CODE =  31
----------------------------------------------------------------------------
  >>>>>COMPUTE PIPE-FLOW TRAVEL TIME THRU SUBAREA<<<<<
  >>>>>USING COMPUTER-ESTIMATED PIPESIZE (NON-PRESSURE FLOW)<<<<<
============================================================================
  ELEVATION DATA: UPSTREAM(FEET) =   184.63  DOWNSTREAM(FEET) =   182.82
  FLOW LENGTH(FEET) =   167.00   MANNING'S N =  0.013
  DEPTH OF FLOW IN  21.0 INCH PIPE IS  12.7 INCHES
  PIPE-FLOW VELOCITY(FEET/SEC.) =   7.20
  ESTIMATED PIPE DIAMETER(INCH) =  21.00    NUMBER OF PIPES =   1
  PIPE-FLOW(CFS) =     10.99
  PIPE TRAVEL TIME(MIN.) =   0.39    Tc(MIN.) =   2.82
  LONGEST FLOWPATH FROM NODE      8.10 TO NODE      9.00 =   589.00 FEET.

****************************************************************************
  FLOW PROCESS FROM NODE      9.00 TO NODE      9.00 IS CODE =  11
----------------------------------------------------------------------------
```

```
  >>>>>CONFLUENCE MEMORY BANK # 1 WITH THE MAIN-STREAM MEMORY<<<<<
==============================================================================

  ** MAIN STREAM CONFLUENCE DATA **
  STREAM     RUNOFF     Tc      INTENSITY     AREA
  NUMBER      (CFS)   (MIN.)   (INCH/HOUR)   (ACRE)
      1       10.99     2.82       6.060        2.46
      2        8.55     7.79       4.553        2.46
  LONGEST FLOWPATH FROM NODE      8.10 TO NODE      9.00 =   589.00 FEET.

  ** MEMORY BANK #  1 CONFLUENCE DATA **
  STREAM     RUNOFF     Tc      INTENSITY     AREA
  NUMBER      (CFS)   (MIN.)   (INCH/HOUR)   (ACRE)
      1        1.19     6.48       5.128        0.66
      2        1.20     6.57       5.079        0.66
      3        1.18     6.80       4.967        0.66
  LONGEST FLOWPATH FROM NODE      1.00 TO NODE      9.00 =   444.00 FEET.

  ** PEAK FLOW RATE TABLE **
  STREAM    RUNOFF       Tc      INTENSITY
  NUMBER     (CFS)     (MIN.)   (INCH/HOUR)
      1      11.51       2.82        6.060
      2      10.49       6.48        5.128
      3      10.41       6.57        5.079
      4      10.19       6.80        4.967
      5       9.64       7.79        4.553

  COMPUTED CONFLUENCE ESTIMATES ARE AS FOLLOWS:
  PEAK FLOW RATE(CFS) =     11.51   Tc(MIN.) =    2.82
  TOTAL AREA(ACRES) =      3.12

****************************************************************************
  FLOW PROCESS FROM NODE      9.00 TO NODE      7.00 IS CODE =  31
----------------------------------------------------------------------------
  >>>>>COMPUTE PIPE-FLOW TRAVEL TIME THRU SUBAREA<<<<<
  >>>>>USING COMPUTER-ESTIMATED PIPESIZE (NON-PRESSURE FLOW)<<<<<
==============================================================================
  ELEVATION DATA: UPSTREAM(FEET) =   182.82  DOWNSTREAM(FEET) =   182.42
  FLOW LENGTH(FEET) =    45.00   MANNING'S N =  0.013
  DEPTH OF FLOW IN  21.0 INCH PIPE IS  14.1 INCHES
  PIPE-FLOW VELOCITY(FEET/SEC.) =   6.71
  ESTIMATED PIPE DIAMETER(INCH) =  21.00    NUMBER OF PIPES =   1
  PIPE-FLOW(CFS) =     11.51
  PIPE TRAVEL TIME(MIN.) =   0.11    Tc(MIN.) =   2.94
  LONGEST FLOWPATH FROM NODE      8.10 TO NODE      7.00 =   634.00 FEET.

****************************************************************************
  FLOW PROCESS FROM NODE      7.00 TO NODE      7.00 IS CODE =   1
----------------------------------------------------------------------------
  >>>>>DESIGNATE INDEPENDENT STREAM FOR CONFLUENCE<<<<<
==============================================================================
  TOTAL NUMBER OF STREAMS =  2
  CONFLUENCE VALUES USED FOR INDEPENDENT STREAM  1 ARE:
  TIME OF CONCENTRATION(MIN.) =   2.94
  RAINFALL INTENSITY(INCH/HR) =   6.06
  TOTAL STREAM AREA(ACRES) =     3.12
  PEAK FLOW RATE(CFS) AT CONFLUENCE =     11.51

****************************************************************************
  FLOW PROCESS FROM NODE      7.20 TO NODE      7.10 IS CODE =  21
----------------------------------------------------------------------------
  >>>>>RATIONAL METHOD INITIAL SUBAREA ANALYSIS<<<<<
==============================================================================
  OPEN BRUSH FAIR COVER RUNOFF COEFFICIENT = .3500
  SOIL CLASSIFICATION IS "D"
  S.C.S. CURVE NUMBER (AMC II) =  83
  INITIAL SUBAREA FLOW-LENGTH(FEET) =   220.00
  UPSTREAM ELEVATION(FEET) =    225.00
  DOWNSTREAM ELEVATION(FEET) =    190.13
  ELEVATION DIFFERENCE(FEET) =     34.87
  SUBAREA OVERLAND TIME OF FLOW(MIN.) =    6.267
```

```
  WARNING: INITIAL SUBAREA FLOW PATH LENGTH IS GREATER THAN
           THE MAXIMUM OVERLAND FLOW LENGTH =   100.00
           (Reference: Table 3-1B of Hydrology Manual)
           THE MAXIMUM OVERLAND FLOW LENGTH IS USED IN Tc CALCULATION!
   100 YEAR RAINFALL INTENSITY(INCH/HOUR) =  5.239
  SUBAREA RUNOFF(CFS) =      0.50
  TOTAL AREA(ACRES) =      0.27   TOTAL RUNOFF(CFS) =      0.50

****************************************************************************
  FLOW PROCESS FROM NODE      7.10 TO NODE      7.00 IS CODE =  31
----------------------------------------------------------------------------
  >>>>>COMPUTE PIPE-FLOW TRAVEL TIME THRU SUBAREA<<<<<
  >>>>>USING COMPUTER-ESTIMATED PIPESIZE (NON-PRESSURE FLOW)<<<<<
============================================================================
  ELEVATION DATA: UPSTREAM(FEET) =   186.78  DOWNSTREAM(FEET) =   182.42
  FLOW LENGTH(FEET) =    16.00   MANNING'S N =  0.013
  ESTIMATED PIPE DIAMETER(INCH) INCREASED TO 18.000
  DEPTH OF FLOW IN  18.0 INCH PIPE IS   1.2 INCHES
  PIPE-FLOW VELOCITY(FEET/SEC.) =   9.46
  ESTIMATED PIPE DIAMETER(INCH) =  18.00    NUMBER OF PIPES =   1
  PIPE-FLOW(CFS) =      0.50
  PIPE TRAVEL TIME(MIN.) =   0.03    Tc(MIN.) =   6.29
  LONGEST FLOWPATH FROM NODE      7.20 TO NODE      7.00 =   236.00 FEET.

****************************************************************************
  FLOW PROCESS FROM NODE      7.00 TO NODE      7.00 IS CODE =   1
----------------------------------------------------------------------------
  >>>>>DESIGNATE INDEPENDENT STREAM FOR CONFLUENCE<<<<<
  >>>>>AND COMPUTE VARIOUS CONFLUENCED STREAM VALUES<<<<<
============================================================================
  TOTAL NUMBER OF STREAMS =  2
  CONFLUENCE VALUES USED FOR INDEPENDENT STREAM  2 ARE:
  TIME OF CONCENTRATION(MIN.) =   6.29
  RAINFALL INTENSITY(INCH/HR) =   5.22
  TOTAL STREAM AREA(ACRES) =     0.27
  PEAK FLOW RATE(CFS) AT CONFLUENCE =      0.50

  ** CONFLUENCE DATA **
  STREAM     RUNOFF      Tc      INTENSITY      AREA
  NUMBER      (CFS)    (MIN.)   (INCH/HOUR)    (ACRE)
      1       11.51     2.94        6.060          3.12
      1       10.49     6.59        5.071          3.12
      1       10.41     6.69        5.023          3.12
      1       10.19     6.92        4.914          3.12
      1        9.64     7.91        4.508          3.12
      2        0.50     6.29        5.223          0.27

  RAINFALL INTENSITY AND TIME OF CONCENTRATION RATIO
  CONFLUENCE FORMULA USED FOR  2 STREAMS.

  ** PEAK FLOW RATE TABLE **
  STREAM     RUNOFF      Tc      INTENSITY
  NUMBER      (CFS)    (MIN.)   (INCH/HOUR)
      1       11.74     2.94       6.060
      2       10.68     6.29       5.223
      3       10.97     6.59       5.071
      4       10.88     6.69       5.023
      5       10.66     6.92       4.914
      6       10.06     7.91       4.508

  COMPUTED CONFLUENCE ESTIMATES ARE AS FOLLOWS:
  PEAK FLOW RATE(CFS) =     11.74   Tc(MIN.) =    2.94
  TOTAL AREA(ACRES) =      3.39
  LONGEST FLOWPATH FROM NODE      8.10 TO NODE      7.00 =   634.00 FEET.

****************************************************************************
  FLOW PROCESS FROM NODE      7.00 TO NODE     10.00 IS CODE =  31
----------------------------------------------------------------------------
  >>>>>COMPUTE PIPE-FLOW TRAVEL TIME THRU SUBAREA<<<<<
  >>>>>USING COMPUTER-ESTIMATED PIPESIZE (NON-PRESSURE FLOW)<<<<<
============================================================================
```

```
  ELEVATION DATA: UPSTREAM(FEET) =   182.42  DOWNSTREAM(FEET) =   179.89
  FLOW LENGTH(FEET) =   265.00   MANNING'S N =  0.013
  DEPTH OF FLOW IN  21.0 INCH PIPE IS  13.9 INCHES
  PIPE-FLOW VELOCITY(FEET/SEC.) =   6.93
  ESTIMATED PIPE DIAMETER(INCH) =  21.00    NUMBER OF PIPES =   1
  PIPE-FLOW(CFS) =     11.74
  PIPE TRAVEL TIME(MIN.) =   0.64    Tc(MIN.) =   3.57
  LONGEST FLOWPATH FROM NODE      8.10 TO NODE     10.00 =   899.00 FEET.

****************************************************************************
  FLOW PROCESS FROM NODE     10.00 TO NODE     10.00 IS CODE =   1
----------------------------------------------------------------------------
  >>>>>DESIGNATE INDEPENDENT STREAM FOR CONFLUENCE<<<<<
============================================================================
  TOTAL NUMBER OF STREAMS =  3
  CONFLUENCE VALUES USED FOR INDEPENDENT STREAM  1 ARE:
  TIME OF CONCENTRATION(MIN.) =   3.57
  RAINFALL INTENSITY(INCH/HR) =   6.06
  TOTAL STREAM AREA(ACRES) =     3.39
  PEAK FLOW RATE(CFS) AT CONFLUENCE =     11.74

****************************************************************************
  FLOW PROCESS FROM NODE     10.20 TO NODE     10.10 IS CODE =  21
----------------------------------------------------------------------------
  >>>>>RATIONAL METHOD INITIAL SUBAREA ANALYSIS<<<<<
============================================================================
  OPEN BRUSH FAIR COVER RUNOFF COEFFICIENT = .3500
  SOIL CLASSIFICATION IS "D"
  S.C.S. CURVE NUMBER (AMC II) =  83
  INITIAL SUBAREA FLOW-LENGTH(FEET) =   207.00
  UPSTREAM ELEVATION(FEET) =    204.00
  DOWNSTREAM ELEVATION(FEET) =    186.07
  ELEVATION DIFFERENCE(FEET) =     17.93
  SUBAREA OVERLAND TIME OF FLOW(MIN.) =    6.574
  WARNING: INITIAL SUBAREA FLOW PATH LENGTH IS GREATER THAN
           THE MAXIMUM OVERLAND FLOW LENGTH =   100.00
           (Reference: Table 3-1B of Hydrology Manual)
           THE MAXIMUM OVERLAND FLOW LENGTH IS USED IN Tc CALCULATION!
   100 YEAR RAINFALL INTENSITY(INCH/HOUR) =  5.079
  SUBAREA RUNOFF(CFS) =      0.21
  TOTAL AREA(ACRES) =      0.12   TOTAL RUNOFF(CFS) =      0.21

****************************************************************************
  FLOW PROCESS FROM NODE     10.10 TO NODE     10.00 IS CODE =   1
----------------------------------------------------------------------------
  >>>>>DESIGNATE INDEPENDENT STREAM FOR CONFLUENCE<<<<<
============================================================================
  TOTAL NUMBER OF STREAMS =  3
  CONFLUENCE VALUES USED FOR INDEPENDENT STREAM  2 ARE:
  TIME OF CONCENTRATION(MIN.) =   6.57
  RAINFALL INTENSITY(INCH/HR) =   5.08
  TOTAL STREAM AREA(ACRES) =     0.12
  PEAK FLOW RATE(CFS) AT CONFLUENCE =      0.21

****************************************************************************
  FLOW PROCESS FROM NODE     10.40 TO NODE     10.30 IS CODE =  21
----------------------------------------------------------------------------
  >>>>>RATIONAL METHOD INITIAL SUBAREA ANALYSIS<<<<<
============================================================================
  OFFICE PROFESSIONAL/COMMERCIAL RUNOFF COEFFICIENT = .8500
  SOIL CLASSIFICATION IS "D"
  S.C.S. CURVE NUMBER (AMC II) =  96
  INITIAL SUBAREA FLOW-LENGTH(FEET) =   392.00
  UPSTREAM ELEVATION(FEET) =    194.07
  DOWNSTREAM ELEVATION(FEET) =    188.71
  ELEVATION DIFFERENCE(FEET) =      5.36
  SUBAREA OVERLAND TIME OF FLOW(MIN.) =    3.235
  WARNING: INITIAL SUBAREA FLOW PATH LENGTH IS GREATER THAN
           THE MAXIMUM OVERLAND FLOW LENGTH =    63.67
           (Reference: Table 3-1B of Hydrology Manual)
           THE MAXIMUM OVERLAND FLOW LENGTH IS USED IN Tc CALCULATION!
```

```
   100 YEAR RAINFALL INTENSITY(INCH/HOUR) =  6.060
  NOTE: RAINFALL INTENSITY IS BASED ON Tc = 5-MINUTE.
  SUBAREA RUNOFF(CFS) =      1.91
  TOTAL AREA(ACRES) =      0.37   TOTAL RUNOFF(CFS) =      1.91

****************************************************************************
  FLOW PROCESS FROM NODE     10.30 TO NODE     10.30 IS CODE =  81
----------------------------------------------------------------------------
  >>>>>ADDITION OF SUBAREA TO MAINLINE PEAK FLOW<<<<<
============================================================================
   100 YEAR RAINFALL INTENSITY(INCH/HOUR) =  6.060
  NOTE: RAINFALL INTENSITY IS BASED ON Tc = 5-MINUTE.
  OFFICE PROFESSIONAL/COMMERCIAL RUNOFF COEFFICIENT = .8500
  SOIL CLASSIFICATION IS "D"
  S.C.S. CURVE NUMBER (AMC II) =  96
  AREA-AVERAGE RUNOFF COEFFICIENT = 0.8500
  SUBAREA AREA(ACRES) =    0.28   SUBAREA RUNOFF(CFS) =    1.44
  TOTAL AREA(ACRES) =      0.65   TOTAL RUNOFF(CFS) =    3.35
  TC(MIN.) =   3.24

****************************************************************************
  FLOW PROCESS FROM NODE     10.30 TO NODE     10.00 IS CODE =  31
----------------------------------------------------------------------------
  >>>>>COMPUTE PIPE-FLOW TRAVEL TIME THRU SUBAREA<<<<<
  >>>>>USING COMPUTER-ESTIMATED PIPESIZE (NON-PRESSURE FLOW)<<<<<
============================================================================
  ELEVATION DATA: UPSTREAM(FEET) =   180.48  DOWNSTREAM(FEET) =   179.89
  FLOW LENGTH(FEET) =     9.00   MANNING'S N =  0.013
  ESTIMATED PIPE DIAMETER(INCH) INCREASED TO 18.000
  DEPTH OF FLOW IN  18.0 INCH PIPE IS   4.3 INCHES
  PIPE-FLOW VELOCITY(FEET/SEC.) =  10.18
  ESTIMATED PIPE DIAMETER(INCH) =  18.00    NUMBER OF PIPES =   1
  PIPE-FLOW(CFS) =      3.35
  PIPE TRAVEL TIME(MIN.) =   0.01    Tc(MIN.) =   3.25
  LONGEST FLOWPATH FROM NODE     10.40 TO NODE     10.00 =   401.00 FEET.

****************************************************************************
  FLOW PROCESS FROM NODE     10.00 TO NODE     10.00 IS CODE =   1
----------------------------------------------------------------------------
  >>>>>DESIGNATE INDEPENDENT STREAM FOR CONFLUENCE<<<<<
  >>>>>AND COMPUTE VARIOUS CONFLUENCED STREAM VALUES<<<<<
============================================================================
  TOTAL NUMBER OF STREAMS =  3
  CONFLUENCE VALUES USED FOR INDEPENDENT STREAM  3 ARE:
  TIME OF CONCENTRATION(MIN.) =   3.25
  RAINFALL INTENSITY(INCH/HR) =   6.06
  TOTAL STREAM AREA(ACRES) =     0.65
  PEAK FLOW RATE(CFS) AT CONFLUENCE =      3.35

  ** CONFLUENCE DATA **
  STREAM     RUNOFF      Tc      INTENSITY      AREA
  NUMBER      (CFS)    (MIN.)   (INCH/HOUR)    (ACRE)
      1       11.74     3.57        6.060          3.39
      1       10.68     6.94        4.903          3.39
      1       10.97     7.24        4.774          3.39
      1       10.88     7.33        4.733          3.39
      1       10.66     7.57        4.638          3.39
      1       10.06     8.57        4.282          3.39
      2        0.21     6.57        5.079          0.12
      3        3.35     3.25        6.060          0.65

  RAINFALL INTENSITY AND TIME OF CONCENTRATION RATIO
  CONFLUENCE FORMULA USED FOR  3 STREAMS.

  ** PEAK FLOW RATE TABLE **
  STREAM     RUNOFF      Tc      INTENSITY
  NUMBER      (CFS)    (MIN.)   (INCH/HOUR)
      1       15.19     3.25       6.060
      2       15.20     3.57       6.060
      3       13.33     6.57       5.079
      4       13.59     6.94       4.903
```

```
     5       13.81     7.24       4.774
     6       13.70     7.33       4.733
     7       13.41     7.57       4.638
     8       12.61     8.57       4.282

  COMPUTED CONFLUENCE ESTIMATES ARE AS FOLLOWS:
  PEAK FLOW RATE(CFS) =     15.20   Tc(MIN.) =    3.57
  TOTAL AREA(ACRES) =      4.16
  LONGEST FLOWPATH FROM NODE      8.10 TO NODE     10.00 =   899.00 FEET.

****************************************************************************
  FLOW PROCESS FROM NODE     10.00 TO NODE     12.00 IS CODE =  31
----------------------------------------------------------------------------
  >>>>>COMPUTE PIPE-FLOW TRAVEL TIME THRU SUBAREA<<<<<
  >>>>>USING COMPUTER-ESTIMATED PIPESIZE (NON-PRESSURE FLOW)<<<<<
============================================================================
  ELEVATION DATA: UPSTREAM(FEET) =   179.89  DOWNSTREAM(FEET) =   168.59
  FLOW LENGTH(FEET) =   228.00   MANNING'S N =  0.013
  DEPTH OF FLOW IN  18.0 INCH PIPE IS  10.7 INCHES
  PIPE-FLOW VELOCITY(FEET/SEC.) =  13.81
  ESTIMATED PIPE DIAMETER(INCH) =  18.00    NUMBER OF PIPES =   1
  PIPE-FLOW(CFS) =     15.20
  PIPE TRAVEL TIME(MIN.) =   0.28    Tc(MIN.) =   3.85
  LONGEST FLOWPATH FROM NODE      8.10 TO NODE     12.00 =  1127.00 FEET.

****************************************************************************
  FLOW PROCESS FROM NODE     12.00 TO NODE     12.00 IS CODE =   1
----------------------------------------------------------------------------
  >>>>>DESIGNATE INDEPENDENT STREAM FOR CONFLUENCE<<<<<
============================================================================
  TOTAL NUMBER OF STREAMS =  2
  CONFLUENCE VALUES USED FOR INDEPENDENT STREAM  1 ARE:
  TIME OF CONCENTRATION(MIN.) =   3.85
  RAINFALL INTENSITY(INCH/HR) =   6.06
  TOTAL STREAM AREA(ACRES) =     4.16
  PEAK FLOW RATE(CFS) AT CONFLUENCE =     15.20

****************************************************************************
  FLOW PROCESS FROM NODE     11.10 TO NODE     11.00 IS CODE =  21
----------------------------------------------------------------------------
  >>>>>RATIONAL METHOD INITIAL SUBAREA ANALYSIS<<<<<
============================================================================
  OFFICE PROFESSIONAL/COMMERCIAL RUNOFF COEFFICIENT = .8500
  SOIL CLASSIFICATION IS "D"
  S.C.S. CURVE NUMBER (AMC II) =  96
  INITIAL SUBAREA FLOW-LENGTH(FEET) =   497.00
  UPSTREAM ELEVATION(FEET) =    190.17
  DOWNSTREAM ELEVATION(FEET) =    173.13
  ELEVATION DIFFERENCE(FEET) =     17.04
  SUBAREA OVERLAND TIME OF FLOW(MIN.) =    2.705
  WARNING: INITIAL SUBAREA FLOW PATH LENGTH IS GREATER THAN
           THE MAXIMUM OVERLAND FLOW LENGTH =    82.14
           (Reference: Table 3-1B of Hydrology Manual)
           THE MAXIMUM OVERLAND FLOW LENGTH IS USED IN Tc CALCULATION!
   100 YEAR RAINFALL INTENSITY(INCH/HOUR) =  6.060
  NOTE: RAINFALL INTENSITY IS BASED ON Tc = 5-MINUTE.
  SUBAREA RUNOFF(CFS) =      6.49
  TOTAL AREA(ACRES) =      1.26   TOTAL RUNOFF(CFS) =      6.49

****************************************************************************
  FLOW PROCESS FROM NODE     11.00 TO NODE     11.20 IS CODE =  31
----------------------------------------------------------------------------
  >>>>>COMPUTE PIPE-FLOW TRAVEL TIME THRU SUBAREA<<<<<
  >>>>>USING COMPUTER-ESTIMATED PIPESIZE (NON-PRESSURE FLOW)<<<<<
============================================================================
  ELEVATION DATA: UPSTREAM(FEET) =   169.63  DOWNSTREAM(FEET) =   168.71
  FLOW LENGTH(FEET) =   182.00   MANNING'S N =  0.013
  DEPTH OF FLOW IN  18.0 INCH PIPE IS  13.3 INCHES
  PIPE-FLOW VELOCITY(FEET/SEC.) =   4.65
  ESTIMATED PIPE DIAMETER(INCH) =  18.00    NUMBER OF PIPES =   1
  PIPE-FLOW(CFS) =      6.49
```

```
  PIPE TRAVEL TIME(MIN.) =   0.65    Tc(MIN.) =   3.36
  LONGEST FLOWPATH FROM NODE     11.10 TO NODE     11.20 =   679.00 FEET.

****************************************************************************
  FLOW PROCESS FROM NODE     11.20 TO NODE     11.20 IS CODE =  81
----------------------------------------------------------------------------
  >>>>>ADDITION OF SUBAREA TO MAINLINE PEAK FLOW<<<<<
============================================================================
   100 YEAR RAINFALL INTENSITY(INCH/HOUR) =  6.060
  NOTE: RAINFALL INTENSITY IS BASED ON Tc = 5-MINUTE.
  OFFICE PROFESSIONAL/COMMERCIAL RUNOFF COEFFICIENT = .8500
  SOIL CLASSIFICATION IS "D"
  S.C.S. CURVE NUMBER (AMC II) =  96
  AREA-AVERAGE RUNOFF COEFFICIENT = 0.8500
  SUBAREA AREA(ACRES) =    0.58   SUBAREA RUNOFF(CFS) =    2.99
  TOTAL AREA(ACRES) =      1.84   TOTAL RUNOFF(CFS) =    9.48
  TC(MIN.) =   3.36

****************************************************************************
  FLOW PROCESS FROM NODE     11.20 TO NODE     12.00 IS CODE =  31
----------------------------------------------------------------------------
  >>>>>COMPUTE PIPE-FLOW TRAVEL TIME THRU SUBAREA<<<<<
  >>>>>USING COMPUTER-ESTIMATED PIPESIZE (NON-PRESSURE FLOW)<<<<<
============================================================================
  ELEVATION DATA: UPSTREAM(FEET) =   168.71  DOWNSTREAM(FEET) =   168.59
  FLOW LENGTH(FEET) =    24.00   MANNING'S N =  0.013
  DEPTH OF FLOW IN  21.0 INCH PIPE IS  15.1 INCHES
  PIPE-FLOW VELOCITY(FEET/SEC.) =   5.11
  ESTIMATED PIPE DIAMETER(INCH) =  21.00    NUMBER OF PIPES =   1
  PIPE-FLOW(CFS) =      9.48
  PIPE TRAVEL TIME(MIN.) =   0.08    Tc(MIN.) =   3.43
  LONGEST FLOWPATH FROM NODE     11.10 TO NODE     12.00 =   703.00 FEET.

****************************************************************************
  FLOW PROCESS FROM NODE     12.00 TO NODE     12.00 IS CODE =   1
----------------------------------------------------------------------------
  >>>>>DESIGNATE INDEPENDENT STREAM FOR CONFLUENCE<<<<<
  >>>>>AND COMPUTE VARIOUS CONFLUENCED STREAM VALUES<<<<<
============================================================================
  TOTAL NUMBER OF STREAMS =  2
  CONFLUENCE VALUES USED FOR INDEPENDENT STREAM  2 ARE:
  TIME OF CONCENTRATION(MIN.) =   3.43
  RAINFALL INTENSITY(INCH/HR) =   6.06
  TOTAL STREAM AREA(ACRES) =     1.84
  PEAK FLOW RATE(CFS) AT CONFLUENCE =      9.48

  ** CONFLUENCE DATA **
  STREAM     RUNOFF      Tc      INTENSITY      AREA
  NUMBER      (CFS)    (MIN.)   (INCH/HOUR)    (ACRE)
      1       15.19     3.53        6.060          4.16
      1       15.20     3.85        6.060          4.16
      1       13.33     6.86        4.943          4.16
      1       13.59     7.23        4.779          4.16
      1       13.81     7.52        4.658          4.16
      1       13.70     7.62        4.619          4.16
      1       13.41     7.85        4.529          4.16
      1       12.61     8.85        4.192          4.16
      2        9.48     3.43        6.060          1.84

  RAINFALL INTENSITY AND TIME OF CONCENTRATION RATIO
  CONFLUENCE FORMULA USED FOR  2 STREAMS.

  ** PEAK FLOW RATE TABLE **
  STREAM     RUNOFF      Tc      INTENSITY
  NUMBER      (CFS)    (MIN.)   (INCH/HOUR)
      1       24.68     3.43       6.060
      2       24.67     3.53       6.060
      3       24.68     3.85       6.060
      4       21.06     6.86       4.943
      5       21.07     7.23       4.779
      6       21.09     7.52       4.658
```

```
      7       20.92     7.62       4.619
      8       20.50     7.85       4.529
      9       19.17     8.85       4.192

  COMPUTED CONFLUENCE ESTIMATES ARE AS FOLLOWS:
  PEAK FLOW RATE(CFS) =     24.68   Tc(MIN.) =    3.85
  TOTAL AREA(ACRES) =      6.00
  LONGEST FLOWPATH FROM NODE      8.10 TO NODE     12.00 =  1127.00 FEET.

+----------------------------------------------------------------------------+
|                                                                            |
|                                                                            |
|                                                                            |
+----------------------------------------------------------------------------+

****************************************************************************
  FLOW PROCESS FROM NODE     20.10 TO NODE     20.00 IS CODE =  21
----------------------------------------------------------------------------
  >>>>>RATIONAL METHOD INITIAL SUBAREA ANALYSIS<<<<<
============================================================================
  LAWNS, GOLF COURSES, ETC. FAIR COVER RUNOFF COEFFICIENT = .3500
  SOIL CLASSIFICATION IS "D"
  S.C.S. CURVE NUMBER (AMC II) =  84
  INITIAL SUBAREA FLOW-LENGTH(FEET) =   776.00
  UPSTREAM ELEVATION(FEET) =    193.50
  DOWNSTREAM ELEVATION(FEET) =    150.23
  ELEVATION DIFFERENCE(FEET) =     43.27
  SUBAREA OVERLAND TIME OF FLOW(MIN.) =    7.613
  WARNING: INITIAL SUBAREA FLOW PATH LENGTH IS GREATER THAN
           THE MAXIMUM OVERLAND FLOW LENGTH =   100.00
           (Reference: Table 3-1B of Hydrology Manual)
           THE MAXIMUM OVERLAND FLOW LENGTH IS USED IN Tc CALCULATION!
   100 YEAR RAINFALL INTENSITY(INCH/HOUR) =  4.620
  SUBAREA RUNOFF(CFS) =      0.87
  TOTAL AREA(ACRES) =      0.54   TOTAL RUNOFF(CFS) =      0.87

****************************************************************************
  FLOW PROCESS FROM NODE     20.00 TO NODE     21.00 IS CODE =  31
----------------------------------------------------------------------------
  >>>>>COMPUTE PIPE-FLOW TRAVEL TIME THRU SUBAREA<<<<<
  >>>>>USING COMPUTER-ESTIMATED PIPESIZE (NON-PRESSURE FLOW)<<<<<
============================================================================
  ELEVATION DATA: UPSTREAM(FEET) =   149.42  DOWNSTREAM(FEET) =   148.67
  FLOW LENGTH(FEET) =   149.00   MANNING'S N =  0.013
  ESTIMATED PIPE DIAMETER(INCH) INCREASED TO 18.000
  DEPTH OF FLOW IN  18.0 INCH PIPE IS   4.2 INCHES
  PIPE-FLOW VELOCITY(FEET/SEC.) =   2.77
  ESTIMATED PIPE DIAMETER(INCH) =  18.00    NUMBER OF PIPES =   1
  PIPE-FLOW(CFS) =      0.87
  PIPE TRAVEL TIME(MIN.) =   0.90    Tc(MIN.) =   8.51
  LONGEST FLOWPATH FROM NODE     20.10 TO NODE     21.00 =   925.00 FEET.

****************************************************************************
  FLOW PROCESS FROM NODE     21.00 TO NODE     21.00 IS CODE =   1
----------------------------------------------------------------------------
  >>>>>DESIGNATE INDEPENDENT STREAM FOR CONFLUENCE<<<<<
============================================================================
  TOTAL NUMBER OF STREAMS =  2
  CONFLUENCE VALUES USED FOR INDEPENDENT STREAM  1 ARE:
  TIME OF CONCENTRATION(MIN.) =   8.51
  RAINFALL INTENSITY(INCH/HR) =   4.30
  TOTAL STREAM AREA(ACRES) =     0.54
  PEAK FLOW RATE(CFS) AT CONFLUENCE =      0.87

****************************************************************************
  FLOW PROCESS FROM NODE     21.10 TO NODE     21.00 IS CODE =  21
----------------------------------------------------------------------------
  >>>>>RATIONAL METHOD INITIAL SUBAREA ANALYSIS<<<<<
============================================================================
  NEIGHBORHOOD COMMERCIAL RUNOFF COEFFICIENT = .7900
  SOIL CLASSIFICATION IS "D"
```

```
  S.C.S. CURVE NUMBER (AMC II) =  94
  INITIAL SUBAREA FLOW-LENGTH(FEET) =   490.00
  UPSTREAM ELEVATION(FEET) =    189.46
  DOWNSTREAM ELEVATION(FEET) =    155.85
  ELEVATION DIFFERENCE(FEET) =     33.61
  SUBAREA OVERLAND TIME OF FLOW(MIN.) =    2.891
  WARNING: INITIAL SUBAREA FLOW PATH LENGTH IS GREATER THAN
           THE MAXIMUM OVERLAND FLOW LENGTH =    96.86
           (Reference: Table 3-1B of Hydrology Manual)
           THE MAXIMUM OVERLAND FLOW LENGTH IS USED IN Tc CALCULATION!
   100 YEAR RAINFALL INTENSITY(INCH/HOUR) =  6.060
  NOTE: RAINFALL INTENSITY IS BASED ON Tc = 5-MINUTE.
  SUBAREA RUNOFF(CFS) =      2.54
  TOTAL AREA(ACRES) =      0.53   TOTAL RUNOFF(CFS) =      2.54

****************************************************************************
  FLOW PROCESS FROM NODE     21.00 TO NODE     21.00 IS CODE =  81
----------------------------------------------------------------------------
  >>>>>ADDITION OF SUBAREA TO MAINLINE PEAK FLOW<<<<<
============================================================================
   100 YEAR RAINFALL INTENSITY(INCH/HOUR) =  6.060
  NOTE: RAINFALL INTENSITY IS BASED ON Tc = 5-MINUTE.
  LAWNS, GOLF COURSES, ETC. FAIR COVER RUNOFF COEFFICIENT = .3500
  SOIL CLASSIFICATION IS "D"
  S.C.S. CURVE NUMBER (AMC II) =  84
  AREA-AVERAGE RUNOFF COEFFICIENT = 0.7323
  SUBAREA AREA(ACRES) =    0.08   SUBAREA RUNOFF(CFS) =    0.17
  TOTAL AREA(ACRES) =      0.61   TOTAL RUNOFF(CFS) =    2.71
  TC(MIN.) =   2.89

****************************************************************************
  FLOW PROCESS FROM NODE     21.00 TO NODE     21.00 IS CODE =   1
----------------------------------------------------------------------------
  >>>>>DESIGNATE INDEPENDENT STREAM FOR CONFLUENCE<<<<<
  >>>>>AND COMPUTE VARIOUS CONFLUENCED STREAM VALUES<<<<<
============================================================================
  TOTAL NUMBER OF STREAMS =  2
  CONFLUENCE VALUES USED FOR INDEPENDENT STREAM  2 ARE:
  TIME OF CONCENTRATION(MIN.) =   2.89
  RAINFALL INTENSITY(INCH/HR) =   6.06
  TOTAL STREAM AREA(ACRES) =     0.61
  PEAK FLOW RATE(CFS) AT CONFLUENCE =      2.71

  ** CONFLUENCE DATA **
  STREAM     RUNOFF      Tc      INTENSITY      AREA
  NUMBER      (CFS)    (MIN.)   (INCH/HOUR)    (ACRE)
      1        0.87     8.51        4.300         0.54
      2        2.71     2.89        6.060         0.61

  RAINFALL INTENSITY AND TIME OF CONCENTRATION RATIO
  CONFLUENCE FORMULA USED FOR  2 STREAMS.

  ** PEAK FLOW RATE TABLE **
  STREAM     RUNOFF      Tc      INTENSITY
  NUMBER      (CFS)    (MIN.)   (INCH/HOUR)
      1        3.00     2.89       6.060
      2        2.79     8.51       4.300

  COMPUTED CONFLUENCE ESTIMATES ARE AS FOLLOWS:
  PEAK FLOW RATE(CFS) =      3.00   Tc(MIN.) =    2.89
  TOTAL AREA(ACRES) =      1.15
  LONGEST FLOWPATH FROM NODE     20.10 TO NODE     21.00 =   925.00 FEET.

****************************************************************************
  FLOW PROCESS FROM NODE     21.00 TO NODE     22.00 IS CODE =  31
----------------------------------------------------------------------------
  >>>>>COMPUTE PIPE-FLOW TRAVEL TIME THRU SUBAREA<<<<<
  >>>>>USING COMPUTER-ESTIMATED PIPESIZE (NON-PRESSURE FLOW)<<<<<
============================================================================
  ELEVATION DATA: UPSTREAM(FEET) =   147.10  DOWNSTREAM(FEET) =   145.30
  FLOW LENGTH(FEET) =     8.00   MANNING'S N =  0.013
```

```
  ESTIMATED PIPE DIAMETER(INCH) INCREASED TO 18.000
  DEPTH OF FLOW IN  18.0 INCH PIPE IS   3.0 INCHES
  PIPE-FLOW VELOCITY(FEET/SEC.) =  15.25
  ESTIMATED PIPE DIAMETER(INCH) =  18.00    NUMBER OF PIPES =   1
  PIPE-FLOW(CFS) =      3.00
  PIPE TRAVEL TIME(MIN.) =   0.01    Tc(MIN.) =   2.90
  LONGEST FLOWPATH FROM NODE     20.10 TO NODE     22.00 =   933.00 FEET.

****************************************************************************
  FLOW PROCESS FROM NODE     22.00 TO NODE     23.00 IS CODE =  31
----------------------------------------------------------------------------
  >>>>>COMPUTE PIPE-FLOW TRAVEL TIME THRU SUBAREA<<<<<
  >>>>>USING COMPUTER-ESTIMATED PIPESIZE (NON-PRESSURE FLOW)<<<<<
============================================================================
  ELEVATION DATA: UPSTREAM(FEET) =   145.30  DOWNSTREAM(FEET) =   144.92
  FLOW LENGTH(FEET) =    36.00   MANNING'S N =  0.013
  ESTIMATED PIPE DIAMETER(INCH) INCREASED TO 18.000
  DEPTH OF FLOW IN  18.0 INCH PIPE IS   6.6 INCHES
  PIPE-FLOW VELOCITY(FEET/SEC.) =   5.13
  ESTIMATED PIPE DIAMETER(INCH) =  18.00    NUMBER OF PIPES =   1
  PIPE-FLOW(CFS) =      3.00
  PIPE TRAVEL TIME(MIN.) =   0.12    Tc(MIN.) =   3.02
  LONGEST FLOWPATH FROM NODE     20.10 TO NODE     23.00 =   969.00 FEET.

****************************************************************************
  FLOW PROCESS FROM NODE     23.00 TO NODE     23.00 IS CODE =  10
----------------------------------------------------------------------------
  >>>>>MAIN-STREAM MEMORY COPIED ONTO MEMORY BANK # 3 <<<<<
============================================================================

****************************************************************************
  FLOW PROCESS FROM NODE     23.30 TO NODE     23.20 IS CODE =  21
----------------------------------------------------------------------------
  >>>>>RATIONAL METHOD INITIAL SUBAREA ANALYSIS<<<<<
============================================================================
  OPEN BRUSH FAIR COVER RUNOFF COEFFICIENT = .3500
  SOIL CLASSIFICATION IS "D"
  S.C.S. CURVE NUMBER (AMC II) =  83
  INITIAL SUBAREA FLOW-LENGTH(FEET) =   701.00
  UPSTREAM ELEVATION(FEET) =    236.88
  DOWNSTREAM ELEVATION(FEET) =    154.00
  ELEVATION DIFFERENCE(FEET) =     82.88
  SUBAREA OVERLAND TIME OF FLOW(MIN.) =    6.267
  WARNING: INITIAL SUBAREA FLOW PATH LENGTH IS GREATER THAN
           THE MAXIMUM OVERLAND FLOW LENGTH =   100.00
           (Reference: Table 3-1B of Hydrology Manual)
           THE MAXIMUM OVERLAND FLOW LENGTH IS USED IN Tc CALCULATION!
   100 YEAR RAINFALL INTENSITY(INCH/HOUR) =  5.239
  SUBAREA RUNOFF(CFS) =      2.48
  TOTAL AREA(ACRES) =      1.35   TOTAL RUNOFF(CFS) =      2.48

****************************************************************************
  FLOW PROCESS FROM NODE     23.20 TO NODE     23.10 IS CODE =  31
----------------------------------------------------------------------------
  >>>>>COMPUTE PIPE-FLOW TRAVEL TIME THRU SUBAREA<<<<<
  >>>>>USING COMPUTER-ESTIMATED PIPESIZE (NON-PRESSURE FLOW)<<<<<
============================================================================
  ELEVATION DATA: UPSTREAM(FEET) =   151.25  DOWNSTREAM(FEET) =   145.75
  FLOW LENGTH(FEET) =    52.00   MANNING'S N =  0.013
  ESTIMATED PIPE DIAMETER(INCH) INCREASED TO 18.000
  DEPTH OF FLOW IN  18.0 INCH PIPE IS   3.3 INCHES
  PIPE-FLOW VELOCITY(FEET/SEC.) =  11.05
  ESTIMATED PIPE DIAMETER(INCH) =  18.00    NUMBER OF PIPES =   1
  PIPE-FLOW(CFS) =      2.48
  PIPE TRAVEL TIME(MIN.) =   0.08    Tc(MIN.) =   6.35
  LONGEST FLOWPATH FROM NODE     23.30 TO NODE     23.10 =   753.00 FEET.

****************************************************************************
  FLOW PROCESS FROM NODE     23.10 TO NODE     23.10 IS CODE =   1
----------------------------------------------------------------------------
  >>>>>DESIGNATE INDEPENDENT STREAM FOR CONFLUENCE<<<<<
```

```
============================================================================
  TOTAL NUMBER OF STREAMS =  2
  CONFLUENCE VALUES USED FOR INDEPENDENT STREAM  1 ARE:
  TIME OF CONCENTRATION(MIN.) =   6.35
  RAINFALL INTENSITY(INCH/HR) =   5.20
  TOTAL STREAM AREA(ACRES) =     1.35
  PEAK FLOW RATE(CFS) AT CONFLUENCE =      2.48

****************************************************************************
  FLOW PROCESS FROM NODE     23.40 TO NODE     23.10 IS CODE =  21
----------------------------------------------------------------------------
  >>>>>RATIONAL METHOD INITIAL SUBAREA ANALYSIS<<<<<
============================================================================
  GENERAL INDUSTRIAL RUNOFF COEFFICIENT = .8700
  SOIL CLASSIFICATION IS "D"
  S.C.S. CURVE NUMBER (AMC II) =  97
  INITIAL SUBAREA FLOW-LENGTH(FEET) =   584.00
  UPSTREAM ELEVATION(FEET) =    209.00
  DOWNSTREAM ELEVATION(FEET) =    154.50
  ELEVATION DIFFERENCE(FEET) =     54.50
  SUBAREA OVERLAND TIME OF FLOW(MIN.) =    1.953
  WARNING: INITIAL SUBAREA FLOW PATH LENGTH IS GREATER THAN
           THE MAXIMUM OVERLAND FLOW LENGTH =    98.66
           (Reference: Table 3-1B of Hydrology Manual)
           THE MAXIMUM OVERLAND FLOW LENGTH IS USED IN Tc CALCULATION!
   100 YEAR RAINFALL INTENSITY(INCH/HOUR) =  6.060
  NOTE: RAINFALL INTENSITY IS BASED ON Tc = 5-MINUTE.
  SUBAREA RUNOFF(CFS) =      1.85
  TOTAL AREA(ACRES) =      0.35   TOTAL RUNOFF(CFS) =      1.85

****************************************************************************
  FLOW PROCESS FROM NODE     23.10 TO NODE     23.10 IS CODE =  81
----------------------------------------------------------------------------
  >>>>>ADDITION OF SUBAREA TO MAINLINE PEAK FLOW<<<<<
============================================================================
   100 YEAR RAINFALL INTENSITY(INCH/HOUR) =  6.060
  NOTE: RAINFALL INTENSITY IS BASED ON Tc = 5-MINUTE.
  LAWNS, GOLF COURSES, ETC. FAIR COVER RUNOFF COEFFICIENT = .3500
  SOIL CLASSIFICATION IS "D"
  S.C.S. CURVE NUMBER (AMC II) =  84
  AREA-AVERAGE RUNOFF COEFFICIENT = 0.5155
  SUBAREA AREA(ACRES) =    0.75   SUBAREA RUNOFF(CFS) =    1.59
  TOTAL AREA(ACRES) =      1.10   TOTAL RUNOFF(CFS) =    3.44
  TC(MIN.) =   1.95

****************************************************************************
  FLOW PROCESS FROM NODE     23.10 TO NODE     23.10 IS CODE =   1
----------------------------------------------------------------------------
  >>>>>DESIGNATE INDEPENDENT STREAM FOR CONFLUENCE<<<<<
  >>>>>AND COMPUTE VARIOUS CONFLUENCED STREAM VALUES<<<<<
============================================================================
  TOTAL NUMBER OF STREAMS =  2
  CONFLUENCE VALUES USED FOR INDEPENDENT STREAM  2 ARE:
  TIME OF CONCENTRATION(MIN.) =   1.95
  RAINFALL INTENSITY(INCH/HR) =   6.06
  TOTAL STREAM AREA(ACRES) =     1.10
  PEAK FLOW RATE(CFS) AT CONFLUENCE =      3.44

  ** CONFLUENCE DATA **
  STREAM     RUNOFF      Tc      INTENSITY      AREA
  NUMBER      (CFS)    (MIN.)   (INCH/HOUR)    (ACRE)
      1        2.48     6.35        5.197          1.35
      2        3.44     1.95        6.060          1.10

  RAINFALL INTENSITY AND TIME OF CONCENTRATION RATIO
  CONFLUENCE FORMULA USED FOR  2 STREAMS.

  ** PEAK FLOW RATE TABLE **
  STREAM     RUNOFF      Tc      INTENSITY
  NUMBER      (CFS)    (MIN.)   (INCH/HOUR)
      1        4.20     1.95       6.060
```

```
      2        5.42     6.35       5.197

  COMPUTED CONFLUENCE ESTIMATES ARE AS FOLLOWS:
  PEAK FLOW RATE(CFS) =      5.42   Tc(MIN.) =    6.35
  TOTAL AREA(ACRES) =      2.45
  LONGEST FLOWPATH FROM NODE     23.30 TO NODE     23.10 =   753.00 FEET.

****************************************************************************
  FLOW PROCESS FROM NODE     23.10 TO NODE     23.00 IS CODE =  31
----------------------------------------------------------------------------
  >>>>>COMPUTE PIPE-FLOW TRAVEL TIME THRU SUBAREA<<<<<
  >>>>>USING COMPUTER-ESTIMATED PIPESIZE (NON-PRESSURE FLOW)<<<<<
============================================================================
  ELEVATION DATA: UPSTREAM(FEET) =   145.75  DOWNSTREAM(FEET) =   144.92
  FLOW LENGTH(FEET) =    59.00   MANNING'S N =  0.013
  ESTIMATED PIPE DIAMETER(INCH) INCREASED TO 18.000
  DEPTH OF FLOW IN  18.0 INCH PIPE IS   8.4 INCHES
  PIPE-FLOW VELOCITY(FEET/SEC.) =   6.68
  ESTIMATED PIPE DIAMETER(INCH) =  18.00    NUMBER OF PIPES =   1
  PIPE-FLOW(CFS) =      5.42
  PIPE TRAVEL TIME(MIN.) =   0.15    Tc(MIN.) =   6.49
  LONGEST FLOWPATH FROM NODE     23.30 TO NODE     23.00 =   812.00 FEET.

****************************************************************************
  FLOW PROCESS FROM NODE     23.00 TO NODE     23.00 IS CODE =  11
----------------------------------------------------------------------------
  >>>>>CONFLUENCE MEMORY BANK # 3 WITH THE MAIN-STREAM MEMORY<<<<<
============================================================================

  ** MAIN STREAM CONFLUENCE DATA **
  STREAM     RUNOFF     Tc      INTENSITY     AREA
  NUMBER      (CFS)   (MIN.)   (INCH/HOUR)   (ACRE)
      1        4.20     2.11       6.060        2.45
      2        5.42     6.49       5.120        2.45
  LONGEST FLOWPATH FROM NODE     23.30 TO NODE     23.00 =   812.00 FEET.

  ** MEMORY BANK #  3 CONFLUENCE DATA **
  STREAM     RUNOFF     Tc      INTENSITY     AREA
  NUMBER      (CFS)   (MIN.)   (INCH/HOUR)   (ACRE)
      1        3.00     3.02       6.060        1.15
      2        2.79     8.64       4.259        1.15
  LONGEST FLOWPATH FROM NODE     20.10 TO NODE     23.00 =   969.00 FEET.

  ** PEAK FLOW RATE TABLE **
  STREAM    RUNOFF       Tc      INTENSITY
  NUMBER     (CFS)     (MIN.)   (INCH/HOUR)
      1       6.30       2.11        6.060
      2       7.20       3.02        6.060
      3       7.96       6.49        5.120
      4       7.30       8.64        4.259

  COMPUTED CONFLUENCE ESTIMATES ARE AS FOLLOWS:
  PEAK FLOW RATE(CFS) =      7.96   Tc(MIN.) =    6.49
  TOTAL AREA(ACRES) =      3.60

****************************************************************************
  FLOW PROCESS FROM NODE     23.00 TO NODE     29.00 IS CODE =  31
----------------------------------------------------------------------------
  >>>>>COMPUTE PIPE-FLOW TRAVEL TIME THRU SUBAREA<<<<<
  >>>>>USING COMPUTER-ESTIMATED PIPESIZE (NON-PRESSURE FLOW)<<<<<
============================================================================
  ELEVATION DATA: UPSTREAM(FEET) =   144.92  DOWNSTREAM(FEET) =   144.23
  FLOW LENGTH(FEET) =   116.00   MANNING'S N =  0.013
  DEPTH OF FLOW IN  21.0 INCH PIPE IS  12.6 INCHES
  PIPE-FLOW VELOCITY(FEET/SEC.) =   5.30
  ESTIMATED PIPE DIAMETER(INCH) =  21.00    NUMBER OF PIPES =   1
  PIPE-FLOW(CFS) =      7.96
  PIPE TRAVEL TIME(MIN.) =   0.36    Tc(MIN.) =   6.86
  LONGEST FLOWPATH FROM NODE     20.10 TO NODE     29.00 =  1085.00 FEET.
============================================================================
  END OF STUDY SUMMARY:
```

```
  TOTAL AREA(ACRES)     =      3.60  TC(MIN.) =      6.86
  PEAK FLOW RATE(CFS)   =      7.96
  *** PEAK FLOW RATE TABLE ***
         Q(CFS)   Tc(MIN.)
  1        6.30       2.50
  2        7.20       3.40
  3        7.96       6.86
  4        7.30       9.02
============================================================================
============================================================================
  END OF RATIONAL METHOD ANALYSIS
```

Section 3 – Detention Basin Requirements and Calculations

```
       U N I T  H Y D R O G R A P H  A N A L Y S I S

Copyright (c) CIVILCADD/CIVILDESIGN, 1990 - 2004, Version 7.0

               Study date  07/19/20  File: vista.out


++++++++++++++++++++++++++++++++++++++++++++++++++++++++++++++++++++++


Program License Serial Number 4027

---------------------------------------------------------------------
Existing condition
Encompass Health Chula Vista


---------------------------------------------------------------------
++++++++++++++++++++++++++++++++++++++++++++++++++++++++++++++++++++++

Storm Event Year = 100

Antecedent Moisture Condition = 3

 English (in-lb) Input Units Used

 English Rainfall Data (Inches) Input Values Used

Area averaged rainfall isohyetal data:
        Sub-Area(Ac.)       Rainfall (In)
             9.60             2.50

Rainfall Distribution pattern used in study:
Type B for SCS (small dam) or San Diego 6 hour storms
--------------------------------------------------------------------
++++++++++++++++++++++++++++++++++++++++++++++++++++++++++++++++++++++

********* Area-Averaged SCS Curve Number and Fm *********

Area       Area          SCS CN    SCS CN    Fm      Soil
(Ac.)      fract         (AMC2)    (AMC3)   (In/Hr)  Group
     9.60   1.000         85.0      97.0     0.000    D

Area-averaged catchment SCS Curve Number AMC(3) = 97.000
Area-averaged Fm value using values listed =  0.000(In/Hr)
++++++++++++++++++++++++++++++++++++++++++++++++++++++++++++++++++++++
Using SCS formula for calculating lag time
        lag = L(Ft)^0.8 (S+1)^0.7 / 1900 Slope(%)^0.5
Length to the watershed divide (L) =    1220.00(Ft.)
Average watershed slope in % =      5.100
S = (1000 / CN(97.00) - 10) =   0.31
Watershed area =       9.60(Ac.)
Catchment Lag time =   0.083 hours
Unit interval =   5.000 minutes
Unit interval percentage of lag time = 100.5419
Hydrograph baseflow =     0.00(CFS)
Minimum watershed loss rate(Fm) =  0.099(In/Hr)
Average adjusted SCS Curve Number = 97.000

Rainfall depth area reduction factors:
Using a total area of       9.60(Ac.) (Ref: SCS Sup A, Sec.4)

Pacific Coastal Climate ratio used
Areal factor ratio (rainfall reduction) = 1.000
Rainfall entered for study =    2.500(In)
Adjusted rainfall =    2.500(In)
++++++++++++++++++++++++++++++++++++++++++++++++++++++++++++++++++++++

The following unit hydrograph was developed using an S-Graph
interpolated by time percentage of lag time vs. percentage of peak flow.
```

The S-Graphs for Valley, Foothill, and Mountain were developed by the U.S. Army Corps of Engineers for use in the respective type of basins located in Southern California. (Hydrology San Gabrial River ... U.S. Engineer Office, Dec 1944, revised Jul 1946) The Desert S-Graph is from Report ... on ... Tahquitz Creek, California, same U.S. offfice, Corps of Engineers, June 1963. The Valley Developed S-Graph is used by Orange and San Bernardino counties in California to represent the characteristics of valley areas with a large amount of development. Because of the wide variety in topography in Southern California, these synthetic unit hydrographs were included for use as options in any geographic location.

The SCS(Soil Conservation Service Dimensionless S-Graph, SCS handbook, of 1972, applies to a broad cross section of geographic locations and hydrologic regions.

The User Defined hydrograph converts the user Q/Qp vs. T/Tp values into an S-Graph based on lag = Tp/0.9. Then, for the lag time used, the S-Graph in interpolated in time % of lag.

The following S-Graph or S-Graph combination is used in this study:

VALLEY DEVELOPED S-Graph

U N I T H Y D R O G R A P H

(K = 116.16 (CFS))

Time Ratio (t/Lag)	Time (hrs)	Discharge Ratios (Q/Qp)	Q (CFS)	Mass Curve Ratios (Qa/Q)
1.01	0.083	0.279	20.174	0.174
2.01	0.167	1.000	72.392	0.797
3.02	0.250	0.293	21.197	0.979
4.02	0.333	0.033	2.397	1.000

For each time interval of the 6 or 24 hour storm, the total rainfall up to that storm time is calculated. Then the Soil Conservation Service SCS (report 1972, 1975) area averaged Curve Number (CN) is used to determine the amount of direct runoff in (In) using the following equations:

$$Q = \frac{(P - Ia)^2}{P - Ia + S}$$

Where:
Q = direct runoff, P = depth of precipitation, Ia = Initial Abstraction and S is the watershed storage in inches. S and Ia are given by the following equations:

$$S = \frac{1000}{CN} - 10 \quad \text{and} \quad Ia = 0.2\,S$$

Note: If Metric (SI) Units are used, rainfall data is converted by the program internally into inches for these calculations.

Note: In the following printout, the revised runoff column is only used when the minimum soil loss rate, fm, exceeds the normal loss rate of delta P(dP) - delta Q(dQ) then the dP-dQ column equals fm = 0.099(In) (for time interval = 0.008(In)) and the revised runoff is shown in the last column.

Time Period (hours)	Total Rainfall (In) P	Total SCS Runoff (In) Q	Rainfall Amount (In) dP	Runoff Amount (In) dQ	Infiltr-ation (In) dP-dQ	Revised Runoff Min Loss Rate
0.08	0.0146	0.0000	0.0146	0.0000	0.0146	--------
0.17	0.0292	0.0000	0.0146	0.0000	0.0146	--------
0.25	0.0438	0.0000	0.0146	0.0000	0.0146	--------
0.33	0.0583	0.0000	0.0146	0.0000	0.0146	--------
0.42	0.0729	0.0004	0.0146	0.0004	0.0142	--------
0.50	0.0875	0.0020	0.0146	0.0016	0.0130	--------
0.58	0.1071	0.0058	0.0196	0.0038	0.0158	--------
0.67	0.1267	0.0112	0.0196	0.0055	0.0141	--------
0.75	0.1463	0.0181	0.0196	0.0069	0.0127	--------
0.83	0.1658	0.0262	0.0196	0.0081	0.0115	--------
0.92	0.1854	0.0353	0.0196	0.0091	0.0105	--------
1.00	0.2050	0.0453	0.0196	0.0100	0.0096	--------
1.08	0.2292	0.0587	0.0242	0.0134	0.0107	--------
1.17	0.2533	0.0732	0.0242	0.0145	0.0097	--------
1.25	0.2775	0.0886	0.0242	0.0154	0.0088	--------
1.33	0.3017	0.1047	0.0242	--------	0.0083	0.0159
1.42	0.3258	0.1216	0.0242	--------	0.0083	0.0159
1.50	0.3500	0.1390	0.0242	--------	0.0083	0.0159
1.58	0.3875	0.1670	0.0375	0.0280	0.0095	--------
1.67	0.4250	0.1961	0.0375	0.0291	0.0084	--------
1.75	0.4625	0.2261	0.0375	--------	0.0083	0.0292
1.83	0.5000	0.2568	0.0375	--------	0.0083	0.0292
1.92	0.5375	0.2882	0.0375	--------	0.0083	0.0293
2.00	0.5750	0.3202	0.0375	--------	0.0083	0.0292
2.08	0.7292	0.4560	0.1542	0.1358	0.0184	--------
2.17	0.8833	0.5968	0.1542	0.1408	0.0134	--------
2.25	1.0375	0.7408	0.1542	0.1440	0.0101	--------
2.33	1.1917	0.8870	0.1542	--------	0.0083	0.1459
2.42	1.3458	1.0347	0.1542	--------	0.0083	0.1459
2.50	1.5000	1.1836	0.1542	--------	0.0083	0.1459
2.58	1.5417	1.2240	0.0417	--------	0.0083	0.0334
2.67	1.5833	1.2644	0.0417	--------	0.0083	0.0334
2.75	1.6250	1.3050	0.0417	--------	0.0083	0.0334
2.83	1.6667	1.3455	0.0417	--------	0.0083	0.0334
2.92	1.7083	1.3861	0.0417	--------	0.0083	0.0334
3.00	1.7500	1.4268	0.0417	--------	0.0083	0.0334
3.08	1.7837	1.4597	0.0337	--------	0.0083	0.0255
3.17	1.8175	1.4927	0.0337	--------	0.0083	0.0255
3.25	1.8512	1.5257	0.0337	--------	0.0083	0.0255
3.33	1.8850	1.5587	0.0338	--------	0.0083	0.0255
3.42	1.9188	1.5918	0.0338	--------	0.0083	0.0255
3.50	1.9525	1.6248	0.0337	--------	0.0083	0.0255
3.58	1.9750	1.6469	0.0225	--------	0.0083	0.0142
3.67	1.9975	1.6690	0.0225	--------	0.0083	0.0142
3.75	2.0200	1.6911	0.0225	--------	0.0083	0.0142
3.83	2.0425	1.7131	0.0225	--------	0.0083	0.0142
3.92	2.0650	1.7352	0.0225	--------	0.0083	0.0142
4.00	2.0875	1.7573	0.0225	--------	0.0083	0.0142
4.08	2.1063	1.7758	0.0188	--------	0.0083	0.0105
4.17	2.1250	1.7942	0.0187	--------	0.0083	0.0105
4.25	2.1437	1.8126	0.0187	--------	0.0083	0.0105
4.33	2.1625	1.8311	0.0188	--------	0.0083	0.0105
4.42	2.1813	1.8495	0.0188	--------	0.0083	0.0105
4.50	2.2000	1.8679	0.0187	--------	0.0083	0.0105
4.58	2.2179	1.8856	0.0179	--------	0.0083	0.0097
4.67	2.2358	1.9032	0.0179	--------	0.0083	0.0097
4.75	2.2538	1.9209	0.0179	--------	0.0083	0.0097
4.83	2.2717	1.9385	0.0179	--------	0.0083	0.0097
4.92	2.2896	1.9562	0.0179	--------	0.0083	0.0097
5.00	2.3075	1.9738	0.0179	--------	0.0083	0.0097
5.08	2.3229	1.9890	0.0154	--------	0.0083	0.0072
5.17	2.3383	2.0042	0.0154	--------	0.0083	0.0072
5.25	2.3537	2.0194	0.0154	--------	0.0083	0.0072

5.33	2.3692	2.0346	0.0154	--------	0.0083	0.0072
5.42	2.3846	2.0498	0.0154	--------	0.0083	0.0072
5.50	2.4000	2.0650	0.0154	--------	0.0083	0.0072
5.58	2.4167	2.0814	0.0167	--------	0.0083	0.0084
5.67	2.4333	2.0979	0.0167	--------	0.0083	0.0084
5.75	2.4500	2.1143	0.0167	--------	0.0083	0.0084
5.83	2.4667	2.1308	0.0167	--------	0.0083	0.0084
5.92	2.4833	2.1472	0.0167	--------	0.0083	0.0084
6.00	2.5000	2.1637	0.0167	--------	0.0083	0.0084

Total soil rain loss = 0.68(In)
Total effective runoff = 1.82(In)

Peak flow rate this hydrograph = 16.95(CFS)
Total runoff volume this hydrograph = 63505.9(Ft3)

++

6 - H O U R S T O R M
R u n o f f H y d r o g r a p h

Hydrograph in 5 Minute intervals ((CFS))

```
Time(h+m) Volume Ac.Ft   Q(CFS)  0        5.0      10.0      15.0      20.0
-----------------------------------------------------------------------
  0+ 5       0.0000      0.00  Q         |         |         |         |
  0+10       0.0000      0.00  Q         |         |         |         |
  0+15       0.0000      0.00  Q         |         |         |         |
  0+20       0.0000      0.00  Q         |         |         |         |
  0+25       0.0001      0.01  Q         |         |         |         |
  0+30       0.0005      0.06  Q         |         |         |         |
  0+35       0.0018      0.20  Q         |         |         |         |
  0+40       0.0047      0.42  Q         |         |         |         |
  0+45       0.0090      0.62  VQ        |         |         |         |
  0+50       0.0144      0.78  VQ        |         |         |         |
  0+55       0.0208      0.93  VQ        |         |         |         |
  1+ 0       0.0280      1.05  V Q       |         |         |         |
  1+ 5       0.0363      1.21  V Q       |         |         |         |
  1+10       0.0467      1.50  |VQ       |         |         |         |
  1+15       0.0581      1.67  |V Q      |         |         |         |
  1+20       0.0703      1.77  |V Q      |         |         |         |
  1+25       0.0830      1.83  | VQ      |         |         |         |
  1+30       0.0957      1.85  | VQ      |         |         |         |
  1+35       0.1101      2.09  |  VQ     |         |         |         |
  1+40       0.1307      2.99  |  V Q    |         |         |         |
  1+45       0.1537      3.33  |   V Q   |         |         |         |
  1+50       0.1770      3.39  |   V Q   |         |         |         |
  1+55       0.2004      3.40  |    VQ   |         |         |         |
  2+ 0       0.2238      3.40  |     Q   |         |         |         |
  2+ 5       0.2620      5.55  |      V  |Q        |         |         |
  2+10       0.3540     13.36  |        V|         |     Q   |         |
  2+15       0.4646     16.05  |         | V       |         | Q       |
  2+20       0.5794     16.68  |         |    V    |         |  Q      |
  2+25       0.6958     16.90  |         |        V|         |  Q      |
  2+30       0.8125     16.95  |         |         | V       |  Q      |
  2+35       0.9136     14.68  |         |         |    V   Q|         |
  2+40       0.9586      6.54  |         |  Q      |     V   |         |
  2+45       0.9872      4.15  |       Q |         |      V  |         |
  2+50       1.0140      3.88  |      Q  |         |      V  |         |
  2+55       1.0407      3.88  |      Q  |         |       V |         |
  3+ 0       1.0674      3.88  |      Q  |         |        V|         |
  3+ 5       1.0931      3.72  |      Q  |         |        V|         |
  3+10       1.1147      3.15  |     Q   |         |         V         |
  3+15       1.1353      2.98  |    Q    |         |         |V        |
  3+20       1.1557      2.96  |    Q    |         |         |V        |
  3+25       1.1761      2.96  |    Q    |         |         | V       |
  3+30       1.1965      2.96  |    Q    |         |         | V       |
  3+35       1.2153      2.74  |    Q    |         |         |  V      |
  3+40       1.2285      1.92  |  Q      |         |         |  V      |
  3+45       1.2401      1.68  |  Q      |         |         |   V     |
```

```
    3+50       1.2515      1.66  |  Q      |         |         |   V     |
    3+55       1.2629      1.66  |  Q      |         |         |   V     |
    4+ 0       1.2743      1.66  |  Q      |         |         |   V     |
    4+ 5       1.2852      1.58  |  Q      |         |         |    V    |
    4+10       1.2942      1.31  | Q       |         |         |    V    |
    4+15       1.3027      1.23  | Q       |         |         |    V    |
    4+20       1.3111      1.22  | Q       |         |         |    V    |
    4+25       1.3195      1.22  | Q       |         |         |     V   |
    4+30       1.3279      1.22  | Q       |         |         |     V   |
    4+35       1.3362      1.20  | Q       |         |         |     V   |
    4+40       1.3440      1.14  | Q       |         |         |     V   |
    4+45       1.3518      1.12  | Q       |         |         |      V  |
    4+50       1.3595      1.12  | Q       |         |         |      V  |
    4+55       1.3672      1.12  | Q       |         |         |      V  |
    5+ 0       1.3750      1.12  | Q       |         |         |      V  |
    5+ 5       1.3824      1.07  | Q       |         |         |      V  |
    5+10       1.3885      0.89  |Q        |         |         |       V |
    5+15       1.3943      0.84  |Q        |         |         |       V |
    5+20       1.4000      0.83  |Q        |         |         |       V |
    5+25       1.4057      0.83  |Q        |         |         |       V |
    5+30       1.4115      0.83  |Q        |         |         |       V |
    5+35       1.4174      0.86  |Q        |         |         |       V |
    5+40       1.4239      0.95  |Q        |         |         |        V|
    5+45       1.4306      0.97  |Q        |         |         |        V|
    5+50       1.4374      0.98  |Q        |         |         |        V|
    5+55       1.4441      0.98  |Q        |         |         |        V|
    6+ 0       1.4508      0.98  |Q        |         |         |        V|
    6+ 5       1.4564      0.81  |Q        |         |         |        V|
    6+10       1.4578      0.20  Q         |         |         |        V|
    6+15       1.4579      0.02  Q         |         |         |         V
-----------------------------------------------------------------------
```

```
       U N I T  H Y D R O G R A P H  A N A L Y S I S

Copyright (c) CIVILCADD/CIVILDESIGN, 1990 - 2004, Version 7.0

               Study date  07/19/20  File: vista1.out


++++++++++++++++++++++++++++++++++++++++++++++++++++++++++++++++++++++


Program License Serial Number 4027

---------------------------------------------------------------------
Encompass Health
100 yr 6 hr
upper area

---------------------------------------------------------------------
++++++++++++++++++++++++++++++++++++++++++++++++++++++++++++++++++++++

Storm Event Year = 100

Antecedent Moisture Condition = 3

 English (in-lb) Input Units Used

 English Rainfall Data (Inches) Input Values Used

Area averaged rainfall isohyetal data:
        Sub-Area(Ac.)       Rainfall (In)
             6.00             2.50

Rainfall Distribution pattern used in study:
Type B for SCS (small dam) or San Diego 6 hour storms
--------------------------------------------------------------------
++++++++++++++++++++++++++++++++++++++++++++++++++++++++++++++++++++++

********* Area-Averaged SCS Curve Number and Fm *********

Area       Area          SCS CN    SCS CN    Fm      Soil
(Ac.)      fract         (AMC2)    (AMC3)   (In/Hr)  Group
     0.03   0.005         85.0      97.0     0.000    D
     2.77   0.462         98.0      98.0

     0.01   0.002         82.0      95.2     0.000    D
     0.99   0.165         98.0      98.0

     1.90   0.317         79.0      93.4     0.000    D

     0.30   0.049         85.0      97.0     0.000    D
     0.00   0.001         98.0      98.0

Area-averaged catchment SCS Curve Number AMC(3) = 96.484
Area-averaged Fm value using values listed =  0.000(In/Hr)
++++++++++++++++++++++++++++++++++++++++++++++++++++++++++++++++++++++
Using SCS formula for calculating lag time
        lag = L(Ft)^0.8 (S+1)^0.7 / 1900 Slope(%)^0.5
Length to the watershed divide (L) =     955.00(Ft.)
Average watershed slope in % =     10.600
S = (1000 / CN(96.48) - 10) =   0.36
Watershed area =       6.00(Ac.)
Catchment Lag time =   0.049 hours
Unit interval =   5.000 minutes
Unit interval percentage of lag time = 171.3060
Hydrograph baseflow =     0.00(CFS)
Minimum watershed loss rate(Fm) =  0.000(In/Hr)
Average adjusted SCS Curve Number = 96.484

Rainfall depth area reduction factors:
Using a total area of       6.00(Ac.) (Ref: SCS Sup A, Sec.4)
```

Pacific Coastal Climate ratio used
Areal factor ratio (rainfall reduction) = 1.000
Rainfall entered for study = 2.500(In)
Adjusted rainfall = 2.500(In)
++

The following unit hydrograph was developed using an S-Graph interpolated by time percentage of lag time vs. percentage of peak flow. The S-Graphs for Valley, Foothill, and Mountain were developed by the U.S. Army Corps of Engineers for use in the respective type of basins located in Southern California. (Hydrology San Gabrial River ... U.S. Engineer Office, Dec 1944, revised Jul 1946) The Desert S-Graph is from Report ... on ... Tahquitz Creek, California, same U.S. offfice, Corps of Engineers, June 1963. The Valley Developed S-Graph is used by Orange and San Bernardino counties in California to represent the characteristics of valley areas with a large amount of development. Because of the wide variety in topography in Southern California, these synthetic unit hydrographs were included for use as options in any geographic location.

The SCS(Soil Conservation Service Dimensionless S-Graph, SCS handbook, of 1972, applies to a broad cross section of geographic locations and hydrologic regions.

The User Defined hydrograph converts the user Q/Qp vs. T/Tp values into an S-Graph based on lag = Tp/0.9. Then, for the lag time used, the S-Graph in interpolated in time % of lag.

The following S-Graph or S-Graph combination is used in this study:

VALLEY DEVELOPED S-Graph

U N I T H Y D R O G R A P H

++

Time Ratio (t/Lag)	Time (hrs)	Discharge Ratios (Q/Qp)	Q (CFS)	Mass Curve Ratios (Qa/Q)
1.71	0.083	0.724	29.695	0.409
3.43	0.167	1.000	40.996	0.974
5.14	0.250	0.047	1.909	1.000

(K = 72.60 (CFS))

++

For each time interval of the 6 or 24 hour storm, the total rainfall up to that storm time is calculated. Then the Soil Conservation Service SCS (report 1972, 1975) area averaged Curve Number (CN) is used to determine the amount of direct runoff in (In) using the following equations:

$$Q = \frac{(P - Ia)^2}{P - Ia + S}$$

Where:
Q = direct runoff, P = depth of precipitation, Ia = Initial Abstraction and S is the watershed storage in inches. S and Ia are given by the following equations:

$$S = \frac{1000}{CN} - 10 \quad \text{and} \quad Ia = 0.2\,S$$

Note: If Metric (SI) Units are used, rainfall data is converted by the program internally into inches for these calculations.

Note: In the following printout, the revised runoff column is only used when the minimum soil loss rate, fm, exceeds the normal loss rate of delta P(dP) - delta Q(dQ) then the dP-dQ column equals fm = 0.000(In) (for time interval = 0.000(In)) and the revised runoff is shown in the last column.

Time Period (hours)	Total Rainfall (In) P	Total SCS Runoff (In) Q	Rainfall Amount (In) dP	Runoff Amount (In) dQ	Infiltr-ation (In) dP-dQ	Revised Runoff Min Loss Rate
0.08	0.0146	0.0000	0.0146	0.0000	0.0146	--------
0.17	0.0292	0.0000	0.0146	0.0000	0.0146	--------
0.25	0.0438	0.0000	0.0146	0.0000	0.0146	--------
0.33	0.0583	0.0000	0.0146	0.0000	0.0146	--------
0.42	0.0729	0.0000	0.0146	0.0000	0.0146	--------
0.50	0.0875	0.0006	0.0146	0.0006	0.0140	--------
0.58	0.1071	0.0029	0.0196	0.0024	0.0172	--------
0.67	0.1267	0.0069	0.0196	0.0040	0.0156	--------
0.75	0.1463	0.0123	0.0196	0.0054	0.0142	--------
0.83	0.1658	0.0189	0.0196	0.0066	0.0130	--------
0.92	0.1854	0.0266	0.0196	0.0077	0.0119	--------
1.00	0.2050	0.0352	0.0196	0.0086	0.0110	--------
1.08	0.2292	0.0469	0.0242	0.0118	0.0124	--------
1.17	0.2533	0.0598	0.0242	0.0129	0.0113	--------
1.25	0.2775	0.0736	0.0242	0.0138	0.0103	--------
1.33	0.3017	0.0883	0.0242	0.0147	0.0095	--------
1.42	0.3258	0.1037	0.0242	0.0154	0.0088	--------
1.50	0.3500	0.1197	0.0242	0.0161	0.0081	--------
1.58	0.3875	0.1458	0.0375	0.0261	0.0114	--------
1.67	0.4250	0.1731	0.0375	0.0273	0.0102	--------
1.75	0.4625	0.2013	0.0375	0.0283	0.0092	--------
1.83	0.5000	0.2305	0.0375	0.0292	0.0083	--------
1.92	0.5375	0.2604	0.0375	0.0299	0.0076	--------
2.00	0.5750	0.2910	0.0375	0.0306	0.0069	--------
2.08	0.7292	0.4220	0.1542	0.1310	0.0231	--------
2.17	0.8833	0.5591	0.1542	0.1371	0.0171	--------
2.25	1.0375	0.7002	0.1542	0.1411	0.0131	--------
2.33	1.1917	0.8439	0.1542	0.1438	0.0104	--------
2.42	1.3458	0.9897	0.1542	0.1457	0.0084	--------
2.50	1.5000	1.1369	0.1542	0.1472	0.0070	--------
2.58	1.5417	1.1769	0.0417	0.0400	0.0017	--------
2.67	1.5833	1.2169	0.0417	0.0401	0.0016	--------
2.75	1.6250	1.2570	0.0417	0.0401	0.0015	--------
2.83	1.6667	1.2972	0.0417	0.0402	0.0015	--------
2.92	1.7083	1.3375	0.0417	0.0403	0.0014	--------
3.00	1.7500	1.3778	0.0417	0.0403	0.0014	--------
3.08	1.7837	1.4105	0.0337	0.0327	0.0011	--------
3.17	1.8175	1.4432	0.0337	0.0327	0.0010	--------
3.25	1.8512	1.4760	0.0337	0.0328	0.0010	--------
3.33	1.8850	1.5088	0.0338	0.0328	0.0010	--------
3.42	1.9188	1.5416	0.0338	0.0328	0.0009	--------
3.50	1.9525	1.5744	0.0337	0.0328	0.0009	--------
3.58	1.9750	1.5963	0.0225	0.0219	0.0006	--------
3.67	1.9975	1.6183	0.0225	0.0219	0.0006	--------
3.75	2.0200	1.6402	0.0225	0.0219	0.0006	--------
3.83	2.0425	1.6621	0.0225	0.0219	0.0006	--------
3.92	2.0650	1.6841	0.0225	0.0220	0.0005	--------
4.00	2.0875	1.7061	0.0225	0.0220	0.0005	--------
4.08	2.1063	1.7244	0.0188	0.0183	0.0004	--------
4.17	2.1250	1.7427	0.0187	0.0183	0.0004	--------
4.25	2.1437	1.7610	0.0187	0.0183	0.0004	--------
4.33	2.1625	1.7794	0.0188	0.0183	0.0004	--------
4.42	2.1813	1.7977	0.0188	0.0183	0.0004	--------
4.50	2.2000	1.8161	0.0187	0.0183	0.0004	--------
4.58	2.2179	1.8336	0.0179	0.0175	0.0004	--------

```
  4.67   2.2358    1.8511    0.0179    0.0175    0.0004 --------
  4.75   2.2538    1.8687    0.0179    0.0175    0.0004 --------
  4.83   2.2717    1.8862    0.0179    0.0176    0.0004 --------
  4.92   2.2896    1.9038    0.0179    0.0176    0.0004 --------
  5.00   2.3075    1.9213    0.0179    0.0176    0.0004 --------
  5.08   2.3229    1.9365    0.0154    0.0151    0.0003 --------
  5.17   2.3383    1.9516    0.0154    0.0151    0.0003 --------
  5.25   2.3537    1.9667    0.0154    0.0151    0.0003 --------
  5.33   2.3692    1.9818    0.0154    0.0151    0.0003 --------
  5.42   2.3846    1.9970    0.0154    0.0151    0.0003 --------
  5.50   2.4000    2.0121    0.0154    0.0151    0.0003 --------
  5.58   2.4167    2.0285    0.0167    0.0164    0.0003 --------
  5.67   2.4333    2.0448    0.0167    0.0164    0.0003 --------
  5.75   2.4500    2.0612    0.0167    0.0164    0.0003 --------
  5.83   2.4667    2.0776    0.0167    0.0164    0.0003 --------
  5.92   2.4833    2.0939    0.0167    0.0164    0.0003 --------
  6.00   2.5000    2.1103    0.0167    0.0164    0.0003 --------
--------------------------------------------------------------------
--------------------------------------------------------------------
Total soil rain loss =      0.39(In)
Total effective runoff =      2.11(In)
----------------------------------------------------------------------
Peak flow rate this hydrograph =          10.62(CFS)
Total runoff volume this hydrograph =          45962.9(Ft3)
----------------------------------------------------------------------
++++++++++++++++++++++++++++++++++++++++++++++++++++++++++++++++++++++
                    6 - H O U R    S T O R M
               R u n o f f      H y d r o g r a p h
--------------------------------------------------------------------
            Hydrograph in   5   Minute intervals ((CFS))

--------------------------------------------------------------------
Time(h+m) Volume Ac.Ft   Q(CFS)  0        5.0      10.0      15.0      20.0
----------------------------------------------------------------------
  0+ 5       0.0000      0.00  Q         |         |         |         |
  0+10       0.0000      0.00  Q         |         |         |         |
  0+15       0.0000      0.00  Q         |         |         |         |
  0+20       0.0000      0.00  Q         |         |         |         |
  0+25       0.0000      0.00  Q         |         |         |         |
  0+30       0.0001      0.02  Q         |         |         |         |
  0+35       0.0008      0.09  Q         |         |         |         |
  0+40       0.0023      0.22  Q         |         |         |         |
  0+45       0.0045      0.33  Q         |         |         |         |
  0+50       0.0074      0.42  Q         |         |         |         |
  0+55       0.0109      0.51  VQ        |         |         |         |
  1+ 0       0.0149      0.58  VQ        |         |         |         |
  1+ 5       0.0199      0.72  VQ        |         |         |         |
  1+10       0.0259      0.88  VQ        |         |         |         |
  1+15       0.0325      0.96  |Q        |         |         |         |
  1+20       0.0396      1.03  |VQ       |         |         |         |
  1+25       0.0471      1.08  |VQ       |         |         |         |
  1+30       0.0549      1.14  | Q       |         |         |         |
  1+35       0.0650      1.46  | Q       |         |         |         |
  1+40       0.0781      1.91  | VQ      |         |         |         |
  1+45       0.0920      2.01  |  VQ     |         |         |         |
  1+50       0.1063      2.08  |   Q     |         |         |         |
  1+55       0.1210      2.14  |   Q     |         |         |         |
  2+ 0       0.1361      2.19  |   QV    |         |         |         |
  2+ 5       0.1719      5.20  |     V   Q         |         |         |
  2+10       0.2373      9.50  |       V |         Q|         |         |
  2+15       0.3066     10.06  |         |V         Q         |         |
  2+20       0.3776     10.31  |         |   V      Q         |         |
  2+25       0.4499     10.49  |         |      V  Q          |         |
  2+30       0.5230     10.62  |         |        V|Q        |         |
  2+35       0.5747      7.50  |         |   Q     |V        |         |
  2+40       0.5961      3.11  |     Q   |         | V       |         |
  2+45       0.6161      2.91  |    Q    |         |  V      |         |
  2+50       0.6362      2.92  |    Q    |         |   V     |         |
  2+55       0.6563      2.92  |    Q    |         |   V     |         |
  3+ 0       0.6765      2.92  |    Q    |         |    V    |         |
  3+ 5       0.6951      2.70  |    Q    |         |     V   |         |
```

```
    3+10       0.7115      2.39  |   Q     |         |     V   |         |
    3+15       0.7279      2.38  |   Q     |         |      V  |         |
    3+20       0.7443      2.38  |   Q     |         |       V |         |
    3+25       0.7607      2.38  |   Q     |         |       V |         |
    3+30       0.7771      2.38  |   Q     |         |        V|         |
    3+35       0.7913      2.06  |   Q     |         |        V|         |
    3+40       0.8024      1.61  |  Q      |         |         V         |
    3+45       0.8133      1.59  |  Q      |         |         V         |
    3+50       0.8243      1.59  |  Q      |         |         |V        |
    3+55       0.8353      1.59  |  Q      |         |         |V        |
    4+ 0       0.8463      1.59  |  Q      |         |         | V       |
    4+ 5       0.8565      1.49  | Q       |         |         | V       |
    4+10       0.8657      1.34  | Q       |         |         | V       |
    4+15       0.8749      1.33  | Q       |         |         |  V      |
    4+20       0.8840      1.33  | Q       |         |         |  V      |
    4+25       0.8932      1.33  | Q       |         |         |  V      |
    4+30       0.9024      1.33  | Q       |         |         |   V     |
    4+35       0.9114      1.31  | Q       |         |         |   V     |
    4+40       0.9202      1.27  | Q       |         |         |   V     |
    4+45       0.9289      1.27  | Q       |         |         |    V    |
    4+50       0.9377      1.27  | Q       |         |         |    V    |
    4+55       0.9465      1.27  | Q       |         |         |    V    |
    5+ 0       0.9553      1.27  | Q       |         |         |     V   |
    5+ 5       0.9635      1.20  | Q       |         |         |     V   |
    5+10       0.9711      1.10  | Q       |         |         |     V   |
    5+15       0.9787      1.10  | Q       |         |         |      V  |
    5+20       0.9862      1.10  | Q       |         |         |      V  |
    5+25       0.9938      1.10  | Q       |         |         |      V  |
    5+30       1.0014      1.10  | Q       |         |         |      V  |
    5+35       1.0092      1.14  | Q       |         |         |       V |
    5+40       1.0174      1.19  | Q       |         |         |       V |
    5+45       1.0255      1.19  | Q       |         |         |       V |
    5+50       1.0337      1.19  | Q       |         |         |        V|
    5+55       1.0419      1.19  | Q       |         |         |        V|
    6+ 0       1.0501      1.19  | Q       |         |         |        V|
    6+ 5       1.0549      0.70  |Q        |         |         |        V|
    6+10       1.0552      0.03  Q         |         |         |         V
-----------------------------------------------------------------------
```

```
       U N I T  H Y D R O G R A P H  A N A L Y S I S

Copyright (c) CIVILCADD/CIVILDESIGN, 1990 - 2004, Version 7.0

               Study date  07/19/20  File: vista2.out


++++++++++++++++++++++++++++++++++++++++++++++++++++++++++++++++++++++


Program License Serial Number 4027

------------------------------------------------------------------------
Encompass Health
100 year/6 hour
lower area

------------------------------------------------------------------------
++++++++++++++++++++++++++++++++++++++++++++++++++++++++++++++++++++++

Storm Event Year = 100

Antecedent Moisture Condition = 3

 English (in-lb) Input Units Used

 English Rainfall Data (Inches) Input Values Used

Area averaged rainfall isohyetal data:
        Sub-Area(Ac.)       Rainfall (In)
             0.00             2.50
             3.60             2.50

Rainfall Distribution pattern used in study:
Type B for SCS (small dam) or San Diego 6 hour storms
-------------------------------------------------------------------------
+++++++++++++++++++++++++++++++++++++++++++++++++++++++++++++++++++++++

********* Area-Averaged SCS Curve Number and Fm *********

Area       Area          SCS CN    SCS CN    Fm      Soil
(Ac.)      fract         (AMC2)    (AMC3)   (In/Hr)  Group
     0.01   0.002         82.0      95.2     0.000    D
     0.80   0.223         98.0      98.0

     1.53   0.426         85.0      97.0     0.000    D
     0.02   0.004         98.0      98.0

     1.18   0.327         79.0      93.4     0.000    D
     0.06   0.017         98.0      98.0

Area-averaged catchment SCS Curve Number AMC(3) = 96.062
Area-averaged Fm value using values listed =  0.000(In/Hr)
++++++++++++++++++++++++++++++++++++++++++++++++++++++++++++++++++++++
Using U.S. Army Corps of Engineers formula for lag time
   lag = 24 n ( L(Mi) Lc(Mi) /Slope(Ft/Mi) ) ^ 0.38
Watercourse length =     870.00(Ft.)
Length from concentration point to centroid =     400.00(Ft.)
Elevation difference along watercourse =     114.00(Ft.)
Mannings friction factor along watercourse (n) =  0.025
Watershed area =       3.60(Ac.)
Catchment Lag time =   0.033 hours
Unit interval =   5.000 minutes
Unit interval percentage of lag time = 254.4913
Hydrograph baseflow =     0.00(CFS)
Minimum watershed loss rate(Fm) =  0.000(In/Hr)
Average adjusted SCS Curve Number = 96.062

Rainfall depth area reduction factors:
Using a total area of       3.60(Ac.) (Ref: SCS Sup A, Sec.4)
```

Pacific Coastal Climate ratio used
Areal factor ratio (rainfall reduction) = 1.000
Rainfall entered for study = 2.500(In)
Adjusted rainfall = 2.500(In)
++

The following unit hydrograph was developed using an S-Graph interpolated by time percentage of lag time vs. percentage of peak flow. The S-Graphs for Valley, Foothill, and Mountain were developed by the U.S. Army Corps of Engineers for use in the respective type of basins located in Southern California. (Hydrology San Gabrial River ... U.S. Engineer Office, Dec 1944, revised Jul 1946) The Desert S-Graph is from Report ... on ... Tahquitz Creek, California, same U.S. offfice, Corps of Engineers, June 1963. The Valley Developed S-Graph is used by Orange and San Bernardino counties in California to represent the characteristics of valley areas with a large amount of development. Because of the wide variety in topography in Southern California, these synthetic unit hydrographs were included for use as options in any geographic location.

The SCS(Soil Conservation Service Dimensionless S-Graph, SCS handbook, of 1972, applies to a broad cross section of geographic locations and hydrologic regions.

The User Defined hydrograph converts the user Q/Qp vs. T/Tp values into an S-Graph based on lag = Tp/0.9. Then, for the lag time used, the S-Graph in interpolated in time % of lag.

The following S-Graph or S-Graph combination is used in this study:

VALLEY DEVELOPED S-Graph

U N I T H Y D R O G R A P H

++

Time Ratio (t/Lag)	Time (hrs)	Discharge Ratios (Q/Qp)	Q (CFS)	Mass Curve Ratios (Qa/Q)
2.54	0.083	1.000	25.585	0.587
5.09	0.167	0.703	17.975	1.000

(K = 43.56 (CFS))

++

For each time interval of the 6 or 24 hour storm, the total rainfall up to that storm time is calculated. Then the Soil Conservation Service SCS (report 1972, 1975) area averaged Curve Number (CN) is used to determine the amount of direct runoff in (In) using the following equations:

$$Q = \frac{(P - Ia)^2}{P - Ia + S}$$

Where:
Q = direct runoff, P = depth of precipitation, Ia = Initial Abstraction and S is the watershed storage in inches. S and Ia are given by the following equations:

$$S = \frac{1000}{CN} - 10 \quad \text{and} \quad Ia = 0.2\,S$$

Note: If Metric (SI) Units are used, rainfall data is converted by

the program internally into inches for these calculations.

Note: In the following printout, the revised runoff column is only used when the minimum soil loss rate, fm, exceeds the normal loss rate of delta P(dP) - delta Q(dQ) then the dP-dQ column equals fm = 0.000(In) (for time interval = 0.000(In)) and the revised runoff is shown in the last column.

Time Period (hours)	Total Rainfall (In) P	Total SCS Runoff (In) Q	Rainfall Amount (In) dP	Runoff Amount (In) dQ	Infiltr-ation (In) dP-dQ	Revised Runoff Min Loss Rate
0.08	0.0146	0.0000	0.0146	0.0000	0.0146	--------
0.17	0.0292	0.0000	0.0146	0.0000	0.0146	--------
0.25	0.0438	0.0000	0.0146	0.0000	0.0146	--------
0.33	0.0583	0.0000	0.0146	0.0000	0.0146	--------
0.42	0.0729	0.0000	0.0146	0.0000	0.0146	--------
0.50	0.0875	0.0001	0.0146	0.0001	0.0145	--------
0.58	0.1071	0.0014	0.0196	0.0014	0.0182	--------
0.67	0.1267	0.0044	0.0196	0.0029	0.0166	--------
0.75	0.1463	0.0087	0.0196	0.0043	0.0153	--------
0.83	0.1658	0.0142	0.0196	0.0055	0.0141	--------
0.92	0.1854	0.0208	0.0196	0.0066	0.0130	--------
1.00	0.2050	0.0284	0.0196	0.0076	0.0120	--------
1.08	0.2292	0.0389	0.0242	0.0105	0.0137	--------
1.17	0.2533	0.0505	0.0242	0.0116	0.0125	--------
1.25	0.2775	0.0631	0.0242	0.0126	0.0115	--------
1.33	0.3017	0.0767	0.0242	0.0135	0.0107	--------
1.42	0.3258	0.0910	0.0242	0.0143	0.0099	--------
1.50	0.3500	0.1060	0.0242	0.0150	0.0092	--------
1.58	0.3875	0.1305	0.0375	0.0245	0.0130	--------
1.67	0.4250	0.1563	0.0375	0.0258	0.0117	--------
1.75	0.4625	0.1832	0.0375	0.0269	0.0106	--------
1.83	0.5000	0.2111	0.0375	0.0279	0.0096	--------
1.92	0.5375	0.2398	0.0375	0.0287	0.0088	--------
2.00	0.5750	0.2692	0.0375	0.0294	0.0081	--------
2.08	0.7292	0.3962	0.1542	0.1270	0.0271	--------
2.17	0.8833	0.5302	0.1542	0.1339	0.0202	--------
2.25	1.0375	0.6687	0.1542	0.1385	0.0157	--------
2.33	1.1917	0.8103	0.1542	0.1417	0.0125	--------
2.42	1.3458	0.9543	0.1542	0.1440	0.0102	--------
2.50	1.5000	1.1000	0.1542	0.1457	0.0085	--------
2.58	1.5417	1.1396	0.0417	0.0396	0.0020	--------
2.67	1.5833	1.1793	0.0417	0.0397	0.0020	--------
2.75	1.6250	1.2191	0.0417	0.0398	0.0019	--------
2.83	1.6667	1.2590	0.0417	0.0399	0.0018	--------
2.92	1.7083	1.2990	0.0417	0.0399	0.0017	--------
3.00	1.7500	1.3390	0.0417	0.0400	0.0017	--------
3.08	1.7837	1.3714	0.0337	0.0325	0.0013	--------
3.17	1.8175	1.4039	0.0337	0.0325	0.0013	--------
3.25	1.8512	1.4365	0.0337	0.0325	0.0012	--------
3.33	1.8850	1.4690	0.0338	0.0326	0.0012	--------
3.42	1.9188	1.5016	0.0338	0.0326	0.0011	--------
3.50	1.9525	1.5343	0.0337	0.0326	0.0011	--------
3.58	1.9750	1.5561	0.0225	0.0218	0.0007	--------
3.67	1.9975	1.5779	0.0225	0.0218	0.0007	--------
3.75	2.0200	1.5997	0.0225	0.0218	0.0007	--------
3.83	2.0425	1.6215	0.0225	0.0218	0.0007	--------
3.92	2.0650	1.6433	0.0225	0.0218	0.0007	--------
4.00	2.0875	1.6652	0.0225	0.0218	0.0007	--------
4.08	2.1063	1.6834	0.0188	0.0182	0.0005	--------
4.17	2.1250	1.7016	0.0187	0.0182	0.0005	--------
4.25	2.1437	1.7198	0.0187	0.0182	0.0005	--------
4.33	2.1625	1.7381	0.0188	0.0182	0.0005	--------
4.42	2.1813	1.7563	0.0188	0.0182	0.0005	--------
4.50	2.2000	1.7746	0.0187	0.0183	0.0005	--------
4.58	2.2179	1.7920	0.0179	0.0174	0.0005	--------
4.67	2.2358	1.8095	0.0179	0.0175	0.0005	--------

```
  4.75   2.2538    1.8269    0.0179    0.0175    0.0005 --------
  4.83   2.2717    1.8444    0.0179    0.0175    0.0004 --------
  4.92   2.2896    1.8619    0.0179    0.0175    0.0004 --------
  5.00   2.3075    1.8794    0.0179    0.0175    0.0004 --------
  5.08   2.3229    1.8944    0.0154    0.0150    0.0004 --------
  5.17   2.3383    1.9095    0.0154    0.0151    0.0004 --------
  5.25   2.3537    1.9245    0.0154    0.0151    0.0004 --------
  5.33   2.3692    1.9396    0.0154    0.0151    0.0004 --------
  5.42   2.3846    1.9546    0.0154    0.0151    0.0004 --------
  5.50   2.4000    1.9697    0.0154    0.0151    0.0004 --------
  5.58   2.4167    1.9860    0.0167    0.0163    0.0004 --------
  5.67   2.4333    2.0023    0.0167    0.0163    0.0004 --------
  5.75   2.4500    2.0186    0.0167    0.0163    0.0004 --------
  5.83   2.4667    2.0349    0.0167    0.0163    0.0004 --------
  5.92   2.4833    2.0512    0.0167    0.0163    0.0004 --------
  6.00   2.5000    2.0675    0.0167    0.0163    0.0004 --------
-----------------------------------------------------------------
-----------------------------------------------------------------
Total soil rain loss =      0.43(In)
Total effective runoff =      2.07(In)
-----------------------------------------------------------------
Peak flow rate this hydrograph =           6.32(CFS)
Total runoff volume this hydrograph =          27018.3(Ft3)
-----------------------------------------------------------------
+++++++++++++++++++++++++++++++++++++++++++++++++++++++++++++++++
                    6 - H O U R    S T O R M
               R u n o f f     H y d r o g r a p h
-----------------------------------------------------------------
            Hydrograph in   5   Minute intervals ((CFS))

-----------------------------------------------------------------
Time(h+m) Volume Ac.Ft   Q(CFS)  0        2.5       5.0       7.5      10.0
-----------------------------------------------------------------
  0+ 5       0.0000      0.00  Q         |         |         |         |
  0+10       0.0000      0.00  Q         |         |         |         |
  0+15       0.0000      0.00  Q         |         |         |         |
  0+20       0.0000      0.00  Q         |         |         |         |
  0+25       0.0000      0.00  Q         |         |         |         |
  0+30       0.0000      0.00  Q         |         |         |         |
  0+35       0.0003      0.04  Q         |         |         |         |
  0+40       0.0010      0.10  Q         |         |         |         |
  0+45       0.0021      0.16  Q         |         |         |         |
  0+50       0.0036      0.22  Q         |         |         |         |
  0+55       0.0054      0.27  VQ        |         |         |         |
  1+ 0       0.0076      0.31  VQ        |         |         |         |
  1+ 5       0.0104      0.40  VQ        |         |         |         |
  1+10       0.0137      0.49  VQ        |         |         |         |
  1+15       0.0174      0.53  |VQ       |         |         |         |
  1+20       0.0213      0.57  |VQ       |         |         |         |
  1+25       0.0255      0.61  |VQ       |         |         |         |
  1+30       0.0299      0.64  |VQ       |         |         |         |
  1+35       0.0361      0.90  | VQ      |         |         |         |
  1+40       0.0437      1.10  | V Q     |         |         |         |
  1+45       0.0516      1.15  |  VQ     |         |         |         |
  1+50       0.0599      1.20  |  VQ     |         |         |         |
  1+55       0.0684      1.24  |   Q     |         |         |         |
  2+ 0       0.0771      1.27  |   VQ    |         |         |         |
  2+ 5       0.1031      3.78  |     V   |    Q    |         |         |
  2+10       0.1425      5.71  |        V|         | Q       |         |
  2+15       0.1835      5.95  |         |V        |  Q      |         |
  2+20       0.2256      6.11  |         |   V     |   Q     |         |
  2+25       0.2685      6.23  |         |      V  |   Q     |         |
  2+30       0.3120      6.32  |         |         V    Q    |         |
  2+35       0.3370      3.63  |         |   Q     |V        |         |
  2+40       0.3489      1.73  |     Q   |         | V       |         |
  2+45       0.3608      1.73  |     Q   |         |  V      |         |
  2+50       0.3728      1.74  |     Q   |         |   V     |         |
  2+55       0.3847      1.74  |     Q   |         |   V     |         |
  3+ 0       0.3967      1.74  |     Q   |         |    V    |         |
  3+ 5       0.4074      1.55  |     Q   |         |     V   |         |
  3+10       0.4172      1.41  |    Q    |         |     V   |         |
```

```
    3+15       0.4269      1.42  |    Q    |         |      V  |         |
    3+20       0.4367      1.42  |    Q    |         |       V |         |
    3+25       0.4465      1.42  |    Q    |         |       V |         |
    3+30       0.4562      1.42  |    Q    |         |        V|         |
    3+35       0.4641      1.14  |   Q     |         |        V|         |
    3+40       0.4707      0.95  |  Q      |         |         V         |
    3+45       0.4772      0.95  |  Q      |         |         V         |
    3+50       0.4837      0.95  |  Q      |         |         |V        |
    3+55       0.4903      0.95  |  Q      |         |         |V        |
    4+ 0       0.4968      0.95  |  Q      |         |         | V       |
    4+ 5       0.5028      0.86  |  Q      |         |         | V       |
    4+10       0.5082      0.79  |  Q      |         |         | V       |
    4+15       0.5137      0.79  |  Q      |         |         |  V      |
    4+20       0.5192      0.79  |  Q      |         |         |  V      |
    4+25       0.5246      0.79  |  Q      |         |         |  V      |
    4+30       0.5301      0.79  |  Q      |         |         |   V     |
    4+35       0.5354      0.77  |  Q      |         |         |   V     |
    4+40       0.5407      0.76  |  Q      |         |         |   V     |
    4+45       0.5459      0.76  |  Q      |         |         |    V    |
    4+50       0.5512      0.76  |  Q      |         |         |    V    |
    4+55       0.5564      0.76  |  Q      |         |         |    V    |
    5+ 0       0.5616      0.76  |  Q      |         |         |     V   |
    5+ 5       0.5665      0.70  | Q       |         |         |     V   |
    5+10       0.5710      0.66  | Q       |         |         |     V   |
    5+15       0.5755      0.66  | Q       |         |         |      V  |
    5+20       0.5800      0.66  | Q       |         |         |      V  |
    5+25       0.5845      0.66  | Q       |         |         |      V  |
    5+30       0.5890      0.66  | Q       |         |         |      V  |
    5+35       0.5938      0.69  | Q       |         |         |       V |
    5+40       0.5987      0.71  | Q       |         |         |       V |
    5+45       0.6036      0.71  | Q       |         |         |       V |
    5+50       0.6084      0.71  | Q       |         |         |        V|
    5+55       0.6133      0.71  | Q       |         |         |        V|
    6+ 0       0.6182      0.71  | Q       |         |         |        V|
    6+ 5       0.6203      0.29  |Q        |         |         |        V|
-----------------------------------------------------------------------
```

```
                    FLOOD HYDROGRAPH ROUTING PROGRAM
            Copyright (c) CIVILCADD/CIVILDESIGN, 1989 - 2004
                        Study date: 07/20/20

------------------------------------------------------------------


underground detention basin routing
upper area, 6.0 acres
100 yr / 6 hr

-----------------------------------------------------------------


Program License Serial Number 4027

-----------------------------------------------------------------
******************** HYDROGRAPH INFORMATION **********************

               From study/file name: vista1.rte
****************************HYDROGRAPH DATA****************************
               Number of intervals =    72
               Time interval =    5.0 (Min.)
               Maximum/Peak flow rate =       10.935 (CFS)
               Total volume =       1.114 (Ac.Ft)
       Status of hydrographs being held in storage
                  Stream 1  Stream 2  Stream 3  Stream 4  Stream 5
       Peak (CFS)      0.000     0.000     0.000     0.000     0.000
       Vol (Ac.Ft)      0.000     0.000     0.000     0.000     0.000
**********************************************************************



++++++++++++++++++++++++++++++++++++++++++++++++++++++++++++++++++++++
Process from Point/Station        0.000 to Point/Station        0.000
**** RETARDING BASIN ROUTING ****
______________________________________________________________________

User entry of depth-outflow-storage data
-----------------------------------------------------------------
Total number of inflow hydrograph intervals = 72
Hydrograph time unit =  5.000 (Min.)
Initial depth in storage basin =   0.00(Ft.)
-----------------------------------------------------------------
-----------------------------------------------------------------
Initial basin depth =   0.00 (Ft.)
Initial basin storage =      0.00 (Ac.Ft)
Initial basin outflow =   0.00 (CFS)
-----------------------------------------------------------------
-----------------------------------------------------------------
Depth vs. Storage and Depth vs. Discharge data:
 Basin Depth  Storage    Outflow   (S-O*dt/2)   (S+O*dt/2)
     (Ft.)    (Ac.Ft)    (CFS)     (Ac.Ft)    (Ac.Ft)
-----------------------------------------------------------------
   0.000      0.000      0.000      0.000        0.000
   1.000      0.041      0.001      0.041        0.041
   2.000      0.082      0.002      0.082        0.082
   3.000      0.123      0.003      0.123        0.123
   4.000      0.210      0.004      0.210        0.210
   5.000      0.293      1.160      0.289        0.297
   6.000      0.371      2.390      0.363        0.379
   7.000      0.440      3.180      0.429        0.451
   8.000      0.491      3.800      0.478        0.504
   9.000      0.532      4.340      0.517        0.547
-----------------------------------------------------------------
               Hydrograph Detention Basin Routing
-----------------------------------------------------------------

Graph values: 'I'= unit inflow; 'O'=outflow at time shown
```

```
      ----------------------------------------------------------------------
 Time   Inflow  Outflow    Storage                                          Depth
(Hours) (CFS)   (CFS)     (Ac.Ft) .0       2.7    5.47    8.20   10.93 (Ft.)
 0.083   0.00    0.00      0.000  O       |       |       |       |     0.00
 0.167   0.00    0.00      0.000  O       |       |       |       |     0.00
 0.250   0.00    0.00      0.000  O       |       |       |       |     0.00
 0.333   0.02    0.00      0.000  O       |       |       |       |     0.00
 0.417   0.13    0.00      0.001  O       |       |       |       |     0.01
 0.500   0.22    0.00      0.002  O       |       |       |       |     0.04
 0.583   0.43    0.00      0.004  OI      |       |       |       |     0.10
 0.667   0.55    0.00      0.007  OI      |       |       |       |     0.18
 0.750   0.65    0.00      0.012  OI      |       |       |       |     0.28
 0.833   0.73    0.00      0.016  O I     |       |       |       |     0.40
 0.917   0.80    0.00      0.022  O I     |       |       |       |     0.53
 1.000   0.86    0.00      0.027  O I     |       |       |       |     0.67
 1.083   1.14    0.00      0.034  O  I    |       |       |       |     0.83
 1.167   1.20    0.00      0.042  O  I    |       |       |       |     1.03
 1.250   1.26    0.00      0.051  O  I    |       |       |       |     1.24
 1.333   1.31    0.00      0.060  O  I    |       |       |       |     1.45
 1.417   1.35    0.00      0.069  O  I    |       |       |       |     1.67
 1.500   1.38    0.00      0.078  O   I   |       |       |       |     1.90
 1.583   2.21    0.00      0.090  O     I |       |       |       |     2.21
 1.667   2.27    0.00      0.106  O     I |       |       |       |     2.58
 1.750   2.32    0.00      0.122  O     I |       |       |       |     2.97
 1.833   2.37    0.00      0.138  O     I |       |       |       |     3.17
 1.917   2.40    0.00      0.154  O      I|       |       |       |     3.36
 2.000   2.43    0.00      0.171  O      I|       |       |       |     3.55
 2.083  10.25    0.06      0.214  O       |       |       |    I  |     4.05
 2.167  10.52    1.01      0.282  | O     |       |       |     I |     4.87
 2.250  10.69    1.98      0.345  |    O  |       |       |      I|     5.66
 2.333  10.80    2.75      0.402  |       O       |       |      I|     6.46
 2.417  10.88    3.37      0.456  |       |O      |       |      I|     7.31
 2.500  10.93    3.99      0.506  |       |  O    |       |       I     8.36
 2.583   2.96    4.25      0.525  |       I   O   |       |       |     8.83
 2.667   2.97    4.14      0.517  |       I   O   |       |       |     8.63
 2.750   2.97    4.04      0.509  |       I  O    |       |       |     8.44
 2.833   2.97    3.94      0.502  |       I  O    |       |       |     8.27
 2.917   2.97    3.86      0.496  |       I  O    |       |       |     8.11
 3.000   2.98    3.78      0.490  |       I  O    |       |       |     7.98
 3.083   2.41    3.70      0.483  |      I| O     |       |       |     7.83
 3.167   2.41    3.59      0.474  |      I| O     |       |       |     7.67
 3.250   2.41    3.50      0.466  |      I| O     |       |       |     7.51
 3.333   2.42    3.41      0.459  |      I|O      |       |       |     7.37
 3.417   2.42    3.33      0.453  |      I|O      |       |       |     7.25
 3.500   2.42    3.26      0.446  |      I|O      |       |       |     7.13
 3.583   1.61    3.16      0.438  |   I   |O      |       |       |     6.97
 3.667   1.61    3.04      0.428  |   I   O       |       |       |     6.83
 3.750   1.61    2.93      0.419  |   I   O       |       |       |     6.69
 3.833   1.61    2.83      0.410  |   I   O       |       |       |     6.56
 3.917   1.61    2.74      0.402  |   I   O       |       |       |     6.44
 4.000   1.61    2.66      0.394  |   I  O|       |       |       |     6.34
 4.083   1.35    2.57      0.386  |  I   O|       |       |       |     6.22
 4.167   1.35    2.47      0.378  |  I   O|       |       |       |     6.11
 4.250   1.35    2.39      0.371  |  I  O |       |       |       |     6.00
 4.333   1.35    2.28      0.364  |  I  O |       |       |       |     5.91
 4.417   1.35    2.18      0.358  |  I  O |       |       |       |     5.83
 4.500   1.35    2.10      0.352  |  I  O |       |       |       |     5.76
 4.583   1.29    2.02      0.347  |  I O  |       |       |       |     5.70
 4.667   1.29    1.94      0.343  |  I O  |       |       |       |     5.64
 4.750   1.29    1.87      0.338  |  I O  |       |       |       |     5.58
 4.833   1.29    1.81      0.335  |  I O  |       |       |       |     5.53
 4.917   1.29    1.76      0.331  |  I O  |       |       |       |     5.49
 5.000   1.29    1.71      0.328  |  I O  |       |       |       |     5.45
 5.083   1.11    1.66      0.325  |  IO   |       |       |       |     5.41
 5.167   1.11    1.60      0.321  |  IO   |       |       |       |     5.36
 5.250   1.11    1.55      0.318  |  IO   |       |       |       |     5.32
 5.333   1.11    1.51      0.315  |  IO   |       |       |       |     5.28
 5.417   1.11    1.46      0.312  |  IO   |       |       |       |     5.25
 5.500   1.11    1.43      0.310  |  IO   |       |       |       |     5.22
 5.583   1.20    1.40      0.308  |  IO   |       |       |       |     5.20
 5.667   1.20    1.38      0.307  |  IO   |       |       |       |     5.18
```

```
5.750    1.20    1.36      0.306  |  O    |       |       |       |     5.16
5.833    1.20    1.34      0.305  |  O    |       |       |       |     5.15
5.917    1.20    1.33      0.304  |  O    |       |       |       |     5.14
6.000    1.20    1.32      0.303  |  O    |       |       |       |     5.13
6.083    0.00    1.24      0.298  I  O    |       |       |       |     5.07
6.167    0.00    1.12      0.290  I  O    |       |       |       |     4.96
6.250    0.00    1.02      0.283  I O     |       |       |       |     4.88
6.333    0.00    0.92      0.276  I O     |       |       |       |     4.80
6.417    0.00    0.84      0.270  I O     |       |       |       |     4.72
6.500    0.00    0.76      0.264  I O     |       |       |       |     4.66
6.583    0.00    0.69      0.259  I O     |       |       |       |     4.60
6.667    0.00    0.63      0.255  IO      |       |       |       |     4.54
6.750    0.00    0.57      0.251  IO      |       |       |       |     4.49
6.833    0.00    0.52      0.247  IO      |       |       |       |     4.45
6.917    0.00    0.47      0.244  IO      |       |       |       |     4.40
7.000    0.00    0.43      0.240  IO      |       |       |       |     4.37
7.083    0.00    0.39      0.238  IO      |       |       |       |     4.33
7.167    0.00    0.35      0.235  IO      |       |       |       |     4.30
7.250    0.00    0.32      0.233  O       |       |       |       |     4.27
7.333    0.00    0.29      0.231  O       |       |       |       |     4.25
7.417    0.00    0.27      0.229  O       |       |       |       |     4.23
7.500    0.00    0.24      0.227  O       |       |       |       |     4.20
7.583    0.00    0.22      0.225  O       |       |       |       |     4.19
7.667    0.00    0.20      0.224  O       |       |       |       |     4.17
7.750    0.00    0.18      0.223  O       |       |       |       |     4.15
7.833    0.00    0.16      0.221  O       |       |       |       |     4.14
7.917    0.00    0.15      0.220  O       |       |       |       |     4.13
8.000    0.00    0.14      0.219  O       |       |       |       |     4.11
8.083    0.00    0.12      0.219  O       |       |       |       |     4.10
8.167    0.00    0.11      0.218  O       |       |       |       |     4.09
8.250    0.00    0.10      0.217  O       |       |       |       |     4.08
8.333    0.00    0.09      0.216  O       |       |       |       |     4.08

      Remaining water in basin =    0.22 (Ac.Ft)

      ****************************HYDROGRAPH DATA****************************
                     Number of intervals =   100
                     Time interval =    5.0 (Min.)
                     Maximum/Peak flow rate =        4.251 (CFS)
                     Total volume =       0.898 (Ac.Ft)
             Status of hydrographs being held in storage
                         Stream 1  Stream 2  Stream 3  Stream 4  Stream 5
             Peak (CFS)      0.000     0.000     0.000     0.000     0.000
             Vol (Ac.Ft)      0.000     0.000     0.000     0.000     0.000
      ************************************************************************

      ----------------------------------------------------------------------
```

Encompass Health Chula Vista
Upper Storm/Water Qulaity Chambers - Stage/Storage/Dischage Relationship

depth	Volume		height	Q out
	Cumulative		h	
(feet)	(cubic feet)	(acre-feet)	(feet)	(cfs)
	103 chambers			
	22 end caps			
	12" rocks above			
	36" rocks below			
9.00	23,171	0.5319	4.51	4.34
8.00	21,380	0.4908	3.51	3.8
top of chambers				
7.00	19,147	0.4396	2.51	3.18
6.00	16,154	0.3708	1.51	2.39
5.00	12,775	0.2933	0.51	1.16
4.00	9,150	0.2101	0	
bottom of chambers				
3.00	5,372	0.1233	0	
2.00	3,582	0.0822	0	
1.00	1,791	0.0411	0	
0.00	0	0.0000	0	

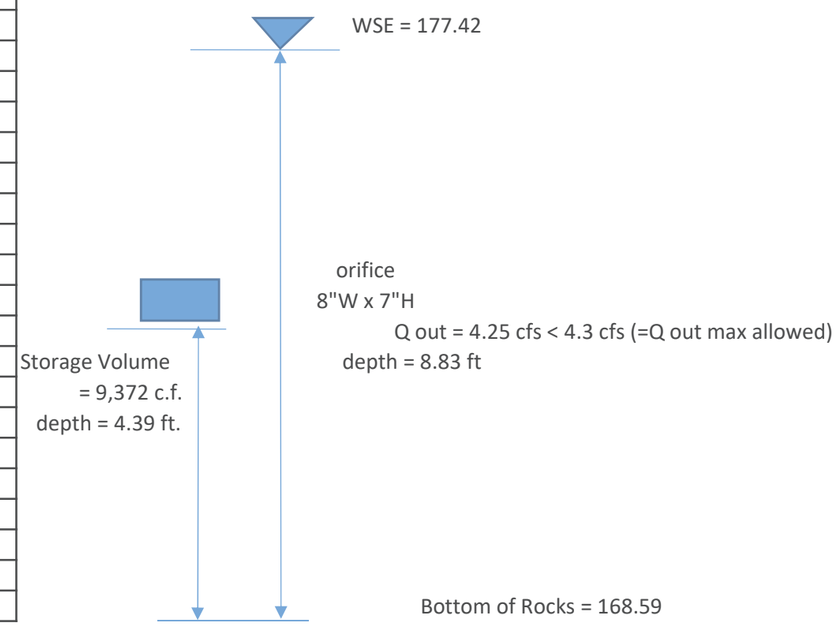

Notes:
1. DCV = 6,248 c.f.
2. Required Storage = DCV x 1.5 = 6,248 x 1.5 = 9,372 c.f.
3. Q out max allowed = 4.3 cfs
4. Bottom of Chambers = 171.59
5. Bottom of Rocks = 168.59

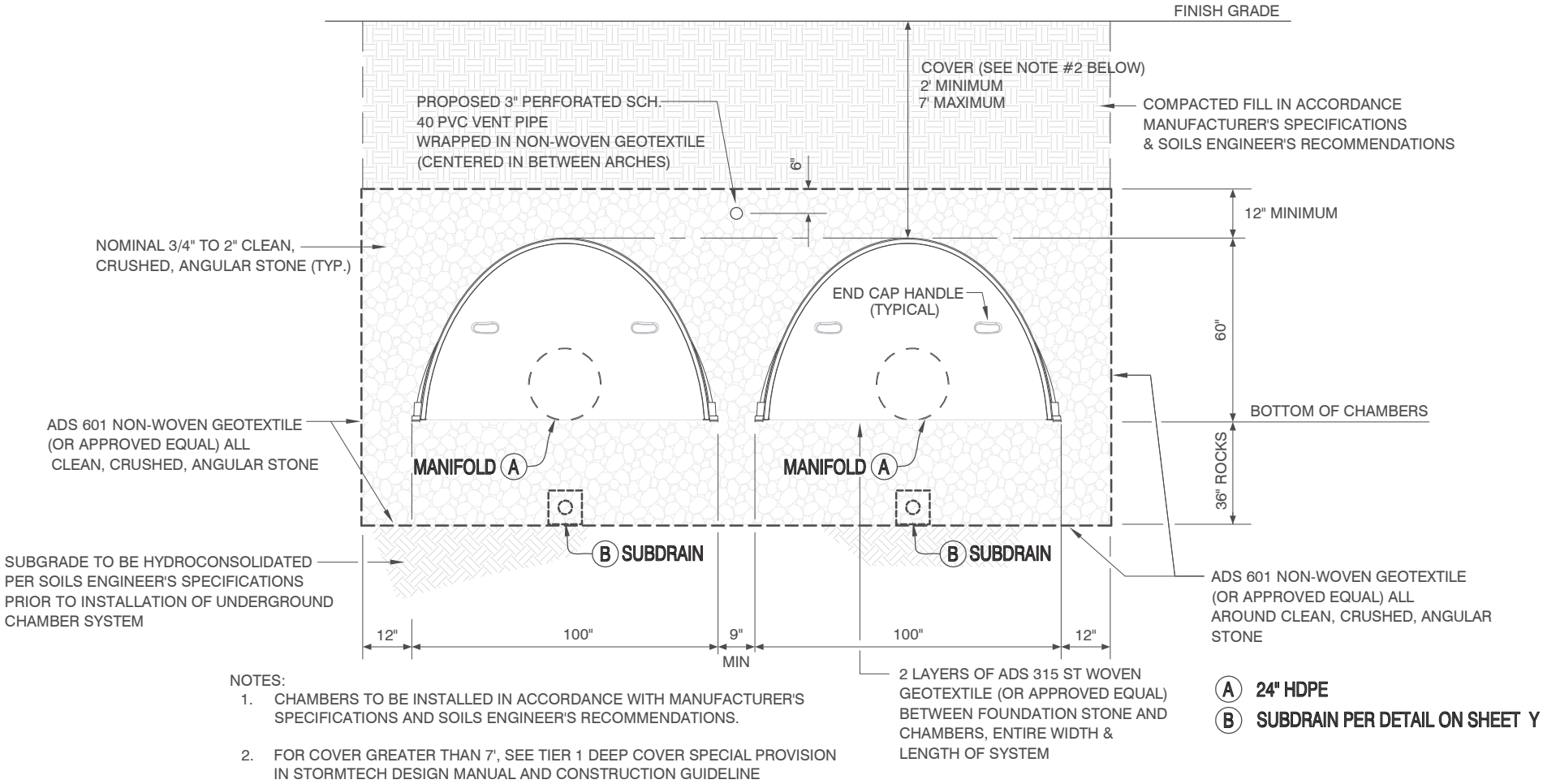

NOTES:

1. CHAMBERS TO BE INSTALLED IN ACCORDANCE WITH MANUFACTURER'S SPECIFICATIONS AND SOILS ENGINEER'S RECOMMENDATIONS.
2. FOR COVER GREATER THAN 7', SEE TIER 1 DEEP COVER SPECIAL PROVISION IN STORMTECH DESIGN MANUAL AND CONSTRUCTION GUIDELINE

A 24" HDPE

B SUBDRAIN PER DETAIL ON SHEET Y

UNDERGROUND DETENTION CHAMBER DETAIL

STORMTECH MC-4500

NOT TO SCALE

103 CHAMBERS / 22 END CAPS
ROCKS: 12" ABOVE / 36" BELOW
VOLUME = 23,171 CU.FT.

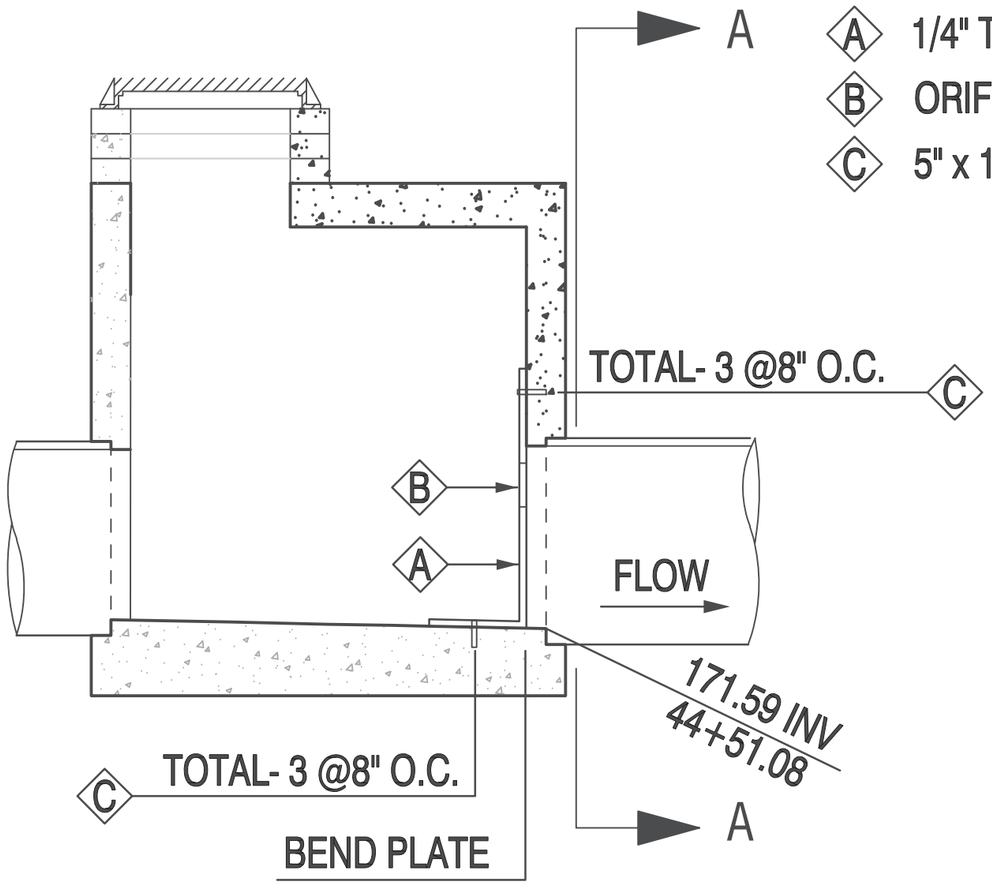

A 1/4" THICK PLATE - 2.0'W x 3'H

B ORIFICE - 8"W x 7"H

C 5" x 1/2" DIAMETER BOLT

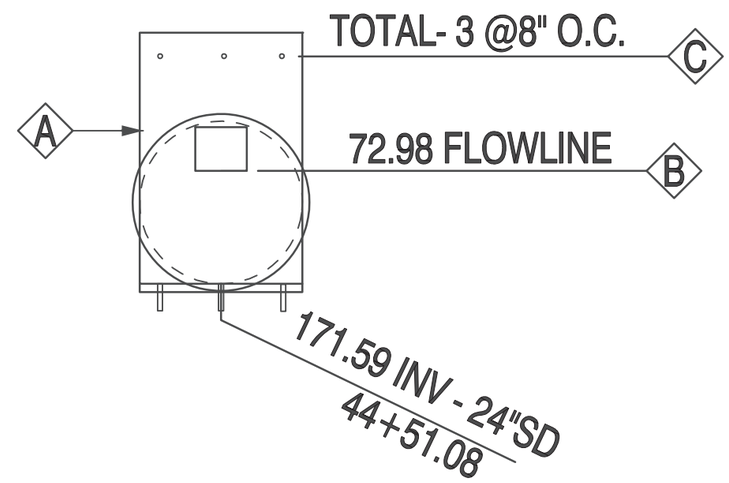

SECTION A-A

ORIFICE OUTLET AT JUNCTION STRUCTURE DETAIL

NOT TO SCALE

Project: **Encompass Health - lower chambers**

StormTech
Detention • Retention • Water Quality
A division of ADS

Chamber Model -	MC-4500	
Units -	**Imperial**	Click Here for Metric
Number of Chambers -	21	
Number of End Caps -	6	
Voids in the stone (porosity) -	40	%
Base of Stone Elevation -	0.00	ft
Amount of Stone Above Chambers -	12	in
Amount of Stone Below Chambers -	14	in
Area of system -	962	sf Min. Area - 962 sf min. area

☑ Include Perimeter Stone in Calculations

StormTech MC-4500 Cumulative Storage Volumes

Height of System *(inches)*	Incremental Single Chamber *(cubic feet)*	Incremental Single End Cap *(cubic feet)*	Incremental Chambers *(cubic feet)*	Incremental End Cap *(cubic feet)*	Incremental Stone *(cubic feet)*	Incremental Ch, EC and Stone *(cubic feet)*	Cumulative System (cubic feet)	Elevation (feet)
86	0.00	0.00	0.00	0.00	32.07	32.07	4228.27	7.17
85	0.00	0.00	0.00	0.00	32.07	32.07	4196.20	7.08
84	0.00	0.00	0.00	0.00	32.07	32.07	4164.13	7.00
83	0.00	0.00	0.00	0.00	32.07	32.07	4132.07	6.92
82	0.00	0.00	0.00	0.00	32.07	32.07	4100.00	6.83
81	0.00	0.00	0.00	0.00	32.07	32.07	4067.93	6.75
80	0.00	0.00	0.00	0.00	32.07	32.07	4035.87	6.67
79	0.00	0.00	0.00	0.00	32.07	32.07	4003.80	6.58
78	0.00	0.00	0.00	0.00	32.07	32.07	3971.73	6.50
77	0.00	0.00	0.00	0.00	32.07	32.07	3939.67	6.42
76	0.00	0.00	0.00	0.00	32.07	32.07	3907.60	6.33
75	0.00	0.00	0.00	0.00	32.07	32.07	3875.53	6.25
74	0.04	0.00	0.86	0.00	31.72	32.58	3843.47	6.17
73	0.12	0.01	2.44	0.06	31.07	33.57	3810.88	6.08
72	0.16	0.03	3.46	0.16	30.62	34.24	3777.32	6.00
71	0.21	0.05	4.38	0.29	30.20	34.87	3743.08	5.92
70	0.27	0.07	5.64	0.41	29.65	35.69	3708.21	5.83
69	0.45	0.09	9.51	0.53	28.05	38.09	3672.52	5.75
68	0.67	0.11	13.97	0.68	26.21	40.86	3634.43	5.67
67	0.80	0.14	16.78	0.85	25.02	42.64	3593.58	5.58
66	0.91	0.17	19.07	1.01	24.04	44.11	3550.94	5.50
65	1.00	0.19	21.06	1.15	23.18	45.39	3506.82	5.42
64	1.09	0.22	22.83	1.29	22.42	46.54	3461.43	5.33
63	1.16	0.24	24.43	1.45	21.71	47.60	3414.89	5.25
62	1.23	0.27	25.91	1.62	21.05	48.59	3367.29	5.17
61	1.30	0.30	27.29	1.79	20.44	49.51	3318.70	5.08
60	1.36	0.32	28.58	1.94	19.86	50.38	3269.19	5.00
59	1.42	0.35	29.79	2.09	19.31	51.19	3218.81	4.92
58	1.47	0.37	30.94	2.23	18.80	51.97	3167.62	4.83
57	1.53	0.39	32.03	2.36	18.31	52.70	3115.65	4.75
56	1.57	0.42	33.06	2.50	17.84	53.41	3062.95	4.67
55	1.62	0.44	34.05	2.64	17.39	54.08	3009.54	4.58
54	1.67	0.46	34.99	2.78	16.96	54.73	2955.46	4.50
53	1.71	0.48	35.89	2.90	16.55	55.34	2900.73	4.42
52	1.75	0.50	36.75	3.03	16.15	55.94	2845.39	4.33
51	1.79	0.53	37.58	3.15	15.78	56.50	2789.45	4.25
50	1.83	0.55	38.37	3.27	15.41	57.05	2732.95	4.17
49	1.86	0.56	39.13	3.39	15.06	57.58	2675.90	4.08
48	1.90	0.58	39.86	3.50	14.72	58.09	2618.32	4.00
47	1.93	0.60	40.57	3.61	14.40	58.57	2560.24	3.92
46	1.96	0.62	41.25	3.72	14.08	59.05	2501.66	3.83
45	2.00	0.64	41.90	3.83	13.78	59.50	2442.62	3.75
44	2.03	0.66	42.53	3.93	13.48	59.94	2383.11	3.67
43	2.05	0.67	43.13	4.04	13.20	60.37	2323.17	3.58
42	2.08	0.69	43.71	4.14	12.93	60.78	2262.80	3.50
41	2.11	0.71	44.27	4.24	12.66	61.17	2202.02	3.42
40	2.13	0.72	44.81	4.34	12.41	61.56	2140.85	3.33
39	2.16	0.74	45.33	4.44	12.16	61.93	2079.29	3.25
38	2.18	0.76	45.83	4.54	11.92	62.29	2017.36	3.17
37	2.21	0.77	46.32	4.63	11.69	62.63	1955.07	3.08
36	2.23	0.79	46.78	4.72	11.47	62.97	1892.44	3.00
35	2.25	0.80	47.23	4.81	11.25	63.29	1829.47	2.92
34	2.27	0.82	47.66	4.92	11.03	63.62	1766.18	2.83
33	2.29	0.84	48.07	5.04	10.82	63.93	1702.57	2.75
32	2.31	0.85	48.46	5.08	10.65	64.19	1638.63	2.67
31	2.33	0.86	48.84	5.15	10.47	64.46	1574.44	2.58
30	2.34	0.87	49.21	5.23	10.29	64.73	1509.98	2.50
29	2.36	0.89	49.56	5.31	10.12	64.99	1445.24	2.42
28	2.38	0.90	49.89	5.39	9.95	65.23	1380.26	2.33
27	2.39	0.91	50.21	5.46	9.80	65.47	1315.02	2.25
26	2.41	0.92	50.51	5.53	9.65	65.70	1249.55	2.17
25	2.42	0.93	50.80	5.61	9.50	65.91	1183.86	2.08
24	2.43	0.95	51.08	5.67	9.37	66.12	1117.94	2.00
23	2.44	0.96	51.34	5.74	9.23	66.32	1051.82	1.92
22	2.46	0.97	51.59	5.80	9.11	66.50	985.51	1.83
21	2.47	0.98	51.82	5.87	8.99	66.68	919.00	1.75
20	2.48	0.99	52.04	5.93	8.88	66.85	852.32	1.67
19	2.49	1.00	52.25	5.99	8.77	67.01	785.47	1.58
18	2.50	1.01	52.45	6.04	8.67	67.16	718.46	1.50
17	2.51	1.02	52.64	6.10	8.57	67.31	651.30	1.42
16	2.51	1.02	52.81	6.15	8.48	67.44	584.00	1.33
15	2.53	1.03	53.07	6.20	8.36	67.62	516.56	1.25
14	0.00	0.00	0.00	0.00	32.07	32.07	448.93	1.17
13	0.00	0.00	0.00	0.00	32.07	32.07	416.87	1.08
12	0.00	0.00	0.00	0.00	32.07	32.07	384.80	1.00
11	0.00	0.00	0.00	0.00	32.07	32.07	352.73	0.92
10	0.00	0.00	0.00	0.00	32.07	32.07	320.67	0.83
9	0.00	0.00	0.00	0.00	32.07	32.07	288.60	0.75
8	0.00	0.00	0.00	0.00	32.07	32.07	256.53	0.67
7	0.00	0.00	0.00	0.00	32.07	32.07	224.47	0.58
6	0.00	0.00	0.00	0.00	32.07	32.07	192.40	0.50
5	0.00	0.00	0.00	0.00	32.07	32.07	160.33	0.42
4	0.00	0.00	0.00	0.00	32.07	32.07	128.27	0.33
3	0.00	0.00	0.00	0.00	32.07	32.07	96.20	0.25
2	0.00	0.00	0.00	0.00	32.07	32.07	64.13	0.17

Project: **Encompass Health - upper chambers**

StormTech
Detention • Retention • Water Quality
A division of ADS

Chamber Model -	MC-4500	
Units -	**Imperial**	Click Here for Metric
Number of Chambers -	103	
Number of End Caps -	22	
Voids in the stone (porosity) -	40	%
Base of Stone Elevation -	0.00	ft
Amount of Stone Above Chambers -	12	in
Amount of Stone Below Chambers -	36	in
Area of system -	4477	sf Min. Area - 4477 sf min. area

☑ Include Perimeter Stone in Calculations

StormTech MC-4500 Cumulative Storage Volumes

Height of System *(inches)*	Incremental Single Chamber *(cubic feet)*	Incremental Single End Cap *(cubic feet)*	Incremental Chambers *(cubic feet)*	Incremental End Cap *(cubic feet)*	Incremental Stone *(cubic feet)*	Incremental Ch, EC and Stone *(cubic feet)*	Cumulative System (cubic feet)	Elevation (feet)
108	0.00	0.00	0.00	0.00	149.23	149.23	23170.66	9.00
107	0.00	0.00	0.00	0.00	149.23	149.23	23021.43	8.92
106	0.00	0.00	0.00	0.00	149.23	149.23	22872.19	8.83
105	0.00	0.00	0.00	0.00	149.23	149.23	22722.96	8.75
104	0.00	0.00	0.00	0.00	149.23	149.23	22573.73	8.67
103	0.00	0.00	0.00	0.00	149.23	149.23	22424.49	8.58
102	0.00	0.00	0.00	0.00	149.23	149.23	22275.26	8.50
101	0.00	0.00	0.00	0.00	149.23	149.23	22126.03	8.42
100	0.00	0.00	0.00	0.00	149.23	149.23	21976.79	8.33
99	0.00	0.00	0.00	0.00	149.23	149.23	21827.56	8.25
98	0.00	0.00	0.00	0.00	149.23	149.23	21678.33	8.17
97	0.00	0.00	0.00	0.00	149.23	149.23	21529.09	8.08
96	0.04	0.00	4.22	0.00	147.55	151.77	21379.86	8.00
95	0.12	0.01	11.96	0.22	144.36	156.54	21228.09	7.92
94	0.16	0.03	16.97	0.58	142.21	159.76	21071.55	7.83
93	0.21	0.05	21.50	1.05	140.21	162.76	20911.79	7.75
92	0.27	0.07	27.64	1.49	137.58	166.71	20749.03	7.67
91	0.45	0.09	46.64	1.93	129.81	178.37	20582.32	7.58
90	0.67	0.11	68.52	2.49	120.83	191.84	20403.95	7.50
89	0.80	0.14	82.30	3.11	115.07	200.48	20212.11	7.42
88	0.91	0.17	93.54	3.69	110.34	207.57	20011.63	7.33
87	1.00	0.19	103.30	4.22	106.23	213.74	19804.06	7.25
86	1.09	0.22	112.00	4.73	102.54	219.27	19590.32	7.17
85	1.16	0.24	119.84	5.31	99.17	224.32	19371.05	7.08
84	1.23	0.27	127.10	5.94	96.01	229.06	19146.73	7.00
83	1.30	0.30	133.87	6.55	93.07	233.48	18917.67	6.92
82	1.36	0.32	140.19	7.12	90.31	237.61	18684.18	6.83
81	1.42	0.35	146.13	7.65	87.72	241.50	18446.57	6.75
80	1.47	0.37	151.75	8.16	85.27	245.18	18205.07	6.67
79	1.53	0.39	157.09	8.67	82.93	248.69	17959.88	6.58
78	1.57	0.42	162.17	9.18	80.69	252.05	17711.19	6.50
77	1.62	0.44	167.00	9.69	78.56	255.25	17459.15	6.42
76	1.67	0.46	171.62	10.18	76.51	258.31	17203.90	6.33
75	1.71	0.48	176.04	10.65	74.56	261.25	16945.59	6.25
74	1.75	0.50	180.26	11.11	72.69	264.05	16684.35	6.17
73	1.79	0.53	184.30	11.56	70.89	266.74	16420.29	6.08
72	1.83	0.55	188.20	11.99	69.16	269.35	16153.55	6.00
71	1.86	0.56	191.93	12.42	67.49	271.84	15884.20	5.92
70	1.90	0.58	195.53	12.83	65.89	274.25	15612.35	5.83
69	1.93	0.60	198.98	13.24	64.35	276.56	15338.11	5.75
68	1.96	0.62	202.30	13.64	62.86	278.80	15061.54	5.67
67	2.00	0.64	205.50	14.04	61.42	280.95	14782.74	5.58
66	2.03	0.66	208.58	14.43	60.03	283.03	14501.79	5.50
65	2.05	0.67	211.54	14.81	58.69	285.04	14218.76	5.42
64	2.08	0.69	214.39	15.19	57.40	286.98	13933.71	5.33
63	2.11	0.71	217.13	15.56	56.16	288.85	13646.73	5.25
62	2.13	0.72	219.79	15.92	54.95	290.66	13357.88	5.17
61	2.16	0.74	222.34	16.28	53.78	292.41	13067.22	5.08
60	2.18	0.76	224.80	16.63	52.66	294.09	12774.81	5.00
59	2.21	0.77	227.17	16.98	51.58	295.72	12480.72	4.92
58	2.23	0.79	229.45	17.31	50.53	297.29	12185.00	4.83
57	2.25	0.80	231.63	17.64	49.52	298.80	11887.71	4.75
56	2.27	0.82	233.74	18.06	48.51	300.31	11588.91	4.67
55	2.29	0.84	235.77	18.50	47.53	301.79	11288.60	4.58
54	2.31	0.85	237.71	18.61	46.71	303.02	10986.81	4.50
53	2.33	0.86	239.57	18.89	45.85	304.31	10683.79	4.42
52	2.34	0.87	241.36	19.19	45.02	305.56	10379.47	4.33
51	2.36	0.89	243.07	19.47	44.22	306.76	10073.91	4.25
50	2.38	0.90	244.71	19.75	43.45	307.91	9767.15	4.17
49	2.39	0.91	246.27	20.03	42.71	309.01	9459.24	4.08
48	2.41	0.92	247.76	20.29	42.01	310.07	9150.23	4.00
47	2.42	0.93	249.18	20.55	41.34	311.08	8840.16	3.92
46	2.43	0.95	250.54	20.80	40.70	312.04	8529.09	3.83
45	2.44	0.96	251.82	21.05	40.09	312.95	8217.05	3.75
44	2.46	0.97	253.03	21.28	39.51	313.82	7904.10	3.67
43	2.47	0.98	254.18	21.51	38.96	314.65	7590.28	3.58
42	2.48	0.99	255.26	21.73	38.43	315.43	7275.63	3.50
41	2.49	1.00	256.29	21.95	37.94	316.18	6960.19	3.42
40	2.50	1.01	257.26	22.15	37.47	316.88	6644.02	3.33
39	2.51	1.02	258.17	22.35	37.03	317.54	6327.14	3.25
38	2.51	1.02	259.02	22.54	36.61	318.17	6009.59	3.17
37	2.53	1.03	260.27	22.72	36.04	319.03	5691.43	3.08
36	0.00	0.00	0.00	0.00	149.23	149.23	5372.40	3.00
35	0.00	0.00	0.00	0.00	149.23	149.23	5223.17	2.92
34	0.00	0.00	0.00	0.00	149.23	149.23	5073.93	2.83
33	0.00	0.00	0.00	0.00	149.23	149.23	4924.70	2.75
32	0.00	0.00	0.00	0.00	149.23	149.23	4775.47	2.67
31	0.00	0.00	0.00	0.00	149.23	149.23	4626.23	2.58
30	0.00	0.00	0.00	0.00	149.23	149.23	4477.00	2.50
29	0.00	0.00	0.00	0.00	149.23	149.23	4327.77	2.42
28	0.00	0.00	0.00	0.00	149.23	149.23	4178.53	2.33
27	0.00	0.00	0.00	0.00	149.23	149.23	4029.30	2.25
26	0.00	0.00	0.00	0.00	149.23	149.23	3880.07	2.17
25	0.00	0.00	0.00	0.00	149.23	149.23	3730.83	2.08
24	0.00	0.00	0.00	0.00	149.23	149.23	3581.60	2.00

Section 4 – Hydrology Maps

4.1 Existing Development Hydrology Map
4.2 Proposed Development Hydrology Map

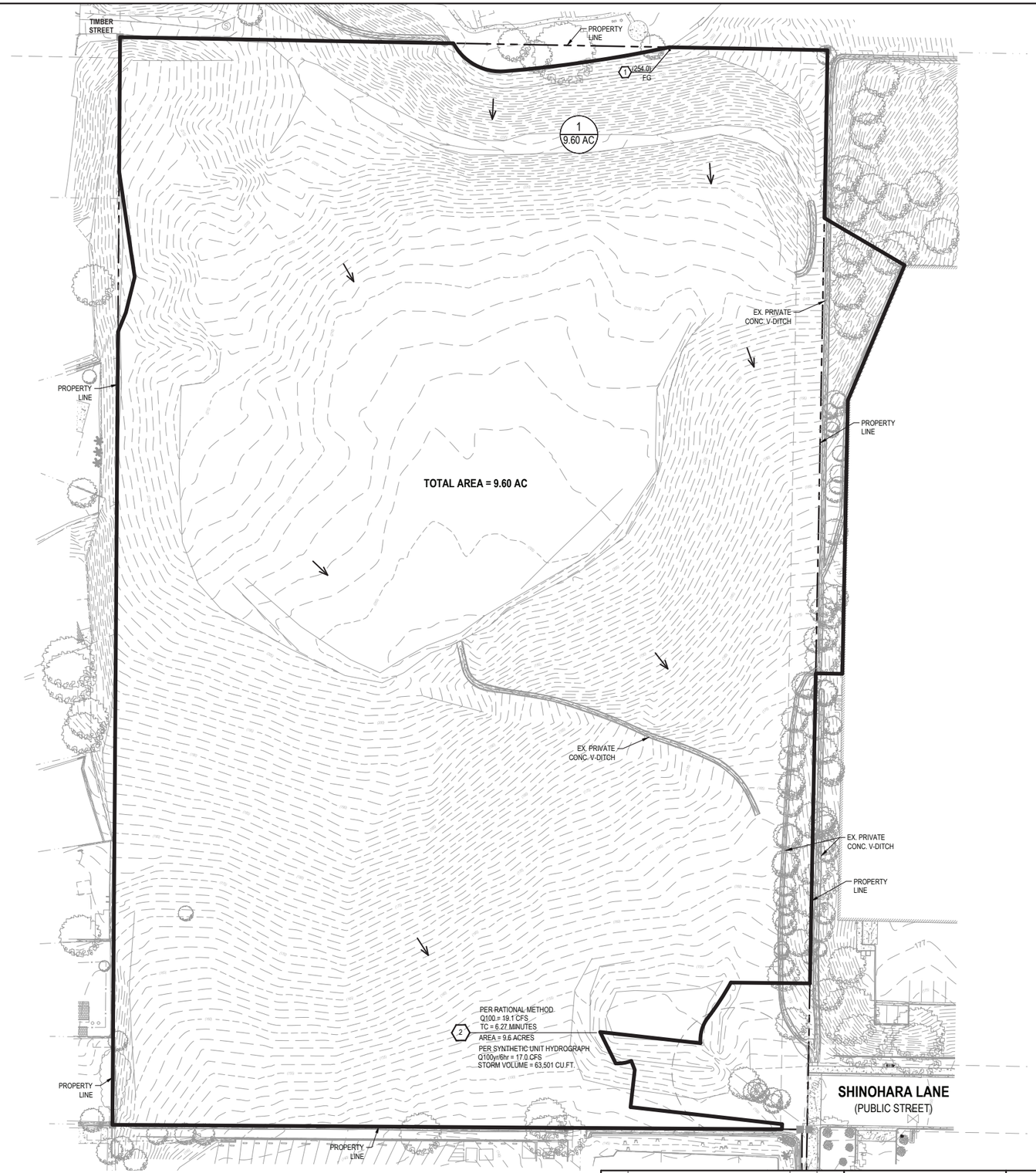

LEGEND:

→	FLOW PATH OF WATER
━━━	DRAINAGE AREA BOUNDARY
— — —	PROPERTY LINE
1	SUB-AREA NUMBER
0.14 AC	SUB-AREA ACREAGE

AC	ACRES
CB	CATCH BASIN
HP	HIGH POINT
INV	INVERT
JS	JUNCTION STRUCTURE
MH	MANHOLE
L. PT.	LOW POINT
TG	TOP OF GRATE
TS	TOP OF SLOPE

REGISTERED PROFESSIONAL ENGINEER RABIH F. MAHMOUD 60421 EXPIRES 6/30/22 CIVIL STATE OF CALIFORNIA

APD CONSULTANTS, INC.
PLANNING . ENGINEERING . CONSTRUCTION MANAGEMENT
22362 GILBERTO, SUITE 245, RANCHO SANTA MARGARITA, CA 92688
TEL: (949) 336-6336 ; (949) 336-6337 www.apdcon.com

40' 20' 0 40' 80'
SCALE: 1" = 40'

By	REVISIONS	Date	App'd

DATUM
VERTICAL DATUM: NAVD88
HORIZONTAL DATUM: NAD83

SCALE
HORIZONTAL
AS SHOWN
VERTICAL

Designed By:	Drawn By:	Checked By:
V.B.	V.B.	R.M.

Plans Prepared Under Supervision Of: Date:
ROBBIE MAHMOOD, P.E. R.C.E. No. 60421

CITY OF CHULA VISTA DEVELOPMENT SERVICES DEPARTMENT
ENCOMPASS HEALTH CHULA VISTA
PRE-DEVELOPMENT CONDITION HYDROLOGY MAP

DRAWING NO. 1
W.O. No.

CV REVISED: 2/13/19

ENCOMPASS HEALTH CHULA VISTA

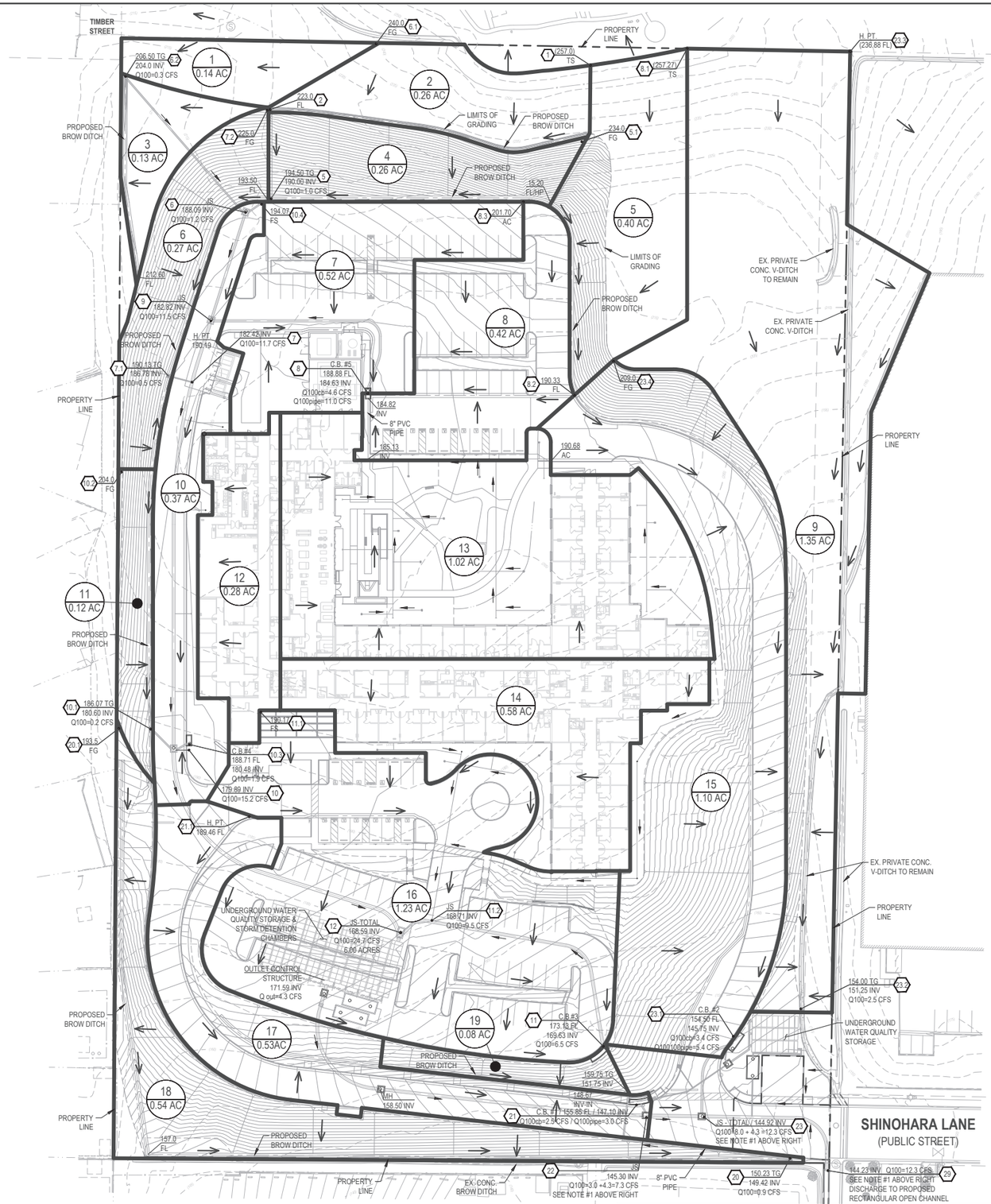

LEGEND:

→	FLOW PATH OF WATER
━━	DRAINAGE AREA BOUNDARY
— — —	PROPERTY LINE
1	SUB-AREA NUMBER
0.14 AC	SUB-AREA ACREAGE

AC	ACRES
CB	CATCH BASIN
HP	HIGH POINT
INV	INVERT
JS	JUNCTION STRUCTURE
MH	MANHOLE
L. PT.	LOW POINT
TG	TOP OF GRATE
TS	TOP OF SLOPE
CB	CATCH BASIN
Q100	100-YEAR PEAK FLOW (CFS)
Q100cb	100-YEAR PEAK FLOW IN CATCH BASIN (CFS)
Q100pipe	100-YEAR PEAK FLOW IN PIPE (CFS)

NOTE:

1. The 4.3 cfs is the flow discharging from the upstream detention chamber

REGISTERED PROFESSIONAL ENGINEER RABI H. F. MAHMOOD 60421 EXPIRES 6/30/22 CIVIL STATE OF CALIFORNIA

APD CONSULTANTS, INC.
PLANNING . ENGINEERING . CONSTRUCTION MANAGEMENT
22362 GILBERTO, SUITE 245, RANCHO SANTA MARGARITA, CA 92688
TEL: (949) 336-6336 ; (949) 336-6337 www.apdcon.com

40' 20' 0 40' 80'
SCALE: 1" = 40'

ENCOMPASS HEALTH CHULA VISTA

By	REVISIONS	Date	App'd

DATUM
VERTICAL DATUM: NAVD88
HORIZONTAL DATUM: NAD83

SCALE
HORIZONTAL
AS SHOWN
VERTICAL

Designed By: V.B. | Drawn By: V.B. | Checked By: R.M.

Plans Prepared Under Supervision Of: Date: _____
ROBBIE MAHMOOD, P.E. R.C.E. No. 60421

CITY OF CHULA VISTA DEVELOPMENT SERVICES DEPARTMENT
ENCOMPASS HEALTH CHULA VISTA
HYDROLOGY MAP PROPOSED CONDITION

DRAWING NO. 1
W.O. No.

CV REVISED: 2/13/19

Section 5 – 3’ Wide Concrete Channel Hydraulics

```
____________________________________________________________________________
****************************************************************************
                 HYDRAULIC ELEMENTS - I  PROGRAM PACKAGE
          (C) Copyright 1982-99 Advanced Engineering Software (aes)
                     Ver. 8.0  Release Date: 01/01/99


----------------------------------------------------------------------------
  TIME/DATE OF STUDY: 15:39   7/22/2020
============================================================================


 ************************* DESCRIPTION OF STUDY *************************
* channel                                                                  *
* Q = attenuated flow                                                      *
*                                                                          *
 ****************************************************************************

****************************************************************************
>>>>CHANNEL INPUT INFORMATION<<<<
----------------------------------------------------------------------------
    CHANNEL Z1(HORIZONTAL/VERTICAL) =    0.00
            Z2(HORIZONTAL/VERTICAL) =    0.00
    BASEWIDTH(FEET) =     3.00
    CONSTANT CHANNEL SLOPE(FEET/FEET) = 0.005000
    UNIFORM FLOW(CFS) =       12.30
    MANNINGS FRICTION FACTOR = 0.0140
============================================================================
    NORMAL-DEPTH FLOW INFORMATION:
----------------------------------------------------------------------------
    >>>>> NORMAL DEPTH(FEET) =   0.83
    FLOW TOP-WIDTH(FEET) =         3.00
    FLOW AREA(SQUARE FEET) =           2.49
    HYDRAULIC DEPTH(FEET) =     0.83
    FLOW AVERAGE VELOCITY(FEET/SEC.) =     4.94
    UNIFORM FROUDE NUMBER =    0.956
    PRESSURE + MOMENTUM(POUNDS) =          182.22
    AVERAGED VELOCITY HEAD(FEET) =      0.379
    SPECIFIC ENERGY(FEET) =      1.209
============================================================================
    CRITICAL-DEPTH FLOW INFORMATION:
----------------------------------------------------------------------------
    CRITICAL FLOW TOP-WIDTH(FEET) =         3.00
    CRITICAL FLOW AREA(SQUARE FEET) =           2.41
    CRITICAL FLOW HYDRAULIC DEPTH(FEET) =     0.80
    CRITICAL FLOW AVERAGE VELOCITY(FEET/SEC.) =     5.10
    CRITICAL DEPTH(FEET) =     0.80
    CRITICAL FLOW PRESSURE + MOMENTUM(POUNDS) =          182.06
    AVERAGED CRITICAL FLOW VELOCITY HEAD(FEET) =      0.403
    CRITICAL FLOW SPECIFIC ENERGY(FEET) =      1.208
============================================================================
```

Section 6 – Catch Basin and Piping Hydraulics

```
*****************************************************************************
                 PIPE-FLOW HYDRAULICS COMPUTER PROGRAM PACKAGE
           (Reference: LACFCD,LACRD, AND OCEMA HYDRAULICS CRITERION)
          (c) Copyright 1982-2003 Advanced Engineering Software (aes)
                      Ver. 8.0  Release Date: 01/01/2003


  ************************** DESCRIPTION OF STUDY **************************
 * Line "A"                                                               *
 *                                                                        *
 *                                                                        *
  **************************************************************************

   FILE NAME: VA.DAT
   TIME/DATE OF STUDY: 14:20 07/22/2020
*****************************************************************************
                GRADUALLY VARIED FLOW ANALYSIS FOR PIPE SYSTEM
                          NODAL POINT STATUS TABLE
                 (Note: "*" indicates nodal point data used.)
                       UPSTREAM RUN                  DOWNSTREAM RUN
    NODE    MODEL   PRESSURE      PRESSURE+          FLOW         PRESSURE+
   NUMBER  PROCESS  HEAD(FT)   MOMENTUM(POUNDS)   DEPTH(FT)   MOMENTUM(POUNDS)
   996.50-             2.00*            572.37        1.58             562.93
         } FRICTION
   999.66-             1.92*            561.49        1.75 Dc          554.05
         } JUNCTION
  1003.51-             3.20*            574.48        0.76             433.27
         } FRICTION
  1004.65-             3.15*            563.73        0.76             433.00
         } FRICTION+BEND   } HYDRAULIC JUMP
  1027.63-             2.19             374.91        0.76*            431.64
         } FRICTION
  1115.86-             1.41 Dc          281.26        0.80*            406.63
         } FRICTION+BEND
  1229.91-             1.41 Dc          281.26        1.23*            288.73
         } FRICTION
  1231.27-             1.41*Dc          281.26        1.41*Dc          281.26
         } JUNCTION
  1235.94-             1.82*            250.38        1.06             204.62
         } FRICTION        } HYDRAULIC JUMP
  1396.03-             1.23 Dc          198.32        1.06*            204.52
         } FRICTION+BEND
  1521.43-             1.23 Dc          198.32        1.09*            202.53
         } FRICTION
  1544.97-             1.23*Dc          198.32        1.23*Dc          198.32
         } JUNCTION
  1549.64-             1.96*            135.23        0.23              17.14
         } FRICTION        } HYDRAULIC JUMP
  1627.24-             0.41*Dc           11.25        0.41*Dc           11.25
-----------------------------------------------------------------------------
  MAXIMUM NUMBER OF ENERGY BALANCES USED IN EACH PROFILE =  10
-----------------------------------------------------------------------------
  NOTE: STEADY FLOW HYDRAULIC HEAD-LOSS COMPUTATIONS BASED ON THE MOST
  CONSERVATIVE FORMULAE FROM THE CURRENT LACRD,LACFCD, AND OCEMA
  DESIGN MANUALS.
*****************************************************************************
  DOWNSTREAM PIPE FLOW CONTROL DATA:
  NODE NUMBER =   996.50            FLOWLINE ELEVATION =   168.30
  PIPE FLOW =      24.70 CFS        PIPE DIAMETER =  24.00 INCHES
  ASSUMED DOWNSTREAM CONTROL HGL =   170.300 FEET
-----------------------------------------------------------------------------
  NODE   996.50 : HGL = <  170.300>;EGL= <  171.260>;FLOWLINE= <  168.300>

*****************************************************************************
  FLOW PROCESS FROM NODE   996.50 TO NODE   999.66 IS CODE =  1
  UPSTREAM NODE   999.66     ELEVATION =   168.39  (FLOW SEALS IN REACH)
-----------------------------------------------------------------------------
  CALCULATE FRICTION LOSSES(LACFCD):
  PIPE FLOW   =      24.70 CFS     PIPE DIAMETER =  24.00 INCHES
  PIPE LENGTH =       3.16 FEET          MANNING'S N  =  0.01300
-----------------------------------------------------------------------------
  NORMAL DEPTH(FT) =      1.17           CRITICAL DEPTH(FT) =      1.75
=============================================================================
  DOWNSTREAM CONTROL ASSUMED PRESSURE HEAD(FT) =     2.00
=============================================================================
  GRADUALLY VARIED FLOW PROFILE COMPUTED INFORMATION:
-----------------------------------------------------------------------------
  DISTANCE FROM      FLOW DEPTH  VELOCITY      SPECIFIC        PRESSURE+
   CONTROL(FT)           (FT)    (FT/SEC)     ENERGY(FT)    MOMENTUM(POUNDS)
         0.000          2.000      7.860          2.960           572.37
         1.184          1.975      7.878          2.940           568.42
         2.110          1.951      7.911          2.923           565.21
         2.886          1.926      7.955          2.909           562.50
         3.160          1.916      7.975          2.904           561.49
-----------------------------------------------------------------------------
  NODE   999.66 : HGL = <  170.306>;EGL= <  171.294>;FLOWLINE= <  168.390>

*****************************************************************************
  FLOW PROCESS FROM NODE   999.66 TO NODE  1003.51 IS CODE =  5
  UPSTREAM NODE  1003.51     ELEVATION =   168.59  (FLOW UNSEALS IN REACH)
```

```
----------------------------------------------------------------------------
  CALCULATE JUNCTION LOSSES:
       PIPE        FLOW    DIAMETER   ANGLE    FLOWLINE   CRITICAL   VELOCITY
                   (CFS)   (INCHES) (DEGREES) ELEVATION  DEPTH(FT.)  (FT/SEC)
     UPSTREAM      15.20    24.00     60.00    168.59      1.41        4.838
    DOWNSTREAM     24.70    24.00       -      168.39      1.75        7.978
    LATERAL #1      9.50    24.00     60.00    168.59      1.10        3.024
    LATERAL #2      0.00     0.00      0.00      0.00      0.00        0.000
       Q5           0.00===Q5 EQUALS BASIN INPUT===

  LACFCD AND OCEMA FLOW JUNCTION FORMULAE USED:
  DY=(Q2*V2-Q1*V1*COS(DELTA1)-Q3*V3*COS(DELTA3)-
      Q4*V4*COS(DELTA4))/((A1+A2)*16.1)+FRICTION LOSSES
  UPSTREAM:    MANNING'S N = 0.01300;  FRICTION SLOPE = 0.00451
  DOWNSTREAM:  MANNING'S N = 0.01300;  FRICTION SLOPE = 0.01037
  AVERAGED FRICTION SLOPE IN JUNCTION ASSUMED AS 0.00744
  JUNCTION LENGTH =   4.67 FEET
  FRICTION LOSSES =  0.035 FEET         ENTRANCE LOSSES =  0.000 FEET
  JUNCTION LOSSES = (DY+HV1-HV2)+(ENTRANCE LOSSES)
  JUNCTION LOSSES = ( 0.863)+( 0.000) =   0.863
----------------------------------------------------------------------------
  NODE  1003.51 : HGL = <  171.794>;EGL= <  172.157>;FLOWLINE= <  168.590>

****************************************************************************
  FLOW PROCESS FROM NODE  1003.51 TO NODE  1004.65 IS CODE =  1
  UPSTREAM NODE  1004.65     ELEVATION =   168.65  (FLOW IS UNDER PRESSURE)
----------------------------------------------------------------------------
  CALCULATE FRICTION LOSSES(LACFCD):
  PIPE FLOW   =      15.20 CFS     PIPE DIAMETER =  24.00 INCHES
  PIPE LENGTH =       1.14 FEET          MANNING'S N  =  0.01300
  SF=(Q/K)**2 = ((     15.20)/(   226.319))**2 = 0.00451
  HF=L*SF = (      1.14)*(0.00451) =      0.005
----------------------------------------------------------------------------
  NODE  1004.65 : HGL = <  171.799>;EGL= <  172.162>;FLOWLINE= <  168.650>

****************************************************************************
  FLOW PROCESS FROM NODE  1004.65 TO NODE  1027.63 IS CODE =  3
  UPSTREAM NODE  1027.63     ELEVATION =   169.79  (HYDRAULIC JUMP OCCURS)
----------------------------------------------------------------------------
  CALCULATE PIPE-BEND LOSSES(OCEMA):
  PIPE FLOW =      15.20 CFS             PIPE DIAMETER =  24.00 INCHES
  CENTRAL ANGLE = 58.200 DEGREES         MANNING'S N = 0.01300
  PIPE LENGTH =      22.98 FEET
----------------------------------------------------------------------------
  HYDRAULIC JUMP: DOWNSTREAM RUN ANALYSIS RESULTS
----------------------------------------------------------------------------
  NORMAL DEPTH(FT) =      0.75           CRITICAL DEPTH(FT) =      1.41
============================================================================
  UPSTREAM CONTROL ASSUMED FLOWDEPTH(FT) =     0.76
============================================================================
  GRADUALLY VARIED FLOW PROFILE COMPUTED INFORMATION:
----------------------------------------------------------------------------
  DISTANCE FROM      FLOW DEPTH  VELOCITY      SPECIFIC        PRESSURE+
   CONTROL(FT)           (FT)    (FT/SEC)     ENERGY(FT)    MOMENTUM(POUNDS)
          0.000          0.758     13.919          3.768           431.64
          4.250          0.758     13.931          3.773           431.96
          9.006          0.757     13.942          3.777           432.27
         14.404          0.757     13.954          3.782           432.58
         20.643          0.756     13.966          3.787           432.90
         22.980          0.756     13.970          3.788           433.00
----------------------------------------------------------------------------
  HYDRAULIC JUMP: UPSTREAM RUN ANALYSIS RESULTS
============================================================================
  DOWNSTREAM CONTROL ASSUMED PRESSURE HEAD(FT) =     3.15
============================================================================
  PRESSURE FLOW PROFILE COMPUTED INFORMATION:
----------------------------------------------------------------------------
  DISTANCE FROM       PRESSURE   VELOCITY      SPECIFIC        PRESSURE+
   CONTROL(FT)        HEAD(FT)   (FT/SEC)     ENERGY(FT)    MOMENTUM(POUNDS)
          0.000          3.149      4.838          3.512           563.73
         22.980          2.185      4.838          2.549           374.91
-------------------------END OF HYDRAULIC JUMP ANALYSIS-------------------------
| PRESSURE+MOMENTUM BALANCE OCCURS AT    16.02 FEET UPSTREAM OF NODE 1004.65 |
|       DOWNSTREAM DEPTH = 2.477 FEET, UPSTREAM CONJUGATE DEPTH = 0.757 FEET |
----------------------------------------------------------------------------
  NODE  1027.63 : HGL = <  170.548>;EGL= <  173.558>;FLOWLINE= <  169.790>

****************************************************************************
  FLOW PROCESS FROM NODE  1027.63 TO NODE  1115.86 IS CODE =  1
  UPSTREAM NODE  1115.86     ELEVATION =   174.17  (FLOW IS SUPERCRITICAL)
----------------------------------------------------------------------------
  CALCULATE FRICTION LOSSES(LACFCD):
  PIPE FLOW   =      15.20 CFS     PIPE DIAMETER =  24.00 INCHES
  PIPE LENGTH =      88.23 FEET         MANNING'S N  =  0.01300
----------------------------------------------------------------------------
  NORMAL DEPTH(FT) =      0.75           CRITICAL DEPTH(FT) =      1.41
============================================================================
  UPSTREAM CONTROL ASSUMED FLOWDEPTH(FT) =     0.80
============================================================================
  GRADUALLY VARIED FLOW PROFILE COMPUTED INFORMATION:
----------------------------------------------------------------------------
  DISTANCE FROM      FLOW DEPTH  VELOCITY      SPECIFIC        PRESSURE+
   CONTROL(FT)           (FT)    (FT/SEC)     ENERGY(FT)    MOMENTUM(POUNDS)
```

```
          0.000          0.799     12.972          3.414           406.63
          3.872          0.794     13.072          3.449           409.24
          8.248          0.790     13.173          3.486           411.90
         13.265          0.785     13.276          3.524           414.60
         19.120          0.781     13.381          3.563           417.35
         26.122          0.776     13.487          3.602           420.15
         34.787          0.771     13.594          3.643           423.00
         46.081          0.767     13.703          3.685           425.89
         62.176          0.762     13.814          3.727           428.84
         88.230          0.758     13.919          3.768           431.64
--------------------------------------------------------------------------------
  NODE  1115.86 : HGL = <  174.969>;EGL= <  177.584>;FLOWLINE= <  174.170>

********************************************************************************
  FLOW PROCESS FROM NODE  1115.86 TO NODE  1229.91 IS CODE =  3
  UPSTREAM NODE  1229.91     ELEVATION =   179.83  (FLOW IS SUPERCRITICAL)
--------------------------------------------------------------------------------
  CALCULATE PIPE-BEND LOSSES(OCEMA):
  PIPE FLOW =      15.20 CFS             PIPE DIAMETER =  24.00 INCHES
  CENTRAL ANGLE = 72.200 DEGREES         MANNING'S N = 0.01300
  PIPE LENGTH =     114.05 FEET
--------------------------------------------------------------------------------
  NORMAL DEPTH(FT) =      0.75           CRITICAL DEPTH(FT) =      1.41
================================================================================
  UPSTREAM CONTROL ASSUMED FLOWDEPTH(FT) =     1.23
================================================================================
  GRADUALLY VARIED FLOW PROFILE COMPUTED INFORMATION:
--------------------------------------------------------------------------------
  DISTANCE FROM      FLOW DEPTH  VELOCITY      SPECIFIC        PRESSURE+
   CONTROL(FT)           (FT)    (FT/SEC)     ENERGY(FT)    MOMENTUM(POUNDS)
          0.000          1.226      7.530          2.106           288.73
          0.995          1.178      7.892          2.146           293.58
          2.401          1.131      8.293          2.200           299.89
          4.346          1.084      8.741          2.271           307.82
          7.021          1.037      9.243          2.364           317.61
         10.727          0.989      9.806          2.483           329.50
         15.972          0.942     10.442          2.636           343.82
         23.715          0.895     11.164          2.832           360.95
         36.120          0.848     11.989          3.081           381.38
         60.151          0.800     12.938          3.401           405.75
        114.050          0.799     12.972          3.414           406.63
--------------------------------------------------------------------------------
  NODE  1229.91 : HGL = <  181.056>;EGL= <  181.936>;FLOWLINE= <  179.830>

********************************************************************************
  FLOW PROCESS FROM NODE  1229.91 TO NODE  1231.27 IS CODE =  1
  UPSTREAM NODE  1231.27     ELEVATION =   179.90  (FLOW IS SUPERCRITICAL)
--------------------------------------------------------------------------------
  CALCULATE FRICTION LOSSES(LACFCD):
  PIPE FLOW   =      15.20 CFS     PIPE DIAMETER =  24.00 INCHES
  PIPE LENGTH =       1.36 FEET          MANNING'S N  =  0.01300
--------------------------------------------------------------------------------
  NORMAL DEPTH(FT) =      0.75           CRITICAL DEPTH(FT) =      1.41
================================================================================
  UPSTREAM CONTROL ASSUMED FLOWDEPTH(FT) =     1.41
================================================================================
  GRADUALLY VARIED FLOW PROFILE COMPUTED INFORMATION:
--------------------------------------------------------------------------------
  DISTANCE FROM      FLOW DEPTH  VELOCITY      SPECIFIC        PRESSURE+
   CONTROL(FT)           (FT)    (FT/SEC)     ENERGY(FT)    MOMENTUM(POUNDS)
          0.000          1.405      6.443          2.050           281.26
          0.148          1.339      6.795          2.057           282.20
          0.651          1.273      7.199          2.079           285.16
          1.360          1.226      7.530          2.106           288.73
--------------------------------------------------------------------------------
  NODE  1231.27 : HGL = <  181.305>;EGL= <  181.950>;FLOWLINE= <  179.900>

********************************************************************************
  FLOW PROCESS FROM NODE  1231.27 TO NODE  1235.94 IS CODE =  5
  UPSTREAM NODE  1235.94     ELEVATION =   180.09  (FLOW IS SUBCRITICAL)
--------------------------------------------------------------------------------
  CALCULATE JUNCTION LOSSES:
       PIPE        FLOW    DIAMETER   ANGLE    FLOWLINE   CRITICAL   VELOCITY
                   (CFS)   (INCHES) (DEGREES) ELEVATION  DEPTH(FT.)  (FT/SEC)
     UPSTREAM      11.70    24.00      0.00    180.09      1.23        3.892
    DOWNSTREAM     15.20    24.00       -      179.90      1.41        6.445
    LATERAL #1      0.20    18.00     45.00    180.39      0.16        0.130
    LATERAL #2      3.30    18.00     60.00    180.39      0.69        2.145
       Q5           0.00===Q5 EQUALS BASIN INPUT===

  LACFCD AND OCEMA FLOW JUNCTION FORMULAE USED:
  DY=(Q2*V2-Q1*V1*COS(DELTA1)-Q3*V3*COS(DELTA3)-
      Q4*V4*COS(DELTA4))/((A1+A2)*16.1)+FRICTION LOSSES
  UPSTREAM:    MANNING'S N = 0.01300;  FRICTION SLOPE = 0.00233
  DOWNSTREAM:  MANNING'S N = 0.01300;  FRICTION SLOPE = 0.00638
  AVERAGED FRICTION SLOPE IN JUNCTION ASSUMED AS 0.00436
  JUNCTION LENGTH =   4.67 FEET
  FRICTION LOSSES =  0.020 FEET         ENTRANCE LOSSES =  0.000 FEET
  JUNCTION LOSSES = (DY+HV1-HV2)+(ENTRANCE LOSSES)
  JUNCTION LOSSES = ( 0.199)+( 0.000) =   0.199
--------------------------------------------------------------------------------
  NODE  1235.94 : HGL = <  181.914>;EGL= <  182.149>;FLOWLINE= <  180.090>
```

```
****************************************************************************
  FLOW PROCESS FROM NODE  1235.94 TO NODE  1396.03 IS CODE =  1
  UPSTREAM NODE  1396.03     ELEVATION =   181.50  (HYDRAULIC JUMP OCCURS)
----------------------------------------------------------------------------
  CALCULATE FRICTION LOSSES(LACFCD):
  PIPE FLOW   =      11.70 CFS     PIPE DIAMETER =  24.00 INCHES
  PIPE LENGTH =     160.09 FEET          MANNING'S N  =  0.01300
----------------------------------------------------------------------------
  HYDRAULIC JUMP: DOWNSTREAM RUN ANALYSIS RESULTS
----------------------------------------------------------------------------
  NORMAL DEPTH(FT) =      1.06           CRITICAL DEPTH(FT) =      1.23
============================================================================
  UPSTREAM CONTROL ASSUMED FLOWDEPTH(FT) =     1.06
============================================================================
  GRADUALLY VARIED FLOW PROFILE COMPUTED INFORMATION:
----------------------------------------------------------------------------
  DISTANCE FROM      FLOW DEPTH  VELOCITY      SPECIFIC        PRESSURE+
   CONTROL(FT)           (FT)    (FT/SEC)     ENERGY(FT)    MOMENTUM(POUNDS)
          0.000          1.061      6.909          1.803           204.52
          2.885          1.061      6.910          1.803           204.53
          6.113          1.061      6.911          1.803           204.54
          9.775          1.061      6.912          1.803           204.55
         14.006          1.061      6.913          1.803           204.56
         19.014          1.060      6.915          1.803           204.57
         25.150          1.060      6.916          1.803           204.58
         33.067          1.060      6.917          1.803           204.59
         44.237          1.060      6.918          1.804           204.60
         63.387          1.060      6.919          1.804           204.61
        160.090          1.060      6.919          1.804           204.62
----------------------------------------------------------------------------
  HYDRAULIC JUMP: UPSTREAM RUN ANALYSIS RESULTS
============================================================================
  DOWNSTREAM CONTROL ASSUMED FLOWDEPTH(FT) =     1.82
============================================================================
  GRADUALLY VARIED FLOW PROFILE COMPUTED INFORMATION:
----------------------------------------------------------------------------
  DISTANCE FROM      FLOW DEPTH  VELOCITY      SPECIFIC        PRESSURE+
   CONTROL(FT)           (FT)    (FT/SEC)     ENERGY(FT)    MOMENTUM(POUNDS)
          0.000          1.824      3.891          2.059           250.38
          7.424          1.764      3.987          2.011           241.51
         14.566          1.705      4.100          1.966           233.31
         21.426          1.645      4.230          1.923           225.81
         27.979          1.586      4.379          1.884           219.08
         34.177          1.526      4.547          1.847           213.15
         39.938          1.466      4.738          1.815           208.10
         45.133          1.407      4.953          1.788           204.00
         49.547          1.347      5.196          1.767           200.93
         52.805          1.288      5.471          1.753           199.00
         54.174          1.228      5.782          1.747           198.32
        160.090          1.228      5.782          1.747           198.32
------------------------END OF HYDRAULIC JUMP ANALYSIS------------------------
| PRESSURE+MOMENTUM BALANCE OCCURS AT    44.35 FEET UPSTREAM OF NODE 1235.94 |
|       DOWNSTREAM DEPTH = 1.416 FEET, UPSTREAM CONJUGATE DEPTH = 1.060 FEET |
----------------------------------------------------------------------------
  NODE  1396.03 : HGL = <  182.561>;EGL= <  183.303>;FLOWLINE= <  181.500>

****************************************************************************
  FLOW PROCESS FROM NODE  1396.03 TO NODE  1521.43 IS CODE =  3
  UPSTREAM NODE  1521.43     ELEVATION =   182.61  (FLOW IS SUPERCRITICAL)
----------------------------------------------------------------------------
  CALCULATE PIPE-BEND LOSSES(OCEMA):
  PIPE FLOW =      11.70 CFS             PIPE DIAMETER =  24.00 INCHES
  CENTRAL ANGLE = 17.300 DEGREES         MANNING'S N = 0.01300
  PIPE LENGTH =     125.40 FEET
----------------------------------------------------------------------------
  NORMAL DEPTH(FT) =      1.06           CRITICAL DEPTH(FT) =      1.23
============================================================================
  UPSTREAM CONTROL ASSUMED FLOWDEPTH(FT) =     1.09
============================================================================
  GRADUALLY VARIED FLOW PROFILE COMPUTED INFORMATION:
----------------------------------------------------------------------------
  DISTANCE FROM      FLOW DEPTH  VELOCITY      SPECIFIC        PRESSURE+
   CONTROL(FT)           (FT)    (FT/SEC)     ENERGY(FT)    MOMENTUM(POUNDS)
          0.000          1.089      6.689          1.784           202.53
          2.410          1.086      6.713          1.786           202.73
          5.164          1.083      6.736          1.788           202.93
          8.355          1.080      6.760          1.790           203.14
         12.118          1.077      6.784          1.792           203.36
         16.662          1.074      6.809          1.794           203.57
         22.339          1.071      6.833          1.796           203.80
         29.808          1.067      6.858          1.798           204.03
         40.547          1.064      6.883          1.800           204.27
         59.302          1.061      6.908          1.803           204.51
        125.400          1.061      6.909          1.803           204.52
----------------------------------------------------------------------------
  NODE  1521.43 : HGL = <  183.699>;EGL= <  184.394>;FLOWLINE= <  182.610>

****************************************************************************
  FLOW PROCESS FROM NODE  1521.43 TO NODE  1544.97 IS CODE =  1
  UPSTREAM NODE  1544.97     ELEVATION =   182.82  (FLOW IS SUPERCRITICAL)
----------------------------------------------------------------------------
  CALCULATE FRICTION LOSSES(LACFCD):
  PIPE FLOW   =      11.70 CFS     PIPE DIAMETER =  24.00 INCHES
```

```
  PIPE LENGTH =      23.54 FEET          MANNING'S N  =  0.01300
-------------------------------------------------------------------------------
  NORMAL DEPTH(FT) =      1.06           CRITICAL DEPTH(FT) =      1.23
===============================================================================
  UPSTREAM CONTROL ASSUMED FLOWDEPTH(FT) =     1.23
===============================================================================
  GRADUALLY VARIED FLOW PROFILE COMPUTED INFORMATION:
-------------------------------------------------------------------------------
  DISTANCE FROM      FLOW DEPTH  VELOCITY      SPECIFIC        PRESSURE+
   CONTROL(FT)           (FT)    (FT/SEC)     ENERGY(FT)    MOMENTUM(POUNDS)
         0.000          1.228      5.782          1.747           198.32
         0.147          1.211      5.880          1.748           198.38
         0.635          1.194      5.981          1.749           198.56
         1.558          1.176      6.087          1.752           198.87
         3.051          1.159      6.196          1.756           199.30
         5.326          1.142      6.310          1.761           199.88
         8.737          1.125      6.429          1.767           200.59
        13.949          1.107      6.552          1.774           201.45
        22.454          1.090      6.680          1.784           202.46
        23.540          1.089      6.689          1.784           202.53
-------------------------------------------------------------------------------
  NODE  1544.97 : HGL = <  184.048>;EGL= <  184.567>;FLOWLINE= <  182.820>

*******************************************************************************
  FLOW PROCESS FROM NODE  1544.97 TO NODE  1549.64 IS CODE =  5
  UPSTREAM NODE  1549.64     ELEVATION =   183.02  (FLOW UNSEALS IN REACH)
-------------------------------------------------------------------------------
  CALCULATE JUNCTION LOSSES:
       PIPE       FLOW    DIAMETER   ANGLE    FLOWLINE   CRITICAL   VELOCITY
                  (CFS)   (INCHES) (DEGREES) ELEVATION  DEPTH(FT.)  (FT/SEC)
    UPSTREAM       1.20    18.00      0.00    183.02      0.41        0.679
   DOWNSTREAM     11.70    24.00       -      182.82      1.23        5.784
   LATERAL #1     10.50    24.00     72.30    183.07      1.16        4.320
   LATERAL #2      0.00     0.00      0.00      0.00      0.00        0.000
      Q5           0.00===Q5 EQUALS BASIN INPUT===

  LACFCD AND OCEMA FLOW JUNCTION FORMULAE USED:
  DY=(Q2*V2-Q1*V1*COS(DELTA1)-Q3*V3*COS(DELTA3)-
      Q4*V4*COS(DELTA4))/((A1+A2)*16.1)+FRICTION LOSSES
  UPSTREAM:    MANNING'S N = 0.01300;  FRICTION SLOPE = 0.00013
  DOWNSTREAM:  MANNING'S N = 0.01300;  FRICTION SLOPE = 0.00552
  AVERAGED FRICTION SLOPE IN JUNCTION ASSUMED AS 0.00283
  JUNCTION LENGTH =   4.67 FEET
  FRICTION LOSSES =  0.013 FEET         ENTRANCE LOSSES =  0.000 FEET
  JUNCTION LOSSES = (DY+HV1-HV2)+(ENTRANCE LOSSES)
  JUNCTION LOSSES = ( 0.422)+( 0.000) =   0.422
-------------------------------------------------------------------------------
  NODE  1549.64 : HGL = <  184.982>;EGL= <  184.989>;FLOWLINE= <  183.020>

*******************************************************************************
  FLOW PROCESS FROM NODE  1549.64 TO NODE  1627.24 IS CODE =  1
  UPSTREAM NODE  1627.24     ELEVATION =   188.09  (HYDRAULIC JUMP OCCURS)
-------------------------------------------------------------------------------
  CALCULATE FRICTION LOSSES(LACFCD):
  PIPE FLOW   =       1.20 CFS     PIPE DIAMETER =  18.00 INCHES
  PIPE LENGTH =      77.60 FEET          MANNING'S N  =  0.01300
-------------------------------------------------------------------------------
  HYDRAULIC JUMP: DOWNSTREAM RUN ANALYSIS RESULTS
-------------------------------------------------------------------------------
  NORMAL DEPTH(FT) =      0.22           CRITICAL DEPTH(FT) =      0.41
===============================================================================
  UPSTREAM CONTROL ASSUMED FLOWDEPTH(FT) =     0.41
===============================================================================
  GRADUALLY VARIED FLOW PROFILE COMPUTED INFORMATION:
-------------------------------------------------------------------------------
  DISTANCE FROM      FLOW DEPTH  VELOCITY      SPECIFIC        PRESSURE+
   CONTROL(FT)           (FT)    (FT/SEC)     ENERGY(FT)    MOMENTUM(POUNDS)
         0.000          0.410      3.068          0.556            11.25
         0.032          0.390      3.284          0.558            11.29
         0.142          0.371      3.528          0.564            11.43
         0.357          0.351      3.805          0.576            11.68
         0.718          0.332      4.124          0.596            12.06
         1.289          0.313      4.492          0.626            12.58
         2.180          0.293      4.921          0.670            13.27
         3.600          0.274      5.428          0.732            14.16
         6.026          0.255      6.031          0.820            15.31
        10.990          0.235      6.760          0.946            16.78
        77.600          0.231      6.932          0.978            17.14
-------------------------------------------------------------------------------
  HYDRAULIC JUMP: UPSTREAM RUN ANALYSIS RESULTS
===============================================================================
  DOWNSTREAM CONTROL ASSUMED PRESSURE HEAD(FT) =     1.96
===============================================================================
  PRESSURE FLOW PROFILE COMPUTED INFORMATION:
-------------------------------------------------------------------------------
  DISTANCE FROM       PRESSURE   VELOCITY      SPECIFIC        PRESSURE+
   CONTROL(FT)        HEAD(FT)   (FT/SEC)     ENERGY(FT)    MOMENTUM(POUNDS)
         0.000          1.962      0.679          1.969           135.23
         7.086          1.500      0.679          1.507            84.28
===============================================================================
  ASSUMED DOWNSTREAM PRESSURE HEAD(FT) =     1.50
===============================================================================
  GRADUALLY VARIED FLOW PROFILE COMPUTED INFORMATION:
```

```
-------------------------------------------------------------------------------
  DISTANCE FROM      FLOW DEPTH  VELOCITY      SPECIFIC        PRESSURE+
   CONTROL(FT)           (FT)    (FT/SEC)     ENERGY(FT)    MOMENTUM(POUNDS)
          7.086          1.500      0.679          1.507            84.28
          8.751          1.391      0.702          1.399            72.47
         10.407          1.282      0.746          1.291            61.26
         12.056          1.173      0.809          1.183            50.89
         13.695          1.064      0.895          1.076            41.47
         15.316          0.955      1.011          0.971            33.14
         16.911          0.846      1.168          0.867            25.97
         18.456          0.737      1.389          0.767            20.05
         19.903          0.628      1.712          0.673            15.48
         21.130          0.519      2.213          0.595            12.43
         21.750          0.410      3.068          0.556            11.25
         77.600          0.410      3.068          0.556            11.25
------------------------END OF HYDRAULIC JUMP ANALYSIS------------------------
| PRESSURE+MOMENTUM BALANCE OCCURS AT    19.41 FEET UPSTREAM OF NODE 1549.64 |
|       DOWNSTREAM DEPTH = 0.665 FEET, UPSTREAM CONJUGATE DEPTH = 0.233 FEET |
-------------------------------------------------------------------------------
  NODE  1627.24 : HGL = <  188.500>;EGL= <  188.646>;FLOWLINE= <  188.090>

*******************************************************************************
  UPSTREAM PIPE FLOW CONTROL DATA:
  NODE NUMBER =  1627.24            FLOWLINE ELEVATION =   188.09
  ASSUMED UPSTREAM CONTROL HGL =    188.50 FOR DOWNSTREAM RUN ANALYSIS

===============================================================================
  END OF GRADUALLY VARIED FLOW ANALYSIS
```

```
****************************************************************************
                 PIPE-FLOW HYDRAULICS COMPUTER PROGRAM PACKAGE
           (Reference: LACFCD,LACRD, AND OCEMA HYDRAULICS CRITERION)
          (c) Copyright 1982-2003 Advanced Engineering Software (aes)
                     Ver. 8.0  Release Date: 01/01/2003


  ************************* DESCRIPTION OF STUDY *************************
 * Line "B"                                                             *
 *                                                                      *
 *                                                                      *
  ************************************************************************

   FILE NAME: VB.DAT
   TIME/DATE OF STUDY: 14:53 07/22/2020
----------------------------------------------------------------------------
****************************************************************************
                GRADUALLY VARIED FLOW ANALYSIS FOR PIPE SYSTEM
                          NODAL POINT STATUS TABLE
                 (Note: "*" indicates nodal point data used.)
                       UPSTREAM RUN                  DOWNSTREAM RUN
    NODE    MODEL   PRESSURE      PRESSURE+          FLOW          PRESSURE+
   NUMBER  PROCESS  HEAD(FT)   MOMENTUM(POUNDS)   DEPTH(FT)   MOMENTUM(POUNDS)
  2003.53-             3.21*            488.91        1.10 Dc          150.81
         } FRICTION
  2012.50-             3.19*            484.17        1.07             150.96
         } FRICTION+BEND
  2023.18-             3.17*            481.49        1.10 Dc          150.81
         } FRICTION
  2027.95-             3.16*            479.22        1.10 Dc          150.81
         } JUNCTION
  2027.95-             3.31*            479.73        0.88 Dc           92.20
         } FRICTION
  2126.62-             2.90*            397.68        0.89 Dc           92.18
         } FRICTION+BEND
  2154.48-             2.79*            377.62        0.89 Dc           92.17
         } FRICTION
  2210.55-             2.56*            331.81        0.90 Dc           92.13
----------------------------------------------------------------------------
  MAXIMUM NUMBER OF ENERGY BALANCES USED IN EACH PROFILE =  10
----------------------------------------------------------------------------
  NOTE: STEADY FLOW HYDRAULIC HEAD-LOSS COMPUTATIONS BASED ON THE MOST
  CONSERVATIVE FORMULAE FROM THE CURRENT LACRD,LACFCD, AND OCEMA
  DESIGN MANUALS.
****************************************************************************
  DOWNSTREAM PIPE FLOW CONTROL DATA:
  NODE NUMBER =  2003.53            FLOWLINE ELEVATION =   168.59
  PIPE FLOW =       9.50 CFS        PIPE DIAMETER =  24.00 INCHES
  ASSUMED DOWNSTREAM CONTROL HGL =   171.800 FEET
----------------------------------------------------------------------------
  NODE  2003.53 : HGL = <  171.800>;EGL= <  171.942>;FLOWLINE= <  168.590>

****************************************************************************
  FLOW PROCESS FROM NODE  2003.53 TO NODE  2012.50 IS CODE =  1
  UPSTREAM NODE  2012.50     ELEVATION =   168.63  (FLOW IS UNDER PRESSURE)
----------------------------------------------------------------------------
  CALCULATE FRICTION LOSSES(LACFCD):
  PIPE FLOW   =       9.50 CFS     PIPE DIAMETER =  24.00 INCHES
  PIPE LENGTH =       8.97 FEET          MANNING'S N  =  0.01300
  SF=(Q/K)**2 = ((      9.50)/(   226.188))**2 = 0.00176
  HF=L*SF = (      8.97)*(0.00176) =      0.016
----------------------------------------------------------------------------
  NODE  2012.50 : HGL = <  171.816>;EGL= <  171.958>;FLOWLINE= <  168.630>

****************************************************************************
  FLOW PROCESS FROM NODE  2012.50 TO NODE  2023.18 IS CODE =  3
  UPSTREAM NODE  2023.18     ELEVATION =   168.69  (FLOW IS UNDER PRESSURE)
----------------------------------------------------------------------------
  CALCULATE PIPE-BEND LOSSES(OCEMA):
  PIPE FLOW =       9.50 CFS             PIPE DIAMETER =  24.00 INCHES
  CENTRAL ANGLE = 54.100 DEGREES         MANNING'S N = 0.01300
  PIPE LENGTH =      10.68 FEET          BEND COEFFICIENT(KB) = 0.19383
  FLOW VELOCITY =   3.02 FEET/SEC.       VELOCITY HEAD =  0.142 FEET
  HB=KB*(VELOCITY HEAD) = ( 0.194)*( 0.142) =   0.028
  SF=(Q/K)**2 = ((      9.50)/(   226.212))**2 = 0.00176
  HF=L*SF = (     10.68)*(0.00176) =  0.019
  TOTAL HEAD LOSSES = HB + HF = ( 0.028)+( 0.019) =  0.046
----------------------------------------------------------------------------
  NODE  2023.18 : HGL = <  171.862>;EGL= <  172.004>;FLOWLINE= <  168.690>

****************************************************************************
  FLOW PROCESS FROM NODE  2023.18 TO NODE  2027.95 IS CODE =  1
  UPSTREAM NODE  2027.95     ELEVATION =   168.71  (FLOW IS UNDER PRESSURE)
----------------------------------------------------------------------------
  CALCULATE FRICTION LOSSES(LACFCD):
  PIPE FLOW   =       9.50 CFS     PIPE DIAMETER =  24.00 INCHES
  PIPE LENGTH =       4.77 FEET          MANNING'S N  =  0.01300
  SF=(Q/K)**2 = ((      9.50)/(   226.280))**2 = 0.00176
  HF=L*SF = (      4.77)*(0.00176) =      0.008
----------------------------------------------------------------------------
  NODE  2027.95 : HGL = <  171.871>;EGL= <  172.013>;FLOWLINE= <  168.710>
```

```
****************************************************************************
  FLOW PROCESS FROM NODE  2027.95 TO NODE  2027.95 IS CODE =  5
  UPSTREAM NODE  2027.95     ELEVATION =   168.71  (FLOW IS UNDER PRESSURE)
----------------------------------------------------------------------------
  CALCULATE JUNCTION LOSSES:
       PIPE        FLOW    DIAMETER   ANGLE    FLOWLINE   CRITICAL   VELOCITY
                   (CFS)   (INCHES) (DEGREES) ELEVATION  DEPTH(FT.)  (FT/SEC)
     UPSTREAM       6.50    24.00      0.00    168.71      0.90        2.069
    DOWNSTREAM      9.50    24.00       -      168.71      1.10        3.024
    LATERAL #1      3.00     8.00     90.00    169.38      0.66        8.594
    LATERAL #2      0.00     0.00      0.00      0.00      0.00        0.000
       Q5           0.00===Q5 EQUALS BASIN INPUT===

  LACFCD AND OCEMA FLOW JUNCTION FORMULAE USED:
  DY=(Q2*V2-Q1*V1*COS(DELTA1)-Q3*V3*COS(DELTA3)-
      Q4*V4*COS(DELTA4))/((A1+A2)*16.1)+FRICTION LOSSES
  UPSTREAM:    MANNING'S N = 0.01300;  FRICTION SLOPE = 0.00083
  DOWNSTREAM:  MANNING'S N = 0.01300;  FRICTION SLOPE = 0.00176
  AVERAGED FRICTION SLOPE IN JUNCTION ASSUMED AS 0.00129
  JUNCTION LENGTH =   2.00 FEET
  FRICTION LOSSES =  0.003 FEET         ENTRANCE LOSSES =  0.000 FEET
  JUNCTION LOSSES = (DY+HV1-HV2)+(ENTRANCE LOSSES)
  JUNCTION LOSSES = ( 0.078)+( 0.000) =   0.078
----------------------------------------------------------------------------
  NODE  2027.95 : HGL = <  172.024>;EGL= <  172.091>;FLOWLINE= <  168.710>

****************************************************************************
  FLOW PROCESS FROM NODE  2027.95 TO NODE  2126.62 IS CODE =  1
  UPSTREAM NODE  2126.62     ELEVATION =   169.21  (FLOW IS UNDER PRESSURE)
----------------------------------------------------------------------------
  CALCULATE FRICTION LOSSES(LACFCD):
  PIPE FLOW   =       6.50 CFS     PIPE DIAMETER =  24.00 INCHES
  PIPE LENGTH =      98.67 FEET          MANNING'S N  =  0.01300
  SF=(Q/K)**2 = ((      6.50)/(   226.212))**2 = 0.00083
  HF=L*SF = (     98.67)*(0.00083) =      0.081
----------------------------------------------------------------------------
  NODE  2126.62 : HGL = <  172.106>;EGL= <  172.172>;FLOWLINE= <  169.210>

****************************************************************************
  FLOW PROCESS FROM NODE  2126.62 TO NODE  2154.48 IS CODE =  3
  UPSTREAM NODE  2154.48     ELEVATION =   169.35  (FLOW IS UNDER PRESSURE)
----------------------------------------------------------------------------
  CALCULATE PIPE-BEND LOSSES(OCEMA):
  PIPE FLOW =       6.50 CFS             PIPE DIAMETER =  24.00 INCHES
  CENTRAL ANGLE = 70.300 DEGREES         MANNING'S N = 0.01300
  PIPE LENGTH =      27.86 FEET          BEND COEFFICIENT(KB) = 0.22095
  FLOW VELOCITY =   2.07 FEET/SEC.       VELOCITY HEAD =  0.066 FEET
  HB=KB*(VELOCITY HEAD) = ( 0.221)*( 0.066) =   0.015
  SF=(Q/K)**2 = ((      6.50)/(   226.226))**2 = 0.00083
  HF=L*SF = (     27.86)*(0.00083) =  0.023
  TOTAL HEAD LOSSES = HB + HF = ( 0.015)+( 0.023) =  0.038
----------------------------------------------------------------------------
  NODE  2154.48 : HGL = <  172.143>;EGL= <  172.210>;FLOWLINE= <  169.350>

****************************************************************************
  FLOW PROCESS FROM NODE  2154.48 TO NODE  2210.55 IS CODE =  1
  UPSTREAM NODE  2210.55     ELEVATION =   169.63  (FLOW IS UNDER PRESSURE)
----------------------------------------------------------------------------
  CALCULATE FRICTION LOSSES(LACFCD):
  PIPE FLOW   =       6.50 CFS     PIPE DIAMETER =  24.00 INCHES
  PIPE LENGTH =      56.07 FEET          MANNING'S N  =  0.01300
  SF=(Q/K)**2 = ((      6.50)/(   226.247))**2 = 0.00083
  HF=L*SF = (     56.07)*(0.00083) =      0.046
----------------------------------------------------------------------------
  NODE  2210.55 : HGL = <  172.190>;EGL= <  172.256>;FLOWLINE= <  169.630>

****************************************************************************
  UPSTREAM PIPE FLOW CONTROL DATA:
  NODE NUMBER =  2210.55            FLOWLINE ELEVATION =   169.63
  ASSUMED UPSTREAM CONTROL HGL =    170.53 FOR DOWNSTREAM RUN ANALYSIS

============================================================================
  END OF GRADUALLY VARIED FLOW ANALYSIS
```

```
****************************************************************************
                 PIPE-FLOW HYDRAULICS COMPUTER PROGRAM PACKAGE
           (Reference: LACFCD,LACRD, AND OCEMA HYDRAULICS CRITERION)
          (c) Copyright 1982-2003 Advanced Engineering Software (aes)
                        Ver. 8.0  Release Date: 01/01/2003


  ************************** DESCRIPTION OF STUDY **************************
 * Line "C"                                                               *
 *                                                                        *
 *                                                                        *
  ****************************************************************************

   FILE NAME: VC.DAT
   TIME/DATE OF STUDY: 14:47 07/22/2020
****************************************************************************
                GRADUALLY VARIED FLOW ANALYSIS FOR PIPE SYSTEM
                          NODAL POINT STATUS TABLE
                 (Note: "*" indicates nodal point data used.)
                       UPSTREAM RUN                  DOWNSTREAM RUN
    NODE    MODEL   PRESSURE      PRESSURE+          FLOW         PRESSURE+
   NUMBER  PROCESS  HEAD(FT)   MOMENTUM(POUNDS)   DEPTH(FT)   MOMENTUM(POUNDS)
  3001.84-             1.93*            257.84        1.00             190.63
         } FRICTION         } HYDRAULIC JUMP
  3111.44-             1.19 Dc          182.81        1.01*            189.89
         } FRICTION+BEND
  3129.11-             1.19 Dc          182.81        1.03*            188.63
         } FRICTION
  3138.71-             1.19 Dc          182.81        1.04*            187.78
         } FRICTION+BEND
  3146.49-             1.19 Dc          182.81        1.05*            187.15
         } FRICTION
  3168.39-             1.19*Dc          182.81        1.19*Dc          182.81
         } CATCH BASIN
  3175.39-             1.61*             89.26        1.19 Dc           62.37
----------------------------------------------------------------------------
  MAXIMUM NUMBER OF ENERGY BALANCES USED IN EACH PROFILE =  10
----------------------------------------------------------------------------
  NOTE: STEADY FLOW HYDRAULIC HEAD-LOSS COMPUTATIONS BASED ON THE MOST
  CONSERVATIVE FORMULAE FROM THE CURRENT LACRD,LACFCD, AND OCEMA
  DESIGN MANUALS.
****************************************************************************
  DOWNSTREAM PIPE FLOW CONTROL DATA:
  NODE NUMBER =  3001.84            FLOWLINE ELEVATION =   183.07
  PIPE FLOW =      11.00 CFS        PIPE DIAMETER =  24.00 INCHES
  ASSUMED DOWNSTREAM CONTROL HGL =   185.000 FEET
----------------------------------------------------------------------------
  NODE  3001.84 : HGL = <  185.000>;EGL= <  185.195>;FLOWLINE= <  183.070>

****************************************************************************
  FLOW PROCESS FROM NODE  3001.84 TO NODE  3111.44 IS CODE =  1
  UPSTREAM NODE  3111.44     ELEVATION =   184.10  (HYDRAULIC JUMP OCCURS)
----------------------------------------------------------------------------
  CALCULATE FRICTION LOSSES(LACFCD):
  PIPE FLOW   =      11.00 CFS     PIPE DIAMETER =  24.00 INCHES
  PIPE LENGTH =     109.60 FEET          MANNING'S N  =  0.01300
----------------------------------------------------------------------------
  HYDRAULIC JUMP: DOWNSTREAM RUN ANALYSIS RESULTS
----------------------------------------------------------------------------
  NORMAL DEPTH(FT) =      1.00           CRITICAL DEPTH(FT) =      1.19
============================================================================
  UPSTREAM CONTROL ASSUMED FLOWDEPTH(FT) =     1.01
============================================================================
  GRADUALLY VARIED FLOW PROFILE COMPUTED INFORMATION:
----------------------------------------------------------------------------
  DISTANCE FROM      FLOW DEPTH  VELOCITY      SPECIFIC        PRESSURE+
   CONTROL(FT)           (FT)    (FT/SEC)     ENERGY(FT)    MOMENTUM(POUNDS)
         0.000          1.011      6.903          1.751           189.89
         2.915          1.010      6.911          1.752           189.97
         6.192          1.009      6.919          1.753           190.05
         9.926          1.008      6.927          1.754           190.13
        14.261          1.007      6.935          1.755           190.21
        19.414          1.006      6.943          1.756           190.29
        25.754          1.006      6.951          1.756           190.38
        33.972          1.005      6.960          1.757           190.46
        45.617          1.004      6.968          1.758           190.54
        65.662          1.003      6.976          1.759           190.62
       109.600          1.003      6.976          1.759           190.63
----------------------------------------------------------------------------
  HYDRAULIC JUMP: UPSTREAM RUN ANALYSIS RESULTS
============================================================================
  DOWNSTREAM CONTROL ASSUMED FLOWDEPTH(FT) =     1.93
============================================================================
  GRADUALLY VARIED FLOW PROFILE COMPUTED INFORMATION:
----------------------------------------------------------------------------
  DISTANCE FROM      FLOW DEPTH  VELOCITY      SPECIFIC        PRESSURE+
   CONTROL(FT)           (FT)    (FT/SEC)     ENERGY(FT)    MOMENTUM(POUNDS)
         0.000          1.930      3.539          2.125           257.84
         8.914          1.856      3.616          2.059           245.27
        17.405          1.782      3.720          1.997           233.62
```

```
        25.541          1.708      3.849          1.938           222.92
        33.323          1.634      4.003          1.883           213.24
        40.711          1.560      4.184          1.832           204.67
        47.621          1.486      4.395          1.786           197.31
        53.905          1.411      4.640          1.746           191.29
        59.307          1.337      4.926          1.714           186.73
        63.361          1.263      5.259          1.693           183.83
        65.102          1.189      5.648          1.685           182.81
       109.600          1.189      5.648          1.685           182.81
------------------------END OF HYDRAULIC JUMP ANALYSIS------------------------
| PRESSURE+MOMENTUM BALANCE OCCURS AT    54.74 FEET UPSTREAM OF NODE 3001.84 |
|       DOWNSTREAM DEPTH = 1.400 FEET, UPSTREAM CONJUGATE DEPTH = 1.003 FEET |
----------------------------------------------------------------------------
  NODE  3111.44 : HGL = <  185.111>;EGL= <  185.852>;FLOWLINE= <  184.100>

****************************************************************************
  FLOW PROCESS FROM NODE  3111.44 TO NODE  3129.11 IS CODE =  3
  UPSTREAM NODE  3129.11     ELEVATION =   184.27  (FLOW IS SUPERCRITICAL)
----------------------------------------------------------------------------
  CALCULATE PIPE-BEND LOSSES(OCEMA):
  PIPE FLOW =      11.00 CFS             PIPE DIAMETER =  24.00 INCHES
  CENTRAL ANGLE = 90.000 DEGREES         MANNING'S N = 0.01300
  PIPE LENGTH =      17.67 FEET
----------------------------------------------------------------------------
  NORMAL DEPTH(FT) =      0.99           CRITICAL DEPTH(FT) =      1.19
============================================================================
  UPSTREAM CONTROL ASSUMED FLOWDEPTH(FT) =     1.03
============================================================================
  GRADUALLY VARIED FLOW PROFILE COMPUTED INFORMATION:
----------------------------------------------------------------------------
  DISTANCE FROM      FLOW DEPTH  VELOCITY      SPECIFIC        PRESSURE+
   CONTROL(FT)           (FT)    (FT/SEC)     ENERGY(FT)    MOMENTUM(POUNDS)
         0.000          1.027      6.770          1.739           188.63
         2.627          1.024      6.797          1.741           188.87
         5.623          1.020      6.823          1.744           189.12
         9.086          1.017      6.851          1.746           189.38
        13.160          1.014      6.878          1.749           189.64
        17.670          1.011      6.903          1.751           189.89
----------------------------------------------------------------------------
  NODE  3129.11 : HGL = <  185.297>;EGL= <  186.009>;FLOWLINE= <  184.270>

****************************************************************************
  FLOW PROCESS FROM NODE  3129.11 TO NODE  3138.71 IS CODE =  1
  UPSTREAM NODE  3138.71     ELEVATION =   184.36  (FLOW IS SUPERCRITICAL)
----------------------------------------------------------------------------
  CALCULATE FRICTION LOSSES(LACFCD):
  PIPE FLOW   =      11.00 CFS     PIPE DIAMETER =  24.00 INCHES
  PIPE LENGTH =       9.60 FEET          MANNING'S N  =  0.01300
----------------------------------------------------------------------------
  NORMAL DEPTH(FT) =      1.00           CRITICAL DEPTH(FT) =      1.19
============================================================================
  UPSTREAM CONTROL ASSUMED FLOWDEPTH(FT) =     1.04
============================================================================
  GRADUALLY VARIED FLOW PROFILE COMPUTED INFORMATION:
----------------------------------------------------------------------------
  DISTANCE FROM      FLOW DEPTH  VELOCITY      SPECIFIC        PRESSURE+
   CONTROL(FT)           (FT)    (FT/SEC)     ENERGY(FT)    MOMENTUM(POUNDS)
         0.000          1.038      6.675          1.731           187.78
         2.485          1.035      6.704          1.733           188.03
         5.330          1.031      6.733          1.736           188.29
         8.632          1.028      6.763          1.738           188.56
         9.600          1.027      6.770          1.739           188.63
----------------------------------------------------------------------------
  NODE  3138.71 : HGL = <  185.398>;EGL= <  186.091>;FLOWLINE= <  184.360>

****************************************************************************
  FLOW PROCESS FROM NODE  3138.71 TO NODE  3146.49 IS CODE =  3
  UPSTREAM NODE  3146.49     ELEVATION =   184.43  (FLOW IS SUPERCRITICAL)
----------------------------------------------------------------------------
  CALCULATE PIPE-BEND LOSSES(OCEMA):
  PIPE FLOW =      11.00 CFS             PIPE DIAMETER =  24.00 INCHES
  CENTRAL ANGLE = 19.300 DEGREES         MANNING'S N = 0.01300
  PIPE LENGTH =       7.78 FEET
----------------------------------------------------------------------------
  NORMAL DEPTH(FT) =      1.01           CRITICAL DEPTH(FT) =      1.19
============================================================================
  UPSTREAM CONTROL ASSUMED FLOWDEPTH(FT) =     1.05
============================================================================
  GRADUALLY VARIED FLOW PROFILE COMPUTED INFORMATION:
----------------------------------------------------------------------------
  DISTANCE FROM      FLOW DEPTH  VELOCITY      SPECIFIC        PRESSURE+
   CONTROL(FT)           (FT)    (FT/SEC)     ENERGY(FT)    MOMENTUM(POUNDS)
         0.000          1.048      6.600          1.725           187.15
         2.398          1.044      6.626          1.727           187.37
         5.142          1.041      6.653          1.729           187.59
         7.780          1.038      6.675          1.731           187.78
----------------------------------------------------------------------------
  NODE  3146.49 : HGL = <  185.478>;EGL= <  186.155>;FLOWLINE= <  184.430>

****************************************************************************
  FLOW PROCESS FROM NODE  3146.49 TO NODE  3168.39 IS CODE =  1
  UPSTREAM NODE  3168.39     ELEVATION =   184.63  (FLOW IS SUPERCRITICAL)
----------------------------------------------------------------------------
```

```
  CALCULATE FRICTION LOSSES(LACFCD):
  PIPE FLOW   =      11.00 CFS     PIPE DIAMETER =  24.00 INCHES
  PIPE LENGTH =      21.90 FEET          MANNING'S N  =  0.01300
-----------------------------------------------------------------------------
  NORMAL DEPTH(FT) =      1.01           CRITICAL DEPTH(FT) =      1.19
=============================================================================
  UPSTREAM CONTROL ASSUMED FLOWDEPTH(FT) =     1.19
=============================================================================
  GRADUALLY VARIED FLOW PROFILE COMPUTED INFORMATION:
-----------------------------------------------------------------------------
  DISTANCE FROM      FLOW DEPTH  VELOCITY      SPECIFIC        PRESSURE+
   CONTROL(FT)           (FT)    (FT/SEC)     ENERGY(FT)    MOMENTUM(POUNDS)
         0.000          1.189      5.648          1.685           182.81
         0.148          1.171      5.752          1.685           182.87
         0.639          1.153      5.860          1.687           183.07
         1.567          1.136      5.973          1.690           183.39
         3.070          1.118      6.090          1.694           183.86
         5.362          1.100      6.213          1.699           184.48
         8.799          1.082      6.340          1.706           185.24
        14.053          1.064      6.473          1.715           186.17
        21.900          1.048      6.600          1.725           187.15
-----------------------------------------------------------------------------
  NODE  3168.39 : HGL = <  185.819>;EGL= <  186.315>;FLOWLINE= <  184.630>

*****************************************************************************
  FLOW PROCESS FROM NODE  3168.39 TO NODE  3175.39 IS CODE =  8
  UPSTREAM NODE  3175.39     ELEVATION =   184.80  (FLOW IS SUBCRITICAL)
-----------------------------------------------------------------------------
  CALCULATE CATCH BASIN ENTRANCE LOSSES(LACFCD):
  PIPE FLOW =      11.00 CFS          PIPE DIAMETER =  24.00 INCHES
  FLOW VELOCITY =   5.65 FEET/SEC.    VELOCITY HEAD =  0.496 FEET
  CATCH BASIN ENERGY LOSS = .2*(VELOCITY HEAD) = .2*(  0.496) =  0.099
-----------------------------------------------------------------------------
  NODE  3175.39 : HGL = <  186.414>;EGL= <  186.414>;FLOWLINE= <  184.800>

*****************************************************************************
  UPSTREAM PIPE FLOW CONTROL DATA:
  NODE NUMBER =  3175.39            FLOWLINE ELEVATION =   184.80
  ASSUMED UPSTREAM CONTROL HGL =    185.99 FOR DOWNSTREAM RUN ANALYSIS

=============================================================================
  END OF GRADUALLY VARIED FLOW ANALYSIS
```

```
*****************************************************************************
                 PIPE-FLOW HYDRAULICS COMPUTER PROGRAM PACKAGE
           (Reference: LACFCD,LACRD, AND OCEMA HYDRAULICS CRITERION)
          (c) Copyright 1982-2003 Advanced Engineering Software (aes)
                      Ver. 8.0  Release Date: 01/01/2003


  ************************** DESCRIPTION OF STUDY **************************
 * Line "D"                                                               *
 *                                                                        *
 *                                                                        *
  **************************************************************************

   FILE NAME: VD.DAT
   TIME/DATE OF STUDY: 16:05 07/22/2020
*****************************************************************************
                GRADUALLY VARIED FLOW ANALYSIS FOR PIPE SYSTEM
                          NODAL POINT STATUS TABLE
                 (Note: "*" indicates nodal point data used.)
                       UPSTREAM RUN                  DOWNSTREAM RUN
    NODE     MODEL   PRESSURE      PRESSURE+          FLOW         PRESSURE+
   NUMBER  PROCESS  HEAD(FT)   MOMENTUM(POUNDS)   DEPTH(FT)   MOMENTUM(POUNDS)
  4000.00-             2.00*            855.63        1.90 Dc          848.73
         } FRICTION
  4017.16-             2.27*            908.27        1.90 Dc          848.73
         } FRICTION+BEND
  4050.66-             3.21*           1092.33        1.90 Dc          848.73
         } FRICTION
  4116.70-             4.26*           1298.13        1.64             881.21
         } JUNCTION
  4121.37-             3.46*           1080.51        1.49 Dc          864.09
         } FRICTION
  4157.16-             5.59*           1315.64        1.49 Dc          864.09
         } JUNCTION
  4161.83-             6.65*           1319.52        1.19             836.65
         } FRICTION
  4179.00-             7.21*           1381.20        1.09             901.72
         } FRICTION
  4183.20-             7.42*           1404.60        1.06             926.70
         } FRICTION+BEND
  4191.73-             7.44*           1406.24        1.06             928.72
         } FRICTION
  4350.14-             4.24*           1054.16        0.94            1048.29
         } MANHOLE
  4354.81-             4.19            1048.83        0.93*           1059.54
         } FRICTION
  4358.81-             3.94            1020.28        0.93*           1057.14
         } FRICTION+BEND
  4429.50-             1.49 Dc          751.22        1.02*            958.66
         } FRICTION+BEND
  4436.85-             1.49 Dc          751.22        1.05*            936.60
         } FRICTION
  4455.08-             1.49*Dc          751.22        1.49*Dc          751.22
-----------------------------------------------------------------------------
  MAXIMUM NUMBER OF ENERGY BALANCES USED IN EACH PROFILE =  10
-----------------------------------------------------------------------------
  NOTE: STEADY FLOW HYDRAULIC HEAD-LOSS COMPUTATIONS BASED ON THE MOST
  CONSERVATIVE FORMULAE FROM THE CURRENT LACRD,LACFCD, AND OCEMA
  DESIGN MANUALS.
*****************************************************************************
  DOWNSTREAM PIPE FLOW CONTROL DATA:
  NODE NUMBER =  4000.00            FLOWLINE ELEVATION =   144.23
  PIPE FLOW =      32.70 CFS        PIPE DIAMETER =  24.00 INCHES
  ASSUMED DOWNSTREAM CONTROL HGL =   146.230 FEET
-----------------------------------------------------------------------------
  NODE  4000.00 : HGL = <  146.230>;EGL= <  147.912>;FLOWLINE= <  144.230>

*****************************************************************************
  FLOW PROCESS FROM NODE  4000.00 TO NODE  4017.16 IS CODE =  1
  UPSTREAM NODE  4017.16     ELEVATION =   144.32  (FLOW IS UNDER PRESSURE)
-----------------------------------------------------------------------------
  CALCULATE FRICTION LOSSES(LACFCD):
  PIPE FLOW   =      32.70 CFS     PIPE DIAMETER =  24.00 INCHES
  PIPE LENGTH =      17.16 FEET          MANNING'S N  =  0.01300
  SF=(Q/K)**2 = ((     32.70)/(   226.225))**2 = 0.02089
  HF=L*SF = (     17.16)*(0.02089) =      0.359
-----------------------------------------------------------------------------
  NODE  4017.16 : HGL = <  146.589>;EGL= <  148.271>;FLOWLINE= <  144.320>

*****************************************************************************
  FLOW PROCESS FROM NODE  4017.16 TO NODE  4050.66 IS CODE =  3
  UPSTREAM NODE  4050.66     ELEVATION =   144.49  (FLOW IS UNDER PRESSURE)
-----------------------------------------------------------------------------
  CALCULATE PIPE-BEND LOSSES(OCEMA):
  PIPE FLOW =      32.70 CFS             PIPE DIAMETER =  24.00 INCHES
  CENTRAL ANGLE = 85.100 DEGREES         MANNING'S N = 0.01300
  PIPE LENGTH =      33.50 FEET          BEND COEFFICIENT(KB) = 0.24310
  FLOW VELOCITY =  10.41 FEET/SEC.       VELOCITY HEAD =  1.682 FEET
  HB=KB*(VELOCITY HEAD) = ( 0.243)*( 1.682) =   0.409
  SF=(Q/K)**2 = ((     32.70)/(   226.223))**2 = 0.02089
```

```
  HF=L*SF = (     33.50)*(0.02089) =  0.700
  TOTAL HEAD LOSSES = HB + HF = ( 0.409)+( 0.700) =  1.109
--------------------------------------------------------------------------------
  NODE  4050.66 : HGL = <  147.697>;EGL= <  149.380>;FLOWLINE= <  144.490>

********************************************************************************
  FLOW PROCESS FROM NODE  4050.66 TO NODE  4116.70 IS CODE =  1
  UPSTREAM NODE  4116.70     ELEVATION =   144.82  (FLOW IS UNDER PRESSURE)
--------------------------------------------------------------------------------
  CALCULATE FRICTION LOSSES(LACFCD):
  PIPE FLOW   =      32.70 CFS     PIPE DIAMETER =  24.00 INCHES
  PIPE LENGTH =      66.04 FEET          MANNING'S N  =  0.01300
  SF=(Q/K)**2 = ((     32.70)/(   226.225))**2 = 0.02089
  HF=L*SF = (     66.04)*(0.02089) =      1.380
--------------------------------------------------------------------------------
  NODE  4116.70 : HGL = <  149.077>;EGL= <  150.760>;FLOWLINE= <  144.820>

********************************************************************************
  FLOW PROCESS FROM NODE  4116.70 TO NODE  4121.37 IS CODE =  5
  UPSTREAM NODE  4121.37     ELEVATION =   145.02  (FLOW IS UNDER PRESSURE)
--------------------------------------------------------------------------------
  CALCULATE JUNCTION LOSSES:
       PIPE       FLOW    DIAMETER   ANGLE    FLOWLINE   CRITICAL   VELOCITY
                  (CFS)   (INCHES) (DEGREES) ELEVATION  DEPTH(FT.)  (FT/SEC)
     UPSTREAM      26.70    18.00      0.00    145.02      1.49       15.109
    DOWNSTREAM     32.70    24.00       -      144.82      1.90       10.409
    LATERAL #1      6.00    18.00     90.00    145.16      0.95        3.395
    LATERAL #2      0.00     0.00      0.00      0.00      0.00        0.000
       Q5           0.00===Q5 EQUALS BASIN INPUT===

  LACFCD AND OCEMA FLOW JUNCTION FORMULAE USED:
  DY=(Q2*V2-Q1*V1*COS(DELTA1)-Q3*V3*COS(DELTA3)-
      Q4*V4*COS(DELTA4))/((A1+A2)*16.1)+FRICTION LOSSES
  UPSTREAM:    MANNING'S N = 0.01300;  FRICTION SLOPE = 0.06461
  DOWNSTREAM:  MANNING'S N = 0.01300;  FRICTION SLOPE = 0.02089
  AVERAGED FRICTION SLOPE IN JUNCTION ASSUMED AS 0.04275
  JUNCTION LENGTH =   4.67 FEET
  FRICTION LOSSES =  0.200 FEET         ENTRANCE LOSSES =  0.000 FEET
  JUNCTION LOSSES = (DY+HV1-HV2)+(ENTRANCE LOSSES)
  JUNCTION LOSSES = ( 1.264)+( 0.000) =   1.264
--------------------------------------------------------------------------------
  NODE  4121.37 : HGL = <  148.479>;EGL= <  152.024>;FLOWLINE= <  145.020>

********************************************************************************
  FLOW PROCESS FROM NODE  4121.37 TO NODE  4157.16 IS CODE =  1
  UPSTREAM NODE  4157.16     ELEVATION =   145.20  (FLOW IS UNDER PRESSURE)
--------------------------------------------------------------------------------
  CALCULATE FRICTION LOSSES(LACFCD):
  PIPE FLOW   =      26.70 CFS     PIPE DIAMETER =  18.00 INCHES
  PIPE LENGTH =      35.79 FEET          MANNING'S N  =  0.01300
  SF=(Q/K)**2 = ((     26.70)/(   105.043))**2 = 0.06461
  HF=L*SF = (     35.79)*(0.06461) =      2.312
--------------------------------------------------------------------------------
  NODE  4157.16 : HGL = <  150.791>;EGL= <  154.336>;FLOWLINE= <  145.200>

********************************************************************************
  FLOW PROCESS FROM NODE  4157.16 TO NODE  4161.83 IS CODE =  5
  UPSTREAM NODE  4161.83     ELEVATION =   145.40  (FLOW IS UNDER PRESSURE)
--------------------------------------------------------------------------------
  CALCULATE JUNCTION LOSSES:
       PIPE       FLOW    DIAMETER   ANGLE    FLOWLINE   CRITICAL   VELOCITY
                  (CFS)   (INCHES) (DEGREES) ELEVATION  DEPTH(FT.)  (FT/SEC)
     UPSTREAM      24.70    18.00      0.00    145.40      1.49       13.977
    DOWNSTREAM     26.70    18.00       -      145.20      1.49       15.109
    LATERAL #1      2.00    12.00     60.00    145.70      0.60        2.546
    LATERAL #2      0.00     0.00      0.00      0.00      0.00        0.000
       Q5           0.00===Q5 EQUALS BASIN INPUT===

  LACFCD AND OCEMA FLOW JUNCTION FORMULAE USED:
  DY=(Q2*V2-Q1*V1*COS(DELTA1)-Q3*V3*COS(DELTA3)-
      Q4*V4*COS(DELTA4))/((A1+A2)*16.1)+FRICTION LOSSES
  UPSTREAM:    MANNING'S N = 0.01300;  FRICTION SLOPE = 0.05529
  DOWNSTREAM:  MANNING'S N = 0.01300;  FRICTION SLOPE = 0.06461
  AVERAGED FRICTION SLOPE IN JUNCTION ASSUMED AS 0.05995
  JUNCTION LENGTH =   4.67 FEET
  FRICTION LOSSES =  0.280 FEET         ENTRANCE LOSSES =  0.000 FEET
  JUNCTION LOSSES = (DY+HV1-HV2)+(ENTRANCE LOSSES)
  JUNCTION LOSSES = ( 0.746)+( 0.000) =   0.746
--------------------------------------------------------------------------------
  NODE  4161.83 : HGL = <  152.049>;EGL= <  155.083>;FLOWLINE= <  145.400>

********************************************************************************
  FLOW PROCESS FROM NODE  4161.83 TO NODE  4179.00 IS CODE =  1
  UPSTREAM NODE  4179.00     ELEVATION =   145.79  (FLOW IS UNDER PRESSURE)
--------------------------------------------------------------------------------
  CALCULATE FRICTION LOSSES(LACFCD):
  PIPE FLOW   =      24.70 CFS     PIPE DIAMETER =  18.00 INCHES
  PIPE LENGTH =      17.17 FEET          MANNING'S N  =  0.01300
  SF=(Q/K)**2 = ((     24.70)/(   105.043))**2 = 0.05529
  HF=L*SF = (     17.17)*(0.05529) =      0.949
--------------------------------------------------------------------------------
  NODE  4179.00 : HGL = <  152.998>;EGL= <  156.032>;FLOWLINE= <  145.790>
```

```
****************************************************************************
  FLOW PROCESS FROM NODE  4179.00 TO NODE  4183.20 IS CODE =  1
  UPSTREAM NODE  4183.20     ELEVATION =   145.81  (FLOW IS UNDER PRESSURE)
----------------------------------------------------------------------------
  CALCULATE FRICTION LOSSES(LACFCD):
  PIPE FLOW   =      24.70 CFS     PIPE DIAMETER =  18.00 INCHES
  PIPE LENGTH =       4.20 FEET          MANNING'S N  =  0.01300
  SF=(Q/K)**2 = ((     24.70)/(   105.047))**2 = 0.05529
  HF=L*SF = (      4.20)*(0.05529) =      0.232
----------------------------------------------------------------------------
  NODE  4183.20 : HGL = <  153.231>;EGL= <  156.264>;FLOWLINE= <  145.810>

****************************************************************************
  FLOW PROCESS FROM NODE  4183.20 TO NODE  4191.73 IS CODE =  3
  UPSTREAM NODE  4191.73     ELEVATION =   146.45  (FLOW IS UNDER PRESSURE)
----------------------------------------------------------------------------
  CALCULATE PIPE-BEND LOSSES(OCEMA):
  PIPE FLOW =      24.70 CFS             PIPE DIAMETER =  18.00 INCHES
  CENTRAL ANGLE =  5.160 DEGREES         MANNING'S N = 0.01300
  PIPE LENGTH =       8.56 FEET          BEND COEFFICIENT(KB) = 0.05986
  FLOW VELOCITY =  13.98 FEET/SEC.       VELOCITY HEAD =  3.034 FEET
  HB=KB*(VELOCITY HEAD) = ( 0.060)*( 3.034) =   0.182
  SF=(Q/K)**2 = ((     24.70)/(   105.043))**2 = 0.05529
  HF=L*SF = (      8.56)*(0.05529) =  0.473
  TOTAL HEAD LOSSES = HB + HF = ( 0.182)+( 0.473) =  0.655
----------------------------------------------------------------------------
  NODE  4191.73 : HGL = <  153.885>;EGL= <  156.919>;FLOWLINE= <  146.450>

****************************************************************************
  FLOW PROCESS FROM NODE  4191.73 TO NODE  4350.14 IS CODE =  1
  UPSTREAM NODE  4350.14     ELEVATION =   158.40  (FLOW IS UNDER PRESSURE)
----------------------------------------------------------------------------
  CALCULATE FRICTION LOSSES(LACFCD):
  PIPE FLOW   =      24.70 CFS     PIPE DIAMETER =  18.00 INCHES
  PIPE LENGTH =     158.38 FEET          MANNING'S N  =  0.01300
  SF=(Q/K)**2 = ((     24.70)/(   105.043))**2 = 0.05529
  HF=L*SF = (    158.38)*(0.05529) =      8.757
----------------------------------------------------------------------------
  NODE  4350.14 : HGL = <  162.643>;EGL= <  165.676>;FLOWLINE= <  158.400>

****************************************************************************
  FLOW PROCESS FROM NODE  4350.14 TO NODE  4354.81 IS CODE =  2
  UPSTREAM NODE  4354.81     ELEVATION =   158.60  (FLOW IS UNDER PRESSURE)
  (NOTE: POSSIBLE JUMP IN OR UPSTREAM OF STRUCTURE)
----------------------------------------------------------------------------
  CALCULATE MANHOLE LOSSES(LACFCD):
  PIPE FLOW =      24.70 CFS           PIPE DIAMETER =  18.00 INCHES
  AVERAGED VELOCITY HEAD =  5.117 FEET
  HMN = .05*(AVERAGED VELOCITY HEAD) = .05*( 5.117) =  0.256
  NOTE: ENERGY GRADE LINE HAS BEEN ADJUSTED DUE TO
        CHANGING IN FLOW LINE ELEVATIONS
----------------------------------------------------------------------------
  NODE  4354.81 : HGL = <  159.527>;EGL= <  166.728>;FLOWLINE= <  158.600>

****************************************************************************
  FLOW PROCESS FROM NODE  4354.81 TO NODE  4358.81 IS CODE =  1
  UPSTREAM NODE  4358.81     ELEVATION =   159.08  (FLOW IS SUPERCRITICAL)
----------------------------------------------------------------------------
  CALCULATE FRICTION LOSSES(LACFCD):
  PIPE FLOW   =      24.70 CFS     PIPE DIAMETER =  18.00 INCHES
  PIPE LENGTH =       4.00 FEET          MANNING'S N  =  0.01300
----------------------------------------------------------------------------
  NORMAL DEPTH(FT) =      0.91           CRITICAL DEPTH(FT) =      1.49
============================================================================
  UPSTREAM CONTROL ASSUMED FLOWDEPTH(FT) =     0.93
============================================================================
  GRADUALLY VARIED FLOW PROFILE COMPUTED INFORMATION:
----------------------------------------------------------------------------
  DISTANCE FROM      FLOW DEPTH  VELOCITY      SPECIFIC        PRESSURE+
   CONTROL(FT)           (FT)    (FT/SEC)     ENERGY(FT)    MOMENTUM(POUNDS)
          0.000          0.929     21.474          8.094          1057.14
          4.000          0.927     21.527          8.128          1059.54
----------------------------------------------------------------------------
  NODE  4358.81 : HGL = <  160.009>;EGL= <  167.174>;FLOWLINE= <  159.080>

****************************************************************************
  FLOW PROCESS FROM NODE  4436.85 TO NODE  4429.50 IS CODE =  3
  UPSTREAM NODE  4429.50     ELEVATION =   167.53  (FLOW IS SUPERCRITICAL)
----------------------------------------------------------------------------
  CALCULATE PIPE-BEND LOSSES(OCEMA):
  PIPE FLOW =      24.70 CFS             PIPE DIAMETER =  18.00 INCHES
  CENTRAL ANGLE = 90.000 DEGREES         MANNING'S N = 0.01300
  PIPE LENGTH =      70.69 FEET
----------------------------------------------------------------------------
  NORMAL DEPTH(FT) =      0.91           CRITICAL DEPTH(FT) =      1.49
============================================================================
  UPSTREAM CONTROL ASSUMED FLOWDEPTH(FT) =     1.02
============================================================================
  GRADUALLY VARIED FLOW PROFILE COMPUTED INFORMATION:
----------------------------------------------------------------------------
  DISTANCE FROM      FLOW DEPTH  VELOCITY      SPECIFIC        PRESSURE+
   CONTROL(FT)           (FT)    (FT/SEC)     ENERGY(FT)    MOMENTUM(POUNDS)
          0.000          1.021     19.272          6.792           958.66
```

```
          4.070          1.010     19.515          6.927           969.41
          8.719          0.998     19.767          7.069           980.54
         14.103          0.987     20.026          7.218           992.07
         20.453          0.976     20.293          7.374          1004.01
         28.124          0.964     20.569          7.538          1016.37
         37.713          0.953     20.855          7.710          1029.18
         50.338          0.941     21.149          7.891          1042.44
         68.512          0.930     21.453          8.081          1056.18
         70.690          0.929     21.474          8.094          1057.14
-------------------------------------------------------------------------------
  NODE  4429.50 : HGL = <  168.551>;EGL= <  174.322>;FLOWLINE= <  167.530>

*******************************************************************************
  FLOW PROCESS FROM NODE  4394.15 TO NODE  4436.85 IS CODE =  3
  UPSTREAM NODE  4436.85     ELEVATION =   168.41  (FLOW IS SUPERCRITICAL)
-------------------------------------------------------------------------------
  CALCULATE PIPE-BEND LOSSES(OCEMA):
  PIPE FLOW =      24.70 CFS            PIPE DIAMETER =  18.00 INCHES
  CENTRAL ANGLE = 10.000 DEGREES        MANNING'S N = 0.01300
  PIPE LENGTH =       7.35 FEET
-------------------------------------------------------------------------------
  NORMAL DEPTH(FT) =      0.91           CRITICAL DEPTH(FT) =      1.49
===============================================================================
  UPSTREAM CONTROL ASSUMED FLOWDEPTH(FT) =     1.05
===============================================================================
  GRADUALLY VARIED FLOW PROFILE COMPUTED INFORMATION:
-------------------------------------------------------------------------------
  DISTANCE FROM      FLOW DEPTH  VELOCITY      SPECIFIC        PRESSURE+
   CONTROL(FT)           (FT)    (FT/SEC)     ENERGY(FT)    MOMENTUM(POUNDS)
          0.000          1.046     18.769          6.520           936.60
          3.886          1.032     19.048          6.670           948.81
          7.350          1.021     19.272          6.792           958.66
-------------------------------------------------------------------------------
  NODE  4436.85 : HGL = <  169.456>;EGL= <  174.930>;FLOWLINE= <  168.410>

*******************************************************************************
  FLOW PROCESS FROM NODE  4436.85 TO NODE  4455.08 IS CODE =  1
  UPSTREAM NODE  4455.08     ELEVATION =   171.59  (FLOW IS SUPERCRITICAL)
-------------------------------------------------------------------------------
  CALCULATE FRICTION LOSSES(LACFCD):
  PIPE FLOW   =      24.70 CFS     PIPE DIAMETER =  18.00 INCHES
  PIPE LENGTH =      18.23 FEET          MANNING'S N  =  0.01300
-------------------------------------------------------------------------------
  NORMAL DEPTH(FT) =      0.81           CRITICAL DEPTH(FT) =      1.49
===============================================================================
  UPSTREAM CONTROL ASSUMED FLOWDEPTH(FT) =     1.49
===============================================================================
  GRADUALLY VARIED FLOW PROFILE COMPUTED INFORMATION:
-------------------------------------------------------------------------------
  DISTANCE FROM      FLOW DEPTH  VELOCITY      SPECIFIC        PRESSURE+
   CONTROL(FT)           (FT)    (FT/SEC)     ENERGY(FT)    MOMENTUM(POUNDS)
          0.000          1.486     13.995          4.529           751.22
          0.448          1.418     14.279          4.586           757.40
          1.563          1.350     14.742          4.727           772.35
          3.323          1.282     15.356          4.945           794.75
          5.867          1.214     16.121          5.251           824.70
          9.472          1.146     17.052          5.663           862.94
         14.643          1.077     18.173          6.209           910.70
         18.230          1.046     18.769          6.520           936.60
-------------------------------------------------------------------------------
  NODE  4455.08 : HGL = <  173.076>;EGL= <  176.119>;FLOWLINE= <  171.590>

*******************************************************************************
  UPSTREAM PIPE FLOW CONTROL DATA:
  NODE NUMBER =  4455.08            FLOWLINE ELEVATION =   171.59
  ASSUMED UPSTREAM CONTROL HGL =    173.08 FOR DOWNSTREAM RUN ANALYSIS

===============================================================================
  END OF GRADUALLY VARIED FLOW ANALYSIS
```

```
*****************************************************************************
                 PIPE-FLOW HYDRAULICS COMPUTER PROGRAM PACKAGE
           (Reference: LACFCD,LACRD, AND OCEMA HYDRAULICS CRITERION)
          (c) Copyright 1982-2003 Advanced Engineering Software (aes)
                      Ver. 8.0  Release Date: 01/01/2003


  ************************** DESCRIPTION OF STUDY **************************
 * storm drain line @CB#1                                                 *
 *                                                                        *
 *                                                                        *
  **************************************************************************

   FILE NAME: VCB1.DAT
   TIME/DATE OF STUDY: 16:12 07/22/2020
*****************************************************************************
                GRADUALLY VARIED FLOW ANALYSIS FOR PIPE SYSTEM
                          NODAL POINT STATUS TABLE
                 (Note: "*" indicates nodal point data used.)
                       UPSTREAM RUN                  DOWNSTREAM RUN
    NODE    MODEL   PRESSURE      PRESSURE+          FLOW         PRESSURE+
   NUMBER  PROCESS  HEAD(FT)   MOMENTUM(POUNDS)   DEPTH(FT)   MOMENTUM(POUNDS)
   102.00-             6.30*            306.46        0.39              64.97
         } FRICTION
   109.62-             4.95*            240.49        0.74 Dc           40.83
-----------------------------------------------------------------------------
  MAXIMUM NUMBER OF ENERGY BALANCES USED IN EACH PROFILE =  10
-----------------------------------------------------------------------------
  NOTE: STEADY FLOW HYDRAULIC HEAD-LOSS COMPUTATIONS BASED ON THE MOST
  CONSERVATIVE FORMULAE FROM THE CURRENT LACRD,LACFCD, AND OCEMA
  DESIGN MANUALS.
*****************************************************************************
  DOWNSTREAM PIPE FLOW CONTROL DATA:
  NODE NUMBER =   102.00            FLOWLINE ELEVATION =   145.70
  PIPE FLOW =       3.00 CFS        PIPE DIAMETER =  12.00 INCHES
  ASSUMED DOWNSTREAM CONTROL HGL =   152.000 FEET
-----------------------------------------------------------------------------
  NODE   102.00 : HGL = <  152.000>;EGL= <  152.227>;FLOWLINE= <  145.700>

*****************************************************************************
  FLOW PROCESS FROM NODE   102.00 TO NODE   109.62 IS CODE =  1
  UPSTREAM NODE   109.62     ELEVATION =   147.10  (FLOW IS UNDER PRESSURE)
-----------------------------------------------------------------------------
  CALCULATE FRICTION LOSSES(LACFCD):
  PIPE FLOW   =       3.00 CFS     PIPE DIAMETER =  12.00 INCHES
  PIPE LENGTH =       7.61 FEET          MANNING'S N  =  0.01300
  SF=(Q/K)**2 = ((      3.00)/(    35.628))**2 = 0.00709
  HF=L*SF = (      7.61)*(0.00709) =      0.054
-----------------------------------------------------------------------------
  NODE   109.62 : HGL = <  152.054>;EGL= <  152.281>;FLOWLINE= <  147.100>

*****************************************************************************
  UPSTREAM PIPE FLOW CONTROL DATA:
  NODE NUMBER =   109.62            FLOWLINE ELEVATION =   147.10
  ASSUMED UPSTREAM CONTROL HGL =    147.84 FOR DOWNSTREAM RUN ANALYSIS

=============================================================================
  END OF GRADUALLY VARIED FLOW ANALYSIS
```

```
*****************************************************************************
                 PIPE-FLOW HYDRAULICS COMPUTER PROGRAM PACKAGE
           (Reference: LACFCD,LACRD, AND OCEMA HYDRAULICS CRITERION)
          (c) Copyright 1982-2003 Advanced Engineering Software (aes)
                     Ver. 8.0  Release Date: 01/01/2003


  ************************* DESCRIPTION OF STUDY *************************
 * storm drain lateral @CB #2                                            *
 *                                                                       *
 *                                                                       *
  *************************************************************************

   FILE NAME: VCB2.DAT
   TIME/DATE OF STUDY: 16:09 07/22/2020
*****************************************************************************
                GRADUALLY VARIED FLOW ANALYSIS FOR PIPE SYSTEM
                          NODAL POINT STATUS TABLE
                 (Note: "*" indicates nodal point data used.)
                       UPSTREAM RUN                  DOWNSTREAM RUN
    NODE     MODEL   PRESSURE      PRESSURE+          FLOW         PRESSURE+
   NUMBER  PROCESS  HEAD(FT)   MOMENTUM(POUNDS)   DEPTH(FT)   MOMENTUM(POUNDS)
  5000.00-             6.84*            703.52        0.77              80.57
         } FRICTION
  5024.27-             6.64*            681.79        0.77              80.33
         } FRICTION+BEND
  5059.41-             6.44*            659.55        0.90 Dc           77.91
-----------------------------------------------------------------------------
  MAXIMUM NUMBER OF ENERGY BALANCES USED IN EACH PROFILE =  10
-----------------------------------------------------------------------------
  NOTE: STEADY FLOW HYDRAULIC HEAD-LOSS COMPUTATIONS BASED ON THE MOST
  CONSERVATIVE FORMULAE FROM THE CURRENT LACRD,LACFCD, AND OCEMA
  DESIGN MANUALS.
*****************************************************************************
  DOWNSTREAM PIPE FLOW CONTROL DATA:
  NODE NUMBER =  5000.00            FLOWLINE ELEVATION =   145.16
  PIPE FLOW =       5.40 CFS        PIPE DIAMETER =  18.00 INCHES
  ASSUMED DOWNSTREAM CONTROL HGL =   152.000 FEET
-----------------------------------------------------------------------------
  NODE  5000.00 : HGL = <  152.000>;EGL= <  152.145>;FLOWLINE= <  145.160>

*****************************************************************************
  FLOW PROCESS FROM NODE  5000.00 TO NODE  5024.27 IS CODE =  1
  UPSTREAM NODE  5024.27     ELEVATION =   145.43  (FLOW IS UNDER PRESSURE)
-----------------------------------------------------------------------------
  CALCULATE FRICTION LOSSES(LACFCD):
  PIPE FLOW   =       5.40 CFS     PIPE DIAMETER =  18.00 INCHES
  PIPE LENGTH =      27.60 FEET          MANNING'S N  =  0.01300
  SF=(Q/K)**2 = ((      5.40)/(   105.034))**2 = 0.00264
  HF=L*SF = (     27.60)*(0.00264) =      0.073
-----------------------------------------------------------------------------
  NODE  5024.27 : HGL = <  152.073>;EGL= <  152.218>;FLOWLINE= <  145.430>

*****************************************************************************
  FLOW PROCESS FROM NODE  5024.27 TO NODE  5059.41 IS CODE =  3
  UPSTREAM NODE  5059.41     ELEVATION =   145.75  (FLOW IS UNDER PRESSURE)
-----------------------------------------------------------------------------
  CALCULATE PIPE-BEND LOSSES(OCEMA):
  PIPE FLOW =       5.40 CFS             PIPE DIAMETER =  18.00 INCHES
  CENTRAL ANGLE = 80.350 DEGREES         MANNING'S N = 0.01300
  PIPE LENGTH =      31.80 FEET          BEND COEFFICIENT(KB) = 0.23622
  FLOW VELOCITY =   3.06 FEET/SEC.       VELOCITY HEAD =  0.145 FEET
  HB=KB*(VELOCITY HEAD) = ( 0.236)*( 0.145) =   0.034
  SF=(Q/K)**2 = ((      5.40)/(   105.046))**2 = 0.00264
  HF=L*SF = (     31.80)*(0.00264) =  0.084
  TOTAL HEAD LOSSES = HB + HF = ( 0.034)+( 0.084) =  0.118
-----------------------------------------------------------------------------
  NODE  5059.41 : HGL = <  152.191>;EGL= <  152.336>;FLOWLINE= <  145.750>

*****************************************************************************
  UPSTREAM PIPE FLOW CONTROL DATA:
  NODE NUMBER =  5059.41            FLOWLINE ELEVATION =   145.75
  ASSUMED UPSTREAM CONTROL HGL =    146.65 FOR DOWNSTREAM RUN ANALYSIS

=============================================================================
  END OF GRADUALLY VARIED FLOW ANALYSIS
```

```
*****************************************************************************
                 PIPE-FLOW HYDRAULICS COMPUTER PROGRAM PACKAGE
           (Reference: LACFCD,LACRD, AND OCEMA HYDRAULICS CRITERION)
          (c) Copyright 1982-2003 Advanced Engineering Software (aes)
                     Ver. 8.0  Release Date: 01/01/2003


  ************************* DESCRIPTION OF STUDY *************************
 * storm drain lateral CB #4                                             *
 *                                                                       *
 *                                                                       *
  *************************************************************************

   FILE NAME: VCB4.DAT
   TIME/DATE OF STUDY: 15:12 07/22/2020
*****************************************************************************
                GRADUALLY VARIED FLOW ANALYSIS FOR PIPE SYSTEM
                          NODAL POINT STATUS TABLE
                 (Note: "*" indicates nodal point data used.)
                       UPSTREAM RUN                  DOWNSTREAM RUN
    NODE    MODEL   PRESSURE      PRESSURE+          FLOW         PRESSURE+
   NUMBER  PROCESS  HEAD(FT)   MOMENTUM(POUNDS)   DEPTH(FT)   MOMENTUM(POUNDS)
   102.00-             1.51*             79.72        0.80 Dc           50.52
         } FRICTION
   110.97-             1.51*             79.52        0.80 Dc           50.52
-----------------------------------------------------------------------------
  MAXIMUM NUMBER OF ENERGY BALANCES USED IN EACH PROFILE =  10
-----------------------------------------------------------------------------
  NOTE: STEADY FLOW HYDRAULIC HEAD-LOSS COMPUTATIONS BASED ON THE MOST
  CONSERVATIVE FORMULAE FROM THE CURRENT LACRD,LACFCD, AND OCEMA
  DESIGN MANUALS.
*****************************************************************************
  DOWNSTREAM PIPE FLOW CONTROL DATA:
  NODE NUMBER =   102.00            FLOWLINE ELEVATION =   180.39
  PIPE FLOW =       3.50 CFS        PIPE DIAMETER =  12.00 INCHES
  ASSUMED DOWNSTREAM CONTROL HGL =   181.900 FEET
-----------------------------------------------------------------------------
  NODE   102.00 : HGL = <  181.900>;EGL= <  182.208>;FLOWLINE= <  180.390>

*****************************************************************************
  FLOW PROCESS FROM NODE   102.00 TO NODE   110.97 IS CODE =  1
  UPSTREAM NODE   110.97     ELEVATION =   180.50  (FLOW IS UNDER PRESSURE)
-----------------------------------------------------------------------------
  CALCULATE FRICTION LOSSES(LACFCD):
  PIPE FLOW   =       3.50 CFS     PIPE DIAMETER =  12.00 INCHES
  PIPE LENGTH =      10.97 FEET          MANNING'S N  =  0.01300
  SF=(Q/K)**2 = ((      3.50)/(    35.628))**2 = 0.00965
  HF=L*SF = (     10.97)*(0.00965) =      0.106
-----------------------------------------------------------------------------
  NODE   110.97 : HGL = <  182.006>;EGL= <  182.314>;FLOWLINE= <  180.500>

*****************************************************************************
  UPSTREAM PIPE FLOW CONTROL DATA:
  NODE NUMBER =   110.97            FLOWLINE ELEVATION =   180.50
  ASSUMED UPSTREAM CONTROL HGL =    181.30 FOR DOWNSTREAM RUN ANALYSIS

=============================================================================
  END OF GRADUALLY VARIED FLOW ANALYSIS
 ♠
```

```
____________________________________________________________________________
****************************************************************************
                 HYDRAULIC ELEMENTS - I  PROGRAM PACKAGE
          (C) Copyright 1982-99 Advanced Engineering Software (aes)
                     Ver. 8.0  Release Date: 01/01/99


----------------------------------------------------------------------------
  TIME/DATE OF STUDY: 11:37   7/22/2020
============================================================================


 ************************* DESCRIPTION OF STUDY *************************
* CB #1 sizing                                                           *
* use w=14'                                                              *
*                                                                        *
 ************************************************************************

****************************************************************************
>>>>FLOWBY CATCH BASIN INLET CAPACITY INPUT INFORMATION<<<<
----------------------------------------------------------------------------


    Curb Inlet Capacities are approximated based on the Bureau of
    Public Roads nomograph plots for flowby basins and sump basins.


    STREETFLOW(CFS) =    3.40
    GUTTER FLOWDEPTH(FEET) =  0.29
    BASIN LOCAL DEPRESSION(FEET) =  0.33
    FLOWBY BASIN WIDTH(FEET) =  10.00

    >>>>CALCULATED BASIN WIDTH FOR TOTAL INTERCEPTION =     12.5

    >>>>CALCULATED ESTIMATED INTERCEPTION(CFS) =    2.9

============================================================================
```

```
____________________________________________________________________________
****************************************************************************
                 HYDRAULIC ELEMENTS - I  PROGRAM PACKAGE
          (C) Copyright 1982-99 Advanced Engineering Software (aes)
                     Ver. 8.0  Release Date: 01/01/99


----------------------------------------------------------------------------
  TIME/DATE OF STUDY: 11:24   7/22/2020
============================================================================


 ************************* DESCRIPTION OF STUDY *************************
* curb and gutter depth  of flow @CB #1                                   *
*                                                                         *
*                                                                         *
 ***************************************************************************

****************************************************************************
>>>>STREETFLOW MODEL INPUT INFORMATION<<<<
----------------------------------------------------------------------------
    CONSTANT STREET GRADE(FEET/FEET) = 0.060000
    CONSTANT STREET FLOW(CFS) =    2.50
    AVERAGE STREETFLOW FRICTION FACTOR(MANNING) = 0.015000
    CONSTANT SYMMETRICAL STREET HALF-WIDTH(FEET) =   24.00
    DISTANCE FROM CROWN TO CROSSFALL GRADEBREAK(FEET) =   22.00
    INTERIOR STREET CROSSFALL(DECIMAL) = 0.010000
    OUTSIDE  STREET CROSSFALL(DECIMAL) = 0.010000
    CONSTANT SYMMETRICAL CURB HEIGHT(FEET) =   0.50
    CONSTANT SYMMETRICAL GUTTER-WIDTH(FEET) =   1.50
    CONSTANT SYMMETRICAL GUTTER-LIP(FEET) =  0.03125
    CONSTANT SYMMETRICAL GUTTER-HIKE(FEET) =  0.12500
    FLOW ASSUMED TO FILL STREET ON ONE SIDE, AND THEN SPLITS
============================================================================
    STREET FLOW MODEL RESULTS:
----------------------------------------------------------------------------
    STREET FLOW DEPTH(FEET) =  0.25
    HALFSTREET FLOOD WIDTH(FEET) =   10.64
    AVERAGE FLOW VELOCITY(FEET/SEC.) =    3.59
    PRODUCT OF DEPTH&VELOCITY =    0.89
============================================================================
```

```
____________________________________________________________________________
****************************************************************************
                 HYDRAULIC ELEMENTS - I  PROGRAM PACKAGE
          (C) Copyright 1982-99 Advanced Engineering Software (aes)
                     Ver. 8.0  Release Date: 01/01/99


----------------------------------------------------------------------------
  TIME/DATE OF STUDY: 11:35   7/22/2020
============================================================================


 ************************* DESCRIPTION OF STUDY *************************
* CB #2 sizing                                                           *
* use W=14'                                                              *
*                                                                        *
 ************************************************************************

****************************************************************************
>>>>FLOWBY CATCH BASIN INLET CAPACITY INPUT INFORMATION<<<<
----------------------------------------------------------------------------


    Curb Inlet Capacities are approximated based on the Bureau of
    Public Roads nomograph plots for flowby basins and sump basins.


    STREETFLOW(CFS) =    2.50
    GUTTER FLOWDEPTH(FEET) =  0.25
    BASIN LOCAL DEPRESSION(FEET) =  0.33
    FLOWBY BASIN WIDTH(FEET) =  10.00

    >>>>CALCULATED BASIN WIDTH FOR TOTAL INTERCEPTION =     10.7

    >>>>CALCULATED ESTIMATED INTERCEPTION(CFS) =    2.4

============================================================================
```

```
____________________________________________________________________________
****************************************************************************
                 HYDRAULIC ELEMENTS - I  PROGRAM PACKAGE
          (C) Copyright 1982-99 Advanced Engineering Software (aes)
                     Ver. 8.0  Release Date: 01/01/99


  TIME/DATE OF STUDY: 11:31   7/22/2020
============================================================================


 ************************* DESCRIPTION OF STUDY *************************
* curb and gutter depth of flow @CB #2                                   *
*                                                                        *
*                                                                        *
 ************************************************************************

****************************************************************************
>>>>STREETFLOW MODEL INPUT INFORMATION<<<<
----------------------------------------------------------------------------
    CONSTANT STREET GRADE(FEET/FEET) = 0.064000
    CONSTANT STREET FLOW(CFS) =    3.40
    AVERAGE STREETFLOW FRICTION FACTOR(MANNING) = 0.015000
    CONSTANT SYMMETRICAL STREET HALF-WIDTH(FEET) =   24.00
    DISTANCE FROM CROWN TO CROSSFALL GRADEBREAK(FEET) =   22.00
    INTERIOR STREET CROSSFALL(DECIMAL) = 0.030000
    OUTSIDE  STREET CROSSFALL(DECIMAL) = 0.030000
    CONSTANT SYMMETRICAL CURB HEIGHT(FEET) =   0.50
    CONSTANT SYMMETRICAL GUTTER-WIDTH(FEET) =   1.50
    CONSTANT SYMMETRICAL GUTTER-LIP(FEET) =  0.03125
    CONSTANT SYMMETRICAL GUTTER-HIKE(FEET) =  0.12500
    FLOW ASSUMED TO FILL STREET ON ONE SIDE, AND THEN SPLITS
============================================================================
    STREET FLOW MODEL RESULTS:
----------------------------------------------------------------------------
    STREET FLOW DEPTH(FEET) =  0.29
    HALFSTREET FLOOD WIDTH(FEET) =    5.89
    AVERAGE FLOW VELOCITY(FEET/SEC.) =    5.41
    PRODUCT OF DEPTH&VELOCITY =    1.56
============================================================================
```

```
_____________________________________________________________________________
*****************************************************************************
                 HYDRAULIC ELEMENTS - I  PROGRAM PACKAGE
          (C) Copyright 1982-99 Advanced Engineering Software (aes)
                     Ver. 8.0  Release Date: 01/01/99


-----------------------------------------------------------------------------
  TIME/DATE OF STUDY:  8:50   9/30/2016
=============================================================================


 ************************* DESCRIPTION OF STUDY *************************
* Capacity of 3.5' catch basin at sump condition                          *
*                                                                         *
*                                                                         *
 *************************************************************************

*****************************************************************************
>>>>SUMP TYPE BASIN INPUT INFORMATION<<<<
-----------------------------------------------------------------------------


    Curb Inlet Capacities are approximated based on the Bureau of
    Public Roads nomograph plots for flowby basins and sump basins.


    BASIN INFLOW(CFS) =    6.85
    BASIN OPENING(FEET) =  0.54
    DEPTH OF WATER(FEET) =  0.83

    >>>>CALCULATED ESTIMATED SUMP BASIN WIDTH(FEET) =       3.50

=============================================================================
```

```
_____________________________________________________________________________
*****************************************************************************
                 HYDRAULIC ELEMENTS - I  PROGRAM PACKAGE
         (C) Copyright 1982-99 Advanced Engineering Software (aes)
                     Ver. 8.0  Release Date: 01/01/99


-----------------------------------------------------------------------------
  TIME/DATE OF STUDY: 11:12   7/22/2020
=============================================================================


 ************************* DESCRIPTION OF STUDY *************************
* Capacity of 7.0' catch basin at a sump condition                        *
*                                                                         *
*                                                                         *
 *************************************************************************

*****************************************************************************
>>>>SUMP TYPE BASIN INPUT INFORMATION<<<<
-----------------------------------------------------------------------------


    Curb Inlet Capacities are approximated based on the Bureau of
    Public Roads nomograph plots for flowby basins and sump basins.


    BASIN INFLOW(CFS) =   13.70
    BASIN OPENING(FEET) =  0.54
    DEPTH OF WATER(FEET) =  0.83

    >>>>CALCULATED ESTIMATED SUMP BASIN WIDTH(FEET) =       7.00

=============================================================================
```

Encompass Health Chula Vista
Catch Basin Sizing

Catch Basin #	Type FB S	Q100 (cfs)	W (ft)	street slope (ft/ft)	curb & gutter depth of flow (ft)	notes
	(flow-by) (sump)					
1	FB	2.5	14	0.060	0.25	
2	FB	3.4	14	0.064	0.29	
3	S	6.5	3.5	-	-	
4	S	3.5	3.5	-	-	
5	S	4.6	3.5	-	-	use w= 7'

Capacity of catch basin at sump condition:

w (ft)	Q (cfs)
3.5	6.85
7	13.7

Section 7 – References

7.1 Soil's Report
7.2 100-year 6-hr Precipitation Map

United States Department of Agriculture

NRCS

Natural Resources Conservation Service

A product of the National Cooperative Soil Survey, a joint effort of the United States Department of Agriculture and other Federal agencies, State agencies including the Agricultural Experiment Stations, and local participants

Custom Soil Resource Report for San Diego County Area, California

chula vista

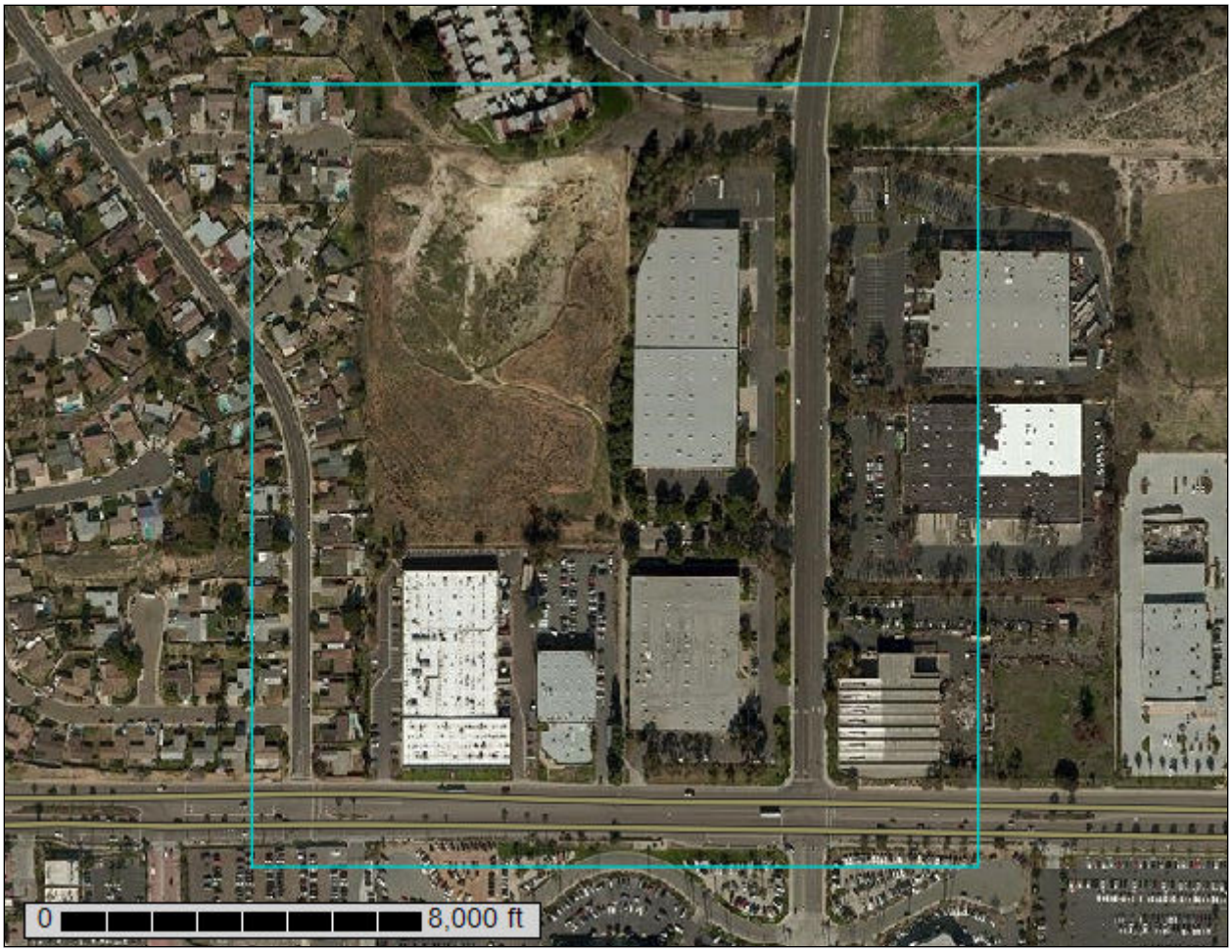

February 14, 2019

Preface

Soil surveys contain information that affects land use planning in survey areas. They highlight soil limitations that affect various land uses and provide information about the properties of the soils in the survey areas. Soil surveys are designed for many different users, including farmers, ranchers, foresters, agronomists, urban planners, community officials, engineers, developers, builders, and home buyers. Also, conservationists, teachers, students, and specialists in recreation, waste disposal, and pollution control can use the surveys to help them understand, protect, or enhance the environment.

Various land use regulations of Federal, State, and local governments may impose special restrictions on land use or land treatment. Soil surveys identify soil properties that are used in making various land use or land treatment decisions. The information is intended to help the land users identify and reduce the effects of soil limitations on various land uses. The landowner or user is responsible for identifying and complying with existing laws and regulations.

Although soil survey information can be used for general farm, local, and wider area planning, onsite investigation is needed to supplement this information in some cases. Examples include soil quality assessments (http://www.nrcs.usda.gov/wps/portal/nrcs/main/soils/health/) and certain conservation and engineering applications. For more detailed information, contact your local USDA Service Center (https://offices.sc.egov.usda.gov/locator/app?agency=nrcs) or your NRCS State Soil Scientist (http://www.nrcs.usda.gov/wps/portal/nrcs/detail/soils/contactus/?cid=nrcs142p2_053951).

Great differences in soil properties can occur within short distances. Some soils are seasonally wet or subject to flooding. Some are too unstable to be used as a foundation for buildings or roads. Clayey or wet soils are poorly suited to use as septic tank absorption fields. A high water table makes a soil poorly suited to basements or underground installations.

The National Cooperative Soil Survey is a joint effort of the United States Department of Agriculture and other Federal agencies, State agencies including the Agricultural Experiment Stations, and local agencies. The Natural Resources Conservation Service (NRCS) has leadership for the Federal part of the National Cooperative Soil Survey.

Information about soils is updated periodically. Updated information is available through the NRCS Web Soil Survey, the site for official soil survey information.

The U.S. Department of Agriculture (USDA) prohibits discrimination in all its programs and activities on the basis of race, color, national origin, age, disability, and where applicable, sex, marital status, familial status, parental status, religion, sexual orientation, genetic information, political beliefs, reprisal, or because all or a part of an individual's income is derived from any public assistance program. (Not all prohibited bases apply to all programs.) Persons with disabilities who require

alternative means for communication of program information (Braille, large print, audiotape, etc.) should contact USDA's TARGET Center at (202) 720-2600 (voice and TDD). To file a complaint of discrimination, write to USDA, Director, Office of Civil Rights, 1400 Independence Avenue, S.W., Washington, D.C. 20250-9410 or call (800) 795-3272 (voice) or (202) 720-6382 (TDD). USDA is an equal opportunity provider and employer.

Contents

Preface.....2
How Soil Surveys Are Made.....5
Soil Map.....8
Soil Map.....9
Legend.....10
Map Unit Legend.....11
Map Unit Descriptions.....11
San Diego County Area, California.....13
DaD—Diablo clay, 9 to 15 percent slopes, warm MAAT, MLRA 20.....13
OhE—Olivenhain cobbly loam, 9 to 30 percent slopes.....14
OkC—Olivenhain-Urban land complex, 2 to 9 percent slopes.....15
SbC—Salinas clay loam, 2 to 9 percent slopes.....17
References.....19

How Soil Surveys Are Made

Soil surveys are made to provide information about the soils and miscellaneous areas in a specific area. They include a description of the soils and miscellaneous areas and their location on the landscape and tables that show soil properties and limitations affecting various uses. Soil scientists observed the steepness, length, and shape of the slopes; the general pattern of drainage; the kinds of crops and native plants; and the kinds of bedrock. They observed and described many soil profiles. A soil profile is the sequence of natural layers, or horizons, in a soil. The profile extends from the surface down into the unconsolidated material in which the soil formed or from the surface down to bedrock. The unconsolidated material is devoid of roots and other living organisms and has not been changed by other biological activity.

Currently, soils are mapped according to the boundaries of major land resource areas (MLRAs). MLRAs are geographically associated land resource units that share common characteristics related to physiography, geology, climate, water resources, soils, biological resources, and land uses (USDA, 2006). Soil survey areas typically consist of parts of one or more MLRA.

The soils and miscellaneous areas in a survey area occur in an orderly pattern that is related to the geology, landforms, relief, climate, and natural vegetation of the area. Each kind of soil and miscellaneous area is associated with a particular kind of landform or with a segment of the landform. By observing the soils and miscellaneous areas in the survey area and relating their position to specific segments of the landform, a soil scientist develops a concept, or model, of how they were formed. Thus, during mapping, this model enables the soil scientist to predict with a considerable degree of accuracy the kind of soil or miscellaneous area at a specific location on the landscape.

Commonly, individual soils on the landscape merge into one another as their characteristics gradually change. To construct an accurate soil map, however, soil scientists must determine the boundaries between the soils. They can observe only a limited number of soil profiles. Nevertheless, these observations, supplemented by an understanding of the soil-vegetation-landscape relationship, are sufficient to verify predictions of the kinds of soil in an area and to determine the boundaries.

Soil scientists recorded the characteristics of the soil profiles that they studied. They noted soil color, texture, size and shape of soil aggregates, kind and amount of rock fragments, distribution of plant roots, reaction, and other features that enable them to identify soils. After describing the soils in the survey area and determining their properties, the soil scientists assigned the soils to taxonomic classes (units). Taxonomic classes are concepts. Each taxonomic class has a set of soil characteristics with precisely defined limits. The classes are used as a basis for comparison to classify soils systematically. Soil taxonomy, the system of taxonomic classification used in the United States, is based mainly on the kind and character of soil properties and the arrangement of horizons within the profile. After the soil

scientists classified and named the soils in the survey area, they compared the individual soils with similar soils in the same taxonomic class in other areas so that they could confirm data and assemble additional data based on experience and research.

The objective of soil mapping is not to delineate pure map unit components; the objective is to separate the landscape into landforms or landform segments that have similar use and management requirements. Each map unit is defined by a unique combination of soil components and/or miscellaneous areas in predictable proportions. Some components may be highly contrasting to the other components of the map unit. The presence of minor components in a map unit in no way diminishes the usefulness or accuracy of the data. The delineation of such landforms and landform segments on the map provides sufficient information for the development of resource plans. If intensive use of small areas is planned, onsite investigation is needed to define and locate the soils and miscellaneous areas.

Soil scientists make many field observations in the process of producing a soil map. The frequency of observation is dependent upon several factors, including scale of mapping, intensity of mapping, design of map units, complexity of the landscape, and experience of the soil scientist. Observations are made to test and refine the soil-landscape model and predictions and to verify the classification of the soils at specific locations. Once the soil-landscape model is refined, a significantly smaller number of measurements of individual soil properties are made and recorded. These measurements may include field measurements, such as those for color, depth to bedrock, and texture, and laboratory measurements, such as those for content of sand, silt, clay, salt, and other components. Properties of each soil typically vary from one point to another across the landscape.

Observations for map unit components are aggregated to develop ranges of characteristics for the components. The aggregated values are presented. Direct measurements do not exist for every property presented for every map unit component. Values for some properties are estimated from combinations of other properties.

While a soil survey is in progress, samples of some of the soils in the area generally are collected for laboratory analyses and for engineering tests. Soil scientists interpret the data from these analyses and tests as well as the field-observed characteristics and the soil properties to determine the expected behavior of the soils under different uses. Interpretations for all of the soils are field tested through observation of the soils in different uses and under different levels of management. Some interpretations are modified to fit local conditions, and some new interpretations are developed to meet local needs. Data are assembled from other sources, such as research information, production records, and field experience of specialists. For example, data on crop yields under defined levels of management are assembled from farm records and from field or plot experiments on the same kinds of soil.

Predictions about soil behavior are based not only on soil properties but also on such variables as climate and biological activity. Soil conditions are predictable over long periods of time, but they are not predictable from year to year. For example, soil scientists can predict with a fairly high degree of accuracy that a given soil will have a high water table within certain depths in most years, but they cannot predict that a high water table will always be at a specific level in the soil on a specific date.

After soil scientists located and identified the significant natural bodies of soil in the survey area, they drew the boundaries of these bodies on aerial photographs and

identified each as a specific map unit. Aerial photographs show trees, buildings, fields, roads, and rivers, all of which help in locating boundaries accurately.

Soil Map

The soil map section includes the soil map for the defined area of interest, a list of soil map units on the map and extent of each map unit, and cartographic symbols displayed on the map. Also presented are various metadata about data used to produce the map, and a description of each soil map unit.

Custom Soil Resource Report
Soil Map

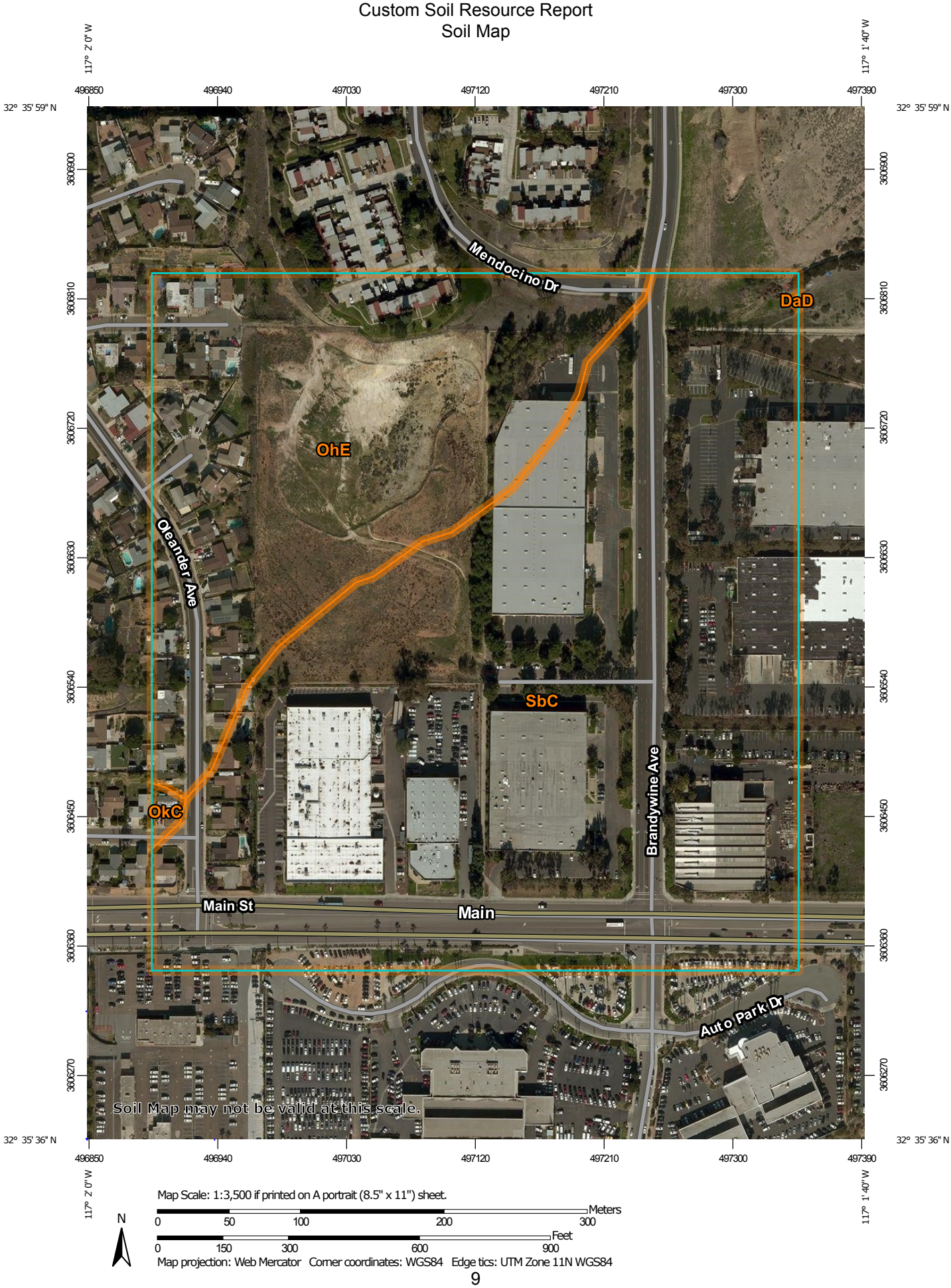

Map Scale: 1:3,500 if printed on A portrait (8.5" x 11") sheet.

N

Meters: 0 50 100 200 300

Feet: 0 150 300 600 900

Map projection: Web Mercator Corner coordinates: WGS84 Edge tics: UTM Zone 11N WGS84

MAP LEGEND

Area of Interest (AOI)

Area of Interest (AOI)

Soils

Soil Map Unit Polygons

Soil Map Unit Lines

Soil Map Unit Points

Special Point Features

Blowout

Borrow Pit

Clay Spot

Closed Depression

Gravel Pit

Gravelly Spot

Landfill

Lava Flow

Marsh or swamp

Mine or Quarry

Miscellaneous Water

Perennial Water

Rock Outcrop

Saline Spot

Sandy Spot

Severely Eroded Spot

Sinkhole

Slide or Slip

Sodic Spot

Spoil Area

Stony Spot

Very Stony Spot

Wet Spot

Other

Special Line Features

Water Features

Streams and Canals

Transportation

Rails

Interstate Highways

US Routes

Major Roads

Local Roads

Background

Aerial Photography

MAP INFORMATION

The soil surveys that comprise your AOI were mapped at 1:24,000.

Warning: Soil Map may not be valid at this scale.

Enlargement of maps beyond the scale of mapping can cause misunderstanding of the detail of mapping and accuracy of soil line placement. The maps do not show the small areas of contrasting soils that could have been shown at a more detailed scale.

Please rely on the bar scale on each map sheet for map measurements.

Source of Map: Natural Resources Conservation Service
Web Soil Survey URL:
Coordinate System: Web Mercator (EPSG:3857)

Maps from the Web Soil Survey are based on the Web Mercator projection, which preserves direction and shape but distorts distance and area. A projection that preserves area, such as the Albers equal-area conic projection, should be used if more accurate calculations of distance or area are required.

This product is generated from the USDA-NRCS certified data as of the version date(s) listed below.

Soil Survey Area: San Diego County Area, California
Survey Area Data: Version 13, Sep 12, 2018

Soil map units are labeled (as space allows) for map scales 1:50,000 or larger.

Date(s) aerial images were photographed: Dec 7, 2014—Jan 4, 2015

The orthophoto or other base map on which the soil lines were compiled and digitized probably differs from the background imagery displayed on these maps. As a result, some minor shifting of map unit boundaries may be evident.

Map Unit Legend

Map Unit Symbol	Map Unit Name	Acres in AOI	Percent of AOI
DaD	Diablo clay, 9 to 15 percent slopes, warm MAAT, MLRA 20	0.0	0.0%
OhE	Olivenhain cobbly loam, 9 to 30 percent slopes	17.2	31.7%
OkC	Olivenhain-Urban land complex, 2 to 9 percent slopes	0.2	0.3%
SbC	Salinas clay loam, 2 to 9 percent slopes	37.0	68.0%
Totals for Area of Interest		**54.4**	**100.0%**

Map Unit Descriptions

The map units delineated on the detailed soil maps in a soil survey represent the soils or miscellaneous areas in the survey area. The map unit descriptions, along with the maps, can be used to determine the composition and properties of a unit.

A map unit delineation on a soil map represents an area dominated by one or more major kinds of soil or miscellaneous areas. A map unit is identified and named according to the taxonomic classification of the dominant soils. Within a taxonomic class there are precisely defined limits for the properties of the soils. On the landscape, however, the soils are natural phenomena, and they have the characteristic variability of all natural phenomena. Thus, the range of some observed properties may extend beyond the limits defined for a taxonomic class. Areas of soils of a single taxonomic class rarely, if ever, can be mapped without including areas of other taxonomic classes. Consequently, every map unit is made up of the soils or miscellaneous areas for which it is named and some minor components that belong to taxonomic classes other than those of the major soils.

Most minor soils have properties similar to those of the dominant soil or soils in the map unit, and thus they do not affect use and management. These are called noncontrasting, or similar, components. They may or may not be mentioned in a particular map unit description. Other minor components, however, have properties and behavioral characteristics divergent enough to affect use or to require different management. These are called contrasting, or dissimilar, components. They generally are in small areas and could not be mapped separately because of the scale used. Some small areas of strongly contrasting soils or miscellaneous areas are identified by a special symbol on the maps. If included in the database for a given area, the contrasting minor components are identified in the map unit descriptions along with some characteristics of each. A few areas of minor components may not have been observed, and consequently they are not mentioned in the descriptions, especially where the pattern was so complex that it was impractical to make enough observations to identify all the soils and miscellaneous areas on the landscape.

The presence of minor components in a map unit in no way diminishes the usefulness or accuracy of the data. The objective of mapping is not to delineate pure taxonomic classes but rather to separate the landscape into landforms or landform segments that have similar use and management requirements. The delineation of such segments on the map provides sufficient information for the development of resource plans. If intensive use of small areas is planned, however, onsite investigation is needed to define and locate the soils and miscellaneous areas.

An identifying symbol precedes the map unit name in the map unit descriptions. Each description includes general facts about the unit and gives important soil properties and qualities.

Soils that have profiles that are almost alike make up a *soil series*. Except for differences in texture of the surface layer, all the soils of a series have major horizons that are similar in composition, thickness, and arrangement.

Soils of one series can differ in texture of the surface layer, slope, stoniness, salinity, degree of erosion, and other characteristics that affect their use. On the basis of such differences, a soil series is divided into *soil phases*. Most of the areas shown on the detailed soil maps are phases of soil series. The name of a soil phase commonly indicates a feature that affects use or management. For example, Alpha silt loam, 0 to 2 percent slopes, is a phase of the Alpha series.

Some map units are made up of two or more major soils or miscellaneous areas. These map units are complexes, associations, or undifferentiated groups.

A *complex* consists of two or more soils or miscellaneous areas in such an intricate pattern or in such small areas that they cannot be shown separately on the maps. The pattern and proportion of the soils or miscellaneous areas are somewhat similar in all areas. Alpha-Beta complex, 0 to 6 percent slopes, is an example.

An *association* is made up of two or more geographically associated soils or miscellaneous areas that are shown as one unit on the maps. Because of present or anticipated uses of the map units in the survey area, it was not considered practical or necessary to map the soils or miscellaneous areas separately. The pattern and relative proportion of the soils or miscellaneous areas are somewhat similar. Alpha-Beta association, 0 to 2 percent slopes, is an example.

An *undifferentiated group* is made up of two or more soils or miscellaneous areas that could be mapped individually but are mapped as one unit because similar interpretations can be made for use and management. The pattern and proportion of the soils or miscellaneous areas in a mapped area are not uniform. An area can be made up of only one of the major soils or miscellaneous areas, or it can be made up of all of them. Alpha and Beta soils, 0 to 2 percent slopes, is an example.

Some surveys include *miscellaneous areas*. Such areas have little or no soil material and support little or no vegetation. Rock outcrop is an example.

San Diego County Area, California

DaD—Diablo clay, 9 to 15 percent slopes, warm MAAT, MLRA 20

Map Unit Setting

National map unit symbol: 2w63f
Elevation: 0 to 2,340 feet
Mean annual precipitation: 10 to 27 inches
Mean annual air temperature: 58 to 65 degrees F
Frost-free period: 290 to 365 days
Farmland classification: Farmland of statewide importance

Map Unit Composition

Diablo and similar soils: 85 percent
Minor components: 15 percent
Estimates are based on observations, descriptions, and transects of the mapunit.

Description of Diablo

Setting

Landform: Mountain slopes, hillslopes
Down-slope shape: Linear, convex
Across-slope shape: Linear, convex
Parent material: Residuum weathered from calcareous shale

Typical profile

A - 0 to 15 inches: clay
Bkss1 - 15 to 28 inches: clay
Bkss2 - 28 to 40 inches: clay loam
Cr - 40 to 79 inches: bedrock

Properties and qualities

Slope: 9 to 15 percent
Depth to restrictive feature: 39 to 79 inches to paralithic bedrock
Natural drainage class: Well drained
Capacity of the most limiting layer to transmit water (Ksat): Moderately low to moderately high (0.06 to 0.20 in/hr)
Depth to water table: More than 80 inches
Frequency of flooding: None
Frequency of ponding: None
Calcium carbonate, maximum in profile: 5 percent
Available water storage in profile: Moderate (about 6.8 inches)

Interpretive groups

Land capability classification (irrigated): 4e
Land capability classification (nonirrigated): 4e
Hydrologic Soil Group: C
Ecological site: CLAYEY (1975) (R019XD001CA)
Hydric soil rating: No

Minor Components

Altamont

Percent of map unit: 10 percent
Landform: Hillslopes
Down-slope shape: Convex

Across-slope shape: Convex
Hydric soil rating: No

Linne

Percent of map unit: 3 percent
Landform: Hillslopes
Down-slope shape: Convex
Across-slope shape: Convex
Hydric soil rating: No

Oliventain

Percent of map unit: 2 percent
Landform: Terraces
Down-slope shape: Concave
Across-slope shape: Concave
Hydric soil rating: No

OhE—Olivenhain cobbly loam, 9 to 30 percent slopes

Map Unit Setting

National map unit symbol: hbfc
Elevation: 100 to 600 feet
Mean annual precipitation: 14 inches
Mean annual air temperature: 63 degrees F
Frost-free period: 290 to 330 days
Farmland classification: Not prime farmland

Map Unit Composition

Olivenhain and similar soils: 85 percent
Minor components: 10 percent
Estimates are based on observations, descriptions, and transects of the mapunit.

Description of Olivenhain

Setting

Landform: Marine terraces
Landform position (three-dimensional): Riser
Down-slope shape: Concave
Across-slope shape: Concave
Parent material: Gravelly alluvium derived from mixed sources

Typical profile

H1 - 0 to 10 inches: cobbly loam
H2 - 10 to 27 inches: very cobbly clay, very cobbly clay loam
H2 - 10 to 27 inches: cobbly loam, cobbly clay loam
H3 - 27 to 45 inches:
H3 - 27 to 45 inches:

Properties and qualities

Slope: 9 to 30 percent
Depth to restrictive feature: About 10 inches to abrupt textural change

Natural drainage class: Well drained
Runoff class: Very high
Capacity of the most limiting layer to transmit water (Ksat): Very low to moderately low (0.00 to 0.06 in/hr)
Depth to water table: More than 80 inches
Frequency of flooding: None
Frequency of ponding: None
Available water storage in profile: Very low (about 1.3 inches)

Interpretive groups
Land capability classification (irrigated): 6e
Land capability classification (nonirrigated): 6e
Hydrologic Soil Group: D
Ecological site: CLAYPAN (1975) (R019XD061CA)
Hydric soil rating: No

Minor Components

Diablo
Percent of map unit: 4 percent
Hydric soil rating: No

Linne
Percent of map unit: 2 percent
Hydric soil rating: No

Unnamed, ponded
Percent of map unit: 2 percent
Landform: Depressions
Hydric soil rating: Yes

Huerhuero
Percent of map unit: 2 percent
Hydric soil rating: No

OkC—Olivenhain-Urban land complex, 2 to 9 percent slopes

Map Unit Setting
National map unit symbol: hbff
Elevation: 100 to 600 feet
Mean annual precipitation: 14 inches
Mean annual air temperature: 63 degrees F
Frost-free period: 290 to 330 days
Farmland classification: Not prime farmland

Map Unit Composition
Olivenhain and similar soils: 50 percent
Urban land: 30 percent
Minor components: 6 percent
Estimates are based on observations, descriptions, and transects of the mapunit.

Description of Olivenhain

Setting

Landform: Marine terraces
Down-slope shape: Linear
Across-slope shape: Linear
Parent material: Gravelly alluvium derived from mixed sources

Typical profile

H1 - 0 to 10 inches: cobbly loam
H2 - 10 to 42 inches: very cobbly clay, very cobbly clay loam
H2 - 10 to 42 inches: cobbly loam, cobbly clay loam
H3 - 42 to 60 inches:
H3 - 42 to 60 inches:

Properties and qualities

Slope: 2 to 9 percent
Depth to restrictive feature: About 10 inches to abrupt textural change
Natural drainage class: Well drained
Runoff class: Very high
Capacity of the most limiting layer to transmit water (Ksat): Very low to moderately low (0.00 to 0.06 in/hr)
Depth to water table: More than 80 inches
Frequency of flooding: None
Frequency of ponding: None
Available water storage in profile: Very low (about 1.3 inches)

Interpretive groups

Land capability classification (irrigated): None specified
Land capability classification (nonirrigated): 4e
Hydrologic Soil Group: D
Hydric soil rating: No

Description of Urban Land

Typical profile

H1 - 0 to 6 inches: variable

Interpretive groups

Land capability classification (irrigated): None specified
Land capability classification (nonirrigated): 8
Hydric soil rating: No

Minor Components

Huerhuero

Percent of map unit: 2 percent
Hydric soil rating: No

Diablo

Percent of map unit: 2 percent
Hydric soil rating: No

Linne

Percent of map unit: 2 percent
Hydric soil rating: No

SbC—Salinas clay loam, 2 to 9 percent slopes

Map Unit Setting

National map unit symbol: hbgg
Elevation: 2,000 feet
Mean annual precipitation: 12 to 20 inches
Mean annual air temperature: 61 to 64 degrees F
Frost-free period: 300 to 340 days
Farmland classification: Prime farmland if irrigated

Map Unit Composition

Salinas and similar soils: 85 percent
Minor components: 15 percent
Estimates are based on observations, descriptions, and transects of the mapunit.

Description of Salinas

Setting

Landform: Alluvial fans
Landform position (two-dimensional): Toeslope
Landform position (three-dimensional): Base slope, rise
Down-slope shape: Linear
Across-slope shape: Convex
Parent material: Alluvium derived from mixed sources

Typical profile

H1 - 0 to 22 inches: clay loam
H2 - 22 to 46 inches: clay loam, clay
H2 - 22 to 46 inches: loam, clay loam
H3 - 46 to 64 inches:
H3 - 46 to 64 inches:

Properties and qualities

Slope: 2 to 9 percent
Depth to restrictive feature: More than 80 inches
Natural drainage class: Well drained
Runoff class: High
Capacity of the most limiting layer to transmit water (Ksat): Moderately high (0.20 to 0.57 in/hr)
Depth to water table: More than 80 inches
Frequency of flooding: None
Frequency of ponding: None
Calcium carbonate, maximum in profile: 10 percent
Salinity, maximum in profile: Nonsaline to very slightly saline (0.0 to 2.0 mmhos/cm)
Available water storage in profile: Very high (about 16.5 inches)

Interpretive groups

Land capability classification (irrigated): 2e

Land capability classification (nonirrigated): 3e
Hydrologic Soil Group: C
Hydric soil rating: No

Minor Components

Diablo
Percent of map unit: 5 percent
Hydric soil rating: No

Huerhuero
Percent of map unit: 5 percent
Hydric soil rating: No

Tujunga
Percent of map unit: 5 percent
Hydric soil rating: No

References

American Association of State Highway and Transportation Officials (AASHTO). 2004. Standard specifications for transportation materials and methods of sampling and testing. 24th edition.

American Society for Testing and Materials (ASTM). 2005. Standard classification of soils for engineering purposes. ASTM Standard D2487-00.

Cowardin, L.M., V. Carter, F.C. Golet, and E.T. LaRoe. 1979. Classification of wetlands and deep-water habitats of the United States. U.S. Fish and Wildlife Service FWS/OBS-79/31.

Federal Register. July 13, 1994. Changes in hydric soils of the United States.

Federal Register. September 18, 2002. Hydric soils of the United States.

Hurt, G.W., and L.M. Vasilas, editors. Version 6.0, 2006. Field indicators of hydric soils in the United States.

National Research Council. 1995. Wetlands: Characteristics and boundaries.

Soil Survey Division Staff. 1993. Soil survey manual. Soil Conservation Service. U.S. Department of Agriculture Handbook 18. http://www.nrcs.usda.gov/wps/portal/nrcs/detail/national/soils/?cid=nrcs142p2_054262

Soil Survey Staff. 1999. Soil taxonomy: A basic system of soil classification for making and interpreting soil surveys. 2nd edition. Natural Resources Conservation Service, U.S. Department of Agriculture Handbook 436. http://www.nrcs.usda.gov/wps/portal/nrcs/detail/national/soils/?cid=nrcs142p2_053577

Soil Survey Staff. 2010. Keys to soil taxonomy. 11th edition. U.S. Department of Agriculture, Natural Resources Conservation Service. http://www.nrcs.usda.gov/wps/portal/nrcs/detail/national/soils/?cid=nrcs142p2_053580

Tiner, R.W., Jr. 1985. Wetlands of Delaware. U.S. Fish and Wildlife Service and Delaware Department of Natural Resources and Environmental Control, Wetlands Section.

United States Army Corps of Engineers, Environmental Laboratory. 1987. Corps of Engineers wetlands delineation manual. Waterways Experiment Station Technical Report Y-87-1.

United States Department of Agriculture, Natural Resources Conservation Service. National forestry manual. http://www.nrcs.usda.gov/wps/portal/nrcs/detail/soils/home/?cid=nrcs142p2_053374

United States Department of Agriculture, Natural Resources Conservation Service. National range and pasture handbook. http://www.nrcs.usda.gov/wps/portal/nrcs/detail/national/landuse/rangepasture/?cid=stelprdb1043084

United States Department of Agriculture, Natural Resources Conservation Service. National soil survey handbook, title 430-VI. http://www.nrcs.usda.gov/wps/portal/nrcs/detail/soils/scientists/?cid=nrcs142p2_054242

United States Department of Agriculture, Natural Resources Conservation Service. 2006. Land resource regions and major land resource areas of the United States, the Caribbean, and the Pacific Basin. U.S. Department of Agriculture Handbook 296. http://www.nrcs.usda.gov/wps/portal/nrcs/detail/national/soils/?cid=nrcs142p2_053624

United States Department of Agriculture, Soil Conservation Service. 1961. Land capability classification. U.S. Department of Agriculture Handbook 210. http://www.nrcs.usda.gov/Internet/FSE_DOCUMENTS/nrcs142p2_052290.pdf

April 15, 2019

Kellye Rohrabaugh
Encompass Health
9001 Liberty Parkway

Subject: **Updated Geotechnical and Geologic Investigation Report**
Encompass Health Hospital Site
512 Shinohara Lane
Chula Vista, California 91911
Partner Project No. 17-199602.7

Dear Kellye Rohrabaugh:

Partner Assessment Corporation (Partner) presents the following updated geotechnical/geologic investigation report based on our general experience with construction practices and geologic/geotechnical conditions on this and other sites. This report is in accordance with the proposal (#199602) dated 7/6/2018, approved by Kellye Rohrabaug of Encompass Health and also was later revised based on proposal (#199602) dated 12/17/2018, approved by John Tschudin of Encompass Health.

The descriptions and findings of our geotechnical report are presented for your use in this electronic format, for your use as shown in the hyperlinked outline below. To return to this page after clicking a hyperlink, hold "alt" and press the "left arrow key" on your keyboard.

1.0 Geotechnical Executive Summary
2.0 Report Overview and Limitations
3.0 Site Location and Project Information
4.0 Geologic Findings
5.0 Seismic Hazards
6.0 Seismic Design
7.0 Geotechnical Exploration and Laboratory Results
8.0 Geotechnical Recommendations

Figures & Appendices

We appreciate the opportunity to be of service during this phase of the work.

Sincerely,

Matthew Marcus, PE
Principal Engineer

Razi Quraishi, PG, CEG
Certified Engineering Geologist

Francisca Chan, EIT
Project Engineer

1. GEOTECHNICAL/GEOLOGIC EXECUTIVE SUMMARY

Geologic Zones and Site Hazards:

According to the report*: Regionally the site is located in Peninsular Ranges Geomorphic Province. The Peninsular Ranges Province is traversed by a group of sub-parallel faults and fault zones trending roughly northwest. Several of these faults are major active faults (Rose Canyon, Elsinore, San Jacinto and Newport – Inglewood). Undivided sediments/sedimentary rocks and San Diego Formation occurs within the regional area of the site. The subject property is currently vacant and undeveloped since 1904. Substantial grading, drainage improvements and hydro-seed applications occurred on the northern slopes in 2007. Surficial geology consists of topsoil and artificial fill, overlying residual weathered bedrock (San Diego Formation). The site is in an area where the seismic hazard potential was not evaluated by the State of California, and the historic groundwater levels were not provided by the California Department of Conservation. Based on our evaluation the slopes on the site are stable with regards to landsliding and slope stability. Given the seismic activity in the region we anticipate low to moderate ground shaking during the project life. No other geologic hazards are known or suspected on the project.

Excavation Conditions:

According to the report*: We anticipate extensive grading will be needed on the site to establish the finished grades for the new buildings. We anticipate cut slopes on the order of 20 feet or more on the north end of the property. The stability of the slopes during and after construction have been evaluated and will call for special considerations during construction. In general, the borings encountered soil that would be excavatable using conventional construction equipment in good working condition. However, hard digging conditions may be encountered on the norther portion of the site. Loose fill soils and native sandy soils may be prone to caving during excavation. Groundwater was not encountered during drilling; however, groundwater levels can fluctuate over time.

Foundation/Slab Support:

According to the report*: The upper 1 to 6 feet of soil encountered in our explorations consisted of artificial fill material, debris and plant material. Some debris and deleterious inclusions (paper bags, household garbage, etc.) were noted in the fill. Where present in new building or fill embankment areas, the fill and other deleterious/organic materials should be completely removed to expose clean, competent native soil. Spread foundations should be considered for the new hospital building. The foundations can be supported on engineered fill and/or competent, clean native soil compacted in-place, as described in the report. Slab-on-grade areas should be supported on non-expansive engineered fill extending to competent native soils that are approved by the engineer.

Mass Grading and Soil Reuse:

According to the report*: Site soils are generally expected to be usable as engineered fill on the site, after stripping/grubbing of organic material and disposal of trash, topsoil and debris. The native soil encountered had a relatively low in-place density. As such, we anticipate that volume loss of cut materials will occur after moisture conditioning and compaction, on the order of 15% to 25%. New fills of up to 20 feet in height to be placed on existing slopes should be benched and keyed per CBC requirements. It is recommended to

use non-expansive structural fill that is free of deleterious materials, and is properly moisture conditioned and compacted to 95% of the modified proctor (ASTM D 1557) is recommended.

Pavement Design: According to the report*:

Roadway Type	*Subgrade Preparation*	*Pavement Section*
Parking Area Light Duty (TI=4)	Compacted Subgrade	3-in asphalt & 6-in aggregate base
Parking Area Heavy Duty (TI=7)	Compacted Subgrade	6-in concrete & 4-in aggregate base

This summary in no way replaces or overrides the detailed sections of the report*

2. REPORT OVERVIEW & LIMITATIONS

2.1 Report Overview

To develop this report, Partner accessed existing information and obtained site specific data from our exploration program. Partner also used standard industry practices and our experience on previous projects to perform engineering analysis and provide recommendations for construction along with construction considerations to guide the methods of site development. The opinions on the cover letter of this report do not constitute engineering recommendations, and are only general, based on our recent anecdotal experiences and not statistical analysis. Section 1.0, Executive Geotechnical Summary, compiles data from each of the report sections, while each of sections in the report presents a detailed description of our work. The detailed descriptions in Sections 4, 5, 6, 7 and 8 and Appendix A to address slope stability findings and Appendix D constitute our engineering recommendations for the project, and they supersede the Executive Geotechnical Summary.

The report overview, including a description of the planned construction and a list of references, as well as an explanation of the report limitations is provided in Section 2.0. The findings of Partner's geologic review are included in Sections 4.0 and 5.0, Geologic Conditions and Hazards. The descriptions of our methods of exploration and testing, as well as our findings are included in Section 7.0. In addition, logs of our trench excavations are included in Appendix A, Boring Logs are included in Appendix B, and geotechnical laboratory testing is included in Appendix C of the report. Site Location and Site Investigation Plan are included as Figures 1 and 2 in the report.

2.2 Assumed Construction

Partner's understanding of the planned construction was based on information provided by the project team. The proposed site plan is included as Figure 2 to this report. Partner's assumptions regarding the new construction are presented in the below table.

Property Data	
Property Use:	Encompass Health Hospital Site
Building footprint/height	One story above grade, roughly 130,000 sf
Land Acreage (Ac):	Approx. 9.6 Ac, APN 644-040-01-00
Number of Buildings:	1
Expected Cuts and Fills	Unknown
Type of Construction:	Unknown, assumed slab-on-grade with metal framing
Foundations Type	Unknown, assumed shallow foundations
Anticipated Loads	2,000 to 3,000 psf
Traffic Loading	Parking lot and loading dock
Site Information Sources:	APD Consultants, Conceptual Project Plans, 3/7/2019.

2.3 References

The following references were used to generate this report:

California Building Code IBC 2009 and ASCE 7-10

California Geological Survey, Note 36*, California Geomorphic Provinces*, 2002.

California Geological Survey Topographic Map 2015, 7.5 Minute series, *Imperial Beach, CA*, accessed via internet, accessed 1/24/18

Federal Emergency Management Agency, FEMA Flood Map Service Center, accessed 1/24/18

Federal Highway Administration, Rock Slope Engineering, 1979

Google Earth Pro (Online), accessed 1/24/18

Geologic Map of the San Diego Quadrangle, Regional Geologic Map No. 3, 1: Kennedy and Tan, 2008.

Geotechnical Engineering Portable Handbook, Robert W. Day, 2000

Historic Aerials by NETR Online, accessed 1/24/18

Naval Facilities Engineering Command, NAVFAC DM 7.1-.3, Design Manual, Soil Mechanics and Foundations, May 1982, April 1983.

Partner Engineering and Science, Inc., Phase 1 Environmental Assessment Report, *Industrial Land, 517 Shinohara Lane, Chula Vista*, *California,* dated February 1, 2018.

Partner Engineering and Science, Inc., Preliminary Geotechnical Report, *Industrial Land, 517 Shinohara Lane, Chula Vista*, *California,* dated January 16, 2018.

Willian A. Steen & Associates, Otay Valley Industrial Park (Phase 1), As Built, 517 Shinohara Lane, San Diego, CA, dated 10-31-07.

United States Geological Survey, Lower 48 States 2014 Seismic Hazard Map, accessed online 1/24/18

United States Geologic Survey, Earthquake Hazards Program (Online), accessed 1/24/18

2.4 Limitations

The conclusions, recommendations, and opinions in this report are based upon soil samples and data obtained in widely spaced locations that were accessible at the time of exploration, and collected based on project information available at that time. Our findings are subject to field confirmation that the samples we obtained were representative of site conditions. If conditions on the site are different than what was encountered in our borings, the report recommendations should be reviewed by our office, and new recommendations should be provided based on the new information and possible additional exploration if needed. It should be noted that geotechnical subsurface evaluations are not capable of predicting all subsurface conditions, and that our evaluation was performed to industry standards at the time of the study, no other warranty or guarantee is made.

Likewise, our document review and geologic research study made a good-faith effort to review readily available documents that we could access and were aware of at the time, as listed in this letter. We are not able to guarantee that we have discovered, observed, and reviewed all relevant site documents and conditions. If new documents or studies are available following the completion of the report, the recommendations herein should be reviewed by our office, and new recommendations should be provided based on the new information and possible additional exploration if needed.

This report is intended for the use of the client in its entirety for the proposed project as described in the text. Information from this report is not to be used for other projects or for other sites. All of the report must be reviewed and applied to the project or else the report recommendations may no longer apply. If pertinent changes are made in the project plans or conditions are encountered during construction that

appear to be different than indicated by this report, please contact this office for review. Significant variations may necessitate a re-evaluation of the recommendations presented in this report. The findings in this report are valid for one year from the date of the report. This report has been completed under specific Terms and Conditions relating to scope, relying parties, limitations of liability, indemnification, dispute resolution, and other factors relevant to any reliance on this report. Any parties relying on this report do so having accepted Partner's standard Terms and Conditions, a copy of which can be found at http: / www.partneresi.com/terms-and-conditions.php

If parties other than Partner are engaged to provide construction geotechnical services, they must be notified that they will be required to assume complete responsibility for the geotechnical phase of the project by concurring with the findings and recommendations in this report or providing alternate recommendations.

3. SITE LOCATION AND PROJECT INFORMATION

3.1 Site Location and Project Information

The planned construction will be situated on a currently undeveloped parcel in Chula Vista, California. The immediately surrounding properties consist of light industrial buildings and residential buildings. Figure 2 presents the project site and the locations of our site exploration. Based on our review of available documents, the site has had the following previous uses:

Historical Use Information		
Period/Date	**Source**	**Description/Use**
1904-1995	Aerial Photographs, Topographic Maps, City Directories, Onsite Observations	Undeveloped Land
1995-Present	Aerial Photographs, Topographic Maps, City Directories, Onsite Observations	Some site improvements: grading, drainage, hydroseeding

4. GEOLOGIC FINDINGS

This section presents the results of a geologic review performed by Partner, for a proposed new construction on site. The general location of the project is shown on Figure 1.

4.1 Regional Geology

Regionally the site is located in Peninsular Ranges Geomorphic Province. The Peninsular Ranges Province is traversed by a group of sub-parallel faults and fault zones trending roughly northwest. Several of these faults are major active faults (Rose Canyon, Elsinore, San Jacinto and Newport – Inglewood). Undivided sediments/sedimentary rocks and San Diego Formation occurs within the regional area of the site. The province varies in width from approximately 30 to 100 miles. The western portion of the province, which includes the project area, consists generally of dissected coastal plain underlain by upper Cretaceous, Tertiary rocks and Quaternary sediments, very old Pleistocene marine and non-marine terrace deposits an bedrock of early Pleistocene and late Pliocene of San Diego Formation.

The Regional Geologic Maps are included in Figures 3 and 4.

Summary of Geologic Data		
Parameter	**Value**	**Source**
Geomorphic Zone	Peninsular Ranges	CGS, Geology of California
Site Ground Elevation Range	140 to 255 feet above MSL	USGS and Site Topographic Survey
Flood Elevation	Zone X (Minimal Flood Hazard)	FEMA
Seismic Hazard Zone	Low to Moderate	USGS and CGS
Geologic Hazards	Low Density Sandy Silty Soils	CGS/ Lab Results
Surface Cover	Artificial Fill/San Diego Formation	Geotechnical/Geologic Investigation
Site Modifications	Previously graded; seed soil type	Google Earth
Surficial Geology	Artificial Fill (AF)/San Diego Formation (Tsdss)	USGS, California Geologic Survey, Geologic Map of San Diego Quadrangle, Site Geologic Mapping
Depth to Residual Soils/ Weathered San Diego Formation	1.5 to 6.0 feet (Approximately)	Boring Logs/ Trenches/ Site Geologic Mapping
Approximate Groundwater Depth	45 to 85 feet	Partner ESA

4.2 Site Engineering Geology and Subsurface Conditions

The site geology and subsurface conditions have been summarized in this section from available geologic data, geologic mapping (Figure 5) and previous subsurface investigations consisting of exploratory six soil borings performed on January 25, 2018 (B-1,B-2, B-3, B-4 ,B-5 and B-6) and four exploratory trenches (TP-1,TP-2,TP-3 and TP-4) are shown at location in Figure 2. Additional borings were performed on February 12, 2019 (B-7, B-10 , B-12, B-13, B-14, B-15) and also continuous core borings on March 15, 2019 (B8-A, B11-A, B16-A).

Trench logs are provided in Appendix A. The soil boring and continuous core logs are provided in Appendix B. The subject property is located approximately at elevation 145 feet to 250 feet above MSL, in an area of sloping topographic relief sloping generally to the south and south east.

Generalized geologic cross sections A-A′ and B-B′ and C-C′ are included in Figure 6, 7 and 8 respectively. Top soil was observed on the scattered areas of the site in varying thickness from 0.5 feet to 2.5 feet. The site is mapped to be underlain by artificial fill (AF) varying in thickness from approximately 1.0 feet to 6.0 feet. The fill generally consists of orangish brown fine to coarse sand, some silt and clay, fine to coarse gravel and cobbles.

Artificial Fill (AF) is underlain by bedrock of early Pleistocene and late Pliocene San Diego Formation (Tsdss). San Diego Formation (silty sandstone) consists of yellowish brown to whitish gray, slightly micaceous, silty fine sand (unified soil classification symbol "SM"), or slightly micaceous, medium dense to dense, moderately weathered grey fine sand, little silt ("SP-SM"). Exploratory trenches indicated the San Diego formation is poorly bedded. The San Diego Formation exhibits low angle, faint bedding dips approximately 4 to 5 degrees towards southwest and strikes approximately N 20 to 25 degrees northwest. The strikes and dips generally co-relates with the regional dip.

4.3 Groundwater and Caving

No active surface ground water seeps or springs were observed at the project site. Subsurface water was not encountered during our field exploration to maximum excavated/drilled depth of 50 feet below existing grade. Trench walls were stable during and after excavation.

However, based on data on an adjacent site, groundwater is approximated around 40-85 feet below ground surface. Seasonal and long-term fluctuations in the groundwater may occur as a result in variations in subsurface conditions, rainfall, run-off conditions and other factors. Therefore, variations from our observations may occur.

4.4 Slope Stability Analysis

Regional Geologic and Site Engineering Geologic Maps (Figures 4 and 5) and Seismic Hazards Map (Figure 9) indicated the site is not located in the landslide area. Site Geologic mapping indicated the residual soils/San Diego Formation slopes are stable. In addition, Partner performed global slope stability analysis of four site cross-sections which had planned retaining walls of 6 feet or higher at the base of soil slopes. The slopes were evaluated for global stability (circular failure) using Bishop and Janbu methods, and soil parameters determined from direct shear testing of relatively "undisturbed" site soils obtained during drilling in a California modified split-spoon sampler. The parameters used were a cohesion of 100 psf and friction angle of 30 degrees. The slope stability cross sections are shown in Appendix D, and the output of the Slide 2d Software models are shown in Appendix E.

Factors of safety in three of the sections were 1.5 or greater with normally sized and embedded foundations. Cross-section H-H′, located on the north side of the project includes a roughly 40-ft high cut slope with a 13-ft high retaining wall at its base. This section did not have a 1.5 factor of safety with normally sized and embedded foundation. As such, we recommend that the retaining wall in this location have a cantilevered

foundation embedded 4 feet below grade, and that extends 7.5 feet from the centerline of the wall, where wall heights are higher than 6 feet.

In addition, seismic stability analysis was performed on the slopes, based on a maximum horizontal acceleration of 0.375 g for soft rock (site class C) conditions. Based on the information in California SP 117, the K_{eq} factor was 0.5 x .375 for an M 7 earthquake event. As such, a K_{eq} factor of 0.19 was used for the site. The minimum factor of safety determined by this method was 1.06, which is acceptable per California SP 117.

Slope stability analysis at the northern slopes (Location STA #1, Figure 5) indicates the slopes are stable with a calculated factor of safety of 2.58 which is greater than the normally accepted minimum for stable slopes. Slope stability analysis was also conducted at the western areas (Location STA #2 and STA #3, Figure 5) indicated the disturbing forces tending to cause the block to slide down becomes negative. The bedding angle is greater than the slope angle. The bedding dips beneath the slope and the slopes are stable. Slope soil properties and Factor of Safety calculation are included in Appendix A.

All slopes will be subjected to surficial erosion. Therefore, slopes should be protected from surface runoff by means of top of the slopes compacted earth berms.

It is recommended that the slopes should be properly maintained in future by some of these methods: cleaning and removing loose debris, minor grading, controlling surface water, revegetation and by constructing benches. Over- watering and subsequent saturation of slope surface should be avoided.

4.5 Faulting and Seismicity

The subject site is in San Diego County of Southern California. Like the rest of Southern California, it is in a seismically active region. This region is located near the active margin between the North American and Pacific tectonic plates. The seismicity is due to movement along the regional active faults such as the San Andreas, Rose Canyon, Newport-Inglewood, Elsinore and San Jacinto.

According to the State Mining and Geology Board, an active fault is defined which has had surface displacement within the Holocene Epoch (roughly within the last 11,000 years). The State Mining and Geology Board define a potentially active fault as a fault which has been active during the Quaternary Period (roughly within the last 1.6 Million years). Historic and Holocene age faults are considered active, Late Quaternary and Quaternary age faults are considered potentially active, and pre-Quaternary age faults are considered inactive.

The above definitions are used in delineating Earthquake Fault Zones as mandated by the Alquist-Priolo Geologic Hazard Zones Act of 1972 and as subsequently revised in 1994 (Hart, 1997) as the Alquist-Priolo Geologic Hazard Zoning Act and Earthquake Fault Zones. The Act regulates development and construction of buildings intended for human occupancy to mitigate the hazards of surface fault rupture. It defines areas where ground rupture is likely to occur during future earthquakes. Where such zones are designated, a geologic study must be conducted to determine the locations of all active fault lines in the zone before any construction is allowed and to determine whether building setbacks should be established, and no building may be constructed on the fault lines.

Our review of geologic literature pertaining to the site area indicates that there are active faults within the regional area (Rose Canyon Fault, Elsinore Fault, San Jacinto Fault and Newport-Inglewood Fault. The nearest active zone is Rose Canyon Fault Zone located in 6.7 miles west of the project site.

Rose Canyon Fault Zone Parameters	
Length:	55 to 70 (km)
Fault Type:	Right Lateral/Strike Slip
Slip rate:	1.5 mm/ year
Dip:	90 degrees

Based on the 2010 California Fault Activity Map (Jennings and Bryant 2010, Figure 9), active faults are not mapped on the site. Quaternary La Nacion Fault Zone is located approximately 0.3 miles east from the project site. Geologic mapping by Partner indicated structural continuity across the site, further suggesting the absence of active faults in the area explored.

No evidence of active or potentially active faulting was observed or encountered in any of our excavations/trenches on the site. It should be noted that the Southern California region is an area of moderate to high seismic risk and it is not considered feasible to render structures fully resistant to seismic related hazard. The minimum seismic design should comply with the 2013 California Building Code (CBC) and ASCE 7-10 using the seismic parameters recommended in Section 6.0 of this report.

5. SECONDARY SEISMIC HAZARDS

This section presents the results of a geologic review performed by Partner, for a proposed new construction on site. The general location of the project is shown on Figure 1.

5.1 Surface/Subsurface Fault Rupture

Surface fault rupture resulting from the movement of nearby major faults is not known with certainty but is considered low. However, due to the known active and potentially active faults in the region, low to moderate ground shaking should be expected during the life of the proposed structures.

5.2 Liquefaction

Liquefaction is defined as a seismic phenomenon in which loose or soft, saturated, fine-grained soil mass suffers a substantial reduction in its shear strength when subjected to high-intensity ground shaking and exhibits a liquid-like behavior.

During earthquakes, excess pore water pressures may develop in saturated soil deposits as a result of induced cyclic shear stresses. Effects of liquefaction can include sand boils, settlement and bearing capacity failures. Liquefaction occurs when these ground conditions exist: 1) Shallow groundwater; 2) Low density, fine, clean sandy soils; and 3) High-intensity ground motion. Shallow ground water and saturated, clean, sandy soils are not present at the project site.

Published data from California Geological Survey - Seismic Hazards Zone Map, indicates that the project site is not located in an area identified as having a potential for soil liquefaction. The potential for site liquefaction is negligible (see Figure 9).

5.3 Seismically Induced Landslide

According to the published data from California Geological Survey "State of California Seismic Hazard Zones Official Map, the site is not within a landslide zone (see Figure 9).

6. SEISMIC / DESIGN PARAMETERS

When reviewing the 2010 California Building Code, IBC 2009 and ASCE 7-10 the following seismic data should be incorporated into the design.

6.1 Seismic Design Parameters

Latitude: 32.597463 N (Degrees)
Longitude: -117.031415 W (Degrees)
MCE: 2% Probability of Exceedance in 50 Years

Seismic Item	*Value*	*Seismic Item*	*Value*
Site Classification	D	Seismic Design Category	D
Fa (site coefficient)	1.043	Fv (site coefficient)	1.461
Ss (spectral response at 0.2 seconds)	0.892g	S_1 (spectral response at 1.0 second)	0.339g
S_{MS} (maximum considered earthquake spectral acceleration)	0.931g	S_{M1} (maximum considered earthquake acceleration)	0.496 g
S_{DS} (design spectral acceleration)	0.621g	S_{D1} (design spectral acceleration)	0.330g
PGA Max (ASCE '10)	0.375g	67% PGA (ASCE '10)	0.251g

Source: 2010 and 2016 CBC (IBC 2016/ ASCE 7-10) and USGS Seismic Hazards Design Maps.

The Structural Consultant should review the above parameters and the 2010 California Building Code (IBC 2009/ASCE 7-10) to evaluate the seismic design.

7. GEOTECHNICAL EXPLORATION & LABORATORY RESULTS

Our evaluation of soils on the site included field exploration and laboratory testing. The field exploration and laboratory testing programs are briefly described below. Data reports from the field exploration and laboratory testing are provided in Appendix B and Appendix C, respectively.

7.1 Soil/ Continuous Core Borings

The first soil boring program was conducted on January 25, 2018. Six (6) borings were advanced by the use of a track-mounted drill using solid flight auger drilling techniques. The borings were made to depths of 5 to 15 feet below ground surface. Boring B-5 encountered hard drilling material and then was terminated due to damage to the drill rig.

The second soil boring program was conducted on February 12, 2019. The approximate locations of the exploratory borings are shown on Figure 2. Six (6) borings were advanced by the use of a track-mounted drill using solid flight auger drilling techniques. The borings were made to depths of 16.5 feet below ground surface.

Three (3) continuous soil cores were performed on the site to depths of 40 to 50 feet for geologic mapping on March 15, 2019. The geologic data and stratigraphic evaluation from these borings are included in the boring Appendix B. Logs of subsurface conditions encountered in the borings were prepared in the field by a representative of Partner Engineering. Soil samples consisting of relatively undisturbed brass ring samples and Standard Penetration Tests (SPT) samples were collected at approximately 2.5 and 5-foot depth intervals and were returned to the laboratory for testing. The SPTs were performed in accordance with ASTM D 1586. Typed boring logs were prepared from the field logs and are presented in Appendix A. Continuous corings were also conducted on three borings for stratigraphic evaluation.

A summary table description is provided below:

Summary of Geologic Straiographic Data		
Strata	**Depth to Bottom of Layer (bgs*)**	**Description**
Surface Cover	0-1 feet	Grass/ Dirt
Fill Material	Up to 6 feet	Silty sand with gravel and cobbles
San Diego Formation	16+ feet	Silty sandstone, fine silty sand
Groundwater	NA	Not encountered
Bedrock (Very Hard)	NA	Not encountered

7.2 Trenches

The trenches were excavated during July 26 to July 27, 2018. Four (4) trenches were excavated using Backhoe Komatsu, PC 390 LC. The trenches were excavated to depths of 14 feet in the slopes of the parcel. The approximate locations of the trenches are shown on Figure 2.

Logs of subsurface conditions encountered in the trenches were prepared by our Certified Engineering Geologist. Soil Bag samples were taken at TP-1 at approximately 5.5 and 11.0-foot depth interval and were

returned to the laboratory for testing. Test pits were backfilled on completion. Typed trench logs were prepared from the field logs and are presented in Appendix A.

7.3 Geotechnical Laboratory Evaluation

Soil samples were submitted to a certified testing laboratory, Hamilton & Associates. Results are attached in Appendix C. Tests performed included in-place moisture and density, sieve analysis, Atterberg and direct shear tests. We have reviewed the results from Hamilton & Associates and are in agreement with the results. The results of laboratory analyses are presented in the boring logs and in Appendix C.

8. PRELIMINARY GEOTECHNICAL RECOMMENDATIONS

The following discussion of findings for the site is based on the assumed construction, geologic review, results of the field exploration, and laboratory testing programs. The recommendations of this report are contingent upon adherence to Appendix D of this report, General Geotechnical Design and Construction Considerations. For additional details on the below recommendations, please see Appendix D.

8.1 Geotechnical Recommendations

- The proposed construction is generally feasible from a geotechnical perspective provided the recommendations and assumptions of this report are followed.

Geologic/General Site Considerations

- Regionally the site is located in Peninsular Ranges Geomorphic Province. The Peninsular Ranges Province is traversed by a group of sub-parallel faults and fault zones trending roughly northwest. Several of these faults are major active faults (Rose Canyon, Elsinore, San Jacinto and Newport – Inglewood). Undivided sediments/sedimentary rocks and San Diego Formation occurs within the regional area of the site. The subject property is currently vacant and undeveloped since 1904, there was substantial grading, drainage improvements and hydro-seed applications on the northern slopes in 2007. The site is in an area where the seismic hazard potential was not evaluated, and the historic groundwater levels were not provided by the California Department of Conservation. Partner conducted geologic and seismic investigations in July – August 2018. Partner's evaluation indicated the hazards of landslide and liquefaction are not present at the project site. No other hazards are known. Due to the proximity to residential homes, additional regulations for construction noise and setbacks should be carefully reviewed during the planning stages.

Excavation Considerations

- We anticipate extensive grading will be needed on the site to establish the finished grades for the new buildings. We anticipate site excavations can be made using conventional construction equipment in good working condition; However, given the quantity of cuts on the site, particularly on the north side of the property, hard excavation may be encountered in some of the deeper cuts. Groundwater was not encountered during drilling; however, groundwater levels can fluctuate over time. Loose fill soils and native sandy soils/San Diego Formation may be prone to caving during excavation. Excavations should be sloped or shored per OSHA requirements.
- On the north side of the property, cuts of up to 20 feet are anticipated. Laying back of cuts up to 20 feet can be done on a temporary basis per OSHA with the consideration of type C, sandy soils at a 1.5:1 horizontal to vertical slope. Such slopes should be monitored for sloughing or loose material on a daily basis for site safety. Where such slopes exceed 20 feet, a shoring or bracing system should be used. This can consist of a temporary soldier pile and lagging retaining wall. The soldier piles may require pre-drilling and grouting for installation. Spacing and depth calculations for this should be done by a certified contractor, and should comply with California and other local jurisdictional requirements. The design can use soil data from Section 8.2 of this report, and more information is provided in Appendix C under Excavations and Dewatering.

Spread Foundation

- We anticipate that spread foundations are planned for the site structure. We anticipate that spread foundations will be proportioned for bearing capacities ranging from 2,000 to 3,000 pounds per square foot or less. The foundations and slabs should be supported on a layer of in-place native soils that have been evaluated and approved by the engineer and compacted in-place, or bear on controlled fill that has been placed and compacted as a part of mass grading, as described below, in Section 8.2 and Appendix C.

Mass Grading Considerations

- All undocumented fills, debris, grass, roots and other plant materials should be removed from structural areas of the site. In the new fill areas, the cleaned subgrade should be proofrolled and evaluated by the engineer with a loaded water truck (4,000 gallon) or equivalent rubber tired equipment. Soft or unstable areas should be repaired per the direction of the engineer.
- Prior to the placement of new fill, Appendix J of the California building code should be carefully reviewed. Given the native slopes on the site, benching and keying of new fills will be needed as shown in Figure 10. The bulk of the new hospital building will be supported on native material; however, a portion is to bear on deep fills (up to 20 feet) placed over the existing slope. For new fill zones where more than 5 feet of fill will support the new building or parking areas, 95% compaction is required to reduce the potential of differential settlement. It is recommended, that this zone start 5 feet from the edge of building or pavement, and extend at a 1:1 slope to the base of fill. In order to achieve this level of compaction, careful attention to moisture conditioning, lift thickness, and compaction equipment selection will be needed.
- We assume that mass grading will be performed prior to the installation of new retaining walls, and the new fill will be cut back where needed to install retaining wall foundations, and to provide room for retaining wall backfill. However, in some cases, it may make sense to partially grade retaining wall areas, so that cut backs for wall installation do not create steep/unstable slopes (greater than 2:1 horizontal to vertical and/or higher than 20 feet) In the event that walls are in-place during grading operations, grading equipment should be routed to avoid retaining walls. Only lightweight equipment should be used to backfill retaining walls, as described below.

Retaining Wall Considerations

- Most of the site retaining walls are in support of new fills, and as such, can be staged so as to not result in a temporary steep cut-back condition for wall installation. However, the wall on the north of the property, cross-section H-H', will require a relatively large over-cut in the existing soil. Partner performed a slope stability analysis of this as a 1.5:1 horizontal to vertical cut, as shown in Appendix D, and demonstrated a factor of safety of 1.05 for global stability. This excavation should be stable on a temporary basis; however, if used, the slope should be regularly monitored and cleaned of any large rocks or loose soil that could slip. Alternatively, the excavation could be supported by a temporary shoring system, consisting of soldier piles or the permanent wall could be constructed of a soldier pile system. Appendix D contains our slope stability cross sections and results.
- The soil parameters for the design of site retaining walls is provided in Section 8.2. The wall designer should check the wall for sliding, overturning, and internal stability. Partner performed global

stability for the four site walls sections that were over 6 feet in height. Factors of safety in three of the four sections were 1.5 or greater with normally sized and embedded foundations. Cross-section H-H', located on the north side of the project includes a roughly 40-ft high cut slope with a 13-ft high retaining wall at its base. This section did not have a 1.5 factor of safety with normally sized and embedded foundation. As such, we recommend that the retaining wall in this location have a cantilevered foundation embedded 4 feet below grade, and that extends 7.5 feet from the centerline of the wall, where wall heights are higher than 6 feet. Construction should proceed in general accordance with Appendix C, with specific attention to Laterally Loaded Structures.

Soil Reuse Considerations

- Site soils were generally acceptable for use as engineered fill. The vegetation and debris should be stripped from the site and should not be incorporated into fill material. It is recommended to use non-expansive structural fill that is free of deleterious materials, and is properly moisture conditioned and compacted to 90-95% of the modified proctor (ASTM D 1557). For deep fills below the building, and at the pavement subgrade elevation 95% should be used, and 90% may be used in other areas where allowed by the building code.

Concrete Considerations

- Concrete should be corrosion resistant, using Type II/V Portland Cement, and fly ash mixtures of 25 percent cement replacement. We recommend a water/cement ratio of 0.45 or less. Site soil may be corrosive to un-protected metallic elements such as pipes, poles, etc. Concrete exposed to freezing weather in cold climates should be air-entrained.

Site Storm Water Considerations

- The site surficial soils are generally undocumented fill and sandy soil. Surface drainage and landscaping design should be carefully planned to protect the new structures from erosion/undermining, and to maintain the site earthwork and structure subgrades in a relatively consistent moisture condition. Water should not flow towards or pond near to new structures, and high water demand plants should not be planned near to structures.

8.2 Geotechnical Parameters

Based on the findings of our field and laboratory testing, we recommend that design and construction proceed per industry accepted practices and procedures, as described in Appendix D, General Geotechnical Design and Construction Considerations (Considerations).

Subgrade Preparation Parameters – (hyperlink to Construction Considerations)

Subgrade Preparation				
Structure	**Bearing Capacity**	**Embedment Depth**	**Bearing Surface [a]**	**Settlement [d]**
Grade Slabs	k=150 pci [b]	NA	95% Compacted Fill or Native to 90%	<1 inch
Spread Foundations	3,000 [c] psf	30 inches	95% Compacted Fill or Native to 90%	<1 inch
Spread Foundations	2,500 [c] psf	24 inches	95% Compacted Fill or Native to 90%	<1 inch
Spread Foundations	2,000 [c] psf	18 inches	95% Compacted Fill or Native to 90%	<1 inch

[a] *Repairs in bearing surface areas should be structural fill per the recommendation of the Earthwork section of Appendix C that is moisture conditioned to within 3 percent below to optimum moisture content and compacted to 95 percent or more of the soil maximum dry density per ASTM D1557. Expansive material should not be located within the upper* 3 feet of the soil subgrade.

[b] *Subgrade modulus value "k", assuming the grade slab is supported by aggregate layer roughly equal to slab thickness (minimum 4 inches)*

[c] *Can be increased by 1/3 for temporary loading such as seismic and wind*

[d] *Differential settlement is expected to be half of total settlement*

Paving Structural Sections – (hyperlink to Construction Considerations)

Pavement Sections		
Roadway Type	**Subgrade Preparation [a]**	**Pavement Section**
Parking Area Light Duty (TI=4)	Proofrolled/Compacted Subgrade	3-in asphalt & 6-in aggregate base
Parking Area Heavy Duty (TI=7)	Proofrolled/Compacted Subgrade	4-in asphalt & 9-in aggregate base
Parking Area Heavy Duty (TI=7)	Proofrolled/Compacted Subgrade	6-in concrete & 4-in aggregate base
Special High Traffic Areas	Proofrolled/Compacted Subgrade	8-in concrete

[a] *Repairs in proofrolled areas should be structural fill per the recommendation of the Earthwork (hyperlink to Construction Considerations) that is moisture conditioned to within 3 percent below to optimum moisture content and compacted to 95 percent or more of the soil maximum dry density per ASTM D1557.*

Laterally Loaded Structures Parameters– (hyperlink to Construction Considerations)

Lateral Earth Pressures				
Soil Type	**Coefficient of Friction (μ)**	**Static Fluid Pressure (pcf)**	**Active Fluid Pressure (pcf)**	**Passive Fluid Pressure (pcf)**
Fill Soil	0.3	50	35	300
Native Soil	0.3	50	35	350

**seismic equations*

Combined effect of static and seismic lateral force:

$P_{AE} = F_1 + F_2$

$F_1 = 1/2*A*H^2$ Resultant acting at a distance of H/3 from base of wall

$F_2 = 3/8*K_h*\gamma*H^2$ Resultant acting at a distance of (0.6*H) from base of wall

Where:

F_1 = Static Force (plf) based on active pressure

F_2 = Seismic Lateral Force (plf) based on seismic pressure

γ = 120 pcf

$K_h = S_{DS}/2.5$

A = Active Pressure (pcf)

H = Height of retained soil (ft)

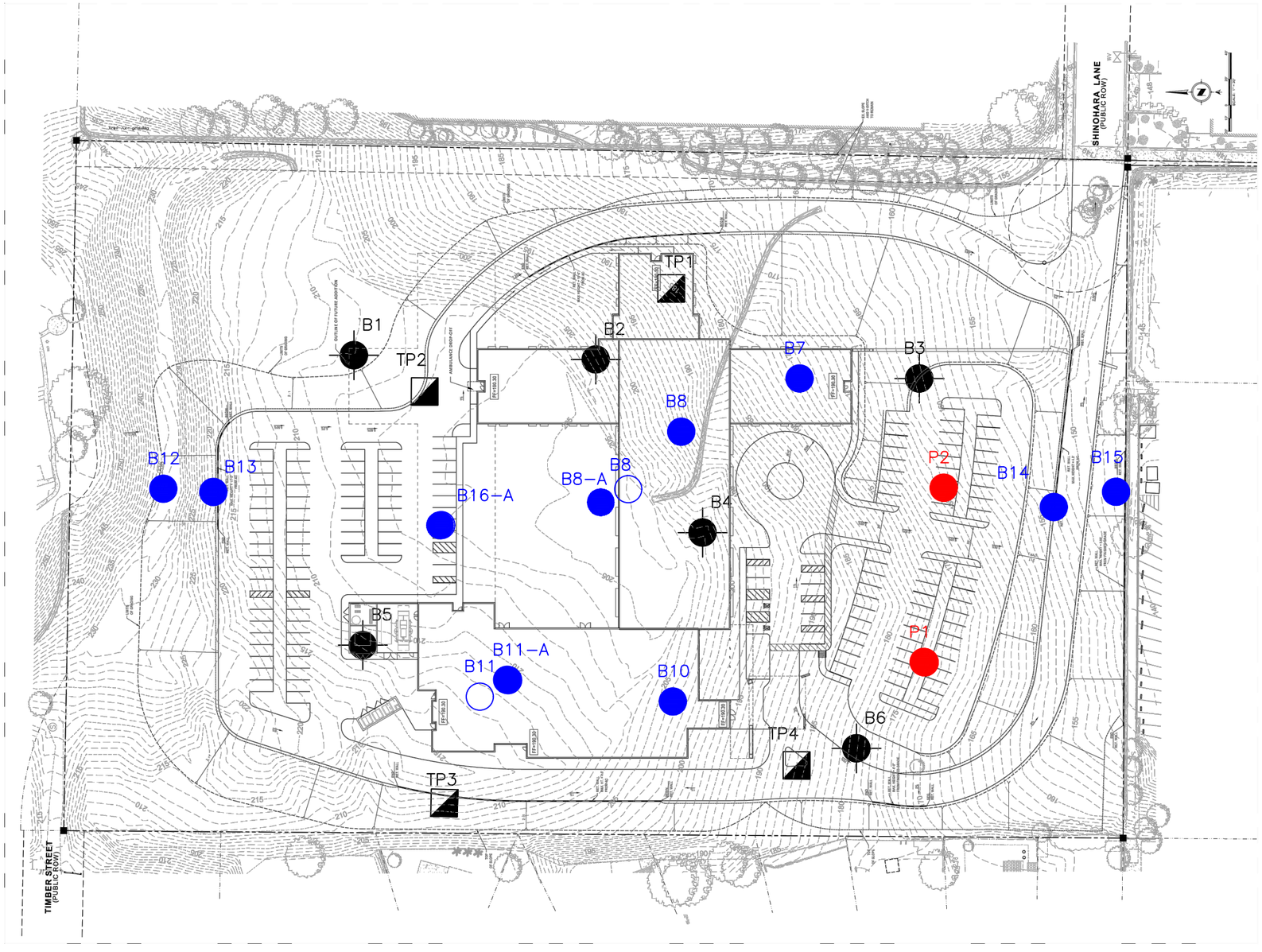

LEGEND:

APPROXIMATE FOOTPRINT OF HOSPITAL BUILDING.

TP1 — TRENCH EXCAVATED DURING JULY 26-27, 2018.

B1 — BORING DRILLED JANUARY 25, 2018.

B1 — BORING DRILLED FEBRUARY 12, 2019.

B11–A — CORE BORING DRILLED MARCH 15, 2019.

B1 — CORE BORING NOT COMPLETED DUE TO MECHANICAL AND SAMPLING DIFFICULTIES.

P1 — PERCOLATION TEST

NOTES:

- BGS = BELOW GROUND SURFACE
- BORING, TRENCHES AND PERCOLATION TEST LOCATIONS ON THIS MAP ARE APPROXIMATE

50' 0' 50' 100'

APPROXIMATE SCALE

*Source Drawing from EH Grading Plan, 517 Shinohara Lane, Chula Vista, CA

AERIAL IMAGERY PROVIDED BY GOOGLE AND ITS LICENSORS © 2016

TITLE:

GEOTECHNICAL/GEOLOGIC INVESTIGATION PLAN

FIGURE:	PREPARED BY:	DATE:	PROJECT NUMBER:
2	FC	MARCH 2019	17–199602.4

ADDRESS:

517 Shinohara Lane, Chula Vista, CA 91911

PARTNER Engineering and Science, Inc.
2154 TORRANCE BOULEVARD, SUITE 200
TORRANCE, CALIFORNIA 90501

Plotted:04/15/19 – 3:44 PM, By: fahan
File: C:\Users\fhaez\Documents\Shinohara Report Auto\CAD\Figures 1 and 2 – shinohara_recover.dwg, ----> Figure 2 New Site Plan
Copyright: Partner Engineering and Science, Inc., 2019

APPENDIX E

Percolation Test

Pecolation Test Data Sheet	
Project:	EHS Chula Vista
Project No.:	17-199602.7
Date:	3/14/2019
Test Hole:	P1
Tested by:	MM
Depth of Hole, ft, D:	3.25
Boring Radius, in:	6
UCSD:	SP

$$I_t = \frac{\Delta H(60r)}{\Delta t(r + 2H_{avg})}$$

Pre-Soak Procedure (See notes)						Calculations	
Reading #	Start Time	Stop Time	Δ t Time Interval	Do Initial Depth to Water Level	Df Final Depth to Water Level	Δ D Change in Water Level	Greater than 6"
	hr:mm	hr:mm	min	in	in	in	(y/n)
1	10:30	11:00	30	12	19	7.0	
2	11:10	11:40	30	19	28	9.0	

IN RIVERSIDE, 2Y=SAND: 10 min intervals for 1 hour. **IF NOT SAND:** 12 intervals at 30 min each, refilling each time

IN SAN DIEGO, Presoak for at least 2 hours if sandy soils. Rates of fall are measured for six hours, refilling each half hour (or 10 minutes for sand). Tests are generally repeated until consistent results are obtained.

Raw Data						Calculations		
Reading #	Start Time	Stop Time	Δ t Time Interval (10 or 30)	Do Initial Depth to Water Level	Df Final Depth to Water Level	Δ D Change in Water Level	Percolation Rate	Corrected Infiltration Rate
	hr:mm	hr:mm	min	inches (0.25" precision)			min/ in	in/hr
1	13:40	14:00	20	4.5	5.0	0.5	40.0	0.12
2	14:00	14:20	20	5.0	5.5	0.5	40.0	0.12
3	14:20	14:30	20	5.5	5.8	0.3	80.0	**0.06**
4								
5								
6								
7								
8								
9								
10								
11								
12								

Sources:

Appendix D, Approved Infiltration Rate Assessment Methods for Selection of Storm Water BMPs (San Diego)

Appendix A, Infiltration Testing (Riverside County)

Appendix D, Infiltration Rate Protocol, 2011 (Orange County)

Pecolation Test Data Sheet	
Project:	EHS Chula Vista
Project No.:	17-199602.7
Date:	3/14/2019
Test Hole:	P2
Tested by:	MM
Depth of Hole, ft, D:	3
Boring Radius, in:	6
UCSD:	SP

$$I_t = \frac{\Delta H(60r)}{\Delta t(r + 2H_{avg})}$$

Pre-Soak Procedure (See notes)						Calculations	
Reading #	Start Time	Stop Time	Δ t Time Interval	Do Initial Depth to Water Level	Df Final Depth to Water Level	Δ D Change in Water Level	Greater than 6"
	hr:mm	hr:mm	min	in	in	in	(y/n)
1	10:40	11:10	30	12	24	12.0	
2	11:10	11:40	30	24	36	12.0	

IN RIVERSIDE, 2Y=SAND: 10 min intervals for 1 hour. **IF NOT SAND:** 12 intervals at 30 min each, refilling each time

IN SAN DIEGO, Presoak for at least 2 hours if sandy soils. Rates of fall are measured for six hours, refilling each half hour (or 10 minutes for sand). Tests are generally repeated until consistent results are obtained.

Raw Data						Calculations		
Reading #	Start Time	Stop Time	Δ t Time Interval (10 or 30)	Do Initial Depth to Water Level	Df Final Depth to Water Level	Δ D Change in Water Level	Percolation Rate	Corrected Infiltration Rate
	hr:mm	hr:mm	min	inches (0.25" precision)			min/ in	in/hr
1	13:40	14:00	20	0.0	5.3	5.3	3.8	1.30
2	14:00	14:20	20	5.3	8.0	2.8	7.3	0.76
3	14:20	14:30	10	0.0	2.3	2.3	4.4	1.07
4	14:13	14:23	20	2.3	5.0	2.8	7.3	0.70
5	14:23	14:33	10	5.0	6.3	1.3	8.0	**0.67**
6								
7								
8								
9								
10								
11								
12								

Sources:

Appendix D, Approved Infiltration Rate Assessment Methods for Selection of Storm Water BMPs (San Diego)

Appendix A, Infiltration Testing (Riverside County)

Appendix D, Infiltration Rate Protocol, 2011 (Orange County)

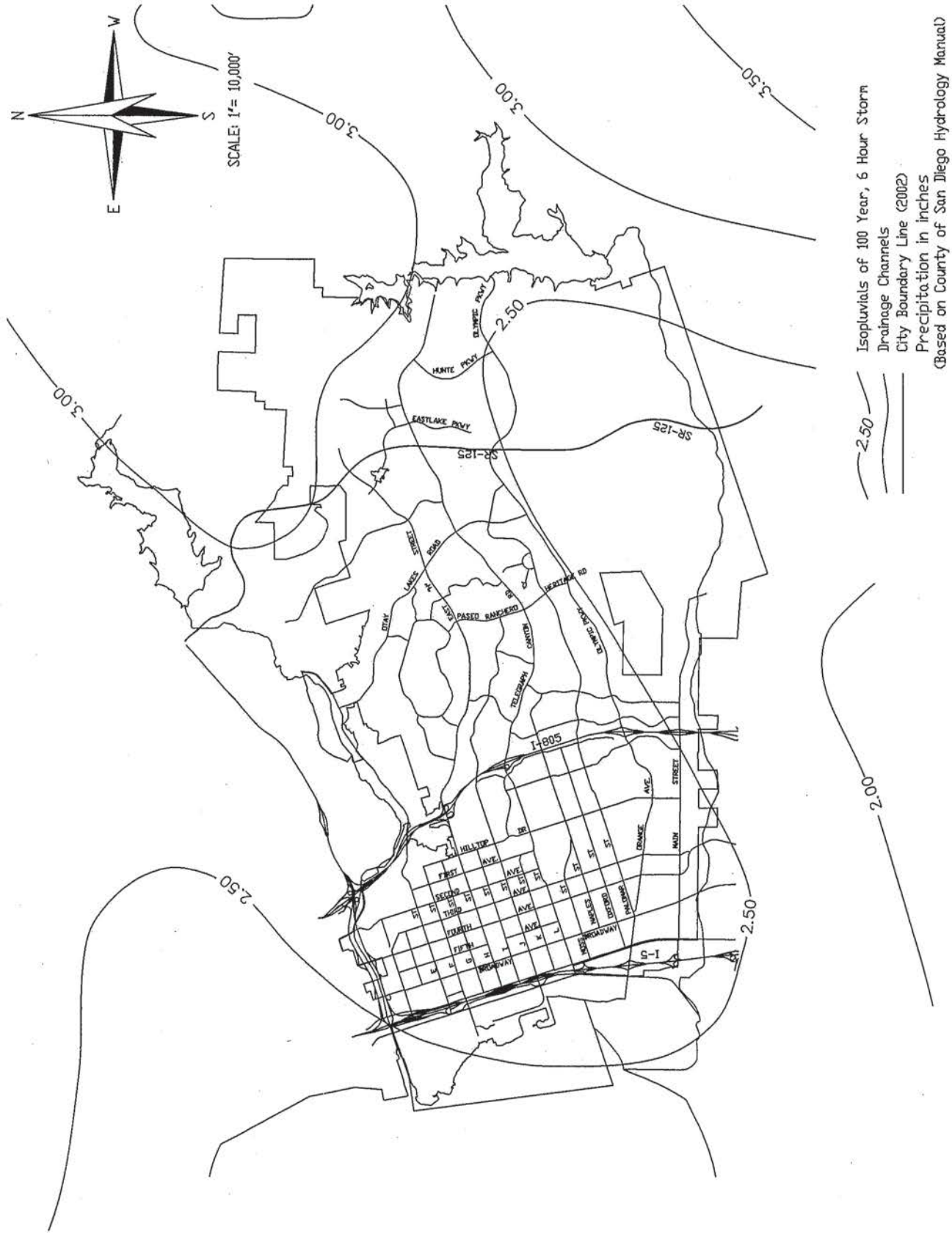

REVISION	BY	APPROVED	DATE
ORIGINAL			01/02
REVISION	CVM	C. SWANSON	11/02
REVISION	DPH	W. VALLE	11/17

CITY OF CHULA VISTA
ENGINEERING & CAPITAL PROJECTS
STANDARD DRAWING

100-YEAR, 6-HOUR PRECIPITATION

WILLIAM S. VALLE 11/21/2017
CITY ENGINEER

DRN-04