Appendix G

Sound Level Measurement Data, Construction Noise Modeling Outputs, and Mechanical Equipment Specification Sheets

LT1

- Freq Weight : A
- Time Weight : SLOW
- Level Range : 50-110
- Max dB : 90.6 - 2020/07/30 15:03:20
- Level Range : 50-110
- SEL : 119.3
- Leq : 70.0
-

No.s	Date Time	(dB)
1	2020/07/30 09:51:23	57.6
2	2020/07/30 09:55:23	70.7
3	2020/07/30 09:59:23	60.3
4	2020/07/30 10:03:23	64.4
5	2020/07/30 10:07:23	61.9
6	2020/07/30 10:11:23	67.1
7	2020/07/30 10:15:23	70.7
8	2020/07/30 10:19:23	59.0
9	2020/07/30 10:23:23	70.8
10	2020/07/30 10:27:23	51.0
11	2020/07/30 10:31:23	70.6
12	2020/07/30 10:35:23	61.6
13	2020/07/30 10:39:23	60.9
14	2020/07/30 10:43:23	56.3
15	2020/07/30 10:47:23	49.6
16	2020/07/30 10:51:23	47.3
17	2020/07/30 10:55:23	75.1
18	2020/07/30 10:59:23	59.8
19	2020/07/30 11:03:23	64.1
20	2020/07/30 11:07:23	52.2
21	2020/07/30 11:11:23	57.9
22	2020/07/30 11:15:23	62.2
23	2020/07/30 11:19:23	60.5
24	2020/07/30 11:23:23	58.4
25	2020/07/30 11:27:23	52.2
26	2020/07/30 11:31:23	50.8
27	2020/07/30 11:35:23	56.8
28	2020/07/30 11:39:23	68.3
29	2020/07/30 11:43:23	58.3
30	2020/07/30 11:47:23	68.4
31	2020/07/30 11:51:23	60.8
32	2020/07/30 11:55:23	61.3
33	2020/07/30 11:59:23	57.7
34	2020/07/30 12:03:23	59.6
35	2020/07/30 12:07:23	60.7
36	2020/07/30 12:11:23	55.2
37	2020/07/30 12:15:23	63.3
38	2020/07/30 12:19:23	67.1
39	2020/07/30 12:23:23	56.6
40	2020/07/30 12:27:23	63.7
41	2020/07/30 12:31:23	62.8
42	2020/07/30 12:35:23	65.7
43	2020/07/30 12:39:23	57.3
44	2020/07/30 12:43:23	59.8
45	2020/07/30 12:47:23	55.1
46	2020/07/30 12:51:23	52.9
47	2020/07/30 12:55:23	66.2
48	2020/07/30 12:59:23	66.6
49	2020/07/30 13:03:23	51.2
50	2020/07/30 13:07:23	65.3
51	2020/07/30 13:11:23	61.3
52	2020/07/30 13:15:23	60.2
53	2020/07/30 13:19:23	63.6
54	2020/07/30 13:23:23	62.6
55	2020/07/30 13:27:23	65.4
56	2020/07/30 13:31:23	66.2
57	2020/07/30 13:35:23	52.0
58	2020/07/30 13:39:23	60.4
59	2020/07/30 13:43:23	65.5
60	2020/07/30 13:47:23	60.0
61	2020/07/30 13:51:23	63.0
62	2020/07/30 13:55:23	66.4
63	2020/07/30 13:59:23	68.4
64	2020/07/30 14:03:23	57.7
65	2020/07/30 14:07:23	66.5
66	2020/07/30 14:11:23	64.8
67	2020/07/30 14:15:23	58.3
68	2020/07/30 14:19:23	59.4
69	2020/07/30 14:23:23	69.6
70	2020/07/30 14:27:23	66.0
71	2020/07/30 14:31:23	57.3
72	2020/07/30 14:35:23	69.0
73	2020/07/30 14:39:23	55.7
74	2020/07/30 14:43:23	62.4
75	2020/07/30 14:47:23	51.4
76	2020/07/30 14:51:23	74.2
77	2020/07/30 14:55:23	53.2
78	2020/07/30 14:59:23	79.4
79	2020/07/30 15:03:23	63.7
80	2020/07/30 15:07:23	68.4
81	2020/07/30 15:11:23	65.6
82	2020/07/30 15:15:23	59.7
83	2020/07/30 15:19:23	67.4
84	2020/07/30 15:23:23	63.0

85	2020/07/30 15:27:23	54.4
86	2020/07/30 15:31:23	68.6
87	2020/07/30 15:35:23	59.0
88	2020/07/30 15:39:23	62.1
89	2020/07/30 15:43:23	54.9
90	2020/07/30 15:47:23	50.8
91	2020/07/30 15:51:23	63.4
92	2020/07/30 15:55:23	52.0
93	2020/07/30 15:59:23	60.8
94	2020/07/30 16:03:23	65.7
95	2020/07/30 16:07:23	72.9
96	2020/07/30 16:11:23	60.4
97	2020/07/30 16:15:23	61.1
98	2020/07/30 16:19:23	51.1
99	2020/07/30 16:23:23	65.8
100	2020/07/30 16:27:23	75.8
101	2020/07/30 16:31:23	68.1
102	2020/07/30 16:35:23	56.8
103	2020/07/30 16:39:23	59.9
104	2020/07/30 16:43:23	58.9
105	2020/07/30 16:47:23	57.5
106	2020/07/30 16:51:23	62.1
107	2020/07/30 16:55:23	65.2
108	2020/07/30 16:59:23	61.1
109	2020/07/30 17:03:23	57.5
110	2020/07/30 17:07:23	57.7
111	2020/07/30 17:11:23	61.2
112	2020/07/30 17:15:23	50.8
113	2020/07/30 17:19:23	56.7
114	2020/07/30 17:23:23	53.3
115	2020/07/30 17:27:23	53.3
116	2020/07/30 17:31:23	63.2
117	2020/07/30 17:35:23	63.4
118	2020/07/30 17:39:23	58.2
119	2020/07/30 17:43:23	65.0
120	2020/07/30 17:47:23	49.5
121	2020/07/30 17:51:23	64.0
122	2020/07/30 17:55:23	51.6
123	2020/07/30 17:59:23	51.0
124	2020/07/30 18:03:23	57.4
125	2020/07/30 18:07:23	49.8
126	2020/07/30 18:11:23	66.6
127	2020/07/30 18:15:23	51.7
128	2020/07/30 18:19:23	53.6
129	2020/07/30 18:23:23	56.1
130	2020/07/30 18:27:23	58.8
131	2020/07/30 18:31:23	59.0
132	2020/07/30 18:35:23	61.1
133	2020/07/30 18:39:23	52.1
134	2020/07/30 18:43:23	51.7
135	2020/07/30 18:47:23	62.2
136	2020/07/30 18:51:23	60.7
137	2020/07/30 18:55:23	48.5
138	2020/07/30 18:59:23	65.7
139	2020/07/30 19:03:23	46.1
140	2020/07/30 19:07:23	56.6
141	2020/07/30 19:11:23	47.6
142	2020/07/30 19:15:23	51.6
143	2020/07/30 19:19:23	45.5
144	2020/07/30 19:23:23	47.5
145	2020/07/30 19:27:23	48.4
146	2020/07/30 19:31:23	67.4
147	2020/07/30 19:35:23	51.0
148	2020/07/30 19:39:23	64.3
149	2020/07/30 19:43:23	44.9
150	2020/07/30 19:47:23	44.5
151	2020/07/30 19:51:23	65.1
152	2020/07/30 19:55:23	49.3
153	2020/07/30 19:59:23	46.4
154	2020/07/30 20:03:23	46.7
155	2020/07/30 20:07:23	45.7
156	2020/07/30 20:11:23	46.7
157	2020/07/30 20:15:23	46.6
158	2020/07/30 20:19:23	62.2
159	2020/07/30 20:23:23	52.5
160	2020/07/30 20:27:23	59.6
161	2020/07/30 20:31:23	55.1
162	2020/07/30 20:35:23	56.9
163	2020/07/30 20:39:23	44.1
164	2020/07/30 20:43:23	43.6
165	2020/07/30 20:47:23	48.5
166	2020/07/30 20:51:23	58.0
167	2020/07/30 20:55:23	51.6
168	2020/07/30 20:59:23	51.9
169	2020/07/30 21:03:23	52.8
170	2020/07/30 21:07:23	49.8
171	2020/07/30 21:11:23	45.4
172	2020/07/30 21:15:23	62.1
173	2020/07/30 21:19:23	70.1
174	2020/07/30 21:23:23	76.2
175	2020/07/30 21:27:23	54.4
176	2020/07/30 21:31:23	48.8
177	2020/07/30 21:35:23	43.9
178	2020/07/30 21:39:23	56.5
179	2020/07/30 21:43:23	46.5
180	2020/07/30 21:47:23	54.7
181	2020/07/30 21:51:23	62.1
182	2020/07/30 21:55:23	42.1

183	2020/07/30	21:59:23	45.5
184	2020/07/30	22:03:23	42.4
185	2020/07/30	22:07:23	43.4
186	2020/07/30	22:11:23	53.2
187	2020/07/30	22:15:23	51.6
188	2020/07/30	22:19:23	55.7
189	2020/07/30	22:23:23	57.7
190	2020/07/30	22:27:23	57.8
191	2020/07/30	22:31:23	61.0
192	2020/07/30	22:35:23	57.1
193	2020/07/30	22:39:23	41.1
194	2020/07/30	22:43:23	42.2
195	2020/07/30	22:47:23	42.2
196	2020/07/30	22:51:23	56.5
197	2020/07/30	22:55:23	40.7
198	2020/07/30	22:59:23	45.2
199	2020/07/30	23:03:23	44.3
200	2020/07/30	23:07:23	39.7
201	2020/07/30	23:11:23	40.6
202	2020/07/30	23:15:23	45.2
203	2020/07/30	23:19:23	41.1
204	2020/07/30	23:23:23	40.4
205	2020/07/30	23:27:23	69.8
206	2020/07/30	23:31:23	41.8
207	2020/07/30	23:35:23	40.9
208	2020/07/30	23:39:23	40.9
209	2020/07/30	23:43:23	62.3
210	2020/07/30	23:47:23	43.5
211	2020/07/30	23:51:23	40.9
212	2020/07/30	23:55:23	42.3
213	2020/07/30	23:59:23	41.6
214	2020/07/31	00:03:23	48.5
215	2020/07/31	00:07:23	43.4
216	2020/07/31	00:11:23	44.9
217	2020/07/31	00:15:23	42.1
218	2020/07/31	00:19:23	40.2
219	2020/07/31	00:23:23	40.0
220	2020/07/31	00:27:23	56.5
221	2020/07/31	00:31:23	40.4
222	2020/07/31	00:35:23	64.0
223	2020/07/31	00:39:23	41.6
224	2020/07/31	00:43:23	39.1
225	2020/07/31	00:47:23	44.5
226	2020/07/31	00:51:23	38.1
227	2020/07/31	00:55:23	37.7
228	2020/07/31	00:59:23	39.7
229	2020/07/31	01:03:23	40.3
230	2020/07/31	01:07:23	49.4
231	2020/07/31	01:11:23	38.0
232	2020/07/31	01:15:23	38.6
233	2020/07/31	01:19:23	38.0
234	2020/07/31	01:23:23	38.8
235	2020/07/31	01:27:23	37.9
236	2020/07/31	01:31:23	39.5
237	2020/07/31	01:35:23	38.2
238	2020/07/31	01:39:23	39.1
239	2020/07/31	01:43:23	38.6
240	2020/07/31	01:47:23	61.4
241	2020/07/31	01:51:23	37.6
242	2020/07/31	01:55:23	40.0
243	2020/07/31	01:59:23	62.3
244	2020/07/31	02:03:23	54.7
245	2020/07/31	02:07:23	39.6
246	2020/07/31	02:11:23	42.0
247	2020/07/31	02:15:23	40.2
248	2020/07/31	02:19:23	40.6
249	2020/07/31	02:23:23	39.5
250	2020/07/31	02:27:23	39.4
251	2020/07/31	02:31:23	39.9
252	2020/07/31	02:35:23	38.6
253	2020/07/31	02:39:23	38.7
254	2020/07/31	02:43:23	38.3
255	2020/07/31	02:47:23	53.3
256	2020/07/31	02:51:23	53.7
257	2020/07/31	02:55:23	46.4
258	2020/07/31	02:59:23	42.4
259	2020/07/31	03:03:23	40.4
260	2020/07/31	03:07:23	64.2
261	2020/07/31	03:11:23	55.7
262	2020/07/31	03:15:23	49.3
263	2020/07/31	03:19:23	66.2
264	2020/07/31	03:23:23	61.3
265	2020/07/31	03:27:23	43.2
266	2020/07/31	03:31:23	40.5
267	2020/07/31	03:35:23	46.1
268	2020/07/31	03:39:23	62.0
269	2020/07/31	03:43:23	55.5
270	2020/07/31	03:47:23	39.9
271	2020/07/31	03:51:23	48.3
272	2020/07/31	03:55:23	42.6
273	2020/07/31	03:59:23	50.0
274	2020/07/31	04:03:23	47.1
275	2020/07/31	04:07:23	59.2
276	2020/07/31	04:11:23	44.8
277	2020/07/31	04:15:23	55.6
278	2020/07/31	04:19:23	69.3
279	2020/07/31	04:23:23	67.2
280	2020/07/31	04:27:23	56.0

281	2020/07/31 04:31:23	62.0
282	2020/07/31 04:35:23	51.5
283	2020/07/31 04:39:23	45.8
284	2020/07/31 04:43:23	53.2
285	2020/07/31 04:47:23	56.6
286	2020/07/31 04:51:23	55.0
287	2020/07/31 04:55:23	57.2
288	2020/07/31 04:59:23	68.7
289	2020/07/31 05:03:23	70.2
290	2020/07/31 05:07:23	65.0
291	2020/07/31 05:11:23	64.1
292	2020/07/31 05:15:23	51.7
293	2020/07/31 05:19:23	61.2
294	2020/07/31 05:23:23	69.5
295	2020/07/31 05:27:23	60.5
296	2020/07/31 05:31:23	44.7
297	2020/07/31 05:35:23	65.5
298	2020/07/31 05:39:23	54.0
299	2020/07/31 05:43:23	50.9
300	2020/07/31 05:47:23	60.6
301	2020/07/31 05:51:23	67.8
302	2020/07/31 05:55:23	66.8
303	2020/07/31 05:59:23	63.0
304	2020/07/31 06:03:23	67.1
305	2020/07/31 06:07:23	58.3
306	2020/07/31 06:11:23	54.2
307	2020/07/31 06:15:23	60.6
308	2020/07/31 06:19:23	63.0
309	2020/07/31 06:23:23	59.9
310	2020/07/31 06:27:23	67.0
311	2020/07/31 06:31:23	67.5
312	2020/07/31 06:35:23	62.6
313	2020/07/31 06:39:23	63.9
314	2020/07/31 06:43:23	60.9
315	2020/07/31 06:47:23	70.8
316	2020/07/31 06:51:23	54.0
317	2020/07/31 06:55:23	48.4
318	2020/07/31 06:59:23	55.5
319	2020/07/31 07:03:23	56.5
320	2020/07/31 07:07:23	62.3
321	2020/07/31 07:11:23	59.4
322	2020/07/31 07:15:23	55.0
323	2020/07/31 07:19:23	61.5
324	2020/07/31 07:23:23	56.3
325	2020/07/31 07:27:23	65.3
326	2020/07/31 07:31:23	64.8
327	2020/07/31 07:35:23	60.3
328	2020/07/31 07:39:23	62.3
329	2020/07/31 07:43:23	54.8
330	2020/07/31 07:47:23	60.4
331	2020/07/31 07:51:23	68.7
332	2020/07/31 07:55:23	58.4
333	2020/07/31 07:59:23	59.3
334	2020/07/31 08:03:23	61.8
335	2020/07/31 08:07:23	66.2
336	2020/07/31 08:11:23	52.0
337	2020/07/31 08:15:23	51.3
338	2020/07/31 08:19:23	63.5
339	2020/07/31 08:23:23	61.9
340	2020/07/31 08:27:23	59.5
341	2020/07/31 08:31:23	68.1
342	2020/07/31 08:35:23	72.9
343	2020/07/31 08:39:23	73.2
344	2020/07/31 08:43:23	71.8
345	2020/07/31 08:47:23	72.9
346	2020/07/31 08:51:23	76.0
347	2020/07/31 08:55:23	82.2
348	2020/07/31 08:59:23	79.2
349	2020/07/31 09:03:23	77.0
350	2020/07/31 09:07:23	81.3
351	2020/07/31 09:11:23	73.9
352	2020/07/31 09:15:23	77.3
353	2020/07/31 09:19:23	75.2
354	2020/07/31 09:23:23	79.2
355	2020/07/31 09:27:23	80.3
356	2020/07/31 09:31:23	74.8
357	2020/07/31 09:35:23	75.9
358	2020/07/31 09:39:23	76.0
359	2020/07/31 09:43:23	57.7
360	2020/07/31 09:47:23	52.1

LT2

- Freq Weight : A
- Time Weight : SLOW
- Level Range : 40-100
- Max dB : 105.3 - 2020/07/31 10:05:15
- Level Range : 40-100
- SEL : 119.3
- Leq : 70.0
-

No.s	Date Time	(dB)
1	2020/07/30 10:10:10	60.4
2	2020/07/30 10:14:10	60.5
3	2020/07/30 10:18:10	59.2
4	2020/07/30 10:22:10	58.7
5	2020/07/30 10:26:10	64.2
6	2020/07/30 10:30:10	60.5
7	2020/07/30 10:34:10	60.5
8	2020/07/30 10:38:10	61.6
9	2020/07/30 10:42:10	56.1
10	2020/07/30 10:46:10	59.6
11	2020/07/30 10:50:10	59.9
12	2020/07/30 10:54:10	58.8
13	2020/07/30 10:58:10	55.5
14	2020/07/30 11:02:10	69.6
15	2020/07/30 11:06:10	61.1
16	2020/07/30 11:10:10	59.1
17	2020/07/30 11:14:10	67.0
18	2020/07/30 11:18:10	60.1
19	2020/07/30 11:22:10	66.0
20	2020/07/30 11:26:10	58.6
21	2020/07/30 11:30:10	55.0
22	2020/07/30 11:34:10	57.6
23	2020/07/30 11:38:10	57.4
24	2020/07/30 11:42:10	55.7
25	2020/07/30 11:46:10	67.9
26	2020/07/30 11:50:10	67.6
27	2020/07/30 11:54:10	56.9
28	2020/07/30 11:58:10	62.8
29	2020/07/30 12:02:10	60.9
30	2020/07/30 12:06:10	55.8
31	2020/07/30 12:10:10	60.7
32	2020/07/30 12:14:10	55.4
33	2020/07/30 12:18:10	56.3
34	2020/07/30 12:22:10	56.2
35	2020/07/30 12:26:10	56.4
36	2020/07/30 12:30:10	55.0
37	2020/07/30 12:34:10	55.5
38	2020/07/30 12:38:10	57.2
39	2020/07/30 12:42:10	56.5
40	2020/07/30 12:46:10	53.9
41	2020/07/30 12:50:10	61.4
42	2020/07/30 12:54:10	63.7
43	2020/07/30 12:58:10	54.8
44	2020/07/30 13:02:10	54.9
45	2020/07/30 13:06:10	56.0
46	2020/07/30 13:10:10	58.4
47	2020/07/30 13:14:10	52.9
48	2020/07/30 13:18:10	55.6
49	2020/07/30 13:22:10	56.4
50	2020/07/30 13:26:10	56.1
51	2020/07/30 13:30:10	57.7
52	2020/07/30 13:34:10	57.9
53	2020/07/30 13:38:10	59.4
54	2020/07/30 13:42:10	55.7
55	2020/07/30 13:46:10	55.1
56	2020/07/30 13:50:10	58.0
57	2020/07/30 13:54:10	55.3
58	2020/07/30 13:58:10	61.1
59	2020/07/30 14:02:10	55.6
60	2020/07/30 14:06:10	55.9
61	2020/07/30 14:10:10	54.4
62	2020/07/30 14:14:10	56.5
63	2020/07/30 14:18:10	57.6
64	2020/07/30 14:22:10	55.3
65	2020/07/30 14:26:10	58.3
66	2020/07/30 14:30:10	55.8
67	2020/07/30 14:34:10	56.6
68	2020/07/30 14:38:10	56.9
69	2020/07/30 14:42:10	60.8
70	2020/07/30 14:46:10	54.5
71	2020/07/30 14:50:10	60.6
72	2020/07/30 14:54:10	56.4
73	2020/07/30 14:58:10	55.4
74	2020/07/30 15:02:10	55.7
75	2020/07/30 15:06:10	56.2
76	2020/07/30 15:10:10	58.3
77	2020/07/30 15:14:10	58.2
78	2020/07/30 15:18:10	53.6
79	2020/07/30 15:22:10	56.3
80	2020/07/30 15:26:10	69.0
81	2020/07/30 15:30:10	53.7
82	2020/07/30 15:34:10	55.9
83	2020/07/30 15:38:10	55.7
84	2020/07/30 15:42:10	55.3

85	2020/07/30	15:46:10	54.7
86	2020/07/30	15:50:10	55.8
87	2020/07/30	15:54:10	60.8
88	2020/07/30	15:58:10	55.9
89	2020/07/30	16:02:10	59.9
90	2020/07/30	16:06:10	56.7
91	2020/07/30	16:10:10	60.4
92	2020/07/30	16:14:10	54.0
93	2020/07/30	16:18:10	58.1
94	2020/07/30	16:22:10	56.2
95	2020/07/30	16:26:10	55.5
96	2020/07/30	16:30:10	53.8
97	2020/07/30	16:34:10	54.5
98	2020/07/30	16:38:10	55.6
99	2020/07/30	16:42:10	61.7
100	2020/07/30	16:46:10	57.6
101	2020/07/30	16:50:10	55.9
102	2020/07/30	16:54:10	59.9
103	2020/07/30	16:58:10	56.5
104	2020/07/30	17:02:10	56.4
105	2020/07/30	17:06:10	55.9
106	2020/07/30	17:10:10	54.1
107	2020/07/30	17:14:10	56.2
108	2020/07/30	17:18:10	60.1
109	2020/07/30	17:22:10	58.1
110	2020/07/30	17:26:10	54.6
111	2020/07/30	17:30:10	56.2
112	2020/07/30	17:34:10	55.8
113	2020/07/30	17:38:10	57.0
114	2020/07/30	17:42:10	56.7
115	2020/07/30	17:46:10	57.2
116	2020/07/30	17:50:10	60.5
117	2020/07/30	17:54:10	57.4
118	2020/07/30	17:58:10	62.6
119	2020/07/30	18:02:10	60.8
120	2020/07/30	18:06:10	57.3
121	2020/07/30	18:10:10	65.7
122	2020/07/30	18:14:10	59.7
123	2020/07/30	18:18:10	65.4
124	2020/07/30	18:22:10	55.9
125	2020/07/30	18:26:10	56.0
126	2020/07/30	18:30:10	55.8
127	2020/07/30	18:34:10	60.2
128	2020/07/30	18:38:10	55.1
129	2020/07/30	18:42:10	56.4
130	2020/07/30	18:46:10	57.3
131	2020/07/30	18:50:10	54.9
132	2020/07/30	18:54:10	54.8
133	2020/07/30	18:58:10	58.6
134	2020/07/30	19:02:10	66.5
135	2020/07/30	19:06:10	53.0
136	2020/07/30	19:10:10	57.9
137	2020/07/30	19:14:10	56.2
138	2020/07/30	19:18:10	56.6
139	2020/07/30	19:22:10	57.3
140	2020/07/30	19:26:10	57.8
141	2020/07/30	19:30:10	56.9
142	2020/07/30	19:34:10	54.3
143	2020/07/30	19:38:10	56.8
144	2020/07/30	19:42:10	57.5
145	2020/07/30	19:46:10	57.8
146	2020/07/30	19:50:10	56.2
147	2020/07/30	19:54:10	57.9
148	2020/07/30	19:58:10	58.1
149	2020/07/30	20:02:10	59.1
150	2020/07/30	20:06:10	58.3
151	2020/07/30	20:10:10	57.9
152	2020/07/30	20:14:10	57.2
153	2020/07/30	20:18:10	56.9
154	2020/07/30	20:22:10	64.7
155	2020/07/30	20:26:10	61.1
156	2020/07/30	20:30:10	73.4
157	2020/07/30	20:34:10	61.5
158	2020/07/30	20:38:10	58.2
159	2020/07/30	20:42:10	56.4
160	2020/07/30	20:46:10	55.5
161	2020/07/30	20:50:10	53.7
162	2020/07/30	20:54:10	55.8
163	2020/07/30	20:58:10	56.8
164	2020/07/30	21:02:10	55.7
165	2020/07/30	21:06:10	56.2
166	2020/07/30	21:10:10	57.8
167	2020/07/30	21:14:10	54.4
168	2020/07/30	21:18:10	54.9
169	2020/07/30	21:22:10	54.5
170	2020/07/30	21:26:10	55.5
171	2020/07/30	21:30:10	54.9
172	2020/07/30	21:34:10	54.6
173	2020/07/30	21:38:10	54.6
174	2020/07/30	21:42:10	53.1
175	2020/07/30	21:46:10	54.8
176	2020/07/30	21:50:10	57.7
177	2020/07/30	21:54:10	56.2
178	2020/07/30	21:58:10	67.0
179	2020/07/30	22:02:10	52.2
180	2020/07/30	22:06:10	55.5
181	2020/07/30	22:10:10	52.3
182	2020/07/30	22:14:10	54.4

183	2020/07/30	22:18:10	60.1
184	2020/07/30	22:22:10	59.8
185	2020/07/30	22:26:10	53.3
186	2020/07/30	22:30:10	63.2
187	2020/07/30	22:34:10	53.8
188	2020/07/30	22:38:10	51.8
189	2020/07/30	22:42:10	52.3
190	2020/07/30	22:46:10	57.2
191	2020/07/30	22:50:10	54.3
192	2020/07/30	22:54:10	55.1
193	2020/07/30	22:58:10	51.1
194	2020/07/30	23:02:10	61.0
195	2020/07/30	23:06:10	53.5
196	2020/07/30	23:10:10	50.5
197	2020/07/30	23:14:10	53.4
198	2020/07/30	23:18:10	51.5
199	2020/07/30	23:22:10	49.9
200	2020/07/30	23:26:10	53.7
201	2020/07/30	23:30:10	53.4
202	2020/07/30	23:34:10	52.9
203	2020/07/30	23:38:10	55.0
204	2020/07/30	23:42:10	53.8
205	2020/07/30	23:46:10	51.9
206	2020/07/30	23:50:10	55.8
207	2020/07/30	23:54:10	54.7
208	2020/07/30	23:58:10	53.3
209	2020/07/31	00:02:10	49.8
210	2020/07/31	00:06:10	50.1
211	2020/07/31	00:10:10	53.6
212	2020/07/31	00:14:10	54.6
213	2020/07/31	00:18:10	54.1
214	2020/07/31	00:22:10	51.7
215	2020/07/31	00:26:10	51.2
216	2020/07/31	00:30:10	50.1
217	2020/07/31	00:34:10	66.0
218	2020/07/31	00:38:10	52.7
219	2020/07/31	00:42:10	53.5
220	2020/07/31	00:46:10	53.1
221	2020/07/31	00:50:10	53.5
222	2020/07/31	00:54:10	50.4
223	2020/07/31	00:58:10	54.9
224	2020/07/31	01:02:10	49.3
225	2020/07/31	01:06:10	52.2
226	2020/07/31	01:10:10	50.2
227	2020/07/31	01:14:10	51.1
228	2020/07/31	01:18:10	49.4
229	2020/07/31	01:22:10	48.8
230	2020/07/31	01:26:10	52.4
231	2020/07/31	01:30:10	50.7
232	2020/07/31	01:34:10	49.7
233	2020/07/31	01:38:10	48.6
234	2020/07/31	01:42:10	52.7
235	2020/07/31	01:46:10	49.3
236	2020/07/31	01:50:10	50.8
237	2020/07/31	01:54:10	52.6
238	2020/07/31	01:58:10	48.9
239	2020/07/31	02:02:10	54.9
240	2020/07/31	02:06:10	51.3
241	2020/07/31	02:10:10	51.2
242	2020/07/31	02:14:10	50.0
243	2020/07/31	02:18:10	52.1
244	2020/07/31	02:22:10	57.8
245	2020/07/31	02:26:10	49.0
246	2020/07/31	02:30:10	49.0
247	2020/07/31	02:34:10	50.1
248	2020/07/31	02:38:10	51.0
249	2020/07/31	02:42:10	56.0
250	2020/07/31	02:46:10	53.7
251	2020/07/31	02:50:10	51.4
252	2020/07/31	02:54:10	59.8
253	2020/07/31	02:58:10	53.9
254	2020/07/31	03:02:10	56.8
255	2020/07/31	03:06:10	50.6
256	2020/07/31	03:10:10	52.3
257	2020/07/31	03:14:10	55.9
258	2020/07/31	03:18:10	54.1
259	2020/07/31	03:22:10	56.8
260	2020/07/31	03:26:10	61.2
261	2020/07/31	03:30:10	51.7
262	2020/07/31	03:34:10	49.6
263	2020/07/31	03:38:10	57.1
264	2020/07/31	03:42:10	54.7
265	2020/07/31	03:46:10	56.1
266	2020/07/31	03:50:10	54.6
267	2020/07/31	03:54:10	58.9
268	2020/07/31	03:58:10	55.0
269	2020/07/31	04:02:10	56.0
270	2020/07/31	04:06:10	59.9
271	2020/07/31	04:10:10	55.5
272	2020/07/31	04:14:10	59.0
273	2020/07/31	04:18:10	59.2
274	2020/07/31	04:22:10	55.1
275	2020/07/31	04:26:10	59.2
276	2020/07/31	04:30:10	59.0
277	2020/07/31	04:34:10	58.5
278	2020/07/31	04:38:10	55.9
279	2020/07/31	04:42:10	59.8
280	2020/07/31	04:46:10	58.1

281	2020/07/31	04:50:10	62.0
282	2020/07/31	04:54:10	62.2
283	2020/07/31	04:58:10	62.0
284	2020/07/31	05:02:10	58.9
285	2020/07/31	05:06:10	83.2
286	2020/07/31	05:10:10	64.1
287	2020/07/31	05:14:10	65.2
288	2020/07/31	05:18:10	62.9
289	2020/07/31	05:22:10	60.4
290	2020/07/31	05:26:10	60.6
291	2020/07/31	05:30:10	60.4
292	2020/07/31	05:34:10	61.6
293	2020/07/31	05:38:10	65.4
294	2020/07/31	05:42:10	61.8
295	2020/07/31	05:46:10	63.3
296	2020/07/31	05:50:10	72.2
297	2020/07/31	05:54:10	64.9
298	2020/07/31	05:58:10	61.8
299	2020/07/31	06:02:10	61.4
300	2020/07/31	06:06:10	59.1
301	2020/07/31	06:10:10	62.3
302	2020/07/31	06:14:10	64.2
303	2020/07/31	06:18:10	63.1
304	2020/07/31	06:22:10	61.0
305	2020/07/31	06:26:10	64.0
306	2020/07/31	06:30:10	63.2
307	2020/07/31	06:34:10	62.4
308	2020/07/31	06:38:10	62.3
309	2020/07/31	06:42:10	59.9
310	2020/07/31	06:46:10	64.1
311	2020/07/31	06:50:10	62.4
312	2020/07/31	06:54:10	60.4
313	2020/07/31	06:58:10	70.6
314	2020/07/31	07:02:10	66.7
315	2020/07/31	07:06:10	66.5
316	2020/07/31	07:10:10	64.6
317	2020/07/31	07:14:10	65.4
318	2020/07/31	07:18:10	64.2
319	2020/07/31	07:22:10	64.7
320	2020/07/31	07:26:10	65.2
321	2020/07/31	07:30:10	63.7
322	2020/07/31	07:34:10	66.7
323	2020/07/31	07:38:10	66.9
324	2020/07/31	07:42:10	66.2
325	2020/07/31	07:46:10	64.8
326	2020/07/31	07:50:10	62.4
327	2020/07/31	07:54:10	62.9
328	2020/07/31	07:58:10	64.7
329	2020/07/31	08:02:10	65.7
330	2020/07/31	08:06:10	61.9
331	2020/07/31	08:10:10	61.7
332	2020/07/31	08:14:10	65.0
333	2020/07/31	08:18:10	63.6
334	2020/07/31	08:22:10	63.8
335	2020/07/31	08:26:10	64.2
336	2020/07/31	08:30:10	65.8
337	2020/07/31	08:34:10	66.2
338	2020/07/31	08:38:10	68.8
339	2020/07/31	08:42:10	65.5
340	2020/07/31	08:46:10	63.6
341	2020/07/31	08:50:10	67.1
342	2020/07/31	08:54:10	64.3
343	2020/07/31	08:58:10	65.3
344	2020/07/31	09:02:10	66.9
345	2020/07/31	09:06:10	64.4
346	2020/07/31	09:10:10	65.4
347	2020/07/31	09:14:10	65.1
348	2020/07/31	09:18:10	65.1
349	2020/07/31	09:22:10	62.3
350	2020/07/31	09:26:10	61.6
351	2020/07/31	09:30:10	70.0
352	2020/07/31	09:34:10	66.1
353	2020/07/31	09:38:10	64.8
354	2020/07/31	09:42:10	63.4
355	2020/07/31	09:46:10	62.7
356	2020/07/31	09:50:10	61.8
357	2020/07/31	09:54:10	61.3
358	2020/07/31	09:58:10	62.3
359	2020/07/31	10:02:10	100.2
360	2020/07/31	10:06:10	61.5

ST1

- Freq Weight : A
- Time Weight : SLOW
- Level Range : 40-100
- Max dB : 77.4 - 2020/07/30 09:29:07
- Level Range : 40-100
- SEL : 93.6
- Leq : 64.1
-

No.s	Date Time	(dB)
1	2020/07/30 09:25:06	60.4
2	2020/07/30 09:25:09	53.8
3	2020/07/30 09:25:12	54.3
4	2020/07/30 09:25:15	55.4
5	2020/07/30 09:25:18	56.5
6	2020/07/30 09:25:21	60.6
7	2020/07/30 09:25:24	59.2
8	2020/07/30 09:25:27	60.7
9	2020/07/30 09:25:30	61.6
10	2020/07/30 09:25:33	63.4
11	2020/07/30 09:25:36	59.8
12	2020/07/30 09:25:39	57.4
13	2020/07/30 09:25:42	61.8
14	2020/07/30 09:25:45	67.2
15	2020/07/30 09:25:48	58.8
16	2020/07/30 09:25:51	52.1
17	2020/07/30 09:25:54	51.7
18	2020/07/30 09:25:57	54.4
19	2020/07/30 09:26:00	64.1
20	2020/07/30 09:26:03	61.3
21	2020/07/30 09:26:06	70.0
22	2020/07/30 09:26:09	69.1
23	2020/07/30 09:26:12	68.7
24	2020/07/30 09:26:15	66.7
25	2020/07/30 09:26:18	68.4
26	2020/07/30 09:26:21	70.4
27	2020/07/30 09:26:24	66.2
28	2020/07/30 09:26:27	60.2
29	2020/07/30 09:26:30	60.3
30	2020/07/30 09:26:33	62.9
31	2020/07/30 09:26:36	61.8
32	2020/07/30 09:26:39	59.8
33	2020/07/30 09:26:42	63.5
34	2020/07/30 09:26:45	60.3
35	2020/07/30 09:26:48	59.7
36	2020/07/30 09:26:51	69.2
37	2020/07/30 09:26:54	68.0
38	2020/07/30 09:26:57	67.5
39	2020/07/30 09:27:00	67.7
40	2020/07/30 09:27:03	62.7
41	2020/07/30 09:27:06	62.3
42	2020/07/30 09:27:09	65.0
43	2020/07/30 09:27:12	62.4
44	2020/07/30 09:27:15	61.7
45	2020/07/30 09:27:18	59.2
46	2020/07/30 09:27:21	55.9
47	2020/07/30 09:27:24	55.4
48	2020/07/30 09:27:27	56.0
49	2020/07/30 09:27:30	54.7
50	2020/07/30 09:27:33	53.5
51	2020/07/30 09:27:36	54.0
52	2020/07/30 09:27:39	57.1
53	2020/07/30 09:27:42	63.9
54	2020/07/30 09:27:45	59.1
55	2020/07/30 09:27:48	53.2
56	2020/07/30 09:27:51	52.0
57	2020/07/30 09:27:54	53.5
58	2020/07/30 09:27:57	60.2
59	2020/07/30 09:28:00	58.6
60	2020/07/30 09:28:03	53.1
61	2020/07/30 09:28:06	54.6
62	2020/07/30 09:28:09	65.7
63	2020/07/30 09:28:12	67.4
64	2020/07/30 09:28:15	65.3
65	2020/07/30 09:28:18	59.9
66	2020/07/30 09:28:21	63.3
67	2020/07/30 09:28:24	63.4
68	2020/07/30 09:28:27	59.7
69	2020/07/30 09:28:30	57.2
70	2020/07/30 09:28:33	65.6
71	2020/07/30 09:28:36	66.6
72	2020/07/30 09:28:39	60.5
73	2020/07/30 09:28:42	59.7
74	2020/07/30 09:28:45	66.5
75	2020/07/30 09:28:48	69.0
76	2020/07/30 09:28:51	70.0
77	2020/07/30 09:28:54	63.3
78	2020/07/30 09:28:57	60.7
79	2020/07/30 09:29:00	62.8
80	2020/07/30 09:29:03	67.7
81	2020/07/30 09:29:06	74.9
82	2020/07/30 09:29:09	66.9
83	2020/07/30 09:29:12	58.4
84	2020/07/30 09:29:15	59.7

85	2020/07/30 09:29:18	63.1
86	2020/07/30 09:29:21	54.9
87	2020/07/30 09:29:24	56.8
88	2020/07/30 09:29:27	63.1
89	2020/07/30 09:29:30	68.3
90	2020/07/30 09:29:33	69.7
91	2020/07/30 09:29:36	65.7
92	2020/07/30 09:29:39	62.0
93	2020/07/30 09:29:42	64.3
94	2020/07/30 09:29:45	61.3
95	2020/07/30 09:29:48	58.2
96	2020/07/30 09:29:51	54.3
97	2020/07/30 09:29:54	52.7
98	2020/07/30 09:29:57	52.7
99	2020/07/30 09:30:00	53.4
100	2020/07/30 09:30:03	54.6
101	2020/07/30 09:30:06	63.2
102	2020/07/30 09:30:09	63.4
103	2020/07/30 09:30:12	63.3
104	2020/07/30 09:30:15	64.2
105	2020/07/30 09:30:18	60.8
106	2020/07/30 09:30:21	64.2
107	2020/07/30 09:30:24	65.0
108	2020/07/30 09:30:27	70.1
109	2020/07/30 09:30:30	69.3
110	2020/07/30 09:30:33	68.0
111	2020/07/30 09:30:36	63.0
112	2020/07/30 09:30:39	58.0
113	2020/07/30 09:30:42	57.2
114	2020/07/30 09:30:45	54.8
115	2020/07/30 09:30:48	62.9
116	2020/07/30 09:30:51	63.1
117	2020/07/30 09:30:54	66.8
118	2020/07/30 09:30:57	59.9
119	2020/07/30 09:31:00	57.7
120	2020/07/30 09:31:03	60.4
121	2020/07/30 09:31:06	62.2
122	2020/07/30 09:31:09	58.6
123	2020/07/30 09:31:12	62.5
124	2020/07/30 09:31:15	66.0
125	2020/07/30 09:31:18	75.4
126	2020/07/30 09:31:21	73.6
127	2020/07/30 09:31:24	64.6
128	2020/07/30 09:31:27	61.4
129	2020/07/30 09:31:30	60.6
130	2020/07/30 09:31:33	55.6
131	2020/07/30 09:31:36	52.7
132	2020/07/30 09:31:39	61.5
133	2020/07/30 09:31:42	55.4
134	2020/07/30 09:31:45	59.4
135	2020/07/30 09:31:48	65.1
136	2020/07/30 09:31:51	61.7
137	2020/07/30 09:31:54	64.3
138	2020/07/30 09:31:57	56.8
139	2020/07/30 09:32:00	53.5
140	2020/07/30 09:32:03	62.4
141	2020/07/30 09:32:06	61.0
142	2020/07/30 09:32:09	56.7
143	2020/07/30 09:32:12	67.8
144	2020/07/30 09:32:15	63.3
145	2020/07/30 09:32:18	59.0
146	2020/07/30 09:32:21	52.8
147	2020/07/30 09:32:24	56.0
148	2020/07/30 09:32:27	62.7
149	2020/07/30 09:32:30	63.7
150	2020/07/30 09:32:33	64.2
151	2020/07/30 09:32:36	55.3
152	2020/07/30 09:32:39	50.4
153	2020/07/30 09:32:42	49.4
154	2020/07/30 09:32:45	51.5
155	2020/07/30 09:32:48	56.5
156	2020/07/30 09:32:51	66.8
157	2020/07/30 09:32:54	65.2
158	2020/07/30 09:32:57	62.8
159	2020/07/30 09:33:00	65.3
160	2020/07/30 09:33:03	58.1
161	2020/07/30 09:33:06	55.0
162	2020/07/30 09:33:09	54.5
163	2020/07/30 09:33:12	57.1
164	2020/07/30 09:33:15	66.4
165	2020/07/30 09:33:18	67.8
166	2020/07/30 09:33:21	66.4
167	2020/07/30 09:33:24	65.0
168	2020/07/30 09:33:27	63.4
169	2020/07/30 09:33:30	57.1
170	2020/07/30 09:33:33	55.4
171	2020/07/30 09:33:36	60.4
172	2020/07/30 09:33:39	67.1
173	2020/07/30 09:33:42	72.4
174	2020/07/30 09:33:45	66.6
175	2020/07/30 09:33:48	60.5
176	2020/07/30 09:33:51	60.2
177	2020/07/30 09:33:54	63.1
178	2020/07/30 09:33:57	65.5
179	2020/07/30 09:34:00	61.7
180	2020/07/30 09:34:03	55.4
181	2020/07/30 09:34:06	55.2
182	2020/07/30 09:34:09	55.6

183	2020/07/30 09:34:12	55.2
184	2020/07/30 09:34:15	52.1
185	2020/07/30 09:34:18	53.2
186	2020/07/30 09:34:21	55.5
187	2020/07/30 09:34:24	61.4
188	2020/07/30 09:34:27	67.6
189	2020/07/30 09:34:30	64.7
190	2020/07/30 09:34:33	56.6
191	2020/07/30 09:34:36	52.2
192	2020/07/30 09:34:39	52.1
193	2020/07/30 09:34:42	55.5
194	2020/07/30 09:34:45	66.6
195	2020/07/30 09:34:48	62.5
196	2020/07/30 09:34:51	57.2
197	2020/07/30 09:34:54	60.7
198	2020/07/30 09:34:57	68.1
199	2020/07/30 09:35:00	62.6
200	2020/07/30 09:35:03	60.4
201	2020/07/30 09:35:06	62.7
202	2020/07/30 09:35:09	60.6
203	2020/07/30 09:35:12	71.9
204	2020/07/30 09:35:15	63.0
205	2020/07/30 09:35:18	54.1
206	2020/07/30 09:35:21	55.2
207	2020/07/30 09:35:24	61.1
208	2020/07/30 09:35:27	65.4
209	2020/07/30 09:35:30	59.8
210	2020/07/30 09:35:33	54.8
211	2020/07/30 09:35:36	54.2
212	2020/07/30 09:35:39	60.3
213	2020/07/30 09:35:42	63.3
214	2020/07/30 09:35:45	66.4
215	2020/07/30 09:35:48	67.0
216	2020/07/30 09:35:51	61.5
217	2020/07/30 09:35:54	55.1
218	2020/07/30 09:35:57	57.9
219	2020/07/30 09:36:00	67.5
220	2020/07/30 09:36:03	66.2
221	2020/07/30 09:36:06	67.9
222	2020/07/30 09:36:09	67.3
223	2020/07/30 09:36:12	62.9
224	2020/07/30 09:36:15	59.2
225	2020/07/30 09:36:18	54.6
226	2020/07/30 09:36:21	58.3
227	2020/07/30 09:36:24	54.5
228	2020/07/30 09:36:27	53.9
229	2020/07/30 09:36:30	54.3
230	2020/07/30 09:36:33	56.2
231	2020/07/30 09:36:36	57.8
232	2020/07/30 09:36:39	63.4
233	2020/07/30 09:36:42	62.1
234	2020/07/30 09:36:45	62.0
235	2020/07/30 09:36:48	68.7
236	2020/07/30 09:36:51	63.7
237	2020/07/30 09:36:54	62.6
238	2020/07/30 09:36:57	58.5
239	2020/07/30 09:37:00	59.0
240	2020/07/30 09:37:03	65.2
241	2020/07/30 09:37:06	69.3
242	2020/07/30 09:37:09	63.6
243	2020/07/30 09:37:12	57.1
244	2020/07/30 09:37:15	55.1
245	2020/07/30 09:37:18	59.6
246	2020/07/30 09:37:21	68.7
247	2020/07/30 09:37:24	65.1
248	2020/07/30 09:37:27	64.7
249	2020/07/30 09:37:30	65.7
250	2020/07/30 09:37:33	59.4
251	2020/07/30 09:37:36	52.1
252	2020/07/30 09:37:39	51.1
253	2020/07/30 09:37:42	50.9
254	2020/07/30 09:37:45	52.0
255	2020/07/30 09:37:48	55.1
256	2020/07/30 09:37:51	59.8
257	2020/07/30 09:37:54	56.2
258	2020/07/30 09:37:57	60.3
259	2020/07/30 09:38:00	67.9
260	2020/07/30 09:38:03	66.8
261	2020/07/30 09:38:06	65.5
262	2020/07/30 09:38:09	60.1
263	2020/07/30 09:38:12	57.4
264	2020/07/30 09:38:15	58.2
265	2020/07/30 09:38:18	60.6
266	2020/07/30 09:38:21	61.0
267	2020/07/30 09:38:24	60.8
268	2020/07/30 09:38:27	59.4
269	2020/07/30 09:38:30	62.6
270	2020/07/30 09:38:33	66.4
271	2020/07/30 09:38:36	61.7
272	2020/07/30 09:38:39	63.3
273	2020/07/30 09:38:42	65.0
274	2020/07/30 09:38:45	66.1
275	2020/07/30 09:38:48	66.8
276	2020/07/30 09:38:51	68.3
277	2020/07/30 09:38:54	69.9
278	2020/07/30 09:38:57	67.5
279	2020/07/30 09:39:00	65.8
280	2020/07/30 09:39:03	59.7

281	2020/07/30 09:39:06	59.1
282	2020/07/30 09:39:09	62.9
283	2020/07/30 09:39:12	62.8
284	2020/07/30 09:39:15	61.8
285	2020/07/30 09:39:18	73.3
286	2020/07/30 09:39:21	69.6
287	2020/07/30 09:39:24	62.1
288	2020/07/30 09:39:27	60.8
289	2020/07/30 09:39:30	60.1
290	2020/07/30 09:39:33	64.0
291	2020/07/30 09:39:36	59.2
292	2020/07/30 09:39:39	59.3
293	2020/07/30 09:39:42	60.4
294	2020/07/30 09:39:45	54.6
295	2020/07/30 09:39:48	52.9
296	2020/07/30 09:39:51	52.0
297	2020/07/30 09:39:54	52.6
298	2020/07/30 09:39:57	52.5
299	2020/07/30 09:40:00	51.1
300	2020/07/30 09:40:03	47.8

ST2

- Freq Weight : A
- Time Weight : SLOW
- Level Range : 40-100
- Max dB : 76.0 - 2020/07/31 11:39:14
- Level Range : 40-100
- SEL : 91.9
- Leq : 62.4
-

No.s	Date Time	(dB)
1	2020/07/31 11:38:14	67.9
2	2020/07/31 11:38:17	70.0
3	2020/07/31 11:38:20	67.9
4	2020/07/31 11:38:23	70.2
5	2020/07/31 11:38:26	68.4
6	2020/07/31 11:38:29	68.0
7	2020/07/31 11:38:32	68.2
8	2020/07/31 11:38:35	68.5
9	2020/07/31 11:38:38	67.3
10	2020/07/31 11:38:41	69.9
11	2020/07/31 11:38:44	68.0
12	2020/07/31 11:38:47	67.9
13	2020/07/31 11:38:50	66.6
14	2020/07/31 11:38:53	66.3
15	2020/07/31 11:38:56	67.3
16	2020/07/31 11:38:59	68.1
17	2020/07/31 11:39:02	67.5
18	2020/07/31 11:39:05	67.8
19	2020/07/31 11:39:08	70.1
20	2020/07/31 11:39:11	71.9
21	2020/07/31 11:39:14	72.0
22	2020/07/31 11:39:17	71.3
23	2020/07/31 11:39:20	65.2
24	2020/07/31 11:39:23	64.8
25	2020/07/31 11:39:26	62.6
26	2020/07/31 11:39:29	62.4
27	2020/07/31 11:39:32	62.2
28	2020/07/31 11:39:35	61.0
29	2020/07/31 11:39:38	61.4
30	2020/07/31 11:39:41	61.5
31	2020/07/31 11:39:44	62.6
32	2020/07/31 11:39:47	62.8
33	2020/07/31 11:39:50	61.2
34	2020/07/31 11:39:53	60.1
35	2020/07/31 11:39:56	59.7
36	2020/07/31 11:39:59	60.6
37	2020/07/31 11:40:02	59.1
38	2020/07/31 11:40:05	59.3
39	2020/07/31 11:40:08	59.6
40	2020/07/31 11:40:11	58.6
41	2020/07/31 11:40:14	56.0
42	2020/07/31 11:40:17	56.6
43	2020/07/31 11:40:20	58.6
44	2020/07/31 11:40:23	58.4
45	2020/07/31 11:40:26	58.3
46	2020/07/31 11:40:29	58.4
47	2020/07/31 11:40:32	59.2
48	2020/07/31 11:40:35	59.3
49	2020/07/31 11:40:38	59.5
50	2020/07/31 11:40:41	57.9
51	2020/07/31 11:40:44	59.4
52	2020/07/31 11:40:47	61.0
53	2020/07/31 11:40:50	64.0
54	2020/07/31 11:40:53	60.5
55	2020/07/31 11:40:56	59.4
56	2020/07/31 11:40:59	59.2
57	2020/07/31 11:41:02	64.6
58	2020/07/31 11:41:05	63.1
59	2020/07/31 11:41:08	60.1
60	2020/07/31 11:41:11	59.5
61	2020/07/31 11:41:14	58.4
62	2020/07/31 11:41:17	58.5
63	2020/07/31 11:41:20	61.5
64	2020/07/31 11:41:23	59.1
65	2020/07/31 11:41:26	57.2
66	2020/07/31 11:41:29	59.9
67	2020/07/31 11:41:32	60.1
68	2020/07/31 11:41:35	59.1
69	2020/07/31 11:41:38	56.3
70	2020/07/31 11:41:41	58.4
71	2020/07/31 11:41:44	58.7
72	2020/07/31 11:41:47	58.0
73	2020/07/31 11:41:50	56.0
74	2020/07/31 11:41:53	55.0
75	2020/07/31 11:41:56	56.0
76	2020/07/31 11:41:59	58.1
77	2020/07/31 11:42:02	59.3
78	2020/07/31 11:42:05	63.2
79	2020/07/31 11:42:08	61.1
80	2020/07/31 11:42:11	60.5
81	2020/07/31 11:42:14	58.3
82	2020/07/31 11:42:17	57.3
83	2020/07/31 11:42:20	59.5
84	2020/07/31 11:42:23	63.4

85	2020/07/31 11:42:26	64.6
86	2020/07/31 11:42:29	59.9
87	2020/07/31 11:42:32	57.8
88	2020/07/31 11:42:35	58.6
89	2020/07/31 11:42:38	60.0
90	2020/07/31 11:42:41	60.9
91	2020/07/31 11:42:44	59.3
92	2020/07/31 11:42:47	58.8
93	2020/07/31 11:42:50	59.3
94	2020/07/31 11:42:53	57.1
95	2020/07/31 11:42:56	55.0
96	2020/07/31 11:42:59	56.6
97	2020/07/31 11:43:02	60.4
98	2020/07/31 11:43:05	61.4
99	2020/07/31 11:43:08	60.0
100	2020/07/31 11:43:11	60.9
101	2020/07/31 11:43:14	60.1
102	2020/07/31 11:43:17	63.2
103	2020/07/31 11:43:20	62.7
104	2020/07/31 11:43:23	64.6
105	2020/07/31 11:43:26	63.3
106	2020/07/31 11:43:29	66.1
107	2020/07/31 11:43:32	65.2
108	2020/07/31 11:43:35	68.8
109	2020/07/31 11:43:38	68.8
110	2020/07/31 11:43:41	69.0
111	2020/07/31 11:43:44	67.7
112	2020/07/31 11:43:47	65.8
113	2020/07/31 11:43:50	64.1
114	2020/07/31 11:43:53	64.6
115	2020/07/31 11:43:56	65.2
116	2020/07/31 11:43:59	63.5
117	2020/07/31 11:44:02	63.5
118	2020/07/31 11:44:05	63.8
119	2020/07/31 11:44:08	63.4
120	2020/07/31 11:44:11	65.4
121	2020/07/31 11:44:14	62.1
122	2020/07/31 11:44:17	59.9
123	2020/07/31 11:44:20	59.3
124	2020/07/31 11:44:23	60.5
125	2020/07/31 11:44:26	59.8
126	2020/07/31 11:44:29	58.2
127	2020/07/31 11:44:32	56.2
128	2020/07/31 11:44:35	56.7
129	2020/07/31 11:44:38	59.5
130	2020/07/31 11:44:41	61.5
131	2020/07/31 11:44:44	58.7
132	2020/07/31 11:44:47	57.5
133	2020/07/31 11:44:50	58.6
134	2020/07/31 11:44:53	58.9
135	2020/07/31 11:44:56	61.9
136	2020/07/31 11:44:59	60.6
137	2020/07/31 11:45:02	57.8
138	2020/07/31 11:45:05	56.2
139	2020/07/31 11:45:08	56.7
140	2020/07/31 11:45:11	59.6
141	2020/07/31 11:45:14	57.9
142	2020/07/31 11:45:17	56.9
143	2020/07/31 11:45:20	58.7
144	2020/07/31 11:45:23	59.2
145	2020/07/31 11:45:26	62.6
146	2020/07/31 11:45:29	61.3
147	2020/07/31 11:45:32	58.4
148	2020/07/31 11:45:35	58.7
149	2020/07/31 11:45:38	56.4
150	2020/07/31 11:45:41	57.4
151	2020/07/31 11:45:44	62.9
152	2020/07/31 11:45:47	63.9
153	2020/07/31 11:45:50	60.3
154	2020/07/31 11:45:53	61.4
155	2020/07/31 11:45:56	60.9
156	2020/07/31 11:45:59	60.2
157	2020/07/31 11:46:02	61.0
158	2020/07/31 11:46:05	61.9
159	2020/07/31 11:46:08	62.6
160	2020/07/31 11:46:11	61.8
161	2020/07/31 11:46:14	61.5
162	2020/07/31 11:46:17	59.3
163	2020/07/31 11:46:20	58.9
164	2020/07/31 11:46:23	59.2
165	2020/07/31 11:46:26	59.0
166	2020/07/31 11:46:29	57.2
167	2020/07/31 11:46:32	57.9
168	2020/07/31 11:46:35	58.5
169	2020/07/31 11:46:38	59.8
170	2020/07/31 11:46:41	58.2
171	2020/07/31 11:46:44	57.8
172	2020/07/31 11:46:47	54.9
173	2020/07/31 11:46:50	53.5
174	2020/07/31 11:46:53	54.0
175	2020/07/31 11:46:56	55.1
176	2020/07/31 11:46:59	55.9
177	2020/07/31 11:47:02	57.5
178	2020/07/31 11:47:05	57.2
179	2020/07/31 11:47:08	56.6
180	2020/07/31 11:47:11	58.7
181	2020/07/31 11:47:14	56.7
182	2020/07/31 11:47:17	61.0

183	2020/07/31	11:47:20	62.0
184	2020/07/31	11:47:23	59.7
185	2020/07/31	11:47:26	61.9
186	2020/07/31	11:47:29	63.7
187	2020/07/31	11:47:32	60.6
188	2020/07/31	11:47:35	60.1
189	2020/07/31	11:47:38	58.3
190	2020/07/31	11:47:41	59.3
191	2020/07/31	11:47:44	58.9
192	2020/07/31	11:47:47	58.0
193	2020/07/31	11:47:50	59.6
194	2020/07/31	11:47:53	63.0
195	2020/07/31	11:47:56	61.5
196	2020/07/31	11:47:59	60.9
197	2020/07/31	11:48:02	60.0
198	2020/07/31	11:48:05	58.7
199	2020/07/31	11:48:08	58.9
200	2020/07/31	11:48:11	59.2
201	2020/07/31	11:48:14	57.0
202	2020/07/31	11:48:17	55.7
203	2020/07/31	11:48:20	56.9
204	2020/07/31	11:48:23	60.3
205	2020/07/31	11:48:26	60.7
206	2020/07/31	11:48:29	59.7
207	2020/07/31	11:48:32	58.8
208	2020/07/31	11:48:35	58.2
209	2020/07/31	11:48:38	58.8
210	2020/07/31	11:48:41	58.7
211	2020/07/31	11:48:44	59.2
212	2020/07/31	11:48:47	62.0
213	2020/07/31	11:48:50	62.4
214	2020/07/31	11:48:53	60.6
215	2020/07/31	11:48:56	62.7
216	2020/07/31	11:48:59	64.2
217	2020/07/31	11:49:02	61.2
218	2020/07/31	11:49:05	60.2
219	2020/07/31	11:49:08	59.8
220	2020/07/31	11:49:11	61.8
221	2020/07/31	11:49:14	61.6
222	2020/07/31	11:49:17	61.2
223	2020/07/31	11:49:20	61.6
224	2020/07/31	11:49:23	60.0
225	2020/07/31	11:49:26	60.6
226	2020/07/31	11:49:29	61.9
227	2020/07/31	11:49:32	58.7
228	2020/07/31	11:49:35	56.3
229	2020/07/31	11:49:38	54.5
230	2020/07/31	11:49:41	55.7
231	2020/07/31	11:49:44	57.3
232	2020/07/31	11:49:47	59.5
233	2020/07/31	11:49:50	60.2
234	2020/07/31	11:49:53	59.8
235	2020/07/31	11:49:56	60.7
236	2020/07/31	11:49:59	59.8
237	2020/07/31	11:50:02	59.7
238	2020/07/31	11:50:05	60.6
239	2020/07/31	11:50:08	59.8
240	2020/07/31	11:50:11	58.3
241	2020/07/31	11:50:14	59.6
242	2020/07/31	11:50:17	58.4
243	2020/07/31	11:50:20	58.9
244	2020/07/31	11:50:23	58.7
245	2020/07/31	11:50:26	59.3
246	2020/07/31	11:50:29	63.2
247	2020/07/31	11:50:32	62.5
248	2020/07/31	11:50:35	60.4
249	2020/07/31	11:50:38	60.1
250	2020/07/31	11:50:41	60.0
251	2020/07/31	11:50:44	58.3
252	2020/07/31	11:50:47	57.7
253	2020/07/31	11:50:50	60.4
254	2020/07/31	11:50:53	59.4
255	2020/07/31	11:50:56	58.3
256	2020/07/31	11:50:59	59.3
257	2020/07/31	11:51:02	58.3
258	2020/07/31	11:51:05	61.6
259	2020/07/31	11:51:08	60.9
260	2020/07/31	11:51:11	63.3
261	2020/07/31	11:51:14	62.0
262	2020/07/31	11:51:17	60.3
263	2020/07/31	11:51:20	60.7
264	2020/07/31	11:51:23	61.2
265	2020/07/31	11:51:26	59.6
266	2020/07/31	11:51:29	58.7
267	2020/07/31	11:51:32	58.1
268	2020/07/31	11:51:35	59.4
269	2020/07/31	11:51:38	57.8
270	2020/07/31	11:51:41	55.9
271	2020/07/31	11:51:44	56.9
272	2020/07/31	11:51:47	58.5
273	2020/07/31	11:51:50	58.7
274	2020/07/31	11:51:53	59.5
275	2020/07/31	11:51:56	59.1
276	2020/07/31	11:51:59	57.0
277	2020/07/31	11:52:02	56.8
278	2020/07/31	11:52:05	58.9
279	2020/07/31	11:52:08	63.1
280	2020/07/31	11:52:11	61.3

281	2020/07/31 11:52:14	60.3
282	2020/07/31 11:52:17	59.3
283	2020/07/31 11:52:20	59.4
284	2020/07/31 11:52:23	58.5
285	2020/07/31 11:52:26	56.9
286	2020/07/31 11:52:29	58.3
287	2020/07/31 11:52:32	57.3
288	2020/07/31 11:52:35	57.8
289	2020/07/31 11:52:38	59.7
290	2020/07/31 11:52:41	57.8
291	2020/07/31 11:52:44	57.5
292	2020/07/31 11:52:47	60.7
293	2020/07/31 11:52:50	60.1
294	2020/07/31 11:52:53	62.4
295	2020/07/31 11:52:56	63.3
296	2020/07/31 11:52:59	65.0
297	2020/07/31 11:53:02	68.4
298	2020/07/31 11:53:05	66.6
299	2020/07/31 11:53:08	65.4
300	2020/07/31 11:53:11	62.0

Roadway Construction Noise Model (RCNM),Version 1.1

Report date: 9/18/2020
Case Description: Clawiter Industrial Project

---- Receptor #1 ----

Description	Land Use	Baselines (dBA) Daytime	Evening	Night
Industrial	Industrial	86	86	86

Description	Impact Device	Usage(%)	Equipment Spec Lmax (dBA)	Actual Lmax (dBA)	Receptor Distance (feet)	Estimated Shielding (dBA)
Excavator	No	40		80.7	25	0

Results

		Calculated (dBA) *Lmax	Leq
Equipment			
Excavator		86.7	82.8
	Total	86.7	82.8

*Calculated Lmax is the Loudest value.

Roadway Construction Noise Model (RCNM),Version 1.1

Report date: 9/18/2020
Case Description: Clawiter Industrial Project

				---- Receptor #1 ----
		Baselines (dBA)		
Description	Land Use	Daytime	Evening	Night
Industrial	Industrial	86	86	86

			Equipment			
			Spec	Actual	Receptor	Estimated
		Impact	Lmax	Lmax	Distance	Shielding
Description		Device	Usage(%)	(dBA)	(dBA)	(feet)	(dBA)
Excavator		No	40		80.7	100	0

Calculated (dBA)

Equipment		*Lmax	Leq
Excavator		74.7	70.7
	Total	74.7	70.7

*Calculated Lmax is the Loudest value.

38AUZ/D 50 Hz
Commercial Split Systems
Air Conditioning Condensing Units
18.3 kW to 59.2 kW

Carrier
turn to the experts

Product Data

Gemini

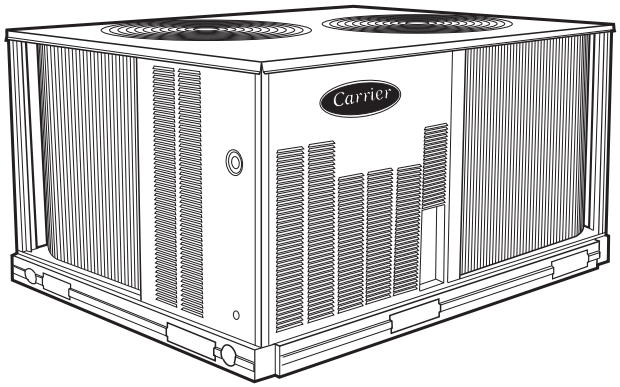

C09227

38AUZ07-08 shown

Certified to ISO 9001

Carrier's air-cooled air conditioning split systems:

- provide a logical solution for commercial needs
- have a rugged, dependable construction
- are available in single and circuit scroll compressor capacity control
- have cooling capability up to 52°C (125°F) ambient and down to 2°C (35°F) ambient standard

FEATURES/BENEFITS

These dependable outdoor air cooled condensing units match Carrier's indoor-air handlers to meet a wide selection of cooling solutions.

Constructed for long life

The 38AUZ single circuit and 38AUD dual circuit, scroll compressor models are designed and built to last. The high efficient designed outdoor coil construction allows for a more efficient design in a smaller cabinet size that utilizes an overall reduction in refrigerant charge. Where conditions require, special coil coating coil protection option is available. Cabinets are constructed of prepainted galvanized steel, delivering unparalleled protection from the environment. Inside and outside surfaces are protected to ensure long life, good looks, and reliable operation. Safety controls are used for enhanced system protection and reliability.

Each unit utilizes the Comfort Alert diagnostic and troubleshoot control system. This protects the units operation and provides valuable diagnostic information when required.

Factory-installed options (FIOPs)

Certified and pre-engineered factory-installed options (FIOPs) allow units to be installed in less time, thereby reducing installed cost. FIOPs include:

- low ambient controls which provide cooling operation down to -29°C (-20°F) ambient temperatures
- non-fused disconnect
- special coil coating coil protection
- louvered hail guard

Efficient operation

These air cooled condensing units will provide EER's up to 12.6 (tested in accordance with ASHRAE 90.1 standards).

This high efficiency will help reduce overall operating cost and energy consumption.

Controls for performance dependability

The 38AU condensing units offer operating controls and components designed for performance dependability. The high efficiency hermetic scroll compressor is engineered for long life and durability. The compressors include vibration isolation for quiet operation. The high-pressure switch protects the entire refrigeration system from abnormally high operating pressures. A low-pressure switch protects the system from loss of charge. These units also include anti-short-cycling protection, which helps to protect the units against compressor failure.

All units include a crankcase heater to eliminate liquid slugging at start-up. Each unit comes standard with the Comfort Alert™ control system. This provides:

- System Go LED indicator
- Fault LED indicator
- Compressor fault LED indicator
- Phase loss protection
- Phase reversal protection
- Safety pressure indicator
- Anti-short cycle protection

Innovative Carrier 40RU packaged air handlers are custom matched to 38AUZ/D condensing units

Information on matching 40RU DX packaged air handler follows for convenience. See separate product data for more details. The 40RU Series has excellent fan performance, efficient direct-expansion (DX) coils, a unique combination of indoor-air quality features, and is easy to install. Its versatility and state-of-the-art features help to ensure economical performance of the split system both now and in the future.

Indoor-air quality (IAQ) features

The unique combination of IAQ features in the 40RU Series air handlers help to ensure that only clean, fresh, conditioned air is delivered to the occupied space.

Direct-expansion (DX) 4 row cooling coils prevent the build-up of humidity in the room, even during part-load conditions.

Standard 2-in. (51mm) disposable filters remove dust and airborne particles from the occupied space for cleaner air.

The pitched, non-corroding drain pan can be adjusted for a right-hand or left-hand connection to suit many applications and provide positive drainage and prevent standing condensate.

The accessory economizer can provide ventilation air to improve indoor-air quality by using demand control ventilation. When used in conjunction with Carrier Comfort System and CO_2 sensors, the economizer admits fresh outdoor air to replace stale, recirculated indoor air.

Economy

The 40RU Series packaged air handlers provide reduced installation expense and energy-efficient performance.

Quick installation is ensured by the multipoise design. Units can be installed in either the horizontal or vertical configuration without modifications. Fan motors and contactors are pre-wired and thermostatic expansion valves (TXVs) are factory-installed on all 40RU models.

High efficiency, precision-balanced fans minimize air turbulence, surging, and unbalanced operation, cutting operation expenses.

The economizer accessory precisely controls the blend of outdoor air and room air to achieve comfort levels. When the outside air enthalpy is suitable, outside air dampers can fully open to provide "free" cooling without energizing mechanical cooling.

Rugged dependability

The 40RU series units are made to last. The die-formed galvanized steel panels ensure structural integrity under all operating conditions. Galvanized steel fan housings are securely mounted to a die-formed galvanized steel fan deck.

Rugged pillow-block bearings (40RU14) are securely fastened to the solid steel fan shaft with split collets and clamp locking devices. Smaller unit sizes have spider-type bearings.

Coil flexibility

Model 40RU direct- expansion coils have galvanized steel casings; inlet and outlet connections are on the same end. The coils are designed for use with Puron (R-410A) refrigerant and have $^3/_8$-in. diameter copper tubes mechanically bonded to aluminum sine-wave fins. The coils include matched, factory-installed thermostatic expansion valves (TXVs) with matching distributor nozzles and offers a removable power element and extended connections.

Easier installation and service

The multipoise design and component layout ensures quick unit installation and operation. Units can be converted from horizontal to vertical operation by simply repositioning the unit. Drain pan connections are duplicated on both sides of the unit. The filters, motor, drive, TXVs, and coil connections are all easily accessed by removing a single side panel.

MODEL NUMBER NOMENCLATURE

1	2	3	4	5	6	7	8	9	10	11	12	13	14	15	16	17	18
3	8	A	U	Z	A	0	7	A	0	A	9	–	0	A	0	A	0

Model Type
Commercial Air Cooled Cond. Unit
Puron® R–410A Refrigerant

Type of Coil
D = Dual Circuit
Z = Single Circuit

Refrigerant Options
A = Standard
B = Low Ambient Controls

Nominal Tonnage
07 = 18.3 kW (5.2 Tons)
08 = 23.2 kW (6.6 Tons)
12 = 29.1 kW (8.3 Tons)
14 = 35.2 kW (10.0 Tons)
16 = 45.8 kW (13.0 Tons)
25 = 59.2 kW (16.8 Tons)

Factory Assigned
A = Default

Factory Assigned
0 = Default

Voltage
9 = 400–3–50

Design Rev
– = Factory Assigned

Base Unit Controls
0 = Standard Electro–Mechanical Controls

Factory Assigned
A = Default

Service Options
0 = None

Electrical Options
A = None
C = Non–Fused Disconnect

Brand / Packaging
0 = Standard
1 = LTL

Coil Options (Condenser)
With Round Tube/Plate Fin Design
All models except 14 size (12.5 Ton)
A = Al/Cu Standard
B = Pre Coat Al/Cu
C = E–Coat Al/Cu
E = Cu/Cu
M = Al/Cu Standard with louvered hail guard
N = Pre Coat Al/Cu with louvered hail guard
P = E–Coat Al/Cu with louvered hail guard
R = Cu/Cu – Louvered hail guard
Coil Options (Condenser)
With All Aluminum – NOVATION Design (07–16 sizes)
G = Al/Al Standard
K = E–Coat Al/Al
T = Al/Al with louvered hail guard
W = E–Coat Al/Al with louvered hail guard

AHRI CAPACITY RATINGS

UNIT	COOLING STAGES	NOM. CAPACITY (TONS)	NET COOLING CAPACITY (MBH)	TOTAL POWER (kW)	EER
38AUZ07/40RU07	1	5	62.7	5.1	12.2
38AUZ08/40RU08	1	6.3	79.3	6.9	11.5
38AUD12/40RU12	2	8.3	103.0	8.2	12.6
38AUD14/40RU14	2	10.4	125.0	10.9	11.5
38AUD16/40RU16	2	12.5	162.0	13.5	12.0
38AUD25/40RU25	2	16.7	202.2	16.6	12.2

LEGEND

AHRI – Air Conditioning, Heating and Refrigeration Institute
ASHRAE – American Society of Heating, Refrigerating and Air Conditioning, Inc.
EER – Energy Efficiency Ratio
IEER – Integrated Energy Efficiency Ratio

NOTES

1. Rated in accordance with AHRI Standard 340/360, as appropriate.
2. Ratings are based on:
   Cooling Standard: 27°C (80°F) db, 19°C (67°F) wb indoor air temp and 35°C (95°F) db outdoor air temp.
3. All units comply with ASHRAE 90.1 Energy Standard for minimum EER and IEER requirements.

38AU

SOUND POWER LEVELS, dB

UNIT	COOLING STAGES	OUTDOOR SOUND (dB)								
		A–WEIGHTED	63	125	250	500	1000	2000	4000	8000
NOVATION – All Aluminum Coil Design										
38AUZ07	1	82	78.7	91.2	84.4	79.7	76.9	73.5	71.9	67.5
38AUZ08	1	81	81.7	89.7	82.6	77.6	74.4	70.3	68.0	64.2
38AUD12	2	78	79.2	81.1	78.4	75.0	72.9	68.2	66.4	68.2
38AUD14	2	79	76.2	78.6	78.1	75.1	75.2	71.4	67.9	65.1
38AUD16	2	80	90.3	81.8	78.0	76.7	75.2	70.5	66.4	61.9
RTPF – Round Tube/Plate Fin Coil Design										
38AUZ07	1	83	81.7	88.2	84.0	79.7	78.1	74.0	71.4	68.0
38AUZ08	1	83	81.7	88.2	84.0	79.7	78.1	74.0	71.4	68.0
38AUD12	2	80	76.0	79.9	79.8	77.4	75.6	69.8	67.8	66.4
38AUD16	2	83	86.7	81.2	78.9	80.4	78.0	74.2	70.2	65.0
38AUD25	2	85	91.0	85.0	80.0	86.0	79.0	73.0	68.0	63.0

NOTE: Outdoor sound data is measure in accordance with AHRI standard 270–2008.
LEGEND:
dB = Decibel

PHYSICAL DATA

SINGLE CIRCUIT MODELS with RTPF – Round Tube/Plate Fin Coil Design		
	38AUZ07	**38AUZ08**
Refrigeration System		
# Circuits / # Comp. / Type	1 / 1 / Scroll	1 / 1 / Scroll
R–410a shipping charge A/B (lbs, 50 Hz)	11	13
System charge w/ fan coil* (50 Hz)	14	17
Metering device	TXV	TXV
High–press. Trip / Reset (psig)	630 / 505	630 / 505
Low–press. Trip / Reset (psig)	54 / 117	54 / 117
Cond. Coil		
Material	Al/Cu	Al/Cu
Coil type	RTPF	RTPF
Rows / FPI	2 / 17	2 / 17
Total face area (ft2)	17.5	17.5
Cond. fan / motor		
Qty / Motor drive type	2 / direct	2 / direct
Motor HP / RPM	1/4 / 1100	1/4 / 1100
Fan diameter (in)	22	22
Nominal Airflow (cfm)	6000	6000
Watts (total)	610	610
Piping Connections		
Qty / Suction (in. ODS)	1 / 1 1/8	1 / 1 1/8
Qty / Liquid (in. ODS)	1 / 3/8	1 / 1/2

SINGLE CIRCUIT MODELS with NOVATION – All Aluminum coil Design		
	38AUZ07	**38AUZ08**
Refrigeration System		
# Circuits / # Comp. / Type	1 / 1 / Scroll	1 / 1 / Scroll
R–410a shipping charge A/B (lbs)	4.4	4.9
System charge w/ fan coil	8.4	10.2
System charge w/ fan coil (50hz)	9.0	12.3
Metering device	TXV	TXV
High–press. Trip / Reset (psig)	630 / 505	630 / 505
Low–press. Trip / Reset (psig)	54 / 117	54 / 117
Cond. Coil		
Material	Al	Al
Coil type	microchannel	microchannel
Rows / FPI	1 / 17	1 / 17
total face area (ft2)	17.5	20.5
Cond. fan / motor		
Qty / Motor drive type	2 / direct	2 / direct
Motor HP / RPM	1/4 / 1100	1/4 / 1100
Fan diameter (in)	22	22
Nominal Airflow (cfm)	6,000	6,000
Watts (total)	610	610

RTPF – Round tube /plate fin design

* Approximate system charge with about 25 ft piping of sizes indicated with matched 40RU.

PHYSICAL DATA (CONT)

38AU

DUAL CIRCUIT MODELS with RTPF – Round Tube/Plate Fin Coil Design			
	38AUD12	**38AUD16**	**38AUD25**
Refrigeration System			
# Circuits / # Comp. / Type	2 / 2 / Scroll	2 / 2 / Scroll	2 / 2 / Scroll
R–410a shipping charge A/B (lbs, 50 Hz)	8.0 / 8.0	16.0 / 16.0	14.0 / 14.0
System charge w/ fan coil* (50 Hz)	11.0 / 10.0	22.0 / 22.0	19.0 / 19.0
Metering device	TXV	TXV	TXV
High–press. Trip / Reset (psig)	630 / 505	630 / 505	630 / 505
Low–press. Trip / Reset (psig)	54 / 117	54 / 117	54 / 117
Compressor			
Model	ZP51 (2)	ZP83 (2)	ZP103 (2)
Oil Charge A/B (oz)	42 / 42	60 / 60	110 / 110
Speed rpm 50 Hz	2900	2900	2900
Cond. Coil			
Material	Al/Cu	Al/Cu	Al/Cu
Coil type	RTPF	RTPF	RTPF
Rows / FPI	2 / 17	2 / 17	2 / 17
Total face area (ft2)	25.1	23.5 x 2	25.0 x 2
Cond. fan / motor			
Qty / Motor drive type	2 / direct	3 / direct	4 / direct
Motor HP / RPM	1/4 / 1100	1/4 / 1100	1/4 / 1100
Fan diameter (in)	22	22	22
Nominal Airflow (cfm)	6000	9000	12000
Watts (total)	610	970	1150
Piping Connections			
Qty / Suction (in. ODS)	2 / 1 1/8	2 / 1 3/8	2 / 1 3/8
Qty / Liquid (in. ODS)	2 / 3/8	2 / 1/2	2 / 1/2

DUAL CIRCUIT MODELS with NOVATION – All Aluminum coil Design			
	38AUD12	**38AUD14**	**38AUD16**
Refrigeration System			
# Circuits / # Comp. / Type	2/2/Scroll	2/2/Scroll	2/2/Scroll
R–410a shipping charge A/B (lbs)	3.0 /3.1	3.7/3.9	6.1/6.1
System charge w/ fan coil	7.4 / 7.4	10.8 / 10.8	12.0/12.0
System charge w/ fan coil (50hz)	7.5 / 7.5	11.2 / 11.2	14.0 /14.0
Metering device	TXV	TXV	TXV
High–press. Trip / Reset (psig)	630 / 505	630 / 505	630 / 505
Low–press. Trip / Reset (psig)	54 / 117	54 / 117	54 / 117
Cond. Coil			
Material	Al	Al	Al
Coil type	microchannel	microchannel	microchannel
Rows / FPI	1 / 17	1 / 17	1 / 17
total face area (ft2)	25.0	31.8	25.0 x 2
Cond. fan / motor			
Qty / Motor drive type	2 / direct	2 / direct	3 / direct
Motor HP / RPM	1/4 / 1100	1/4 / 1100	1/4 / 1100
Fan diameter (in)	22	22	22
Nominal Airflow (cfm)	6,000	6,000	10,000
Watts (total)	610	610	970

RTPF – Round tube /plate fin design

* Approximate system charge with about 25 ft piping of sizes indicated with matched 40RU.

DIMENSIONS

UNIT	STD. UNIT WT.		CORNER A		CORNER B		CORNER C		CORNER D		CENTER OF GRAVITY			UNIT HEIGHT
	KG.	LBS.	KG.	LBS.	KG.	LBS.	KG.	LBS.	KG.	LBS.	X	Y	Z	H
38AUZ-07 (MCHX)	149	328	58	128	31	68	28	62	32	70	21 [533.4]	19 [482.6]	13 [330.2]	42-3/8 [1076.0]
38AUZ-08 (MCHX)	160	353	63	138	33	72	29	65	35	78	19 [482.6]	23 [584.2]	13 [330.2]	42-3/8 [1076.0]
38AUD-12 (MCHX)	226	499	88	193	50	111	38	72	56	123	20 [508.0]	23 [584.2]	15 [381.0]	50-3/8 [1279.2]
38AUD-14 (MCHX)	229	505	86	190	40	88	34	76	68	151	20 [508.0]	24 [609.6]	15 [381.0]	50-3/8 [1279.2]
38AUZ-07 (RTPF)	176	389	64	141	44	96	28	62	41	91	18 [457.2]	24 [609.6]	21 [533.4]	42-3/8 [1076.0]
38AUZ-08 (RTPF)	177	391	64	142	44	96	28	62	41	91	18 [457.2]	24 [609.6]	21 [533.4]	42-3/8 [1076.0]
38AUD-12 (RTPF)	234	516	84	185	53	117	38	83	59	131	19 [482.6]	23 [584.2]	24 [609.6]	50-3/8 [1279.2]

CG CENTER OF GRAVITY

DIRECTION OF AIR FLOW

DIMENSIONS IN [ ] ARE IN MM

SERVICE VALVE CONNECTIONS		
UNIT	SUCTION	LIQUID
38AUZ07	1-1/8 [28.6]	3/8 [9.5]
38AUZ08	1-1/8 [28.6]	1/2 [12.7]
38AUD12	1-1/8 [28.6]	3/8 [9.5]
38AUD14	1-3/8 [34.9]	1/2 [12.7]

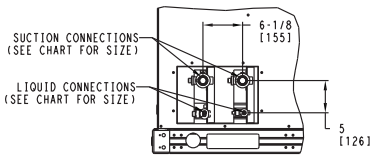

RIGHT SIDE VIEW
(FOR 38AUD SYSTEMS)

38AU

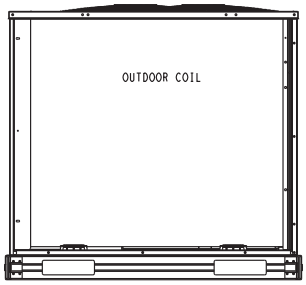

PLAN VIEW

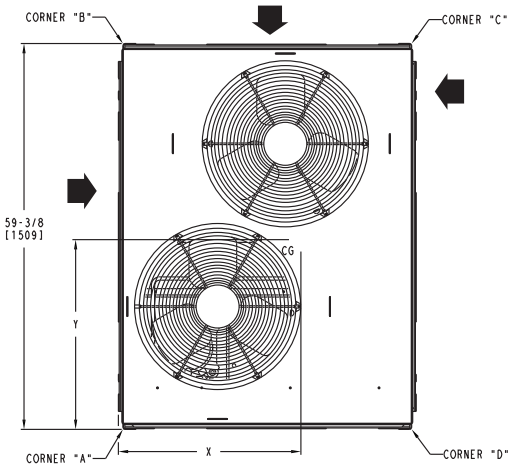

TOP VIEW

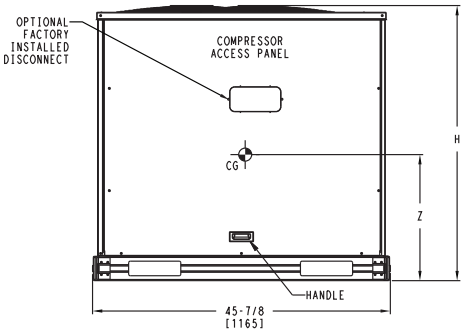

FRONT VIEW

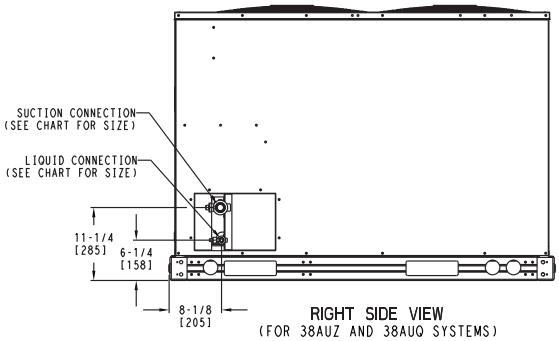

RIGHT SIDE VIEW
(FOR 38AUZ AND 38AUQ SYSTEMS)

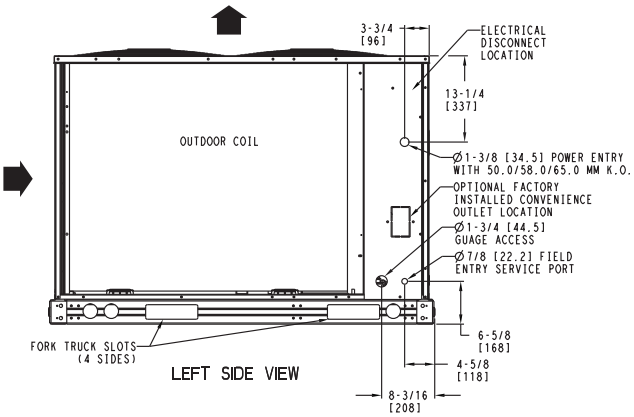

LEFT SIDE VIEW

NOTES:

1. MINIMUM CLEARANCE (LOCAL CODES OR JURISDICTION MAY PREVAIL):
   A. BOTTOM TO COMBUSTIBLE SURFACES: 0 INCHES.
   B. OUTDOOR COIL, FOR PROPER AIR FLOW: 36 INCHES ONE SIDE, 12 INCHES THE OTHER. THE SIDE GETTING THE GREATER CLEARANCE IS OPTIONAL.
   C. OVERHEAD: 60 INCHES, TO ASSURE PROPER OUTDOOR FAN OPERATION.
   D. BETWEEN UNITS: CONTROL BOX SIDE, 42 INCHES PER NEC.
   E. BETWEEN UNIT AND UNGROUNDED SURFACES: CONTROL BOX SIDE, 36 INCHES PER NEC.
   F. BETWEEN UNIT AND BLOCK OR CONCRETE WALLS AND OTHER GROUNDED SURFACES: CONTROL BOX SIDE, 42 INCHES PER NEC.

2. WITH EXCEPTION OF THE CLEARANCE FOR THE OUTDOOR COIL AS STATED IN NOTE 1B, A REMOVABLE FENCE OR BARRICADE REQUIRES NO CLEARANCE.

3. UNITS MAY BE INSTALLED ON COMBUSTIBLE FLOORS MADE FROM WOOD OR CLASS A, B OR C ROOF COVERING MATERIAL.

C10590

DIMENSIONS (cont.)

UNIT	STD. UNIT WT.		CORNER A		CORNER B		CORNER C		CORNER D		CENTER OF GRAVITY			UNIT HEIGHT
	KG.	LBS.	KG.	LBS.	KG.	LBS.	KG.	LBS.	KG.	LBS.	X	Y	Z	H
38AUD16 (MCHX)	288	633	100	220	61	134	61.5	135	65.5	144	38 [965.2]	19 [482.6]	15 [381]	50-3/8 [1279.2]
38AUD16 (RTPF)	332	731	107	237	78	172	61	135	84	186	38 [965.2]	19 [482.6]	17 [431.8]	50-3/8 [1279.2]

CG CENTER OF GRAVITY

DIRECTION OF AIR FLOW

DIMENSIONS IN [ ] ARE IN MM

SERVICE VALVE CONNECTIONS			QTY
UNIT	SUCTION	LIQUID	
38AUD16	1-3/8 [34.9]	1/2 [12.7]	2 EA

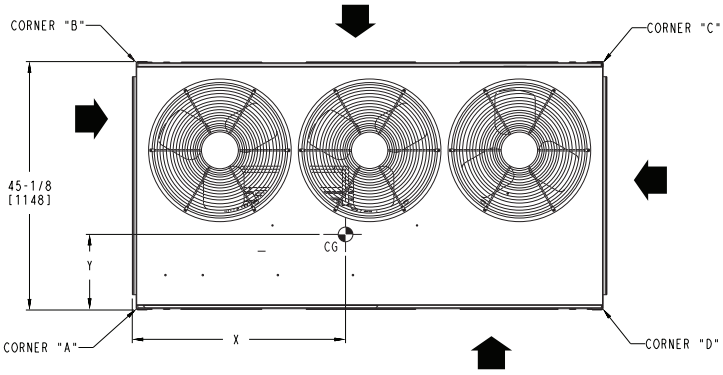

TOP VIEW

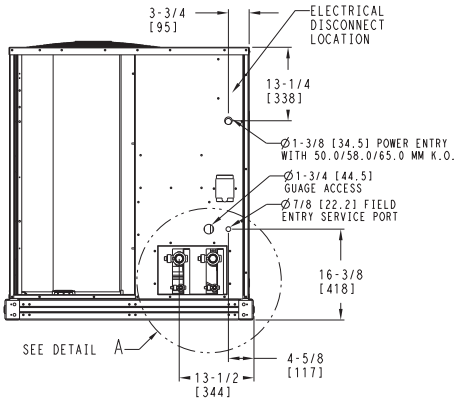

LEFT SIDE VIEW FOR 38AUD SYSTEMS

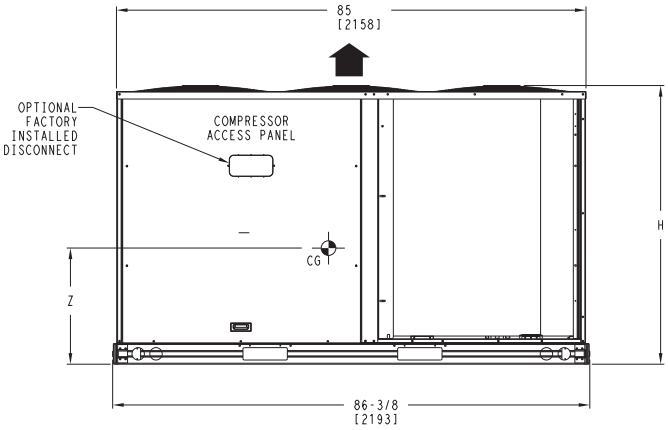

FRONT VIEW

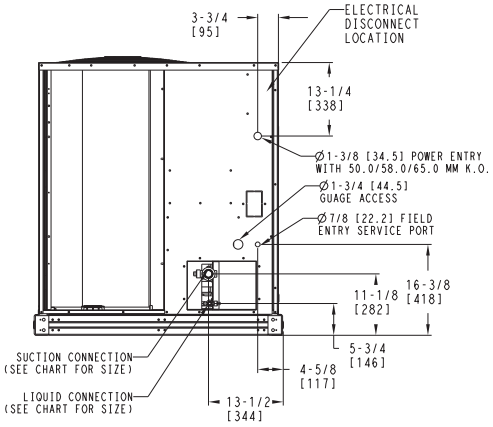

LEFT SIDE VIEW

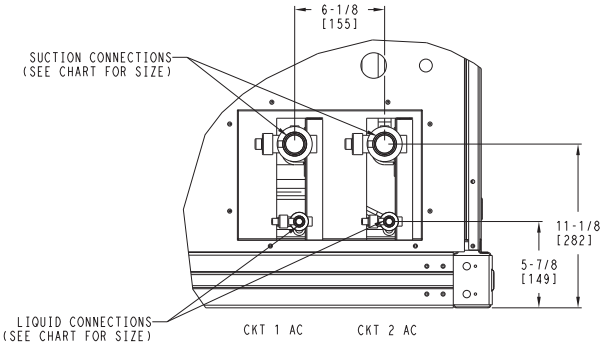

DETAIL A
(NOTE POSITION OF CKT 1)

NOTES:
1. MINIMUM CLEARANCE (LOCAL CODES OR JURISDICTION MAY PREVAIL):
   A. BOTTOM TO COMBUSTIBLE SURFACES: 0 INCHES.
   B. OUTDOOR COIL, FOR PROPER AIR FLOW: 36 INCHES ONE SIDE, 12 INCHES THE OTHER. THE SIDE GETTING THE GREATER CLEARANCE IS OPTIONAL.
   C. OVERHEAD: 60 INCHES, TO ASSURE PROPER OUTDOOR FAN OPERATION.
   D. BETWEEN UNITS: CONTROL BOX SIDE, 42 INCHES PER NEC.
   E. BETWEEN UNIT AND UNGROUNDED SURFACES: CONTROL BOX SIDE, 36 INCHES PER NEC.
   F. BETWEEN UNIT AND BLOCK OR CONCRETE WALLS AND OTHER GROUNDED SURFACES: CONTROL BOX SIDE, 42 INCHES PER NEC.
2. WITH EXCEPTION OF THE CLEARANCE FOR THE OUTDOOR COIL AS STATED IN NOTE 1B, A REMOVABLE FENCE OR BARRICADE REQUIRES NO CLEARANCE.
3. UNITS MAY BE INSTALLED ON COMBUSTIBLE FLOORS MADE FROM WOOD OR CLASS A, B OR C ROOF COVERING MATERIAL.

C10591

DIMENSIONS (cont.)

UNIT	STD. UNIT WT.		CORNER A		CORNER B		CORNER C		CORNER D		CENTER OF GRAVITY			UNIT HEIGHT
	KG.	LBS.	KG.	LBS.	KG.	LBS.	KG.	LBS.	KG.	LBS.	X	Y	Z	H
38AUD25 (RTPF)	444	978	163	360	85	188	67	147	128	283	38 [965.2]	23 [584.2]	17 [431.8]	50-3/8 [1279.2]

CG CENTER OF GRAVITY

DIRECTION OF AIR FLOW

DIMENSIONS IN [ ] ARE IN MM

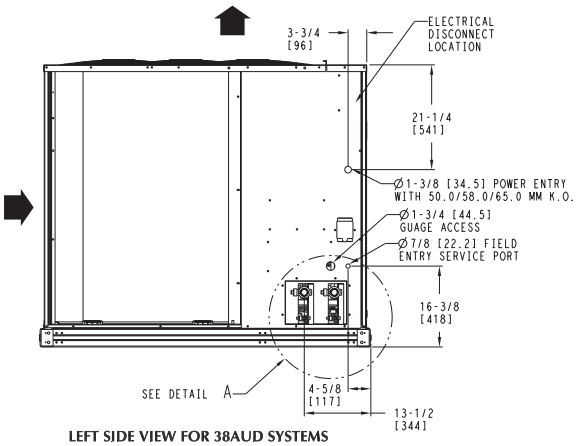

LEFT SIDE VIEW FOR 38AUD SYSTEMS

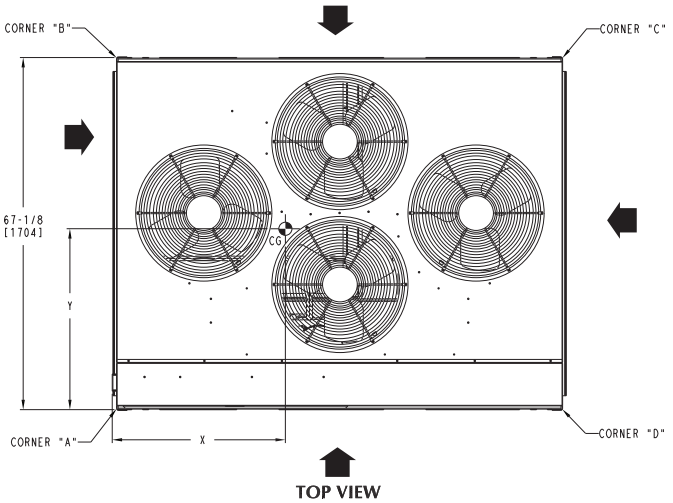

TOP VIEW

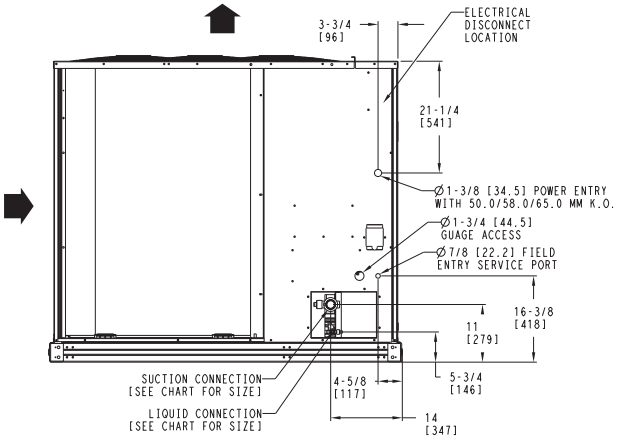

LEFT SIDE VIEW

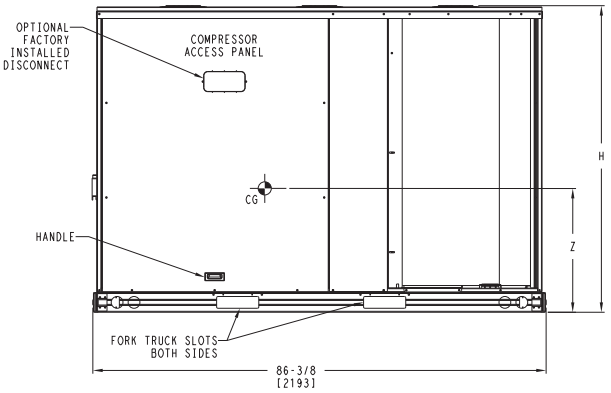

FRONT VIEW

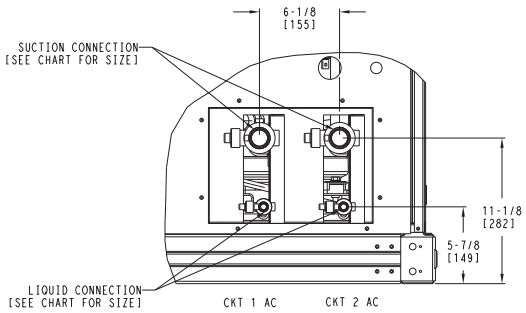

DETAIL A
(NOTE POSITION OF CKT 1)

NOTES:
1. MINIMUM CLEARANCE (LOCAL CODES OR JURISDICTION MAY PREVAIL):
   A. BOTTOM TO COMBUSTIBLE SURFACES: 0 INCHES.
   B. OUTDOOR COIL, FOR PROPER AIR FLOW: 36 INCHES ONE SIDE, 12 INCHES THE OTHER. THE SIDE GETTING THE GREATER CLEARANCE IS OPTIONAL.
   C. OVERHEAD: 60 INCHES, TO ASSURE PROPER OUTDOOR FAN OPERATION.
   D. BETWEEN UNITS: CONTROL BOX SIDE, 42 INCHES PER NEC.
   E. BETWEEN UNIT AND UNGROUNDED SURFACES: CONTROL BOX SIDE, 36 INCHES PER NEC.
   F. BETWEEN UNIT AND BLOCK OR CONCRETE WALLS AND OTHER GROUNDED SURFACES: CONTROL BOX SIDE, 42 INCHES PER NEC.
2. WITH EXCEPTION OF THE CLEARANCE FOR THE OUTDOOR COIL AS STATED IN NOTE 1B, A REMOVABLE FENCE OR BARRICADE REQUIRES NO CLEARANCE.
3. UNITS MAY BE INSTALLED ON COMBUSTIBLE FLOORS MADE FROM WOOD OR CLASS A, B OR C ROOF COVERING MATERIAL.

SERVICE VALVE CONNECTIONS			QTY
UNIT	SUCTION	LIQUID	
38AUD25	1-3/8 [34.9]	1/2 [12.7]	2 EA

C10592

38AU

38AUZ/D OPTIONS AND ACCESSORIES

ITEM	OPTION*	ACCESSORY†
Disconnect Switch (non-fused)	X	
Special–coated Coil Protection	X	
Low Ambient Temperature MotorMaster I® Control	X	X
Wired Condenser Coil Grille (Novation 07–14 models only)		X
Louvered Hail Guard	X	X
Programmable Thermostats		X

* Factory-installed option.
† Field-installed accessory.

38AUZ/38AUD factory-installed options

E-coated aluminum-fin coils have a flexible and durable epoxy coating uniformly applied to all coil surfaces. Unlike brittle phenolic dip and bake coatings, E-coating provides superior protection with unmatched flexibility, edge coverage, metal adhesion, thermal performance, and most importantly, corrosion resistance.

E-coated coils provide this protection since all coil surfaces are completely encapsulated from environmental contamination. This coating is especially suitable in industrial environments.

Pre-coated coils (RTPF coils only) provide protection in mild coastal environments.

–29°C (–20°F) low-ambient temperature kit option (MotorMaster I®) controls outdoor-fan motor operation to maintain the correct head pressure at low outdoor ambient temperatures.

Louvered hail guard package protects coils against damage from flying debris and hail.

Non-fused disconnect switch is used to remove power locally at the condensing unit. This switch also includes a power lockout capability to protect the service person. This lockout switch saves the service person time and effort because there is no need to access a distant disconnect switch while servicing the unit.

NOTE: Non-fused disconnect switch cannot be used when unit MOCP electrical rating exceeds 80 amps.

38AUZ/D field-installed accessories

–29°C (–20°F) low-ambient temperature kit accessory (MotorMaster I®) controls outdoor-fan motor operation to maintain the correct head pressure at low outdoor ambient temperatures.

Louvered hail guard package protects coils against damage from flying debris and hail.

Condenser coil grille package protects condensing unit coil from impact by large objects and vandalism.

Carrier's line of thermostats provide both programmable and non-programmable capability with the new **Debonair®** line of commercial programmable thermostats. The **Commercial Electronic** thermostats provide 7-day programmable capability for economical applications.

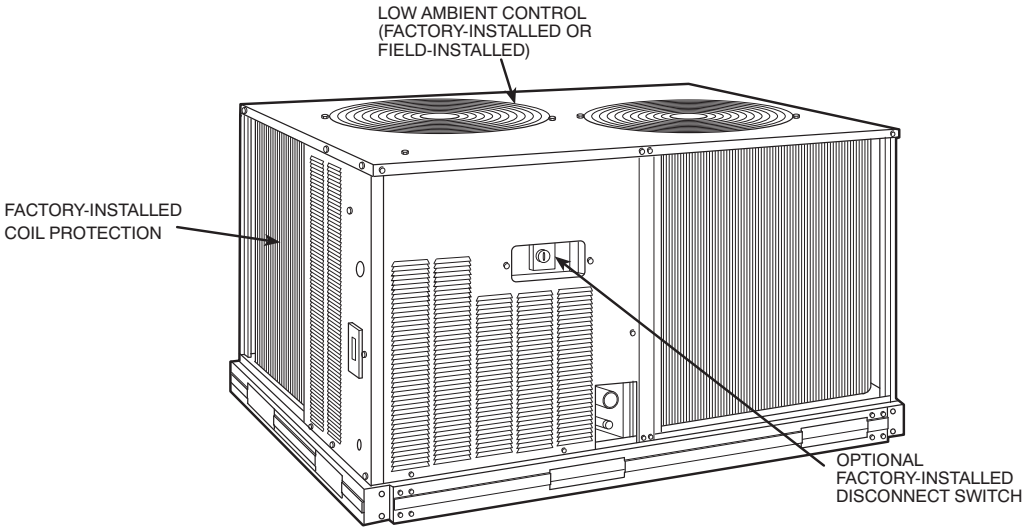

C10609

40RU OPTIONS AND ACCESSORIES

ITEM	OPTION*	ACCESSORY†
Alternate Fan Motors	X	
Alternate Drives	X	
CO_2 Sensors		X
Condensate Drain Trap		X
Discharge Plenum		X
Economizer		X
Electric Heat		X
Hot Water Heating Coils		X
Overhead Suspension Package		X
Prepainted Units	X	
Return Air Grille		X
Steam Heating Coil		X
Subbase		X

* Factory-installed option.
† Field-installed accessory.

40RU factory-installed options

Alternate fan motors and drives are available to provide the widest possible range of performance.

Units constructed of prepainted steel are available from the factory for applications that require painted units. Unit color is American Sterling Gray.

40RU field-installed accessories

Two-row hot water coils have $^5/_8$-in. diameter copper tubes mechanically bonded to aluminum plate fins. Coils have non-ferrous headers.

One-row steam coil has 1-in. OD copper tube and aluminum fins. The Inner Distributing Tube (IDT) design provides uniform temperatures across the coil face. The IDT steam coils are especially suited to applications where sub-freezing air enters the unit.

Electric resistance heat coils have an open-wire design and are mounted in a rigid frame. Safety cutouts for high temperature conditions are standard.

Economizer (enthalpy controlled) provides ventilation air and provides “free” cooling if the outside ambient temperature and humidity are suitable. The economizer can also be used in conjunction with Carrier Comfort System thermostats and CO_2 sensors to help meet indoor air quality requirements. The economizer can be used in both vertical and horizontal positions.

Discharge plenum directs the air discharge into the occupied space; integral horizontal and vertical louvers enable redirection of airflow. This accessory is available unpainted or painted.

Return-air grille provides a protective barrier over the return-air opening and gives a finished appearance to units installed in the occupied space. This accessory is available unpainted or painted.

Subbase provides a stable, raised platform and room for condensate drain connection for floor-mounted units. This accessory is available unpainted or painted.

Overhead suspension package includes necessary brackets to support units in horizontal installations.

CO_2 sensors can be used in conjunction with the economizer accessory to help meet indoor air quality requirements. The sensor signals the economizer to open when the CO_2 level in the space exceeds the setpoint. A Carrier Comfort System programmable thermostat can also be used to override the sensor if the outside-air temperature is too high or too low.

Condensate drain trap includes an overflow shutoff switch that can be wired to turn off the unit if the trap becomes plugged. The kit also includes a wire harness that can be connected to an alarm if desired. The transparent trap is designed for easy service and maintenance.

OPTIONS AND ACCESSORIES (cont.)

40RU WITH DISCHARGE PLENUM RETURN-AIR GRILLE AND SUBBASE

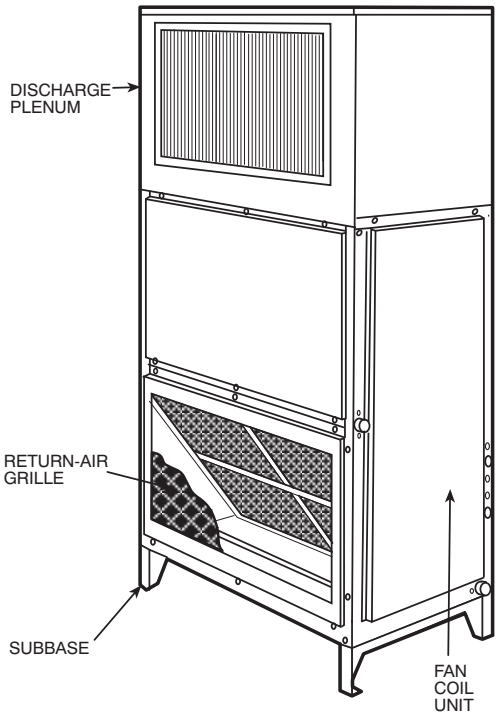

40RU WITH HOT WATER OR STEAM COIL

40RU WITH ECONOMIZER

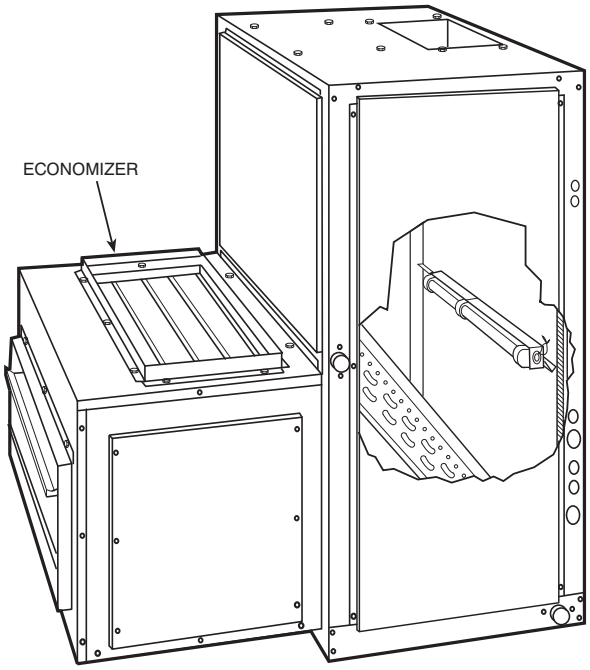

40RU WITH CONDENSATE TRAP

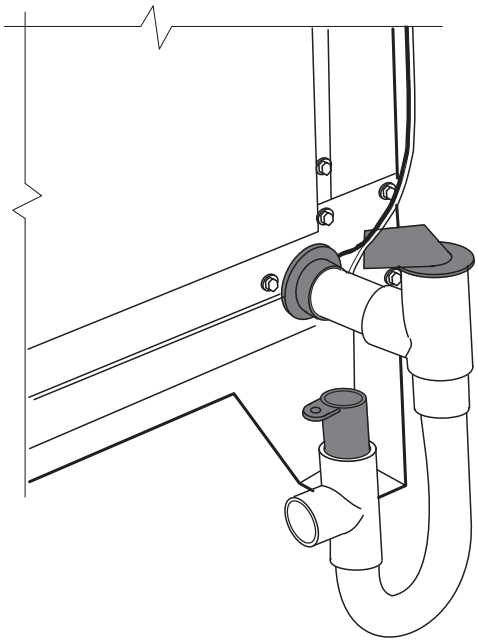

C10610

TYPICAL WIRING SCHEMATIC

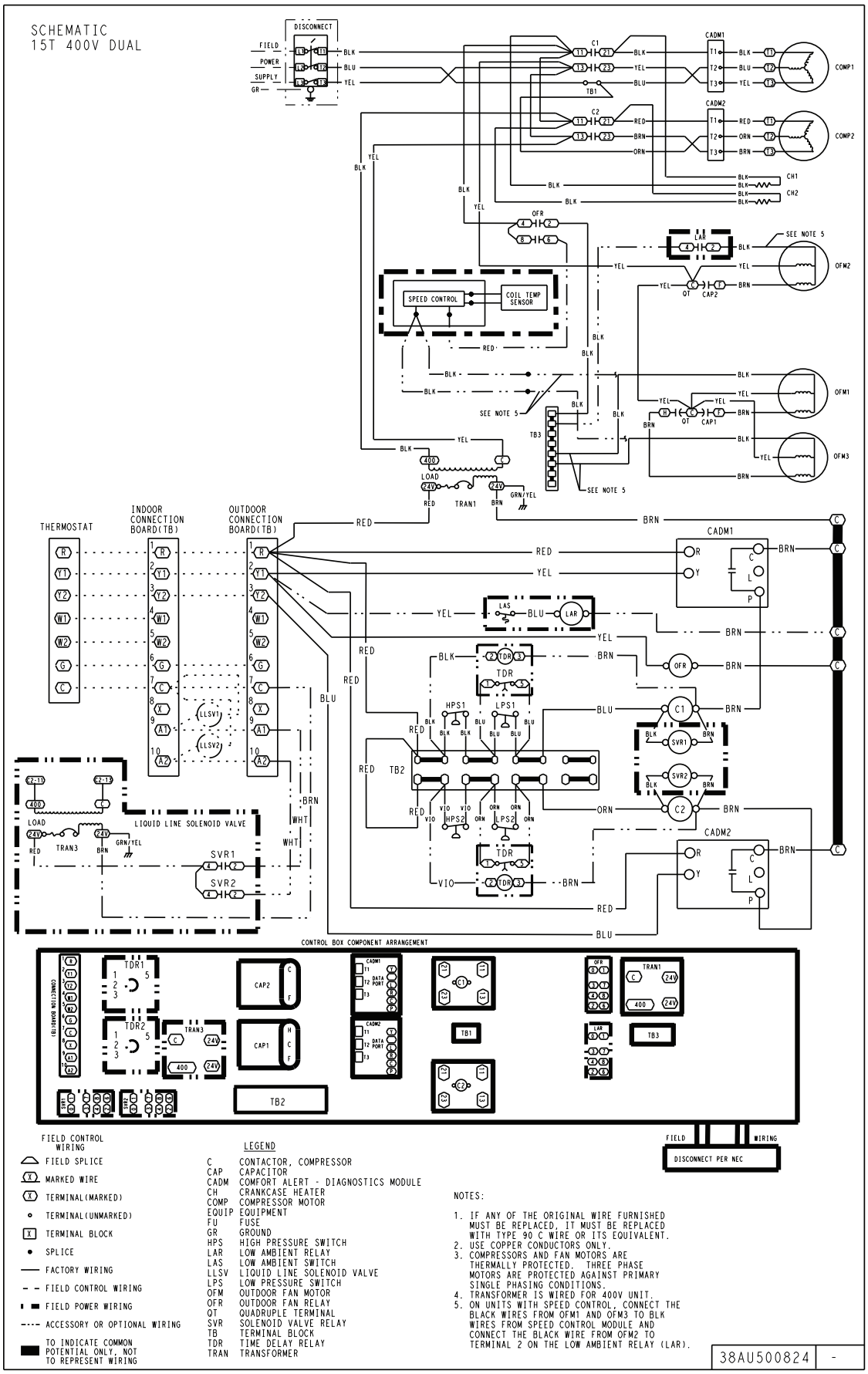

C10593

Typical 38AUD16 Dual Circuit

38AU

PERFORMANCE DATA

38AU

38AUZ07 50 Hz — CONDENSER ONLY RATINGS — SI

SST (°C)		Air Temperature entering Condenser (°C)					
		27	29	35	41	46	52
-7	TC	11.9	39.4	37.0	34.2	30.9	27.2
	kW	3.6	3.9	4.4	5.0	5.7	6.3
	SDT	35.4	38.1	44.2	49.5	54.5	59.6
-4	TC	13.2	39.4	37.0	34.2	30.9	27.2
	kW	3.6	3.9	4.4	5.0	5.7	6.3
	SDT	35.9	38.7	44.2	49.5	54.3	60.0
-1	TC	14.6	39.4	37.0	34.2	30.9	27.2
	kW	3.6	3.9	4.4	5.0	5.7	6.3
	SDT	36.5	39.3	44.8	50.0	54.9	61.9
2	TC	16.0	39.4	37.0	34.2	30.9	27.2
	kW	3.6	3.9	4.4	5.0	5.7	6.3
	SDT	37.1	39.8	45.4	50.9	56.1	61.6
4	TC	17.4	39.4	37.0	34.2	30.9	27.2
	kW	3.6	3.9	4.4	5.0	5.7	6.3
	SDT	37.7	40.4	45.9	51.5	56.9	62.2
7	TC	18.9	39.4	37.0	34.2	30.9	27.2
	kW	3.6	3.9	4.4	5.0	5.7	6.3
	SDT	38.2	41.0	46.5	52.0	57.4	62.5
10	TC	20.3	39.4	37.0	34.2	30.9	27.2
	kW	3.6	3.9	4.4	5.0	5.7	6.3
	SDT	38.8	41.6	47.1	52.5	57.9	63.3

38AUZ07 50 Hz — CONDENSER ONLY RATINGS — ENGLISH

SST (°F)		Air Temperature entering Condenser (°F)					
		80	85	95	105	115	125
20	TC	40.7	39.4	37.0	34.2	30.9	27.2
	kW	3.6	3.9	4.4	5.0	5.7	6.3
	SDT	95.7	100.6	111.5	121.1	130.1	139.3
25	TC	45.2	43.8	41.0	38.0	34.5	31.3
	kW	3.6	3.8	4.4	5.0	5.7	6.4
	SDT	96.7	101.6	111.6	121.1	129.8	140.1
30	TC	49.8	48.4	45.5	42.2	38.6	36.0
	kW	3.5	3.8	4.4	5.0	5.7	6.6
	SDT	97.8	102.7	112.6	122.1	130.8	143.5
35	TC	54.6	53.2	50.2	47.0	43.2	40.0
	kW	3.5	3.7	4.3	5.0	5.8	6.6
	SDT	98.8	103.7	113.7	123.6	132.9	142.9
40	TC	59.5	58.0	54.9	51.6	48.1	44.3
	kW	3.4	3.7	4.3	5.0	5.7	6.6
	SDT	99.8	104.7	114.7	124.6	134.5	143.9
45	TC	64.4	62.9	59.7	56.4	52.8	48.6
	kW	3.3	3.6	4.2	4.9	5.7	6.5
	SDT	100.8	105.8	115.7	125.6	135.4	144.4
50	TC	69.3	67.8	64.6	61.2	57.6	53.6
	kW	3.2	3.5	4.2	4.9	5.6	6.5
	SDT	101.9	106.8	116.7	126.5	136.3	145.9

LEGEND:

kW – Compressor Power
SDT – Saturated Discharge Temperature at Compressor
SST – Saturated Suction Temperature
TC – Gross Cooling Capacity (1000 Btuh)

38AUZ08 50 Hz CONDENSER ONLY RATINGS SI

SST (°C)		Air Temperature entering Condenser (°C)					
		27	29	35	41	46	52
-7	TC	15.3	39.4	37.0	34.2	30.9	27.2
	kW	3.6	3.9	4.4	5.0	5.7	6.3
	SDT	34.5	37.2	42.7	48.2	53.5	59.1
-4	TC	16.9	39.4	37.0	34.2	30.9	27.2
	kW	3.6	3.9	4.4	5.0	5.7	6.3
	SDT	35.0	37.7	43.2	48.7	53.5	58.9
-1	TC	18.6	39.4	37.0	34.2	30.9	27.2
	kW	3.6	3.9	4.4	5.0	5.7	6.3
	SDT	35.6	38.3	43.7	49.2	54.6	59.5
2	TC	20.3	39.4	37.0	34.2	30.9	27.2
	kW	3.6	3.9	4.4	5.0	5.7	6.3
	SDT	36.1	38.8	44.3	49.7	55.1	60.5
4	TC	22.1	39.4	37.0	34.2	30.9	27.2
	kW	3.6	3.9	4.4	5.0	5.7	6.3
	SDT	36.7	39.4	44.8	50.2	55.6	60.9
7	TC	23.8	39.4	37.0	34.2	30.9	27.2
	kW	3.6	3.9	4.4	5.0	5.7	6.3
	SDT	37.3	40.0	45.4	50.7	56.1	61.4
10	TC	25.6	39.4	37.0	34.2	30.9	27.2
	kW	3.6	3.9	4.4	5.0	5.7	6.3
	SDT	38.0	40.6	46.0	51.3	56.6	61.8

38AUZ08 50 Hz CONDENSER ONLY RATINGS ENGLISH

SST (°F)		Air Temperature entering Condenser (°F)					
		80	85	95	105	115	125
20	TC	52.2	50.6	47.2	43.7	39.9	36.3
	kW	4.1	4.4	5.2	6.0	6.8	7.8
	SDT	94.1	99.0	108.9	118.8	128.2	138.4
25	TC	57.7	55.9	52.3	48.6	44.0	40.1
	kW	4.1	4.5	5.2	6.0	6.9	7.9
	SDT	95.0	99.9	109.8	119.7	128.3	138.1
30	TC	63.4	61.5	57.7	53.8	49.6	44.7
	kW	4.2	4.5	5.3	6.1	7.0	8.0
	SDT	96.0	100.9	110.7	120.6	130.3	139.1
35	TC	69.3	67.3	63.3	59.2	54.9	50.4
	kW	4.2	4.6	5.3	6.2	7.1	8.0
	SDT	97.0	101.9	111.7	121.5	131.3	140.9
40	TC	75.2	73.3	69.2	64.9	60.4	55.6
	kW	4.3	4.6	5.4	6.2	7.1	8.1
	SDT	98.1	102.9	112.7	122.4	132.1	141.7
45	TC	81.3	79.3	75.2	70.7	66.0	61.0
	kW	4.3	4.6	5.4	6.2	7.2	8.2
	SDT	99.2	104.0	113.7	123.3	132.9	142.5
50	TC	87.4	85.4	81.1	76.6	71.7	66.5
	kW	4.3	4.7	5.5	6.3	7.2	8.2
	SDT	100.3	105.1	114.7	124.3	133.8	143.3

LEGEND:

kW – Compressor Power
SDT – Saturated Discharge Temperature at Compressor
SST – Saturated Suction Temperature
TC – Gross Cooling Capacity (1000 Btuh)

PERFORMANCE DATA (cont.)

38AUD12 Total Unit 50 Hz CONDENSER ONLY RATINGS SI

SST (°C)		Air Temperature entering Condenser (°C)					
		27	29	35	41	46	52
-7	TC	19.5	39.4	37.0	34.2	30.9	27.2
	kW	3.6	3.9	4.4	5.0	5.7	6.3
	SDT	35.5	38.0	43.1	48.2	53.2	58.2
-4	TC	21.5	39.4	37.0	34.2	30.9	27.2
	kW	3.6	3.9	4.4	5.0	5.7	6.3
	SDT	36.2	38.7	43.8	48.8	53.8	58.7
-1	TC	23.7	39.4	37.0	34.2	30.9	27.2
	kW	3.6	3.9	4.4	5.0	5.7	6.3
	SDT	36.9	39.5	44.5	49.5	54.4	59.2
2	TC	26.0	39.4	37.0	34.2	30.9	27.2
	kW	3.6	3.9	4.4	5.0	5.7	6.3
	SDT	37.7	40.2	45.2	50.1	55.0	59.8
4	TC	28.4	39.4	37.0	34.2	30.9	27.2
	kW	3.6	3.9	4.4	5.0	5.7	6.3
	SDT	38.5	40.9	45.9	50.8	55.6	60.3
7	TC	30.9	39.4	37.0	34.2	30.9	27.2
	kW	3.6	3.9	4.4	5.0	5.7	6.3
	SDT	39.2	41.7	46.6	51.5	56.2	60.9
10	TC	33.6	39.4	37.0	34.2	30.9	27.2
	kW	3.6	3.9	4.4	5.0	5.7	6.3
	SDT	40.1	42.5	47.3	52.2	56.9	61.4

38AUD12 Total Unit 50 Hz CONDENSER ONLY RATINGS ENGLISH

SST (°F)		Air Temperature entering Condenser (°F)					
		80	85	95	105	115	125
20	TC	66.5	64.3	59.8	55.1	50.0	44.7
	kW	5.2	5.6	6.4	7.3	8.2	9.1
	SDT	95.9	100.5	109.6	118.8	127.8	136.7
25	TC	73.4	71.0	66.1	61.0	55.7	50.0
	kW	5.2	5.6	6.5	7.4	8.3	9.2
	SDT	97.2	101.7	110.8	119.9	128.9	137.7
30	TC	80.8	78.2	72.9	67.3	61.6	55.5
	kW	5.3	5.7	6.6	7.5	8.4	9.3
	SDT	98.5	103.0	112.1	121.1	129.9	138.6
35	TC	88.6	85.8	80.0	74.0	67.9	61.4
	kW	5.4	5.8	6.6	7.5	8.5	9.4
	SDT	99.8	104.3	113.3	122.3	131.1	139.6
40	TC	96.8	93.8	87.5	81.2	74.5	67.4
	kW	5.5	5.9	6.7	7.6	8.6	9.5
	SDT	101.2	105.7	114.6	123.4	132.2	140.6
45	TC	105.6	102.2	95.4	88.5	81.2	73.6
	kW	5.6	5.9	6.8	7.7	8.7	9.6
	SDT	102.6	107.0	115.9	124.6	133.2	141.6
50	TC	114.7	111.0	103.6	96.0	88.0	79.6
	kW	5.6	6.0	6.9	7.8	8.7	9.7
	SDT	104.1	108.4	117.2	125.9	134.3	142.6

LEGEND:

kW – Compressor Power
SDT – Saturated Discharge Temperature at Compressor
SST – Saturated Suction Temperature
TC – Gross Cooling Capacity (1000 Btuh)

38AUD12 Circuit A 50 Hz CONDENSER ONLY RATINGS SI

SST (°C)		Air Temperature entering Condenser (° C)					
		27	29	35	41	46	52
-7	TC	9.6	39.4	37.0	34.2	30.9	27.2
	kW	3.6	3.9	4.4	5.0	5.7	6.3
	SDT	35.4	37.9	43.0	48.1	53.1	58.0
-4	TC	10.6	39.4	37.0	34.2	30.9	27.2
	kW	3.6	3.9	4.4	5.0	5.7	6.3
	SDT	36.1	38.6	43.7	48.7	53.7	58.6
-1	TC	11.7	39.4	37.0	34.2	30.9	27.2
	kW	3.6	3.9	4.4	5.0	5.7	6.3
	SDT	36.8	39.3	44.3	49.3	54.3	59.1
2	TC	12.8	39.4	37.0	34.2	30.9	27.2
	kW	3.6	3.9	4.4	5.0	5.7	6.3
	SDT	37.5	40.0	45.0	50.0	54.9	59.6
4	TC	14.0	39.4	37.0	34.2	30.9	27.2
	kW	3.6	3.9	4.4	5.0	5.7	6.3
	SDT	38.3	40.8	45.7	50.6	55.5	60.1
7	TC	15.2	39.4	37.0	34.2	30.9	27.2
	kW	3.6	3.9	4.4	5.0	5.7	6.3
	SDT	39.1	41.5	46.4	51.3	56.0	60.7
10	TC	16.5	39.4	37.0	34.2	30.9	27.2
	kW	3.6	3.9	4.4	5.0	5.7	6.3
	SDT	39.9	42.3	47.1	52.0	56.6	61.2

38AUD12 Circuit A 50 Hz CONDENSER ONLY RATINGS ENGLISH

SST (°F)		Air Temperature entering Condenser (°F)					
		80	85	95	105	115	125
20	TC	32.9	31.8	29.6	27.2	24.7	22.1
	kW	2.6	2.8	3.2	3.6	4.1	4.5
	SDT	95.7	100.3	109.4	118.6	127.6	136.4
25	TC	36.3	35.1	32.6	30.1	27.4	24.6
	kW	2.6	2.8	3.2	3.7	4.1	4.6
	SDT	96.9	101.5	110.6	119.7	128.6	137.4
30	TC	39.9	38.6	35.9	33.2	30.3	27.3
	kW	2.6	2.8	3.3	3.7	4.2	4.7
	SDT	98.3	102.8	111.8	120.8	129.7	138.3
35	TC	43.7	42.2	39.4	36.4	33.3	30.1
	kW	2.7	2.9	3.3	3.8	4.2	4.7
	SDT	99.6	104.1	113.0	122.0	130.7	139.3
40	TC	47.6	46.1	43.0	39.8	36.5	32.9
	kW	2.7	2.9	3.3	3.8	4.3	4.8
	SDT	101.0	105.4	114.3	123.1	131.8	140.3
45	TC	51.8	50.1	46.8	43.3	39.6	35.9
	kW	2.8	3.0	3.4	3.8	4.3	4.8
	SDT	102.3	106.7	115.5	124.3	132.9	141.3
50	TC	56.2	54.3	50.6	46.8	42.8	38.6
	kW	2.8	3.0	3.4	3.9	4.3	4.8
	SDT	103.8	108.1	116.8	125.5	133.9	142.1

LEGEND:

kW – Compressor Power
SDT – Saturated Discharge Temperature at Compressor
SST – Saturated Suction Temperature
TC – Gross Cooling Capacity (1000 Btuh)

PERFORMANCE DATA (cont.)

38AUD12 Circuit B 50 Hz CONDENSER ONLY RATINGS SI

SST (°C)		Air Temperature entering Condenser (°C)					
		27	29	35	41	46	52
-7	TC	9.8	39.4	37.0	34.2	30.9	27.2
	kW	3.6	3.9	4.4	5.0	5.7	6.3
	SDT	35.6	38.2	43.3	48.3	53.3	58.3
-4	TC	10.9	39.4	37.0	34.2	30.9	27.2
	kW	3.6	3.9	4.4	5.0	5.7	6.3
	SDT	36.3	38.9	43.9	49.0	53.9	58.8
-1	TC	12.0	39.4	37.0	34.2	30.9	27.2
	kW	3.6	3.9	4.4	5.0	5.7	6.3
	SDT	37.1	39.6	44.6	49.6	54.6	59.4
2	TC	13.2	39.4	37.0	34.2	30.9	27.2
	kW	3.6	3.9	4.4	5.0	5.7	6.3
	SDT	37.8	40.3	45.3	50.3	55.2	60.0
4	TC	14.4	39.4	37.0	34.2	30.9	27.2
	kW	3.6	3.9	4.4	5.0	5.7	6.3
	SDT	38.6	41.1	46.0	51.0	55.8	60.5
7	TC	15.7	39.4	37.0	34.2	30.9	27.2
	kW	3.6	3.9	4.4	5.0	5.7	6.3
	SDT	39.4	41.8	46.8	51.6	56.4	61.1
10	TC	17.1	39.4	37.0	34.2	30.9	27.2
	kW	3.6	3.9	4.4	5.0	5.7	6.3
	SDT	40.2	42.7	47.5	52.3	57.1	61.7

38AUD12 Circuit B 50 Hz CONDENSER ONLY RATINGS ENGLISH

SST (°F)		Air Temperature entering Condenser (°F)					
		80	85	95	105	115	125
20	TC	33.6	32.5	30.2	27.8	25.3	22.7
	kW	2.6	2.8	3.2	3.7	4.1	4.5
	SDT	96.1	100.7	109.9	119.0	128.0	136.9
25	TC	37.1	35.9	33.5	30.9	28.2	25.4
	kW	2.6	2.8	3.2	3.7	4.2	4.6
	SDT	97.4	101.9	111.1	120.2	129.1	137.9
30	TC	40.9	39.6	37.0	34.2	31.3	28.2
	kW	2.7	2.9	3.3	3.7	4.2	4.7
	SDT	98.7	103.3	112.3	121.3	130.2	138.9
35	TC	44.9	43.5	40.6	37.6	34.6	31.3
	kW	2.7	2.9	3.3	3.8	4.3	4.7
	SDT	100.1	104.6	113.6	122.6	131.4	139.9
40	TC	49.2	47.7	44.5	41.4	38.0	34.5
	kW	2.7	2.9	3.4	3.8	4.3	4.8
	SDT	101.5	106.0	114.9	123.7	132.5	141.0
45	TC	53.7	52.1	48.7	45.2	41.6	37.8
	kW	2.8	3.0	3.4	3.9	4.3	4.8
	SDT	102.9	107.3	116.2	125.0	133.6	142.0
50	TC	58.5	56.7	53.0	49.2	45.2	41.1
	kW	2.8	3.0	3.5	3.9	4.4	4.9
	SDT	104.4	108.8	117.6	126.2	134.7	143.0

LEGEND:

kW – Compressor Power
SDT – Saturated Discharge Temperature at Compressor
SST – Saturated Suction Temperature
TC – Gross Cooling Capacity (1000 Btuh)

38AUD14 Total Unit 50 Hz CONDENSER ONLY RATINGS SI

SST (°C)		Air Temperature entering Condenser (°C)					
		27	29	35	41	46	52
-7	TC	24.5	39.4	37.0	34.2	30.9	27.2
	kW	3.6	3.9	4.4	5.0	5.7	6.3
	SDT	36.5	39.0	44.0	48.9	53.7	58.4
-4	TC	27.0	39.4	37.0	34.2	30.9	27.2
	kW	3.6	3.9	4.4	5.0	5.7	6.3
	SDT	37.4	39.8	44.8	49.6	54.4	59.1
-1	TC	29.6	39.4	37.0	34.2	30.9	27.2
	kW	3.6	3.9	4.4	5.0	5.7	6.3
	SDT	38.2	40.7	45.6	50.4	55.1	59.7
2	TC	32.3	39.4	37.0	34.2	30.9	27.2
	kW	3.6	3.9	4.4	5.0	5.7	6.3
	SDT	39.1	41.5	46.4	51.2	55.9	60.4
4	TC	35.1	39.4	37.0	34.2	30.9	27.2
	kW	3.6	3.9	4.4	5.0	5.7	6.3
	SDT	40.0	42.4	47.2	52.0	56.6	61.1
7	TC	38.0	39.4	37.0	34.2	30.9	27.2
	kW	3.6	3.9	4.4	5.0	5.7	6.3
	SDT	40.9	43.3	48.1	52.8	57.4	61.7
10	TC	40.8	39.4	37.0	34.2	30.9	27.2
	kW	3.6	3.9	4.4	5.0	5.7	6.3
	SDT	41.9	44.3	48.9	53.6	58.1	62.4

38AUD14 Total Unit 50 Hz CONDENSER ONLY RATINGS ENGLISH

SST (°F)		Air Temperature entering Condenser (°F)					
		80	85	95	105	115	125
20	TC	83.7	80.8	74.6	68.0	61.0	53.9
	kW	7.0	7.5	8.4	9.3	10.2	11.0
	SDT	97.8	102.2	111.2	120.0	128.7	137.2
25	TC	92.1	89.0	82.3	75.4	67.9	60.3
	kW	7.1	7.6	8.5	9.5	10.4	11.3
	SDT	99.3	103.7	112.6	121.4	129.9	138.3
30	TC	101.0	97.5	90.5	83.0	75.3	66.8
	kW	7.3	7.7	8.7	9.7	10.6	11.6
	SDT	100.8	105.2	114.0	122.7	131.3	139.5
35	TC	110.2	106.5	98.9	91.0	82.4	73.5
	kW	7.4	7.9	8.8	9.8	10.8	11.8
	SDT	102.4	106.8	115.5	124.2	132.6	140.8
40	TC	119.8	115.7	107.6	98.9	89.8	80.1
	kW	7.6	8.0	9.0	10.0	11.0	12.1
	SDT	104.0	108.3	117.0	125.6	133.9	141.9
45	TC	129.6	125.1	116.1	106.8	97.1	86.6
	kW	7.7	8.2	9.2	10.2	11.2	12.3
	SDT	105.7	110.0	118.5	127.0	135.2	143.1
50	TC	139.3	134.6	124.7	114.8	104.1	93.1
	kW	7.9	8.4	9.3	10.4	11.4	12.5
	SDT	107.4	111.7	120.1	128.5	136.5	144.4

LEGEND:

kW – Compressor Power
SDT – Saturated Discharge Temperature at Compressor
SST – Saturated Suction Temperature
TC – Gross Cooling Capacity (1000 Btuh)

PERFORMANCE DATA (cont.)

38AUD14 Circuit A 50 Hz CONDENSER ONLY RATINGS SI

SST (°C)		Air Temperature entering Condenser (°C)					
		27	29	35	41	46	52
-7	TC	12.3	39.4	37.0	34.2	30.9	27.2
	kW	3.6	3.9	4.4	5.0	5.7	6.3
	SDT	36.3	38.8	43.7	48.7	53.5	58.2
-4	TC	13.6	39.4	37.0	34.2	30.9	27.2
	kW	3.6	3.9	4.4	5.0	5.7	6.3
	SDT	37.1	39.6	44.5	49.4	54.2	58.9
-1	TC	14.9	39.4	37.0	34.2	30.9	27.2
	kW	3.6	3.9	4.4	5.0	5.7	6.3
	SDT	37.9	40.4	45.3	50.1	54.9	59.5
2	TC	16.2	39.4	37.0	34.2	30.9	27.2
	kW	3.6	3.9	4.4	5.0	5.7	6.3
	SDT	38.8	41.2	46.1	50.9	55.6	60.2
4	TC	17.7	39.4	37.0	34.2	30.9	27.2
	kW	3.6	3.9	4.4	5.0	5.7	6.3
	SDT	39.7	42.1	46.9	51.7	56.4	60.9
7	TC	19.1	39.4	37.0	34.2	30.9	27.2
	kW	3.6	3.9	4.4	5.0	5.7	6.3
	SDT	40.6	43.0	47.8	52.5	57.1	61.5
10	TC	20.6	39.4	37.0	34.2	30.9	27.2
	kW	3.6	3.9	4.4	5.0	5.7	6.3
	SDT	41.6	43.9	48.6	53.3	57.8	62.2

38AUD14 Circuit A 50 Hz CONDENSER ONLY RATINGS ENGLISH

SST (°F)		Air Temperature entering Condenser (°F)					
		80	85	95	105	115	125
20	TC	42.0	40.5	37.4	34.2	30.7	27.1
	kW	3.5	3.8	4.2	4.7	5.1	5.5
	SDT	97.3	101.8	110.7	119.6	128.3	136.8
25	TC	46.2	44.7	41.4	37.9	34.2	30.3
	kW	3.6	3.8	4.3	4.8	5.2	5.7
	SDT	98.8	103.2	112.1	120.9	129.5	138.0
30	TC	50.7	49.0	45.5	41.7	37.9	33.7
	kW	3.7	3.9	4.4	4.9	5.3	5.8
	SDT	100.3	104.7	113.6	122.3	130.8	139.1
35	TC	55.4	53.5	49.7	45.8	41.5	37.0
	kW	3.7	4.0	4.4	4.9	5.4	5.9
	SDT	101.8	106.2	115.0	123.7	132.1	140.4
40	TC	60.2	58.2	54.1	49.8	45.2	40.4
	kW	3.8	4.0	4.5	5.0	5.6	6.1
	SDT	103.5	107.8	116.5	125.1	133.4	141.5
45	TC	65.2	62.9	58.4	53.8	48.9	43.7
	kW	3.9	4.1	4.6	5.1	5.6	6.2
	SDT	105.1	109.4	118.0	126.5	134.8	142.7
50	TC	70.2	67.8	62.8	57.9	52.5	47.0
	kW	4.0	4.2	4.7	5.2	5.7	6.3
	SDT	106.8	111.1	119.5	127.9	136.0	143.9

LEGEND:

kW – Compressor Power
SDT – Saturated Discharge Temperature at Compressor
SST – Saturated Suction Temperature
TC – Gross Cooling Capacity (1000 Btuh)

38AUD14 Circuit B 50 Hz CONDENSER ONLY RATINGS SI

SST (°C)		Air Temperature entering Condenser (°C)					
		27	29	35	41	46	52
-7	TC	12.2	39.4	37.0	34.2	30.9	27.2
	kW	3.6	3.9	4.4	5.0	5.7	6.3
	SDT	36.8	39.3	44.2	49.1	53.9	58.6
-4	TC	13.4	39.4	37.0	34.2	30.9	27.2
	kW	3.6	3.9	4.4	5.0	5.7	6.3
	SDT	37.6	40.1	45.0	49.9	54.6	59.3
-1	TC	14.7	39.4	37.0	34.2	30.9	27.2
	kW	3.6	3.9	4.4	5.0	5.7	6.3
	SDT	38.5	41.0	45.9	50.7	55.4	60.0
2	TC	16.1	39.4	37.0	34.2	30.9	27.2
	kW	3.6	3.9	4.4	5.0	5.7	6.3
	SDT	39.4	41.8	46.7	51.5	56.1	60.7
4	TC	17.5	39.4	37.0	34.2	30.9	27.2
	kW	3.6	3.9	4.4	5.0	5.7	6.3
	SDT	40.3	42.7	47.5	52.3	56.9	61.3
7	TC	18.9	39.4	37.0	34.2	30.9	27.2
	kW	3.6	3.9	4.4	5.0	5.7	6.3
	SDT	41.3	43.6	48.4	53.1	57.6	62.0
10	TC	20.3	39.4	37.0	34.2	30.9	27.2
	kW	3.6	3.9	4.4	5.0	5.7	6.3
	SDT	42.2	44.6	49.2	53.9	58.4	62.7

38AUD14 Circuit B 50 Hz CONDENSER ONLY RATINGS ENGLISH

SST (°F)		Air Temperature entering Condenser (°F)					
		80	85	95	105	115	125
20	TC	41.7	40.2	37.1	33.8	30.3	26.8
	kW	3.5	3.7	4.2	4.6	5.1	5.5
	SDT	98.2	102.7	111.6	120.4	129.1	137.6
25	TC	45.9	44.3	41.0	37.5	33.8	29.9
	kW	3.5	3.8	4.2	4.7	5.2	5.6
	SDT	99.7	104.2	113.1	121.8	130.3	138.7
30	TC	50.2	48.5	45.0	41.3	37.4	33.2
	kW	3.6	3.8	4.3	4.8	5.3	5.8
	SDT	101.3	105.7	114.5	123.2	131.7	139.9
35	TC	54.8	53.0	49.2	45.2	40.9	36.5
	kW	3.7	3.9	4.4	4.9	5.4	5.9
	SDT	102.9	107.3	116.0	124.6	133.0	141.2
40	TC	59.6	57.5	53.5	49.1	44.6	39.7
	kW	3.8	4.0	4.5	5.0	5.5	6.0
	SDT	104.6	108.9	117.6	126.1	134.4	142.4
45	TC	64.4	62.1	57.6	53.0	48.1	42.9
	kW	3.8	4.1	4.5	5.1	5.6	6.1
	SDT	106.3	110.5	119.1	127.5	135.7	143.6
50	TC	69.2	66.8	61.9	56.9	51.6	46.2
	kW	3.9	4.1	4.6	5.1	5.7	6.2
	SDT	108.0	112.3	120.6	129.0	137.0	144.8

LEGEND:

kW – Compressor Power
SDT – Saturated Discharge Temperature at Compressor
SST – Saturated Suction Temperature
TC – Gross Cooling Capacity (1000 Btuh)

38AUD16 Total Unit 50 Hz CONDENSER ONLY RATINGS SI

SST (°C)		Air Temperature entering Condenser (°C)					
		27	29	35	41	46	52
-7	TC	31.6	39.4	37.0	34.2	30.9	27.2
	kW	3.6	3.9	4.4	5.0	5.7	6.3
	SDT	35.4	38.0	43.2	48.3	53.4	58.4
-4	TC	34.8	39.4	37.0	34.2	30.9	27.2
	kW	3.6	3.9	4.4	5.0	5.7	6.3
	SDT	36.2	38.7	43.8	48.9	53.9	58.9
-1	TC	38.3	39.4	37.0	34.2	30.9	27.2
	kW	3.6	3.9	4.4	5.0	5.7	6.3
	SDT	36.9	39.5	44.5	49.5	54.5	59.4
2	TC	41.9	39.4	37.0	34.2	30.9	27.2
	kW	3.6	3.9	4.4	5.0	5.7	6.3
	SDT	37.7	40.2	45.2	50.2	55.1	59.9
4	TC	45.6	39.4	37.0	34.2	30.9	27.2
	kW	3.6	3.9	4.4	5.0	5.7	6.3
	SDT	38.5	41.0	45.9	50.9	55.7	60.5
7	TC	49.7	39.4	37.0	34.2	30.9	27.2
	kW	3.6	3.9	4.4	5.0	5.7	6.3
	SDT	39.3	41.8	46.7	51.6	56.4	61.0
10	TC	53.9	39.4	37.0	34.2	30.9	27.2
	kW	3.6	3.9	4.4	5.0	5.7	6.3
	SDT	40.2	42.6	47.5	52.3	57.0	61.6

38AUD16 Total Unit 50 Hz CONDENSER ONLY RATINGS ENGLISH

SST (°F)		Air Temperature entering Condenser (°F)					
		80	85	95	105	115	125
20	TC	107.8	104.6	97.9	90.9	83.7	76.1
	kW	8.4	8.9	10.0	11.2	12.5	13.9
	SDT	95.8	100.4	109.7	118.9	128.1	137.1
25	TC	118.8	115.3	107.9	100.4	92.4	84.1
	kW	8.6	9.1	10.2	11.4	12.7	14.1
	SDT	97.1	101.7	110.9	120.0	129.1	138.0
30	TC	130.5	126.6	118.6	110.3	101.6	92.7
	kW	8.7	9.2	10.3	11.6	12.9	14.3
	SDT	98.4	103.0	112.1	121.2	130.1	138.9
35	TC	142.8	138.5	129.7	120.8	111.5	101.6
	kW	8.9	9.4	10.5	11.7	13.0	14.4
	SDT	99.8	104.3	113.4	122.4	131.2	139.9
40	TC	155.8	151.0	141.6	132.0	121.7	110.7
	kW	9.1	9.6	10.7	11.9	13.2	14.6
	SDT	101.3	105.7	114.7	123.6	132.3	140.8
45	TC	169.5	164.3	154.0	143.4	132.0	120.1
	kW	9.3	9.8	10.9	12.1	13.4	14.8
	SDT	102.7	107.2	116.0	124.8	133.5	141.9
50	TC	183.9	178.2	166.8	154.9	142.6	129.5
	kW	9.5	10.0	11.1	12.3	13.6	15.0
	SDT	104.3	108.7	117.4	126.1	134.6	142.9

LEGEND:

kW – Compressor Power
SDT – Saturated Discharge Temperature at Compressor
SST – Saturated Suction Temperature
TC – Gross Cooling Capacity (1000 Btuh)

38AUD16 Circuit A 50 Hz CONDENSER ONLY RATINGS SI

SST (°C)		Air Temperature entering Condenser (°C)					
		27	29	35	41	46	52
-7	TC	15.8	39.4	37.0	34.2	30.9	27.2
	kW	3.6	3.9	4.4	5.0	5.7	6.3
	SDT	35.9	38.5	43.6	48.7	53.8	58.8
-4	TC	17.4	39.4	37.0	34.2	30.9	27.2
	kW	3.6	3.9	4.4	5.0	5.7	6.3
	SDT	36.6	39.2	44.3	49.4	54.3	59.3
-1	TC	19.1	39.4	37.0	34.2	30.9	27.2
	kW	3.6	3.9	4.4	5.0	5.7	6.3
	SDT	37.4	39.9	45.0	50.0	54.9	59.8
2	TC	20.8	39.4	37.0	34.2	30.9	27.2
	kW	3.6	3.9	4.4	5.0	5.7	6.3
	SDT	38.2	40.7	45.7	50.7	55.6	60.3
4	TC	22.7	39.4	37.0	34.2	30.9	27.2
	kW	3.6	3.9	4.4	5.0	5.7	6.3
	SDT	39.0	41.5	46.4	51.4	56.2	60.9
7	TC	24.7	39.4	37.0	34.2	30.9	27.2
	kW	3.6	3.9	4.4	5.0	5.7	6.3
	SDT	39.9	42.3	47.2	52.1	56.8	61.5
10	TC	26.8	39.4	37.0	34.2	30.9	27.2
	kW	3.6	3.9	4.4	5.0	5.7	6.3
	SDT	40.7	43.1	48.0	52.8	57.5	62.1

38AUD16 Circuit A 50 Hz CONDENSER ONLY RATINGS ENGLISH

SST (°F)		Air Temperature entering Condenser (°F)					
		80	85	95	105	115	125
20	TC	53.8	52.2	48.8	45.3	41.7	37.9
	kW	4.2	4.5	5.1	5.7	6.3	7.0
	SDT	96.6	101.2	110.5	119.7	128.8	137.8
25	TC	59.3	57.5	53.8	50.0	46.0	41.9
	kW	4.3	4.6	5.1	5.7	6.4	7.1
	SDT	97.9	102.5	111.7	120.8	129.8	138.7
30	TC	65.1	63.1	59.0	54.9	50.6	46.1
	kW	4.4	4.7	5.2	5.8	6.5	7.2
	SDT	99.3	103.9	112.9	122.0	130.9	139.6
35	TC	71.1	68.9	64.5	60.1	55.4	50.5
	kW	4.5	4.8	5.3	5.9	6.6	7.3
	SDT	100.7	105.2	114.2	123.2	132.0	140.6
40	TC	77.5	75.1	70.4	65.6	60.5	55.0
	kW	4.6	4.9	5.4	6.0	6.7	7.4
	SDT	102.2	106.7	115.6	124.5	133.2	141.6
45	TC	84.3	81.7	76.6	71.3	65.6	59.6
	kW	4.7	5.0	5.5	6.1	6.8	7.5
	SDT	103.7	108.1	117.0	125.7	134.3	142.7
50	TC	91.4	88.6	82.9	76.9	70.8	64.3
	kW	4.8	5.1	5.6	6.2	6.9	7.6
	SDT	105.3	109.7	118.4	127.0	135.5	143.7

LEGEND:

kW – Compressor Power
SDT – Saturated Discharge Temperature at Compressor
SST – Saturated Suction Temperature
TC – Gross Cooling Capacity (1000 Btuh)

PERFORMANCE DATA (cont.)

38AUD16 Circuit B 50 Hz CONDENSER ONLY RATINGS SI

SST (°C)		Air Temperature entering Condenser (°C)					
		27	29	35	41	46	52
-7	TC	15.8	39.4	37.0	34.2	30.9	27.2
	kW	3.6	3.9	4.4	5.0	5.7	6.3
	SDT	35.0	37.6	42.7	47.9	53.0	58.0
-4	TC	17.5	39.4	37.0	34.2	30.9	27.2
	kW	3.6	3.9	4.4	5.0	5.7	6.3
	SDT	35.7	38.3	43.4	48.5	53.5	58.5
-1	TC	19.2	39.4	37.0	34.2	30.9	27.2
	kW	3.6	3.9	4.4	5.0	5.7	6.3
	SDT	36.4	39.0	44.0	49.1	54.1	59.0
2	TC	21.0	39.4	37.0	34.2	30.9	27.2
	kW	3.6	3.9	4.4	5.0	5.7	6.3
	SDT	37.2	39.7	44.7	49.7	54.7	59.5
4	TC	22.9	39.4	37.0	34.2	30.9	27.2
	kW	3.6	3.9	4.4	5.0	5.7	6.3
	SDT	38.0	40.4	45.4	50.4	55.3	60.0
7	TC	25.0	39.4	37.0	34.2	30.9	27.2
	kW	3.6	3.9	4.4	5.0	5.7	6.3
	SDT	38.8	41.2	46.2	51.1	55.9	60.6
10	TC	27.1	39.4	37.0	34.2	30.9	27.2
	kW	3.6	3.9	4.4	5.0	5.7	6.3
	SDT	39.6	42.0	46.9	51.8	56.5	61.2

38AUD16 Circuit B 50 Hz CONDENSER ONLY RATINGS ENGLISH

SST (°F)		Air Temperature entering Condenser (°F)					
		80	85	95	105	115	125
20	TC	54.0	52.4	49.1	45.6	42.0	38.2
	kW	4.2	4.4	5.0	5.6	6.2	6.9
	SDT	95.0	99.7	108.9	118.2	127.3	136.3
25	TC	59.6	57.8	54.2	50.4	46.4	42.3
	kW	4.2	4.5	5.0	5.6	6.3	7.0
	SDT	96.2	100.9	110.1	119.2	128.3	137.2
30	TC	65.5	63.5	59.5	55.4	51.1	46.6
	kW	4.3	4.6	5.1	5.7	6.4	7.1
	SDT	97.6	102.1	111.3	120.4	129.3	138.1
35	TC	71.7	69.5	65.2	60.7	56.0	51.1
	kW	4.4	4.7	5.2	5.8	6.5	7.2
	SDT	98.9	103.4	112.5	121.5	130.4	139.1
40	TC	78.2	75.9	71.2	66.3	61.2	55.7
	kW	4.5	4.8	5.3	5.9	6.5	7.2
	SDT	100.3	104.8	113.8	122.7	131.5	140.0
45	TC	85.2	82.6	77.4	72.1	66.4	60.4
	kW	4.6	4.9	5.4	6.0	6.6	7.3
	SDT	101.8	106.2	115.1	123.9	132.6	141.1
50	TC	92.4	89.6	83.9	77.9	71.8	65.2
	kW	4.7	5.0	5.5	6.1	6.7	7.4
	SDT	103.3	107.6	116.5	125.2	133.8	142.1

LEGEND:

kW – Compressor Power
SDT – Saturated Discharge Temperature at Compressor
SST – Saturated Suction Temperature
TC – Gross Cooling Capacity (1000 Btuh)

38AUD25 Total Unit — CONDENSER ONLY RATINGS — SI

SST (°C)		Air Temperature entering Condenser (°C)					
		27	29	35	41	46	52
-7	TC	38.7	39.4	37.0	34.2	30.9	27.2
	kW	3.6	3.9	4.4	5.0	5.7	6.3
	SDT	33.8	36.4	41.6	46.7	51.9	57.0
-4	TC	42.8	39.4	37.0	34.2	30.9	27.2
	kW	3.6	3.9	4.4	5.0	5.7	6.3
	SDT	34.5	37.1	42.2	47.4	52.5	57.5
-1	TC	47.2	39.4	37.0	34.2	30.9	27.2
	kW	3.6	3.9	4.4	5.0	5.7	6.3
	SDT	35.2	37.8	42.9	48.0	53.1	58.1
2	TC	52.0	39.4	37.0	34.2	30.9	27.2
	kW	3.6	3.9	4.4	5.0	5.7	6.3
	SDT	36.0	38.6	43.6	48.7	53.7	58.6
4	TC	57.1	39.4	37.0	34.2	30.9	27.2
	kW	3.6	3.9	4.4	5.0	5.7	6.3
	SDT	36.9	39.4	44.4	49.4	54.4	59.2
7	TC	62.6	39.4	37.0	34.2	30.9	27.2
	kW	3.6	3.9	4.4	5.0	5.7	6.3
	SDT	37.8	40.3	45.2	50.2	55.1	59.8
10	TC	68.4	39.4	37.0	34.2	30.9	27.2
	kW	3.6	3.9	4.4	5.0	5.7	6.3
	SDT	38.8	41.2	46.1	51.0	55.8	60.5

38AUD25 Total Unit — CONDENSER ONLY RATINGS — ENGLISH

SST (°F)		Air Temperature entering Condenser (°F)					
		80	85	95	105	115	125
20	TC	131.9	128.0	119.8	111.1	101.6	91.4
	kW	10.0	10.6	12.0	13.5	15.2	17.2
	SDT	92.8	97.5	106.9	116.1	125.4	134.6
25	TC	145.9	141.7	132.9	123.5	113.3	102.3
	kW	10.2	10.8	12.1	13.6	15.4	17.3
	SDT	94.1	98.7	108.0	117.3	126.4	135.5
30	TC	161.1	156.5	146.9	136.7	125.6	113.7
	kW	10.4	11.0	12.3	13.8	15.5	17.5
	SDT	95.4	100.0	109.2	118.4	127.5	136.5
35	TC	177.3	172.3	161.9	150.7	138.7	125.7
	kW	10.6	11.2	12.5	14.0	15.7	17.6
	SDT	96.9	101.4	110.5	119.6	128.7	137.6
40	TC	194.8	189.3	177.9	165.7	152.5	138.4
	kW	10.8	11.4	12.7	14.2	15.9	17.8
	SDT	98.4	102.9	111.9	120.9	129.8	138.6
45	TC	213.5	207.4	194.9	181.5	167.1	151.7
	kW	11.1	11.7	13.0	14.5	16.1	18.0
	SDT	100.0	104.5	113.4	122.3	131.1	139.7
50	TC	233.4	226.7	213.0	198.2	182.5	165.6
	kW	11.4	12.0	13.3	14.7	16.4	18.2
	SDT	101.8	106.2	115.0	123.7	132.4	140.9

LEGEND:

kW – Compressor Power
SDT – Saturated Discharge Temperature at Compressor
SST – Saturated Suction Temperature
TC – Gross Cooling Capacity (1000 Btuh)

PERFORMANCE DATA (cont.)

38AUD25 Circuit A 50 Hz CONDENSER ONLY RATINGS SI

SST (°C)		Air Temperature entering Condenser (°C)					
		27	29	35	41	46	52
-7	TC	19.3	39.4	37.0	34.2	30.9	27.2
	kW	3.6	3.9	4.4	5.0	5.7	6.3
	SDT	33.6	36.2	41.4	46.6	51.7	56.8
-4	TC	21.4	39.4	37.0	34.2	30.9	27.2
	kW	3.6	3.9	4.4	5.0	5.7	6.3
	SDT	34.3	36.8	42.0	47.2	52.3	57.3
-1	TC	23.6	39.4	37.0	34.2	30.9	27.2
	kW	3.6	3.9	4.4	5.0	5.7	6.3
	SDT	35.0	37.5	42.7	47.8	52.9	57.9
2	TC	26.0	39.4	37.0	34.2	30.9	27.2
	kW	3.6	3.9	4.4	5.0	5.7	6.3
	SDT	35.8	38.3	43.4	48.5	53.5	58.4
4	TC	28.6	39.4	37.0	34.2	30.9	27.2
	kW	3.6	3.9	4.4	5.0	5.7	6.3
	SDT	36.6	39.1	44.1	49.2	54.1	59.0
7	TC	31.3	39.4	37.0	34.2	30.9	27.2
	kW	3.6	3.9	4.4	5.0	5.7	6.3
	SDT	37.5	40.0	44.9	49.9	54.8	59.6
10	TC	34.3	39.4	37.0	34.2	30.9	27.2
	kW	3.6	3.9	4.4	5.0	5.7	6.3
	SDT	38.4	40.9	45.8	50.7	55.5	60.3

38AUD25 Circuit A 50 Hz CONDENSER ONLY RATINGS ENGLISH

SST (°F)		Air Temperature entering Condenser (°F)					
		80	85	95	105	115	125
20	TC	66.0	64.0	60.0	55.6	50.9	45.8
	kW	5.0	5.3	5.9	6.7	7.6	8.5
	SDT	92.4	97.1	106.5	115.8	125.1	134.3
25	TC	73.0	70.9	66.5	61.8	56.7	51.2
	kW	5.1	5.4	6.0	6.8	7.6	8.6
	SDT	93.7	98.3	107.6	116.9	126.1	135.2
30	TC	80.6	78.3	73.5	68.4	62.9	57.0
	kW	5.2	5.5	6.1	6.9	7.7	8.7
	SDT	95.0	99.6	108.8	118.0	127.1	136.2
35	TC	88.8	86.2	81.1	75.5	69.5	63.0
	kW	5.3	5.6	6.2	7.0	7.8	8.8
	SDT	96.4	100.9	110.1	119.2	128.3	137.2
40	TC	97.5	94.8	89.1	83.0	76.4	69.4
	kW	5.4	5.7	6.3	7.1	7.9	8.9
	SDT	97.9	102.4	111.4	120.5	129.4	138.2
45	TC	106.9	103.9	97.6	91.0	83.8	76.0
	kW	5.5	5.8	6.5	7.2	8.0	9.0
	SDT	99.5	104.0	112.9	121.8	130.6	139.3
50	TC	116.9	113.6	106.7	99.4	91.5	83.0
	kW	5.7	6.0	6.6	7.3	8.1	9.1
	SDT	101.2	105.6	114.4	123.2	131.9	140.5

LEGEND:

kW – Compressor Power
SDT – Saturated Discharge Temperature at Compressor
SST – Saturated Suction Temperature
TC – Gross Cooling Capacity (1000 Btuh)

38AUD25 Circuit B 50 Hz CONDENSER ONLY RATINGS SI

SST (°C)		Air Temperature entering Condenser (°C)					
		27	29	35	41	46	52
-7	TC	19.3	39.4	37.0	34.2	30.9	27.2
	kW	3.6	3.9	4.4	5.0	5.7	6.3
	SDT	34.0	36.6	41.8	46.9	52.1	57.2
-4	TC	21.4	39.4	37.0	34.2	30.9	27.2
	kW	3.6	3.9	4.4	5.0	5.7	6.3
	SDT	34.7	37.3	42.4	47.6	52.7	57.7
-1	TC	23.6	39.4	37.0	34.2	30.9	27.2
	kW	3.6	3.9	4.4	5.0	5.7	6.3
	SDT	35.5	38.0	43.1	48.2	53.3	58.3
2	TC	26.0	39.4	37.0	34.2	30.9	27.2
	kW	3.6	3.9	4.4	5.0	5.7	6.3
	SDT	36.3	38.8	43.9	48.9	53.9	58.8
4	TC	28.5	39.4	37.0	34.2	30.9	27.2
	kW	3.6	3.9	4.4	5.0	5.7	6.3
	SDT	37.2	39.7	44.7	49.7	54.6	59.4
7	TC	31.2	39.4	37.0	34.2	30.9	27.2
	kW	3.6	3.9	4.4	5.0	5.7	6.3
	SDT	38.1	40.6	45.5	50.4	55.3	60.1
10	TC	34.1	39.4	37.0	34.2	30.9	27.2
	kW	3.6	3.9	4.4	5.0	5.7	6.3
	SDT	39.1	41.5	46.4	51.2	56.0	60.7

38AUD25 Circuit B 50 Hz CONDENSER ONLY RATINGS ENGLISH

SST (°F)		Air Temperature entering Condenser (°F)					
		80	85	95	105	115	125
20	TC	65.9	63.9	59.9	55.5	50.7	45.6
	kW	5.0	5.3	6.0	6.8	7.6	8.6
	SDT	93.3	97.9	107.2	116.5	125.8	134.9
25	TC	72.9	70.8	66.4	61.7	56.6	51.0
	kW	5.1	5.4	6.1	6.8	7.7	8.7
	SDT	94.5	99.2	108.4	117.6	126.8	135.9
30	TC	80.5	78.2	73.4	68.2	62.7	56.7
	kW	5.2	5.5	6.2	6.9	7.8	8.8
	SDT	95.9	100.5	109.6	118.8	127.9	136.9
35	TC	88.6	86.0	80.8	75.2	69.2	62.7
	kW	5.3	5.6	6.3	7.0	7.9	8.9
	SDT	97.4	101.9	111.0	120.1	129.0	137.9
40	TC	97.3	94.5	88.8	82.7	76.1	69.0
	kW	5.4	5.7	6.4	7.1	8.0	8.9
	SDT	98.9	103.4	112.4	121.4	130.3	139.0
45	TC	106.6	103.5	97.2	90.5	83.3	75.6
	kW	5.6	5.9	6.5	7.3	8.1	9.0
	SDT	100.6	105.0	113.9	122.8	131.5	140.1
50	TC	116.5	113.1	106.2	98.8	91.0	82.5
	kW	5.7	6.0	6.7	7.4	8.2	9.2
	SDT	102.4	106.8	115.5	124.2	132.9	141.3

LEGEND:
kW – Compressor Power
SDT – Saturated Discharge Temperature at Compressor
SST – Saturated Suction Temperature
TC – Gross Cooling Capacity (1000 Btuh)

PERFORMANCE DATA (cont.)

38AUZ07 - 40RUA07 COMBINATION RATINGS SI

				Ambient Temperature														
				29.4			35.0			40.6			46.1			51.7		
				EAT (db)			EAT (db)			EAT (db)			EAT (db)			EAT (db)		
				23.9	26.7	29.4	23.9	26.7	29.4	23.9	26.7	29.4	23.9	26.7	29.4	23.9	26.7	29.4
850 L/S	EAT (wb)	14.4	THC	17.2	17.2	19.3	16.6	16.6	18.8	16.0	16.0	18.1	15.4	15.4	17.4	14.5	14.5	16.4
			SHC	15.0	17.2	19.3	14.5	16.6	18.8	14.0	16.0	18.1	13.5	15.4	17.4	12.7	14.5	16.4
			kW		3.6			4.3			4.9			5.7			6.5	
		16.7	THC	17.5	17.5	19.2	16.9	16.9	18.8	16.2	16.2	18.4	15.5	15.5	17.9	14.6	14.6	17.1
			SHC	13.8	16.5	19.2	13.5	16.2	18.8	13.2	15.8	18.4	12.8	15.4	17.9	12.2	14.6	17.1
			kW		3.6			4.2			4.9			5.7			6.5	
		19.4	THC	18.9	18.9	18.9	18.3	18.3	18.3	17.5	17.5	17.5	16.7	16.7	16.7	15.8	15.8	15.8
			SHC	11.2	13.9	16.6	10.9	13.6	16.3	10.6	13.3	16.0	10.3	13.0	15.7	9.9	12.6	15.3
			kW		3.6			4.2			4.9		5.7				6.5	
		22.2	THC	20.6	20.6	20.6	19.9	19.9	19.9	19.1	19.1	19.1	18.3	18.3	18.3	17.3	17.3	17.3
			SHC	8.4	11.2	13.9	8.2	10.9	13.6	7.9	10.6	13.3	7.6	10.3	13.0	7.2	9.9	12.7
			kW		3.5			4.1			4.8			5.6			6.5	
		24.4	THC	–	22.0	22.0	–	21.3	21.3	–	20.5	20.5	–	19.6	19.6	–	–	–
			SHC	–	9.0	11.8	–	8.7	11.5	–	8.4	11.2	–	8.1	10.9	–	–	–
			kW		3.5			4.1			4.8			5.6			–	
991 L/S	EAT (wb)	14.4	THC	17.9	17.9	20.2	17.4	17.4	19.5	16.7	16.7	18.8	16.1	16.1	18.1	15.3	15.3	17.3
			SHC	15.6	17.9	20.2	15.2	17.4	19.5	14.6	16.7	18.8	14.0	16.1	18.1	13.4	15.3	17.3
			kW		3.6			4.2			4.9			5.7			6.5	
		16.7	THC	18.0	18.0	20.6	17.4	17.4	20.3	16.7	16.7	19.6	16.1	16.1	18.8	15.3	15.3	17.9
			SHC	14.7	17.7	20.6	14.4	17.4	20.3	13.9	16.7	19.6	13.4	16.1	18.8	12.7	15.3	17.9
			kW		3.6			4.2			4.9			5.7			6.5	
		19.4	THC	19.3	19.3	19.3	18.6	18.6	18.6	17.8	17.8	17.8	17.0	17.0	17.1	16.1	16.1	16.7
			SHC	11.8	14.9	18.0	11.5	14.6	17.7	11.3	14.3	17.4	10.9	14.0	17.1	10.6	13.6	16.7
			kW		3.6			4.2			4.9			5.6			6.5	
		22.2	THC	21.0	21.0	21.0	20.3	20.3	20.3	19.5	19.5	19.5	18.6	18.6	18.6	17.6	17.6	17.6
			SHC	8.7	11.8	14.9	8.4	11.5	14.6	8.2	11.3	14.3	7.9	10.9	14.0	7.5	10.6	13.7
			kW		3.5			4.1			4.8			5.6			6.4	
		24.4	THC	–	22.4	22.4	–	21.7	21.7	–	20.8	20.8	–	–	–	–	–	–
			SHC	–	9.3	12.5	–	9.1	12.3	–	8.8	12.0	–	–	–	–	–	–
			kW		3.4			4.1			4.8			–			–	
1133 L/S	EAT (wb)	14.4	THC	18.5	18.5	20.8	17.9	17.9	20.2	17.3	17.3	19.5	16.6	16.6	18.7	15.8	15.8	17.8
			SHC	16.1	18.5	20.8	15.7	17.9	20.2	15.1	17.3	19.5	14.5	16.6	18.7	13.8	15.8	17.8
			kW		3.6			4.2			4.9			5.7			6.5	
		16.7	THC	18.5	18.5	21.7	17.9	17.9	21.0	17.3	17.3	20.2	16.6	16.6	19.4	15.8	15.8	18.5
			SHC	15.4	18.5	21.7	14.9	17.9	21.0	14.4	17.3	20.2	13.8	16.6	19.4	13.2	15.8	18.5
			kW		3.6			4.2			4.9			5.7			6.5	
		19.4	THC	19.6	19.6	19.6	18.9	18.9	19.0	18.1	18.1	18.7	17.3	17.3	18.3	16.3	16.3	17.9
			SHC	12.4	15.9	19.3	12.1	15.6	19.0	11.8	15.3	18.7	11.5	14.9	18.3	11.1	14.5	17.9
			kW		3.5			4.2			4.9			5.6			6.5	
		22.2	THC	21.2	21.2	21.2	20.5	20.5	20.5	19.7	19.7	19.7	18.8	18.8	18.8	17.8	17.8	17.8
			SHC	8.9	12.4	15.9	8.7	12.1	15.6	8.4	11.8	15.3	8.1	11.5	14.9	7.7	11.2	14.6
			kW		3.5			4.1			4.8			5.6			6.4	
		24.4	THC	–	22.7	22.7	–	21.9	21.9	–	21.1	21.1	–	–	–	–	–	–
			SHC	–	9.6	13.2	–	9.4	12.9	–	9.1	12.6	–	–	–	–	–	–
			kW		3.4			4.1			4.8			–			–	
1274 L/S	EAT (wb)	14.4	THC	19.0	19.0	21.4	18.4	18.4	20.7	17.7	17.7	20.0	17.0	17.0	19.2	16.2	16.2	18.3
			SHC	16.6	19.0	21.4	16.0	18.4	20.7	15.5	17.7	20.0	14.9	17.0	19.2	14.2	16.2	18.3
			kW	3.6			4.2			4.9			5.6			6.5		
		16.7	THC	19.0	19.0	22.2	18.4	18.4	21.5	17.7	17.7	20.8	17.0	17.0	19.9	16.2	16.2	19.0
			SHC	15.8	19.0	22.2	15.3	18.4	21.5	14.7	17.7	20.8	14.1	17.0	19.9	13.5	16.2	19.0
			kW	3.6			4.2			4.9			5.6			6.5		
		19.4	THC	19.8	19.8	20.5	19.1	19.1	20.2	18.3	18.3	19.9	17.5	17.5	19.5	16.5	16.5	19.1
			SHC	13.0	16.8	20.5	12.7	16.5	20.2	12.4	16.1	19.9	12.0	15.8	19.5	11.6	15.4	19.1
			kW	3.5			4.2			4.8			5.6			6.5		
		22.2	THC	21.5	21.5	21.5	20.8	20.8	20.8	19.9	19.9	19.9	19.0	19.0	19.0	–	–	–
			SHC	9.2	13.0	16.8	8.9	12.7	16.5	8.6	12.4	16.2	8.3	12.1	15.9	–	–	–
			kW	3.5			4.1			4.8			5.6			–		
		24.4	THC	–	22.9	22.9	–	22.2	22.2	–	21.3	21.3	–	–	–	–	–	–
			SHC	–	9.9	13.8	–	9.7	13.5	–	9.4	13.2	–	–	–	–	–	–
			kW		3.4			4.1			4.8			–			–	
1416 L/S	EAT (wb)	14.4	THC	19.4	19.4	21.9	18.8	18.8	21.2	18.1	18.1	20.4	17.4	17.4	19.6	16.6	16.6	18.6
			SHC	16.9	19.4	21.9	16.4	18.8	21.2	15.8	18.1	20.4	15.2	17.4	19.6	14.4	16.6	18.6
			kW		3.5			4.2			4.9			5.6			6.5	
		16.7	THC	19.4	19.4	22.7	18.8	18.8	22.0	18.1	18.1	21.2	17.4	17.4	20.3	16.6	16.6	19.4
			SHC	16.1	19.4	22.7	15.6	18.8	22.0	15.1	18.1	21.2	14.4	17.4	20.3	13.7	16.6	19.4
			kW		3.5			4.2		4.8			5.6			6.5		
		19.4	THC	20.0	20.0	21.7	19.3	19.3	21.4	18.5	18.5	21.0	17.6	17.6	20.6	16.7	16.7	20.1
			SHC	13.5	17.6	21.7	13.2	17.3	21.4	12.9	17.0	21.0	12.5	16.6	20.6	12.1	16.1	20.1
			kW		3.5			4.1		4.8			5.6				6.5	
		22.2	THC	21.7	21.7	21.7	20.9	20.9	20.9	20.1	20.1	20.1	19.1	19.1	19.1	–	–	–
			SHC	9.4	13.5	17.6	9.1	13.2	17.4	8.8	12.9	17.1	8.5	12.6	16.7	–	–	–
			kW		3.5			4.1			4.8			5.6			–	
		24.4	THC	–	23.1	23.1	–	22.3	22.3	–	21.4	21.4	–	–	–	–	–	–
			SHC	–	10.2	14.4	–	9.9	14.1	–	9.6	13.8	–	–	–	–	–	–
			kW		3.4			4.1			4.8			–			–	

LEGEND:
– = Do not operate
L/s = Liters per second
EAT(wb) = Entering air temp (wet bulb)
kW = Compressor kilowatts
SHC = Sensible heat capacity (Gross)
THC = Total heat capacity (Gross)
EAT(db) = Entering air temp (dry bulb)
Cfm = Cubic feet per minute (supply air)

				Ambient Temperature														
				85.0			95.0			105.0			115.0			125.0		
				EAT (db)			EAT (db)			EAT (db)			EAT (db)			EAT (db)		
				75.0	80.0	85.0	75.0	80.0	85.0	75.0	80.0	85.0	75.0	80.0	85.0	75.0	80.0	85.0
1800 cfm	EAT (wb)	58.0	THC	58.6	58.6	66.0	56.8	56.8	64.0	54.7	54.7	61.7	52.6	52.6	59.3	49.6	49.6	55.9
			SHC	51.1	58.6	66.0	49.6	56.8	64.0	47.8	54.7	61.7	45.9	52.6	59.3	43.3	49.6	55.9
			kW		3.6			4.3			4.9			5.7			6.5	
		62.0	THC	59.7	59.7	65.4	57.5	57.5	64.2	55.2	55.2	62.8	52.8	52.8	61.2	49.9	49.9	58.4
			SHC	47.2	56.3	65.4	46.2	55.2	64.2	44.9	53.9	62.8	43.6	52.4	61.2	41.5	49.9	58.4
			kW		3.6			4.2			4.9			5.7			6.5	
		67.0	THC	64.6	64.6	64.6	62.3	62.3	62.3	59.7	59.7	59.7	57.0	57.0	57.0	54.0	54.0	54.0
			SHC	38.2	47.4	56.6	37.2	46.4	55.6	36.2	45.4	54.6	35.1	44.3	53.4	33.8	43.0	52.2
			kW		3.6			4.2			4.9			5.7			6.5	
		72.0	THC	70.3	70.3	70.3	67.9	67.9	67.9	65.3	65.3	65.3	62.3	62.3	62.3	59.1	59.1	59.1
			SHC	28.8	38.1	47.4	27.9	37.2	46.5	27.0	36.2	45.5	25.9	35.1	44.4	24.7	33.9	43.2
			kW		3.5			4.1			4.8			5.6			6.5	
		76.0	THC	–	75.1	75.1	–	72.7	72.7	–	69.9	69.9	–	66.8	66.8	–	–	–
			SHC	–	30.6	40.2	–	29.8	39.3	–	28.8	38.3	–	27.7	37.2	–	–	–
			kW		3.5			4.1			4.8			5.6			–	
2100 cfm	EAT (wb)	58.0	THC	61.1	61.1	68.8	59.2	59.2	66.7	57.1	57.1	64.3	54.8	54.8	61.8	52.3	52.3	58.9
			SHC	53.3	61.1	68.8	51.7	59.2	66.7	49.8	57.1	64.3	47.9	54.8	61.8	45.6	52.3	58.9
			kW		3.6			4.2			4.9			5.7			6.5	
		62.0	THC	61.5	61.5	70.4	59.2	59.2	69.2	57.1	57.1	66.8	54.9	54.9	64.2	52.3	52.3	61.2
			SHC	50.3	60.3	70.4	49.2	59.2	69.2	47.4	57.1	66.8	45.6	54.9	64.2	43.5	52.3	61.2
			kW		3.6			4.2			4.9			5.7			6.5	
		67.0	THC	65.8	65.8	65.8	63.4	63.4	63.4	60.9	60.9	60.9	58.0	58.0	58.2	54.9	54.9	56.9
			SHC	40.4	50.9	61.4	39.4	49.9	60.4	38.4	48.9	59.3	37.2	47.7	58.2	36.0	46.4	56.9
			kW		3.6			4.2			4.9			5.6			6.5	
		72.0	THC	71.6	71.6	71.6	69.1	69.1	69.1	66.4	66.4	66.4	63.4	63.4	63.4	60.1	60.1	60.1
			SHC	29.7	40.3	50.9	28.8	39.4	49.9	27.9	38.4	48.9	26.8	37.3	47.8	25.6	36.1	46.6
			kW		3.5			4.1			4.8			5.6			6.4	
		76.0	THC	–	76.4	76.4	–	73.9	73.9	–	71.0	71.0	–	–	–	–	–	–
			SHC	–	31.8	42.6	–	30.9	41.8	–	29.9	40.8	–	–	–	–	–	–
			kW		3.4			4.1			4.8			–			–	
2400 cfm	EAT (wb)	58.0	THC	63.1	63.1	71.1	61.1	61.1	68.9	58.9	58.9	66.4	56.6	56.6	63.8	54.0	54.0	60.9
			SHC	55.1	63.1	71.1	53.4	61.1	68.9	51.5	58.9	66.4	49.4	56.6	63.8	47.1	54.0	60.9
			kW		3.6			4.2			4.9			5.7			6.5	
		62.0	THC	63.2	63.2	73.9	61.2	61.2	71.5	59.0	59.0	68.9	56.6	56.6	66.2	54.0	54.0	63.2
			SHC	52.5	63.2	73.9	50.8	61.2	71.5	49.0	59.0	68.9	47.0	56.6	66.2	44.9	54.0	63.2
			kW		3.6			4.2			4.9			5.7			6.5	
		67.0	THC	66.8	66.8	66.8	64.4	64.4	64.9	61.8	61.8	63.8	58.9	58.9	62.5	55.7	55.7	61.1
			SHC	42.4	54.2	65.9	41.4	53.2	64.9	40.4	52.1	63.8	39.2	50.9	62.5	37.9	49.5	61.1
			kW		3.5			4.2			4.9			5.6			6.5	
		72.0	THC	72.5	72.5	72.5	70.1	70.1	70.1	67.3	67.3	67.3	64.2	64.2	64.2	60.7	60.7	60.7
			SHC	30.5	42.3	54.1	29.7	41.4	53.2	28.7	40.4	52.2	27.6	39.3	51.0	26.4	38.1	49.7
			kW		3.5		4.1			4.8				5.6			6.4	
		76.0	THC	–	77.4	77.4	–	74.8	74.8	–	71.9	71.9	–	–	–	–	–	–
			SHC	–	32.8	44.9	–	32.0	44.0	–	31.0	43.0	–	–	–	–	–	–
			kW		3.4			4.1			4.8			–			–	
2700 cfm	EAT (wb)	58.0	THC	64.8	64.8	73.0	62.7	62.7	70.7	60.5	60.5	68.2	58.0	58.0	65.4	55.4	55.4	62.4
			SHC	56.6	64.8	73.0	54.7	62.7	70.7	52.8	60.5	68.2	50.7	58.0	65.4	48.3	55.4	62.4
			kW		3.6			4.2			4.9			5.6			6.5	
		62.0	THC	64.8	64.8	75.8	62.7	62.7	73.4	60.5	60.5	70.8	58.1	58.1	67.9	55.4	55.4	64.8
			SHC	53.9	64.8	75.8	52.1	62.7	73.4	50.3	60.5	70.8	48.2	58.1	67.9	46.0	55.4	64.8
			kW		3.6			4.2			4.9			5.6			6.5	
		67.0	THC	67.6	67.6	70.1	65.1	65.1	69.0	62.5	62.5	67.9	59.6	59.6	66.6	56.4	56.4	65.1
			SHC	44.3	57.2	70.1	43.3	56.2	69.0	42.3	55.1	67.9	41.1	53.8	66.6	39.7	52.4	65.1
			kW		3.5			4.2			4.8			5.6			6.5	
		72.0	THC	73.3	73.3	73.3	70.8	70.8	70.8	67.9	67.9	67.9	64.8	64.8	64.8	–	–	–
			SHC	31.3	44.3	57.2	30.4	43.3	56.3	29.4	42.3	55.2	28.3	41.2	54.1	–	–	–
			kW		3.5			4.1			4.8			5.6			–	
		76.0	THC	–	78.2	78.2	–	75.6	75.6	–	72.6	72.6	–	–	–	–	–	–
			SHC	–	33.9	47.1	–	33.0	46.2	–	32.0	45.2	–	–	–	–	–	–
			kW		3.4			4.1			4.8			–			–	
3000 cfm	EAT (wb)	58.0	THC	66.2	66.2	74.6	64.1	64.1	72.2	61.8	61.8	69.6	59.3	59.3	66.8	56.5	56.5	63.6
			SHC	57.8	66.2	74.6	55.9	64.1	72.2	53.9	61.8	69.6	51.8	59.3	66.8	49.3	56.5	63.6
			kW		3.5			4.2			4.9			5.6			6.5	
		62.0	THC	66.2	66.2	77.4	64.1	64.1	75.0	61.8	61.8	72.3	59.3	59.3	69.4	56.5	56.5	66.1
			SHC	55.0	66.2	77.4	53.3	64.1	75.0	51.4	61.8	72.3	49.3	59.3	69.4	46.9	56.5	66.1
			kW		3.5			4.2			4.8			5.6			6.5	
		67.0	THC	68.2	68.2	74.0	65.8	65.8	72.9	63.1	63.1	71.7	60.2	60.2	70.3	57.0	57.0	68.5
			SHC	46.1	60.1	74.0	45.1	59.0	72.9	44.0	57.9	71.7	42.7	56.5	70.3	41.3	54.9	68.5
			kW		3.5			4.1			4.8			5.6			6.5	
		72.0	THC	73.9	73.9	73.9	71.3	71.3	71.3	68.5	68.5	68.5	65.3	65.3	65.3	–	–	–
			SHC	32.0	46.1	60.2	31.1	45.2	59.2	30.1	44.1	58.2	29.0	43.0	57.0	–	–	–
			kW		3.5			4.1			4.8			5.6			–	
		76.0	THC	–	78.9	78.9	–	76.2	76.2	–	73.1	73.1	–	–	–	–	–	–
			SHC	–	34.8	49.2	–	33.9	48.2	–	32.9	47.2	–	–	–	–	–	–
			kW		3.4			4.1			4.8			–			–	

LEGEND:
– = Do not operate
L/s = Liters per second
EAT(wb) = Entering air temp (wet bulb)
kW = Compressor kilowatts
SHC = Sensible heat capacity (Gross)
THC = Total heat capacity (Gross)
EAT(db) = Entering air temp (dry bulb)
Cfm = Cubic feet per minute (supply air)

38AU

PERFORMANCE DATA (cont.)

38AUZ08 - 40RUA08 **COMBINATION RATINGS** **SI**

				Ambient Temperature														
				29.4			35.0			40.6			46.1			51.7		
				EAT (db)			EAT (db)			EAT (db)			EAT (db)			EAT (db)		
				23.9	26.7	29.4	23.9	26.7	29.4	23.9	26.7	29.4	23.9	26.7	29.4	23.9	26.7	29.4
1062 L/S	EAT (wb)	14.4	THC	21.9	21.9	24.6	21.2	21.2	23.9	20.4	20.4	23.0	19.5	19.5	22.0	18.6	18.6	21.0
			SHC	19.1	21.9	24.6	18.5	21.2	23.9	17.8	20.4	23.0	17.1	19.5	22.0	16.2	18.6	21.0
			Kw		4.6			5.4			6.2			7.2			8.2	
		16.7	THC	22.5	22.5	24.3	21.6	21.6	23.9	20.7	20.7	23.3	19.6	19.6	22.7	18.6	18.6	21.7
			SHC	17.6	21.0	24.3	17.2	20.5	23.9	16.7	20.0	23.3	16.1	19.4	22.7	15.4	18.6	21.7
			kW		4.6			5.4			6.3			7.2			8.2	
		19.4	THC	24.4	24.4	24.4	23.5	23.5	23.5	22.4	22.4	22.4	21.3	21.3	21.3	20.0	20.0	20.0
			SHC	14.3	17.7	21.1	13.9	17.3	20.7	13.5	16.9	20.3	13.0	16.4	19.8	12.5	15.9	19.3
			kW		4.7			5.5			6.3			7.2			8.2	
		22.2	THC	26.5	26.5	26.5	25.5	25.5	25.5	24.4	24.4	24.4	23.2	23.2	23.2	–	–	–
			SHC	10.8	14.3	17.7	10.5	13.9	17.3	10.1	13.5	16.9	9.6	13.0	16.4	–	–	–
			kW		4.8			5.5			6.4			7.3			–	
		24.4	THC	–	28.3	28.3	–	27.3	27.3	–	26.1	26.1	–	24.8	24.8	–	–	–
			SHC	–	11.5	15.0	–	11.1	14.6	–	10.7	14.2	–	10.3	13.8	–	–	–
			kW		4.8			5.6			6.4			7.4			–	
1239 L/S	EAT (wb)	14.4	THC	22.9	22.9	25.8	22.1	22.1	24.9	21.3	21.3	24.0	20.4	20.4	22.9	19.4	19.4	21.8
			SHC	20.0	22.9	25.8	19.3	22.1	24.9	18.6	21.3	24.0	17.8	20.4	22.9	16.9	19.4	21.8
			kW		4.6			5.4			6.3			7.2			8.2	
		16.7	THC	23.1	23.1	26.4	22.2	22.2	25.9	21.3	21.3	24.9	20.4	20.4	23.9	19.4	19.4	22.7
			SHC	18.9	22.7	26.4	18.4	22.2	25.9	17.7	21.3	24.9	16.9	20.4	23.9	16.1	19.4	22.7
			kW		4.7			5.4			6.3			7.2			8.2	
		19.4	THC	24.9	24.9	24.9	23.9	23.9	23.9	22.9	22.9	22.9	21.7	21.7	21.7	20.4	20.4	21.1
			SHC	15.2	19.1	23.0	14.8	18.7	22.6	14.3	18.2	22.1	13.9	17.8	21.6	13.4	17.2	21.1
			kW		4.7			5.5			6.3			7.2			8.2	
		22.2	THC	27.1	27.1	27.1	26.0	26.0	26.0	24.9	24.9	24.9	23.6	23.6	23.6	22.2	22.2	22.2
			SHC	11.2	15.1	19.1	10.8	14.7	18.6	10.4	14.3	18.2	10.0	13.9	17.8	9.5	13.4	17.3
			kW		4.8			5.5			6.4			7.3			8.3	
		24.4	THC	–	28.9	28.9	–	27.8	27.8	–	26.6	26.6	–	–	–	–	–	–
			SHC	–	11.9	16.0	–	11.6	15.6	–	11.2	15.2						
			kW		4.8			5.6			6.5			–			–	
1416 L/S	EAT (wb)	14.4	THC	23.7	23.7	26.7	22.9	22.9	25.8	22.0	22.0	24.8	21.1	21.1	23.7	20.0	20.0	22.5
			SHC	20.7	23.7	26.7	20.0	22.9	25.8	19.2	22.0	24.8	18.4	21.1	23.7	17.5	20.0	22.5
			kW		4.7			5.4			6.3			7.2			8.2	
		16.7	THC	23.7	23.7	27.8	22.9	22.9	26.8	22.0	22.0	25.8	21.1	21.1	24.6	20.0	20.0	23.4
			SHC	19.7	23.7	27.8	19.1	22.9	26.8	18.3	22.0	25.8	17.5	21.1	24.6	16.6	20.0	23.4
			kW		4.7			5.4			6.3			7.2			8.2	
		19.4	THC	25.3	25.3	25.3	24.3	24.3	24.4	23.2	23.2	23.9	22.0	22.0	23.4	20.7	20.7	22.8
			SHC	16.0	20.4	24.8	15.6	20.0	24.4	15.2	19.5	23.9	14.7	19.0	23.4	14.1	18.5	22.8
			kW		4.7			5.5			6.3			7.3			8.3	
		22.2	THC	27.4	27.4	27.4	26.4	26.4	26.4	25.2	25.2	25.2	23.9	23.9	23.9	22.5	22.5	22.5
			SHC	11.5	15.9	20.3	11.1	15.6	20.0	10.7	15.1	19.5	10.3	14.7	19.1	9.8	14.2	18.6
			kW		4.8			5.6			6.4			7.3			8.3	
		24.4	THC	–	–	–	–	–	–	–	–	–	–	–	–	–	–	–
			SHC	–	–	–	–	–	–	–	–	–	–	–	–	–	–	–
			kW		–			–			–			–			–	
1593 L/S	EAT (wb)	14.4	THC	24.4	24.4	27.5	23.5	23.5	26.5	22.6	22.6	25.5	21.6	21.6	24.4	20.5	20.5	23.1
			SHC	21.3	24.4	27.5	20.5	23.5	26.5	19.8	22.6	25.5	18.9	21.6	24.4	17.9	20.5	23.1
			kW		4.7			5.5			6.3			7.2			8.2	
		16.7	THC	24.4	24.4	28.5	23.6	23.6	27.5	22.6	22.6	26.5	21.6	21.6	25.3	20.5	20.5	24.0
			SHC	20.3	24.4	28.5	19.6	23.6	27.5	18.8	22.6	26.5	18.0	21.6	25.3	17.1	20.5	24.0
			kW		4.7			5.5			6.3			7.2			8.2	
		19.4	THC	25.6	25.6	26.5	24.6	24.6	26.0	23.5	23.5	25.5	22.2	22.2	25.0	21.0	21.0	24.4
			SHC	16.8	21.6	26.5	16.3	21.2	26.0	15.9	20.7	25.5	15.4	20.2	25.0	14.8	19.6	24.4
			kW		4.7			5.5			6.3			7.3			8.3	
		22.2	THC	27.7	27.7	27.7	26.7	26.7	26.7	25.5	25.5	25.5	24.2	24.2	24.2	–	–	–
			SHC	11.8	16.7	21.6	11.5	16.4	21.2	11.0	15.9	20.8	10.6	15.5	20.3	–	–	–
			kW		4.8			5.6			6.4			7.3			–	
		24.4	THC	–	–	–	–	–	–	–	–	–	–	–	–	–	–	–
			SHC	–	–	–	–	–	–	–	–	–	–	–	–	–	–	–
			kW		–			–			–			–			–	
1770 L/S	EAT (wb)	14.4	THC	24.9	24.9	28.1	24.1	24.1	27.1	23.1	23.1	26.1	22.1	22.1	24.9	21.0	21.0	23.6
			SHC	21.8	24.9	28.1	21.0	24.1	27.1	20.2	23.1	26.1	19.3	22.1	24.9	18.3	21.0	23.6
			kW		4.7			5.5			6.3			7.3			8.3	
		16.7	THC	24.9	24.9	29.2	24.1	24.1	28.2	23.2	23.2	27.1	22.1	22.1	25.8	21.0	21.0	24.5
			SHC	20.7	24.9	29.2	20.0	24.1	28.2	19.2	23.2	27.1	18.3	22.1	25.8	17.4	21.0	24.5
			kW		4.7			5.5			6.3			7.3			8.3	
		19.4	THC	25.8	25.8	28.1	24.8	24.8	27.6	23.7	23.7	27.1	22.5	22.5	26.5	21.2	21.2	25.7
			SHC	17.5	22.8	28.1	17.1	22.3	27.6	16.6	21.8	27.1	16.1	21.2	26.5	15.4	20.6	25.7
			kW		4.7			5.5			6.3			7.3			8.3	
		22.2	THC	28.0	28.0	28.0	26.9	26.9	26.9	25.7	25.7	25.7	24.4	24.4	24.4	–	–	–
			SHC	12.1	17.5	22.9	11.8	17.1	22.5	11.3	16.7	22.0	10.9	16.2	21.6	–	–	–
			kW		4.8			5.6			6.4			7.3			–	
		24.4	THC	–	–	–	–	–	–	–	–	–	–	–	–	–	–	–
			SHC	–	–	–	–	–	–	–	–	–	–	–	–	–	–	–
			kW		–			–			–			–			–	

LEGEND:

– = Do not operate
L/s = Liters per second
EAT(wb) = Entering air temp (wet bulb)
kW = Compressor kilowatts
SHC = Sensible heat capacity (Gross)
THC = Total heat capacity (Gross)
EAT(db) = Entering air temp (dry bulb)
Cfm = Cubic feet per minute (supply air)

38AU

PERFORMANCE DATA (cont.)

38AUZ08 - 40RUA08 **COMBINATION RATINGS** **ENGLISH**

				Ambient Temperature														
				85.0			95.0			105.0			115.0			125.0		
				EAT (db)			EAT (db)			EAT (db)			EAT (db)			EAT (db)		
				75.0	80.0	85.0	75.0	80.0	85.0	75.0	80.0	85.0	75.0	80.0	85.0	75.0	80.0	85.0
2250 cfm	EAT (wb)	58.0	THC	74.7	74.7	84.1	72.2	72.2	81.4	69.6	69.6	78.4	66.6	66.6	75.1	63.4	63.4	71.5
			SHC	65.2	74.7	84.1	63.1	72.2	81.4	60.7	69.6	78.4	58.2	66.6	75.1	55.4	63.4	71.5
			kW		4.6			5.4			6.2			7.2			8.2	
		62.0	THC	76.7	76.7	83.0	73.7	73.7	81.4	70.5	70.5	79.6	67.0	67.0	77.3	63.5	63.5	74.2
			SHC	60.2	71.6	83.0	58.7	70.0	81.4	57.1	68.3	79.6	55.1	66.2	77.3	52.7	63.5	74.2
			kW		4.6			5.4			6.3			7.2			8.2	
		67.0	THC	83.3	83.3	83.3	80.1	80.1	80.1	76.5	76.5	76.5	72.6	72.6	72.6	68.4	68.4	68.4
			SHC	48.8	60.4	72.0	47.5	59.0	70.6	46.0	57.6	69.1	44.5	56.0	67.5	42.8	54.3	65.8
			kW		4.7			5.5			6.3			7.2			8.2	
		72.0	THC	90.5	90.5	90.5	87.1	87.1	87.1	83.3	83.3	83.3	79.2	79.2	79.2	–	–	–
			SHC	37.0	48.7	60.3	35.8	47.4	59.0	34.4	46.0	57.6	32.8	44.4	56.0	–	–	–
			kW		4.8		5.5			6.4				7.3			–	
		76.0	THC	–	96.5	96.5	–	93.0	93.0	–	89.1	89.1	–	84.7	84.7	–	–	–
			SHC	–	39.2	51.2	–	37.9	49.9	–	36.6	48.5	–	35.1	47.0	–	–	–
			kW		4.8		5.6			6.4				7.4			–	
2625 cfm	EAT (wb)	58.0	THC	78.1	78.1	88.0	75.5	75.5	85.1	72.7	72.7	81.9	69.5	69.5	78.3	66.1	66.1	74.5
			SHC	68.2	78.1	88.0	65.9	75.5	85.1	63.4	72.7	81.9	60.7	69.5	78.3	57.7	66.1	74.5
			kW		4.6		5.4			6.3				7.2			8.2	
		62.0	THC	78.8	78.8	90.1	75.7	75.7	88.5	72.7	72.7	85.0	69.6	69.6	81.4	66.2	66.2	77.4
			SHC	64.4	77.3	90.1	62.9	75.7	88.5	60.4	72.7	85.0	57.8	69.6	81.4	54.9	66.2	77.4
			kW		4.7		5.4			6.3				7.2			8.2	
		67.0	THC	85.1	85.1	85.1	81.7	81.7	81.7	78.0	78.0	78.0	74.0	74.0	74.0	69.7	69.7	72.0
			SHC	51.8	65.1	78.4	50.4	63.7	77.0	48.9	62.2	75.5	47.3	60.6	73.8	45.6	58.8	72.0
			kW		4.7			5.5			6.3			7.2			8.2	
		72.0	THC	92.3	92.3	92.3	88.7	88.7	88.7	84.9	84.9	84.9	80.6	80.6	80.6	75.9	75.9	75.9
			SHC	38.2	51.6	65.0	36.9	50.3	63.6	35.5	48.9	62.2	34.0	47.3	60.6	32.4	45.6	58.9
			kW		4.8			5.5			6.4			7.3			8.3	
		76.0	THC	–	98.5	98.5	–	94.7	94.7	–	90.7	90.7	–	–	–	–	–	–
			SHC	–	40.7	54.5	–	39.5	53.1	–	38.1	51.7	–	–	–	–	–	–
			kW		4.8			5.6			6.5			–			–	
3000 cfm	EAT (wb)	58.0	THC	80.9	80.9	91.2	78.2	78.2	88.1	75.2	75.2	84.7	71.9	71.9	81.0	68.3	68.3	76.9
			SHC	70.6	80.9	91.2	68.2	78.2	88.1	65.6	75.2	84.7	62.8	71.9	81.0	59.6	68.3	76.9
			kW		4.7			5.4			6.3			7.2			8.2	
		62.0	THC	81.0	81.0	94.7	78.3	78.3	91.6	75.2	75.2	88.0	71.9	71.9	84.1	68.3	68.3	79.9
			SHC	67.3	81.0	94.7	65.0	78.3	91.6	62.5	75.2	88.0	59.7	71.9	84.1	56.8	68.3	79.9
			kW		4.7			5.4			6.3			7.2			8.2	
		67.0	THC	86.3	86.3	86.3	82.9	82.9	83.1	79.2	79.2	81.5	75.1	75.1	79.7	70.7	70.7	77.8
			SHC	54.5	69.5	84.5	53.2	68.1	83.1	51.7	66.6	81.5	50.0	64.9	79.7	48.2	63.0	77.8
			kW		4.7			5.5			6.3			7.3			8.3	
		72.0	THC	93.6	93.6	93.6	90.0	90.0	90.0	86.0	86.0	86.0	81.6	81.6	81.6	76.9	76.9	76.9
			SHC	39.3	54.4	69.4	38.0	53.1	68.1	36.6	51.6	66.7	35.1	50.1	65.1	33.4	48.4	63.4
			kW		4.8			5.6			6.4			7.3			8.3	
		76.0	THC	–	–	–	–	–	–	–	–	–	–	–	–	–	–	–
			SHC	–	–	–	–	–	–	–	–	–	–	–	–	–	–	–
			kW		–			–		–				–			–	
3375 cfm	EAT (wb)	58.0	THC	83.1	83.1	93.7	80.3	80.3	90.5	77.2	77.2	87.0	73.8	73.8	83.1	70.0	70.0	78.9
			SHC	72.6	83.1	93.7	70.1	80.3	90.5	67.4	77.2	87.0	64.4	73.8	83.1	61.1	70.0	78.9
			kW		4.7			5.5			6.3			7.2			8.2	
		62.0	THC	83.2	83.2	97.3	80.4	80.4	94.0	77.2	77.2	90.3	73.8	73.8	86.3	70.1	70.1	81.9
			SHC	69.1	83.2	97.3	66.8	80.4	94.0	64.2	77.2	90.3	61.3	73.8	86.3	58.2	70.1	81.9
			kW		4.7			5.5			6.3			7.2			8.2	
		67.0	THC	87.4	87.4	90.3	83.9	83.9	88.8	80.1	80.1	87.1	75.9	75.9	85.3	71.5	71.5	83.1
			SHC	57.2	73.7	90.3	55.7	72.3	88.8	54.2	70.7	87.1	52.5	68.9	85.3	50.6	66.9	83.1
			kW		4.7			5.5			6.3			7.3			8.3	
		72.0	THC	94.6	94.6	94.6	91.0	91.0	91.0	86.9	86.9	86.9	82.5	82.5	82.5	–	–	–
			SHC	40.4	57.1	73.8	39.1	55.8	72.4	37.7	54.3	71.0	36.1	52.8	69.4	–	–	–
			kW		4.8			5.6			6.4			7.3			–	
		76.0	THC	–	–	–	–	–	–	–	–	–	–	–	–	–	–	–
			SHC	–	–	–	–	–	–	–	–	–	–	–	–	–	–	–
			kW		–			–			–			–			–	
3750 cfm	EAT (wb)	58.0	THC	85.1	85.1	95.8	82.1	82.1	92.5	78.9	78.9	88.9	75.4	75.4	84.9	71.5	71.5	80.6
			SHC	74.3	85.1	95.8	71.7	82.1	92.5	68.9	78.9	88.9	65.8	75.4	84.9	62.4	71.5	80.6
			kW		4.7			5.5			6.3			7.3			8.3	
		62.0	THC	85.1	85.1	99.5	82.2	82.2	96.1	79.0	79.0	92.3	75.4	75.4	88.2	71.5	71.5	83.6
			SHC	70.7	85.1	99.5	68.3	82.2	96.1	65.6	79.0	92.3	62.6	75.4	88.2	59.4	71.5	83.6
			kW		4.7			5.5			6.3			7.3			8.3	
		67.0	THC	88.2	88.2	95.8	84.7	84.7	94.2	80.9	80.9	92.4	76.7	76.7	90.3	72.2	72.2	87.8
			SHC	59.6	77.7	95.8	58.2	76.2	94.2	56.6	74.5	92.4	54.8	72.5	90.3	52.7	70.3	87.8
			kW		4.7			5.5			6.3			7.3			8.3	
		72.0	THC	95.5	95.5	95.5	91.7	91.7	91.7	87.6	87.6	87.6	83.1	83.1	83.1	–	–	–
			SHC	41.4	59.7	78.0	40.1	58.4	76.6	38.7	56.9	75.2	37.1	55.3	73.6	–	–	–
			kW		4.8			5.6			6.4			7.3			–	
		76.0	THC	–	–	–	–	–	–	–	–	–	–	–	–	–	–	–
			SHC	–	–	–	–	–	–	–	–	–	–	–	–	–	–	–
			kW		–			–			–			–			–	

LEGEND:

– = Do not operate
L/s = Liters per second
EAT(wb) = Entering air temp (wet bulb)
kW = Compressor kilowatts
SHC = Sensible heat capacity (Gross)
THC = Total heat capacity (Gross)
EAT(db) = Entering air temp (dry bulb)
Cfm = Cubic feet per minute (supply air)

38AU

PERFORMANCE DATA (cont.)

38AUD12 - 40RUA12 COMBINATION RATINGS SI

				Ambient Temperature														
				29.4			35.0			40.6			46.1			51.7		
				EAT (db)			EAT (db)			EAT (db)			EAT (db)			EAT (db)		
				23.9	26.7	29.4	23.9	26.7	29.4	23.9	26.7	29.4	23.9	26.7	29.4	23.9	26.7	29.4
1416 L/S	EAT (wb)	14.4	THC	28.2	28.2	31.8	27.2	27.2	30.7	26.1	26.1	29.4	24.9	24.9	28.1	23.5	23.5	26.5
			SHC	24.6	28.2	31.8	23.8	27.2	30.7	22.8	26.1	29.4	21.7	24.9	28.1	20.5	23.5	26.5
			kW	5.9			6.8			7.9			9.0			10.2		
		16.7	THC	28.7	28.7	31.9	27.5	27.5	31.2	26.2	26.2	30.4	24.9	24.9	29.2	23.6	23.6	27.5
			SHC	22.9	27.4	31.9	22.3	26.8	31.2	21.7	26.1	30.4	20.7	24.9	29.2	19.6	23.6	27.5
			kW	5.9			6.8			7.9			9.0			10.2		
		19.4	THC	31.2	31.2	31.2	29.9	29.9	29.9	28.5	28.5	28.5	26.9	26.9	26.9	25.1	25.1	25.1
			SHC	18.6	23.1	27.6	18.0	22.5	27.1	17.4	22.0	26.5	16.8	21.3	25.8	16.1	20.6	25.1
			kW	6.0			6.9			7.9			9.0			10.2		
		22.2	THC	33.8	33.8	33.8	32.5	32.5	32.5	31.0	31.0	31.0	29.3	29.3	29.3	–	–	–
			SHC	13.9	18.5	23.0	13.4	18.0	22.5	12.9	17.4	22.0	12.3	16.8	21.4	–	–	–
			kW	6.0			7.0			8.0			9.1			10.3		
		24.4	THC	–	36.1	36.1	–	–	–	–	–	–	–	–	–	–	–	–
			SHC	–	14.7	19.3	–	–	–	–	–	–	–	–	–	–	–	–
			kW	6.1			–			–			–			–		
1652 L/S	EAT (wb)	14.4	THC	29.5	29.5	33.2	28.4	28.4	32.0	27.3	27.3	30.7	26.0	26.0	29.3	24.6	24.6	27.7
			SHC	25.7	29.5	33.2	24.8	28.4	32.0	23.8	27.3	30.7	22.7	26.0	29.3	21.4	24.6	27.7
			kW	5.9			6.9			7.9			9.0			10.2		
		16.7	THC	29.6	29.6	34.3	28.5	28.5	33.3	27.3	27.3	31.9	26.0	26.0	30.4	24.6	24.6	28.7
			SHC	24.4	29.3	34.3	23.6	28.5	33.3	22.7	27.3	31.9	21.6	26.0	30.4	20.4	24.6	28.7
			kW	5.9			6.9			7.9			9.0			10.2		
		19.4	THC	31.8	31.8	31.8	30.5	30.5	30.5	29.0	29.0	29.0	27.4	27.4	28.3	25.6	25.6	27.5
			SHC	19.7	24.9	30.1	19.1	24.4	29.6	18.6	23.8	29.0	17.9	23.1	28.3	17.2	22.4	27.5
			kW	6.0			6.9			7.9			9.1			10.2		
		22.2	THC	34.5	34.5	34.5	33.1	33.1	33.1	31.5	31.5	31.5	29.8	29.8	29.8	28.0	28.0	28.0
			SHC	14.4	19.6	24.9	13.9	19.1	24.4	13.3	18.6	23.8	12.7	17.9	23.2	12.0	17.3	22.5
			kW	6.1			7.0			8.0			9.1			10.3		
		24.4	THC	–	–	–	–	–	–	–	–	–	–	–	–	–	–	–
			SHC	–	–	–	–	–	–	–	–	–	–	–	–	–	–	–
			kW	–			–			–			–			–		
1888 L/S	EAT (wb)	14.4	THC	30.5	30.5	34.3	29.4	29.4	33.1	28.2	28.2	31.7	26.8	26.8	30.2	25.3	25.3	28.5
			SHC	26.6	30.5	34.3	25.7	29.4	33.1	24.6	28.2	31.7	23.4	26.8	30.2	22.1	25.3	28.5
			kW	5.9			6.9			7.9			9.0			10.2		
		16.7	THC	30.5	30.5	35.7	29.4	29.4	34.4	28.2	28.2	33.0	26.8	26.8	31.4	25.4	25.4	29.7
			SHC	25.4	30.5	35.7	24.4	29.4	34.4	23.4	28.2	33.0	22.3	26.8	31.4	21.1	25.4	29.7
			kW	5.9			6.9			7.9			9.0			10.2		
		19.4	THC	32.3	32.3	32.5	30.9	30.9	31.9	29.4	29.4	31.3	27.8	27.8	30.6	26.0	26.0	29.8
			SHC	20.8	26.6	32.5	20.2	26.1	31.9	19.6	25.5	31.3	19.0	24.8	30.6	18.2	24.0	29.8
			kW	6.0			6.9			8.0			9.1			10.2		
		22.2	THC	34.9	34.9	34.9	33.5	33.5	33.5	31.9	31.9	31.9	30.2	30.2	30.2	–	–	–
			SHC	14.8	20.7	26.6	14.3	20.2	26.1	13.7	19.6	25.6	13.2	19.1	24.9	–	–	–
			kW	6.1			7.0			8.0			9.1			–		
		24.4	THC	–	–	–	–	–	–	–	–	–	–	–	–	–	–	–
			SHC	–	–	–	–	–	–	–	–	–	–	–	–	–	–	–
			kW	–			–			–			–			–		
2124 L/S	EAT (wb)	14.4	THC	31.3	31.3	35.3	30.2	30.2	34.0	28.9	28.9	32.6	27.5	27.5	31.0	26.0	26.0	29.3
			SHC	27.3	31.3	35.3	26.3	30.2	34.0	25.3	28.9	32.6	24.0	27.5	31.0	22.7	26.0	29.3
			kW	6.0			6.9			7.9			9.1			10.2		
		16.7	THC	31.4	31.4	36.7	30.2	30.2	35.3	29.0	29.0	33.9	27.5	27.5	32.2	26.0	26.0	30.4
			SHC	26.1	31.4	36.7	25.1	30.2	35.3	24.0	29.0	33.9	22.9	27.5	32.2	21.6	26.0	30.4
			kW	6.0			6.9			7.9			9.1			10.2		
		19.4	THC	32.6	32.6	34.8	31.2	31.2	34.2	29.7	29.7	33.5	28.1	28.1	32.7	26.3	26.3	31.7
			SHC	21.8	28.3	34.8	21.2	27.7	34.2	20.6	27.1	33.5	19.9	26.3	32.7	19.1	25.4	31.7
			kW	6.0			6.9			8.0			9.1			10.2		
		22.2	THC	35.3	35.3	35.3	33.8	33.8	33.8	32.2	32.2	32.2	–	–	–	–	–	–
			SHC	15.2	21.8	28.3	14.7	21.2	27.8	14.2	20.7	27.3	–	–	–	–	–	–
			kW	6.1			7.0			8.0			–			–		
		24.4	THC	–	–	–	–	–	–	–	–	–	–	–	–	–	–	–
			SHC	–	–	–	–	–	–	–	–	–	–	–	–	–	–	–
			kW	–			–			–			–			–		
2360 L/S	EAT (wb)	14.4	THC	32.0	32.0	36.1	30.9	30.9	34.8	29.5	29.5	33.3	28.1	28.1	31.7	26.5	26.5	29.9
			SHC	28.0	32.0	36.1	26.9	30.9	34.8	25.8	29.5	33.3	24.6	28.1	31.7	23.2	26.5	29.9
			kW	6.0			6.9			8.0			9.1			10.2		
		16.7	THC	32.0	32.0	37.5	30.9	30.9	36.1	29.6	29.6	34.6	28.1	28.1	32.9	26.6	26.6	31.0
			SHC	26.6	32.0	37.5	25.6	30.9	36.1	24.6	29.6	34.6	23.4	28.1	32.9	22.0	26.6	31.0
			kW	6.0			6.9			8.0			9.1			10.2		
		19.4	THC	32.9	32.9	36.9	31.6	31.6	36.2	30.0	30.0	35.5	28.4	28.4	34.5	26.6	26.6	33.3
			SHC	22.7	29.8	36.9	22.2	29.2	36.2	21.5	28.5	35.5	20.8	27.6	34.5	19.8	26.6	33.3
			kW	6.0			7.0			8.0			9.1			10.2		
		22.2	THC	35.6	35.6	35.6	34.1	34.1	34.1	–	–	–	–	–	–	–	–	–
			SHC	15.6	22.8	30.0	15.1	22.3	29.5	–	–	–	–	–	–	–	–	–
			kW	6.1			7.0			–			–			–		
		24.4	THC	–	–	–	–	–	–	–	–	–	–	–	–	–	–	–
			SHC	–	–	–	–	–	–	–	–	–	–	–	–	–	–	–
			kW	–			–			–			–			–		

LEGEND:

– = Do not operate
L/s = Liters per second
EAT(wb) = Entering air temp (wet bulb)
kW = Compressor kilowatts
SHC = Sensible heat capacity (Gross)
THC = Total heat capacity (Gross)
EAT(db) = Entering air temp (dry bulb)
Cfm = Cubic feet per minute (supply air)

PERFORMANCE DATA (cont.)

38AUD12 - 40RUA12 **COMBINATION RATINGS** **ENGLISH**

				Ambient Temperature														
				85.0			95.0			105.0			115.0			125.0		
				EAT (db)			EAT (db)			EAT (db)			EAT (db)			EAT (db)		
				75.0	80.0	85.0	75.0	80.0	85.0	75.0	80.0	85.0	75.0	80.0	85.0	75.0	80.0	85.0
3000 cfm	EAT (wb)	58.0	THC	96.3	96.3	108.5	92.9	92.9	104.6	89.1	89.1	100.4	85.0	85.0	95.8	80.3	80.3	90.5
			SHC	84.1	96.3	108.5	81.1	92.9	104.6	77.8	89.1	100.4	74.2	85.0	95.8	70.1	80.3	90.5
			kW	5.9			6.8			7.9			9.0			10.2		
		62.0	THC	98.0	98.0	108.7	94.0	94.0	106.4	89.5	89.5	103.8	85.1	85.1	99.5	80.4	80.4	94.0
			SHC	78.3	93.5	108.7	76.2	91.3	106.4	73.9	88.9	103.8	70.7	85.1	99.5	66.8	80.4	94.0
			kW	5.9			6.8			7.9			9.0			10.2		
		67.0	THC	106.4	106.4	106.4	102.0	102.0	102.0	97.1	97.1	97.1	91.7	91.7	91.7	85.8	85.8	85.8
			SHC	63.3	78.7	94.2	61.5	76.9	92.4	59.5	74.9	90.4	57.3	72.8	88.2	54.9	70.3	85.8
			kW	6.0			6.9			7.9			9.0			10.2		
		72.0	THC	115.4	115.4	115.4	110.8	110.8	110.8	105.8	105.8	105.8	100.1	100.1	100.1	93.8	93.8	93.8
			SHC	47.4	63.0	78.6	45.7	61.3	76.8	43.9	59.4	75.0	41.8	57.4	72.9	39.6	55.1	70.6
			kW	6.0			7.0			8.0			9.1			10.3		
		76.0	THC	–	123.2	123.2	–	–	–	–	–	–	–	–	–	–	–	–
			SHC	–	50.2	66.0	–	–	–	–	–	–	–	–	–	–	–	–
			kW	6.1			–			–			–			–		
3500 cfm	EAT (wb)	58.0	THC	100.6	100.6	113.4	97.0	97.0	109.3	93.0	93.0	104.8	88.6	88.6	99.9	83.8	83.8	94.4
			SHC	87.8	100.6	113.4	84.7	97.0	109.3	81.2	93.0	104.8	77.4	88.6	99.9	73.1	83.8	94.4
			kW	5.9			6.9			7.9			9.0			10.2		
		62.0	THC	100.9	100.9	117.0	97.1	97.1	113.5	93.1	93.1	108.9	88.7	88.7	103.7	83.8	83.8	98.0
			SHC	83.2	100.1	117.0	80.6	97.1	113.5	77.3	93.1	108.9	73.7	88.7	103.7	69.6	83.8	98.0
			kW	5.9			6.9			7.9			9.0			10.2		
		67.0	THC	108.5	108.5	108.5	104.0	104.0	104.0	98.9	98.9	98.9	93.4	93.4	96.5	87.3	87.3	94.0
			SHC	67.2	85.0	102.8	65.3	83.1	100.9	63.3	81.1	98.8	61.1	78.8	96.5	58.7	76.3	94.0
			kW	6.0			6.9			7.9			9.1			10.2		
		72.0	THC	117.6	117.6	117.6	112.8	112.8	112.8	107.6	107.6	107.6	101.8	101.8	101.8	95.4	95.4	95.4
			SHC	49.0	66.9	84.8	47.3	65.2	83.1	45.4	63.3	81.2	43.4	61.2	79.1	41.1	59.0	76.8
			kW	6.1			7.0			8.0			9.1			10.3		
		76.0	THC	–	–	–	–	–	–	–	–	–	–	–	–	–	–	–
			SHC	–	–	–	–	–	–	–	–	–	–	–	–	–	–	–
			kW	–			–			–			–			–		
4000 cfm	EAT (wb)	58.0	THC	104.0	104.0	117.2	100.3	100.3	113.0	96.1	96.1	108.3	91.5	91.5	103.1	86.4	86.4	97.4
			SHC	90.8	104.0	117.2	87.6	100.3	113.0	83.9	96.1	108.3	79.9	91.5	103.1	75.5	86.4	97.4
			kW	5.9			6.9			7.9			9.0			10.2		
		62.0	THC	104.1	104.1	121.8	100.4	100.4	117.4	96.2	96.2	112.5	91.6	91.6	107.1	86.5	86.5	101.2
			SHC	86.5	104.1	121.8	83.4	100.4	117.4	79.9	96.2	112.5	76.1	91.6	107.1	71.9	86.5	101.2
			kW	5.9			6.9			7.9			9.0			10.2		
		67.0	THC	110.1	110.1	110.9	105.5	105.5	109.0	100.3	100.3	106.8	94.7	94.7	104.4	88.6	88.6	101.6
			SHC	70.8	90.9	110.9	69.0	89.0	109.0	66.9	86.9	106.8	64.7	84.5	104.4	62.1	81.9	101.6
			kW	6.0			6.9			8.0			9.1			10.2		
		72.0	THC	119.2	119.2	119.2	114.3	114.3	114.3	109.0	109.0	109.0	103.1	103.1	103.1	–	–	–
			SHC	50.5	70.7	90.8	48.8	68.9	89.1	46.9	67.0	87.2	44.9	65.0	85.1	–	–	–
			kW	6.1			7.0			8.0			9.1			–		
		76.0	THC	–	–	–	–	–	–	–	–	–	–	–	–	–	–	–
			SHC	–	–	–	–	–	–	–	–	–	–	–	–	–	–	–
			kW	–			–			–			–			–		
4500 cfm	EAT (wb)	58.0	THC	106.9	106.9	120.5	103.0	103.0	116.0	98.7	98.7	111.2	93.9	93.9	105.8	88.6	88.6	99.9
			SHC	93.3	106.9	120.5	89.9	103.0	116.0	86.2	98.7	111.2	82.0	93.9	105.8	77.4	88.6	99.9
			kW	6.0			6.9			7.9			9.1			10.2		
		62.0	THC	107.0	107.0	125.1	103.1	103.1	120.5	98.8	98.8	115.5	94.0	94.0	109.9	88.7	88.7	103.7
			SHC	88.9	107.0	125.1	85.6	103.1	120.5	82.0	98.8	115.5	78.1	94.0	109.9	73.7	88.7	103.7
			kW	6.0			6.9			7.9			9.1			10.2		
		67.0	THC	111.3	111.3	118.6	106.6	106.6	116.6	101.5	101.5	114.3	95.8	95.8	111.6	89.6	89.6	108.3
			SHC	74.3	96.5	118.6	72.4	94.5	116.6	70.3	92.3	114.3	67.9	89.7	111.6	65.2	86.7	108.3
			kW	6.0			6.9			8.0			9.1			10.2		
		72.0	THC	120.5	120.5	120.5	115.4	115.4	115.4	110.0	110.0	110.0	–	–	–	–	–	–
			SHC	51.9	74.3	96.7	50.2	72.5	94.9	48.3	70.7	93.0	–	–	–	–	–	–
			kW	6.1			7.0			8.0			–			–		
		76.0	THC	–	–	–	–	–	–	–	–	–	–	–	–	–	–	–
			SHC	–	–	–	–	–	–	–	–	–	–	–	–	–	–	–
			kW	–			–			–			–			–		
5000 cfm	EAT (wb)	58.0	THC	109.3	109.3	123.1	105.3	105.3	118.6	100.8	100.8	113.6	95.9	95.9	108.1	90.5	90.5	102.0
			SHC	95.4	109.3	123.1	91.9	105.3	118.6	88.0	100.8	113.6	83.8	95.9	108.1	79.0	90.5	102.0
			kW	6.0			6.9			8.0			9.1			10.2		
		62.0	THC	109.3	109.3	127.8	105.3	105.3	123.2	100.9	100.9	118.0	96.0	96.0	112.2	90.6	90.6	105.9
			SHC	90.8	109.3	127.8	87.5	105.3	123.2	83.8	100.9	118.0	79.7	96.0	112.2	75.2	90.6	105.9
			kW	6.0			6.9			8.0			9.1			10.2		
		67.0	THC	112.4	112.4	125.8	107.7	107.7	123.6	102.5	102.5	121.0	96.8	96.8	117.8	90.7	90.7	113.7
			SHC	77.6	101.7	125.8	75.6	99.6	123.6	73.4	97.2	121.0	70.8	94.3	117.8	67.7	90.7	113.7
			kW	6.0			7.0			8.0			9.1			10.2		
		72.0	THC	121.5	121.5	121.5	116.4	116.4	116.4	–	–	–	–	–	–	–	–	–
			SHC	53.3	77.9	102.4	51.5	76.1	100.6	–	–	–	–	–	–	–	–	–
			kW	6.1			7.0			–			–			–		
		76.0	THC	–	–	–	–	–	–	–	–	–	–	–	–	–	–	–
			SHC	–	–	–	–	–	–	–	–	–	–	–	–	–	–	–
			kW	–			–			–			–			–		

LEGEND:

– = Do not operate
L/s = Liters per second
EAT(wb) = Entering air temp (wet bulb)
kW = Compressor kilowatts
SHC = Sensible heat capacity (Gross)
THC = Total heat capacity (Gross)
EAT(db) = Entering air temp (dry bulb)
Cfm = Cubic feet per minute (supply air)

38AU

PERFORMANCE DATA (cont.)

38AUD14 - 40RUA14 COMBINATION RATINGS SI

				Ambient Temperature														
				29.4			35.0			40.6			46.1			51.7		
				EAT (db)			EAT (db)			EAT (db)			EAT (db)			EAT (db)		
				23.9	26.7	29.4	23.9	26.7	29.4	23.9	26.7	29.4	23.9	26.7	29.4	23.9	26.7	29.4
1699 L/S	EAT (wb)	14.4	THC	34.2	34.2	38.5	33.0	33.0	37.2	31.7	31.7	35.7	30.2	30.2	34.0	28.5	28.5	32.1
			SHC	29.8	34.2	38.5	28.8	33.0	37.2	27.6	31.7	35.7	26.3	30.2	34.0	24.9	28.5	32.1
			kW		8.1			9.2			10.4			11.6			12.9	
		16.7	THC	34.8	34.8	38.3	33.4	33.4	37.5	31.9	31.9	36.6	30.2	30.2	35.3	28.5	28.5	33.3
			SHC	27.6	33.0	38.3	26.9	32.2	37.5	26.1	31.4	36.6	25.1	30.2	35.3	23.7	28.5	33.3
			kW		8.1			9.2			10.4			11.6			12.9	
		19.4	THC	37.5	37.5	37.5	36.0	36.0	36.0	34.3	34.3	34.3	32.4	32.4	32.4	30.3	30.3	30.3
			SHC	22.2	27.7	33.1	21.6	27.0	32.4	20.9	26.3	31.7	20.2	25.6	31.0	19.3	24.7	30.1
			kW		8.3			9.4			10.6			11.8			13.1	
		22.2	THC	40.7	40.7	40.7	38.8	38.8	38.8	37.0	37.0	37.0	35.1	35.1	35.1	32.9	32.9	32.9
			SHC	16.7	22.2	27.6	16.0	21.5	26.9	15.4	20.8	26.2	14.7	20.1	25.5	13.9	19.3	24.7
			kW		8.5			9.6			10.7			12.0			13.3	
		24.4	THC	–	43.6	43.6	–	–	–	–	–	–	–	–	–	–	–	–
			SHC	–	17.7	23.3	–	–	–	–	–	–	–	–	–	–	–	–
			kW		8.7			–			–			–			–	
1982 L/S	EAT (wb)	14.4	THC	35.6	35.6	40.1	34.3	34.3	38.7	32.9	32.9	37.1	31.4	31.4	35.3	29.6	29.6	33.3
			SHC	31.1	35.6	40.1	30.0	34.3	38.7	28.8	32.9	37.1	27.4	31.4	35.3	25.8	29.6	33.3
			kW		8.2			9.3			10.5			11.7			13.0	
		16.7	THC	35.7	35.7	41.6	34.4	34.4	40.2	33.0	33.0	38.5	31.4	31.4	36.7	29.6	29.6	34.6
			SHC	29.5	35.6	41.6	28.5	34.4	40.2	27.4	33.0	38.5	26.1	31.4	36.7	24.6	29.6	34.6
			kW		8.2			9.3			10.5			11.7			13.0	
		19.4	THC	38.2	38.2	38.2	36.6	36.6	36.6	34.9	34.9	34.9	33.0	33.0	33.9	30.8	30.8	33.0
			SHC	23.6	29.8	36.1	22.9	29.2	35.4	22.3	28.5	34.7	21.5	27.7	33.9	20.6	26.8	33.0
			kW		8.4			9.4			10.6			11.8			13.1	
		22.2	THC	41.5	41.5	41.5	39.5	39.5	39.5	37.6	37.6	37.6	35.6	35.6	35.6	33.3	33.3	33.3
			SHC	17.3	23.5	29.8	16.6	22.8	29.1	15.9	22.2	28.4	15.2	21.4	27.7	14.4	20.6	26.9
			kW		8.6			9.6			10.8			12.0			13.3	
		24.4	THC	–	–	–	–	–	–	–	–	–	–	–	–	–	–	–
			SHC	–	–	–	–	–	–	–	–	–	–	–	–	–	–	–
			kW		–			–			–			–			–	
2265 L/S	EAT (wb)	14.4	THC	36.7	36.7	41.4	35.4	35.4	39.9	33.9	33.9	38.2	32.3	32.3	36.4	30.5	30.5	34.3
			SHC	32.1	36.7	41.4	30.9	35.4	39.9	29.6	33.9	38.2	28.2	32.3	36.4	26.6	30.5	34.3
			kW		8.3			9.4			10.5			11.8			13.1	
		16.7	THC	36.8	36.8	43.0	35.4	35.4	41.4	34.0	34.0	39.7	32.3	32.3	37.8	30.5	30.5	35.6
			SHC	30.5	36.8	43.0	29.4	35.4	41.4	28.2	34.0	39.7	26.8	32.3	37.8	25.3	30.5	35.6
			kW		8.3			9.4			10.5			11.8			13.1	
		19.4	THC	38.7	38.7	39.0	37.1	37.1	38.2	35.3	35.3	37.5	33.4	33.4	36.7	31.2	31.2	35.7
			SHC	24.9	31.9	39.0	24.2	31.2	38.2	23.5	30.5	37.5	22.7	29.7	36.7	21.8	28.8	35.7
			kW		8.4			9.5			10.6			11.9			13.1	
		22.2	THC	42.1	42.1	42.1	39.9	39.9	39.9	38.0	38.0	38.0	36.0	36.0	36.0	–	–	–
			SHC	17.8	24.9	32.0	17.1	24.1	31.2	16.4	23.4	30.5	15.7	22.7	29.8	–	–	–
			kW															
		24.4	THC	–	–	–	–	–	–	–	–	–	–	–	–	–	–	–
			SHC	–	–	–	–	–	–	–	–	–	–	–	–	–	–	–
			kW		–			–			–			–			–	
2549 L/S	EAT (wb)	14.4	THC	37.7	37.7	42.4	36.3	36.3	40.9	34.8	34.8	39.2	33.1	33.1	37.3	31.2	31.2	35.1
			SHC	32.9	37.7	42.4	31.7	36.3	40.9	30.4	34.8	39.2	28.9	33.1	37.3	27.2	31.2	35.1
			kW		8.3			9.4			10.6			11.9			13.1	
		16.7	THC	37.7	37.7	44.1	36.3	36.3	42.4	34.8	34.8	40.7	33.1	33.1	38.7	31.2	31.2	36.5
			SHC	31.3	37.7	44.1	30.2	36.3	42.4	28.9	34.8	40.7	27.5	33.1	38.7	25.9	31.2	36.5
			kW		8.3			9.4			10.6			11.9			13.1	
		19.4	THC	39.2	39.2	41.6	37.5	37.5	40.9	35.7	35.7	40.1	33.7	33.7	39.2	31.5	31.5	38.0
			SHC	26.1	33.9	41.6	25.4	33.1	40.9	24.7	32.4	40.1	23.9	31.5	39.2	22.9	30.5	38.0
			kW		8.4			9.5			10.7			11.9			13.2	
		22.2	THC	42.6	42.6	42.6	40.3	40.3	40.3	38.4	38.4	38.4	–	–	–	–	–	–
			SHC	18.3	26.2	34.0	17.5	25.4	33.2	16.9	24.7	32.6	–	–	–	–	–	–
			kW		8.7			9.7		10.8				–			–	
		24.4	THC	–	–	–	–	–	–	–	–	–	–	–	–	–	–	–
			SHC	–	–	–	–	–	–	–	–	–	–	–	–	–	–	–
			kW		–			–			–			–			–	
2832 L/S	EAT (wb)	14.4	THC	38.5	38.5	43.3	37.0	37.0	41.7	35.5	35.5	40.0	33.7	33.7	38.0	31.8	31.8	35.8
			SHC	33.6	38.5	43.3	32.3	37.0	41.7	31.0	35.5	40.0	29.5	33.7	38.0	27.8	31.8	35.8
			kW		8.4			9.5			10.7			11.9			13.2	
		16.7	THC	38.5	38.5	45.0	37.0	37.0	43.3	35.5	35.5	41.5	33.8	33.8	39.5	31.8	31.8	37.2
			SHC	32.0	38.5	45.0	30.8	37.0	43.3	29.5	35.5	41.5	28.0	33.8	39.5	26.4	31.8	37.2
			kW	8.4			9.5			10.7			11.9				13.2	
		19.4	THC	39.6	39.6	44.2	37.8	37.8	43.4	36.0	36.0	42.5	34.0	34.0	41.4	31.8	31.8	39.9
			SHC	27.3	35.7	44.2	26.5	35.0	43.4	25.8	34.1	42.5	24.9	33.1	41.4	23.8	31.8	39.9
			kW		8.5			9.5			10.7			11.9			13.2	
		22.2	THC	43.0	43.0	43.0	40.7	40.7	40.7	–	–	–	–	–	–	–	–	–
			SHC	18.8	27.4	36.0	18.0	26.6	35.3	–	–	–	–	–	–	–	–	–
			kW	8.7				9.7			–			–			–	
		24.4	THC	–	–	–	–	–	–	–	–	–	–	–	–	–	–	–
			SHC	–	–	–	–	–	–	–	–	–	–	–	–	–	–	–
			kW		–			–			–			–			–	

LEGEND:

– = Do not operate
L/s = Liters per second
EAT(wb) = Entering air temp (wet bulb)
kW = Compressor kilowatts
SHC = Sensible heat capacity (Gross)
THC = Total heat capacity (Gross)
EAT(db) = Entering air temp (dry bulb)
Cfm = Cubic feet per minute (supply air)

PERFORMANCE DATA (cont.)

38AUD14 - 40RUA14 **COMBINATION RATINGS** **ENGLISH**

				Ambient Temperature														
				85.0			95.0			105.0			115.0			125.0		
				EAT (db)			EAT (db)			EAT (db)			EAT (db)			EAT (db)		
				75.0	80.0	85.0	75.0	80.0	85.0	75.0	80.0	85.0	75.0	80.0	85.0	75.0	80.0	85.0
3600 cfm	EAT (wb)	58.0	THC	116.6	116.6	131.3	112.5	112.5	126.8	108.0	108.0	121.7	102.9	102.9	115.9	97.1	97.1	109.4
			SHC	101.8	116.6	131.3	98.2	112.5	126.8	94.3	108.0	121.7	89.8	102.9	115.9	84.8	97.1	109.4
			kW	8.1			9.2			10.4			11.6			12.9		
		62.0	THC	118.8	118.8	130.6	114.0	114.0	128.0	108.7	108.7	124.9	103.0	103.0	120.4	97.2	97.2	113.7
			SHC	94.3	112.5	130.6	91.9	110.0	128.0	89.1	107.0	124.9	85.5	103.0	120.4	80.7	97.2	113.7
			kW	8.1			9.2			10.4			11.6			12.9		
		67.0	THC	128.0	128.0	128.0	122.8	122.8	122.8	117.1	117.1	117.1	110.6	110.6	110.6	103.4	103.4	103.4
			SHC	75.9	94.4	112.8	73.8	92.2	110.7	71.4	89.9	108.3	68.9	87.3	105.7	66.0	84.4	102.8
			kW	8.3			9.4			10.6			11.8			13.1		
		72.0	THC	138.8	138.8	138.8	132.5	132.5	132.5	126.4	126.4	126.4	119.7	119.7	119.7	112.1	112.1	112.1
			SHC	57.0	75.6	94.1	54.6	73.2	91.8	52.4	71.0	89.5	50.0	68.5	87.1	47.3	65.8	84.3
			kW	8.5			9.6			10.7			12.0			13.3		
		76.0	THC	–	148.6	148.6	–	–	–	–	–	–	–	–	–	–	–	–
			SHC	–	60.5	79.4	–	–	–	–	–	–	–	–	–	–	–	–
			kW	8.7			–			–			–			–		
4200 cfm	EAT (wb)	58.0	THC	121.4	121.4	136.8	117.1	117.1	131.9	112.3	112.3	126.6	107.0	107.0	120.6	100.9	100.9	113.7
			SHC	106.0	121.4	136.8	102.2	117.1	131.9	98.1	112.3	126.6	93.4	107.0	120.6	88.1	100.9	113.7
			kW	8.2			9.3			10.5			11.7			13.0		
		62.0	THC	121.8	121.8	141.8	117.3	117.3	137.1	112.5	112.5	131.5	107.1	107.1	125.2	101.0	101.0	118.1
			SHC	100.8	121.3	141.8	97.4	117.3	137.1	93.4	112.5	131.5	88.9	107.1	125.2	83.9	101.0	118.1
			kW	8.2			9.3			10.5			11.7			13.0		
		67.0	THC	130.4	130.4	130.4	124.9	124.9	124.9	119.1	119.1	119.1	112.5	112.5	115.8	105.0	105.0	112.6
			SHC	80.5	101.8	123.1	78.3	99.6	120.8	76.0	97.2	118.5	73.4	94.6	115.8	70.4	91.5	112.6
			kW	8.4			9.4			10.6			11.8			13.1		
		72.0	THC	141.6	141.6	141.6	134.7	134.7	134.7	128.4	128.4	128.4	121.5	121.5	121.5	113.7	113.7	113.7
			SHC	59.0	80.3	101.7	56.5	77.8	99.2	54.2	75.6	97.0	51.8	73.1	94.5	49.0	70.4	91.7
			kW	8.6			9.6			10.8			12.0			13.3		
		76.0	THC	–	–	–	–	–	–	–	–	–	–	–	–	–	–	–
			SHC	–	–	–	–	–	–	–	–	–	–	–	–	–	–	–
			kW	–			–			–			–			–		
4800 cfm	EAT (wb)	58.0	THC	125.3	125.3	141.2	120.8	120.8	136.1	115.8	115.8	130.5	110.2	110.2	124.2	103.9	103.9	117.1
			SHC	109.4	125.3	141.2	105.4	120.8	136.1	101.1	115.8	130.5	96.3	110.2	124.2	90.7	103.9	117.1
			kW	8.3			9.4			10.5			11.8			13.1		
		62.0	THC	125.5	125.5	146.7	120.9	120.9	141.3	115.9	115.9	135.6	110.3	110.3	129.0	104.0	104.0	121.6
			SHC	104.2	125.4	146.7	100.4	120.9	141.3	96.3	115.9	135.6	91.6	110.3	129.0	86.4	104.0	121.6
			kW	8.3			9.4			10.5			11.8			13.1		
		67.0	THC	132.2	132.2	132.9	126.5	126.5	130.5	120.6	120.6	128.0	113.9	113.9	125.1	106.4	106.4	121.7
			SHC	84.9	108.9	132.9	82.6	106.6	130.5	80.2	104.1	128.0	77.5	101.3	125.1	74.5	98.1	121.7
			kW	8.4			9.5			10.6			11.9			13.1		
		72.0	THC	143.8	143.8	143.8	136.3	136.3	136.3	129.8	129.8	129.8	122.8	122.8	122.8	–	–	–
			SHC	60.8	84.9	109.1	58.2	82.3	106.4	55.9	80.0	104.1	53.5	77.6	101.7	–	–	–
			kW	8.6			9.7			10.8			12.1			–		
		76.0	THC	–	–	–	–	–	–	–	–	–	–	–	–	–	–	–
			SHC	–	–	–	–	–	–	–	–	–	–	–	–	–	–	–
			kW	–			–			–			–			–		
5400 cfm	EAT (wb)	58.0	THC	128.5	128.5	144.8	123.8	123.8	139.5	118.7	118.7	133.8	112.9	112.9	127.2	106.4	106.4	119.9
			SHC	112.2	128.5	144.8	108.1	123.8	139.5	103.6	118.7	133.8	98.6	112.9	127.2	92.9	106.4	119.9
			kW	8.3			9.4			10.6			11.9			13.1		
		62.0	THC	128.6	128.6	150.4	123.9	123.9	144.8	118.8	118.8	138.9	113.0	113.0	132.1	106.4	106.4	124.5
			SHC	106.8	128.6	150.4	102.9	123.9	144.8	98.7	118.8	138.9	93.8	113.0	132.1	88.4	106.4	124.5
			kW	8.3			9.4			10.6			11.9			13.1		
		67.0	THC	133.7	133.7	142.1	127.8	127.8	139.5	121.8	121.8	136.9	115.0	115.0	133.7	107.5	107.5	129.8
			SHC	89.1	115.6	142.1	86.7	113.1	139.5	84.2	110.6	136.9	81.4	107.6	133.7	78.1	103.9	129.8
			kW	8.4			9.5			10.7			11.9			13.2		
		72.0	THC	145.3	145.3	145.3	137.6	137.6	137.6	130.9	130.9	130.9	–	–	–	–	–	–
			SHC	62.5	89.3	116.1	59.8	86.6	113.4	57.5	84.3	111.1	–	–	–	–	–	–
			kW	8.7			9.7			10.8			–			–		
		76.0	THC	–	–	–	–	–	–	–	–	–	–	–	–	–	–	–
			SHC	–	–	–	–	–	–	–	–	–	–	–	–	–	–	–
			kW	–			–			–			–			–		
6000 cfm	EAT (wb)	58.0	THC	131.2	131.2	147.9	126.3	126.3	142.3	121.0	121.0	136.4	115.1	115.1	129.7	108.4	108.4	122.2
			SHC	114.6	131.2	147.9	110.3	126.3	142.3	105.7	121.0	136.4	100.5	115.1	129.7	94.7	108.4	122.2
			kW	8.4			9.5			10.7			11.9			13.2		
		62.0	THC	131.3	131.3	153.6	126.4	126.4	147.8	121.1	121.1	141.6	115.2	115.2	134.7	108.5	108.5	126.8
			SHC	109.1	131.3	153.6	105.0	126.4	147.8	100.6	121.1	141.6	95.7	115.2	134.7	90.1	108.5	126.8
			kW	8.4			9.5			10.7			11.9			13.2		
		67.0	THC	135.0	135.0	150.8	128.9	128.9	148.0	122.8	122.8	145.0	116.1	116.1	141.3	108.6	108.6	136.2
			SHC	93.0	121.9	150.8	90.5	119.3	148.0	87.9	116.5	145.0	84.8	113.0	141.3	81.1	108.6	136.2
			kW	8.5			9.5			10.7			11.9			13.2		
		72.0	THC	146.6	146.6	146.6	138.8	138.8	138.8	–	–	–	–	–	–	–	–	–
			SHC	64.2	93.6	123.0	61.5	90.9	120.3	–	–	–	–	–	–	–	–	–
			kW	8.7			9.7			–			–			–		
		76.0	THC	–	–	–	–	–	–	–	–	–	–	–	–	–	–	–
			SHC	–	–	–	–	–	–	–	–	–	–	–	–	–	–	–
			kW	–			–			–			–			–		

LEGEND:

– = Do not operate
L/s = Liters per second
EAT(wb) = Entering air temp (wet bulb)
kW = Compressor kilowatts
SHC = Sensible heat capacity (Gross)
THC = Total heat capacity (Gross)
EAT(db) = Entering air temp (dry bulb)
Cfm = Cubic feet per minute (supply air)

38AU

PERFORMANCE DATA (cont.)

38AUD16 - 40RUA16 **COMBINATION RATINGS** **SI**

				Ambient Temperature														
				29.4			35.0			40.6			46.1			51.7		
				EAT (db)			EAT (db)			EAT (db)			EAT (db)			EAT (db)		
				23.9	26.7	29.4	23.9	26.7	29.4	23.9	26.7	29.4	23.9	26.7	29.4	23.9	26.7	29.4
2124 L/S	EAT (wb)	14.4	THC	44.1	44.1	49.7	42.6	42.6	48.0	40.9	40.9	46.1	39.2	39.2	44.2	37.3	37.3	42.0
			SHC	38.5	44.1	49.7	37.2	42.6	48.0	35.8	40.9	46.1	34.2	39.2	44.2	32.5	37.3	42.0
			kW		9.7			10.9			12.3			13.8			15.4	
		16.7	THC	45.3	45.3	49.0	43.4	43.4	48.0	41.4	41.4	46.9	39.4	39.4	45.4	37.3	37.3	43.6
			SHC	35.5	42.3	49.0	34.6	41.3	48.0	33.6	40.3	46.9	32.4	38.9	45.4	31.0	37.3	43.6
			kW		9.7			10.9			12.3			13.8			15.4	
		19.4	THC	49.2	49.2	49.2	47.1	47.1	47.1	44.9	44.9	44.9	42.6	42.6	42.6	40.0	40.0	40.0
			SHC	28.8	35.6	42.5	28.0	34.8	41.6	27.1	33.9	40.7	26.1	32.9	39.7	25.1	31.9	38.7
			kW		9.9			11.1			12.4			13.9			15.5	
		22.2	THC	53.3	53.3	53.3	51.1	51.1	51.1	48.8	48.8	48.8	46.2	46.2	46.2	43.5	43.5	43.5
			SHC	21.8	28.7	35.5	21.0	27.9	34.7	20.1	27.0	33.9	19.2	26.1	32.9	18.2	25.1	31.9
			kW		10.1			11.3			12.6			14.1			15.6	
		24.4	THC	–	56.7	56.7	–	54.5	54.5	–	52.0	52.0	–	–	–	–	–	–
			SHC	–	23.0	30.0	–	22.2	29.2	–	21.4	28.3	–	–	–	–	–	–
			kW		10.3			11.5			12.8			–			–	
2478 L/S	EAT (wb)	14.4	THC	46.1	46.1	52.0	44.5	44.5	50.1	42.8	42.8	48.2	40.9	40.9	46.0	38.8	38.8	43.7
			SHC	40.3	46.1	52.0	38.9	44.5	50.1	37.3	42.8	48.2	35.7	40.9	46.0	33.9	38.8	43.7
			kW		9.8			11.0			12.4			13.8			15.4	
		16.7	THC	46.5	46.5	53.3	44.7	44.7	51.7	42.8	42.8	50.0	40.9	40.9	47.8	38.8	38.8	45.4
			SHC	38.0	45.6	53.3	36.8	44.3	51.7	35.6	42.8	50.0	34.0	40.9	47.8	32.2	38.8	45.4
			kW		9.8			11.0			12.4			13.8			15.4	
		19.4	THC	50.2	50.2	50.2	48.1	48.1	48.1	45.8	45.8	45.8	43.3	43.3	43.5	40.7	40.7	42.4
			SHC	30.6	38.4	46.3	29.7	37.5	45.4	28.8	36.6	44.5	27.8	35.6	43.5	26.8	34.6	42.4
			kW		10.0			11.2			12.5			13.9			15.5	
		22.2	THC	54.3	54.3	54.3	52.1	52.1	52.1	49.6	49.6	49.6	47.0	47.0	47.0	44.2	44.2	44.2
			SHC	22.5	30.4	38.3	21.7	29.6	37.5	20.8	28.7	36.6	19.9	27.8	35.6	18.9	26.8	34.6
			kW		10.2			11.4			12.7			14.1			15.7	
		24.4	THC	–	57.8	57.8	–	55.4	55.4	–	–	–	–	–	–	–	–	–
			SHC	–	23.9	31.9	–	23.1	31.1	–	–	–	–	–	–	–	–	–
			kW		10.4			11.6			–			–			–	
2832 L/S	EAT (wb)	14.4	THC	47.8	47.8	53.8	46.1	46.1	51.9	44.2	44.2	49.8	42.2	42.2	47.6	40.0	40.0	45.1
			SHC	41.7	47.8	53.8	40.2	46.1	51.9	38.6	44.2	49.8	36.8	42.2	47.6	34.9	40.0	45.1
			kW		9.9			11.1			12.4			13.9			15.5	
		16.7	THC	47.8	47.8	55.9	46.1	46.1	53.9	44.3	44.3	51.7	42.2	42.2	49.4	40.0	40.0	46.8
			SHC	39.7	47.8	55.9	38.3	46.1	53.9	36.8	44.3	51.7	35.1	42.2	49.4	33.3	40.0	46.8
			kW		9.9			11.1			12.4			13.9			15.5	
		19.4	THC	50.9	50.9	50.9	48.8	48.8	49.0	46.4	46.4	48.1	43.9	43.9	47.0	41.2	41.2	45.8
			SHC	32.2	41.1	49.9	31.3	40.2	49.0	30.4	39.2	48.1	29.4	38.2	47.0	28.3	37.1	45.8
			kW		10.0			11.2			12.5			14.0			15.5	
		22.2	THC	55.1	55.1	55.1	52.8	52.8	52.8	50.3	50.3	50.3	47.6	47.6	47.6	44.7	44.7	44.7
			SHC	23.2	32.1	41.0	22.3	31.2	40.2	21.5	30.4	39.2	20.5	29.4	38.3	19.5	28.4	37.3
			kW		10.2			11.4			12.7			14.2			15.7	
		24.4	THC	–	–	–	–	–	–	–	–	–	–	–	–	–	–	–
			SHC	–	–	–	–	–	–	–	–	–	–	–	–	–	–	–
			kW		–			–			–			–			–	
3186 L/S	EAT (wb)	14.4	THC	49.1	49.1	55.4	47.3	47.3	53.3	45.4	45.4	51.1	43.3	43.3	48.8	41.0	41.0	46.2
			SHC	42.9	49.1	55.4	41.3	47.3	53.3	39.6	45.4	51.1	37.8	43.3	48.8	35.8	41.0	46.2
			kW		9.9			11.1			12.5			13.9			15.5	
		16.7	THC	49.2	49.2	57.5	47.4	47.4	55.4	45.4	45.4	53.1	43.3	43.3	50.6	41.0	41.0	47.9
			SHC	40.8	49.2	57.5	39.3	47.4	55.4	37.7	45.4	53.1	36.0	43.3	50.6	34.1	41.0	47.9
			kW		9.9			11.1			12.5			13.9			15.5	
		19.4	THC	51.5	51.5	53.4	49.3	49.3	52.5	47.0	47.0	51.4	44.4	44.4	50.3	41.7	41.7	49.0
			SHC	33.8	43.6	53.4	32.9	42.7	52.5	31.9	41.7	51.4	30.9	40.6	50.3	29.7	39.4	49.0
			kW		10.0			11.2			12.6			14.0			15.6	
		22.2	THC	55.7	55.7	55.7	53.3	53.3	53.3	50.8	50.8	50.8	48.0	48.0	48.0	45.0	45.0	45.0
			SHC	23.8	33.7	43.6	23.0	32.9	42.7	22.1	32.0	41.9	21.1	31.0	40.9	20.1	30.0	39.8
			kW		10.3			11.4			12.8			14.2			15.7	
		24.4	THC	–	–	–	–	–	–	–	–	–	–	–	–	–	–	–
			SHC	–	–	–	–	–	–	–	–	–	–	–	–	–	–	–
			kW		–			–			–			–			–	
3540 L/S	EAT (wb)	14.4	THC	50.2	50.2	56.6	48.4	48.4	54.5	46.4	46.4	52.3	44.2	44.2	49.8	41.8	41.8	47.1
			SHC	43.9	50.2	56.6	42.2	48.4	54.5	40.5	46.4	52.3	38.6	44.2	49.8	36.5	41.8	47.1
			kW		10.0			11.2			12.5			14.0			15.6	
		16.7	THC	50.3	50.3	58.8	48.4	48.4	56.6	46.4	46.4	54.2	44.2	44.2	51.7	41.8	41.8	48.9
			SHC	41.8	50.3	58.8	40.2	48.4	56.6	38.5	46.4	54.2	36.7	44.2	51.7	34.8	41.8	48.9
			kW		10.0			11.2			12.5			14.0			15.6	
		19.4	THC	52.0	52.0	56.7	49.8	49.8	55.7	47.4	47.4	54.5	44.8	44.8	53.3	42.1	42.1	51.7
			SHC	35.3	46.0	56.7	34.3	45.0	55.7	33.3	43.9	54.5	32.2	42.7	53.3	30.9	41.3	51.7
			kW		10.1			11.3			12.6			14.0			15.6	
		22.2	THC	56.1	56.1	56.1	53.7	53.7	53.7	51.2	51.2	51.2	–	–	–	–	–	–
			SHC	24.4	35.3	46.1	23.6	34.4	45.3	22.7	33.5	44.4	–	–	–	–	–	–
			kW		10.3			11.5			12.8			14.2			–	
		24.4	THC	–	–	–	–	–	–	–	–	–	–	–	–	–	–	–
			SHC	–	–	–	–	–	–	–	–	–	–	–	–	–	–	–
			kW		–			–			–			–			–	

LEGEND:

– = Do not operate
L/s = Liters per second
EAT(wb) = Entering air temp (wet bulb)
kW = Compressor kilowatts
SHC = Sensible heat capacity (Gross)
THC = Total heat capacity (Gross)
EAT(db) = Entering air temp (dry bulb)
Cfm = Cubic feet per minute (supply air)

38AU

PERFORMANCE DATA (cont.)

38AUD16 - 40RUA16 **COMBINATION RATINGS** **ENGLISH**

				Ambient Temperature														
				85.0			95.0			105.0			115.0			125.0		
				EAT (db)			EAT (db)			EAT (db)			EAT (db)			EAT (db)		
				75.0	80.0	85.0	75.0	80.0	85.0	75.0	80.0	85.0	75.0	80.0	85.0	75.0	80.0	85.0
4500 cfm	EAT (wb)	58.0	THC	150.4	150.4	169.5	145.3	145.3	163.7	139.7	139.7	157.4	133.7	133.7	150.7	127.1	127.1	143.2
			SHC	131.3	150.4	169.5	126.8	145.3	163.7	122.0	139.7	157.4	116.7	133.7	150.7	111.0	127.1	143.2
			kW	9.7			10.9			12.3			13.8			15.4		
		62.0	THC	154.4	154.4	167.2	148.0	148.0	163.8	141.4	141.4	160.1	134.4	134.4	155.0	127.2	127.2	148.8
			SHC	121.2	144.2	167.2	118.0	140.9	163.8	114.7	137.4	160.1	110.5	132.8	155.0	105.7	127.2	148.8
			kW	9.7			10.9			12.3			13.8			15.4		
		67.0	THC	167.7	167.7	167.7	160.7	160.7	160.7	153.3	153.3	153.3	145.2	145.2	145.2	136.6	136.6	136.6
			SHC	98.3	121.6	144.9	95.4	118.7	142.0	92.4	115.7	138.9	89.1	112.4	135.6	85.6	108.9	132.1
			kW	9.9			11.1			12.4			13.9			15.5		
		72.0	THC	181.8	181.8	181.8	174.4	174.4	174.4	166.5	166.5	166.5	157.8	157.8	157.8	148.5	148.5	148.5
			SHC	74.4	97.8	121.2	71.7	95.1	118.5	68.7	92.1	115.5	65.5	88.9	112.3	62.1	85.5	108.8
			kW	10.1			11.3			12.6			14.1			15.6		
		76.0	THC	–	193.5	193.5	–	185.8	185.8	–	177.4	177.4	–	–	–	–	–	–
			SHC	–	78.4	102.4	–	75.8	99.7	–	72.9	96.7	–	–	–	–	–	–
			kW	10.3			11.5			12.8			–			–		
5250 cfm	EAT (wb)	58.0	THC	157.4	157.4	177.4	151.8	151.8	171.1	145.9	145.9	164.4	139.4	139.4	157.1	132.3	132.3	149.1
			SHC	137.4	157.4	177.4	132.6	151.8	171.1	127.4	145.9	164.4	121.7	139.4	157.1	115.5	132.3	149.1
			kW	9.8			11.0			12.4			13.8			15.4		
		62.0	THC	158.7	158.7	181.7	152.4	152.4	176.5	146.0	146.0	170.7	139.5	139.5	163.1	132.4	132.4	154.9
			SHC	129.7	155.7	181.7	125.7	151.1	176.5	121.3	146.0	170.7	115.9	139.5	163.1	110.0	132.4	154.9
			kW	9.8			11.0			12.4			13.8			15.4		
		67.0	THC	171.2	171.2	171.2	164.0	164.0	164.0	156.2	156.2	156.2	147.9	147.9	148.3	139.0	139.0	144.6
			SHC	104.3	131.1	157.9	101.3	128.1	154.9	98.2	125.0	151.8	94.9	121.6	148.3	91.3	118.0	144.6
			kW	10.0			11.2			12.5			13.9			15.5		
		72.0	THC	185.3	185.3	185.3	177.6	177.6	177.6	169.4	169.4	169.4	160.5	160.5	160.5	150.7	150.7	150.7
			SHC	76.8	103.7	130.7	74.0	100.9	127.9	71.0	98.0	124.9	67.9	94.7	121.6	64.4	91.3	118.1
			kW	10.2			11.4			12.7			14.1			15.7		
		76.0	THC	–	197.1	197.1	–	189.1	189.1	–	–	–	–	–	–	–	–	–
			SHC	–	81.5	109.0	–	78.8	106.2	–	–	–	–	–	–	–	–	–
			kW	10.4			11.6			–			–			–		
6000 cfm	EAT (wb)	58.0	THC	163.0	163.0	183.7	157.2	157.2	177.1	150.8	150.8	170.0	144.0	144.0	162.3	136.5	136.5	153.8
			SHC	142.4	163.0	183.7	137.2	157.2	177.1	131.7	150.8	170.0	125.7	144.0	162.3	119.2	136.5	153.8
			kW	9.9			11.1			12.4			13.9			15.5		
		62.0	THC	163.2	163.2	190.8	157.3	157.3	183.9	151.0	151.0	176.5	144.1	144.1	168.5	136.6	136.6	159.7
			SHC	135.6	163.2	190.8	130.6	157.3	183.9	125.4	151.0	176.5	119.7	144.1	168.5	113.5	136.6	159.7
			kW	9.9			11.1			12.4			13.9			15.5		
		67.0	THC	173.8	173.8	173.8	166.4	166.4	167.3	158.4	158.4	164.0	149.9	149.9	160.3	140.7	140.7	156.4
			SHC	109.9	140.1	170.3	106.9	137.1	167.3	103.7	133.8	164.0	100.3	130.3	160.3	96.6	126.5	156.4
			kW	10.0			11.2			12.5			14.0			15.5		
		72.0	THC	187.9	187.9	187.9	180.0	180.0	180.0	171.6	171.6	171.6	162.4	162.4	162.4	152.5	152.5	152.5
			SHC	79.0	109.4	139.8	76.2	106.6	137.0	73.2	103.6	133.9	70.0	100.3	130.7	66.6	96.9	127.2
			kW	10.2			11.4			12.7			14.2			15.7		
		76.0	THC	–	–	–	–	–	–	–	–	–	–	–	–	–	–	–
			SHC	–	–	–	–	–	–	–	–	–	–	–	–	–	–	–
			kW	–			–			–			–			–		
6750 cfm	EAT (wb)	58.0	THC	167.6	167.6	188.9	161.5	161.5	182.0	154.9	154.9	174.5	147.7	147.7	166.4	139.8	139.8	157.6
			SHC	146.3	167.6	188.9	141.0	161.5	182.0	135.2	154.9	174.5	128.9	147.7	166.4	122.1	139.8	157.6
			kW	9.9			11.1			12.5			13.9			15.5		
		62.0	THC	167.7	167.7	196.1	161.6	161.6	188.9	155.0	155.0	181.2	147.8	147.8	172.8	139.9	139.9	163.6
			SHC	139.3	167.7	196.1	134.2	161.6	188.9	128.7	155.0	181.2	122.7	147.8	172.8	116.2	139.9	163.6
			kW	9.9			11.1			12.5			13.9			15.5		
		67.0	THC	175.8	175.8	182.2	168.3	168.3	179.0	160.2	160.2	175.5	151.5	151.5	171.6	142.3	142.3	167.1
			SHC	115.2	148.7	182.2	112.2	145.6	179.0	108.9	142.2	175.5	105.4	138.5	171.6	101.5	134.3	167.1
			kW	10.0			11.2			12.6			14.0			15.6		
		72.0	THC	189.9	189.9	189.9	181.9	181.9	181.9	173.2	173.2	173.2	163.9	163.9	163.9	153.7	153.7	153.7
			SHC	81.2	114.9	148.7	78.4	112.1	145.8	75.3	109.1	142.8	72.1	105.8	139.5	68.6	102.3	135.9
			kW	10.3			11.4			12.8			14.2			15.7		
		76.0	THC	–	–	–	–	–	–	–	–	–	–	–	–	–	–	–
			SHC	–	–	–	–	–	–	–	–	–	–	–	–	–	–	–
			kW	–			–			–			–			–		
7500 cfm	EAT (wb)	58.0	THC	171.4	171.4	193.2	165.1	165.1	186.0	158.2	158.2	178.3	150.8	150.8	169.9	142.7	142.7	160.7
			SHC	149.7	171.4	193.2	144.1	165.1	186.0	138.1	158.2	178.3	131.6	150.8	169.9	124.6	142.7	160.7
			kW	10.0			11.2			12.5			14.0			15.6		
		62.0	THC	171.5	171.5	200.6	165.2	165.2	193.1	158.3	158.3	185.1	150.9	150.9	176.4	142.7	142.7	166.9
			SHC	142.5	171.5	200.6	137.2	165.2	193.1	131.5	158.3	185.1	125.3	150.9	176.4	118.6	142.7	166.9
			kW	10.0			11.2			12.5			14.0			15.6		
		67.0	THC	177.5	177.5	193.4	169.8	169.8	190.0	161.7	161.7	186.1	153.0	153.0	181.7	143.7	143.7	176.3
			SHC	120.3	156.8	193.4	117.1	153.5	190.0	113.7	149.9	186.1	110.0	145.8	181.7	105.6	140.9	176.3
			kW	10.1			11.3			12.6			14.0			15.6		
		72.0	THC	191.5	191.5	191.5	183.3	183.3	183.3	174.6	174.6	174.6	165.0	165.0	165.0	–	–	–
			SHC	83.2	120.3	157.3	80.4	117.4	154.5	77.4	114.4	151.4	74.1	111.1	148.1	–	–	–
			kW	10.3			11.5			12.8			14.2			–		
		76.0	THC	–	–	–	–	–	–	–	–	–	–	–	–	–	–	–
			SHC	–	–	–	–	–	–	–	–	–	–	–	–	–	–	–
			kW	–			–			–			–			–		

LEGEND:

– = Do not operate
L/s = Liters per second
EAT(wb) = Entering air temp (wet bulb)
kW = Compressor kilowatts
SHC = Sensible heat capacity (Gross)
THC = Total heat capacity (Gross)
EAT(db) = Entering air temp (dry bulb)
Cfm = Cubic feet per minute (supply air)

38AU

PERFORMANCE DATA (cont.)

38AUD25 - 40RUA25 **COMBINATION RATINGS** **SI**

				Ambient Temperature														
				29.4			35.0			40.6			46.1			51.7		
				EAT (db)			EAT (db)			EAT (db)			EAT (db)			EAT (db)		
				23.9	26.7	29.4	23.9	26.7	29.4	23.9	26.7	29.4	23.9	26.7	29.4	23.9	26.7	29.4
2832 L/S	EAT (wb)	14.4	THC	58.3	58.3	65.7	56.2	56.2	63.3	54.0	54.0	60.8	51.5	51.5	58.0	48.7	48.7	54.9
			SHC	50.9	58.3	65.7	49.1	56.2	63.3	47.1	54.0	60.8	44.9	51.5	58.0	42.5	48.7	54.9
			kW	11.6			13.0			14.5			16.3			18.3		
		16.7	THC	59.8	59.8	64.9	57.3	57.3	63.6	54.5	54.5	62.0	51.7	51.7	59.8	48.7	48.7	57.0
			SHC	47.0	56.0	64.9	45.8	54.7	63.6	44.4	53.2	62.0	42.6	51.2	59.8	40.5	48.7	57.0
			kW	11.7			13.0			14.6			16.3			18.3		
		19.4	THC	65.4	65.4	65.4	62.5	62.5	62.5	59.4	59.4	59.4	56.0	56.0	56.0	52.3	52.3	52.3
			SHC	38.3	47.4	56.4	37.1	46.2	55.2	35.8	44.9	53.9	34.5	43.5	52.5	33.0	42.0	51.0
			kW		11.9			13.3			14.6			16.6			18.5	
		22.2	THC	71.6	71.6	71.6	68.4	68.4	68.4	65.0	65.0	65.0	61.3	61.3	61.3	57.2	57.2	57.2
			SHC	29.3	38.4	47.5	28.1	37.2	46.3	26.8	35.9	45.0	25.4	34.5	43.6	24.0	33.0	42.1
			kW		12.3			13.6			15.1			16.9		18.8		
		24.4	THC	–	76.8	76.8	–	73.4	73.4	–	69.7	69.7	–	–	–	–	–	–
			SHC	–	31.1	40.6	–	29.9	39.3	–	28.6	38.0	–	–	–	–	–	–
			kW		12.6			13.9			15.4			–			–	
3304 L/S	EAT (wb)	14.4	THC	61.1	61.1	68.8	58.9	58.9	66.4	56.4	56.4	63.6	53.7	53.7	60.6	50.7	50.7	57.2
			SHC	53.3	61.1	68.8	51.4	58.9	66.4	49.3	56.4	63.6	46.9	53.7	60.6	44.3	50.7	57.2
			kW		11.7			13.1			14.7			16.5		18.4		
		16.7	THC	61.7	61.7	70.5	59.1	59.1	68.5	56.5	56.5	66.0	53.8	53.8	62.9	50.8	50.8	59.4
			SHC	50.4	60.4	70.5	48.8	58.6	68.5	46.9	56.5	66.0	44.7	53.8	62.9	42.2	50.8	59.4
			kW		11.8			13.1			14.7			16.5			18.4	
		19.4	THC	67.0	67.0	67.0	64.0	64.0	64.0	60.7	60.7	60.7	57.2	57.2	57.5	53.3	53.3	55.9
			SHC	40.7	51.1	61.5	39.5	49.9	60.3	38.2	48.5	58.9	36.7	47.1	57.5	35.2	45.5	55.9
			kW		12.0			13.4			14.9			16.6			18.6	
		22.2	THC	73.2	73.2	73.2	69.9	69.9	69.9	66.3	66.3	66.3	62.4	62.4	62.4	58.2	58.2	58.2
			SHC	30.3	40.8	51.3	29.1	39.5	50.0	27.8	38.2	48.7	26.4	36.8	47.2	24.9	35.3	45.7
			kW		12.4			13.7			15.2			16.9			18.8	
		24.4	THC	–	78.5	78.5	–	–	–	–	–	–	–	–	–	–	–	–
			SHC	–	32.4	43.2	–	–	–	–	–	–	–	–	–	–	–	–
			kW		12.7			–			–			–			–	
3776 L/S	EAT (wb)	14.4	THC	63.4	63.4	71.5	61.0	61.0	68.8	58.4	58.4	65.8	55.5	55.5	62.6	52.4	52.4	59.0
			SHC	55.4	63.4	71.5	53.3	61.0	68.8	51.0	58.4	65.8	48.5	55.5	62.6	45.7	52.4	59.0
			kW		11.9			13.2			14.8			16.6			18.5	
		16.7	THC	63.5	63.5	74.2	61.1	61.1	71.4	58.5	58.5	68.4	55.6	55.6	65.0	52.4	52.4	61.3
			SHC	52.7	63.5	74.2	50.7	61.1	71.4	48.6	58.5	68.4	46.2	55.6	65.0	43.6	52.4	61.3
			kW		11.9			13.2			14.8			16.6			18.5	
		19.4	THC	68.1	68.1	68.1	65.0	65.0	65.1	61.6	61.6	63.7	58.0	58.0	62.1	54.0	54.0	60.4
			SHC	42.9	54.7	66.4	41.7	53.4	65.1	40.3	52.0	63.7	38.8	50.5	62.1	37.3	48.8	60.4
			kW		12.1			13.4			15.0			16.7			18.6	
		22.2	THC	74.5	74.5	74.5	71.0	71.0	71.0	67.3	67.3	67.3	63.3	63.3	63.3	59.0	59.0	59.0
			SHC	31.2	43.1	54.8	30.0	41.8	53.6	28.7	40.4	52.2	27.3	39.0	50.7	25.8	37.5	49.2
			kW		12.4			13.8			15.3			17.0			18.9	
		24.4	THC	–	–	–	–	–	–	–	–	–	–	–	–	–	–	–
			SHC	–	–	–	–	–	–	–	–	–	–	–	–	–	–	–
			kW		–			–			–			–			–	
4248 L/S	EAT (wb)	14.4	THC	65.4	65.4	73.7	62.8	62.8	70.8	60.1	60.1	67.7	57.1	57.1	64.3	53.8	53.8	60.6
			SHC	57.1	65.4	73.7	54.9	62.8	70.8	52.5	60.1	67.7	49.8	57.1	64.3	46.9	53.8	60.6
			kW		12.0			13.3			14.9			16.6			18.6	
		16.7	THC	65.4	65.4	76.5	62.9	62.9	73.5	60.1	60.1	70.3	57.1	57.1	66.8	53.8	53.8	62.9
			SHC	54.3	65.4	76.5	52.2	62.9	73.5	49.9	60.1	70.3	47.5	57.1	66.8	44.7	53.8	62.9
			kW		12.0			13.3			14.9			16.6			18.6	
		19.4	THC	69.1	69.1	71.0	65.9	65.9	69.7	62.4	62.4	68.1	58.7	58.7	66.4	54.7	54.7	64.5
			SHC	45.1	58.1	71.0	43.8	56.7	69.7	42.4	55.2	68.1	40.8	53.6	66.4	39.1	51.8	64.5
			kW		12.2			13.5			15.0			16.7			18.7	
		22.2	THC	75.5	75.5	75.5	72.0	72.0	72.0	68.1	68.1	68.1	64.0	64.0	64.0	–	–	–
			SHC	32.1	45.2	58.3	30.9	43.9	57.0	29.5	42.6	55.6	28.1	41.1	54.1	–	–	–
			kW		12.5			13.8			15.3			17.0			–	
		24.4	THC	–	–	–	–	–	–	–	–	–	–	–	–	–	–	–
			SHC	–	–	–	–	–	–	–	–	–	–	–	–	–	–	–
			kW		–			–			–			–			–	
4719 L/S	EAT (wb)	14.4	THC	67.0	67.0	75.5	64.4	64.4	72.6	61.5	61.5	69.3	58.4	58.4	65.8	54.9	54.9	61.8
			SHC	58.5	67.0	75.5	56.2	64.4	72.6	53.7	61.5	69.3	51.0	58.4	65.8	47.9	54.9	61.8
			kW		12.1			13.4			15.0			16.7			18.7	
		16.7	THC	67.1	67.1	78.4	64.4	64.4	75.4	61.5	61.5	72.0	58.4	58.4	68.3	54.9	54.9	64.2
			SHC	55.7	67.1	78.4	53.5	64.4	75.4	51.1	61.5	72.0	48.5	58.4	68.3	45.6	54.9	64.2
			kW		12.1			13.4			15.0			16.7			18.7	
		19.4	THC	69.9	69.9	75.4	66.6	66.6	74.0	63.1	63.1	72.3	59.3	59.3	70.4	55.3	55.3	67.9
			SHC	47.1	61.3	75.4	45.7	59.8	74.0	44.3	58.3	72.3	42.6	56.5	70.4	40.7	54.3	67.9
			kW		12.2			13.5			15.1			16.8			18.7	
		22.2	THC	76.3	76.3	76.3	72.7	72.7	72.7	68.7	68.7	68.7	–	–	–	–	–	–
			SHC	33.0	47.3	61.7	31.7	46.0	60.3	30.3	44.6	58.9	–	–	–	–	–	–
			kW		12.6			13.9			15.4			–			–	
		24.4	THC	–	–	–	–	–	–	–	–	–	–	–	–	–	–	–
			SHC	–	–	–	–	–	–	–	–	–	–	–	–	–	–	–
			kW		–			–			–			–			–	

LEGEND:

– = Do not operate
L/s = Liters per second
EAT(wb) = Entering air temp (wet bulb)
kW = Compressor kilowatts
SHC = Sensible heat capacity (Gross)
THC = Total heat capacity (Gross)
EAT(db) = Entering air temp (dry bulb)
Cfm = Cubic feet per minute (supply air)

38AU

PERFORMANCE DATA (cont.)

38AUD25 - 40RUA25 **COMBINATION RATINGS** **ENGLISH**

				Ambient Temperature														
				85.0			95.0			105.0			115.0			125.0		
				EAT (db)			EAT (db)			EAT (db)			EAT (db)			EAT (db)		
				75.0	80.0	85.0	75.0	80.0	85.0	75.0	80.0	85.0	75.0	80.0	85.0	75.0	80.0	85.0
6000 cfm	EAT (wb)	58.0	THC	198.8	198.8	224.1	191.8	191.8	216.1	184.1	184.1	207.4	175.6	175.6	197.9	166.1	166.1	187.2
			SHC	173.6	198.8	224.1	167.5	191.8	216.1	160.7	184.1	207.4	153.3	175.6	197.9	145.1	166.1	187.2
			kW	11.6			13.0			14.5			16.3			18.3		
		62.0	THC	204.2	204.2	221.5	195.5	195.5	216.9	186.1	186.1	211.6	176.5	176.5	204.0	166.3	166.3	194.5
			SHC	160.5	191.0	221.5	156.2	186.5	216.9	151.4	181.5	211.6	145.3	174.7	204.0	138.1	166.3	194.5
			kW	11.7			13.0			14.6			16.3			18.3		
		67.0	THC	223.1	223.1	223.1	213.4	213.4	213.4	202.7	202.7	202.7	191.2	191.2	191.2	178.5	178.5	178.5
			SHC	130.8	161.7	192.6	126.7	157.6	188.4	122.3	153.2	184.0	117.6	148.4	179.2	112.5	143.3	174.1
			kW	11.9			13.3			14.6			16.6			18.5		
		72.0	THC	244.3	244.3	244.3	233.5	233.5	233.5	221.8	221.8	221.8	209.1	209.1	209.1	195.3	195.3	195.3
			SHC	99.9	131.0	162.2	95.9	126.9	158.0	91.5	122.5	153.6	86.8	117.8	148.8	81.8	112.7	143.7
			kW	12.3			13.6			15.1			16.9			18.8		
		76.0	THC	–	262.2	262.2	–	250.5	250.5	–	237.8	237.8	–	–	–	–	–	–
			SHC	–	106.2	138.4	–	102.1	134.2	–	97.7	129.6	–	–	–	–	–	–
			kW	12.6			13.9			15.4			–			–		
7000 cfm	EAT (wb)	58.0	THC	208.5	208.5	234.9	200.9	200.9	226.4	192.5	192.5	216.9	183.3	183.3	206.6	173.1	173.1	195.1
			SHC	182.0	208.5	234.9	175.4	200.9	226.4	168.1	192.5	216.9	160.1	183.3	206.6	151.1	173.1	195.1
			kW	11.7			13.1			14.7			16.5			18.4		
		62.0	THC	210.4	210.4	240.6	201.7	201.7	233.7	192.7	192.7	225.3	183.5	183.5	214.6	173.3	173.3	202.6
			SHC	171.9	206.2	240.6	166.4	200.1	233.7	160.0	192.7	225.3	152.4	183.5	214.6	143.9	173.3	202.6
			kW	11.8			13.1			14.7			16.5			18.4		
		67.0	THC	228.5	228.5	228.5	218.2	218.2	218.2	207.0	207.0	207.0	195.0	195.0	196.1	181.9	181.9	190.6
			SHC	138.9	174.4	210.0	134.7	170.2	205.7	130.2	165.6	201.1	125.3	160.7	196.1	120.0	155.3	190.6
			kW	12.0			13.4			14.9			16.6			18.6		
		72.0	THC	249.9	249.9	249.9	238.6	238.6	238.6	226.3	226.3	226.3	213.0	213.0	213.0	198.6	198.6	198.6
			SHC	103.4	139.1	174.9	99.2	134.9	170.6	94.8	130.4	166.1	90.0	125.6	161.2	84.9	120.4	155.9
			kW	12.4			13.7			15.2			16.9			18.8		
		76.0	THC	–	268.0	268.0	–	–	–	–	–	–	–	–	–	–	–	–
			SHC	–	110.5	147.3	–	–	–	–	–	–	–	–	–	–	–	–
			kW	12.7			–			–			–			–		
8000 cfm	EAT (wb)	58.0	THC	216.4	216.4	243.8	208.2	208.2	234.7	199.3	199.3	224.6	189.5	189.5	213.6	178.7	178.7	201.4
			SHC	188.9	216.4	243.8	181.8	208.2	234.7	174.0	199.3	224.6	165.5	189.5	213.6	156.0	178.7	201.4
			kW	11.9			13.2			14.8			16.6			18.5		
		62.0	THC	216.6	216.6	253.3	208.4	208.4	243.7	199.5	199.5	233.3	189.7	189.7	221.8	178.8	178.8	209.1
			SHC	179.9	216.6	253.3	173.1	208.4	243.7	165.7	199.5	233.3	157.6	189.7	221.8	148.6	178.8	209.1
			kW	11.9			13.2			14.8			16.6			18.5		
		67.0	THC	232.5	232.5	232.5	221.8	221.8	222.2	210.3	210.3	217.3	197.9	197.9	212.0	184.4	184.4	206.0
			SHC	146.5	186.6	226.6	142.2	182.2	222.2	137.6	177.4	217.3	132.5	172.2	212.0	127.1	166.5	206.0
			kW	12.1			13.4			15.0			16.7			18.6		
		72.0	THC	254.2	254.2	254.2	242.4	242.4	242.4	229.7	229.7	229.7	216.0	216.0	216.0	201.2	201.2	201.2
			SHC	106.6	146.9	187.1	102.4	142.6	182.8	97.9	138.0	178.1	93.0	133.1	173.1	87.9	127.8	167.7
			kW	12.4			13.8			15.3			17.0			18.9		
		76.0	THC	–	–	–	–	–	–	–	–	–	–	–	–	–	–	–
			SHC	–	–	–	–	–	–	–	–	–	–	–	–	–	–	–
			kW	–			–			–			–			–		
9000 cfm	EAT (wb)	58.0	THC	223.0	223.0	251.3	214.4	214.4	241.6	205.0	205.0	231.0	194.7	194.7	219.4	183.4	183.4	206.6
			SHC	194.7	223.0	251.3	187.2	214.4	241.6	179.0	205.0	231.0	170.0	194.7	219.4	160.1	183.4	206.6
			kW	12.0			13.3			14.9			16.6			18.6		
		62.0	THC	223.2	223.2	261.0	214.6	214.6	250.9	205.2	205.2	239.9	194.9	194.9	227.9	183.5	183.5	214.5
			SHC	185.4	223.2	261.0	178.2	214.6	250.9	170.4	205.2	239.9	161.9	194.9	227.9	152.4	183.5	214.5
			kW	12.0			13.3			14.9			16.6			18.6		
		67.0	THC	235.8	235.8	242.4	224.8	224.8	237.7	213.0	213.0	232.5	200.3	200.3	226.7	186.6	186.6	220.0
			SHC	153.8	198.1	242.4	149.3	193.5	237.7	144.5	188.5	232.5	139.3	183.0	226.7	133.4	176.7	220.0
			kW	12.2			13.5			15.0			16.7			18.7		
		72.0	THC	257.6	257.6	257.6	245.5	245.5	245.5	232.4	232.4	232.4	218.4	218.4	218.4	–	–	–
			SHC	109.6	154.3	198.9	105.4	149.9	194.5	100.8	145.2	189.7	95.9	140.2	184.6	–	–	–
			kW	12.5			13.8			15.3			17.0			–		
		76.0	THC	–	–	–	–	–	–	–	–	–	–	–	–	–	–	–
			SHC	–	–	–	–	–	–	–	–	–	–	–	–	–	–	–
			kW	–			–			–			–			–		
10,000 cfm	EAT (wb)	58.0	THC	228.7	228.7	257.7	219.7	219.7	247.6	209.8	209.8	236.5	199.1	199.1	224.4	187.3	187.3	211.0
			SHC	199.7	228.7	257.7	191.8	219.7	247.6	183.2	209.8	236.5	173.9	199.1	224.4	163.5	187.3	211.0
			kW	12.1			13.4			15.0			16.7			18.7		
		62.0	THC	228.8	228.8	267.6	219.8	219.8	257.1	210.0	210.0	245.5	199.2	199.2	233.0	187.4	187.4	219.1
			SHC	190.1	228.8	267.6	182.6	219.8	257.1	174.4	210.0	245.5	165.5	199.2	233.0	155.7	187.4	219.1
			kW	12.1			13.4			15.0			16.7			18.7		
		67.0	THC	238.5	238.5	257.4	227.3	227.3	252.4	215.2	215.2	246.7	202.4	202.4	240.1	188.7	188.7	231.8
			SHC	160.6	209.0	257.4	156.0	204.2	252.4	151.0	198.8	246.7	145.4	192.7	240.1	138.9	185.3	231.8
			kW	12.2			13.5			15.1			16.8			18.7		
		72.0	THC	260.3	260.3	260.3	247.9	247.9	247.9	234.5	234.5	234.5	–	–	–	–	–	–
			SHC	112.5	161.4	210.4	108.2	157.0	205.9	103.5	152.3	201.0	–	–	–	–	–	–
			kW	12.6			13.9			15.4			–			–		
		76.0	THC	–	–	–	–	–	–	–	–	–	–	–	–	–	–	–
			SHC	–	–	–	–	–	–	–	–	–	–	–	–	–	–	–
			kW	–			–			–			–			–		

LEGEND:

– = Do not operate
L/s = Liters per second
EAT(wb) = Entering air temp (wet bulb)
kW = Compressor kilowatts
SHC = Sensible heat capacity (Gross)
THC = Total heat capacity (Gross)
EAT(db) = Entering air temp (dry bulb)
Cfm = Cubic feet per minute (supply air)

38AU

ELECTRICAL DATA

38AUZ07 COOLING 50 Hz

38AUZ07							WITHOUT PWRD C.O.		WITH PWRD C.O.	
V–Ph–Hz	VOLTAGE RANGE		COMP 1		OFM (ea)		MCA	Fuse	MCA	Fuse
	MIN	MAX	RLA	LRA	WATTS	FLA				
400–3–50	380	420	9.7	64	270	0.7	13.5	20	15.9	25

38AUZ08 COOLING 50 Hz

38AUZ08							WITHOUT PWRD C.O.		WITH PWRD C.O.	
V–Ph–Hz	VOLTAGE RANGE		COMP 1		OFM (ea)					
	MIN	MAX	RLA	LRA	WATTS	FLA	MCA	Fuse	MCA	Fuse
400–3–50	380	420	12.2	101	270	0.7	16.7	25	19.0	30

38AU

38AUD12 COOLING 50 Hz

38AUD12									WITHOUT PWRD C.O.		WITH PWRD C.O.	
V–Ph–Hz	VOLTAGE RANGE		COMP 1		COMP 2		OFM (ea)					
	MIN	MAX	RLA	LRA	RLA	LRA	WATTS	FLA	MCA	Fuse	MCA	Fuse
400–3–50	380	420	7.8	51.5	7.8	51.5	270	0.7	19.0	25	21.3	30

38AUD14 COOLING 50 Hz

38AUD14									WITHOUT PWRD C.O.		WITH PWRD C.O.	
V–Ph–Hz	VOLTAGE RANGE		COMP 1		COMP 2		OFM (ea)					
	MIN	MAX	RLA	LRA	RLA	LRA	WATTS	FLA	MCA	Fuse	MCA	Fuse
400–3–50	380	420	10.6	74	10.6	74	270	0.7	25.3	30	27.6	30

38AUD16 COOLING 50 Hz

38AUD16									POWER SUPPLY		DISCONNECT SIZE	
V–Ph–Hz	VOLTAGE RANGE		COMP 1		COMP 2		OFM					
	Min	Max	RLA	LRA	RLA	LRA	Qty	FLA (ea)	MCA	MOCP	FLA	LRA
400–3–50	360	440	12.2	101	12.2	101	3	0.7	29.6	40	30	208

38AUD25 COOLING 50 Hz

38AUD24									POWER SUPPLY		DISCONNECT SIZE	
V–Ph–Hz	VOLTAGE RANGE		COMP 1		COMP 2		OFM					
	Min	Max	RLA	LRA	RLA	LRA	Qty	FLA (ea)	MCA	MOCP	FLA	LRA
400–3–50	360	440	16.7	111	16.7	111	4	0.7	40.4	50	42	230

APPLICATION DATA

Operating limits

Maximum outdoor temperature . . . . . 125°F

Minimum return-air temperature (40RUA) . . . . . 55°F

Maximum return-air temperature (40RUA) . . . . . 95°F

Range of acceptable saturation
suction temperature . . . . . 20 to 50°F

Maximum discharge temperature . . . . . 275°F

Minimum discharge superheat . . . . . 60°F

NOTES:

1. Select air handler at no less than 300 cfm/ton (nominal condensing unit capacity).
2. Total combined draw of the field-supplied liquid line solenoid valve and air handler fan contactor must not exceed 22 va. If the specified va must be exceeded, use a remote relay to control the load.

MINIMUM OUTDOOR-AIR OPERATING TEMPERATURE

UNIT 38AU	MINIMUM OUTDOOR TEMP (°F)	
	Std	With MotorMaster I® Control†
Z07	35	–20
Z08	35	
D12	35	
D14	35	
D16	35	
D25	35	

† Wind baffles (field-supplied and field-installed) are recommended for all units with MotorMaster I® control. Refer to Low Ambient Temperature Control Installation Instructions for additional information.

Refrigerant piping

IMPORTANT: Do not bury refrigerant piping underground.

It is recommended that the refrigerant piping for all commercial split systems include a liquid line solenoid valve, a liquid line filter drier and a sight glass.

For refrigerant lines longer than 75 lineal ft, a liquid line solenoid valve installed at the **indoor** unit and a suction accumulator are required. Refer to the Refrigerant Specialties Part Numbers table.

REFRIGERANT SPECIALTIES PART NUMBERS

LIQUID LINE SIZE (in.)	LIQUID LINE SOLENOID VALVE (LLSV)	LLSV COIL	SIGHT GLASS
3/8	EF680033	EF680037	KM680008
1/2	EF680035	EF680037	KM680004
5/8	EF680036	EF680037	KM680005

NOTE: 38AUD units require TWO sets of parts.

38AUZ 07-08 PIPING RECOMMENDATIONS (SINGLE-CIRCUIT UNIT)

R–410A	Equivalent Length									
	meter	0–12		12–23		23–34		34–46		46–57	
	feet	0–38		38–75		75–113		113–150		150–188	
Model	Linear Length										
	meter	0–7.5		7.5–15		15–23		23–30		30–38	
	feet	0–25		25–50		50–75		75–100		100–125	
38AUZ*07	Liquid Line	3/8		3/8	1/2	3/8	1/2	3/8	1/2	3/8	1/2
	Max Lift										
	SI (m)										
	Novation	7.5		15		16	23	9	29	10	34
	RTPF	7.5		15		19	23	12	30	11	38
	EN (ft)										
	Novation	25		50		53	75	34	97	33	112
	RTPF	25		50		63	75	42	100	38	125
	Suction Line	7/8	7/8	7/8		7/8		7/8		1–1/8	
	Charge										
	SI (kg)										
	Novation	3.8		4.4		4.9	5.9	5.4	6.8	6.1	7.9
	RTPF	6.4		7.0		7.4	8.5	7.9	9.3	8.7	10.4
	EN (lbs)										
	Novation	8.4		9.8		10.8	13.1	11.8	14.9	13.5	17.4
	RTPF	14.0		15.4		16.4	18.7	17.4	20.5	19.1	23.0
38AUZ*08	Liquid Line	1/2		1/2	5/8	1/2	5/8	1/2	5/8	1/2	5/8
	Max Lift										
	SI (m)										
	Novation	7.5		9	11	7	10	DNU	10	10	16
	RTPF	7.5		15	NR	23	NR	27	30	18	38
	EN (ft)										
	Novation	25		30	38	24	36	DNU	35	33	53
	RTPF	25		50	NR	75	NR	89	100	62	125
	Suction Line	7/8		7/8		1–1/8		1–1/8		1–1/8	
	Charge										
	SI (kg)										
	Novation	5.5		6.3	7.2	7.4	8.6	DNU	9.9	9.1	11.2
	RTPF	8.6		9.4	NR	10.4	NR	11.3	13.0	12.2	14.3
	EN (lbs)										
	Novation	12.2		13.9	15.8	16.2	19.0	DNU	21.9	20.0	24.8
	RTPF	19.0		20.7	NR	23.0	NR	24.9	28.7	26.8	31.6

Legend:

Equivalent Length – Equivalent tubing length, including effects of refrigeration specialties devices

Linear Length – Linear tubing length, feet

Liquid Line – Tubing size, inches OD.

Max Lift – Maximum liquid lift (indoor unit ABOVE outdoor unit only), at maximum permitted liquid line pressure drop
- Linear Length Less than 30 m (100 ft): Minimum 1.1° C (2.0° F) subcooling entering TXV
- Linear Length Greater than 30 m (100 ft): Minimum 0.3° C (0.5° F) subcooling entering TXV

Suction Line – Tube size, inches OD

Charge – Charge Quantity, lbs. Calculated for both liquid line sizes (where applicable), but only with larger suction line size (where applicable)

DNU – Do Not Use (pressure drop exceeds available subcooling in this model)

NR – Not Recommended (use smaller liquid tube size)

SI – Metric units of measure

EN – English units of measure (I–P)

NOTE: For applications with equivalent length greater than 57 m (188 ft) and/or linear length greater than 38 m (125 ft), contact your local Carrier representative.

38AUD 12-14 PIPING RECOMMENDATIONS (TWO-CIRCUIT UNIT)

NOTE: 38AUD requires TWO sets of refrigeration piping

R–410A	Equivalent Length									
	meter	**0–12**	**12–23**		**23–34**		**34–46**		**46–57**	
	feet	**0–38**	**38–75**		**75–113**		**113–150**		**150–188**	
Model	Linear Length									
	meter	0–7.5	7.5–15		15–23		23–30		30–38	
	feet	0–25	25–50		50–75		75–100		100–125	
38AUD*12	Liquid Line	3/8	3/8		3/8	1/2	3/8	1/2	3/8	1/2
	Max Lift									
	SI (m)									
	Novation	7.5	15		15	23	10	24	13	29
	RTPF	7.5	15		15	23	10	27	11	32
	EN (ft)									
	Novation	25	50		50	75	36	79	44	96
	RTPF	25	50		50	75	36	89	39	106
	Suction Line	7/8	7/8		7/8		7/8		1–1/8	
	Charge									
	SI (kg)									
	Novation	3.3	3.8		4.2	5.3	4.7	6.1	5.1	6.9
	RTPF	4.9	5.4		5.8	6.9	6.3	7.7	6.8	8.6
	EN (lbs)									
	Novation	7.3	8.3		9.3	11.6	10.3	13.4	11.3	15.2
	RTPF	10.9	11.9		12.9	15.2	13.9	17.0	14.9	18.8
38AUD*14	Liquid Line	3/8	1/2	5/8	1/2	5/8	1/2	5/8	1/2	5/8
	Max Lift									
	SI (m)									
	Novation	7.5	13	15	12	14	11	14	17	20
	EN (ft)									
	Novation	25	45	50	42	49	39	48	56	68
	Suction Line	7/8	7/8		7/8		1–1/8		1–1/8	
	Charge									
	SI (kg)									
	Novation	4.6	5.8	6.6	6.6	7.8	7.6	10.7	9.4	12.0
	EN (lbs)									
	Novation	10.1	12.7	14.6	14.5	17.3	16.8	23.5	20.7	26.4

Legend:

Equivalent Length – Equivalent tubing length, including effects of refrigeration specialties devices

Linear Length – Linear tubing length, feet

Liquid Line – Tubing size, inches OD.

Max Lift – Maximum liquid lift (indoor unit ABOVE outdoor unit only), at maximum permitted liquid line pressure drop
- Linear Length Less than 30 m (100 ft): Minimum 1.1° C (2.0° F) subcooling entering TXV
- Linear Length Greater than 30 m (100 ft): Minimum 0.3° C (0.5° F) subcooling entering TXV

Suction Line – Tube size, inches OD

Charge – Charge Quantity, lbs. Calculated for both liquid line sizes (where applicable), but only with larger suction line size (where applicable)

DNU – Do Not Use (pressure drop exceeds available subcooling in this model)

NR – Not Recommended (use smaller liquid tube size)

SI – Metric units of measure

EN – English units of measure (I–P)

NOTE: For applications with equivalent length greater than 57 m (188 ft) and/or linear length greater than 38 m (125 ft), contact your local Carrier representative.

38AUD 16-25 PIPING RECOMMENDATIONS (TWO-CIRCUIT UNIT)

NOTE: 38AUD requires TWO sets of refrigeration piping

R–410A	Equivalent Length										
	meter	**0–12**		**12–23**		**23–34**		**34–46**		**46–57**	
	feet	**0–38**		**38–75**		**75–113**		**113–150**		**150–188**	
Model	Linear Length										
	meter	0–7.5		7.5–15		15–23		23–30		30–38	
	feet	0–25		25–50		50–75		75–100		100–125	
38AUD*16	Liquid Line	3/8	1/2	3/8	1/2	3/8	1/2	3/8	1/2	1/2	
	Max Lift										
	SI (m)										
	Novation	7.5	NR	15	NR	21	23	13	30	38	
	RTPF	DNU	7.5	DNU	15	DNU	23	DNU	30	36	
	EN (ft)										
	Novation	25	NR	50	NR	71	75	43	100	125	
	RTPF	DNU	25	DNU	50	DNU	75	DNU	100	119	
	Suction Line	7/8		1–1/8		1–1/8		1–1/8		1–1/8	
	Charge										
	SI (kg)										
	Novation	5.8	NR	6.3	NR	7.0	8.0	7.5	8.9	9.8	
	RTPF	DNU	9.8	DNU	10.7	DNU	11.6	DNU	12.4	13.3	
	EN (lbs)										
	Novation	12.9	NR	13.9	NR	15.4	17.7	16.5	19.6	21.6	
	RTPF	DNU	21.7	DNU	23.6	DNU	25.5	DNU	27.4	29.3	
38AUD*25	Liquid Line	1/2		1/2		1/2		1/2	5/8	1/2	5/8
	Max Lift										
	SI (m)										
	RTPF	7.5		15		23		20	27	23	32
	EN (ft)										
	RTPF	25		50		75		67	91	76	107
	Suction Line	7/8		1–1/8		1–1/8		1–1/8		1–1/8	
	Charge										
	SI (kg)										
	RTPF	9.4		10.3		11.2		12.1	13.8	13.0	15.1
	EN (lbs)										
	RTPF	20.7		22.8		24.7		26.6	30.4	28.6	33.3

Legend:

Equivalent Length –	Equivalent tubing length, including effects of refrigeration specialties devices
Linear Length –	Linear tubing length, feet
Liquid Line –	Tubing size, inches OD.
Max Lift –	Maximum liquid lift (indoor unit ABOVE outdoor unit only), at maximum permitted liquid line pressure drop • Linear Length Less than 30 m (100 ft): Minimum 1.1° C (2.0° F) subcooling entering TXV • Linear Length Greater than 30 m (100 ft): Minimum 0.3° C (0.5° F) subcooling entering TXV
Suction Line –	Tube size, inches OD
Charge –	Charge Quantity, lbs. Calculated for both liquid line sizes (where applicable), but only with larger suction line size (where applicable)
DNU –	Do Not Use (pressure drop exceeds available subcooling in this model)
NR –	Not Recommended (use smaller liquid tube size)
SI –	Metric units of measure
EN –	English units of measure (I–P)
NOTE:	For applications with equivalent length greater than 57 m (188 ft) and/or linear length greater than 38 m (125 ft), contact your local Carrier representative.

TYPICAL PIPING AND WIRING

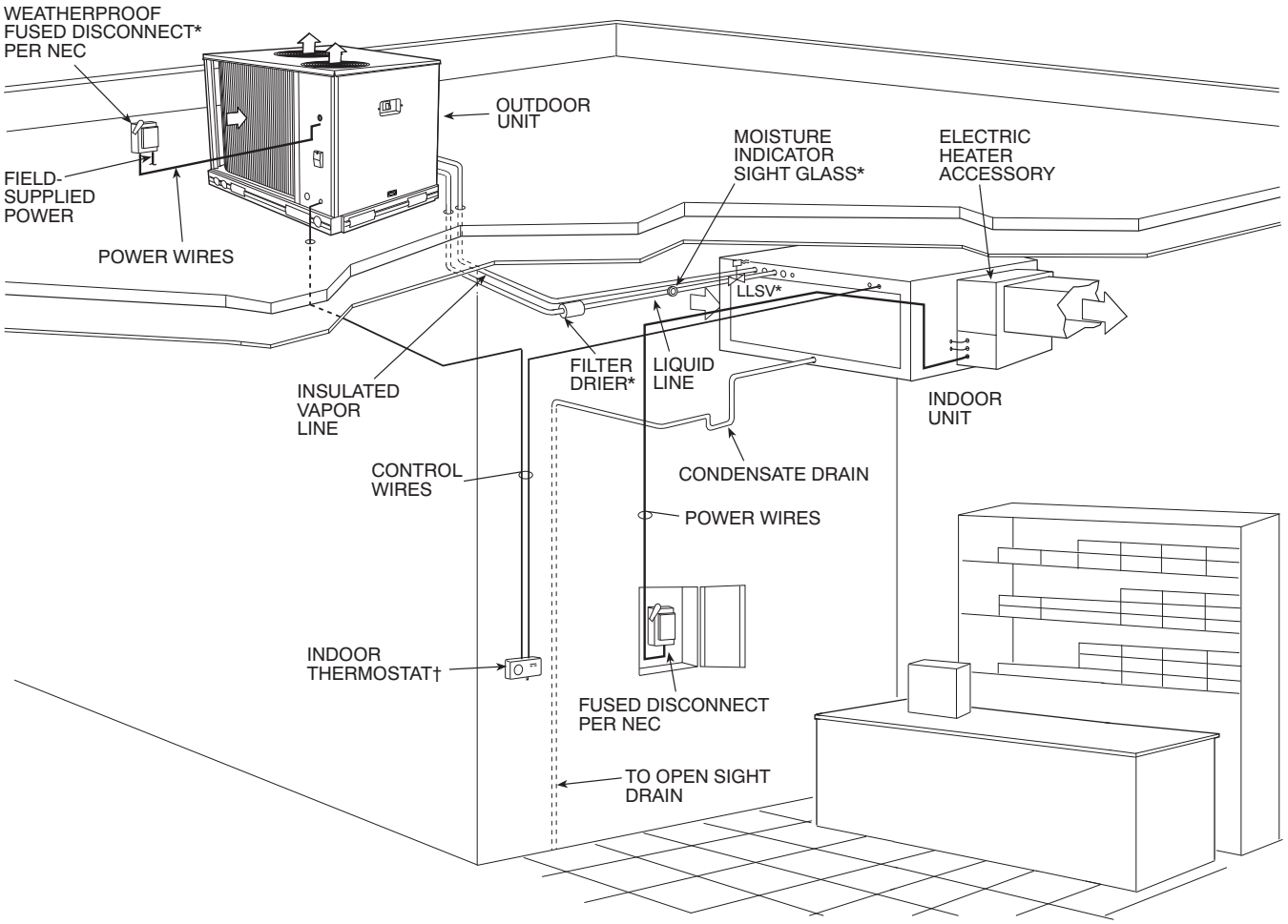

LEGEND:

NEC – National Electrical Code

TXV – Thermostatic Expansion Valve

* Field–supplied

† Double riser may be required. Consult condensing unit product data catalog for details.

NOTES:

1. All piping must follow standard refrigerant piping techniques. Refer to Carrier System Design Manual for details.
2. All wiring must comply with the applicable local and national codes.
3. Wiring and piping shown are general points-of-connection guides only and are not intended for, or to include all details for, a specific installation.
4. Liquid line solenoid valve (solenoid drop control) is recommended to prevent refrigerant migration to the compressor.
5. Internal factory-supplied TXVs not shown.

GUIDE SPECIFICATIONS

Commercial Air-Cooled Condensing Units

HVAC Guide Specifications

Size Range: 18.3 kW to 59.2 kW

Carrier Model Numbers: **38AUZ, Single Circuit (07 - 08 Models) 38AUD, Dual Circuit (12, 14, 16, 25 Models)**

Part 1 — General

1.01 SYSTEM DESCRIPTION

Outdoor-mounted, air-cooled condensing unit suitable for on-the-ground or rooftop installation. Unit shall consist of a hermetic scroll air-conditioning compressor(s) assembly, an air-cooled coil, propeller-type condenser fans, and a control box. Unit shall discharge supply air upward as shown on contract drawings. Unit shall be used in a refrigeration circuit matched with a packaged air-handling unit.

1.02 QUALITY ASSURANCE

A. Unit shall be rated in accordance with AHRI Standard 340/360.

B. Unit construction shall comply with ANSI/ASHRAE 15 safety code latest revision and comply with NEC.

C. Unit shall be constructed in accordance with UL 1995 standard and shall carry the UL and UL, Canada label.

D. Unit cabinet shall be capable of withstanding 500-hour salt spray exposure per ASTM B117 (scribed specimen).

E. Air-cooled condenser coils for hermetic scroll compressor units 38AUZ and 38AUD shall be leak tested at 150 psig, and pressure tested at 650 psig.

F. Unit shall be manufactured in a facility registered to ISO 9001:2008 manufacturing quality standard.

1.03 DELIVERY, STORAGE, AND HANDLING

Unit shall be shipped as single package only, and shall be stored and handled according to unit manufacturer's recommendations.

1.04 WARRANTY (FOR INCLUSION BY SPECIFYING ENGINEER.)

Part 2 — Products

2.01 EQUIPMENT

A. General:

Factory-assembled, single piece, air-cooled condensing unit. Contained within the unit enclosure shall be all factory wiring, piping, controls, compressor, holding charge, and special features required prior to field start-up.

B. Unit Cabinet:

1. Unit cabinet shall be constructed of galvanized steel, bonderized and coated with a prepainted baked enamel finish.
2. A heavy-gauge roll-formed perimeter base rail with forklift slots and lifting holes shall be provided to facilitate rigging.

C. Condenser Fans:

1. Condenser fans shall be direct driven, propeller type, discharging air vertically upward.
2. Fan blades shall be balanced.
3. Condenser fan discharge openings shall be equipped with PVC-coated steel wire safety guards.
4. Condenser fan and motor shaft shall be corrosion resistant.

D. Compressor:

1. Compressor shall be of the hermetic scroll type .
2. Compressor shall be mounted on rubber grommets.
3. Compressors shall include overload protection.
4. Compressors shall be equipped with a crankcase heater.
5. Compressor shall be equipped with internal high pressure and high temperature protection.

E. Condenser Coils:

1. Standard Aluminum fin - Copper Tube Coils:

a. Standard evaporator and condenser coils shall have aluminum lanced plate fins mechanically bonded to seamless internally grooved copper tubes with all joints brazed.

b. Evaporator coils shall be leak tested to 150 psig, pressure tested to 450 psig, and qualified to UL 1995 burst test at 1775 psig.

c. Condenser coils shall be leak tested to 150 psig, pressure tested to 650 psig, and qualified to UL 1995 burst test at 1980 psig.

2. Optional Copper-fin evaporator and condenser coils:

a. Shall be constructed of copper fins mechanically bonded to copper tubes and copper tube sheets.

b. Galvanized steel tube sheets shall not be acceptable.

c. A polymer strip shall prevent coil assembly from contacting the sheet metal coil pan to minimize potential for galvanic corrosion between coil and pan.

3. Optional E-coated aluminum-fin evaporator and condenser coils:

a. Shall have a flexible epoxy polymer coating uniformly applied to all coil surface areas without material bridging between fins.

b. Coating process shall ensure complete coil encapsulation of tubes, fins and headers.

c. Color shall be high gloss black with gloss per ASTM D523-89.

d. Uniform dry film thickness from 0.8 to 1.2 mil on all surface areas including fin edges.

e. Superior hardness characteristics of 2H per ASTM D3363-92A and cross-hatch adhesion of 4B-5B per ASTM D3359-93.

f. Impact resistance shall be up to 160 in.-lb (ASTM D2794-93).

g. Humidity and water immersion resistance shall be up to minimum 1000 and 250 hours respectively (ASTM D2247-92 and ASTM D870-92).

h. Corrosion durability shall be confirmed through testing to be no less than 1000 hours salt spray per ASTM B117-90.

4. Standard All Aluminum Novation Coils:

a. Standard condenser coils shall have all aluminum Novation Heat Exchanger Technology design consisting of aluminum multi port flat tube design and aluminum fin. Coils shall be a furnace brazed design and contain epoxy lined shrink wrap on all aluminum to copper connections.

b. Condenser coils shall be leak tested to 150 psig, pressure tested to 650 psig, and qualified to UL 1995 burst test at 1980 psig.

5. Optional E-coated aluminum-fin, aluminum tube condenser coils:

a. Shall have a flexible epoxy polymer coating uniformly applied to all coil external surface areas without material bridging between fins or louvers.

b. Coating process shall ensure complete coil encapsulation, including all exposed fin edges.

c. E-coat thickness of 0.8 to 1.2 mil with top coat having a uniform dry film thickness from 1.0 to 2.0 mil on all external coil surface areas, including fin edges, shall be provided.

d. Shall have superior hardness characteristics of 2H per ASTM D3363-00 and cross-hatch adhesion of 4B-5B per ASTM D3359-02.

e. Shall have superior impact resistance with no cracking, chipping or peeling per NSF/ANSI 51-2002 Method 10.2.

F. Refrigeration Components:

Refrigeration circuit components shall include liquid line service valve, suction line service valve, a full charge of compressor oil, and a partial holding charge of refrigerant.

G. Controls and Safeties:

1. Minimum control functions shall include:

f. Control wire terminal blocks.

g. Compressor lockout on auto-reset safety until reset from thermostat.

h. Each unit shall utilize the Comfort Alert™ Diagnostic Board that provides:

(1.) System Pressure Trip fault code indication

(2.) Short Cycling fault code indication

(3.) Locked Rotor fault code indication

(4.) Open Circuit fault code indication

(5.) Reverse Phase 3 fault code indication

(6.) Welded Contactor fault code indication

(7.) Low Voltage fault code indication

(8.) Anti-short cycle protection

(9.) Phase reversal protection

2. Minimum safety devices which are equipped with automatic reset (after resetting first at thermostat), shall include:
   a. High discharge pressure cutout.
   b. Low pressure cutout.

H. Operating Characteristics:
1. The capacity of the condensing unit shall meet or exceed _____ Btuh at a suction temperature of _____°C/F. The power consumption at full load shall not exceed _____ kW.
2. The combination of the condensing unit and the evaporator or fan coil unit shall have a total net cooling capacity of _____ Btuh or greater at conditions of _____ cfm entering-air temperature at the evaporator at _____°C/F wet bulb and _____°C/F dry bulb, and air entering the condensing unit at _____°C/F.
3. The system shall have an EER of _____ Btuh/Watt or greater at standard AHRI conditions.
4. Standard unit shall be capable to operate up to 52°C (125°F) and down to 4°C (40°F)

I. Electrical Requirements:
1. Nominal unit electrical characteristics shall be _____ v, 3-ph, 50 Hz. The unit shall be capable of satisfactory operation within voltage limits of ____ v to _____ v.
2. Unit electrical power shall be single-point connection.
3. Unit control circuit shall contain a 24-v transformer for unit control.

J. Special Features:
1. Low-Ambient Temperature Control:
   A low-ambient temperature control shall be available as a factory-installed option or as a field-installed accessory. This low-ambient control shall regulate speed of the condenser-fan motors in response to the saturated condensing temperature of the unit. The control shall maintain correct condensing pressure at outdoor temperatures down to –29°C (-20°F).
2. Unit-Mounted, Non-Fused Disconnect Switch:
   Switch shall be factory-installed and internally mounted. NEC and UL-approved non-fused switch shall provide unit power shutoff. Switch shall be accessible from outside the unit and shall provide power off lockout capability. Non-fused disconnect cannot be used when unit MOCP electrical rating exceeds 80 amps.
3. Thermostat Controls:
   a. Programmable multi-stage thermostat shall have 7-day clock, holiday scheduling, large backlit display, remote sensor capability, and Title 24 compliance.
   b. Commercial Electronic Thermostat shall have 7-day time clock, auto-changeover, multi-stage capability, and large LCD (liquid crystal display) temperature display.
4. Louvered hail Guard Package:
   Louvered hail guard package shall protect coils against damage from hail and other flying debris.
5. Condenser Coil Grille (Novation 07-14 models only):
   Grille shall add decorative appearance to unit and protect condenser coil from large objects and vandalism.

Copyright 2010 Carrier Corp. • 7310 W. Morris St. • Indianapolis, IN 46231 Printed in U.S.A. Edition Date: 11/10 **Catalog No: 38AU–C01PD**

Manufacturer reserves the right to change, at any time, specifications and designs without notice and without obligations. Replaces: NEW

NEMA ST 20-2014

Dry Type Transformers for General Applications

Published by:

National Electrical Manufacturers Association
1300 North 17th Street, Suite 900
Rosslyn, Virginia 22209

www.nema.org

© Copyright 2014 by the National Electrical Manufacturers Association. All rights including translation into other languages, reserved under the Universal Copyright Convention, the Berne Convention for the Protection of Literary and Artistic Works, and the International and Pan American Copyright Conventions.

- Three-phase transformers designed for both delta and wye operation shall be shipped connected for the wye voltage.

3.32 AUDIBLE SOUND LEVELS

Transformers shall be so designed that the average audible sound level will not exceed the values given in Table 3-9 when tested in accordance with clause 4.2.10.

Table 3.9
AVERAGE SOUND LEVEL

	Average Sound Level, Decibels			
	SELF COOLED VENTILATED			**SELF COOLED SEALED**
	A	**B**	**C**	**D**
Equivalent Winding kVA Range	**K Factor = 1 K Factor = 4 K Factor = 9**	**K Factor = 13 K Factor = 20**	**Forced Air When Fans Running**	
3.00 and below	40	40	67	45
3.01 to 9.00	40	40	67	45
9.01 to 15.00	45	45	67	50
15.01 to 30.00	45	45	67	50
30.01 to 50.00	45	48	67	50
50.01 to 75.00	50	53	67	55
75.01 to 112.50	50	53	67	55
112.51 to 150.00	50	53	67	55
150.01 to 225.00	55	58	67	57
225.01 to 300.00	55	58	67	57
300.01 to 500.00	60	63	67	59
500.01 to 700.00	62	65	67	61
700.01 to 1000.00	64	67	67	63
Greater than 1000	Consult Factory			

Note 1: Consult factory for non-linear requirements exceeding a K-factor rating of 20.
Note 2: When the fans are not running columns A & B apply
Note 3: Sound levels are measured using the A-weighted scale (dB (A))

© 2014 National Electrical Manufacturers Association