Appendix A

Air Quality and Greenhouse Gas Modeling Worksheets

Clawiter Industrial Project - Buildings 1 to 3 - 2023

Bay Area AQMD Air District, Winter

1.0 Project Characteristics

1.1 Land Usage

Land Uses	Size	Metric	Lot Acreage	Floor Surface Area	Population
Industrial Park	337.09	1000sqft	16.37	337,094.00	0
Parking Lot	310.00	Space	2.79	124,000.00	0

1.2 Other Project Characteristics

Urbanization	Urban	**Wind Speed (m/s)**	2.2	**Precipitation Freq (Days)**	64
Climate Zone	5			**Operational Year**	2023
Utility Company	Pacific Gas & Electric Company				
CO2 Intensity (lb/MWhr)	641.35	**CH4 Intensity (lb/MWhr)**	0.029	**N2O Intensity (lb/MWhr)**	0.006

1.3 User Entered Comments & Non-Default Data

Clawiter Industrial Project - Buildings 1 to 3 - 2023 - Bay Area AQMD Air District, Winter

Project Characteristics -

Land Use - SF of buildings 1-3, lot acreage is project site (26) minus default estimate for data center (6.39) and parking lots (3.24)

Construction Phase - Applicant specified 15-month schedule. Extended AC to overlap BC for mroe realistic conditions.

Off-road Equipment - Default

Off-road Equipment - Applicant-provided equipment list

Off-road Equipment - Applicant-provided equipment list

Off-road Equipment - Applicant-provided equipment list. Paver used as proxy for compactor

Off-road Equipment - Applicant-provided equipment list

Off-road Equipment - Applicant-provided equipment list. Paver used as proxy for compactor

Trips and VMT -

Demolition - Based on Google Earth estimate - 185255+27142+2810+35260

Grading - Export quantity provided by applicant

Architectural Coating - BAAQMD Regulation 8, Rule 3

Vehicle Trips - Weekday rate provided by Kittleson, includes trips for Buildings 1-4

Area Coating - BAAQMD Regulation 8, Rule 3

Energy Use -

Water And Wastewater - All wastewater treated at Hayward WWTP with aerobic processes. Outdoor water use calculated assuming 2.43 AFY per acre of landscaped area.

Solid Waste - 77% diversion rate for Hayward

Construction Off-road Equipment Mitigation - Hayward Municipal Code 10-8.32

Mobile Land Use Mitigation -

Water Mitigation - Applicant-specified sustainability features

Fleet Mix -

Energy Mitigation - Title 24 reduced by 30% for 2019 Standards

Table Name	Column Name	Default Value	New Value
tblArchitecturalCoating	EF_Parking	150.00	100.00
tblAreaCoating	Area_EF_Parking	150	100
tblConstructionPhase	NumDays	20.00	130.00
tblConstructionPhase	NumDays	300.00	265.00
tblGrading	MaterialExported	0.00	29,073.00
tblLandUse	LandUseSquareFeet	337,090.00	337,094.00
tblLandUse	LotAcreage	7.74	16.37
tblOffRoadEquipment	OffRoadEquipmentUnitAmount	1.00	2.00
tblOffRoadEquipment	OffRoadEquipmentUnitAmount	2.00	1.00
tblOffRoadEquipment	OffRoadEquipmentUnitAmount	2.00	1.00
tblOffRoadEquipment	OffRoadEquipmentUnitAmount	2.00	1.00
tblOffRoadEquipment	OffRoadEquipmentUnitAmount	2.00	1.00
tblSolidWaste	SolidWasteGenerationRate	417.99	192.28
tblVehicleTrips	WD_TR	6.83	6.15
tblWater	AerobicPercent	87.46	100.00
tblWater	AerobicPercent	87.46	100.00
tblWater	AnaerobicandFacultativeLagoonsPercent	2.21	0.00
tblWater	AnaerobicandFacultativeLagoonsPercent	2.21	0.00
tblWater	OutdoorWaterUseRate	0.00	3,812,456.00
tblWater	SepticTankPercent	10.33	0.00
tblWater	SepticTankPercent	10.33	0.00

2.0 Emissions Summary

2.1 Overall Construction (Maximum Daily Emission)

Unmitigated Construction

	ROG	NOx	CO	SO2	Fugitive PM10	Exhaust PM10	PM10 Total	Fugitive PM2.5	Exhaust PM2.5	PM2.5 Total	Bio- CO2	NBio- CO2	Total CO2	CH4	N2O	CO2e
Year	lb/day										lb/day					
2021	30.1717	45.3933	22.2075	0.1138	13.4292	1.0128	14.0148	2.1675	0.9400	2.7080	0.0000	11,972.8982	11,972.8982	1.1448	0.0000	12,001.5190
2022	30.8401	29.7958	28.5267	0.0732	2.4942	1.1487	3.6429	0.6732	1.0639	1.7371	0.0000	7,317.7510	7,317.7510	1.2030	0.0000	7,347.8255
Maximum	**30.8401**	**45.3933**	**28.5267**	**0.1138**	**13.4292**	**1.1487**	**14.0148**	**2.1675**	**1.0639**	**2.7080**	**0.0000**	**11,972.8982**	**11,972.8982**	**1.2030**	**0.0000**	**12,001.5190**

Mitigated Construction

	ROG	NOx	CO	SO2	Fugitive PM10	Exhaust PM10	PM10 Total	Fugitive PM2.5	Exhaust PM2.5	PM2.5 Total	Bio- CO2	NBio- CO2	Total CO2	CH4	N2O	CO2e
Year	lb/day										lb/day					
2021	30.1717	45.3933	22.2075	0.1138	6.6491	1.0128	7.2347	1.1409	0.9400	1.6815	0.0000	11,972.8982	11,972.8982	1.1448	0.0000	12,001.5190
2022	30.8401	29.7958	28.5267	0.0732	2.4942	1.1487	3.6429	0.6732	1.0639	1.7371	0.0000	7,317.7510	7,317.7510	1.2030	0.0000	7,347.8255
Maximum	**30.8401**	**45.3933**	**28.5267**	**0.1138**	**6.6491**	**1.1487**	**7.2347**	**1.1409**	**1.0639**	**1.7371**	**0.0000**	**11,972.8982**	**11,972.8982**	**1.2030**	**0.0000**	**12,001.5190**

	ROG	**NOx**	**CO**	**SO2**	**Fugitive PM10**	**Exhaust PM10**	**PM10 Total**	**Fugitive PM2.5**	**Exhaust PM2.5**	**PM2.5 Total**	**Bio- CO2**	**NBio-CO2**	**Total CO2**	**CH4**	**N20**	**CO2e**
Percent Reduction	**0.00**	**0.00**	**0.00**	**0.00**	**42.58**	**0.00**	**38.40**	**36.14**	**0.00**	**23.09**	**0.00**	**0.00**	**0.00**	**0.00**	**0.00**	**0.00**

2.2 Overall Operational

Unmitigated Operational

	ROG	NOx	CO	SO2	Fugitive PM10	Exhaust PM10	PM10 Total	Fugitive PM2.5	Exhaust PM2.5	PM2.5 Total	Bio- CO2	NBio- CO2	Total CO2	CH4	N2O	CO2e
Category	lb/day										lb/day					
Area	8.2364	6.0000e-004	0.0661	0.0000		2.4000e-004	2.4000e-004		2.4000e-004	2.4000e-004		0.1416	0.1416	3.7000e-004		0.1509
Energy	0.1925	1.7502	1.4702	0.0105		0.1330	0.1330		0.1330	0.1330		2,100.2505	2,100.2505	0.0403	0.0385	2,112.7312
Mobile	2.6901	12.4819	33.7152	0.1221	11.5466	0.1006	11.6472	3.0890	0.0940	3.1830		12,358.5098	12,358.5098	0.4322		12,369.3140
Total	**11.1190**	**14.2327**	**35.2515**	**0.1326**	**11.5466**	**0.2339**	**11.7805**	**3.0890**	**0.2272**	**3.3162**		**14,458.9019**	**14,458.9019**	**0.4728**	**0.0385**	**14,482.1961**

Mitigated Operational

	ROG	NOx	CO	SO2	Fugitive PM10	Exhaust PM10	PM10 Total	Fugitive PM2.5	Exhaust PM2.5	PM2.5 Total	Bio- CO2	NBio- CO2	Total CO2	CH4	N2O	CO2e
Category	lb/day										lb/day					
Area	8.2364	6.0000e-004	0.0661	0.0000		2.4000e-004	2.4000e-004		2.4000e-004	2.4000e-004		0.1416	0.1416	3.7000e-004		0.1509
Energy	0.1378	1.2526	1.0522	7.5200e-003		0.0952	0.0952		0.0952	0.0952		1,503.0970	1,503.0970	0.0288	0.0276	1,512.0291
Mobile	2.6901	12.4819	33.7152	0.1221	11.5466	0.1006	11.6472	3.0890	0.0940	3.1830		12,358.5098	12,358.5098	0.4322		12,369.3140
Total	**11.0643**	**13.7351**	**34.8335**	**0.1296**	**11.5466**	**0.1960**	**11.7426**	**3.0890**	**0.1894**	**3.2784**		**13,861.7484**	**13,861.7484**	**0.4614**	**0.0276**	**13,881.4940**

	ROG	NOx	CO	SO2	Fugitive PM10	Exhaust PM10	PM10 Total	Fugitive PM2.5	Exhaust PM2.5	PM2.5 Total	Bio- CO2	NBio-CO2	Total CO2	CH4	N20	CO2e
Percent Reduction	**0.49**	**3.50**	**1.19**	**2.25**	**0.00**	**16.17**	**0.32**	**0.00**	**16.65**	**1.14**	**0.00**	**4.13**	**4.13**	**2.42**	**28.42**	**4.15**

3.0 Construction Detail

Construction Phase

Phase Number	Phase Name	Phase Type	Start Date	End Date	Num Days Week	Num Days	Phase Description
1	Demolition	Demolition	1/1/2021	1/28/2021	5	20	
2	Site Preparation	Site Preparation	1/29/2021	2/11/2021	5	10	
3	Grading	Grading	2/12/2021	3/25/2021	5	30	
4	Building Construction	Building Construction	3/26/2021	3/31/2022	5	265	
5	Architectural Coating	Architectural Coating	10/1/2021	3/31/2022	5	130	
6	Paving	Paving	3/4/2022	3/31/2022	5	20	

Acres of Grading (Site Preparation Phase): 5

Acres of Grading (Grading Phase): 15

Acres of Paving: 2.79

Residential Indoor: 0; Residential Outdoor: 0; Non-Residential Indoor: 505,641; Non-Residential Outdoor: 168,547; Striped Parking Area: 7,440 (Architectural Coating – sqft)

OffRoad Equipment

Clawiter Industrial Project - Buildings 1 to 3 - 2023 - Bay Area AQMD Air District, Winter

Phase Name	Offroad Equipment Type	Amount	Usage Hours	Horse Power	Load Factor
Demolition	Excavators	3	8.00	158	0.38
Demolition	Tractors/Loaders/Backhoes	2	8.00	97	0.37
Site Preparation	Graders	1	8.00	187	0.41
Site Preparation	Pavers	1	8.00	130	0.42
Site Preparation	Tractors/Loaders/Backhoes	4	8.00	97	0.37
Grading	Excavators	1	8.00	158	0.38
Grading	Graders	1	8.00	187	0.41
Grading	Pavers	1	8.00	130	0.42
Grading	Tractors/Loaders/Backhoes	1	8.00	97	0.37
Building Construction	Cranes	2	7.00	231	0.29
Building Construction	Forklifts	3	8.00	89	0.20
Building Construction	Tractors/Loaders/Backhoes	3	7.00	97	0.37
Architectural Coating	Air Compressors	1	6.00	78	0.48
Paving	Pavers	1	8.00	130	0.42
Paving	Rollers	1	8.00	80	0.38
Paving	Tractors/Loaders/Backhoes	1	8.00	97	0.37

Trips and VMT

Phase Name	Offroad Equipment Count	Worker Trip Number	Vendor Trip Number	Hauling Trip Number	Worker Trip Length	Vendor Trip Length	Hauling Trip Length	Worker Vehicle Class	Vendor Vehicle Class	Hauling Vehicle Class
Demolition	5	13.00	0.00	1,139.00	10.80	7.30	20.00	LD_Mix	HDT_Mix	HHDT
Site Preparation	6	15.00	0.00	0.00	10.80	7.30	20.00	LD_Mix	HDT_Mix	HHDT
Grading	4	10.00	0.00	3,634.00	10.80	7.30	20.00	LD_Mix	HDT_Mix	HHDT
Building Construction	8	194.00	76.00	0.00	10.80	7.30	20.00	LD_Mix	HDT_Mix	HHDT
Architectural Coating	1	39.00	0.00	0.00	10.80	7.30	20.00	LD_Mix	HDT_Mix	HHDT
Paving	3	8.00	0.00	0.00	10.80	7.30	20.00	LD_Mix	HDT_Mix	HHDT

3.1 Mitigation Measures Construction

Water Exposed Area

3.2 Demolition - 2021

Unmitigated Construction On-Site

	ROG	NOx	CO	SO2	Fugitive PM10	Exhaust PM10	PM10 Total	Fugitive PM2.5	Exhaust PM2.5	PM2.5 Total	Bio- CO2	NBio- CO2	Total CO2	CH4	N2O	CO2e
Category	lb/day										lb/day					
Fugitive Dust					12.3274	0.0000	12.3274	1.8665	0.0000	1.8665			0.0000			0.0000
Off-Road	1.0621	10.2518	14.3359	0.0217		0.5369	0.5369		0.4939	0.4939		2,102.3761	2,102.3761	0.6800		2,119.3748
Total	**1.0621**	**10.2518**	**14.3359**	**0.0217**	**12.3274**	**0.5369**	**12.8643**	**1.8665**	**0.4939**	**2.3604**		**2,102.3761**	**2,102.3761**	**0.6800**		**2,119.3748**

3.2 Demolition - 2021

Unmitigated Construction Off-Site

	ROG	NOx	CO	SO2	Fugitive PM10	Exhaust PM10	PM10 Total	Fugitive PM2.5	Exhaust PM2.5	PM2.5 Total	Bio- CO2	NBio- CO2	Total CO2	CH4	N2O	CO2e
Category	lb/day										lb/day					
Hauling	0.4556	15.4213	3.4102	0.0439	0.9950	0.0481	1.0431	0.2727	0.0460	0.3187		4,702.4218	4,702.4218	0.2489		4,708.6439
Vendor	0.0000	0.0000	0.0000	0.0000	0.0000	0.0000	0.0000	0.0000	0.0000	0.0000		0.0000	0.0000	0.0000		0.0000
Worker	0.0443	0.0302	0.2988	9.5000e-004	0.1068	6.7000e-004	0.1075	0.0283	6.2000e-004	0.0290		94.8398	94.8398	2.1500e-003		94.8934
Total	**0.4999**	**15.4515**	**3.7089**	**0.0449**	**1.1018**	**0.0488**	**1.1505**	**0.3010**	**0.0466**	**0.3476**		**4,797.2616**	**4,797.2616**	**0.2510**		**4,803.5373**

Mitigated Construction On-Site

	ROG	NOx	CO	SO2	Fugitive PM10	Exhaust PM10	PM10 Total	Fugitive PM2.5	Exhaust PM2.5	PM2.5 Total	Bio- CO2	NBio- CO2	Total CO2	CH4	N2O	CO2e
Category	lb/day										lb/day					
Fugitive Dust					5.5473	0.0000	5.5473	0.8399	0.0000	0.8399			0.0000			0.0000
Off-Road	1.0621	10.2518	14.3359	0.0217		0.5369	0.5369		0.4939	0.4939	0.0000	2,102.3761	2,102.3761	0.6800		2,119.3748
Total	**1.0621**	**10.2518**	**14.3359**	**0.0217**	**5.5473**	**0.5369**	**6.0842**	**0.8399**	**0.4939**	**1.3338**	**0.0000**	**2,102.3761**	**2,102.3761**	**0.6800**		**2,119.3748**

3.2 Demolition - 2021

Mitigated Construction Off-Site

	ROG	NOx	CO	SO2	Fugitive PM10	Exhaust PM10	PM10 Total	Fugitive PM2.5	Exhaust PM2.5	PM2.5 Total	Bio- CO2	NBio- CO2	Total CO2	CH4	N2O	CO2e
Category	lb/day										lb/day					
Hauling	0.4556	15.4213	3.4102	0.0439	0.9950	0.0481	1.0431	0.2727	0.0460	0.3187		4,702.4218	4,702.4218	0.2489		4,708.6439
Vendor	0.0000	0.0000	0.0000	0.0000	0.0000	0.0000	0.0000	0.0000	0.0000	0.0000		0.0000	0.0000	0.0000		0.0000
Worker	0.0443	0.0302	0.2988	9.5000e-004	0.1068	6.7000e-004	0.1075	0.0283	6.2000e-004	0.0290		94.8398	94.8398	2.1500e-003		94.8934
Total	**0.4999**	**15.4515**	**3.7089**	**0.0449**	**1.1018**	**0.0488**	**1.1505**	**0.3010**	**0.0466**	**0.3476**		**4,797.2616**	**4,797.2616**	**0.2510**		**4,803.5373**

3.3 Site Preparation - 2021

Unmitigated Construction On-Site

	ROG	NOx	CO	SO2	Fugitive PM10	Exhaust PM10	PM10 Total	Fugitive PM2.5	Exhaust PM2.5	PM2.5 Total	Bio- CO2	NBio- CO2	Total CO2	CH4	N2O	CO2e
Category	lb/day										lb/day					
Fugitive Dust					0.5303	0.0000	0.5303	0.0573	0.0000	0.0573			0.0000			0.0000
Off-Road	1.4483	16.1028	13.7129	0.0238		0.7602	0.7602		0.6994	0.6994		2,300.3453	2,300.3453	0.7440		2,318.9447
Total	**1.4483**	**16.1028**	**13.7129**	**0.0238**	**0.5303**	**0.7602**	**1.2905**	**0.0573**	**0.6994**	**0.7566**		**2,300.3453**	**2,300.3453**	**0.7440**		**2,318.9447**

3.3 Site Preparation - 2021

Unmitigated Construction Off-Site

	ROG	NOx	CO	SO2	Fugitive PM10	Exhaust PM10	PM10 Total	Fugitive PM2.5	Exhaust PM2.5	PM2.5 Total	Bio- CO2	NBio- CO2	Total CO2	CH4	N2O	CO2e
Category	lb/day										lb/day					
Hauling	0.0000	0.0000	0.0000	0.0000	0.0000	0.0000	0.0000	0.0000	0.0000	0.0000		0.0000	0.0000	0.0000		0.0000
Vendor	0.0000	0.0000	0.0000	0.0000	0.0000	0.0000	0.0000	0.0000	0.0000	0.0000		0.0000	0.0000	0.0000		0.0000
Worker	0.0511	0.0348	0.3447	1.1000e-003	0.1232	7.8000e-004	0.1240	0.0327	7.1000e-004	0.0334		109.4305	109.4305	2.4800e-003		109.4924
Total	**0.0511**	**0.0348**	**0.3447**	**1.1000e-003**	**0.1232**	**7.8000e-004**	**0.1240**	**0.0327**	**7.1000e-004**	**0.0334**		**109.4305**	**109.4305**	**2.4800e-003**		**109.4924**

Mitigated Construction On-Site

	ROG	NOx	CO	SO2	Fugitive PM10	Exhaust PM10	PM10 Total	Fugitive PM2.5	Exhaust PM2.5	PM2.5 Total	Bio- CO2	NBio- CO2	Total CO2	CH4	N2O	CO2e
Category	lb/day										lb/day					
Fugitive Dust					0.2386	0.0000	0.2386	0.0258	0.0000	0.0258			0.0000			0.0000
Off-Road	1.4483	16.1028	13.7129	0.0238		0.7602	0.7602		0.6994	0.6994	0.0000	2,300.3453	2,300.3453	0.7440		2,318.9447
Total	**1.4483**	**16.1028**	**13.7129**	**0.0238**	**0.2386**	**0.7602**	**0.9988**	**0.0258**	**0.6994**	**0.7252**	**0.0000**	**2,300.3453**	**2,300.3453**	**0.7440**		**2,318.9447**

3.3 Site Preparation - 2021

Mitigated Construction Off-Site

	ROG	NOx	CO	SO2	Fugitive PM10	Exhaust PM10	PM10 Total	Fugitive PM2.5	Exhaust PM2.5	PM2.5 Total	Bio- CO2	NBio- CO2	Total CO2	CH4	N2O	CO2e
Category	lb/day										lb/day					
Hauling	0.0000	0.0000	0.0000	0.0000	0.0000	0.0000	0.0000	0.0000	0.0000	0.0000		0.0000	0.0000	0.0000		0.0000
Vendor	0.0000	0.0000	0.0000	0.0000	0.0000	0.0000	0.0000	0.0000	0.0000	0.0000		0.0000	0.0000	0.0000		0.0000
Worker	0.0511	0.0348	0.3447	1.1000e-003	0.1232	7.8000e-004	0.1240	0.0327	7.1000e-004	0.0334		109.4305	109.4305	2.4800e-003		109.4924
Total	**0.0511**	**0.0348**	**0.3447**	**1.1000e-003**	**0.1232**	**7.8000e-004**	**0.1240**	**0.0327**	**7.1000e-004**	**0.0334**		**109.4305**	**109.4305**	**2.4800e-003**		**109.4924**

3.4 Grading - 2021

Unmitigated Construction On-Site

	ROG	NOx	CO	SO2	Fugitive PM10	Exhaust PM10	PM10 Total	Fugitive PM2.5	Exhaust PM2.5	PM2.5 Total	Bio- CO2	NBio- CO2	Total CO2	CH4	N2O	CO2e
Category	lb/day										lb/day					
Fugitive Dust					0.6399	0.0000	0.6399	0.0739	0.0000	0.0739			0.0000			0.0000
Off-Road	1.1157	12.5688	10.2040	0.0196		0.5293	0.5293		0.4870	0.4870		1,897.8370	1,897.8370	0.6138		1,913.1820
Total	**1.1157**	**12.5688**	**10.2040**	**0.0196**	**0.6399**	**0.5293**	**1.1692**	**0.0739**	**0.4870**	**0.5608**		**1,897.8370**	**1,897.8370**	**0.6138**		**1,913.1820**

3.4 Grading - 2021

Unmitigated Construction Off-Site

	ROG	NOx	CO	SO2	Fugitive PM10	Exhaust PM10	PM10 Total	Fugitive PM2.5	Exhaust PM2.5	PM2.5 Total	Bio- CO2	NBio- CO2	Total CO2	CH4	N2O	CO2e
Category	lb/day										lb/day					
Hauling	0.9691	32.8013	7.2535	0.0935	2.1163	0.1023	2.2186	0.5800	0.0979	0.6778		10,002.1076	10,002.1076	0.5294		10,015.3421
Vendor	0.0000	0.0000	0.0000	0.0000	0.0000	0.0000	0.0000	0.0000	0.0000	0.0000		0.0000	0.0000	0.0000		0.0000
Worker	0.0341	0.0232	0.2298	7.3000e-004	0.0822	5.2000e-004	0.0827	0.0218	4.8000e-004	0.0223		72.9537	72.9537	1.6500e-003		72.9949
Total	**1.0032**	**32.8245**	**7.4833**	**0.0942**	**2.1985**	**0.1028**	**2.3013**	**0.6017**	**0.0983**	**0.7001**		**10,075.0612**	**10,075.0612**	**0.5310**		**10,088.3370**

Mitigated Construction On-Site

	ROG	NOx	CO	SO2	Fugitive PM10	Exhaust PM10	PM10 Total	Fugitive PM2.5	Exhaust PM2.5	PM2.5 Total	Bio- CO2	NBio- CO2	Total CO2	CH4	N2O	CO2e
Category	lb/day										lb/day					
Fugitive Dust					0.2879	0.0000	0.2879	0.0332	0.0000	0.0332			0.0000			0.0000
Off-Road	1.1157	12.5688	10.2040	0.0196		0.5293	0.5293		0.4870	0.4870	0.0000	1,897.8370	1,897.8370	0.6138		1,913.1820
Total	**1.1157**	**12.5688**	**10.2040**	**0.0196**	**0.2879**	**0.5293**	**0.8173**	**0.0332**	**0.4870**	**0.5202**	**0.0000**	**1,897.8370**	**1,897.8370**	**0.6138**		**1,913.1820**

3.4 Grading - 2021

Mitigated Construction Off-Site

	ROG	NOx	CO	SO2	Fugitive PM10	Exhaust PM10	PM10 Total	Fugitive PM2.5	Exhaust PM2.5	PM2.5 Total	Bio- CO2	NBio- CO2	Total CO2	CH4	N2O	CO2e
Category	lb/day										lb/day					
Hauling	0.9691	32.8013	7.2535	0.0935	2.1163	0.1023	2.2186	0.5800	0.0979	0.6778		10,002.1076	10,002.1076	0.5294		10,015.3421
Vendor	0.0000	0.0000	0.0000	0.0000	0.0000	0.0000	0.0000	0.0000	0.0000	0.0000		0.0000	0.0000	0.0000		0.0000
Worker	0.0341	0.0232	0.2298	7.3000e-004	0.0822	5.2000e-004	0.0827	0.0218	4.8000e-004	0.0223		72.9537	72.9537	1.6500e-003		72.9949
Total	**1.0032**	**32.8245**	**7.4833**	**0.0942**	**2.1985**	**0.1028**	**2.3013**	**0.6017**	**0.0983**	**0.7001**		**10,075.0612**	**10,075.0612**	**0.5310**		**10,088.3370**

3.5 Building Construction - 2021

Unmitigated Construction On-Site

	ROG	NOx	CO	SO2	Fugitive PM10	Exhaust PM10	PM10 Total	Fugitive PM2.5	Exhaust PM2.5	PM2.5 Total	Bio- CO2	NBio- CO2	Total CO2	CH4	N2O	CO2e
Category	lb/day										lb/day					
Off-Road	1.6022	17.0002	12.9067	0.0228		0.8890	0.8890		0.8179	0.8179		2,211.7480	2,211.7480	0.7153		2,229.6311
Total	**1.6022**	**17.0002**	**12.9067**	**0.0228**		**0.8890**	**0.8890**		**0.8179**	**0.8179**		**2,211.7480**	**2,211.7480**	**0.7153**		**2,229.6311**

3.5 Building Construction - 2021

Unmitigated Construction Off-Site

	ROG	NOx	CO	SO2	Fugitive PM10	Exhaust PM10	PM10 Total	Fugitive PM2.5	Exhaust PM2.5	PM2.5 Total	Bio- CO2	NBio- CO2	Total CO2	CH4	N2O	CO2e
Category	lb/day										lb/day					
Hauling	0.0000	0.0000	0.0000	0.0000	0.0000	0.0000	0.0000	0.0000	0.0000	0.0000		0.0000	0.0000	0.0000		0.0000
Vendor	0.2497	7.9215	2.1287	0.0202	0.5145	0.0176	0.5321	0.1481	0.0168	0.1649		2,140.3663	2,140.3663	0.1115		2,143.1541
Worker	0.6608	0.4503	4.4583	0.0142	1.5937	0.0100	1.6037	0.4227	9.2400e-003	0.4320		1,415.3011	1,415.3011	0.0320		1,416.1017
Total	**0.9105**	**8.3718**	**6.5871**	**0.0344**	**2.1081**	**0.0276**	**2.1358**	**0.5708**	**0.0261**	**0.5969**		**3,555.6674**	**3,555.6674**	**0.1435**		**3,559.2558**

Mitigated Construction On-Site

	ROG	NOx	CO	SO2	Fugitive PM10	Exhaust PM10	PM10 Total	Fugitive PM2.5	Exhaust PM2.5	PM2.5 Total	Bio- CO2	NBio- CO2	Total CO2	CH4	N2O	CO2e
Category	lb/day										lb/day					
Off-Road	1.6022	17.0002	12.9067	0.0228		0.8890	0.8890		0.8179	0.8179	0.0000	2,211.7480	2,211.7480	0.7153		2,229.6311
Total	**1.6022**	**17.0002**	**12.9067**	**0.0228**		**0.8890**	**0.8890**		**0.8179**	**0.8179**	**0.0000**	**2,211.7480**	**2,211.7480**	**0.7153**		**2,229.6311**

3.5 Building Construction - 2021

Mitigated Construction Off-Site

	ROG	NOx	CO	SO2	Fugitive PM10	Exhaust PM10	PM10 Total	Fugitive PM2.5	Exhaust PM2.5	PM2.5 Total	Bio- CO2	NBio- CO2	Total CO2	CH4	N2O	CO2e
Category	lb/day										lb/day					
Hauling	0.0000	0.0000	0.0000	0.0000	0.0000	0.0000	0.0000	0.0000	0.0000	0.0000		0.0000	0.0000	0.0000		0.0000
Vendor	0.2497	7.9215	2.1287	0.0202	0.5145	0.0176	0.5321	0.1481	0.0168	0.1649		2,140.3663	2,140.3663	0.1115		2,143.1541
Worker	0.6608	0.4503	4.4583	0.0142	1.5937	0.0100	1.6037	0.4227	9.2400e-003	0.4320		1,415.3011	1,415.3011	0.0320		1,416.1017
Total	**0.9105**	**8.3718**	**6.5871**	**0.0344**	**2.1081**	**0.0276**	**2.1358**	**0.5708**	**0.0261**	**0.5969**		**3,555.6674**	**3,555.6674**	**0.1435**		**3,559.2558**

3.5 Building Construction - 2022

Unmitigated Construction On-Site

	ROG	NOx	CO	SO2	Fugitive PM10	Exhaust PM10	PM10 Total	Fugitive PM2.5	Exhaust PM2.5	PM2.5 Total	Bio- CO2	NBio- CO2	Total CO2	CH4	N2O	CO2e
Category	lb/day										lb/day					
Off-Road	1.4259	14.8857	12.6474	0.0229		0.7502	0.7502		0.6902	0.6902		2,212.7978	2,212.7978	0.7157		2,230.6894
Total	**1.4259**	**14.8857**	**12.6474**	**0.0229**		**0.7502**	**0.7502**		**0.6902**	**0.6902**		**2,212.7978**	**2,212.7978**	**0.7157**		**2,230.6894**

3.5 Building Construction - 2022

Unmitigated Construction Off-Site

	ROG	NOx	CO	SO2	Fugitive PM10	Exhaust PM10	PM10 Total	Fugitive PM2.5	Exhaust PM2.5	PM2.5 Total	Bio- CO2	NBio- CO2	Total CO2	CH4	N2O	CO2e
Category	lb/day										lb/day					
Hauling	0.0000	0.0000	0.0000	0.0000	0.0000	0.0000	0.0000	0.0000	0.0000	0.0000		0.0000	0.0000	0.0000		0.0000
Vendor	0.2328	7.4996	2.0011	0.0200	0.5145	0.0153	0.5298	0.1481	0.0146	0.1627		2,119.1757	2,119.1757	0.1065		2,121.8387
Worker	0.6168	0.4037	4.0912	0.0137	1.5937	9.7900e-003	1.6035	0.4227	9.0200e-003	0.4317		1,363.4165	1,363.4165	0.0287		1,364.1334
Total	**0.8496**	**7.9034**	**6.0923**	**0.0337**	**2.1081**	**0.0251**	**2.1332**	**0.5708**	**0.0236**	**0.5945**		**3,482.5922**	**3,482.5922**	**0.1352**		**3,485.9720**

Mitigated Construction On-Site

	ROG	NOx	CO	SO2	Fugitive PM10	Exhaust PM10	PM10 Total	Fugitive PM2.5	Exhaust PM2.5	PM2.5 Total	Bio- CO2	NBio- CO2	Total CO2	CH4	N2O	CO2e
Category	lb/day										lb/day					
Off-Road	1.4259	14.8857	12.6474	0.0229		0.7502	0.7502		0.6902	0.6902	0.0000	2,212.7978	2,212.7978	0.7157		2,230.6894
Total	**1.4259**	**14.8857**	**12.6474**	**0.0229**		**0.7502**	**0.7502**		**0.6902**	**0.6902**	**0.0000**	**2,212.7978**	**2,212.7978**	**0.7157**		**2,230.6894**

3.5 Building Construction - 2022

Mitigated Construction Off-Site

	ROG	NOx	CO	SO2	Fugitive PM10	Exhaust PM10	PM10 Total	Fugitive PM2.5	Exhaust PM2.5	PM2.5 Total	Bio- CO2	NBio- CO2	Total CO2	CH4	N2O	CO2e
Category	lb/day										lb/day					
Hauling	0.0000	0.0000	0.0000	0.0000	0.0000	0.0000	0.0000	0.0000	0.0000	0.0000		0.0000	0.0000	0.0000		0.0000
Vendor	0.2328	7.4996	2.0011	0.0200	0.5145	0.0153	0.5298	0.1481	0.0146	0.1627		2,119.1757	2,119.1757	0.1065		2,121.8387
Worker	0.6168	0.4037	4.0912	0.0137	1.5937	9.7900e-003	1.6035	0.4227	9.0200e-003	0.4317		1,363.4165	1,363.4165	0.0287		1,364.1334
Total	**0.8496**	**7.9034**	**6.0923**	**0.0337**	**2.1081**	**0.0251**	**2.1332**	**0.5708**	**0.0236**	**0.5945**		**3,482.5922**	**3,482.5922**	**0.1352**		**3,485.9720**

3.6 Architectural Coating - 2021

Unmitigated Construction On-Site

	ROG	NOx	CO	SO2	Fugitive PM10	Exhaust PM10	PM10 Total	Fugitive PM2.5	Exhaust PM2.5	PM2.5 Total	Bio- CO2	NBio- CO2	Total CO2	CH4	N2O	CO2e
Category	lb/day										lb/day					
Archit. Coating	27.3073					0.0000	0.0000		0.0000	0.0000			0.0000			0.0000
Off-Road	0.2189	1.5268	1.8176	2.9700e-003		0.0941	0.0941		0.0941	0.0941		281.4481	281.4481	0.0193		281.9309
Total	**27.5262**	**1.5268**	**1.8176**	**2.9700e-003**		**0.0941**	**0.0941**		**0.0941**	**0.0941**		**281.4481**	**281.4481**	**0.0193**		**281.9309**

3.6 Architectural Coating - 2021

Unmitigated Construction Off-Site

	ROG	NOx	CO	SO2	Fugitive PM10	Exhaust PM10	PM10 Total	Fugitive PM2.5	Exhaust PM2.5	PM2.5 Total	Bio- CO2	NBio- CO2	Total CO2	CH4	N2O	CO2e
Category	lb/day										lb/day					
Hauling	0.0000	0.0000	0.0000	0.0000	0.0000	0.0000	0.0000	0.0000	0.0000	0.0000		0.0000	0.0000	0.0000		0.0000
Vendor	0.0000	0.0000	0.0000	0.0000	0.0000	0.0000	0.0000	0.0000	0.0000	0.0000		0.0000	0.0000	0.0000		0.0000
Worker	0.1328	0.0905	0.8963	2.8500e-003	0.3204	2.0200e-003	0.3224	0.0850	1.8600e-003	0.0868		284.5193	284.5193	6.4400e-003		284.6802
Total	**0.1328**	**0.0905**	**0.8963**	**2.8500e-003**	**0.3204**	**2.0200e-003**	**0.3224**	**0.0850**	**1.8600e-003**	**0.0868**		**284.5193**	**284.5193**	**6.4400e-003**		**284.6802**

Mitigated Construction On-Site

	ROG	NOx	CO	SO2	Fugitive PM10	Exhaust PM10	PM10 Total	Fugitive PM2.5	Exhaust PM2.5	PM2.5 Total	Bio- CO2	NBio- CO2	Total CO2	CH4	N2O	CO2e
Category	lb/day										lb/day					
Archit. Coating	27.3073					0.0000	0.0000		0.0000	0.0000			0.0000			0.0000
Off-Road	0.2189	1.5268	1.8176	2.9700e-003		0.0941	0.0941		0.0941	0.0941	0.0000	281.4481	281.4481	0.0193		281.9309
Total	**27.5262**	**1.5268**	**1.8176**	**2.9700e-003**		**0.0941**	**0.0941**		**0.0941**	**0.0941**	**0.0000**	**281.4481**	**281.4481**	**0.0193**		**281.9309**

3.6 Architectural Coating - 2021

Mitigated Construction Off-Site

	ROG	NOx	CO	SO2	Fugitive PM10	Exhaust PM10	PM10 Total	Fugitive PM2.5	Exhaust PM2.5	PM2.5 Total	Bio- CO2	NBio- CO2	Total CO2	CH4	N2O	CO2e
Category	lb/day										lb/day					
Hauling	0.0000	0.0000	0.0000	0.0000	0.0000	0.0000	0.0000	0.0000	0.0000	0.0000		0.0000	0.0000	0.0000		0.0000
Vendor	0.0000	0.0000	0.0000	0.0000	0.0000	0.0000	0.0000	0.0000	0.0000	0.0000		0.0000	0.0000	0.0000		0.0000
Worker	0.1328	0.0905	0.8963	2.8500e-003	0.3204	2.0200e-003	0.3224	0.0850	1.8600e-003	0.0868		284.5193	284.5193	6.4400e-003		284.6802
Total	**0.1328**	**0.0905**	**0.8963**	**2.8500e-003**	**0.3204**	**2.0200e-003**	**0.3224**	**0.0850**	**1.8600e-003**	**0.0868**		**284.5193**	**284.5193**	**6.4400e-003**		**284.6802**

3.6 Architectural Coating - 2022

Unmitigated Construction On-Site

	ROG	NOx	CO	SO2	Fugitive PM10	Exhaust PM10	PM10 Total	Fugitive PM2.5	Exhaust PM2.5	PM2.5 Total	Bio- CO2	NBio- CO2	Total CO2	CH4	N2O	CO2e
Category	lb/day										lb/day					
Archit. Coating	27.3073					0.0000	0.0000		0.0000	0.0000			0.0000			0.0000
Off-Road	0.2045	1.4085	1.8136	2.9700e-003		0.0817	0.0817		0.0817	0.0817		281.4481	281.4481	0.0183		281.9062
Total	**27.5119**	**1.4085**	**1.8136**	**2.9700e-003**		**0.0817**	**0.0817**		**0.0817**	**0.0817**		**281.4481**	**281.4481**	**0.0183**		**281.9062**

3.6 Architectural Coating - 2022

Unmitigated Construction Off-Site

	ROG	NOx	CO	SO2	Fugitive PM10	Exhaust PM10	PM10 Total	Fugitive PM2.5	Exhaust PM2.5	PM2.5 Total	Bio- CO2	NBio- CO2	Total CO2	CH4	N2O	CO2e
Category	lb/day										lb/day					
Hauling	0.0000	0.0000	0.0000	0.0000	0.0000	0.0000	0.0000	0.0000	0.0000	0.0000		0.0000	0.0000	0.0000		0.0000
Vendor	0.0000	0.0000	0.0000	0.0000	0.0000	0.0000	0.0000	0.0000	0.0000	0.0000		0.0000	0.0000	0.0000		0.0000
Worker	0.1240	0.0812	0.8225	2.7500e-003	0.3204	1.9700e-003	0.3223	0.0850	1.8100e-003	0.0868		274.0889	274.0889	5.7600e-003		274.2330
Total	**0.1240**	**0.0812**	**0.8225**	**2.7500e-003**	**0.3204**	**1.9700e-003**	**0.3223**	**0.0850**	**1.8100e-003**	**0.0868**		**274.0889**	**274.0889**	**5.7600e-003**		**274.2330**

Mitigated Construction On-Site

	ROG	NOx	CO	SO2	Fugitive PM10	Exhaust PM10	PM10 Total	Fugitive PM2.5	Exhaust PM2.5	PM2.5 Total	Bio- CO2	NBio- CO2	Total CO2	CH4	N2O	CO2e
Category	lb/day										lb/day					
Archit. Coating	27.3073					0.0000	0.0000		0.0000	0.0000			0.0000			0.0000
Off-Road	0.2045	1.4085	1.8136	2.9700e-003		0.0817	0.0817		0.0817	0.0817	0.0000	281.4481	281.4481	0.0183		281.9062
Total	**27.5119**	**1.4085**	**1.8136**	**2.9700e-003**		**0.0817**	**0.0817**		**0.0817**	**0.0817**	**0.0000**	**281.4481**	**281.4481**	**0.0183**		**281.9062**

3.6 Architectural Coating - 2022

Mitigated Construction Off-Site

	ROG	NOx	CO	SO2	Fugitive PM10	Exhaust PM10	PM10 Total	Fugitive PM2.5	Exhaust PM2.5	PM2.5 Total	Bio- CO2	NBio- CO2	Total CO2	CH4	N2O	CO2e
Category	lb/day										lb/day					
Hauling	0.0000	0.0000	0.0000	0.0000	0.0000	0.0000	0.0000	0.0000	0.0000	0.0000		0.0000	0.0000	0.0000		0.0000
Vendor	0.0000	0.0000	0.0000	0.0000	0.0000	0.0000	0.0000	0.0000	0.0000	0.0000		0.0000	0.0000	0.0000		0.0000
Worker	0.1240	0.0812	0.8225	2.7500e-003	0.3204	1.9700e-003	0.3223	0.0850	1.8100e-003	0.0868		274.0889	274.0889	5.7600e-003		274.2330
Total	**0.1240**	**0.0812**	**0.8225**	**2.7500e-003**	**0.3204**	**1.9700e-003**	**0.3223**	**0.0850**	**1.8100e-003**	**0.0868**		**274.0889**	**274.0889**	**5.7600e-003**		**274.2330**

3.7 Paving - 2022

Unmitigated Construction On-Site

	ROG	NOx	CO	SO2	Fugitive PM10	Exhaust PM10	PM10 Total	Fugitive PM2.5	Exhaust PM2.5	PM2.5 Total	Bio- CO2	NBio- CO2	Total CO2	CH4	N2O	CO2e
Category	lb/day										lb/day					
Off-Road	0.5379	5.5004	6.9822	0.0104		0.2893	0.2893		0.2662	0.2662		1,010.6007	1,010.6007	0.3269		1,018.7719
Paving	0.3655					0.0000	0.0000		0.0000	0.0000			0.0000			0.0000
Total	**0.9034**	**5.5004**	**6.9822**	**0.0104**		**0.2893**	**0.2893**		**0.2662**	**0.2662**		**1,010.6007**	**1,010.6007**	**0.3269**		**1,018.7719**

3.7 Paving - 2022

Unmitigated Construction Off-Site

	ROG	NOx	CO	SO2	Fugitive PM10	Exhaust PM10	PM10 Total	Fugitive PM2.5	Exhaust PM2.5	PM2.5 Total	Bio- CO2	NBio- CO2	Total CO2	CH4	N2O	CO2e
Category	lb/day										lb/day					
Hauling	0.0000	0.0000	0.0000	0.0000	0.0000	0.0000	0.0000	0.0000	0.0000	0.0000		0.0000	0.0000	0.0000		0.0000
Vendor	0.0000	0.0000	0.0000	0.0000	0.0000	0.0000	0.0000	0.0000	0.0000	0.0000		0.0000	0.0000	0.0000		0.0000
Worker	0.0254	0.0167	0.1687	5.6000e-004	0.0657	4.0000e-004	0.0661	0.0174	3.7000e-004	0.0178		56.2234	56.2234	1.1800e-003		56.2529
Total	**0.0254**	**0.0167**	**0.1687**	**5.6000e-004**	**0.0657**	**4.0000e-004**	**0.0661**	**0.0174**	**3.7000e-004**	**0.0178**		**56.2234**	**56.2234**	**1.1800e-003**		**56.2529**

Mitigated Construction On-Site

	ROG	NOx	CO	SO2	Fugitive PM10	Exhaust PM10	PM10 Total	Fugitive PM2.5	Exhaust PM2.5	PM2.5 Total	Bio- CO2	NBio- CO2	Total CO2	CH4	N2O	CO2e
Category	lb/day										lb/day					
Off-Road	0.5379	5.5004	6.9822	0.0104		0.2893	0.2893		0.2662	0.2662	0.0000	1,010.6007	1,010.6007	0.3269		1,018.7719
Paving	0.3655					0.0000	0.0000		0.0000	0.0000			0.0000			0.0000
Total	**0.9034**	**5.5004**	**6.9822**	**0.0104**		**0.2893**	**0.2893**		**0.2662**	**0.2662**	**0.0000**	**1,010.6007**	**1,010.6007**	**0.3269**		**1,018.7719**

3.7 Paving - 2022

Mitigated Construction Off-Site

	ROG	NOx	CO	SO2	Fugitive PM10	Exhaust PM10	PM10 Total	Fugitive PM2.5	Exhaust PM2.5	PM2.5 Total	Bio- CO2	NBio- CO2	Total CO2	CH4	N2O	CO2e
Category	lb/day										lb/day					
Hauling	0.0000	0.0000	0.0000	0.0000	0.0000	0.0000	0.0000	0.0000	0.0000	0.0000		0.0000	0.0000	0.0000		0.0000
Vendor	0.0000	0.0000	0.0000	0.0000	0.0000	0.0000	0.0000	0.0000	0.0000	0.0000		0.0000	0.0000	0.0000		0.0000
Worker	0.0254	0.0167	0.1687	5.6000e-004	0.0657	4.0000e-004	0.0661	0.0174	3.7000e-004	0.0178		56.2234	56.2234	1.1800e-003		56.2529
Total	**0.0254**	**0.0167**	**0.1687**	**5.6000e-004**	**0.0657**	**4.0000e-004**	**0.0661**	**0.0174**	**3.7000e-004**	**0.0178**		**56.2234**	**56.2234**	**1.1800e-003**		**56.2529**

4.0 Operational Detail - Mobile

4.1 Mitigation Measures Mobile

	ROG	NOx	CO	SO2	Fugitive PM10	Exhaust PM10	PM10 Total	Fugitive PM2.5	Exhaust PM2.5	PM2.5 Total	Bio- CO2	NBio- CO2	Total CO2	CH4	N2O	CO2e
Category	lb/day										lb/day					
Mitigated	2.6901	12.4819	33.7152	0.1221	11.5466	0.1006	11.6472	3.0890	0.0940	3.1830		12,358.5098	12,358.5098	0.4322		12,369.3140
Unmitigated	2.6901	12.4819	33.7152	0.1221	11.5466	0.1006	11.6472	3.0890	0.0940	3.1830		12,358.5098	12,358.5098	0.4322		12,369.3140

4.2 Trip Summary Information

	Average Daily Trip Rate			Unmitigated	Mitigated
Land Use	Weekday	Saturday	Sunday	Annual VMT	Annual VMT
Industrial Park	2,073.10	839.35	246.08	4,288,917	4,288,917
Parking Lot	0.00	0.00	0.00		
Total	2,073.10	839.35	246.08	4,288,917	4,288,917

4.3 Trip Type Information

	Miles			Trip %			Trip Purpose %		
Land Use	H-W or C-W	H-S or C-C	H-O or C-NW	H-W or C-W	H-S or C-C	H-O or C-NW	Primary	Diverted	Pass-by
Industrial Park	9.50	7.30	7.30	59.00	28.00	13.00	79	19	2
Parking Lot	9.50	7.30	7.30	0.00	0.00	0.00	0	0	0

4.4 Fleet Mix

Land Use	LDA	LDT1	LDT2	MDV	LHD1	LHD2	MHD	HHD	OBUS	UBUS	MCY	SBUS	MH
Industrial Park	0.578638	0.038775	0.193686	0.110919	0.015677	0.005341	0.018293	0.026358	0.002641	0.002200	0.005832	0.000891	0.000749
Parking Lot	0.578638	0.038775	0.193686	0.110919	0.015677	0.005341	0.018293	0.026358	0.002641	0.002200	0.005832	0.000891	0.000749

5.0 Energy Detail

Historical Energy Use: N

5.1 Mitigation Measures Energy

Exceed Title 24

	ROG	NOx	CO	SO2	Fugitive PM10	Exhaust PM10	PM10 Total	Fugitive PM2.5	Exhaust PM2.5	PM2.5 Total	Bio- CO2	NBio- CO2	Total CO2	CH4	N2O	CO2e
Category	lb/day										lb/day					
NaturalGas Mitigated	0.1378	1.2526	1.0522	7.5200e-003		0.0952	0.0952		0.0952	0.0952		1,503.0970	1,503.0970	0.0288	0.0276	1,512.0291
NaturalGas Unmitigated	0.1925	1.7502	1.4702	0.0105		0.1330	0.1330		0.1330	0.1330		2,100.2505	2,100.2505	0.0403	0.0385	2,112.7312

5.2 Energy by Land Use - NaturalGas

Unmitigated

	NaturalGas Use	ROG	NOx	CO	SO2	Fugitive PM10	Exhaust PM10	PM10 Total	Fugitive PM2.5	Exhaust PM2.5	PM2.5 Total	Bio- CO2	NBio- CO2	Total CO2	CH4	N2O	CO2e
Land Use	kBTU/yr	lb/day										lb/day					
Industrial Park	17852.1	0.1925	1.7502	1.4702	0.0105		0.1330	0.1330		0.1330	0.1330		2,100.2505	2,100.2505	0.0403	0.0385	2,112.7312
Parking Lot	0	0.0000	0.0000	0.0000	0.0000		0.0000	0.0000		0.0000	0.0000		0.0000	0.0000	0.0000	0.0000	0.0000
Total		**0.1925**	**1.7502**	**1.4702**	**0.0105**		**0.1330**	**0.1330**		**0.1330**	**0.1330**		**2,100.2505**	**2,100.2505**	**0.0403**	**0.0385**	**2,112.7312**

Mitigated

	NaturalGas Use	ROG	NOx	CO	SO2	Fugitive PM10	Exhaust PM10	PM10 Total	Fugitive PM2.5	Exhaust PM2.5	PM2.5 Total	Bio- CO2	NBio- CO2	Total CO2	CH4	N2O	CO2e
Land Use	kBTU/yr	lb/day										lb/day					
Industrial Park	12.7763	0.1378	1.2526	1.0522	7.5200e-003		0.0952	0.0952		0.0952	0.0952		1,503.0970	1,503.0970	0.0288	0.0276	1,512.0291
Parking Lot	0	0.0000	0.0000	0.0000	0.0000		0.0000	0.0000		0.0000	0.0000		0.0000	0.0000	0.0000	0.0000	0.0000
Total		**0.1378**	**1.2526**	**1.0522**	**7.5200e-003**		**0.0952**	**0.0952**		**0.0952**	**0.0952**		**1,503.0970**	**1,503.0970**	**0.0288**	**0.0276**	**1,512.0291**

6.0 Area Detail

6.1 Mitigation Measures Area

	ROG	NOx	CO	SO2	Fugitive PM10	Exhaust PM10	PM10 Total	Fugitive PM2.5	Exhaust PM2.5	PM2.5 Total	Bio- CO2	NBio- CO2	Total CO2	CH4	N2O	CO2e
Category	lb/day										lb/day					
Mitigated	8.2364	6.0000e-004	0.0661	0.0000		2.4000e-004	2.4000e-004		2.4000e-004	2.4000e-004		0.1416	0.1416	3.7000e-004		0.1509
Unmitigated	8.2364	6.0000e-004	0.0661	0.0000		2.4000e-004	2.4000e-004		2.4000e-004	2.4000e-004		0.1416	0.1416	3.7000e-004		0.1509

6.2 Area by SubCategory

Unmitigated

	ROG	NOx	CO	SO2	Fugitive PM10	Exhaust PM10	PM10 Total	Fugitive PM2.5	Exhaust PM2.5	PM2.5 Total	Bio- CO2	NBio- CO2	Total CO2	CH4	N2O	CO2e
SubCategory	lb/day										lb/day					
Architectural Coating	0.9726					0.0000	0.0000		0.0000	0.0000			0.0000			0.0000
Consumer Products	7.2577					0.0000	0.0000		0.0000	0.0000			0.0000			0.0000
Landscaping	6.1200e-003	6.0000e-004	0.0661	0.0000		2.4000e-004	2.4000e-004		2.4000e-004	2.4000e-004		0.1416	0.1416	3.7000e-004		0.1509
Total	**8.2364**	**6.0000e-004**	**0.0661**	**0.0000**		**2.4000e-004**	**2.4000e-004**		**2.4000e-004**	**2.4000e-004**		**0.1416**	**0.1416**	**3.7000e-004**		**0.1509**

6.2 Area by SubCategory

Mitigated

	ROG	NOx	CO	SO2	Fugitive PM10	Exhaust PM10	PM10 Total	Fugitive PM2.5	Exhaust PM2.5	PM2.5 Total	Bio- CO2	NBio- CO2	Total CO2	CH4	N2O	CO2e
SubCategory	lb/day										lb/day					
Architectural Coating	0.9726					0.0000	0.0000		0.0000	0.0000			0.0000			0.0000
Consumer Products	7.2577					0.0000	0.0000		0.0000	0.0000			0.0000			0.0000
Landscaping	6.1200e-003	6.0000e-004	0.0661	0.0000		2.4000e-004	2.4000e-004		2.4000e-004	2.4000e-004		0.1416	0.1416	3.7000e-004		0.1509
Total	**8.2364**	**6.0000e-004**	**0.0661**	**0.0000**		**2.4000e-004**	**2.4000e-004**		**2.4000e-004**	**2.4000e-004**		**0.1416**	**0.1416**	**3.7000e-004**		**0.1509**

7.0 Water Detail

7.1 Mitigation Measures Water

Install Low Flow Bathroom Faucet

Install Low Flow Kitchen Faucet

Install Low Flow Toilet

Install Low Flow Shower

Use Water Efficient Irrigation System

8.0 Waste Detail

8.1 Mitigation Measures Waste

9.0 Operational Offroad

Equipment Type	Number	Hours/Day	Days/Year	Horse Power	Load Factor	Fuel Type

10.0 Stationary Equipment

Fire Pumps and Emergency Generators

Equipment Type	Number	Hours/Day	Hours/Year	Horse Power	Load Factor	Fuel Type

Boilers

Equipment Type	Number	Heat Input/Day	Heat Input/Year	Boiler Rating	Fuel Type

User Defined Equipment

Equipment Type	Number

11.0 Vegetation

Clawiter Industrial Project - Buildings 1 to 3 - 2023

Bay Area AQMD Air District, Summer

1.0 Project Characteristics

1.1 Land Usage

Land Uses	Size	Metric	Lot Acreage	Floor Surface Area	Population
Industrial Park	337.09	1000sqft	16.37	337,094.00	0
Parking Lot	310.00	Space	2.79	124,000.00	0

1.2 Other Project Characteristics

Urbanization	Urban	**Wind Speed (m/s)**	2.2	**Precipitation Freq (Days)**	64
Climate Zone	5			**Operational Year**	2023
Utility Company	Pacific Gas & Electric Company				
CO2 Intensity (lb/MWhr)	641.35	**CH4 Intensity (lb/MWhr)**	0.029	**N2O Intensity (lb/MWhr)**	0.006

1.3 User Entered Comments & Non-Default Data

Project Characteristics -

Land Use - SF of buildings 1-3, lot acreage is project site (26) minus default estimate for data center (6.39) and parking lots (3.24)

Construction Phase - Applicant specified 15-month schedule. Extended AC to overlap BC for mroe realistic conditions.

Off-road Equipment - Default

Off-road Equipment - Applicant-provided equipment list

Off-road Equipment - Applicant-provided equipment list

Off-road Equipment - Applicant-provided equipment list. Paver used as proxy for compactor

Off-road Equipment - Applicant-provided equipment list

Off-road Equipment - Applicant-provided equipment list. Paver used as proxy for compactor

Trips and VMT -

Demolition - Based on Google Earth estimate - 185255+27142+2810+35260

Grading - Export quantity provided by applicant

Architectural Coating - BAAQMD Regulation 8, Rule 3

Vehicle Trips - Weekday rate provided by Kittleson, includes trips for Buildings 1-4

Area Coating - BAAQMD Regulation 8, Rule 3

Energy Use -

Water And Wastewater - All wastewater treated at Hayward WWTP with aerobic processes. Outdoor water use calculated assuming 2.43 AFY per acre of landscaped area.

Solid Waste - 77% diversion rate for Hayward

Construction Off-road Equipment Mitigation - Hayward Municipal Code 10-8.32

Mobile Land Use Mitigation -

Water Mitigation - Applicant-specified sustainability features

Fleet Mix -

Energy Mitigation - Title 24 reduced by 30% for 2019 Standards

Table Name	Column Name	Default Value	New Value
tblArchitecturalCoating	EF_Parking	150.00	100.00
tblAreaCoating	Area_EF_Parking	150	100
tblConstructionPhase	NumDays	20.00	130.00
tblConstructionPhase	NumDays	300.00	265.00
tblGrading	MaterialExported	0.00	29,073.00
tblLandUse	LandUseSquareFeet	337,090.00	337,094.00
tblLandUse	LotAcreage	7.74	16.37
tblOffRoadEquipment	OffRoadEquipmentUnitAmount	1.00	2.00
tblOffRoadEquipment	OffRoadEquipmentUnitAmount	2.00	1.00
tblOffRoadEquipment	OffRoadEquipmentUnitAmount	2.00	1.00
tblOffRoadEquipment	OffRoadEquipmentUnitAmount	2.00	1.00
tblOffRoadEquipment	OffRoadEquipmentUnitAmount	2.00	1.00
tblSolidWaste	SolidWasteGenerationRate	417.99	192.28
tblVehicleTrips	WD_TR	6.83	6.15
tblWater	AerobicPercent	87.46	100.00
tblWater	AerobicPercent	87.46	100.00
tblWater	AnaerobicandFacultativeLagoonsPercent	2.21	0.00
tblWater	AnaerobicandFacultativeLagoonsPercent	2.21	0.00
tblWater	OutdoorWaterUseRate	0.00	3,812,456.00
tblWater	SepticTankPercent	10.33	0.00
tblWater	SepticTankPercent	10.33	0.00

2.0 Emissions Summary

2.1 Overall Construction (Maximum Daily Emission)

Unmitigated Construction

	ROG	NOx	CO	SO2	Fugitive PM10	Exhaust PM10	PM10 Total	Fugitive PM2.5	Exhaust PM2.5	PM2.5 Total	Bio- CO2	NBio- CO2	Total CO2	CH4	N2O	CO2e
Year	lb/day										lb/day					
2021	30.1133	44.6394	22.2994	0.1154	13.4292	1.0122	14.0140	2.1675	0.9394	2.7072	0.0000	12,151.1393	12,151.1393	1.1204	0.0000	12,179.1500
2022	30.7822	29.6443	28.6397	0.0752	2.4942	1.1482	3.6424	0.6732	1.0634	1.7366	0.0000	7,518.1226	7,518.1226	1.1977	0.0000	7,548.0651
Maximum	**30.7822**	**44.6394**	**28.6397**	**0.1154**	**13.4292**	**1.1482**	**14.0140**	**2.1675**	**1.0634**	**2.7072**	**0.0000**	**12,151.1393**	**12,151.1393**	**1.1977**	**0.0000**	**12,179.1500**

Mitigated Construction

	ROG	NOx	CO	SO2	Fugitive PM10	Exhaust PM10	PM10 Total	Fugitive PM2.5	Exhaust PM2.5	PM2.5 Total	Bio- CO2	NBio- CO2	Total CO2	CH4	N2O	CO2e
Year	lb/day										lb/day					
2021	30.1133	44.6394	22.2994	0.1154	6.6491	1.0122	7.2339	1.1409	0.9394	1.6807	0.0000	12,151.1393	12,151.1393	1.1204	0.0000	12,179.1500
2022	30.7822	29.6443	28.6397	0.0752	2.4942	1.1482	3.6424	0.6732	1.0634	1.7366	0.0000	7,518.1226	7,518.1226	1.1977	0.0000	7,548.0651
Maximum	**30.7822**	**44.6394**	**28.6397**	**0.1154**	**6.6491**	**1.1482**	**7.2339**	**1.1409**	**1.0634**	**1.7366**	**0.0000**	**12,151.1393**	**12,151.1393**	**1.1977**	**0.0000**	**12,179.1500**

	ROG	**NOx**	**CO**	**SO2**	**Fugitive PM10**	**Exhaust PM10**	**PM10 Total**	**Fugitive PM2.5**	**Exhaust PM2.5**	**PM2.5 Total**	**Bio- CO2**	**NBio-CO2**	**Total CO2**	**CH4**	**N20**	**CO2e**
Percent Reduction	**0.00**	**0.00**	**0.00**	**0.00**	**42.58**	**0.00**	**38.40**	**36.14**	**0.00**	**23.10**	**0.00**	**0.00**	**0.00**	**0.00**	**0.00**	**0.00**

2.2 Overall Operational

Unmitigated Operational

	ROG	NOx	CO	SO2	Fugitive PM10	Exhaust PM10	PM10 Total	Fugitive PM2.5	Exhaust PM2.5	PM2.5 Total	Bio- CO2	NBio- CO2	Total CO2	CH4	N2O	CO2e
Category	lb/day										lb/day					
Area	8.2364	6.0000e-004	0.0661	0.0000		2.4000e-004	2.4000e-004		2.4000e-004	2.4000e-004		0.1416	0.1416	3.7000e-004		0.1509
Energy	0.1925	1.7502	1.4702	0.0105		0.1330	0.1330		0.1330	0.1330		2,100.2505	2,100.2505	0.0403	0.0385	2,112.7312
Mobile	3.1075	11.8307	33.9352	0.1304	11.5466	0.1002	11.6468	3.0890	0.0935	3.1826		13,192.6941	13,192.6941	0.4268		13,203.3629
Total	**11.5365**	**13.5815**	**35.4714**	**0.1409**	**11.5466**	**0.2334**	**11.7800**	**3.0890**	**0.2268**	**3.3158**		**15,293.0862**	**15,293.0862**	**0.4674**	**0.0385**	**15,316.2450**

Mitigated Operational

	ROG	NOx	CO	SO2	Fugitive PM10	Exhaust PM10	PM10 Total	Fugitive PM2.5	Exhaust PM2.5	PM2.5 Total	Bio- CO2	NBio- CO2	Total CO2	CH4	N2O	CO2e
Category	lb/day										lb/day					
Area	8.2364	6.0000e-004	0.0661	0.0000		2.4000e-004	2.4000e-004		2.4000e-004	2.4000e-004		0.1416	0.1416	3.7000e-004		0.1509
Energy	0.1378	1.2526	1.0522	7.5200e-003		0.0952	0.0952		0.0952	0.0952		1,503.0970	1,503.0970	0.0288	0.0276	1,512.0291
Mobile	3.1075	11.8307	33.9352	0.1304	11.5466	0.1002	11.6468	3.0890	0.0935	3.1826		13,192.6941	13,192.6941	0.4268		13,203.3629
Total	**11.4817**	**13.0839**	**35.0534**	**0.1379**	**11.5466**	**0.1956**	**11.7422**	**3.0890**	**0.1890**	**3.2780**		**14,695.9327**	**14,695.9327**	**0.4559**	**0.0276**	**14,715.5430**

	ROG	NOx	CO	SO2	Fugitive PM10	Exhaust PM10	PM10 Total	Fugitive PM2.5	Exhaust PM2.5	PM2.5 Total	Bio- CO2	NBio-CO2	Total CO2	CH4	N20	CO2e
Percent Reduction	**0.47**	**3.66**	**1.18**	**2.12**	**0.00**	**16.20**	**0.32**	**0.00**	**16.68**	**1.14**	**0.00**	**3.90**	**3.90**	**2.45**	**28.42**	**3.92**

3.0 Construction Detail

Construction Phase

Phase Number	Phase Name	Phase Type	Start Date	End Date	Num Days Week	Num Days	Phase Description
1	Demolition	Demolition	1/1/2021	1/28/2021	5	20	
2	Site Preparation	Site Preparation	1/29/2021	2/11/2021	5	10	
3	Grading	Grading	2/12/2021	3/25/2021	5	30	
4	Building Construction	Building Construction	3/26/2021	3/31/2022	5	265	
5	Architectural Coating	Architectural Coating	10/1/2021	3/31/2022	5	130	
6	Paving	Paving	3/4/2022	3/31/2022	5	20	

Acres of Grading (Site Preparation Phase): 5

Acres of Grading (Grading Phase): 15

Acres of Paving: 2.79

Residential Indoor: 0; Residential Outdoor: 0; Non-Residential Indoor: 505,641; Non-Residential Outdoor: 168,547; Striped Parking Area: 7,440 (Architectural Coating – sqft)

OffRoad Equipment

Clawiter Industrial Project - Buildings 1 to 3 - 2023 - Bay Area AQMD Air District, Summer

Phase Name	Offroad Equipment Type	Amount	Usage Hours	Horse Power	Load Factor
Demolition	Excavators	3	8.00	158	0.38
Demolition	Tractors/Loaders/Backhoes	2	8.00	97	0.37
Site Preparation	Graders	1	8.00	187	0.41
Site Preparation	Pavers	1	8.00	130	0.42
Site Preparation	Tractors/Loaders/Backhoes	4	8.00	97	0.37
Grading	Excavators	1	8.00	158	0.38
Grading	Graders	1	8.00	187	0.41
Grading	Pavers	1	8.00	130	0.42
Grading	Tractors/Loaders/Backhoes	1	8.00	97	0.37
Building Construction	Cranes	2	7.00	231	0.29
Building Construction	Forklifts	3	8.00	89	0.20
Building Construction	Tractors/Loaders/Backhoes	3	7.00	97	0.37
Architectural Coating	Air Compressors	1	6.00	78	0.48
Paving	Pavers	1	8.00	130	0.42
Paving	Rollers	1	8.00	80	0.38
Paving	Tractors/Loaders/Backhoes	1	8.00	97	0.37

Trips and VMT

Phase Name	Offroad Equipment Count	Worker Trip Number	Vendor Trip Number	Hauling Trip Number	Worker Trip Length	Vendor Trip Length	Hauling Trip Length	Worker Vehicle Class	Vendor Vehicle Class	Hauling Vehicle Class
Demolition	5	13.00	0.00	1,139.00	10.80	7.30	20.00	LD_Mix	HDT_Mix	HHDT
Site Preparation	6	15.00	0.00	0.00	10.80	7.30	20.00	LD_Mix	HDT_Mix	HHDT
Grading	4	10.00	0.00	3,634.00	10.80	7.30	20.00	LD_Mix	HDT_Mix	HHDT
Building Construction	8	194.00	76.00	0.00	10.80	7.30	20.00	LD_Mix	HDT_Mix	HHDT
Architectural Coating	1	39.00	0.00	0.00	10.80	7.30	20.00	LD_Mix	HDT_Mix	HHDT
Paving	3	8.00	0.00	0.00	10.80	7.30	20.00	LD_Mix	HDT_Mix	HHDT

3.1 Mitigation Measures Construction

Water Exposed Area

3.2 Demolition - 2021

Unmitigated Construction On-Site

	ROG	NOx	CO	SO2	Fugitive PM10	Exhaust PM10	PM10 Total	Fugitive PM2.5	Exhaust PM2.5	PM2.5 Total	Bio- CO2	NBio- CO2	Total CO2	CH4	N2O	CO2e
Category	lb/day										lb/day					
Fugitive Dust					12.3274	0.0000	12.3274	1.8665	0.0000	1.8665			0.0000			0.0000
Off-Road	1.0621	10.2518	14.3359	0.0217		0.5369	0.5369		0.4939	0.4939		2,102.3761	2,102.3761	0.6800		2,119.3748
Total	**1.0621**	**10.2518**	**14.3359**	**0.0217**	**12.3274**	**0.5369**	**12.8643**	**1.8665**	**0.4939**	**2.3604**		**2,102.3761**	**2,102.3761**	**0.6800**		**2,119.3748**

3.2 Demolition - 2021

Unmitigated Construction Off-Site

	ROG	NOx	CO	SO2	Fugitive PM10	Exhaust PM10	PM10 Total	Fugitive PM2.5	Exhaust PM2.5	PM2.5 Total	Bio- CO2	NBio- CO2	Total CO2	CH4	N2O	CO2e
Category	lb/day										lb/day					
Hauling	0.4436	15.0689	3.1765	0.0447	0.9950	0.0473	1.0422	0.2727	0.0452	0.3179		4,783.2858	4,783.2858	0.2374		4,789.2197
Vendor	0.0000	0.0000	0.0000	0.0000	0.0000	0.0000	0.0000	0.0000	0.0000	0.0000		0.0000	0.0000	0.0000		0.0000
Worker	0.0418	0.0244	0.3193	1.0300e-003	0.1068	6.7000e-004	0.1075	0.0283	6.2000e-004	0.0290		102.9547	102.9547	2.3000e-003		103.0123
Total	**0.4854**	**15.0934**	**3.4959**	**0.0457**	**1.1018**	**0.0479**	**1.1497**	**0.3010**	**0.0458**	**0.3468**		**4,886.2406**	**4,886.2406**	**0.2397**		**4,892.2320**

Mitigated Construction On-Site

	ROG	NOx	CO	SO2	Fugitive PM10	Exhaust PM10	PM10 Total	Fugitive PM2.5	Exhaust PM2.5	PM2.5 Total	Bio- CO2	NBio- CO2	Total CO2	CH4	N2O	CO2e
Category	lb/day										lb/day					
Fugitive Dust					5.5473	0.0000	5.5473	0.8399	0.0000	0.8399			0.0000			0.0000
Off-Road	1.0621	10.2518	14.3359	0.0217		0.5369	0.5369		0.4939	0.4939	0.0000	2,102.3761	2,102.3761	0.6800		2,119.3748
Total	**1.0621**	**10.2518**	**14.3359**	**0.0217**	**5.5473**	**0.5369**	**6.0842**	**0.8399**	**0.4939**	**1.3338**	**0.0000**	**2,102.3761**	**2,102.3761**	**0.6800**		**2,119.3748**

3.2 Demolition - 2021

Mitigated Construction Off-Site

	ROG	NOx	CO	SO2	Fugitive PM10	Exhaust PM10	PM10 Total	Fugitive PM2.5	Exhaust PM2.5	PM2.5 Total	Bio- CO2	NBio- CO2	Total CO2	CH4	N2O	CO2e
Category	lb/day										lb/day					
Hauling	0.4436	15.0689	3.1765	0.0447	0.9950	0.0473	1.0422	0.2727	0.0452	0.3179		4,783.2858	4,783.2858	0.2374		4,789.2197
Vendor	0.0000	0.0000	0.0000	0.0000	0.0000	0.0000	0.0000	0.0000	0.0000	0.0000		0.0000	0.0000	0.0000		0.0000
Worker	0.0418	0.0244	0.3193	1.0300e-003	0.1068	6.7000e-004	0.1075	0.0283	6.2000e-004	0.0290		102.9547	102.9547	2.3000e-003		103.0123
Total	**0.4854**	**15.0934**	**3.4959**	**0.0457**	**1.1018**	**0.0479**	**1.1497**	**0.3010**	**0.0458**	**0.3468**		**4,886.2406**	**4,886.2406**	**0.2397**		**4,892.2320**

3.3 Site Preparation - 2021

Unmitigated Construction On-Site

	ROG	NOx	CO	SO2	Fugitive PM10	Exhaust PM10	PM10 Total	Fugitive PM2.5	Exhaust PM2.5	PM2.5 Total	Bio- CO2	NBio- CO2	Total CO2	CH4	N2O	CO2e
Category	lb/day										lb/day					
Fugitive Dust					0.5303	0.0000	0.5303	0.0573	0.0000	0.0573			0.0000			0.0000
Off-Road	1.4483	16.1028	13.7129	0.0238		0.7602	0.7602		0.6994	0.6994		2,300.3453	2,300.3453	0.7440		2,318.9447
Total	**1.4483**	**16.1028**	**13.7129**	**0.0238**	**0.5303**	**0.7602**	**1.2905**	**0.0573**	**0.6994**	**0.7566**		**2,300.3453**	**2,300.3453**	**0.7440**		**2,318.9447**

3.3 Site Preparation - 2021

Unmitigated Construction Off-Site

	ROG	NOx	CO	SO2	Fugitive PM10	Exhaust PM10	PM10 Total	Fugitive PM2.5	Exhaust PM2.5	PM2.5 Total	Bio- CO2	NBio- CO2	Total CO2	CH4	N2O	CO2e
Category	lb/day										lb/day					
Hauling	0.0000	0.0000	0.0000	0.0000	0.0000	0.0000	0.0000	0.0000	0.0000	0.0000		0.0000	0.0000	0.0000		0.0000
Vendor	0.0000	0.0000	0.0000	0.0000	0.0000	0.0000	0.0000	0.0000	0.0000	0.0000		0.0000	0.0000	0.0000		0.0000
Worker	0.0482	0.0282	0.3685	1.1900e-003	0.1232	7.8000e-004	0.1240	0.0327	7.1000e-004	0.0334		118.7939	118.7939	2.6600e-003		118.8603
Total	**0.0482**	**0.0282**	**0.3685**	**1.1900e-003**	**0.1232**	**7.8000e-004**	**0.1240**	**0.0327**	**7.1000e-004**	**0.0334**		**118.7939**	**118.7939**	**2.6600e-003**		**118.8603**

Mitigated Construction On-Site

	ROG	NOx	CO	SO2	Fugitive PM10	Exhaust PM10	PM10 Total	Fugitive PM2.5	Exhaust PM2.5	PM2.5 Total	Bio- CO2	NBio- CO2	Total CO2	CH4	N2O	CO2e
Category	lb/day										lb/day					
Fugitive Dust					0.2386	0.0000	0.2386	0.0258	0.0000	0.0258			0.0000			0.0000
Off-Road	1.4483	16.1028	13.7129	0.0238		0.7602	0.7602		0.6994	0.6994	0.0000	2,300.3453	2,300.3453	0.7440		2,318.9447
Total	**1.4483**	**16.1028**	**13.7129**	**0.0238**	**0.2386**	**0.7602**	**0.9988**	**0.0258**	**0.6994**	**0.7252**	**0.0000**	**2,300.3453**	**2,300.3453**	**0.7440**		**2,318.9447**

3.3 Site Preparation - 2021

Mitigated Construction Off-Site

	ROG	NOx	CO	SO2	Fugitive PM10	Exhaust PM10	PM10 Total	Fugitive PM2.5	Exhaust PM2.5	PM2.5 Total	Bio- CO2	NBio- CO2	Total CO2	CH4	N2O	CO2e
Category	lb/day										lb/day					
Hauling	0.0000	0.0000	0.0000	0.0000	0.0000	0.0000	0.0000	0.0000	0.0000	0.0000		0.0000	0.0000	0.0000		0.0000
Vendor	0.0000	0.0000	0.0000	0.0000	0.0000	0.0000	0.0000	0.0000	0.0000	0.0000		0.0000	0.0000	0.0000		0.0000
Worker	0.0482	0.0282	0.3685	1.1900e-003	0.1232	7.8000e-004	0.1240	0.0327	7.1000e-004	0.0334		118.7939	118.7939	2.6600e-003		118.8603
Total	**0.0482**	**0.0282**	**0.3685**	**1.1900e-003**	**0.1232**	**7.8000e-004**	**0.1240**	**0.0327**	**7.1000e-004**	**0.0334**		**118.7939**	**118.7939**	**2.6600e-003**		**118.8603**

3.4 Grading - 2021

Unmitigated Construction On-Site

	ROG	NOx	CO	SO2	Fugitive PM10	Exhaust PM10	PM10 Total	Fugitive PM2.5	Exhaust PM2.5	PM2.5 Total	Bio- CO2	NBio- CO2	Total CO2	CH4	N2O	CO2e
Category	lb/day										lb/day					
Fugitive Dust					0.6399	0.0000	0.6399	0.0739	0.0000	0.0739			0.0000			0.0000
Off-Road	1.1157	12.5688	10.2040	0.0196		0.5293	0.5293		0.4870	0.4870		1,897.8370	1,897.8370	0.6138		1,913.1820
Total	**1.1157**	**12.5688**	**10.2040**	**0.0196**	**0.6399**	**0.5293**	**1.1692**	**0.0739**	**0.4870**	**0.5608**		**1,897.8370**	**1,897.8370**	**0.6138**		**1,913.1820**

3.4 Grading - 2021

Unmitigated Construction Off-Site

	ROG	NOx	CO	SO2	Fugitive PM10	Exhaust PM10	PM10 Total	Fugitive PM2.5	Exhaust PM2.5	PM2.5 Total	Bio- CO2	NBio- CO2	Total CO2	CH4	N2O	CO2e
Category	lb/day										lb/day					
Hauling	0.9435	32.0518	6.7565	0.0951	2.1163	0.1005	2.2168	0.5800	0.0961	0.6761		10,174.1063	10,174.1063	0.5049		10,186.7278
Vendor	0.0000	0.0000	0.0000	0.0000	0.0000	0.0000	0.0000	0.0000	0.0000	0.0000		0.0000	0.0000	0.0000		0.0000
Worker	0.0322	0.0188	0.2456	7.9000e-004	0.0822	5.2000e-004	0.0827	0.0218	4.8000e-004	0.0223		79.1960	79.1960	1.7700e-003		79.2402
Total	**0.9757**	**32.0706**	**7.0022**	**0.0958**	**2.1985**	**0.1010**	**2.2995**	**0.6017**	**0.0966**	**0.6984**		**10,253.3023**	**10,253.3023**	**0.5066**		**10,265.9680**

Mitigated Construction On-Site

	ROG	NOx	CO	SO2	Fugitive PM10	Exhaust PM10	PM10 Total	Fugitive PM2.5	Exhaust PM2.5	PM2.5 Total	Bio- CO2	NBio- CO2	Total CO2	CH4	N2O	CO2e
Category	lb/day										lb/day					
Fugitive Dust					0.2879	0.0000	0.2879	0.0332	0.0000	0.0332			0.0000			0.0000
Off-Road	1.1157	12.5688	10.2040	0.0196		0.5293	0.5293		0.4870	0.4870	0.0000	1,897.8370	1,897.8370	0.6138		1,913.1820
Total	**1.1157**	**12.5688**	**10.2040**	**0.0196**	**0.2879**	**0.5293**	**0.8173**	**0.0332**	**0.4870**	**0.5202**	**0.0000**	**1,897.8370**	**1,897.8370**	**0.6138**		**1,913.1820**

3.4 Grading - 2021

Mitigated Construction Off-Site

	ROG	NOx	CO	SO2	Fugitive PM10	Exhaust PM10	PM10 Total	Fugitive PM2.5	Exhaust PM2.5	PM2.5 Total	Bio- CO2	NBio- CO2	Total CO2	CH4	N2O	CO2e
Category	lb/day										lb/day					
Hauling	0.9435	32.0518	6.7565	0.0951	2.1163	0.1005	2.2168	0.5800	0.0961	0.6761		10,174.1063	10,174.1063	0.5049		10,186.7278
Vendor	0.0000	0.0000	0.0000	0.0000	0.0000	0.0000	0.0000	0.0000	0.0000	0.0000		0.0000	0.0000	0.0000		0.0000
Worker	0.0322	0.0188	0.2456	7.9000e-004	0.0822	5.2000e-004	0.0827	0.0218	4.8000e-004	0.0223		79.1960	79.1960	1.7700e-003		79.2402
Total	**0.9757**	**32.0706**	**7.0022**	**0.0958**	**2.1985**	**0.1010**	**2.2995**	**0.6017**	**0.0966**	**0.6984**		**10,253.3023**	**10,253.3023**	**0.5066**		**10,265.9680**

3.5 Building Construction - 2021

Unmitigated Construction On-Site

	ROG	NOx	CO	SO2	Fugitive PM10	Exhaust PM10	PM10 Total	Fugitive PM2.5	Exhaust PM2.5	PM2.5 Total	Bio- CO2	NBio- CO2	Total CO2	CH4	N2O	CO2e
Category	lb/day										lb/day					
Off-Road	1.6022	17.0002	12.9067	0.0228		0.8890	0.8890		0.8179	0.8179		2,211.7480	2,211.7480	0.7153		2,229.6311
Total	**1.6022**	**17.0002**	**12.9067**	**0.0228**		**0.8890**	**0.8890**		**0.8179**	**0.8179**		**2,211.7480**	**2,211.7480**	**0.7153**		**2,229.6311**

3.5 Building Construction - 2021

Unmitigated Construction Off-Site

	ROG	NOx	CO	SO2	Fugitive PM10	Exhaust PM10	PM10 Total	Fugitive PM2.5	Exhaust PM2.5	PM2.5 Total	Bio- CO2	NBio- CO2	Total CO2	CH4	N2O	CO2e
Category	lb/day										lb/day					
Hauling	0.0000	0.0000	0.0000	0.0000	0.0000	0.0000	0.0000	0.0000	0.0000	0.0000		0.0000	0.0000	0.0000		0.0000
Vendor	0.2357	7.8539	1.8520	0.0207	0.5145	0.0170	0.5315	0.1481	0.0163	0.1644		2,196.0849	2,196.0849	0.1031		2,198.6617
Worker	0.6238	0.3646	4.7653	0.0154	1.5937	0.0100	1.6037	0.4227	9.2400e-003	0.4320		1,536.4015	1,536.4015	0.0343		1,537.2601
Total	**0.8595**	**8.2185**	**6.6173**	**0.0361**	**2.1081**	**0.0271**	**2.1352**	**0.5708**	**0.0255**	**0.5963**		**3,732.4864**	**3,732.4864**	**0.1374**		**3,735.9218**

Mitigated Construction On-Site

	ROG	NOx	CO	SO2	Fugitive PM10	Exhaust PM10	PM10 Total	Fugitive PM2.5	Exhaust PM2.5	PM2.5 Total	Bio- CO2	NBio- CO2	Total CO2	CH4	N2O	CO2e
Category	lb/day										lb/day					
Off-Road	1.6022	17.0002	12.9067	0.0228		0.8890	0.8890		0.8179	0.8179	0.0000	2,211.7480	2,211.7480	0.7153		2,229.6311
Total	**1.6022**	**17.0002**	**12.9067**	**0.0228**		**0.8890**	**0.8890**		**0.8179**	**0.8179**	**0.0000**	**2,211.7480**	**2,211.7480**	**0.7153**		**2,229.6311**

3.5 Building Construction - 2021

Mitigated Construction Off-Site

	ROG	NOx	CO	SO2	Fugitive PM10	Exhaust PM10	PM10 Total	Fugitive PM2.5	Exhaust PM2.5	PM2.5 Total	Bio- CO2	NBio- CO2	Total CO2	CH4	N2O	CO2e
Category	lb/day										lb/day					
Hauling	0.0000	0.0000	0.0000	0.0000	0.0000	0.0000	0.0000	0.0000	0.0000	0.0000		0.0000	0.0000	0.0000		0.0000
Vendor	0.2357	7.8539	1.8520	0.0207	0.5145	0.0170	0.5315	0.1481	0.0163	0.1644		2,196.0849	2,196.0849	0.1031		2,198.6617
Worker	0.6238	0.3646	4.7653	0.0154	1.5937	0.0100	1.6037	0.4227	9.2400e-003	0.4320		1,536.4015	1,536.4015	0.0343		1,537.2601
Total	**0.8595**	**8.2185**	**6.6173**	**0.0361**	**2.1081**	**0.0271**	**2.1352**	**0.5708**	**0.0255**	**0.5963**		**3,732.4864**	**3,732.4864**	**0.1374**		**3,735.9218**

3.5 Building Construction - 2022

Unmitigated Construction On-Site

	ROG	NOx	CO	SO2	Fugitive PM10	Exhaust PM10	PM10 Total	Fugitive PM2.5	Exhaust PM2.5	PM2.5 Total	Bio- CO2	NBio- CO2	Total CO2	CH4	N2O	CO2e
Category	lb/day										lb/day					
Off-Road	1.4259	14.8857	12.6474	0.0229		0.7502	0.7502		0.6902	0.6902		2,212.7978	2,212.7978	0.7157		2,230.6894
Total	**1.4259**	**14.8857**	**12.6474**	**0.0229**		**0.7502**	**0.7502**		**0.6902**	**0.6902**		**2,212.7978**	**2,212.7978**	**0.7157**		**2,230.6894**

3.5 Building Construction - 2022

Unmitigated Construction Off-Site

	ROG	NOx	CO	SO2	Fugitive PM10	Exhaust PM10	PM10 Total	Fugitive PM2.5	Exhaust PM2.5	PM2.5 Total	Bio- CO2	NBio- CO2	Total CO2	CH4	N2O	CO2e
Category	lb/day										lb/day					
Hauling	0.0000	0.0000	0.0000	0.0000	0.0000	0.0000	0.0000	0.0000	0.0000	0.0000		0.0000	0.0000	0.0000		0.0000
Vendor	0.2198	7.4435	1.7418	0.0205	0.5145	0.0148	0.5292	0.1481	0.0141	0.1622		2,174.6982	2,174.6982	0.0986		2,177.1620
Worker	0.5806	0.3270	4.3909	0.0148	1.5937	9.7900e-003	1.6035	0.4227	9.0200e-003	0.4317		1,480.0170	1,480.0170	0.0308		1,480.7881
Total	**0.8004**	**7.7704**	**6.1327**	**0.0354**	**2.1081**	**0.0245**	**2.1327**	**0.5708**	**0.0231**	**0.5939**		**3,654.7152**	**3,654.7152**	**0.1294**		**3,657.9500**

Mitigated Construction On-Site

	ROG	NOx	CO	SO2	Fugitive PM10	Exhaust PM10	PM10 Total	Fugitive PM2.5	Exhaust PM2.5	PM2.5 Total	Bio- CO2	NBio- CO2	Total CO2	CH4	N2O	CO2e
Category	lb/day										lb/day					
Off-Road	1.4259	14.8857	12.6474	0.0229		0.7502	0.7502		0.6902	0.6902	0.0000	2,212.7978	2,212.7978	0.7157		2,230.6894
Total	**1.4259**	**14.8857**	**12.6474**	**0.0229**		**0.7502**	**0.7502**		**0.6902**	**0.6902**	**0.0000**	**2,212.7978**	**2,212.7978**	**0.7157**		**2,230.6894**

3.5 Building Construction - 2022

Mitigated Construction Off-Site

	ROG	NOx	CO	SO2	Fugitive PM10	Exhaust PM10	PM10 Total	Fugitive PM2.5	Exhaust PM2.5	PM2.5 Total	Bio- CO2	NBio- CO2	Total CO2	CH4	N2O	CO2e
Category	lb/day										lb/day					
Hauling	0.0000	0.0000	0.0000	0.0000	0.0000	0.0000	0.0000	0.0000	0.0000	0.0000		0.0000	0.0000	0.0000		0.0000
Vendor	0.2198	7.4435	1.7418	0.0205	0.5145	0.0148	0.5292	0.1481	0.0141	0.1622		2,174.6982	2,174.6982	0.0986		2,177.1620
Worker	0.5806	0.3270	4.3909	0.0148	1.5937	9.7900e-003	1.6035	0.4227	9.0200e-003	0.4317		1,480.0170	1,480.0170	0.0308		1,480.7881
Total	**0.8004**	**7.7704**	**6.1327**	**0.0354**	**2.1081**	**0.0245**	**2.1327**	**0.5708**	**0.0231**	**0.5939**		**3,654.7152**	**3,654.7152**	**0.1294**		**3,657.9500**

3.6 Architectural Coating - 2021

Unmitigated Construction On-Site

	ROG	NOx	CO	SO2	Fugitive PM10	Exhaust PM10	PM10 Total	Fugitive PM2.5	Exhaust PM2.5	PM2.5 Total	Bio- CO2	NBio- CO2	Total CO2	CH4	N2O	CO2e
Category	lb/day										lb/day					
Archit. Coating	27.3073					0.0000	0.0000		0.0000	0.0000			0.0000			0.0000
Off-Road	0.2189	1.5268	1.8176	2.9700e-003		0.0941	0.0941		0.0941	0.0941		281.4481	281.4481	0.0193		281.9309
Total	**27.5262**	**1.5268**	**1.8176**	**2.9700e-003**		**0.0941**	**0.0941**		**0.0941**	**0.0941**		**281.4481**	**281.4481**	**0.0193**		**281.9309**

3.6 Architectural Coating - 2021

Unmitigated Construction Off-Site

	ROG	NOx	CO	SO2	Fugitive PM10	Exhaust PM10	PM10 Total	Fugitive PM2.5	Exhaust PM2.5	PM2.5 Total	Bio- CO2	NBio- CO2	Total CO2	CH4	N2O	CO2e
Category	lb/day										lb/day					
Hauling	0.0000	0.0000	0.0000	0.0000	0.0000	0.0000	0.0000	0.0000	0.0000	0.0000		0.0000	0.0000	0.0000		0.0000
Vendor	0.0000	0.0000	0.0000	0.0000	0.0000	0.0000	0.0000	0.0000	0.0000	0.0000		0.0000	0.0000	0.0000		0.0000
Worker	0.1254	0.0733	0.9580	3.1000e-003	0.3204	2.0200e-003	0.3224	0.0850	1.8600e-003	0.0868		308.8642	308.8642	6.9000e-003		309.0368
Total	**0.1254**	**0.0733**	**0.9580**	**3.1000e-003**	**0.3204**	**2.0200e-003**	**0.3224**	**0.0850**	**1.8600e-003**	**0.0868**		**308.8642**	**308.8642**	**6.9000e-003**		**309.0368**

Mitigated Construction On-Site

	ROG	NOx	CO	SO2	Fugitive PM10	Exhaust PM10	PM10 Total	Fugitive PM2.5	Exhaust PM2.5	PM2.5 Total	Bio- CO2	NBio- CO2	Total CO2	CH4	N2O	CO2e
Category	lb/day										lb/day					
Archit. Coating	27.3073					0.0000	0.0000		0.0000	0.0000			0.0000			0.0000
Off-Road	0.2189	1.5268	1.8176	2.9700e-003		0.0941	0.0941		0.0941	0.0941	0.0000	281.4481	281.4481	0.0193		281.9309
Total	**27.5262**	**1.5268**	**1.8176**	**2.9700e-003**		**0.0941**	**0.0941**		**0.0941**	**0.0941**	**0.0000**	**281.4481**	**281.4481**	**0.0193**		**281.9309**

3.6 Architectural Coating - 2021

Mitigated Construction Off-Site

	ROG	NOx	CO	SO2	Fugitive PM10	Exhaust PM10	PM10 Total	Fugitive PM2.5	Exhaust PM2.5	PM2.5 Total	Bio- CO2	NBio- CO2	Total CO2	CH4	N2O	CO2e
Category	lb/day										lb/day					
Hauling	0.0000	0.0000	0.0000	0.0000	0.0000	0.0000	0.0000	0.0000	0.0000	0.0000		0.0000	0.0000	0.0000		0.0000
Vendor	0.0000	0.0000	0.0000	0.0000	0.0000	0.0000	0.0000	0.0000	0.0000	0.0000		0.0000	0.0000	0.0000		0.0000
Worker	0.1254	0.0733	0.9580	3.1000e-003	0.3204	2.0200e-003	0.3224	0.0850	1.8600e-003	0.0868		308.8642	308.8642	6.9000e-003		309.0368
Total	**0.1254**	**0.0733**	**0.9580**	**3.1000e-003**	**0.3204**	**2.0200e-003**	**0.3224**	**0.0850**	**1.8600e-003**	**0.0868**		**308.8642**	**308.8642**	**6.9000e-003**		**309.0368**

3.6 Architectural Coating - 2022

Unmitigated Construction On-Site

	ROG	NOx	CO	SO2	Fugitive PM10	Exhaust PM10	PM10 Total	Fugitive PM2.5	Exhaust PM2.5	PM2.5 Total	Bio- CO2	NBio- CO2	Total CO2	CH4	N2O	CO2e
Category	lb/day										lb/day					
Archit. Coating	27.3073					0.0000	0.0000		0.0000	0.0000			0.0000			0.0000
Off-Road	0.2045	1.4085	1.8136	2.9700e-003		0.0817	0.0817		0.0817	0.0817		281.4481	281.4481	0.0183		281.9062
Total	**27.5119**	**1.4085**	**1.8136**	**2.9700e-003**		**0.0817**	**0.0817**		**0.0817**	**0.0817**		**281.4481**	**281.4481**	**0.0183**		**281.9062**

3.6 Architectural Coating - 2022

Unmitigated Construction Off-Site

	ROG	NOx	CO	SO2	Fugitive PM10	Exhaust PM10	PM10 Total	Fugitive PM2.5	Exhaust PM2.5	PM2.5 Total	Bio- CO2	NBio- CO2	Total CO2	CH4	N2O	CO2e
Category	lb/day										lb/day					
Hauling	0.0000	0.0000	0.0000	0.0000	0.0000	0.0000	0.0000	0.0000	0.0000	0.0000		0.0000	0.0000	0.0000		0.0000
Vendor	0.0000	0.0000	0.0000	0.0000	0.0000	0.0000	0.0000	0.0000	0.0000	0.0000		0.0000	0.0000	0.0000		0.0000
Worker	0.1167	0.0657	0.8827	2.9800e-003	0.3204	1.9700e-003	0.3223	0.0850	1.8100e-003	0.0868		297.5292	297.5292	6.2000e-003		297.6842
Total	**0.1167**	**0.0657**	**0.8827**	**2.9800e-003**	**0.3204**	**1.9700e-003**	**0.3223**	**0.0850**	**1.8100e-003**	**0.0868**		**297.5292**	**297.5292**	**6.2000e-003**		**297.6842**

Mitigated Construction On-Site

	ROG	NOx	CO	SO2	Fugitive PM10	Exhaust PM10	PM10 Total	Fugitive PM2.5	Exhaust PM2.5	PM2.5 Total	Bio- CO2	NBio- CO2	Total CO2	CH4	N2O	CO2e
Category	lb/day										lb/day					
Archit. Coating	27.3073					0.0000	0.0000		0.0000	0.0000			0.0000			0.0000
Off-Road	0.2045	1.4085	1.8136	2.9700e-003		0.0817	0.0817		0.0817	0.0817	0.0000	281.4481	281.4481	0.0183		281.9062
Total	**27.5119**	**1.4085**	**1.8136**	**2.9700e-003**		**0.0817**	**0.0817**		**0.0817**	**0.0817**	**0.0000**	**281.4481**	**281.4481**	**0.0183**		**281.9062**

3.6 Architectural Coating - 2022

Mitigated Construction Off-Site

	ROG	NOx	CO	SO2	Fugitive PM10	Exhaust PM10	PM10 Total	Fugitive PM2.5	Exhaust PM2.5	PM2.5 Total	Bio- CO2	NBio- CO2	Total CO2	CH4	N2O	CO2e
Category	lb/day										lb/day					
Hauling	0.0000	0.0000	0.0000	0.0000	0.0000	0.0000	0.0000	0.0000	0.0000	0.0000		0.0000	0.0000	0.0000		0.0000
Vendor	0.0000	0.0000	0.0000	0.0000	0.0000	0.0000	0.0000	0.0000	0.0000	0.0000		0.0000	0.0000	0.0000		0.0000
Worker	0.1167	0.0657	0.8827	2.9800e-003	0.3204	1.9700e-003	0.3223	0.0850	1.8100e-003	0.0868		297.5292	297.5292	6.2000e-003		297.6842
Total	**0.1167**	**0.0657**	**0.8827**	**2.9800e-003**	**0.3204**	**1.9700e-003**	**0.3223**	**0.0850**	**1.8100e-003**	**0.0868**		**297.5292**	**297.5292**	**6.2000e-003**		**297.6842**

3.7 Paving - 2022

Unmitigated Construction On-Site

	ROG	NOx	CO	SO2	Fugitive PM10	Exhaust PM10	PM10 Total	Fugitive PM2.5	Exhaust PM2.5	PM2.5 Total	Bio- CO2	NBio- CO2	Total CO2	CH4	N2O	CO2e
Category	lb/day										lb/day					
Off-Road	0.5379	5.5004	6.9822	0.0104		0.2893	0.2893		0.2662	0.2662		1,010.6007	1,010.6007	0.3269		1,018.7719
Paving	0.3655					0.0000	0.0000		0.0000	0.0000			0.0000			0.0000
Total	**0.9034**	**5.5004**	**6.9822**	**0.0104**		**0.2893**	**0.2893**		**0.2662**	**0.2662**		**1,010.6007**	**1,010.6007**	**0.3269**		**1,018.7719**

3.7 Paving - 2022

Unmitigated Construction Off-Site

	ROG	NOx	CO	SO2	Fugitive PM10	Exhaust PM10	PM10 Total	Fugitive PM2.5	Exhaust PM2.5	PM2.5 Total	Bio- CO2	NBio- CO2	Total CO2	CH4	N2O	CO2e
Category	lb/day										lb/day					
Hauling	0.0000	0.0000	0.0000	0.0000	0.0000	0.0000	0.0000	0.0000	0.0000	0.0000		0.0000	0.0000	0.0000		0.0000
Vendor	0.0000	0.0000	0.0000	0.0000	0.0000	0.0000	0.0000	0.0000	0.0000	0.0000		0.0000	0.0000	0.0000		0.0000
Worker	0.0239	0.0135	0.1811	6.1000e-004	0.0657	4.0000e-004	0.0661	0.0174	3.7000e-004	0.0178		61.0316	61.0316	1.2700e-003		61.0634
Total	**0.0239**	**0.0135**	**0.1811**	**6.1000e-004**	**0.0657**	**4.0000e-004**	**0.0661**	**0.0174**	**3.7000e-004**	**0.0178**		**61.0316**	**61.0316**	**1.2700e-003**		**61.0634**

Mitigated Construction On-Site

	ROG	NOx	CO	SO2	Fugitive PM10	Exhaust PM10	PM10 Total	Fugitive PM2.5	Exhaust PM2.5	PM2.5 Total	Bio- CO2	NBio- CO2	Total CO2	CH4	N2O	CO2e
Category	lb/day										lb/day					
Off-Road	0.5379	5.5004	6.9822	0.0104		0.2893	0.2893		0.2662	0.2662	0.0000	1,010.6007	1,010.6007	0.3269		1,018.7719
Paving	0.3655					0.0000	0.0000		0.0000	0.0000			0.0000			0.0000
Total	**0.9034**	**5.5004**	**6.9822**	**0.0104**		**0.2893**	**0.2893**		**0.2662**	**0.2662**	**0.0000**	**1,010.6007**	**1,010.6007**	**0.3269**		**1,018.7719**

3.7 Paving - 2022

Mitigated Construction Off-Site

	ROG	NOx	CO	SO2	Fugitive PM10	Exhaust PM10	PM10 Total	Fugitive PM2.5	Exhaust PM2.5	PM2.5 Total	Bio- CO2	NBio- CO2	Total CO2	CH4	N2O	CO2e
Category	lb/day										lb/day					
Hauling	0.0000	0.0000	0.0000	0.0000	0.0000	0.0000	0.0000	0.0000	0.0000	0.0000		0.0000	0.0000	0.0000		0.0000
Vendor	0.0000	0.0000	0.0000	0.0000	0.0000	0.0000	0.0000	0.0000	0.0000	0.0000		0.0000	0.0000	0.0000		0.0000
Worker	0.0239	0.0135	0.1811	6.1000e-004	0.0657	4.0000e-004	0.0661	0.0174	3.7000e-004	0.0178		61.0316	61.0316	1.2700e-003		61.0634
Total	**0.0239**	**0.0135**	**0.1811**	**6.1000e-004**	**0.0657**	**4.0000e-004**	**0.0661**	**0.0174**	**3.7000e-004**	**0.0178**		**61.0316**	**61.0316**	**1.2700e-003**		**61.0634**

4.0 Operational Detail - Mobile

4.1 Mitigation Measures Mobile

	ROG	NOx	CO	SO2	Fugitive PM10	Exhaust PM10	PM10 Total	Fugitive PM2.5	Exhaust PM2.5	PM2.5 Total	Bio- CO2	NBio- CO2	Total CO2	CH4	N2O	CO2e
Category	lb/day										lb/day					
Mitigated	3.1075	11.8307	33.9352	0.1304	11.5466	0.1002	11.6468	3.0890	0.0935	3.1826		13,192.6941	13,192.6941	0.4268		13,203.3629
Unmitigated	3.1075	11.8307	33.9352	0.1304	11.5466	0.1002	11.6468	3.0890	0.0935	3.1826		13,192.6941	13,192.6941	0.4268		13,203.3629

4.2 Trip Summary Information

	Average Daily Trip Rate			Unmitigated	Mitigated
Land Use	Weekday	Saturday	Sunday	Annual VMT	Annual VMT
Industrial Park	2,073.10	839.35	246.08	4,288,917	4,288,917
Parking Lot	0.00	0.00	0.00		
Total	2,073.10	839.35	246.08	4,288,917	4,288,917

4.3 Trip Type Information

	Miles			Trip %			Trip Purpose %		
Land Use	H-W or C-W	H-S or C-C	H-O or C-NW	H-W or C-W	H-S or C-C	H-O or C-NW	Primary	Diverted	Pass-by
Industrial Park	9.50	7.30	7.30	59.00	28.00	13.00	79	19	2
Parking Lot	9.50	7.30	7.30	0.00	0.00	0.00	0	0	0

4.4 Fleet Mix

Land Use	LDA	LDT1	LDT2	MDV	LHD1	LHD2	MHD	HHD	OBUS	UBUS	MCY	SBUS	MH
Industrial Park	0.578638	0.038775	0.193686	0.110919	0.015677	0.005341	0.018293	0.026358	0.002641	0.002200	0.005832	0.000891	0.000749
Parking Lot	0.578638	0.038775	0.193686	0.110919	0.015677	0.005341	0.018293	0.026358	0.002641	0.002200	0.005832	0.000891	0.000749

5.0 Energy Detail

Historical Energy Use: N

5.1 Mitigation Measures Energy

Exceed Title 24

	ROG	NOx	CO	SO2	Fugitive PM10	Exhaust PM10	PM10 Total	Fugitive PM2.5	Exhaust PM2.5	PM2.5 Total	Bio- CO2	NBio- CO2	Total CO2	CH4	N2O	CO2e
Category	lb/day										lb/day					
NaturalGas Mitigated	0.1378	1.2526	1.0522	7.5200e-003		0.0952	0.0952		0.0952	0.0952		1,503.0970	1,503.0970	0.0288	0.0276	1,512.0291
NaturalGas Unmitigated	0.1925	1.7502	1.4702	0.0105		0.1330	0.1330		0.1330	0.1330		2,100.2505	2,100.2505	0.0403	0.0385	2,112.7312

5.2 Energy by Land Use - NaturalGas

Unmitigated

	NaturalGas Use	ROG	NOx	CO	SO2	Fugitive PM10	Exhaust PM10	PM10 Total	Fugitive PM2.5	Exhaust PM2.5	PM2.5 Total	Bio- CO2	NBio- CO2	Total CO2	CH4	N2O	CO2e
Land Use	kBTU/yr	lb/day										lb/day					
Industrial Park	17852.1	0.1925	1.7502	1.4702	0.0105		0.1330	0.1330		0.1330	0.1330		2,100.2505	2,100.2505	0.0403	0.0385	2,112.7312
Parking Lot	0	0.0000	0.0000	0.0000	0.0000		0.0000	0.0000		0.0000	0.0000		0.0000	0.0000	0.0000	0.0000	0.0000
Total		**0.1925**	**1.7502**	**1.4702**	**0.0105**		**0.1330**	**0.1330**		**0.1330**	**0.1330**		**2,100.2505**	**2,100.2505**	**0.0403**	**0.0385**	**2,112.7312**

Mitigated

	NaturalGas Use	ROG	NOx	CO	SO2	Fugitive PM10	Exhaust PM10	PM10 Total	Fugitive PM2.5	Exhaust PM2.5	PM2.5 Total	Bio- CO2	NBio- CO2	Total CO2	CH4	N2O	CO2e
Land Use	kBTU/yr	lb/day										lb/day					
Industrial Park	12.7763	0.1378	1.2526	1.0522	7.5200e-003		0.0952	0.0952		0.0952	0.0952		1,503.0970	1,503.0970	0.0288	0.0276	1,512.0291
Parking Lot	0	0.0000	0.0000	0.0000	0.0000		0.0000	0.0000		0.0000	0.0000		0.0000	0.0000	0.0000	0.0000	0.0000
Total		**0.1378**	**1.2526**	**1.0522**	**7.5200e-003**		**0.0952**	**0.0952**		**0.0952**	**0.0952**		**1,503.0970**	**1,503.0970**	**0.0288**	**0.0276**	**1,512.0291**

6.0 Area Detail

6.1 Mitigation Measures Area

	ROG	NOx	CO	SO2	Fugitive PM10	Exhaust PM10	PM10 Total	Fugitive PM2.5	Exhaust PM2.5	PM2.5 Total	Bio- CO2	NBio- CO2	Total CO2	CH4	N2O	CO2e
Category	lb/day										lb/day					
Mitigated	8.2364	6.0000e-004	0.0661	0.0000		2.4000e-004	2.4000e-004		2.4000e-004	2.4000e-004		0.1416	0.1416	3.7000e-004		0.1509
Unmitigated	8.2364	6.0000e-004	0.0661	0.0000		2.4000e-004	2.4000e-004		2.4000e-004	2.4000e-004		0.1416	0.1416	3.7000e-004		0.1509

6.2 Area by SubCategory

Unmitigated

	ROG	NOx	CO	SO2	Fugitive PM10	Exhaust PM10	PM10 Total	Fugitive PM2.5	Exhaust PM2.5	PM2.5 Total	Bio- CO2	NBio- CO2	Total CO2	CH4	N2O	CO2e
SubCategory	lb/day										lb/day					
Architectural Coating	0.9726					0.0000	0.0000		0.0000	0.0000			0.0000			0.0000
Consumer Products	7.2577					0.0000	0.0000		0.0000	0.0000			0.0000			0.0000
Landscaping	6.1200e-003	6.0000e-004	0.0661	0.0000		2.4000e-004	2.4000e-004		2.4000e-004	2.4000e-004		0.1416	0.1416	3.7000e-004		0.1509
Total	**8.2364**	**6.0000e-004**	**0.0661**	**0.0000**		**2.4000e-004**	**2.4000e-004**		**2.4000e-004**	**2.4000e-004**		**0.1416**	**0.1416**	**3.7000e-004**		**0.1509**

6.2 Area by SubCategory

Mitigated

	ROG	NOx	CO	SO2	Fugitive PM10	Exhaust PM10	PM10 Total	Fugitive PM2.5	Exhaust PM2.5	PM2.5 Total	Bio- CO2	NBio- CO2	Total CO2	CH4	N2O	CO2e
SubCategory	lb/day										lb/day					
Architectural Coating	0.9726					0.0000	0.0000		0.0000	0.0000			0.0000			0.0000
Consumer Products	7.2577					0.0000	0.0000		0.0000	0.0000			0.0000			0.0000
Landscaping	6.1200e-003	6.0000e-004	0.0661	0.0000		2.4000e-004	2.4000e-004		2.4000e-004	2.4000e-004		0.1416	0.1416	3.7000e-004		0.1509
Total	**8.2364**	**6.0000e-004**	**0.0661**	**0.0000**		**2.4000e-004**	**2.4000e-004**		**2.4000e-004**	**2.4000e-004**		**0.1416**	**0.1416**	**3.7000e-004**		**0.1509**

7.0 Water Detail

7.1 Mitigation Measures Water

Install Low Flow Bathroom Faucet

Install Low Flow Kitchen Faucet

Install Low Flow Toilet

Install Low Flow Shower

Use Water Efficient Irrigation System

8.0 Waste Detail

8.1 Mitigation Measures Waste

9.0 Operational Offroad

Equipment Type	Number	Hours/Day	Days/Year	Horse Power	Load Factor	Fuel Type

10.0 Stationary Equipment

Fire Pumps and Emergency Generators

Equipment Type	Number	Hours/Day	Hours/Year	Horse Power	Load Factor	Fuel Type

Boilers

Equipment Type	Number	Heat Input/Day	Heat Input/Year	Boiler Rating	Fuel Type

User Defined Equipment

Equipment Type	Number

11.0 Vegetation

Clawiter Industrial Project - Buildings 1 to 3 - 2023

Bay Area AQMD Air District, Annual

1.0 Project Characteristics

1.1 Land Usage

Land Uses	Size	Metric	Lot Acreage	Floor Surface Area	Population
Industrial Park	337.09	1000sqft	16.37	337,094.00	0
Parking Lot	310.00	Space	2.79	124,000.00	0

1.2 Other Project Characteristics

Urbanization	Urban	**Wind Speed (m/s)**	2.2	**Precipitation Freq (Days)**	64
Climate Zone	5			**Operational Year**	2023
Utility Company	Pacific Gas & Electric Company				
CO2 Intensity (lb/MWhr)	641.35	**CH4 Intensity (lb/MWhr)**	0.029	**N2O Intensity (lb/MWhr)**	0.006

1.3 User Entered Comments & Non-Default Data

Project Characteristics -

Land Use - SF of buildings 1-3, lot acreage is project site (26) minus default estimate for data center (6.39) and parking lots (3.24)

Construction Phase - Applicant specified 15-month schedule. Extended AC to overlap BC for mroe realistic conditions.

Off-road Equipment - Default

Off-road Equipment - Applicant-provided equipment list

Off-road Equipment - Applicant-provided equipment list

Off-road Equipment - Applicant-provided equipment list. Paver used as proxy for compactor

Off-road Equipment - Applicant-provided equipment list

Off-road Equipment - Applicant-provided equipment list. Paver used as proxy for compactor

Trips and VMT -

Demolition - Based on Google Earth estimate - 185255+27142+2810+35260

Grading - Export quantity provided by applicant

Architectural Coating - BAAQMD Regulation 8, Rule 3

Vehicle Trips - Weekday rate provided by Kittleson, includes trips for Buildings 1-4

Area Coating - BAAQMD Regulation 8, Rule 3

Energy Use -

Water And Wastewater - All wastewater treated at Hayward WWTP with aerobic processes. Outdoor water use calculated assuming 2.43 AFY per acre of landscaped area.

Solid Waste - 77% diversion rate for Hayward

Construction Off-road Equipment Mitigation - Hayward Municipal Code 10-8.32

Mobile Land Use Mitigation -

Water Mitigation - Applicant-specified sustainability features

Fleet Mix -

Energy Mitigation - Title 24 reduced by 30% for 2019 Standards

Table Name	Column Name	Default Value	New Value
tblArchitecturalCoating	EF_Parking	150.00	100.00
tblAreaCoating	Area_EF_Parking	150	100
tblConstructionPhase	NumDays	20.00	130.00
tblConstructionPhase	NumDays	300.00	265.00
tblGrading	MaterialExported	0.00	29,073.00
tblLandUse	LandUseSquareFeet	337,090.00	337,094.00
tblLandUse	LotAcreage	7.74	16.37
tblOffRoadEquipment	OffRoadEquipmentUnitAmount	1.00	2.00
tblOffRoadEquipment	OffRoadEquipmentUnitAmount	2.00	1.00
tblOffRoadEquipment	OffRoadEquipmentUnitAmount	2.00	1.00
tblOffRoadEquipment	OffRoadEquipmentUnitAmount	2.00	1.00
tblOffRoadEquipment	OffRoadEquipmentUnitAmount	2.00	1.00
tblSolidWaste	SolidWasteGenerationRate	417.99	192.28
tblVehicleTrips	WD_TR	6.83	6.15
tblWater	AerobicPercent	87.46	100.00
tblWater	AerobicPercent	87.46	100.00
tblWater	AnaerobicandFacultativeLagoonsPercent	2.21	0.00
tblWater	AnaerobicandFacultativeLagoonsPercent	2.21	0.00
tblWater	OutdoorWaterUseRate	0.00	3,812,456.00
tblWater	SepticTankPercent	10.33	0.00
tblWater	SepticTankPercent	10.33	0.00

2.0 Emissions Summary

2.1 Overall Construction

Unmitigated Construction

	ROG	NOx	CO	SO2	Fugitive PM10	Exhaust PM10	PM10 Total	Fugitive PM2.5	Exhaust PM2.5	PM2.5 Total	Bio- CO2	NBio- CO2	Total CO2	CH4	N2O	CO2e
Year	tons/yr										MT/yr					
2021	1.2119	3.6171	2.5326	8.5000e-003	0.3930	0.1144	0.5073	0.0901	0.1056	0.1957	0.0000	785.2497	785.2497	0.1058	0.0000	787.8949
2022	0.9638	0.8313	0.7475	2.1200e-003	0.0755	0.0304	0.1059	0.0205	0.0282	0.0486	0.0000	192.5240	192.5240	0.0283	0.0000	193.2302
Maximum	**1.2119**	**3.6171**	**2.5326**	**8.5000e-003**	**0.3930**	**0.1144**	**0.5073**	**0.0901**	**0.1056**	**0.1957**	**0.0000**	**785.2497**	**785.2497**	**0.1058**	**0.0000**	**787.8949**

Mitigated Construction

	ROG	NOx	CO	SO2	Fugitive PM10	Exhaust PM10	PM10 Total	Fugitive PM2.5	Exhaust PM2.5	PM2.5 Total	Bio- CO2	NBio- CO2	Total CO2	CH4	N2O	CO2e
Year	tons/yr										MT/yr					
2021	1.2119	3.6171	2.5326	8.5000e-003	0.3184	0.1144	0.4328	0.0790	0.1056	0.1847	0.0000	785.2494	785.2494	0.1058	0.0000	787.8946
2022	0.9638	0.8313	0.7475	2.1200e-003	0.0755	0.0304	0.1059	0.0205	0.0282	0.0486	0.0000	192.5239	192.5239	0.0283	0.0000	193.2301
Maximum	**1.2119**	**3.6171**	**2.5326**	**8.5000e-003**	**0.3184**	**0.1144**	**0.4328**	**0.0790**	**0.1056**	**0.1847**	**0.0000**	**785.2494**	**785.2494**	**0.1058**	**0.0000**	**787.8946**

	ROG	**NOx**	**CO**	**SO2**	**Fugitive PM10**	**Exhaust PM10**	**PM10 Total**	**Fugitive PM2.5**	**Exhaust PM2.5**	**PM2.5 Total**	**Bio- CO2**	**NBio-CO2**	**Total CO2**	**CH4**	**N20**	**CO2e**
Percent Reduction	**0.00**	**0.00**	**0.00**	**0.00**	**15.91**	**0.01**	**12.15**	**9.98**	**0.00**	**4.51**	**0.00**	**0.00**	**0.00**	**0.00**	**0.00**	**0.00**

Quarter	Start Date	End Date	Maximum Unmitigated ROG + NOX (tons/quarter)	Maximum Mitigated ROG + NOX (tons/quarter)
1	**1-1-2021**	**3-31-2021**	1.1333	1.1333
2	**4-1-2021**	**6-30-2021**	0.8996	0.8996
3	**7-1-2021**	**9-30-2021**	0.9095	0.9095
4	**10-1-2021**	**12-31-2021**	1.8781	1.8781
5	**1-1-2022**	**3-31-2022**	1.8063	1.8063
		Highest	1.8781	1.8781

2.2 Overall Operational

Unmitigated Operational

	ROG	NOx	CO	SO2	Fugitive PM10	Exhaust PM10	PM10 Total	Fugitive PM2.5	Exhaust PM2.5	PM2.5 Total	Bio- CO2	NBio- CO2	Total CO2	CH4	N2O	CO2e
Category	tons/yr										MT/yr					
Area	1.5026	5.0000e-005	5.9500e-003	0.0000		2.0000e-005	2.0000e-005		2.0000e-005	2.0000e-005	0.0000	0.0116	0.0116	3.0000e-005	0.0000	0.0123
Energy	0.0351	0.3194	0.2683	1.9200e-003		0.0243	0.0243		0.0243	0.0243	0.0000	1,584.1907	1,584.1907	0.0626	0.0179	1,591.1018
Mobile	0.3899	1.7560	4.6449	0.0177	1.5961	0.0144	1.6105	0.4284	0.0134	0.4418	0.0000	1,624.7950	1,624.7950	0.0551	0.0000	1,626.1716
Waste						0.0000	0.0000		0.0000	0.0000	39.0311	0.0000	39.0311	2.3067	0.0000	96.6979
Water						0.0000	0.0000		0.0000	0.0000	27.5796	126.5879	154.1674	0.1007	0.0612	174.9096
Total	**1.9276**	**2.0755**	**4.9192**	**0.0196**	**1.5961**	**0.0387**	**1.6348**	**0.4284**	**0.0377**	**0.4661**	**66.6107**	**3,335.5850**	**3,402.1957**	**2.5250**	**0.0791**	**3,488.8932**

2.2 Overall Operational

Mitigated Operational

	ROG	NOx	CO	SO2	Fugitive PM10	Exhaust PM10	PM10 Total	Fugitive PM2.5	Exhaust PM2.5	PM2.5 Total	Bio- CO2	NBio- CO2	Total CO2	CH4	N2O	CO2e
Category	tons/yr										MT/yr					
Area	1.5026	5.0000e-005	5.9500e-003	0.0000		2.0000e-005	2.0000e-005		2.0000e-005	2.0000e-005	0.0000	0.0116	0.0116	3.0000e-005	0.0000	0.0123
Energy	0.0252	0.2286	0.1920	1.3700e-003		0.0174	0.0174		0.0174	0.0174	0.0000	1,364.7059	1,364.7059	0.0552	0.0150	1,370.5569
Mobile	0.3899	1.7560	4.6449	0.0177	1.5961	0.0144	1.6105	0.4284	0.0134	0.4418	0.0000	1,624.7950	1,624.7950	0.0551	0.0000	1,626.1716
Waste						0.0000	0.0000		0.0000	0.0000	39.0311	0.0000	39.0311	2.3067	0.0000	96.6979
Water						0.0000	0.0000		0.0000	0.0000	22.0637	101.8099	123.8735	0.0805	0.0489	140.4694
Total	**1.9176**	**1.9847**	**4.8429**	**0.0191**	**1.5961**	**0.0318**	**1.6279**	**0.4284**	**0.0308**	**0.4592**	**61.0948**	**3,091.3222**	**3,152.4170**	**2.4975**	**0.0639**	**3,233.9081**

	ROG	NOx	CO	SO2	Fugitive PM10	Exhaust PM10	PM10 Total	Fugitive PM2.5	Exhaust PM2.5	PM2.5 Total	Bio- CO2	NBio-CO2	Total CO2	CH4	N20	CO2e
Percent Reduction	**0.52**	**4.38**	**1.55**	**2.80**	**0.00**	**17.86**	**0.42**	**0.00**	**18.31**	**1.48**	**8.28**	**7.32**	**7.34**	**1.09**	**19.18**	**7.31**

3.0 Construction Detail

Construction Phase

Phase Number	Phase Name	Phase Type	Start Date	End Date	Num Days Week	Num Days	Phase Description
1	Demolition	Demolition	1/1/2021	1/28/2021	5	20	
2	Site Preparation	Site Preparation	1/29/2021	2/11/2021	5	10	
3	Grading	Grading	2/12/2021	3/25/2021	5	30	
4	Building Construction	Building Construction	3/26/2021	3/31/2022	5	265	
5	Architectural Coating	Architectural Coating	10/1/2021	3/31/2022	5	130	
6	Paving	Paving	3/4/2022	3/31/2022	5	20	

Acres of Grading (Site Preparation Phase): 5

Acres of Grading (Grading Phase): 15

Acres of Paving: 2.79

Residential Indoor: 0; Residential Outdoor: 0; Non-Residential Indoor: 505,641; Non-Residential Outdoor: 168,547; Striped Parking Area: 7,440 (Architectural Coating – sqft)

<u>OffRoad Equipment</u>

Clawiter Industrial Project - Buildings 1 to 3 - 2023 - Bay Area AQMD Air District, Annual

Phase Name	Offroad Equipment Type	Amount	Usage Hours	Horse Power	Load Factor
Demolition	Excavators	3	8.00	158	0.38
Demolition	Tractors/Loaders/Backhoes	2	8.00	97	0.37
Site Preparation	Graders	1	8.00	187	0.41
Site Preparation	Pavers	1	8.00	130	0.42
Site Preparation	Tractors/Loaders/Backhoes	4	8.00	97	0.37
Grading	Excavators	1	8.00	158	0.38
Grading	Graders	1	8.00	187	0.41
Grading	Pavers	1	8.00	130	0.42
Grading	Tractors/Loaders/Backhoes	1	8.00	97	0.37
Building Construction	Cranes	2	7.00	231	0.29
Building Construction	Forklifts	3	8.00	89	0.20
Building Construction	Tractors/Loaders/Backhoes	3	7.00	97	0.37
Architectural Coating	Air Compressors	1	6.00	78	0.48
Paving	Pavers	1	8.00	130	0.42
Paving	Rollers	1	8.00	80	0.38
Paving	Tractors/Loaders/Backhoes	1	8.00	97	0.37

Trips and VMT

Phase Name	Offroad Equipment Count	Worker Trip Number	Vendor Trip Number	Hauling Trip Number	Worker Trip Length	Vendor Trip Length	Hauling Trip Length	Worker Vehicle Class	Vendor Vehicle Class	Hauling Vehicle Class
Demolition	5	13.00	0.00	1,139.00	10.80	7.30	20.00	LD_Mix	HDT_Mix	HHDT
Site Preparation	6	15.00	0.00	0.00	10.80	7.30	20.00	LD_Mix	HDT_Mix	HHDT
Grading	4	10.00	0.00	3,634.00	10.80	7.30	20.00	LD_Mix	HDT_Mix	HHDT
Building Construction	8	194.00	76.00	0.00	10.80	7.30	20.00	LD_Mix	HDT_Mix	HHDT
Architectural Coating	1	39.00	0.00	0.00	10.80	7.30	20.00	LD_Mix	HDT_Mix	HHDT
Paving	3	8.00	0.00	0.00	10.80	7.30	20.00	LD_Mix	HDT_Mix	HHDT

3.1 Mitigation Measures Construction

Water Exposed Area

3.2 Demolition - 2021

Unmitigated Construction On-Site

	ROG	NOx	CO	SO2	Fugitive PM10	Exhaust PM10	PM10 Total	Fugitive PM2.5	Exhaust PM2.5	PM2.5 Total	Bio- CO2	NBio- CO2	Total CO2	CH4	N2O	CO2e
Category	tons/yr										MT/yr					
Fugitive Dust					0.1233	0.0000	0.1233	0.0187	0.0000	0.0187	0.0000	0.0000	0.0000	0.0000	0.0000	0.0000
Off-Road	0.0106	0.1025	0.1434	2.2000e-004		5.3700e-003	5.3700e-003		4.9400e-003	4.9400e-003	0.0000	19.0724	19.0724	6.1700e-003	0.0000	19.2267
Total	**0.0106**	**0.1025**	**0.1434**	**2.2000e-004**	**0.1233**	**5.3700e-003**	**0.1286**	**0.0187**	**4.9400e-003**	**0.0236**	**0.0000**	**19.0724**	**19.0724**	**6.1700e-003**	**0.0000**	**19.2267**

3.2 Demolition - 2021

Unmitigated Construction Off-Site

	ROG	NOx	CO	SO2	Fugitive PM10	Exhaust PM10	PM10 Total	Fugitive PM2.5	Exhaust PM2.5	PM2.5 Total	Bio- CO2	NBio- CO2	Total CO2	CH4	N2O	CO2e
Category	tons/yr										MT/yr					
Hauling	4.4900e-003	0.1537	0.0328	4.4000e-004	9.6200e-003	4.8000e-004	0.0101	2.6500e-003	4.6000e-004	3.1000e-003	0.0000	43.0851	43.0851	2.2000e-003	0.0000	43.1401
Vendor	0.0000	0.0000	0.0000	0.0000	0.0000	0.0000	0.0000	0.0000	0.0000	0.0000	0.0000	0.0000	0.0000	0.0000	0.0000	0.0000
Worker	4.0000e-004	2.8000e-004	2.9200e-003	1.0000e-005	1.0300e-003	1.0000e-005	1.0300e-003	2.7000e-004	1.0000e-005	2.8000e-004	0.0000	0.8684	0.8684	2.0000e-005	0.0000	0.8689
Total	**4.8900e-003**	**0.1540**	**0.0357**	**4.5000e-004**	**0.0107**	**4.9000e-004**	**0.0111**	**2.9200e-003**	**4.7000e-004**	**3.3800e-003**	**0.0000**	**43.9535**	**43.9535**	**2.2200e-003**	**0.0000**	**44.0090**

Mitigated Construction On-Site

	ROG	NOx	CO	SO2	Fugitive PM10	Exhaust PM10	PM10 Total	Fugitive PM2.5	Exhaust PM2.5	PM2.5 Total	Bio- CO2	NBio- CO2	Total CO2	CH4	N2O	CO2e
Category	tons/yr										MT/yr					
Fugitive Dust					0.0555	0.0000	0.0555	8.4000e-003	0.0000	8.4000e-003	0.0000	0.0000	0.0000	0.0000	0.0000	0.0000
Off-Road	0.0106	0.1025	0.1434	2.2000e-004		5.3700e-003	5.3700e-003		4.9400e-003	4.9400e-003	0.0000	19.0724	19.0724	6.1700e-003	0.0000	19.2266
Total	**0.0106**	**0.1025**	**0.1434**	**2.2000e-004**	**0.0555**	**5.3700e-003**	**0.0608**	**8.4000e-003**	**4.9400e-003**	**0.0133**	**0.0000**	**19.0724**	**19.0724**	**6.1700e-003**	**0.0000**	**19.2266**

3.2 Demolition - 2021

Mitigated Construction Off-Site

	ROG	NOx	CO	SO2	Fugitive PM10	Exhaust PM10	PM10 Total	Fugitive PM2.5	Exhaust PM2.5	PM2.5 Total	Bio- CO2	NBio- CO2	Total CO2	CH4	N2O	CO2e
Category	tons/yr										MT/yr					
Hauling	4.4900e-003	0.1537	0.0328	4.4000e-004	9.6200e-003	4.8000e-004	0.0101	2.6500e-003	4.6000e-004	3.1000e-003	0.0000	43.0851	43.0851	2.2000e-003	0.0000	43.1401
Vendor	0.0000	0.0000	0.0000	0.0000	0.0000	0.0000	0.0000	0.0000	0.0000	0.0000	0.0000	0.0000	0.0000	0.0000	0.0000	0.0000
Worker	4.0000e-004	2.8000e-004	2.9200e-003	1.0000e-005	1.0300e-003	1.0000e-005	1.0300e-003	2.7000e-004	1.0000e-005	2.8000e-004	0.0000	0.8684	0.8684	2.0000e-005	0.0000	0.8689
Total	**4.8900e-003**	**0.1540**	**0.0357**	**4.5000e-004**	**0.0107**	**4.9000e-004**	**0.0111**	**2.9200e-003**	**4.7000e-004**	**3.3800e-003**	**0.0000**	**43.9535**	**43.9535**	**2.2200e-003**	**0.0000**	**44.0090**

3.3 Site Preparation - 2021

Unmitigated Construction On-Site

	ROG	NOx	CO	SO2	Fugitive PM10	Exhaust PM10	PM10 Total	Fugitive PM2.5	Exhaust PM2.5	PM2.5 Total	Bio- CO2	NBio- CO2	Total CO2	CH4	N2O	CO2e
Category	tons/yr										MT/yr					
Fugitive Dust					2.6500e-003	0.0000	2.6500e-003	2.9000e-004	0.0000	2.9000e-004	0.0000	0.0000	0.0000	0.0000	0.0000	0.0000
Off-Road	7.2400e-003	0.0805	0.0686	1.2000e-004		3.8000e-003	3.8000e-003		3.5000e-003	3.5000e-003	0.0000	10.4342	10.4342	3.3700e-003	0.0000	10.5186
Total	**7.2400e-003**	**0.0805**	**0.0686**	**1.2000e-004**	**2.6500e-003**	**3.8000e-003**	**6.4500e-003**	**2.9000e-004**	**3.5000e-003**	**3.7900e-003**	**0.0000**	**10.4342**	**10.4342**	**3.3700e-003**	**0.0000**	**10.5186**

3.3 Site Preparation - 2021

Unmitigated Construction Off-Site

	ROG	NOx	CO	SO2	Fugitive PM10	Exhaust PM10	PM10 Total	Fugitive PM2.5	Exhaust PM2.5	PM2.5 Total	Bio- CO2	NBio- CO2	Total CO2	CH4	N2O	CO2e
Category	tons/yr										MT/yr					
Hauling	0.0000	0.0000	0.0000	0.0000	0.0000	0.0000	0.0000	0.0000	0.0000	0.0000	0.0000	0.0000	0.0000	0.0000	0.0000	0.0000
Vendor	0.0000	0.0000	0.0000	0.0000	0.0000	0.0000	0.0000	0.0000	0.0000	0.0000	0.0000	0.0000	0.0000	0.0000	0.0000	0.0000
Worker	2.3000e-004	1.6000e-004	1.6800e-003	1.0000e-005	5.9000e-004	0.0000	6.0000e-004	1.6000e-004	0.0000	1.6000e-004	0.0000	0.5010	0.5010	1.0000e-005	0.0000	0.5013
Total	**2.3000e-004**	**1.6000e-004**	**1.6800e-003**	**1.0000e-005**	**5.9000e-004**	**0.0000**	**6.0000e-004**	**1.6000e-004**	**0.0000**	**1.6000e-004**	**0.0000**	**0.5010**	**0.5010**	**1.0000e-005**	**0.0000**	**0.5013**

Mitigated Construction On-Site

	ROG	NOx	CO	SO2	Fugitive PM10	Exhaust PM10	PM10 Total	Fugitive PM2.5	Exhaust PM2.5	PM2.5 Total	Bio- CO2	NBio- CO2	Total CO2	CH4	N2O	CO2e
Category	tons/yr										MT/yr					
Fugitive Dust					1.1900e-003	0.0000	1.1900e-003	1.3000e-004	0.0000	1.3000e-004	0.0000	0.0000	0.0000	0.0000	0.0000	0.0000
Off-Road	7.2400e-003	0.0805	0.0686	1.2000e-004		3.8000e-003	3.8000e-003		3.5000e-003	3.5000e-003	0.0000	10.4342	10.4342	3.3700e-003	0.0000	10.5185
Total	**7.2400e-003**	**0.0805**	**0.0686**	**1.2000e-004**	**1.1900e-003**	**3.8000e-003**	**4.9900e-003**	**1.3000e-004**	**3.5000e-003**	**3.6300e-003**	**0.0000**	**10.4342**	**10.4342**	**3.3700e-003**	**0.0000**	**10.5185**

3.3 Site Preparation - 2021

Mitigated Construction Off-Site

	ROG	NOx	CO	SO2	Fugitive PM10	Exhaust PM10	PM10 Total	Fugitive PM2.5	Exhaust PM2.5	PM2.5 Total	Bio- CO2	NBio- CO2	Total CO2	CH4	N2O	CO2e
Category	tons/yr										MT/yr					
Hauling	0.0000	0.0000	0.0000	0.0000	0.0000	0.0000	0.0000	0.0000	0.0000	0.0000	0.0000	0.0000	0.0000	0.0000	0.0000	0.0000
Vendor	0.0000	0.0000	0.0000	0.0000	0.0000	0.0000	0.0000	0.0000	0.0000	0.0000	0.0000	0.0000	0.0000	0.0000	0.0000	0.0000
Worker	2.3000e-004	1.6000e-004	1.6800e-003	1.0000e-005	5.9000e-004	0.0000	6.0000e-004	1.6000e-004	0.0000	1.6000e-004	0.0000	0.5010	0.5010	1.0000e-005	0.0000	0.5013
Total	**2.3000e-004**	**1.6000e-004**	**1.6800e-003**	**1.0000e-005**	**5.9000e-004**	**0.0000**	**6.0000e-004**	**1.6000e-004**	**0.0000**	**1.6000e-004**	**0.0000**	**0.5010**	**0.5010**	**1.0000e-005**	**0.0000**	**0.5013**

3.4 Grading - 2021

Unmitigated Construction On-Site

	ROG	NOx	CO	SO2	Fugitive PM10	Exhaust PM10	PM10 Total	Fugitive PM2.5	Exhaust PM2.5	PM2.5 Total	Bio- CO2	NBio- CO2	Total CO2	CH4	N2O	CO2e
Category	tons/yr										MT/yr					
Fugitive Dust					9.6000e-003	0.0000	9.6000e-003	1.1100e-003	0.0000	1.1100e-003	0.0000	0.0000	0.0000	0.0000	0.0000	0.0000
Off-Road	0.0167	0.1885	0.1531	2.9000e-004		7.9400e-003	7.9400e-003		7.3000e-003	7.3000e-003	0.0000	25.8253	25.8253	8.3500e-003	0.0000	26.0341
Total	**0.0167**	**0.1885**	**0.1531**	**2.9000e-004**	**9.6000e-003**	**7.9400e-003**	**0.0175**	**1.1100e-003**	**7.3000e-003**	**8.4100e-003**	**0.0000**	**25.8253**	**25.8253**	**8.3500e-003**	**0.0000**	**26.0341**

3.4 Grading - 2021

Unmitigated Construction Off-Site

	ROG	NOx	CO	SO2	Fugitive PM10	Exhaust PM10	PM10 Total	Fugitive PM2.5	Exhaust PM2.5	PM2.5 Total	Bio- CO2	NBio- CO2	Total CO2	CH4	N2O	CO2e
Category	tons/yr										MT/yr					
Hauling	0.0143	0.4904	0.1045	1.4200e-003	0.0307	1.5200e-003	0.0322	8.4400e-003	1.4500e-003	9.8900e-003	0.0000	137.4639	137.4639	7.0100e-003	0.0000	137.6393
Vendor	0.0000	0.0000	0.0000	0.0000	0.0000	0.0000	0.0000	0.0000	0.0000	0.0000	0.0000	0.0000	0.0000	0.0000	0.0000	0.0000
Worker	4.6000e-004	3.2000e-004	3.3600e-003	1.0000e-005	1.1900e-003	1.0000e-005	1.1900e-003	3.2000e-004	1.0000e-005	3.2000e-004	0.0000	1.0020	1.0020	2.0000e-005	0.0000	1.0026
Total	**0.0148**	**0.4907**	**0.1078**	**1.4300e-003**	**0.0319**	**1.5300e-003**	**0.0334**	**8.7600e-003**	**1.4600e-003**	**0.0102**	**0.0000**	**138.4659**	**138.4659**	**7.0300e-003**	**0.0000**	**138.6418**

Mitigated Construction On-Site

	ROG	NOx	CO	SO2	Fugitive PM10	Exhaust PM10	PM10 Total	Fugitive PM2.5	Exhaust PM2.5	PM2.5 Total	Bio- CO2	NBio- CO2	Total CO2	CH4	N2O	CO2e
Category	tons/yr										MT/yr					
Fugitive Dust					4.3200e-003	0.0000	4.3200e-003	5.0000e-004	0.0000	5.0000e-004	0.0000	0.0000	0.0000	0.0000	0.0000	0.0000
Off-Road	0.0167	0.1885	0.1531	2.9000e-004		7.9400e-003	7.9400e-003		7.3000e-003	7.3000e-003	0.0000	25.8253	25.8253	8.3500e-003	0.0000	26.0341
Total	**0.0167**	**0.1885**	**0.1531**	**2.9000e-004**	**4.3200e-003**	**7.9400e-003**	**0.0123**	**5.0000e-004**	**7.3000e-003**	**7.8000e-003**	**0.0000**	**25.8253**	**25.8253**	**8.3500e-003**	**0.0000**	**26.0341**

3.4 Grading - 2021

Mitigated Construction Off-Site

	ROG	NOx	CO	SO2	Fugitive PM10	Exhaust PM10	PM10 Total	Fugitive PM2.5	Exhaust PM2.5	PM2.5 Total	Bio- CO2	NBio- CO2	Total CO2	CH4	N2O	CO2e
Category	tons/yr										MT/yr					
Hauling	0.0143	0.4904	0.1045	1.4200e-003	0.0307	1.5200e-003	0.0322	8.4400e-003	1.4500e-003	9.8900e-003	0.0000	137.4639	137.4639	7.0100e-003	0.0000	137.6393
Vendor	0.0000	0.0000	0.0000	0.0000	0.0000	0.0000	0.0000	0.0000	0.0000	0.0000	0.0000	0.0000	0.0000	0.0000	0.0000	0.0000
Worker	4.6000e-004	3.2000e-004	3.3600e-003	1.0000e-005	1.1900e-003	1.0000e-005	1.1900e-003	3.2000e-004	1.0000e-005	3.2000e-004	0.0000	1.0020	1.0020	2.0000e-005	0.0000	1.0026
Total	**0.0148**	**0.4907**	**0.1078**	**1.4300e-003**	**0.0319**	**1.5300e-003**	**0.0334**	**8.7600e-003**	**1.4600e-003**	**0.0102**	**0.0000**	**138.4659**	**138.4659**	**7.0300e-003**	**0.0000**	**138.6418**

3.5 Building Construction - 2021

Unmitigated Construction On-Site

	ROG	NOx	CO	SO2	Fugitive PM10	Exhaust PM10	PM10 Total	Fugitive PM2.5	Exhaust PM2.5	PM2.5 Total	Bio- CO2	NBio- CO2	Total CO2	CH4	N2O	CO2e
Category	tons/yr										MT/yr					
Off-Road	0.1610	1.7085	1.2971	2.2900e-003		0.0894	0.0894		0.0822	0.0822	0.0000	201.6496	201.6496	0.0652	0.0000	203.2801
Total	**0.1610**	**1.7085**	**1.2971**	**2.2900e-003**		**0.0894**	**0.0894**		**0.0822**	**0.0822**	**0.0000**	**201.6496**	**201.6496**	**0.0652**	**0.0000**	**203.2801**

3.5 Building Construction - 2021

Unmitigated Construction Off-Site

	ROG	NOx	CO	SO2	Fugitive PM10	Exhaust PM10	PM10 Total	Fugitive PM2.5	Exhaust PM2.5	PM2.5 Total	Bio- CO2	NBio- CO2	Total CO2	CH4	N2O	CO2e
Category	tons/yr										MT/yr					
Hauling	0.0000	0.0000	0.0000	0.0000	0.0000	0.0000	0.0000	0.0000	0.0000	0.0000	0.0000	0.0000	0.0000	0.0000	0.0000	0.0000
Vendor	0.0243	0.7978	0.1991	2.0600e-003	0.0501	1.7400e-003	0.0518	0.0145	1.6600e-003	0.0162	0.0000	198.0869	198.0869	9.7400e-003	0.0000	198.3304
Worker	0.0598	0.0413	0.4373	1.4400e-003	0.1541	1.0100e-003	0.1551	0.0410	9.3000e-004	0.0419	0.0000	130.2380	130.2380	2.9200e-003	0.0000	130.3110
Total	**0.0841**	**0.8391**	**0.6364**	**3.5000e-003**	**0.2042**	**2.7500e-003**	**0.2069**	**0.0555**	**2.5900e-003**	**0.0581**	**0.0000**	**328.3249**	**328.3249**	**0.0127**	**0.0000**	**328.6414**

Mitigated Construction On-Site

	ROG	NOx	CO	SO2	Fugitive PM10	Exhaust PM10	PM10 Total	Fugitive PM2.5	Exhaust PM2.5	PM2.5 Total	Bio- CO2	NBio- CO2	Total CO2	CH4	N2O	CO2e
Category	tons/yr										MT/yr					
Off-Road	0.1610	1.7085	1.2971	2.2900e-003		0.0894	0.0894		0.0822	0.0822	0.0000	201.6494	201.6494	0.0652	0.0000	203.2798
Total	**0.1610**	**1.7085**	**1.2971**	**2.2900e-003**		**0.0894**	**0.0894**		**0.0822**	**0.0822**	**0.0000**	**201.6494**	**201.6494**	**0.0652**	**0.0000**	**203.2798**

3.5 Building Construction - 2021

Mitigated Construction Off-Site

	ROG	NOx	CO	SO2	Fugitive PM10	Exhaust PM10	PM10 Total	Fugitive PM2.5	Exhaust PM2.5	PM2.5 Total	Bio- CO2	NBio- CO2	Total CO2	CH4	N2O	CO2e
Category	tons/yr										MT/yr					
Hauling	0.0000	0.0000	0.0000	0.0000	0.0000	0.0000	0.0000	0.0000	0.0000	0.0000	0.0000	0.0000	0.0000	0.0000	0.0000	0.0000
Vendor	0.0243	0.7978	0.1991	2.0600e-003	0.0501	1.7400e-003	0.0518	0.0145	1.6600e-003	0.0162	0.0000	198.0869	198.0869	9.7400e-003	0.0000	198.3304
Worker	0.0598	0.0413	0.4373	1.4400e-003	0.1541	1.0100e-003	0.1551	0.0410	9.3000e-004	0.0419	0.0000	130.2380	130.2380	2.9200e-003	0.0000	130.3110
Total	**0.0841**	**0.8391**	**0.6364**	**3.5000e-003**	**0.2042**	**2.7500e-003**	**0.2069**	**0.0555**	**2.5900e-003**	**0.0581**	**0.0000**	**328.3249**	**328.3249**	**0.0127**	**0.0000**	**328.6414**

3.5 Building Construction - 2022

Unmitigated Construction On-Site

	ROG	NOx	CO	SO2	Fugitive PM10	Exhaust PM10	PM10 Total	Fugitive PM2.5	Exhaust PM2.5	PM2.5 Total	Bio- CO2	NBio- CO2	Total CO2	CH4	N2O	CO2e
Category	tons/yr										MT/yr					
Off-Road	0.0456	0.4763	0.4047	7.3000e-004		0.0240	0.0240		0.0221	0.0221	0.0000	64.2373	64.2373	0.0208	0.0000	64.7567
Total	**0.0456**	**0.4763**	**0.4047**	**7.3000e-004**		**0.0240**	**0.0240**		**0.0221**	**0.0221**	**0.0000**	**64.2373**	**64.2373**	**0.0208**	**0.0000**	**64.7567**

3.5 Building Construction - 2022

Unmitigated Construction Off-Site

	ROG	NOx	CO	SO2	Fugitive PM10	Exhaust PM10	PM10 Total	Fugitive PM2.5	Exhaust PM2.5	PM2.5 Total	Bio- CO2	NBio- CO2	Total CO2	CH4	N2O	CO2e
Category	tons/yr										MT/yr					
Hauling	0.0000	0.0000	0.0000	0.0000	0.0000	0.0000	0.0000	0.0000	0.0000	0.0000	0.0000	0.0000	0.0000	0.0000	0.0000	0.0000
Vendor	7.2000e-003	0.2406	0.0596	6.5000e-004	0.0160	4.8000e-004	0.0164	4.6100e-003	4.6000e-004	5.0700e-003	0.0000	62.4540	62.4540	2.9600e-003	0.0000	62.5281
Worker	0.0178	0.0118	0.1280	4.4000e-004	0.0491	3.1000e-004	0.0494	0.0131	2.9000e-004	0.0133	0.0000	39.9485	39.9485	8.3000e-004	0.0000	39.9694
Total	**0.0250**	**0.2524**	**0.1876**	**1.0900e-003**	**0.0650**	**7.9000e-004**	**0.0658**	**0.0177**	**7.5000e-004**	**0.0184**	**0.0000**	**102.4025**	**102.4025**	**3.7900e-003**	**0.0000**	**102.4974**

Mitigated Construction On-Site

	ROG	NOx	CO	SO2	Fugitive PM10	Exhaust PM10	PM10 Total	Fugitive PM2.5	Exhaust PM2.5	PM2.5 Total	Bio- CO2	NBio- CO2	Total CO2	CH4	N2O	CO2e
Category	tons/yr										MT/yr					
Off-Road	0.0456	0.4763	0.4047	7.3000e-004		0.0240	0.0240		0.0221	0.0221	0.0000	64.2373	64.2373	0.0208	0.0000	64.7566
Total	**0.0456**	**0.4763**	**0.4047**	**7.3000e-004**		**0.0240**	**0.0240**		**0.0221**	**0.0221**	**0.0000**	**64.2373**	**64.2373**	**0.0208**	**0.0000**	**64.7566**

3.5 Building Construction - 2022

Mitigated Construction Off-Site

	ROG	NOx	CO	SO2	Fugitive PM10	Exhaust PM10	PM10 Total	Fugitive PM2.5	Exhaust PM2.5	PM2.5 Total	Bio- CO2	NBio- CO2	Total CO2	CH4	N2O	CO2e
Category	tons/yr										MT/yr					
Hauling	0.0000	0.0000	0.0000	0.0000	0.0000	0.0000	0.0000	0.0000	0.0000	0.0000	0.0000	0.0000	0.0000	0.0000	0.0000	0.0000
Vendor	7.2000e-003	0.2406	0.0596	6.5000e-004	0.0160	4.8000e-004	0.0164	4.6100e-003	4.6000e-004	5.0700e-003	0.0000	62.4540	62.4540	2.9600e-003	0.0000	62.5281
Worker	0.0178	0.0118	0.1280	4.4000e-004	0.0491	3.1000e-004	0.0494	0.0131	2.9000e-004	0.0133	0.0000	39.9485	39.9485	8.3000e-004	0.0000	39.9694
Total	**0.0250**	**0.2524**	**0.1876**	**1.0900e-003**	**0.0650**	**7.9000e-004**	**0.0658**	**0.0177**	**7.5000e-004**	**0.0184**	**0.0000**	**102.4025**	**102.4025**	**3.7900e-003**	**0.0000**	**102.4974**

3.6 Architectural Coating - 2021

Unmitigated Construction On-Site

	ROG	NOx	CO	SO2	Fugitive PM10	Exhaust PM10	PM10 Total	Fugitive PM2.5	Exhaust PM2.5	PM2.5 Total	Bio- CO2	NBio- CO2	Total CO2	CH4	N2O	CO2e
Category	tons/yr										MT/yr					
Archit. Coating	0.9011					0.0000	0.0000		0.0000	0.0000	0.0000	0.0000	0.0000	0.0000	0.0000	0.0000
Off-Road	7.2200e-003	0.0504	0.0600	1.0000e-004		3.1100e-003	3.1100e-003		3.1100e-003	3.1100e-003	0.0000	8.4257	8.4257	5.8000e-004	0.0000	8.4402
Total	**0.9084**	**0.0504**	**0.0600**	**1.0000e-004**		**3.1100e-003**	**3.1100e-003**		**3.1100e-003**	**3.1100e-003**	**0.0000**	**8.4257**	**8.4257**	**5.8000e-004**	**0.0000**	**8.4402**

3.6 Architectural Coating - 2021

Unmitigated Construction Off-Site

	ROG	NOx	CO	SO2	Fugitive PM10	Exhaust PM10	PM10 Total	Fugitive PM2.5	Exhaust PM2.5	PM2.5 Total	Bio- CO2	NBio- CO2	Total CO2	CH4	N2O	CO2e
Category	tons/yr										MT/yr					
Hauling	0.0000	0.0000	0.0000	0.0000	0.0000	0.0000	0.0000	0.0000	0.0000	0.0000	0.0000	0.0000	0.0000	0.0000	0.0000	0.0000
Vendor	0.0000	0.0000	0.0000	0.0000	0.0000	0.0000	0.0000	0.0000	0.0000	0.0000	0.0000	0.0000	0.0000	0.0000	0.0000	0.0000
Worker	3.9500e-003	2.7200e-003	0.0289	1.0000e-004	0.0102	7.0000e-005	0.0102	2.7100e-003	6.0000e-005	2.7700e-003	0.0000	8.5970	8.5970	1.9000e-004	0.0000	8.6019
Total	**3.9500e-003**	**2.7200e-003**	**0.0289**	**1.0000e-004**	**0.0102**	**7.0000e-005**	**0.0102**	**2.7100e-003**	**6.0000e-005**	**2.7700e-003**	**0.0000**	**8.5970**	**8.5970**	**1.9000e-004**	**0.0000**	**8.6019**

Mitigated Construction On-Site

	ROG	NOx	CO	SO2	Fugitive PM10	Exhaust PM10	PM10 Total	Fugitive PM2.5	Exhaust PM2.5	PM2.5 Total	Bio- CO2	NBio- CO2	Total CO2	CH4	N2O	CO2e
Category	tons/yr										MT/yr					
Archit. Coating	0.9011					0.0000	0.0000		0.0000	0.0000	0.0000	0.0000	0.0000	0.0000	0.0000	0.0000
Off-Road	7.2200e-003	0.0504	0.0600	1.0000e-004		3.1100e-003	3.1100e-003		3.1100e-003	3.1100e-003	0.0000	8.4257	8.4257	5.8000e-004	0.0000	8.4402
Total	**0.9084**	**0.0504**	**0.0600**	**1.0000e-004**		**3.1100e-003**	**3.1100e-003**		**3.1100e-003**	**3.1100e-003**	**0.0000**	**8.4257**	**8.4257**	**5.8000e-004**	**0.0000**	**8.4402**

3.6 Architectural Coating - 2021

Mitigated Construction Off-Site

	ROG	NOx	CO	SO2	Fugitive PM10	Exhaust PM10	PM10 Total	Fugitive PM2.5	Exhaust PM2.5	PM2.5 Total	Bio- CO2	NBio- CO2	Total CO2	CH4	N2O	CO2e
Category	tons/yr										MT/yr					
Hauling	0.0000	0.0000	0.0000	0.0000	0.0000	0.0000	0.0000	0.0000	0.0000	0.0000	0.0000	0.0000	0.0000	0.0000	0.0000	0.0000
Vendor	0.0000	0.0000	0.0000	0.0000	0.0000	0.0000	0.0000	0.0000	0.0000	0.0000	0.0000	0.0000	0.0000	0.0000	0.0000	0.0000
Worker	3.9500e-003	2.7200e-003	0.0289	1.0000e-004	0.0102	7.0000e-005	0.0102	2.7100e-003	6.0000e-005	2.7700e-003	0.0000	8.5970	8.5970	1.9000e-004	0.0000	8.6019
Total	**3.9500e-003**	**2.7200e-003**	**0.0289**	**1.0000e-004**	**0.0102**	**7.0000e-005**	**0.0102**	**2.7100e-003**	**6.0000e-005**	**2.7700e-003**	**0.0000**	**8.5970**	**8.5970**	**1.9000e-004**	**0.0000**	**8.6019**

3.6 Architectural Coating - 2022

Unmitigated Construction On-Site

	ROG	NOx	CO	SO2	Fugitive PM10	Exhaust PM10	PM10 Total	Fugitive PM2.5	Exhaust PM2.5	PM2.5 Total	Bio- CO2	NBio- CO2	Total CO2	CH4	N2O	CO2e
Category	tons/yr										MT/yr					
Archit. Coating	0.8738					0.0000	0.0000		0.0000	0.0000	0.0000	0.0000	0.0000	0.0000	0.0000	0.0000
Off-Road	6.5500e-003	0.0451	0.0580	1.0000e-004		2.6100e-003	2.6100e-003		2.6100e-003	2.6100e-003	0.0000	8.1704	8.1704	5.3000e-004	0.0000	8.1837
Total	**0.8804**	**0.0451**	**0.0580**	**1.0000e-004**		**2.6100e-003**	**2.6100e-003**		**2.6100e-003**	**2.6100e-003**	**0.0000**	**8.1704**	**8.1704**	**5.3000e-004**	**0.0000**	**8.1837**

3.6 Architectural Coating - 2022

Unmitigated Construction Off-Site

	ROG	NOx	CO	SO2	Fugitive PM10	Exhaust PM10	PM10 Total	Fugitive PM2.5	Exhaust PM2.5	PM2.5 Total	Bio- CO2	NBio- CO2	Total CO2	CH4	N2O	CO2e
Category	tons/yr										MT/yr					
Hauling	0.0000	0.0000	0.0000	0.0000	0.0000	0.0000	0.0000	0.0000	0.0000	0.0000	0.0000	0.0000	0.0000	0.0000	0.0000	0.0000
Vendor	0.0000	0.0000	0.0000	0.0000	0.0000	0.0000	0.0000	0.0000	0.0000	0.0000	0.0000	0.0000	0.0000	0.0000	0.0000	0.0000
Worker	3.5700e-003	2.3700e-003	0.0257	9.0000e-005	9.8600e-003	6.0000e-005	9.9200e-003	2.6200e-003	6.0000e-005	2.6800e-003	0.0000	8.0309	8.0309	1.7000e-004	0.0000	8.0351
Total	**3.5700e-003**	**2.3700e-003**	**0.0257**	**9.0000e-005**	**9.8600e-003**	**6.0000e-005**	**9.9200e-003**	**2.6200e-003**	**6.0000e-005**	**2.6800e-003**	**0.0000**	**8.0309**	**8.0309**	**1.7000e-004**	**0.0000**	**8.0351**

Mitigated Construction On-Site

	ROG	NOx	CO	SO2	Fugitive PM10	Exhaust PM10	PM10 Total	Fugitive PM2.5	Exhaust PM2.5	PM2.5 Total	Bio- CO2	NBio- CO2	Total CO2	CH4	N2O	CO2e
Category	tons/yr										MT/yr					
Archit. Coating	0.8738					0.0000	0.0000		0.0000	0.0000	0.0000	0.0000	0.0000	0.0000	0.0000	0.0000
Off-Road	6.5500e-003	0.0451	0.0580	1.0000e-004		2.6100e-003	2.6100e-003		2.6100e-003	2.6100e-003	0.0000	8.1704	8.1704	5.3000e-004	0.0000	8.1837
Total	**0.8804**	**0.0451**	**0.0580**	**1.0000e-004**		**2.6100e-003**	**2.6100e-003**		**2.6100e-003**	**2.6100e-003**	**0.0000**	**8.1704**	**8.1704**	**5.3000e-004**	**0.0000**	**8.1837**

3.6 Architectural Coating - 2022

Mitigated Construction Off-Site

	ROG	NOx	CO	SO2	Fugitive PM10	Exhaust PM10	PM10 Total	Fugitive PM2.5	Exhaust PM2.5	PM2.5 Total	Bio- CO2	NBio- CO2	Total CO2	CH4	N2O	CO2e
Category	tons/yr										MT/yr					
Hauling	0.0000	0.0000	0.0000	0.0000	0.0000	0.0000	0.0000	0.0000	0.0000	0.0000	0.0000	0.0000	0.0000	0.0000	0.0000	0.0000
Vendor	0.0000	0.0000	0.0000	0.0000	0.0000	0.0000	0.0000	0.0000	0.0000	0.0000	0.0000	0.0000	0.0000	0.0000	0.0000	0.0000
Worker	3.5700e-003	2.3700e-003	0.0257	9.0000e-005	9.8600e-003	6.0000e-005	9.9200e-003	2.6200e-003	6.0000e-005	2.6800e-003	0.0000	8.0309	8.0309	1.7000e-004	0.0000	8.0351
Total	**3.5700e-003**	**2.3700e-003**	**0.0257**	**9.0000e-005**	**9.8600e-003**	**6.0000e-005**	**9.9200e-003**	**2.6200e-003**	**6.0000e-005**	**2.6800e-003**	**0.0000**	**8.0309**	**8.0309**	**1.7000e-004**	**0.0000**	**8.0351**

3.7 Paving - 2022

Unmitigated Construction On-Site

	ROG	NOx	CO	SO2	Fugitive PM10	Exhaust PM10	PM10 Total	Fugitive PM2.5	Exhaust PM2.5	PM2.5 Total	Bio- CO2	NBio- CO2	Total CO2	CH4	N2O	CO2e
Category	tons/yr										MT/yr					
Off-Road	5.3800e-003	0.0550	0.0698	1.0000e-004		2.8900e-003	2.8900e-003		2.6600e-003	2.6600e-003	0.0000	9.1680	9.1680	2.9700e-003	0.0000	9.2421
Paving	3.6500e-003					0.0000	0.0000		0.0000	0.0000	0.0000	0.0000	0.0000	0.0000	0.0000	0.0000
Total	**9.0300e-003**	**0.0550**	**0.0698**	**1.0000e-004**		**2.8900e-003**	**2.8900e-003**		**2.6600e-003**	**2.6600e-003**	**0.0000**	**9.1680**	**9.1680**	**2.9700e-003**	**0.0000**	**9.2421**

3.7 Paving - 2022

Unmitigated Construction Off-Site

	ROG	NOx	CO	SO2	Fugitive PM10	Exhaust PM10	PM10 Total	Fugitive PM2.5	Exhaust PM2.5	PM2.5 Total	Bio- CO2	NBio- CO2	Total CO2	CH4	N2O	CO2e
Category	tons/yr										MT/yr					
Hauling	0.0000	0.0000	0.0000	0.0000	0.0000	0.0000	0.0000	0.0000	0.0000	0.0000	0.0000	0.0000	0.0000	0.0000	0.0000	0.0000
Vendor	0.0000	0.0000	0.0000	0.0000	0.0000	0.0000	0.0000	0.0000	0.0000	0.0000	0.0000	0.0000	0.0000	0.0000	0.0000	0.0000
Worker	2.3000e-004	1.5000e-004	1.6500e-003	1.0000e-005	6.3000e-004	0.0000	6.4000e-004	1.7000e-004	0.0000	1.7000e-004	0.0000	0.5148	0.5148	1.0000e-005	0.0000	0.5151
Total	**2.3000e-004**	**1.5000e-004**	**1.6500e-003**	**1.0000e-005**	**6.3000e-004**	**0.0000**	**6.4000e-004**	**1.7000e-004**	**0.0000**	**1.7000e-004**	**0.0000**	**0.5148**	**0.5148**	**1.0000e-005**	**0.0000**	**0.5151**

Mitigated Construction On-Site

	ROG	NOx	CO	SO2	Fugitive PM10	Exhaust PM10	PM10 Total	Fugitive PM2.5	Exhaust PM2.5	PM2.5 Total	Bio- CO2	NBio- CO2	Total CO2	CH4	N2O	CO2e
Category	tons/yr										MT/yr					
Off-Road	5.3800e-003	0.0550	0.0698	1.0000e-004		2.8900e-003	2.8900e-003		2.6600e-003	2.6600e-003	0.0000	9.1680	9.1680	2.9700e-003	0.0000	9.2421
Paving	3.6500e-003					0.0000	0.0000		0.0000	0.0000	0.0000	0.0000	0.0000	0.0000	0.0000	0.0000
Total	**9.0300e-003**	**0.0550**	**0.0698**	**1.0000e-004**		**2.8900e-003**	**2.8900e-003**		**2.6600e-003**	**2.6600e-003**	**0.0000**	**9.1680**	**9.1680**	**2.9700e-003**	**0.0000**	**9.2421**

3.7 Paving - 2022

Mitigated Construction Off-Site

	ROG	NOx	CO	SO2	Fugitive PM10	Exhaust PM10	PM10 Total	Fugitive PM2.5	Exhaust PM2.5	PM2.5 Total	Bio- CO2	NBio- CO2	Total CO2	CH4	N2O	CO2e
Category	tons/yr										MT/yr					
Hauling	0.0000	0.0000	0.0000	0.0000	0.0000	0.0000	0.0000	0.0000	0.0000	0.0000	0.0000	0.0000	0.0000	0.0000	0.0000	0.0000
Vendor	0.0000	0.0000	0.0000	0.0000	0.0000	0.0000	0.0000	0.0000	0.0000	0.0000	0.0000	0.0000	0.0000	0.0000	0.0000	0.0000
Worker	2.3000e-004	1.5000e-004	1.6500e-003	1.0000e-005	6.3000e-004	0.0000	6.4000e-004	1.7000e-004	0.0000	1.7000e-004	0.0000	0.5148	0.5148	1.0000e-005	0.0000	0.5151
Total	**2.3000e-004**	**1.5000e-004**	**1.6500e-003**	**1.0000e-005**	**6.3000e-004**	**0.0000**	**6.4000e-004**	**1.7000e-004**	**0.0000**	**1.7000e-004**	**0.0000**	**0.5148**	**0.5148**	**1.0000e-005**	**0.0000**	**0.5151**

4.0 Operational Detail - Mobile

4.1 Mitigation Measures Mobile

	ROG	NOx	CO	SO2	Fugitive PM10	Exhaust PM10	PM10 Total	Fugitive PM2.5	Exhaust PM2.5	PM2.5 Total	Bio- CO2	NBio- CO2	Total CO2	CH4	N2O	CO2e
Category	tons/yr										MT/yr					
Mitigated	0.3899	1.7560	4.6449	0.0177	1.5961	0.0144	1.6105	0.4284	0.0134	0.4418	0.0000	1,624.7950	1,624.7950	0.0551	0.0000	1,626.1716
Unmitigated	0.3899	1.7560	4.6449	0.0177	1.5961	0.0144	1.6105	0.4284	0.0134	0.4418	0.0000	1,624.7950	1,624.7950	0.0551	0.0000	1,626.1716

4.2 Trip Summary Information

	Average Daily Trip Rate			Unmitigated	Mitigated
Land Use	Weekday	Saturday	Sunday	Annual VMT	Annual VMT
Industrial Park	2,073.10	839.35	246.08	4,288,917	4,288,917
Parking Lot	0.00	0.00	0.00		
Total	2,073.10	839.35	246.08	4,288,917	4,288,917

4.3 Trip Type Information

	Miles			Trip %			Trip Purpose %		
Land Use	H-W or C-W	H-S or C-C	H-O or C-NW	H-W or C-W	H-S or C-C	H-O or C-NW	Primary	Diverted	Pass-by
Industrial Park	9.50	7.30	7.30	59.00	28.00	13.00	79	19	2
Parking Lot	9.50	7.30	7.30	0.00	0.00	0.00	0	0	0

4.4 Fleet Mix

Land Use	LDA	LDT1	LDT2	MDV	LHD1	LHD2	MHD	HHD	OBUS	UBUS	MCY	SBUS	MH
Industrial Park	0.578638	0.038775	0.193686	0.110919	0.015677	0.005341	0.018293	0.026358	0.002641	0.002200	0.005832	0.000891	0.000749
Parking Lot	0.578638	0.038775	0.193686	0.110919	0.015677	0.005341	0.018293	0.026358	0.002641	0.002200	0.005832	0.000891	0.000749

5.0 Energy Detail

Historical Energy Use: N

5.1 Mitigation Measures Energy

Exceed Title 24

	ROG	NOx	CO	SO2	Fugitive PM10	Exhaust PM10	PM10 Total	Fugitive PM2.5	Exhaust PM2.5	PM2.5 Total	Bio- CO2	NBio- CO2	Total CO2	CH4	N2O	CO2e
Category	tons/yr										MT/yr					
Electricity Mitigated						0.0000	0.0000		0.0000	0.0000	0.0000	1,115.8513	1,115.8513	0.0505	0.0104	1,120.2235
Electricity Unmitigated						0.0000	0.0000		0.0000	0.0000	0.0000	1,236.4706	1,236.4706	0.0559	0.0116	1,241.3155
NaturalGas Mitigated	0.0252	0.2286	0.1920	1.3700e-003		0.0174	0.0174		0.0174	0.0174	0.0000	248.8546	248.8546	4.7700e-003	4.5600e-003	250.3334
NaturalGas Unmitigated	0.0351	0.3194	0.2683	1.9200e-003		0.0243	0.0243		0.0243	0.0243	0.0000	347.7200	347.7200	6.6600e-003	6.3700e-003	349.7863

5.2 Energy by Land Use - NaturalGas

Unmitigated

	NaturalGas Use	ROG	NOx	CO	SO2	Fugitive PM10	Exhaust PM10	PM10 Total	Fugitive PM2.5	Exhaust PM2.5	PM2.5 Total	Bio- CO2	NBio- CO2	Total CO2	CH4	N2O	CO2e
Land Use	kBTU/yr	tons/yr										MT/yr					
Industrial Park	6.51603e+006	0.0351	0.3194	0.2683	1.9200e-003		0.0243	0.0243		0.0243	0.0243	0.0000	347.7200	347.7200	6.6600e-003	6.3700e-003	349.7863
Parking Lot	0	0.0000	0.0000	0.0000	0.0000		0.0000	0.0000		0.0000	0.0000	0.0000	0.0000	0.0000	0.0000	0.0000	0.0000
Total		**0.0351**	**0.3194**	**0.2683**	**1.9200e-003**		**0.0243**	**0.0243**		**0.0243**	**0.0243**	**0.0000**	**347.7200**	**347.7200**	**6.6600e-003**	**6.3700e-003**	**349.7863**

Mitigated

	NaturalGas Use	ROG	NOx	CO	SO2	Fugitive PM10	Exhaust PM10	PM10 Total	Fugitive PM2.5	Exhaust PM2.5	PM2.5 Total	Bio- CO2	NBio- CO2	Total CO2	CH4	N2O	CO2e
Land Use	kBTU/yr	tons/yr										MT/yr					
Industrial Park	4.66336e+006	0.0252	0.2286	0.1920	1.3700e-003		0.0174	0.0174		0.0174	0.0174	0.0000	248.8546	248.8546	4.7700e-003	4.5600e-003	250.3334
Parking Lot	0	0.0000	0.0000	0.0000	0.0000		0.0000	0.0000		0.0000	0.0000	0.0000	0.0000	0.0000	0.0000	0.0000	0.0000
Total		**0.0252**	**0.2286**	**0.1920**	**1.3700e-003**		**0.0174**	**0.0174**		**0.0174**	**0.0174**	**0.0000**	**248.8546**	**248.8546**	**4.7700e-003**	**4.5600e-003**	**250.3334**

5.3 Energy by Land Use - Electricity

Unmitigated

	Electricity Use	Total CO2	CH4	N2O	CO2e
Land Use	kWh/yr	MT/yr			
Industrial Park	4.20693e+006	1,223.8451	0.0553	0.0115	1,228.6405
Parking Lot	43400	12.6256	5.7000e-004	1.2000e-004	12.6750
Total		**1,236.4706**	**0.0559**	**0.0116**	**1,241.3155**

Mitigated

	Electricity Use	Total CO2	CH4	N2O	CO2e
Land Use	kWh/yr	MT/yr			
Industrial Park	3.79231e+006	1,103.2257	0.0499	0.0103	1,107.5485
Parking Lot	43400	12.6256	5.7000e-004	1.2000e-004	12.6750
Total		**1,115.8513**	**0.0505**	**0.0104**	**1,120.2235**

6.0 Area Detail

6.1 Mitigation Measures Area

	ROG	NOx	CO	SO2	Fugitive PM10	Exhaust PM10	PM10 Total	Fugitive PM2.5	Exhaust PM2.5	PM2.5 Total	Bio- CO2	NBio- CO2	Total CO2	CH4	N2O	CO2e
Category	tons/yr										MT/yr					
Mitigated	1.5026	5.0000e-005	5.9500e-003	0.0000		2.0000e-005	2.0000e-005		2.0000e-005	2.0000e-005	0.0000	0.0116	0.0116	3.0000e-005	0.0000	0.0123
Unmitigated	1.5026	5.0000e-005	5.9500e-003	0.0000		2.0000e-005	2.0000e-005		2.0000e-005	2.0000e-005	0.0000	0.0116	0.0116	3.0000e-005	0.0000	0.0123

6.2 Area by SubCategory

Unmitigated

	ROG	NOx	CO	SO2	Fugitive PM10	Exhaust PM10	PM10 Total	Fugitive PM2.5	Exhaust PM2.5	PM2.5 Total	Bio- CO2	NBio- CO2	Total CO2	CH4	N2O	CO2e
SubCategory	tons/yr										MT/yr					
Architectural Coating	0.1775					0.0000	0.0000		0.0000	0.0000	0.0000	0.0000	0.0000	0.0000	0.0000	0.0000
Consumer Products	1.3245					0.0000	0.0000		0.0000	0.0000	0.0000	0.0000	0.0000	0.0000	0.0000	0.0000
Landscaping	5.5000e-004	5.0000e-005	5.9500e-003	0.0000		2.0000e-005	2.0000e-005		2.0000e-005	2.0000e-005	0.0000	0.0116	0.0116	3.0000e-005	0.0000	0.0123
Total	**1.5026**	**5.0000e-005**	**5.9500e-003**	**0.0000**		**2.0000e-005**	**2.0000e-005**		**2.0000e-005**	**2.0000e-005**	**0.0000**	**0.0116**	**0.0116**	**3.0000e-005**	**0.0000**	**0.0123**

6.2 Area by SubCategory

Mitigated

	ROG	NOx	CO	SO2	Fugitive PM10	Exhaust PM10	PM10 Total	Fugitive PM2.5	Exhaust PM2.5	PM2.5 Total	Bio- CO2	NBio- CO2	Total CO2	CH4	N2O	CO2e
SubCategory	tons/yr										MT/yr					
Architectural Coating	0.1775					0.0000	0.0000		0.0000	0.0000	0.0000	0.0000	0.0000	0.0000	0.0000	0.0000
Consumer Products	1.3245					0.0000	0.0000		0.0000	0.0000	0.0000	0.0000	0.0000	0.0000	0.0000	0.0000
Landscaping	5.5000e-004	5.0000e-005	5.9500e-003	0.0000		2.0000e-005	2.0000e-005		2.0000e-005	2.0000e-005	0.0000	0.0116	0.0116	3.0000e-005	0.0000	0.0123
Total	**1.5026**	**5.0000e-005**	**5.9500e-003**	**0.0000**		**2.0000e-005**	**2.0000e-005**		**2.0000e-005**	**2.0000e-005**	**0.0000**	**0.0116**	**0.0116**	**3.0000e-005**	**0.0000**	**0.0123**

7.0 Water Detail

7.1 Mitigation Measures Water

Install Low Flow Bathroom Faucet

Install Low Flow Kitchen Faucet

Install Low Flow Toilet

Install Low Flow Shower

Use Water Efficient Irrigation System

	Total CO2	CH4	N2O	CO2e
Category	MT/yr			
Mitigated	123.8735	0.0805	0.0489	140.4694
Unmitigated	154.1674	0.1007	0.0612	174.9096

7.2 Water by Land Use

Unmitigated

	Indoor/Outdoor Use	Total CO2	CH4	N2O	CO2e
Land Use	Mgal	MT/yr			
Industrial Park	77.9521 / 3.81246	154.1674	0.1007	0.0612	174.9096
Parking Lot	0 / 0	0.0000	0.0000	0.0000	0.0000
Total		**154.1674**	**0.1007**	**0.0612**	**174.9096**

7.2 Water by Land Use

Mitigated

	Indoor/Outdoor Use	Total CO2	CH4	N2O	CO2e
Land Use	Mgal	MT/yr			
Industrial Park	62.3616 / 3.5799	123.8735	0.0805	0.0489	140.4694
Parking Lot	0 / 0	0.0000	0.0000	0.0000	0.0000
Total		**123.8735**	**0.0805**	**0.0489**	**140.4694**

8.0 Waste Detail

8.1 Mitigation Measures Waste

Category/Year

	Total CO2	CH4	N2O	CO2e
	MT/yr			
Mitigated	39.0311	2.3067	0.0000	96.6979
Unmitigated	39.0311	2.3067	0.0000	96.6979

8.2 Waste by Land Use

Unmitigated

	Waste Disposed	Total CO2	CH4	N2O	CO2e
Land Use	tons	MT/yr			
Industrial Park	192.28	39.0311	2.3067	0.0000	96.6979
Parking Lot	0	0.0000	0.0000	0.0000	0.0000
Total		**39.0311**	**2.3067**	**0.0000**	**96.6979**

Mitigated

	Waste Disposed	Total CO2	CH4	N2O	CO2e
Land Use	tons	MT/yr			
Industrial Park	192.28	39.0311	2.3067	0.0000	96.6979
Parking Lot	0	0.0000	0.0000	0.0000	0.0000
Total		**39.0311**	**2.3067**	**0.0000**	**96.6979**

9.0 Operational Offroad

Equipment Type	Number	Hours/Day	Days/Year	Horse Power	Load Factor	Fuel Type

10.0 Stationary Equipment

Fire Pumps and Emergency Generators

Equipment Type	Number	Hours/Day	Hours/Year	Horse Power	Load Factor	Fuel Type

Boilers

Equipment Type	Number	Heat Input/Day	Heat Input/Year	Boiler Rating	Fuel Type

User Defined Equipment

Equipment Type	Number

11.0 Vegetation

Clawiter Industrial Project - Building 4 - 2023

Bay Area AQMD Air District, Winter

1.0 Project Characteristics

1.1 Land Usage

Land Uses	Size	Metric	Lot Acreage	Floor Surface Area	Population
Industrial Park	273.53	1000sqft	6.28	273,526.00	0
Parking Lot	50.00	Space	0.45	20,000.00	0

1.2 Other Project Characteristics

Urbanization	Urban	**Wind Speed (m/s)**	2.2	**Precipitation Freq (Days)**	64
Climate Zone	5			**Operational Year**	2023
Utility Company	Pacific Gas & Electric Company				
CO2 Intensity (lb/MWhr)	641.35	**CH4 Intensity (lb/MWhr)**	0.029	**N2O Intensity (lb/MWhr)**	0.006

1.3 User Entered Comments & Non-Default Data

Project Characteristics -

Land Use - SF and parking for building 4

Construction Phase - Applicant specified 15-month schedule. Extended AC to overlap BC for mroe realistic conditions.

Off-road Equipment - Emissions from equipment calculated in model for Buildings 1 to 3

Off-road Equipment - Emissions from equipment calculated in model for Buildings 1 to 3

Off-road Equipment - Emissions from equipment calculated in model for Buildings 1 to 3

Off-road Equipment - Emissions from equipment calculated in model for Buildings 1 to 3

Off-road Equipment - Emissions from equipment calculated in model for Buildings 1 to 3

Off-road Equipment - Emissions from equipment calculated in model for Buildings 1 to 3

Trips and VMT - Emissions from trips calculated in model for Buildings 1 to 3 except for BC and AC trips

Demolition - Emissions from demolition calculated in model for Buildings 1 to 3

Grading - Emissions from soil export calculated in model for Buildings 1 to 3. Retained default acres of grading for fugitive dust emission estimate.

Architectural Coating - BAAQMD Regulation 8, Rule 3

Vehicle Trips - Mobile source emissions estimated in Buildings 1 to 3 run

Area Coating - BAAQMD Regulation 8, Rule 3

Energy Use - Electricity emissions calculated separately

Water And Wastewater - All wastewater treated at Hayward WWTP with aerobic processes. Additional one million gallons added to indoor water use for cooling purposes. Outdoor water use in model for Buildings 1 to 3

Solid Waste - 77% diversion rate for Hayward

Construction Off-road Equipment Mitigation - Hayward Municipal Code 10-8.32

Mobile Land Use Mitigation -

Water Mitigation - Applicant-specified sustainability features

Fleet Mix -

Energy Mitigation - Title 24 reduced by 30% for 2019 Standards

Table Name	Column Name	Default Value	New Value
tblArchitecturalCoating	EF_Parking	150.00	100.00
tblAreaCoating	Area_EF_Nonresidential_Exterior	150	100

tblConstructionPhase	NumDays	20.00	30.00
tblConstructionPhase	NumDays	230.00	265.00
tblConstructionPhase	NumDays	20.00	130.00
tblEnergyUse	LightingElect	3.58	0.00
tblEnergyUse	NT24E	4.80	0.00
tblEnergyUse	T24E	4.10	0.00
tblGrading	AcresOfGrading	0.00	15.00
tblLandUse	LandUseSquareFeet	273,530.00	273,526.00
tblOffRoadEquipment	UsageHours	6.00	0.00
tblOffRoadEquipment	UsageHours	8.00	0.00
tblOffRoadEquipment	UsageHours	7.00	0.00
tblOffRoadEquipment	UsageHours	8.00	0.00
tblOffRoadEquipment	UsageHours	8.00	0.00
tblOffRoadEquipment	UsageHours	8.00	0.00
tblOffRoadEquipment	UsageHours	8.00	0.00
tblOffRoadEquipment	UsageHours	8.00	0.00
tblOffRoadEquipment	UsageHours	8.00	0.00
tblOffRoadEquipment	UsageHours	8.00	0.00
tblOffRoadEquipment	UsageHours	8.00	0.00
tblOffRoadEquipment	UsageHours	8.00	0.00
tblOffRoadEquipment	UsageHours	8.00	0.00
tblOffRoadEquipment	UsageHours	7.00	0.00
tblOffRoadEquipment	UsageHours	8.00	0.00
tblOffRoadEquipment	UsageHours	8.00	0.00
tblOffRoadEquipment	UsageHours	8.00	0.00
tblSolidWaste	SolidWasteGenerationRate	339.18	78.01

tblTripsAndVMT	WorkerTripNumber	15.00	0.00
tblTripsAndVMT	WorkerTripNumber	18.00	0.00
tblTripsAndVMT	WorkerTripNumber	15.00	0.00
tblTripsAndVMT	WorkerTripNumber	15.00	0.00
tblVehicleTrips	ST_TR	2.49	0.00
tblVehicleTrips	SU_TR	0.73	0.00
tblVehicleTrips	WD_TR	6.83	0.00
tblWater	AerobicPercent	87.46	100.00
tblWater	AnaerobicandFacultativeLagoonsPercent	2.21	0.00
tblWater	IndoorWaterUseRate	63,253,812.50	64,253,812.50
tblWater	SepticTankPercent	10.33	0.00

2.0 Emissions Summary

2.1 Overall Construction (Maximum Daily Emission)

Unmitigated Construction

	ROG	NOx	CO	SO2	Fugitive PM10	Exhaust PM10	PM10 Total	Fugitive PM2.5	Exhaust PM2.5	PM2.5 Total	Bio- CO2	NBio- CO2	Total CO2	CH4	N2O	CO2e
Year	lb/day										lb/day					
2021	22.6472	5.3466	4.7457	0.0236	1.5407	0.0188	1.5595	0.4160	0.0177	0.4337	0.0000	2,431.5245	2,431.5245	0.0949	0.0000	2,433.8960
2022	22.6619	5.0446	4.3850	0.0231	1.5407	0.0171	1.5578	0.4160	0.0161	0.4321	0.0000	2,378.5589	2,378.5589	0.0892	0.0000	2,380.7877
Maximum	**22.6619**	**5.3466**	**4.7457**	**0.0236**	**1.5407**	**0.0188**	**1.5595**	**0.4160**	**0.0177**	**0.4337**	**0.0000**	**2,431.5245**	**2,431.5245**	**0.0949**	**0.0000**	**2,433.8960**

Mitigated Construction

	ROG	NOx	CO	SO2	Fugitive PM10	Exhaust PM10	PM10 Total	Fugitive PM2.5	Exhaust PM2.5	PM2.5 Total	Bio- CO2	NBio- CO2	Total CO2	CH4	N2O	CO2e
Year	lb/day										lb/day					
2021	22.6472	5.3466	4.7457	0.0236	1.5407	0.0188	1.5595	0.4160	0.0177	0.4337	0.0000	2,431.5245	2,431.5245	0.0949	0.0000	2,433.8960
2022	22.6619	5.0446	4.3850	0.0231	1.5407	0.0171	1.5578	0.4160	0.0161	0.4321	0.0000	2,378.5589	2,378.5589	0.0892	0.0000	2,380.7877
Maximum	**22.6619**	**5.3466**	**4.7457**	**0.0236**	**1.5407**	**0.0188**	**1.5595**	**0.4160**	**0.0177**	**0.4337**	**0.0000**	**2,431.5245**	**2,431.5245**	**0.0949**	**0.0000**	**2,433.8960**

	ROG	**NOx**	**CO**	**SO2**	**Fugitive PM10**	**Exhaust PM10**	**PM10 Total**	**Fugitive PM2.5**	**Exhaust PM2.5**	**PM2.5 Total**	**Bio- CO2**	**NBio-CO2**	**Total CO2**	**CH4**	**N20**	**CO2e**
Percent Reduction	**0.00**	**0.00**	**0.00**	**0.00**	**0.00**	**0.00**	**0.00**	**0.00**	**0.00**	**0.00**	**0.00**	**0.00**	**0.00**	**0.00**	**0.00**	**0.00**

2.2 Overall Operational

Unmitigated Operational

	ROG	NOx	CO	SO2	Fugitive PM10	Exhaust PM10	PM10 Total	Fugitive PM2.5	Exhaust PM2.5	PM2.5 Total	Bio- CO2	NBio- CO2	Total CO2	CH4	N2O	CO2e
Category	lb/day										lb/day					
Area	6.5606	3.0000e-004	0.0330	0.0000		1.2000e-004	1.2000e-004		1.2000e-004	1.2000e-004		0.0708	0.0708	1.9000e-004		0.0755
Energy	0.1562	1.4202	1.1929	8.5200e-003		0.1079	0.1079		0.1079	0.1079		1,704.1926	1,704.1926	0.0327	0.0312	1,714.3198
Mobile	0.0000	0.0000	0.0000	0.0000	0.0000	0.0000	0.0000	0.0000	0.0000	0.0000		0.0000	0.0000	0.0000		0.0000
Total	**6.7168**	**1.4205**	**1.2260**	**8.5200e-003**	**0.0000**	**0.1081**	**0.1081**	**0.0000**	**0.1081**	**0.1081**		**1,704.2634**	**1,704.2634**	**0.0329**	**0.0312**	**1,714.3952**

Mitigated Operational

	ROG	NOx	CO	SO2	Fugitive PM10	Exhaust PM10	PM10 Total	Fugitive PM2.5	Exhaust PM2.5	PM2.5 Total	Bio- CO2	NBio- CO2	Total CO2	CH4	N2O	CO2e
Category	lb/day										lb/day					
Area	6.5606	3.0000e-004	0.0330	0.0000		1.2000e-004	1.2000e-004		1.2000e-004	1.2000e-004		0.0708	0.0708	1.9000e-004		0.0755
Energy	0.1118	1.0164	0.8538	6.1000e-003		0.0772	0.0772		0.0772	0.0772		1,219.6483	1,219.6483	0.0234	0.0224	1,226.8960
Mobile	0.0000	0.0000	0.0000	0.0000	0.0000	0.0000	0.0000	0.0000	0.0000	0.0000		0.0000	0.0000	0.0000		0.0000
Total	**6.6724**	**1.0167**	**0.8868**	**6.1000e-003**	**0.0000**	**0.0774**	**0.0774**	**0.0000**	**0.0774**	**0.0774**		**1,219.7191**	**1,219.7191**	**0.0236**	**0.0224**	**1,226.9715**

	ROG	NOx	CO	SO2	Fugitive PM10	Exhaust PM10	PM10 Total	Fugitive PM2.5	Exhaust PM2.5	PM2.5 Total	Bio- CO2	NBio-CO2	Total CO2	CH4	N20	CO2e
Percent Reduction	**0.66**	**28.43**	**27.67**	**28.40**	**0.00**	**28.40**	**28.40**	**0.00**	**28.40**	**28.40**	**0.00**	**28.43**	**28.43**	**28.25**	**28.43**	**28.43**

3.0 Construction Detail

Construction Phase

Phase Number	Phase Name	Phase Type	Start Date	End Date	Num Days Week	Num Days	Phase Description
1	Demolition	Demolition	1/1/2021	1/28/2021	5	20	
2	Site Preparation	Site Preparation	1/29/2021	2/11/2021	5	10	
3	Grading	Grading	2/12/2021	3/25/2021	5	30	
4	Building Construction	Building Construction	3/26/2021	3/31/2022	5	265	
5	Architectural Coating	Architectural Coating	10/1/2021	3/31/2022	5	130	
6	Paving	Paving	3/4/2022	3/31/2022	5	20	

Acres of Grading (Site Preparation Phase): 0

Acres of Grading (Grading Phase): 15

Acres of Paving: 0.45

Residential Indoor: 0; Residential Outdoor: 0; Non-Residential Indoor: 410,289; Non-Residential Outdoor: 136,763; Striped Parking Area: 1,200 (Architectural Coating – sqft)

OffRoad Equipment

Clawiter Industrial Project - Building 4 - 2023 - Bay Area AQMD Air District, Winter

Phase Name	Offroad Equipment Type	Amount	Usage Hours	Horse Power	Load Factor
Demolition	Concrete/Industrial Saws	1	0.00	81	0.73
Demolition	Excavators	3	0.00	158	0.38
Demolition	Rubber Tired Dozers	2	0.00	247	0.40
Site Preparation	Rubber Tired Dozers	3	0.00	247	0.40
Site Preparation	Tractors/Loaders/Backhoes	4	0.00	97	0.37
Grading	Excavators	1	0.00	158	0.38
Grading	Graders	1	0.00	187	0.41
Grading	Rubber Tired Dozers	1	0.00	247	0.40
Grading	Tractors/Loaders/Backhoes	3	0.00	97	0.37
Building Construction	Cranes	1	0.00	231	0.29
Building Construction	Forklifts	3	0.00	89	0.20
Building Construction	Generator Sets	1	0.00	84	0.74
Building Construction	Tractors/Loaders/Backhoes	3	0.00	97	0.37
Building Construction	Welders	1	0.00	46	0.45
Architectural Coating	Air Compressors	1	0.00	78	0.48
Paving	Pavers	2	0.00	130	0.42
Paving	Paving Equipment	2	0.00	132	0.36
Paving	Rollers	2	0.00	80	0.38

Trips and VMT

Phase Name	Offroad Equipment Count	Worker Trip Number	Vendor Trip Number	Hauling Trip Number	Worker Trip Length	Vendor Trip Length	Hauling Trip Length	Worker Vehicle Class	Vendor Vehicle Class	Hauling Vehicle Class
Demolition	6	0.00	0.00	0.00	10.80	7.30	20.00	LD_Mix	HDT_Mix	HHDT
Site Preparation	7	0.00	0.00	0.00	10.80	7.30	20.00	LD_Mix	HDT_Mix	HHDT
Grading	6	0.00	0.00	0.00	10.80	7.30	20.00	LD_Mix	HDT_Mix	HHDT
Building Construction	9	123.00	48.00	0.00	10.80	7.30	20.00	LD_Mix	HDT_Mix	HHDT
Architectural Coating	1	25.00	0.00	0.00	10.80	7.30	20.00	LD_Mix	HDT_Mix	HHDT
Paving	6	0.00	0.00	0.00	10.80	7.30	20.00	LD_Mix	HDT_Mix	HHDT

3.1 Mitigation Measures Construction

Water Exposed Area

3.2 Demolition - 2021

Unmitigated Construction On-Site

	ROG	NOx	CO	SO2	Fugitive PM10	Exhaust PM10	PM10 Total	Fugitive PM2.5	Exhaust PM2.5	PM2.5 Total	Bio- CO2	NBio- CO2	Total CO2	CH4	N2O	CO2e
Category	lb/day										lb/day					
Fugitive Dust					0.0000	0.0000	0.0000	0.0000	0.0000	0.0000			0.0000			0.0000
Off-Road	0.0000	0.0000	0.0000	0.0000		0.0000	0.0000		0.0000	0.0000		0.0000	0.0000	0.0000		0.0000
Total	**0.0000**	**0.0000**	**0.0000**	**0.0000**	**0.0000**	**0.0000**	**0.0000**	**0.0000**	**0.0000**	**0.0000**		**0.0000**	**0.0000**	**0.0000**		**0.0000**

3.2 Demolition - 2021

Unmitigated Construction Off-Site

	ROG	NOx	CO	SO2	Fugitive PM10	Exhaust PM10	PM10 Total	Fugitive PM2.5	Exhaust PM2.5	PM2.5 Total	Bio- CO2	NBio- CO2	Total CO2	CH4	N2O	CO2e
Category	lb/day										lb/day					
Hauling	0.0000	0.0000	0.0000	0.0000	0.0000	0.0000	0.0000	0.0000	0.0000	0.0000		0.0000	0.0000	0.0000		0.0000
Vendor	0.0000	0.0000	0.0000	0.0000	0.0000	0.0000	0.0000	0.0000	0.0000	0.0000		0.0000	0.0000	0.0000		0.0000
Worker	0.0000	0.0000	0.0000	0.0000	0.0000	0.0000	0.0000	0.0000	0.0000	0.0000		0.0000	0.0000	0.0000		0.0000
Total	**0.0000**	**0.0000**	**0.0000**	**0.0000**	**0.0000**	**0.0000**	**0.0000**	**0.0000**	**0.0000**	**0.0000**		**0.0000**	**0.0000**	**0.0000**		**0.0000**

Mitigated Construction On-Site

	ROG	NOx	CO	SO2	Fugitive PM10	Exhaust PM10	PM10 Total	Fugitive PM2.5	Exhaust PM2.5	PM2.5 Total	Bio- CO2	NBio- CO2	Total CO2	CH4	N2O	CO2e
Category	lb/day										lb/day					
Fugitive Dust					0.0000	0.0000	0.0000	0.0000	0.0000	0.0000			0.0000			0.0000
Off-Road	0.0000	0.0000	0.0000	0.0000		0.0000	0.0000		0.0000	0.0000	0.0000	0.0000	0.0000	0.0000		0.0000
Total	**0.0000**	**0.0000**	**0.0000**	**0.0000**	**0.0000**	**0.0000**	**0.0000**	**0.0000**	**0.0000**	**0.0000**	**0.0000**	**0.0000**	**0.0000**	**0.0000**		**0.0000**

3.2 Demolition - 2021

Mitigated Construction Off-Site

	ROG	NOx	CO	SO2	Fugitive PM10	Exhaust PM10	PM10 Total	Fugitive PM2.5	Exhaust PM2.5	PM2.5 Total	Bio- CO2	NBio- CO2	Total CO2	CH4	N2O	CO2e
Category	lb/day										lb/day					
Hauling	0.0000	0.0000	0.0000	0.0000	0.0000	0.0000	0.0000	0.0000	0.0000	0.0000		0.0000	0.0000	0.0000		0.0000
Vendor	0.0000	0.0000	0.0000	0.0000	0.0000	0.0000	0.0000	0.0000	0.0000	0.0000		0.0000	0.0000	0.0000		0.0000
Worker	0.0000	0.0000	0.0000	0.0000	0.0000	0.0000	0.0000	0.0000	0.0000	0.0000		0.0000	0.0000	0.0000		0.0000
Total	**0.0000**	**0.0000**	**0.0000**	**0.0000**	**0.0000**	**0.0000**	**0.0000**	**0.0000**	**0.0000**	**0.0000**		**0.0000**	**0.0000**	**0.0000**		**0.0000**

3.3 Site Preparation - 2021

Unmitigated Construction On-Site

	ROG	NOx	CO	SO2	Fugitive PM10	Exhaust PM10	PM10 Total	Fugitive PM2.5	Exhaust PM2.5	PM2.5 Total	Bio- CO2	NBio- CO2	Total CO2	CH4	N2O	CO2e
Category	lb/day										lb/day					
Fugitive Dust					0.0000	0.0000	0.0000	0.0000	0.0000	0.0000			0.0000			0.0000
Off-Road	0.0000	0.0000	0.0000	0.0000		0.0000	0.0000		0.0000	0.0000		0.0000	0.0000	0.0000		0.0000
Total	**0.0000**	**0.0000**	**0.0000**	**0.0000**	**0.0000**	**0.0000**	**0.0000**	**0.0000**	**0.0000**	**0.0000**		**0.0000**	**0.0000**	**0.0000**		**0.0000**

3.3 Site Preparation - 2021

Unmitigated Construction Off-Site

	ROG	NOx	CO	SO2	Fugitive PM10	Exhaust PM10	PM10 Total	Fugitive PM2.5	Exhaust PM2.5	PM2.5 Total	Bio- CO2	NBio- CO2	Total CO2	CH4	N2O	CO2e
Category	lb/day										lb/day					
Hauling	0.0000	0.0000	0.0000	0.0000	0.0000	0.0000	0.0000	0.0000	0.0000	0.0000		0.0000	0.0000	0.0000		0.0000
Vendor	0.0000	0.0000	0.0000	0.0000	0.0000	0.0000	0.0000	0.0000	0.0000	0.0000		0.0000	0.0000	0.0000		0.0000
Worker	0.0000	0.0000	0.0000	0.0000	0.0000	0.0000	0.0000	0.0000	0.0000	0.0000		0.0000	0.0000	0.0000		0.0000
Total	**0.0000**	**0.0000**	**0.0000**	**0.0000**	**0.0000**	**0.0000**	**0.0000**	**0.0000**	**0.0000**	**0.0000**		**0.0000**	**0.0000**	**0.0000**		**0.0000**

Mitigated Construction On-Site

	ROG	NOx	CO	SO2	Fugitive PM10	Exhaust PM10	PM10 Total	Fugitive PM2.5	Exhaust PM2.5	PM2.5 Total	Bio- CO2	NBio- CO2	Total CO2	CH4	N2O	CO2e
Category	lb/day										lb/day					
Fugitive Dust					0.0000	0.0000	0.0000	0.0000	0.0000	0.0000			0.0000			0.0000
Off-Road	0.0000	0.0000	0.0000	0.0000		0.0000	0.0000		0.0000	0.0000	0.0000	0.0000	0.0000	0.0000		0.0000
Total	**0.0000**	**0.0000**	**0.0000**	**0.0000**	**0.0000**	**0.0000**	**0.0000**	**0.0000**	**0.0000**	**0.0000**	**0.0000**	**0.0000**	**0.0000**	**0.0000**		**0.0000**

3.3 Site Preparation - 2021

Mitigated Construction Off-Site

	ROG	NOx	CO	SO2	Fugitive PM10	Exhaust PM10	PM10 Total	Fugitive PM2.5	Exhaust PM2.5	PM2.5 Total	Bio- CO2	NBio- CO2	Total CO2	CH4	N2O	CO2e
Category	lb/day										lb/day					
Hauling	0.0000	0.0000	0.0000	0.0000	0.0000	0.0000	0.0000	0.0000	0.0000	0.0000		0.0000	0.0000	0.0000		0.0000
Vendor	0.0000	0.0000	0.0000	0.0000	0.0000	0.0000	0.0000	0.0000	0.0000	0.0000		0.0000	0.0000	0.0000		0.0000
Worker	0.0000	0.0000	0.0000	0.0000	0.0000	0.0000	0.0000	0.0000	0.0000	0.0000		0.0000	0.0000	0.0000		0.0000
Total	**0.0000**	**0.0000**	**0.0000**	**0.0000**	**0.0000**	**0.0000**	**0.0000**	**0.0000**	**0.0000**	**0.0000**		**0.0000**	**0.0000**	**0.0000**		**0.0000**

3.4 Grading - 2021

Unmitigated Construction On-Site

	ROG	NOx	CO	SO2	Fugitive PM10	Exhaust PM10	PM10 Total	Fugitive PM2.5	Exhaust PM2.5	PM2.5 Total	Bio- CO2	NBio- CO2	Total CO2	CH4	N2O	CO2e
Category	lb/day										lb/day					
Fugitive Dust					0.5303	0.0000	0.5303	0.0573	0.0000	0.0573			0.0000			0.0000
Off-Road	0.0000	0.0000	0.0000	0.0000		0.0000	0.0000		0.0000	0.0000		0.0000	0.0000	0.0000		0.0000
Total	**0.0000**	**0.0000**	**0.0000**	**0.0000**	**0.5303**	**0.0000**	**0.5303**	**0.0573**	**0.0000**	**0.0573**		**0.0000**	**0.0000**	**0.0000**		**0.0000**

3.4 Grading - 2021

Unmitigated Construction Off-Site

	ROG	NOx	CO	SO2	Fugitive PM10	Exhaust PM10	PM10 Total	Fugitive PM2.5	Exhaust PM2.5	PM2.5 Total	Bio- CO2	NBio- CO2	Total CO2	CH4	N2O	CO2e
Category	lb/day										lb/day					
Hauling	0.0000	0.0000	0.0000	0.0000	0.0000	0.0000	0.0000	0.0000	0.0000	0.0000		0.0000	0.0000	0.0000		0.0000
Vendor	0.0000	0.0000	0.0000	0.0000	0.0000	0.0000	0.0000	0.0000	0.0000	0.0000		0.0000	0.0000	0.0000		0.0000
Worker	0.0000	0.0000	0.0000	0.0000	0.0000	0.0000	0.0000	0.0000	0.0000	0.0000		0.0000	0.0000	0.0000		0.0000
Total	**0.0000**	**0.0000**	**0.0000**	**0.0000**	**0.0000**	**0.0000**	**0.0000**	**0.0000**	**0.0000**	**0.0000**		**0.0000**	**0.0000**	**0.0000**		**0.0000**

Mitigated Construction On-Site

	ROG	NOx	CO	SO2	Fugitive PM10	Exhaust PM10	PM10 Total	Fugitive PM2.5	Exhaust PM2.5	PM2.5 Total	Bio- CO2	NBio- CO2	Total CO2	CH4	N2O	CO2e
Category	lb/day										lb/day					
Fugitive Dust					0.2386	0.0000	0.2386	0.0258	0.0000	0.0258			0.0000			0.0000
Off-Road	0.0000	0.0000	0.0000	0.0000		0.0000	0.0000		0.0000	0.0000	0.0000	0.0000	0.0000	0.0000		0.0000
Total	**0.0000**	**0.0000**	**0.0000**	**0.0000**	**0.2386**	**0.0000**	**0.2386**	**0.0258**	**0.0000**	**0.0258**	**0.0000**	**0.0000**	**0.0000**	**0.0000**		**0.0000**

3.4 Grading - 2021

Mitigated Construction Off-Site

	ROG	NOx	CO	SO2	Fugitive PM10	Exhaust PM10	PM10 Total	Fugitive PM2.5	Exhaust PM2.5	PM2.5 Total	Bio- CO2	NBio- CO2	Total CO2	CH4	N2O	CO2e
Category	lb/day										lb/day					
Hauling	0.0000	0.0000	0.0000	0.0000	0.0000	0.0000	0.0000	0.0000	0.0000	0.0000		0.0000	0.0000	0.0000		0.0000
Vendor	0.0000	0.0000	0.0000	0.0000	0.0000	0.0000	0.0000	0.0000	0.0000	0.0000		0.0000	0.0000	0.0000		0.0000
Worker	0.0000	0.0000	0.0000	0.0000	0.0000	0.0000	0.0000	0.0000	0.0000	0.0000		0.0000	0.0000	0.0000		0.0000
Total	**0.0000**	**0.0000**	**0.0000**	**0.0000**	**0.0000**	**0.0000**	**0.0000**	**0.0000**	**0.0000**	**0.0000**		**0.0000**	**0.0000**	**0.0000**		**0.0000**

3.5 Building Construction - 2021

Unmitigated Construction On-Site

	ROG	NOx	CO	SO2	Fugitive PM10	Exhaust PM10	PM10 Total	Fugitive PM2.5	Exhaust PM2.5	PM2.5 Total	Bio- CO2	NBio- CO2	Total CO2	CH4	N2O	CO2e
Category	lb/day										lb/day					
Off-Road	0.0000	0.0000	0.0000	0.0000		0.0000	0.0000		0.0000	0.0000		0.0000	0.0000	0.0000		0.0000
Total	**0.0000**	**0.0000**	**0.0000**	**0.0000**		**0.0000**	**0.0000**		**0.0000**	**0.0000**		**0.0000**	**0.0000**	**0.0000**		**0.0000**

3.5 Building Construction - 2021

Unmitigated Construction Off-Site

	ROG	NOx	CO	SO2	Fugitive PM10	Exhaust PM10	PM10 Total	Fugitive PM2.5	Exhaust PM2.5	PM2.5 Total	Bio- CO2	NBio- CO2	Total CO2	CH4	N2O	CO2e
Category	lb/day										lb/day					
Hauling	0.0000	0.0000	0.0000	0.0000	0.0000	0.0000	0.0000	0.0000	0.0000	0.0000		0.0000	0.0000	0.0000		0.0000
Vendor	0.1577	5.0030	1.3445	0.0128	0.3249	0.0111	0.3360	0.0935	0.0106	0.1042		1,351.8103	1,351.8103	0.0704		1,353.5710
Worker	0.4190	0.2855	2.8267	9.0000e-003	1.0104	6.3600e-003	1.0168	0.2680	5.8600e-003	0.2739		897.3301	897.3301	0.0203		897.8377
Total	**0.5767**	**5.2885**	**4.1711**	**0.0218**	**1.3353**	**0.0175**	**1.3528**	**0.3615**	**0.0165**	**0.3780**		**2,249.1404**	**2,249.1404**	**0.0907**		**2,251.4087**

Mitigated Construction On-Site

	ROG	NOx	CO	SO2	Fugitive PM10	Exhaust PM10	PM10 Total	Fugitive PM2.5	Exhaust PM2.5	PM2.5 Total	Bio- CO2	NBio- CO2	Total CO2	CH4	N2O	CO2e
Category	lb/day										lb/day					
Off-Road	0.0000	0.0000	0.0000	0.0000		0.0000	0.0000		0.0000	0.0000	0.0000	0.0000	0.0000	0.0000		0.0000
Total	**0.0000**	**0.0000**	**0.0000**	**0.0000**		**0.0000**	**0.0000**		**0.0000**	**0.0000**	**0.0000**	**0.0000**	**0.0000**	**0.0000**		**0.0000**

3.5 Building Construction - 2021

Mitigated Construction Off-Site

	ROG	NOx	CO	SO2	Fugitive PM10	Exhaust PM10	PM10 Total	Fugitive PM2.5	Exhaust PM2.5	PM2.5 Total	Bio- CO2	NBio- CO2	Total CO2	CH4	N2O	CO2e
Category	lb/day										lb/day					
Hauling	0.0000	0.0000	0.0000	0.0000	0.0000	0.0000	0.0000	0.0000	0.0000	0.0000		0.0000	0.0000	0.0000		0.0000
Vendor	0.1577	5.0030	1.3445	0.0128	0.3249	0.0111	0.3360	0.0935	0.0106	0.1042		1,351.8103	1,351.8103	0.0704		1,353.5710
Worker	0.4190	0.2855	2.8267	9.0000e-003	1.0104	6.3600e-003	1.0168	0.2680	5.8600e-003	0.2739		897.3301	897.3301	0.0203		897.8377
Total	**0.5767**	**5.2885**	**4.1711**	**0.0218**	**1.3353**	**0.0175**	**1.3528**	**0.3615**	**0.0165**	**0.3780**		**2,249.1404**	**2,249.1404**	**0.0907**		**2,251.4087**

3.5 Building Construction - 2022

Unmitigated Construction On-Site

	ROG	NOx	CO	SO2	Fugitive PM10	Exhaust PM10	PM10 Total	Fugitive PM2.5	Exhaust PM2.5	PM2.5 Total	Bio- CO2	NBio- CO2	Total CO2	CH4	N2O	CO2e
Category	lb/day										lb/day					
Off-Road	0.0000	0.0000	0.0000	0.0000		0.0000	0.0000		0.0000	0.0000		0.0000	0.0000	0.0000		0.0000
Total	**0.0000**	**0.0000**	**0.0000**	**0.0000**		**0.0000**	**0.0000**		**0.0000**	**0.0000**		**0.0000**	**0.0000**	**0.0000**		**0.0000**

3.5 Building Construction - 2022

Unmitigated Construction Off-Site

	ROG	NOx	CO	SO2	Fugitive PM10	Exhaust PM10	PM10 Total	Fugitive PM2.5	Exhaust PM2.5	PM2.5 Total	Bio- CO2	NBio- CO2	Total CO2	CH4	N2O	CO2e
Category	lb/day										lb/day					
Hauling	0.0000	0.0000	0.0000	0.0000	0.0000	0.0000	0.0000	0.0000	0.0000	0.0000		0.0000	0.0000	0.0000		0.0000
Vendor	0.1470	4.7366	1.2638	0.0126	0.3249	9.6500e-003	0.3346	0.0935	9.2300e-003	0.1028		1,338.4267	1,338.4267	0.0673		1,340.1087
Worker	0.3911	0.2560	2.5939	8.6700e-003	1.0104	6.2100e-003	1.0166	0.2680	5.7200e-003	0.2737		864.4342	864.4342	0.0182		864.8887
Total	**0.5381**	**4.9926**	**3.8578**	**0.0213**	**1.3354**	**0.0159**	**1.3512**	**0.3616**	**0.0150**	**0.3765**		**2,202.8609**	**2,202.8609**	**0.0855**		**2,204.9973**

Mitigated Construction On-Site

	ROG	NOx	CO	SO2	Fugitive PM10	Exhaust PM10	PM10 Total	Fugitive PM2.5	Exhaust PM2.5	PM2.5 Total	Bio- CO2	NBio- CO2	Total CO2	CH4	N2O	CO2e
Category	lb/day										lb/day					
Off-Road	0.0000	0.0000	0.0000	0.0000		0.0000	0.0000		0.0000	0.0000	0.0000	0.0000	0.0000	0.0000		0.0000
Total	**0.0000**	**0.0000**	**0.0000**	**0.0000**		**0.0000**	**0.0000**		**0.0000**	**0.0000**	**0.0000**	**0.0000**	**0.0000**	**0.0000**		**0.0000**

3.5 Building Construction - 2022

Mitigated Construction Off-Site

	ROG	NOx	CO	SO2	Fugitive PM10	Exhaust PM10	PM10 Total	Fugitive PM2.5	Exhaust PM2.5	PM2.5 Total	Bio- CO2	NBio- CO2	Total CO2	CH4	N2O	CO2e
Category	lb/day										lb/day					
Hauling	0.0000	0.0000	0.0000	0.0000	0.0000	0.0000	0.0000	0.0000	0.0000	0.0000		0.0000	0.0000	0.0000		0.0000
Vendor	0.1470	4.7366	1.2638	0.0126	0.3249	9.6500e-003	0.3346	0.0935	9.2300e-003	0.1028		1,338.4267	1,338.4267	0.0673		1,340.1087
Worker	0.3911	0.2560	2.5939	8.6700e-003	1.0104	6.2100e-003	1.0166	0.2680	5.7200e-003	0.2737		864.4342	864.4342	0.0182		864.8887
Total	**0.5381**	**4.9926**	**3.8578**	**0.0213**	**1.3354**	**0.0159**	**1.3512**	**0.3616**	**0.0150**	**0.3765**		**2,202.8609**	**2,202.8609**	**0.0855**		**2,204.9973**

3.6 Architectural Coating - 2021

Unmitigated Construction On-Site

	ROG	NOx	CO	SO2	Fugitive PM10	Exhaust PM10	PM10 Total	Fugitive PM2.5	Exhaust PM2.5	PM2.5 Total	Bio- CO2	NBio- CO2	Total CO2	CH4	N2O	CO2e
Category	lb/day										lb/day					
Archit. Coating	21.9854					0.0000	0.0000		0.0000	0.0000			0.0000			0.0000
Off-Road	0.0000	0.0000	0.0000	0.0000		0.0000	0.0000		0.0000	0.0000		0.0000	0.0000	0.0000		0.0000
Total	**21.9854**	**0.0000**	**0.0000**	**0.0000**		**0.0000**	**0.0000**		**0.0000**	**0.0000**		**0.0000**	**0.0000**	**0.0000**		**0.0000**

3.6 Architectural Coating - 2021

Unmitigated Construction Off-Site

	ROG	NOx	CO	SO2	Fugitive PM10	Exhaust PM10	PM10 Total	Fugitive PM2.5	Exhaust PM2.5	PM2.5 Total	Bio- CO2	NBio- CO2	Total CO2	CH4	N2O	CO2e
Category	lb/day										lb/day					
Hauling	0.0000	0.0000	0.0000	0.0000	0.0000	0.0000	0.0000	0.0000	0.0000	0.0000		0.0000	0.0000	0.0000		0.0000
Vendor	0.0000	0.0000	0.0000	0.0000	0.0000	0.0000	0.0000	0.0000	0.0000	0.0000		0.0000	0.0000	0.0000		0.0000
Worker	0.0852	0.0580	0.5745	1.8300e-003	0.2054	1.2900e-003	0.2067	0.0545	1.1900e-003	0.0557		182.3842	182.3842	4.1300e-003		182.4873
Total	**0.0852**	**0.0580**	**0.5745**	**1.8300e-003**	**0.2054**	**1.2900e-003**	**0.2067**	**0.0545**	**1.1900e-003**	**0.0557**		**182.3842**	**182.3842**	**4.1300e-003**		**182.4873**

Mitigated Construction On-Site

	ROG	NOx	CO	SO2	Fugitive PM10	Exhaust PM10	PM10 Total	Fugitive PM2.5	Exhaust PM2.5	PM2.5 Total	Bio- CO2	NBio- CO2	Total CO2	CH4	N2O	CO2e
Category	lb/day										lb/day					
Archit. Coating	21.9854					0.0000	0.0000		0.0000	0.0000			0.0000			0.0000
Off-Road	0.0000	0.0000	0.0000	0.0000		0.0000	0.0000		0.0000	0.0000	0.0000	0.0000	0.0000	0.0000		0.0000
Total	**21.9854**	**0.0000**	**0.0000**	**0.0000**		**0.0000**	**0.0000**		**0.0000**	**0.0000**	**0.0000**	**0.0000**	**0.0000**	**0.0000**		**0.0000**

3.6 Architectural Coating - 2021

Mitigated Construction Off-Site

	ROG	NOx	CO	SO2	Fugitive PM10	Exhaust PM10	PM10 Total	Fugitive PM2.5	Exhaust PM2.5	PM2.5 Total	Bio- CO2	NBio- CO2	Total CO2	CH4	N2O	CO2e
Category	lb/day										lb/day					
Hauling	0.0000	0.0000	0.0000	0.0000	0.0000	0.0000	0.0000	0.0000	0.0000	0.0000		0.0000	0.0000	0.0000		0.0000
Vendor	0.0000	0.0000	0.0000	0.0000	0.0000	0.0000	0.0000	0.0000	0.0000	0.0000		0.0000	0.0000	0.0000		0.0000
Worker	0.0852	0.0580	0.5745	1.8300e-003	0.2054	1.2900e-003	0.2067	0.0545	1.1900e-003	0.0557		182.3842	182.3842	4.1300e-003		182.4873
Total	**0.0852**	**0.0580**	**0.5745**	**1.8300e-003**	**0.2054**	**1.2900e-003**	**0.2067**	**0.0545**	**1.1900e-003**	**0.0557**		**182.3842**	**182.3842**	**4.1300e-003**		**182.4873**

3.6 Architectural Coating - 2022

Unmitigated Construction On-Site

	ROG	NOx	CO	SO2	Fugitive PM10	Exhaust PM10	PM10 Total	Fugitive PM2.5	Exhaust PM2.5	PM2.5 Total	Bio- CO2	NBio- CO2	Total CO2	CH4	N2O	CO2e
Category	lb/day										lb/day					
Archit. Coating	21.9854					0.0000	0.0000		0.0000	0.0000			0.0000			0.0000
Off-Road	0.0000	0.0000	0.0000	0.0000		0.0000	0.0000		0.0000	0.0000		0.0000	0.0000	0.0000		0.0000
Total	**21.9854**	**0.0000**	**0.0000**	**0.0000**		**0.0000**	**0.0000**		**0.0000**	**0.0000**		**0.0000**	**0.0000**	**0.0000**		**0.0000**

3.6 Architectural Coating - 2022

Unmitigated Construction Off-Site

	ROG	NOx	CO	SO2	Fugitive PM10	Exhaust PM10	PM10 Total	Fugitive PM2.5	Exhaust PM2.5	PM2.5 Total	Bio- CO2	NBio- CO2	Total CO2	CH4	N2O	CO2e
Category	lb/day										lb/day					
Hauling	0.0000	0.0000	0.0000	0.0000	0.0000	0.0000	0.0000	0.0000	0.0000	0.0000		0.0000	0.0000	0.0000		0.0000
Vendor	0.0000	0.0000	0.0000	0.0000	0.0000	0.0000	0.0000	0.0000	0.0000	0.0000		0.0000	0.0000	0.0000		0.0000
Worker	0.0795	0.0520	0.5272	1.7600e-003	0.2054	1.2600e-003	0.2066	0.0545	1.1600e-003	0.0556		175.6980	175.6980	3.7000e-003		175.7904
Total	**0.0795**	**0.0520**	**0.5272**	**1.7600e-003**	**0.2054**	**1.2600e-003**	**0.2066**	**0.0545**	**1.1600e-003**	**0.0556**		**175.6980**	**175.6980**	**3.7000e-003**		**175.7904**

Mitigated Construction On-Site

	ROG	NOx	CO	SO2	Fugitive PM10	Exhaust PM10	PM10 Total	Fugitive PM2.5	Exhaust PM2.5	PM2.5 Total	Bio- CO2	NBio- CO2	Total CO2	CH4	N2O	CO2e
Category	lb/day										lb/day					
Archit. Coating	21.9854					0.0000	0.0000		0.0000	0.0000			0.0000			0.0000
Off-Road	0.0000	0.0000	0.0000	0.0000		0.0000	0.0000		0.0000	0.0000	0.0000	0.0000	0.0000	0.0000		0.0000
Total	**21.9854**	**0.0000**	**0.0000**	**0.0000**		**0.0000**	**0.0000**		**0.0000**	**0.0000**	**0.0000**	**0.0000**	**0.0000**	**0.0000**		**0.0000**

3.6 Architectural Coating - 2022

Mitigated Construction Off-Site

	ROG	NOx	CO	SO2	Fugitive PM10	Exhaust PM10	PM10 Total	Fugitive PM2.5	Exhaust PM2.5	PM2.5 Total	Bio- CO2	NBio- CO2	Total CO2	CH4	N2O	CO2e
Category	lb/day										lb/day					
Hauling	0.0000	0.0000	0.0000	0.0000	0.0000	0.0000	0.0000	0.0000	0.0000	0.0000		0.0000	0.0000	0.0000		0.0000
Vendor	0.0000	0.0000	0.0000	0.0000	0.0000	0.0000	0.0000	0.0000	0.0000	0.0000		0.0000	0.0000	0.0000		0.0000
Worker	0.0795	0.0520	0.5272	1.7600e-003	0.2054	1.2600e-003	0.2066	0.0545	1.1600e-003	0.0556		175.6980	175.6980	3.7000e-003		175.7904
Total	**0.0795**	**0.0520**	**0.5272**	**1.7600e-003**	**0.2054**	**1.2600e-003**	**0.2066**	**0.0545**	**1.1600e-003**	**0.0556**		**175.6980**	**175.6980**	**3.7000e-003**		**175.7904**

3.7 Paving - 2022

Unmitigated Construction On-Site

	ROG	NOx	CO	SO2	Fugitive PM10	Exhaust PM10	PM10 Total	Fugitive PM2.5	Exhaust PM2.5	PM2.5 Total	Bio- CO2	NBio- CO2	Total CO2	CH4	N2O	CO2e
Category	lb/day										lb/day					
Off-Road	0.0000	0.0000	0.0000	0.0000		0.0000	0.0000		0.0000	0.0000		0.0000	0.0000	0.0000		0.0000
Paving	0.0590					0.0000	0.0000		0.0000	0.0000			0.0000			0.0000
Total	**0.0590**	**0.0000**	**0.0000**	**0.0000**		**0.0000**	**0.0000**		**0.0000**	**0.0000**		**0.0000**	**0.0000**	**0.0000**		**0.0000**

3.7 Paving - 2022

Unmitigated Construction Off-Site

	ROG	NOx	CO	SO2	Fugitive PM10	Exhaust PM10	PM10 Total	Fugitive PM2.5	Exhaust PM2.5	PM2.5 Total	Bio- CO2	NBio- CO2	Total CO2	CH4	N2O	CO2e
Category	lb/day										lb/day					
Hauling	0.0000	0.0000	0.0000	0.0000	0.0000	0.0000	0.0000	0.0000	0.0000	0.0000		0.0000	0.0000	0.0000		0.0000
Vendor	0.0000	0.0000	0.0000	0.0000	0.0000	0.0000	0.0000	0.0000	0.0000	0.0000		0.0000	0.0000	0.0000		0.0000
Worker	0.0000	0.0000	0.0000	0.0000	0.0000	0.0000	0.0000	0.0000	0.0000	0.0000		0.0000	0.0000	0.0000		0.0000
Total	**0.0000**	**0.0000**	**0.0000**	**0.0000**	**0.0000**	**0.0000**	**0.0000**	**0.0000**	**0.0000**	**0.0000**		**0.0000**	**0.0000**	**0.0000**		**0.0000**

Mitigated Construction On-Site

	ROG	NOx	CO	SO2	Fugitive PM10	Exhaust PM10	PM10 Total	Fugitive PM2.5	Exhaust PM2.5	PM2.5 Total	Bio- CO2	NBio- CO2	Total CO2	CH4	N2O	CO2e
Category	lb/day										lb/day					
Off-Road	0.0000	0.0000	0.0000	0.0000		0.0000	0.0000		0.0000	0.0000	0.0000	0.0000	0.0000	0.0000		0.0000
Paving	0.0590					0.0000	0.0000		0.0000	0.0000			0.0000			0.0000
Total	**0.0590**	**0.0000**	**0.0000**	**0.0000**		**0.0000**	**0.0000**		**0.0000**	**0.0000**	**0.0000**	**0.0000**	**0.0000**	**0.0000**		**0.0000**

3.7 Paving - 2022

Mitigated Construction Off-Site

	ROG	NOx	CO	SO2	Fugitive PM10	Exhaust PM10	PM10 Total	Fugitive PM2.5	Exhaust PM2.5	PM2.5 Total	Bio- CO2	NBio- CO2	Total CO2	CH4	N2O	CO2e
Category	lb/day										lb/day					
Hauling	0.0000	0.0000	0.0000	0.0000	0.0000	0.0000	0.0000	0.0000	0.0000	0.0000		0.0000	0.0000	0.0000		0.0000
Vendor	0.0000	0.0000	0.0000	0.0000	0.0000	0.0000	0.0000	0.0000	0.0000	0.0000		0.0000	0.0000	0.0000		0.0000
Worker	0.0000	0.0000	0.0000	0.0000	0.0000	0.0000	0.0000	0.0000	0.0000	0.0000		0.0000	0.0000	0.0000		0.0000
Total	**0.0000**	**0.0000**	**0.0000**	**0.0000**	**0.0000**	**0.0000**	**0.0000**	**0.0000**	**0.0000**	**0.0000**		**0.0000**	**0.0000**	**0.0000**		**0.0000**

4.0 Operational Detail - Mobile

4.1 Mitigation Measures Mobile

	ROG	NOx	CO	SO2	Fugitive PM10	Exhaust PM10	PM10 Total	Fugitive PM2.5	Exhaust PM2.5	PM2.5 Total	Bio- CO2	NBio- CO2	Total CO2	CH4	N2O	CO2e
Category	lb/day										lb/day					
Mitigated	0.0000	0.0000	0.0000	0.0000	0.0000	0.0000	0.0000	0.0000	0.0000	0.0000		0.0000	0.0000	0.0000		0.0000
Unmitigated	0.0000	0.0000	0.0000	0.0000	0.0000	0.0000	0.0000	0.0000	0.0000	0.0000		0.0000	0.0000	0.0000		0.0000

4.2 Trip Summary Information

	Average Daily Trip Rate			Unmitigated	Mitigated
Land Use	Weekday	Saturday	Sunday	Annual VMT	Annual VMT
Industrial Park	0.00	0.00	0.00		
Parking Lot	0.00	0.00	0.00		
Total	0.00	0.00	0.00		

4.3 Trip Type Information

	Miles			Trip %			Trip Purpose %		
Land Use	H-W or C-W	H-S or C-C	H-O or C-NW	H-W or C-W	H-S or C-C	H-O or C-NW	Primary	Diverted	Pass-by
Industrial Park	9.50	7.30	7.30	59.00	28.00	13.00	79	19	2
Parking Lot	9.50	7.30	7.30	0.00	0.00	0.00	0	0	0

4.4 Fleet Mix

Land Use	LDA	LDT1	LDT2	MDV	LHD1	LHD2	MHD	HHD	OBUS	UBUS	MCY	SBUS	MH
Industrial Park	0.578638	0.038775	0.193686	0.110919	0.015677	0.005341	0.018293	0.026358	0.002641	0.002200	0.005832	0.000891	0.000749
Parking Lot	0.578638	0.038775	0.193686	0.110919	0.015677	0.005341	0.018293	0.026358	0.002641	0.002200	0.005832	0.000891	0.000749

5.0 Energy Detail

Historical Energy Use: N

5.1 Mitigation Measures Energy

Exceed Title 24

	ROG	NOx	CO	SO2	Fugitive PM10	Exhaust PM10	PM10 Total	Fugitive PM2.5	Exhaust PM2.5	PM2.5 Total	Bio- CO2	NBio- CO2	Total CO2	CH4	N2O	CO2e
Category	lb/day										lb/day					
NaturalGas Mitigated	0.1118	1.0164	0.8538	6.1000e-003		0.0772	0.0772		0.0772	0.0772		1,219.6483	1,219.6483	0.0234	0.0224	1,226.8960
NaturalGas Unmitigated	0.1562	1.4202	1.1929	8.5200e-003		0.1079	0.1079		0.1079	0.1079		1,704.1926	1,704.1926	0.0327	0.0312	1,714.3198

5.2 Energy by Land Use - NaturalGas

Unmitigated

	NaturalGas Use	ROG	NOx	CO	SO2	Fugitive PM10	Exhaust PM10	PM10 Total	Fugitive PM2.5	Exhaust PM2.5	PM2.5 Total	Bio- CO2	NBio- CO2	Total CO2	CH4	N2O	CO2e
Land Use	kBTU/yr	lb/day										lb/day					
Industrial Park	14485.6	0.1562	1.4202	1.1929	8.5200e-003		0.1079	0.1079		0.1079	0.1079		1,704.1926	1,704.1926	0.0327	0.0312	1,714.3198
Parking Lot	0	0.0000	0.0000	0.0000	0.0000		0.0000	0.0000		0.0000	0.0000		0.0000	0.0000	0.0000	0.0000	0.0000
Total		**0.1562**	**1.4202**	**1.1929**	**8.5200e-003**		**0.1079**	**0.1079**		**0.1079**	**0.1079**		**1,704.1926**	**1,704.1926**	**0.0327**	**0.0312**	**1,714.3198**

Mitigated

	NaturalGas Use	ROG	NOx	CO	SO2	Fugitive PM10	Exhaust PM10	PM10 Total	Fugitive PM2.5	Exhaust PM2.5	PM2.5 Total	Bio- CO2	NBio- CO2	Total CO2	CH4	N2O	CO2e
Land Use	kBTU/yr	lb/day										lb/day					
Industrial Park	10.367	0.1118	1.0164	0.8538	6.1000e-003		0.0772	0.0772		0.0772	0.0772		1,219.6483	1,219.6483	0.0234	0.0224	1,226.8960
Parking Lot	0	0.0000	0.0000	0.0000	0.0000		0.0000	0.0000		0.0000	0.0000		0.0000	0.0000	0.0000	0.0000	0.0000
Total		**0.1118**	**1.0164**	**0.8538**	**6.1000e-003**		**0.0772**	**0.0772**		**0.0772**	**0.0772**		**1,219.6483**	**1,219.6483**	**0.0234**	**0.0224**	**1,226.8960**

6.0 Area Detail

6.1 Mitigation Measures Area

	ROG	NOx	CO	SO2	Fugitive PM10	Exhaust PM10	PM10 Total	Fugitive PM2.5	Exhaust PM2.5	PM2.5 Total	Bio- CO2	NBio- CO2	Total CO2	CH4	N2O	CO2e
Category	lb/day										lb/day					
Mitigated	6.5606	3.0000e-004	0.0330	0.0000		1.2000e-004	1.2000e-004		1.2000e-004	1.2000e-004		0.0708	0.0708	1.9000e-004		0.0755
Unmitigated	6.5606	3.0000e-004	0.0330	0.0000		1.2000e-004	1.2000e-004		1.2000e-004	1.2000e-004		0.0708	0.0708	1.9000e-004		0.0755

6.2 Area by SubCategory

Unmitigated

	ROG	NOx	CO	SO2	Fugitive PM10	Exhaust PM10	PM10 Total	Fugitive PM2.5	Exhaust PM2.5	PM2.5 Total	Bio- CO2	NBio- CO2	Total CO2	CH4	N2O	CO2e
SubCategory	lb/day										lb/day					
Architectural Coating	0.6970					0.0000	0.0000		0.0000	0.0000			0.0000			0.0000
Consumer Products	5.8605					0.0000	0.0000		0.0000	0.0000			0.0000			0.0000
Landscaping	3.0600e-003	3.0000e-004	0.0330	0.0000		1.2000e-004	1.2000e-004		1.2000e-004	1.2000e-004		0.0708	0.0708	1.9000e-004		0.0755
Total	**6.5606**	**3.0000e-004**	**0.0330**	**0.0000**		**1.2000e-004**	**1.2000e-004**		**1.2000e-004**	**1.2000e-004**		**0.0708**	**0.0708**	**1.9000e-004**		**0.0755**

6.2 Area by SubCategory

Mitigated

	ROG	NOx	CO	SO2	Fugitive PM10	Exhaust PM10	PM10 Total	Fugitive PM2.5	Exhaust PM2.5	PM2.5 Total	Bio- CO2	NBio- CO2	Total CO2	CH4	N2O	CO2e
SubCategory	lb/day										lb/day					
Architectural Coating	0.6970					0.0000	0.0000		0.0000	0.0000			0.0000			0.0000
Consumer Products	5.8605					0.0000	0.0000		0.0000	0.0000			0.0000			0.0000
Landscaping	3.0600e-003	3.0000e-004	0.0330	0.0000		1.2000e-004	1.2000e-004		1.2000e-004	1.2000e-004		0.0708	0.0708	1.9000e-004		0.0755
Total	**6.5606**	**3.0000e-004**	**0.0330**	**0.0000**		**1.2000e-004**	**1.2000e-004**		**1.2000e-004**	**1.2000e-004**		**0.0708**	**0.0708**	**1.9000e-004**		**0.0755**

7.0 Water Detail

7.1 Mitigation Measures Water

Install Low Flow Bathroom Faucet

Install Low Flow Kitchen Faucet

Install Low Flow Toilet

Install Low Flow Shower

Use Water Efficient Irrigation System

8.0 Waste Detail

8.1 Mitigation Measures Waste

9.0 Operational Offroad

Equipment Type	Number	Hours/Day	Days/Year	Horse Power	Load Factor	Fuel Type

10.0 Stationary Equipment

Fire Pumps and Emergency Generators

Equipment Type	Number	Hours/Day	Hours/Year	Horse Power	Load Factor	Fuel Type

Boilers

Equipment Type	Number	Heat Input/Day	Heat Input/Year	Boiler Rating	Fuel Type

User Defined Equipment

Equipment Type	Number

11.0 Vegetation

Clawiter Industrial Project - Building 4 - 2023

Bay Area AQMD Air District, Summer

1.0 Project Characteristics

1.1 Land Usage

Land Uses	Size	Metric	Lot Acreage	Floor Surface Area	Population
Industrial Park	273.53	1000sqft	6.28	273,526.00	0
Parking Lot	50.00	Space	0.45	20,000.00	0

1.2 Other Project Characteristics

Urbanization	Urban	**Wind Speed (m/s)**	2.2	**Precipitation Freq (Days)**	64
Climate Zone	5			**Operational Year**	2023
Utility Company	Pacific Gas & Electric Company				
CO2 Intensity (lb/MWhr)	641.35	**CH4 Intensity (lb/MWhr)**	0.029	**N2O Intensity (lb/MWhr)**	0.006

1.3 User Entered Comments & Non-Default Data

Project Characteristics -

Land Use - SF and parking for building 4

Construction Phase - Applicant specified 15-month schedule. Extended AC to overlap BC for mroe realistic conditions.

Off-road Equipment - Emissions from equipment calculated in model for Buildings 1 to 3

Off-road Equipment - Emissions from equipment calculated in model for Buildings 1 to 3

Off-road Equipment - Emissions from equipment calculated in model for Buildings 1 to 3

Off-road Equipment - Emissions from equipment calculated in model for Buildings 1 to 3

Off-road Equipment - Emissions from equipment calculated in model for Buildings 1 to 3

Off-road Equipment - Emissions from equipment calculated in model for Buildings 1 to 3

Trips and VMT - Emissions from trips calculated in model for Buildings 1 to 3 except for BC and AC trips

Demolition - Emissions from demolition calculated in model for Buildings 1 to 3

Grading - Emissions from soil export calculated in model for Buildings 1 to 3. Retained default acres of grading for fugitive dust emission estimate.

Architectural Coating - BAAQMD Regulation 8, Rule 3

Vehicle Trips - Mobile source emissions estimated in Buildings 1 to 3 run

Area Coating - BAAQMD Regulation 8, Rule 3

Energy Use - Electricity emissions calculated separately

Water And Wastewater - All wastewater treated at Hayward WWTP with aerobic processes. Additional one million gallons added to indoor water use for cooling purposes. Outdoor water use in model for Buildings 1 to 3

Solid Waste - 77% diversion rate for Hayward

Construction Off-road Equipment Mitigation - Hayward Municipal Code 10-8.32

Mobile Land Use Mitigation -

Water Mitigation - Applicant-specified sustainability features

Fleet Mix -

Energy Mitigation - Title 24 reduced by 30% for 2019 Standards

Table Name	Column Name	Default Value	New Value
tblArchitecturalCoating	EF_Parking	150.00	100.00
tblAreaCoating	Area_EF_Nonresidential_Exterior	150	100

tblConstructionPhase	NumDays	20.00	30.00
tblConstructionPhase	NumDays	230.00	265.00
tblConstructionPhase	NumDays	20.00	130.00
tblEnergyUse	LightingElect	3.58	0.00
tblEnergyUse	NT24E	4.80	0.00
tblEnergyUse	T24E	4.10	0.00
tblGrading	AcresOfGrading	0.00	15.00
tblLandUse	LandUseSquareFeet	273,530.00	273,526.00
tblOffRoadEquipment	UsageHours	6.00	0.00
tblOffRoadEquipment	UsageHours	8.00	0.00
tblOffRoadEquipment	UsageHours	7.00	0.00
tblOffRoadEquipment	UsageHours	8.00	0.00
tblOffRoadEquipment	UsageHours	8.00	0.00
tblOffRoadEquipment	UsageHours	8.00	0.00
tblOffRoadEquipment	UsageHours	8.00	0.00
tblOffRoadEquipment	UsageHours	8.00	0.00
tblOffRoadEquipment	UsageHours	8.00	0.00
tblOffRoadEquipment	UsageHours	8.00	0.00
tblOffRoadEquipment	UsageHours	8.00	0.00
tblOffRoadEquipment	UsageHours	8.00	0.00
tblOffRoadEquipment	UsageHours	8.00	0.00
tblOffRoadEquipment	UsageHours	7.00	0.00
tblOffRoadEquipment	UsageHours	8.00	0.00
tblOffRoadEquipment	UsageHours	8.00	0.00
tblOffRoadEquipment	UsageHours	8.00	0.00
tblSolidWaste	SolidWasteGenerationRate	339.18	78.01

tblTripsAndVMT	WorkerTripNumber	15.00	0.00
tblTripsAndVMT	WorkerTripNumber	18.00	0.00
tblTripsAndVMT	WorkerTripNumber	15.00	0.00
tblTripsAndVMT	WorkerTripNumber	15.00	0.00
tblVehicleTrips	ST_TR	2.49	0.00
tblVehicleTrips	SU_TR	0.73	0.00
tblVehicleTrips	WD_TR	6.83	0.00
tblWater	AerobicPercent	87.46	100.00
tblWater	AnaerobicandFacultativeLagoonsPercent	2.21	0.00
tblWater	IndoorWaterUseRate	63,253,812.50	64,253,812.50
tblWater	SepticTankPercent	10.33	0.00

2.0 Emissions Summary

2.1 Overall Construction (Maximum Daily Emission)

Unmitigated Construction

	ROG	NOx	CO	SO2	Fugitive PM10	Exhaust PM10	PM10 Total	Fugitive PM2.5	Exhaust PM2.5	PM2.5 Total	Bio- CO2	NBio- CO2	Total CO2	CH4	N2O	CO2e
Year	lb/day										lb/day					
2021	22.6101	5.2385	4.8051	0.0249	1.5407	0.0184	1.5591	0.4160	0.0173	0.4333	0.0000	2,559.1011	2,559.1011	0.0913	0.0000	2,561.3836
2022	22.6261	4.9506	4.4498	0.0243	1.5407	0.0168	1.5575	0.4160	0.0158	0.4318	0.0000	2,502.5787	2,502.5787	0.0858	0.0000	2,504.7230
Maximum	**22.6261**	**5.2385**	**4.8051**	**0.0249**	**1.5407**	**0.0184**	**1.5591**	**0.4160**	**0.0173**	**0.4333**	**0.0000**	**2,559.1011**	**2,559.1011**	**0.0913**	**0.0000**	**2,561.3836**

Mitigated Construction

	ROG	NOx	CO	SO2	Fugitive PM10	Exhaust PM10	PM10 Total	Fugitive PM2.5	Exhaust PM2.5	PM2.5 Total	Bio- CO2	NBio- CO2	Total CO2	CH4	N2O	CO2e
Year	lb/day										lb/day					
2021	22.6101	5.2385	4.8051	0.0249	1.5407	0.0184	1.5591	0.4160	0.0173	0.4333	0.0000	2,559.1011	2,559.1011	0.0913	0.0000	2,561.3836
2022	22.6261	4.9506	4.4498	0.0243	1.5407	0.0168	1.5575	0.4160	0.0158	0.4318	0.0000	2,502.5787	2,502.5787	0.0858	0.0000	2,504.7230
Maximum	**22.6261**	**5.2385**	**4.8051**	**0.0249**	**1.5407**	**0.0184**	**1.5591**	**0.4160**	**0.0173**	**0.4333**	**0.0000**	**2,559.1011**	**2,559.1011**	**0.0913**	**0.0000**	**2,561.3836**

	ROG	**NOx**	**CO**	**SO2**	**Fugitive PM10**	**Exhaust PM10**	**PM10 Total**	**Fugitive PM2.5**	**Exhaust PM2.5**	**PM2.5 Total**	**Bio- CO2**	**NBio-CO2**	**Total CO2**	**CH4**	**N20**	**CO2e**
Percent Reduction	**0.00**	**0.00**	**0.00**	**0.00**	**0.00**	**0.00**	**0.00**	**0.00**	**0.00**	**0.00**	**0.00**	**0.00**	**0.00**	**0.00**	**0.00**	**0.00**

2.2 Overall Operational

Unmitigated Operational

	ROG	NOx	CO	SO2	Fugitive PM10	Exhaust PM10	PM10 Total	Fugitive PM2.5	Exhaust PM2.5	PM2.5 Total	Bio- CO2	NBio- CO2	Total CO2	CH4	N2O	CO2e
Category	lb/day										lb/day					
Area	6.5606	3.0000e-004	0.0330	0.0000		1.2000e-004	1.2000e-004		1.2000e-004	1.2000e-004		0.0708	0.0708	1.9000e-004		0.0755
Energy	0.1562	1.4202	1.1929	8.5200e-003		0.1079	0.1079		0.1079	0.1079		1,704.1926	1,704.1926	0.0327	0.0312	1,714.3198
Mobile	0.0000	0.0000	0.0000	0.0000	0.0000	0.0000	0.0000	0.0000	0.0000	0.0000		0.0000	0.0000	0.0000		0.0000
Total	**6.7168**	**1.4205**	**1.2260**	**8.5200e-003**	**0.0000**	**0.1081**	**0.1081**	**0.0000**	**0.1081**	**0.1081**		**1,704.2634**	**1,704.2634**	**0.0329**	**0.0312**	**1,714.3952**

Mitigated Operational

	ROG	NOx	CO	SO2	Fugitive PM10	Exhaust PM10	PM10 Total	Fugitive PM2.5	Exhaust PM2.5	PM2.5 Total	Bio- CO2	NBio- CO2	Total CO2	CH4	N2O	CO2e
Category	lb/day										lb/day					
Area	6.5606	3.0000e-004	0.0330	0.0000		1.2000e-004	1.2000e-004		1.2000e-004	1.2000e-004		0.0708	0.0708	1.9000e-004		0.0755
Energy	0.1118	1.0164	0.8538	6.1000e-003		0.0772	0.0772		0.0772	0.0772		1,219.6483	1,219.6483	0.0234	0.0224	1,226.8960
Mobile	0.0000	0.0000	0.0000	0.0000	0.0000	0.0000	0.0000	0.0000	0.0000	0.0000		0.0000	0.0000	0.0000		0.0000
Total	**6.6724**	**1.0167**	**0.8868**	**6.1000e-003**	**0.0000**	**0.0774**	**0.0774**	**0.0000**	**0.0774**	**0.0774**		**1,219.7191**	**1,219.7191**	**0.0236**	**0.0224**	**1,226.9715**

	ROG	NOx	CO	SO2	Fugitive PM10	Exhaust PM10	PM10 Total	Fugitive PM2.5	Exhaust PM2.5	PM2.5 Total	Bio- CO2	NBio-CO2	Total CO2	CH4	N20	CO2e
Percent Reduction	**0.66**	**28.43**	**27.67**	**28.40**	**0.00**	**28.40**	**28.40**	**0.00**	**28.40**	**28.40**	**0.00**	**28.43**	**28.43**	**28.25**	**28.43**	**28.43**

3.0 Construction Detail

Construction Phase

Phase Number	Phase Name	Phase Type	Start Date	End Date	Num Days Week	Num Days	Phase Description
1	Demolition	Demolition	1/1/2021	1/28/2021	5	20	
2	Site Preparation	Site Preparation	1/29/2021	2/11/2021	5	10	
3	Grading	Grading	2/12/2021	3/25/2021	5	30	
4	Building Construction	Building Construction	3/26/2021	3/31/2022	5	265	
5	Architectural Coating	Architectural Coating	10/1/2021	3/31/2022	5	130	
6	Paving	Paving	3/4/2022	3/31/2022	5	20	

Acres of Grading (Site Preparation Phase): 0

Acres of Grading (Grading Phase): 15

Acres of Paving: 0.45

Residential Indoor: 0; Residential Outdoor: 0; Non-Residential Indoor: 410,289; Non-Residential Outdoor: 136,763; Striped Parking Area: 1,200 (Architectural Coating – sqft)

OffRoad Equipment

Clawiter Industrial Project - Building 4 - 2023 - Bay Area AQMD Air District, Summer

Phase Name	Offroad Equipment Type	Amount	Usage Hours	Horse Power	Load Factor
Demolition	Concrete/Industrial Saws	1	0.00	81	0.73
Demolition	Excavators	3	0.00	158	0.38
Demolition	Rubber Tired Dozers	2	0.00	247	0.40
Site Preparation	Rubber Tired Dozers	3	0.00	247	0.40
Site Preparation	Tractors/Loaders/Backhoes	4	0.00	97	0.37
Grading	Excavators	1	0.00	158	0.38
Grading	Graders	1	0.00	187	0.41
Grading	Rubber Tired Dozers	1	0.00	247	0.40
Grading	Tractors/Loaders/Backhoes	3	0.00	97	0.37
Building Construction	Cranes	1	0.00	231	0.29
Building Construction	Forklifts	3	0.00	89	0.20
Building Construction	Generator Sets	1	0.00	84	0.74
Building Construction	Tractors/Loaders/Backhoes	3	0.00	97	0.37
Building Construction	Welders	1	0.00	46	0.45
Architectural Coating	Air Compressors	1	0.00	78	0.48
Paving	Pavers	2	0.00	130	0.42
Paving	Paving Equipment	2	0.00	132	0.36
Paving	Rollers	2	0.00	80	0.38

Trips and VMT

Phase Name	Offroad Equipment Count	Worker Trip Number	Vendor Trip Number	Hauling Trip Number	Worker Trip Length	Vendor Trip Length	Hauling Trip Length	Worker Vehicle Class	Vendor Vehicle Class	Hauling Vehicle Class
Demolition	6	0.00	0.00	0.00	10.80	7.30	20.00	LD_Mix	HDT_Mix	HHDT
Site Preparation	7	0.00	0.00	0.00	10.80	7.30	20.00	LD_Mix	HDT_Mix	HHDT
Grading	6	0.00	0.00	0.00	10.80	7.30	20.00	LD_Mix	HDT_Mix	HHDT
Building Construction	9	123.00	48.00	0.00	10.80	7.30	20.00	LD_Mix	HDT_Mix	HHDT
Architectural Coating	1	25.00	0.00	0.00	10.80	7.30	20.00	LD_Mix	HDT_Mix	HHDT
Paving	6	0.00	0.00	0.00	10.80	7.30	20.00	LD_Mix	HDT_Mix	HHDT

3.1 Mitigation Measures Construction

Water Exposed Area

3.2 Demolition - 2021

Unmitigated Construction On-Site

	ROG	NOx	CO	SO2	Fugitive PM10	Exhaust PM10	PM10 Total	Fugitive PM2.5	Exhaust PM2.5	PM2.5 Total	Bio- CO2	NBio- CO2	Total CO2	CH4	N2O	CO2e
Category	lb/day										lb/day					
Fugitive Dust					0.0000	0.0000	0.0000	0.0000	0.0000	0.0000			0.0000			0.0000
Off-Road	0.0000	0.0000	0.0000	0.0000		0.0000	0.0000		0.0000	0.0000		0.0000	0.0000	0.0000		0.0000
Total	**0.0000**	**0.0000**	**0.0000**	**0.0000**	**0.0000**	**0.0000**	**0.0000**	**0.0000**	**0.0000**	**0.0000**		**0.0000**	**0.0000**	**0.0000**		**0.0000**

3.2 Demolition - 2021

Unmitigated Construction Off-Site

	ROG	NOx	CO	SO2	Fugitive PM10	Exhaust PM10	PM10 Total	Fugitive PM2.5	Exhaust PM2.5	PM2.5 Total	Bio- CO2	NBio- CO2	Total CO2	CH4	N2O	CO2e
Category	lb/day										lb/day					
Hauling	0.0000	0.0000	0.0000	0.0000	0.0000	0.0000	0.0000	0.0000	0.0000	0.0000		0.0000	0.0000	0.0000		0.0000
Vendor	0.0000	0.0000	0.0000	0.0000	0.0000	0.0000	0.0000	0.0000	0.0000	0.0000		0.0000	0.0000	0.0000		0.0000
Worker	0.0000	0.0000	0.0000	0.0000	0.0000	0.0000	0.0000	0.0000	0.0000	0.0000		0.0000	0.0000	0.0000		0.0000
Total	**0.0000**	**0.0000**	**0.0000**	**0.0000**	**0.0000**	**0.0000**	**0.0000**	**0.0000**	**0.0000**	**0.0000**		**0.0000**	**0.0000**	**0.0000**		**0.0000**

Mitigated Construction On-Site

	ROG	NOx	CO	SO2	Fugitive PM10	Exhaust PM10	PM10 Total	Fugitive PM2.5	Exhaust PM2.5	PM2.5 Total	Bio- CO2	NBio- CO2	Total CO2	CH4	N2O	CO2e
Category	lb/day										lb/day					
Fugitive Dust					0.0000	0.0000	0.0000	0.0000	0.0000	0.0000			0.0000			0.0000
Off-Road	0.0000	0.0000	0.0000	0.0000		0.0000	0.0000		0.0000	0.0000	0.0000	0.0000	0.0000	0.0000		0.0000
Total	**0.0000**	**0.0000**	**0.0000**	**0.0000**	**0.0000**	**0.0000**	**0.0000**	**0.0000**	**0.0000**	**0.0000**	**0.0000**	**0.0000**	**0.0000**	**0.0000**		**0.0000**

3.2 Demolition - 2021

Mitigated Construction Off-Site

	ROG	NOx	CO	SO2	Fugitive PM10	Exhaust PM10	PM10 Total	Fugitive PM2.5	Exhaust PM2.5	PM2.5 Total	Bio- CO2	NBio- CO2	Total CO2	CH4	N2O	CO2e
Category	lb/day										lb/day					
Hauling	0.0000	0.0000	0.0000	0.0000	0.0000	0.0000	0.0000	0.0000	0.0000	0.0000		0.0000	0.0000	0.0000		0.0000
Vendor	0.0000	0.0000	0.0000	0.0000	0.0000	0.0000	0.0000	0.0000	0.0000	0.0000		0.0000	0.0000	0.0000		0.0000
Worker	0.0000	0.0000	0.0000	0.0000	0.0000	0.0000	0.0000	0.0000	0.0000	0.0000		0.0000	0.0000	0.0000		0.0000
Total	**0.0000**	**0.0000**	**0.0000**	**0.0000**	**0.0000**	**0.0000**	**0.0000**	**0.0000**	**0.0000**	**0.0000**		**0.0000**	**0.0000**	**0.0000**		**0.0000**

3.3 Site Preparation - 2021

Unmitigated Construction On-Site

	ROG	NOx	CO	SO2	Fugitive PM10	Exhaust PM10	PM10 Total	Fugitive PM2.5	Exhaust PM2.5	PM2.5 Total	Bio- CO2	NBio- CO2	Total CO2	CH4	N2O	CO2e
Category	lb/day										lb/day					
Fugitive Dust					0.0000	0.0000	0.0000	0.0000	0.0000	0.0000			0.0000			0.0000
Off-Road	0.0000	0.0000	0.0000	0.0000		0.0000	0.0000		0.0000	0.0000		0.0000	0.0000	0.0000		0.0000
Total	**0.0000**	**0.0000**	**0.0000**	**0.0000**	**0.0000**	**0.0000**	**0.0000**	**0.0000**	**0.0000**	**0.0000**		**0.0000**	**0.0000**	**0.0000**		**0.0000**

3.3 Site Preparation - 2021

Unmitigated Construction Off-Site

	ROG	NOx	CO	SO2	Fugitive PM10	Exhaust PM10	PM10 Total	Fugitive PM2.5	Exhaust PM2.5	PM2.5 Total	Bio- CO2	NBio- CO2	Total CO2	CH4	N2O	CO2e
Category	lb/day										lb/day					
Hauling	0.0000	0.0000	0.0000	0.0000	0.0000	0.0000	0.0000	0.0000	0.0000	0.0000		0.0000	0.0000	0.0000		0.0000
Vendor	0.0000	0.0000	0.0000	0.0000	0.0000	0.0000	0.0000	0.0000	0.0000	0.0000		0.0000	0.0000	0.0000		0.0000
Worker	0.0000	0.0000	0.0000	0.0000	0.0000	0.0000	0.0000	0.0000	0.0000	0.0000		0.0000	0.0000	0.0000		0.0000
Total	**0.0000**	**0.0000**	**0.0000**	**0.0000**	**0.0000**	**0.0000**	**0.0000**	**0.0000**	**0.0000**	**0.0000**		**0.0000**	**0.0000**	**0.0000**		**0.0000**

Mitigated Construction On-Site

	ROG	NOx	CO	SO2	Fugitive PM10	Exhaust PM10	PM10 Total	Fugitive PM2.5	Exhaust PM2.5	PM2.5 Total	Bio- CO2	NBio- CO2	Total CO2	CH4	N2O	CO2e
Category	lb/day										lb/day					
Fugitive Dust					0.0000	0.0000	0.0000	0.0000	0.0000	0.0000			0.0000			0.0000
Off-Road	0.0000	0.0000	0.0000	0.0000		0.0000	0.0000		0.0000	0.0000	0.0000	0.0000	0.0000	0.0000		0.0000
Total	**0.0000**	**0.0000**	**0.0000**	**0.0000**	**0.0000**	**0.0000**	**0.0000**	**0.0000**	**0.0000**	**0.0000**	**0.0000**	**0.0000**	**0.0000**	**0.0000**		**0.0000**

3.3 Site Preparation - 2021

Mitigated Construction Off-Site

	ROG	NOx	CO	SO2	Fugitive PM10	Exhaust PM10	PM10 Total	Fugitive PM2.5	Exhaust PM2.5	PM2.5 Total	Bio- CO2	NBio- CO2	Total CO2	CH4	N2O	CO2e
Category	lb/day										lb/day					
Hauling	0.0000	0.0000	0.0000	0.0000	0.0000	0.0000	0.0000	0.0000	0.0000	0.0000		0.0000	0.0000	0.0000		0.0000
Vendor	0.0000	0.0000	0.0000	0.0000	0.0000	0.0000	0.0000	0.0000	0.0000	0.0000		0.0000	0.0000	0.0000		0.0000
Worker	0.0000	0.0000	0.0000	0.0000	0.0000	0.0000	0.0000	0.0000	0.0000	0.0000		0.0000	0.0000	0.0000		0.0000
Total	**0.0000**	**0.0000**	**0.0000**	**0.0000**	**0.0000**	**0.0000**	**0.0000**	**0.0000**	**0.0000**	**0.0000**		**0.0000**	**0.0000**	**0.0000**		**0.0000**

3.4 Grading - 2021

Unmitigated Construction On-Site

	ROG	NOx	CO	SO2	Fugitive PM10	Exhaust PM10	PM10 Total	Fugitive PM2.5	Exhaust PM2.5	PM2.5 Total	Bio- CO2	NBio- CO2	Total CO2	CH4	N2O	CO2e
Category	lb/day										lb/day					
Fugitive Dust					0.5303	0.0000	0.5303	0.0573	0.0000	0.0573			0.0000			0.0000
Off-Road	0.0000	0.0000	0.0000	0.0000		0.0000	0.0000		0.0000	0.0000		0.0000	0.0000	0.0000		0.0000
Total	**0.0000**	**0.0000**	**0.0000**	**0.0000**	**0.5303**	**0.0000**	**0.5303**	**0.0573**	**0.0000**	**0.0573**		**0.0000**	**0.0000**	**0.0000**		**0.0000**

3.4 Grading - 2021

Unmitigated Construction Off-Site

	ROG	NOx	CO	SO2	Fugitive PM10	Exhaust PM10	PM10 Total	Fugitive PM2.5	Exhaust PM2.5	PM2.5 Total	Bio- CO2	NBio- CO2	Total CO2	CH4	N2O	CO2e
Category	lb/day										lb/day					
Hauling	0.0000	0.0000	0.0000	0.0000	0.0000	0.0000	0.0000	0.0000	0.0000	0.0000		0.0000	0.0000	0.0000		0.0000
Vendor	0.0000	0.0000	0.0000	0.0000	0.0000	0.0000	0.0000	0.0000	0.0000	0.0000		0.0000	0.0000	0.0000		0.0000
Worker	0.0000	0.0000	0.0000	0.0000	0.0000	0.0000	0.0000	0.0000	0.0000	0.0000		0.0000	0.0000	0.0000		0.0000
Total	**0.0000**	**0.0000**	**0.0000**	**0.0000**	**0.0000**	**0.0000**	**0.0000**	**0.0000**	**0.0000**	**0.0000**		**0.0000**	**0.0000**	**0.0000**		**0.0000**

Mitigated Construction On-Site

	ROG	NOx	CO	SO2	Fugitive PM10	Exhaust PM10	PM10 Total	Fugitive PM2.5	Exhaust PM2.5	PM2.5 Total	Bio- CO2	NBio- CO2	Total CO2	CH4	N2O	CO2e
Category	lb/day										lb/day					
Fugitive Dust					0.2386	0.0000	0.2386	0.0258	0.0000	0.0258			0.0000			0.0000
Off-Road	0.0000	0.0000	0.0000	0.0000		0.0000	0.0000		0.0000	0.0000	0.0000	0.0000	0.0000	0.0000		0.0000
Total	**0.0000**	**0.0000**	**0.0000**	**0.0000**	**0.2386**	**0.0000**	**0.2386**	**0.0258**	**0.0000**	**0.0258**	**0.0000**	**0.0000**	**0.0000**	**0.0000**		**0.0000**

3.4 Grading - 2021

Mitigated Construction Off-Site

	ROG	NOx	CO	SO2	Fugitive PM10	Exhaust PM10	PM10 Total	Fugitive PM2.5	Exhaust PM2.5	PM2.5 Total	Bio- CO2	NBio- CO2	Total CO2	CH4	N2O	CO2e
Category	lb/day										lb/day					
Hauling	0.0000	0.0000	0.0000	0.0000	0.0000	0.0000	0.0000	0.0000	0.0000	0.0000		0.0000	0.0000	0.0000		0.0000
Vendor	0.0000	0.0000	0.0000	0.0000	0.0000	0.0000	0.0000	0.0000	0.0000	0.0000		0.0000	0.0000	0.0000		0.0000
Worker	0.0000	0.0000	0.0000	0.0000	0.0000	0.0000	0.0000	0.0000	0.0000	0.0000		0.0000	0.0000	0.0000		0.0000
Total	**0.0000**	**0.0000**	**0.0000**	**0.0000**	**0.0000**	**0.0000**	**0.0000**	**0.0000**	**0.0000**	**0.0000**		**0.0000**	**0.0000**	**0.0000**		**0.0000**

3.5 Building Construction - 2021

Unmitigated Construction On-Site

	ROG	NOx	CO	SO2	Fugitive PM10	Exhaust PM10	PM10 Total	Fugitive PM2.5	Exhaust PM2.5	PM2.5 Total	Bio- CO2	NBio- CO2	Total CO2	CH4	N2O	CO2e
Category	lb/day										lb/day					
Off-Road	0.0000	0.0000	0.0000	0.0000		0.0000	0.0000		0.0000	0.0000		0.0000	0.0000	0.0000		0.0000
Total	**0.0000**	**0.0000**	**0.0000**	**0.0000**		**0.0000**	**0.0000**		**0.0000**	**0.0000**		**0.0000**	**0.0000**	**0.0000**		**0.0000**

3.5 Building Construction - 2021

Unmitigated Construction Off-Site

	ROG	NOx	CO	SO2	Fugitive PM10	Exhaust PM10	PM10 Total	Fugitive PM2.5	Exhaust PM2.5	PM2.5 Total	Bio- CO2	NBio- CO2	Total CO2	CH4	N2O	CO2e
Category	lb/day										lb/day					
Hauling	0.0000	0.0000	0.0000	0.0000	0.0000	0.0000	0.0000	0.0000	0.0000	0.0000		0.0000	0.0000	0.0000		0.0000
Vendor	0.1489	4.9604	1.1697	0.0131	0.3249	0.0108	0.3357	0.0935	0.0103	0.1038		1,387.0010	1,387.0010	0.0651		1,388.6285
Worker	0.3955	0.2311	3.0213	9.7700e-003	1.0104	6.3600e-003	1.0168	0.2680	5.8600e-003	0.2739		974.1102	974.1102	0.0218		974.6546
Total	**0.5444**	**5.1915**	**4.1910**	**0.0229**	**1.3353**	**0.0171**	**1.3524**	**0.3615**	**0.0161**	**0.3777**		**2,361.1112**	**2,361.1112**	**0.0869**		**2,363.2830**

Mitigated Construction On-Site

	ROG	NOx	CO	SO2	Fugitive PM10	Exhaust PM10	PM10 Total	Fugitive PM2.5	Exhaust PM2.5	PM2.5 Total	Bio- CO2	NBio- CO2	Total CO2	CH4	N2O	CO2e
Category	lb/day										lb/day					
Off-Road	0.0000	0.0000	0.0000	0.0000		0.0000	0.0000		0.0000	0.0000	0.0000	0.0000	0.0000	0.0000		0.0000
Total	**0.0000**	**0.0000**	**0.0000**	**0.0000**		**0.0000**	**0.0000**		**0.0000**	**0.0000**	**0.0000**	**0.0000**	**0.0000**	**0.0000**		**0.0000**

3.5 Building Construction - 2021

Mitigated Construction Off-Site

	ROG	NOx	CO	SO2	Fugitive PM10	Exhaust PM10	PM10 Total	Fugitive PM2.5	Exhaust PM2.5	PM2.5 Total	Bio- CO2	NBio- CO2	Total CO2	CH4	N2O	CO2e
Category	lb/day										lb/day					
Hauling	0.0000	0.0000	0.0000	0.0000	0.0000	0.0000	0.0000	0.0000	0.0000	0.0000		0.0000	0.0000	0.0000		0.0000
Vendor	0.1489	4.9604	1.1697	0.0131	0.3249	0.0108	0.3357	0.0935	0.0103	0.1038		1,387.0010	1,387.0010	0.0651		1,388.6285
Worker	0.3955	0.2311	3.0213	9.7700e-003	1.0104	6.3600e-003	1.0168	0.2680	5.8600e-003	0.2739		974.1102	974.1102	0.0218		974.6546
Total	**0.5444**	**5.1915**	**4.1910**	**0.0229**	**1.3353**	**0.0171**	**1.3524**	**0.3615**	**0.0161**	**0.3777**		**2,361.1112**	**2,361.1112**	**0.0869**		**2,363.2830**

3.5 Building Construction - 2022

Unmitigated Construction On-Site

	ROG	NOx	CO	SO2	Fugitive PM10	Exhaust PM10	PM10 Total	Fugitive PM2.5	Exhaust PM2.5	PM2.5 Total	Bio- CO2	NBio- CO2	Total CO2	CH4	N2O	CO2e
Category	lb/day										lb/day					
Off-Road	0.0000	0.0000	0.0000	0.0000		0.0000	0.0000		0.0000	0.0000		0.0000	0.0000	0.0000		0.0000
Total	**0.0000**	**0.0000**	**0.0000**	**0.0000**		**0.0000**	**0.0000**		**0.0000**	**0.0000**		**0.0000**	**0.0000**	**0.0000**		**0.0000**

3.5 Building Construction - 2022

Unmitigated Construction Off-Site

	ROG	NOx	CO	SO2	Fugitive PM10	Exhaust PM10	PM10 Total	Fugitive PM2.5	Exhaust PM2.5	PM2.5 Total	Bio- CO2	NBio- CO2	Total CO2	CH4	N2O	CO2e
Category	lb/day										lb/day					
Hauling	0.0000	0.0000	0.0000	0.0000	0.0000	0.0000	0.0000	0.0000	0.0000	0.0000		0.0000	0.0000	0.0000		0.0000
Vendor	0.1388	4.7011	1.1001	0.0130	0.3249	9.3200e-003	0.3342	0.0935	8.9100e-003	0.1024		1,373.4936	1,373.4936	0.0622		1,375.0497
Worker	0.3681	0.2073	2.7839	9.4100e-003	1.0104	6.2100e-003	1.0166	0.2680	5.7200e-003	0.2737		938.3613	938.3613	0.0196		938.8502
Total	**0.5070**	**4.9084**	**3.8840**	**0.0224**	**1.3354**	**0.0155**	**1.3509**	**0.3616**	**0.0146**	**0.3762**		**2,311.8549**	**2,311.8549**	**0.0818**		**2,313.8998**

Mitigated Construction On-Site

	ROG	NOx	CO	SO2	Fugitive PM10	Exhaust PM10	PM10 Total	Fugitive PM2.5	Exhaust PM2.5	PM2.5 Total	Bio- CO2	NBio- CO2	Total CO2	CH4	N2O	CO2e
Category	lb/day										lb/day					
Off-Road	0.0000	0.0000	0.0000	0.0000		0.0000	0.0000		0.0000	0.0000	0.0000	0.0000	0.0000	0.0000		0.0000
Total	**0.0000**	**0.0000**	**0.0000**	**0.0000**		**0.0000**	**0.0000**		**0.0000**	**0.0000**	**0.0000**	**0.0000**	**0.0000**	**0.0000**		**0.0000**

3.5 Building Construction - 2022

Mitigated Construction Off-Site

	ROG	NOx	CO	SO2	Fugitive PM10	Exhaust PM10	PM10 Total	Fugitive PM2.5	Exhaust PM2.5	PM2.5 Total	Bio- CO2	NBio- CO2	Total CO2	CH4	N2O	CO2e
Category	lb/day										lb/day					
Hauling	0.0000	0.0000	0.0000	0.0000	0.0000	0.0000	0.0000	0.0000	0.0000	0.0000		0.0000	0.0000	0.0000		0.0000
Vendor	0.1388	4.7011	1.1001	0.0130	0.3249	9.3200e-003	0.3342	0.0935	8.9100e-003	0.1024		1,373.4936	1,373.4936	0.0622		1,375.0497
Worker	0.3681	0.2073	2.7839	9.4100e-003	1.0104	6.2100e-003	1.0166	0.2680	5.7200e-003	0.2737		938.3613	938.3613	0.0196		938.8502
Total	**0.5070**	**4.9084**	**3.8840**	**0.0224**	**1.3354**	**0.0155**	**1.3509**	**0.3616**	**0.0146**	**0.3762**		**2,311.8549**	**2,311.8549**	**0.0818**		**2,313.8998**

3.6 Architectural Coating - 2021

Unmitigated Construction On-Site

	ROG	NOx	CO	SO2	Fugitive PM10	Exhaust PM10	PM10 Total	Fugitive PM2.5	Exhaust PM2.5	PM2.5 Total	Bio- CO2	NBio- CO2	Total CO2	CH4	N2O	CO2e
Category	lb/day										lb/day					
Archit. Coating	21.9854					0.0000	0.0000		0.0000	0.0000			0.0000			0.0000
Off-Road	0.0000	0.0000	0.0000	0.0000		0.0000	0.0000		0.0000	0.0000		0.0000	0.0000	0.0000		0.0000
Total	**21.9854**	**0.0000**	**0.0000**	**0.0000**		**0.0000**	**0.0000**		**0.0000**	**0.0000**		**0.0000**	**0.0000**	**0.0000**		**0.0000**

3.6 Architectural Coating - 2021

Unmitigated Construction Off-Site

	ROG	NOx	CO	SO2	Fugitive PM10	Exhaust PM10	PM10 Total	Fugitive PM2.5	Exhaust PM2.5	PM2.5 Total	Bio- CO2	NBio- CO2	Total CO2	CH4	N2O	CO2e
Category	lb/day										lb/day					
Hauling	0.0000	0.0000	0.0000	0.0000	0.0000	0.0000	0.0000	0.0000	0.0000	0.0000		0.0000	0.0000	0.0000		0.0000
Vendor	0.0000	0.0000	0.0000	0.0000	0.0000	0.0000	0.0000	0.0000	0.0000	0.0000		0.0000	0.0000	0.0000		0.0000
Worker	0.0804	0.0470	0.6141	1.9900e-003	0.2054	1.2900e-003	0.2067	0.0545	1.1900e-003	0.0557		197.9899	197.9899	4.4300e-003		198.1005
Total	**0.0804**	**0.0470**	**0.6141**	**1.9900e-003**	**0.2054**	**1.2900e-003**	**0.2067**	**0.0545**	**1.1900e-003**	**0.0557**		**197.9899**	**197.9899**	**4.4300e-003**		**198.1005**

Mitigated Construction On-Site

	ROG	NOx	CO	SO2	Fugitive PM10	Exhaust PM10	PM10 Total	Fugitive PM2.5	Exhaust PM2.5	PM2.5 Total	Bio- CO2	NBio- CO2	Total CO2	CH4	N2O	CO2e
Category	lb/day										lb/day					
Archit. Coating	21.9854					0.0000	0.0000		0.0000	0.0000			0.0000			0.0000
Off-Road	0.0000	0.0000	0.0000	0.0000		0.0000	0.0000		0.0000	0.0000	0.0000	0.0000	0.0000	0.0000		0.0000
Total	**21.9854**	**0.0000**	**0.0000**	**0.0000**		**0.0000**	**0.0000**		**0.0000**	**0.0000**	**0.0000**	**0.0000**	**0.0000**	**0.0000**		**0.0000**

3.6 Architectural Coating - 2021

Mitigated Construction Off-Site

	ROG	NOx	CO	SO2	Fugitive PM10	Exhaust PM10	PM10 Total	Fugitive PM2.5	Exhaust PM2.5	PM2.5 Total	Bio- CO2	NBio- CO2	Total CO2	CH4	N2O	CO2e
Category	lb/day										lb/day					
Hauling	0.0000	0.0000	0.0000	0.0000	0.0000	0.0000	0.0000	0.0000	0.0000	0.0000		0.0000	0.0000	0.0000		0.0000
Vendor	0.0000	0.0000	0.0000	0.0000	0.0000	0.0000	0.0000	0.0000	0.0000	0.0000		0.0000	0.0000	0.0000		0.0000
Worker	0.0804	0.0470	0.6141	1.9900e-003	0.2054	1.2900e-003	0.2067	0.0545	1.1900e-003	0.0557		197.9899	197.9899	4.4300e-003		198.1005
Total	**0.0804**	**0.0470**	**0.6141**	**1.9900e-003**	**0.2054**	**1.2900e-003**	**0.2067**	**0.0545**	**1.1900e-003**	**0.0557**		**197.9899**	**197.9899**	**4.4300e-003**		**198.1005**

3.6 Architectural Coating - 2022

Unmitigated Construction On-Site

	ROG	NOx	CO	SO2	Fugitive PM10	Exhaust PM10	PM10 Total	Fugitive PM2.5	Exhaust PM2.5	PM2.5 Total	Bio- CO2	NBio- CO2	Total CO2	CH4	N2O	CO2e
Category	lb/day										lb/day					
Archit. Coating	21.9854					0.0000	0.0000		0.0000	0.0000			0.0000			0.0000
Off-Road	0.0000	0.0000	0.0000	0.0000		0.0000	0.0000		0.0000	0.0000		0.0000	0.0000	0.0000		0.0000
Total	**21.9854**	**0.0000**	**0.0000**	**0.0000**		**0.0000**	**0.0000**		**0.0000**	**0.0000**		**0.0000**	**0.0000**	**0.0000**		**0.0000**

3.6 Architectural Coating - 2022

Unmitigated Construction Off-Site

	ROG	NOx	CO	SO2	Fugitive PM10	Exhaust PM10	PM10 Total	Fugitive PM2.5	Exhaust PM2.5	PM2.5 Total	Bio- CO2	NBio- CO2	Total CO2	CH4	N2O	CO2e
Category	lb/day										lb/day					
Hauling	0.0000	0.0000	0.0000	0.0000	0.0000	0.0000	0.0000	0.0000	0.0000	0.0000		0.0000	0.0000	0.0000		0.0000
Vendor	0.0000	0.0000	0.0000	0.0000	0.0000	0.0000	0.0000	0.0000	0.0000	0.0000		0.0000	0.0000	0.0000		0.0000
Worker	0.0748	0.0421	0.5658	1.9100e-003	0.2054	1.2600e-003	0.2066	0.0545	1.1600e-003	0.0556		190.7238	190.7238	3.9700e-003		190.8232
Total	**0.0748**	**0.0421**	**0.5658**	**1.9100e-003**	**0.2054**	**1.2600e-003**	**0.2066**	**0.0545**	**1.1600e-003**	**0.0556**		**190.7238**	**190.7238**	**3.9700e-003**		**190.8232**

Mitigated Construction On-Site

	ROG	NOx	CO	SO2	Fugitive PM10	Exhaust PM10	PM10 Total	Fugitive PM2.5	Exhaust PM2.5	PM2.5 Total	Bio- CO2	NBio- CO2	Total CO2	CH4	N2O	CO2e
Category	lb/day										lb/day					
Archit. Coating	21.9854					0.0000	0.0000		0.0000	0.0000			0.0000			0.0000
Off-Road	0.0000	0.0000	0.0000	0.0000		0.0000	0.0000		0.0000	0.0000	0.0000	0.0000	0.0000	0.0000		0.0000
Total	**21.9854**	**0.0000**	**0.0000**	**0.0000**		**0.0000**	**0.0000**		**0.0000**	**0.0000**	**0.0000**	**0.0000**	**0.0000**	**0.0000**		**0.0000**

3.6 Architectural Coating - 2022

Mitigated Construction Off-Site

	ROG	NOx	CO	SO2	Fugitive PM10	Exhaust PM10	PM10 Total	Fugitive PM2.5	Exhaust PM2.5	PM2.5 Total	Bio- CO2	NBio- CO2	Total CO2	CH4	N2O	CO2e
Category	lb/day										lb/day					
Hauling	0.0000	0.0000	0.0000	0.0000	0.0000	0.0000	0.0000	0.0000	0.0000	0.0000		0.0000	0.0000	0.0000		0.0000
Vendor	0.0000	0.0000	0.0000	0.0000	0.0000	0.0000	0.0000	0.0000	0.0000	0.0000		0.0000	0.0000	0.0000		0.0000
Worker	0.0748	0.0421	0.5658	1.9100e-003	0.2054	1.2600e-003	0.2066	0.0545	1.1600e-003	0.0556		190.7238	190.7238	3.9700e-003		190.8232
Total	**0.0748**	**0.0421**	**0.5658**	**1.9100e-003**	**0.2054**	**1.2600e-003**	**0.2066**	**0.0545**	**1.1600e-003**	**0.0556**		**190.7238**	**190.7238**	**3.9700e-003**		**190.8232**

3.7 Paving - 2022

Unmitigated Construction On-Site

	ROG	NOx	CO	SO2	Fugitive PM10	Exhaust PM10	PM10 Total	Fugitive PM2.5	Exhaust PM2.5	PM2.5 Total	Bio- CO2	NBio- CO2	Total CO2	CH4	N2O	CO2e
Category	lb/day										lb/day					
Off-Road	0.0000	0.0000	0.0000	0.0000		0.0000	0.0000		0.0000	0.0000		0.0000	0.0000	0.0000		0.0000
Paving	0.0590					0.0000	0.0000		0.0000	0.0000			0.0000			0.0000
Total	**0.0590**	**0.0000**	**0.0000**	**0.0000**		**0.0000**	**0.0000**		**0.0000**	**0.0000**		**0.0000**	**0.0000**	**0.0000**		**0.0000**

3.7 Paving - 2022

Unmitigated Construction Off-Site

	ROG	NOx	CO	SO2	Fugitive PM10	Exhaust PM10	PM10 Total	Fugitive PM2.5	Exhaust PM2.5	PM2.5 Total	Bio- CO2	NBio- CO2	Total CO2	CH4	N2O	CO2e
Category	lb/day										lb/day					
Hauling	0.0000	0.0000	0.0000	0.0000	0.0000	0.0000	0.0000	0.0000	0.0000	0.0000		0.0000	0.0000	0.0000		0.0000
Vendor	0.0000	0.0000	0.0000	0.0000	0.0000	0.0000	0.0000	0.0000	0.0000	0.0000		0.0000	0.0000	0.0000		0.0000
Worker	0.0000	0.0000	0.0000	0.0000	0.0000	0.0000	0.0000	0.0000	0.0000	0.0000		0.0000	0.0000	0.0000		0.0000
Total	**0.0000**	**0.0000**	**0.0000**	**0.0000**	**0.0000**	**0.0000**	**0.0000**	**0.0000**	**0.0000**	**0.0000**		**0.0000**	**0.0000**	**0.0000**		**0.0000**

Mitigated Construction On-Site

	ROG	NOx	CO	SO2	Fugitive PM10	Exhaust PM10	PM10 Total	Fugitive PM2.5	Exhaust PM2.5	PM2.5 Total	Bio- CO2	NBio- CO2	Total CO2	CH4	N2O	CO2e
Category	lb/day										lb/day					
Off-Road	0.0000	0.0000	0.0000	0.0000		0.0000	0.0000		0.0000	0.0000	0.0000	0.0000	0.0000	0.0000		0.0000
Paving	0.0590					0.0000	0.0000		0.0000	0.0000			0.0000			0.0000
Total	**0.0590**	**0.0000**	**0.0000**	**0.0000**		**0.0000**	**0.0000**		**0.0000**	**0.0000**	**0.0000**	**0.0000**	**0.0000**	**0.0000**		**0.0000**

3.7 Paving - 2022

Mitigated Construction Off-Site

	ROG	NOx	CO	SO2	Fugitive PM10	Exhaust PM10	PM10 Total	Fugitive PM2.5	Exhaust PM2.5	PM2.5 Total	Bio- CO2	NBio- CO2	Total CO2	CH4	N2O	CO2e
Category	lb/day										lb/day					
Hauling	0.0000	0.0000	0.0000	0.0000	0.0000	0.0000	0.0000	0.0000	0.0000	0.0000		0.0000	0.0000	0.0000		0.0000
Vendor	0.0000	0.0000	0.0000	0.0000	0.0000	0.0000	0.0000	0.0000	0.0000	0.0000		0.0000	0.0000	0.0000		0.0000
Worker	0.0000	0.0000	0.0000	0.0000	0.0000	0.0000	0.0000	0.0000	0.0000	0.0000		0.0000	0.0000	0.0000		0.0000
Total	**0.0000**	**0.0000**	**0.0000**	**0.0000**	**0.0000**	**0.0000**	**0.0000**	**0.0000**	**0.0000**	**0.0000**		**0.0000**	**0.0000**	**0.0000**		**0.0000**

4.0 Operational Detail - Mobile

4.1 Mitigation Measures Mobile

	ROG	NOx	CO	SO2	Fugitive PM10	Exhaust PM10	PM10 Total	Fugitive PM2.5	Exhaust PM2.5	PM2.5 Total	Bio- CO2	NBio- CO2	Total CO2	CH4	N2O	CO2e
Category	lb/day										lb/day					
Mitigated	0.0000	0.0000	0.0000	0.0000	0.0000	0.0000	0.0000	0.0000	0.0000	0.0000		0.0000	0.0000	0.0000		0.0000
Unmitigated	0.0000	0.0000	0.0000	0.0000	0.0000	0.0000	0.0000	0.0000	0.0000	0.0000		0.0000	0.0000	0.0000		0.0000

4.2 Trip Summary Information

	Average Daily Trip Rate			Unmitigated	Mitigated
Land Use	Weekday	Saturday	Sunday	Annual VMT	Annual VMT
Industrial Park	0.00	0.00	0.00		
Parking Lot	0.00	0.00	0.00		
Total	0.00	0.00	0.00		

4.3 Trip Type Information

	Miles			Trip %			Trip Purpose %		
Land Use	H-W or C-W	H-S or C-C	H-O or C-NW	H-W or C-W	H-S or C-C	H-O or C-NW	Primary	Diverted	Pass-by
Industrial Park	9.50	7.30	7.30	59.00	28.00	13.00	79	19	2
Parking Lot	9.50	7.30	7.30	0.00	0.00	0.00	0	0	0

4.4 Fleet Mix

Land Use	LDA	LDT1	LDT2	MDV	LHD1	LHD2	MHD	HHD	OBUS	UBUS	MCY	SBUS	MH
Industrial Park	0.578638	0.038775	0.193686	0.110919	0.015677	0.005341	0.018293	0.026358	0.002641	0.002200	0.005832	0.000891	0.000749
Parking Lot	0.578638	0.038775	0.193686	0.110919	0.015677	0.005341	0.018293	0.026358	0.002641	0.002200	0.005832	0.000891	0.000749

5.0 Energy Detail

Historical Energy Use: N

5.1 Mitigation Measures Energy

Exceed Title 24

	ROG	NOx	CO	SO2	Fugitive PM10	Exhaust PM10	PM10 Total	Fugitive PM2.5	Exhaust PM2.5	PM2.5 Total	Bio- CO2	NBio- CO2	Total CO2	CH4	N2O	CO2e
Category	lb/day										lb/day					
NaturalGas Mitigated	0.1118	1.0164	0.8538	6.1000e-003		0.0772	0.0772		0.0772	0.0772		1,219.6483	1,219.6483	0.0234	0.0224	1,226.8960
NaturalGas Unmitigated	0.1562	1.4202	1.1929	8.5200e-003		0.1079	0.1079		0.1079	0.1079		1,704.1926	1,704.1926	0.0327	0.0312	1,714.3198

5.2 Energy by Land Use - NaturalGas

Unmitigated

	NaturalGas Use	ROG	NOx	CO	SO2	Fugitive PM10	Exhaust PM10	PM10 Total	Fugitive PM2.5	Exhaust PM2.5	PM2.5 Total	Bio- CO2	NBio- CO2	Total CO2	CH4	N2O	CO2e
Land Use	kBTU/yr	lb/day										lb/day					
Industrial Park	14485.6	0.1562	1.4202	1.1929	8.5200e-003		0.1079	0.1079		0.1079	0.1079		1,704.1926	1,704.1926	0.0327	0.0312	1,714.3198
Parking Lot	0	0.0000	0.0000	0.0000	0.0000		0.0000	0.0000		0.0000	0.0000		0.0000	0.0000	0.0000	0.0000	0.0000
Total		**0.1562**	**1.4202**	**1.1929**	**8.5200e-003**		**0.1079**	**0.1079**		**0.1079**	**0.1079**		**1,704.1926**	**1,704.1926**	**0.0327**	**0.0312**	**1,714.3198**

Mitigated

	NaturalGas Use	ROG	NOx	CO	SO2	Fugitive PM10	Exhaust PM10	PM10 Total	Fugitive PM2.5	Exhaust PM2.5	PM2.5 Total	Bio- CO2	NBio- CO2	Total CO2	CH4	N2O	CO2e
Land Use	kBTU/yr	lb/day										lb/day					
Industrial Park	10.367	0.1118	1.0164	0.8538	6.1000e-003		0.0772	0.0772		0.0772	0.0772		1,219.6483	1,219.6483	0.0234	0.0224	1,226.8960
Parking Lot	0	0.0000	0.0000	0.0000	0.0000		0.0000	0.0000		0.0000	0.0000		0.0000	0.0000	0.0000	0.0000	0.0000
Total		**0.1118**	**1.0164**	**0.8538**	**6.1000e-003**		**0.0772**	**0.0772**		**0.0772**	**0.0772**		**1,219.6483**	**1,219.6483**	**0.0234**	**0.0224**	**1,226.8960**

6.0 Area Detail

6.1 Mitigation Measures Area

	ROG	NOx	CO	SO2	Fugitive PM10	Exhaust PM10	PM10 Total	Fugitive PM2.5	Exhaust PM2.5	PM2.5 Total	Bio- CO2	NBio- CO2	Total CO2	CH4	N2O	CO2e
Category	lb/day										lb/day					
Mitigated	6.5606	3.0000e-004	0.0330	0.0000		1.2000e-004	1.2000e-004		1.2000e-004	1.2000e-004		0.0708	0.0708	1.9000e-004		0.0755
Unmitigated	6.5606	3.0000e-004	0.0330	0.0000		1.2000e-004	1.2000e-004		1.2000e-004	1.2000e-004		0.0708	0.0708	1.9000e-004		0.0755

6.2 Area by SubCategory

Unmitigated

	ROG	NOx	CO	SO2	Fugitive PM10	Exhaust PM10	PM10 Total	Fugitive PM2.5	Exhaust PM2.5	PM2.5 Total	Bio- CO2	NBio- CO2	Total CO2	CH4	N2O	CO2e
SubCategory	lb/day										lb/day					
Architectural Coating	0.6970					0.0000	0.0000		0.0000	0.0000			0.0000			0.0000
Consumer Products	5.8605					0.0000	0.0000		0.0000	0.0000			0.0000			0.0000
Landscaping	3.0600e-003	3.0000e-004	0.0330	0.0000		1.2000e-004	1.2000e-004		1.2000e-004	1.2000e-004		0.0708	0.0708	1.9000e-004		0.0755
Total	**6.5606**	**3.0000e-004**	**0.0330**	**0.0000**		**1.2000e-004**	**1.2000e-004**		**1.2000e-004**	**1.2000e-004**		**0.0708**	**0.0708**	**1.9000e-004**		**0.0755**

6.2 Area by SubCategory

Mitigated

	ROG	NOx	CO	SO2	Fugitive PM10	Exhaust PM10	PM10 Total	Fugitive PM2.5	Exhaust PM2.5	PM2.5 Total	Bio- CO2	NBio- CO2	Total CO2	CH4	N2O	CO2e
SubCategory	lb/day										lb/day					
Architectural Coating	0.6970					0.0000	0.0000		0.0000	0.0000			0.0000			0.0000
Consumer Products	5.8605					0.0000	0.0000		0.0000	0.0000			0.0000			0.0000
Landscaping	3.0600e-003	3.0000e-004	0.0330	0.0000		1.2000e-004	1.2000e-004		1.2000e-004	1.2000e-004		0.0708	0.0708	1.9000e-004		0.0755
Total	**6.5606**	**3.0000e-004**	**0.0330**	**0.0000**		**1.2000e-004**	**1.2000e-004**		**1.2000e-004**	**1.2000e-004**		**0.0708**	**0.0708**	**1.9000e-004**		**0.0755**

7.0 Water Detail

7.1 Mitigation Measures Water

Install Low Flow Bathroom Faucet

Install Low Flow Kitchen Faucet

Install Low Flow Toilet

Install Low Flow Shower

Use Water Efficient Irrigation System

8.0 Waste Detail

8.1 Mitigation Measures Waste

9.0 Operational Offroad

Equipment Type	Number	Hours/Day	Days/Year	Horse Power	Load Factor	Fuel Type

10.0 Stationary Equipment

Fire Pumps and Emergency Generators

Equipment Type	Number	Hours/Day	Hours/Year	Horse Power	Load Factor	Fuel Type

Boilers

Equipment Type	Number	Heat Input/Day	Heat Input/Year	Boiler Rating	Fuel Type

User Defined Equipment

Equipment Type	Number

11.0 Vegetation

Clawiter Industrial Project - Building 4 - 2023

Bay Area AQMD Air District, Annual

1.0 Project Characteristics

1.1 Land Usage

Land Uses	Size	Metric	Lot Acreage	Floor Surface Area	Population
Industrial Park	273.53	1000sqft	6.28	273,526.00	0
Parking Lot	50.00	Space	0.45	20,000.00	0

1.2 Other Project Characteristics

Urbanization	Urban	**Wind Speed (m/s)**	2.2	**Precipitation Freq (Days)**	64
Climate Zone	5			**Operational Year**	2023
Utility Company	Pacific Gas & Electric Company				
CO2 Intensity (lb/MWhr)	641.35	**CH4 Intensity (lb/MWhr)**	0.029	**N2O Intensity (lb/MWhr)**	0.006

1.3 User Entered Comments & Non-Default Data

Project Characteristics -

Land Use - SF and parking for building 4

Construction Phase - Applicant specified 15-month schedule. Extended AC to overlap BC for mroe realistic conditions.

Off-road Equipment - Emissions from equipment calculated in model for Buildings 1 to 3

Off-road Equipment - Emissions from equipment calculated in model for Buildings 1 to 3

Off-road Equipment - Emissions from equipment calculated in model for Buildings 1 to 3

Off-road Equipment - Emissions from equipment calculated in model for Buildings 1 to 3

Off-road Equipment - Emissions from equipment calculated in model for Buildings 1 to 3

Off-road Equipment - Emissions from equipment calculated in model for Buildings 1 to 3

Trips and VMT - Emissions from trips calculated in model for Buildings 1 to 3 except for BC and AC trips

Demolition - Emissions from demolition calculated in model for Buildings 1 to 3

Grading - Emissions from soil export calculated in model for Buildings 1 to 3. Retained default acres of grading for fugitive dust emission estimate.

Architectural Coating - BAAQMD Regulation 8, Rule 3

Vehicle Trips - Mobile source emissions estimated in Buildings 1 to 3 run

Area Coating - BAAQMD Regulation 8, Rule 3

Energy Use - Electricity emissions calculated separately

Water And Wastewater - All wastewater treated at Hayward WWTP with aerobic processes. Additional one million gallons added to indoor water use for cooling purposes. Outdoor water use in model for Buildings 1 to 3

Solid Waste - 77% diversion rate for Hayward

Construction Off-road Equipment Mitigation - Hayward Municipal Code 10-8.32

Mobile Land Use Mitigation -

Water Mitigation - Applicant-specified sustainability features

Fleet Mix -

Energy Mitigation - Title 24 reduced by 30% for 2019 Standards

Table Name	Column Name	Default Value	New Value
tblArchitecturalCoating	EF_Parking	150.00	100.00
tblAreaCoating	Area_EF_Nonresidential_Exterior	150	100

tblConstructionPhase	NumDays	20.00	30.00
tblConstructionPhase	NumDays	230.00	265.00
tblConstructionPhase	NumDays	20.00	130.00
tblEnergyUse	LightingElect	3.58	0.00
tblEnergyUse	NT24E	4.80	0.00
tblEnergyUse	T24E	4.10	0.00
tblGrading	AcresOfGrading	0.00	15.00
tblLandUse	LandUseSquareFeet	273,530.00	273,526.00
tblOffRoadEquipment	UsageHours	6.00	0.00
tblOffRoadEquipment	UsageHours	8.00	0.00
tblOffRoadEquipment	UsageHours	7.00	0.00
tblOffRoadEquipment	UsageHours	8.00	0.00
tblOffRoadEquipment	UsageHours	8.00	0.00
tblOffRoadEquipment	UsageHours	8.00	0.00
tblOffRoadEquipment	UsageHours	8.00	0.00
tblOffRoadEquipment	UsageHours	8.00	0.00
tblOffRoadEquipment	UsageHours	8.00	0.00
tblOffRoadEquipment	UsageHours	8.00	0.00
tblOffRoadEquipment	UsageHours	8.00	0.00
tblOffRoadEquipment	UsageHours	8.00	0.00
tblOffRoadEquipment	UsageHours	8.00	0.00
tblOffRoadEquipment	UsageHours	7.00	0.00
tblOffRoadEquipment	UsageHours	8.00	0.00
tblOffRoadEquipment	UsageHours	8.00	0.00
tblOffRoadEquipment	UsageHours	8.00	0.00
tblSolidWaste	SolidWasteGenerationRate	339.18	78.01

tblTripsAndVMT	WorkerTripNumber	15.00	0.00
tblTripsAndVMT	WorkerTripNumber	18.00	0.00
tblTripsAndVMT	WorkerTripNumber	15.00	0.00
tblTripsAndVMT	WorkerTripNumber	15.00	0.00
tblVehicleTrips	ST_TR	2.49	0.00
tblVehicleTrips	SU_TR	0.73	0.00
tblVehicleTrips	WD_TR	6.83	0.00
tblWater	AerobicPercent	87.46	100.00
tblWater	AnaerobicandFacultativeLagoonsPercent	2.21	0.00
tblWater	IndoorWaterUseRate	63,253,812.50	64,253,812.50
tblWater	SepticTankPercent	10.33	0.00

2.0 Emissions Summary

2.1 Overall Construction

Unmitigated Construction

	ROG	NOx	CO	SO2	Fugitive PM10	Exhaust PM10	PM10 Total	Fugitive PM2.5	Exhaust PM2.5	PM2.5 Total	Bio- CO2	NBio- CO2	Total CO2	CH4	N2O	CO2e
Year	tons/yr										MT/yr					
2021	0.7813	0.5318	0.4215	2.2800e-003	0.1438	1.7800e-003	0.1456	0.0377	1.6800e-003	0.0394	0.0000	213.1920	213.1920	8.1300e-003	0.0000	213.3952
2022	0.7222	0.1609	0.1353	7.5000e-004	0.0475	5.4000e-004	0.0480	0.0129	5.1000e-004	0.0134	0.0000	69.9208	69.9208	2.5100e-003	0.0000	69.9835
Maximum	**0.7813**	**0.5318**	**0.4215**	**2.2800e-003**	**0.1438**	**1.7800e-003**	**0.1456**	**0.0377**	**1.6800e-003**	**0.0394**	**0.0000**	**213.1920**	**213.1920**	**8.1300e-003**	**0.0000**	**213.3952**

Mitigated Construction

	ROG	NOx	CO	SO2	Fugitive PM10	Exhaust PM10	PM10 Total	Fugitive PM2.5	Exhaust PM2.5	PM2.5 Total	Bio- CO2	NBio- CO2	Total CO2	CH4	N2O	CO2e
Year	tons/yr										MT/yr					
2021	0.7813	0.5318	0.4215	2.2800e-003	0.1394	1.7800e-003	0.1412	0.0373	1.6800e-003	0.0389	0.0000	213.1920	213.1920	8.1300e-003	0.0000	213.3952
2022	0.7222	0.1609	0.1353	7.5000e-004	0.0475	5.4000e-004	0.0480	0.0129	5.1000e-004	0.0134	0.0000	69.9208	69.9208	2.5100e-003	0.0000	69.9835
Maximum	**0.7813**	**0.5318**	**0.4215**	**2.2800e-003**	**0.1394**	**1.7800e-003**	**0.1412**	**0.0373**	**1.6800e-003**	**0.0389**	**0.0000**	**213.1920**	**213.1920**	**8.1300e-003**	**0.0000**	**213.3952**

	ROG	**NOx**	**CO**	**SO2**	**Fugitive PM10**	**Exhaust PM10**	**PM10 Total**	**Fugitive PM2.5**	**Exhaust PM2.5**	**PM2.5 Total**	**Bio- CO2**	**NBio-CO2**	**Total CO2**	**CH4**	**N20**	**CO2e**
Percent Reduction	**0.00**	**0.00**	**0.00**	**0.00**	**2.28**	**0.00**	**2.26**	**0.93**	**0.00**	**0.89**	**0.00**	**0.00**	**0.00**	**0.00**	**0.00**	**0.00**

Quarter	Start Date	End Date	Maximum Unmitigated ROG + NOX (tons/quarter)	Maximum Mitigated ROG + NOX (tons/quarter)
1	**1-1-2021**	**3-31-2021**	0.0126	0.0126
2	**4-1-2021**	**6-30-2021**	0.1864	0.1864
3	**7-1-2021**	**9-30-2021**	0.1885	0.1885
4	**10-1-2021**	**12-31-2021**	0.9198	0.9198
5	**1-1-2022**	**3-31-2022**	0.8893	0.8893
		Highest	0.9198	0.9198

2.2 Overall Operational

Unmitigated Operational

	ROG	NOx	CO	SO2	Fugitive PM10	Exhaust PM10	PM10 Total	Fugitive PM2.5	Exhaust PM2.5	PM2.5 Total	Bio- CO2	NBio- CO2	Total CO2	CH4	N2O	CO2e
Category	tons/yr										MT/yr					
Area	1.1970	3.0000e-005	2.9700e-003	0.0000		1.0000e-005	1.0000e-005		1.0000e-005	1.0000e-005	0.0000	5.7800e-003	5.7800e-003	2.0000e-005	0.0000	6.1600e-003
Energy	0.0285	0.2592	0.2177	1.5600e-003		0.0197	0.0197		0.0197	0.0197	0.0000	284.1846	284.1846	5.5000e-003	5.1900e-003	285.8692
Mobile	0.0000	0.0000	0.0000	0.0000	0.0000	0.0000	0.0000	0.0000	0.0000	0.0000	0.0000	0.0000	0.0000	0.0000	0.0000	0.0000
Waste						0.0000	0.0000		0.0000	0.0000	15.8353	0.0000	15.8353	0.9358	0.0000	39.2314
Water						0.0000	0.0000		0.0000	0.0000	22.7331	101.1433	123.8764	0.0828	0.0504	140.9611
Total	**1.2255**	**0.2592**	**0.2207**	**1.5600e-003**	**0.0000**	**0.0197**	**0.0197**	**0.0000**	**0.0197**	**0.0197**	**38.5684**	**385.3337**	**423.9021**	**1.0242**	**0.0556**	**466.0678**

2.2 Overall Operational

Mitigated Operational

	ROG	NOx	CO	SO2	Fugitive PM10	Exhaust PM10	PM10 Total	Fugitive PM2.5	Exhaust PM2.5	PM2.5 Total	Bio- CO2	NBio- CO2	Total CO2	CH4	N2O	CO2e
Category	tons/yr										MT/yr					
Area	1.1970	3.0000e-005	2.9700e-003	0.0000		1.0000e-005	1.0000e-005		1.0000e-005	1.0000e-005	0.0000	5.7800e-003	5.7800e-003	2.0000e-005	0.0000	6.1600e-003
Energy	0.0204	0.1855	0.1558	1.1100e-003		0.0141	0.0141		0.0141	0.0141	0.0000	203.9628	203.9628	3.9600e-003	3.7200e-003	205.1708
Mobile	0.0000	0.0000	0.0000	0.0000	0.0000	0.0000	0.0000	0.0000	0.0000	0.0000	0.0000	0.0000	0.0000	0.0000	0.0000	0.0000
Waste						0.0000	0.0000		0.0000	0.0000	15.8353	0.0000	15.8353	0.9358	0.0000	39.2314
Water						0.0000	0.0000		0.0000	0.0000	18.1865	80.9147	99.1012	0.0663	0.0403	112.7689
Total	**1.2174**	**0.1855**	**0.1588**	**1.1100e-003**	**0.0000**	**0.0141**	**0.0141**	**0.0000**	**0.0141**	**0.0141**	**34.0218**	**284.8833**	**318.9051**	**1.0061**	**0.0440**	**357.1772**

	ROG	NOx	CO	SO2	Fugitive PM10	Exhaust PM10	PM10 Total	Fugitive PM2.5	Exhaust PM2.5	PM2.5 Total	Bio- CO2	NBio-CO2	Total CO2	CH4	N20	CO2e
Percent Reduction	**0.66**	**28.43**	**28.05**	**28.85**	**0.00**	**28.41**	**28.41**	**0.00**	**28.41**	**28.41**	**11.79**	**26.07**	**24.77**	**1.77**	**20.77**	**23.36**

3.0 Construction Detail

Construction Phase

Phase Number	Phase Name	Phase Type	Start Date	End Date	Num Days Week	Num Days	Phase Description
1	Demolition	Demolition	1/1/2021	1/28/2021	5	20	
2	Site Preparation	Site Preparation	1/29/2021	2/11/2021	5	10	
3	Grading	Grading	2/12/2021	3/25/2021	5	30	
4	Building Construction	Building Construction	3/26/2021	3/31/2022	5	265	
5	Architectural Coating	Architectural Coating	10/1/2021	3/31/2022	5	130	
6	Paving	Paving	3/4/2022	3/31/2022	5	20	

Acres of Grading (Site Preparation Phase): 0

Acres of Grading (Grading Phase): 15

Acres of Paving: 0.45

Residential Indoor: 0; Residential Outdoor: 0; Non-Residential Indoor: 410,289; Non-Residential Outdoor: 136,763; Striped Parking Area: 1,200 (Architectural Coating – sqft)

<u>OffRoad Equipment</u>

Clawiter Industrial Project - Building 4 - 2023 - Bay Area AQMD Air District, Annual

Phase Name	Offroad Equipment Type	Amount	Usage Hours	Horse Power	Load Factor
Demolition	Concrete/Industrial Saws	1	0.00	81	0.73
Demolition	Excavators	3	0.00	158	0.38
Demolition	Rubber Tired Dozers	2	0.00	247	0.40
Site Preparation	Rubber Tired Dozers	3	0.00	247	0.40
Site Preparation	Tractors/Loaders/Backhoes	4	0.00	97	0.37
Grading	Excavators	1	0.00	158	0.38
Grading	Graders	1	0.00	187	0.41
Grading	Rubber Tired Dozers	1	0.00	247	0.40
Grading	Tractors/Loaders/Backhoes	3	0.00	97	0.37
Building Construction	Cranes	1	0.00	231	0.29
Building Construction	Forklifts	3	0.00	89	0.20
Building Construction	Generator Sets	1	0.00	84	0.74
Building Construction	Tractors/Loaders/Backhoes	3	0.00	97	0.37
Building Construction	Welders	1	0.00	46	0.45
Architectural Coating	Air Compressors	1	0.00	78	0.48
Paving	Pavers	2	0.00	130	0.42
Paving	Paving Equipment	2	0.00	132	0.36
Paving	Rollers	2	0.00	80	0.38

Trips and VMT

Phase Name	Offroad Equipment Count	Worker Trip Number	Vendor Trip Number	Hauling Trip Number	Worker Trip Length	Vendor Trip Length	Hauling Trip Length	Worker Vehicle Class	Vendor Vehicle Class	Hauling Vehicle Class
Demolition	6	0.00	0.00	0.00	10.80	7.30	20.00	LD_Mix	HDT_Mix	HHDT
Site Preparation	7	0.00	0.00	0.00	10.80	7.30	20.00	LD_Mix	HDT_Mix	HHDT
Grading	6	0.00	0.00	0.00	10.80	7.30	20.00	LD_Mix	HDT_Mix	HHDT
Building Construction	9	123.00	48.00	0.00	10.80	7.30	20.00	LD_Mix	HDT_Mix	HHDT
Architectural Coating	1	25.00	0.00	0.00	10.80	7.30	20.00	LD_Mix	HDT_Mix	HHDT
Paving	6	0.00	0.00	0.00	10.80	7.30	20.00	LD_Mix	HDT_Mix	HHDT

3.1 Mitigation Measures Construction

Water Exposed Area

3.2 Demolition - 2021

Unmitigated Construction On-Site

	ROG	NOx	CO	SO2	Fugitive PM10	Exhaust PM10	PM10 Total	Fugitive PM2.5	Exhaust PM2.5	PM2.5 Total	Bio- CO2	NBio- CO2	Total CO2	CH4	N2O	CO2e
Category	tons/yr										MT/yr					
Fugitive Dust					0.0000	0.0000	0.0000	0.0000	0.0000	0.0000	0.0000	0.0000	0.0000	0.0000	0.0000	0.0000
Off-Road	0.0000	0.0000	0.0000	0.0000		0.0000	0.0000		0.0000	0.0000	0.0000	0.0000	0.0000	0.0000	0.0000	0.0000
Total	**0.0000**	**0.0000**	**0.0000**	**0.0000**	**0.0000**	**0.0000**	**0.0000**	**0.0000**	**0.0000**	**0.0000**	**0.0000**	**0.0000**	**0.0000**	**0.0000**	**0.0000**	**0.0000**

3.2 Demolition - 2021

Unmitigated Construction Off-Site

	ROG	NOx	CO	SO2	Fugitive PM10	Exhaust PM10	PM10 Total	Fugitive PM2.5	Exhaust PM2.5	PM2.5 Total	Bio- CO2	NBio- CO2	Total CO2	CH4	N2O	CO2e
Category	tons/yr										MT/yr					
Hauling	0.0000	0.0000	0.0000	0.0000	0.0000	0.0000	0.0000	0.0000	0.0000	0.0000	0.0000	0.0000	0.0000	0.0000	0.0000	0.0000
Vendor	0.0000	0.0000	0.0000	0.0000	0.0000	0.0000	0.0000	0.0000	0.0000	0.0000	0.0000	0.0000	0.0000	0.0000	0.0000	0.0000
Worker	0.0000	0.0000	0.0000	0.0000	0.0000	0.0000	0.0000	0.0000	0.0000	0.0000	0.0000	0.0000	0.0000	0.0000	0.0000	0.0000
Total	**0.0000**	**0.0000**	**0.0000**	**0.0000**	**0.0000**	**0.0000**	**0.0000**	**0.0000**	**0.0000**	**0.0000**	**0.0000**	**0.0000**	**0.0000**	**0.0000**	**0.0000**	**0.0000**

Mitigated Construction On-Site

	ROG	NOx	CO	SO2	Fugitive PM10	Exhaust PM10	PM10 Total	Fugitive PM2.5	Exhaust PM2.5	PM2.5 Total	Bio- CO2	NBio- CO2	Total CO2	CH4	N2O	CO2e
Category	tons/yr										MT/yr					
Fugitive Dust					0.0000	0.0000	0.0000	0.0000	0.0000	0.0000	0.0000	0.0000	0.0000	0.0000	0.0000	0.0000
Off-Road	0.0000	0.0000	0.0000	0.0000		0.0000	0.0000		0.0000	0.0000	0.0000	0.0000	0.0000	0.0000	0.0000	0.0000
Total	**0.0000**	**0.0000**	**0.0000**	**0.0000**	**0.0000**	**0.0000**	**0.0000**	**0.0000**	**0.0000**	**0.0000**	**0.0000**	**0.0000**	**0.0000**	**0.0000**	**0.0000**	**0.0000**

3.2 Demolition - 2021

Mitigated Construction Off-Site

	ROG	NOx	CO	SO2	Fugitive PM10	Exhaust PM10	PM10 Total	Fugitive PM2.5	Exhaust PM2.5	PM2.5 Total	Bio- CO2	NBio- CO2	Total CO2	CH4	N2O	CO2e
Category	tons/yr										MT/yr					
Hauling	0.0000	0.0000	0.0000	0.0000	0.0000	0.0000	0.0000	0.0000	0.0000	0.0000	0.0000	0.0000	0.0000	0.0000	0.0000	0.0000
Vendor	0.0000	0.0000	0.0000	0.0000	0.0000	0.0000	0.0000	0.0000	0.0000	0.0000	0.0000	0.0000	0.0000	0.0000	0.0000	0.0000
Worker	0.0000	0.0000	0.0000	0.0000	0.0000	0.0000	0.0000	0.0000	0.0000	0.0000	0.0000	0.0000	0.0000	0.0000	0.0000	0.0000
Total	**0.0000**	**0.0000**	**0.0000**	**0.0000**	**0.0000**	**0.0000**	**0.0000**	**0.0000**	**0.0000**	**0.0000**	**0.0000**	**0.0000**	**0.0000**	**0.0000**	**0.0000**	**0.0000**

3.3 Site Preparation - 2021

Unmitigated Construction On-Site

	ROG	NOx	CO	SO2	Fugitive PM10	Exhaust PM10	PM10 Total	Fugitive PM2.5	Exhaust PM2.5	PM2.5 Total	Bio- CO2	NBio- CO2	Total CO2	CH4	N2O	CO2e
Category	tons/yr										MT/yr					
Fugitive Dust					0.0000	0.0000	0.0000	0.0000	0.0000	0.0000	0.0000	0.0000	0.0000	0.0000	0.0000	0.0000
Off-Road	0.0000	0.0000	0.0000	0.0000		0.0000	0.0000		0.0000	0.0000	0.0000	0.0000	0.0000	0.0000	0.0000	0.0000
Total	**0.0000**	**0.0000**	**0.0000**	**0.0000**	**0.0000**	**0.0000**	**0.0000**	**0.0000**	**0.0000**	**0.0000**	**0.0000**	**0.0000**	**0.0000**	**0.0000**	**0.0000**	**0.0000**

3.3 Site Preparation - 2021

Unmitigated Construction Off-Site

	ROG	NOx	CO	SO2	Fugitive PM10	Exhaust PM10	PM10 Total	Fugitive PM2.5	Exhaust PM2.5	PM2.5 Total	Bio- CO2	NBio- CO2	Total CO2	CH4	N2O	CO2e
Category	tons/yr										MT/yr					
Hauling	0.0000	0.0000	0.0000	0.0000	0.0000	0.0000	0.0000	0.0000	0.0000	0.0000	0.0000	0.0000	0.0000	0.0000	0.0000	0.0000
Vendor	0.0000	0.0000	0.0000	0.0000	0.0000	0.0000	0.0000	0.0000	0.0000	0.0000	0.0000	0.0000	0.0000	0.0000	0.0000	0.0000
Worker	0.0000	0.0000	0.0000	0.0000	0.0000	0.0000	0.0000	0.0000	0.0000	0.0000	0.0000	0.0000	0.0000	0.0000	0.0000	0.0000
Total	**0.0000**	**0.0000**	**0.0000**	**0.0000**	**0.0000**	**0.0000**	**0.0000**	**0.0000**	**0.0000**	**0.0000**	**0.0000**	**0.0000**	**0.0000**	**0.0000**	**0.0000**	**0.0000**

Mitigated Construction On-Site

	ROG	NOx	CO	SO2	Fugitive PM10	Exhaust PM10	PM10 Total	Fugitive PM2.5	Exhaust PM2.5	PM2.5 Total	Bio- CO2	NBio- CO2	Total CO2	CH4	N2O	CO2e
Category	tons/yr										MT/yr					
Fugitive Dust					0.0000	0.0000	0.0000	0.0000	0.0000	0.0000	0.0000	0.0000	0.0000	0.0000	0.0000	0.0000
Off-Road	0.0000	0.0000	0.0000	0.0000		0.0000	0.0000		0.0000	0.0000	0.0000	0.0000	0.0000	0.0000	0.0000	0.0000
Total	**0.0000**	**0.0000**	**0.0000**	**0.0000**	**0.0000**	**0.0000**	**0.0000**	**0.0000**	**0.0000**	**0.0000**	**0.0000**	**0.0000**	**0.0000**	**0.0000**	**0.0000**	**0.0000**

3.3 Site Preparation - 2021

Mitigated Construction Off-Site

	ROG	NOx	CO	SO2	Fugitive PM10	Exhaust PM10	PM10 Total	Fugitive PM2.5	Exhaust PM2.5	PM2.5 Total	Bio- CO2	NBio- CO2	Total CO2	CH4	N2O	CO2e
Category	tons/yr										MT/yr					
Hauling	0.0000	0.0000	0.0000	0.0000	0.0000	0.0000	0.0000	0.0000	0.0000	0.0000	0.0000	0.0000	0.0000	0.0000	0.0000	0.0000
Vendor	0.0000	0.0000	0.0000	0.0000	0.0000	0.0000	0.0000	0.0000	0.0000	0.0000	0.0000	0.0000	0.0000	0.0000	0.0000	0.0000
Worker	0.0000	0.0000	0.0000	0.0000	0.0000	0.0000	0.0000	0.0000	0.0000	0.0000	0.0000	0.0000	0.0000	0.0000	0.0000	0.0000
Total	**0.0000**	**0.0000**	**0.0000**	**0.0000**	**0.0000**	**0.0000**	**0.0000**	**0.0000**	**0.0000**	**0.0000**	**0.0000**	**0.0000**	**0.0000**	**0.0000**	**0.0000**	**0.0000**

3.4 Grading - 2021

Unmitigated Construction On-Site

	ROG	NOx	CO	SO2	Fugitive PM10	Exhaust PM10	PM10 Total	Fugitive PM2.5	Exhaust PM2.5	PM2.5 Total	Bio- CO2	NBio- CO2	Total CO2	CH4	N2O	CO2e
Category	tons/yr										MT/yr					
Fugitive Dust					7.9500e-003	0.0000	7.9500e-003	8.6000e-004	0.0000	8.6000e-004	0.0000	0.0000	0.0000	0.0000	0.0000	0.0000
Off-Road	0.0000	0.0000	0.0000	0.0000		0.0000	0.0000		0.0000	0.0000	0.0000	0.0000	0.0000	0.0000	0.0000	0.0000
Total	**0.0000**	**0.0000**	**0.0000**	**0.0000**	**7.9500e-003**	**0.0000**	**7.9500e-003**	**8.6000e-004**	**0.0000**	**8.6000e-004**	**0.0000**	**0.0000**	**0.0000**	**0.0000**	**0.0000**	**0.0000**

3.4 Grading - 2021

Unmitigated Construction Off-Site

	ROG	NOx	CO	SO2	Fugitive PM10	Exhaust PM10	PM10 Total	Fugitive PM2.5	Exhaust PM2.5	PM2.5 Total	Bio- CO2	NBio- CO2	Total CO2	CH4	N2O	CO2e
Category	tons/yr										MT/yr					
Hauling	0.0000	0.0000	0.0000	0.0000	0.0000	0.0000	0.0000	0.0000	0.0000	0.0000	0.0000	0.0000	0.0000	0.0000	0.0000	0.0000
Vendor	0.0000	0.0000	0.0000	0.0000	0.0000	0.0000	0.0000	0.0000	0.0000	0.0000	0.0000	0.0000	0.0000	0.0000	0.0000	0.0000
Worker	0.0000	0.0000	0.0000	0.0000	0.0000	0.0000	0.0000	0.0000	0.0000	0.0000	0.0000	0.0000	0.0000	0.0000	0.0000	0.0000
Total	**0.0000**	**0.0000**	**0.0000**	**0.0000**	**0.0000**	**0.0000**	**0.0000**	**0.0000**	**0.0000**	**0.0000**	**0.0000**	**0.0000**	**0.0000**	**0.0000**	**0.0000**	**0.0000**

Mitigated Construction On-Site

	ROG	NOx	CO	SO2	Fugitive PM10	Exhaust PM10	PM10 Total	Fugitive PM2.5	Exhaust PM2.5	PM2.5 Total	Bio- CO2	NBio- CO2	Total CO2	CH4	N2O	CO2e
Category	tons/yr										MT/yr					
Fugitive Dust					3.5800e-003	0.0000	3.5800e-003	3.9000e-004	0.0000	3.9000e-004	0.0000	0.0000	0.0000	0.0000	0.0000	0.0000
Off-Road	0.0000	0.0000	0.0000	0.0000		0.0000	0.0000		0.0000	0.0000	0.0000	0.0000	0.0000	0.0000	0.0000	0.0000
Total	**0.0000**	**0.0000**	**0.0000**	**0.0000**	**3.5800e-003**	**0.0000**	**3.5800e-003**	**3.9000e-004**	**0.0000**	**3.9000e-004**	**0.0000**	**0.0000**	**0.0000**	**0.0000**	**0.0000**	**0.0000**

3.4 Grading - 2021

Mitigated Construction Off-Site

	ROG	NOx	CO	SO2	Fugitive PM10	Exhaust PM10	PM10 Total	Fugitive PM2.5	Exhaust PM2.5	PM2.5 Total	Bio- CO2	NBio- CO2	Total CO2	CH4	N2O	CO2e
Category	tons/yr										MT/yr					
Hauling	0.0000	0.0000	0.0000	0.0000	0.0000	0.0000	0.0000	0.0000	0.0000	0.0000	0.0000	0.0000	0.0000	0.0000	0.0000	0.0000
Vendor	0.0000	0.0000	0.0000	0.0000	0.0000	0.0000	0.0000	0.0000	0.0000	0.0000	0.0000	0.0000	0.0000	0.0000	0.0000	0.0000
Worker	0.0000	0.0000	0.0000	0.0000	0.0000	0.0000	0.0000	0.0000	0.0000	0.0000	0.0000	0.0000	0.0000	0.0000	0.0000	0.0000
Total	**0.0000**	**0.0000**	**0.0000**	**0.0000**	**0.0000**	**0.0000**	**0.0000**	**0.0000**	**0.0000**	**0.0000**	**0.0000**	**0.0000**	**0.0000**	**0.0000**	**0.0000**	**0.0000**

3.5 Building Construction - 2021

Unmitigated Construction On-Site

	ROG	NOx	CO	SO2	Fugitive PM10	Exhaust PM10	PM10 Total	Fugitive PM2.5	Exhaust PM2.5	PM2.5 Total	Bio- CO2	NBio- CO2	Total CO2	CH4	N2O	CO2e
Category	tons/yr										MT/yr					
Off-Road	0.0000	0.0000	0.0000	0.0000		0.0000	0.0000		0.0000	0.0000	0.0000	0.0000	0.0000	0.0000	0.0000	0.0000
Total	**0.0000**	**0.0000**	**0.0000**	**0.0000**		**0.0000**	**0.0000**		**0.0000**	**0.0000**	**0.0000**	**0.0000**	**0.0000**	**0.0000**	**0.0000**	**0.0000**

3.5 Building Construction - 2021

Unmitigated Construction Off-Site

	ROG	NOx	CO	SO2	Fugitive PM10	Exhaust PM10	PM10 Total	Fugitive PM2.5	Exhaust PM2.5	PM2.5 Total	Bio- CO2	NBio- CO2	Total CO2	CH4	N2O	CO2e
Category	tons/yr										MT/yr					
Hauling	0.0000	0.0000	0.0000	0.0000	0.0000	0.0000	0.0000	0.0000	0.0000	0.0000	0.0000	0.0000	0.0000	0.0000	0.0000	0.0000
Vendor	0.0153	0.5039	0.1258	1.3000e-003	0.0316	1.1000e-003	0.0327	9.1500e-003	1.0500e-003	0.0102	0.0000	125.1075	125.1075	6.1500e-003	0.0000	125.2613
Worker	0.0379	0.0262	0.2773	9.1000e-004	0.0977	6.4000e-004	0.0983	0.0260	5.9000e-004	0.0266	0.0000	82.5736	82.5736	1.8500e-003	0.0000	82.6199
Total	**0.0533**	**0.5300**	**0.4030**	**2.2100e-003**	**0.1293**	**1.7400e-003**	**0.1311**	**0.0351**	**1.6400e-003**	**0.0368**	**0.0000**	**207.6811**	**207.6811**	**8.0000e-003**	**0.0000**	**207.8812**

Mitigated Construction On-Site

	ROG	NOx	CO	SO2	Fugitive PM10	Exhaust PM10	PM10 Total	Fugitive PM2.5	Exhaust PM2.5	PM2.5 Total	Bio- CO2	NBio- CO2	Total CO2	CH4	N2O	CO2e
Category	tons/yr										MT/yr					
Off-Road	0.0000	0.0000	0.0000	0.0000		0.0000	0.0000		0.0000	0.0000	0.0000	0.0000	0.0000	0.0000	0.0000	0.0000
Total	**0.0000**	**0.0000**	**0.0000**	**0.0000**		**0.0000**	**0.0000**		**0.0000**	**0.0000**	**0.0000**	**0.0000**	**0.0000**	**0.0000**	**0.0000**	**0.0000**

3.5 Building Construction - 2021

Mitigated Construction Off-Site

	ROG	NOx	CO	SO2	Fugitive PM10	Exhaust PM10	PM10 Total	Fugitive PM2.5	Exhaust PM2.5	PM2.5 Total	Bio- CO2	NBio- CO2	Total CO2	CH4	N2O	CO2e
Category	tons/yr										MT/yr					
Hauling	0.0000	0.0000	0.0000	0.0000	0.0000	0.0000	0.0000	0.0000	0.0000	0.0000	0.0000	0.0000	0.0000	0.0000	0.0000	0.0000
Vendor	0.0153	0.5039	0.1258	1.3000e-003	0.0316	1.1000e-003	0.0327	9.1500e-003	1.0500e-003	0.0102	0.0000	125.1075	125.1075	6.1500e-003	0.0000	125.2613
Worker	0.0379	0.0262	0.2773	9.1000e-004	0.0977	6.4000e-004	0.0983	0.0260	5.9000e-004	0.0266	0.0000	82.5736	82.5736	1.8500e-003	0.0000	82.6199
Total	**0.0533**	**0.5300**	**0.4030**	**2.2100e-003**	**0.1293**	**1.7400e-003**	**0.1311**	**0.0351**	**1.6400e-003**	**0.0368**	**0.0000**	**207.6811**	**207.6811**	**8.0000e-003**	**0.0000**	**207.8812**

3.5 Building Construction - 2022

Unmitigated Construction On-Site

	ROG	NOx	CO	SO2	Fugitive PM10	Exhaust PM10	PM10 Total	Fugitive PM2.5	Exhaust PM2.5	PM2.5 Total	Bio- CO2	NBio- CO2	Total CO2	CH4	N2O	CO2e
Category	tons/yr										MT/yr					
Off-Road	0.0000	0.0000	0.0000	0.0000		0.0000	0.0000		0.0000	0.0000	0.0000	0.0000	0.0000	0.0000	0.0000	0.0000
Total	**0.0000**	**0.0000**	**0.0000**	**0.0000**		**0.0000**	**0.0000**		**0.0000**	**0.0000**	**0.0000**	**0.0000**	**0.0000**	**0.0000**	**0.0000**	**0.0000**

3.5 Building Construction - 2022

Unmitigated Construction Off-Site

	ROG	NOx	CO	SO2	Fugitive PM10	Exhaust PM10	PM10 Total	Fugitive PM2.5	Exhaust PM2.5	PM2.5 Total	Bio- CO2	NBio- CO2	Total CO2	CH4	N2O	CO2e
Category	tons/yr										MT/yr					
Hauling	0.0000	0.0000	0.0000	0.0000	0.0000	0.0000	0.0000	0.0000	0.0000	0.0000	0.0000	0.0000	0.0000	0.0000	0.0000	0.0000
Vendor	4.5500e-003	0.1519	0.0377	4.1000e-004	0.0101	3.0000e-004	0.0104	2.9100e-003	2.9000e-004	3.2000e-003	0.0000	39.4446	39.4446	1.8700e-003	0.0000	39.4914
Worker	0.0113	7.4700e-003	0.0811	2.8000e-004	0.0311	2.0000e-004	0.0313	8.2700e-003	1.8000e-004	8.4600e-003	0.0000	25.3282	25.3282	5.3000e-004	0.0000	25.3414
Total	**0.0158**	**0.1594**	**0.1188**	**6.9000e-004**	**0.0412**	**5.0000e-004**	**0.0417**	**0.0112**	**4.7000e-004**	**0.0117**	**0.0000**	**64.7728**	**64.7728**	**2.4000e-003**	**0.0000**	**64.8328**

Mitigated Construction On-Site

	ROG	NOx	CO	SO2	Fugitive PM10	Exhaust PM10	PM10 Total	Fugitive PM2.5	Exhaust PM2.5	PM2.5 Total	Bio- CO2	NBio- CO2	Total CO2	CH4	N2O	CO2e
Category	tons/yr										MT/yr					
Off-Road	0.0000	0.0000	0.0000	0.0000		0.0000	0.0000		0.0000	0.0000	0.0000	0.0000	0.0000	0.0000	0.0000	0.0000
Total	**0.0000**	**0.0000**	**0.0000**	**0.0000**		**0.0000**	**0.0000**		**0.0000**	**0.0000**	**0.0000**	**0.0000**	**0.0000**	**0.0000**	**0.0000**	**0.0000**

3.5 Building Construction - 2022

Mitigated Construction Off-Site

	ROG	NOx	CO	SO2	Fugitive PM10	Exhaust PM10	PM10 Total	Fugitive PM2.5	Exhaust PM2.5	PM2.5 Total	Bio- CO2	NBio- CO2	Total CO2	CH4	N2O	CO2e
Category	tons/yr										MT/yr					
Hauling	0.0000	0.0000	0.0000	0.0000	0.0000	0.0000	0.0000	0.0000	0.0000	0.0000	0.0000	0.0000	0.0000	0.0000	0.0000	0.0000
Vendor	4.5500e-003	0.1519	0.0377	4.1000e-004	0.0101	3.0000e-004	0.0104	2.9100e-003	2.9000e-004	3.2000e-003	0.0000	39.4446	39.4446	1.8700e-003	0.0000	39.4914
Worker	0.0113	7.4700e-003	0.0811	2.8000e-004	0.0311	2.0000e-004	0.0313	8.2700e-003	1.8000e-004	8.4600e-003	0.0000	25.3282	25.3282	5.3000e-004	0.0000	25.3414
Total	**0.0158**	**0.1594**	**0.1188**	**6.9000e-004**	**0.0412**	**5.0000e-004**	**0.0417**	**0.0112**	**4.7000e-004**	**0.0117**	**0.0000**	**64.7728**	**64.7728**	**2.4000e-003**	**0.0000**	**64.8328**

3.6 Architectural Coating - 2021

Unmitigated Construction On-Site

	ROG	NOx	CO	SO2	Fugitive PM10	Exhaust PM10	PM10 Total	Fugitive PM2.5	Exhaust PM2.5	PM2.5 Total	Bio- CO2	NBio- CO2	Total CO2	CH4	N2O	CO2e
Category	tons/yr										MT/yr					
Archit. Coating	0.7255					0.0000	0.0000		0.0000	0.0000	0.0000	0.0000	0.0000	0.0000	0.0000	0.0000
Off-Road	0.0000	0.0000	0.0000	0.0000		0.0000	0.0000		0.0000	0.0000	0.0000	0.0000	0.0000	0.0000	0.0000	0.0000
Total	**0.7255**	**0.0000**	**0.0000**	**0.0000**		**0.0000**	**0.0000**		**0.0000**	**0.0000**	**0.0000**	**0.0000**	**0.0000**	**0.0000**	**0.0000**	**0.0000**

3.6 Architectural Coating - 2021

Unmitigated Construction Off-Site

	ROG	NOx	CO	SO2	Fugitive PM10	Exhaust PM10	PM10 Total	Fugitive PM2.5	Exhaust PM2.5	PM2.5 Total	Bio- CO2	NBio- CO2	Total CO2	CH4	N2O	CO2e
Category	tons/yr										MT/yr					
Hauling	0.0000	0.0000	0.0000	0.0000	0.0000	0.0000	0.0000	0.0000	0.0000	0.0000	0.0000	0.0000	0.0000	0.0000	0.0000	0.0000
Vendor	0.0000	0.0000	0.0000	0.0000	0.0000	0.0000	0.0000	0.0000	0.0000	0.0000	0.0000	0.0000	0.0000	0.0000	0.0000	0.0000
Worker	2.5300e-003	1.7500e-003	0.0185	6.0000e-005	6.5200e-003	4.0000e-005	6.5600e-003	1.7300e-003	4.0000e-005	1.7700e-003	0.0000	5.5109	5.5109	1.2000e-004	0.0000	5.5140
Total	**2.5300e-003**	**1.7500e-003**	**0.0185**	**6.0000e-005**	**6.5200e-003**	**4.0000e-005**	**6.5600e-003**	**1.7300e-003**	**4.0000e-005**	**1.7700e-003**	**0.0000**	**5.5109**	**5.5109**	**1.2000e-004**	**0.0000**	**5.5140**

Mitigated Construction On-Site

	ROG	NOx	CO	SO2	Fugitive PM10	Exhaust PM10	PM10 Total	Fugitive PM2.5	Exhaust PM2.5	PM2.5 Total	Bio- CO2	NBio- CO2	Total CO2	CH4	N2O	CO2e
Category	tons/yr										MT/yr					
Archit. Coating	0.7255					0.0000	0.0000		0.0000	0.0000	0.0000	0.0000	0.0000	0.0000	0.0000	0.0000
Off-Road	0.0000	0.0000	0.0000	0.0000		0.0000	0.0000		0.0000	0.0000	0.0000	0.0000	0.0000	0.0000	0.0000	0.0000
Total	**0.7255**	**0.0000**	**0.0000**	**0.0000**		**0.0000**	**0.0000**		**0.0000**	**0.0000**	**0.0000**	**0.0000**	**0.0000**	**0.0000**	**0.0000**	**0.0000**

3.6 Architectural Coating - 2021

Mitigated Construction Off-Site

	ROG	NOx	CO	SO2	Fugitive PM10	Exhaust PM10	PM10 Total	Fugitive PM2.5	Exhaust PM2.5	PM2.5 Total	Bio- CO2	NBio- CO2	Total CO2	CH4	N2O	CO2e
Category	tons/yr										MT/yr					
Hauling	0.0000	0.0000	0.0000	0.0000	0.0000	0.0000	0.0000	0.0000	0.0000	0.0000	0.0000	0.0000	0.0000	0.0000	0.0000	0.0000
Vendor	0.0000	0.0000	0.0000	0.0000	0.0000	0.0000	0.0000	0.0000	0.0000	0.0000	0.0000	0.0000	0.0000	0.0000	0.0000	0.0000
Worker	2.5300e-003	1.7500e-003	0.0185	6.0000e-005	6.5200e-003	4.0000e-005	6.5600e-003	1.7300e-003	4.0000e-005	1.7700e-003	0.0000	5.5109	5.5109	1.2000e-004	0.0000	5.5140
Total	**2.5300e-003**	**1.7500e-003**	**0.0185**	**6.0000e-005**	**6.5200e-003**	**4.0000e-005**	**6.5600e-003**	**1.7300e-003**	**4.0000e-005**	**1.7700e-003**	**0.0000**	**5.5109**	**5.5109**	**1.2000e-004**	**0.0000**	**5.5140**

3.6 Architectural Coating - 2022

Unmitigated Construction On-Site

	ROG	NOx	CO	SO2	Fugitive PM10	Exhaust PM10	PM10 Total	Fugitive PM2.5	Exhaust PM2.5	PM2.5 Total	Bio- CO2	NBio- CO2	Total CO2	CH4	N2O	CO2e
Category	tons/yr										MT/yr					
Archit. Coating	0.7035					0.0000	0.0000		0.0000	0.0000	0.0000	0.0000	0.0000	0.0000	0.0000	0.0000
Off-Road	0.0000	0.0000	0.0000	0.0000		0.0000	0.0000		0.0000	0.0000	0.0000	0.0000	0.0000	0.0000	0.0000	0.0000
Total	**0.7035**	**0.0000**	**0.0000**	**0.0000**		**0.0000**	**0.0000**		**0.0000**	**0.0000**	**0.0000**	**0.0000**	**0.0000**	**0.0000**	**0.0000**	**0.0000**

3.6 Architectural Coating - 2022

Unmitigated Construction Off-Site

	ROG	NOx	CO	SO2	Fugitive PM10	Exhaust PM10	PM10 Total	Fugitive PM2.5	Exhaust PM2.5	PM2.5 Total	Bio- CO2	NBio- CO2	Total CO2	CH4	N2O	CO2e
Category	tons/yr										MT/yr					
Hauling	0.0000	0.0000	0.0000	0.0000	0.0000	0.0000	0.0000	0.0000	0.0000	0.0000	0.0000	0.0000	0.0000	0.0000	0.0000	0.0000
Vendor	0.0000	0.0000	0.0000	0.0000	0.0000	0.0000	0.0000	0.0000	0.0000	0.0000	0.0000	0.0000	0.0000	0.0000	0.0000	0.0000
Worker	2.2900e-003	1.5200e-003	0.0165	6.0000e-005	6.3200e-003	4.0000e-005	6.3600e-003	1.6800e-003	4.0000e-005	1.7200e-003	0.0000	5.1480	5.1480	1.1000e-004	0.0000	5.1507
Total	**2.2900e-003**	**1.5200e-003**	**0.0165**	**6.0000e-005**	**6.3200e-003**	**4.0000e-005**	**6.3600e-003**	**1.6800e-003**	**4.0000e-005**	**1.7200e-003**	**0.0000**	**5.1480**	**5.1480**	**1.1000e-004**	**0.0000**	**5.1507**

Mitigated Construction On-Site

	ROG	NOx	CO	SO2	Fugitive PM10	Exhaust PM10	PM10 Total	Fugitive PM2.5	Exhaust PM2.5	PM2.5 Total	Bio- CO2	NBio- CO2	Total CO2	CH4	N2O	CO2e
Category	tons/yr										MT/yr					
Archit. Coating	0.7035					0.0000	0.0000		0.0000	0.0000	0.0000	0.0000	0.0000	0.0000	0.0000	0.0000
Off-Road	0.0000	0.0000	0.0000	0.0000		0.0000	0.0000		0.0000	0.0000	0.0000	0.0000	0.0000	0.0000	0.0000	0.0000
Total	**0.7035**	**0.0000**	**0.0000**	**0.0000**		**0.0000**	**0.0000**		**0.0000**	**0.0000**	**0.0000**	**0.0000**	**0.0000**	**0.0000**	**0.0000**	**0.0000**

3.6 Architectural Coating - 2022

Mitigated Construction Off-Site

	ROG	NOx	CO	SO2	Fugitive PM10	Exhaust PM10	PM10 Total	Fugitive PM2.5	Exhaust PM2.5	PM2.5 Total	Bio- CO2	NBio- CO2	Total CO2	CH4	N2O	CO2e
Category	tons/yr										MT/yr					
Hauling	0.0000	0.0000	0.0000	0.0000	0.0000	0.0000	0.0000	0.0000	0.0000	0.0000	0.0000	0.0000	0.0000	0.0000	0.0000	0.0000
Vendor	0.0000	0.0000	0.0000	0.0000	0.0000	0.0000	0.0000	0.0000	0.0000	0.0000	0.0000	0.0000	0.0000	0.0000	0.0000	0.0000
Worker	2.2900e-003	1.5200e-003	0.0165	6.0000e-005	6.3200e-003	4.0000e-005	6.3600e-003	1.6800e-003	4.0000e-005	1.7200e-003	0.0000	5.1480	5.1480	1.1000e-004	0.0000	5.1507
Total	**2.2900e-003**	**1.5200e-003**	**0.0165**	**6.0000e-005**	**6.3200e-003**	**4.0000e-005**	**6.3600e-003**	**1.6800e-003**	**4.0000e-005**	**1.7200e-003**	**0.0000**	**5.1480**	**5.1480**	**1.1000e-004**	**0.0000**	**5.1507**

3.7 Paving - 2022

Unmitigated Construction On-Site

	ROG	NOx	CO	SO2	Fugitive PM10	Exhaust PM10	PM10 Total	Fugitive PM2.5	Exhaust PM2.5	PM2.5 Total	Bio- CO2	NBio- CO2	Total CO2	CH4	N2O	CO2e
Category	tons/yr										MT/yr					
Off-Road	0.0000	0.0000	0.0000	0.0000		0.0000	0.0000		0.0000	0.0000	0.0000	0.0000	0.0000	0.0000	0.0000	0.0000
Paving	5.9000e-004					0.0000	0.0000		0.0000	0.0000	0.0000	0.0000	0.0000	0.0000	0.0000	0.0000
Total	**5.9000e-004**	**0.0000**	**0.0000**	**0.0000**		**0.0000**	**0.0000**		**0.0000**	**0.0000**	**0.0000**	**0.0000**	**0.0000**	**0.0000**	**0.0000**	**0.0000**

3.7 Paving - 2022

Unmitigated Construction Off-Site

	ROG	NOx	CO	SO2	Fugitive PM10	Exhaust PM10	PM10 Total	Fugitive PM2.5	Exhaust PM2.5	PM2.5 Total	Bio- CO2	NBio- CO2	Total CO2	CH4	N2O	CO2e
Category	tons/yr										MT/yr					
Hauling	0.0000	0.0000	0.0000	0.0000	0.0000	0.0000	0.0000	0.0000	0.0000	0.0000	0.0000	0.0000	0.0000	0.0000	0.0000	0.0000
Vendor	0.0000	0.0000	0.0000	0.0000	0.0000	0.0000	0.0000	0.0000	0.0000	0.0000	0.0000	0.0000	0.0000	0.0000	0.0000	0.0000
Worker	0.0000	0.0000	0.0000	0.0000	0.0000	0.0000	0.0000	0.0000	0.0000	0.0000	0.0000	0.0000	0.0000	0.0000	0.0000	0.0000
Total	**0.0000**	**0.0000**	**0.0000**	**0.0000**	**0.0000**	**0.0000**	**0.0000**	**0.0000**	**0.0000**	**0.0000**	**0.0000**	**0.0000**	**0.0000**	**0.0000**	**0.0000**	**0.0000**

Mitigated Construction On-Site

	ROG	NOx	CO	SO2	Fugitive PM10	Exhaust PM10	PM10 Total	Fugitive PM2.5	Exhaust PM2.5	PM2.5 Total	Bio- CO2	NBio- CO2	Total CO2	CH4	N2O	CO2e
Category	tons/yr										MT/yr					
Off-Road	0.0000	0.0000	0.0000	0.0000		0.0000	0.0000		0.0000	0.0000	0.0000	0.0000	0.0000	0.0000	0.0000	0.0000
Paving	5.9000e-004					0.0000	0.0000		0.0000	0.0000	0.0000	0.0000	0.0000	0.0000	0.0000	0.0000
Total	**5.9000e-004**	**0.0000**	**0.0000**	**0.0000**		**0.0000**	**0.0000**		**0.0000**	**0.0000**	**0.0000**	**0.0000**	**0.0000**	**0.0000**	**0.0000**	**0.0000**

3.7 Paving - 2022

Mitigated Construction Off-Site

	ROG	NOx	CO	SO2	Fugitive PM10	Exhaust PM10	PM10 Total	Fugitive PM2.5	Exhaust PM2.5	PM2.5 Total	Bio- CO2	NBio- CO2	Total CO2	CH4	N2O	CO2e
Category	tons/yr										MT/yr					
Hauling	0.0000	0.0000	0.0000	0.0000	0.0000	0.0000	0.0000	0.0000	0.0000	0.0000	0.0000	0.0000	0.0000	0.0000	0.0000	0.0000
Vendor	0.0000	0.0000	0.0000	0.0000	0.0000	0.0000	0.0000	0.0000	0.0000	0.0000	0.0000	0.0000	0.0000	0.0000	0.0000	0.0000
Worker	0.0000	0.0000	0.0000	0.0000	0.0000	0.0000	0.0000	0.0000	0.0000	0.0000	0.0000	0.0000	0.0000	0.0000	0.0000	0.0000
Total	**0.0000**	**0.0000**	**0.0000**	**0.0000**	**0.0000**	**0.0000**	**0.0000**	**0.0000**	**0.0000**	**0.0000**	**0.0000**	**0.0000**	**0.0000**	**0.0000**	**0.0000**	**0.0000**

4.0 Operational Detail - Mobile

4.1 Mitigation Measures Mobile

	ROG	NOx	CO	SO2	Fugitive PM10	Exhaust PM10	PM10 Total	Fugitive PM2.5	Exhaust PM2.5	PM2.5 Total	Bio- CO2	NBio- CO2	Total CO2	CH4	N2O	CO2e
Category	tons/yr										MT/yr					
Mitigated	0.0000	0.0000	0.0000	0.0000	0.0000	0.0000	0.0000	0.0000	0.0000	0.0000	0.0000	0.0000	0.0000	0.0000	0.0000	0.0000
Unmitigated	0.0000	0.0000	0.0000	0.0000	0.0000	0.0000	0.0000	0.0000	0.0000	0.0000	0.0000	0.0000	0.0000	0.0000	0.0000	0.0000

4.2 Trip Summary Information

	Average Daily Trip Rate			Unmitigated	Mitigated
Land Use	Weekday	Saturday	Sunday	Annual VMT	Annual VMT
Industrial Park	0.00	0.00	0.00		
Parking Lot	0.00	0.00	0.00		
Total	0.00	0.00	0.00		

4.3 Trip Type Information

	Miles			Trip %			Trip Purpose %		
Land Use	H-W or C-W	H-S or C-C	H-O or C-NW	H-W or C-W	H-S or C-C	H-O or C-NW	Primary	Diverted	Pass-by
Industrial Park	9.50	7.30	7.30	59.00	28.00	13.00	79	19	2
Parking Lot	9.50	7.30	7.30	0.00	0.00	0.00	0	0	0

4.4 Fleet Mix

Land Use	LDA	LDT1	LDT2	MDV	LHD1	LHD2	MHD	HHD	OBUS	UBUS	MCY	SBUS	MH
Industrial Park	0.578638	0.038775	0.193686	0.110919	0.015677	0.005341	0.018293	0.026358	0.002641	0.002200	0.005832	0.000891	0.000749
Parking Lot	0.578638	0.038775	0.193686	0.110919	0.015677	0.005341	0.018293	0.026358	0.002641	0.002200	0.005832	0.000891	0.000749

5.0 Energy Detail

Historical Energy Use: N

5.1 Mitigation Measures Energy

Exceed Title 24

	ROG	NOx	CO	SO2	Fugitive PM10	Exhaust PM10	PM10 Total	Fugitive PM2.5	Exhaust PM2.5	PM2.5 Total	Bio- CO2	NBio- CO2	Total CO2	CH4	N2O	CO2e
Category	tons/yr										MT/yr					
Electricity Mitigated						0.0000	0.0000		0.0000	0.0000	0.0000	2.0364	2.0364	9.0000e-005	2.0000e-005	2.0444
Electricity Unmitigated						0.0000	0.0000		0.0000	0.0000	0.0000	2.0364	2.0364	9.0000e-005	2.0000e-005	2.0444
NaturalGas Mitigated	0.0204	0.1855	0.1558	1.1100e-003		0.0141	0.0141		0.0141	0.0141	0.0000	201.9265	201.9265	3.8700e-003	3.7000e-003	203.1264
NaturalGas Unmitigated	0.0285	0.2592	0.2177	1.5600e-003		0.0197	0.0197		0.0197	0.0197	0.0000	282.1482	282.1482	5.4100e-003	5.1700e-003	283.8249

5.2 Energy by Land Use - NaturalGas

Unmitigated

	NaturalGas Use	ROG	NOx	CO	SO2	Fugitive PM10	Exhaust PM10	PM10 Total	Fugitive PM2.5	Exhaust PM2.5	PM2.5 Total	Bio- CO2	NBio- CO2	Total CO2	CH4	N2O	CO2e
Land Use	kBTU/yr	tons/yr										MT/yr					
Industrial Park	5.28726e+006	0.0285	0.2592	0.2177	1.5600e-003		0.0197	0.0197		0.0197	0.0197	0.0000	282.1482	282.1482	5.4100e-003	5.1700e-003	283.8249
Parking Lot	0	0.0000	0.0000	0.0000	0.0000		0.0000	0.0000		0.0000	0.0000	0.0000	0.0000	0.0000	0.0000	0.0000	0.0000
Total		**0.0285**	**0.2592**	**0.2177**	**1.5600e-003**		**0.0197**	**0.0197**		**0.0197**	**0.0197**	**0.0000**	**282.1482**	**282.1482**	**5.4100e-003**	**5.1700e-003**	**283.8249**

Mitigated

	NaturalGas Use	ROG	NOx	CO	SO2	Fugitive PM10	Exhaust PM10	PM10 Total	Fugitive PM2.5	Exhaust PM2.5	PM2.5 Total	Bio- CO2	NBio- CO2	Total CO2	CH4	N2O	CO2e
Land Use	kBTU/yr	tons/yr										MT/yr					
Industrial Park	3.78396e+006	0.0204	0.1855	0.1558	1.1100e-003		0.0141	0.0141		0.0141	0.0141	0.0000	201.9265	201.9265	3.8700e-003	3.7000e-003	203.1264
Parking Lot	0	0.0000	0.0000	0.0000	0.0000		0.0000	0.0000		0.0000	0.0000	0.0000	0.0000	0.0000	0.0000	0.0000	0.0000
Total		**0.0204**	**0.1855**	**0.1558**	**1.1100e-003**		**0.0141**	**0.0141**		**0.0141**	**0.0141**	**0.0000**	**201.9265**	**201.9265**	**3.8700e-003**	**3.7000e-003**	**203.1264**

5.3 Energy by Land Use - Electricity

Unmitigated

	Electricity Use	Total CO2	CH4	N2O	CO2e
Land Use	kWh/yr	MT/yr			
Industrial Park	0	0.0000	0.0000	0.0000	0.0000
Parking Lot	7000	2.0364	9.0000e-005	2.0000e-005	2.0444
Total		**2.0364**	**9.0000e-005**	**2.0000e-005**	**2.0444**

Mitigated

	Electricity Use	Total CO2	CH4	N2O	CO2e
Land Use	kWh/yr	MT/yr			
Industrial Park	0	0.0000	0.0000	0.0000	0.0000
Parking Lot	7000	2.0364	9.0000e-005	2.0000e-005	2.0444
Total		**2.0364**	**9.0000e-005**	**2.0000e-005**	**2.0444**

6.0 Area Detail

6.1 Mitigation Measures Area

	ROG	NOx	CO	SO2	Fugitive PM10	Exhaust PM10	PM10 Total	Fugitive PM2.5	Exhaust PM2.5	PM2.5 Total	Bio- CO2	NBio- CO2	Total CO2	CH4	N2O	CO2e
Category	tons/yr										MT/yr					
Mitigated	1.1970	3.0000e-005	2.9700e-003	0.0000		1.0000e-005	1.0000e-005		1.0000e-005	1.0000e-005	0.0000	5.7800e-003	5.7800e-003	2.0000e-005	0.0000	6.1600e-003
Unmitigated	1.1970	3.0000e-005	2.9700e-003	0.0000		1.0000e-005	1.0000e-005		1.0000e-005	1.0000e-005	0.0000	5.7800e-003	5.7800e-003	2.0000e-005	0.0000	6.1600e-003

6.2 Area by SubCategory

Unmitigated

	ROG	NOx	CO	SO2	Fugitive PM10	Exhaust PM10	PM10 Total	Fugitive PM2.5	Exhaust PM2.5	PM2.5 Total	Bio- CO2	NBio- CO2	Total CO2	CH4	N2O	CO2e
SubCategory	tons/yr										MT/yr					
Architectural Coating	0.1272					0.0000	0.0000		0.0000	0.0000	0.0000	0.0000	0.0000	0.0000	0.0000	0.0000
Consumer Products	1.0696					0.0000	0.0000		0.0000	0.0000	0.0000	0.0000	0.0000	0.0000	0.0000	0.0000
Landscaping	2.8000e-004	3.0000e-005	2.9700e-003	0.0000		1.0000e-005	1.0000e-005		1.0000e-005	1.0000e-005	0.0000	5.7800e-003	5.7800e-003	2.0000e-005	0.0000	6.1600e-003
Total	**1.1970**	**3.0000e-005**	**2.9700e-003**	**0.0000**		**1.0000e-005**	**1.0000e-005**		**1.0000e-005**	**1.0000e-005**	**0.0000**	**5.7800e-003**	**5.7800e-003**	**2.0000e-005**	**0.0000**	**6.1600e-003**

6.2 Area by SubCategory

Mitigated

	ROG	NOx	CO	SO2	Fugitive PM10	Exhaust PM10	PM10 Total	Fugitive PM2.5	Exhaust PM2.5	PM2.5 Total	Bio- CO2	NBio- CO2	Total CO2	CH4	N2O	CO2e
SubCategory	tons/yr										MT/yr					
Architectural Coating	0.1272					0.0000	0.0000		0.0000	0.0000	0.0000	0.0000	0.0000	0.0000	0.0000	0.0000
Consumer Products	1.0696					0.0000	0.0000		0.0000	0.0000	0.0000	0.0000	0.0000	0.0000	0.0000	0.0000
Landscaping	2.8000e-004	3.0000e-005	2.9700e-003	0.0000		1.0000e-005	1.0000e-005		1.0000e-005	1.0000e-005	0.0000	5.7800e-003	5.7800e-003	2.0000e-005	0.0000	6.1600e-003
Total	**1.1970**	**3.0000e-005**	**2.9700e-003**	**0.0000**		**1.0000e-005**	**1.0000e-005**		**1.0000e-005**	**1.0000e-005**	**0.0000**	**5.7800e-003**	**5.7800e-003**	**2.0000e-005**	**0.0000**	**6.1600e-003**

7.0 Water Detail

7.1 Mitigation Measures Water

Install Low Flow Bathroom Faucet

Install Low Flow Kitchen Faucet

Install Low Flow Toilet

Install Low Flow Shower

Use Water Efficient Irrigation System

	Total CO2	CH4	N2O	CO2e
Category	MT/yr			
Mitigated	99.1012	0.0663	0.0403	112.7689
Unmitigated	123.8764	0.0828	0.0504	140.9611

7.2 Water by Land Use

Unmitigated

	Indoor/Outdoor Use	Total CO2	CH4	N2O	CO2e
Land Use	Mgal	MT/yr			
Industrial Park	64.2538 / 0	123.8764	0.0828	0.0504	140.9611
Parking Lot	0 / 0	0.0000	0.0000	0.0000	0.0000
Total		**123.8764**	**0.0828**	**0.0504**	**140.9611**

7.2 Water by Land Use

Mitigated

	Indoor/Outdoor Use	Total CO2	CH4	N2O	CO2e
Land Use	Mgal	MT/yr			
Industrial Park	51.4031 / 0	99.1012	0.0663	0.0403	112.7689
Parking Lot	0 / 0	0.0000	0.0000	0.0000	0.0000
Total		**99.1012**	**0.0663**	**0.0403**	**112.7689**

8.0 Waste Detail

8.1 Mitigation Measures Waste

Category/Year

	Total CO2	CH4	N2O	CO2e
	MT/yr			
Mitigated	15.8353	0.9358	0.0000	39.2314
Unmitigated	15.8353	0.9358	0.0000	39.2314

8.2 Waste by Land Use

Unmitigated

	Waste Disposed	Total CO2	CH4	N2O	CO2e
Land Use	tons	MT/yr			
Industrial Park	78.01	15.8353	0.9358	0.0000	39.2314
Parking Lot	0	0.0000	0.0000	0.0000	0.0000
Total		**15.8353**	**0.9358**	**0.0000**	**39.2314**

Mitigated

	Waste Disposed	Total CO2	CH4	N2O	CO2e
Land Use	tons	MT/yr			
Industrial Park	78.01	15.8353	0.9358	0.0000	39.2314
Parking Lot	0	0.0000	0.0000	0.0000	0.0000
Total		**15.8353**	**0.9358**	**0.0000**	**39.2314**

9.0 Operational Offroad

Equipment Type	Number	Hours/Day	Days/Year	Horse Power	Load Factor	Fuel Type

10.0 Stationary Equipment

Fire Pumps and Emergency Generators

Equipment Type	Number	Hours/Day	Hours/Year	Horse Power	Load Factor	Fuel Type

Boilers

Equipment Type	Number	Heat Input/Day	Heat Input/Year	Boiler Rating	Fuel Type

User Defined Equipment

Equipment Type	Number

11.0 Vegetation

Clawiter Industrial Project - Existing Uses - 2023

Bay Area AQMD Air District, Winter

1.0 Project Characteristics

1.1 Land Usage

Land Uses	Size	Metric	Lot Acreage	Floor Surface Area	Population
Parking Lot	381.59	1000sqft	8.76	381,586.00	0

1.2 Other Project Characteristics

Urbanization	Urban	**Wind Speed (m/s)**	2.2	**Precipitation Freq (Days)**	64
Climate Zone	5			**Operational Year**	2023
Utility Company	Pacific Gas & Electric Company				
CO2 Intensity (lb/MWhr)	641.35	**CH4 Intensity (lb/MWhr)**	0.029	**N2O Intensity (lb/MWhr)**	0.006

1.3 User Entered Comments & Non-Default Data

Project Characteristics -

Land Use - Based on trip gen memo.

Construction Phase - No construction - existing uses

Off-road Equipment - No construction - existing uses

Off-road Equipment - No construction - existing uses

Off-road Equipment - No construction - existing uses

Off-road Equipment - No construction - existing uses

Off-road Equipment - No construction - existing uses

Off-road Equipment - No construction - existing uses

Trips and VMT - No construction - existing uses

Grading -

Architectural Coating - No construction - existing uses

Vehicle Trips - Based on trip gen memo from Kittleson

Area Coating - Vehicle storage yard - no painting of parking lines

Energy Use - Vehicle storage yard - no lighting

Table Name	Column Name	Default Value	New Value
tblArchitecturalCoating	ConstArea_Parking	22,895.00	0.00
tblAreaCoating	Area_Parking	22895	0
tblEnergyUse	LightingElect	0.35	0.00
tblLandUse	LandUseSquareFeet	381,590.00	381,586.00
tblOffRoadEquipment	UsageHours	6.00	0.00
tblOffRoadEquipment	UsageHours	8.00	0.00
tblOffRoadEquipment	UsageHours	7.00	0.00
tblOffRoadEquipment	UsageHours	8.00	0.00
tblOffRoadEquipment	UsageHours	8.00	0.00
tblOffRoadEquipment	UsageHours	8.00	0.00

tblOffRoadEquipment	UsageHours	8.00	0.00
tblOffRoadEquipment	UsageHours	8.00	0.00
tblOffRoadEquipment	UsageHours	8.00	0.00
tblOffRoadEquipment	UsageHours	8.00	0.00
tblOffRoadEquipment	UsageHours	8.00	0.00
tblOffRoadEquipment	UsageHours	7.00	0.00
tblOffRoadEquipment	UsageHours	8.00	0.00
tblOffRoadEquipment	UsageHours	8.00	0.00
tblOffRoadEquipment	UsageHours	8.00	0.00
tblTripsAndVMT	VendorTripNumber	63.00	0.00
tblTripsAndVMT	WorkerTripNumber	15.00	0.00
tblTripsAndVMT	WorkerTripNumber	18.00	0.00
tblTripsAndVMT	WorkerTripNumber	15.00	0.00
tblTripsAndVMT	WorkerTripNumber	160.00	0.00
tblTripsAndVMT	WorkerTripNumber	32.00	0.00
tblVehicleTrips	CW_TTP	0.00	100.00
tblVehicleTrips	PR_TP	0.00	100.00
tblVehicleTrips	WD_TR	0.00	1.74

2.0 Emissions Summary

2.1 Overall Construction (Maximum Daily Emission)

Unmitigated Construction

	ROG	NOx	CO	SO2	Fugitive PM10	Exhaust PM10	PM10 Total	Fugitive PM2.5	Exhaust PM2.5	PM2.5 Total	Bio- CO2	NBio- CO2	Total CO2	CH4	N2O	CO2e
Year	lb/day										lb/day					
2020	0.0000	0.0000	0.0000	0.0000	0.0000	0.0000	0.0000	0.0000	0.0000	0.0000	0.0000	0.0000	0.0000	0.0000	0.0000	0.0000
2021	0.0000	0.0000	0.0000	0.0000	0.0000	0.0000	0.0000	0.0000	0.0000	0.0000	0.0000	0.0000	0.0000	0.0000	0.0000	0.0000
Maximum	**0.0000**	**0.0000**	**0.0000**	**0.0000**	**0.0000**	**0.0000**	**0.0000**	**0.0000**	**0.0000**	**0.0000**	**0.0000**	**0.0000**	**0.0000**	**0.0000**	**0.0000**	**0.0000**

Mitigated Construction

	ROG	NOx	CO	SO2	Fugitive PM10	Exhaust PM10	PM10 Total	Fugitive PM2.5	Exhaust PM2.5	PM2.5 Total	Bio- CO2	NBio- CO2	Total CO2	CH4	N2O	CO2e
Year	lb/day										lb/day					
2020	0.0000	0.0000	0.0000	0.0000	0.0000	0.0000	0.0000	0.0000	0.0000	0.0000	0.0000	0.0000	0.0000	0.0000	0.0000	0.0000
2021	0.0000	0.0000	0.0000	0.0000	0.0000	0.0000	0.0000	0.0000	0.0000	0.0000	0.0000	0.0000	0.0000	0.0000	0.0000	0.0000
Maximum	**0.0000**	**0.0000**	**0.0000**	**0.0000**	**0.0000**	**0.0000**	**0.0000**	**0.0000**	**0.0000**	**0.0000**	**0.0000**	**0.0000**	**0.0000**	**0.0000**	**0.0000**	**0.0000**

	ROG	**NOx**	**CO**	**SO2**	**Fugitive PM10**	**Exhaust PM10**	**PM10 Total**	**Fugitive PM2.5**	**Exhaust PM2.5**	**PM2.5 Total**	**Bio- CO2**	**NBio-CO2**	**Total CO2**	**CH4**	**N20**	**CO2e**
Percent Reduction	**0.00**	**0.00**	**0.00**	**0.00**	**0.00**	**0.00**	**0.00**	**0.00**	**0.00**	**0.00**	**0.00**	**0.00**	**0.00**	**0.00**	**0.00**	**0.00**

2.2 Overall Operational

Unmitigated Operational

	ROG	NOx	CO	SO2	Fugitive PM10	Exhaust PM10	PM10 Total	Fugitive PM2.5	Exhaust PM2.5	PM2.5 Total	Bio- CO2	NBio- CO2	Total CO2	CH4	N2O	CO2e
Category	lb/day										lb/day					
Area	0.1388	3.5000e-004	0.0390	0.0000		1.4000e-004	1.4000e-004		1.4000e-004	1.4000e-004		0.0835	0.0835	2.2000e-004		0.0890
Energy	0.0000	0.0000	0.0000	0.0000		0.0000	0.0000		0.0000	0.0000		0.0000	0.0000	0.0000	0.0000	0.0000
Mobile	0.9688	4.6739	13.3078	0.0508	4.8775	0.0413	4.9188	1.3049	0.0386	1.3435		5,139.7567	5,139.7567	0.1708		5,144.0254
Total	**1.1075**	**4.6742**	**13.3468**	**0.0508**	**4.8775**	**0.0415**	**4.9190**	**1.3049**	**0.0387**	**1.3436**		**5,139.8402**	**5,139.8402**	**0.1710**	**0.0000**	**5,144.1143**

Mitigated Operational

	ROG	NOx	CO	SO2	Fugitive PM10	Exhaust PM10	PM10 Total	Fugitive PM2.5	Exhaust PM2.5	PM2.5 Total	Bio- CO2	NBio- CO2	Total CO2	CH4	N2O	CO2e
Category	lb/day										lb/day					
Area	0.1388	3.5000e-004	0.0390	0.0000		1.4000e-004	1.4000e-004		1.4000e-004	1.4000e-004		0.0835	0.0835	2.2000e-004		0.0890
Energy	0.0000	0.0000	0.0000	0.0000		0.0000	0.0000		0.0000	0.0000		0.0000	0.0000	0.0000	0.0000	0.0000
Mobile	0.9688	4.6739	13.3078	0.0508	4.8775	0.0413	4.9188	1.3049	0.0386	1.3435		5,139.7567	5,139.7567	0.1708		5,144.0254
Total	**1.1075**	**4.6742**	**13.3468**	**0.0508**	**4.8775**	**0.0415**	**4.9190**	**1.3049**	**0.0387**	**1.3436**		**5,139.8402**	**5,139.8402**	**0.1710**	**0.0000**	**5,144.1143**

	ROG	NOx	CO	SO2	Fugitive PM10	Exhaust PM10	PM10 Total	Fugitive PM2.5	Exhaust PM2.5	PM2.5 Total	Bio- CO2	NBio-CO2	Total CO2	CH4	N20	CO2e
Percent Reduction	**0.00**	**0.00**	**0.00**	**0.00**	**0.00**	**0.00**	**0.00**	**0.00**	**0.00**	**0.00**	**0.00**	**0.00**	**0.00**	**0.00**	**0.00**	**0.00**

3.0 Construction Detail

Construction Phase

Phase Number	Phase Name	Phase Type	Start Date	End Date	Num Days Week	Num Days	Phase Description
1	Demolition	Demolition	9/29/2020	10/26/2020	5	20	
2	Site Preparation	Site Preparation	10/27/2020	11/9/2020	5	10	
3	Grading	Grading	11/10/2020	12/7/2020	5	20	
4	Building Construction	Building Construction	12/8/2020	10/25/2021	5	230	
5	Architectural Coating	Architectural Coating	11/23/2021	12/20/2021	5	20	

Acres of Grading (Site Preparation Phase): 0

Acres of Grading (Grading Phase): 0

Acres of Paving: 8.76

Residential Indoor: 0; Residential Outdoor: 0; Non-Residential Indoor: 0; Non-Residential Outdoor: 0; Striped Parking Area: 0 (Architectural Coating – sqft)

OffRoad Equipment

Phase Name	Offroad Equipment Type	Amount	Usage Hours	Horse Power	Load Factor
Demolition	Concrete/Industrial Saws	1	0.00	81	0.73
Demolition	Excavators	3	0.00	158	0.38
Demolition	Rubber Tired Dozers	2	0.00	247	0.40
Site Preparation	Rubber Tired Dozers	3	0.00	247	0.40
Site Preparation	Tractors/Loaders/Backhoes	4	0.00	97	0.37
Grading	Excavators	1	0.00	158	0.38
Grading	Graders	1	0.00	187	0.41
Grading	Rubber Tired Dozers	1	0.00	247	0.40
Grading	Tractors/Loaders/Backhoes	3	0.00	97	0.37
Building Construction	Cranes	1	0.00	231	0.29
Building Construction	Forklifts	3	0.00	89	0.20
Building Construction	Generator Sets	1	0.00	84	0.74
Building Construction	Tractors/Loaders/Backhoes	3	0.00	97	0.37
Building Construction	Welders	1	0.00	46	0.45
Architectural Coating	Air Compressors	1	0.00	78	0.48

Trips and VMT

Phase Name	Offroad Equipment Count	Worker Trip Number	Vendor Trip Number	Hauling Trip Number	Worker Trip Length	Vendor Trip Length	Hauling Trip Length	Worker Vehicle Class	Vendor Vehicle Class	Hauling Vehicle Class
Demolition	6	0.00	0.00	0.00	10.80	7.30	20.00	LD_Mix	HDT_Mix	HHDT
Site Preparation	7	0.00	0.00	0.00	10.80	7.30	20.00	LD_Mix	HDT_Mix	HHDT
Grading	6	0.00	0.00	0.00	10.80	7.30	20.00	LD_Mix	HDT_Mix	HHDT
Building Construction	9	0.00	0.00	0.00	10.80	7.30	20.00	LD_Mix	HDT_Mix	HHDT
Architectural Coating	1	0.00	0.00	0.00	10.80	7.30	20.00	LD_Mix	HDT_Mix	HHDT

3.1 Mitigation Measures Construction

3.2 Demolition - 2020

Unmitigated Construction On-Site

	ROG	NOx	CO	SO2	Fugitive PM10	Exhaust PM10	PM10 Total	Fugitive PM2.5	Exhaust PM2.5	PM2.5 Total	Bio- CO2	NBio- CO2	Total CO2	CH4	N2O	CO2e
Category	lb/day										lb/day					
Off-Road	0.0000	0.0000	0.0000	0.0000		0.0000	0.0000		0.0000	0.0000		0.0000	0.0000	0.0000		0.0000
Total	**0.0000**	**0.0000**	**0.0000**	**0.0000**		**0.0000**	**0.0000**		**0.0000**	**0.0000**		**0.0000**	**0.0000**	**0.0000**		**0.0000**

Unmitigated Construction Off-Site

	ROG	NOx	CO	SO2	Fugitive PM10	Exhaust PM10	PM10 Total	Fugitive PM2.5	Exhaust PM2.5	PM2.5 Total	Bio- CO2	NBio- CO2	Total CO2	CH4	N2O	CO2e
Category	lb/day										lb/day					
Hauling	0.0000	0.0000	0.0000	0.0000	0.0000	0.0000	0.0000	0.0000	0.0000	0.0000		0.0000	0.0000	0.0000		0.0000
Vendor	0.0000	0.0000	0.0000	0.0000	0.0000	0.0000	0.0000	0.0000	0.0000	0.0000		0.0000	0.0000	0.0000		0.0000
Worker	0.0000	0.0000	0.0000	0.0000	0.0000	0.0000	0.0000	0.0000	0.0000	0.0000		0.0000	0.0000	0.0000		0.0000
Total	**0.0000**	**0.0000**	**0.0000**	**0.0000**	**0.0000**	**0.0000**	**0.0000**	**0.0000**	**0.0000**	**0.0000**		**0.0000**	**0.0000**	**0.0000**		**0.0000**

3.2 Demolition - 2020

Mitigated Construction On-Site

	ROG	NOx	CO	SO2	Fugitive PM10	Exhaust PM10	PM10 Total	Fugitive PM2.5	Exhaust PM2.5	PM2.5 Total	Bio- CO2	NBio- CO2	Total CO2	CH4	N2O	CO2e
Category	lb/day										lb/day					
Off-Road	0.0000	0.0000	0.0000	0.0000		0.0000	0.0000		0.0000	0.0000	0.0000	0.0000	0.0000	0.0000		0.0000
Total	**0.0000**	**0.0000**	**0.0000**	**0.0000**		**0.0000**	**0.0000**		**0.0000**	**0.0000**	**0.0000**	**0.0000**	**0.0000**	**0.0000**		**0.0000**

Mitigated Construction Off-Site

	ROG	NOx	CO	SO2	Fugitive PM10	Exhaust PM10	PM10 Total	Fugitive PM2.5	Exhaust PM2.5	PM2.5 Total	Bio- CO2	NBio- CO2	Total CO2	CH4	N2O	CO2e
Category	lb/day										lb/day					
Hauling	0.0000	0.0000	0.0000	0.0000	0.0000	0.0000	0.0000	0.0000	0.0000	0.0000		0.0000	0.0000	0.0000		0.0000
Vendor	0.0000	0.0000	0.0000	0.0000	0.0000	0.0000	0.0000	0.0000	0.0000	0.0000		0.0000	0.0000	0.0000		0.0000
Worker	0.0000	0.0000	0.0000	0.0000	0.0000	0.0000	0.0000	0.0000	0.0000	0.0000		0.0000	0.0000	0.0000		0.0000
Total	**0.0000**	**0.0000**	**0.0000**	**0.0000**	**0.0000**	**0.0000**	**0.0000**	**0.0000**	**0.0000**	**0.0000**		**0.0000**	**0.0000**	**0.0000**		**0.0000**

3.3 Site Preparation - 2020

Unmitigated Construction On-Site

	ROG	NOx	CO	SO2	Fugitive PM10	Exhaust PM10	PM10 Total	Fugitive PM2.5	Exhaust PM2.5	PM2.5 Total	Bio- CO2	NBio- CO2	Total CO2	CH4	N2O	CO2e
Category	lb/day										lb/day					
Fugitive Dust					0.0000	0.0000	0.0000	0.0000	0.0000	0.0000			0.0000			0.0000
Off-Road	0.0000	0.0000	0.0000	0.0000		0.0000	0.0000		0.0000	0.0000		0.0000	0.0000	0.0000		0.0000
Total	**0.0000**	**0.0000**	**0.0000**	**0.0000**	**0.0000**	**0.0000**	**0.0000**	**0.0000**	**0.0000**	**0.0000**		**0.0000**	**0.0000**	**0.0000**		**0.0000**

Unmitigated Construction Off-Site

	ROG	NOx	CO	SO2	Fugitive PM10	Exhaust PM10	PM10 Total	Fugitive PM2.5	Exhaust PM2.5	PM2.5 Total	Bio- CO2	NBio- CO2	Total CO2	CH4	N2O	CO2e
Category	lb/day										lb/day					
Hauling	0.0000	0.0000	0.0000	0.0000	0.0000	0.0000	0.0000	0.0000	0.0000	0.0000		0.0000	0.0000	0.0000		0.0000
Vendor	0.0000	0.0000	0.0000	0.0000	0.0000	0.0000	0.0000	0.0000	0.0000	0.0000		0.0000	0.0000	0.0000		0.0000
Worker	0.0000	0.0000	0.0000	0.0000	0.0000	0.0000	0.0000	0.0000	0.0000	0.0000		0.0000	0.0000	0.0000		0.0000
Total	**0.0000**	**0.0000**	**0.0000**	**0.0000**	**0.0000**	**0.0000**	**0.0000**	**0.0000**	**0.0000**	**0.0000**		**0.0000**	**0.0000**	**0.0000**		**0.0000**

3.3 Site Preparation - 2020

Mitigated Construction On-Site

	ROG	NOx	CO	SO2	Fugitive PM10	Exhaust PM10	PM10 Total	Fugitive PM2.5	Exhaust PM2.5	PM2.5 Total	Bio- CO2	NBio- CO2	Total CO2	CH4	N2O	CO2e
Category	lb/day										lb/day					
Fugitive Dust					0.0000	0.0000	0.0000	0.0000	0.0000	0.0000			0.0000			0.0000
Off-Road	0.0000	0.0000	0.0000	0.0000		0.0000	0.0000		0.0000	0.0000	0.0000	0.0000	0.0000	0.0000		0.0000
Total	**0.0000**	**0.0000**	**0.0000**	**0.0000**	**0.0000**	**0.0000**	**0.0000**	**0.0000**	**0.0000**	**0.0000**	**0.0000**	**0.0000**	**0.0000**	**0.0000**		**0.0000**

Mitigated Construction Off-Site

	ROG	NOx	CO	SO2	Fugitive PM10	Exhaust PM10	PM10 Total	Fugitive PM2.5	Exhaust PM2.5	PM2.5 Total	Bio- CO2	NBio- CO2	Total CO2	CH4	N2O	CO2e
Category	lb/day										lb/day					
Hauling	0.0000	0.0000	0.0000	0.0000	0.0000	0.0000	0.0000	0.0000	0.0000	0.0000		0.0000	0.0000	0.0000		0.0000
Vendor	0.0000	0.0000	0.0000	0.0000	0.0000	0.0000	0.0000	0.0000	0.0000	0.0000		0.0000	0.0000	0.0000		0.0000
Worker	0.0000	0.0000	0.0000	0.0000	0.0000	0.0000	0.0000	0.0000	0.0000	0.0000		0.0000	0.0000	0.0000		0.0000
Total	**0.0000**	**0.0000**	**0.0000**	**0.0000**	**0.0000**	**0.0000**	**0.0000**	**0.0000**	**0.0000**	**0.0000**		**0.0000**	**0.0000**	**0.0000**		**0.0000**

3.4 Grading - 2020

Unmitigated Construction On-Site

	ROG	NOx	CO	SO2	Fugitive PM10	Exhaust PM10	PM10 Total	Fugitive PM2.5	Exhaust PM2.5	PM2.5 Total	Bio- CO2	NBio- CO2	Total CO2	CH4	N2O	CO2e
Category	lb/day										lb/day					
Fugitive Dust					0.0000	0.0000	0.0000	0.0000	0.0000	0.0000			0.0000			0.0000
Off-Road	0.0000	0.0000	0.0000	0.0000		0.0000	0.0000		0.0000	0.0000		0.0000	0.0000	0.0000		0.0000
Total	**0.0000**	**0.0000**	**0.0000**	**0.0000**	**0.0000**	**0.0000**	**0.0000**	**0.0000**	**0.0000**	**0.0000**		**0.0000**	**0.0000**	**0.0000**		**0.0000**

Unmitigated Construction Off-Site

	ROG	NOx	CO	SO2	Fugitive PM10	Exhaust PM10	PM10 Total	Fugitive PM2.5	Exhaust PM2.5	PM2.5 Total	Bio- CO2	NBio- CO2	Total CO2	CH4	N2O	CO2e
Category	lb/day										lb/day					
Hauling	0.0000	0.0000	0.0000	0.0000	0.0000	0.0000	0.0000	0.0000	0.0000	0.0000		0.0000	0.0000	0.0000		0.0000
Vendor	0.0000	0.0000	0.0000	0.0000	0.0000	0.0000	0.0000	0.0000	0.0000	0.0000		0.0000	0.0000	0.0000		0.0000
Worker	0.0000	0.0000	0.0000	0.0000	0.0000	0.0000	0.0000	0.0000	0.0000	0.0000		0.0000	0.0000	0.0000		0.0000
Total	**0.0000**	**0.0000**	**0.0000**	**0.0000**	**0.0000**	**0.0000**	**0.0000**	**0.0000**	**0.0000**	**0.0000**		**0.0000**	**0.0000**	**0.0000**		**0.0000**

3.4 Grading - 2020

Mitigated Construction On-Site

	ROG	NOx	CO	SO2	Fugitive PM10	Exhaust PM10	PM10 Total	Fugitive PM2.5	Exhaust PM2.5	PM2.5 Total	Bio- CO2	NBio- CO2	Total CO2	CH4	N2O	CO2e
Category	lb/day										lb/day					
Fugitive Dust					0.0000	0.0000	0.0000	0.0000	0.0000	0.0000			0.0000			0.0000
Off-Road	0.0000	0.0000	0.0000	0.0000		0.0000	0.0000		0.0000	0.0000	0.0000	0.0000	0.0000	0.0000		0.0000
Total	**0.0000**	**0.0000**	**0.0000**	**0.0000**	**0.0000**	**0.0000**	**0.0000**	**0.0000**	**0.0000**	**0.0000**	**0.0000**	**0.0000**	**0.0000**	**0.0000**		**0.0000**

Mitigated Construction Off-Site

	ROG	NOx	CO	SO2	Fugitive PM10	Exhaust PM10	PM10 Total	Fugitive PM2.5	Exhaust PM2.5	PM2.5 Total	Bio- CO2	NBio- CO2	Total CO2	CH4	N2O	CO2e
Category	lb/day										lb/day					
Hauling	0.0000	0.0000	0.0000	0.0000	0.0000	0.0000	0.0000	0.0000	0.0000	0.0000		0.0000	0.0000	0.0000		0.0000
Vendor	0.0000	0.0000	0.0000	0.0000	0.0000	0.0000	0.0000	0.0000	0.0000	0.0000		0.0000	0.0000	0.0000		0.0000
Worker	0.0000	0.0000	0.0000	0.0000	0.0000	0.0000	0.0000	0.0000	0.0000	0.0000		0.0000	0.0000	0.0000		0.0000
Total	**0.0000**	**0.0000**	**0.0000**	**0.0000**	**0.0000**	**0.0000**	**0.0000**	**0.0000**	**0.0000**	**0.0000**		**0.0000**	**0.0000**	**0.0000**		**0.0000**

3.5 Building Construction - 2020

Unmitigated Construction On-Site

	ROG	NOx	CO	SO2	Fugitive PM10	Exhaust PM10	PM10 Total	Fugitive PM2.5	Exhaust PM2.5	PM2.5 Total	Bio- CO2	NBio- CO2	Total CO2	CH4	N2O	CO2e
Category	lb/day										lb/day					
Off-Road	0.0000	0.0000	0.0000	0.0000		0.0000	0.0000		0.0000	0.0000		0.0000	0.0000	0.0000		0.0000
Total	**0.0000**	**0.0000**	**0.0000**	**0.0000**		**0.0000**	**0.0000**		**0.0000**	**0.0000**		**0.0000**	**0.0000**	**0.0000**		**0.0000**

Unmitigated Construction Off-Site

	ROG	NOx	CO	SO2	Fugitive PM10	Exhaust PM10	PM10 Total	Fugitive PM2.5	Exhaust PM2.5	PM2.5 Total	Bio- CO2	NBio- CO2	Total CO2	CH4	N2O	CO2e
Category	lb/day										lb/day					
Hauling	0.0000	0.0000	0.0000	0.0000	0.0000	0.0000	0.0000	0.0000	0.0000	0.0000		0.0000	0.0000	0.0000		0.0000
Vendor	0.0000	0.0000	0.0000	0.0000	0.0000	0.0000	0.0000	0.0000	0.0000	0.0000		0.0000	0.0000	0.0000		0.0000
Worker	0.0000	0.0000	0.0000	0.0000	0.0000	0.0000	0.0000	0.0000	0.0000	0.0000		0.0000	0.0000	0.0000		0.0000
Total	**0.0000**	**0.0000**	**0.0000**	**0.0000**	**0.0000**	**0.0000**	**0.0000**	**0.0000**	**0.0000**	**0.0000**		**0.0000**	**0.0000**	**0.0000**		**0.0000**

3.5 Building Construction - 2020

Mitigated Construction On-Site

	ROG	NOx	CO	SO2	Fugitive PM10	Exhaust PM10	PM10 Total	Fugitive PM2.5	Exhaust PM2.5	PM2.5 Total	Bio- CO2	NBio- CO2	Total CO2	CH4	N2O	CO2e
Category	lb/day										lb/day					
Off-Road	0.0000	0.0000	0.0000	0.0000		0.0000	0.0000		0.0000	0.0000	0.0000	0.0000	0.0000	0.0000		0.0000
Total	**0.0000**	**0.0000**	**0.0000**	**0.0000**		**0.0000**	**0.0000**		**0.0000**	**0.0000**	**0.0000**	**0.0000**	**0.0000**	**0.0000**		**0.0000**

Mitigated Construction Off-Site

	ROG	NOx	CO	SO2	Fugitive PM10	Exhaust PM10	PM10 Total	Fugitive PM2.5	Exhaust PM2.5	PM2.5 Total	Bio- CO2	NBio- CO2	Total CO2	CH4	N2O	CO2e
Category	lb/day										lb/day					
Hauling	0.0000	0.0000	0.0000	0.0000	0.0000	0.0000	0.0000	0.0000	0.0000	0.0000		0.0000	0.0000	0.0000		0.0000
Vendor	0.0000	0.0000	0.0000	0.0000	0.0000	0.0000	0.0000	0.0000	0.0000	0.0000		0.0000	0.0000	0.0000		0.0000
Worker	0.0000	0.0000	0.0000	0.0000	0.0000	0.0000	0.0000	0.0000	0.0000	0.0000		0.0000	0.0000	0.0000		0.0000
Total	**0.0000**	**0.0000**	**0.0000**	**0.0000**	**0.0000**	**0.0000**	**0.0000**	**0.0000**	**0.0000**	**0.0000**		**0.0000**	**0.0000**	**0.0000**		**0.0000**

3.5 Building Construction - 2021

Unmitigated Construction On-Site

	ROG	NOx	CO	SO2	Fugitive PM10	Exhaust PM10	PM10 Total	Fugitive PM2.5	Exhaust PM2.5	PM2.5 Total	Bio- CO2	NBio- CO2	Total CO2	CH4	N2O	CO2e
Category	lb/day										lb/day					
Off-Road	0.0000	0.0000	0.0000	0.0000		0.0000	0.0000		0.0000	0.0000		0.0000	0.0000	0.0000		0.0000
Total	**0.0000**	**0.0000**	**0.0000**	**0.0000**		**0.0000**	**0.0000**		**0.0000**	**0.0000**		**0.0000**	**0.0000**	**0.0000**		**0.0000**

Unmitigated Construction Off-Site

	ROG	NOx	CO	SO2	Fugitive PM10	Exhaust PM10	PM10 Total	Fugitive PM2.5	Exhaust PM2.5	PM2.5 Total	Bio- CO2	NBio- CO2	Total CO2	CH4	N2O	CO2e
Category	lb/day										lb/day					
Hauling	0.0000	0.0000	0.0000	0.0000	0.0000	0.0000	0.0000	0.0000	0.0000	0.0000		0.0000	0.0000	0.0000		0.0000
Vendor	0.0000	0.0000	0.0000	0.0000	0.0000	0.0000	0.0000	0.0000	0.0000	0.0000		0.0000	0.0000	0.0000		0.0000
Worker	0.0000	0.0000	0.0000	0.0000	0.0000	0.0000	0.0000	0.0000	0.0000	0.0000		0.0000	0.0000	0.0000		0.0000
Total	**0.0000**	**0.0000**	**0.0000**	**0.0000**	**0.0000**	**0.0000**	**0.0000**	**0.0000**	**0.0000**	**0.0000**		**0.0000**	**0.0000**	**0.0000**		**0.0000**

3.5 Building Construction - 2021

Mitigated Construction On-Site

	ROG	NOx	CO	SO2	Fugitive PM10	Exhaust PM10	PM10 Total	Fugitive PM2.5	Exhaust PM2.5	PM2.5 Total	Bio- CO2	NBio- CO2	Total CO2	CH4	N2O	CO2e
Category	lb/day										lb/day					
Off-Road	0.0000	0.0000	0.0000	0.0000		0.0000	0.0000		0.0000	0.0000	0.0000	0.0000	0.0000	0.0000		0.0000
Total	**0.0000**	**0.0000**	**0.0000**	**0.0000**		**0.0000**	**0.0000**		**0.0000**	**0.0000**	**0.0000**	**0.0000**	**0.0000**	**0.0000**		**0.0000**

Mitigated Construction Off-Site

	ROG	NOx	CO	SO2	Fugitive PM10	Exhaust PM10	PM10 Total	Fugitive PM2.5	Exhaust PM2.5	PM2.5 Total	Bio- CO2	NBio- CO2	Total CO2	CH4	N2O	CO2e
Category	lb/day										lb/day					
Hauling	0.0000	0.0000	0.0000	0.0000	0.0000	0.0000	0.0000	0.0000	0.0000	0.0000		0.0000	0.0000	0.0000		0.0000
Vendor	0.0000	0.0000	0.0000	0.0000	0.0000	0.0000	0.0000	0.0000	0.0000	0.0000		0.0000	0.0000	0.0000		0.0000
Worker	0.0000	0.0000	0.0000	0.0000	0.0000	0.0000	0.0000	0.0000	0.0000	0.0000		0.0000	0.0000	0.0000		0.0000
Total	**0.0000**	**0.0000**	**0.0000**	**0.0000**	**0.0000**	**0.0000**	**0.0000**	**0.0000**	**0.0000**	**0.0000**		**0.0000**	**0.0000**	**0.0000**		**0.0000**

3.6 Architectural Coating - 2021

Unmitigated Construction On-Site

	ROG	NOx	CO	SO2	Fugitive PM10	Exhaust PM10	PM10 Total	Fugitive PM2.5	Exhaust PM2.5	PM2.5 Total	Bio- CO2	NBio- CO2	Total CO2	CH4	N2O	CO2e
Category	lb/day										lb/day					
Archit. Coating	0.0000					0.0000	0.0000		0.0000	0.0000			0.0000			0.0000
Off-Road	0.0000	0.0000	0.0000	0.0000		0.0000	0.0000		0.0000	0.0000		0.0000	0.0000	0.0000		0.0000
Total	**0.0000**	**0.0000**	**0.0000**	**0.0000**		**0.0000**	**0.0000**		**0.0000**	**0.0000**		**0.0000**	**0.0000**	**0.0000**		**0.0000**

Unmitigated Construction Off-Site

	ROG	NOx	CO	SO2	Fugitive PM10	Exhaust PM10	PM10 Total	Fugitive PM2.5	Exhaust PM2.5	PM2.5 Total	Bio- CO2	NBio- CO2	Total CO2	CH4	N2O	CO2e
Category	lb/day										lb/day					
Hauling	0.0000	0.0000	0.0000	0.0000	0.0000	0.0000	0.0000	0.0000	0.0000	0.0000		0.0000	0.0000	0.0000		0.0000
Vendor	0.0000	0.0000	0.0000	0.0000	0.0000	0.0000	0.0000	0.0000	0.0000	0.0000		0.0000	0.0000	0.0000		0.0000
Worker	0.0000	0.0000	0.0000	0.0000	0.0000	0.0000	0.0000	0.0000	0.0000	0.0000		0.0000	0.0000	0.0000		0.0000
Total	**0.0000**	**0.0000**	**0.0000**	**0.0000**	**0.0000**	**0.0000**	**0.0000**	**0.0000**	**0.0000**	**0.0000**		**0.0000**	**0.0000**	**0.0000**		**0.0000**

3.6 Architectural Coating - 2021

Mitigated Construction On-Site

	ROG	NOx	CO	SO2	Fugitive PM10	Exhaust PM10	PM10 Total	Fugitive PM2.5	Exhaust PM2.5	PM2.5 Total	Bio- CO2	NBio- CO2	Total CO2	CH4	N2O	CO2e
Category	lb/day										lb/day					
Archit. Coating	0.0000					0.0000	0.0000		0.0000	0.0000			0.0000			0.0000
Off-Road	0.0000	0.0000	0.0000	0.0000		0.0000	0.0000		0.0000	0.0000	0.0000	0.0000	0.0000	0.0000		0.0000
Total	**0.0000**	**0.0000**	**0.0000**	**0.0000**		**0.0000**	**0.0000**		**0.0000**	**0.0000**	**0.0000**	**0.0000**	**0.0000**	**0.0000**		**0.0000**

Mitigated Construction Off-Site

	ROG	NOx	CO	SO2	Fugitive PM10	Exhaust PM10	PM10 Total	Fugitive PM2.5	Exhaust PM2.5	PM2.5 Total	Bio- CO2	NBio- CO2	Total CO2	CH4	N2O	CO2e
Category	lb/day										lb/day					
Hauling	0.0000	0.0000	0.0000	0.0000	0.0000	0.0000	0.0000	0.0000	0.0000	0.0000		0.0000	0.0000	0.0000		0.0000
Vendor	0.0000	0.0000	0.0000	0.0000	0.0000	0.0000	0.0000	0.0000	0.0000	0.0000		0.0000	0.0000	0.0000		0.0000
Worker	0.0000	0.0000	0.0000	0.0000	0.0000	0.0000	0.0000	0.0000	0.0000	0.0000		0.0000	0.0000	0.0000		0.0000
Total	**0.0000**	**0.0000**	**0.0000**	**0.0000**	**0.0000**	**0.0000**	**0.0000**	**0.0000**	**0.0000**	**0.0000**		**0.0000**	**0.0000**	**0.0000**		**0.0000**

4.0 Operational Detail - Mobile

4.1 Mitigation Measures Mobile

	ROG	NOx	CO	SO2	Fugitive PM10	Exhaust PM10	PM10 Total	Fugitive PM2.5	Exhaust PM2.5	PM2.5 Total	Bio- CO2	NBio- CO2	Total CO2	CH4	N2O	CO2e
Category	lb/day										lb/day					
Mitigated	0.9688	4.6739	13.3078	0.0508	4.8775	0.0413	4.9188	1.3049	0.0386	1.3435		5,139.7567	5,139.7567	0.1708		5,144.0254
Unmitigated	0.9688	4.6739	13.3078	0.0508	4.8775	0.0413	4.9188	1.3049	0.0386	1.3435		5,139.7567	5,139.7567	0.1708		5,144.0254

4.2 Trip Summary Information

	Average Daily Trip Rate			Unmitigated	Mitigated
Land Use	Weekday	Saturday	Sunday	Annual VMT	Annual VMT
Parking Lot	663.97	0.00	0.00	1,639,998	1,639,998
Total	663.97	0.00	0.00	1,639,998	1,639,998

4.3 Trip Type Information

	Miles			Trip %			Trip Purpose %		
Land Use	H-W or C-W	H-S or C-C	H-O or C-NW	H-W or C-W	H-S or C-C	H-O or C-NW	Primary	Diverted	Pass-by
Parking Lot	9.50	7.30	7.30	100.00	0.00	0.00	100	0	0

4.4 Fleet Mix

Land Use	LDA	LDT1	LDT2	MDV	LHD1	LHD2	MHD	HHD	OBUS	UBUS	MCY	SBUS	MH
Parking Lot	0.578638	0.038775	0.193686	0.110919	0.015677	0.005341	0.018293	0.026358	0.002641	0.002200	0.005832	0.000891	0.000749

5.0 Energy Detail

Historical Energy Use: N

5.1 Mitigation Measures Energy

	ROG	NOx	CO	SO2	Fugitive PM10	Exhaust PM10	PM10 Total	Fugitive PM2.5	Exhaust PM2.5	PM2.5 Total	Bio- CO2	NBio- CO2	Total CO2	CH4	N2O	CO2e
Category	lb/day										lb/day					
NaturalGas Mitigated	0.0000	0.0000	0.0000	0.0000		0.0000	0.0000		0.0000	0.0000		0.0000	0.0000	0.0000	0.0000	0.0000
NaturalGas Unmitigated	0.0000	0.0000	0.0000	0.0000		0.0000	0.0000		0.0000	0.0000		0.0000	0.0000	0.0000	0.0000	0.0000

5.2 Energy by Land Use - NaturalGas

Unmitigated

	NaturalGas Use	ROG	NOx	CO	SO2	Fugitive PM10	Exhaust PM10	PM10 Total	Fugitive PM2.5	Exhaust PM2.5	PM2.5 Total	Bio- CO2	NBio- CO2	Total CO2	CH4	N2O	CO2e
Land Use	kBTU/yr	lb/day										lb/day					
Parking Lot	0	0.0000	0.0000	0.0000	0.0000		0.0000	0.0000		0.0000	0.0000		0.0000	0.0000	0.0000	0.0000	0.0000
Total		**0.0000**	**0.0000**	**0.0000**	**0.0000**		**0.0000**	**0.0000**		**0.0000**	**0.0000**		**0.0000**	**0.0000**	**0.0000**	**0.0000**	**0.0000**

Mitigated

	NaturalGas Use	ROG	NOx	CO	SO2	Fugitive PM10	Exhaust PM10	PM10 Total	Fugitive PM2.5	Exhaust PM2.5	PM2.5 Total	Bio- CO2	NBio- CO2	Total CO2	CH4	N2O	CO2e
Land Use	kBTU/yr	lb/day										lb/day					
Parking Lot	0	0.0000	0.0000	0.0000	0.0000		0.0000	0.0000		0.0000	0.0000		0.0000	0.0000	0.0000	0.0000	0.0000
Total		**0.0000**	**0.0000**	**0.0000**	**0.0000**		**0.0000**	**0.0000**		**0.0000**	**0.0000**		**0.0000**	**0.0000**	**0.0000**	**0.0000**	**0.0000**

6.0 Area Detail

6.1 Mitigation Measures Area

	ROG	NOx	CO	SO2	Fugitive PM10	Exhaust PM10	PM10 Total	Fugitive PM2.5	Exhaust PM2.5	PM2.5 Total	Bio- CO2	NBio- CO2	Total CO2	CH4	N2O	CO2e
Category	lb/day										lb/day					
Mitigated	0.1388	3.5000e-004	0.0390	0.0000		1.4000e-004	1.4000e-004		1.4000e-004	1.4000e-004		0.0835	0.0835	2.2000e-004		0.0890
Unmitigated	0.1388	3.5000e-004	0.0390	0.0000		1.4000e-004	1.4000e-004		1.4000e-004	1.4000e-004		0.0835	0.0835	2.2000e-004		0.0890

6.2 Area by SubCategory

Unmitigated

	ROG	NOx	CO	SO2	Fugitive PM10	Exhaust PM10	PM10 Total	Fugitive PM2.5	Exhaust PM2.5	PM2.5 Total	Bio- CO2	NBio- CO2	Total CO2	CH4	N2O	CO2e
SubCategory	lb/day										lb/day					
Architectural Coating	0.0000					0.0000	0.0000		0.0000	0.0000			0.0000			0.0000
Consumer Products	0.1352					0.0000	0.0000		0.0000	0.0000			0.0000			0.0000
Landscaping	3.6100e-003	3.5000e-004	0.0390	0.0000		1.4000e-004	1.4000e-004		1.4000e-004	1.4000e-004		0.0835	0.0835	2.2000e-004		0.0890
Total	**0.1388**	**3.5000e-004**	**0.0390**	**0.0000**		**1.4000e-004**	**1.4000e-004**		**1.4000e-004**	**1.4000e-004**		**0.0835**	**0.0835**	**2.2000e-004**		**0.0890**

6.2 Area by SubCategory

Mitigated

	ROG	NOx	CO	SO2	Fugitive PM10	Exhaust PM10	PM10 Total	Fugitive PM2.5	Exhaust PM2.5	PM2.5 Total	Bio- CO2	NBio- CO2	Total CO2	CH4	N2O	CO2e
SubCategory	lb/day										lb/day					
Architectural Coating	0.0000					0.0000	0.0000		0.0000	0.0000			0.0000			0.0000
Consumer Products	0.1352					0.0000	0.0000		0.0000	0.0000			0.0000			0.0000
Landscaping	3.6100e-003	3.5000e-004	0.0390	0.0000		1.4000e-004	1.4000e-004		1.4000e-004	1.4000e-004		0.0835	0.0835	2.2000e-004		0.0890
Total	**0.1388**	**3.5000e-004**	**0.0390**	**0.0000**		**1.4000e-004**	**1.4000e-004**		**1.4000e-004**	**1.4000e-004**		**0.0835**	**0.0835**	**2.2000e-004**		**0.0890**

7.0 Water Detail

7.1 Mitigation Measures Water

8.0 Waste Detail

8.1 Mitigation Measures Waste

9.0 Operational Offroad

Equipment Type	Number	Hours/Day	Days/Year	Horse Power	Load Factor	Fuel Type

10.0 Stationary Equipment

Fire Pumps and Emergency Generators

Equipment Type	Number	Hours/Day	Hours/Year	Horse Power	Load Factor	Fuel Type

Boilers

Equipment Type	Number	Heat Input/Day	Heat Input/Year	Boiler Rating	Fuel Type

User Defined Equipment

Equipment Type	Number

11.0 Vegetation

Clawiter Industrial Project - Existing Uses - 2023

Bay Area AQMD Air District, Summer

1.0 Project Characteristics

1.1 Land Usage

Land Uses	Size	Metric	Lot Acreage	Floor Surface Area	Population
Parking Lot	381.59	1000sqft	8.76	381,586.00	0

1.2 Other Project Characteristics

Urbanization	Urban	**Wind Speed (m/s)**	2.2	**Precipitation Freq (Days)**	64
Climate Zone	5			**Operational Year**	2023
Utility Company	Pacific Gas & Electric Company				
CO2 Intensity (lb/MWhr)	641.35	**CH4 Intensity (lb/MWhr)**	0.029	**N2O Intensity (lb/MWhr)**	0.006

1.3 User Entered Comments & Non-Default Data

Project Characteristics -

Land Use - Based on trip gen memo.

Construction Phase - No construction - existing uses

Off-road Equipment - No construction - existing uses

Off-road Equipment - No construction - existing uses

Off-road Equipment - No construction - existing uses

Off-road Equipment - No construction - existing uses

Off-road Equipment - No construction - existing uses

Off-road Equipment - No construction - existing uses

Trips and VMT - No construction - existing uses

Grading -

Architectural Coating - No construction - existing uses

Vehicle Trips - Based on trip gen memo from Kittleson

Area Coating - Vehicle storage yard - no painting of parking lines

Energy Use - Vehicle storage yard - no lighting

Table Name	Column Name	Default Value	New Value
tblArchitecturalCoating	ConstArea_Parking	22,895.00	0.00
tblAreaCoating	Area_Parking	22895	0
tblEnergyUse	LightingElect	0.35	0.00
tblLandUse	LandUseSquareFeet	381,590.00	381,586.00
tblOffRoadEquipment	UsageHours	6.00	0.00
tblOffRoadEquipment	UsageHours	8.00	0.00
tblOffRoadEquipment	UsageHours	7.00	0.00
tblOffRoadEquipment	UsageHours	8.00	0.00
tblOffRoadEquipment	UsageHours	8.00	0.00
tblOffRoadEquipment	UsageHours	8.00	0.00

tblOffRoadEquipment	UsageHours	8.00	0.00
tblOffRoadEquipment	UsageHours	8.00	0.00
tblOffRoadEquipment	UsageHours	8.00	0.00
tblOffRoadEquipment	UsageHours	8.00	0.00
tblOffRoadEquipment	UsageHours	8.00	0.00
tblOffRoadEquipment	UsageHours	7.00	0.00
tblOffRoadEquipment	UsageHours	8.00	0.00
tblOffRoadEquipment	UsageHours	8.00	0.00
tblOffRoadEquipment	UsageHours	8.00	0.00
tblTripsAndVMT	VendorTripNumber	63.00	0.00
tblTripsAndVMT	WorkerTripNumber	15.00	0.00
tblTripsAndVMT	WorkerTripNumber	18.00	0.00
tblTripsAndVMT	WorkerTripNumber	15.00	0.00
tblTripsAndVMT	WorkerTripNumber	160.00	0.00
tblTripsAndVMT	WorkerTripNumber	32.00	0.00
tblVehicleTrips	CW_TTP	0.00	100.00
tblVehicleTrips	PR_TP	0.00	100.00
tblVehicleTrips	WD_TR	0.00	1.74

2.0 Emissions Summary

2.1 Overall Construction (Maximum Daily Emission)

Unmitigated Construction

	ROG	NOx	CO	SO2	Fugitive PM10	Exhaust PM10	PM10 Total	Fugitive PM2.5	Exhaust PM2.5	PM2.5 Total	Bio- CO2	NBio- CO2	Total CO2	CH4	N2O	CO2e
Year	lb/day										lb/day					
2020	0.0000	0.0000	0.0000	0.0000	0.0000	0.0000	0.0000	0.0000	0.0000	0.0000	0.0000	0.0000	0.0000	0.0000	0.0000	0.0000
2021	0.0000	0.0000	0.0000	0.0000	0.0000	0.0000	0.0000	0.0000	0.0000	0.0000	0.0000	0.0000	0.0000	0.0000	0.0000	0.0000
Maximum	**0.0000**	**0.0000**	**0.0000**	**0.0000**	**0.0000**	**0.0000**	**0.0000**	**0.0000**	**0.0000**	**0.0000**	**0.0000**	**0.0000**	**0.0000**	**0.0000**	**0.0000**	**0.0000**

Mitigated Construction

	ROG	NOx	CO	SO2	Fugitive PM10	Exhaust PM10	PM10 Total	Fugitive PM2.5	Exhaust PM2.5	PM2.5 Total	Bio- CO2	NBio- CO2	Total CO2	CH4	N2O	CO2e
Year	lb/day										lb/day					
2020	0.0000	0.0000	0.0000	0.0000	0.0000	0.0000	0.0000	0.0000	0.0000	0.0000	0.0000	0.0000	0.0000	0.0000	0.0000	0.0000
2021	0.0000	0.0000	0.0000	0.0000	0.0000	0.0000	0.0000	0.0000	0.0000	0.0000	0.0000	0.0000	0.0000	0.0000	0.0000	0.0000
Maximum	**0.0000**	**0.0000**	**0.0000**	**0.0000**	**0.0000**	**0.0000**	**0.0000**	**0.0000**	**0.0000**	**0.0000**	**0.0000**	**0.0000**	**0.0000**	**0.0000**	**0.0000**	**0.0000**

	ROG	**NOx**	**CO**	**SO2**	**Fugitive PM10**	**Exhaust PM10**	**PM10 Total**	**Fugitive PM2.5**	**Exhaust PM2.5**	**PM2.5 Total**	**Bio- CO2**	**NBio-CO2**	**Total CO2**	**CH4**	**N20**	**CO2e**
Percent Reduction	**0.00**	**0.00**	**0.00**	**0.00**	**0.00**	**0.00**	**0.00**	**0.00**	**0.00**	**0.00**	**0.00**	**0.00**	**0.00**	**0.00**	**0.00**	**0.00**

2.2 Overall Operational

Unmitigated Operational

	ROG	NOx	CO	SO2	Fugitive PM10	Exhaust PM10	PM10 Total	Fugitive PM2.5	Exhaust PM2.5	PM2.5 Total	Bio- CO2	NBio- CO2	Total CO2	CH4	N2O	CO2e
Category	lb/day										lb/day					
Area	0.1388	3.5000e-004	0.0390	0.0000		1.4000e-004	1.4000e-004		1.4000e-004	1.4000e-004		0.0835	0.0835	2.2000e-004		0.0890
Energy	0.0000	0.0000	0.0000	0.0000		0.0000	0.0000		0.0000	0.0000		0.0000	0.0000	0.0000	0.0000	0.0000
Mobile	1.1040	4.3961	13.6893	0.0542	4.8775	0.0412	4.9187	1.3049	0.0385	1.3433		5,484.2861	5,484.2861	0.1705		5,488.5479
Total	**1.2427**	**4.3965**	**13.7282**	**0.0542**	**4.8775**	**0.0413**	**4.9189**	**1.3049**	**0.0386**	**1.3435**		**5,484.3696**	**5,484.3696**	**0.1707**	**0.0000**	**5,488.6369**

Mitigated Operational

	ROG	NOx	CO	SO2	Fugitive PM10	Exhaust PM10	PM10 Total	Fugitive PM2.5	Exhaust PM2.5	PM2.5 Total	Bio- CO2	NBio- CO2	Total CO2	CH4	N2O	CO2e
Category	lb/day										lb/day					
Area	0.1388	3.5000e-004	0.0390	0.0000		1.4000e-004	1.4000e-004		1.4000e-004	1.4000e-004		0.0835	0.0835	2.2000e-004		0.0890
Energy	0.0000	0.0000	0.0000	0.0000		0.0000	0.0000		0.0000	0.0000		0.0000	0.0000	0.0000	0.0000	0.0000
Mobile	1.1040	4.3961	13.6893	0.0542	4.8775	0.0412	4.9187	1.3049	0.0385	1.3433		5,484.2861	5,484.2861	0.1705		5,488.5479
Total	**1.2427**	**4.3965**	**13.7282**	**0.0542**	**4.8775**	**0.0413**	**4.9189**	**1.3049**	**0.0386**	**1.3435**		**5,484.3696**	**5,484.3696**	**0.1707**	**0.0000**	**5,488.6369**

	ROG	NOx	CO	SO2	Fugitive PM10	Exhaust PM10	PM10 Total	Fugitive PM2.5	Exhaust PM2.5	PM2.5 Total	Bio- CO2	NBio-CO2	Total CO2	CH4	N20	CO2e
Percent Reduction	**0.00**	**0.00**	**0.00**	**0.00**	**0.00**	**0.00**	**0.00**	**0.00**	**0.00**	**0.00**	**0.00**	**0.00**	**0.00**	**0.00**	**0.00**	**0.00**

3.0 Construction Detail

Construction Phase

Phase Number	Phase Name	Phase Type	Start Date	End Date	Num Days Week	Num Days	Phase Description
1	Demolition	Demolition	9/29/2020	10/26/2020	5	20	
2	Site Preparation	Site Preparation	10/27/2020	11/9/2020	5	10	
3	Grading	Grading	11/10/2020	12/7/2020	5	20	
4	Building Construction	Building Construction	12/8/2020	10/25/2021	5	230	
5	Architectural Coating	Architectural Coating	11/23/2021	12/20/2021	5	20	

Acres of Grading (Site Preparation Phase): 0

Acres of Grading (Grading Phase): 0

Acres of Paving: 8.76

Residential Indoor: 0; Residential Outdoor: 0; Non-Residential Indoor: 0; Non-Residential Outdoor: 0; Striped Parking Area: 0 (Architectural Coating – sqft)

OffRoad Equipment

Phase Name	Offroad Equipment Type	Amount	Usage Hours	Horse Power	Load Factor
Demolition	Concrete/Industrial Saws	1	0.00	81	0.73
Demolition	Excavators	3	0.00	158	0.38
Demolition	Rubber Tired Dozers	2	0.00	247	0.40
Site Preparation	Rubber Tired Dozers	3	0.00	247	0.40
Site Preparation	Tractors/Loaders/Backhoes	4	0.00	97	0.37
Grading	Excavators	1	0.00	158	0.38
Grading	Graders	1	0.00	187	0.41
Grading	Rubber Tired Dozers	1	0.00	247	0.40
Grading	Tractors/Loaders/Backhoes	3	0.00	97	0.37
Building Construction	Cranes	1	0.00	231	0.29
Building Construction	Forklifts	3	0.00	89	0.20
Building Construction	Generator Sets	1	0.00	84	0.74
Building Construction	Tractors/Loaders/Backhoes	3	0.00	97	0.37
Building Construction	Welders	1	0.00	46	0.45
Architectural Coating	Air Compressors	1	0.00	78	0.48

Trips and VMT

Phase Name	Offroad Equipment Count	Worker Trip Number	Vendor Trip Number	Hauling Trip Number	Worker Trip Length	Vendor Trip Length	Hauling Trip Length	Worker Vehicle Class	Vendor Vehicle Class	Hauling Vehicle Class
Demolition	6	0.00	0.00	0.00	10.80	7.30	20.00	LD_Mix	HDT_Mix	HHDT
Site Preparation	7	0.00	0.00	0.00	10.80	7.30	20.00	LD_Mix	HDT_Mix	HHDT
Grading	6	0.00	0.00	0.00	10.80	7.30	20.00	LD_Mix	HDT_Mix	HHDT
Building Construction	9	0.00	0.00	0.00	10.80	7.30	20.00	LD_Mix	HDT_Mix	HHDT
Architectural Coating	1	0.00	0.00	0.00	10.80	7.30	20.00	LD_Mix	HDT_Mix	HHDT

3.1 Mitigation Measures Construction

3.2 Demolition - 2020

Unmitigated Construction On-Site

	ROG	NOx	CO	SO2	Fugitive PM10	Exhaust PM10	PM10 Total	Fugitive PM2.5	Exhaust PM2.5	PM2.5 Total	Bio- CO2	NBio- CO2	Total CO2	CH4	N2O	CO2e
Category	lb/day										lb/day					
Off-Road	0.0000	0.0000	0.0000	0.0000		0.0000	0.0000		0.0000	0.0000		0.0000	0.0000	0.0000		0.0000
Total	**0.0000**	**0.0000**	**0.0000**	**0.0000**		**0.0000**	**0.0000**		**0.0000**	**0.0000**		**0.0000**	**0.0000**	**0.0000**		**0.0000**

Unmitigated Construction Off-Site

	ROG	NOx	CO	SO2	Fugitive PM10	Exhaust PM10	PM10 Total	Fugitive PM2.5	Exhaust PM2.5	PM2.5 Total	Bio- CO2	NBio- CO2	Total CO2	CH4	N2O	CO2e
Category	lb/day										lb/day					
Hauling	0.0000	0.0000	0.0000	0.0000	0.0000	0.0000	0.0000	0.0000	0.0000	0.0000		0.0000	0.0000	0.0000		0.0000
Vendor	0.0000	0.0000	0.0000	0.0000	0.0000	0.0000	0.0000	0.0000	0.0000	0.0000		0.0000	0.0000	0.0000		0.0000
Worker	0.0000	0.0000	0.0000	0.0000	0.0000	0.0000	0.0000	0.0000	0.0000	0.0000		0.0000	0.0000	0.0000		0.0000
Total	**0.0000**	**0.0000**	**0.0000**	**0.0000**	**0.0000**	**0.0000**	**0.0000**	**0.0000**	**0.0000**	**0.0000**		**0.0000**	**0.0000**	**0.0000**		**0.0000**

3.2 Demolition - 2020

Mitigated Construction On-Site

	ROG	NOx	CO	SO2	Fugitive PM10	Exhaust PM10	PM10 Total	Fugitive PM2.5	Exhaust PM2.5	PM2.5 Total	Bio- CO2	NBio- CO2	Total CO2	CH4	N2O	CO2e
Category	lb/day										lb/day					
Off-Road	0.0000	0.0000	0.0000	0.0000		0.0000	0.0000		0.0000	0.0000	0.0000	0.0000	0.0000	0.0000		0.0000
Total	**0.0000**	**0.0000**	**0.0000**	**0.0000**		**0.0000**	**0.0000**		**0.0000**	**0.0000**	**0.0000**	**0.0000**	**0.0000**	**0.0000**		**0.0000**

Mitigated Construction Off-Site

	ROG	NOx	CO	SO2	Fugitive PM10	Exhaust PM10	PM10 Total	Fugitive PM2.5	Exhaust PM2.5	PM2.5 Total	Bio- CO2	NBio- CO2	Total CO2	CH4	N2O	CO2e
Category	lb/day										lb/day					
Hauling	0.0000	0.0000	0.0000	0.0000	0.0000	0.0000	0.0000	0.0000	0.0000	0.0000		0.0000	0.0000	0.0000		0.0000
Vendor	0.0000	0.0000	0.0000	0.0000	0.0000	0.0000	0.0000	0.0000	0.0000	0.0000		0.0000	0.0000	0.0000		0.0000
Worker	0.0000	0.0000	0.0000	0.0000	0.0000	0.0000	0.0000	0.0000	0.0000	0.0000		0.0000	0.0000	0.0000		0.0000
Total	**0.0000**	**0.0000**	**0.0000**	**0.0000**	**0.0000**	**0.0000**	**0.0000**	**0.0000**	**0.0000**	**0.0000**		**0.0000**	**0.0000**	**0.0000**		**0.0000**

3.3 Site Preparation - 2020

Unmitigated Construction On-Site

	ROG	NOx	CO	SO2	Fugitive PM10	Exhaust PM10	PM10 Total	Fugitive PM2.5	Exhaust PM2.5	PM2.5 Total	Bio- CO2	NBio- CO2	Total CO2	CH4	N2O	CO2e
Category	lb/day										lb/day					
Fugitive Dust					0.0000	0.0000	0.0000	0.0000	0.0000	0.0000			0.0000			0.0000
Off-Road	0.0000	0.0000	0.0000	0.0000		0.0000	0.0000		0.0000	0.0000		0.0000	0.0000	0.0000		0.0000
Total	**0.0000**	**0.0000**	**0.0000**	**0.0000**	**0.0000**	**0.0000**	**0.0000**	**0.0000**	**0.0000**	**0.0000**		**0.0000**	**0.0000**	**0.0000**		**0.0000**

Unmitigated Construction Off-Site

	ROG	NOx	CO	SO2	Fugitive PM10	Exhaust PM10	PM10 Total	Fugitive PM2.5	Exhaust PM2.5	PM2.5 Total	Bio- CO2	NBio- CO2	Total CO2	CH4	N2O	CO2e
Category	lb/day										lb/day					
Hauling	0.0000	0.0000	0.0000	0.0000	0.0000	0.0000	0.0000	0.0000	0.0000	0.0000		0.0000	0.0000	0.0000		0.0000
Vendor	0.0000	0.0000	0.0000	0.0000	0.0000	0.0000	0.0000	0.0000	0.0000	0.0000		0.0000	0.0000	0.0000		0.0000
Worker	0.0000	0.0000	0.0000	0.0000	0.0000	0.0000	0.0000	0.0000	0.0000	0.0000		0.0000	0.0000	0.0000		0.0000
Total	**0.0000**	**0.0000**	**0.0000**	**0.0000**	**0.0000**	**0.0000**	**0.0000**	**0.0000**	**0.0000**	**0.0000**		**0.0000**	**0.0000**	**0.0000**		**0.0000**

3.3 Site Preparation - 2020

Mitigated Construction On-Site

	ROG	NOx	CO	SO2	Fugitive PM10	Exhaust PM10	PM10 Total	Fugitive PM2.5	Exhaust PM2.5	PM2.5 Total	Bio- CO2	NBio- CO2	Total CO2	CH4	N2O	CO2e
Category	lb/day										lb/day					
Fugitive Dust					0.0000	0.0000	0.0000	0.0000	0.0000	0.0000			0.0000			0.0000
Off-Road	0.0000	0.0000	0.0000	0.0000		0.0000	0.0000		0.0000	0.0000	0.0000	0.0000	0.0000	0.0000		0.0000
Total	**0.0000**	**0.0000**	**0.0000**	**0.0000**	**0.0000**	**0.0000**	**0.0000**	**0.0000**	**0.0000**	**0.0000**	**0.0000**	**0.0000**	**0.0000**	**0.0000**		**0.0000**

Mitigated Construction Off-Site

	ROG	NOx	CO	SO2	Fugitive PM10	Exhaust PM10	PM10 Total	Fugitive PM2.5	Exhaust PM2.5	PM2.5 Total	Bio- CO2	NBio- CO2	Total CO2	CH4	N2O	CO2e
Category	lb/day										lb/day					
Hauling	0.0000	0.0000	0.0000	0.0000	0.0000	0.0000	0.0000	0.0000	0.0000	0.0000		0.0000	0.0000	0.0000		0.0000
Vendor	0.0000	0.0000	0.0000	0.0000	0.0000	0.0000	0.0000	0.0000	0.0000	0.0000		0.0000	0.0000	0.0000		0.0000
Worker	0.0000	0.0000	0.0000	0.0000	0.0000	0.0000	0.0000	0.0000	0.0000	0.0000		0.0000	0.0000	0.0000		0.0000
Total	**0.0000**	**0.0000**	**0.0000**	**0.0000**	**0.0000**	**0.0000**	**0.0000**	**0.0000**	**0.0000**	**0.0000**		**0.0000**	**0.0000**	**0.0000**		**0.0000**

3.4 Grading - 2020

Unmitigated Construction On-Site

	ROG	NOx	CO	SO2	Fugitive PM10	Exhaust PM10	PM10 Total	Fugitive PM2.5	Exhaust PM2.5	PM2.5 Total	Bio- CO2	NBio- CO2	Total CO2	CH4	N2O	CO2e
Category	lb/day										lb/day					
Fugitive Dust					0.0000	0.0000	0.0000	0.0000	0.0000	0.0000			0.0000			0.0000
Off-Road	0.0000	0.0000	0.0000	0.0000		0.0000	0.0000		0.0000	0.0000		0.0000	0.0000	0.0000		0.0000
Total	**0.0000**	**0.0000**	**0.0000**	**0.0000**	**0.0000**	**0.0000**	**0.0000**	**0.0000**	**0.0000**	**0.0000**		**0.0000**	**0.0000**	**0.0000**		**0.0000**

Unmitigated Construction Off-Site

	ROG	NOx	CO	SO2	Fugitive PM10	Exhaust PM10	PM10 Total	Fugitive PM2.5	Exhaust PM2.5	PM2.5 Total	Bio- CO2	NBio- CO2	Total CO2	CH4	N2O	CO2e
Category	lb/day										lb/day					
Hauling	0.0000	0.0000	0.0000	0.0000	0.0000	0.0000	0.0000	0.0000	0.0000	0.0000		0.0000	0.0000	0.0000		0.0000
Vendor	0.0000	0.0000	0.0000	0.0000	0.0000	0.0000	0.0000	0.0000	0.0000	0.0000		0.0000	0.0000	0.0000		0.0000
Worker	0.0000	0.0000	0.0000	0.0000	0.0000	0.0000	0.0000	0.0000	0.0000	0.0000		0.0000	0.0000	0.0000		0.0000
Total	**0.0000**	**0.0000**	**0.0000**	**0.0000**	**0.0000**	**0.0000**	**0.0000**	**0.0000**	**0.0000**	**0.0000**		**0.0000**	**0.0000**	**0.0000**		**0.0000**

3.4 Grading - 2020

Mitigated Construction On-Site

	ROG	NOx	CO	SO2	Fugitive PM10	Exhaust PM10	PM10 Total	Fugitive PM2.5	Exhaust PM2.5	PM2.5 Total	Bio- CO2	NBio- CO2	Total CO2	CH4	N2O	CO2e
Category	lb/day										lb/day					
Fugitive Dust					0.0000	0.0000	0.0000	0.0000	0.0000	0.0000			0.0000			0.0000
Off-Road	0.0000	0.0000	0.0000	0.0000		0.0000	0.0000		0.0000	0.0000	0.0000	0.0000	0.0000	0.0000		0.0000
Total	**0.0000**	**0.0000**	**0.0000**	**0.0000**	**0.0000**	**0.0000**	**0.0000**	**0.0000**	**0.0000**	**0.0000**	**0.0000**	**0.0000**	**0.0000**	**0.0000**		**0.0000**

Mitigated Construction Off-Site

	ROG	NOx	CO	SO2	Fugitive PM10	Exhaust PM10	PM10 Total	Fugitive PM2.5	Exhaust PM2.5	PM2.5 Total	Bio- CO2	NBio- CO2	Total CO2	CH4	N2O	CO2e
Category	lb/day										lb/day					
Hauling	0.0000	0.0000	0.0000	0.0000	0.0000	0.0000	0.0000	0.0000	0.0000	0.0000		0.0000	0.0000	0.0000		0.0000
Vendor	0.0000	0.0000	0.0000	0.0000	0.0000	0.0000	0.0000	0.0000	0.0000	0.0000		0.0000	0.0000	0.0000		0.0000
Worker	0.0000	0.0000	0.0000	0.0000	0.0000	0.0000	0.0000	0.0000	0.0000	0.0000		0.0000	0.0000	0.0000		0.0000
Total	**0.0000**	**0.0000**	**0.0000**	**0.0000**	**0.0000**	**0.0000**	**0.0000**	**0.0000**	**0.0000**	**0.0000**		**0.0000**	**0.0000**	**0.0000**		**0.0000**

3.5 Building Construction - 2020

Unmitigated Construction On-Site

	ROG	NOx	CO	SO2	Fugitive PM10	Exhaust PM10	PM10 Total	Fugitive PM2.5	Exhaust PM2.5	PM2.5 Total	Bio- CO2	NBio- CO2	Total CO2	CH4	N2O	CO2e
Category	lb/day										lb/day					
Off-Road	0.0000	0.0000	0.0000	0.0000		0.0000	0.0000		0.0000	0.0000		0.0000	0.0000	0.0000		0.0000
Total	**0.0000**	**0.0000**	**0.0000**	**0.0000**		**0.0000**	**0.0000**		**0.0000**	**0.0000**		**0.0000**	**0.0000**	**0.0000**		**0.0000**

Unmitigated Construction Off-Site

	ROG	NOx	CO	SO2	Fugitive PM10	Exhaust PM10	PM10 Total	Fugitive PM2.5	Exhaust PM2.5	PM2.5 Total	Bio- CO2	NBio- CO2	Total CO2	CH4	N2O	CO2e
Category	lb/day										lb/day					
Hauling	0.0000	0.0000	0.0000	0.0000	0.0000	0.0000	0.0000	0.0000	0.0000	0.0000		0.0000	0.0000	0.0000		0.0000
Vendor	0.0000	0.0000	0.0000	0.0000	0.0000	0.0000	0.0000	0.0000	0.0000	0.0000		0.0000	0.0000	0.0000		0.0000
Worker	0.0000	0.0000	0.0000	0.0000	0.0000	0.0000	0.0000	0.0000	0.0000	0.0000		0.0000	0.0000	0.0000		0.0000
Total	**0.0000**	**0.0000**	**0.0000**	**0.0000**	**0.0000**	**0.0000**	**0.0000**	**0.0000**	**0.0000**	**0.0000**		**0.0000**	**0.0000**	**0.0000**		**0.0000**

3.5 Building Construction - 2020

Mitigated Construction On-Site

	ROG	NOx	CO	SO2	Fugitive PM10	Exhaust PM10	PM10 Total	Fugitive PM2.5	Exhaust PM2.5	PM2.5 Total	Bio- CO2	NBio- CO2	Total CO2	CH4	N2O	CO2e
Category	lb/day										lb/day					
Off-Road	0.0000	0.0000	0.0000	0.0000		0.0000	0.0000		0.0000	0.0000	0.0000	0.0000	0.0000	0.0000		0.0000
Total	**0.0000**	**0.0000**	**0.0000**	**0.0000**		**0.0000**	**0.0000**		**0.0000**	**0.0000**	**0.0000**	**0.0000**	**0.0000**	**0.0000**		**0.0000**

Mitigated Construction Off-Site

	ROG	NOx	CO	SO2	Fugitive PM10	Exhaust PM10	PM10 Total	Fugitive PM2.5	Exhaust PM2.5	PM2.5 Total	Bio- CO2	NBio- CO2	Total CO2	CH4	N2O	CO2e
Category	lb/day										lb/day					
Hauling	0.0000	0.0000	0.0000	0.0000	0.0000	0.0000	0.0000	0.0000	0.0000	0.0000		0.0000	0.0000	0.0000		0.0000
Vendor	0.0000	0.0000	0.0000	0.0000	0.0000	0.0000	0.0000	0.0000	0.0000	0.0000		0.0000	0.0000	0.0000		0.0000
Worker	0.0000	0.0000	0.0000	0.0000	0.0000	0.0000	0.0000	0.0000	0.0000	0.0000		0.0000	0.0000	0.0000		0.0000
Total	**0.0000**	**0.0000**	**0.0000**	**0.0000**	**0.0000**	**0.0000**	**0.0000**	**0.0000**	**0.0000**	**0.0000**		**0.0000**	**0.0000**	**0.0000**		**0.0000**

3.5 Building Construction - 2021

Unmitigated Construction On-Site

	ROG	NOx	CO	SO2	Fugitive PM10	Exhaust PM10	PM10 Total	Fugitive PM2.5	Exhaust PM2.5	PM2.5 Total	Bio- CO2	NBio- CO2	Total CO2	CH4	N2O	CO2e
Category	lb/day										lb/day					
Off-Road	0.0000	0.0000	0.0000	0.0000		0.0000	0.0000		0.0000	0.0000		0.0000	0.0000	0.0000		0.0000
Total	**0.0000**	**0.0000**	**0.0000**	**0.0000**		**0.0000**	**0.0000**		**0.0000**	**0.0000**		**0.0000**	**0.0000**	**0.0000**		**0.0000**

Unmitigated Construction Off-Site

	ROG	NOx	CO	SO2	Fugitive PM10	Exhaust PM10	PM10 Total	Fugitive PM2.5	Exhaust PM2.5	PM2.5 Total	Bio- CO2	NBio- CO2	Total CO2	CH4	N2O	CO2e
Category	lb/day										lb/day					
Hauling	0.0000	0.0000	0.0000	0.0000	0.0000	0.0000	0.0000	0.0000	0.0000	0.0000		0.0000	0.0000	0.0000		0.0000
Vendor	0.0000	0.0000	0.0000	0.0000	0.0000	0.0000	0.0000	0.0000	0.0000	0.0000		0.0000	0.0000	0.0000		0.0000
Worker	0.0000	0.0000	0.0000	0.0000	0.0000	0.0000	0.0000	0.0000	0.0000	0.0000		0.0000	0.0000	0.0000		0.0000
Total	**0.0000**	**0.0000**	**0.0000**	**0.0000**	**0.0000**	**0.0000**	**0.0000**	**0.0000**	**0.0000**	**0.0000**		**0.0000**	**0.0000**	**0.0000**		**0.0000**

3.5 Building Construction - 2021

Mitigated Construction On-Site

	ROG	NOx	CO	SO2	Fugitive PM10	Exhaust PM10	PM10 Total	Fugitive PM2.5	Exhaust PM2.5	PM2.5 Total	Bio- CO2	NBio- CO2	Total CO2	CH4	N2O	CO2e
Category	lb/day										lb/day					
Off-Road	0.0000	0.0000	0.0000	0.0000		0.0000	0.0000		0.0000	0.0000	0.0000	0.0000	0.0000	0.0000		0.0000
Total	**0.0000**	**0.0000**	**0.0000**	**0.0000**		**0.0000**	**0.0000**		**0.0000**	**0.0000**	**0.0000**	**0.0000**	**0.0000**	**0.0000**		**0.0000**

Mitigated Construction Off-Site

	ROG	NOx	CO	SO2	Fugitive PM10	Exhaust PM10	PM10 Total	Fugitive PM2.5	Exhaust PM2.5	PM2.5 Total	Bio- CO2	NBio- CO2	Total CO2	CH4	N2O	CO2e
Category	lb/day										lb/day					
Hauling	0.0000	0.0000	0.0000	0.0000	0.0000	0.0000	0.0000	0.0000	0.0000	0.0000		0.0000	0.0000	0.0000		0.0000
Vendor	0.0000	0.0000	0.0000	0.0000	0.0000	0.0000	0.0000	0.0000	0.0000	0.0000		0.0000	0.0000	0.0000		0.0000
Worker	0.0000	0.0000	0.0000	0.0000	0.0000	0.0000	0.0000	0.0000	0.0000	0.0000		0.0000	0.0000	0.0000		0.0000
Total	**0.0000**	**0.0000**	**0.0000**	**0.0000**	**0.0000**	**0.0000**	**0.0000**	**0.0000**	**0.0000**	**0.0000**		**0.0000**	**0.0000**	**0.0000**		**0.0000**

3.6 Architectural Coating - 2021

Unmitigated Construction On-Site

	ROG	NOx	CO	SO2	Fugitive PM10	Exhaust PM10	PM10 Total	Fugitive PM2.5	Exhaust PM2.5	PM2.5 Total	Bio- CO2	NBio- CO2	Total CO2	CH4	N2O	CO2e
Category	lb/day										lb/day					
Archit. Coating	0.0000					0.0000	0.0000		0.0000	0.0000			0.0000			0.0000
Off-Road	0.0000	0.0000	0.0000	0.0000		0.0000	0.0000		0.0000	0.0000		0.0000	0.0000	0.0000		0.0000
Total	**0.0000**	**0.0000**	**0.0000**	**0.0000**		**0.0000**	**0.0000**		**0.0000**	**0.0000**		**0.0000**	**0.0000**	**0.0000**		**0.0000**

Unmitigated Construction Off-Site

	ROG	NOx	CO	SO2	Fugitive PM10	Exhaust PM10	PM10 Total	Fugitive PM2.5	Exhaust PM2.5	PM2.5 Total	Bio- CO2	NBio- CO2	Total CO2	CH4	N2O	CO2e
Category	lb/day										lb/day					
Hauling	0.0000	0.0000	0.0000	0.0000	0.0000	0.0000	0.0000	0.0000	0.0000	0.0000		0.0000	0.0000	0.0000		0.0000
Vendor	0.0000	0.0000	0.0000	0.0000	0.0000	0.0000	0.0000	0.0000	0.0000	0.0000		0.0000	0.0000	0.0000		0.0000
Worker	0.0000	0.0000	0.0000	0.0000	0.0000	0.0000	0.0000	0.0000	0.0000	0.0000		0.0000	0.0000	0.0000		0.0000
Total	**0.0000**	**0.0000**	**0.0000**	**0.0000**	**0.0000**	**0.0000**	**0.0000**	**0.0000**	**0.0000**	**0.0000**		**0.0000**	**0.0000**	**0.0000**		**0.0000**

3.6 Architectural Coating - 2021

Mitigated Construction On-Site

	ROG	NOx	CO	SO2	Fugitive PM10	Exhaust PM10	PM10 Total	Fugitive PM2.5	Exhaust PM2.5	PM2.5 Total	Bio- CO2	NBio- CO2	Total CO2	CH4	N2O	CO2e
Category	lb/day										lb/day					
Archit. Coating	0.0000					0.0000	0.0000		0.0000	0.0000			0.0000			0.0000
Off-Road	0.0000	0.0000	0.0000	0.0000		0.0000	0.0000		0.0000	0.0000	0.0000	0.0000	0.0000	0.0000		0.0000
Total	**0.0000**	**0.0000**	**0.0000**	**0.0000**		**0.0000**	**0.0000**		**0.0000**	**0.0000**	**0.0000**	**0.0000**	**0.0000**	**0.0000**		**0.0000**

Mitigated Construction Off-Site

	ROG	NOx	CO	SO2	Fugitive PM10	Exhaust PM10	PM10 Total	Fugitive PM2.5	Exhaust PM2.5	PM2.5 Total	Bio- CO2	NBio- CO2	Total CO2	CH4	N2O	CO2e
Category	lb/day										lb/day					
Hauling	0.0000	0.0000	0.0000	0.0000	0.0000	0.0000	0.0000	0.0000	0.0000	0.0000		0.0000	0.0000	0.0000		0.0000
Vendor	0.0000	0.0000	0.0000	0.0000	0.0000	0.0000	0.0000	0.0000	0.0000	0.0000		0.0000	0.0000	0.0000		0.0000
Worker	0.0000	0.0000	0.0000	0.0000	0.0000	0.0000	0.0000	0.0000	0.0000	0.0000		0.0000	0.0000	0.0000		0.0000
Total	**0.0000**	**0.0000**	**0.0000**	**0.0000**	**0.0000**	**0.0000**	**0.0000**	**0.0000**	**0.0000**	**0.0000**		**0.0000**	**0.0000**	**0.0000**		**0.0000**

4.0 Operational Detail - Mobile

4.1 Mitigation Measures Mobile

	ROG	NOx	CO	SO2	Fugitive PM10	Exhaust PM10	PM10 Total	Fugitive PM2.5	Exhaust PM2.5	PM2.5 Total	Bio- CO2	NBio- CO2	Total CO2	CH4	N2O	CO2e
Category	lb/day										lb/day					
Mitigated	1.1040	4.3961	13.6893	0.0542	4.8775	0.0412	4.9187	1.3049	0.0385	1.3433		5,484.2861	5,484.2861	0.1705		5,488.5479
Unmitigated	1.1040	4.3961	13.6893	0.0542	4.8775	0.0412	4.9187	1.3049	0.0385	1.3433		5,484.2861	5,484.2861	0.1705		5,488.5479

4.2 Trip Summary Information

	Average Daily Trip Rate			Unmitigated	Mitigated
Land Use	Weekday	Saturday	Sunday	Annual VMT	Annual VMT
Parking Lot	663.97	0.00	0.00	1,639,998	1,639,998
Total	663.97	0.00	0.00	1,639,998	1,639,998

4.3 Trip Type Information

	Miles			Trip %			Trip Purpose %		
Land Use	H-W or C-W	H-S or C-C	H-O or C-NW	H-W or C-W	H-S or C-C	H-O or C-NW	Primary	Diverted	Pass-by
Parking Lot	9.50	7.30	7.30	100.00	0.00	0.00	100	0	0

4.4 Fleet Mix

Land Use	LDA	LDT1	LDT2	MDV	LHD1	LHD2	MHD	HHD	OBUS	UBUS	MCY	SBUS	MH
Parking Lot	0.578638	0.038775	0.193686	0.110919	0.015677	0.005341	0.018293	0.026358	0.002641	0.002200	0.005832	0.000891	0.000749

5.0 Energy Detail

Historical Energy Use: N

5.1 Mitigation Measures Energy

	ROG	NOx	CO	SO2	Fugitive PM10	Exhaust PM10	PM10 Total	Fugitive PM2.5	Exhaust PM2.5	PM2.5 Total	Bio- CO2	NBio- CO2	Total CO2	CH4	N2O	CO2e
Category	lb/day										lb/day					
NaturalGas Mitigated	0.0000	0.0000	0.0000	0.0000		0.0000	0.0000		0.0000	0.0000		0.0000	0.0000	0.0000	0.0000	0.0000
NaturalGas Unmitigated	0.0000	0.0000	0.0000	0.0000		0.0000	0.0000		0.0000	0.0000		0.0000	0.0000	0.0000	0.0000	0.0000

5.2 Energy by Land Use - NaturalGas

Unmitigated

	NaturalGas Use	ROG	NOx	CO	SO2	Fugitive PM10	Exhaust PM10	PM10 Total	Fugitive PM2.5	Exhaust PM2.5	PM2.5 Total	Bio- CO2	NBio- CO2	Total CO2	CH4	N2O	CO2e
Land Use	kBTU/yr	lb/day										lb/day					
Parking Lot	0	0.0000	0.0000	0.0000	0.0000		0.0000	0.0000		0.0000	0.0000		0.0000	0.0000	0.0000	0.0000	0.0000
Total		**0.0000**	**0.0000**	**0.0000**	**0.0000**		**0.0000**	**0.0000**		**0.0000**	**0.0000**		**0.0000**	**0.0000**	**0.0000**	**0.0000**	**0.0000**

Mitigated

	NaturalGas Use	ROG	NOx	CO	SO2	Fugitive PM10	Exhaust PM10	PM10 Total	Fugitive PM2.5	Exhaust PM2.5	PM2.5 Total	Bio- CO2	NBio- CO2	Total CO2	CH4	N2O	CO2e
Land Use	kBTU/yr	lb/day										lb/day					
Parking Lot	0	0.0000	0.0000	0.0000	0.0000		0.0000	0.0000		0.0000	0.0000		0.0000	0.0000	0.0000	0.0000	0.0000
Total		**0.0000**	**0.0000**	**0.0000**	**0.0000**		**0.0000**	**0.0000**		**0.0000**	**0.0000**		**0.0000**	**0.0000**	**0.0000**	**0.0000**	**0.0000**

6.0 Area Detail

6.1 Mitigation Measures Area

	ROG	NOx	CO	SO2	Fugitive PM10	Exhaust PM10	PM10 Total	Fugitive PM2.5	Exhaust PM2.5	PM2.5 Total	Bio- CO2	NBio- CO2	Total CO2	CH4	N2O	CO2e
Category	lb/day										lb/day					
Mitigated	0.1388	3.5000e-004	0.0390	0.0000		1.4000e-004	1.4000e-004		1.4000e-004	1.4000e-004		0.0835	0.0835	2.2000e-004		0.0890
Unmitigated	0.1388	3.5000e-004	0.0390	0.0000		1.4000e-004	1.4000e-004		1.4000e-004	1.4000e-004		0.0835	0.0835	2.2000e-004		0.0890

6.2 Area by SubCategory

Unmitigated

	ROG	NOx	CO	SO2	Fugitive PM10	Exhaust PM10	PM10 Total	Fugitive PM2.5	Exhaust PM2.5	PM2.5 Total	Bio- CO2	NBio- CO2	Total CO2	CH4	N2O	CO2e
SubCategory	lb/day										lb/day					
Architectural Coating	0.0000					0.0000	0.0000		0.0000	0.0000			0.0000			0.0000
Consumer Products	0.1352					0.0000	0.0000		0.0000	0.0000			0.0000			0.0000
Landscaping	3.6100e-003	3.5000e-004	0.0390	0.0000		1.4000e-004	1.4000e-004		1.4000e-004	1.4000e-004		0.0835	0.0835	2.2000e-004		0.0890
Total	**0.1388**	**3.5000e-004**	**0.0390**	**0.0000**		**1.4000e-004**	**1.4000e-004**		**1.4000e-004**	**1.4000e-004**		**0.0835**	**0.0835**	**2.2000e-004**		**0.0890**

6.2 Area by SubCategory

Mitigated

	ROG	NOx	CO	SO2	Fugitive PM10	Exhaust PM10	PM10 Total	Fugitive PM2.5	Exhaust PM2.5	PM2.5 Total	Bio- CO2	NBio- CO2	Total CO2	CH4	N2O	CO2e
SubCategory	lb/day										lb/day					
Architectural Coating	0.0000					0.0000	0.0000		0.0000	0.0000			0.0000			0.0000
Consumer Products	0.1352					0.0000	0.0000		0.0000	0.0000			0.0000			0.0000
Landscaping	3.6100e-003	3.5000e-004	0.0390	0.0000		1.4000e-004	1.4000e-004		1.4000e-004	1.4000e-004		0.0835	0.0835	2.2000e-004		0.0890
Total	**0.1388**	**3.5000e-004**	**0.0390**	**0.0000**		**1.4000e-004**	**1.4000e-004**		**1.4000e-004**	**1.4000e-004**		**0.0835**	**0.0835**	**2.2000e-004**		**0.0890**

7.0 Water Detail

7.1 Mitigation Measures Water

8.0 Waste Detail

8.1 Mitigation Measures Waste

9.0 Operational Offroad

Equipment Type	Number	Hours/Day	Days/Year	Horse Power	Load Factor	Fuel Type

10.0 Stationary Equipment

Fire Pumps and Emergency Generators

Equipment Type	Number	Hours/Day	Hours/Year	Horse Power	Load Factor	Fuel Type

Boilers

Equipment Type	Number	Heat Input/Day	Heat Input/Year	Boiler Rating	Fuel Type

User Defined Equipment

Equipment Type	Number

11.0 Vegetation

Clawiter Industrial Project - Existing Uses

Bay Area AQMD Air District, Annual

1.0 Project Characteristics

1.1 Land Usage

Land Uses	Size	Metric	Lot Acreage	Floor Surface Area	Population
Parking Lot	381.59	1000sqft	8.76	381,586.00	0

1.2 Other Project Characteristics

Urbanization	Urban	**Wind Speed (m/s)**	2.2	**Precipitation Freq (Days)**	64
Climate Zone	5			**Operational Year**	2023
Utility Company	Pacific Gas & Electric Company				
CO2 Intensity (lb/MWhr)	298.65	**CH4 Intensity (lb/MWhr)**	0.014	**N2O Intensity (lb/MWhr)**	0.003

1.3 User Entered Comments & Non-Default Data

Project Characteristics - 60% RPS by 2030

Land Use - Based on trip gen memo.

Construction Phase - No construction - existing uses

Off-road Equipment - No construction - existing uses

Off-road Equipment - No construction - existing uses

Off-road Equipment - No construction - existing uses

Off-road Equipment - No construction - existing uses

Off-road Equipment - No construction - existing uses

Off-road Equipment - No construction - existing uses

Trips and VMT - No construction - existing uses

Architectural Coating - No construction - existing uses

Vehicle Trips - Based on trip gen memo from Kittleson

Area Coating - Vehicle storage yard - no painting of parking lines

Energy Use - Vehicle storage yard - no lighting

Grading -

Table Name	Column Name	Default Value	New Value
tblArchitecturalCoating	ConstArea_Parking	22,895.00	0.00
tblAreaCoating	Area_Parking	22895	0
tblEnergyUse	LightingElect	0.35	0.00
tblOffRoadEquipment	UsageHours	6.00	0.00
tblOffRoadEquipment	UsageHours	8.00	0.00
tblOffRoadEquipment	UsageHours	8.00	0.00
tblOffRoadEquipment	UsageHours	8.00	0.00
tblOffRoadEquipment	UsageHours	7.00	0.00
tblOffRoadEquipment	UsageHours	8.00	0.00
tblOffRoadEquipment	UsageHours	8.00	0.00

tblOffRoadEquipment	UsageHours	8.00	0.00
tblOffRoadEquipment	UsageHours	8.00	0.00
tblOffRoadEquipment	UsageHours	7.00	0.00
tblOffRoadEquipment	UsageHours	8.00	0.00
tblOffRoadEquipment	UsageHours	8.00	0.00
tblOffRoadEquipment	UsageHours	8.00	0.00
tblOffRoadEquipment	UsageHours	8.00	0.00
tblOffRoadEquipment	UsageHours	8.00	0.00
tblProjectCharacteristics	CH4IntensityFactor	0.029	0.014
tblProjectCharacteristics	CO2IntensityFactor	641.35	298.65
tblProjectCharacteristics	N2OIntensityFactor	0.006	0.003
tblTripsAndVMT	VendorTripNumber	63.00	0.00
tblTripsAndVMT	WorkerTripNumber	15.00	0.00
tblTripsAndVMT	WorkerTripNumber	18.00	0.00
tblTripsAndVMT	WorkerTripNumber	15.00	0.00
tblTripsAndVMT	WorkerTripNumber	160.00	0.00
tblTripsAndVMT	WorkerTripNumber	32.00	0.00
tblVehicleTrips	CW_TTP	0.00	100.00
tblVehicleTrips	PR_TP	0.00	100.00
tblVehicleTrips	WD_TR	0.00	1.74

2.0 Emissions Summary

2.1 Overall Construction

Unmitigated Construction

	ROG	NOx	CO	SO2	Fugitive PM10	Exhaust PM10	PM10 Total	Fugitive PM2.5	Exhaust PM2.5	PM2.5 Total	Bio- CO2	NBio- CO2	Total CO2	CH4	N2O	CO2e
Year	tons/yr										MT/yr					
2020	0.0000	0.0000	0.0000	0.0000	0.0000	0.0000	0.0000	0.0000	0.0000	0.0000	0.0000	0.0000	0.0000	0.0000	0.0000	0.0000
2021	0.0000	0.0000	0.0000	0.0000	0.0000	0.0000	0.0000	0.0000	0.0000	0.0000	0.0000	0.0000	0.0000	0.0000	0.0000	0.0000
Maximum	**0.0000**	**0.0000**	**0.0000**	**0.0000**	**0.0000**	**0.0000**	**0.0000**	**0.0000**	**0.0000**	**0.0000**	**0.0000**	**0.0000**	**0.0000**	**0.0000**	**0.0000**	**0.0000**

Mitigated Construction

	ROG	NOx	CO	SO2	Fugitive PM10	Exhaust PM10	PM10 Total	Fugitive PM2.5	Exhaust PM2.5	PM2.5 Total	Bio- CO2	NBio- CO2	Total CO2	CH4	N2O	CO2e
Year	tons/yr										MT/yr					
2020	0.0000	0.0000	0.0000	0.0000	0.0000	0.0000	0.0000	0.0000	0.0000	0.0000	0.0000	0.0000	0.0000	0.0000	0.0000	0.0000
2021	0.0000	0.0000	0.0000	0.0000	0.0000	0.0000	0.0000	0.0000	0.0000	0.0000	0.0000	0.0000	0.0000	0.0000	0.0000	0.0000
Maximum	**0.0000**	**0.0000**	**0.0000**	**0.0000**	**0.0000**	**0.0000**	**0.0000**	**0.0000**	**0.0000**	**0.0000**	**0.0000**	**0.0000**	**0.0000**	**0.0000**	**0.0000**	**0.0000**

	ROG	**NOx**	**CO**	**SO2**	**Fugitive PM10**	**Exhaust PM10**	**PM10 Total**	**Fugitive PM2.5**	**Exhaust PM2.5**	**PM2.5 Total**	**Bio- CO2**	**NBio-CO2**	**Total CO2**	**CH4**	**N20**	**CO2e**
Percent Reduction	**0.00**	**0.00**	**0.00**	**0.00**	**0.00**	**0.00**	**0.00**	**0.00**	**0.00**	**0.00**	**0.00**	**0.00**	**0.00**	**0.00**	**0.00**	**0.00**

Quarter	Start Date	End Date	Maximum Unmitigated ROG + NOX (tons/quarter)	Maximum Mitigated ROG + NOX (tons/quarter)
		Highest		

2.2 Overall Operational

Unmitigated Operational

	ROG	NOx	CO	SO2	Fugitive PM10	Exhaust PM10	PM10 Total	Fugitive PM2.5	Exhaust PM2.5	PM2.5 Total	Bio- CO2	NBio- CO2	Total CO2	CH4	N2O	CO2e
Category	tons/yr										MT/yr					
Area	0.0250	3.0000e-005	3.5100e-003	0.0000		1.0000e-005	1.0000e-005		1.0000e-005	1.0000e-005	0.0000	6.8200e-003	6.8200e-003	2.0000e-005	0.0000	7.2700e-003
Energy	0.0000	0.0000	0.0000	0.0000		0.0000	0.0000		0.0000	0.0000	0.0000	0.0000	0.0000	0.0000	0.0000	0.0000
Mobile	0.1269	0.5933	1.6716	6.6600e-003	0.6103	5.3500e-003	0.6157	0.1638	5.0000e-003	0.1688	0.0000	611.2362	611.2362	0.0198	0.0000	611.7307
Waste						0.0000	0.0000		0.0000	0.0000	0.0000	0.0000	0.0000	0.0000	0.0000	0.0000
Water						0.0000	0.0000		0.0000	0.0000	0.0000	0.0000	0.0000	0.0000	0.0000	0.0000
Total	**0.1519**	**0.5933**	**1.6751**	**6.6600e-003**	**0.6103**	**5.3600e-003**	**0.6157**	**0.1638**	**5.0100e-003**	**0.1688**	**0.0000**	**611.2430**	**611.2430**	**0.0198**	**0.0000**	**611.7379**

2.2 Overall Operational

Mitigated Operational

	ROG	NOx	CO	SO2	Fugitive PM10	Exhaust PM10	PM10 Total	Fugitive PM2.5	Exhaust PM2.5	PM2.5 Total	Bio- CO2	NBio- CO2	Total CO2	CH4	N2O	CO2e
Category	tons/yr										MT/yr					
Area	0.0250	3.0000e-005	3.5100e-003	0.0000		1.0000e-005	1.0000e-005		1.0000e-005	1.0000e-005	0.0000	6.8200e-003	6.8200e-003	2.0000e-005	0.0000	7.2700e-003
Energy	0.0000	0.0000	0.0000	0.0000		0.0000	0.0000		0.0000	0.0000	0.0000	0.0000	0.0000	0.0000	0.0000	0.0000
Mobile	0.1269	0.5933	1.6716	6.6600e-003	0.6103	5.3500e-003	0.6157	0.1638	5.0000e-003	0.1688	0.0000	611.2362	611.2362	0.0198	0.0000	611.7307
Waste						0.0000	0.0000		0.0000	0.0000	0.0000	0.0000	0.0000	0.0000	0.0000	0.0000
Water						0.0000	0.0000		0.0000	0.0000	0.0000	0.0000	0.0000	0.0000	0.0000	0.0000
Total	**0.1519**	**0.5933**	**1.6751**	**6.6600e-003**	**0.6103**	**5.3600e-003**	**0.6157**	**0.1638**	**5.0100e-003**	**0.1688**	**0.0000**	**611.2430**	**611.2430**	**0.0198**	**0.0000**	**611.7379**

	ROG	NOx	CO	SO2	Fugitive PM10	Exhaust PM10	PM10 Total	Fugitive PM2.5	Exhaust PM2.5	PM2.5 Total	Bio- CO2	NBio-CO2	Total CO2	CH4	N20	CO2e
Percent Reduction	**0.00**	**0.00**	**0.00**	**0.00**	**0.00**	**0.00**	**0.00**	**0.00**	**0.00**	**0.00**	**0.00**	**0.00**	**0.00**	**0.00**	**0.00**	**0.00**

3.0 Construction Detail

Construction Phase

Phase Number	Phase Name	Phase Type	Start Date	End Date	Num Days Week	Num Days	Phase Description
1	Demolition	Demolition	9/29/2020	10/26/2020	5	20	
2	Site Preparation	Site Preparation	10/27/2020	11/9/2020	5	10	
3	Grading	Grading	11/10/2020	12/7/2020	5	20	
4	Building Construction	Building Construction	12/8/2020	10/25/2021	5	230	
5	Architectural Coating	Architectural Coating	11/23/2021	12/20/2021	5	20	

Acres of Grading (Site Preparation Phase): 0

Acres of Grading (Grading Phase): 0

Acres of Paving: 8.76

Residential Indoor: 0; Residential Outdoor: 0; Non-Residential Indoor: 0; Non-Residential Outdoor: 0; Striped Parking Area: 0 (Architectural Coating – sqft)

OffRoad Equipment

Phase Name	Offroad Equipment Type	Amount	Usage Hours	Horse Power	Load Factor
Architectural Coating	Air Compressors	1	0.00	78	0.48
Demolition	Excavators	3	0.00	158	0.38
Demolition	Concrete/Industrial Saws	1	0.00	81	0.73
Grading	Excavators	1	0.00	158	0.38
Building Construction	Cranes	1	0.00	231	0.29
Building Construction	Forklifts	3	0.00	89	0.20
Building Construction	Generator Sets	1	0.00	84	0.74
Demolition	Rubber Tired Dozers	2	0.00	247	0.40
Grading	Rubber Tired Dozers	1	0.00	247	0.40
Building Construction	Tractors/Loaders/Backhoes	3	0.00	97	0.37
Grading	Graders	1	0.00	187	0.41
Grading	Tractors/Loaders/Backhoes	3	0.00	97	0.37
Site Preparation	Tractors/Loaders/Backhoes	4	0.00	97	0.37
Site Preparation	Rubber Tired Dozers	3	0.00	247	0.40
Building Construction	Welders	1	0.00	46	0.45

Trips and VMT

Phase Name	Offroad Equipment Count	Worker Trip Number	Vendor Trip Number	Hauling Trip Number	Worker Trip Length	Vendor Trip Length	Hauling Trip Length	Worker Vehicle Class	Vendor Vehicle Class	Hauling Vehicle Class
Demolition	6	0.00	0.00	0.00	10.80	7.30	20.00	LD_Mix	HDT_Mix	HHDT
Site Preparation	7	0.00	0.00	0.00	10.80	7.30	20.00	LD_Mix	HDT_Mix	HHDT
Grading	6	0.00	0.00	0.00	10.80	7.30	20.00	LD_Mix	HDT_Mix	HHDT
Building Construction	9	0.00	0.00	0.00	10.80	7.30	20.00	LD_Mix	HDT_Mix	HHDT
Architectural Coating	1	0.00	0.00	0.00	10.80	7.30	20.00	LD_Mix	HDT_Mix	HHDT

3.1 Mitigation Measures Construction

3.2 Demolition - 2020

Unmitigated Construction On-Site

	ROG	NOx	CO	SO2	Fugitive PM10	Exhaust PM10	PM10 Total	Fugitive PM2.5	Exhaust PM2.5	PM2.5 Total	Bio- CO2	NBio- CO2	Total CO2	CH4	N2O	CO2e
Category	tons/yr										MT/yr					
Off-Road	0.0000	0.0000	0.0000	0.0000		0.0000	0.0000		0.0000	0.0000	0.0000	0.0000	0.0000	0.0000	0.0000	0.0000
Total	**0.0000**	**0.0000**	**0.0000**	**0.0000**		**0.0000**	**0.0000**		**0.0000**	**0.0000**	**0.0000**	**0.0000**	**0.0000**	**0.0000**	**0.0000**	**0.0000**

Unmitigated Construction Off-Site

	ROG	NOx	CO	SO2	Fugitive PM10	Exhaust PM10	PM10 Total	Fugitive PM2.5	Exhaust PM2.5	PM2.5 Total	Bio- CO2	NBio- CO2	Total CO2	CH4	N2O	CO2e
Category	tons/yr										MT/yr					
Hauling	0.0000	0.0000	0.0000	0.0000	0.0000	0.0000	0.0000	0.0000	0.0000	0.0000	0.0000	0.0000	0.0000	0.0000	0.0000	0.0000
Vendor	0.0000	0.0000	0.0000	0.0000	0.0000	0.0000	0.0000	0.0000	0.0000	0.0000	0.0000	0.0000	0.0000	0.0000	0.0000	0.0000
Worker	0.0000	0.0000	0.0000	0.0000	0.0000	0.0000	0.0000	0.0000	0.0000	0.0000	0.0000	0.0000	0.0000	0.0000	0.0000	0.0000
Total	**0.0000**	**0.0000**	**0.0000**	**0.0000**	**0.0000**	**0.0000**	**0.0000**	**0.0000**	**0.0000**	**0.0000**	**0.0000**	**0.0000**	**0.0000**	**0.0000**	**0.0000**	**0.0000**

3.2 Demolition - 2020

Mitigated Construction On-Site

	ROG	NOx	CO	SO2	Fugitive PM10	Exhaust PM10	PM10 Total	Fugitive PM2.5	Exhaust PM2.5	PM2.5 Total	Bio- CO2	NBio- CO2	Total CO2	CH4	N2O	CO2e
Category	tons/yr										MT/yr					
Off-Road	0.0000	0.0000	0.0000	0.0000		0.0000	0.0000		0.0000	0.0000	0.0000	0.0000	0.0000	0.0000	0.0000	0.0000
Total	**0.0000**	**0.0000**	**0.0000**	**0.0000**		**0.0000**	**0.0000**		**0.0000**	**0.0000**	**0.0000**	**0.0000**	**0.0000**	**0.0000**	**0.0000**	**0.0000**

Mitigated Construction Off-Site

	ROG	NOx	CO	SO2	Fugitive PM10	Exhaust PM10	PM10 Total	Fugitive PM2.5	Exhaust PM2.5	PM2.5 Total	Bio- CO2	NBio- CO2	Total CO2	CH4	N2O	CO2e
Category	tons/yr										MT/yr					
Hauling	0.0000	0.0000	0.0000	0.0000	0.0000	0.0000	0.0000	0.0000	0.0000	0.0000	0.0000	0.0000	0.0000	0.0000	0.0000	0.0000
Vendor	0.0000	0.0000	0.0000	0.0000	0.0000	0.0000	0.0000	0.0000	0.0000	0.0000	0.0000	0.0000	0.0000	0.0000	0.0000	0.0000
Worker	0.0000	0.0000	0.0000	0.0000	0.0000	0.0000	0.0000	0.0000	0.0000	0.0000	0.0000	0.0000	0.0000	0.0000	0.0000	0.0000
Total	**0.0000**	**0.0000**	**0.0000**	**0.0000**	**0.0000**	**0.0000**	**0.0000**	**0.0000**	**0.0000**	**0.0000**	**0.0000**	**0.0000**	**0.0000**	**0.0000**	**0.0000**	**0.0000**

3.3 Site Preparation - 2020

Unmitigated Construction On-Site

	ROG	NOx	CO	SO2	Fugitive PM10	Exhaust PM10	PM10 Total	Fugitive PM2.5	Exhaust PM2.5	PM2.5 Total	Bio- CO2	NBio- CO2	Total CO2	CH4	N2O	CO2e
Category	tons/yr										MT/yr					
Fugitive Dust					0.0000	0.0000	0.0000	0.0000	0.0000	0.0000	0.0000	0.0000	0.0000	0.0000	0.0000	0.0000
Off-Road	0.0000	0.0000	0.0000	0.0000		0.0000	0.0000		0.0000	0.0000	0.0000	0.0000	0.0000	0.0000	0.0000	0.0000
Total	**0.0000**	**0.0000**	**0.0000**	**0.0000**	**0.0000**	**0.0000**	**0.0000**	**0.0000**	**0.0000**	**0.0000**	**0.0000**	**0.0000**	**0.0000**	**0.0000**	**0.0000**	**0.0000**

Unmitigated Construction Off-Site

	ROG	NOx	CO	SO2	Fugitive PM10	Exhaust PM10	PM10 Total	Fugitive PM2.5	Exhaust PM2.5	PM2.5 Total	Bio- CO2	NBio- CO2	Total CO2	CH4	N2O	CO2e
Category	tons/yr										MT/yr					
Hauling	0.0000	0.0000	0.0000	0.0000	0.0000	0.0000	0.0000	0.0000	0.0000	0.0000	0.0000	0.0000	0.0000	0.0000	0.0000	0.0000
Vendor	0.0000	0.0000	0.0000	0.0000	0.0000	0.0000	0.0000	0.0000	0.0000	0.0000	0.0000	0.0000	0.0000	0.0000	0.0000	0.0000
Worker	0.0000	0.0000	0.0000	0.0000	0.0000	0.0000	0.0000	0.0000	0.0000	0.0000	0.0000	0.0000	0.0000	0.0000	0.0000	0.0000
Total	**0.0000**	**0.0000**	**0.0000**	**0.0000**	**0.0000**	**0.0000**	**0.0000**	**0.0000**	**0.0000**	**0.0000**	**0.0000**	**0.0000**	**0.0000**	**0.0000**	**0.0000**	**0.0000**

3.3 Site Preparation - 2020

Mitigated Construction On-Site

	ROG	NOx	CO	SO2	Fugitive PM10	Exhaust PM10	PM10 Total	Fugitive PM2.5	Exhaust PM2.5	PM2.5 Total	Bio- CO2	NBio- CO2	Total CO2	CH4	N2O	CO2e
Category	tons/yr										MT/yr					
Fugitive Dust					0.0000	0.0000	0.0000	0.0000	0.0000	0.0000	0.0000	0.0000	0.0000	0.0000	0.0000	0.0000
Off-Road	0.0000	0.0000	0.0000	0.0000		0.0000	0.0000		0.0000	0.0000	0.0000	0.0000	0.0000	0.0000	0.0000	0.0000
Total	**0.0000**	**0.0000**	**0.0000**	**0.0000**	**0.0000**	**0.0000**	**0.0000**	**0.0000**	**0.0000**	**0.0000**	**0.0000**	**0.0000**	**0.0000**	**0.0000**	**0.0000**	**0.0000**

Mitigated Construction Off-Site

	ROG	NOx	CO	SO2	Fugitive PM10	Exhaust PM10	PM10 Total	Fugitive PM2.5	Exhaust PM2.5	PM2.5 Total	Bio- CO2	NBio- CO2	Total CO2	CH4	N2O	CO2e
Category	tons/yr										MT/yr					
Hauling	0.0000	0.0000	0.0000	0.0000	0.0000	0.0000	0.0000	0.0000	0.0000	0.0000	0.0000	0.0000	0.0000	0.0000	0.0000	0.0000
Vendor	0.0000	0.0000	0.0000	0.0000	0.0000	0.0000	0.0000	0.0000	0.0000	0.0000	0.0000	0.0000	0.0000	0.0000	0.0000	0.0000
Worker	0.0000	0.0000	0.0000	0.0000	0.0000	0.0000	0.0000	0.0000	0.0000	0.0000	0.0000	0.0000	0.0000	0.0000	0.0000	0.0000
Total	**0.0000**	**0.0000**	**0.0000**	**0.0000**	**0.0000**	**0.0000**	**0.0000**	**0.0000**	**0.0000**	**0.0000**	**0.0000**	**0.0000**	**0.0000**	**0.0000**	**0.0000**	**0.0000**

3.4 Grading - 2020

Unmitigated Construction On-Site

	ROG	NOx	CO	SO2	Fugitive PM10	Exhaust PM10	PM10 Total	Fugitive PM2.5	Exhaust PM2.5	PM2.5 Total	Bio- CO2	NBio- CO2	Total CO2	CH4	N2O	CO2e
Category	tons/yr										MT/yr					
Fugitive Dust					0.0000	0.0000	0.0000	0.0000	0.0000	0.0000	0.0000	0.0000	0.0000	0.0000	0.0000	0.0000
Off-Road	0.0000	0.0000	0.0000	0.0000		0.0000	0.0000		0.0000	0.0000	0.0000	0.0000	0.0000	0.0000	0.0000	0.0000
Total	**0.0000**	**0.0000**	**0.0000**	**0.0000**	**0.0000**	**0.0000**	**0.0000**	**0.0000**	**0.0000**	**0.0000**	**0.0000**	**0.0000**	**0.0000**	**0.0000**	**0.0000**	**0.0000**

Unmitigated Construction Off-Site

	ROG	NOx	CO	SO2	Fugitive PM10	Exhaust PM10	PM10 Total	Fugitive PM2.5	Exhaust PM2.5	PM2.5 Total	Bio- CO2	NBio- CO2	Total CO2	CH4	N2O	CO2e
Category	tons/yr										MT/yr					
Hauling	0.0000	0.0000	0.0000	0.0000	0.0000	0.0000	0.0000	0.0000	0.0000	0.0000	0.0000	0.0000	0.0000	0.0000	0.0000	0.0000
Vendor	0.0000	0.0000	0.0000	0.0000	0.0000	0.0000	0.0000	0.0000	0.0000	0.0000	0.0000	0.0000	0.0000	0.0000	0.0000	0.0000
Worker	0.0000	0.0000	0.0000	0.0000	0.0000	0.0000	0.0000	0.0000	0.0000	0.0000	0.0000	0.0000	0.0000	0.0000	0.0000	0.0000
Total	**0.0000**	**0.0000**	**0.0000**	**0.0000**	**0.0000**	**0.0000**	**0.0000**	**0.0000**	**0.0000**	**0.0000**	**0.0000**	**0.0000**	**0.0000**	**0.0000**	**0.0000**	**0.0000**

3.4 Grading - 2020

Mitigated Construction On-Site

	ROG	NOx	CO	SO2	Fugitive PM10	Exhaust PM10	PM10 Total	Fugitive PM2.5	Exhaust PM2.5	PM2.5 Total	Bio- CO2	NBio- CO2	Total CO2	CH4	N2O	CO2e
Category	tons/yr										MT/yr					
Fugitive Dust					0.0000	0.0000	0.0000	0.0000	0.0000	0.0000	0.0000	0.0000	0.0000	0.0000	0.0000	0.0000
Off-Road	0.0000	0.0000	0.0000	0.0000		0.0000	0.0000		0.0000	0.0000	0.0000	0.0000	0.0000	0.0000	0.0000	0.0000
Total	**0.0000**	**0.0000**	**0.0000**	**0.0000**	**0.0000**	**0.0000**	**0.0000**	**0.0000**	**0.0000**	**0.0000**	**0.0000**	**0.0000**	**0.0000**	**0.0000**	**0.0000**	**0.0000**

Mitigated Construction Off-Site

	ROG	NOx	CO	SO2	Fugitive PM10	Exhaust PM10	PM10 Total	Fugitive PM2.5	Exhaust PM2.5	PM2.5 Total	Bio- CO2	NBio- CO2	Total CO2	CH4	N2O	CO2e
Category	tons/yr										MT/yr					
Hauling	0.0000	0.0000	0.0000	0.0000	0.0000	0.0000	0.0000	0.0000	0.0000	0.0000	0.0000	0.0000	0.0000	0.0000	0.0000	0.0000
Vendor	0.0000	0.0000	0.0000	0.0000	0.0000	0.0000	0.0000	0.0000	0.0000	0.0000	0.0000	0.0000	0.0000	0.0000	0.0000	0.0000
Worker	0.0000	0.0000	0.0000	0.0000	0.0000	0.0000	0.0000	0.0000	0.0000	0.0000	0.0000	0.0000	0.0000	0.0000	0.0000	0.0000
Total	**0.0000**	**0.0000**	**0.0000**	**0.0000**	**0.0000**	**0.0000**	**0.0000**	**0.0000**	**0.0000**	**0.0000**	**0.0000**	**0.0000**	**0.0000**	**0.0000**	**0.0000**	**0.0000**

3.5 Building Construction - 2020

Unmitigated Construction On-Site

	ROG	NOx	CO	SO2	Fugitive PM10	Exhaust PM10	PM10 Total	Fugitive PM2.5	Exhaust PM2.5	PM2.5 Total	Bio- CO2	NBio- CO2	Total CO2	CH4	N2O	CO2e
Category	tons/yr										MT/yr					
Off-Road	0.0000	0.0000	0.0000	0.0000		0.0000	0.0000		0.0000	0.0000	0.0000	0.0000	0.0000	0.0000	0.0000	0.0000
Total	**0.0000**	**0.0000**	**0.0000**	**0.0000**		**0.0000**	**0.0000**		**0.0000**	**0.0000**	**0.0000**	**0.0000**	**0.0000**	**0.0000**	**0.0000**	**0.0000**

Unmitigated Construction Off-Site

	ROG	NOx	CO	SO2	Fugitive PM10	Exhaust PM10	PM10 Total	Fugitive PM2.5	Exhaust PM2.5	PM2.5 Total	Bio- CO2	NBio- CO2	Total CO2	CH4	N2O	CO2e
Category	tons/yr										MT/yr					
Hauling	0.0000	0.0000	0.0000	0.0000	0.0000	0.0000	0.0000	0.0000	0.0000	0.0000	0.0000	0.0000	0.0000	0.0000	0.0000	0.0000
Vendor	0.0000	0.0000	0.0000	0.0000	0.0000	0.0000	0.0000	0.0000	0.0000	0.0000	0.0000	0.0000	0.0000	0.0000	0.0000	0.0000
Worker	0.0000	0.0000	0.0000	0.0000	0.0000	0.0000	0.0000	0.0000	0.0000	0.0000	0.0000	0.0000	0.0000	0.0000	0.0000	0.0000
Total	**0.0000**	**0.0000**	**0.0000**	**0.0000**	**0.0000**	**0.0000**	**0.0000**	**0.0000**	**0.0000**	**0.0000**	**0.0000**	**0.0000**	**0.0000**	**0.0000**	**0.0000**	**0.0000**

3.5 Building Construction - 2020

Mitigated Construction On-Site

	ROG	NOx	CO	SO2	Fugitive PM10	Exhaust PM10	PM10 Total	Fugitive PM2.5	Exhaust PM2.5	PM2.5 Total	Bio- CO2	NBio- CO2	Total CO2	CH4	N2O	CO2e
Category	tons/yr										MT/yr					
Off-Road	0.0000	0.0000	0.0000	0.0000		0.0000	0.0000		0.0000	0.0000	0.0000	0.0000	0.0000	0.0000	0.0000	0.0000
Total	**0.0000**	**0.0000**	**0.0000**	**0.0000**		**0.0000**	**0.0000**		**0.0000**	**0.0000**	**0.0000**	**0.0000**	**0.0000**	**0.0000**	**0.0000**	**0.0000**

Mitigated Construction Off-Site

	ROG	NOx	CO	SO2	Fugitive PM10	Exhaust PM10	PM10 Total	Fugitive PM2.5	Exhaust PM2.5	PM2.5 Total	Bio- CO2	NBio- CO2	Total CO2	CH4	N2O	CO2e
Category	tons/yr										MT/yr					
Hauling	0.0000	0.0000	0.0000	0.0000	0.0000	0.0000	0.0000	0.0000	0.0000	0.0000	0.0000	0.0000	0.0000	0.0000	0.0000	0.0000
Vendor	0.0000	0.0000	0.0000	0.0000	0.0000	0.0000	0.0000	0.0000	0.0000	0.0000	0.0000	0.0000	0.0000	0.0000	0.0000	0.0000
Worker	0.0000	0.0000	0.0000	0.0000	0.0000	0.0000	0.0000	0.0000	0.0000	0.0000	0.0000	0.0000	0.0000	0.0000	0.0000	0.0000
Total	**0.0000**	**0.0000**	**0.0000**	**0.0000**	**0.0000**	**0.0000**	**0.0000**	**0.0000**	**0.0000**	**0.0000**	**0.0000**	**0.0000**	**0.0000**	**0.0000**	**0.0000**	**0.0000**

3.5 Building Construction - 2021

Unmitigated Construction On-Site

	ROG	NOx	CO	SO2	Fugitive PM10	Exhaust PM10	PM10 Total	Fugitive PM2.5	Exhaust PM2.5	PM2.5 Total	Bio- CO2	NBio- CO2	Total CO2	CH4	N2O	CO2e
Category	tons/yr										MT/yr					
Off-Road	0.0000	0.0000	0.0000	0.0000		0.0000	0.0000		0.0000	0.0000	0.0000	0.0000	0.0000	0.0000	0.0000	0.0000
Total	**0.0000**	**0.0000**	**0.0000**	**0.0000**		**0.0000**	**0.0000**		**0.0000**	**0.0000**	**0.0000**	**0.0000**	**0.0000**	**0.0000**	**0.0000**	**0.0000**

Unmitigated Construction Off-Site

	ROG	NOx	CO	SO2	Fugitive PM10	Exhaust PM10	PM10 Total	Fugitive PM2.5	Exhaust PM2.5	PM2.5 Total	Bio- CO2	NBio- CO2	Total CO2	CH4	N2O	CO2e
Category	tons/yr										MT/yr					
Hauling	0.0000	0.0000	0.0000	0.0000	0.0000	0.0000	0.0000	0.0000	0.0000	0.0000	0.0000	0.0000	0.0000	0.0000	0.0000	0.0000
Vendor	0.0000	0.0000	0.0000	0.0000	0.0000	0.0000	0.0000	0.0000	0.0000	0.0000	0.0000	0.0000	0.0000	0.0000	0.0000	0.0000
Worker	0.0000	0.0000	0.0000	0.0000	0.0000	0.0000	0.0000	0.0000	0.0000	0.0000	0.0000	0.0000	0.0000	0.0000	0.0000	0.0000
Total	**0.0000**	**0.0000**	**0.0000**	**0.0000**	**0.0000**	**0.0000**	**0.0000**	**0.0000**	**0.0000**	**0.0000**	**0.0000**	**0.0000**	**0.0000**	**0.0000**	**0.0000**	**0.0000**

3.5 Building Construction - 2021

Mitigated Construction On-Site

	ROG	NOx	CO	SO2	Fugitive PM10	Exhaust PM10	PM10 Total	Fugitive PM2.5	Exhaust PM2.5	PM2.5 Total	Bio- CO2	NBio- CO2	Total CO2	CH4	N2O	CO2e
Category	tons/yr										MT/yr					
Off-Road	0.0000	0.0000	0.0000	0.0000		0.0000	0.0000		0.0000	0.0000	0.0000	0.0000	0.0000	0.0000	0.0000	0.0000
Total	**0.0000**	**0.0000**	**0.0000**	**0.0000**		**0.0000**	**0.0000**		**0.0000**	**0.0000**	**0.0000**	**0.0000**	**0.0000**	**0.0000**	**0.0000**	**0.0000**

Mitigated Construction Off-Site

	ROG	NOx	CO	SO2	Fugitive PM10	Exhaust PM10	PM10 Total	Fugitive PM2.5	Exhaust PM2.5	PM2.5 Total	Bio- CO2	NBio- CO2	Total CO2	CH4	N2O	CO2e
Category	tons/yr										MT/yr					
Hauling	0.0000	0.0000	0.0000	0.0000	0.0000	0.0000	0.0000	0.0000	0.0000	0.0000	0.0000	0.0000	0.0000	0.0000	0.0000	0.0000
Vendor	0.0000	0.0000	0.0000	0.0000	0.0000	0.0000	0.0000	0.0000	0.0000	0.0000	0.0000	0.0000	0.0000	0.0000	0.0000	0.0000
Worker	0.0000	0.0000	0.0000	0.0000	0.0000	0.0000	0.0000	0.0000	0.0000	0.0000	0.0000	0.0000	0.0000	0.0000	0.0000	0.0000
Total	**0.0000**	**0.0000**	**0.0000**	**0.0000**	**0.0000**	**0.0000**	**0.0000**	**0.0000**	**0.0000**	**0.0000**	**0.0000**	**0.0000**	**0.0000**	**0.0000**	**0.0000**	**0.0000**

3.6 Architectural Coating - 2021

Unmitigated Construction On-Site

	ROG	NOx	CO	SO2	Fugitive PM10	Exhaust PM10	PM10 Total	Fugitive PM2.5	Exhaust PM2.5	PM2.5 Total	Bio- CO2	NBio- CO2	Total CO2	CH4	N2O	CO2e
Category	tons/yr										MT/yr					
Archit. Coating	0.0000					0.0000	0.0000		0.0000	0.0000	0.0000	0.0000	0.0000	0.0000	0.0000	0.0000
Off-Road	0.0000	0.0000	0.0000	0.0000		0.0000	0.0000		0.0000	0.0000	0.0000	0.0000	0.0000	0.0000	0.0000	0.0000
Total	**0.0000**	**0.0000**	**0.0000**	**0.0000**		**0.0000**	**0.0000**		**0.0000**	**0.0000**	**0.0000**	**0.0000**	**0.0000**	**0.0000**	**0.0000**	**0.0000**

Unmitigated Construction Off-Site

	ROG	NOx	CO	SO2	Fugitive PM10	Exhaust PM10	PM10 Total	Fugitive PM2.5	Exhaust PM2.5	PM2.5 Total	Bio- CO2	NBio- CO2	Total CO2	CH4	N2O	CO2e
Category	tons/yr										MT/yr					
Hauling	0.0000	0.0000	0.0000	0.0000	0.0000	0.0000	0.0000	0.0000	0.0000	0.0000	0.0000	0.0000	0.0000	0.0000	0.0000	0.0000
Vendor	0.0000	0.0000	0.0000	0.0000	0.0000	0.0000	0.0000	0.0000	0.0000	0.0000	0.0000	0.0000	0.0000	0.0000	0.0000	0.0000
Worker	0.0000	0.0000	0.0000	0.0000	0.0000	0.0000	0.0000	0.0000	0.0000	0.0000	0.0000	0.0000	0.0000	0.0000	0.0000	0.0000
Total	**0.0000**	**0.0000**	**0.0000**	**0.0000**	**0.0000**	**0.0000**	**0.0000**	**0.0000**	**0.0000**	**0.0000**	**0.0000**	**0.0000**	**0.0000**	**0.0000**	**0.0000**	**0.0000**

3.6 Architectural Coating - 2021

Mitigated Construction On-Site

	ROG	NOx	CO	SO2	Fugitive PM10	Exhaust PM10	PM10 Total	Fugitive PM2.5	Exhaust PM2.5	PM2.5 Total	Bio- CO2	NBio- CO2	Total CO2	CH4	N2O	CO2e
Category	tons/yr										MT/yr					
Archit. Coating	0.0000					0.0000	0.0000		0.0000	0.0000	0.0000	0.0000	0.0000	0.0000	0.0000	0.0000
Off-Road	0.0000	0.0000	0.0000	0.0000		0.0000	0.0000		0.0000	0.0000	0.0000	0.0000	0.0000	0.0000	0.0000	0.0000
Total	**0.0000**	**0.0000**	**0.0000**	**0.0000**		**0.0000**	**0.0000**		**0.0000**	**0.0000**	**0.0000**	**0.0000**	**0.0000**	**0.0000**	**0.0000**	**0.0000**

Mitigated Construction Off-Site

	ROG	NOx	CO	SO2	Fugitive PM10	Exhaust PM10	PM10 Total	Fugitive PM2.5	Exhaust PM2.5	PM2.5 Total	Bio- CO2	NBio- CO2	Total CO2	CH4	N2O	CO2e
Category	tons/yr										MT/yr					
Hauling	0.0000	0.0000	0.0000	0.0000	0.0000	0.0000	0.0000	0.0000	0.0000	0.0000	0.0000	0.0000	0.0000	0.0000	0.0000	0.0000
Vendor	0.0000	0.0000	0.0000	0.0000	0.0000	0.0000	0.0000	0.0000	0.0000	0.0000	0.0000	0.0000	0.0000	0.0000	0.0000	0.0000
Worker	0.0000	0.0000	0.0000	0.0000	0.0000	0.0000	0.0000	0.0000	0.0000	0.0000	0.0000	0.0000	0.0000	0.0000	0.0000	0.0000
Total	**0.0000**	**0.0000**	**0.0000**	**0.0000**	**0.0000**	**0.0000**	**0.0000**	**0.0000**	**0.0000**	**0.0000**	**0.0000**	**0.0000**	**0.0000**	**0.0000**	**0.0000**	**0.0000**

4.0 Operational Detail - Mobile

4.1 Mitigation Measures Mobile

	ROG	NOx	CO	SO2	Fugitive PM10	Exhaust PM10	PM10 Total	Fugitive PM2.5	Exhaust PM2.5	PM2.5 Total	Bio- CO2	NBio- CO2	Total CO2	CH4	N2O	CO2e
Category	tons/yr										MT/yr					
Mitigated	0.1269	0.5933	1.6716	6.6600e-003	0.6103	5.3500e-003	0.6157	0.1638	5.0000e-003	0.1688	0.0000	611.2362	611.2362	0.0198	0.0000	611.7307
Unmitigated	0.1269	0.5933	1.6716	6.6600e-003	0.6103	5.3500e-003	0.6157	0.1638	5.0000e-003	0.1688	0.0000	611.2362	611.2362	0.0198	0.0000	611.7307

4.2 Trip Summary Information

	Average Daily Trip Rate			Unmitigated	Mitigated
Land Use	Weekday	Saturday	Sunday	Annual VMT	Annual VMT
Parking Lot	663.96	0.00	0.00	1,639,980	1,639,980
Total	663.96	0.00	0.00	1,639,980	1,639,980

4.3 Trip Type Information

	Miles			Trip %			Trip Purpose %		
Land Use	H-W or C-W	H-S or C-C	H-O or C-NW	H-W or C-W	H-S or C-C	H-O or C-NW	Primary	Diverted	Pass-by
Parking Lot	9.50	7.30	7.30	100.00	0.00	0.00	100	0	0

4.4 Fleet Mix

Land Use	LDA	LDT1	LDT2	MDV	LHD1	LHD2	MHD	HHD	OBUS	UBUS	MCY	SBUS	MH
Parking Lot	0.578638	0.038775	0.193686	0.110919	0.015677	0.005341	0.018293	0.026358	0.002641	0.002200	0.005832	0.000891	0.000749

5.0 Energy Detail

Historical Energy Use: N

5.1 Mitigation Measures Energy

	ROG	NOx	CO	SO2	Fugitive PM10	Exhaust PM10	PM10 Total	Fugitive PM2.5	Exhaust PM2.5	PM2.5 Total	Bio- CO2	NBio- CO2	Total CO2	CH4	N2O	CO2e
Category	tons/yr										MT/yr					
Electricity Mitigated						0.0000	0.0000		0.0000	0.0000	0.0000	0.0000	0.0000	0.0000	0.0000	0.0000
Electricity Unmitigated						0.0000	0.0000		0.0000	0.0000	0.0000	0.0000	0.0000	0.0000	0.0000	0.0000
NaturalGas Mitigated	0.0000	0.0000	0.0000	0.0000		0.0000	0.0000		0.0000	0.0000	0.0000	0.0000	0.0000	0.0000	0.0000	0.0000
NaturalGas Unmitigated	0.0000	0.0000	0.0000	0.0000		0.0000	0.0000		0.0000	0.0000	0.0000	0.0000	0.0000	0.0000	0.0000	0.0000

5.2 Energy by Land Use - NaturalGas

Unmitigated

	NaturalGas Use	ROG	NOx	CO	SO2	Fugitive PM10	Exhaust PM10	PM10 Total	Fugitive PM2.5	Exhaust PM2.5	PM2.5 Total	Bio- CO2	NBio- CO2	Total CO2	CH4	N2O	CO2e
Land Use	kBTU/yr	tons/yr										MT/yr					
Parking Lot	0	0.0000	0.0000	0.0000	0.0000		0.0000	0.0000		0.0000	0.0000	0.0000	0.0000	0.0000	0.0000	0.0000	0.0000
Total		**0.0000**	**0.0000**	**0.0000**	**0.0000**		**0.0000**	**0.0000**		**0.0000**	**0.0000**	**0.0000**	**0.0000**	**0.0000**	**0.0000**	**0.0000**	**0.0000**

Mitigated

	NaturalGas Use	ROG	NOx	CO	SO2	Fugitive PM10	Exhaust PM10	PM10 Total	Fugitive PM2.5	Exhaust PM2.5	PM2.5 Total	Bio- CO2	NBio- CO2	Total CO2	CH4	N2O	CO2e
Land Use	kBTU/yr	tons/yr										MT/yr					
Parking Lot	0	0.0000	0.0000	0.0000	0.0000		0.0000	0.0000		0.0000	0.0000	0.0000	0.0000	0.0000	0.0000	0.0000	0.0000
Total		**0.0000**	**0.0000**	**0.0000**	**0.0000**		**0.0000**	**0.0000**		**0.0000**	**0.0000**	**0.0000**	**0.0000**	**0.0000**	**0.0000**	**0.0000**	**0.0000**

5.3 Energy by Land Use - Electricity

Unmitigated

	Electricity Use	Total CO2	CH4	N2O	CO2e
Land Use	kWh/yr	MT/yr			
Parking Lot	0	0.0000	0.0000	0.0000	0.0000
Total		**0.0000**	**0.0000**	**0.0000**	**0.0000**

Mitigated

	Electricity Use	Total CO2	CH4	N2O	CO2e
Land Use	kWh/yr	MT/yr			
Parking Lot	0	0.0000	0.0000	0.0000	0.0000
Total		**0.0000**	**0.0000**	**0.0000**	**0.0000**

6.0 Area Detail

6.1 Mitigation Measures Area

	ROG	NOx	CO	SO2	Fugitive PM10	Exhaust PM10	PM10 Total	Fugitive PM2.5	Exhaust PM2.5	PM2.5 Total	Bio- CO2	NBio- CO2	Total CO2	CH4	N2O	CO2e
Category	tons/yr										MT/yr					
Mitigated	0.0250	3.0000e-005	3.5100e-003	0.0000		1.0000e-005	1.0000e-005		1.0000e-005	1.0000e-005	0.0000	6.8200e-003	6.8200e-003	2.0000e-005	0.0000	7.2700e-003
Unmitigated	0.0250	3.0000e-005	3.5100e-003	0.0000		1.0000e-005	1.0000e-005		1.0000e-005	1.0000e-005	0.0000	6.8200e-003	6.8200e-003	2.0000e-005	0.0000	7.2700e-003

6.2 Area by SubCategory

Unmitigated

	ROG	NOx	CO	SO2	Fugitive PM10	Exhaust PM10	PM10 Total	Fugitive PM2.5	Exhaust PM2.5	PM2.5 Total	Bio- CO2	NBio- CO2	Total CO2	CH4	N2O	CO2e
SubCategory	tons/yr										MT/yr					
Architectural Coating	0.0000					0.0000	0.0000		0.0000	0.0000	0.0000	0.0000	0.0000	0.0000	0.0000	0.0000
Consumer Products	0.0247					0.0000	0.0000		0.0000	0.0000	0.0000	0.0000	0.0000	0.0000	0.0000	0.0000
Landscaping	3.2000e-004	3.0000e-005	3.5100e-003	0.0000		1.0000e-005	1.0000e-005		1.0000e-005	1.0000e-005	0.0000	6.8200e-003	6.8200e-003	2.0000e-005	0.0000	7.2700e-003
Total	**0.0250**	**3.0000e-005**	**3.5100e-003**	**0.0000**		**1.0000e-005**	**1.0000e-005**		**1.0000e-005**	**1.0000e-005**	**0.0000**	**6.8200e-003**	**6.8200e-003**	**2.0000e-005**	**0.0000**	**7.2700e-003**

6.2 Area by SubCategory

Mitigated

	ROG	NOx	CO	SO2	Fugitive PM10	Exhaust PM10	PM10 Total	Fugitive PM2.5	Exhaust PM2.5	PM2.5 Total	Bio- CO2	NBio- CO2	Total CO2	CH4	N2O	CO2e
SubCategory	tons/yr										MT/yr					
Architectural Coating	0.0000					0.0000	0.0000		0.0000	0.0000	0.0000	0.0000	0.0000	0.0000	0.0000	0.0000
Consumer Products	0.0247					0.0000	0.0000		0.0000	0.0000	0.0000	0.0000	0.0000	0.0000	0.0000	0.0000
Landscaping	3.2000e-004	3.0000e-005	3.5100e-003	0.0000		1.0000e-005	1.0000e-005		1.0000e-005	1.0000e-005	0.0000	6.8200e-003	6.8200e-003	2.0000e-005	0.0000	7.2700e-003
Total	**0.0250**	**3.0000e-005**	**3.5100e-003**	**0.0000**		**1.0000e-005**	**1.0000e-005**		**1.0000e-005**	**1.0000e-005**	**0.0000**	**6.8200e-003**	**6.8200e-003**	**2.0000e-005**	**0.0000**	**7.2700e-003**

7.0 Water Detail

7.1 Mitigation Measures Water

	Total CO2	CH4	N2O	CO2e
Category	MT/yr			
Mitigated	0.0000	0.0000	0.0000	0.0000
Unmitigated	0.0000	0.0000	0.0000	0.0000

7.2 Water by Land Use

Unmitigated

	Indoor/Outdoor Use	Total CO2	CH4	N2O	CO2e
Land Use	Mgal	MT/yr			
Parking Lot	0 / 0	0.0000	0.0000	0.0000	0.0000
Total		**0.0000**	**0.0000**	**0.0000**	**0.0000**

7.2 Water by Land Use

Mitigated

	Indoor/Outdoor Use	Total CO2	CH4	N2O	CO2e
Land Use	Mgal	MT/yr			
Parking Lot	0 / 0	0.0000	0.0000	0.0000	0.0000
Total		**0.0000**	**0.0000**	**0.0000**	**0.0000**

8.0 Waste Detail

8.1 Mitigation Measures Waste

Category/Year

	Total CO2	CH4	N2O	CO2e
	MT/yr			
Mitigated	0.0000	0.0000	0.0000	0.0000
Unmitigated	0.0000	0.0000	0.0000	0.0000

8.2 Waste by Land Use

Unmitigated

	Waste Disposed	Total CO2	CH4	N2O	CO2e
Land Use	tons	MT/yr			
Parking Lot	0	0.0000	0.0000	0.0000	0.0000
Total		**0.0000**	**0.0000**	**0.0000**	**0.0000**

Mitigated

	Waste Disposed	Total CO2	CH4	N2O	CO2e
Land Use	tons	MT/yr			
Parking Lot	0	0.0000	0.0000	0.0000	0.0000
Total		**0.0000**	**0.0000**	**0.0000**	**0.0000**

9.0 Operational Offroad

Equipment Type	Number	Hours/Day	Days/Year	Horse Power	Load Factor	Fuel Type

10.0 Stationary Equipment

Fire Pumps and Emergency Generators

Equipment Type	Number	Hours/Day	Hours/Year	Horse Power	Load Factor	Fuel Type

Boilers

Equipment Type	Number	Heat Input/Day	Heat Input/Year	Boiler Rating	Fuel Type

User Defined Equipment

Equipment Type	Number

11.0 Vegetation

Clawiter Industrial Project - Buildings 1 to 3 - 2030

Bay Area AQMD Air District, Annual

1.0 Project Characteristics

1.1 Land Usage

Land Uses	Size	Metric	Lot Acreage	Floor Surface Area	Population
Industrial Park	337.09	1000sqft	16.37	337,094.00	0
Parking Lot	310.00	Space	2.79	124,000.00	0

1.2 Other Project Characteristics

Urbanization	Urban	**Wind Speed (m/s)**	2.2	**Precipitation Freq (Days)**	64
Climate Zone	5			**Operational Year**	2030
Utility Company	Pacific Gas & Electric Company				
CO2 Intensity (lb/MWhr)	298.65	**CH4 Intensity (lb/MWhr)**	0.014	**N2O Intensity (lb/MWhr)**	0.003

1.3 User Entered Comments & Non-Default Data

Project Characteristics - 60% RPS by 2030

Land Use - SF of buildings 1-3, lot acreage is project site (26) minus default estimate for data center (6.39) and parking lots (3.24)

Construction Phase - Applicant specified 15-month schedule. Extended AC to overlap BC for mroe realistic conditions.

Off-road Equipment - Default

Off-road Equipment - Applicant-provided equipment list

Off-road Equipment - Applicant-provided equipment list

Off-road Equipment - Applicant-provided equipment list. Paver used as proxy for compactor

Off-road Equipment - Applicant-provided equipment list

Off-road Equipment - Applicant-provided equipment list. Paver used as proxy for compactor

Trips and VMT -

Demolition - Based on Google Earth estimate - 185255+27142+2810+35260

Grading - Export quantity provided by applicant

Architectural Coating - BAAQMD Regulation 8, Rule 3

Vehicle Trips - Weekday rate provided by Kittleson, includes trips for Buildings 1-4

Area Coating - BAAQMD Regulation 8, Rule 3

Energy Use -

Water And Wastewater - All wastewater treated at Hayward WWTP with aerobic processes. Outdoor water use calculated assuming 2.43 AFY per acre of landscaped area.

Solid Waste - 77% diversion rate for Hayward

Construction Off-road Equipment Mitigation - Hayward Municipal Code 10-8.32

Mobile Land Use Mitigation -

Water Mitigation - Applicant-specified sustainability features

Fleet Mix -

Energy Mitigation - Title 24 energy usage reduced by 30% for 2019 Standards

Table Name	Column Name	Default Value	New Value
tblArchitecturalCoating	EF_Parking	150.00	100.00
tblAreaCoating	Area_EF_Parking	150	100
tblConstructionPhase	NumDays	20.00	130.00
tblConstructionPhase	NumDays	300.00	265.00
tblGrading	MaterialExported	0.00	29,073.00
tblLandUse	LandUseSquareFeet	337,090.00	337,094.00
tblLandUse	LotAcreage	7.74	16.37
tblOffRoadEquipment	OffRoadEquipmentUnitAmount	1.00	2.00
tblOffRoadEquipment	OffRoadEquipmentUnitAmount	2.00	1.00
tblOffRoadEquipment	OffRoadEquipmentUnitAmount	2.00	1.00
tblOffRoadEquipment	OffRoadEquipmentUnitAmount	2.00	1.00
tblOffRoadEquipment	OffRoadEquipmentUnitAmount	2.00	1.00
tblProjectCharacteristics	CH4IntensityFactor	0.029	0.014
tblProjectCharacteristics	CO2IntensityFactor	641.35	298.65
tblProjectCharacteristics	N2OIntensityFactor	0.006	0.003
tblSolidWaste	SolidWasteGenerationRate	417.99	192.28
tblVehicleTrips	WD_TR	6.83	6.15
tblWater	AerobicPercent	87.46	100.00
tblWater	AerobicPercent	87.46	100.00
tblWater	AnaerobicandFacultativeLagoonsPercent	2.21	0.00
tblWater	AnaerobicandFacultativeLagoonsPercent	2.21	0.00
tblWater	OutdoorWaterUseRate	0.00	3,812,456.00
tblWater	SepticTankPercent	10.33	0.00
tblWater	SepticTankPercent	10.33	0.00

2.0 Emissions Summary

2.1 Overall Construction

Unmitigated Construction

	ROG	NOx	CO	SO2	Fugitive PM10	Exhaust PM10	PM10 Total	Fugitive PM2.5	Exhaust PM2.5	PM2.5 Total	Bio- CO2	NBio- CO2	Total CO2	CH4	N2O	CO2e
Year	tons/yr										MT/yr					
2021	1.2119	3.6171	2.5326	8.5000e-003	0.3930	0.1144	0.5073	0.0901	0.1056	0.1957	0.0000	785.2497	785.2497	0.1058	0.0000	787.8949
2022	0.9638	0.8313	0.7475	2.1200e-003	0.0755	0.0304	0.1059	0.0205	0.0282	0.0486	0.0000	192.5240	192.5240	0.0283	0.0000	193.2302
Maximum	**1.2119**	**3.6171**	**2.5326**	**8.5000e-003**	**0.3930**	**0.1144**	**0.5073**	**0.0901**	**0.1056**	**0.1957**	**0.0000**	**785.2497**	**785.2497**	**0.1058**	**0.0000**	**787.8949**

Mitigated Construction

	ROG	NOx	CO	SO2	Fugitive PM10	Exhaust PM10	PM10 Total	Fugitive PM2.5	Exhaust PM2.5	PM2.5 Total	Bio- CO2	NBio- CO2	Total CO2	CH4	N2O	CO2e
Year	tons/yr										MT/yr					
2021	1.2119	3.6171	2.5326	8.5000e-003	0.3184	0.1144	0.4328	0.0790	0.1056	0.1847	0.0000	785.2494	785.2494	0.1058	0.0000	787.8946
2022	0.9638	0.8313	0.7475	2.1200e-003	0.0755	0.0304	0.1059	0.0205	0.0282	0.0486	0.0000	192.5239	192.5239	0.0283	0.0000	193.2301
Maximum	**1.2119**	**3.6171**	**2.5326**	**8.5000e-003**	**0.3184**	**0.1144**	**0.4328**	**0.0790**	**0.1056**	**0.1847**	**0.0000**	**785.2494**	**785.2494**	**0.1058**	**0.0000**	**787.8946**

	ROG	**NOx**	**CO**	**SO2**	**Fugitive PM10**	**Exhaust PM10**	**PM10 Total**	**Fugitive PM2.5**	**Exhaust PM2.5**	**PM2.5 Total**	**Bio- CO2**	**NBio-CO2**	**Total CO2**	**CH4**	**N20**	**CO2e**
Percent Reduction	**0.00**	**0.00**	**0.00**	**0.00**	**15.91**	**0.01**	**12.15**	**9.98**	**0.00**	**4.51**	**0.00**	**0.00**	**0.00**	**0.00**	**0.00**	**0.00**

Quarter	Start Date	End Date	Maximum Unmitigated ROG + NOX (tons/quarter)	Maximum Mitigated ROG + NOX (tons/quarter)
1	**1-1-2021**	**3-31-2021**	1.1333	1.1333
2	**4-1-2021**	**6-30-2021**	0.8996	0.8996
3	**7-1-2021**	**9-30-2021**	0.9095	0.9095
4	**10-1-2021**	**12-31-2021**	1.8781	1.8781
5	**1-1-2022**	**3-31-2022**	1.8063	1.8063
		Highest	1.8781	1.8781

2.2 Overall Operational

Unmitigated Operational

	ROG	NOx	CO	SO2	Fugitive PM10	Exhaust PM10	PM10 Total	Fugitive PM2.5	Exhaust PM2.5	PM2.5 Total	Bio- CO2	NBio- CO2	Total CO2	CH4	N2O	CO2e
Category	tons/yr										MT/yr					
Area	1.5026	5.0000e-005	5.9200e-003	0.0000		2.0000e-005	2.0000e-005		2.0000e-005	2.0000e-005	0.0000	0.0116	0.0116	3.0000e-005	0.0000	0.0123
Energy	0.0351	0.3194	0.2683	1.9200e-003		0.0243	0.0243		0.0243	0.0243	0.0000	923.4929	923.4929	0.0337	0.0122	927.9576
Mobile	0.2751	1.4284	3.2047	0.0148	1.5950	9.7300e-003	1.6048	0.4279	9.0600e-003	0.4369	0.0000	1,363.6463	1,363.6463	0.0422	0.0000	1,364.7020
Waste						0.0000	0.0000		0.0000	0.0000	39.0311	0.0000	39.0311	2.3067	0.0000	96.6979
Water						0.0000	0.0000		0.0000	0.0000	27.5796	58.9467	86.5263	0.0977	0.0606	107.0180
Total	**1.8129**	**1.7479**	**3.4789**	**0.0167**	**1.5950**	**0.0340**	**1.6291**	**0.4279**	**0.0334**	**0.4612**	**66.6107**	**2,346.0975**	**2,412.7081**	**2.4803**	**0.0727**	**2,496.3877**

2.2 Overall Operational

Mitigated Operational

	ROG	NOx	CO	SO2	Fugitive PM10	Exhaust PM10	PM10 Total	Fugitive PM2.5	Exhaust PM2.5	PM2.5 Total	Bio- CO2	NBio- CO2	Total CO2	CH4	N2O	CO2e
Category	tons/yr										MT/yr					
Area	1.5026	5.0000e-005	5.9200e-003	0.0000		2.0000e-005	2.0000e-005		2.0000e-005	2.0000e-005	0.0000	0.0116	0.0116	3.0000e-005	0.0000	0.0123
Energy	0.0252	0.2286	0.1920	1.3700e-003		0.0174	0.0174		0.0174	0.0174	0.0000	768.4601	768.4601	0.0291	9.7800e-003	772.1033
Mobile	0.2751	1.4284	3.2047	0.0148	1.5950	9.7300e-003	1.6048	0.4279	9.0600e-003	0.4369	0.0000	1,363.6463	1,363.6463	0.0422	0.0000	1,364.7020
Waste						0.0000	0.0000		0.0000	0.0000	39.0311	0.0000	39.0311	2.3067	0.0000	96.6979
Water						0.0000	0.0000		0.0000	0.0000	22.0637	47.4086	69.4723	0.0782	0.0485	85.8667
Total	**1.8029**	**1.6571**	**3.4027**	**0.0161**	**1.5950**	**0.0271**	**1.6222**	**0.4279**	**0.0265**	**0.4543**	**61.0948**	**2,179.5265**	**2,240.6213**	**2.4562**	**0.0582**	**2,319.3821**

	ROG	NOx	CO	SO2	Fugitive PM10	Exhaust PM10	PM10 Total	Fugitive PM2.5	Exhaust PM2.5	PM2.5 Total	Bio- CO2	NBio-CO2	Total CO2	CH4	N20	CO2e
Percent Reduction	**0.55**	**5.20**	**2.19**	**3.30**	**0.00**	**20.31**	**0.42**	**0.00**	**20.71**	**1.50**	**8.28**	**7.10**	**7.13**	**0.97**	**19.92**	**7.09**

3.0 Construction Detail

Construction Phase

Phase Number	Phase Name	Phase Type	Start Date	End Date	Num Days Week	Num Days	Phase Description
1	Demolition	Demolition	1/1/2021	1/28/2021	5	20	
2	Site Preparation	Site Preparation	1/29/2021	2/11/2021	5	10	
3	Grading	Grading	2/12/2021	3/25/2021	5	30	
4	Building Construction	Building Construction	3/26/2021	3/31/2022	5	265	
5	Architectural Coating	Architectural Coating	10/1/2021	3/31/2022	5	130	
6	Paving	Paving	3/4/2022	3/31/2022	5	20	

Acres of Grading (Site Preparation Phase): 5

Acres of Grading (Grading Phase): 15

Acres of Paving: 2.79

Residential Indoor: 0; Residential Outdoor: 0; Non-Residential Indoor: 505,641; Non-Residential Outdoor: 168,547; Striped Parking Area: 7,440 (Architectural Coating – sqft)

OffRoad Equipment

Clawiter Industrial Project - Buildings 1 to 3 - 2030 - Bay Area AQMD Air District, Annual

Phase Name	Offroad Equipment Type	Amount	Usage Hours	Horse Power	Load Factor
Demolition	Excavators	3	8.00	158	0.38
Demolition	Tractors/Loaders/Backhoes	2	8.00	97	0.37
Site Preparation	Graders	1	8.00	187	0.41
Site Preparation	Pavers	1	8.00	130	0.42
Site Preparation	Tractors/Loaders/Backhoes	4	8.00	97	0.37
Grading	Excavators	1	8.00	158	0.38
Grading	Graders	1	8.00	187	0.41
Grading	Pavers	1	8.00	130	0.42
Grading	Tractors/Loaders/Backhoes	1	8.00	97	0.37
Building Construction	Cranes	2	7.00	231	0.29
Building Construction	Forklifts	3	8.00	89	0.20
Building Construction	Tractors/Loaders/Backhoes	3	7.00	97	0.37
Architectural Coating	Air Compressors	1	6.00	78	0.48
Paving	Pavers	1	8.00	130	0.42
Paving	Rollers	1	8.00	80	0.38
Paving	Tractors/Loaders/Backhoes	1	8.00	97	0.37

Trips and VMT

Phase Name	Offroad Equipment Count	Worker Trip Number	Vendor Trip Number	Hauling Trip Number	Worker Trip Length	Vendor Trip Length	Hauling Trip Length	Worker Vehicle Class	Vendor Vehicle Class	Hauling Vehicle Class
Demolition	5	13.00	0.00	1,139.00	10.80	7.30	20.00	LD_Mix	HDT_Mix	HHDT
Site Preparation	6	15.00	0.00	0.00	10.80	7.30	20.00	LD_Mix	HDT_Mix	HHDT
Grading	4	10.00	0.00	3,634.00	10.80	7.30	20.00	LD_Mix	HDT_Mix	HHDT
Building Construction	8	194.00	76.00	0.00	10.80	7.30	20.00	LD_Mix	HDT_Mix	HHDT
Architectural Coating	1	39.00	0.00	0.00	10.80	7.30	20.00	LD_Mix	HDT_Mix	HHDT
Paving	3	8.00	0.00	0.00	10.80	7.30	20.00	LD_Mix	HDT_Mix	HHDT

3.1 Mitigation Measures Construction

Water Exposed Area

3.2 Demolition - 2021

Unmitigated Construction On-Site

	ROG	NOx	CO	SO2	Fugitive PM10	Exhaust PM10	PM10 Total	Fugitive PM2.5	Exhaust PM2.5	PM2.5 Total	Bio- CO2	NBio- CO2	Total CO2	CH4	N2O	CO2e
Category	tons/yr										MT/yr					
Fugitive Dust					0.1233	0.0000	0.1233	0.0187	0.0000	0.0187	0.0000	0.0000	0.0000	0.0000	0.0000	0.0000
Off-Road	0.0106	0.1025	0.1434	2.2000e-004		5.3700e-003	5.3700e-003		4.9400e-003	4.9400e-003	0.0000	19.0724	19.0724	6.1700e-003	0.0000	19.2267
Total	**0.0106**	**0.1025**	**0.1434**	**2.2000e-004**	**0.1233**	**5.3700e-003**	**0.1286**	**0.0187**	**4.9400e-003**	**0.0236**	**0.0000**	**19.0724**	**19.0724**	**6.1700e-003**	**0.0000**	**19.2267**

3.2 Demolition - 2021

Unmitigated Construction Off-Site

	ROG	NOx	CO	SO2	Fugitive PM10	Exhaust PM10	PM10 Total	Fugitive PM2.5	Exhaust PM2.5	PM2.5 Total	Bio- CO2	NBio- CO2	Total CO2	CH4	N2O	CO2e
Category	tons/yr										MT/yr					
Hauling	4.4900e-003	0.1537	0.0328	4.4000e-004	9.6200e-003	4.8000e-004	0.0101	2.6500e-003	4.6000e-004	3.1000e-003	0.0000	43.0851	43.0851	2.2000e-003	0.0000	43.1401
Vendor	0.0000	0.0000	0.0000	0.0000	0.0000	0.0000	0.0000	0.0000	0.0000	0.0000	0.0000	0.0000	0.0000	0.0000	0.0000	0.0000
Worker	4.0000e-004	2.8000e-004	2.9200e-003	1.0000e-005	1.0300e-003	1.0000e-005	1.0300e-003	2.7000e-004	1.0000e-005	2.8000e-004	0.0000	0.8684	0.8684	2.0000e-005	0.0000	0.8689
Total	**4.8900e-003**	**0.1540**	**0.0357**	**4.5000e-004**	**0.0107**	**4.9000e-004**	**0.0111**	**2.9200e-003**	**4.7000e-004**	**3.3800e-003**	**0.0000**	**43.9535**	**43.9535**	**2.2200e-003**	**0.0000**	**44.0090**

Mitigated Construction On-Site

	ROG	NOx	CO	SO2	Fugitive PM10	Exhaust PM10	PM10 Total	Fugitive PM2.5	Exhaust PM2.5	PM2.5 Total	Bio- CO2	NBio- CO2	Total CO2	CH4	N2O	CO2e
Category	tons/yr										MT/yr					
Fugitive Dust					0.0555	0.0000	0.0555	8.4000e-003	0.0000	8.4000e-003	0.0000	0.0000	0.0000	0.0000	0.0000	0.0000
Off-Road	0.0106	0.1025	0.1434	2.2000e-004		5.3700e-003	5.3700e-003		4.9400e-003	4.9400e-003	0.0000	19.0724	19.0724	6.1700e-003	0.0000	19.2266
Total	**0.0106**	**0.1025**	**0.1434**	**2.2000e-004**	**0.0555**	**5.3700e-003**	**0.0608**	**8.4000e-003**	**4.9400e-003**	**0.0133**	**0.0000**	**19.0724**	**19.0724**	**6.1700e-003**	**0.0000**	**19.2266**

3.2 Demolition - 2021

Mitigated Construction Off-Site

	ROG	NOx	CO	SO2	Fugitive PM10	Exhaust PM10	PM10 Total	Fugitive PM2.5	Exhaust PM2.5	PM2.5 Total	Bio- CO2	NBio- CO2	Total CO2	CH4	N2O	CO2e
Category	tons/yr										MT/yr					
Hauling	4.4900e-003	0.1537	0.0328	4.4000e-004	9.6200e-003	4.8000e-004	0.0101	2.6500e-003	4.6000e-004	3.1000e-003	0.0000	43.0851	43.0851	2.2000e-003	0.0000	43.1401
Vendor	0.0000	0.0000	0.0000	0.0000	0.0000	0.0000	0.0000	0.0000	0.0000	0.0000	0.0000	0.0000	0.0000	0.0000	0.0000	0.0000
Worker	4.0000e-004	2.8000e-004	2.9200e-003	1.0000e-005	1.0300e-003	1.0000e-005	1.0300e-003	2.7000e-004	1.0000e-005	2.8000e-004	0.0000	0.8684	0.8684	2.0000e-005	0.0000	0.8689
Total	**4.8900e-003**	**0.1540**	**0.0357**	**4.5000e-004**	**0.0107**	**4.9000e-004**	**0.0111**	**2.9200e-003**	**4.7000e-004**	**3.3800e-003**	**0.0000**	**43.9535**	**43.9535**	**2.2200e-003**	**0.0000**	**44.0090**

3.3 Site Preparation - 2021

Unmitigated Construction On-Site

	ROG	NOx	CO	SO2	Fugitive PM10	Exhaust PM10	PM10 Total	Fugitive PM2.5	Exhaust PM2.5	PM2.5 Total	Bio- CO2	NBio- CO2	Total CO2	CH4	N2O	CO2e
Category	tons/yr										MT/yr					
Fugitive Dust					2.6500e-003	0.0000	2.6500e-003	2.9000e-004	0.0000	2.9000e-004	0.0000	0.0000	0.0000	0.0000	0.0000	0.0000
Off-Road	7.2400e-003	0.0805	0.0686	1.2000e-004		3.8000e-003	3.8000e-003		3.5000e-003	3.5000e-003	0.0000	10.4342	10.4342	3.3700e-003	0.0000	10.5186
Total	**7.2400e-003**	**0.0805**	**0.0686**	**1.2000e-004**	**2.6500e-003**	**3.8000e-003**	**6.4500e-003**	**2.9000e-004**	**3.5000e-003**	**3.7900e-003**	**0.0000**	**10.4342**	**10.4342**	**3.3700e-003**	**0.0000**	**10.5186**

3.3 Site Preparation - 2021

Unmitigated Construction Off-Site

	ROG	NOx	CO	SO2	Fugitive PM10	Exhaust PM10	PM10 Total	Fugitive PM2.5	Exhaust PM2.5	PM2.5 Total	Bio- CO2	NBio- CO2	Total CO2	CH4	N2O	CO2e
Category	tons/yr										MT/yr					
Hauling	0.0000	0.0000	0.0000	0.0000	0.0000	0.0000	0.0000	0.0000	0.0000	0.0000	0.0000	0.0000	0.0000	0.0000	0.0000	0.0000
Vendor	0.0000	0.0000	0.0000	0.0000	0.0000	0.0000	0.0000	0.0000	0.0000	0.0000	0.0000	0.0000	0.0000	0.0000	0.0000	0.0000
Worker	2.3000e-004	1.6000e-004	1.6800e-003	1.0000e-005	5.9000e-004	0.0000	6.0000e-004	1.6000e-004	0.0000	1.6000e-004	0.0000	0.5010	0.5010	1.0000e-005	0.0000	0.5013
Total	**2.3000e-004**	**1.6000e-004**	**1.6800e-003**	**1.0000e-005**	**5.9000e-004**	**0.0000**	**6.0000e-004**	**1.6000e-004**	**0.0000**	**1.6000e-004**	**0.0000**	**0.5010**	**0.5010**	**1.0000e-005**	**0.0000**	**0.5013**

Mitigated Construction On-Site

	ROG	NOx	CO	SO2	Fugitive PM10	Exhaust PM10	PM10 Total	Fugitive PM2.5	Exhaust PM2.5	PM2.5 Total	Bio- CO2	NBio- CO2	Total CO2	CH4	N2O	CO2e
Category	tons/yr										MT/yr					
Fugitive Dust					1.1900e-003	0.0000	1.1900e-003	1.3000e-004	0.0000	1.3000e-004	0.0000	0.0000	0.0000	0.0000	0.0000	0.0000
Off-Road	7.2400e-003	0.0805	0.0686	1.2000e-004		3.8000e-003	3.8000e-003		3.5000e-003	3.5000e-003	0.0000	10.4342	10.4342	3.3700e-003	0.0000	10.5185
Total	**7.2400e-003**	**0.0805**	**0.0686**	**1.2000e-004**	**1.1900e-003**	**3.8000e-003**	**4.9900e-003**	**1.3000e-004**	**3.5000e-003**	**3.6300e-003**	**0.0000**	**10.4342**	**10.4342**	**3.3700e-003**	**0.0000**	**10.5185**

3.3 Site Preparation - 2021

Mitigated Construction Off-Site

	ROG	NOx	CO	SO2	Fugitive PM10	Exhaust PM10	PM10 Total	Fugitive PM2.5	Exhaust PM2.5	PM2.5 Total	Bio- CO2	NBio- CO2	Total CO2	CH4	N2O	CO2e
Category	tons/yr										MT/yr					
Hauling	0.0000	0.0000	0.0000	0.0000	0.0000	0.0000	0.0000	0.0000	0.0000	0.0000	0.0000	0.0000	0.0000	0.0000	0.0000	0.0000
Vendor	0.0000	0.0000	0.0000	0.0000	0.0000	0.0000	0.0000	0.0000	0.0000	0.0000	0.0000	0.0000	0.0000	0.0000	0.0000	0.0000
Worker	2.3000e-004	1.6000e-004	1.6800e-003	1.0000e-005	5.9000e-004	0.0000	6.0000e-004	1.6000e-004	0.0000	1.6000e-004	0.0000	0.5010	0.5010	1.0000e-005	0.0000	0.5013
Total	**2.3000e-004**	**1.6000e-004**	**1.6800e-003**	**1.0000e-005**	**5.9000e-004**	**0.0000**	**6.0000e-004**	**1.6000e-004**	**0.0000**	**1.6000e-004**	**0.0000**	**0.5010**	**0.5010**	**1.0000e-005**	**0.0000**	**0.5013**

3.4 Grading - 2021

Unmitigated Construction On-Site

	ROG	NOx	CO	SO2	Fugitive PM10	Exhaust PM10	PM10 Total	Fugitive PM2.5	Exhaust PM2.5	PM2.5 Total	Bio- CO2	NBio- CO2	Total CO2	CH4	N2O	CO2e
Category	tons/yr										MT/yr					
Fugitive Dust					9.6000e-003	0.0000	9.6000e-003	1.1100e-003	0.0000	1.1100e-003	0.0000	0.0000	0.0000	0.0000	0.0000	0.0000
Off-Road	0.0167	0.1885	0.1531	2.9000e-004		7.9400e-003	7.9400e-003		7.3000e-003	7.3000e-003	0.0000	25.8253	25.8253	8.3500e-003	0.0000	26.0341
Total	**0.0167**	**0.1885**	**0.1531**	**2.9000e-004**	**9.6000e-003**	**7.9400e-003**	**0.0175**	**1.1100e-003**	**7.3000e-003**	**8.4100e-003**	**0.0000**	**25.8253**	**25.8253**	**8.3500e-003**	**0.0000**	**26.0341**

3.4 Grading - 2021

Unmitigated Construction Off-Site

	ROG	NOx	CO	SO2	Fugitive PM10	Exhaust PM10	PM10 Total	Fugitive PM2.5	Exhaust PM2.5	PM2.5 Total	Bio- CO2	NBio- CO2	Total CO2	CH4	N2O	CO2e
Category	tons/yr										MT/yr					
Hauling	0.0143	0.4904	0.1045	1.4200e-003	0.0307	1.5200e-003	0.0322	8.4400e-003	1.4500e-003	9.8900e-003	0.0000	137.4639	137.4639	7.0100e-003	0.0000	137.6393
Vendor	0.0000	0.0000	0.0000	0.0000	0.0000	0.0000	0.0000	0.0000	0.0000	0.0000	0.0000	0.0000	0.0000	0.0000	0.0000	0.0000
Worker	4.6000e-004	3.2000e-004	3.3600e-003	1.0000e-005	1.1900e-003	1.0000e-005	1.1900e-003	3.2000e-004	1.0000e-005	3.2000e-004	0.0000	1.0020	1.0020	2.0000e-005	0.0000	1.0026
Total	**0.0148**	**0.4907**	**0.1078**	**1.4300e-003**	**0.0319**	**1.5300e-003**	**0.0334**	**8.7600e-003**	**1.4600e-003**	**0.0102**	**0.0000**	**138.4659**	**138.4659**	**7.0300e-003**	**0.0000**	**138.6418**

Mitigated Construction On-Site

	ROG	NOx	CO	SO2	Fugitive PM10	Exhaust PM10	PM10 Total	Fugitive PM2.5	Exhaust PM2.5	PM2.5 Total	Bio- CO2	NBio- CO2	Total CO2	CH4	N2O	CO2e
Category	tons/yr										MT/yr					
Fugitive Dust					4.3200e-003	0.0000	4.3200e-003	5.0000e-004	0.0000	5.0000e-004	0.0000	0.0000	0.0000	0.0000	0.0000	0.0000
Off-Road	0.0167	0.1885	0.1531	2.9000e-004		7.9400e-003	7.9400e-003		7.3000e-003	7.3000e-003	0.0000	25.8253	25.8253	8.3500e-003	0.0000	26.0341
Total	**0.0167**	**0.1885**	**0.1531**	**2.9000e-004**	**4.3200e-003**	**7.9400e-003**	**0.0123**	**5.0000e-004**	**7.3000e-003**	**7.8000e-003**	**0.0000**	**25.8253**	**25.8253**	**8.3500e-003**	**0.0000**	**26.0341**

3.4 Grading - 2021

Mitigated Construction Off-Site

	ROG	NOx	CO	SO2	Fugitive PM10	Exhaust PM10	PM10 Total	Fugitive PM2.5	Exhaust PM2.5	PM2.5 Total	Bio- CO2	NBio- CO2	Total CO2	CH4	N2O	CO2e
Category	tons/yr										MT/yr					
Hauling	0.0143	0.4904	0.1045	1.4200e-003	0.0307	1.5200e-003	0.0322	8.4400e-003	1.4500e-003	9.8900e-003	0.0000	137.4639	137.4639	7.0100e-003	0.0000	137.6393
Vendor	0.0000	0.0000	0.0000	0.0000	0.0000	0.0000	0.0000	0.0000	0.0000	0.0000	0.0000	0.0000	0.0000	0.0000	0.0000	0.0000
Worker	4.6000e-004	3.2000e-004	3.3600e-003	1.0000e-005	1.1900e-003	1.0000e-005	1.1900e-003	3.2000e-004	1.0000e-005	3.2000e-004	0.0000	1.0020	1.0020	2.0000e-005	0.0000	1.0026
Total	**0.0148**	**0.4907**	**0.1078**	**1.4300e-003**	**0.0319**	**1.5300e-003**	**0.0334**	**8.7600e-003**	**1.4600e-003**	**0.0102**	**0.0000**	**138.4659**	**138.4659**	**7.0300e-003**	**0.0000**	**138.6418**

3.5 Building Construction - 2021

Unmitigated Construction On-Site

	ROG	NOx	CO	SO2	Fugitive PM10	Exhaust PM10	PM10 Total	Fugitive PM2.5	Exhaust PM2.5	PM2.5 Total	Bio- CO2	NBio- CO2	Total CO2	CH4	N2O	CO2e
Category	tons/yr										MT/yr					
Off-Road	0.1610	1.7085	1.2971	2.2900e-003		0.0894	0.0894		0.0822	0.0822	0.0000	201.6496	201.6496	0.0652	0.0000	203.2801
Total	**0.1610**	**1.7085**	**1.2971**	**2.2900e-003**		**0.0894**	**0.0894**		**0.0822**	**0.0822**	**0.0000**	**201.6496**	**201.6496**	**0.0652**	**0.0000**	**203.2801**

3.5 Building Construction - 2021

Unmitigated Construction Off-Site

	ROG	NOx	CO	SO2	Fugitive PM10	Exhaust PM10	PM10 Total	Fugitive PM2.5	Exhaust PM2.5	PM2.5 Total	Bio- CO2	NBio- CO2	Total CO2	CH4	N2O	CO2e
Category	tons/yr										MT/yr					
Hauling	0.0000	0.0000	0.0000	0.0000	0.0000	0.0000	0.0000	0.0000	0.0000	0.0000	0.0000	0.0000	0.0000	0.0000	0.0000	0.0000
Vendor	0.0243	0.7978	0.1991	2.0600e-003	0.0501	1.7400e-003	0.0518	0.0145	1.6600e-003	0.0162	0.0000	198.0869	198.0869	9.7400e-003	0.0000	198.3304
Worker	0.0598	0.0413	0.4373	1.4400e-003	0.1541	1.0100e-003	0.1551	0.0410	9.3000e-004	0.0419	0.0000	130.2380	130.2380	2.9200e-003	0.0000	130.3110
Total	**0.0841**	**0.8391**	**0.6364**	**3.5000e-003**	**0.2042**	**2.7500e-003**	**0.2069**	**0.0555**	**2.5900e-003**	**0.0581**	**0.0000**	**328.3249**	**328.3249**	**0.0127**	**0.0000**	**328.6414**

Mitigated Construction On-Site

	ROG	NOx	CO	SO2	Fugitive PM10	Exhaust PM10	PM10 Total	Fugitive PM2.5	Exhaust PM2.5	PM2.5 Total	Bio- CO2	NBio- CO2	Total CO2	CH4	N2O	CO2e
Category	tons/yr										MT/yr					
Off-Road	0.1610	1.7085	1.2971	2.2900e-003		0.0894	0.0894		0.0822	0.0822	0.0000	201.6494	201.6494	0.0652	0.0000	203.2798
Total	**0.1610**	**1.7085**	**1.2971**	**2.2900e-003**		**0.0894**	**0.0894**		**0.0822**	**0.0822**	**0.0000**	**201.6494**	**201.6494**	**0.0652**	**0.0000**	**203.2798**

3.5 Building Construction - 2021

Mitigated Construction Off-Site

	ROG	NOx	CO	SO2	Fugitive PM10	Exhaust PM10	PM10 Total	Fugitive PM2.5	Exhaust PM2.5	PM2.5 Total	Bio- CO2	NBio- CO2	Total CO2	CH4	N2O	CO2e
Category	tons/yr										MT/yr					
Hauling	0.0000	0.0000	0.0000	0.0000	0.0000	0.0000	0.0000	0.0000	0.0000	0.0000	0.0000	0.0000	0.0000	0.0000	0.0000	0.0000
Vendor	0.0243	0.7978	0.1991	2.0600e-003	0.0501	1.7400e-003	0.0518	0.0145	1.6600e-003	0.0162	0.0000	198.0869	198.0869	9.7400e-003	0.0000	198.3304
Worker	0.0598	0.0413	0.4373	1.4400e-003	0.1541	1.0100e-003	0.1551	0.0410	9.3000e-004	0.0419	0.0000	130.2380	130.2380	2.9200e-003	0.0000	130.3110
Total	**0.0841**	**0.8391**	**0.6364**	**3.5000e-003**	**0.2042**	**2.7500e-003**	**0.2069**	**0.0555**	**2.5900e-003**	**0.0581**	**0.0000**	**328.3249**	**328.3249**	**0.0127**	**0.0000**	**328.6414**

3.5 Building Construction - 2022

Unmitigated Construction On-Site

	ROG	NOx	CO	SO2	Fugitive PM10	Exhaust PM10	PM10 Total	Fugitive PM2.5	Exhaust PM2.5	PM2.5 Total	Bio- CO2	NBio- CO2	Total CO2	CH4	N2O	CO2e
Category	tons/yr										MT/yr					
Off-Road	0.0456	0.4763	0.4047	7.3000e-004		0.0240	0.0240		0.0221	0.0221	0.0000	64.2373	64.2373	0.0208	0.0000	64.7567
Total	**0.0456**	**0.4763**	**0.4047**	**7.3000e-004**		**0.0240**	**0.0240**		**0.0221**	**0.0221**	**0.0000**	**64.2373**	**64.2373**	**0.0208**	**0.0000**	**64.7567**

3.5 Building Construction - 2022

Unmitigated Construction Off-Site

	ROG	NOx	CO	SO2	Fugitive PM10	Exhaust PM10	PM10 Total	Fugitive PM2.5	Exhaust PM2.5	PM2.5 Total	Bio- CO2	NBio- CO2	Total CO2	CH4	N2O	CO2e
Category	tons/yr										MT/yr					
Hauling	0.0000	0.0000	0.0000	0.0000	0.0000	0.0000	0.0000	0.0000	0.0000	0.0000	0.0000	0.0000	0.0000	0.0000	0.0000	0.0000
Vendor	7.2000e-003	0.2406	0.0596	6.5000e-004	0.0160	4.8000e-004	0.0164	4.6100e-003	4.6000e-004	5.0700e-003	0.0000	62.4540	62.4540	2.9600e-003	0.0000	62.5281
Worker	0.0178	0.0118	0.1280	4.4000e-004	0.0491	3.1000e-004	0.0494	0.0131	2.9000e-004	0.0133	0.0000	39.9485	39.9485	8.3000e-004	0.0000	39.9694
Total	**0.0250**	**0.2524**	**0.1876**	**1.0900e-003**	**0.0650**	**7.9000e-004**	**0.0658**	**0.0177**	**7.5000e-004**	**0.0184**	**0.0000**	**102.4025**	**102.4025**	**3.7900e-003**	**0.0000**	**102.4974**

Mitigated Construction On-Site

	ROG	NOx	CO	SO2	Fugitive PM10	Exhaust PM10	PM10 Total	Fugitive PM2.5	Exhaust PM2.5	PM2.5 Total	Bio- CO2	NBio- CO2	Total CO2	CH4	N2O	CO2e
Category	tons/yr										MT/yr					
Off-Road	0.0456	0.4763	0.4047	7.3000e-004		0.0240	0.0240		0.0221	0.0221	0.0000	64.2373	64.2373	0.0208	0.0000	64.7566
Total	**0.0456**	**0.4763**	**0.4047**	**7.3000e-004**		**0.0240**	**0.0240**		**0.0221**	**0.0221**	**0.0000**	**64.2373**	**64.2373**	**0.0208**	**0.0000**	**64.7566**

3.5 Building Construction - 2022

Mitigated Construction Off-Site

	ROG	NOx	CO	SO2	Fugitive PM10	Exhaust PM10	PM10 Total	Fugitive PM2.5	Exhaust PM2.5	PM2.5 Total	Bio- CO2	NBio- CO2	Total CO2	CH4	N2O	CO2e
Category	tons/yr										MT/yr					
Hauling	0.0000	0.0000	0.0000	0.0000	0.0000	0.0000	0.0000	0.0000	0.0000	0.0000	0.0000	0.0000	0.0000	0.0000	0.0000	0.0000
Vendor	7.2000e-003	0.2406	0.0596	6.5000e-004	0.0160	4.8000e-004	0.0164	4.6100e-003	4.6000e-004	5.0700e-003	0.0000	62.4540	62.4540	2.9600e-003	0.0000	62.5281
Worker	0.0178	0.0118	0.1280	4.4000e-004	0.0491	3.1000e-004	0.0494	0.0131	2.9000e-004	0.0133	0.0000	39.9485	39.9485	8.3000e-004	0.0000	39.9694
Total	**0.0250**	**0.2524**	**0.1876**	**1.0900e-003**	**0.0650**	**7.9000e-004**	**0.0658**	**0.0177**	**7.5000e-004**	**0.0184**	**0.0000**	**102.4025**	**102.4025**	**3.7900e-003**	**0.0000**	**102.4974**

3.6 Architectural Coating - 2021

Unmitigated Construction On-Site

	ROG	NOx	CO	SO2	Fugitive PM10	Exhaust PM10	PM10 Total	Fugitive PM2.5	Exhaust PM2.5	PM2.5 Total	Bio- CO2	NBio- CO2	Total CO2	CH4	N2O	CO2e
Category	tons/yr										MT/yr					
Archit. Coating	0.9011					0.0000	0.0000		0.0000	0.0000	0.0000	0.0000	0.0000	0.0000	0.0000	0.0000
Off-Road	7.2200e-003	0.0504	0.0600	1.0000e-004		3.1100e-003	3.1100e-003		3.1100e-003	3.1100e-003	0.0000	8.4257	8.4257	5.8000e-004	0.0000	8.4402
Total	**0.9084**	**0.0504**	**0.0600**	**1.0000e-004**		**3.1100e-003**	**3.1100e-003**		**3.1100e-003**	**3.1100e-003**	**0.0000**	**8.4257**	**8.4257**	**5.8000e-004**	**0.0000**	**8.4402**

3.6 Architectural Coating - 2021

Unmitigated Construction Off-Site

	ROG	NOx	CO	SO2	Fugitive PM10	Exhaust PM10	PM10 Total	Fugitive PM2.5	Exhaust PM2.5	PM2.5 Total	Bio- CO2	NBio- CO2	Total CO2	CH4	N2O	CO2e
Category	tons/yr										MT/yr					
Hauling	0.0000	0.0000	0.0000	0.0000	0.0000	0.0000	0.0000	0.0000	0.0000	0.0000	0.0000	0.0000	0.0000	0.0000	0.0000	0.0000
Vendor	0.0000	0.0000	0.0000	0.0000	0.0000	0.0000	0.0000	0.0000	0.0000	0.0000	0.0000	0.0000	0.0000	0.0000	0.0000	0.0000
Worker	3.9500e-003	2.7200e-003	0.0289	1.0000e-004	0.0102	7.0000e-005	0.0102	2.7100e-003	6.0000e-005	2.7700e-003	0.0000	8.5970	8.5970	1.9000e-004	0.0000	8.6019
Total	**3.9500e-003**	**2.7200e-003**	**0.0289**	**1.0000e-004**	**0.0102**	**7.0000e-005**	**0.0102**	**2.7100e-003**	**6.0000e-005**	**2.7700e-003**	**0.0000**	**8.5970**	**8.5970**	**1.9000e-004**	**0.0000**	**8.6019**

Mitigated Construction On-Site

	ROG	NOx	CO	SO2	Fugitive PM10	Exhaust PM10	PM10 Total	Fugitive PM2.5	Exhaust PM2.5	PM2.5 Total	Bio- CO2	NBio- CO2	Total CO2	CH4	N2O	CO2e
Category	tons/yr										MT/yr					
Archit. Coating	0.9011					0.0000	0.0000		0.0000	0.0000	0.0000	0.0000	0.0000	0.0000	0.0000	0.0000
Off-Road	7.2200e-003	0.0504	0.0600	1.0000e-004		3.1100e-003	3.1100e-003		3.1100e-003	3.1100e-003	0.0000	8.4257	8.4257	5.8000e-004	0.0000	8.4402
Total	**0.9084**	**0.0504**	**0.0600**	**1.0000e-004**		**3.1100e-003**	**3.1100e-003**		**3.1100e-003**	**3.1100e-003**	**0.0000**	**8.4257**	**8.4257**	**5.8000e-004**	**0.0000**	**8.4402**

3.6 Architectural Coating - 2021

Mitigated Construction Off-Site

	ROG	NOx	CO	SO2	Fugitive PM10	Exhaust PM10	PM10 Total	Fugitive PM2.5	Exhaust PM2.5	PM2.5 Total	Bio- CO2	NBio- CO2	Total CO2	CH4	N2O	CO2e
Category	tons/yr										MT/yr					
Hauling	0.0000	0.0000	0.0000	0.0000	0.0000	0.0000	0.0000	0.0000	0.0000	0.0000	0.0000	0.0000	0.0000	0.0000	0.0000	0.0000
Vendor	0.0000	0.0000	0.0000	0.0000	0.0000	0.0000	0.0000	0.0000	0.0000	0.0000	0.0000	0.0000	0.0000	0.0000	0.0000	0.0000
Worker	3.9500e-003	2.7200e-003	0.0289	1.0000e-004	0.0102	7.0000e-005	0.0102	2.7100e-003	6.0000e-005	2.7700e-003	0.0000	8.5970	8.5970	1.9000e-004	0.0000	8.6019
Total	**3.9500e-003**	**2.7200e-003**	**0.0289**	**1.0000e-004**	**0.0102**	**7.0000e-005**	**0.0102**	**2.7100e-003**	**6.0000e-005**	**2.7700e-003**	**0.0000**	**8.5970**	**8.5970**	**1.9000e-004**	**0.0000**	**8.6019**

3.6 Architectural Coating - 2022

Unmitigated Construction On-Site

	ROG	NOx	CO	SO2	Fugitive PM10	Exhaust PM10	PM10 Total	Fugitive PM2.5	Exhaust PM2.5	PM2.5 Total	Bio- CO2	NBio- CO2	Total CO2	CH4	N2O	CO2e
Category	tons/yr										MT/yr					
Archit. Coating	0.8738					0.0000	0.0000		0.0000	0.0000	0.0000	0.0000	0.0000	0.0000	0.0000	0.0000
Off-Road	6.5500e-003	0.0451	0.0580	1.0000e-004		2.6100e-003	2.6100e-003		2.6100e-003	2.6100e-003	0.0000	8.1704	8.1704	5.3000e-004	0.0000	8.1837
Total	**0.8804**	**0.0451**	**0.0580**	**1.0000e-004**		**2.6100e-003**	**2.6100e-003**		**2.6100e-003**	**2.6100e-003**	**0.0000**	**8.1704**	**8.1704**	**5.3000e-004**	**0.0000**	**8.1837**

3.6 Architectural Coating - 2022

Unmitigated Construction Off-Site

	ROG	NOx	CO	SO2	Fugitive PM10	Exhaust PM10	PM10 Total	Fugitive PM2.5	Exhaust PM2.5	PM2.5 Total	Bio- CO2	NBio- CO2	Total CO2	CH4	N2O	CO2e
Category	tons/yr										MT/yr					
Hauling	0.0000	0.0000	0.0000	0.0000	0.0000	0.0000	0.0000	0.0000	0.0000	0.0000	0.0000	0.0000	0.0000	0.0000	0.0000	0.0000
Vendor	0.0000	0.0000	0.0000	0.0000	0.0000	0.0000	0.0000	0.0000	0.0000	0.0000	0.0000	0.0000	0.0000	0.0000	0.0000	0.0000
Worker	3.5700e-003	2.3700e-003	0.0257	9.0000e-005	9.8600e-003	6.0000e-005	9.9200e-003	2.6200e-003	6.0000e-005	2.6800e-003	0.0000	8.0309	8.0309	1.7000e-004	0.0000	8.0351
Total	**3.5700e-003**	**2.3700e-003**	**0.0257**	**9.0000e-005**	**9.8600e-003**	**6.0000e-005**	**9.9200e-003**	**2.6200e-003**	**6.0000e-005**	**2.6800e-003**	**0.0000**	**8.0309**	**8.0309**	**1.7000e-004**	**0.0000**	**8.0351**

Mitigated Construction On-Site

	ROG	NOx	CO	SO2	Fugitive PM10	Exhaust PM10	PM10 Total	Fugitive PM2.5	Exhaust PM2.5	PM2.5 Total	Bio- CO2	NBio- CO2	Total CO2	CH4	N2O	CO2e
Category	tons/yr										MT/yr					
Archit. Coating	0.8738					0.0000	0.0000		0.0000	0.0000	0.0000	0.0000	0.0000	0.0000	0.0000	0.0000
Off-Road	6.5500e-003	0.0451	0.0580	1.0000e-004		2.6100e-003	2.6100e-003		2.6100e-003	2.6100e-003	0.0000	8.1704	8.1704	5.3000e-004	0.0000	8.1837
Total	**0.8804**	**0.0451**	**0.0580**	**1.0000e-004**		**2.6100e-003**	**2.6100e-003**		**2.6100e-003**	**2.6100e-003**	**0.0000**	**8.1704**	**8.1704**	**5.3000e-004**	**0.0000**	**8.1837**

3.6 Architectural Coating - 2022

Mitigated Construction Off-Site

	ROG	NOx	CO	SO2	Fugitive PM10	Exhaust PM10	PM10 Total	Fugitive PM2.5	Exhaust PM2.5	PM2.5 Total	Bio- CO2	NBio- CO2	Total CO2	CH4	N2O	CO2e
Category	tons/yr										MT/yr					
Hauling	0.0000	0.0000	0.0000	0.0000	0.0000	0.0000	0.0000	0.0000	0.0000	0.0000	0.0000	0.0000	0.0000	0.0000	0.0000	0.0000
Vendor	0.0000	0.0000	0.0000	0.0000	0.0000	0.0000	0.0000	0.0000	0.0000	0.0000	0.0000	0.0000	0.0000	0.0000	0.0000	0.0000
Worker	3.5700e-003	2.3700e-003	0.0257	9.0000e-005	9.8600e-003	6.0000e-005	9.9200e-003	2.6200e-003	6.0000e-005	2.6800e-003	0.0000	8.0309	8.0309	1.7000e-004	0.0000	8.0351
Total	**3.5700e-003**	**2.3700e-003**	**0.0257**	**9.0000e-005**	**9.8600e-003**	**6.0000e-005**	**9.9200e-003**	**2.6200e-003**	**6.0000e-005**	**2.6800e-003**	**0.0000**	**8.0309**	**8.0309**	**1.7000e-004**	**0.0000**	**8.0351**

3.7 Paving - 2022

Unmitigated Construction On-Site

	ROG	NOx	CO	SO2	Fugitive PM10	Exhaust PM10	PM10 Total	Fugitive PM2.5	Exhaust PM2.5	PM2.5 Total	Bio- CO2	NBio- CO2	Total CO2	CH4	N2O	CO2e
Category	tons/yr										MT/yr					
Off-Road	5.3800e-003	0.0550	0.0698	1.0000e-004		2.8900e-003	2.8900e-003		2.6600e-003	2.6600e-003	0.0000	9.1680	9.1680	2.9700e-003	0.0000	9.2421
Paving	3.6500e-003					0.0000	0.0000		0.0000	0.0000	0.0000	0.0000	0.0000	0.0000	0.0000	0.0000
Total	**9.0300e-003**	**0.0550**	**0.0698**	**1.0000e-004**		**2.8900e-003**	**2.8900e-003**		**2.6600e-003**	**2.6600e-003**	**0.0000**	**9.1680**	**9.1680**	**2.9700e-003**	**0.0000**	**9.2421**

3.7 Paving - 2022

Unmitigated Construction Off-Site

	ROG	NOx	CO	SO2	Fugitive PM10	Exhaust PM10	PM10 Total	Fugitive PM2.5	Exhaust PM2.5	PM2.5 Total	Bio- CO2	NBio- CO2	Total CO2	CH4	N2O	CO2e
Category	tons/yr										MT/yr					
Hauling	0.0000	0.0000	0.0000	0.0000	0.0000	0.0000	0.0000	0.0000	0.0000	0.0000	0.0000	0.0000	0.0000	0.0000	0.0000	0.0000
Vendor	0.0000	0.0000	0.0000	0.0000	0.0000	0.0000	0.0000	0.0000	0.0000	0.0000	0.0000	0.0000	0.0000	0.0000	0.0000	0.0000
Worker	2.3000e-004	1.5000e-004	1.6500e-003	1.0000e-005	6.3000e-004	0.0000	6.4000e-004	1.7000e-004	0.0000	1.7000e-004	0.0000	0.5148	0.5148	1.0000e-005	0.0000	0.5151
Total	**2.3000e-004**	**1.5000e-004**	**1.6500e-003**	**1.0000e-005**	**6.3000e-004**	**0.0000**	**6.4000e-004**	**1.7000e-004**	**0.0000**	**1.7000e-004**	**0.0000**	**0.5148**	**0.5148**	**1.0000e-005**	**0.0000**	**0.5151**

Mitigated Construction On-Site

	ROG	NOx	CO	SO2	Fugitive PM10	Exhaust PM10	PM10 Total	Fugitive PM2.5	Exhaust PM2.5	PM2.5 Total	Bio- CO2	NBio- CO2	Total CO2	CH4	N2O	CO2e
Category	tons/yr										MT/yr					
Off-Road	5.3800e-003	0.0550	0.0698	1.0000e-004		2.8900e-003	2.8900e-003		2.6600e-003	2.6600e-003	0.0000	9.1680	9.1680	2.9700e-003	0.0000	9.2421
Paving	3.6500e-003					0.0000	0.0000		0.0000	0.0000	0.0000	0.0000	0.0000	0.0000	0.0000	0.0000
Total	**9.0300e-003**	**0.0550**	**0.0698**	**1.0000e-004**		**2.8900e-003**	**2.8900e-003**		**2.6600e-003**	**2.6600e-003**	**0.0000**	**9.1680**	**9.1680**	**2.9700e-003**	**0.0000**	**9.2421**

3.7 Paving - 2022

Mitigated Construction Off-Site

	ROG	NOx	CO	SO2	Fugitive PM10	Exhaust PM10	PM10 Total	Fugitive PM2.5	Exhaust PM2.5	PM2.5 Total	Bio- CO2	NBio- CO2	Total CO2	CH4	N2O	CO2e
Category	tons/yr										MT/yr					
Hauling	0.0000	0.0000	0.0000	0.0000	0.0000	0.0000	0.0000	0.0000	0.0000	0.0000	0.0000	0.0000	0.0000	0.0000	0.0000	0.0000
Vendor	0.0000	0.0000	0.0000	0.0000	0.0000	0.0000	0.0000	0.0000	0.0000	0.0000	0.0000	0.0000	0.0000	0.0000	0.0000	0.0000
Worker	2.3000e-004	1.5000e-004	1.6500e-003	1.0000e-005	6.3000e-004	0.0000	6.4000e-004	1.7000e-004	0.0000	1.7000e-004	0.0000	0.5148	0.5148	1.0000e-005	0.0000	0.5151
Total	**2.3000e-004**	**1.5000e-004**	**1.6500e-003**	**1.0000e-005**	**6.3000e-004**	**0.0000**	**6.4000e-004**	**1.7000e-004**	**0.0000**	**1.7000e-004**	**0.0000**	**0.5148**	**0.5148**	**1.0000e-005**	**0.0000**	**0.5151**

4.0 Operational Detail - Mobile

4.1 Mitigation Measures Mobile

	ROG	NOx	CO	SO2	Fugitive PM10	Exhaust PM10	PM10 Total	Fugitive PM2.5	Exhaust PM2.5	PM2.5 Total	Bio- CO2	NBio- CO2	Total CO2	CH4	N2O	CO2e
Category	tons/yr										MT/yr					
Mitigated	0.2751	1.4284	3.2047	0.0148	1.5950	9.7300e-003	1.6048	0.4279	9.0600e-003	0.4369	0.0000	1,363.6463	1,363.6463	0.0422	0.0000	1,364.7020
Unmitigated	0.2751	1.4284	3.2047	0.0148	1.5950	9.7300e-003	1.6048	0.4279	9.0600e-003	0.4369	0.0000	1,363.6463	1,363.6463	0.0422	0.0000	1,364.7020

4.2 Trip Summary Information

	Average Daily Trip Rate			Unmitigated	Mitigated
Land Use	Weekday	Saturday	Sunday	Annual VMT	Annual VMT
Industrial Park	2,073.10	839.35	246.08	4,288,917	4,288,917
Parking Lot	0.00	0.00	0.00		
Total	2,073.10	839.35	246.08	4,288,917	4,288,917

4.3 Trip Type Information

	Miles			Trip %			Trip Purpose %		
Land Use	H-W or C-W	H-S or C-C	H-O or C-NW	H-W or C-W	H-S or C-C	H-O or C-NW	Primary	Diverted	Pass-by
Industrial Park	9.50	7.30	7.30	59.00	28.00	13.00	79	19	2
Parking Lot	9.50	7.30	7.30	0.00	0.00	0.00	0	0	0

4.4 Fleet Mix

Land Use	LDA	LDT1	LDT2	MDV	LHD1	LHD2	MHD	HHD	OBUS	UBUS	MCY	SBUS	MH
Industrial Park	0.585795	0.036515	0.193581	0.106455	0.012789	0.005274	0.019465	0.028415	0.002699	0.001789	0.005626	0.000921	0.000676
Parking Lot	0.585795	0.036515	0.193581	0.106455	0.012789	0.005274	0.019465	0.028415	0.002699	0.001789	0.005626	0.000921	0.000676

5.0 Energy Detail

Historical Energy Use: N

5.1 Mitigation Measures Energy

Exceed Title 24

	ROG	NOx	CO	SO2	Fugitive PM10	Exhaust PM10	PM10 Total	Fugitive PM2.5	Exhaust PM2.5	PM2.5 Total	Bio- CO2	NBio- CO2	Total CO2	CH4	N2O	CO2e
Category	tons/yr										MT/yr					
Electricity Mitigated						0.0000	0.0000		0.0000	0.0000	0.0000	519.6055	519.6055	0.0244	5.2200e-003	521.7699
Electricity Unmitigated						0.0000	0.0000		0.0000	0.0000	0.0000	575.7729	575.7729	0.0270	5.7800e-003	578.1712
NaturalGas Mitigated	0.0252	0.2286	0.1920	1.3700e-003		0.0174	0.0174		0.0174	0.0174	0.0000	248.8546	248.8546	4.7700e-003	4.5600e-003	250.3334
NaturalGas Unmitigated	0.0351	0.3194	0.2683	1.9200e-003		0.0243	0.0243		0.0243	0.0243	0.0000	347.7200	347.7200	6.6600e-003	6.3700e-003	349.7863

5.2 Energy by Land Use - NaturalGas

Unmitigated

	NaturalGas Use	ROG	NOx	CO	SO2	Fugitive PM10	Exhaust PM10	PM10 Total	Fugitive PM2.5	Exhaust PM2.5	PM2.5 Total	Bio- CO2	NBio- CO2	Total CO2	CH4	N2O	CO2e
Land Use	kBTU/yr	tons/yr										MT/yr					
Industrial Park	6.51603e+006	0.0351	0.3194	0.2683	1.9200e-003		0.0243	0.0243		0.0243	0.0243	0.0000	347.7200	347.7200	6.6600e-003	6.3700e-003	349.7863
Parking Lot	0	0.0000	0.0000	0.0000	0.0000		0.0000	0.0000		0.0000	0.0000	0.0000	0.0000	0.0000	0.0000	0.0000	0.0000
Total		**0.0351**	**0.3194**	**0.2683**	**1.9200e-003**		**0.0243**	**0.0243**		**0.0243**	**0.0243**	**0.0000**	**347.7200**	**347.7200**	**6.6600e-003**	**6.3700e-003**	**349.7863**

Mitigated

	NaturalGas Use	ROG	NOx	CO	SO2	Fugitive PM10	Exhaust PM10	PM10 Total	Fugitive PM2.5	Exhaust PM2.5	PM2.5 Total	Bio- CO2	NBio- CO2	Total CO2	CH4	N2O	CO2e
Land Use	kBTU/yr	tons/yr										MT/yr					
Industrial Park	4.66336e+006	0.0252	0.2286	0.1920	1.3700e-003		0.0174	0.0174		0.0174	0.0174	0.0000	248.8546	248.8546	4.7700e-003	4.5600e-003	250.3334
Parking Lot	0	0.0000	0.0000	0.0000	0.0000		0.0000	0.0000		0.0000	0.0000	0.0000	0.0000	0.0000	0.0000	0.0000	0.0000
Total		**0.0252**	**0.2286**	**0.1920**	**1.3700e-003**		**0.0174**	**0.0174**		**0.0174**	**0.0174**	**0.0000**	**248.8546**	**248.8546**	**4.7700e-003**	**4.5600e-003**	**250.3334**

5.3 Energy by Land Use - Electricity

Unmitigated

	Electricity Use	Total CO2	CH4	N2O	CO2e
Land Use	kWh/yr	MT/yr			
Industrial Park	4.20693e+006	569.8937	0.0267	5.7200e-003	572.2676
Parking Lot	43400	5.8792	2.8000e-004	6.0000e-005	5.9037
Total		**575.7729**	**0.0270**	**5.7800e-003**	**578.1713**

Mitigated

	Electricity Use	Total CO2	CH4	N2O	CO2e
Land Use	kWh/yr	MT/yr			
Industrial Park	3.79231e+006	513.7263	0.0241	5.1600e-003	515.8662
Parking Lot	43400	5.8792	2.8000e-004	6.0000e-005	5.9037
Total		**519.6055**	**0.0244**	**5.2200e-003**	**521.7699**

6.0 Area Detail

6.1 Mitigation Measures Area

	ROG	NOx	CO	SO2	Fugitive PM10	Exhaust PM10	PM10 Total	Fugitive PM2.5	Exhaust PM2.5	PM2.5 Total	Bio- CO2	NBio- CO2	Total CO2	CH4	N2O	CO2e
Category	tons/yr										MT/yr					
Mitigated	1.5026	5.0000e-005	5.9200e-003	0.0000		2.0000e-005	2.0000e-005		2.0000e-005	2.0000e-005	0.0000	0.0116	0.0116	3.0000e-005	0.0000	0.0123
Unmitigated	1.5026	5.0000e-005	5.9200e-003	0.0000		2.0000e-005	2.0000e-005		2.0000e-005	2.0000e-005	0.0000	0.0116	0.0116	3.0000e-005	0.0000	0.0123

6.2 Area by SubCategory

Unmitigated

	ROG	NOx	CO	SO2	Fugitive PM10	Exhaust PM10	PM10 Total	Fugitive PM2.5	Exhaust PM2.5	PM2.5 Total	Bio- CO2	NBio- CO2	Total CO2	CH4	N2O	CO2e
SubCategory	tons/yr										MT/yr					
Architectural Coating	0.1775					0.0000	0.0000		0.0000	0.0000	0.0000	0.0000	0.0000	0.0000	0.0000	0.0000
Consumer Products	1.3245					0.0000	0.0000		0.0000	0.0000	0.0000	0.0000	0.0000	0.0000	0.0000	0.0000
Landscaping	5.4000e-004	5.0000e-005	5.9200e-003	0.0000		2.0000e-005	2.0000e-005		2.0000e-005	2.0000e-005	0.0000	0.0116	0.0116	3.0000e-005	0.0000	0.0123
Total	**1.5026**	**5.0000e-005**	**5.9200e-003**	**0.0000**		**2.0000e-005**	**2.0000e-005**		**2.0000e-005**	**2.0000e-005**	**0.0000**	**0.0116**	**0.0116**	**3.0000e-005**	**0.0000**	**0.0123**

6.2 Area by SubCategory

Mitigated

	ROG	NOx	CO	SO2	Fugitive PM10	Exhaust PM10	PM10 Total	Fugitive PM2.5	Exhaust PM2.5	PM2.5 Total	Bio- CO2	NBio- CO2	Total CO2	CH4	N2O	CO2e
SubCategory	tons/yr										MT/yr					
Architectural Coating	0.1775					0.0000	0.0000		0.0000	0.0000	0.0000	0.0000	0.0000	0.0000	0.0000	0.0000
Consumer Products	1.3245					0.0000	0.0000		0.0000	0.0000	0.0000	0.0000	0.0000	0.0000	0.0000	0.0000
Landscaping	5.4000e-004	5.0000e-005	5.9200e-003	0.0000		2.0000e-005	2.0000e-005		2.0000e-005	2.0000e-005	0.0000	0.0116	0.0116	3.0000e-005	0.0000	0.0123
Total	**1.5026**	**5.0000e-005**	**5.9200e-003**	**0.0000**		**2.0000e-005**	**2.0000e-005**		**2.0000e-005**	**2.0000e-005**	**0.0000**	**0.0116**	**0.0116**	**3.0000e-005**	**0.0000**	**0.0123**

7.0 Water Detail

7.1 Mitigation Measures Water

Install Low Flow Bathroom Faucet

Install Low Flow Kitchen Faucet

Install Low Flow Toilet

Install Low Flow Shower

Use Water Efficient Irrigation System

	Total CO2	CH4	N2O	CO2e
Category	MT/yr			
Mitigated	69.4723	0.0782	0.0485	85.8667
Unmitigated	86.5263	0.0977	0.0606	107.0180

7.2 Water by Land Use

Unmitigated

	Indoor/Outdoor Use	Total CO2	CH4	N2O	CO2e
Land Use	Mgal	MT/yr			
Industrial Park	77.9521 / 3.81246	86.5263	0.0977	0.0606	107.0180
Parking Lot	0 / 0	0.0000	0.0000	0.0000	0.0000
Total		**86.5263**	**0.0977**	**0.0606**	**107.0180**

7.2 Water by Land Use

Mitigated

	Indoor/Outdoor Use	Total CO2	CH4	N2O	CO2e
Land Use	Mgal	MT/yr			
Industrial Park	62.3616 / 3.5799	69.4723	0.0782	0.0485	85.8667
Parking Lot	0 / 0	0.0000	0.0000	0.0000	0.0000
Total		**69.4723**	**0.0782**	**0.0485**	**85.8667**

8.0 Waste Detail

8.1 Mitigation Measures Waste

Category/Year

	Total CO2	CH4	N2O	CO2e
	MT/yr			
Mitigated	39.0311	2.3067	0.0000	96.6979
Unmitigated	39.0311	2.3067	0.0000	96.6979

8.2 Waste by Land Use

Unmitigated

	Waste Disposed	Total CO2	CH4	N2O	CO2e
Land Use	tons	MT/yr			
Industrial Park	192.28	39.0311	2.3067	0.0000	96.6979
Parking Lot	0	0.0000	0.0000	0.0000	0.0000
Total		**39.0311**	**2.3067**	**0.0000**	**96.6979**

Mitigated

	Waste Disposed	Total CO2	CH4	N2O	CO2e
Land Use	tons	MT/yr			
Industrial Park	192.28	39.0311	2.3067	0.0000	96.6979
Parking Lot	0	0.0000	0.0000	0.0000	0.0000
Total		**39.0311**	**2.3067**	**0.0000**	**96.6979**

9.0 Operational Offroad

Equipment Type	Number	Hours/Day	Days/Year	Horse Power	Load Factor	Fuel Type

10.0 Stationary Equipment

Fire Pumps and Emergency Generators

Equipment Type	Number	Hours/Day	Hours/Year	Horse Power	Load Factor	Fuel Type

Boilers

Equipment Type	Number	Heat Input/Day	Heat Input/Year	Boiler Rating	Fuel Type

User Defined Equipment

Equipment Type	Number

11.0 Vegetation

Clawiter Industrial Project - Building 4 - 2030

Bay Area AQMD Air District, Annual

1.0 Project Characteristics

1.1 Land Usage

Land Uses	Size	Metric	Lot Acreage	Floor Surface Area	Population
Industrial Park	273.53	1000sqft	6.28	273,526.00	0
Parking Lot	50.00	Space	0.45	20,000.00	0

1.2 Other Project Characteristics

Urbanization	Urban	**Wind Speed (m/s)**	2.2	**Precipitation Freq (Days)**	64
Climate Zone	5			**Operational Year**	2030
Utility Company	Pacific Gas & Electric Company				
CO2 Intensity (lb/MWhr)	298.65	**CH4 Intensity (lb/MWhr)**	0.014	**N2O Intensity (lb/MWhr)**	0.003

1.3 User Entered Comments & Non-Default Data

Project Characteristics - 60% RPS by 2030

Land Use - SF and parking for building 4

Construction Phase - Applicant specified 15-month schedule. Extended AC to overlap BC for mroe realistic conditions.

Off-road Equipment - Emissions from equipment calculated in model for Buildings 1 to 3

Off-road Equipment - Emissions from equipment calculated in model for Buildings 1 to 3

Off-road Equipment - Emissions from equipment calculated in model for Buildings 1 to 3

Off-road Equipment - Emissions from equipment calculated in model for Buildings 1 to 3

Off-road Equipment - Emissions from equipment calculated in model for Buildings 1 to 3

Off-road Equipment - Emissions from equipment calculated in model for Buildings 1 to 3

Trips and VMT - Emissions from trips calculated in model for Buildings 1 to 3 except for BC and AC trips

Demolition - Emissions from demolition calculated in model for Buildings 1 to 3

Grading - Emissions from soil export calculated in model for Buildings 1 to 3. Retained default acres of grading for fugitive dust emission estimate.

Architectural Coating - BAAQMD Regulation 8, Rule 3

Vehicle Trips - Mobile source emissions estimated in Buildings 1 to 3 run

Area Coating - BAAQMD Regulation 8, Rule 3

Energy Use - Electricity emissions calculated separately

Water And Wastewater - All wastewater treated at Hayward WWTP with aerobic processes. Additional one million gallons added to indoor water use for cooling purposes. Outdoor water use in model for Buildings 1 to 3

Solid Waste - 77% diversion rate for Hayward

Construction Off-road Equipment Mitigation - Hayward Municipal Code 10-8.32

Mobile Land Use Mitigation -

Water Mitigation - Applicant-specified sustainability features

Fleet Mix -

Energy Mitigation - Title 24 energy usage reduced by 30% for 2019 Standards

Table Name	Column Name	Default Value	New Value
tblArchitecturalCoating	EF_Parking	150.00	100.00
tblAreaCoating	Area_EF_Nonresidential_Exterior	150	100

tblConstructionPhase	NumDays	20.00	130.00
tblConstructionPhase	NumDays	230.00	265.00
tblConstructionPhase	NumDays	20.00	30.00
tblEnergyUse	LightingElect	3.58	0.00
tblEnergyUse	NT24E	4.80	0.00
tblEnergyUse	T24E	4.10	0.00
tblGrading	AcresOfGrading	0.00	15.00
tblLandUse	LandUseSquareFeet	273,530.00	273,526.00
tblOffRoadEquipment	UsageHours	6.00	0.00
tblOffRoadEquipment	UsageHours	8.00	0.00
tblOffRoadEquipment	UsageHours	7.00	0.00
tblOffRoadEquipment	UsageHours	8.00	0.00
tblOffRoadEquipment	UsageHours	8.00	0.00
tblOffRoadEquipment	UsageHours	8.00	0.00
tblOffRoadEquipment	UsageHours	8.00	0.00
tblOffRoadEquipment	UsageHours	8.00	0.00
tblOffRoadEquipment	UsageHours	8.00	0.00
tblOffRoadEquipment	UsageHours	8.00	0.00
tblOffRoadEquipment	UsageHours	8.00	0.00
tblOffRoadEquipment	UsageHours	8.00	0.00
tblOffRoadEquipment	UsageHours	8.00	0.00
tblOffRoadEquipment	UsageHours	7.00	0.00
tblOffRoadEquipment	UsageHours	8.00	0.00
tblOffRoadEquipment	UsageHours	8.00	0.00
tblOffRoadEquipment	UsageHours	8.00	0.00
tblProjectCharacteristics	CH4IntensityFactor	0.029	0.014

tblProjectCharacteristics	CO2IntensityFactor	641.35	298.65
tblProjectCharacteristics	N2OIntensityFactor	0.006	0.003
tblSolidWaste	SolidWasteGenerationRate	339.18	78.01
tblTripsAndVMT	WorkerTripNumber	15.00	0.00
tblTripsAndVMT	WorkerTripNumber	18.00	0.00
tblTripsAndVMT	WorkerTripNumber	15.00	0.00
tblTripsAndVMT	WorkerTripNumber	15.00	0.00
tblVehicleTrips	ST_TR	2.49	0.00
tblVehicleTrips	SU_TR	0.73	0.00
tblVehicleTrips	WD_TR	6.83	0.00
tblWater	AerobicPercent	87.46	100.00
tblWater	AnaerobicandFacultativeLagoonsPercent	2.21	0.00
tblWater	IndoorWaterUseRate	63,253,812.50	64,253,812.50
tblWater	SepticTankPercent	10.33	0.00

2.0 Emissions Summary

2.1 Overall Construction

Unmitigated Construction

	ROG	NOx	CO	SO2	Fugitive PM10	Exhaust PM10	PM10 Total	Fugitive PM2.5	Exhaust PM2.5	PM2.5 Total	Bio- CO2	NBio- CO2	Total CO2	CH4	N2O	CO2e
Year	tons/yr										MT/yr					
2021	0.7813	0.5318	0.4215	2.2800e-003	0.1438	1.7800e-003	0.1456	0.0377	1.6800e-003	0.0394	0.0000	213.1920	213.1920	8.1300e-003	0.0000	213.3952
2022	0.7222	0.1609	0.1353	7.5000e-004	0.0475	5.4000e-004	0.0480	0.0129	5.1000e-004	0.0134	0.0000	69.9208	69.9208	2.5100e-003	0.0000	69.9835
Maximum	**0.7813**	**0.5318**	**0.4215**	**2.2800e-003**	**0.1438**	**1.7800e-003**	**0.1456**	**0.0377**	**1.6800e-003**	**0.0394**	**0.0000**	**213.1920**	**213.1920**	**8.1300e-003**	**0.0000**	**213.3952**

Mitigated Construction

	ROG	NOx	CO	SO2	Fugitive PM10	Exhaust PM10	PM10 Total	Fugitive PM2.5	Exhaust PM2.5	PM2.5 Total	Bio- CO2	NBio- CO2	Total CO2	CH4	N2O	CO2e
Year	tons/yr										MT/yr					
2021	0.7813	0.5318	0.4215	2.2800e-003	0.1394	1.7800e-003	0.1412	0.0373	1.6800e-003	0.0389	0.0000	213.1920	213.1920	8.1300e-003	0.0000	213.3952
2022	0.7222	0.1609	0.1353	7.5000e-004	0.0475	5.4000e-004	0.0480	0.0129	5.1000e-004	0.0134	0.0000	69.9208	69.9208	2.5100e-003	0.0000	69.9835
Maximum	**0.7813**	**0.5318**	**0.4215**	**2.2800e-003**	**0.1394**	**1.7800e-003**	**0.1412**	**0.0373**	**1.6800e-003**	**0.0389**	**0.0000**	**213.1920**	**213.1920**	**8.1300e-003**	**0.0000**	**213.3952**

	ROG	**NOx**	**CO**	**SO2**	**Fugitive PM10**	**Exhaust PM10**	**PM10 Total**	**Fugitive PM2.5**	**Exhaust PM2.5**	**PM2.5 Total**	**Bio- CO2**	**NBio-CO2**	**Total CO2**	**CH4**	**N20**	**CO2e**
Percent Reduction	**0.00**	**0.00**	**0.00**	**0.00**	**2.28**	**0.00**	**2.26**	**0.93**	**0.00**	**0.89**	**0.00**	**0.00**	**0.00**	**0.00**	**0.00**	**0.00**

Quarter	Start Date	End Date	Maximum Unmitigated ROG + NOX (tons/quarter)	Maximum Mitigated ROG + NOX (tons/quarter)
1	**1-1-2021**	**3-31-2021**	0.0126	0.0126
2	**4-1-2021**	**6-30-2021**	0.1864	0.1864
3	**7-1-2021**	**9-30-2021**	0.1885	0.1885
4	**10-1-2021**	**12-31-2021**	0.9198	0.9198
5	**1-1-2022**	**3-31-2022**	0.8893	0.8893
		Highest	0.9198	0.9198

2.2 Overall Operational

Unmitigated Operational

	ROG	NOx	CO	SO2	Fugitive PM10	Exhaust PM10	PM10 Total	Fugitive PM2.5	Exhaust PM2.5	PM2.5 Total	Bio- CO2	NBio- CO2	Total CO2	CH4	N2O	CO2e
Category	tons/yr										MT/yr					
Area	1.1970	3.0000e-005	2.9600e-003	0.0000		1.0000e-005	1.0000e-005		1.0000e-005	1.0000e-005	0.0000	5.7800e-003	5.7800e-003	1.0000e-005	0.0000	6.1500e-003
Energy	0.0285	0.2592	0.2177	1.5600e-003		0.0197	0.0197		0.0197	0.0197	0.0000	283.0965	283.0965	5.4500e-003	5.1800e-003	284.7771
Mobile	0.0000	0.0000	0.0000	0.0000	0.0000	0.0000	0.0000	0.0000	0.0000	0.0000	0.0000	0.0000	0.0000	0.0000	0.0000	0.0000
Waste						0.0000	0.0000		0.0000	0.0000	15.8353	0.0000	15.8353	0.9358	0.0000	39.2314
Water						0.0000	0.0000		0.0000	0.0000	22.7331	47.0982	69.8313	0.0805	0.0499	86.7159
Total	**1.2255**	**0.2592**	**0.2207**	**1.5600e-003**	**0.0000**	**0.0197**	**0.0197**	**0.0000**	**0.0197**	**0.0197**	**38.5684**	**330.2005**	**368.7689**	**1.0218**	**0.0551**	**410.7305**

2.2 Overall Operational

Mitigated Operational

	ROG	NOx	CO	SO2	Fugitive PM10	Exhaust PM10	PM10 Total	Fugitive PM2.5	Exhaust PM2.5	PM2.5 Total	Bio- CO2	NBio- CO2	Total CO2	CH4	N2O	CO2e
Category	tons/yr										MT/yr					
Area	1.1970	3.0000e-005	2.9600e-003	0.0000		1.0000e-005	1.0000e-005		1.0000e-005	1.0000e-005	0.0000	5.7800e-003	5.7800e-003	1.0000e-005	0.0000	6.1500e-003
Energy	0.0204	0.1855	0.1558	1.1100e-003		0.0141	0.0141		0.0141	0.0141	0.0000	202.8747	202.8747	3.9100e-003	3.7100e-003	204.0786
Mobile	0.0000	0.0000	0.0000	0.0000	0.0000	0.0000	0.0000	0.0000	0.0000	0.0000	0.0000	0.0000	0.0000	0.0000	0.0000	0.0000
Waste						0.0000	0.0000		0.0000	0.0000	15.8353	0.0000	15.8353	0.9358	0.0000	39.2314
Water						0.0000	0.0000		0.0000	0.0000	18.1865	37.6786	55.8651	0.0644	0.0399	69.3727
Total	**1.2174**	**0.1855**	**0.1588**	**1.1100e-003**	**0.0000**	**0.0141**	**0.0141**	**0.0000**	**0.0141**	**0.0141**	**34.0218**	**240.5591**	**274.5809**	**1.0041**	**0.0436**	**312.6888**

	ROG	**NOx**	**CO**	**SO2**	**Fugitive PM10**	**Exhaust PM10**	**PM10 Total**	**Fugitive PM2.5**	**Exhaust PM2.5**	**PM2.5 Total**	**Bio- CO2**	**NBio-CO2**	**Total CO2**	**CH4**	**N20**	**CO2e**
Percent Reduction	**0.66**	**28.43**	**28.05**	**28.85**	**0.00**	**28.41**	**28.41**	**0.00**	**28.41**	**28.41**	**11.79**	**27.15**	**25.54**	**1.73**	**20.78**	**23.87**

3.0 Construction Detail

Construction Phase

Phase Number	Phase Name	Phase Type	Start Date	End Date	Num Days Week	Num Days	Phase Description
1	Demolition	Demolition	1/1/2021	1/28/2021	5	20	
2	Site Preparation	Site Preparation	1/29/2021	2/11/2021	5	10	
3	Grading	Grading	2/12/2021	3/25/2021	5	30	
4	Building Construction	Building Construction	3/26/2021	3/31/2022	5	265	
5	Architectural Coating	Architectural Coating	10/1/2021	3/31/2022	5	130	
6	Paving	Paving	3/4/2022	3/31/2022	5	20	

Acres of Grading (Site Preparation Phase): 0

Acres of Grading (Grading Phase): 15

Acres of Paving: 0.45

Residential Indoor: 0; Residential Outdoor: 0; Non-Residential Indoor: 410,289; Non-Residential Outdoor: 136,763; Striped Parking Area: 1,200 (Architectural Coating – sqft)

<u>OffRoad Equipment</u>

Clawiter Industrial Project - Building 4 - 2030 - Bay Area AQMD Air District, Annual

Phase Name	Offroad Equipment Type	Amount	Usage Hours	Horse Power	Load Factor
Demolition	Concrete/Industrial Saws	1	0.00	81	0.73
Demolition	Excavators	3	0.00	158	0.38
Demolition	Rubber Tired Dozers	2	0.00	247	0.40
Site Preparation	Rubber Tired Dozers	3	0.00	247	0.40
Site Preparation	Tractors/Loaders/Backhoes	4	0.00	97	0.37
Grading	Excavators	1	0.00	158	0.38
Grading	Graders	1	0.00	187	0.41
Grading	Rubber Tired Dozers	1	0.00	247	0.40
Grading	Tractors/Loaders/Backhoes	3	0.00	97	0.37
Building Construction	Cranes	1	0.00	231	0.29
Building Construction	Forklifts	3	0.00	89	0.20
Building Construction	Generator Sets	1	0.00	84	0.74
Building Construction	Tractors/Loaders/Backhoes	3	0.00	97	0.37
Building Construction	Welders	1	0.00	46	0.45
Architectural Coating	Air Compressors	1	0.00	78	0.48
Paving	Pavers	2	0.00	130	0.42
Paving	Paving Equipment	2	0.00	132	0.36
Paving	Rollers	2	0.00	80	0.38

Trips and VMT

Phase Name	Offroad Equipment Count	Worker Trip Number	Vendor Trip Number	Hauling Trip Number	Worker Trip Length	Vendor Trip Length	Hauling Trip Length	Worker Vehicle Class	Vendor Vehicle Class	Hauling Vehicle Class
Demolition	6	0.00	0.00	0.00	10.80	7.30	20.00	LD_Mix	HDT_Mix	HHDT
Site Preparation	7	0.00	0.00	0.00	10.80	7.30	20.00	LD_Mix	HDT_Mix	HHDT
Grading	6	0.00	0.00	0.00	10.80	7.30	20.00	LD_Mix	HDT_Mix	HHDT
Building Construction	9	123.00	48.00	0.00	10.80	7.30	20.00	LD_Mix	HDT_Mix	HHDT
Architectural Coating	1	25.00	0.00	0.00	10.80	7.30	20.00	LD_Mix	HDT_Mix	HHDT
Paving	6	0.00	0.00	0.00	10.80	7.30	20.00	LD_Mix	HDT_Mix	HHDT

3.1 Mitigation Measures Construction

Water Exposed Area

3.2 Demolition - 2021

Unmitigated Construction On-Site

	ROG	NOx	CO	SO2	Fugitive PM10	Exhaust PM10	PM10 Total	Fugitive PM2.5	Exhaust PM2.5	PM2.5 Total	Bio- CO2	NBio- CO2	Total CO2	CH4	N2O	CO2e
Category	tons/yr										MT/yr					
Fugitive Dust					0.0000	0.0000	0.0000	0.0000	0.0000	0.0000	0.0000	0.0000	0.0000	0.0000	0.0000	0.0000
Off-Road	0.0000	0.0000	0.0000	0.0000		0.0000	0.0000		0.0000	0.0000	0.0000	0.0000	0.0000	0.0000	0.0000	0.0000
Total	**0.0000**	**0.0000**	**0.0000**	**0.0000**	**0.0000**	**0.0000**	**0.0000**	**0.0000**	**0.0000**	**0.0000**	**0.0000**	**0.0000**	**0.0000**	**0.0000**	**0.0000**	**0.0000**

3.2 Demolition - 2021

Unmitigated Construction Off-Site

	ROG	NOx	CO	SO2	Fugitive PM10	Exhaust PM10	PM10 Total	Fugitive PM2.5	Exhaust PM2.5	PM2.5 Total	Bio- CO2	NBio- CO2	Total CO2	CH4	N2O	CO2e
Category	tons/yr										MT/yr					
Hauling	0.0000	0.0000	0.0000	0.0000	0.0000	0.0000	0.0000	0.0000	0.0000	0.0000	0.0000	0.0000	0.0000	0.0000	0.0000	0.0000
Vendor	0.0000	0.0000	0.0000	0.0000	0.0000	0.0000	0.0000	0.0000	0.0000	0.0000	0.0000	0.0000	0.0000	0.0000	0.0000	0.0000
Worker	0.0000	0.0000	0.0000	0.0000	0.0000	0.0000	0.0000	0.0000	0.0000	0.0000	0.0000	0.0000	0.0000	0.0000	0.0000	0.0000
Total	**0.0000**	**0.0000**	**0.0000**	**0.0000**	**0.0000**	**0.0000**	**0.0000**	**0.0000**	**0.0000**	**0.0000**	**0.0000**	**0.0000**	**0.0000**	**0.0000**	**0.0000**	**0.0000**

Mitigated Construction On-Site

	ROG	NOx	CO	SO2	Fugitive PM10	Exhaust PM10	PM10 Total	Fugitive PM2.5	Exhaust PM2.5	PM2.5 Total	Bio- CO2	NBio- CO2	Total CO2	CH4	N2O	CO2e
Category	tons/yr										MT/yr					
Fugitive Dust					0.0000	0.0000	0.0000	0.0000	0.0000	0.0000	0.0000	0.0000	0.0000	0.0000	0.0000	0.0000
Off-Road	0.0000	0.0000	0.0000	0.0000		0.0000	0.0000		0.0000	0.0000	0.0000	0.0000	0.0000	0.0000	0.0000	0.0000
Total	**0.0000**	**0.0000**	**0.0000**	**0.0000**	**0.0000**	**0.0000**	**0.0000**	**0.0000**	**0.0000**	**0.0000**	**0.0000**	**0.0000**	**0.0000**	**0.0000**	**0.0000**	**0.0000**

3.2 Demolition - 2021

Mitigated Construction Off-Site

	ROG	NOx	CO	SO2	Fugitive PM10	Exhaust PM10	PM10 Total	Fugitive PM2.5	Exhaust PM2.5	PM2.5 Total	Bio- CO2	NBio- CO2	Total CO2	CH4	N2O	CO2e
Category	tons/yr										MT/yr					
Hauling	0.0000	0.0000	0.0000	0.0000	0.0000	0.0000	0.0000	0.0000	0.0000	0.0000	0.0000	0.0000	0.0000	0.0000	0.0000	0.0000
Vendor	0.0000	0.0000	0.0000	0.0000	0.0000	0.0000	0.0000	0.0000	0.0000	0.0000	0.0000	0.0000	0.0000	0.0000	0.0000	0.0000
Worker	0.0000	0.0000	0.0000	0.0000	0.0000	0.0000	0.0000	0.0000	0.0000	0.0000	0.0000	0.0000	0.0000	0.0000	0.0000	0.0000
Total	**0.0000**	**0.0000**	**0.0000**	**0.0000**	**0.0000**	**0.0000**	**0.0000**	**0.0000**	**0.0000**	**0.0000**	**0.0000**	**0.0000**	**0.0000**	**0.0000**	**0.0000**	**0.0000**

3.3 Site Preparation - 2021

Unmitigated Construction On-Site

	ROG	NOx	CO	SO2	Fugitive PM10	Exhaust PM10	PM10 Total	Fugitive PM2.5	Exhaust PM2.5	PM2.5 Total	Bio- CO2	NBio- CO2	Total CO2	CH4	N2O	CO2e
Category	tons/yr										MT/yr					
Fugitive Dust					0.0000	0.0000	0.0000	0.0000	0.0000	0.0000	0.0000	0.0000	0.0000	0.0000	0.0000	0.0000
Off-Road	0.0000	0.0000	0.0000	0.0000		0.0000	0.0000		0.0000	0.0000	0.0000	0.0000	0.0000	0.0000	0.0000	0.0000
Total	**0.0000**	**0.0000**	**0.0000**	**0.0000**	**0.0000**	**0.0000**	**0.0000**	**0.0000**	**0.0000**	**0.0000**	**0.0000**	**0.0000**	**0.0000**	**0.0000**	**0.0000**	**0.0000**

3.3 Site Preparation - 2021

Unmitigated Construction Off-Site

	ROG	NOx	CO	SO2	Fugitive PM10	Exhaust PM10	PM10 Total	Fugitive PM2.5	Exhaust PM2.5	PM2.5 Total	Bio- CO2	NBio- CO2	Total CO2	CH4	N2O	CO2e
Category	tons/yr										MT/yr					
Hauling	0.0000	0.0000	0.0000	0.0000	0.0000	0.0000	0.0000	0.0000	0.0000	0.0000	0.0000	0.0000	0.0000	0.0000	0.0000	0.0000
Vendor	0.0000	0.0000	0.0000	0.0000	0.0000	0.0000	0.0000	0.0000	0.0000	0.0000	0.0000	0.0000	0.0000	0.0000	0.0000	0.0000
Worker	0.0000	0.0000	0.0000	0.0000	0.0000	0.0000	0.0000	0.0000	0.0000	0.0000	0.0000	0.0000	0.0000	0.0000	0.0000	0.0000
Total	**0.0000**	**0.0000**	**0.0000**	**0.0000**	**0.0000**	**0.0000**	**0.0000**	**0.0000**	**0.0000**	**0.0000**	**0.0000**	**0.0000**	**0.0000**	**0.0000**	**0.0000**	**0.0000**

Mitigated Construction On-Site

	ROG	NOx	CO	SO2	Fugitive PM10	Exhaust PM10	PM10 Total	Fugitive PM2.5	Exhaust PM2.5	PM2.5 Total	Bio- CO2	NBio- CO2	Total CO2	CH4	N2O	CO2e
Category	tons/yr										MT/yr					
Fugitive Dust					0.0000	0.0000	0.0000	0.0000	0.0000	0.0000	0.0000	0.0000	0.0000	0.0000	0.0000	0.0000
Off-Road	0.0000	0.0000	0.0000	0.0000		0.0000	0.0000		0.0000	0.0000	0.0000	0.0000	0.0000	0.0000	0.0000	0.0000
Total	**0.0000**	**0.0000**	**0.0000**	**0.0000**	**0.0000**	**0.0000**	**0.0000**	**0.0000**	**0.0000**	**0.0000**	**0.0000**	**0.0000**	**0.0000**	**0.0000**	**0.0000**	**0.0000**

3.3 Site Preparation - 2021

Mitigated Construction Off-Site

	ROG	NOx	CO	SO2	Fugitive PM10	Exhaust PM10	PM10 Total	Fugitive PM2.5	Exhaust PM2.5	PM2.5 Total	Bio- CO2	NBio- CO2	Total CO2	CH4	N2O	CO2e
Category	tons/yr										MT/yr					
Hauling	0.0000	0.0000	0.0000	0.0000	0.0000	0.0000	0.0000	0.0000	0.0000	0.0000	0.0000	0.0000	0.0000	0.0000	0.0000	0.0000
Vendor	0.0000	0.0000	0.0000	0.0000	0.0000	0.0000	0.0000	0.0000	0.0000	0.0000	0.0000	0.0000	0.0000	0.0000	0.0000	0.0000
Worker	0.0000	0.0000	0.0000	0.0000	0.0000	0.0000	0.0000	0.0000	0.0000	0.0000	0.0000	0.0000	0.0000	0.0000	0.0000	0.0000
Total	**0.0000**	**0.0000**	**0.0000**	**0.0000**	**0.0000**	**0.0000**	**0.0000**	**0.0000**	**0.0000**	**0.0000**	**0.0000**	**0.0000**	**0.0000**	**0.0000**	**0.0000**	**0.0000**

3.4 Grading - 2021

Unmitigated Construction On-Site

	ROG	NOx	CO	SO2	Fugitive PM10	Exhaust PM10	PM10 Total	Fugitive PM2.5	Exhaust PM2.5	PM2.5 Total	Bio- CO2	NBio- CO2	Total CO2	CH4	N2O	CO2e
Category	tons/yr										MT/yr					
Fugitive Dust					7.9500e-003	0.0000	7.9500e-003	8.6000e-004	0.0000	8.6000e-004	0.0000	0.0000	0.0000	0.0000	0.0000	0.0000
Off-Road	0.0000	0.0000	0.0000	0.0000		0.0000	0.0000		0.0000	0.0000	0.0000	0.0000	0.0000	0.0000	0.0000	0.0000
Total	**0.0000**	**0.0000**	**0.0000**	**0.0000**	**7.9500e-003**	**0.0000**	**7.9500e-003**	**8.6000e-004**	**0.0000**	**8.6000e-004**	**0.0000**	**0.0000**	**0.0000**	**0.0000**	**0.0000**	**0.0000**

3.4 Grading - 2021

Unmitigated Construction Off-Site

	ROG	NOx	CO	SO2	Fugitive PM10	Exhaust PM10	PM10 Total	Fugitive PM2.5	Exhaust PM2.5	PM2.5 Total	Bio- CO2	NBio- CO2	Total CO2	CH4	N2O	CO2e
Category	tons/yr										MT/yr					
Hauling	0.0000	0.0000	0.0000	0.0000	0.0000	0.0000	0.0000	0.0000	0.0000	0.0000	0.0000	0.0000	0.0000	0.0000	0.0000	0.0000
Vendor	0.0000	0.0000	0.0000	0.0000	0.0000	0.0000	0.0000	0.0000	0.0000	0.0000	0.0000	0.0000	0.0000	0.0000	0.0000	0.0000
Worker	0.0000	0.0000	0.0000	0.0000	0.0000	0.0000	0.0000	0.0000	0.0000	0.0000	0.0000	0.0000	0.0000	0.0000	0.0000	0.0000
Total	**0.0000**	**0.0000**	**0.0000**	**0.0000**	**0.0000**	**0.0000**	**0.0000**	**0.0000**	**0.0000**	**0.0000**	**0.0000**	**0.0000**	**0.0000**	**0.0000**	**0.0000**	**0.0000**

Mitigated Construction On-Site

	ROG	NOx	CO	SO2	Fugitive PM10	Exhaust PM10	PM10 Total	Fugitive PM2.5	Exhaust PM2.5	PM2.5 Total	Bio- CO2	NBio- CO2	Total CO2	CH4	N2O	CO2e
Category	tons/yr										MT/yr					
Fugitive Dust					3.5800e-003	0.0000	3.5800e-003	3.9000e-004	0.0000	3.9000e-004	0.0000	0.0000	0.0000	0.0000	0.0000	0.0000
Off-Road	0.0000	0.0000	0.0000	0.0000		0.0000	0.0000		0.0000	0.0000	0.0000	0.0000	0.0000	0.0000	0.0000	0.0000
Total	**0.0000**	**0.0000**	**0.0000**	**0.0000**	**3.5800e-003**	**0.0000**	**3.5800e-003**	**3.9000e-004**	**0.0000**	**3.9000e-004**	**0.0000**	**0.0000**	**0.0000**	**0.0000**	**0.0000**	**0.0000**

3.4 Grading - 2021

Mitigated Construction Off-Site

	ROG	NOx	CO	SO2	Fugitive PM10	Exhaust PM10	PM10 Total	Fugitive PM2.5	Exhaust PM2.5	PM2.5 Total	Bio- CO2	NBio- CO2	Total CO2	CH4	N2O	CO2e
Category	tons/yr										MT/yr					
Hauling	0.0000	0.0000	0.0000	0.0000	0.0000	0.0000	0.0000	0.0000	0.0000	0.0000	0.0000	0.0000	0.0000	0.0000	0.0000	0.0000
Vendor	0.0000	0.0000	0.0000	0.0000	0.0000	0.0000	0.0000	0.0000	0.0000	0.0000	0.0000	0.0000	0.0000	0.0000	0.0000	0.0000
Worker	0.0000	0.0000	0.0000	0.0000	0.0000	0.0000	0.0000	0.0000	0.0000	0.0000	0.0000	0.0000	0.0000	0.0000	0.0000	0.0000
Total	**0.0000**	**0.0000**	**0.0000**	**0.0000**	**0.0000**	**0.0000**	**0.0000**	**0.0000**	**0.0000**	**0.0000**	**0.0000**	**0.0000**	**0.0000**	**0.0000**	**0.0000**	**0.0000**

3.5 Building Construction - 2021

Unmitigated Construction On-Site

	ROG	NOx	CO	SO2	Fugitive PM10	Exhaust PM10	PM10 Total	Fugitive PM2.5	Exhaust PM2.5	PM2.5 Total	Bio- CO2	NBio- CO2	Total CO2	CH4	N2O	CO2e
Category	tons/yr										MT/yr					
Off-Road	0.0000	0.0000	0.0000	0.0000		0.0000	0.0000		0.0000	0.0000	0.0000	0.0000	0.0000	0.0000	0.0000	0.0000
Total	**0.0000**	**0.0000**	**0.0000**	**0.0000**		**0.0000**	**0.0000**		**0.0000**	**0.0000**	**0.0000**	**0.0000**	**0.0000**	**0.0000**	**0.0000**	**0.0000**

3.5 Building Construction - 2021

Unmitigated Construction Off-Site

	ROG	NOx	CO	SO2	Fugitive PM10	Exhaust PM10	PM10 Total	Fugitive PM2.5	Exhaust PM2.5	PM2.5 Total	Bio- CO2	NBio- CO2	Total CO2	CH4	N2O	CO2e
Category	tons/yr										MT/yr					
Hauling	0.0000	0.0000	0.0000	0.0000	0.0000	0.0000	0.0000	0.0000	0.0000	0.0000	0.0000	0.0000	0.0000	0.0000	0.0000	0.0000
Vendor	0.0153	0.5039	0.1258	1.3000e-003	0.0316	1.1000e-003	0.0327	9.1500e-003	1.0500e-003	0.0102	0.0000	125.1075	125.1075	6.1500e-003	0.0000	125.2613
Worker	0.0379	0.0262	0.2773	9.1000e-004	0.0977	6.4000e-004	0.0983	0.0260	5.9000e-004	0.0266	0.0000	82.5736	82.5736	1.8500e-003	0.0000	82.6199
Total	**0.0533**	**0.5300**	**0.4030**	**2.2100e-003**	**0.1293**	**1.7400e-003**	**0.1311**	**0.0351**	**1.6400e-003**	**0.0368**	**0.0000**	**207.6811**	**207.6811**	**8.0000e-003**	**0.0000**	**207.8812**

Mitigated Construction On-Site

	ROG	NOx	CO	SO2	Fugitive PM10	Exhaust PM10	PM10 Total	Fugitive PM2.5	Exhaust PM2.5	PM2.5 Total	Bio- CO2	NBio- CO2	Total CO2	CH4	N2O	CO2e
Category	tons/yr										MT/yr					
Off-Road	0.0000	0.0000	0.0000	0.0000		0.0000	0.0000		0.0000	0.0000	0.0000	0.0000	0.0000	0.0000	0.0000	0.0000
Total	**0.0000**	**0.0000**	**0.0000**	**0.0000**		**0.0000**	**0.0000**		**0.0000**	**0.0000**	**0.0000**	**0.0000**	**0.0000**	**0.0000**	**0.0000**	**0.0000**

3.5 Building Construction - 2021

Mitigated Construction Off-Site

	ROG	NOx	CO	SO2	Fugitive PM10	Exhaust PM10	PM10 Total	Fugitive PM2.5	Exhaust PM2.5	PM2.5 Total	Bio- CO2	NBio- CO2	Total CO2	CH4	N2O	CO2e
Category	tons/yr										MT/yr					
Hauling	0.0000	0.0000	0.0000	0.0000	0.0000	0.0000	0.0000	0.0000	0.0000	0.0000	0.0000	0.0000	0.0000	0.0000	0.0000	0.0000
Vendor	0.0153	0.5039	0.1258	1.3000e-003	0.0316	1.1000e-003	0.0327	9.1500e-003	1.0500e-003	0.0102	0.0000	125.1075	125.1075	6.1500e-003	0.0000	125.2613
Worker	0.0379	0.0262	0.2773	9.1000e-004	0.0977	6.4000e-004	0.0983	0.0260	5.9000e-004	0.0266	0.0000	82.5736	82.5736	1.8500e-003	0.0000	82.6199
Total	**0.0533**	**0.5300**	**0.4030**	**2.2100e-003**	**0.1293**	**1.7400e-003**	**0.1311**	**0.0351**	**1.6400e-003**	**0.0368**	**0.0000**	**207.6811**	**207.6811**	**8.0000e-003**	**0.0000**	**207.8812**

3.5 Building Construction - 2022

Unmitigated Construction On-Site

	ROG	NOx	CO	SO2	Fugitive PM10	Exhaust PM10	PM10 Total	Fugitive PM2.5	Exhaust PM2.5	PM2.5 Total	Bio- CO2	NBio- CO2	Total CO2	CH4	N2O	CO2e
Category	tons/yr										MT/yr					
Off-Road	0.0000	0.0000	0.0000	0.0000		0.0000	0.0000		0.0000	0.0000	0.0000	0.0000	0.0000	0.0000	0.0000	0.0000
Total	**0.0000**	**0.0000**	**0.0000**	**0.0000**		**0.0000**	**0.0000**		**0.0000**	**0.0000**	**0.0000**	**0.0000**	**0.0000**	**0.0000**	**0.0000**	**0.0000**

3.5 Building Construction - 2022

Unmitigated Construction Off-Site

	ROG	NOx	CO	SO2	Fugitive PM10	Exhaust PM10	PM10 Total	Fugitive PM2.5	Exhaust PM2.5	PM2.5 Total	Bio- CO2	NBio- CO2	Total CO2	CH4	N2O	CO2e
Category	tons/yr										MT/yr					
Hauling	0.0000	0.0000	0.0000	0.0000	0.0000	0.0000	0.0000	0.0000	0.0000	0.0000	0.0000	0.0000	0.0000	0.0000	0.0000	0.0000
Vendor	4.5500e-003	0.1519	0.0377	4.1000e-004	0.0101	3.0000e-004	0.0104	2.9100e-003	2.9000e-004	3.2000e-003	0.0000	39.4446	39.4446	1.8700e-003	0.0000	39.4914
Worker	0.0113	7.4700e-003	0.0811	2.8000e-004	0.0311	2.0000e-004	0.0313	8.2700e-003	1.8000e-004	8.4600e-003	0.0000	25.3282	25.3282	5.3000e-004	0.0000	25.3414
Total	**0.0158**	**0.1594**	**0.1188**	**6.9000e-004**	**0.0412**	**5.0000e-004**	**0.0417**	**0.0112**	**4.7000e-004**	**0.0117**	**0.0000**	**64.7728**	**64.7728**	**2.4000e-003**	**0.0000**	**64.8328**

Mitigated Construction On-Site

	ROG	NOx	CO	SO2	Fugitive PM10	Exhaust PM10	PM10 Total	Fugitive PM2.5	Exhaust PM2.5	PM2.5 Total	Bio- CO2	NBio- CO2	Total CO2	CH4	N2O	CO2e
Category	tons/yr										MT/yr					
Off-Road	0.0000	0.0000	0.0000	0.0000		0.0000	0.0000		0.0000	0.0000	0.0000	0.0000	0.0000	0.0000	0.0000	0.0000
Total	**0.0000**	**0.0000**	**0.0000**	**0.0000**		**0.0000**	**0.0000**		**0.0000**	**0.0000**	**0.0000**	**0.0000**	**0.0000**	**0.0000**	**0.0000**	**0.0000**

3.5 Building Construction - 2022

Mitigated Construction Off-Site

	ROG	NOx	CO	SO2	Fugitive PM10	Exhaust PM10	PM10 Total	Fugitive PM2.5	Exhaust PM2.5	PM2.5 Total	Bio- CO2	NBio- CO2	Total CO2	CH4	N2O	CO2e
Category	tons/yr										MT/yr					
Hauling	0.0000	0.0000	0.0000	0.0000	0.0000	0.0000	0.0000	0.0000	0.0000	0.0000	0.0000	0.0000	0.0000	0.0000	0.0000	0.0000
Vendor	4.5500e-003	0.1519	0.0377	4.1000e-004	0.0101	3.0000e-004	0.0104	2.9100e-003	2.9000e-004	3.2000e-003	0.0000	39.4446	39.4446	1.8700e-003	0.0000	39.4914
Worker	0.0113	7.4700e-003	0.0811	2.8000e-004	0.0311	2.0000e-004	0.0313	8.2700e-003	1.8000e-004	8.4600e-003	0.0000	25.3282	25.3282	5.3000e-004	0.0000	25.3414
Total	**0.0158**	**0.1594**	**0.1188**	**6.9000e-004**	**0.0412**	**5.0000e-004**	**0.0417**	**0.0112**	**4.7000e-004**	**0.0117**	**0.0000**	**64.7728**	**64.7728**	**2.4000e-003**	**0.0000**	**64.8328**

3.6 Architectural Coating - 2021

Unmitigated Construction On-Site

	ROG	NOx	CO	SO2	Fugitive PM10	Exhaust PM10	PM10 Total	Fugitive PM2.5	Exhaust PM2.5	PM2.5 Total	Bio- CO2	NBio- CO2	Total CO2	CH4	N2O	CO2e
Category	tons/yr										MT/yr					
Archit. Coating	0.7255					0.0000	0.0000		0.0000	0.0000	0.0000	0.0000	0.0000	0.0000	0.0000	0.0000
Off-Road	0.0000	0.0000	0.0000	0.0000		0.0000	0.0000		0.0000	0.0000	0.0000	0.0000	0.0000	0.0000	0.0000	0.0000
Total	**0.7255**	**0.0000**	**0.0000**	**0.0000**		**0.0000**	**0.0000**		**0.0000**	**0.0000**	**0.0000**	**0.0000**	**0.0000**	**0.0000**	**0.0000**	**0.0000**

3.6 Architectural Coating - 2021

Unmitigated Construction Off-Site

	ROG	NOx	CO	SO2	Fugitive PM10	Exhaust PM10	PM10 Total	Fugitive PM2.5	Exhaust PM2.5	PM2.5 Total	Bio- CO2	NBio- CO2	Total CO2	CH4	N2O	CO2e
Category	tons/yr										MT/yr					
Hauling	0.0000	0.0000	0.0000	0.0000	0.0000	0.0000	0.0000	0.0000	0.0000	0.0000	0.0000	0.0000	0.0000	0.0000	0.0000	0.0000
Vendor	0.0000	0.0000	0.0000	0.0000	0.0000	0.0000	0.0000	0.0000	0.0000	0.0000	0.0000	0.0000	0.0000	0.0000	0.0000	0.0000
Worker	2.5300e-003	1.7500e-003	0.0185	6.0000e-005	6.5200e-003	4.0000e-005	6.5600e-003	1.7300e-003	4.0000e-005	1.7700e-003	0.0000	5.5109	5.5109	1.2000e-004	0.0000	5.5140
Total	**2.5300e-003**	**1.7500e-003**	**0.0185**	**6.0000e-005**	**6.5200e-003**	**4.0000e-005**	**6.5600e-003**	**1.7300e-003**	**4.0000e-005**	**1.7700e-003**	**0.0000**	**5.5109**	**5.5109**	**1.2000e-004**	**0.0000**	**5.5140**

Mitigated Construction On-Site

	ROG	NOx	CO	SO2	Fugitive PM10	Exhaust PM10	PM10 Total	Fugitive PM2.5	Exhaust PM2.5	PM2.5 Total	Bio- CO2	NBio- CO2	Total CO2	CH4	N2O	CO2e
Category	tons/yr										MT/yr					
Archit. Coating	0.7255					0.0000	0.0000		0.0000	0.0000	0.0000	0.0000	0.0000	0.0000	0.0000	0.0000
Off-Road	0.0000	0.0000	0.0000	0.0000		0.0000	0.0000		0.0000	0.0000	0.0000	0.0000	0.0000	0.0000	0.0000	0.0000
Total	**0.7255**	**0.0000**	**0.0000**	**0.0000**		**0.0000**	**0.0000**		**0.0000**	**0.0000**	**0.0000**	**0.0000**	**0.0000**	**0.0000**	**0.0000**	**0.0000**

3.6 Architectural Coating - 2021

Mitigated Construction Off-Site

	ROG	NOx	CO	SO2	Fugitive PM10	Exhaust PM10	PM10 Total	Fugitive PM2.5	Exhaust PM2.5	PM2.5 Total	Bio- CO2	NBio- CO2	Total CO2	CH4	N2O	CO2e
Category	tons/yr										MT/yr					
Hauling	0.0000	0.0000	0.0000	0.0000	0.0000	0.0000	0.0000	0.0000	0.0000	0.0000	0.0000	0.0000	0.0000	0.0000	0.0000	0.0000
Vendor	0.0000	0.0000	0.0000	0.0000	0.0000	0.0000	0.0000	0.0000	0.0000	0.0000	0.0000	0.0000	0.0000	0.0000	0.0000	0.0000
Worker	2.5300e-003	1.7500e-003	0.0185	6.0000e-005	6.5200e-003	4.0000e-005	6.5600e-003	1.7300e-003	4.0000e-005	1.7700e-003	0.0000	5.5109	5.5109	1.2000e-004	0.0000	5.5140
Total	**2.5300e-003**	**1.7500e-003**	**0.0185**	**6.0000e-005**	**6.5200e-003**	**4.0000e-005**	**6.5600e-003**	**1.7300e-003**	**4.0000e-005**	**1.7700e-003**	**0.0000**	**5.5109**	**5.5109**	**1.2000e-004**	**0.0000**	**5.5140**

3.6 Architectural Coating - 2022

Unmitigated Construction On-Site

	ROG	NOx	CO	SO2	Fugitive PM10	Exhaust PM10	PM10 Total	Fugitive PM2.5	Exhaust PM2.5	PM2.5 Total	Bio- CO2	NBio- CO2	Total CO2	CH4	N2O	CO2e
Category	tons/yr										MT/yr					
Archit. Coating	0.7035					0.0000	0.0000		0.0000	0.0000	0.0000	0.0000	0.0000	0.0000	0.0000	0.0000
Off-Road	0.0000	0.0000	0.0000	0.0000		0.0000	0.0000		0.0000	0.0000	0.0000	0.0000	0.0000	0.0000	0.0000	0.0000
Total	**0.7035**	**0.0000**	**0.0000**	**0.0000**		**0.0000**	**0.0000**		**0.0000**	**0.0000**	**0.0000**	**0.0000**	**0.0000**	**0.0000**	**0.0000**	**0.0000**

3.6 Architectural Coating - 2022

Unmitigated Construction Off-Site

	ROG	NOx	CO	SO2	Fugitive PM10	Exhaust PM10	PM10 Total	Fugitive PM2.5	Exhaust PM2.5	PM2.5 Total	Bio- CO2	NBio- CO2	Total CO2	CH4	N2O	CO2e
Category	tons/yr										MT/yr					
Hauling	0.0000	0.0000	0.0000	0.0000	0.0000	0.0000	0.0000	0.0000	0.0000	0.0000	0.0000	0.0000	0.0000	0.0000	0.0000	0.0000
Vendor	0.0000	0.0000	0.0000	0.0000	0.0000	0.0000	0.0000	0.0000	0.0000	0.0000	0.0000	0.0000	0.0000	0.0000	0.0000	0.0000
Worker	2.2900e-003	1.5200e-003	0.0165	6.0000e-005	6.3200e-003	4.0000e-005	6.3600e-003	1.6800e-003	4.0000e-005	1.7200e-003	0.0000	5.1480	5.1480	1.1000e-004	0.0000	5.1507
Total	**2.2900e-003**	**1.5200e-003**	**0.0165**	**6.0000e-005**	**6.3200e-003**	**4.0000e-005**	**6.3600e-003**	**1.6800e-003**	**4.0000e-005**	**1.7200e-003**	**0.0000**	**5.1480**	**5.1480**	**1.1000e-004**	**0.0000**	**5.1507**

Mitigated Construction On-Site

	ROG	NOx	CO	SO2	Fugitive PM10	Exhaust PM10	PM10 Total	Fugitive PM2.5	Exhaust PM2.5	PM2.5 Total	Bio- CO2	NBio- CO2	Total CO2	CH4	N2O	CO2e
Category	tons/yr										MT/yr					
Archit. Coating	0.7035					0.0000	0.0000		0.0000	0.0000	0.0000	0.0000	0.0000	0.0000	0.0000	0.0000
Off-Road	0.0000	0.0000	0.0000	0.0000		0.0000	0.0000		0.0000	0.0000	0.0000	0.0000	0.0000	0.0000	0.0000	0.0000
Total	**0.7035**	**0.0000**	**0.0000**	**0.0000**		**0.0000**	**0.0000**		**0.0000**	**0.0000**	**0.0000**	**0.0000**	**0.0000**	**0.0000**	**0.0000**	**0.0000**

3.6 Architectural Coating - 2022

Mitigated Construction Off-Site

	ROG	NOx	CO	SO2	Fugitive PM10	Exhaust PM10	PM10 Total	Fugitive PM2.5	Exhaust PM2.5	PM2.5 Total	Bio- CO2	NBio- CO2	Total CO2	CH4	N2O	CO2e
Category	tons/yr										MT/yr					
Hauling	0.0000	0.0000	0.0000	0.0000	0.0000	0.0000	0.0000	0.0000	0.0000	0.0000	0.0000	0.0000	0.0000	0.0000	0.0000	0.0000
Vendor	0.0000	0.0000	0.0000	0.0000	0.0000	0.0000	0.0000	0.0000	0.0000	0.0000	0.0000	0.0000	0.0000	0.0000	0.0000	0.0000
Worker	2.2900e-003	1.5200e-003	0.0165	6.0000e-005	6.3200e-003	4.0000e-005	6.3600e-003	1.6800e-003	4.0000e-005	1.7200e-003	0.0000	5.1480	5.1480	1.1000e-004	0.0000	5.1507
Total	**2.2900e-003**	**1.5200e-003**	**0.0165**	**6.0000e-005**	**6.3200e-003**	**4.0000e-005**	**6.3600e-003**	**1.6800e-003**	**4.0000e-005**	**1.7200e-003**	**0.0000**	**5.1480**	**5.1480**	**1.1000e-004**	**0.0000**	**5.1507**

3.7 Paving - 2022

Unmitigated Construction On-Site

	ROG	NOx	CO	SO2	Fugitive PM10	Exhaust PM10	PM10 Total	Fugitive PM2.5	Exhaust PM2.5	PM2.5 Total	Bio- CO2	NBio- CO2	Total CO2	CH4	N2O	CO2e
Category	tons/yr										MT/yr					
Off-Road	0.0000	0.0000	0.0000	0.0000		0.0000	0.0000		0.0000	0.0000	0.0000	0.0000	0.0000	0.0000	0.0000	0.0000
Paving	5.9000e-004					0.0000	0.0000		0.0000	0.0000	0.0000	0.0000	0.0000	0.0000	0.0000	0.0000
Total	**5.9000e-004**	**0.0000**	**0.0000**	**0.0000**		**0.0000**	**0.0000**		**0.0000**	**0.0000**	**0.0000**	**0.0000**	**0.0000**	**0.0000**	**0.0000**	**0.0000**

3.7 Paving - 2022

Unmitigated Construction Off-Site

	ROG	NOx	CO	SO2	Fugitive PM10	Exhaust PM10	PM10 Total	Fugitive PM2.5	Exhaust PM2.5	PM2.5 Total	Bio- CO2	NBio- CO2	Total CO2	CH4	N2O	CO2e
Category	tons/yr										MT/yr					
Hauling	0.0000	0.0000	0.0000	0.0000	0.0000	0.0000	0.0000	0.0000	0.0000	0.0000	0.0000	0.0000	0.0000	0.0000	0.0000	0.0000
Vendor	0.0000	0.0000	0.0000	0.0000	0.0000	0.0000	0.0000	0.0000	0.0000	0.0000	0.0000	0.0000	0.0000	0.0000	0.0000	0.0000
Worker	0.0000	0.0000	0.0000	0.0000	0.0000	0.0000	0.0000	0.0000	0.0000	0.0000	0.0000	0.0000	0.0000	0.0000	0.0000	0.0000
Total	**0.0000**	**0.0000**	**0.0000**	**0.0000**	**0.0000**	**0.0000**	**0.0000**	**0.0000**	**0.0000**	**0.0000**	**0.0000**	**0.0000**	**0.0000**	**0.0000**	**0.0000**	**0.0000**

Mitigated Construction On-Site

	ROG	NOx	CO	SO2	Fugitive PM10	Exhaust PM10	PM10 Total	Fugitive PM2.5	Exhaust PM2.5	PM2.5 Total	Bio- CO2	NBio- CO2	Total CO2	CH4	N2O	CO2e
Category	tons/yr										MT/yr					
Off-Road	0.0000	0.0000	0.0000	0.0000		0.0000	0.0000		0.0000	0.0000	0.0000	0.0000	0.0000	0.0000	0.0000	0.0000
Paving	5.9000e-004					0.0000	0.0000		0.0000	0.0000	0.0000	0.0000	0.0000	0.0000	0.0000	0.0000
Total	**5.9000e-004**	**0.0000**	**0.0000**	**0.0000**		**0.0000**	**0.0000**		**0.0000**	**0.0000**	**0.0000**	**0.0000**	**0.0000**	**0.0000**	**0.0000**	**0.0000**

3.7 Paving - 2022

Mitigated Construction Off-Site

	ROG	NOx	CO	SO2	Fugitive PM10	Exhaust PM10	PM10 Total	Fugitive PM2.5	Exhaust PM2.5	PM2.5 Total	Bio- CO2	NBio- CO2	Total CO2	CH4	N2O	CO2e
Category	tons/yr										MT/yr					
Hauling	0.0000	0.0000	0.0000	0.0000	0.0000	0.0000	0.0000	0.0000	0.0000	0.0000	0.0000	0.0000	0.0000	0.0000	0.0000	0.0000
Vendor	0.0000	0.0000	0.0000	0.0000	0.0000	0.0000	0.0000	0.0000	0.0000	0.0000	0.0000	0.0000	0.0000	0.0000	0.0000	0.0000
Worker	0.0000	0.0000	0.0000	0.0000	0.0000	0.0000	0.0000	0.0000	0.0000	0.0000	0.0000	0.0000	0.0000	0.0000	0.0000	0.0000
Total	**0.0000**	**0.0000**	**0.0000**	**0.0000**	**0.0000**	**0.0000**	**0.0000**	**0.0000**	**0.0000**	**0.0000**	**0.0000**	**0.0000**	**0.0000**	**0.0000**	**0.0000**	**0.0000**

4.0 Operational Detail - Mobile

4.1 Mitigation Measures Mobile

	ROG	NOx	CO	SO2	Fugitive PM10	Exhaust PM10	PM10 Total	Fugitive PM2.5	Exhaust PM2.5	PM2.5 Total	Bio- CO2	NBio- CO2	Total CO2	CH4	N2O	CO2e
Category	tons/yr										MT/yr					
Mitigated	0.0000	0.0000	0.0000	0.0000	0.0000	0.0000	0.0000	0.0000	0.0000	0.0000	0.0000	0.0000	0.0000	0.0000	0.0000	0.0000
Unmitigated	0.0000	0.0000	0.0000	0.0000	0.0000	0.0000	0.0000	0.0000	0.0000	0.0000	0.0000	0.0000	0.0000	0.0000	0.0000	0.0000

4.2 Trip Summary Information

	Average Daily Trip Rate			Unmitigated	Mitigated
Land Use	Weekday	Saturday	Sunday	Annual VMT	Annual VMT
Industrial Park	0.00	0.00	0.00		
Parking Lot	0.00	0.00	0.00		
Total	0.00	0.00	0.00		

4.3 Trip Type Information

	Miles			Trip %			Trip Purpose %		
Land Use	H-W or C-W	H-S or C-C	H-O or C-NW	H-W or C-W	H-S or C-C	H-O or C-NW	Primary	Diverted	Pass-by
Industrial Park	9.50	7.30	7.30	59.00	28.00	13.00	79	19	2
Parking Lot	9.50	7.30	7.30	0.00	0.00	0.00	0	0	0

4.4 Fleet Mix

Land Use	LDA	LDT1	LDT2	MDV	LHD1	LHD2	MHD	HHD	OBUS	UBUS	MCY	SBUS	MH
Industrial Park	0.585795	0.036515	0.193581	0.106455	0.012789	0.005274	0.019465	0.028415	0.002699	0.001789	0.005626	0.000921	0.000676
Parking Lot	0.585795	0.036515	0.193581	0.106455	0.012789	0.005274	0.019465	0.028415	0.002699	0.001789	0.005626	0.000921	0.000676

5.0 Energy Detail

Historical Energy Use: N

5.1 Mitigation Measures Energy

Exceed Title 24

	ROG	NOx	CO	SO2	Fugitive PM10	Exhaust PM10	PM10 Total	Fugitive PM2.5	Exhaust PM2.5	PM2.5 Total	Bio- CO2	NBio- CO2	Total CO2	CH4	N2O	CO2e
Category	tons/yr										MT/yr					
Electricity Mitigated						0.0000	0.0000		0.0000	0.0000	0.0000	0.9483	0.9483	4.0000e-005	1.0000e-005	0.9522
Electricity Unmitigated						0.0000	0.0000		0.0000	0.0000	0.0000	0.9483	0.9483	4.0000e-005	1.0000e-005	0.9522
NaturalGas Mitigated	0.0204	0.1855	0.1558	1.1100e-003		0.0141	0.0141		0.0141	0.0141	0.0000	201.9265	201.9265	3.8700e-003	3.7000e-003	203.1264
NaturalGas Unmitigated	0.0285	0.2592	0.2177	1.5600e-003		0.0197	0.0197		0.0197	0.0197	0.0000	282.1482	282.1482	5.4100e-003	5.1700e-003	283.8249

5.2 Energy by Land Use - NaturalGas

Unmitigated

	NaturalGas Use	ROG	NOx	CO	SO2	Fugitive PM10	Exhaust PM10	PM10 Total	Fugitive PM2.5	Exhaust PM2.5	PM2.5 Total	Bio- CO2	NBio- CO2	Total CO2	CH4	N2O	CO2e
Land Use	kBTU/yr	tons/yr										MT/yr					
Industrial Park	5.28726e+006	0.0285	0.2592	0.2177	1.5600e-003		0.0197	0.0197		0.0197	0.0197	0.0000	282.1482	282.1482	5.4100e-003	5.1700e-003	283.8249
Parking Lot	0	0.0000	0.0000	0.0000	0.0000		0.0000	0.0000		0.0000	0.0000	0.0000	0.0000	0.0000	0.0000	0.0000	0.0000
Total		**0.0285**	**0.2592**	**0.2177**	**1.5600e-003**		**0.0197**	**0.0197**		**0.0197**	**0.0197**	**0.0000**	**282.1482**	**282.1482**	**5.4100e-003**	**5.1700e-003**	**283.8249**

Mitigated

	NaturalGas Use	ROG	NOx	CO	SO2	Fugitive PM10	Exhaust PM10	PM10 Total	Fugitive PM2.5	Exhaust PM2.5	PM2.5 Total	Bio- CO2	NBio- CO2	Total CO2	CH4	N2O	CO2e
Land Use	kBTU/yr	tons/yr										MT/yr					
Industrial Park	3.78396e+006	0.0204	0.1855	0.1558	1.1100e-003		0.0141	0.0141		0.0141	0.0141	0.0000	201.9265	201.9265	3.8700e-003	3.7000e-003	203.1264
Parking Lot	0	0.0000	0.0000	0.0000	0.0000		0.0000	0.0000		0.0000	0.0000	0.0000	0.0000	0.0000	0.0000	0.0000	0.0000
Total		**0.0204**	**0.1855**	**0.1558**	**1.1100e-003**		**0.0141**	**0.0141**		**0.0141**	**0.0141**	**0.0000**	**201.9265**	**201.9265**	**3.8700e-003**	**3.7000e-003**	**203.1264**

5.3 Energy by Land Use - Electricity

Unmitigated

	Electricity Use	Total CO2	CH4	N2O	CO2e
Land Use	kWh/yr	MT/yr			
Industrial Park	0	0.0000	0.0000	0.0000	0.0000
Parking Lot	7000	0.9483	4.0000e-005	1.0000e-005	0.9522
Total		**0.9483**	**4.0000e-005**	**1.0000e-005**	**0.9522**

Mitigated

	Electricity Use	Total CO2	CH4	N2O	CO2e
Land Use	kWh/yr	MT/yr			
Industrial Park	0	0.0000	0.0000	0.0000	0.0000
Parking Lot	7000	0.9483	4.0000e-005	1.0000e-005	0.9522
Total		**0.9483**	**4.0000e-005**	**1.0000e-005**	**0.9522**

6.0 Area Detail

6.1 Mitigation Measures Area

	ROG	NOx	CO	SO2	Fugitive PM10	Exhaust PM10	PM10 Total	Fugitive PM2.5	Exhaust PM2.5	PM2.5 Total	Bio- CO2	NBio- CO2	Total CO2	CH4	N2O	CO2e
Category	tons/yr										MT/yr					
Mitigated	1.1970	3.0000e-005	2.9600e-003	0.0000		1.0000e-005	1.0000e-005		1.0000e-005	1.0000e-005	0.0000	5.7800e-003	5.7800e-003	1.0000e-005	0.0000	6.1500e-003
Unmitigated	1.1970	3.0000e-005	2.9600e-003	0.0000		1.0000e-005	1.0000e-005		1.0000e-005	1.0000e-005	0.0000	5.7800e-003	5.7800e-003	1.0000e-005	0.0000	6.1500e-003

6.2 Area by SubCategory

Unmitigated

	ROG	NOx	CO	SO2	Fugitive PM10	Exhaust PM10	PM10 Total	Fugitive PM2.5	Exhaust PM2.5	PM2.5 Total	Bio- CO2	NBio- CO2	Total CO2	CH4	N2O	CO2e
SubCategory	tons/yr										MT/yr					
Architectural Coating	0.1272					0.0000	0.0000		0.0000	0.0000	0.0000	0.0000	0.0000	0.0000	0.0000	0.0000
Consumer Products	1.0696					0.0000	0.0000		0.0000	0.0000	0.0000	0.0000	0.0000	0.0000	0.0000	0.0000
Landscaping	2.7000e-004	3.0000e-005	2.9600e-003	0.0000		1.0000e-005	1.0000e-005		1.0000e-005	1.0000e-005	0.0000	5.7800e-003	5.7800e-003	1.0000e-005	0.0000	6.1500e-003
Total	**1.1970**	**3.0000e-005**	**2.9600e-003**	**0.0000**		**1.0000e-005**	**1.0000e-005**		**1.0000e-005**	**1.0000e-005**	**0.0000**	**5.7800e-003**	**5.7800e-003**	**1.0000e-005**	**0.0000**	**6.1500e-003**

6.2 Area by SubCategory

Mitigated

	ROG	NOx	CO	SO2	Fugitive PM10	Exhaust PM10	PM10 Total	Fugitive PM2.5	Exhaust PM2.5	PM2.5 Total	Bio- CO2	NBio- CO2	Total CO2	CH4	N2O	CO2e
SubCategory	tons/yr										MT/yr					
Architectural Coating	0.1272					0.0000	0.0000		0.0000	0.0000	0.0000	0.0000	0.0000	0.0000	0.0000	0.0000
Consumer Products	1.0696					0.0000	0.0000		0.0000	0.0000	0.0000	0.0000	0.0000	0.0000	0.0000	0.0000
Landscaping	2.7000e-004	3.0000e-005	2.9600e-003	0.0000		1.0000e-005	1.0000e-005		1.0000e-005	1.0000e-005	0.0000	5.7800e-003	5.7800e-003	1.0000e-005	0.0000	6.1500e-003
Total	**1.1970**	**3.0000e-005**	**2.9600e-003**	**0.0000**		**1.0000e-005**	**1.0000e-005**		**1.0000e-005**	**1.0000e-005**	**0.0000**	**5.7800e-003**	**5.7800e-003**	**1.0000e-005**	**0.0000**	**6.1500e-003**

7.0 Water Detail

7.1 Mitigation Measures Water

Install Low Flow Bathroom Faucet

Install Low Flow Kitchen Faucet

Install Low Flow Toilet

Install Low Flow Shower

Use Water Efficient Irrigation System

	Total CO2	CH4	N2O	CO2e
Category	MT/yr			
Mitigated	55.8651	0.0644	0.0399	69.3727
Unmitigated	69.8313	0.0805	0.0499	86.7159

7.2 Water by Land Use

Unmitigated

	Indoor/Outdoor Use	Total CO2	CH4	N2O	CO2e
Land Use	Mgal	MT/yr			
Industrial Park	64.2538 / 0	69.8313	0.0805	0.0499	86.7159
Parking Lot	0 / 0	0.0000	0.0000	0.0000	0.0000
Total		**69.8313**	**0.0805**	**0.0499**	**86.7159**

7.2 Water by Land Use

Mitigated

	Indoor/Outdoor Use	Total CO2	CH4	N2O	CO2e
Land Use	Mgal	MT/yr			
Industrial Park	51.4031 / 0	55.8651	0.0644	0.0399	69.3727
Parking Lot	0 / 0	0.0000	0.0000	0.0000	0.0000
Total		**55.8651**	**0.0644**	**0.0399**	**69.3727**

8.0 Waste Detail

8.1 Mitigation Measures Waste

Category/Year

	Total CO2	CH4	N2O	CO2e
	MT/yr			
Mitigated	15.8353	0.9358	0.0000	39.2314
Unmitigated	15.8353	0.9358	0.0000	39.2314

8.2 Waste by Land Use

Unmitigated

	Waste Disposed	Total CO2	CH4	N2O	CO2e
Land Use	tons	MT/yr			
Industrial Park	78.01	15.8353	0.9358	0.0000	39.2314
Parking Lot	0	0.0000	0.0000	0.0000	0.0000
Total		**15.8353**	**0.9358**	**0.0000**	**39.2314**

Mitigated

	Waste Disposed	Total CO2	CH4	N2O	CO2e
Land Use	tons	MT/yr			
Industrial Park	78.01	15.8353	0.9358	0.0000	39.2314
Parking Lot	0	0.0000	0.0000	0.0000	0.0000
Total		**15.8353**	**0.9358**	**0.0000**	**39.2314**

9.0 Operational Offroad

Equipment Type	Number	Hours/Day	Days/Year	Horse Power	Load Factor	Fuel Type

10.0 Stationary Equipment

Fire Pumps and Emergency Generators

Equipment Type	Number	Hours/Day	Hours/Year	Horse Power	Load Factor	Fuel Type

Boilers

Equipment Type	Number	Heat Input/Day	Heat Input/Year	Boiler Rating	Fuel Type

User Defined Equipment

Equipment Type	Number

11.0 Vegetation

Clawiter Road Industrial Project - Building 4

Total Electricity Usage (MWH)
107,600.00

GHG Emission Calculations

	PG&E		CO2E Conversion Calculations	
	Energy Intensity Factor (lbs/MWh)	Emissions (lbs)	Total CO2E Emissions (lbs)	Total CO2E Emissions (MT)
CO2	298.65	32,134,740.00	32,134,740.00	14,576.06
CH4	0.01	1,506.40	42,179.20	19.13
N2O	0.003	322.80	96,194.40	43.63
			TOTAL GHG EMISSIONS FROM ELECTRICITY	**14,638.83**

Notes

- Energy Intensity Factors for PG&E based on CalEEMod defaults and RPS targets for 2030.
- CH4 conversion assumes 1 lb CH4 is equivalent to 28 lbs CO2E
- N2O conversion assumes 1 lb N2O is equivalent to 298 lbs CO2E

N2O Operational GHG Emission Mobile Calculations

Project Code & Title: 20-09879, Clawiter Road Industrial Project - Proposed Project

Vehicle Population Breakdown*	
5460005	Gasoline vehicles
271191	Diesel vehicles
95.3%	Gasoline vehicle %
4.7%	Diesel vehicle %

VMT per Vehicle Type	
4288917	Project VMT (CalEEMod output)
4085972	Gasoline vehicle VMT
202945	Diesel vehicle VMT

Gasoline Vehicles	
95.3%	Gasoline vehicle %
1.4284	Tons per year mobile NOX emissions (annual output in CalEEMod)
1.36	Gasoline vehicle tons per year NOX emissions
0.0759	Tons per year N2O emissions for gasoline vehicles**
0.0688	Metric tons per year N2O emissions for gasoline vehicles

Diesel Vehicles	
1.60	grams N2O per gallon of fuel for diesel vehicles**
22.99	Diesel average miles per gallon*
0.06961	grams per mile N2O for diesel vehicles
14126.8	grams per year N2O for diesel vehicles
0.0141268	Metric tons per year N2O emissions for diesel vehicles

CO2e Emissions from N2O	
0.0830	Metric tons per year from gasoline + diesel vehicles
298	GWP of N2O***
24.7	**CO2e emissions per year from N2O emissions from gasoline + diesel vehicles**

Sources
***Vehicle population source:** Source: EMFAC2017 (v1.0.2) Emissions Inventory Region Type: Air District Region: Bay Area AQMD Calendar Year: 2030 Season: Annual Vehicle Classification: EMFAC2011 Categories ****Methodology source:** EMFAC2017 Volume III - Technical Documentation https://www.arb.ca.gov/msei/emfac2011-faq.htm *****GWP source:** Intergovernmental Panel on Climate Change (IPCC). 2007. AR4 Climate Change 2007: The Physical Science Basis. Contrbution of Working Group I to the Fourth Assessment Report of the Intergovernmental Panel on Climate Change.

Clawiter Industrial Project - Existing Uses - 2030

Bay Area AQMD Air District, Annual

1.0 Project Characteristics

1.1 Land Usage

Land Uses	Size	Metric	Lot Acreage	Floor Surface Area	Population
Parking Lot	381.59	1000sqft	8.76	381,586.00	0

1.2 Other Project Characteristics

Urbanization	Urban	**Wind Speed (m/s)**	2.2	**Precipitation Freq (Days)**	64
Climate Zone	5			**Operational Year**	2030
Utility Company	Pacific Gas & Electric Company				
CO2 Intensity (lb/MWhr)	298.65	**CH4 Intensity (lb/MWhr)**	0.014	**N2O Intensity (lb/MWhr)**	0.003

1.3 User Entered Comments & Non-Default Data

Project Characteristics - 60% RPS by 2030

Land Use - Based on trip gen memo.

Construction Phase - No construction - existing uses

Off-road Equipment - No construction - existing uses

Off-road Equipment - No construction - existing uses

Off-road Equipment - No construction - existing uses

Off-road Equipment - No construction - existing uses

Off-road Equipment - No construction - existing uses

Off-road Equipment - No construction - existing uses

Trips and VMT - No construction - existing uses

Grading -

Architectural Coating - No construction - existing uses

Vehicle Trips - Based on trip gen memo from Kittleson

Area Coating - Vehicle storage yard - no painting of parking lines

Energy Use - Vehicle storage yard - no lighting

Table Name	Column Name	Default Value	New Value
tblArchitecturalCoating	ConstArea_Parking	22,895.00	0.00
tblAreaCoating	Area_Parking	22895	0
tblEnergyUse	LightingElect	0.35	0.00
tblLandUse	LandUseSquareFeet	381,590.00	381,586.00
tblOffRoadEquipment	UsageHours	6.00	0.00
tblOffRoadEquipment	UsageHours	8.00	0.00
tblOffRoadEquipment	UsageHours	7.00	0.00
tblOffRoadEquipment	UsageHours	8.00	0.00
tblOffRoadEquipment	UsageHours	8.00	0.00
tblOffRoadEquipment	UsageHours	8.00	0.00

tblOffRoadEquipment	UsageHours	8.00	0.00
tblOffRoadEquipment	UsageHours	8.00	0.00
tblOffRoadEquipment	UsageHours	8.00	0.00
tblOffRoadEquipment	UsageHours	8.00	0.00
tblOffRoadEquipment	UsageHours	8.00	0.00
tblOffRoadEquipment	UsageHours	7.00	0.00
tblOffRoadEquipment	UsageHours	8.00	0.00
tblOffRoadEquipment	UsageHours	8.00	0.00
tblOffRoadEquipment	UsageHours	8.00	0.00
tblProjectCharacteristics	CH4IntensityFactor	0.029	0.014
tblProjectCharacteristics	CO2IntensityFactor	641.35	298.65
tblProjectCharacteristics	N2OIntensityFactor	0.006	0.003
tblTripsAndVMT	VendorTripNumber	63.00	0.00
tblTripsAndVMT	WorkerTripNumber	15.00	0.00
tblTripsAndVMT	WorkerTripNumber	18.00	0.00
tblTripsAndVMT	WorkerTripNumber	15.00	0.00
tblTripsAndVMT	WorkerTripNumber	160.00	0.00
tblTripsAndVMT	WorkerTripNumber	32.00	0.00
tblVehicleTrips	CW_TTP	0.00	100.00
tblVehicleTrips	PR_TP	0.00	100.00
tblVehicleTrips	WD_TR	0.00	1.74

2.0 Emissions Summary

2.1 Overall Construction

Unmitigated Construction

	ROG	NOx	CO	SO2	Fugitive PM10	Exhaust PM10	PM10 Total	Fugitive PM2.5	Exhaust PM2.5	PM2.5 Total	Bio- CO2	NBio- CO2	Total CO2	CH4	N2O	CO2e
Year	tons/yr										MT/yr					
2020	0.0000	0.0000	0.0000	0.0000	0.0000	0.0000	0.0000	0.0000	0.0000	0.0000	0.0000	0.0000	0.0000	0.0000	0.0000	0.0000
2021	0.0000	0.0000	0.0000	0.0000	0.0000	0.0000	0.0000	0.0000	0.0000	0.0000	0.0000	0.0000	0.0000	0.0000	0.0000	0.0000
Maximum	**0.0000**	**0.0000**	**0.0000**	**0.0000**	**0.0000**	**0.0000**	**0.0000**	**0.0000**	**0.0000**	**0.0000**	**0.0000**	**0.0000**	**0.0000**	**0.0000**	**0.0000**	**0.0000**

Mitigated Construction

	ROG	NOx	CO	SO2	Fugitive PM10	Exhaust PM10	PM10 Total	Fugitive PM2.5	Exhaust PM2.5	PM2.5 Total	Bio- CO2	NBio- CO2	Total CO2	CH4	N2O	CO2e
Year	tons/yr										MT/yr					
2020	0.0000	0.0000	0.0000	0.0000	0.0000	0.0000	0.0000	0.0000	0.0000	0.0000	0.0000	0.0000	0.0000	0.0000	0.0000	0.0000
2021	0.0000	0.0000	0.0000	0.0000	0.0000	0.0000	0.0000	0.0000	0.0000	0.0000	0.0000	0.0000	0.0000	0.0000	0.0000	0.0000
Maximum	**0.0000**	**0.0000**	**0.0000**	**0.0000**	**0.0000**	**0.0000**	**0.0000**	**0.0000**	**0.0000**	**0.0000**	**0.0000**	**0.0000**	**0.0000**	**0.0000**	**0.0000**	**0.0000**

	ROG	**NOx**	**CO**	**SO2**	**Fugitive PM10**	**Exhaust PM10**	**PM10 Total**	**Fugitive PM2.5**	**Exhaust PM2.5**	**PM2.5 Total**	**Bio- CO2**	**NBio-CO2**	**Total CO2**	**CH4**	**N20**	**CO2e**
Percent Reduction	**0.00**	**0.00**	**0.00**	**0.00**	**0.00**	**0.00**	**0.00**	**0.00**	**0.00**	**0.00**	**0.00**	**0.00**	**0.00**	**0.00**	**0.00**	**0.00**

Quarter	Start Date	End Date	Maximum Unmitigated ROG + NOX (tons/quarter)	Maximum Mitigated ROG + NOX (tons/quarter)
		Highest		

2.2 Overall Operational

Unmitigated Operational

	ROG	NOx	CO	SO2	Fugitive PM10	Exhaust PM10	PM10 Total	Fugitive PM2.5	Exhaust PM2.5	PM2.5 Total	Bio- CO2	NBio- CO2	Total CO2	CH4	N2O	CO2e
Category	tons/yr										MT/yr					
Area	0.0250	3.0000e-005	3.4900e-003	0.0000		1.0000e-005	1.0000e-005		1.0000e-005	1.0000e-005	0.0000	6.8200e-003	6.8200e-003	2.0000e-005	0.0000	7.2600e-003
Energy	0.0000	0.0000	0.0000	0.0000		0.0000	0.0000		0.0000	0.0000	0.0000	0.0000	0.0000	0.0000	0.0000	0.0000
Mobile	0.0903	0.4707	1.1587	5.5500e-003	0.6099	3.6000e-003	0.6135	0.1636	3.3500e-003	0.1670	0.0000	512.1576	512.1576	0.0152	0.0000	512.5376
Waste						0.0000	0.0000		0.0000	0.0000	0.0000	0.0000	0.0000	0.0000	0.0000	0.0000
Water						0.0000	0.0000		0.0000	0.0000	0.0000	0.0000	0.0000	0.0000	0.0000	0.0000
Total	**0.1153**	**0.4707**	**1.1622**	**5.5500e-003**	**0.6099**	**3.6100e-003**	**0.6135**	**0.1636**	**3.3600e-003**	**0.1670**	**0.0000**	**512.1644**	**512.1644**	**0.0152**	**0.0000**	**512.5449**

2.2 Overall Operational

Mitigated Operational

	ROG	NOx	CO	SO2	Fugitive PM10	Exhaust PM10	PM10 Total	Fugitive PM2.5	Exhaust PM2.5	PM2.5 Total	Bio- CO2	NBio- CO2	Total CO2	CH4	N2O	CO2e
Category	tons/yr										MT/yr					
Area	0.0250	3.0000e-005	3.4900e-003	0.0000		1.0000e-005	1.0000e-005		1.0000e-005	1.0000e-005	0.0000	6.8200e-003	6.8200e-003	2.0000e-005	0.0000	7.2600e-003
Energy	0.0000	0.0000	0.0000	0.0000		0.0000	0.0000		0.0000	0.0000	0.0000	0.0000	0.0000	0.0000	0.0000	0.0000
Mobile	0.0903	0.4707	1.1587	5.5500e-003	0.6099	3.6000e-003	0.6135	0.1636	3.3500e-003	0.1670	0.0000	512.1576	512.1576	0.0152	0.0000	512.5376
Waste						0.0000	0.0000		0.0000	0.0000	0.0000	0.0000	0.0000	0.0000	0.0000	0.0000
Water						0.0000	0.0000		0.0000	0.0000	0.0000	0.0000	0.0000	0.0000	0.0000	0.0000
Total	**0.1153**	**0.4707**	**1.1622**	**5.5500e-003**	**0.6099**	**3.6100e-003**	**0.6135**	**0.1636**	**3.3600e-003**	**0.1670**	**0.0000**	**512.1644**	**512.1644**	**0.0152**	**0.0000**	**512.5449**

	ROG	NOx	CO	SO2	Fugitive PM10	Exhaust PM10	PM10 Total	Fugitive PM2.5	Exhaust PM2.5	PM2.5 Total	Bio- CO2	NBio-CO2	Total CO2	CH4	N20	CO2e
Percent Reduction	**0.00**	**0.00**	**0.00**	**0.00**	**0.00**	**0.00**	**0.00**	**0.00**	**0.00**	**0.00**	**0.00**	**0.00**	**0.00**	**0.00**	**0.00**	**0.00**

3.0 Construction Detail

Construction Phase

Phase Number	Phase Name	Phase Type	Start Date	End Date	Num Days Week	Num Days	Phase Description
1	Demolition	Demolition	9/29/2020	10/26/2020	5	20	
2	Site Preparation	Site Preparation	10/27/2020	11/9/2020	5	10	
3	Grading	Grading	11/10/2020	12/7/2020	5	20	
4	Building Construction	Building Construction	12/8/2020	10/25/2021	5	230	
5	Architectural Coating	Architectural Coating	11/23/2021	12/20/2021	5	20	

Acres of Grading (Site Preparation Phase): 0

Acres of Grading (Grading Phase): 0

Acres of Paving: 8.76

Residential Indoor: 0; Residential Outdoor: 0; Non-Residential Indoor: 0; Non-Residential Outdoor: 0; Striped Parking Area: 0 (Architectural Coating – sqft)

OffRoad Equipment

Phase Name	Offroad Equipment Type	Amount	Usage Hours	Horse Power	Load Factor
Demolition	Concrete/Industrial Saws	1	0.00	81	0.73
Demolition	Excavators	3	0.00	158	0.38
Demolition	Rubber Tired Dozers	2	0.00	247	0.40
Site Preparation	Rubber Tired Dozers	3	0.00	247	0.40
Site Preparation	Tractors/Loaders/Backhoes	4	0.00	97	0.37
Grading	Excavators	1	0.00	158	0.38
Grading	Graders	1	0.00	187	0.41
Grading	Rubber Tired Dozers	1	0.00	247	0.40
Grading	Tractors/Loaders/Backhoes	3	0.00	97	0.37
Building Construction	Cranes	1	0.00	231	0.29
Building Construction	Forklifts	3	0.00	89	0.20
Building Construction	Generator Sets	1	0.00	84	0.74
Building Construction	Tractors/Loaders/Backhoes	3	0.00	97	0.37
Building Construction	Welders	1	0.00	46	0.45
Architectural Coating	Air Compressors	1	0.00	78	0.48

Trips and VMT

Phase Name	Offroad Equipment Count	Worker Trip Number	Vendor Trip Number	Hauling Trip Number	Worker Trip Length	Vendor Trip Length	Hauling Trip Length	Worker Vehicle Class	Vendor Vehicle Class	Hauling Vehicle Class
Demolition	6	0.00	0.00	0.00	10.80	7.30	20.00	LD_Mix	HDT_Mix	HHDT
Site Preparation	7	0.00	0.00	0.00	10.80	7.30	20.00	LD_Mix	HDT_Mix	HHDT
Grading	6	0.00	0.00	0.00	10.80	7.30	20.00	LD_Mix	HDT_Mix	HHDT
Building Construction	9	0.00	0.00	0.00	10.80	7.30	20.00	LD_Mix	HDT_Mix	HHDT
Architectural Coating	1	0.00	0.00	0.00	10.80	7.30	20.00	LD_Mix	HDT_Mix	HHDT

3.1 Mitigation Measures Construction

3.2 Demolition - 2020

Unmitigated Construction On-Site

	ROG	NOx	CO	SO2	Fugitive PM10	Exhaust PM10	PM10 Total	Fugitive PM2.5	Exhaust PM2.5	PM2.5 Total	Bio- CO2	NBio- CO2	Total CO2	CH4	N2O	CO2e
Category	tons/yr										MT/yr					
Off-Road	0.0000	0.0000	0.0000	0.0000		0.0000	0.0000		0.0000	0.0000	0.0000	0.0000	0.0000	0.0000	0.0000	0.0000
Total	**0.0000**	**0.0000**	**0.0000**	**0.0000**		**0.0000**	**0.0000**		**0.0000**	**0.0000**	**0.0000**	**0.0000**	**0.0000**	**0.0000**	**0.0000**	**0.0000**

Unmitigated Construction Off-Site

	ROG	NOx	CO	SO2	Fugitive PM10	Exhaust PM10	PM10 Total	Fugitive PM2.5	Exhaust PM2.5	PM2.5 Total	Bio- CO2	NBio- CO2	Total CO2	CH4	N2O	CO2e
Category	tons/yr										MT/yr					
Hauling	0.0000	0.0000	0.0000	0.0000	0.0000	0.0000	0.0000	0.0000	0.0000	0.0000	0.0000	0.0000	0.0000	0.0000	0.0000	0.0000
Vendor	0.0000	0.0000	0.0000	0.0000	0.0000	0.0000	0.0000	0.0000	0.0000	0.0000	0.0000	0.0000	0.0000	0.0000	0.0000	0.0000
Worker	0.0000	0.0000	0.0000	0.0000	0.0000	0.0000	0.0000	0.0000	0.0000	0.0000	0.0000	0.0000	0.0000	0.0000	0.0000	0.0000
Total	**0.0000**	**0.0000**	**0.0000**	**0.0000**	**0.0000**	**0.0000**	**0.0000**	**0.0000**	**0.0000**	**0.0000**	**0.0000**	**0.0000**	**0.0000**	**0.0000**	**0.0000**	**0.0000**

3.2 Demolition - 2020

Mitigated Construction On-Site

	ROG	NOx	CO	SO2	Fugitive PM10	Exhaust PM10	PM10 Total	Fugitive PM2.5	Exhaust PM2.5	PM2.5 Total	Bio- CO2	NBio- CO2	Total CO2	CH4	N2O	CO2e
Category	tons/yr										MT/yr					
Off-Road	0.0000	0.0000	0.0000	0.0000		0.0000	0.0000		0.0000	0.0000	0.0000	0.0000	0.0000	0.0000	0.0000	0.0000
Total	**0.0000**	**0.0000**	**0.0000**	**0.0000**		**0.0000**	**0.0000**		**0.0000**	**0.0000**	**0.0000**	**0.0000**	**0.0000**	**0.0000**	**0.0000**	**0.0000**

Mitigated Construction Off-Site

	ROG	NOx	CO	SO2	Fugitive PM10	Exhaust PM10	PM10 Total	Fugitive PM2.5	Exhaust PM2.5	PM2.5 Total	Bio- CO2	NBio- CO2	Total CO2	CH4	N2O	CO2e
Category	tons/yr										MT/yr					
Hauling	0.0000	0.0000	0.0000	0.0000	0.0000	0.0000	0.0000	0.0000	0.0000	0.0000	0.0000	0.0000	0.0000	0.0000	0.0000	0.0000
Vendor	0.0000	0.0000	0.0000	0.0000	0.0000	0.0000	0.0000	0.0000	0.0000	0.0000	0.0000	0.0000	0.0000	0.0000	0.0000	0.0000
Worker	0.0000	0.0000	0.0000	0.0000	0.0000	0.0000	0.0000	0.0000	0.0000	0.0000	0.0000	0.0000	0.0000	0.0000	0.0000	0.0000
Total	**0.0000**	**0.0000**	**0.0000**	**0.0000**	**0.0000**	**0.0000**	**0.0000**	**0.0000**	**0.0000**	**0.0000**	**0.0000**	**0.0000**	**0.0000**	**0.0000**	**0.0000**	**0.0000**

3.3 Site Preparation - 2020

Unmitigated Construction On-Site

	ROG	NOx	CO	SO2	Fugitive PM10	Exhaust PM10	PM10 Total	Fugitive PM2.5	Exhaust PM2.5	PM2.5 Total	Bio- CO2	NBio- CO2	Total CO2	CH4	N2O	CO2e
Category	tons/yr										MT/yr					
Fugitive Dust					0.0000	0.0000	0.0000	0.0000	0.0000	0.0000	0.0000	0.0000	0.0000	0.0000	0.0000	0.0000
Off-Road	0.0000	0.0000	0.0000	0.0000		0.0000	0.0000		0.0000	0.0000	0.0000	0.0000	0.0000	0.0000	0.0000	0.0000
Total	**0.0000**	**0.0000**	**0.0000**	**0.0000**	**0.0000**	**0.0000**	**0.0000**	**0.0000**	**0.0000**	**0.0000**	**0.0000**	**0.0000**	**0.0000**	**0.0000**	**0.0000**	**0.0000**

Unmitigated Construction Off-Site

	ROG	NOx	CO	SO2	Fugitive PM10	Exhaust PM10	PM10 Total	Fugitive PM2.5	Exhaust PM2.5	PM2.5 Total	Bio- CO2	NBio- CO2	Total CO2	CH4	N2O	CO2e
Category	tons/yr										MT/yr					
Hauling	0.0000	0.0000	0.0000	0.0000	0.0000	0.0000	0.0000	0.0000	0.0000	0.0000	0.0000	0.0000	0.0000	0.0000	0.0000	0.0000
Vendor	0.0000	0.0000	0.0000	0.0000	0.0000	0.0000	0.0000	0.0000	0.0000	0.0000	0.0000	0.0000	0.0000	0.0000	0.0000	0.0000
Worker	0.0000	0.0000	0.0000	0.0000	0.0000	0.0000	0.0000	0.0000	0.0000	0.0000	0.0000	0.0000	0.0000	0.0000	0.0000	0.0000
Total	**0.0000**	**0.0000**	**0.0000**	**0.0000**	**0.0000**	**0.0000**	**0.0000**	**0.0000**	**0.0000**	**0.0000**	**0.0000**	**0.0000**	**0.0000**	**0.0000**	**0.0000**	**0.0000**

3.3 Site Preparation - 2020

Mitigated Construction On-Site

	ROG	NOx	CO	SO2	Fugitive PM10	Exhaust PM10	PM10 Total	Fugitive PM2.5	Exhaust PM2.5	PM2.5 Total	Bio- CO2	NBio- CO2	Total CO2	CH4	N2O	CO2e
Category	tons/yr										MT/yr					
Fugitive Dust					0.0000	0.0000	0.0000	0.0000	0.0000	0.0000	0.0000	0.0000	0.0000	0.0000	0.0000	0.0000
Off-Road	0.0000	0.0000	0.0000	0.0000		0.0000	0.0000		0.0000	0.0000	0.0000	0.0000	0.0000	0.0000	0.0000	0.0000
Total	**0.0000**	**0.0000**	**0.0000**	**0.0000**	**0.0000**	**0.0000**	**0.0000**	**0.0000**	**0.0000**	**0.0000**	**0.0000**	**0.0000**	**0.0000**	**0.0000**	**0.0000**	**0.0000**

Mitigated Construction Off-Site

	ROG	NOx	CO	SO2	Fugitive PM10	Exhaust PM10	PM10 Total	Fugitive PM2.5	Exhaust PM2.5	PM2.5 Total	Bio- CO2	NBio- CO2	Total CO2	CH4	N2O	CO2e
Category	tons/yr										MT/yr					
Hauling	0.0000	0.0000	0.0000	0.0000	0.0000	0.0000	0.0000	0.0000	0.0000	0.0000	0.0000	0.0000	0.0000	0.0000	0.0000	0.0000
Vendor	0.0000	0.0000	0.0000	0.0000	0.0000	0.0000	0.0000	0.0000	0.0000	0.0000	0.0000	0.0000	0.0000	0.0000	0.0000	0.0000
Worker	0.0000	0.0000	0.0000	0.0000	0.0000	0.0000	0.0000	0.0000	0.0000	0.0000	0.0000	0.0000	0.0000	0.0000	0.0000	0.0000
Total	**0.0000**	**0.0000**	**0.0000**	**0.0000**	**0.0000**	**0.0000**	**0.0000**	**0.0000**	**0.0000**	**0.0000**	**0.0000**	**0.0000**	**0.0000**	**0.0000**	**0.0000**	**0.0000**

3.4 Grading - 2020

Unmitigated Construction On-Site

	ROG	NOx	CO	SO2	Fugitive PM10	Exhaust PM10	PM10 Total	Fugitive PM2.5	Exhaust PM2.5	PM2.5 Total	Bio- CO2	NBio- CO2	Total CO2	CH4	N2O	CO2e
Category	tons/yr										MT/yr					
Fugitive Dust					0.0000	0.0000	0.0000	0.0000	0.0000	0.0000	0.0000	0.0000	0.0000	0.0000	0.0000	0.0000
Off-Road	0.0000	0.0000	0.0000	0.0000		0.0000	0.0000		0.0000	0.0000	0.0000	0.0000	0.0000	0.0000	0.0000	0.0000
Total	**0.0000**	**0.0000**	**0.0000**	**0.0000**	**0.0000**	**0.0000**	**0.0000**	**0.0000**	**0.0000**	**0.0000**	**0.0000**	**0.0000**	**0.0000**	**0.0000**	**0.0000**	**0.0000**

Unmitigated Construction Off-Site

	ROG	NOx	CO	SO2	Fugitive PM10	Exhaust PM10	PM10 Total	Fugitive PM2.5	Exhaust PM2.5	PM2.5 Total	Bio- CO2	NBio- CO2	Total CO2	CH4	N2O	CO2e
Category	tons/yr										MT/yr					
Hauling	0.0000	0.0000	0.0000	0.0000	0.0000	0.0000	0.0000	0.0000	0.0000	0.0000	0.0000	0.0000	0.0000	0.0000	0.0000	0.0000
Vendor	0.0000	0.0000	0.0000	0.0000	0.0000	0.0000	0.0000	0.0000	0.0000	0.0000	0.0000	0.0000	0.0000	0.0000	0.0000	0.0000
Worker	0.0000	0.0000	0.0000	0.0000	0.0000	0.0000	0.0000	0.0000	0.0000	0.0000	0.0000	0.0000	0.0000	0.0000	0.0000	0.0000
Total	**0.0000**	**0.0000**	**0.0000**	**0.0000**	**0.0000**	**0.0000**	**0.0000**	**0.0000**	**0.0000**	**0.0000**	**0.0000**	**0.0000**	**0.0000**	**0.0000**	**0.0000**	**0.0000**

3.4 Grading - 2020

Mitigated Construction On-Site

	ROG	NOx	CO	SO2	Fugitive PM10	Exhaust PM10	PM10 Total	Fugitive PM2.5	Exhaust PM2.5	PM2.5 Total	Bio- CO2	NBio- CO2	Total CO2	CH4	N2O	CO2e
Category	tons/yr										MT/yr					
Fugitive Dust					0.0000	0.0000	0.0000	0.0000	0.0000	0.0000	0.0000	0.0000	0.0000	0.0000	0.0000	0.0000
Off-Road	0.0000	0.0000	0.0000	0.0000		0.0000	0.0000		0.0000	0.0000	0.0000	0.0000	0.0000	0.0000	0.0000	0.0000
Total	**0.0000**	**0.0000**	**0.0000**	**0.0000**	**0.0000**	**0.0000**	**0.0000**	**0.0000**	**0.0000**	**0.0000**	**0.0000**	**0.0000**	**0.0000**	**0.0000**	**0.0000**	**0.0000**

Mitigated Construction Off-Site

	ROG	NOx	CO	SO2	Fugitive PM10	Exhaust PM10	PM10 Total	Fugitive PM2.5	Exhaust PM2.5	PM2.5 Total	Bio- CO2	NBio- CO2	Total CO2	CH4	N2O	CO2e
Category	tons/yr										MT/yr					
Hauling	0.0000	0.0000	0.0000	0.0000	0.0000	0.0000	0.0000	0.0000	0.0000	0.0000	0.0000	0.0000	0.0000	0.0000	0.0000	0.0000
Vendor	0.0000	0.0000	0.0000	0.0000	0.0000	0.0000	0.0000	0.0000	0.0000	0.0000	0.0000	0.0000	0.0000	0.0000	0.0000	0.0000
Worker	0.0000	0.0000	0.0000	0.0000	0.0000	0.0000	0.0000	0.0000	0.0000	0.0000	0.0000	0.0000	0.0000	0.0000	0.0000	0.0000
Total	**0.0000**	**0.0000**	**0.0000**	**0.0000**	**0.0000**	**0.0000**	**0.0000**	**0.0000**	**0.0000**	**0.0000**	**0.0000**	**0.0000**	**0.0000**	**0.0000**	**0.0000**	**0.0000**

3.5 Building Construction - 2020

Unmitigated Construction On-Site

	ROG	NOx	CO	SO2	Fugitive PM10	Exhaust PM10	PM10 Total	Fugitive PM2.5	Exhaust PM2.5	PM2.5 Total	Bio- CO2	NBio- CO2	Total CO2	CH4	N2O	CO2e
Category	tons/yr										MT/yr					
Off-Road	0.0000	0.0000	0.0000	0.0000		0.0000	0.0000		0.0000	0.0000	0.0000	0.0000	0.0000	0.0000	0.0000	0.0000
Total	**0.0000**	**0.0000**	**0.0000**	**0.0000**		**0.0000**	**0.0000**		**0.0000**	**0.0000**	**0.0000**	**0.0000**	**0.0000**	**0.0000**	**0.0000**	**0.0000**

Unmitigated Construction Off-Site

	ROG	NOx	CO	SO2	Fugitive PM10	Exhaust PM10	PM10 Total	Fugitive PM2.5	Exhaust PM2.5	PM2.5 Total	Bio- CO2	NBio- CO2	Total CO2	CH4	N2O	CO2e
Category	tons/yr										MT/yr					
Hauling	0.0000	0.0000	0.0000	0.0000	0.0000	0.0000	0.0000	0.0000	0.0000	0.0000	0.0000	0.0000	0.0000	0.0000	0.0000	0.0000
Vendor	0.0000	0.0000	0.0000	0.0000	0.0000	0.0000	0.0000	0.0000	0.0000	0.0000	0.0000	0.0000	0.0000	0.0000	0.0000	0.0000
Worker	0.0000	0.0000	0.0000	0.0000	0.0000	0.0000	0.0000	0.0000	0.0000	0.0000	0.0000	0.0000	0.0000	0.0000	0.0000	0.0000
Total	**0.0000**	**0.0000**	**0.0000**	**0.0000**	**0.0000**	**0.0000**	**0.0000**	**0.0000**	**0.0000**	**0.0000**	**0.0000**	**0.0000**	**0.0000**	**0.0000**	**0.0000**	**0.0000**

3.5 Building Construction - 2020

Mitigated Construction On-Site

	ROG	NOx	CO	SO2	Fugitive PM10	Exhaust PM10	PM10 Total	Fugitive PM2.5	Exhaust PM2.5	PM2.5 Total	Bio- CO2	NBio- CO2	Total CO2	CH4	N2O	CO2e
Category	tons/yr										MT/yr					
Off-Road	0.0000	0.0000	0.0000	0.0000		0.0000	0.0000		0.0000	0.0000	0.0000	0.0000	0.0000	0.0000	0.0000	0.0000
Total	**0.0000**	**0.0000**	**0.0000**	**0.0000**		**0.0000**	**0.0000**		**0.0000**	**0.0000**	**0.0000**	**0.0000**	**0.0000**	**0.0000**	**0.0000**	**0.0000**

Mitigated Construction Off-Site

	ROG	NOx	CO	SO2	Fugitive PM10	Exhaust PM10	PM10 Total	Fugitive PM2.5	Exhaust PM2.5	PM2.5 Total	Bio- CO2	NBio- CO2	Total CO2	CH4	N2O	CO2e
Category	tons/yr										MT/yr					
Hauling	0.0000	0.0000	0.0000	0.0000	0.0000	0.0000	0.0000	0.0000	0.0000	0.0000	0.0000	0.0000	0.0000	0.0000	0.0000	0.0000
Vendor	0.0000	0.0000	0.0000	0.0000	0.0000	0.0000	0.0000	0.0000	0.0000	0.0000	0.0000	0.0000	0.0000	0.0000	0.0000	0.0000
Worker	0.0000	0.0000	0.0000	0.0000	0.0000	0.0000	0.0000	0.0000	0.0000	0.0000	0.0000	0.0000	0.0000	0.0000	0.0000	0.0000
Total	**0.0000**	**0.0000**	**0.0000**	**0.0000**	**0.0000**	**0.0000**	**0.0000**	**0.0000**	**0.0000**	**0.0000**	**0.0000**	**0.0000**	**0.0000**	**0.0000**	**0.0000**	**0.0000**

3.5 Building Construction - 2021

Unmitigated Construction On-Site

	ROG	NOx	CO	SO2	Fugitive PM10	Exhaust PM10	PM10 Total	Fugitive PM2.5	Exhaust PM2.5	PM2.5 Total	Bio- CO2	NBio- CO2	Total CO2	CH4	N2O	CO2e
Category	tons/yr										MT/yr					
Off-Road	0.0000	0.0000	0.0000	0.0000		0.0000	0.0000		0.0000	0.0000	0.0000	0.0000	0.0000	0.0000	0.0000	0.0000
Total	**0.0000**	**0.0000**	**0.0000**	**0.0000**		**0.0000**	**0.0000**		**0.0000**	**0.0000**	**0.0000**	**0.0000**	**0.0000**	**0.0000**	**0.0000**	**0.0000**

Unmitigated Construction Off-Site

	ROG	NOx	CO	SO2	Fugitive PM10	Exhaust PM10	PM10 Total	Fugitive PM2.5	Exhaust PM2.5	PM2.5 Total	Bio- CO2	NBio- CO2	Total CO2	CH4	N2O	CO2e
Category	tons/yr										MT/yr					
Hauling	0.0000	0.0000	0.0000	0.0000	0.0000	0.0000	0.0000	0.0000	0.0000	0.0000	0.0000	0.0000	0.0000	0.0000	0.0000	0.0000
Vendor	0.0000	0.0000	0.0000	0.0000	0.0000	0.0000	0.0000	0.0000	0.0000	0.0000	0.0000	0.0000	0.0000	0.0000	0.0000	0.0000
Worker	0.0000	0.0000	0.0000	0.0000	0.0000	0.0000	0.0000	0.0000	0.0000	0.0000	0.0000	0.0000	0.0000	0.0000	0.0000	0.0000
Total	**0.0000**	**0.0000**	**0.0000**	**0.0000**	**0.0000**	**0.0000**	**0.0000**	**0.0000**	**0.0000**	**0.0000**	**0.0000**	**0.0000**	**0.0000**	**0.0000**	**0.0000**	**0.0000**

3.5 Building Construction - 2021

Mitigated Construction On-Site

	ROG	NOx	CO	SO2	Fugitive PM10	Exhaust PM10	PM10 Total	Fugitive PM2.5	Exhaust PM2.5	PM2.5 Total	Bio- CO2	NBio- CO2	Total CO2	CH4	N2O	CO2e
Category	tons/yr										MT/yr					
Off-Road	0.0000	0.0000	0.0000	0.0000		0.0000	0.0000		0.0000	0.0000	0.0000	0.0000	0.0000	0.0000	0.0000	0.0000
Total	**0.0000**	**0.0000**	**0.0000**	**0.0000**		**0.0000**	**0.0000**		**0.0000**	**0.0000**	**0.0000**	**0.0000**	**0.0000**	**0.0000**	**0.0000**	**0.0000**

Mitigated Construction Off-Site

	ROG	NOx	CO	SO2	Fugitive PM10	Exhaust PM10	PM10 Total	Fugitive PM2.5	Exhaust PM2.5	PM2.5 Total	Bio- CO2	NBio- CO2	Total CO2	CH4	N2O	CO2e
Category	tons/yr										MT/yr					
Hauling	0.0000	0.0000	0.0000	0.0000	0.0000	0.0000	0.0000	0.0000	0.0000	0.0000	0.0000	0.0000	0.0000	0.0000	0.0000	0.0000
Vendor	0.0000	0.0000	0.0000	0.0000	0.0000	0.0000	0.0000	0.0000	0.0000	0.0000	0.0000	0.0000	0.0000	0.0000	0.0000	0.0000
Worker	0.0000	0.0000	0.0000	0.0000	0.0000	0.0000	0.0000	0.0000	0.0000	0.0000	0.0000	0.0000	0.0000	0.0000	0.0000	0.0000
Total	**0.0000**	**0.0000**	**0.0000**	**0.0000**	**0.0000**	**0.0000**	**0.0000**	**0.0000**	**0.0000**	**0.0000**	**0.0000**	**0.0000**	**0.0000**	**0.0000**	**0.0000**	**0.0000**

3.6 Architectural Coating - 2021

Unmitigated Construction On-Site

	ROG	NOx	CO	SO2	Fugitive PM10	Exhaust PM10	PM10 Total	Fugitive PM2.5	Exhaust PM2.5	PM2.5 Total	Bio- CO2	NBio- CO2	Total CO2	CH4	N2O	CO2e
Category	tons/yr										MT/yr					
Archit. Coating	0.0000					0.0000	0.0000		0.0000	0.0000	0.0000	0.0000	0.0000	0.0000	0.0000	0.0000
Off-Road	0.0000	0.0000	0.0000	0.0000		0.0000	0.0000		0.0000	0.0000	0.0000	0.0000	0.0000	0.0000	0.0000	0.0000
Total	**0.0000**	**0.0000**	**0.0000**	**0.0000**		**0.0000**	**0.0000**		**0.0000**	**0.0000**	**0.0000**	**0.0000**	**0.0000**	**0.0000**	**0.0000**	**0.0000**

Unmitigated Construction Off-Site

	ROG	NOx	CO	SO2	Fugitive PM10	Exhaust PM10	PM10 Total	Fugitive PM2.5	Exhaust PM2.5	PM2.5 Total	Bio- CO2	NBio- CO2	Total CO2	CH4	N2O	CO2e
Category	tons/yr										MT/yr					
Hauling	0.0000	0.0000	0.0000	0.0000	0.0000	0.0000	0.0000	0.0000	0.0000	0.0000	0.0000	0.0000	0.0000	0.0000	0.0000	0.0000
Vendor	0.0000	0.0000	0.0000	0.0000	0.0000	0.0000	0.0000	0.0000	0.0000	0.0000	0.0000	0.0000	0.0000	0.0000	0.0000	0.0000
Worker	0.0000	0.0000	0.0000	0.0000	0.0000	0.0000	0.0000	0.0000	0.0000	0.0000	0.0000	0.0000	0.0000	0.0000	0.0000	0.0000
Total	**0.0000**	**0.0000**	**0.0000**	**0.0000**	**0.0000**	**0.0000**	**0.0000**	**0.0000**	**0.0000**	**0.0000**	**0.0000**	**0.0000**	**0.0000**	**0.0000**	**0.0000**	**0.0000**

3.6 Architectural Coating - 2021

Mitigated Construction On-Site

	ROG	NOx	CO	SO2	Fugitive PM10	Exhaust PM10	PM10 Total	Fugitive PM2.5	Exhaust PM2.5	PM2.5 Total	Bio- CO2	NBio- CO2	Total CO2	CH4	N2O	CO2e
Category	tons/yr										MT/yr					
Archit. Coating	0.0000					0.0000	0.0000		0.0000	0.0000	0.0000	0.0000	0.0000	0.0000	0.0000	0.0000
Off-Road	0.0000	0.0000	0.0000	0.0000		0.0000	0.0000		0.0000	0.0000	0.0000	0.0000	0.0000	0.0000	0.0000	0.0000
Total	**0.0000**	**0.0000**	**0.0000**	**0.0000**		**0.0000**	**0.0000**		**0.0000**	**0.0000**	**0.0000**	**0.0000**	**0.0000**	**0.0000**	**0.0000**	**0.0000**

Mitigated Construction Off-Site

	ROG	NOx	CO	SO2	Fugitive PM10	Exhaust PM10	PM10 Total	Fugitive PM2.5	Exhaust PM2.5	PM2.5 Total	Bio- CO2	NBio- CO2	Total CO2	CH4	N2O	CO2e
Category	tons/yr										MT/yr					
Hauling	0.0000	0.0000	0.0000	0.0000	0.0000	0.0000	0.0000	0.0000	0.0000	0.0000	0.0000	0.0000	0.0000	0.0000	0.0000	0.0000
Vendor	0.0000	0.0000	0.0000	0.0000	0.0000	0.0000	0.0000	0.0000	0.0000	0.0000	0.0000	0.0000	0.0000	0.0000	0.0000	0.0000
Worker	0.0000	0.0000	0.0000	0.0000	0.0000	0.0000	0.0000	0.0000	0.0000	0.0000	0.0000	0.0000	0.0000	0.0000	0.0000	0.0000
Total	**0.0000**	**0.0000**	**0.0000**	**0.0000**	**0.0000**	**0.0000**	**0.0000**	**0.0000**	**0.0000**	**0.0000**	**0.0000**	**0.0000**	**0.0000**	**0.0000**	**0.0000**	**0.0000**

4.0 Operational Detail - Mobile

4.1 Mitigation Measures Mobile

	ROG	NOx	CO	SO2	Fugitive PM10	Exhaust PM10	PM10 Total	Fugitive PM2.5	Exhaust PM2.5	PM2.5 Total	Bio- CO2	NBio- CO2	Total CO2	CH4	N2O	CO2e
Category	tons/yr										MT/yr					
Mitigated	0.0903	0.4707	1.1587	5.5500e-003	0.6099	3.6000e-003	0.6135	0.1636	3.3500e-003	0.1670	0.0000	512.1576	512.1576	0.0152	0.0000	512.5376
Unmitigated	0.0903	0.4707	1.1587	5.5500e-003	0.6099	3.6000e-003	0.6135	0.1636	3.3500e-003	0.1670	0.0000	512.1576	512.1576	0.0152	0.0000	512.5376

4.2 Trip Summary Information

	Average Daily Trip Rate			Unmitigated	Mitigated
Land Use	Weekday	Saturday	Sunday	Annual VMT	Annual VMT
Parking Lot	663.97	0.00	0.00	1,639,998	1,639,998
Total	663.97	0.00	0.00	1,639,998	1,639,998

4.3 Trip Type Information

	Miles			Trip %			Trip Purpose %		
Land Use	H-W or C-W	H-S or C-C	H-O or C-NW	H-W or C-W	H-S or C-C	H-O or C-NW	Primary	Diverted	Pass-by
Parking Lot	9.50	7.30	7.30	100.00	0.00	0.00	100	0	0

4.4 Fleet Mix

Land Use	LDA	LDT1	LDT2	MDV	LHD1	LHD2	MHD	HHD	OBUS	UBUS	MCY	SBUS	MH
Parking Lot	0.585795	0.036515	0.193581	0.106455	0.012789	0.005274	0.019465	0.028415	0.002699	0.001789	0.005626	0.000921	0.000676

5.0 Energy Detail

Historical Energy Use: N

5.1 Mitigation Measures Energy

	ROG	NOx	CO	SO2	Fugitive PM10	Exhaust PM10	PM10 Total	Fugitive PM2.5	Exhaust PM2.5	PM2.5 Total	Bio- CO2	NBio- CO2	Total CO2	CH4	N2O	CO2e
Category	tons/yr										MT/yr					
Electricity Mitigated						0.0000	0.0000		0.0000	0.0000	0.0000	0.0000	0.0000	0.0000	0.0000	0.0000
Electricity Unmitigated						0.0000	0.0000		0.0000	0.0000	0.0000	0.0000	0.0000	0.0000	0.0000	0.0000
NaturalGas Mitigated	0.0000	0.0000	0.0000	0.0000		0.0000	0.0000		0.0000	0.0000	0.0000	0.0000	0.0000	0.0000	0.0000	0.0000
NaturalGas Unmitigated	0.0000	0.0000	0.0000	0.0000		0.0000	0.0000		0.0000	0.0000	0.0000	0.0000	0.0000	0.0000	0.0000	0.0000

5.2 Energy by Land Use - NaturalGas

Unmitigated

	NaturalGas Use	ROG	NOx	CO	SO2	Fugitive PM10	Exhaust PM10	PM10 Total	Fugitive PM2.5	Exhaust PM2.5	PM2.5 Total	Bio- CO2	NBio- CO2	Total CO2	CH4	N2O	CO2e
Land Use	kBTU/yr	tons/yr										MT/yr					
Parking Lot	0	0.0000	0.0000	0.0000	0.0000		0.0000	0.0000		0.0000	0.0000	0.0000	0.0000	0.0000	0.0000	0.0000	0.0000
Total		**0.0000**	**0.0000**	**0.0000**	**0.0000**		**0.0000**	**0.0000**		**0.0000**	**0.0000**	**0.0000**	**0.0000**	**0.0000**	**0.0000**	**0.0000**	**0.0000**

Mitigated

	NaturalGas Use	ROG	NOx	CO	SO2	Fugitive PM10	Exhaust PM10	PM10 Total	Fugitive PM2.5	Exhaust PM2.5	PM2.5 Total	Bio- CO2	NBio- CO2	Total CO2	CH4	N2O	CO2e
Land Use	kBTU/yr	tons/yr										MT/yr					
Parking Lot	0	0.0000	0.0000	0.0000	0.0000		0.0000	0.0000		0.0000	0.0000	0.0000	0.0000	0.0000	0.0000	0.0000	0.0000
Total		**0.0000**	**0.0000**	**0.0000**	**0.0000**		**0.0000**	**0.0000**		**0.0000**	**0.0000**	**0.0000**	**0.0000**	**0.0000**	**0.0000**	**0.0000**	**0.0000**

5.3 Energy by Land Use - Electricity

Unmitigated

	Electricity Use	Total CO2	CH4	N2O	CO2e
Land Use	kWh/yr	MT/yr			
Parking Lot	0	0.0000	0.0000	0.0000	0.0000
Total		**0.0000**	**0.0000**	**0.0000**	**0.0000**

Mitigated

	Electricity Use	Total CO2	CH4	N2O	CO2e
Land Use	kWh/yr	MT/yr			
Parking Lot	0	0.0000	0.0000	0.0000	0.0000
Total		**0.0000**	**0.0000**	**0.0000**	**0.0000**

6.0 Area Detail

6.1 Mitigation Measures Area

	ROG	NOx	CO	SO2	Fugitive PM10	Exhaust PM10	PM10 Total	Fugitive PM2.5	Exhaust PM2.5	PM2.5 Total	Bio- CO2	NBio- CO2	Total CO2	CH4	N2O	CO2e
Category	tons/yr										MT/yr					
Mitigated	0.0250	3.0000e-005	3.4900e-003	0.0000		1.0000e-005	1.0000e-005		1.0000e-005	1.0000e-005	0.0000	6.8200e-003	6.8200e-003	2.0000e-005	0.0000	7.2600e-003
Unmitigated	0.0250	3.0000e-005	3.4900e-003	0.0000		1.0000e-005	1.0000e-005		1.0000e-005	1.0000e-005	0.0000	6.8200e-003	6.8200e-003	2.0000e-005	0.0000	7.2600e-003

6.2 Area by SubCategory

Unmitigated

	ROG	NOx	CO	SO2	Fugitive PM10	Exhaust PM10	PM10 Total	Fugitive PM2.5	Exhaust PM2.5	PM2.5 Total	Bio- CO2	NBio- CO2	Total CO2	CH4	N2O	CO2e
SubCategory	tons/yr										MT/yr					
Architectural Coating	0.0000					0.0000	0.0000		0.0000	0.0000	0.0000	0.0000	0.0000	0.0000	0.0000	0.0000
Consumer Products	0.0247					0.0000	0.0000		0.0000	0.0000	0.0000	0.0000	0.0000	0.0000	0.0000	0.0000
Landscaping	3.2000e-004	3.0000e-005	3.4900e-003	0.0000		1.0000e-005	1.0000e-005		1.0000e-005	1.0000e-005	0.0000	6.8200e-003	6.8200e-003	2.0000e-005	0.0000	7.2600e-003
Total	**0.0250**	**3.0000e-005**	**3.4900e-003**	**0.0000**		**1.0000e-005**	**1.0000e-005**		**1.0000e-005**	**1.0000e-005**	**0.0000**	**6.8200e-003**	**6.8200e-003**	**2.0000e-005**	**0.0000**	**7.2600e-003**

6.2 Area by SubCategory

Mitigated

	ROG	NOx	CO	SO2	Fugitive PM10	Exhaust PM10	PM10 Total	Fugitive PM2.5	Exhaust PM2.5	PM2.5 Total	Bio- CO2	NBio- CO2	Total CO2	CH4	N2O	CO2e
SubCategory	tons/yr										MT/yr					
Architectural Coating	0.0000					0.0000	0.0000		0.0000	0.0000	0.0000	0.0000	0.0000	0.0000	0.0000	0.0000
Consumer Products	0.0247					0.0000	0.0000		0.0000	0.0000	0.0000	0.0000	0.0000	0.0000	0.0000	0.0000
Landscaping	3.2000e-004	3.0000e-005	3.4900e-003	0.0000		1.0000e-005	1.0000e-005		1.0000e-005	1.0000e-005	0.0000	6.8200e-003	6.8200e-003	2.0000e-005	0.0000	7.2600e-003
Total	**0.0250**	**3.0000e-005**	**3.4900e-003**	**0.0000**		**1.0000e-005**	**1.0000e-005**		**1.0000e-005**	**1.0000e-005**	**0.0000**	**6.8200e-003**	**6.8200e-003**	**2.0000e-005**	**0.0000**	**7.2600e-003**

7.0 Water Detail

7.1 Mitigation Measures Water

	Total CO2	CH4	N2O	CO2e
Category	MT/yr			
Mitigated	0.0000	0.0000	0.0000	0.0000
Unmitigated	0.0000	0.0000	0.0000	0.0000

7.2 Water by Land Use

Unmitigated

	Indoor/Outdoor Use	Total CO2	CH4	N2O	CO2e
Land Use	Mgal	MT/yr			
Parking Lot	0 / 0	0.0000	0.0000	0.0000	0.0000
Total		**0.0000**	**0.0000**	**0.0000**	**0.0000**

7.2 Water by Land Use

Mitigated

	Indoor/Outdoor Use	Total CO2	CH4	N2O	CO2e
Land Use	Mgal	MT/yr			
Parking Lot	0 / 0	0.0000	0.0000	0.0000	0.0000
Total		**0.0000**	**0.0000**	**0.0000**	**0.0000**

8.0 Waste Detail

8.1 Mitigation Measures Waste

Category/Year

	Total CO2	CH4	N2O	CO2e
	MT/yr			
Mitigated	0.0000	0.0000	0.0000	0.0000
Unmitigated	0.0000	0.0000	0.0000	0.0000

8.2 Waste by Land Use

Unmitigated

	Waste Disposed	Total CO2	CH4	N2O	CO2e
Land Use	tons	MT/yr			
Parking Lot	0	0.0000	0.0000	0.0000	0.0000
Total		**0.0000**	**0.0000**	**0.0000**	**0.0000**

Mitigated

	Waste Disposed	Total CO2	CH4	N2O	CO2e
Land Use	tons	MT/yr			
Parking Lot	0	0.0000	0.0000	0.0000	0.0000
Total		**0.0000**	**0.0000**	**0.0000**	**0.0000**

9.0 Operational Offroad

Equipment Type	Number	Hours/Day	Days/Year	Horse Power	Load Factor	Fuel Type

10.0 Stationary Equipment

Fire Pumps and Emergency Generators

Equipment Type	Number	Hours/Day	Hours/Year	Horse Power	Load Factor	Fuel Type

Boilers

Equipment Type	Number	Heat Input/Day	Heat Input/Year	Boiler Rating	Fuel Type

User Defined Equipment

Equipment Type	Number

11.0 Vegetation

Criteria Pollutant Emissions Calculations - Unmitigated Generator Operations

Generator Assumptions		
Generator	**Horsepower***	**Notes**
2.5 mW	2345.844504	assumed 70% efficiency per generator spec sheet
600 kW	563.002681	assumed 70% efficiency per generator spec sheet
HP equals kw/.746 EFF (gen.)		

Operational Assumptions	
Hours of Operation per year, one gen	50
Hours of Operation per year, total	1200
# of 2.5 mW generators	23

Emission Calculations - Tier 2 Generators						
2.5 mW - Tier 2	**g/hp-h**	**lbs/hp-h**	**lbs/hr**	**lbs/year**	**Averaged over 365 days**	**Averaged daily total w/ 23 Gens**
NO_X	5.3200	0.0117	27.5134	1375.6711	3.7690	86.6861
CO	0.4200	0.0009	2.1721	108.6056	0.2975	6.8436
HC	0.1000	0.0002	0.5172	25.8585	0.0708	1.6294
PM	0.0400	0.0001	0.2069	10.3434	0.0283	0.6518

600 kW - Tier 2	**g/hp-h**	**lbs/hp-h**	**lbs/hr**	**lbs/year**	**Averaged over 365 days**	**Averaged daily total w/ 1 Gens**
NO_X	5.8000	0.0128	7.1990	359.9500	0.9862	0.9862
CO	0.5000	0.0011	0.6206	31.0302	0.0850	0.0850
HC	0.0100	0.0000	0.0124	0.6206	0.0017	0.0017
PM	0.0300	0.0001	0.0372	1.8618	0.0051	0.0051

TOTALS - Tier 2	**Daily Emissions (lbs/day)**	**Annual Emissions (tpy)**
NO_X	87.6723	16.0002
CO	6.9287	1.2645
HC	1.6311	0.2977
PM	0.6569	0.1199

Criteria Pollutant Emissions Calculations - Mitigated Generator Operations - Reduced Hours

Generator Assumptions		
Generator	**Horsepower***	**Notes**
2.5 mW	2345.844504	assumed 70% efficiency per generator spec sheet
600 kW	563.002681	assumed 70% efficiency per generator spec sheet
HP equals kw/.746 EFF (gen.)		

Operational Assumptions	
Hours of Operation per year, one gen	25
Hours of Operation per year, total	600
# of 2.5 mW generators	23

Emission Calculations - Tier 2 Generators						
2.5 mW - Tier 2	**g/hp-h**	**lbs/hp-h**	**lbs/hr**	**lbs/year**	**Averaged over 365 days**	**Averaged daily total w/ 23 Gens**
NO_X	5.3200	0.0117	27.5134	687.8355	1.8845	43.3431
CO	0.4200	0.0009	2.1721	54.3028	0.1488	3.4218
HC	0.1000	0.0002	0.5172	12.9292	0.0354	0.8147
PM	0.0400	0.0001	0.2069	5.1717	0.0142	0.3259

600 kW - Tier 2	**g/hp-h**	**lbs/hp-h**	**lbs/hr**	**lbs/year**	**Averaged over 365 days**	**Averaged daily total w/ 1 Gens**
NO_X	5.8000	0.0128	7.1990	179.9750	0.4931	0.4931
CO	0.5000	0.0011	0.6206	15.5151	0.0425	0.0425
HC	0.0100	0.0000	0.0124	0.3103	0.0009	0.0009
PM	0.0300	0.0001	0.0372	0.9309	0.0026	0.0026

TOTALS - Tier 2	**Daily Emissions (lbs/day)**	**Annual Emissions (tpy)**
NO_X	43.8361	8.0001
CO	3.4643	0.6322
HC	0.8156	0.1488
PM	0.3284	0.0599

Criteria Pollutant Emissions Calculations - Generators' Potential to Emit for Eligiblity for Small Facility Banking Account

Generator Assumptions		
Generator	**Horsepower***	**Notes**
2.5 mW	2345.844504	assumed 70% efficiency per generator spec sheet
600 kW	563.002681	assumed 70% efficiency per generator spec sheet
HP equals kw/.746 EFF (gen.)		

Operational Assumptions	
Hours of Operation per year, one gen	150
Hours of Operation per year, total	3600
# of 2.5 mW generators	23

Emission Calculations - Tier 2 Generators						
2.5 mW - Tier 2	**g/hp-h**	**lbs/hp-h**	**lbs/hr**	**lbs/year**	**Averaged over 365 days**	**Averaged daily total w/ 23 Gens**
NO_X	5.3200	0.0117	27.5134	4127.0132	11.3069	260.0584
CO	0.4200	0.0009	2.1721	325.8168	0.8926	20.5309
HC	0.1000	0.0002	0.5172	77.5754	0.2125	4.8883
PM	0.0400	0.0001	0.2069	31.0302	0.0850	1.9553

600 kW - Tier 2	**g/hp-h**	**lbs/hp-h**	**lbs/hr**	**lbs/year**	**Averaged over 365 days**	**Averaged daily total w/ 1 Gens**
NO_X	5.8000	0.0128	7.1990	1079.8501	2.9585	2.9585
CO	0.5000	0.0011	0.6206	93.0905	0.2550	0.2550
HC	0.0100	0.0000	0.0124	1.8618	0.0051	0.0051
PM	0.0300	0.0001	0.0372	5.5854	0.0153	0.0153

TOTALS - Tier 2	**Daily Emissions (lbs/day)**	**Annual Emissions (tpy)**
NO_X	263.0169	48.0006
CO	20.7860	3.7934
HC	4.8934	0.8930
PM	1.9706	0.3596

N2O Operational GHG Emission Mobile Calculations

Project Code & Title: 20-09879, Clawiter Road Industrial Project

Vehicle Population Breakdown*	
5460005	Gasoline vehicles
271191	Diesel vehicles
95.3%	Gasoline vehicle %
4.7%	Diesel vehicle %

VMT per Vehicle Type	
1639998	Project VMT (CalEEMod output)
1562396	Gasoline vehicle VMT
77602	Diesel vehicle VMT

Gasoline Vehicles	
95.3%	Gasoline vehicle %
0.4707	Tons per year mobile NOX emissions (annual output in CalEEMod)
0.45	Gasoline vehicle tons per year NOX emissions
0.0350	Tons per year N2O emissions for gasoline vehicles**
0.0317	Metric tons per year N2O emissions for gasoline vehicles

Diesel Vehicles	
1.60	grams N2O per gallon of fuel for diesel vehicles**
22.99	Diesel average miles per gallon*
0.06961	grams per mile N2O for diesel vehicles
5401.8	grams per year N2O for diesel vehicles
0.0054018	Metric tons per year N2O emissions for diesel vehicles

CO2e Emissions from N2O	
0.0371	Metric tons per year from gasoline + diesel vehicles
298	GWP of N2O***
11.1	**CO2e emissions per year from N2O emissions from gasoline + diesel vehicles**

Sources
***Vehicle population source:** Source: EMFAC2017 (v1.0.2) Emissions Inventory Region Type: Air District Region: Bay Area AQMD Calendar Year: 2030 Season: Annual Vehicle Classification: EMFAC2011 Categories ****Methodology source:** EMFAC2017 Volume III - Technical Documentation https://www.arb.ca.gov/msei/emfac2011-faq.htm *****GWP source:** Intergovernmental Panel on Climate Change (IPCC). 2007. AR4 Climate Change 2007: The Physical Science Basis. Contrbution of Working Group I to the Fourth Assessment Report of the Intergovernmental Panel on Climate Change.

Clawiter Road Industrial Project - Building 4

Total Electricity Usage (MWH)
107,600.00

GHG Emission Calculations

	PG&E		CO2E Conversion Calculations	
	Energy Intensity Factor (lbs/MWh)	Emissions (lbs)	Total CO2E Emissions (lbs)	Total CO2E Emissions (MT)
CO2	298.65	32,134,740.00	32,134,740.00	14,576.06
CH4	0.01	1,506.40	42,179.20	19.13
N2O	0.003	322.80	96,194.40	43.63
			TOTAL GHG EMISSIONS FROM ELECTRICITY	**14,638.83**

Notes

- Energy Intensity Factors for PG&E based on CalEEMod defaults and RPS targets for 2030.
- CH4 conversion assumes 1 lb CH4 is equivalent to 28 lbs CO2E
- N2O conversion assumes 1 lb N2O is equivalent to 298 lbs CO2E

GHG Emission Calculations - Generator Operations

Fuel Consumption	203730

Source: Fuel consumption calculations in Section 6, Energy, of IS-MND

Emission Rates (kg/gallon)		
CO_2	CH_4	N_2O
10.21	0.00041	0.00008

Source: https://www.epa.gov/sites/production/files/2018-03/documents/emission-factors_mar_2018_0.pdf

Emissions (MT of CO_2e/year)		
CO_2	CH_4	N_2O
2080.1	2.3	4.9

Total Emissions (MT of CO_2e)	2087.3

Cat® 3516C

Diesel Generator Sets

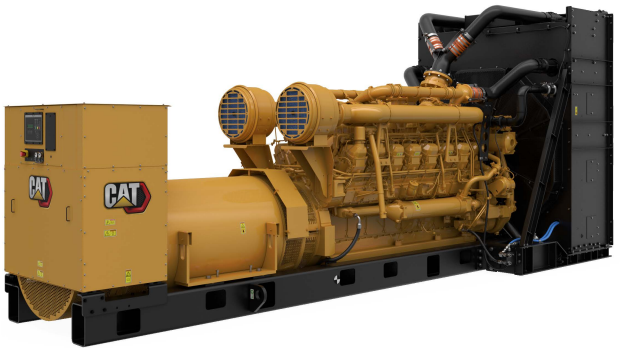

Image shown may not reflect actual configuration

Bore – mm (in)	170 (6.69)
Stroke – mm (in)	215 (8.46)
Displacement – L (in³)	78 (4764.73)
Compression Ratio	14.7:1
Aspiration	TA
Fuel System	EUI
Governor Type	ADEM™ A3

Standby 60 Hz ekW (kVA)	Mission Critical 60 Hz ekW (kVA)	Prime 60 Hz ekW (kVA)	Continuous 60 Hz ekW (kVA)	Emissions Performance
2500 (3125)	2500 (3125)	2250 (2812)	2050 (2562)	U.S. EPA Stationary Emergency Use Only (Tier 2)

Standard Features

Cat® Diesel Engine
- Meets U.S. EPA Stationary Emergency Use Only (Tier 2) emission standards
- Reliable performance proven in thousands of applications worldwide

Generator Set Package
- Accepts 100% block load in one step and meets NFPA 110 loading requirements
- Conforms to ISO 8528-5 G3 load acceptance requirements
- Reliability verified through torsional vibration, fuel consumption, oil consumption, transient performance, and endurance testing

Alternators
- Superior motor starting capability minimizes need for oversizing generator
- Designed to match performance and output characteristics of Cat diesel engines

Cooling System
- Cooling systems available to operate in ambient temperatures up to 50°C (122°F)
- Tested to ensure proper generator set cooling

EMCP 4 Control Panels
- User-friendly interface and navigation
- Scalable system to meet a wide range of installation requirements
- Expansion modules and site specific programming for specific customer requirements

Warranty
- 24 months/1000-hour warranty for standby and mission critical ratings
- 12 months/unlimited hour warranty for prime and continuous ratings
- Extended service protection is available to provide extended coverage options

Worldwide Product Support
- Cat dealers have over 1,800 dealer branch stores operating in 200 countries
- Your local Cat dealer provides extensive post-sale support, including maintenance and repair agreements

Financing
- Caterpillar offers an array of financial products to help you succeed through financial service excellence
- Options include loans, finance lease, operating lease, working capital, and revolving line of credit
- Contact your local Cat dealer for availability in your region

Optional Equipment

Engine

Air Cleaner
- ❑ Single element
- ❑ Dual element

Muffler
- ❑ Industrial grade (15 dB)

Starting
- ❑ Standard batteries
- ❑ Oversized batteries
- ❑ Standard electric starter(s)
- ❑ Heavy duty electric starter(s)
- ❑ Air starter(s)
- ❑ Jacket water heater

Alternator

Output voltage
- ❑ 380V ❑ 6300V
- ❑ 440V ❑ 6600V
- ❑ 480V ❑ 6900V
- ❑ 600V ❑ 12470V
- ❑ 2400V ❑ 13200V
- ❑ 4160V ❑ 13800V

Temperature Rise (over 40°C ambient)
- ❑ 150°C
- ❑ 125°C/130°C
- ❑ 105°C
- ❑ 80°C

Winding type
- ❑ Random wound
- ❑ Form wound

Excitation
- ❑ Internal excitation (IE)
- ❑ Permanent magnet (PM)

Attachments
- ❑ Anti-condensation heater
- ❑ Stator and bearing temperature monitoring and protection

Power Termination

Type
- ❑ Bus bar
- ❑ Circuit breaker
- ❑ 1600A ❑ 2000A
- ❑ 2500A ❑ 3000A
- ❑ 3200A ❑ 4000A
- ❑ 5000A
- ❑ IEC ❑ UL
- ❑ 3-pole ❑ 4-pole
- ❑ Manually operated
- ❑ Electrically operated

Trip Unit
- ❑ LSI ❑ LSI-G
- ❑ LSIG-P

Control System

Controller
- ❑ EMCP 4.2B
- ❑ EMCP 4.3
- ❑ EMCP 4.4

Attachments
- ❑ Local annunciator module
- ❑ Remote annunciator module
- ❑ Expansion I/O module
- ❑ Remote monitoring software

Charging
- ❑ Battery charger – 10A
- ❑ Battery charger – 20A
- ❑ Battery charger – 35A

Vibration Isolators
- ❑ Rubber
- ❑ Spring
- ❑ Seismic rated

Cat Connect

Connectivity
- ❑ Ethernet
- ❑ Cellular
- ❑ Satellite

Extended Service Options

Terms
- ❑ 2 year (prime)
- ❑ 3 year
- ❑ 5 year
- ❑ 10 year

Coverage
- ❑ Silver
- ❑ Gold
- ❑ Platinum
- ❑ Platinum Plus

Ancillary Equipment
- ❑ Automatic transfer switch (ATS)
- ❑ Uninterruptible power supply (UPS)
- ❑ Paralleling switchgear
- ❑ Paralleling controls

Certifications
- ❑ UL 2200 Listed
- ❑ CSA
- ❑ IBC seismic certification
- ❑ OSHPD pre-approval

Note: *Some options may not be available on all models. Certifications may not be available with all model configurations. Consult factory for availability.*

Package Performance

Performance	Standby		Mission Critical		Prime		Continuous	
Frequency	60 Hz		60 Hz		60 Hz		60 Hz	
Gen set power rating with fan	2500 ekW		2500 ekW		2250 ekW		2050 ekW	
Gen set power rating with fan @ 0.8 power factor	3125 kVA		3125 kVA		2812 kVA		2562 kVA	
Emissions	EPA ESE (TIER 2)		EPA ESE (TIER 2)		EPA ESE (TIER 2)		EPA ESE (TIER 2)	
Performance number	EM1894-01		EM1895-02		DM8447-04		DM8268-03	
Fuel Consumption								
100% load with fan – L/hr (gal/hr)	656.8	(175.3)	656.8	(175.3)	593.0	(156.6)	549.3	(145.1)
75% load with fan – L/hr (gal/hr)	510.8	(134.9)	510.8	(134.9)	467.8	(123.6)	435.6	(115.1)
50% load with fan – L/hr (gal/hr)	372.4	(98.4)	372.4	(98.4)	341.9	(90.3)	316.8	(83.7)
25% load with fan – L/hr (gal/hr)	219.3	(57.9)	219.3	(57.9)	203.0	(53.6)	188.9	(49.9)
Cooling System								
Radiator air flow restriction (system) – kPa (in. water)	0.12	(0.48)	0.12	(0.48)	0.12	(0.48)	0.12	(0.48)
Radiator air flow – m^3/min (cfm)	2356	(83201)	2356	(83201)	2800	(98881)	2800	(98881)
Engine coolant capacity – L (gal)	233.0	(61.6)	233.0	(61.6)	233.0	(61.6)	233.0	(61.6)
Radiator coolant capacity – L (gal)	180.0	(47.6)	180.0	(47.6)	268.8	(71.0)	268.8	(71.0)
Total coolant capacity – L (gal)	413.0	(109.2)	413.0	(109.2)	501.8	(132.6)	501.8	(132.6)
Inlet Air								
Combustion air inlet flow rate – m^3/min (cfm)	242.2	(7212.2)	242.2	(7212.2)	193.1	(6819.8)	183.8	(6491.7)
Exhaust System								
Exhaust stack gas temperature – °C (°F)	490.7	(915.2)	490.7	(915.2)	471.3	(880.4)	463.6	(866.5)
Exhaust gas flow rate – m^3/min (cfm)	554.5	(19578.8)	554.5	(19578.8)	507.9	(17935.1)	476.5	(16826.7)
Exhaust system backpressure (maximum allowable) – kPa (in. water)	6.7	(27.0)	6.7	(27.0)	6.7	(27.0)	6.7	(27.0)
Heat Rejection								
Heat rejection to jacket water – kW (Btu/min)	826	(46992)	826	(46992)	777	(44160)	739	(42021)
Heat rejection to exhaust (total) – kW (Btu/min)	2502	(142265)	2502	(142265)	2243	(127532)	2092	(118949)
Heat rejection to aftercooler – kW (Btu/min)	786	(44723)	786	(44723)	690	(39224)	619	(35176)
Heat rejection to atmosphere from engine – kW (Btu/min)	161	(9146)	161	(9146)	150	(8542)	145	(8229)
Heat rejection from alternator – kW (Btu/min)	121	(6853)	121	(6853)	99	(5607)	94	(5368)
Emissions* (Nominal)								
NOx mg/Nm^3 (g/hp-h)	2349.1	(5.32)	2349.1	(5.32)	2206.7	(4.95)	2038.1	(4.62)
CO mg/Nm^3 (g/hp-h)	195.4	(0.42)	195.4	(0.42)	141.2	(0.30)	124.8	(0.27)
HC mg/Nm^3 (g/hp-h)	42.1	(0.10)	42.1	(0.10)	44.4	(0.11)	49.2	(0.12)
PM mg/Nm^3 (g/hp-h)	14.1	(0.04)	14.1	(0.04)	10.9	(0.03)	11.0	(0.03)
Emissions* (Potential Site Variation)								
NOx mg/Nm^3 (g/hp-h)	2818.9	(6.38)	2818.9	(6.38)	2648.0	(5.94)	2445.8	(5.55)
CO mg/Nm^3 (g/hp-h)	351.8	(0.76)	351.8	(0.76)	254.2	(0.55)	224.6	(0.49)
HC mg/Nm^3 (g/hp-h)	55.9	(0.14)	55.9	(0.14)	59.1	(0.15)	65.5	(0.16)
PM mg/Nm^3 (g/hp-h)	19.7	(0.05)	19.7	(0.05)	15.2	(0.04)	15.3	(0.04)

**mg/Nm^3 levels are corrected to 5% O_2. Contact your local Cat dealer for further information.*

Weights and Dimensions

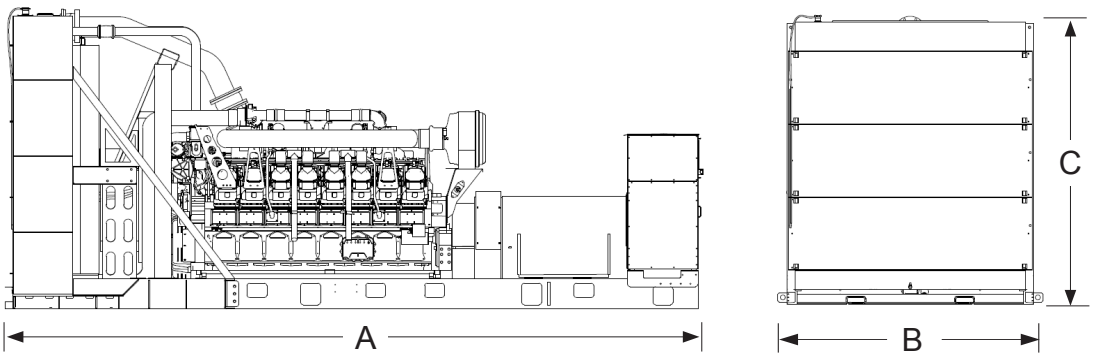

Rating ekW (kVA)	Dim "A" mm (in)	Dim "B" mm (in)	Dim "C" mm (in)	Dry Weight kg (lb)
2500 (3125)	6800 (267.7)	2339 (92.1)	2997 (118.0)	17 590 (38,780)
2250 (2812)	7033 (276.9)	2767 (108.9)	3018 (118.8)	17 590 (38,780)
2050 (2562)	7033 (276.9)	2767 (108.9)	3018 (118.8)	17 590 (38,780)

Note: *For reference only. Do not use for installation design. Contact your local Cat dealer for precise weights and dimensions.*

Ratings Definitions

Standby
Output available with varying load for the duration of the interruption of the normal source power. Average power output is 70% of the standby power rating. Typical operation is 200 hours per year, with maximum expected usage of 500 hours per year.

Mission Critical
Output available with varying load for the duration of the interruption of the normal source power. Average power output is 85% of the mission critical power rating. Typical peak demand up to 100% of rated power for up to 5% of the operating time. Typical operation is 200 hours per year, with maximum expected usage of 500 hours per year.

Prime
Output available with varying load for an unlimited time. Average power output is 70% of the prime power rating. Typical peak demand is 100% of prime rated ekW with 10% overload capability for emergency use for a maximum of 1 hour in 12. Overload operation cannot exceed 25 hours per year.

Continuous
Output available with non-varying load for an unlimited time. Average power output is 70-100% of the continuous power rating. Typical peak demand is 100% of continuous rated kW for 100% of the operating hours.

Applicable Codes and Standards
AS 1359, CSA C22.2 No. 100-04, UL 142, UL 489, UL 869, UL 2200, NFPA 37, NFPA 70, NFPA 99, NFPA 110, IBC, IEC 60034-1, ISO 3046, ISO 8528, NEMA MG1-22, NEMA MG1-33, 2014/35/EU, 2006/42/EC, 2014/30/EU.

Note: Codes may not be available in all model configurations. Please consult your local Cat dealer for availability.

Data Center Applications
- ISO 8528-1 Data Center Power (DCP) compliant per DCP application of Cat diesel generator set prime power rating.
- All ratings Tier III/Tier IV compliant per Uptime Institute requirements.
- All ratings ANSI/TIA-942 compliant for Rated-1 through Rated-4 data centers.

Fuel Rates
Fuel rates are based on fuel oil of 35º API [16°C (60ºF)] gravity having an LHV of 42,780 kJ/kg (18,390 Btu/lb) when used at 29ºC (85ºF) and weighing 838.9 g/liter (7.001 lbs/U.S. gal.)

www.cat.com/electricpower
©2019 Caterpillar
All rights reserved.

Materials and specifications are subject to change without notice.
The International System of Units (SI) is used in this publication.

CAT, CATERPILLAR, LET'S DO THE WORK, their respective logos, "Caterpillar Yellow", the "Power Edge" and Cat "Modern Hex" trade dress as well as corporate and product identity used herein, are trademarks of Caterpillar and may not be used without permission.

Cat® C18 DIESEL GENERATOR SETS

Standby & Prime: 60Hz

Image shown might not reflect actual configuration

Engine Model	Cat® C18 ACERT™ In-line 6, 4-cycle diesel
Bore x Stroke	145mm x 183mm (5.7in x 7.2in)
Displacement	18.1 L (1106 in³)
Compression Ratio	14.5:1
Aspiration	Turbocharged Air-to-Air Aftercooled
Fuel Injection System	MEUI
Governor	Electronic ADEM™ A4

Model	Standby	Prime	Emission Strategy
C18	**600 ekW, 750 kVA**	**545 ekW, 681 kVA**	**TIER II Non-Road**

PACKAGE PERFORMANCE

Performance	Standby	Prime
Frequency	60 Hz	
Genset Power Rating	750 kVA	681 kVA
Genset power rating with fan @ 0.8 power factor	600 ekW	545 ekW
Emissions	TIER II Non-Road	
Performance Number	DM8518-04	DM8522-05
Fuel Consumption		
100% load with fan, L/hr (gal/hr)	161.6 (42.7)	151.1 (39.9)
75% load with fan, L/hr (gal/hr)	129.6 (34.2)	123.6 (32.6)
50% load with fan, L/hr (gal/hr)	91.7 (24.2)	89.2 (23.6)
25% load with fan, L/hr (gal/hr)	46.8 (12.4)	48.7 (12.9)
Cooling System[1]		
Radiator air flow restriction (system), kPa (in. Water)	0.12 (0.48)	0.12 (0.48)
Radiator air flow, m³/min (cfm)	803 (28357)	803 (28357)
Engine coolant capacity, L (gal)	20.8 (5.5)	20.8 (5.5)
Radiator coolant capacity, L (gal)	61 (16)	61 (16)
Total coolant capacity, L (gal)	82 (22)	82 (22)
Inlet Air		
Combustion air inlet flow rate, m³/min (cfm)	47.8 (1687.8)	46.7 (1649.0)
Max. Allowable Combustion Air Inlet Temp, °C (°F)	49 (120)	49 (120)
Exhaust System		
Exhaust stack gas temperature, °C (°F)	534.6 (994.3)	518.2 (964.8)
Exhaust gas flow rate, m³/min (cfm)	135.5 (4784.4)	129.6 (4576.4)
Exhaust system backpressure (maximum allowable) kPa (in. water)	10.0 (40.0)	10.0 (40.0)
Heat Rejection		
Heat rejection to jacket water, kW (Btu/min)	189 (10747)	175 (9953)
Heat rejection to exhaust (total) kW (Btu/min)	634 (36053)	596 (33895)
Heat rejection to aftercooler, kW (Btu/min)	153 (8700)	142 (8076)
Heat rejection to atmosphere from engine, kW (Btu/min)	86 (4902)	83 (4726)

Emissions (Nominal)[2]	Standby		Prime	
NOx, mg/Nm³ (g/hp-hr)	2798.7 (5.8)		2462.2 (5.1)	
CO, mg/Nm³ (g/hp-hr)	225.2 (0.5)		195.1 (0.4)	
HC, mg/Nm³ (g/hp-hr)	3.8 (0.01)		5.0 (0.01)	
PM, mg/Nm³ (g/hp-hr)	13.3 (0.03)		13.1 (0.03)	
Alternator[3]				
Voltages	480V	600V	480V	600V
Motor starting capability @ 30% Voltage Dip	1633 skVA	2023 skVA	1633 skVA	2023 skVA
Current	902 amps	722 amps	819 amps	656 amps
Frame Size	LC7024F	LC7024H	LC7024F	LC7024H
Excitation	AR	AR	AR	AR
Temperature Rise	150 ° C	130 ° C	125 ° C	105 ° C

WEIGHTS & DIMENSIONS

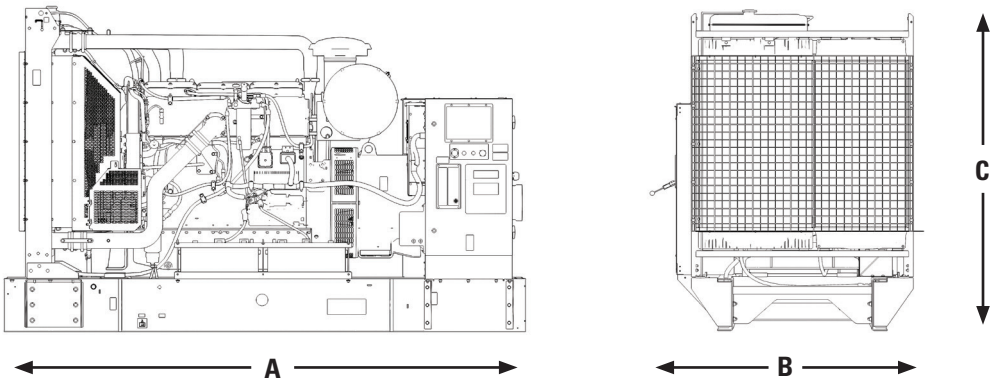

Dim "A" mm (in)	Dim "B" mm (in)	Dim "C" mm (in)	Dry Weight kg (lb)
3477 (137)	**1628 (64)**	**2102 (83)**	**4431 (9769)**

APPLICABLE CODES AND STANDARDS:

AS1359, CSA C22.2 No100-04, UL142, UL489, UL869, UL2200, NFPA37, NFPA70, NFPA99, NFPA110, IBC, IEC60034-1, ISO3046, ISO8528, NEMA MG1-22, NEMA MG1-33, 2006/95/EC, 2006/42/EC, 2004/108/EC.
Note: Codes may not be available in all model configurations. Please consult your local Cat Dealer representative for availability.

STANDBY: Output available with varying load for the duration of the interruption of the normal source power. Average power output is 70% of the standby power rating. Typical operation is 200 hours per year, with maximum expected usage of 500 hours per year.

PRIME: Output available with varying load for an unlimited time. Average power output is 70% of the prime power rating. Typical peak demand is 100% of prime rated ekW with 10% overload capability for emergency use for a maximum of 1 hour in 12. Overload operation cannot exceed 25 hours per year

RATINGS: Ratings are based on SAE J1349 standard conditions. These ratings also apply at ISO3046 standard conditions.

DEFINITIONS AND CONDITIONS

[1] For ambient and altitude capabilities consult your Cat dealer. Air flow restriction (system) is added to existing restriction from factory.

[2] Emissions data measurement procedures are consistent with those described in EPA CFR 40 Part 89, Subpart D & E and ISO8178-1 for measuring HC, CO, PM, NOx. Data shown is based on steady state operating conditions of 77° F, 28.42 in HG and number 2 diesel fuel with 35° API and LHV of 18,390 BTU/lb. The nominal emissions data shown is subject to instrumentation, measurement, facility and engine to engine variations. Emissions data is based on 100% load and thus cannot be used to compare to EPA regulations which use values based on a weighted cycle.

[3] UL 2200 Listed packages may have oversized generators with a different temperature rise and motor starting characteristics. Generator temperature rise is based on a 40° C ambient per NEMA MG1-32.

LET'S DO THE WORK.™

www.Cat.com/electricpower
All rights reserved.
Materials and specifications are subject to change without notice.The International System of Units (SI) is used in this publication.
© 2020 Caterpillar. All Rights Reserved. CAT, CATERPILLAR, LET'S DO THE WORK, their respective logos, "Caterpillar Corporate Yellow", the "Power Edge" and Cat "Modern Hex" trade dress as well as corporate and product identity used herein, are trademarks of Caterpillar and may not be used without permission

LEHE1581-02 (05/20)