Appendix E

AQUATIC RESOURCES DELINEATION REPORT

KINGS BEACH WESTERN APPROACH PROJECT

DEPARTMENT OF THE ARMY
U.S. ARMY CORPS OF ENGINEERS, SACRAMENTO DISTRICT
1325 J STREET
SACRAMENTO CA 95814-2922

June 1, 2020

Regulatory Division (SPK-2002-25054)

Placer County Department of Public Works
Attn: Mr. Andy Deinken
7717 North Lake Boulevard, Box 336
Kings Beach, California 96143
ADeinken@placer.ca.gov

Dear Mr. Deinken:

We are responding to your October 15, 2019 request for an approved jurisdictional determination for the Kings Beach Commercial Core Western Approach Project. The approximately 10.5-acre project site is located on and near Griff Creek in Section 19, Township 16 North, Range 18 East, Mount Diablo Meridian, Latitude 39.23782°, Longitude -120.03044°, Kings Beach, Placer County, California (enclosure 1).

Based on available information, we concur with your aquatic resources delineation for the site as depicted on the enclosed July 22, 2019, Figure 1, Kings Beach Western Approach Project, Proposed Delineation Map drawing prepared by NCE (enclosure 2). Approximately 0.03 acres of aquatic resources consisting of approximately 60 linear feet of perennial stream are present within the survey area. These aquatic resources ("waters of the United States") are regulated under Section 404 of the Clean Water Act since they are relatively permanent waters that flow directly to Lake Tahoe, a Traditionally Navigable Water.

The 0.04-acre of aquatic resources identified as "Stormwater Basin-Upland" on the above drawing is a stormwater treatment feature that is constructed wholly in uplands. As such, this aquatic resource is not currently regulated by the U.S. Army Corps of Engineers. This disclaimer of jurisdiction is only for Section 404 of the Federal Clean Water Act.

We are enclosing a copy of the *Approved Jurisdictional Determination Form* for your site (enclosure 3).

This approved jurisdictional determination is valid for five years from the date of this letter, unless new information warrants revision of the determination before the expiration date. If you object to this determination, you may request an administrative appeal under Corps regulations at 33 Code of Federal Regulations (CFR) Part 331.

A *Notification of Appeal Process (NAP) and Request for Appeal (RFA) Form* is enclosed (enclosure 4). If you request to appeal this determination, you must submit a completed RFA form to the South Pacific Division Office at the following address: Administrative Appeal Review Officer, Army Corps of Engineers, South Pacific Division, CESPD-PDO, 1455 Market Street, 2052B, San Francisco, California 94103-1399, Telephone: 415-503-6574, FAX: 415-503-6646.

In order for an RFA to be accepted by the Corps, we must determine that the form is complete, that it meets the criteria for appeal under 33 CFR Part 331.5, and that the form was received by the Division Office within 60 days of the date of the NAP. It is not necessary to submit an RFA form to the Division Office unless you object to the determination in this letter.

We recommend that you provide a copy of this letter and notice to all other affected parties, including any individual who has an identifiable and substantial legal interest in the property.

This approved jurisdictional determination has been conducted to identify the limits of aquatic resources subject to U.S. Army Corps of Engineers jurisdiction under Section 404 of the Clean Water Act and/or Section 9 and 10 of the Rivers and Harbors Act for the particular site identified in this request.

We appreciate feedback, especially about interaction with our staff and our processes.

Please refer to identification number SPK-2002-25054 in any correspondence concerning this project. If you have any questions, please contact me at our Reno Regulatory Office at 300 Booth Street, Room 3050, Reno, Nevada 89509, by email at *Jennifer.C.Thomason@usace.army.mil*, or telephone at (775) 784-5304. For program information or to complete our Customer Survey, visit our website at *www.spk.usace.army.mil/Missions/Regulatory.aspx*.

Sincerely,

Jennifer C. Thomason
Senior Project Manager
Nevada Utah Section

Enclosures
cc:
Debra Lemke, NCE, DLemke@ncenet.com
California Water Quality Control Board, Lahontan Region, Lahontan@waterboards.ca.gov
Tiffany Good, Shorezone Coordinator, Tahoe Regional Planning Agency, tgood@trpa.org

NCE Collaboration. Commitment. Confidence.℠

October 8, 2019

Ms. Jennifer Thomason
United States Army Corps of Engineers
Reno Regulatory Field Office
300 Booth Street, Room 3050
Reno, NV 89509-1361

Re: Kings Beach Western Approach Project, Final Aquatic Resource Delineation Report
Project Number: 1011.02.25

Dear Ms. Thomason:

On behalf of Mr. Dan LaPlante of Placer County, please find attached a Final Aquatic Resource Delineation Report for the Kings Beach Western Approach Project as well as the Aquatic Resource Spreadsheet and supporting GIS.

We are requesting an Approved Jurisdictional Determination for this project.

Please contact me with any questions.

Thank you very much,

Debra Lemke, PWS, CPESC
Senior Scientist

cc: Lindsey Van Parys, GHD
Dan LaPlante, Placer County

Reno, NV
1885 S. Arlington Ave., Suite 111
Reno, NV 89509
(775) 329-4955

Final Aquatic Resources Delineation Report

Kings Beach Western Approach Project
October 2019

NCE
Reno, NV
1885 S. Arlington Ave., Suite 111
Reno, NV 89509

Placer County Public Works
Mr. Dan LaPlante
7717 North Lake Boulevard
Kings Beach, CA 96143

FINAL AQUATIC RESOURCES DELINEATION REPORT

Kings Beach Western Approach Project

Prepared for:

Placer County Public Works
Mr. Dan LaPlante, P.E.
7717 North Lake Boulevard (no mail received here)
PO Box 336 (for mail purposes)
Kings Beach, CA 96143

Prepared by:

Debra Lemke, PWS, CPESC
Senior Scientist

NCE
1885 S Arlington Ave, Ste 111
Reno, NV 89509

Executive Summary

NCE performed field investigations on October 31, 2018 and July 9, 2019 evaluating the potential jurisdictional status of waters of the United States for the Kings Beach Western Approach Project in Placer County, California.

Within the survey area, Griff Creek is mapped by the United States Geological Survey (USGS) as a perennial stream, and Griff Creek is also mapped by the United States Fish and Wildlife Service National Wetlands Inventory (NWI) as riverine.

NCE surveyed a total of approximately 10.47 acres. NCE delineated one aquatic resource within the survey area that is a potentially jurisdictional waters of the United States due to the presence of ordinary highwater mark indicators and a connection to Lake Tahoe, a traditional navigable waterway.

- Griff Creek was flowing during both site visits. This drainage is Cowardin classified as Lower Perennial, Riverine, and is approximately 0.03 acres in size (**Appendix A, Figure 1**).

NCE also delineated a potentially non-jurisdictional waters of the United States within the survey area. Within the survey area, there is a man-made stormwater basin which was created in uplands for stormwater management. Below is a list of items to support that the man-made stormwater basin was created in uplands:

- The man-made stormwater basin is not shown on USGS or NWI mapping;
- Google Earth imagery from 1991 and 1992 depicts the location of the stormwater basin in uplands;
- In March of 1998, a plan set for bid was released that included the proposed stormwater treatment basin;
- There is documentation of ongoing maintenance of the man-made stormwater basin; and,
- The Federal Register, Volume 80, No. 124, dated Monday June 29, 2015, in Part 328-Definition of Waters of the United States, paragraph (b) states: *The following are not "waters of the United States" even where they otherwise meet the terms of paragraphs (a)(4) through (8) of this section*; paragraph (6) states: *Stormwater control features constructed to convey, treat, or store stormwater that are created in dry land*.

Due to the above bullets, it is NCE's professional opinion that the USACE does not regulate stormwater control features created in dry lands, and therefore this man-made stormwater basin in not federally jurisdictional. The non-jurisdictional feature, man-made stormwater basin, is 0.04 acres (**Appendix A, Figure 1**).

The delineation was conducted in accordance with the:

- 1987 Corps of Engineers Wetland Delineation Manual; and
- Regional Supplement to the Corps of Engineers Wetland Delineation Manual: Western Mountains, Valleys, and Coast Region (Version 2.0), May 2010.

These findings should be considered preliminary until the United States Army Corps of Engineers makes a final approved jurisdictional determination in coordination with the United States Environmental Protection Agency.

TABLE OF CONTENTS

1.0 Introduction 1
1.1 Contact and Project Information 1
1.2 Purpose 1
2.0 Background 2
2.1 Site Description 2
2.1.1 Location 2
2.1.2 Site Access 2
2.1.3 Land Use 2
2.1.4 Vegetation 2
2.1.5 National Wetland Inventory 2
2.1.6 Soils 2
2.1.7 Hydrology 3
3.0 Methods 4
3.1 Literature Review 4
3.2 Research and Field Methodology 4
3.3 Survey Data Integration 5
3.4 Property Owner Access 6
4.0 Results 7
4.1 Landscape Setting 7
4.2 Aquatic Resources 7
4.2.1 Stormwater Basin 7
4.2.2 Drainage 8
4.2.3 Aquatic Resources Types and Amounts 8
4.3 Significant Nexus 9
5.0 References 11

LIST OF TABLES

Table 1. Soils within the Survey Area 3
Table 2. Property Owner Access 6
Table 3. Aquatic Resources within the Survey Area 9
Table 4. Waters of the U.S Proposed Jurisdictional Status 9

LIST OF APPENDICES

Appendix A – Aquatic Resource Delineation Map
Figure 1. Proposed Delineation Map
Appendix B – Supporting Maps
Figure 1. Project Location Map
Figure 2. Project Survey Area
Figure 3. Topographic Quadrangle Map
Figure 4. Staging Area Map
Figure 5. CWHR Type (Vegetation Communities)
Figure 6. National Wetlands Inventory (NWI)
Figure 7. NRCS Soils Map
Figure 8. Ground Level Photograph Locations and Directions
Appendix C - Representative Photographs
Appendix D - Plant List
Appendix E - Wetland Delineation Datasheets

Appendix F –Property Access Statements
Appendix G – Google Earth Imagery 1991 And 1992, JWA 1998 Bid Package Sheet C1, Caltrans As-Built, Maintenance Records For Pond E 1999-2001, 2003, 2005, 2008-2017
Appendix H - Aquatic Resource Spreadsheet and GIS Data

LIST OF ACRONYMS AND ABBREVIATIONS

MSL	Mean Sea Level
NHD	National Hydrologic Dataset
NWI	National Wetlands Inventory
NRCS	Natural Resource Conservation Service
OHWM	Ordinary High-Water Mark
Project	Kings Beach Western Approach Project
RPW	Relatively Permanent Water
SR	State Route
TNW	Traditional Navigable Waterway
USACE	United States Army Corps of Engineers
USDA	United States Department of Agriculture
USFWS	United States Fish and Wildlife Service
USGS	United States Geological Survey
WOUS	Waters of the United States, including wetlands

1.0 INTRODUCTION

1.1 Contact and Project Information

GHD Inc. contracted NCE to conduct a formal United States Army Corps of Engineers (USACE) delineation of aquatic resources within the project area on behalf of Placer County for the Kings Beach Western Approach Project. The Placer County contact is Mr. Dan LaPlante. Mr. LaPlante's contact information is:

Mr. Dan LaPlante, P.E.
Placer County Public Works
7717 North Lake Boulevard (no mail received here)
PO Box 336 (for mailing)
Kings Beach, CA 96143
dlaplant@placer.ca.gov

Ms. Debra Lemke and Mr. Mack Casterman of NCE conducted a site visit to assess aquatic resources on October 31, 2018. Ms. Debra Lemke and Ms. Sarah Bryan of NCE conducted an aquatic resource delineation on July 9, 2019.

The Kings Beach Western Approach Project (project) is located at the intersection of State Route (SR) 28 and SR 267 in Kings Beach, California (**Appendix B, Figure 1**). The survey area extends approximately 0.5 miles west of the intersection along the SR 28 corridor and approximately 0.10 miles north of the intersection along SR 267. The project proposes to remove the existing signaled intersection and replace it with a roundabout intersection. The purpose of the project is to improve overall accessibility, mobility, and safety for all roadway users while providing a continuous complete street corridor.

The survey area consists of roadway, right-of-way, staging areas on impacted lots, and a portion of the Old Brockway Golf Course (**Appendix B, Figure 2**).

The survey area may be found on United States Geological Survey (USGS) Kings Beach, 7.5-minute series topographic quadrangle map (**Appendix B, Figure 3**).

1.2 Purpose

The purpose of this report is to identify and describe aquatic resources and to identify known possible sensitive plant, fish, wildlife species, and cultural/historic resources in the survey area. This report facilitates efforts to:

1. Avoid or minimize impacts to aquatic resources during the project development process.

2. Document aquatic resource boundary determinations for review by the USACE.

3. Provide early indications of known sensitive species and historic/cultural properties within the survey area.

4. Provide background information.

2.0 BACKGROUND

2.1 Site Description

2.1.1 Location

The survey area is located northwest, west, northeast, and east of the intersection of SR 267 and SR 28 (**Appendix B, Figure 2**). This survey area consists of roadway, right-of-way, eight staging areas on impacted lots, and a portion of the Old Brockway Golf Course in Kings Beach, California. Lake Tahoe is located approximately 325 feet south of the survey area. The survey area is located in the eastern half of Section 13, Township 16 N, Range 17 E, and the western half of Section 19, Township 16 N, Range 18E (Mount Diablo baseline) and is within the USGS Kings Beach 7.5 minute quadrangle map (**Appendix B, Figure 3**). At the southwestern corner of the survey area, the latitude is 39.2393658 N and the longitude is 120.0393142 W.

2.1.2 Site Access

To access the survey area from SR 267, take a right (west) at the intersection of SR 267 and SR 28. Go right (north) onto Brassie Avenue and immediately park.

To access the survey area from SR 28, continue west past SR 267, and take a right (north), onto Brassie Avenue and immediately park.

The survey area is between Agatam Ave and Secline Street moving west to east and bounded on the north by the cross-section of Dolly Varden Ave and SR 267. In addition, there is one staging area west of SR 267 and seven staging areas east of SR 267 (**Appendix B, Figure 2**).

2.1.3 Land Use

The land within the survey area except for the staging areas is publicly owned and/or considered right-of-way (**Appendix B, Figure 4**). The extent of the survey area is fully located within the Kings Beach limits. The project has been zoned for commercial and residential use.

South of the survey area the surrounding land uses include mixed-use residential and commercial, west of the project survey area is the North Tahoe Marina, and the parcel northwest is Safeway.

2.1.4 Vegetation

The survey area is characterized predominantly by urban land fragmented by aspen, Jeffrey pine, montane chaparral, and montane hardwood-conifer (**Appendix B, Figure 5**).

2.1.5 National Wetland Inventory

Within the survey area, Griff Creek is recognized as Riverine by the United States Fish and Wildlife Service (USFWS) National Wetlands Inventory (NWI) (**Appendix B, Figure 6**).

2.1.6 Soils

The soils at the survey area have been mapped by the Department of Agriculture, Natural Resource Conservation Service (NRCS), and were downloaded from the Web Soil Survey (NRCS 2019a). NRCS identified four soil types within the survey area (**Appendix B, Figure 7**). All four soil types and their hydric status are presented below and in **Table 1**.

<u>Kingsbeach stony sandy loam</u>
Kingsbeach stony sandy loam is a soil component that occurs on mountains, alluvial fans, and lake terraces. The parent material consists of alluvium and/or colluvium derived from andesite over lacustrine deposits. Depth to a root restrictive layer is greater than 60 inches. The natural drainage class is moderately well drained. This soil does not meet hydric criteria.

Watah peat, 0 to 2 percent slopes
Watah peat is a soil component that occurs on valley flats, fens, and flood plains. The parent material consists of organic material over alluvium. Depth to a root restrictive layer is greater than 80 inches. The natural drainage class is very poorly drained. This soil does meet hydric criteria.

Tahoma-Jorge complex, 2 to 15 percent slopes
Tahoma-Jorge complex is a soil component that occurs on mountain slopes and hillslopes. The parent material consists of colluvium over residuum weathered from andesite. Depth to a restrictive layer is 40 to 80 inches to lithic bedrock. The natural drainage class is well drained. This soil does not meet hydric criteria.

Oxyaquic Cryorthents-Aquic Xerorthents-Tahoe complex, 0 to 15 percent slopes
This complex is a soil component that occurs on drainageways. The parent material consists of alluvium and/or colluvium derived from mixed. Depth to a restrictive layer is more than 80 inches. The natural drainage class is somewhat poorly drained. This soil does not meet hydric criteria.

Table 1. Soils within the Survey Area

Map Unit Symbol	Name	Acres in Project	Percent of Project Area	National Hydric List
7071	Watah peat, 0 to 2 percent slopes	0.2	1.6%	Yes
7161	Kingsbeach stony sandy loam, 2 to 15 percent slopes	9.5	90.4%	No
7222	Tahoma-Jorge complex, 2 to 15 percent slopes	0.6	5.4%	No
9011	Oxyaquic Cryorthents-Aquic Xerorthents-Tahoe complex, 0 to 15 percent slopes	0.3	2.6%	No
Totals for Project Survey Area		**10.5**	**100.0%**	

2.1.7 Hydrology

Direct precipitation, stormwater runoff from SR 267, and nuisance water from the Old Brockway Golf Course and development north of the survey area are the primary surface water sources. Griff Creek is within the eastern survey area, and there is a man-made stormwater basin northwest of the intersection of SR 28 and SR 267. Per State of California, Department of Transportation, 2011 As-built, stormwater runoff (and most likely nuisance water) is conveyed through a concrete culvert under SR 267 and into the man-made stormwater basin. The concrete culvert which routes water into the man-made stormwater basin is 16 inches in diameter.

Griff Creek is a perennial drainage and originates north of the survey area and drains into Lake Tahoe.

3.0 METHODS

3.1 Literature Review

NCE reviewed available natural resource information for the region. References reviewed for this delineation are listed in Section 5.0. Pertinent site-specific reports and general references utilized for the delineation include the following:

- USFWS NWI mapping.
- USGS National Hydrologic Dataset (NHD) mapping.
- Google Earth.
- United States Department of the Interior, USGS. Kings Beach, California 7.5-minute series topographic quadrangle.
- United States Department of Agriculture (USDA), NRCS. 2019a. Soils survey data for the project site accessed online at: *http://websoilsurvey.nrcs.usda.gov/app/*
- USDA, NRCS. 2019b. National and State of California hydric soils for the project study area accessed online at: *http://www.nrcs.usda.gov/wps/portal/nrcs/main/soils/use/hydric/*
- USGS National Hydrography Data. *https://nhd.usgs.gov/tools.html#MDTool*
- Environmental Laboratory. 1987. *Corps of Engineers Wetlands Delineation Manual*. U.S. Army Corps of Engineers Waterways Experiment Station. Vicksburg, MS.
- USACE. 2010. *Regional Supplement to the Corps of Engineers Wetland Delineation Manual: Western Mountains, Valleys, and Coast Region* (Version 2.0).
- USACE U.S. Environmental Protection Agency. 2007. *Clean Water Act Jurisdiction Following the U.S. Supreme Court's Decision in Rapanos v. United States and Carabell v. United States.*
- USDA, NRCS. 2010. *Field Indicators of Hydric Soils in the United States*, Version 7.0. L.M. Vasilas, G.W. Hurt, and C.V. Noble (eds). USDA, NRCS in cooperation with the National Committee for Hydric Soils.
- Gretag, Macbeth. 2000. *Munsell Soil Color Charts*. New Windsor, NY.
- Cowardin, *et al*. 1979. *Classification of Wetlands and Deepwater Habitats of the United States*. U.S. Fish and Wildlife Service, Washington D.C.
- USACE. 2019. *National Wetland Plant List, version 3.3.* Accessed online at: http://wetland_plants.usace.army.mil/

3.2 Research and Field Methodology

Prior to conducting the delineation, NCE reviewed the USGS topographic maps, USGS NHD, aerial photographs, USFWS NWI, and the NRCS Web Soil Survey for the survey area. These documents were reviewed for indications of ephemeral, intermittent, and perennial drainages as well as mapped wetlands and spring locations.

Wetlands

A potential wetland was identified within the survey area; however, it is a man-made stormwater basin created in uplands for stormwater management. NCE delineated the boundaries of this feature to determine if this feature is a potentially jurisdictional resource and/or a waters of the state of California. The man-made stormwater basin was delineated utilizing the USACE 1987 three-parameter (vegetation, hydrology, and soils) methodology. This methodology was refined in the 2010 *Regional Supplement to the Corps of Engineers Wetland Delineation Manual: Western Mountains, Valleys, and Coast Region (Version 2.0)* and requires the collection of data on soils, vegetation, and hydrology at several locations to establish the resource boundary.

The team identified representative locations for data collection. Soil pits were dug, and the team collected data on vegetation, hydrology, and soils. Soils were also examined, and correlations were developed between the three parameters to determine if the potential resource meets the three parameters to be considered a wetland. Data points were evaluated to determine the composition and identification of dominant plant species. The indicator status of all dominant plant species, as determined by the 2016 National Wetland Plant List, version 3.3, was applied and evaluated as part of the vegetation assessment portion of the wetland delineation process. Additionally, immediate subsurface soil conditions were examined for hydric attributes or a lack thereof. Observations were made and recorded for both primary and secondary wetland hydrology indicators, if present. Soil pit locations were recorded with a Trimble Geo7x GPS unit and were documented with representative photographs.

Representative photographs are provided in **Appendix C**. The plants identified within the entire survey area are presented in **Appendix D**. The wetland datasheets are provided in **Appendix E**.

Drainages

Griff Creek within the survey area was assessed for the presence of Ordinary High-Water Mark (OHWM) indicators, evidence of frequent surface water flows, and a connection to a traditional navigable waterway (TNW). These characteristics were considered to be indicative of a jurisdictional waters of the United States (WOUS). Arid West Ephemeral and Intermittent Stream OHWM Data Sheets were completed for each drainage with the presence of OHWM indicators. If the drainage had OHWM indicators present, the drainage was followed to determine if the drainage flowed into another drainage with OHWM indicators or if these indicators terminated. Where the drainage exhibited OHWM indicators, width measurements were taken to be used in determining an average width of the drainage and height measurements from the OHWM to the drainage bottom were taken. When drainages with OHWM indicators left the area, an attempt was made to follow the drainage to determine if OHWM indicators terminated or a connection to a TNW. Ordinary High-Water Mark (OHWM) indicator locations were recorded with a Trimble Geo7x GPS unit and representative photographs were taken.

Representative photographs are provided in **Appendix C**. The plants identified within the entire survey area are presented in **Appendix D**. The OHWM datasheet is provided in **Appendix E**.

3.3 Survey Data Integration

Boundaries of the potential aquatic resources within the project survey area were mapped using a Trimble Geo7x GPS unit and digitized in ESRI ArcGIS Pro 2.4.0 software. The datum is NAD 1983.

3.4 Property Owner Access

Property access is needed for seven parcels (**Appendix B, Figure 4,** and **Table 2**). On August 5, 2019, Mr. Dan LaPlante of Placer County mailed each property owner a letter describing the project and the Property Access Statement to be signed by the property owner (**Appendix F**). As of October 1, 2019, no letters have been received by the property owners. When the signed Property Access Statements are received from the property owner's, they will be emailed to the USACE.

Table 2. Property Owner Access

Staging Area	Property Owner and Land Use	Letter Sent? (Y/N)	Letter Received? (Y/N) (See Appendix F)
A	Two Parcels: Lanza Joseph; Placer County (Department Facility Services)	Y to Lanza Joseph	N
B	Placer County, Department of Public Works	N, Not Applicable	N, Not Applicable
C	Placer County, Vacant Commercial Land and Parking Lots	N, Not Applicable	N, Not Applicable
D	Tahoe Truckee Unified School District, School	Y	N
E	Voltaix LLC, Vacant Commercial Land	Y	N
F	Voltaix LLC, Vacant Commercial Land	Y	N
G	Veeder View, Vacant Commercial Land	Y	N
H	Affordable Linen Service, Light Industrial Use	Y	N
I	Placer County/Right-of-Way	N, Not Applicable	N, Not Applicable
J	Old Brockway Golf Course; Right-of-Way	Y to Old Brockway Golf Course	N

4.0 RESULTS

4.1 Landscape Setting

The survey area is approximately 10.47 acres and was delineated by NCE on October 31, 2018 and July 9, 2019. The survey area generally slopes from north to south. The west side of the site is higher than the east side which is bounded by Secline Street. The highest point of the survey area on the northeast side is at 6,247 ft. above mean sea level (MSL) and the lowest point of the survey area on the southwest side is 6,228 feet above MSL.

Griff Creek runs through the survey area on the east. The survey area is highly developed. The survey area is characterized predominantly by urban land fragmented by aspen, Jeffrey pine, montane chaparral, and montane hardwood-conifer.

There are no NWI mapped wetlands within the survey area and a USGS indicates the presence of a drainage (Griff Creek) within the survey area (**Appendix B, Figure 6**).

4.2 Aquatic Resources

4.2.1 Stormwater Basin

NCE identified a man-made stormwater basin within the survey area. NCE was onsite on October 31, 2018 and July 9, 2019 to assess the hydrology and plant species. During the October site visit the stormwater basin contained about three inches of standing water. During the July site visit the stormwater basin contained standing water but in a much smaller footprint.

The man-made stormwater basin was constructed in uplands as presented in historical aerial Google Earth images from 1991 and 1992. In March of 1998, JWA Consulting Engineers, Inc. released a plan set for bid that included the proposed stormwater treatment basin (identified as Pond E). Due to the size of the 1998 plan set, only Sheet C1 is included in **Appendix G**.

Data points SP1 and SP2 were collected to delineate the boundary of the stormwater basin.

Data point 1 (SP1) contained hydrophytic vegetation but did not contain hydric soils or the presence of wetland hydrology. The vegetation at Data point 1 consisted of 90% *Carex* sp., and 2% *Potentilla gracilis*, as well as 8% bare ground. The Carex species was not able to be identified to species due to a lack of inflorescence. Due to this an Indicator Status of FACW was assumed instead of an OBL because of a lack of wetland hydrology and hydric soils. Data point 1 meet the criteria for hydrophytic vegetation but not the criteria for wetland hydrology (on both Oct 31, 2018 and July 9, 2019 site visits) nor hydric soils, due to this Data point 1 is not within a wetland.

Data point 2 (SP2) contained hydrophytic vegetation, hydric soils, and the presence of hydrology near the data point. Data point 2 consisted of 5% *Carex capitate*, 20% rock, and 75% bare ground. On October 31, 2018, Data point 2 contained about three inches of surface water within and surrounding the data point. On July 9, 2019, Data point 2 was dry but the surrounding area contained the presence of wetland hydrology. Due to the October 31, 2018 and July 9, 2019 site visits, NCE assumed the presence of wetland hydrology. Hydric soils were present, the hydric soil indicator was the depleted below dark surface (A11). Data point 2 is within a wetland.

The stormwater basin contains a 16-inch culvert on the northeastern edge of the basin. This culvert is the input of stormwater from SR 267. The stormwater basin is in a horseshoe shape with the center of the horseshoe being a few feet elevated from the bottom of the basin. The southeast edge of the basin contains an elevated culvert standpipe, this is the outlet for the

stormwater basin during storm events. The stormwater basin is 0.04 acres in size (**Appendix A, Figure 1**). Due to the USACE not regulating stormwater features created in uplands for stormwater management this stormwater basin is not federally jurisdictional.

Data point 3 (SP3) was collected at a representative location to determine if the area surrounding the stormwater basin contained hydrophytic vegetation, hydric soils, and/or wetland hydrology. Data Point 3 consisted of 60% *Carex vesicaria*, 25% *Carex* sp., 13% bare ground, and 2% *Poa pratensis.* The Carex species was not able to be identified to species due to a lack of inflorescence, due to this an Indicator Status of FACW was assumed. Data point SP3 contained hydrophytic vegetation but did not contain hydric soils or the presence of wetland hydrology. Due to this, the area surrounding the stormwater basin is not a wetland.

Appendix B, Figure 8 presents the ground photograph figure. Representative photographs are in **Appendix C**. A plant list of the entire survey area is located in **Appendix D**. Datasheets 1, 2, and 3 are in **Appendix E**.

4.2.2 Drainage

Griff Creek was identified flowing generally north to south in the eastern portion of the survey area. This is a NHD and a NWI mapped drainage, as well as on the USGS topographic map. This drainage passes underneath SR 28 through three metal culverts, each are about 60 inches across. Griff Creek discharges into Lake Tahoe, a TNW. Data point Middle Culvert contained a change in vegetation species and a change in vegetation cover. Due to the presence of OHWM indicators and the drainage's connection to a TNW, NCE believes Griff Creek is a potentially jurisdictional waterway. This drainage is Cowardin classified as Lower Perennial, Riverine, and is approximately 1.04 acres in size (**Appendix A, Figure 1**).

Appendix B, Figure 8 presents the ground photograph figure. Representative photographs are in **Appendix C**. A plant list of the entire survey area is located in **Appendix D**. The OHWM datasheet is in **Appendix E**.

4.2.3 Aquatic Resources Types and Amounts

Below are two tables with the aquatic resources identified within the project survey area (**Table 2**) and the proposed jurisdictional status (**Table 3**).

NCE believes that the man-made stormwater basin in non-federally jurisdictional due to the fact that the creation of the stormwater basin was constructed in uplands for the management of stormwater (Env. Protection Agency, Federal Register, 2015). To support this, Google Earth imagery from 1991 and 1992 depicting the location of the stormwater basin in uplands is in **Appendix G**. In addition, in March of 1998, JWA Consulting Engineers, Inc. released a plan set for bid that included the proposed stormwater treatment basin (identified as Pond E). Due to the size of the 1998 plan set, only Sheet C1 is included in **Appendix G**. Also, there is a history of maintenance that occurs at the stormwater basin (Pond E) (**Appendix G**).

NCE believes that the stormwater basin is a waters of the State of California.

Griff Creek has a direct hydrologic connection to Lake Tahoe; NCE believes that Griff Creek is a federally jurisdictional resource (as well as a waters of the State of California)

Table 3. Aquatic Resources within the Survey Area

Aquatic Resource Name	Aquatic Resources Classification		Aquatic Resource Size (acre) Required for all resources	Aquatic Resource Size (linear feet) Required only for stream channels
	Cowardin	Location (lat/long)		
Stormwater Basin	Upland	39.2382072 N -120.037646 W	0.04	
Griff Creek	R2 – Lower Perennial Riverine	39.2378224 N -120.030445 W	0.03	75.46
Total			0.07	

Table 4. Waters of the U.S Proposed Jurisdictional Status

Water Type	Total Acres	Jurisdictional	Non-Jurisdictional
Stormwater Basin - Upland	0.04		0.04
Griff Creek – Perennial	0.03	0.03	
TOTAL	0.07	0.03	0.04

4.3 Significant Nexus

The U.S Army Corps of Engineers Jurisdictional Determination Form Instructional Guidebook (USACE 2007) was consulted to aid the preliminary determination whether an area would be subject to USACE jurisdiction under Section 404 of the Clean Water Act. The significant nexus test, outlined in a memorandum jointly authored by the U.S. Environmental Protection Agency and USACE, was applied to each potentially jurisdictional habitat type (Grumbles and Woodley 2008). To facilitate potentially jurisdictional determination consistent with the guidance, each water body delineated was evaluated as a TNW, Relatively Permanent Water (RPW), or non-RPW, based on the following definitions:

- TNWs include all waters subject to the ebb and flow the tide, or waters that are presently used, have been used in the past, or may be used in the future to transport interstate or foreign commerce, and all waters that are navigable in fact under federal law for any purpose.
- RPWs are waters that flow continuously at least seasonally (typically at least 3 months of the year) and are not TNWs.
- Non-RPWs are waters that do not have continuous flow at least seasonally.

The following types of water bodies are subject to Clean Water Act jurisdiction:

- All TNWs and adjacent wetlands;
- Relatively permanent tributaries of TNWs and wetlands with a continuous surface connection to such tributaries; and
- Non-relatively permanent tributaries of TNWs and adjacent wetlands if they have a significant nexus to a TNW. Non-RPWs and adjacent wetlands are determined to have a

significant nexus to a TNW if they significantly affect the chemical, physical, or biological integrity of a downstream TNW.

NCE's professional opinion is that the man-made stormwater basin does not have a continuous surface connection to Griff Creek. The outlet of the man-made stormwater basin is an elevated culverted standpipe, due to this, there is no continuous surface connection to Griff Creek. It is unlikely that the man-made stormwater basin could significantly affect the chemical, physical, and/or biological integrity of Griff Creek or Lake Tahoe.

NCE's professional opinion is that Griff Creek is hydrologically connected to Lake Tahoe, which is a TNW. Griff Creek has the ability to affect the chemical, physical, and/or biological integrity of Lake Tahoe, resulting in a significant nexus.

Appendix H contains the Aquatic Resource Excel Sheet and the GIS data.

The above findings should be considered preliminary until the USACE makes a final approved jurisdictional determination in coordination with the United States Environmental Protection Agency. Areas deemed jurisdictional will then be subject to the regulatory requirements of the federal Clean Water Act.

5.0 REFERENCES

Cowardin, et al. 1979. *Classification of Wetlands and Deepwater Habitats of the United States*. U.S. Fish and Wildlife Service, Washington D.C.

Environmental Laboratory. 1987. *Corps of Engineers Wetlands Delineation Manual*. U.S. Army Corps of Engineers Waterways Experiment Station. Vicksburg, MS.

Environmental Protection Agency, Federal Register Volume 80, No. 124, June 29, 2015. Clean Water Rule: Definition of "Waters of the United States"; Final Rule

Google Earth Imagery. 1991 and 1992.

Gretag, Macbeth. 2000. *Munsell Soil Color Charts.* New Windsor, NY.

Grumbles, B. H., and J. P. Woodley, Jr. 2008 (December 2). *Clean Water Act Jurisdiction Following the U.S. Supreme Court's Decision in* Rapanos v. United States *and* Carabell v. United States. Memorandum to U.S. Environmental Protection Agency regions and U.S. Army Corps of Engineers districts. Washington, DC.

JWA Consulting Engineers, Inc. 1998. *Safeway Store #1592, Kings Beach, California, Overall Site Plan*. Sheet C1.

Lichvar, R.W., D.L. Banks, W.N. Kirchner, and N.C. Melvin. 2016. *The National Wetland Plant List*: 2016 wetland ratings. Phytoneuron 2016-30: 1-17. Published 28 April 2016. ISSN 2153 733X. http://www.phytoneuron.net/

Old Brockway Golf Course. Maintenance Records for Pond E from 1999-2001, 2003, 2005, 2008-2017.

State of California, Department of Transportation. 2011. As Built for Basin 124, Sheets D-40, DP-55, D-1, DP-1.

United States Army Corps of Engineers. 2007. *Jurisdictional Determination Form Instructional Guidebook*, Washington, DC.

United States Army Corps of Engineers. 2010. *Regional Supplement to the Corps of Engineers Wetland Delineation Manual: Western Mountains, Valleys, and Coast Region (Version 2.0).*

United States Army Corps of Engineers. 2016. *National Wetland Plant List, version 3.3*. http://wetland_plants.usace.army.mil/

United States Army Corps of Engineers, U.S. Environmental Protection Agency. 2007. *Clean Water Act Jurisdiction Following the U.S. Supreme Court's Decision in Rapanos v. United States and Carabell v. United States.*

United States Department of Agriculture. 2009. Existing Vegetation Data (CALVEG) by Tiles (*EvegTile17B_05_24k_v1) in Albers for Lake Tahoe Basin Management Unit* USDA Forest Service Remote Sensing Lab, Ecosystem Planning, http://www.fs.usda.gov/detail/r5/landmanagement/resourcemanagement/?cid=stelprdb5347192

United States Department of Agriculture, NRCS. 2003. *Field Indicators of Hydric Soils in the United States, Version 5.01*. G.W. Hurt, P.M. Whited, and R.F. Pringle (eds). USDA, NRCS in cooperation with the National Committee for Hydric Soils. Fort Worth, TX.

United States Department of Agriculture, NRCS. 2019a. Soils survey data for the project survey area. http://websoilsurvey.nrcs.usda.gov/app/

United States Department of Agriculture. NRCS. 2019b. National hydric soils for the project survey area. http://www.nrcs.usda.gov/wps/portal/nrcs/main/soils/use/hydric/

United States Geological Survey. National Hydrography Data. https://nhd.usgs.gov/tools.html#MDTool

United States Geological Survey. Kings Beach, California 7.5-minute series topographic quadrangle. U.S. Department of the Interior.

Appendix A

Aquatic Resource Delineation Map

Table 4. Waters of the U.S Proposed Jurisdictional Status

Water Type	Total Acres	Jurisdictional	Non-Jurisdictional
Stormwater Basin - Upland	0.04		0.04
Griff Creek – Perennial	0.03	0.03	
TOTAL	0.07	0.03	0.04

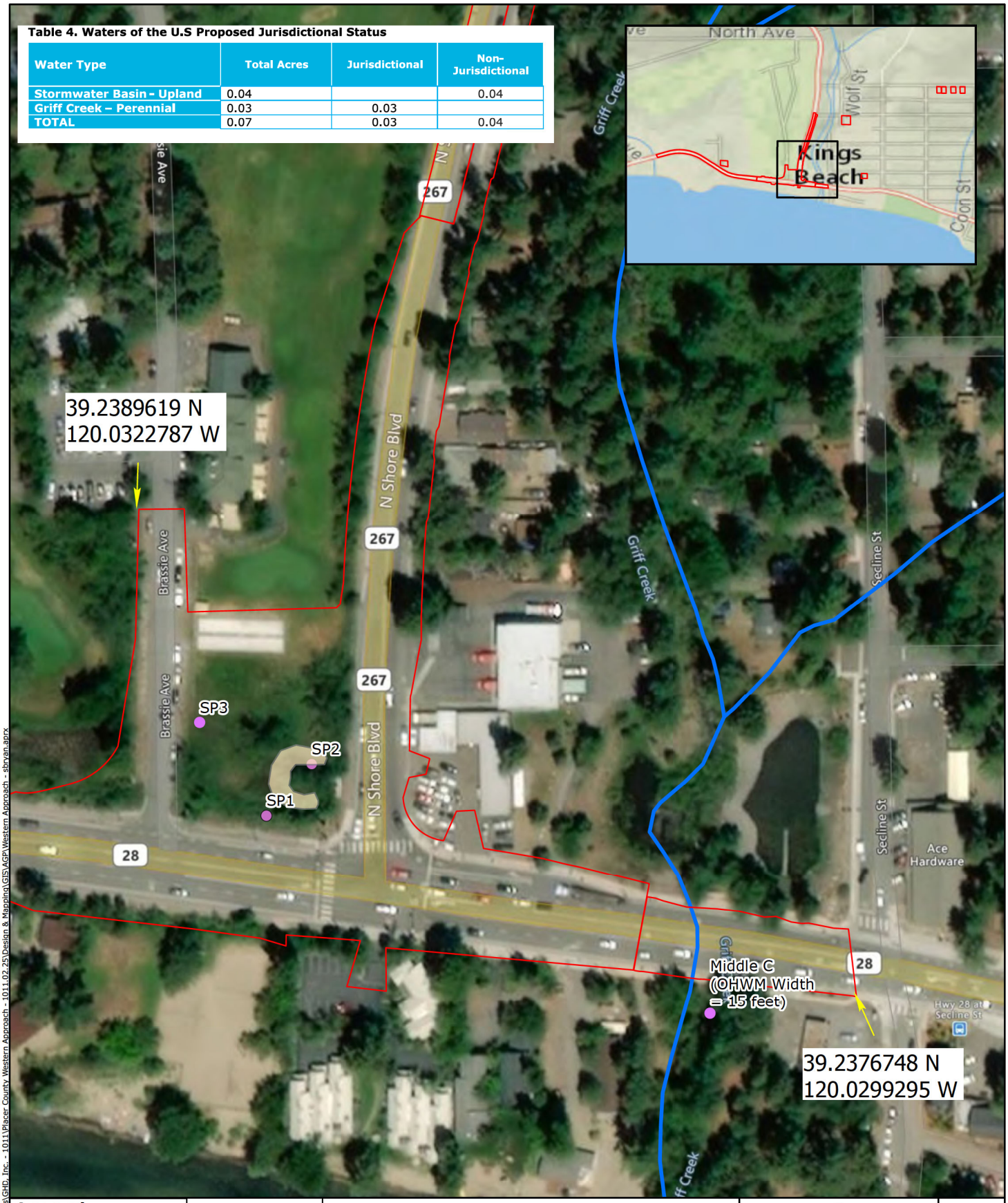

Legend

- Survey Area
- Man-Made Stormwater Basin
- Griff Creek
- Data Point

NCE

Kings Beach Western Approach Project

Proposed Delineation Map

N

1 in. = 60 ft.

0 60 ft.

FIGURE 1

SOURCE	JOB NUMBER	DRAWN	DATE	REVISED	APPROVED
Bing Hybrid Basemap; NCE 2018-2019	1011.02.25	sbryan	7/12/2019	7/22/2019	drios

Document Path: P:\Active Projects\GHD, Inc. - 1011\Placer County Western Approach - 1011.02.25\Design & Mapping\GIS\AGP\Western Approach - sbryan.aprx

Appendix B

Supporting Maps

Legend

Survey Area

NCE

Kings Beach Western Approach

Project Location Map

N

1 in. = 10,000 ft.

0 5,000 10,000 ft.

FIGURE 1

SOURCE	JOB NUMBER	DRAWN	DATE	REVISED	APPROVED
Bing Aerial Basemap	1011.02.25	sbryan	7/2/2019	7/22/2019	drios

Document Path: P:\Active Projects\GHD, Inc. - 1011\Placer County Western Approach - 1011.02.25\Design & Mapping\GIS\AGP\Western Approach - sbryan.aprx

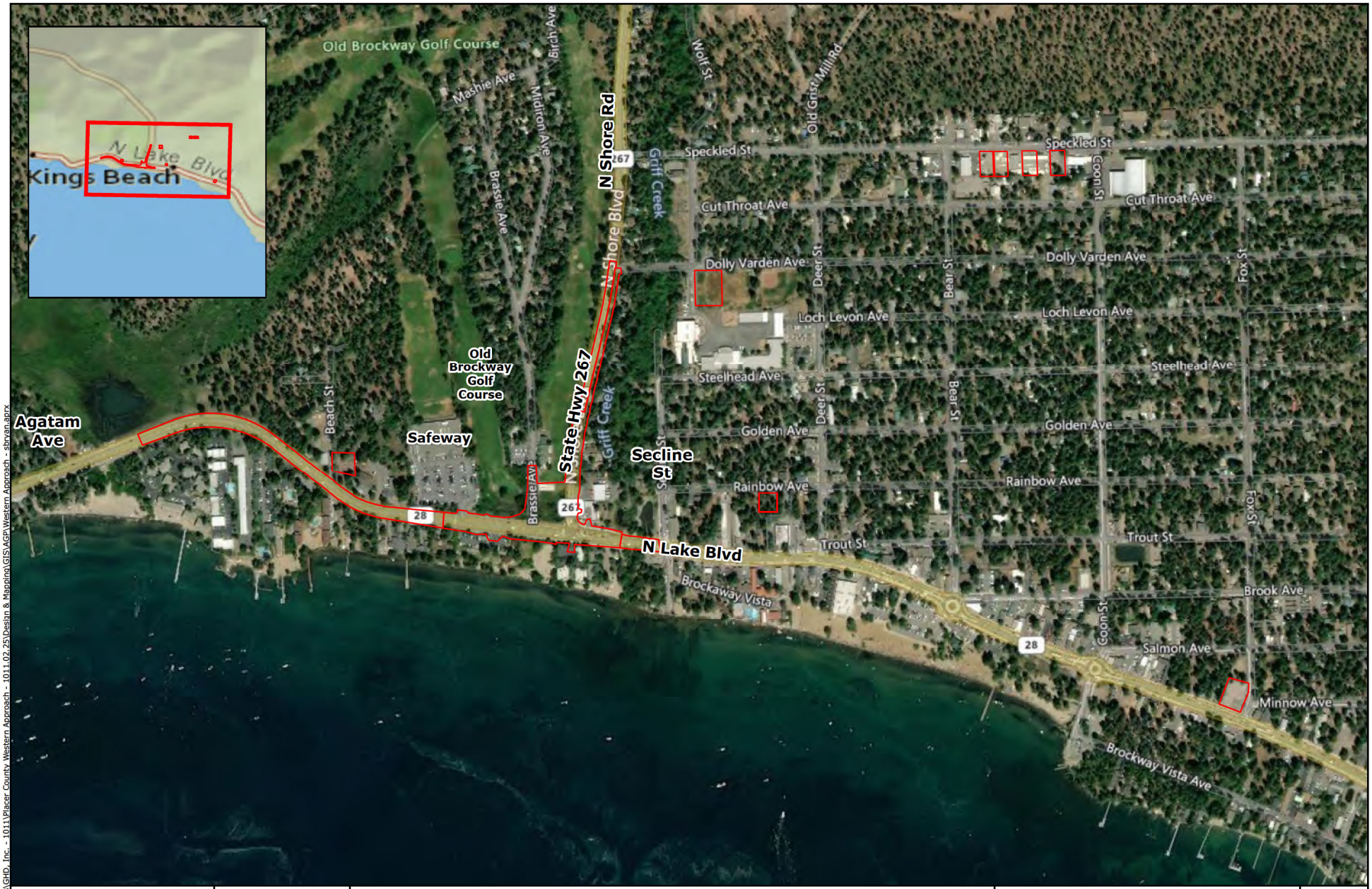

Legend

Survey Area

NCE

Kings Beach Western Approach

Project Survey Area

N

1 in. = 700 ft.

0 350 700 ft.

FIGURE 2

SOURCE	JOB NUMBER	DRAWN	DATE	REVISED	APPROVED
Bing Aerial Basemap	1011.02.25	sbryan	7/1/2019	7/22/2019	drios

Document Path: P:\Active Projects\GHD, Inc. - 1011\Placer County Western Approach - 1011.02.25\Design & Mapping\GIS\AGIP\Western Approach - sbryan.aprx

Legend

Survey Area

NCE

Kings Beach Western Approach

Topographic Quadrangle Map

N

1 in. = 600 ft.

0 300 600 ft.

FIGURE 3

SOURCE	JOB NUMBER	DRAWN	DATE	REVISED	APPROVED
USA Topographic Data	1011.02.25	sbryan	7/1/2019	7/22/2019	drios

Document Path: P:\Active Projects\GHD, Inc. - 1011\Placer County Western Approach - 1011.02.25\Design & Mapping\GIS\AGP\Western Approach - sbryan.aprx

Table 2. Property Owner Access

Staging Area	Property Owner and Land Use
A	Two Parcels: Lanza Joseph; Placer County (Department Facility Services)
B	Placer County, Department of Public Works
C	Placer County, Vacant Commercial Land and Parking Lots
D	Tahoe Truckee Unified School District, School
E	Voltaix LLC, Vacant Commercial Land
F	Voltaix LLC, Vacant Commercial Land
G	Veeder View, Vacant Commercial Land
H	Affordable Linen Service, Light Industrial Use
I	Placer County/Right-of-Way
J	Old Brockway Golf Course; Right-of-Way

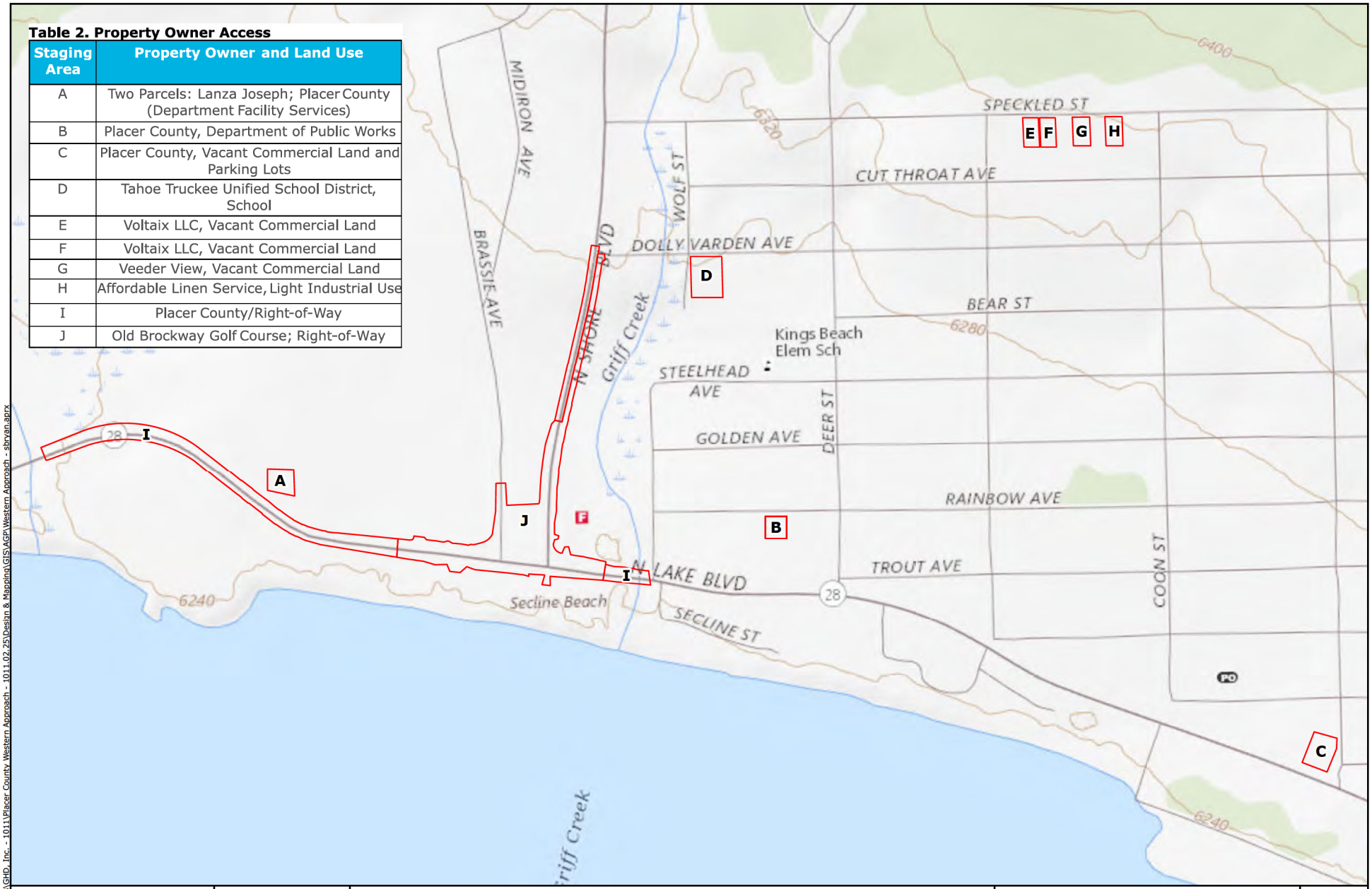

Legend

Survey Area

NCE

Kings Beach Western Approach

Staging Area Map

N

1 in. = 600 ft.

0 300 600 ft.

FIGURE 4

SOURCE	JOB NUMBER	DRAWN	DATE	REVISED	APPROVED
USGS Topographic Data	1011.02.25	sbryan	7/22/2019	7/23/2019	drios

Document Path: P:\Active Projects\GHD, Inc. - 1011\Placer County Western Approach - 1011.02.25\Design & Mapping\GIS\AGP\Western Approach - sbryan.aprx

NCE

Kings Beach Western Approach

CWHR Type (Vegetation Communities)

N

1 in. = 600 ft.

0 300 600 ft.

FIGURE 5

SOURCE	JOB NUMBER	DRAWN	DATE	REVISED	APPROVED
Bing Aerial Hybrid; California Wildlife Habitat Relationships Dataset	1011.02.25	sbryan	7/1/2019	7/22/2019	drios

Document Path: P:\Active Projects\GHD, Inc. - 1011\Placer County Western Approach - 1011.02.25\Design & Mapping\GIS\AGP\Western Approach - sbryan.aprx

NCE

Kings Beach Western Approach

National Wetlands Inventory (NWI) Map

N

1 in. = 600 ft.

0 300 600 ft.

FIGURE 6

SOURCE	JOB NUMBER	DRAWN	DATE	REVISED	APPROVED
Bing Aerial Basemap; National Wetlands Inventory (NWI)	1011.02.25	sbryan	7/2/2019	7/22/2019	drios

Document Path: P:\Active Projects\GHD, Inc. - 1011\Placer County Western Approach - 1011.02.25\Design & Mapping\GIS\AGP\Western Approach - sbryan.aprx

NCE

Kings Beach Western Approach

NRCS Soils Map

N

1 in. = 600 ft.

0 300 600 ft.

FIGURE 7

SOURCE	JOB NUMBER	DRAWN	DATE	REVISED	APPROVED
NRCS Soils	1011.02.25	sbryan	7/2/2019	7/22/2019	drios

Document Path: P:\Active Projects\GHD, Inc. - 1011\Placer County Western Approach - 1011.02.25\Design & Mapping\GIS\AGP\Western Approach - sbryan.aprx

Location	Data Sheet Point	Photo-graph Number	Coordinates (Latitude and Longitude)	Photo Direction/Description
Soil Pit 1	SP1	PP 1	39.2381486 120.0318770	Soil pit; see Appendix C
		PP 2		Looking west at vegetation; see Appendix C
Soil Pit 2	SP2	PP 3	39.2382832 120.0317263	Soil pit, standing water at 3'' depth; see Appendix C
		PP 4		Looking west at standing water; see Appendix C
Soil Pit 3	SP3	PP 5	39.2383916 120.0320996	Soil pit; see Appendix C
		PP 6		Looking south; see Appendix C
Storm Grate	SGrate	PP 7	39.2381673 120.0317082	Looking at the storm grate, discharge point with elevated waters; see Appendix C
Upland Aspen	UA	PP 8	39.2382754 120.0317798	Aspens on the mound inside the stormwater basin; see Appendix C
Middle Culvert	Middle C	PP 9	39.2376318 120.0304055	Looking downstream (south); see Appendix C
Griff Creek Up	GC Up	PP 10	39.2379254 120.0303411	Standing on the concrete culvert landing looking upstream (north); see Appendix C

Legend

- Survey Area
- Man-Made Stormwater Basin
- Griff Creek
- Data Point

NCE

Kings Beach Western Approach

Ground Level Photograph Locations and Directions

N

1 in. = 60 ft.

0 30 60 ft.

FIGURE 8

SOURCE	JOB NUMBER	DRAWN	DATE	REVISED	APPROVED
Bing Aerial Hybrid; NHD Flowline; NCE 2019	1011.02.25	sbryan	7/11/2019	7/23/2019	drios

Document Path: P:\Active Projects\GHD, Inc. - 1011\Placer County Western Approach - 1011.02.25\Design & Mapping\GIS\ASP Western Approach - sbryan.aprx

Appendix C

Representative Photographs

PP 1: Soil Pit 1, SP1, looking at the soil pit.

PP 2: Soil Pit 1, SP1, looking west.

PP 3: Soil Pit 2, SP2, looking at the soil pit, standing water at 3" depth.

PP 4: Soil Pit 2, SP2, looking west at standing water.

PP 5: Soil Pit 3, SP3, looking at the soil pit.

PP 6: Soil Pit 3, SP3, looking south.

PP 7: Storm Grate, SGrate, looking at the storm grate, discharge point with elevated waters.

PP 8: Upland Aspen, UA, aspens on the mound inside of the stormwater basin.

PP 9: Middle Culvert, MC, looking downstream (south).

PP 10: Griff Creek Up, GC Up, standing on the concrete culvert landing looking upstream (north).

Appendix D

Plant List

Plant Species Identified Within the Project Area October 2018 and July 2019

Scientific Name	Common Name	Native: Y, N	Wetland Indicator Status*
Acer sp.	Maple	Unknown	FACU or FAC (due to unknown species)
Achillea millefolium	Common yarrow	Y	FACU
Alnus incana	Speckled alder	Y	FACW
Berberis aquifolium	Mountain grape	Y	NL
Bromus tectorum	Cheatgrass	N	NL
Carex capitata	Capitate sedge	Y	FACW
Carex vesicaria	Blister sedge	Y	OBL
Cirsium andersonii	Anderson's thistle	Y	NL
Cornus sericea	American dogwood	Y	NL
Elymus cinereus	Great Basin wild rye	Y	NL
Elymus hispidus	Intermediate wheatgrass	Y	NL
Equisetum arvense	Field horsetail	Y	FAC
Equisetum hyemale	Tall Scouring-Rush	Y	FACW
Festuca idoahoensis	Blue fescue	Y	NL
Juncus sp.	Rush	Y	OBL, FACW, FAC, and FACU (due to unknown species)
Lathyrus latifolius	Perennial pea	N	NL
Lupinus breweri	Brewer's lupine	Y	NL
Lupinus polyphyllus	Blue-pod lupine	Y	FAC
Melilotus albus	White sweetclover	N	NL
Pinus jeffreyi	Jeffrey pine	Y	NL
Populus tremuloides	Quaking aspen	Y	FACU
Potentilla sp.	Cinquefoil	Y	NL
Rosa californica	Wild rose	Y	FAC
Rumex crispus	Curly dock	N	FAC
Salix lasiolepis	Arroyo willow	Y	FACW

Salix scouleriana	Scouler's willow	Y	FAC
Scirpus microcarpus	Red-tinge bulrush	Y	OBL
Symphoricarpos mollis	Creeping snowberry	Y	FACU
Trifolium pratense	Red clover	N	FACU
Verbascum thapsus	Great mullein	N	FACU
Veronica serpyllifolia	Thymeleaf speedwell	Y	FAC

* Wetland Indicator Status:

OBL = Obligate Wetland; occurs in aquatic resources > 99% of time
FACW = Facultative Wetland; occurs in aquatic resources 67-99% of time
FAC = Facultative; occurs in aquatic resources 34-66% of time
FACU = Facultative Upland; occurs in aquatic resources 1-33% of time
UPL = Obligate Upland; occurs in uplands > 99% of time
NL = Not Listed

Appendix E

Wetland Delineation Datasheets

Arid West Ephemeral and Intermittent Streams OHWM Datasheet

Project: GHD
Project Number: Western Approach 1011.02.25
Stream: Griff Creek
Investigator(s): Sarah Bryan + Debra Lenke

Date: 7-9-19 **Time:** 9:20
Town: North Shore **State:** CA
Photo begin file#: 4 **Photo end file#:** 5

Y ☒ / N ☐ Do normal circumstances exist on the site?

Y ☐ / N ☒ Is the site significantly disturbed?

Location Details: Kings Beach, CA

Projection: NAD 1983 **Datum:**
Coordinates: State Plane CA II FIPS 0403 (feet) 39.2376792, -120.0303405

Potential anthropogenic influences on the channel system:
Highway, high tourism foot traffic, Lake Tahoe is downstream.

Brief site description: Culverts - 3 total under Highway 28 - Associated with Griff Creek. Mature vegetation. Flowing water. Bank above the culvert - man made slope w/ rock protection. Sidewalk along highway. Griff Creek directly discharges into Lake Tahoe

Checklist of resources (if available):

- ☒ Aerial photography
  Dates:
- ☒ Topographic maps
- ☐ Geologic maps
- ☒ Vegetation maps
- ☒ Soils maps
- ☐ Rainfall/precipitation maps
- ☐ Existing delineation(s) for site
- ☒ Global positioning system (GPS)
- ☐ Other studies

- ☐ Stream gage data
  Gage number:
  Period of record:
  - ☐ History of recent effective discharges
  - ☐ Results of flood frequency analysis
  - ☐ Most recent shift-adjusted rating
  - ☐ Gage heights for 2-, 5-, 10-, and 25-year events and the most recent event exceeding a 5-year event

Hydrogeomorphic Floodplain Units

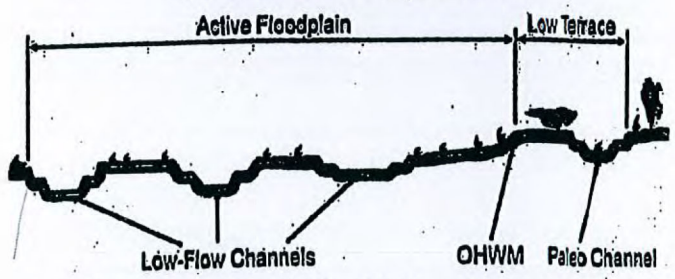

Procedure for identifying and characterizing the floodplain units to assist in identifying the OHWM:

1. Walk the channel and floodplain within the study area to get an impression of the geomorphology and vegetation present at the site.
2. Select a representative cross section across the channel. Draw the cross section and label the floodplain units.
3. Determine a point on the cross section that is characteristic of one of the hydrogeomorphic floodplain units.
   a) Record the floodplain unit and GPS position.
   b) Describe the sediment texture (using the Wentworth class size) and the vegetation characteristics of the floodplain unit.
   c) Identify any indicators present at the location.
4. Repeat for other points in different hydrogeomorphic floodplain units across the cross section.
5. Identify the OHWM and record the indicators. Record the OHWM position via:
   - ☐ Mapping on aerial photograph
   - ☐ Digitized on computer
   - ☒ GPS
   - ☐ Other:

Western Approach

Project ID: GHD **Cross section ID:** Griff Creek **Date:** 7-9-19 **Time:** 9:20

Cross section drawing:

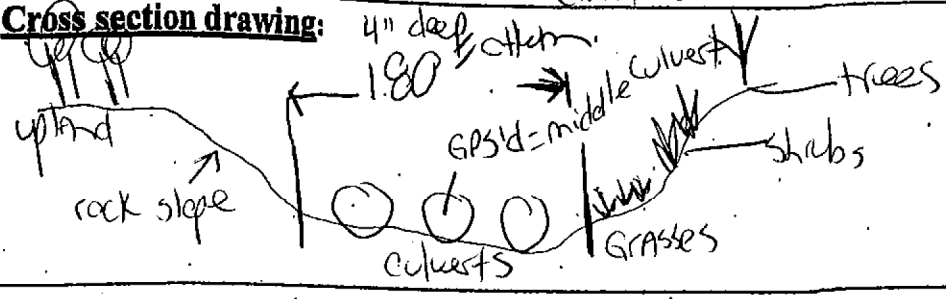

OHWM middle culvert - 60" Across. H2O depth = 4"

- Willows
- Cottonwood
- Pine

GPS point: Middle culvert

Indicators:

- ☐ Change in average sediment texture
- ☒ Change in vegetation species
- ☒ Change in vegetation cover
- ☒ Break in bank slope
- ☒ Other: Flowing water
- ☐ Other: _____

Comments:

3 metal culverts downstream side of Highway 28

Photos: 4 standing on middle culvert looking downstream. S facing

Floodplain unit: ☒ Low-Flow Channel ☐ Active Floodplain ☐ Low Terrace

GPS point: _____

Characteristics of the floodplain unit:

Average sediment texture: Sandy Silt

Total veg cover: 50 % Tree: 20 % Shrub: 40 % Herb: 40 %

Community successional stage:

- ☐ NA
- ☐ Early (herbaceous & seedlings)
- ☐ Mid (herbaceous, shrubs, saplings)
- ☒ Late (herbaceous, shrubs, mature trees)

Indicators:

- ☐ Mudcracks
- ☐ Ripples
- ☐ Drift and/or debris
- ☒ Presence of bed and bank
- ☐ Benches
- ☐ Soil development
- ☐ Surface relief
- ☐ Other: _____
- ☐ Other: _____
- ☐ Other: _____

Comments:

upstream of Highway 28, Griff Creek is not project boundary.

GPS: Griff Up. We're standing on a concrete culvert landing.

creek

Photo 5 on concrete culvert landing - looking upstream - N

WETLAND DETERMINATION DATA FORM – Western Mountains, Valleys, and Coast Region

Project/Site: Western Approach City/County: Placer County Sampling Date: 7-9-19

Applicant/Owner: GHD - Placer County State: CA Sampling Point: SP1

Investigator(s): Debra Lemke & Sarah Bryan Section, Township, Range: 19, 16, 18

Landform (hillslope, terrace, etc.): Sediment Basin Local relief (concave, convex, none): Concave to Convex Slope (%): 2

Subregion (LRR): W. Mountain, Valleys, & Coast Region Lat: 39.2382027 Long: 120.0317645 Datum: NAD 1983

Soil Map Unit Name: Kingsbeach stony sandy loam, 2 to 15 % slopes NWI classification: None

Are climatic / hydrologic conditions on the site typical for this time of year? Yes X No ____ (If no, explain in Remarks.)

Are Vegetation ____, Soil ____, or Hydrology ____ significantly disturbed? No Are "Normal Circumstances" present? Yes X No ____

Are Vegetation ____, Soil ____, or Hydrology ____ naturally problematic? No (If needed, explain any answers in Remarks.)

SUMMARY OF FINDINGS – Attach site map showing sampling point locations, transects, important features, etc.

Hydrophytic Vegetation Present?	Yes X	No ____	**Is the Sampled Area within a Wetland?** Yes ____ No X
Hydric Soil Present?	Yes ____	No X	
Wetland Hydrology Present?	Yes ____	No X	

Remarks: No b/c no hydrology or soils, yet wetland veg is present. This was also a very wet winter.

VEGETATION – Use scientific names of plants.

Tree Stratum (Plot size: ____)	Absolute % Cover	Dominant Species?	Indicator Status
1.			
2.			
3.			
4.			
	____ = Total Cover		

Sapling/Shrub Stratum (Plot size: ____)			
1.			
2.			
3.			
4.			
5.			
	____ = Total Cover		

Herb Stratum (Plot size: 1 m²)			
1. Carex sp (no inflorescence)	90%	Y	FACW
2. Potentilla gracilis	2%		FAC
3. ~~Bareground~~	~~8%~~		
4.			
5.			
6.			
7.			
8.			
9.			
10.			
11.			
	92% = Total Cover		

Woody Vine Stratum (Plot size: ____)			
1.			
2.			
	____ = Total Cover		

% Bare Ground in Herb Stratum 8

Dominance Test worksheet:

Number of Dominant Species That Are OBL, FACW, or FAC: 1 (A)

Total Number of Dominant Species Across All Strata: 1 (B)

Percent of Dominant Species That Are OBL, FACW, or FAC: 100 (A/B)

Prevalence Index worksheet:

Total % Cover of:		Multiply by:
OBL species	____	x 1 = ____
FACW species	____	x 2 = ____
FAC species	____	x 3 = ____
FACU species	____	x 4 = ____
UPL species	____	x 5 = ____
Column Totals:	____ (A)	____ (B)

Prevalence Index = B/A = ____

Hydrophytic Vegetation Indicators:

- ___ 1 - Rapid Test for Hydrophytic Vegetation
- X 2 - Dominance Test is >50%
- ___ 3 - Prevalence Index is ≤3.0[1]
- ___ 4 - Morphological Adaptations[1] (Provide supporting data in Remarks or on a separate sheet)
- ___ 5 - Wetland Non-Vascular Plants[1]
- ___ Problematic Hydrophytic Vegetation[1] (Explain)

[1]Indicators of hydric soil and wetland hydrology must be present, unless disturbed or problematic.

Hydrophytic Vegetation Present? Yes X No ____

Remarks: Assumed indicator status rating for carex sp. due to no inflorescence. We chose this rating due to the potential of wetland vegetation. We did not choose OBL rating due to the lack of hydric soils and wetland hydrology. And CAREX CAPITATA was nearby, and it is a FACW rating.

SOIL

Sampling Point: SP1

Profile Description: (Describe to the depth needed to document the indicator or confirm the absence of indicators.)

Depth (inches)	Matrix Color (moist)	Matrix %	Redox Features Color (moist)	Redox %	Type[1]	Loc[2]	Texture	Remarks
0-4	10YR 4/2	100					loam	thick veg mat
4-12	10YR 4/4	100					loam	
12- refusal								

[1]Type: C=Concentration, D=Depletion, RM=Reduced Matrix, CS=Covered or Coated Sand Grains. [2]Location: PL=Pore Lining, M=Matrix.

Hydric Soil Indicators: (Applicable to all LRRs, unless otherwise noted.)

- ___ Histosol (A1)
- ___ Histic Epipedon (A2)
- ___ Black Histic (A3)
- ___ Hydrogen Sulfide (A4)
- ___ Depleted Below Dark Surface (A11)
- ___ Thick Dark Surface (A12)
- ___ Sandy Mucky Mineral (S1)
- ___ Sandy Gleyed Matrix (S4)
- ___ Sandy Redox (S5)
- ___ Stripped Matrix (S6)
- ___ Loamy Mucky Mineral (F1) **(except MLRA 1)**
- ___ Loamy Gleyed Matrix (F2)
- ___ Depleted Matrix (F3)
- ___ Redox Dark Surface (F6)
- ___ Depleted Dark Surface (F7)
- ___ Redox Depressions (F8)

Indicators for Problematic Hydric Soils[3]:

- ___ 2 cm Muck (A10)
- ___ Red Parent Material (TF2)
- ___ Very Shallow Dark Surface (TF12)
- ___ Other (Explain in Remarks)

[3]Indicators of hydrophytic vegetation and wetland hydrology must be present, unless disturbed or problematic.

Restrictive Layer (if present):

Type: ___

Depth (inches): ___

Hydric Soil Present? Yes ___ No X

Remarks: photo - 1 soil pit
2 N
3 E
4 S
5 W facing

HYDROLOGY

Wetland Hydrology Indicators:

Primary Indicators (minimum of one required; check all that apply)

- ___ Surface Water (A1)
- ___ High Water Table (A2)
- ___ Saturation (A3)
- ___ Water Marks (B1)
- ___ Sediment Deposits (B2)
- ___ Drift Deposits (B3)
- ___ Algal Mat or Crust (B4)
- ___ Iron Deposits (B5)
- ___ Surface Soil Cracks (B6)
- ___ Inundation Visible on Aerial Imagery (B7)
- ___ Sparsely Vegetated Concave Surface (B8)
- ___ Water-Stained Leaves (B9) **(except MLRA 1, 2, 4A, and 4B)**
- ___ Salt Crust (B11)
- ___ Aquatic Invertebrates (B13)
- ___ Hydrogen Sulfide Odor (C1)
- ___ Oxidized Rhizospheres along Living Roots (C3)
- ___ Presence of Reduced Iron (C4)
- ___ Recent Iron Reduction in Tilled Soils (C6)
- ___ Stunted or Stressed Plants (D1) **(LRR A)**
- ___ Other (Explain in Remarks)

Secondary Indicators (2 or more required)

- ___ Water-Stained Leaves (B9) **(MLRA 1, 2, 4A, and 4B)**
- ___ Drainage Patterns (B10)
- ___ Dry-Season Water Table (C2)
- ___ Saturation Visible on Aerial Imagery (C9)
- ___ Geomorphic Position (D2)
- ___ Shallow Aquitard (D3)
- ___ FAC-Neutral Test (D5)
- ___ Raised Ant Mounds (D6) **(LRR A)**
- ___ Frost-Heave Hummocks (D7)

Field Observations:

Surface Water Present? Yes ___ No X Depth (inches): ___

Water Table Present? Yes ___ No X Depth (inches): ___

Saturation Present? (includes capillary fringe) Yes ___ No X Depth (inches): ___

Wetland Hydrology Present? Yes ___ No X

Describe Recorded Data (stream gauge, monitoring well, aerial photos, previous inspections), if available:

Remarks: No evidence of primary or secondary wetland hydrology indicators at both October 31, 2018 and July 9, 2019 site visits.

WETLAND DETERMINATION DATA FORM – Western Mountains, Valleys, and Coast Region

Project/Site: Western Approach City/County: Placer County Sampling Date: 7-9-19

Applicant/Owner: Placer County State: CA Sampling Point: ~~3~~ SP2

Investigator(s): Debra Lemke & Sarah Bryan Section, Township, Range: 19, 16, 18

Landform (hillslope, terrace, etc.): Basin Local relief (concave, convex, none): Concave Slope (%): 2

Subregion (LRR): N. Mountains, Valley, & Coast Region Lat: 39.2382843 Long: 120.0317252 Datum: NAD 1983

Soil Map Unit Name: Kings beach stony sandy loam, 2 to 15% slopes NWI classification: None

Are climatic / hydrologic conditions on the site typical for this time of year? Yes X No _____ (If no, explain in Remarks.)

Are Vegetation _____, Soil _____, or Hydrology _____ significantly disturbed? No Are "Normal Circumstances" present? Yes X No _____

Are Vegetation _____, Soil _____, or Hydrology _____ naturally problematic? No (If needed, explain any answers in Remarks.)

SUMMARY OF FINDINGS – Attach site map showing sampling point locations, transects, important features, etc.

Hydrophytic Vegetation Present?	Yes X	No _____
Hydric Soil Present?	Yes X	No _____
Wetland Hydrology Present?	Yes X	No _____

Is the Sampled Area within a Wetland? Yes X No _____

Remarks: This was a very wet winter.

VEGETATION – Use scientific names of plants.

Tree Stratum (Plot size: _____)	Absolute % Cover	Dominant Species?	Indicator Status
1.			
2.			
3.			
4.			
	_____ = Total Cover		

Sapling/Shrub Stratum (Plot size: _____)			
1.			
2.			
3.			
4.			
5.			
	_____ = Total Cover		

Herb Stratum (Plot size: 1m²)			
1. Carex capitata	5%	Y	FACW
2. ~~Rock~~	~~20%~~		
3. ~~Bare Ground~~	~~75%~~		
4.			
5.			
6.			
7.			
8.			
9.			
10.			
11.			
	~~75~~ ~~100%~~ 5 = Total Cover		

Woody Vine Stratum (Plot size: _____)			
1.			
2.			
	_____ = Total Cover		

% Bare Ground in Herb Stratum 75 + 20 rock

Dominance Test worksheet:

Number of Dominant Species That Are OBL, FACW, or FAC: 1 (A)

Total Number of Dominant Species Across All Strata: 1 (B)

Percent of Dominant Species That Are OBL, FACW, or FAC: 100% (A/B)

Prevalence Index worksheet:

Total % Cover of:	Multiply by:
OBL species _____	x 1 = _____
FACW species _____	x 2 = _____
FAC species _____	x 3 = _____
FACU species _____	x 4 = _____
UPL species _____	x 5 = _____
Column Totals: _____ (A)	_____ (B)

Prevalence Index = B/A = _____

Hydrophytic Vegetation Indicators:

- ___ 1 - Rapid Test for Hydrophytic Vegetation
- X 2 - Dominance Test is >50%
- ___ 3 - Prevalence Index is ≤3.0[1]
- ___ 4 - Morphological Adaptations[1] (Provide supporting data in Remarks or on a separate sheet)
- ___ 5 - Wetland Non-Vascular Plants[1]
- ___ Problematic Hydrophytic Vegetation[1] (Explain)

[1]Indicators of hydric soil and wetland hydrology must be present, unless disturbed or problematic.

Hydrophytic Vegetation Present? Yes X No _____

Remarks: Determined carex was dominant b/c it was the only plant present. In October 31, 2018 this sampling point was in standing water.

SOIL

Sampling Point: SP2

Profile Description: (Describe to the depth needed to document the indicator or confirm the absence of indicators.)

Depth (inches)	Matrix Color (moist)	Matrix %	Redox Features Color (moist)	Redox %	Type[1]	Loc[2]	Texture	Remarks
0-4								OM mtl
4-12	10YR2/1	100					silty clay	saturated

[1]Type: C=Concentration, D=Depletion, RM=Reduced Matrix, CS=Covered or Coated Sand Grains. [2]Location: PL=Pore Lining, M=Matrix.

Hydric Soil Indicators: (Applicable to all LRRs, unless otherwise noted.)

- ___ Histosol (A1)
- ___ Histic Epipedon (A2)
- ___ Black Histic (A3)
- ___ Hydrogen Sulfide (A4)
- X Depleted Below Dark Surface (A11)
- ___ Thick Dark Surface (A12)
- ___ Sandy Mucky Mineral (S1)
- ___ Sandy Gleyed Matrix (S4)
- ___ Sandy Redox (S5)
- ___ Stripped Matrix (S6)
- ___ Loamy Mucky Mineral (F1) **(except MLRA 1)**
- ___ Loamy Gleyed Matrix (F2)
- ___ Depleted Matrix (F3)
- ___ Redox Dark Surface (F6)
- ___ Depleted Dark Surface (F7)
- ___ Redox Depressions (F8)

Indicators for Problematic Hydric Soils[3]:

- ___ 2 cm Muck (A10)
- ___ Red Parent Material (TF2)
- ___ Very Shallow Dark Surface (TF12)
- ___ Other (Explain in Remarks)

[3]Indicators of hydrophytic vegetation and wetland hydrology must be present, unless disturbed or problematic.

Restrictive Layer (if present):

Type: rock

Depth (inches): 12

Hydric Soil Present? Yes X No ___

Remarks:

HYDROLOGY

Wetland Hydrology Indicators:

Primary Indicators (minimum of one required; check all that apply)

- ___ Surface Water (A1)
- X High Water Table (A2)
- X Saturation (A3)
- ___ Water Marks (B1)
- ___ Sediment Deposits (B2)
- ___ Drift Deposits (B3)
- ___ Algal Mat or Crust (B4)
- ___ Iron Deposits (B5)
- ___ Surface Soil Cracks (B6)
- ___ Inundation Visible on Aerial Imagery (B7)
- ___ Sparsely Vegetated Concave Surface (B8)
- ___ Water-Stained Leaves (B9) **(except MLRA 1, 2, 4A, and 4B)**
- ___ Salt Crust (B11)
- ___ Aquatic Invertebrates (B13)
- ___ Hydrogen Sulfide Odor (C1)
- ___ Oxidized Rhizospheres along Living Roots (C3)
- ___ Presence of Reduced Iron (C4)
- ___ Recent Iron Reduction in Tilled Soils (C6)
- ___ Stunted or Stressed Plants (D1) **(LRR A)**
- ___ Other (Explain in Remarks)

Secondary Indicators (2 or more required)

- ___ Water-Stained Leaves (B9) **(MLRA 1, 2, 4A, and 4B)**
- ___ Drainage Patterns (B10)
- ___ Dry-Season Water Table (C2)
- ___ Saturation Visible on Aerial Imagery (C9)
- ___ Geomorphic Position (D2)
- ___ Shallow Aquitard (D3)
- ___ FAC-Neutral Test (D5)
- ___ Raised Ant Mounds (D6) **(LRR A)**
- ___ Frost-Heave Hummocks (D7)

Field Observations:

Surface Water Present? Yes X No ___ Depth (inches): 3"

Water Table Present? Yes X No ___ Depth (inches): 3"

Saturation Present? (includes capillary fringe) Yes X No ___ Depth (inches): top

Wetland Hydrology Present? Yes X No ___

Describe Recorded Data (stream gauge, monitoring well, aerial photos, previous inspections), if available:

Remarks:

Hydrology present on October 31, 2018, but not present on July 9, 2019 around the sampling point was mushy.

WETLAND DETERMINATION DATA FORM – Western Mountains, Valleys, and Coast Region

Project/Site: Western Approach City/County: Placer County Sampling Date: 7-9-19

Applicant/Owner: Placer County State: CA Sampling Point: SP3

Investigator(s): Deba Lemke & Sarah Bryan Section, Township, Range: 19, 16, 18

Landform (hillslope, terrace, etc.): Flat Local relief (concave, convex, none): none Slope (%): 2

Subregion (LRR): W. Mountains, Valleys, & Coast Region Lat: 39.2383885 Long: 120.0320953 Datum: NAD 1983

Soil Map Unit Name: Kings beach stony sandy loam, 2 to 15 % slopes NWI classification: None

Are climatic / hydrologic conditions on the site typical for this time of year? Yes X No _____ (If no, explain in Remarks.)

Are Vegetation _____, Soil _____, or Hydrology _____ significantly disturbed? No Are "Normal Circumstances" present? Yes X No _____

Are Vegetation _____, Soil _____, or Hydrology _____ naturally problematic? No (If needed, explain any answers in Remarks.)

SUMMARY OF FINDINGS – Attach site map showing sampling point locations, transects, important features, etc.

Hydrophytic Vegetation Present?	Yes X	No _____
Hydric Soil Present?	Yes _____	No X
Wetland Hydrology Present?	Yes _____	No X

Is the Sampled Area within a Wetland? Yes _____ No X

Remarks: Very wet winter 2018/2019

VEGETATION – Use scientific names of plants.

Tree Stratum (Plot size: _____)	Absolute % Cover	Dominant Species?	Indicator Status
1.			
2.			
3.			
4.			
	_____ = Total Cover		

Sapling/Shrub Stratum (Plot size: _____)			
1.			
2.			
3.			
4.			
5.			
	_____ = Total Cover		

Herb Stratum (Plot size: 1 m²)			
1. Poa pratensis	2%		FAC
2. Carex vesicaria	60%	Y	OBL
3. Carex sp?	25%	Y	FACW
4. ~~Bare Ground~~	~~13%~~		
5.			
6.			
7.			
8.			
9.			
10.			
11.			
	87 ~~100%~~ = Total Cover		

Woody Vine Stratum (Plot size: _____)			
1.			
2.			
	_____ = Total Cover		

% Bare Ground in Herb Stratum 13

Dominance Test worksheet:

Number of Dominant Species That Are OBL, FACW, or FAC: 2 (A)

Total Number of Dominant Species Across All Strata: 2 (B)

Percent of Dominant Species That Are OBL, FACW, or FAC: 100 (A/B)

Prevalence Index worksheet:

Total % Cover of:		Multiply by:
OBL species	_____	x 1 = _____
FACW species	_____	x 2 = _____
FAC species	_____	x 3 = _____
FACU species	_____	x 4 = _____
UPL species	_____	x 5 = _____
Column Totals:	_____ (A)	_____ (B)

Prevalence Index = B/A = _____

Hydrophytic Vegetation Indicators:

- ___ 1 - Rapid Test for Hydrophytic Vegetation
- X 2 - Dominance Test is >50%
- ___ 3 - Prevalence Index is ≤3.0[1]
- ___ 4 - Morphological Adaptations[1] (Provide supporting data in Remarks or on a separate sheet)
- ___ 5 - Wetland Non-Vascular Plants[1]
- ___ Problematic Hydrophytic Vegetation[1] (Explain)

[1]Indicators of hydric soil and wetland hydrology must be present, unless disturbed or problematic.

Hydrophytic Vegetation Present? Yes X No _____

Remarks: Assumed ~~wet~~ indicator status rating for carex sp. due to no inflorescence. We chose this rating due to the potential of wetland vegetation. We did not chose OBL rating due to the lack of hydric soils and wetland hydrology.

SOIL

Sampling Point: SP3

Profile Description: (Describe to the depth needed to document the indicator or confirm the absence of indicators.)

Depth (inches)	Matrix Color (moist)	Matrix %	Redox Features Color (moist)	Redox %	Type[1]	Loc[2]	Texture	Remarks
0-1								organic veg mat
1-9	7.5YR 3/2	100					loamy sand	

[1]Type: C=Concentration, D=Depletion, RM=Reduced Matrix, CS=Covered or Coated Sand Grains. [2]Location: PL=Pore Lining, M=Matrix.

Hydric Soil Indicators: (Applicable to all LRRs, unless otherwise noted.)

- ___ Histosol (A1)
- ___ Histic Epipedon (A2)
- ___ Black Histic (A3)
- ___ Hydrogen Sulfide (A4)
- ___ Depleted Below Dark Surface (A11)
- ___ Thick Dark Surface (A12)
- ___ Sandy Mucky Mineral (S1)
- ___ Sandy Gleyed Matrix (S4)
- ___ Sandy Redox (S5)
- ___ Stripped Matrix (S6)
- ___ Loamy Mucky Mineral (F1) (except MLRA 1)
- ___ Loamy Gleyed Matrix (F2)
- ___ Depleted Matrix (F3)
- ___ Redox Dark Surface (F6)
- ___ Depleted Dark Surface (F7)
- ___ Redox Depressions (F8)

Indicators for Problematic Hydric Soils[3]:

- ___ 2 cm Muck (A10)
- ___ Red Parent Material (TF2)
- ___ Very Shallow Dark Surface (TF12)
- ___ Other (Explain in Remarks)

[3]Indicators of hydrophytic vegetation and wetland hydrology must be present, unless disturbed or problematic.

Restrictive Layer (if present):

Type: rocky

Depth (inches): 9

Hydric Soil Present? Yes ___ No X

Remarks:

no hydric soil indicators present

photo 5 - soil pit - soil

6 - South
7 east
8 - North
9 - west

HYDROLOGY

Wetland Hydrology Indicators:

Primary Indicators (minimum of one required; check all that apply)

- ___ Surface Water (A1)
- ___ High Water Table (A2)
- ___ Saturation (A3)
- ___ Water Marks (B1)
- ___ Sediment Deposits (B2)
- ___ Drift Deposits (B3)
- ___ Algal Mat or Crust (B4)
- ___ Iron Deposits (B5)
- ___ Surface Soil Cracks (B6)
- ___ Inundation Visible on Aerial Imagery (B7)
- ___ Sparsely Vegetated Concave Surface (B8)
- ___ Water-Stained Leaves (B9) (except MLRA 1, 2, 4A, and 4B)
- ___ Salt Crust (B11)
- ___ Aquatic Invertebrates (B13)
- ___ Hydrogen Sulfide Odor (C1)
- ___ Oxidized Rhizospheres along Living Roots (C3)
- ___ Presence of Reduced Iron (C4)
- ___ Recent Iron Reduction in Tilled Soils (C6)
- ___ Stunted or Stressed Plants (D1) (LRR A)
- ___ Other (Explain in Remarks)

Secondary Indicators (2 or more required)

- ___ Water-Stained Leaves (B9) (MLRA 1, 2, 4A, and 4B)
- ___ Drainage Patterns (B10)
- ___ Dry-Season Water Table (C2)
- ___ Saturation Visible on Aerial Imagery (C9)
- ___ Geomorphic Position (D2)
- ___ Shallow Aquitard (D3)
- ___ FAC-Neutral Test (D5)
- ___ Raised Ant Mounds (D6) (LRR A)
- ___ Frost-Heave Hummocks (D7)

Field Observations:

Surface Water Present? Yes ___ No X Depth (inches): ___

Water Table Present? Yes ___ No X Depth (inches): ___

Saturation Present? (includes capillary fringe) Yes ___ No X Depth (inches): ___

Wetland Hydrology Present? Yes ___ No X

Describe Recorded Data (stream gauge, monitoring well, aerial photos, previous inspections), if available:

Remarks:

no hydrology indicators present.

Appendix F

Property Access Statements

August 5, 2109

Joseph Lanza
PO BOX 1411
Tahoe City CA 96145

Dear Mr. Lanza:

Placer County is planning a roadway improvement project (Kings Beach Western Approach). Placer County staff has identified multiple potential lots within the community that could be used for construction staging. In order for these parcels to be utilized, appropriate pre-surveys would need to be conducted and a written agreement between the property owner and the selected contractor would be required. The construction of this work will take place during May to October of 2022 and May to October of 2023.

The project is located at the intersection of State Route (SR) 28 and SR 267 in Kings Beach, California. The survey area extends approximately 0.5 miles west of the intersection along the SR 28 corridor and approximately 0.10 miles north of the intersection along SR 267. The project proposes to remove the existing signaled intersection and replace it with a roundabout intersection. The purpose of the project is to improve overall accessibility, mobility, and safety for all roadway users while providing a continuous complete street corridor.

We identified your parcel A (**Figure 1**) as a potential staging area for this project. We have finished our technical studies and the United States Army Corps of Engineers (USACE) may need access to your property to confirm the presence/absence of Waters of the United States (WOUS). Our consultant, NCE, did not identify any WOUS on your parcel.

Please sign the attached letter and mail it back for concurrence with this letter.

Should you have any questions, please do not hesitate to contact me at (530) 581-6231 or dlaplant@placer.ca.gov.

Sincerely,

Dan LaPlante, P.E.
Associate Civil Engineer

Attachments:
Figure 1 Staging Area Map
Property Access Statement

August 5, 2019

Tahoe Truckee Unified School District
11839 Donner Pass Road
Truckee CA 96161

Dear Property Owner:

Placer County is planning a roadway improvement project (Kings Beach Western Approach). Placer County staff has identified multiple potential lots within the community that could be used for construction staging. In order for these parcels to be utilized, appropriate pre-surveys would need to be conducted and a written agreement between the property owner and the selected contractor would be required. The construction of this work will take place during May to October of 2022 and May to October of 2023.

The project is located at the intersection of State Route (SR) 28 and SR 267 in Kings Beach, California. The survey area extends approximately 0.5 miles west of the intersection along the SR 28 corridor and approximately 0.10 miles north of the intersection along SR 267. The project proposes to remove the existing signaled intersection and replace it with a roundabout intersection. The purpose of the project is to improve overall accessibility, mobility, and safety for all roadway users while providing a continuous complete street corridor.

We identified your parcel D (**Figure 1**) as a potential staging area for this project. We have finished our technical studies and the United States Army Corps of Engineers (USACE) may need access to your property to confirm the presence/absence of Waters of the United States (WOUS). Our consultant, NCE, did not identify any WOUS on your parcel.

Please sign the attached letter and mail it back for concurrence with this letter.

Should you have any questions, please do not hesitate to contact me at (530) 581-6231 or dlaplant@placer.ca.gov.

Sincerely,

Dan LaPlante, P.E.
Associate Civil Engineer

Attachments:
Figure 1 Staging Area Map
Property Access Statement

August 5, 2019

Voltaix LLC
13140 Fellowship Way
Reno, NV 89511

Dear Property Owner:

Placer County is planning a roadway improvement project (Kings Beach Western Approach). Placer County staff has identified multiple potential lots within the community that could be used for construction staging. In order for these parcels to be utilized, appropriate pre-surveys would need to be conducted and a written agreement between the property owner and the selected contractor would be required. The construction of this work will take place during May to October of 2022 and May to October of 2023.

The project is located at the intersection of State Route (SR) 28 and SR 267 in Kings Beach, California. The survey area extends approximately 0.5 miles west of the intersection along the SR 28 corridor and approximately 0.10 miles north of the intersection along SR 267. The project proposes to remove the existing signaled intersection and replace it with a roundabout intersection. The purpose of the project is to improve overall accessibility, mobility, and safety for all roadway users while providing a continuous complete street corridor.

We identified your parcels E and F (**Figure 1**) as a potential staging area for this project. We have finished our technical studies and the United States Army Corps of Engineers (USACE) may need access to your property to confirm the presence/absence of Waters of the United States (WOUS). Our consultant, NCE, did not identify any WOUS on your parcel.

Please sign the attached letter and mail it back for concurrence with this letter.

Should you have any questions, please do not hesitate to contact me at (530) 581-6231 or dlaplant@placer.ca.gov.

Sincerely,

Dan LaPlante, P.E.
Associate Civil Engineer

Attachments:
Figure 1 Staging Area Map
Property Access Statement

August 5, 2019

Veeder View
PO BOX 432
Oakville, CA 94562

Dear Property Owner:

Placer County is planning a roadway improvement project (Kings Beach Western Approach). Placer County staff has identified multiple potential lots within the community that could be used for construction staging. In order for these parcels to be utilized, appropriate pre-surveys would need to be conducted and a written agreement between the property owner and the selected contractor would be required. The construction of this work will take place during May to October of 2022 and May to October of 2023.

The project is located at the intersection of State Route (SR) 28 and SR 267 in Kings Beach, California. The survey area extends approximately 0.5 miles west of the intersection along the SR 28 corridor and approximately 0.10 miles north of the intersection along SR 267. The project proposes to remove the existing signaled intersection and replace it with a roundabout intersection. The purpose of the project is to improve overall accessibility, mobility, and safety for all roadway users while providing a continuous complete street corridor.

We identified your parcel G (**Figure 1**) as a potential staging area for this project. We have finished our technical studies and the United States Army Corps of Engineers (USACE) may need access to your property to confirm the presence/absence of Waters of the United States (WOUS). Our consultant, NCE, did not identify any WOUS on your parcel.

Please sign the attached letter and mail it back for concurrence with this letter.

Should you have any questions, please do not hesitate to contact me at (530) 581-6231 or dlaplant@placer.ca.gov.

Sincerely,

Dan LaPlante, P.E.
Associate Civil Engineer

Attachments:
Figure 1 Staging Area Map
Property Access Statement

August 5, 2019

Affordable Linen Service
PO Box 817
Kings Beach, CA 96143

Dear Property Owner:

Placer County is planning a roadway improvement project (Kings Beach Western Approach). Placer County staff has identified multiple potential lots within the community that could be used for construction staging. In order for these parcels to be utilized, appropriate pre-surveys would need to be conducted and a written agreement between the property owner and the selected contractor would be required. The construction of this work will take place during May to October of 2022 and May to October of 2023.

The project is located at the intersection of State Route (SR) 28 and SR 267 in Kings Beach, California. The survey area extends approximately 0.5 miles west of the intersection along the SR 28 corridor and approximately 0.10 miles north of the intersection along SR 267. The project proposes to remove the existing signaled intersection and replace it with a roundabout intersection. The purpose of the project is to improve overall accessibility, mobility, and safety for all roadway users while providing a continuous complete street corridor.

We identified your parcel H (**Figure 1**) as a potential staging area for this project. We have finished our technical studies and the United States Army Corps of Engineers (USACE) may need access to your property to confirm the presence/absence of Waters of the United States (WOUS). Our consultant, NCE, did not identify any WOUS on your parcel.

Please sign the attached letter and mail it back for concurrence with this letter.

Should you have any questions, please do not hesitate to contact me at (530) 581-6231 or dlaplant@placer.ca.gov.

Sincerely,

Dan LaPlante, P.E.
Associate Civil Engineer

Attachments:
Figure 1 Staging Area Map
Property Access Statement

August 5, 2019

Old Brockway Golf Course
PO Box 1269
Kings Beach, CA 96143

Dear Property Owner:

Placer County is planning a roadway improvement project (Kings Beach Western Approach). Placer County staff has identified multiple potential lots within the community that could be used for construction staging. In order for these parcels to be utilized, appropriate pre-surveys would need to be conducted and a written agreement between the property owner and the selected contractor would be required. The construction of this work will take place during May to October of 2022 and May to October of 2023.

The project is located at the intersection of State Route (SR) 28 and SR 267 in Kings Beach, California. The survey area extends approximately 0.5 miles west of the intersection along the SR 28 corridor and approximately 0.10 miles north of the intersection along SR 267. The project proposes to remove the existing signaled intersection and replace it with a roundabout intersection. The purpose of the project is to improve overall accessibility, mobility, and safety for all roadway users while providing a continuous complete street corridor.

We identified your parcel J (**Figure 1**) as a potential staging area for this project. We have finished our technical studies and the United States Army Corps of Engineers (USACE) may need access to your property to confirm the presence/absence of Waters of the United States (WOUS). Our consultant, NCE, did not identify any WOUS on your parcel.

Please sign the attached letter and mail it back for concurrence with this letter.

Should you have any questions, please do not hesitate to contact me at (530) 581-6231 or dlaplant@placer.ca.gov.

Sincerely,

Dan LaPlante, P.E.
Associate Civil Engineer

Attachments:
Figure 1 Staging Area Map
Property Access Statement

Table 2. Property Owner Access

Staging Area	Property Owner and Land Use
A	Two Parcels: Lanza Joseph; Placer County (Department Facility Services)
B	Placer County, Department of Public Works
C	Placer County, Vacant Commercial Land and Parking Lots
D	Tahoe Truckee Unified School District, School
E	Voltaix LLC, Vacant Commercial Land
F	Voltaix LLC, Vacant Commercial Land
G	Veeder View, Vacant Commercial Land
H	Affordable Linen Service, Light Industrial Use
I	Placer County/Right-of-Way
J	Old Brockway Golf Course; Right-of-Way

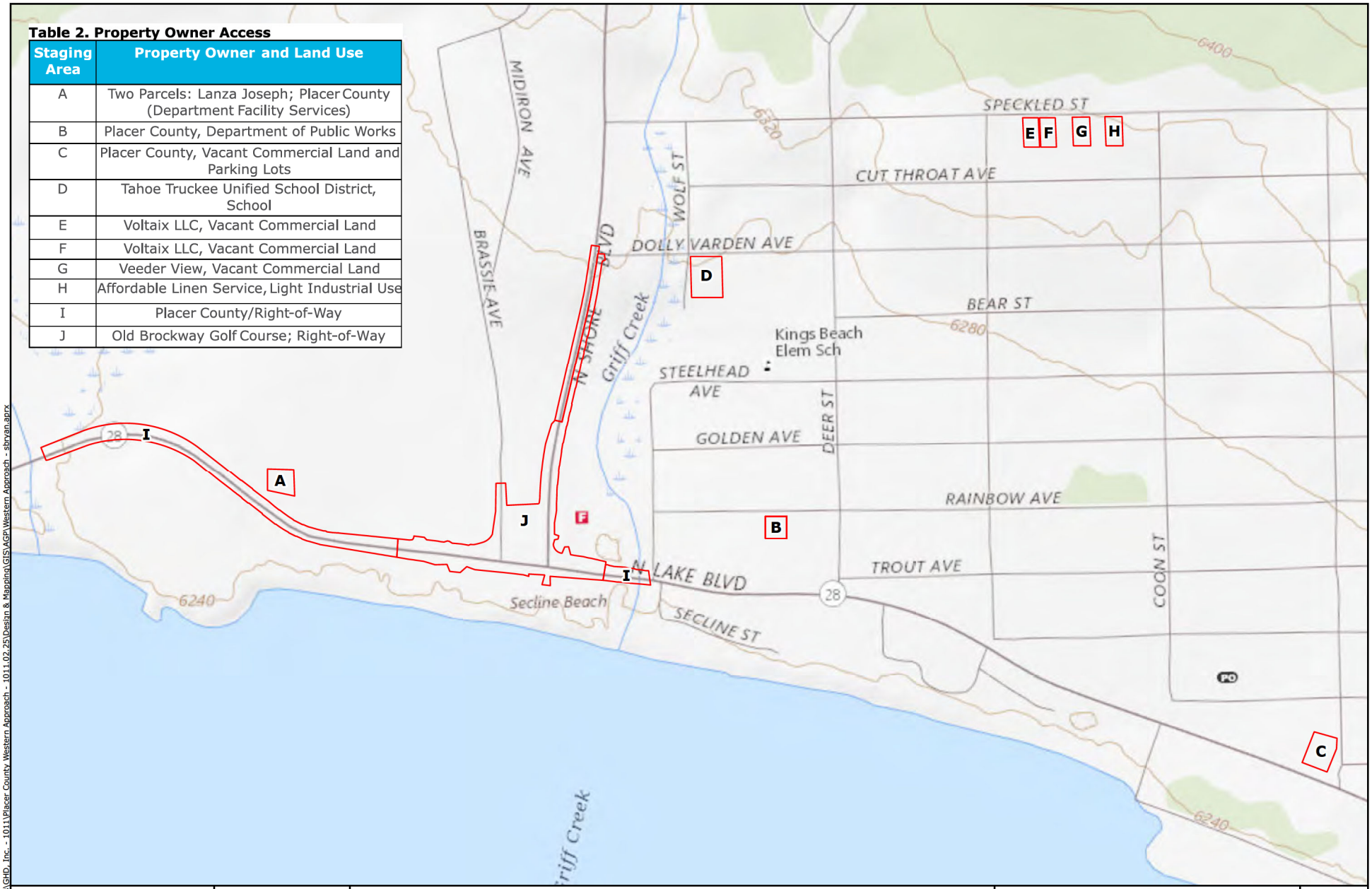

Legend

Survey Area

NCE

Kings Beach Western Approach

Staging Area Map

1 in. = 600 ft.

0 300 600 ft.

FIGURE 1

SOURCE	JOB NUMBER	DRAWN	DATE	REVISED	APPROVED
USGS Topographic Data	1011.02.25	sbryan	7/22/2019	7/23/2019	drios

Document Path: P:\Active Projects\GHD, Inc. - 1011\Placer County Western Approach - 1011.02.25\Design & Mapping\GIS\AGP\Western Approach - sbryan.aprx

I, _____, owner of Assessor's Parcel Number _____, allow USACE personnel to enter the property and collect samples during normal business hours. Please contact me at (___) ___-_____, at least 24 hours prior to entering the property.

_____ (Signature)

_____ (Name)

Appendix G

Google Earth Imagery 1991 and 1992, JWA 1998 Bid Package Sheet C1, Caltrans As-Built, Maintenance Records for Pond E 1999-2001, 2003, 2005, 2008-2017

1991 - Western Approach
Stormwater Basin NW of 267 and 28
Legend
Golden Ave
267
Brassie Ave
Rainbow Ave
28
N Lake Blvd
Seline St
Brookway Vista Dr
N
400 ft
Google Earth
Image U.S. Geological Survey

1992 - Western Approach
Stormwater Basin NW of 267 and 28
Legend
Golden Ave
267
Rainbow Ave
Brassie Ave
28
N Lake Blvd
Sedlne St
Brookway Vista Dr
N
400 ft
Google Earth
Image U.S. Geological Survey

SCALE: 1"= 50'

6' MASONRY WALL, 100 LF (SPLIT FACED CONCRETE TO MATCH THE BUILDING COLOR.) (1/C11)

6' HT. CHAIN LINK FENCE (BROWN VINYL COATED) RECLAIM YARD

J.S. LANZA, ET AL
A.P.N. 117-150-39

EXISTING BOULDER PARKING BARRIER

BORIS AND SHANNON SELITSCH
A.P.N. 117-160-013

MARLIES MOKHTARZADEH
A.P.N. 117-160-015 & 16

FIRE ACCESS ROAD TO REMAIN CLEAR

CONTROL POINT "A", SET REBAR N=5462.037', E=4985.983' TBM EL = 6246.69'

WHOLE ACCESS WALKWAY

16' RIGHT OF WAY EASEMENT (ABANDONED)

N00°02'00"E 114.24'

N08°48'00"W 159.98'

N02°23'00"W 127.96'

2'-3' HIGH BERM

ACCESS EASEMENT

RAMP

TRUCK PIT

CHAIN LINK FENCE ALONG PL TO PL LINE

SNOW STORAGE EASEMENT AREA 2

S03°26'00"E 604.84'

60.52' S25°21'09"E 160.00' S28°38'51"W

165.00' S25°38'51"W

207.67' WEST

N64°21'09"W 676.83'

STATE HIGHWAY 28

EXISTING SEDIMENTATION POND

BUS SHELTER (SEE SHEET C5)

CART STORAGE

5' SLIDING GATE

TRASH COMPACTOR IN THIS AREA, SEE ARCHITECTURAL PLANS

EXISTING SAFEWAY

TEE BOX, 10' X 175' (2/C11)

ADJUST EXISTING MANHOLE RIM TO WITHIN 3" BELOW UPPER TEE BOX SLAB ELEVATION

N84°14'39"E 255.33'

DRIVING RANGE

SAFEWAY PARCEL G
LEASED TO OLD BROCKWAY GOLF COURSE
A.P.N. 117-160-06
PARCEL AREA 502,866 SF

CONCRETE WALK

A.C. PARKING LOT

PROPOSED SAFEWAY

FINISHED FLOOR ELEVATION = 6245.7

TEMPORARY BASELINE

CONTROL POINT "B", SET REBAR N=5487.643', E=5240.025' TBM EL = 6249.61'

EXISTING SAFEWAY SIGN (PYLON) TO BE REMOVED

18" RCP, 65 LF SLOPE = 0.018 SEE SHEET C6 FOR D.I. INVERTS

PARKING STALLS = 203

CART STORAGE

10' POWER EASEMENT

POND B

POND A

PROPOSED TREATMENT BASINS

RELOCATED SAFEWAY SIGN "RELOCATION OF SIGN REQ'S SIGN PERMIT APPROVAL FROM PLACER COUNTY PLANNING DEPARTMENT"

NONEXCLUSIVE POWER EASEMENT DEEDS BOOK 1707, PAGE 666

REVISED PROPERTY LINES BASED ON MINOR BOUNDARY LINE ADJUSTMENT

(4/C11) CONSTRUCT ROCK RIP RAP SPILLWAY, ELEL 6241.85

(5/C9) BASIN OUTLET TR = 6241.10 IE OUT "N" = 6237.65

SNOW STORAGE EASEMENT AREA 1

S83°01'23"E 598.65'

DRAINAGE AREA

SAND TRAP

9TH FAIRWAY

POND D

SAFEWAY PARCEL S
A.P.N. 117-200-14
PARCEL AREA 181,603 SF

716.56'

S09°17'00"E

EXISTING WOOD FENCE TO BE REMOVED AND SALVAGED

(6/C8) PEDESTRIAN SIDEWALK (CONCRETE PAVERS)

9TH GREEN

SAND TRAP

GRAVEL MAINTENANCE YARD

CHAIN LINK FENCE

DRAINAGE YARD

POND E

PROPOSED TREATMENT BASINS

CONCRETE CURB & GUTTER

10' MULTI-PURPOSE EASEMENT

USGS BENCHMARK TO BE RELOCATED, CONTRACTOR TO COORDINATE WITH ENGINEER AND SURVEYOR

PEDESTRIAN LAMP POSTS (TYP)

CONSTRUCT AC SWALE TO TIE INTO PROPOSED CURB & GUTTER BY CALTRANS

SEE SHEET C11 FOR SIDEWALK LAYOUT BETWEEN BRASSIE AVE & STATE HIGHWAY 267

(4/C11) CONSTRUCT ROCK RIP RAP SPILLWAY, ELEL 6241.50

15' MULTI-PURPOSE EASEMENT

CONCRETE CURB AND GUTTER DESIGN BY CALTRANS

PROPOSED TREATMENT BASIN

EXISTING GOLF COURSE SIGN TO REMAIN

WOODVISTA SUBDIVISION

S80°43'00"W 108.86'

MATCH PL TO EP OFFSET AT THIS CORNER

N00°09'00"W 452.34'

BRASSIE AVE.

PROPOSED RELOCATED CLUBHOUSE

PARKING AREA

N01°11'53"W 110.85

DECK

CART PARKING

WOODVISTA SUBDIVISION

N12°49'03"E

OLD BROCKWAY GOLF COURSE
A.P.N. 117-200-46

A.P.N. 117-180-09

A.P.N. 117-180-06

A.P.N. 117-200-47

NO. 1 TEE

CART STORAGE

GRAVEL

157.59'±

155.18'±

1121.10'

FAIRWAY 1

1st TEE

Δ = 11°45'30"
R = 1530.00'
L = 313.99'

SEWER EASEMENT DEED 8/3 3/8

S01°17'49"W 230.81

N45°52'22"E 23.74

FENCE

STATE HIGHWAY 267

NOTE: PONDS A,B,C,D AND E ON THIS SHEET ARE MERELY SCHEMATIC. SEE SHEET 16 FOR CONSTRUCTION OF PONDS

LEGEND

- 30"ø PINE TREE
- MULTI-PURPOSE EASEMENT
- PEDESTRIAN LIGHTING
- BENCHMARKS
- DRAINAGE OR ACCESS EASEMENT
- SNOW STORAGE EASEMENT
- (1) PROPOSED PIPE OUTLET STRUCTURE LOCATION PENDING COORDINATION WITH CALTRANS BASIN OUTLET, TR = 6240.75 (5/C9)

BENCHMARK: CONTROL POINT "A" SET REBAR, N=5462.037', E=4985.983', TBM EL = 6246.69'
CONTROL POINT "B" SET REBAR, N=5487.643', E=5240.025', TBM EL = 6249.61
ELEVATIONS BASED ON USGS BENCHMARK H181, 1932, ELEVATION 6243.31

BASIS OF BEARING: TEMP. BASELINE BETWEEN CONTROL POINTS "A" AND "B", N 84°14'39" E, 255.33' BASED UPON THE STATE HIGHWAY 28 NORTH RIGHT OF WAY LINE

RECORD DRAWING

DATE ENGINEER INITIAL

C9704/C1.DWG APRIL 27, 1998

REV.	DATE	DESCRIPTION
A	11/14/97	RELEASED FOR AGENCY APPROVAL
B	3/18/98	RELEASED FOR BID

DESIGNED BY: JGR
DRAWN BY: KBR
CHECKED BY: RMH
SCALE: AS SHOWN

REGISTERED PROFESSIONAL ENGINEER R. E. WILLIAMS No. C 13198 Exp. 3-31-01 CIVIL STATE OF CALIFORNIA

JWA CONSULTING ENGINEERS, INC.
Zephyr Cove, Nevada
Pleasant Hill, California

SAFEWAY
SAFEWAY STORE #1592, KINGS BEACH, CALIFORNIA

OVERALL SITE PLAN

SHEET NUMBER C1
4 OF 25 SHEETS

PROJECT NO. C9704

DIST	COUNTY	ROUTE	KILOMETER POST TOTAL PROJECT	SHEET No	TOTAL SHEETS
03	Pla	28	1.2/15.1, 16.6/17.8	225	612

REGISTERED CIVIL ENGINEER

5-7-07
PLANS APPROVAL DATE

REGISTERED PROFESSIONAL ENGINEER
BRIAN G. WRIGHT
No. C59331
Exp. 6/30/07
CIVIL
STATE OF CALIFORNIA

PSOMAS
2295 GATEWAY OAKS #250
SACRAMENTO, CA 95833

The State of California or its officers or agents shall not be responsible for the accuracy or completeness of electronic copies of this plan sheet.

To get to the Caltrans web site, go to: http://www.dot.ca.gov

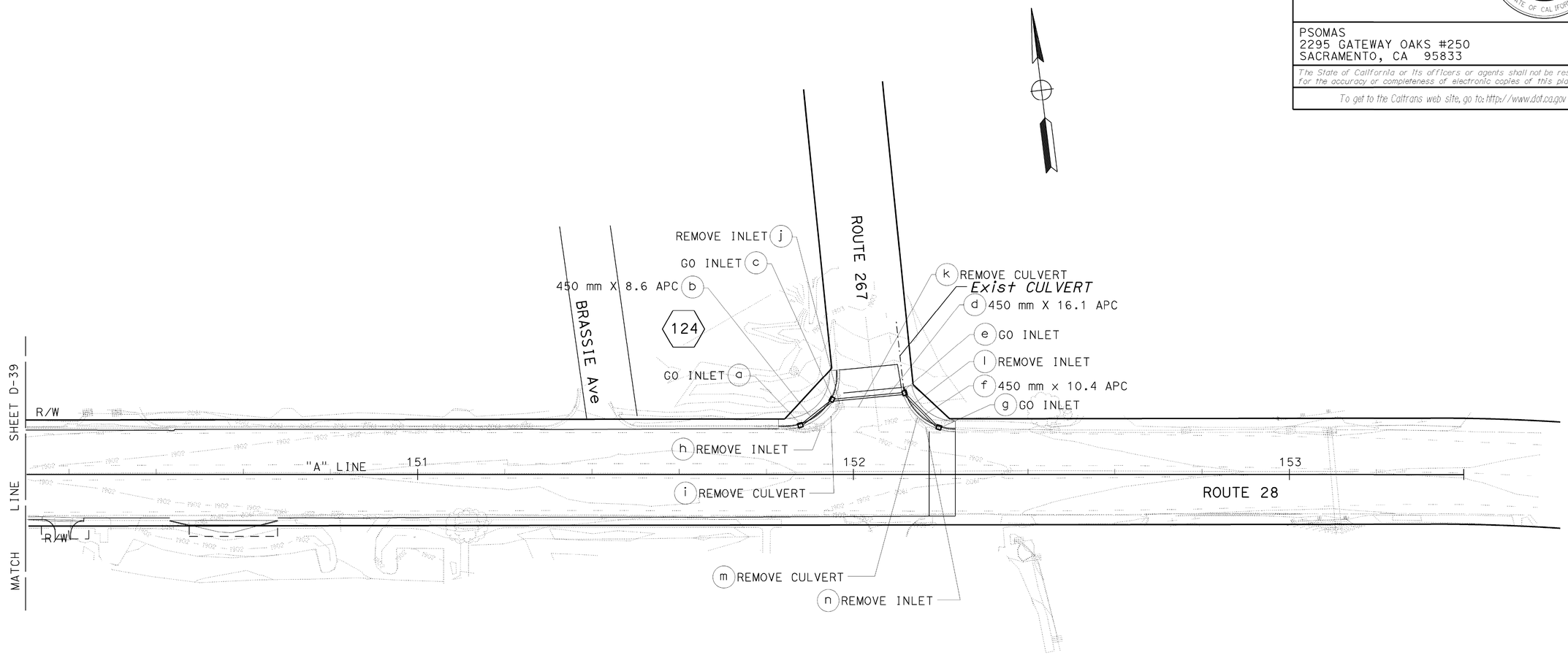

AS BUILT
CONTRACT No. 03-2A9404
C.C.A. DATE 11/23/2011
R.E. NAME ROY ISKIN

ALL DIMENSIONS ARE IN METERS
UNLESS OTHERWISE SHOWN

DRAINAGE PLAN

SCALE 1:500

D-40

THIS PLAN ACCURATE FOR DRAINAGE WORK ONLY.

DATE	REVISED BY
	DATE REVISED

CALCULATED/DESIGNED BY BW
CHECKED BY TH

DESIGN OVERSIGHT
THOMAS K. RUTSCH

STATE OF CALIFORNIA - DEPARTMENT OF TRANSPORTATION
Caltrans

FOR REDUCED PLANS ORIGINAL SCALE IS IN MILLIMETERS 0 20 40 60 80

USERNAME => s119538
DGN FILE => 32a9401a040.dgn

CU 03256
EA 2A9401

LAST REVISION 00-00-00
DATE PLOTTED => 14-SEP-2012
TIME PLOTTED => 15:25

DIST	COUNTY	ROUTE	KILOMETER POST TOTAL PROJECT	SHEET No	TOTAL SHEETS
03	Pla	28	1.2/15.1, 16.6/17.8	280	612

REGISTERED CIVIL ENGINEER

5-7-07
PLANS APPROVAL DATE

REGISTERED PROFESSIONAL ENGINEER BRIAN G. WRIGHT No. C59331 Exp. 6/30/07 CIVIL STATE OF CALIFORNIA

PSOMAS
2295 GATEWAY OAKS #250
SACRAMENTO, CA 95833

The State of California or its officers or agents shall not be responsible for the accuracy or completeness of electronic copies of this plan sheet.

To get to the Caltrans web site, go to: http://www.dot.ca.gov

Caltrans Metric

03-2A9404 CCO 86

Thomas K. Rutsch 5-10-11
REGISTERED CIVIL ENGINEER

REGISTERED PROFESSIONAL ENGINEER THOMAS RUTSCH No. 47797 Exp. 12-31-11 CIVIL STATE OF CALIFORNIA

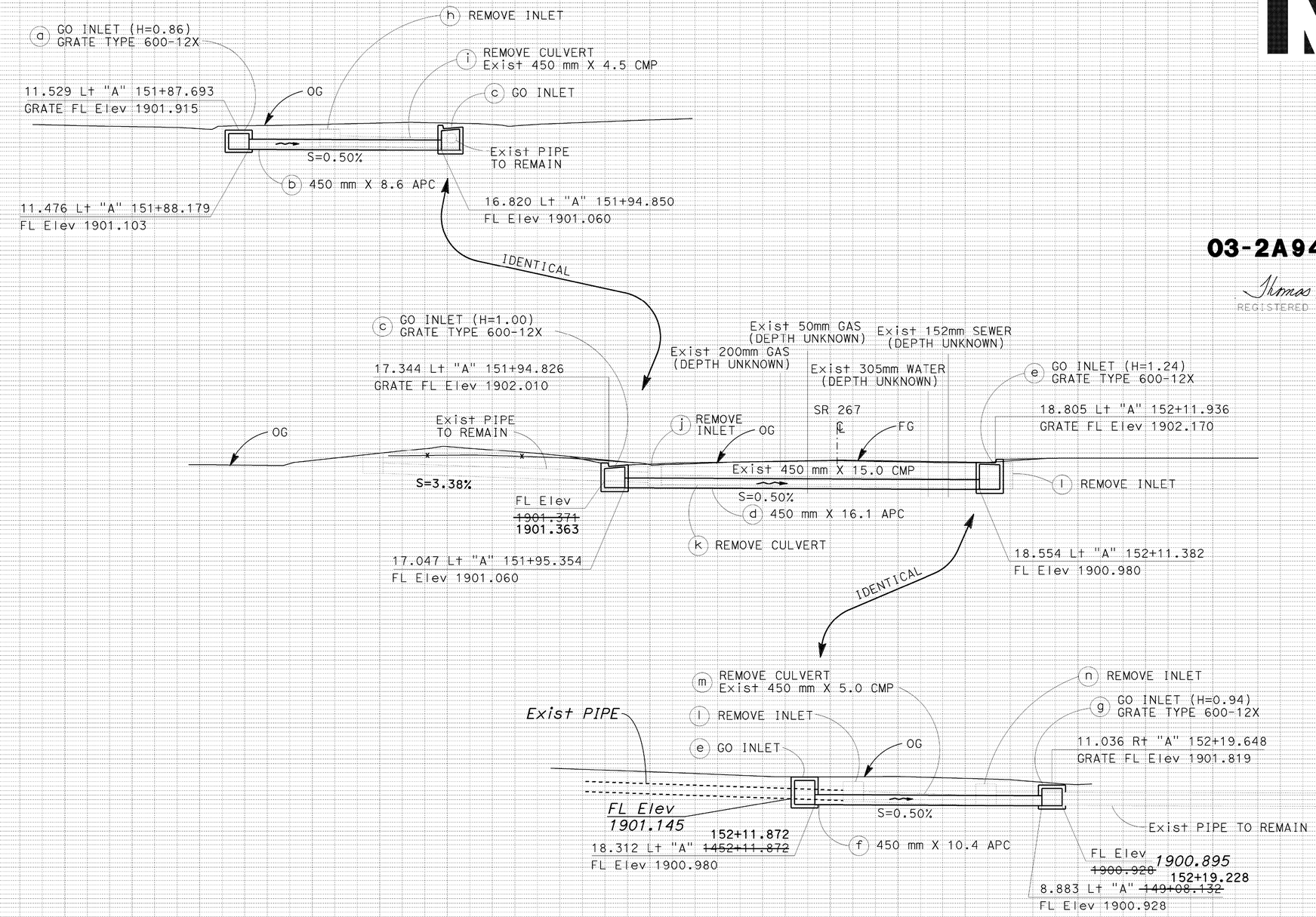

AS BUILT
CONTRACT No. 03-2A9404
C.C.A. DATE 11/23/2011
R.E. NAME ROY ISKIN

ALL DIMENSIONS ARE IN METERS
UNLESS OTHERWISE SHOWN

DRAINAGE PROFILE

SCALE: Horiz 1:100
Vert 1:100

DRAINAGE SYSTEM No. 124
"A" 151.87.000 TO 152+21.000

DP-55

DATE	REVISED BY	DATE REVISED
	SC-R	1-20 2011

CALCULATED/DESIGNED BY: BW
CHECKED BY: TH

DESIGN OVERSIGHT: THOMAS K. RUTSCH

STATE OF CALIFORNIA - DEPARTMENT OF TRANSPORTATION
Caltrans

Station
Cu
M Exc Emb

FOR REDUCED PLANS ORIGINAL SCALE IS IN MILLIMETERS 0 20 40 60 80

USERNAME => s119538
DGN FILE => 32a9401b055.dgn

CU 03256
EA 2A9401

LAST REVISION DATE PLOTTED => 14-SEP-2012
00-00-00 TIME PLOTTED => 15:26

Dist	COUNTY	ROUTE	POST MILES TOTAL PROJECT	SHEET No.	TOTAL SHEETS
03	Pla	267	8.7/9.9	41	113

REGISTERED CIVIL ENGINEER 03/27/08 DATE

9-15-08
PLANS APPROVAL DATE

REGISTERED PROFESSIONAL ENGINEER Matthew J. Korve No. C63248 Exp. 06/30/2008 CIVIL STATE OF CALIFORNIA

THE STATE OF CALIFORNIA OR ITS OFFICERS OR AGENTS SHALL NOT BE RESPONSIBLE FOR THE ACCURACY OR COMPLETENESS OF ELECTRONIC COPIES OF THIS PLAN SHEET.

URS CORPORATION
1380 LEAD HILL BLVD
SUITE 100
ROSEVILLE, CA 95661

NOTES:

1. ALL CONTOURS ARE FINISHED GRADE CONTOURS
2. FOR DITCH AND BASIN DETAILS, SEE DRAINAGE DETAILS

LEGEND:

#	DRAINAGE SYSTEM No.
(a)	DRAINAGE SYSTEM UNIT
DE	DRAINAGE EASEMENT
RED	ROCK ENERGY DISSIPATOR
RIP	ROCK INLET PROTECTION
SFES	STEEL FLARED END SECTION
CHDPE	CORRUGATED HIGH DENSITY POLYETHYLENE
Enc	ENCASED IN CONCRETE BACKFILL
SEZ	STREAM ENVIRONMENTAL ZONE
ST	SAND TRAP
STBO	SAND TRAP BACK OPENING
3G	3 GRATE
S	SLOPE

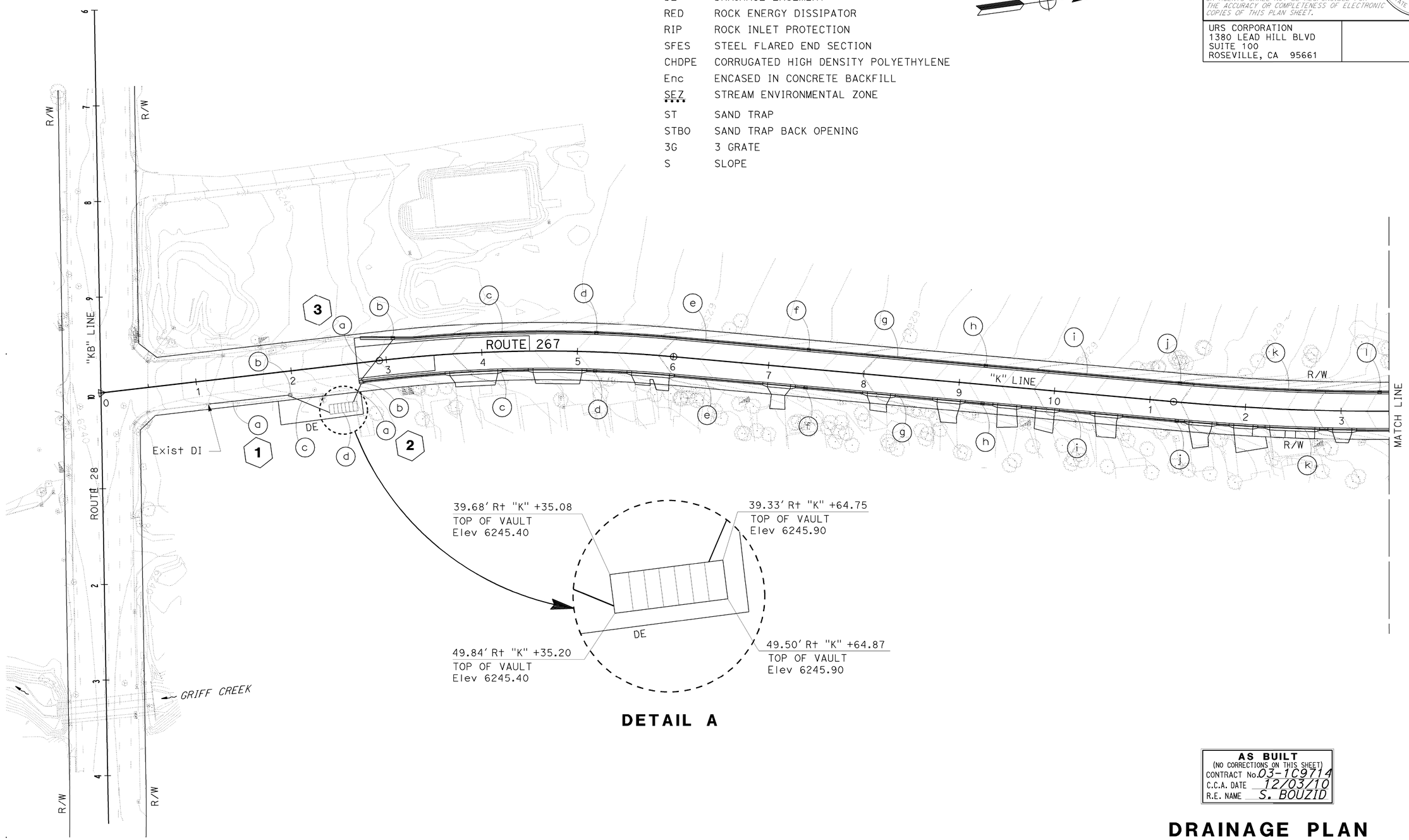

DETAIL A

AS BUILT
(NO CORRECTIONS ON THIS SHEET)
CONTRACT No. 03-1C9714
C.C.A. DATE 12/03/10
R.E. NAME S. BOUZID

DRAINAGE PLAN

SCALE 1" = 50'

THIS PLAN ACCURATE FOR DRAINAGE WORK ONLY

D-1

REVISED BY	DATE REVISED

CALCULATED-DESIGNED BY: MATTHEW KORVE
CHECKED BY: STEVE BORROUM
CONSULTANT FUNCTIONAL SUPERVISOR: STEVE BORROUM

STATE OF CALIFORNIA - DEPARTMENT OF TRANSPORTATION

Caltrans

P:\proj2\03\1c9711\da_builts\pending\31c9711a001.dgn

LAST REVISION 00-00-00 | DATE PLOTTED => 12-MAY-2011 | TIME PLOTTED => 08:30

Dist	COUNTY	ROUTE	POST MILES TOTAL PROJECT	SHEET No.	TOTAL SHEETS
03	Pla	267	8.7/9.9	46	113

REGISTERED CIVIL ENGINEER 03/27/08 DATE

9-15-08
PLANS APPROVAL DATE

REGISTERED PROFESSIONAL ENGINEER Matthew J. Korve No. C63248 Exp. 06/30/2008 CIVIL STATE OF CALIFORNIA

THE STATE OF CALIFORNIA OR ITS OFFICERS OR AGENTS SHALL NOT BE RESPONSIBLE FOR THE ACCURACY OR COMPLETENESS OF ELECTRONIC COPIES OF THIS PLAN SHEET.

URS CORPORATION
1380 LEAD HILL BLVD
SUITE 100
ROSEVILLE, CA 95661

NOTES:

1. FOR DITCH AND BASIN DETAILS, SEE DRAINAGE DETAILS
2. UTILITY INFORMATION SHOWN IS FOR INFORMATION ONLY AND DOES NOT NECESSARILY REPRESENT A UTILITY CROSSING
3. UTILITY INFORMATION SHOWN IS FROM POTHOLE DATA AND IS NOT INTENDED TO REPRESENT COMPLETE UTILITY INFORMATION
4. CONTRACTOR IS RESPONSIBLE FOR POSITIVELY LOCATING UTILITIES PRIOR TO CONSTRUCTION

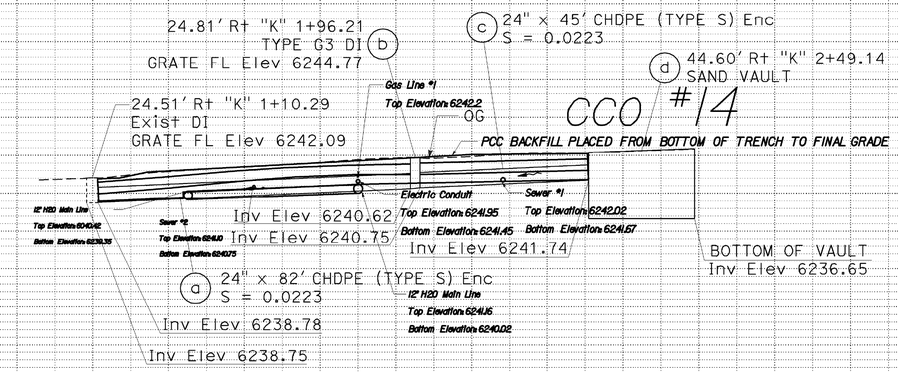

DRAINAGE SYSTEM No. 1

"K" 1+10.29 TO 2+49.14

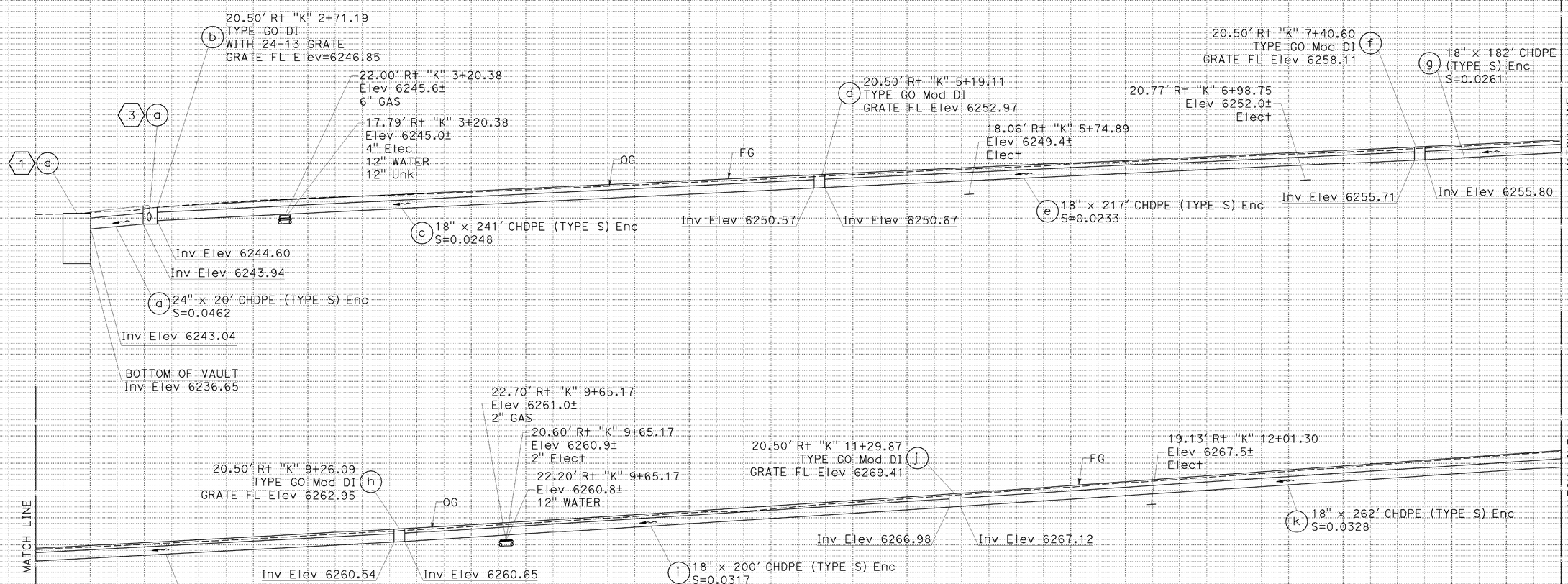

DRAINAGE SYSTEM No. 2

"K" 2+71.19 TO 24+94.73

AS BUILT
CONTRACT No. 03-1C971A
C.C.A. DATE 12/03/10
R.E. NAME S.BOUZID

DRAINAGE PROFILE

SCALE: Horiz 1"=20'
Vert 1"=10'

DP-1

THIS PLAN ACCURATE FOR DRAINAGE WORK ONLY

STATION		TOTAL
CY	Exc	
	Emb	

REVISED BY | DATE REVISED
SERGIO AVILES | MATTHEW KORVE
CALCULATED-DESIGNED BY | CHECKED BY
SUPERVISOR | CONSULTANT FUNCTIONAL SUPERVISOR
STEVE BORROUM
STATE OF CALIFORNIA - DEPARTMENT OF TRANSPORTATION
Caltrans

LAST REVISION 00-00-00 | DATE PLOTTED => 12-MAY-2011 | TIME PLOTTED => 08:30

P:\proj2\03\1c971da_builts\pmdlmg\31c971ib001.dgn

May 1 2002

Safeway Store 1592
Kings Beach, Ca
96143

RE: Easement Maintenance Agreement
(Recorded November 5, 1998)

1999 Costs-Landscape Irrigation (per section 1.4B)

>Equipment Pump Fee ----------$1806.00
>Electrical for pumping water----------$ 181.00
>Monthly irrigation tests/spring start-up
(6 hours @ 29.85)----------$ 179.10
>Winterization (2 hours@ 29.85)----------$ 59.70
(equipment)----------$ 20.00

>Yankton Landscape Irrigation Repair
-April 1999-6 mainline breaks-labor-16hr@17.50-$ 280.00
irrigation tech-2hrs@29.85----------$ 59.70
materials----------$ 162.80

>Fence Repair--4 rails/1post ----------$ 120.00
labor-6hr@17.50----------$ 105.00

>Spring Cleanup (behind store-driving range)
labor-8hr@17.50----------$ 140.00
dumpster----------$ 85.00

->Spring Cleanup (adjacent pond/sidewalk
labor-24hr@17.50----------$ 420.00
labor-8hrs@1750----------$140.00

>Pond Maintenance (for D&E) May-October
8hrs per month-6months=
48hrs@17.50----------$840.00
Dumpster----------$ 85.00

TOTAL COSTS 1999----------$4683.00

2000 Costs-Landscape Irrigation(per section 1.4B)

>Equipment pump fee----------$1806.00
>Electrical for waterpump----------$ 189.00
>Monthly irragation tests/spring start-up
(6hrs@31.34)----------$ 188.04
>Winterization (2hrs@31.34)----------$ 62.68

2000 Costs-Landscape Irrigation(per section 1.4B)

>Equipment pump fee----------$1806.00
>Electrical for waterpump----------$ 189.00
>Monthly irragation tests/spring start-up
(6hrs@31.34)----------$ 188.04
>Winterization (2hrs@31.34)----------$ 62.68
(equipment)----------$ 20.00

Spring Clean-up
>Pond 30hrs@18.00----------$540.00
>Sidewalk 8hrs@18.00----------$144.00

Pond Maintenance(forD&E) May -October
48hrs@18.00----------$864.00
Dumpster---------- $85.00

TOTAL COSTS 2000----------$3898.84

2001 Costs-Landscape Irrigation (per section 1.4B)

>Equipment Pump Fee----------$1806.00
>Electrical for waterpump----------$ 226.00
>Monthly irrigation tests/spring start-up
(6hrs@32.91)----------$197.46
>Winterization (2hrs@32.91)----------$65.82
(equipment)----------$20.00
(broken pipe/head replace)
6hrs@18.50----------$111.00
material----------$ 21.25

Spring Clean-up
>Pond 24hrs@18.50----------$440.00
>Sidewalk 8hrs@18.50----------$148.00

Pond Maintenance (for D&E) May-October
48hrs@18.50----------$888.00
Dumpster----------$ 95.00

TOTAL COSTS 2001----------$4018.00

TOATAL DUE $12,000.14

(equipment)----------$ 20.00

Spring Clean-up
>Pond 30hrs@18.00----------$540.00
>Sidewalk 8hrs@18.00----------$144.00

Pond Maintenance(forD&E) May -October
48hrs@18.00----------$864.00
Dumpster---------- $85.00

TOTAL COSTS 2000----------$3898.84

2001 Costs-Landscape Irrigation (per section 1.4B)

>Equipment Pump Fee----------$1806.00
>Electrical for waterpump----------$ 226.00
>Monthly irrigation tests/spring start-up
(6hrs@32.91)----------$197.46
>Winterization (2hrs@32.91)----------$65.82
(equipment)----------$20.00
(broken pipe/head replace)
6hrs@18.50----------$111.00
material----------$ 21.25

Spring Clean-up
>Pond 24hrs@18.50----------$440.00
>Sidewalk 8hrs@18.50----------$148.00

Pond Maintenance (for D&E) May-October
48hrs@18.50----------$888.00
Dumpster----------$ 95.00

TOTAL COSTS 2001----------$4018.00

TOATAL DUE $12,000.14

2000 Costs-Landscape Irrigation(per section 1.4B)

>Equipment pump fee----------$1806.00
>Electrical for waterpump----------$ 189.00
>Monthly irragation tests/spring start-up
(6hrs@31.34)----------$ 188.04
>Winterization (2hrs@31.34)----------$ 62.68
(equipment)----------$ 20.00

Spring Clean-up
>Pond 30hrs@18.00----------$540.00
>Sidewalk 8hrs@18.00----------$144.00

Pond Maintenance(forD&E) May -October
48hrs@18.00----------$864.00
Dumpster---------- $85.00

TOTAL COSTS 2000----------$3898.84

2001 Costs-Landscape Irrigation (per section 1.4B)

>Equipment Pump Fee----------$1806.00
>Electrical for waterpump----------$ 226.00
>Monthly irrigation tests/spring start-up
(6hrs@32.91)----------$197.46
>Winterization (2hrs@32.91)----------$65.82
(equipment)----------$20.00
(broken pipe/head replace)
6hrs@18.50----------$111.00
material----------$ 21.25

Spring Clean-up
>Pond 24hrs@18.50----------$440.00
>Sidewalk 8hrs@18.50----------$148.00

Pond Maintenance (for D&E) May-October
48hrs@18.50----------$888.00
Dumpster----------$ 95.00

TOTAL COSTS 2001----------$4018.00

TOTAL DUE $12,000.14

POST OFFICE BOX 1368, KINGS BEACH, CALIFORNIA 96143 ● (916) 546-9909

Old Brockway Golf course
P.O. Box 1333
Kings Beach Ca
96143

May 1 2002

Safeway Store 1592
Kings Beach, Ca
96143

RE: Easement Maintenance Agreement
(Recorded November 5, 1998)

1999 Costs-Landscape Irrigation (per section 1.4B)

>Equipment Pump Fee ----------$1806.00
>Electrical for pumping water----------$ 181.00
>Monthly irrigation tests/spring start-up
(6 hours @ 29.85)----------$ 179.10
>Winterization (2 hours@ 29.85)----------$ 59.70
(equipment)----------$ 20.00

>Yankton Landscape Irrigation Repair
-April 1999-6 mainline breaks-labor-16hr@17.50-$ 280.00
irrigation tech-2hrs@29.85----------$ 59.70
materials----------$ 162.80

>Fence Repair--4 rails/1post ----------$ 120.00
labor-6hr@17.50----------$ 105.00

>Spring Cleanup (behind store-driving range)
labor-8hr@17.50----------$ 140.00
dumpster----------$ 85.00

>Spring Cleanup (adjacent pond/sidewalk
labor-24hr@17.50----------$ 420.00
labor-8hrs@1750----------$140.00

>Pond Maintenance (for D&E) May-October
8hrs per month-6months=
48hrs@17.50----------$840.00
Dumpster----------$ 85.00

TOTAL COSTS 1999----------$4683.00

Nov 17, 2003

To Nancy Stanley
5918 Stoneridge Mall
Pleasanton Ca 94588

Re Safeway Store #1592 King Beach
Easement Maintenance Cost per recorded
Agreement Nov 5, 1998

2003 Costs

Electrical for pump	265.00
Monthly irrigation test/Spring startup	216.00
Winterization cost	298.00
Spring Cleanup 24hr 19.50	468.00
Sidewalks 15hr 19.50	292.00
Sidewalk restoration (clean all planter boxes	800.00
Pond Maintenance for D&E May thru Oct 48 19.50	936.00
Dumpster	165.00
40% of cost for waste water discharge permit	1700.40
Total cost	5140.40

OLD BROCKWAY GOLF COURSE · NORTH LAKE TAHOE
POST OFFICE BOX 1368, KINGS BEACH, CALIFORNIA 96143 ● (916) 546-9909

Dec 13, 2005 2007 68841 2

To Nancy Stanley
5918 Stoneridge Mall
Pleasanton, CA 94588

Re Safeway Store #1592 Kings

OLD BROCKWAY · GOLF COURSE · NORTH LAKE TAHOE

2005 Electrical for pump 367.08

Monthly irrigation test startup 225.00

Winterization Cost 315.00

Spring Cleanup 680.00

Sidewalk Restoration 800.00

Sidewalk cleanup 312.75

Pond Maintainance

Ponds D & E May thru Oct 1000.80

Dumpters 375.00

40% Cost for Wastewater discharge permit Facility ID 6A318801004 1870.40

Total Cost 5946.03

POST OFFICE BOX 1388, KINGS BEACH, CALIFORNIA 96143 ● (916) 546-9909

Dec 15, 08

TO Nancy Stanley

Re Safeway Store #1592 Kings Beach

2008 Electrical for pump	532.18
Monthly irrigation test	225.00
Winterization Cost	315.00
Spring Cleanup	780.00
Sidewalk restoration	850.00
Sidewalk Cleanup	513.00
Pond Maintance	
Ponds D & E May thr Oct	1286.00
Dumpster	375.00
Fence repair	286.00
40% cost for wastewater discharge permit	2630.80
	7,794.98

POST OFFICE BOX 1368, KINGS BEACH, CALIFORNIA 96143 • (530) 546-9909

Dec 17, 2009

To Nancy Stanley

Re Safeway Store # 1592 Kings Beach

2009 Electrical for Pump	528.16
Monthy Irrigation test.	225.00
6 hrs Irrigat	
Winterization cost	315.00
Spring Cleanup	780.00
Sidewalk restoration	850.00
Sidewalk cleanup	515.00

Pond Maintance

Ponds D & E May 2 thr Oct	1286.00
Dumpster 2 loads	810.00
Per Safeway request clear 8-11-09 bushes around sign	260.00
Per Safeway request remove 2 cottonwood trees 10-15-09	360.00
40% cost for state water discharge permin I 0 6A31880 1004	2630.80
2009 Total Safeway Cost	8559.96

OLD BROCKWAY GOLF COURSE · NORTH LAKE TAHOE

POST OFFICE BOX 1368 KINGS BEACH, CALIFORNIA 96143 · (530) 546-9909

December 8, 2010

To: Nancy Stanley, Safeway Inc.

Re: #1592 Safeway Store CAM Agreement

- **2010 Electrical Pumping**

  NV Energy $8216.00 ... 7% cost due: $575.12

- **Monthly Irrigation Test**

  6 hrs: Irrigation Tech. @ $37.75 Labor Rate $226.50

- **Winterizing the Irrigation System**

  6 hrs: Irrigation Tech. @ $37.75 Labor Rate $226.50

  Compression Rental $100.00

- Spring Cleanup: 35 hrs. GL @ $22.50 LR $787.50
- Sidewalk Restoration: 30 hrs. GL @ $22.50 LR $675.00
- Sidewalk Cleanup: 25hrs. GL @ $22.50 LR $562.50
- Pond Maintenance: Ponds D & E, May thru October:
- 10 hrs. Per month for 6 months @ $22.50 LR: $1350.00 2

  Dumpsters from TTSD @ $418. Per dumpster: $836.00

Requests from Andra Mandujano:

- Replace 380 lineal feet of Jumbo Cedar Rail Fence

  @ $13.50/ft.: $5130.00

- Cut & Remove willow tree around Safeway sign: $780.00

Also:

- 40% cost for State Waste Water Discharge Permit,

  ID# 6A318801004: $2630.80

2010 TOTAL SAFEWAY COST: $13,879.42

OLD BROCKWAY GOLF COURSE · NORTH LAKE TAHOE

POST OFFICE BOX 1368, KINGS BEACH, CALIFORNIA 96143 · (530) 546-9909

December 13, 2011

To: Nancy Stanley, Safeway Inc.

From: S. Lane Lewis, Old Brockway Golf Course

Re: #1592 Safeway Store CAM Agreement

1.	Liberty Energy $8428.00 … 7% cost due:	$589.96
2.	Monthly Irrigation Test: 24 hours Irrigation Tech @ $37.75 Labor Rate:	$906.00
3.	Winterizing the Irrigation System: 6 hrs. Irrigation Tech @ 37.75 LR:	$226.50
4.	Compressor Rental:	$225.00
5.	Spring Cleanup: 40 hrs. GL @ $22.50 LR:	$900.00
6.	Sidewalk Restoration: 40 hrs. GL @ $22.50 LR:	$900.00
7.	Sidewalk Cleanup: 25 hrs. GL @ $22.50 LR:	$562.50
8.	Pond Maintenance of Ponds "D & E", May thru October: 10 hrs. per month, for six months, @ $22.50 LR:	$1350.00
9.	2 Dumsters from TTSD @ $435.00 per dumpster:	$870.00
10.	Cleanup of East Side of Safeway Store: 50 hrs. @ $22.50 LR:	$1125.00
11.	Repair of fence due to snow removal:	$895.00
12.	Removal of trees around Safeway Sign:	$780.00
13.	40% of cost for State Waste Water Discharge Permit: ID# 6A318801004:	$3261.60
	2011 TOTAL DUE UPON RECEIPT FROM SAFEWAY:	$12,591.56

Patient Registration Form

POST OFFICE BOX 1368, KINGS BEACH, CALIFORNIA 96143 • (530) 546-9909

To Elaine Wettstone

LANE LEWIS
Owner

530/546-9909
530/448-6254 CELL
530/546-7476 FAX

POST OFFICE BOX 1368
KINGS BEACH, CA 96143
obgolf@gmail.com

December 5, 2012

To: Nancy Stanley, Safeway Inc.

From: S. Lane Lewis, Old Brockway Golf Course

Re: #1592 Safeway Store CAM Agreement

1.	Liberty Energy: $8722.00 7% cost due:	610.54
2.	Monthly Irrigation Test:	
	24 hours of Irrigation Tech @ $37.75 LR:	906.00
3.	Winterizing the Irrigation system:	
	6 hours of Irrigation Tech @ $37.75 LR:	226.50
4.	Compressor Rental:	245.00
5.	Spring Cleanup: 40 hours g/l @ $22.50:	900.00
6.	Sidewalk Restoration: 40 hrs. g/l @ $22.50:	900.00
7.	Sidewalk Cleanup: 25 hrs. g/l @ $22.50:	562.50
8.	Maintenance of Ponds "D & E" May thru October:	
	10 hrs./month for 6 months:	1350.00
9.	2 Dumpsters from TTSD @ 445.oo/dumpster:	890.00
10.	Clean up of East Side of Safeway Store:	
	60 hrs. g/l @$22.50:	1350.00
11.	Removal of Trees around Safeway Sign:	900.00
12.	40% of cost for State Waste Water Discharge Permit:	
	ID# 6A318801004:	3261.60

2012 TOTAL DUE UPON RECEIPT FROM SAFEWAY: 12,102.14

December 20, 2013

To: Andra Mandujano

From: S. Lane Lewis, Old Brockway Golf Course

Re: #1592 Safeway Store CAM Agreement

1. Liberty Energy: $9010.00 7% cost due:	630.17
2. Monthly Irrigation Test:	
24 hours of Irrigation Tech@37.75 LR:	906.00
3. Winterizing of Irrigation system:	
6 hours of Irrigation Tech@37.75 LR:	226.50
4. Compressor Rental:	245.00
5. Spring Cleanup: 40 hrs. g/l@22.50:	900.00
6. Sidewalk Restoration: 40 hrs. g/l@22.50:	900.00
7. Sidewalk Cleanup: 25 hrs. g/l@22.50:	562.50
8. Maintenance of Ponds "D & E", May thru October:	
10 hrs./month for 6 months:	1,350.00
9. 2 Dumpsters from TTSD@445.00/dumpster:	890.00
10. Clean up of East Side of Safeway Store:	
60 hrs. g/l@22.50:	1350.00
11. Removal of Trees around Safeway Sign:	900.00
12. 40% of cost for Sate Waste Water Discharge Permit:	
ID#: 6A318801004: Total $10,405.00:	4,162.00
2013 TOTAL DUE UPON RECEIPT FROM SAFEWAY:	13,022.17

December 1, 2014

TO: Andra Mandujano

FROM: S. Lane Lewis, Old Brockway Golf Course

RE: #1592 Safeway Store CAM Agreement

1. Liberty Energy: $9,205 7% Cost Due	$644.35
2. Monthly Irrigation Test:	
24 Hours of Irrigation Tech@37.75 LR:	$906.00
3. Winterizing of Irrigation system:	
6 Hours of Irrigation Tech@37.75 LR:	$226.50
4. Compressor Rental:	$245.00
5. Spring Cleanup: 40 Hrs. g/l@22.50:	$900.00
6. Sidewalk Restoration: 40 Hrs. g/l@22.50	$900.00
7. Sidewalk Cleanup: 25 Hrs. g/l@22.50	$562.50
8. Maintenance of Ponds "D&E", May thru October:	
10 Hrs./month for 6 months:	$1,350.00
9. 2 Dumpsters from TTSD@$445.00/dumpster	$890.00
10. Clean up East Side of Safeway Store:	
60 Hrs. g/l@22.50:	$1,350.00
11. Fence Repair and Replacement:	$985.00
12. 40% of cost for State Waste Water Discharge Permit:	
ID #6A318801004 Total $11,195:	$4,478.00
2014 TOTAL DUE UPON RECEIPT FROM SAFEWAY:	**$13,437.35**

Please send check to P.O. Box 1269, Kings Beach, CA, 96143

Theresa Vigil
Safeway, Inc.
5918 Stoneridge Mall Rd.
Pleasanton, CA
94588

December 19, 2017

TO: Theresa Vigil

FROM: S. Lane Lewis, Old Brockway Golf Course

RE: 2017 Yearly Expense Report for #1592 Safeway Store CAM Agreement

1. Liberty Energy: $11,700. 7% Cost Due	$819.00
2. Monthly Irrigation Test:	
24 Hours of Irrigation Tech@37.75 LR:	$906.00
3. Winterizing of Irrigation system:	
6 Hours of Irrigation Tech@37.75 LR:	$226.50
4. Compressor Rental:	$245.00
5. Spring Cleanup: 40 Hrs. g/l@22.50:	$900.00
6. Sidewalk Restoration: 40 Hrs. g/l@22.50	$900.00
7. Sidewalk Cleanup: 30 Hrs. g/l@22.50	$675.00
8. Maintenance of Ponds "D&E", May thru October:	
10 Hrs./month for 6 months:	$1,800.00
9. 2 Dumpsters from TTSD@$458.00/dumpster	$916.00
10. Clean up East Side of Safeway Store:	
82 Hrs. g/l@22.50:	$1,890.00
11. Fence Repair:	$310.00
12. 40% of cost for State Waste Water Discharge Permit	
ID #6A318801004: Total $11,395:	$4,558.00
2017 TOTAL DUE UPON RECEIPT FROM SAFEWAY:	**$14,145.50**

12,259

Please send check to P.O. Box 1269, Kings Beach, CA, 96143

POST OFFICE BOX 1269, KINGS BEACH, CALIFORNIA 96143 • (530) 546-9909

Dec 1, 2017

S ~~Lane Lewis~~

~~TO Ter~~

1 Liberty Energy 11,700 7% cost Due 819.

2 Monthly Irrigation Test
24 Hours of Irrigation Tech 37.50 LR: 906

3 Winterizing of Irrigation system; 226.50
6 Hours of Irrigation Tech 37.50 LR: 6.

4 compressor Rental; 245.00

5 Spring Cleanup 25 Hrs. g/12 22.50 900.00

6 Sidewalk Restoration 40g/L @22.50 900.00

7 Sidewalk Cleanup 30 Hrs. g/1 22.50 675.00

8 Maintenance of Ponds D&E May thru Oct 1,806
10 Hrs./Month for 6 months

9 2 Dumpsters from TTSD @ 458.00 /dumpster 916

10 Clean up East Side of Safeway Store; 1890.00
82 Hrs. g/1 22.50

11 Fence Repair 310.00

12. 40% 14,145.50 Total 11,395 4558.

Theresa Vigil@albertsons.com

Theresa.vigil@safeway.com
Safeway, Inc.
5918 Stoneridge Mall Rd.
Pleasanton, CA
94588

December 21, 2016

TO: Theresa Vigil

FROM: S. Lane Lewis, Old Brockway Golf Course

RE: 2016 Yearly Expense Report for #1592 Safeway Store CAM Agreement

1. Liberty Energy: $10,300. 7% Cost Due	$721.00
2. Monthly Irrigation Test:	
24 Hours of Irrigation Tech@37.75 LR:	$906.00
3. Winterizing of Irrigation system:	
6 Hours of Irrigation Tech@37.75 LR:	$226.50
4. Compressor Rental:	$245.00
5. Spring Cleanup: 40 Hrs. g/l@22.50:	$900.00
6. Sidewalk Restoration: 40 Hrs. g/l@22.50	$900.00
7. Sidewalk Cleanup: 25 Hrs. g/l@22.50	$562.50
8. Maintenance of Ponds "D&E", May thru October:	
10 Hrs./month for 6 months:	$1,800.00
9. 2 Dumpsters from TTSD@$445.00/dumpster	$890.00
10. Clean up East Side of Safeway Store:	
86 Hrs. g/l@22.50:	$1,935.00
11. Fence Repair:	$280.00
12. 40% of cost for State Waste Water Discharge Permit	
ID #6A318801004: Total $11,195:	$4,478.00
2015 TOTAL DUE UPON RECEIPT FROM SAFEWAY:	**$13,844.00**

Please send check to P.O. Box 1269, Kings Beach, CA, 96143

POST OFFICE BOX 1269, KINGS BEACH, CALIFORNIA 96143 • (530) 546-9909

December 21, 2016

TO: Theresa Vigil

FROM: S. Lane Lewis, Old Brockway Golf Course

RE: 2016 Yearly Expense Report for #1592 Safeway Store CAM Agreement

1. Liberty Energy: $10,300. 7% Cost Due	$721.00
2. Monthly Irrigation Test:	
24 Hours of Irrigation Tech@37.75 LR:	$906.00
3. Winterizing of Irrigation system:	
6 Hours of Irrigation Tech@37.75 LR:	$226.50
4. Compressor Rental:	$245.00
5. Spring Cleanup: 40 Hrs. g/l@22.50:	$900.00
6. Sidewalk Restoration: 40 Hrs. g/l@22.50	$900.00
7. Sidewalk Cleanup: 25 Hrs. g/l@22.50	$562.50
8. Maintenance of Ponds "D&E", May thru October:	
10 Hrs./month for 6 months:	$1,800.00
9. 2 Dumpsters from TTSD@$445.00/dumpster	$890.00
10. Clean up East Side of Safeway Store:	
86 Hrs. g/l@22.50:	$1,935.00
11. Fence Repair:	$280.00
12. 40% of cost for State Waste Water Discharge Permit	
ID #6A318801004: Total $11,195:	$4,478.00
2015 TOTAL DUE UPON RECEIPT FROM SAFEWAY:	**$13,844.00**

Please send check to P.O. Box 1269, Kings Beach, CA, 96143

POST OFFICE BOX 1269, KINGS BEACH, CALIFORNIA 96143 • (530) 546-9909

December 30, 2015

TO: Theresa Vigil

FROM: S. Lane Lewis, Old Brockway Golf Course

RE: 2015 Yearly Expense Report for #1592 Safeway Store CAM Agreement

1. Liberty Energy: ~~$9,815~~ $10,300.— 7% Cost Due	~~$687.05~~ 721.—
2. Monthly Irrigation Test:	
24 Hours of Irrigation Tech@37.75 LR:	$906.00
3. Winterizing of Irrigation system:	
6 Hours of Irrigation Tech@37.75 LR:	$226.50
4. Compressor Rental:	$245.00
5. Spring Cleanup: 40 Hrs. g/l@22.50:	$900.00
6. Sidewalk Restoration: 40 Hrs. g/l@22.50	$900.00
7. Sidewalk Cleanup: 25 Hrs. g/l@22.50	$562.50
8. Maintenance of Ponds "D&E", May thru October:	
10 Hrs./month for 6 months:	$1,800.00
9. 2 Dumpsters from TTSD@$445.00/dumpster	$890.00
10. Clean up East Side of Safeway Store:	
80 Hrs. g/l@22.50:	~~$1,800.00~~ 1935.
11. Fence Repair:	~~$985.00~~ 280.—
12. 40% of cost for State Waste Water Discharge Permit:	
ID #6A318801004 Total $11,195:	$4,478.00
2014 TOTAL DUE UPON RECEIPT FROM SAFEWAY:	**$14,380.05**

Please send check to P.O. Box 1269, Kings Beach, CA, 96143

This Page Intentionally Left Blank