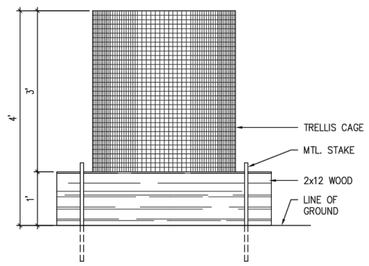

TYPICAL 4'x4' BOX PLANTER | 2

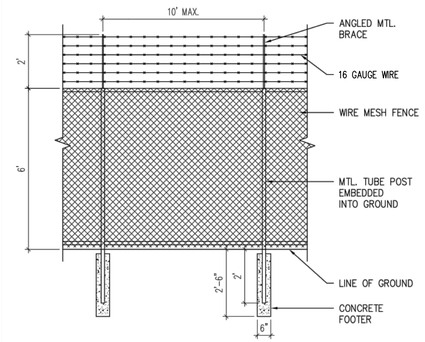

TYP. SECURITY FENCE | 1

KEYNOTES

101 TRASH ENCLOSURE
102 8'-0" TALL WIRE FENCE W/ VINYL SLATS
103 200 AMP PANEL
104 4'x4' PLANTER BOX (SEE DETAIL 1/A-1)
105 SECURITY CAMERAS
106 CODED LOCKED ENTRY
107 APPROVED PORTABLE RESTROOMS
108 4' WIDE X 6' TALL STORAGE LOCKER

FLOOR PLAN NOTES

1. ALL EXTERIOR HEADERS ABOVE OPENINGS SHALL BE 4 x 10 #1 DF UNLESS OTHERWISE NOTED. INTERIOR HEADER SHALL BE 4 x 6 #2 DF UNLESS NOTED.

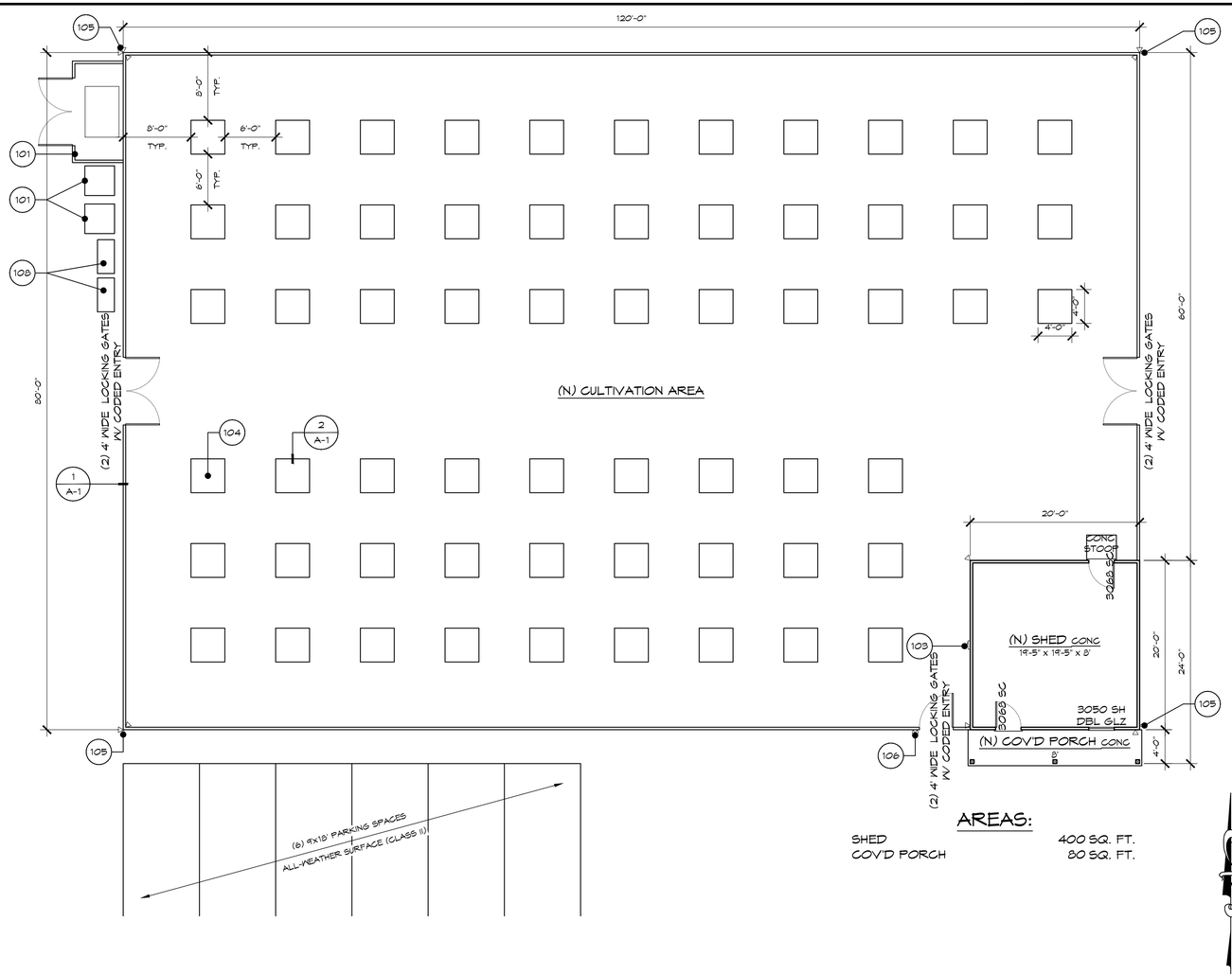

AREAS:

SHED	400 SQ. FT.
COV'D PORCH	80 SQ. FT.

FLOOR PLAN | 1/8" = 1'-0"

NRB DRAFTING SERVICES, INC.
NELSON R. BERNAL

2121 Pine St., SUITE A
Paso Robles, California 93446
Tel: 805.237.3748
Fax: 805.237.1368
Email: nelson@nrbdrafting.biz

ATTENTION: IF PLAN CHECK CORRECTION DATE DOES NOT APPEAR IN THE REVISION BLOCK BELOW, DO NOT LAYOUT / BUILD STRUCTURE FROM THIS COPY OF CONSTRUCTION DRAWINGS, UNLESS OTHERWISE INDICATED WITH "APPROVED" RED STAMP FROM LOCAL BUILDING AND PLANNING DEPARTMENT. COPIES WITHOUT CORRECTION DATE INDICATED ARE MOST LIKELY PRELIMINARY DOCUMENTS ONLY.

SLO GROWN ORGANICS

2560 MCMILLIAN CANYON RD, SHANDON

COUNTY OF SAN LUIS OBISPO CALIFORNIA

19047

FLOOR PLAN

PERMIT: DRC2019-00048

REVISIONS	
DESCRIPTION	DATE
CORRECTIONS	

DRAWN GAB	SCALE 1/4" = 1'-0"	DATE 01-10-14
JOB NO. 19047	DWG NAME -	CHECKED

SHEET

A-1

124.67 ft
91.69 ft
Area: 11,417.56 ft²
Perimeter: 432.01 ft
93.09 ft
017-081-009
017-081-011
122.17 ft