Final Traffic Impact Study

for the

Bloomington Commercial Center

at

SEC of Cedar Avenue and Santa Ana Avenue

PN: 0257-101-01; Project Number: PROJ-2019-00079

in

Bloomington, CA

Presented to:

County of San Bernardino
Public Works Department
825 East 3rd Street
San Bernardino, CA 92415

Prepared for:

Chandi Group, USA
Black Gold Engineering
42270 Spectrum St.
Indio, CA 92203

Prepared by:

MINAGAR & ASSOCIATES, INC.
ITS – Traffic/Civil/Electrical Engineering – Transportation Planning
23282 Mill Creek Drive, Suite 120
Laguna Hills, CA 92653
Tel: (949)707-1199
Web: www.minagarinc.com

June 18, 2020

Table of Contents

1.0 – Executive Summary 4
2.0 – Introduction 5
2.1 – Traffic Impact Study Purpose and Study Objective 5
2.2 – Project Location and Vicinity Map 6
2.3 – Project Size and Description 8
3.0 – Methodology and Impact Thresholds 10
3.1 – Level of Service (LOS) 11
3.2 – Significance Thresholds 13
3.2.1 – Signalized Intersections 13
3.2.2 – Unsignalized Intersections 13
4.0 – Existing Conditions 13
4.1 – Existing Roadway Network 13
3.2 – Existing Traffic Volumes – AM and PM Peak Hour 19
3.3 – Existing Level of Service (LOS) at Intersections 22
3.4 – Existing Bicycle Facilities 23
3.5 – Existing Transit Facilities 23
4.0 – Project Traffic 24
4.1 – Trip Generation 24
4.1.1 – Pass-By Trip Reduction 25
5.0 – Background Conditions (Opening Year) Analysis 29
5.1 – No Project Analysis 31
5.2 – Plus Project Analysis 32
6.0 – Cumulative Horizon Year Analysis 38
6.1 – No Project Analysis 38
6.2 – Plus Project Analysis 40
7.0 – Site Access Analysis 41
8.0 – Freeway Analysis 42
8.1 – Queueing Analysis 42
8.2 – Freeway Segment, Merging/Diverging, and Weaving Analysis 47
8.0 – Improvements and Recommendations 51
8.1 – Proposed Improvements at Impacted Intersections 51
8.1 – Proposed Improvements at Impacted Freeway Segments and Ramps 53
8.2 – Fair Share 54

9.0 – Vehicle Miles Travelled (VMT) Analysis.....55
9.1 – Project VMT per person/employee.....55
10.0 – Conclusions.....56

Appendix

Appendix A: TIS Scoping Agreement

Appendix B: Traffic Counts

Appendix C: Intersection Analysis Worksheets

Appendix D: Trip Generation

Appendix E: Volume Worksheets

Appendix F: Fair Share Calculations

Appendix G: SBTAM Plots

Appendix H: Warrant Assessments

Appendix I: HCS Worksheet

Appendix J: Site Plan

Appendix K: Future Caltrans Plans for Cedar Ave I-10 Interchange Improvements

1.0 – Executive Summary

This study analyzes the forecast traffic impact of the proposed "Bloomington Commercial Center" project, located on a currently vacant 8.9-acre site on the southeast corner of Cedar Avenue and Santa Ana Avenue in the unincorporated community of Bloomington, San Bernardino County (County). The revised proposed project will consist of the following facilities:

- Gas Station with two (2) gas fueling canopies (one for standard gas and one for diesel trucks, truck scale, and truck stopping area) with a 9,900 square foot convenience store
- 3,000 SF fast food restaurant with a drive-thru
- 2,800 SF fast food restaurant with a drive-thru

**The revised plan eliminated the three (3) previously planned facilities at the "Bloomington Commercial Center" Project, one (1) 4,000 SF car wash, one (1) 4,000 SF truck wash and one (1) 5,000 SF restaurant.*

The study identified ten (10) intersections performing below the County's acceptable Level of Service (LOS D or better) for the Horizon Year (2040) with the Project scenario. Those ten (10) intersections include:

- Cedar Avenue / I-10 Westbound Ramps
- Cedar Avenue / I-10 Eastbound Ramps
- Cedar Avenue / Orange Street
- Linden Avenue / Slover Avenue
- Cedar Avenue / Slover Avenue
- Linden Avenue / Santa Ana Avenue
- Cedar Avenue / Santa Ana Avenue
- Cedar Avenue / Jurupa Avenue
- Larch Avenue / Jurupa Avenue
- Cedar Avenue / El Rivino Road

Of the ten (10) intersections, seven (7) intersections met the County's thresholds of significance to require mitigation and improvement recommendations. Mitigation / Improvement measures were incorporated into each of these intersections to restore their performance to LOS D or better, or within five (5) seconds of pre-project delay or better if the intersection was already operating below LOS D prior to project impacts.

- Cedar Avenue / I-10 Eastbound Ramps (PM Peak Hour Worst Case)
- Linden Avenue / Slover Avenue (AM Peak Hour Worst Case)
- Cedar Avenue / Slover Avenue (AM Peak Hour Worst Case)
- Cedar Avenue / Santa Ana Avenue (PM Peak Hour Worst Case)
- Cedar Avenue / Jurupa Avenue (PM Peak Hour Worst Case)
- Larch Avenue / Jurupa Avenue (PM Peak Hour Worst Case)
- Cedar Avenue / El Rivino Road (PM Peak Hour Worst Case)

Mitigation / Improvement measures were also proposed for the Interstate 10 segments and on / off ramps to alleviate the existing and future freeway congestion by constructing additional lanes (e.g. auxiliary lane, ramp lane, etc.) The feasibility of this mitigation measure must be

addressed by checking the existing Caltrans right-of-way and the lane and shoulder standards set by Caltrans.

A fair share percentage was determined for each intersection based on the County's requirements. As the Cedar Avenue / I-10 Eastbound Ramps are included in the SBCTA Rialto Sphere Nexus Study DIF program, the project's fair share contribution will be to pay the DIF program fee for these intersections.

As all the previously mentioned seven (7) intersections are mitigatable, *the Project has an insignificant impact on the local traffic network.*

2.0 – Introduction

2.1 – Traffic Impact Study Purpose and Study Objective

This Traffic Impact Study (TIS) Report documents a traffic analysis performed by Minagar & Associates, Inc. for the Bloomington Commercial Project in Bloomington, identifying potential traffic impacts and recommending mitigation measures to reduce any anticipated impacts to less-than-significant levels as needed. The traffic analysis was in accordance with the County of San Bernardino Traffic Impact Study Guidelines (Revised July 9, 2019) and the Guidelines for CMP Traffic Impact Analysis Reports in San Bernardino County (Appendix B).The following report focuses on the potential traffic impacts to the surrounding roadway network affected by the project site, and development of mitigation measures at potentially impacted locations.

Traffic analyses were conducted for the "Existing" (Year 2020), "Opening Year" (2021), and "Horizon Year" (2040) conditions for fourteen (14) intersections located in the unincorporated region of Blooming and San Bernardino County. An additional three (3) study locations are added for the three (3) additional driveways along Cedar Avenue and Santa Ana Avenue for the Project. For each study location the existing traffic operations were evaluated, future traffic operations were forecast and studied reflecting the project's ultimate build-out conditions, and feasible mitigation measures were developed to offset the potential traffic impacts due to the project and/or other cumulative developments in the area.

The study scope is based on the County Scoping agreement as agreed to by the County on ***Feb. 10, 2020, Project Number: PROJ-2019-00079, APN:0257-101-01*** (**Appendix A**).

The scenarios are summarized in the following table:

Table 1: Study Scenarios

Scenario	Time Frames Analyzed
Existing Year	AM/PM Weekday Peak Hour
Opening Year (2021) with Cumulative	AM/PM Weekday Peak Hour
Opening Year (2021) with Cumulative with Projects	AM/PM Weekday Peak Hour
Horizon year (2040)	AM/PM Weekday Peak Hour
Horizon year (2040) with Project	AM/PM Weekday Peak Hour

2.2 – Project Location and Vicinity Map

In accordance with discussions with city staff, the study area included the analysis of seventeen (17) key intersections. As shown in **Table 2** below, the study intersections were composed of nine (9) nearby signalized intersections, and eight (8) unsignalized/stop controlled intersections.

Table 2: Intersection Locations and Existing Signalization

Intersection No. / Location	Intersection Traffic Control
1 – Cedar Avenue at Valley Boulevard	Signalized
2 – Cedar Avenue at I-10 Westbound Interchange	Signalized
3 – Cedar Avenue at I-10 Eastbound Interchange	Signalized
4 – Cedar Avenue at Orange Street	Signalized
5 – Linden Avenue at Slover Avenue	Unsignalized (all-way stop)
6 – Cedar Avenue at Slover Avenue	Signalized
7 – Larch Avenue at Slover Avenue	Signalized
8 – Linden Avenue at Santa Ana Avenue	Unsignalized (all-way stop)
9 – Cedar Avenue at Santa Ana Avenue	Signalized
10 – Larch Avenue at Santa Ana Avenue	Unsignalized (all-way stop)
11 – Driveway 1 on Cedar Avenue	Unsignalized
12 – Driveway 2 on Santa Ana Avenue	Unsignalized
13 – Driveway 3 on Santa Ana Avenue	Unsignalized
14 – Linden Avenue at Jurupa Avenue	Unsignalized (all-way stop)
15 – Cedar Avenue at Jurupa Avenue	Signalized
16 – Larch Avenue at Jurupa Avenue	Unsignalized (two-way stop)
17 – Cedar Avenue at El Rivino Road	Signalized

Figure 1 shows the Project location and study intersections.

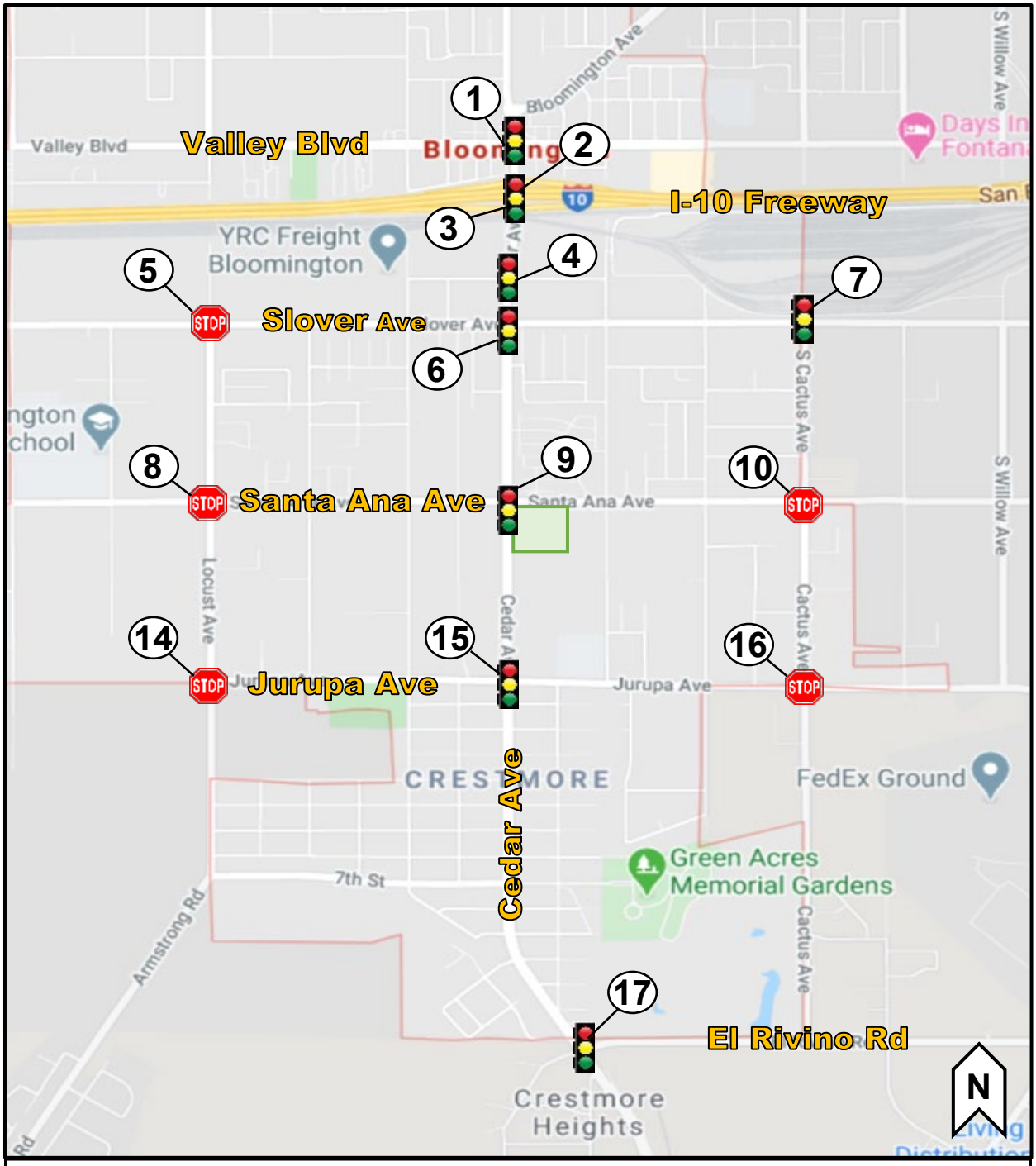

Figure 1: Project Location and Vicinity Map

16 **Intersection Location Number**

Signalized Intersection

Project Site

STOP **Unsignalized Intersection**

2.3 – Project Size and Description

This study analyzes the forecast traffic impact of the proposed "Bloomington Commercial Center" project, located on a currently vacant 8.9-acre site on the southeast corner of Cedar Avenue and Santa Ana Avenue in the unincorporated community of Bloomington, San Bernardino County (County). Currently the 8.9-acre project is vacant and undeveloped. The proposed project will consist of the following facilities:

- Gas Station with two (2) gas fueling canopies (one for standard gas and the other for diesel trucks, truck scale, and truck stopping area) with a 9,900 square foot convenience store
- 3,000 SF fast food restaurant with a drive-thru
- 2,800 SF fast food restaurant with a drive-thru

**The revised plan eliminated the three (3) previously planned facilities at the "Bloomington Commercial Center" Project, one (1) 4,000 SF car wash, one (1) 4,000 SF truck wash and one (1) 5,000 SF restaurant.*

See **Figure 2** for revised site plan.

The project site will take access at one (1) right-in-right-out driveways along Cedar Avenue and two (2) right-in-left-out driveways along Santa Ana Avenue.

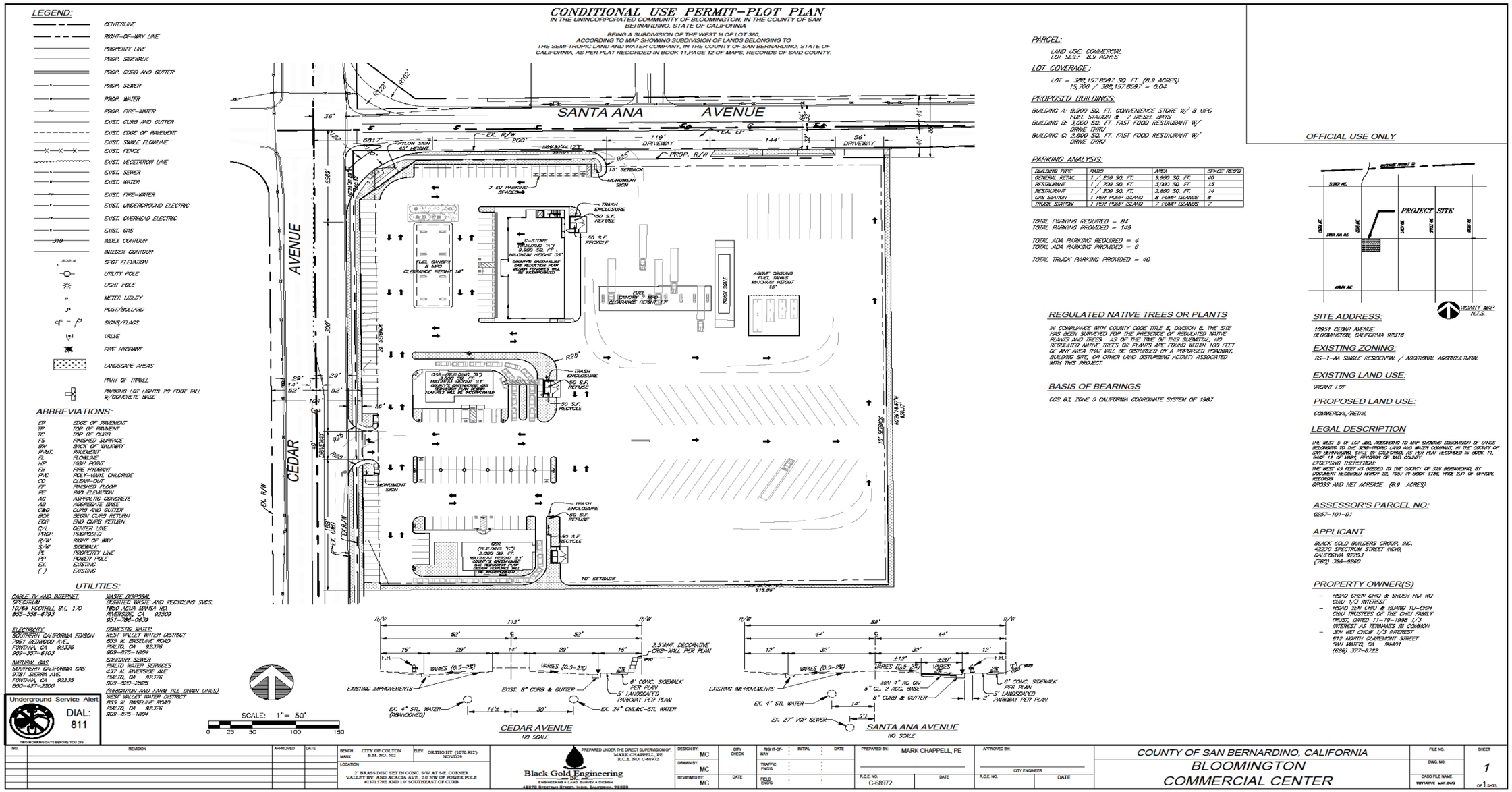

LEGEND:
CENTERLINE
RIGHT-OF-WAY LINE
PROPERTY LINE
PROP. SIDEWALK
PROP. CURB AND GUTTER
PROP. SEWER
PROP. WATER
PROP. FIRE-WATER
EXIST. CURB AND GUTTER
EXIST. EDGE OF PAVEMENT
EXIST. SWALE FLOWLINE
EXIST. FENCE
EXIST. VEGETATION LINE
EXIST. SEWER
EXIST. WATER
EXIST. FIRE-WATER
EXIST. UNDERGROUND ELECTRIC
EXIST. OVERHEAD ELECTRIC
EXIST. GAS
INDEX CONTOUR
INTEGER CONTOUR
SPOT ELEVATION
UTILITY POLE
LIGHT POLE
METER UTILITY
POST/BOLLARD
SIGNS/FLAGS
VALVE
FIRE HYDRANT
LANDSCAPE AREAS
PATH OF TRAVEL
PARKING LOT LIGHTS 20 FOOT TALL W/CONCRETE BASE

ABBREVIATIONS:

EP	EDGE OF PAVEMENT
TP	TOP OF PAVEMENT
TC	TOP OF CURB
FS	FINISHED SURFACE
BW	BACK OF WALKWAY
PVMT.	PAVEMENT
FL	FLOWLINE
HP	HIGH POINT
FH	FIRE HYDRANT
PVC	POLY-VINYL CHLORIDE
CO	CLEAN-OUT
FF	FINISHED FLOOR
PE	PAD ELEVATION
AC	ASPHALTIC CONCRETE
AB	AGGREGATE BASE
C&G	CURB AND GUTTER
BCR	BEGIN CURB RETURN
ECR	END CURB RETURN
C/L	CENTER LINE
PROP.	PROPOSED
R/W	RIGHT OF WAY
S/W	SIDEWALK
PL	PROPERTY LINE
PP	POWER POLE
EX.	EXISTING
( )	EXISTING

UTILITIES:

CABLE TV AND INTERNET
SPECTRUM
10769 FOOTHILL BVL. 170
855-558-8793

ELECTRICITY
SOUTHERN CALIFORNIA EDISON
7951 REDWOOD AVE.
FONTANA, CA 92336
909-357-6103

NATURAL GAS
SOUTHERN CALIFORNIA GAS
9781 SIERRA AVE.
FONTANA, CA 92335
800-427-2200

WASTE DISPOSAL
BURRTEC WASTE AND RECYCLING SVCS.
1850 AGUA MANSA RD.
RIVERSIDE, CA 92509
951-786-8639

DOMESTIC WATER
WEST VALLEY WATER DISTRICT
855 W. BASELINE ROAD
RIALTO, CA 92376
909-875-1804

SANITARY SEWER
RIALTO WATER SERVICES
437 N. RIVERSIDE AVE.
RIALTO, CA 92376
909-820-2525

IRRIGATION AND FARM TILE DRAIN LINES)
WEST VALLEY WATER DISTRICT
855 W. BASELINE ROAD
RIALTO, CA 92376
909-875-1804

Underground Service Alert
DIAL: 811
TWO WORKING DAYS BEFORE YOU DIG

PARCEL:
LAND USE: COMMERCIAL
LOT SIZE: 8.9 ACRES

LOT COVERAGE:
LOT = 388,157.8997 SQ. FT. (8.9 ACRES)
15,700 / 388,157.8997 = 0.04

PROPOSED BUILDINGS:
BUILDING A: 9,900 SQ. FT. CONVENIENCE STORE W/ 8 MPD FUEL STATION & 7 DIESEL BAYS
BUILDING B: 3,000 SQ. FT. FAST FOOD RESTAURANT W/ DRIVE THRU
BUILDING C: 2,800 SQ. FT. FAST FOOD RESTAURANT W/ DRIVE THRU

PARKING ANALYSIS:

BUILDING TYPE	RATIO	AREA	SPACE REQ'D
GENERAL RETAIL	1 / 250 SQ. FT.	9,900 SQ. FT.	40
RESTAURANT	1 / 200 SQ. FT.	3,000 SQ. FT.	15
RESTAURANT	1 / 200 SQ. FT.	2,800 SQ. FT.	14
GAS STATION	1 PER PUMP ISLAND	8 PUMP ISLANDS	8
TRUCK STATION	1 PER PUMP ISLAND	7 PUMP ISLANDS	7

TOTAL PARKING REQUIRED = 84
TOTAL PARKING PROVIDED = 149

TOTAL ADA PARKING REQUIRED = 4
TOTAL ADA PARKING PROVIDED = 6

TOTAL TRUCK PARKING PROVIDED = 40

REGULATED NATIVE TREES OR PLANTS

IN COMPLIANCE WITH COUNTY CODE TITLE 8, DIVISION 8, THE SITE HAS BEEN SURVEYED FOR THE PRESENCE OF REGULATED NATIVE PLANTS AND TREES. AS OF THE TIME OF THIS SUBMITTAL, NO REGULATED NATIVE TREES OR PLANTS ARE FOUND WITHIN 100 FEET OF ANY AREA THAT WILL BE DISTURBED BY A PROPOSED ROADWAY, BUILDING SITE, OR OTHER LAND DISTURBING ACTIVITY ASSOCIATED WITH THIS PROJECT.

BASIS OF BEARINGS

CCS 83, ZONE 5 CALIFORNIA COORDINATE SYSTEM OF 1983

OFFICIAL USE ONLY

SITE ADDRESS:
10951 CEDAR AVENUE
BLOOMINGTON, CALIFORNIA 92316

EXISTING ZONING:
RS-1-AA SINGLE RESIDENTIAL / ADDITIONAL AGRICULTURAL

EXISTING LAND USE:
VACANT LOT

PROPOSED LAND USE:
COMMERCIAL/RETAIL

LEGAL DESCRIPTION

THE WEST ½ OF LOT 380, ACCORDING TO MAP SHOWING SUBDIVISION OF LANDS BELONGING TO THE SEMI-TROPIC LAND AND WATER COMPANY, IN THE COUNTY OF SAN BERNARDINO, STATE OF CALIFORNIA, AS PER PLAT RECORDED IN BOOK 11, PAGE 12 OF MAPS, RECORDS OF SAID COUNTY.
EXCEPTING THEREFROM:
THE WEST 40 FEET AS DEEDED TO THE COUNTY OF SAN BERNARDINO, BY DOCUMENT RECORDED MARCH 22, 1957 IN BOOK 4786, PAGE 231 OF OFFICIAL RECORDS.
GROSS AND NET ACREAGE (8.9 ACRES)

ASSESSOR'S PARCEL NO:
0257-101-01

APPLICANT
BLACK GOLD BUILDERS GROUP, INC.
42270 SPECTRUM STREET INDIO, CALIFORNIA 92203
(760) 396-8260

PROPERTY OWNER(S)
- HSIAO CHIEN CHIU & SHUEH HUI WU CHIU 1/3 INTEREST
- HSIAO YEN CHIU & HUANG YU-CHIH CHIU TRUSTEES OF THE CHIU FAMILY TRUST, DATED 11-19-1998 1/3 INTEREST AS TENNANTS IN COMMON
- JEN WEI CHOW 1/3 INTEREST
  613 NORTH CLAREMONT STREET
  SAN MATEO, CA 94401
  (626) 377-6722

NO.	REVISION	APPROVED	DATE

BENCH MARK: CITY OF COLTON B.M. NO: 502
ELEV. ORTHO HT: (1070.912) NGVD29
LOCATION: 3" BRASS DISC SET IN CONC. S/W AT S.E. CORNER VALLEY BV. AND ACACIA AVE., 2.0' NW OF POWER POLE #1371779E AND 1.0' SOUTHEAST OF CURB

PREPARED UNDER THE DIRECT SUPERVISION OF: MARK CHAPPELL, PE R.C.E. NO: C-68972
Black Gold Engineering Inc.
ENGINEERING • LAND SURVEY • DESIGN
42270 SPECTRUM STREET, INDIO, CALIFORNIA, 92203

DESIGN BY:	MC	CITY CHECK	RIGHT-OF-WAY	INITIAL	DATE	PREPARED BY: MARK CHAPPELL, PE	APPROVED BY: CITY ENGINEER
DRAWN BY:	MC		TRAFFIC ENGG				
REVIEWED BY:	MC	DATE	FIELD ENGG			R.C.E. NO. C-68972 DATE	R.C.E. NO. DATE

COUNTY OF SAN BERNARDINO, CALIFORNIA
BLOOMINGTON COMMERCIAL CENTER

FILE NO.
DWG. NO.
CADD FILE NAME: TENTATIVE MAP.DWG
SHEET 1 OF 1 SHTS.

Figure 2: Project Site Plan

For a clearer image see Site Plan Appendix J

3.0 – Methodology and Impact Thresholds

The site fits the criteria for a truck stop based on the Institute of Transportation Engineers (ITE). The ITE Trip Generation, 10th Edition defines a truck stop as a facility on or near major roadways providing refueling, food, and other services to motorists and truck drivers. Truck stops typically contain convenience stores, showers, restaurants, and on-site truck parking spaces. This description reflects the site plan (**Figure 2**).

At study intersections, existing peak hour traffic volumes were collected for passenger cars, 2-axle trucks, 3-axle trucks, and 4+ axle trucks. Using the conversion factor detailed in the Guidelines for CMP Traffic Impact Analysis Reports in San Bernardino County, existing peak hour traffic volumes were converted to Passenger Car Equivalents (PCE) based on the following factors:

Table 3: PCE Conversion

Vehicle Type	Passenger Car Equivalent (PCE)
Passenger Car	1.0
2 Axle Truck	1.5
3 Axle Truck	2.0
4+ Axle Truck	3.0

It should be noted the analysis in this report is based on PCE's for all study scenarios.

In accordance with the County of San Bernardino Traffic Impact Study Guidelines (Revised July 9, 2019), this study analyzes the following study scenarios during both the AM/PM Peak Hour of adjacent street:

- **Existing Conditions** – Analysis of existing traffic count volumes, intersection geometry and existing roadway network.
- **Opening Year (2021) Conditions Without Project** – Analysis of existing traffic volumes with ambient growth (1.5%) overlaid with traffic associated with approved or pending projects anticipated to be constructed by project opening year (approximately Year 2021).
- **Opening Year (2021) Conditions With Project** – Analysis of existing traffic volumes with ambient growth (1.5%) overlaid with cumulative project traffic and traffic generated by the proposed project.

- **Horizon year (2040) Conditions Without Project** – Analysis of Horizon year (2040) conditions is based on the build-out of the San Bernardino County General Plan land uses and Circulation Element roadway network. Horizon year (2040) forecast daily traffic volumes used in this analysis are based on an annual growth rate of 1.5% in lieu of the San Bernardino Transportation Analysis Traffic Model (SBTAM). The SBTAM was found to underestimate the level of development in the project area. All build-out roadway improvements in the project study area such as the I-10 / Cedar Avenue interchange improvements are included in the analysis of Horizon year (2040) conditions.
- **Horizon year (2040) Conditions With Project** – Analysis of Horizon year (2040) conditions was conducted using the forecast 2040 traffic volumes overlaid with traffic generated by the proposed project.

3.1 – Level of Service (LOS)

As required, the Highway Capacity Manual (HCM) 6th Edition operation methodology for Signalized and Un-signalized Intersections was used to determine the operating Levels of Service (LOS) of the study intersections. Synchro Studio (Version 10.0) software package was used to evaluate the study intersections using the HCM methodology. The HCM methodology describes the operation of an intersection using a range of levels of service (LOS) from LOS A (free-flow conditions) to LOS F (severely congested conditions) as shown in **Table 4**. The corresponding delay per vehicle thresholds for signalized and un-signalized intersections are provided in **Table 5.**

San Bernardino County considers LOS D or better to be acceptable intersection operating conditions during peak traffic periods in valley regions. Any intersection that is operating at LOS “E” or “F” will be considered deficient for purposes of this analysis.

Table 4: Level of Service Descriptions

LOS	Description
A	This level is typically assigned when the volume-to-capacity ratio is low and either progression is exceptionally favorable or the cycle length is very short. If it is due to favorable progression, most vehicles arrive during the green indication and travel through the intersection without stopping.
B	This level is typically assigned when the volume-to-capacity ratio is low and either progression is highly favorable, or the cycle length is short. More vehicles stop than with LOS A.
C	This level is typically assigned when progression is favorable or the cycle length is moderate. Individual cycle failures may begin to appear at this level. The number of vehicles stopping is significant, although many vehicles still pass through the intersection without stopping.
D	This level is typically assigned when the volume-to-capacity ratio is high and either progression is ineffective or the cycle length is long. Many vehicles stop and individual cycle failures are noticeable.
E	This level is typically assigned when the volume-to-capacity ratio is high, progression is unfavorable, and the cycle length is long. Individual cycle failures are frequent.
F	This level is typically assigned when the volume-to-capacity ratio is very high, progression is very poor, and the cycle length is long. Most cycles fail to clear the queue.

Table 5: Level of Service Thresholds

Level of Service	Intersection Control Delay (Seconds/ Vehicle)	
	Signalized Intersection	**Unsignalized Intersection**
A	≤10.0	≤10.0
B	>10.0 to ≤20.0	>10.0 to ≤15.0
C	>20.0 to ≤35.0	>15.0 to ≤25.0
D	>35.0 to ≤55.0	>25.0 to ≤35.0
E	>55.0 to ≤80.0	>35.0 to ≤50.0
F	>80.0	>50.0

Source: Highway Capacity Manual (Transportation Research Board, 6th Edition)

Roadway segment level of service standards are generally used as long-range planning guidelines to determine the functional classification of roadways and are not always accurate indicators of roadway performance along arterials with intersections within 2 miles of each other. Typically, the performance and level of service of a roadway segment is heavily influenced by the ability of intersections to accommodate peak hour volumes. Therefore, peak hour signalized and un-signalized intersections within the study area are the focus of the project traffic analysis summarized in this report since intersections control the movement of vehicles along road segments.

3.2 – Significance Thresholds

To determine whether the addition of project-generated trips results in a significant impact at a study intersection, and thus requires mitigation, San Bernardino County TIS Guidelines utilizes the following thresholds of significance.

3.2.1 – Signalized Intersections

Any study intersection that is operating at an LOS D or better for any study scenario without project traffic in which the addition of project traffic causes the intersection to degrade to a LOS 'E' or 'F' shall require mitigation to bring the intersection back to at least LOS 'D'. Any signalized study intersection that is operating at LOS E or F without project traffic where the project increases delay by 5.0 or more seconds shall identify improvements to offset the increase in delay.

3.2.2 – Unsignalized Intersections

Any study intersection where the addition of project related traffic causes the intersection to degrade from an LOS D or better to a LOS E or worse. Additionally, any study intersection where the project adds

5.0 seconds or more of delay to an intersection that is already projected to operate without project traffic at an LOS E or F.

4.0 – Existing Conditions

4.1 – Existing Roadway Network

A detailed field review was conducted to determine the existing intersection geometry, traffic control devices, signal phasing and other factors, which may affect intersection capacity. Many of the study intersections do not include striping. Therefore field observations were made to identify how motorists approach each intersection. The existing intersection geometry is illustrated in **Figure 3**. The following is a detailed description of roadways in the study area.

Cedar Avenue is a four-lane undivided roadway and is generally oriented in a north-south direction. From Interstate 10, Cedar Avenue extends north through the City of Rialto, and south towards Crestmore Heights. The Bloomington Community Circulation Element classifies Cedar Avenue as a Major Highway from the northern to southern boundaries of Bloomington. The posted speed limit along Cedar Avenue between Valley Boulevard and Jurupa Avenue is 40 mph. Class II bike lanes are not provided on either side of the roadway and parking is prohibited along Cedar Avenue within the study area.

Valley Boulevard is constructed as a four-lane divided roadway oriented in an east-west direction. The roadway extends from Interstate 15 to the 215 parallel to the I-10 along the north side. The Bloomington Community Circulation Element classifies Valley Boulevard as a Major Highway within the boundaries of Bloomington. The posted speed limit along Valley Boulevard is 40 mph. Class II bike lanes are not provided on either side of the roadway. Parking is permitted on both sides of Valley Blvd.

Orange Street is a two-lane divided roadway orientated in an east-west direction. This roadway is a local unclassified roadway serving residents and the Bloomington Junior High School. The posted speed limit on this roadway is 25 mph and parking is permitted on both sides of the road.

Slover Avenue is a two-lane to four-lane roadway with a two-way left turn lane orientated in an east-west direction. Slover Avenue is classified as a Major Highway according to the Bloomington Community Circulation Element. Class II bike lanes are not provided on either side of the roadway and the posted speed limit is 50 mph.

Linden Avenue is a two-lane divided roadway orientated in an east-west direction. This roadway is a local unclassified roadway serving residents. The posted speed limit on this roadway is 25 mph and parking is permitted on both sides of the road.

Larch Avenue is a two-lane divided roadway orientated in an east-west direction. This roadway is a local unclassified roadway serving residents. The posted speed limit on this roadway is 25 mph and parking is permitted on both sides of the road.

Santa Ana Avenue is a two-lane roadway with width to accommodate two approach lanes orientated in an east-west direction at intersections. Santa Ana Avenue is classified as a Secondary Highway according to the Bloomington Community Circulation Element. Class II bike lanes are not provided on either side of the roadway and the posted speed limit is 40 mph.

Jurupa Avenue is a two-lane roadway with width to accommodate two approach lanes orientated in an east-west direction at intersections. Jurupa Avenue is classified as a Major Highway according to the Bloomington Community Circulation Element. Class II bike lanes are not provided on either side of the roadway and the posted speed limit is 40 mph.

El Rivino Road is a two-lane roadway with width to accommodate two approach lanes orientated in an east-west direction at intersections. El Rivino Road is classified as a Secondary Highway according to the Bloomington Community Circulation Element and services local and trucking traffic. Class II bike lanes are not provided on either side of the roadway and the posted speed limit is 40 mph.

Figure 4 illustrates Bloomington Community Plan Circulation Element showing the classification and configuration of arterial highways planned to serve the ultimate development defined by the land use element of the General Plan. **Figure 5** shows the San Bernardino General Plan roadway cross-sections.

The project does reach Caltrans significance criteria and contributes over 100 PCE trips to the I-10 Eastbound/Westbound on and off-ramps. The following analyses have been identified for Caltrans:

- Merge Analysis - I-10 Eastbound On-Ramp
- Weave Analysis - I-10 Eastbound Off-Ramp
- Merge Analysis - I-10 Westbound On-Ramp
- Weave Analysis - I-10 Westbound Off-Ramp

The analyses can be found in **Section 8** with the detailed High Capacity Software worksheets in **Appendix I.**

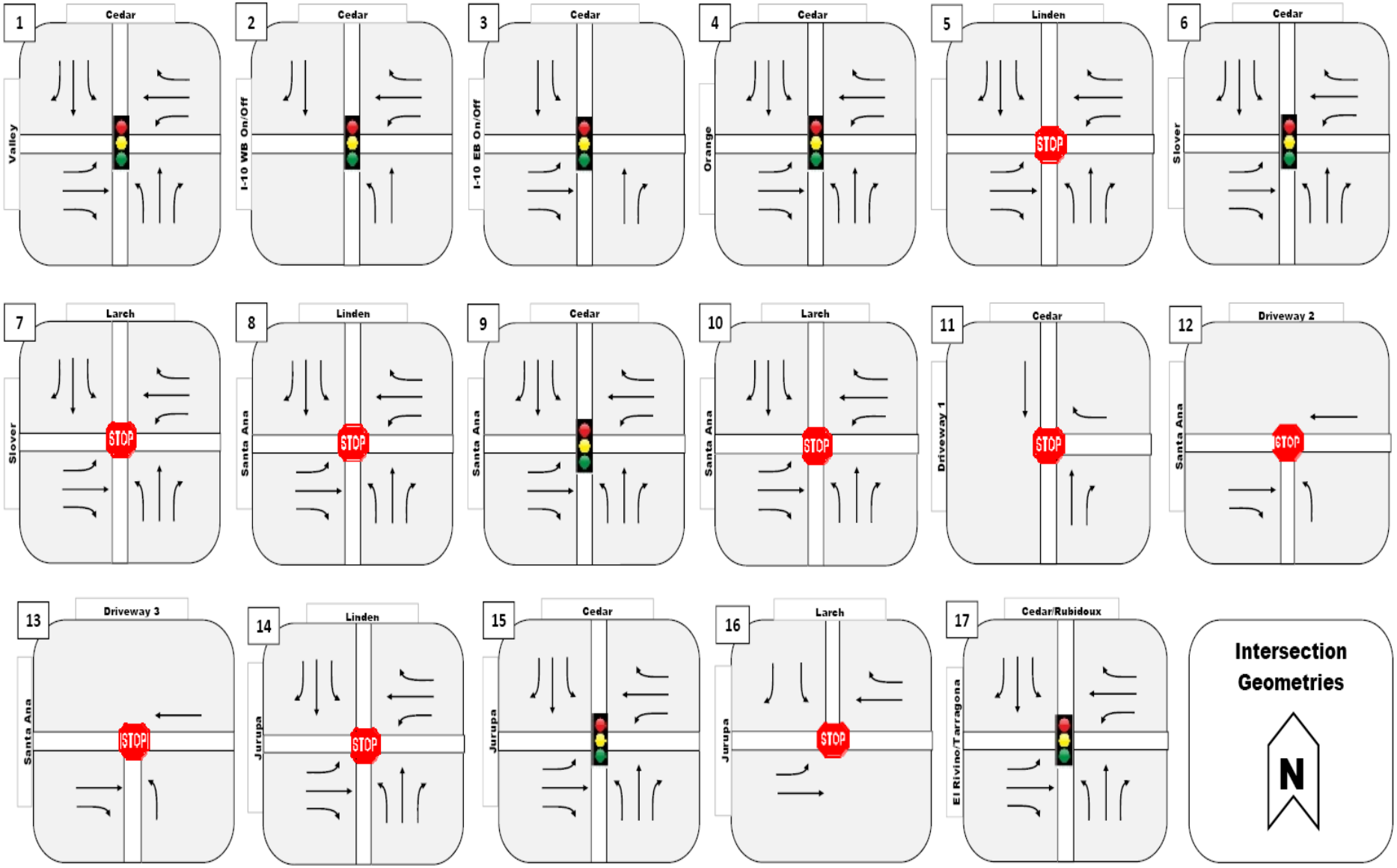

Figure 3: Existing Intersection Geometries

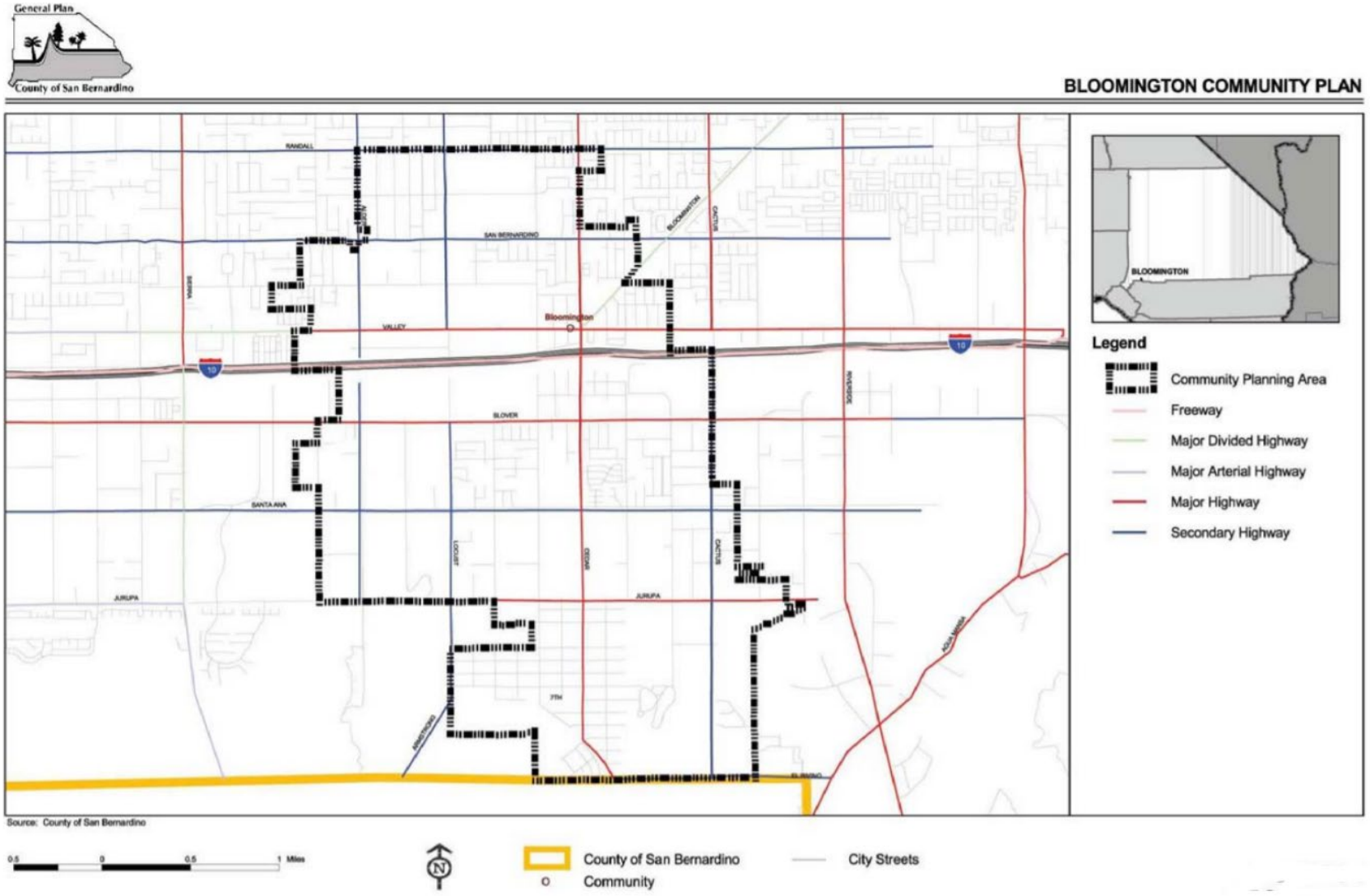

Figure 4: Bloomington Community Plan Circulation Element

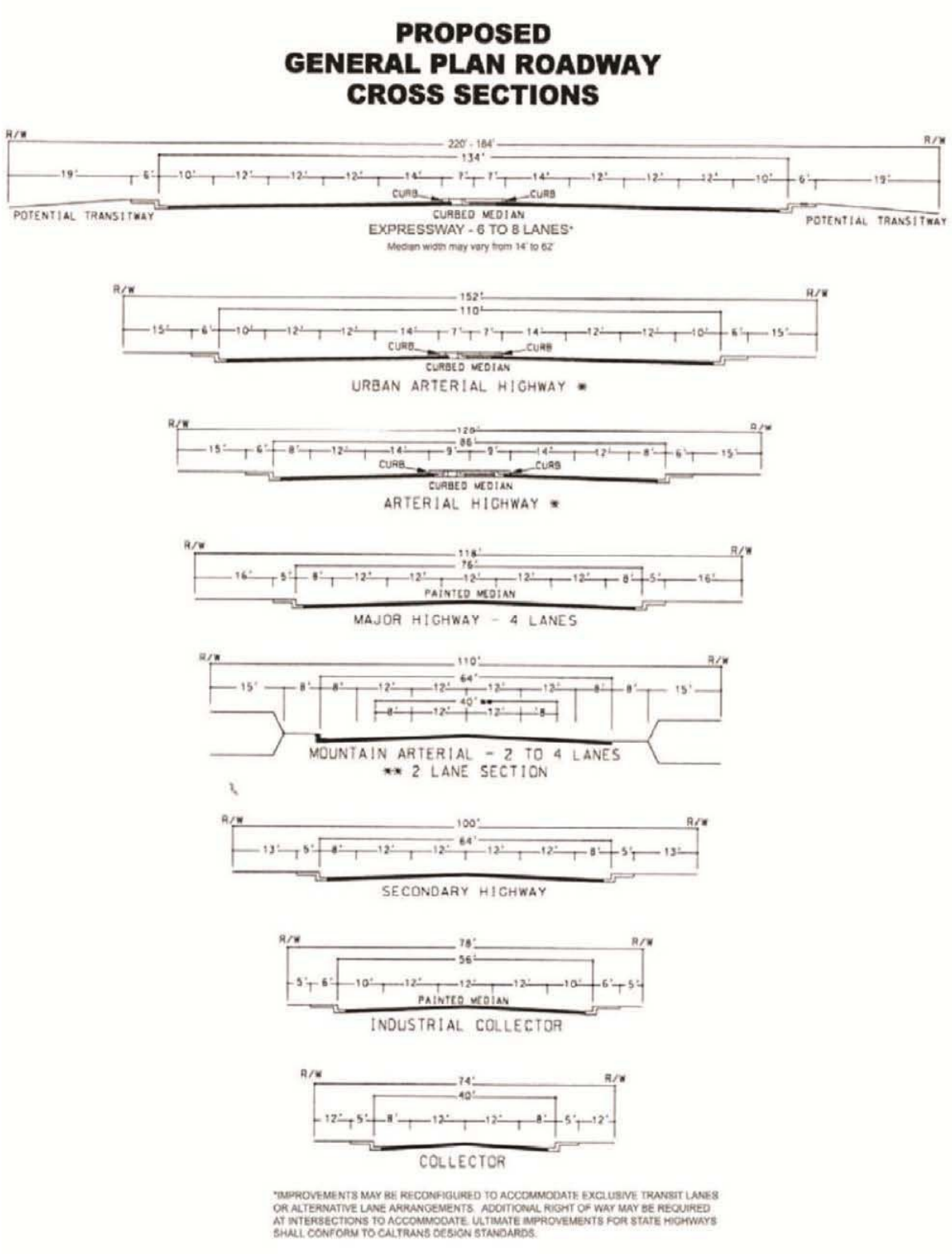

Figure 5: Bloomington General Plan Roadway Cross Sections

3.2 – Existing Traffic Volumes – AM and PM Peak Hour

To determine the existing operations of the study intersections, traffic counts were collected on Thursday, January 23, 2020 during the AM (7:00 to 9:00 AM) and PM (4:00 to 6:00 PM) peak periods at the following fourteen (14) intersections:

1. Cedar Ave / Valley
2. Cedar Ave / I-10 Westbound Interchange
3. Cedar Avenue / I-10 Eastbound Interchange
4. Cedar Avenue / Orange Street
5. Linden Avenue / Slover Avenue
6. Cedar Avenue / Slover Avenue
7. Larch Avenue / Slover Avenue
8. Linden Avenue / Santa Ana Avenue
9. Cedar Avenue / Santa Ana Avenue
10. Larch Avenue / Santa Ana Avenue
14. Linden Avenue / Jurupa Avenue
15. Cedar Avenue / Jurupa Avenue
16. Larch Avenue / Jurupa Avenue
17. Cedar Avenue / El Rivino Road

Note: Numbering values of 11 through 13 are reserved for the three (3) Project driveways

The traffic counts collected at the study intersections include vehicle classifications such as passenger cars, 2-axle trucks, 3-axle trucks, and 4+ axle trucks. For purposes of this analysis, all truck traffic was converted into Passenger Car Equivalents (PCE) due to the fact these trucks occupy the same space as two or more passenger cars. In addition, the time it takes for these larger vehicles to accelerate and slow- down is much longer than passenger cars and varies depending on type of vehicle and number of axles. For these reasons, a PCE factor of 1.5 has been applied to 2-axle trucks, 2.0 for 3-axle trucks and 3.0 for 4-axle trucks. These PCE factors are consistent with the Guidelines for CMP Traffic Impact Analysis Reports in San Bernardino County. PCE conversion worksheets can be found in **Appendix E**.

Figure 6 and 7 shows the existing AM and PM peak hour intersection volumes, respectively. Detailed traffic count data is contained in **Appendix B**

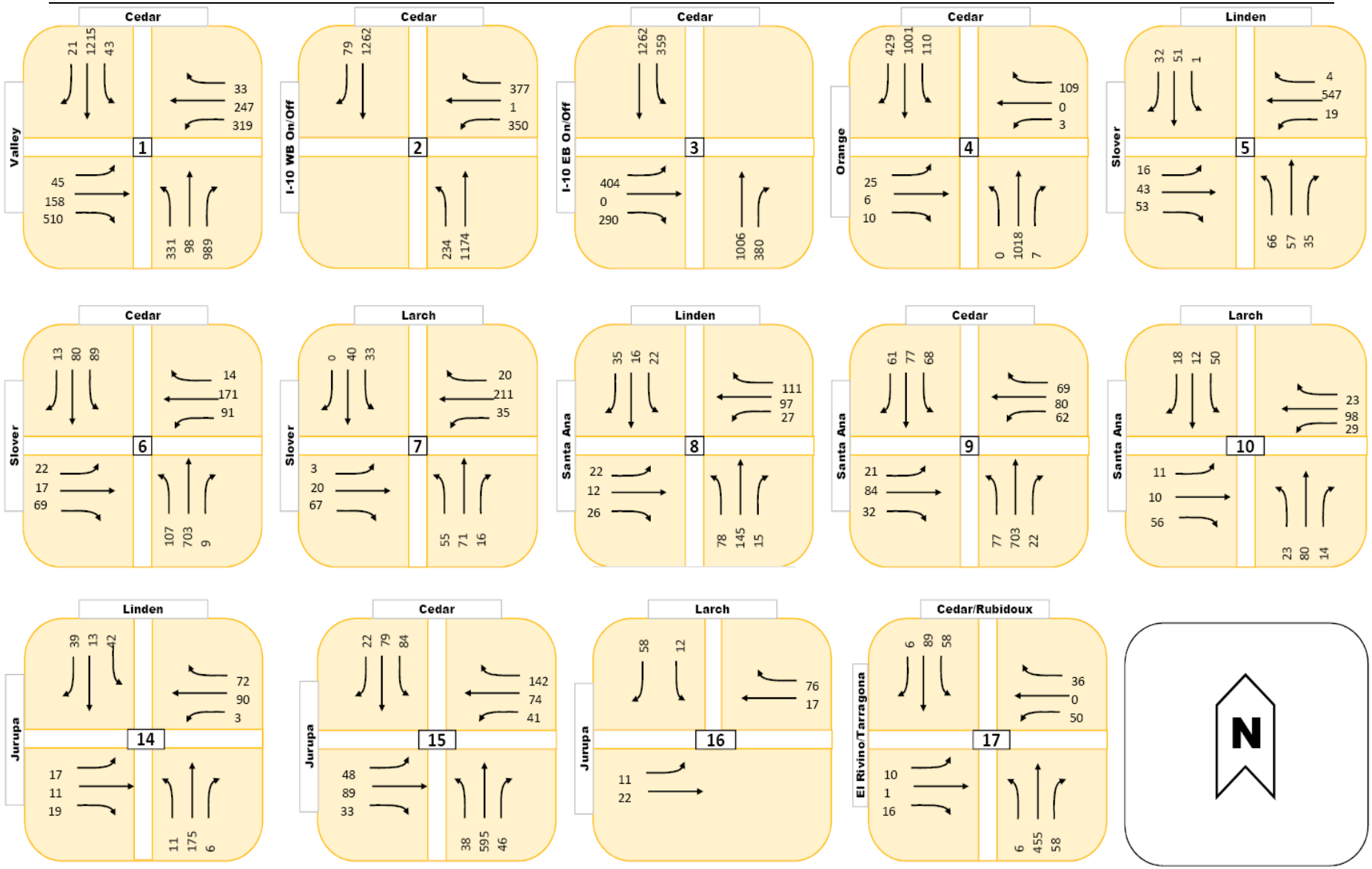

Figure 6: Existing AM Peak Hour Volumes at Each Study Intersection

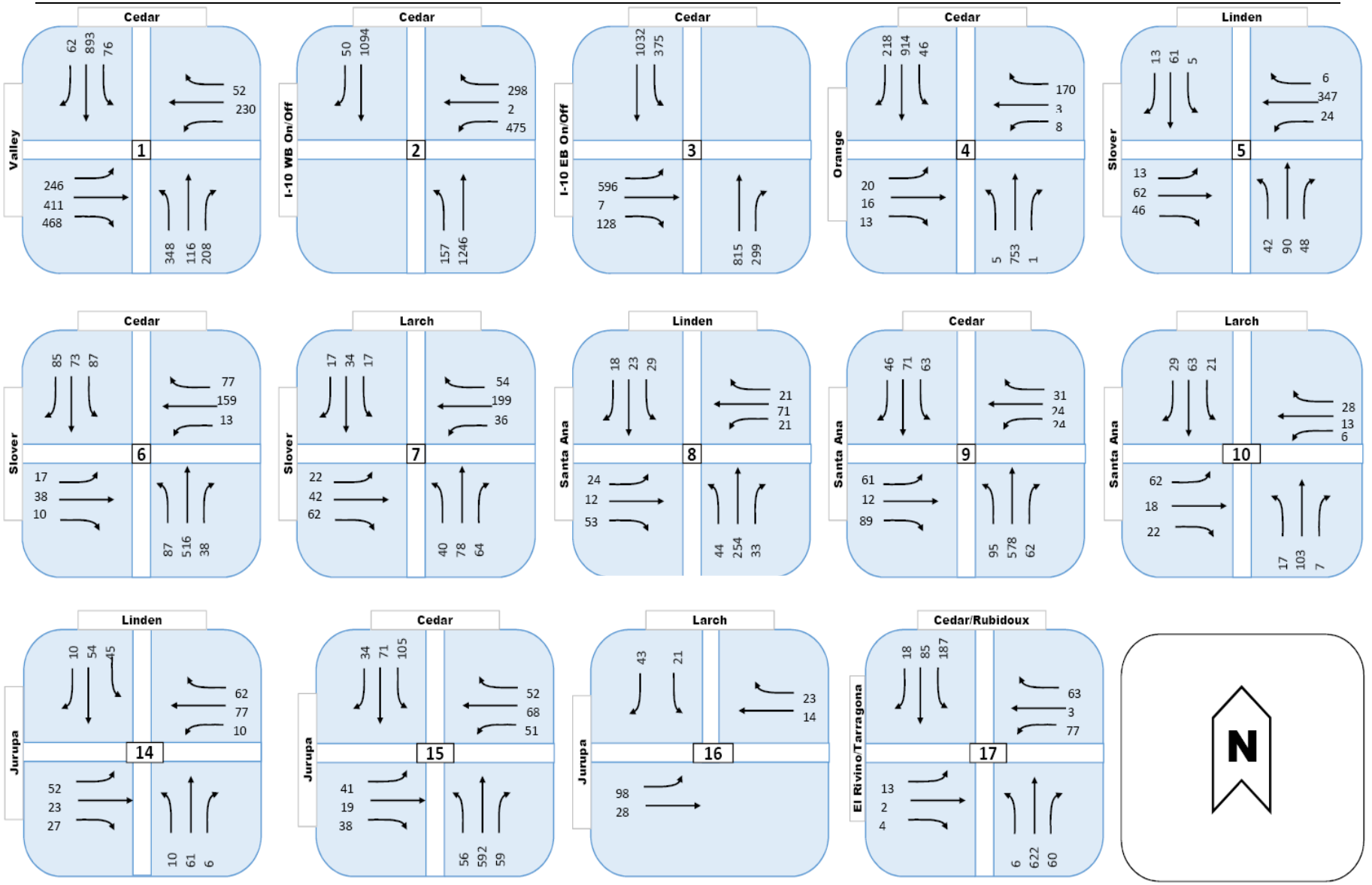

Figure 7: Existing PM Peak Hour Volumes at Each Study Intersection

3.3 – Existing Level of Service (LOS) at Intersections

Table 6 summarizes the existing AM and PM peak hour intersection LOS of the study intersections based on the existing peak hour intersection volumes and existing intersection geometry. Detailed HCM calculation sheets are contained in **Appendix C**.

Table 6: Existing Year Intersection Level of Service

Intersection	Control	Without Project		Without Project	
		AM Peak Hour		PM Peak Hour	
		Delay (sec)	LOS	Delay (sec)	LOS
1. Cedar Ave. / Valley Blvd.	Signalized	16.4	B	16.6	B
2. Cedar Ave. / I-10 WB	Signalized	**93.3**	**F**	27.3	C
3. Cedar Ave. / I-10 EB	Signalized	45.2	D	45.7	D
4. Cedar Ave. / Orange St.	Signalized	**56**	**E**	32.6	C
5. Linden Ave. / Slover Ave.	AWSC	**82.9**	**F**	**35.3**	**E**
6. Cedar Ave. / Slover Ave.	Signalized	**197.8**	**F**	**93.3**	**F**
7. Larch Ave. / Slover Ave.	Signalized	6.0	A	7.5	A
8. Linden Ave. / Santa Ana Ave.	AWSC	13.1	B	13.9	B
9. Cedar Ave. / Santa Ana Ave.	Signalized	49.5	D	**85.6**	**F**
10. Larch Ave. / Santa Ana Ave.	AWSC	11	B	10.4	B
11. Driveway 1 / Cedar Ave.					
12. Driveway 2 / Santa Ana Ave.					
13. Driveway 3 / Santa Ana Ave.					
14. Jurupa Ave. / Linden Ave.	AWSC	11.4	B	10.6	B
15. Cedar Ave. / Jurupa Ave.	Signalized	20.3	C	36.5	D
16. Jurupa Ave. / Larch Ave.	TWSC	13.3	B	14.0	B
17. Cedar Avenue / El Rivino Road	Signalized	17.3	B	17.7	B

As shown in **Table 6**, the following intersections currently operate at a deficient level of service in the existing year scenario without the proposed project trips:

- Cedar Avenue / I-10 Westbound Ramps
- Cedar Avenue / Orange Street
- Linden Avenue / Slover Avenue
- Cedar Avenue / Slover Avenue
- Cedar Avenue / Santa Ana Avenue

In the subsequent opening year and horizon year scenarios, this study will compare intersection performance with and without proposed project trips to determine if mitigation improvements should be identified.

3.4 – Existing Bicycle Facilities

There are currently no Class II bike lanes in each direction of travel on Cedar Avenue or Santa Ana Avenue in the vicinity of the project site. Sidewalks does not exist on the streets surrounding the project site and no current ADA path exists.

The project will be providing sidewalks along the project frontage on Cedar Avenue and Santa Ana Avenue.

3.5 – Existing Transit Facilities

The nearest transit facility to the project site is a bus stop on the northeast corner of Cedar Avenue and Santana Avenue and is serviced by OmniTrans Route 29. Route 29 originates and terminates at the South Fontana Transfer Center next to Kaiser Hospital off Sierra Avenue north of Valley Boulevard.

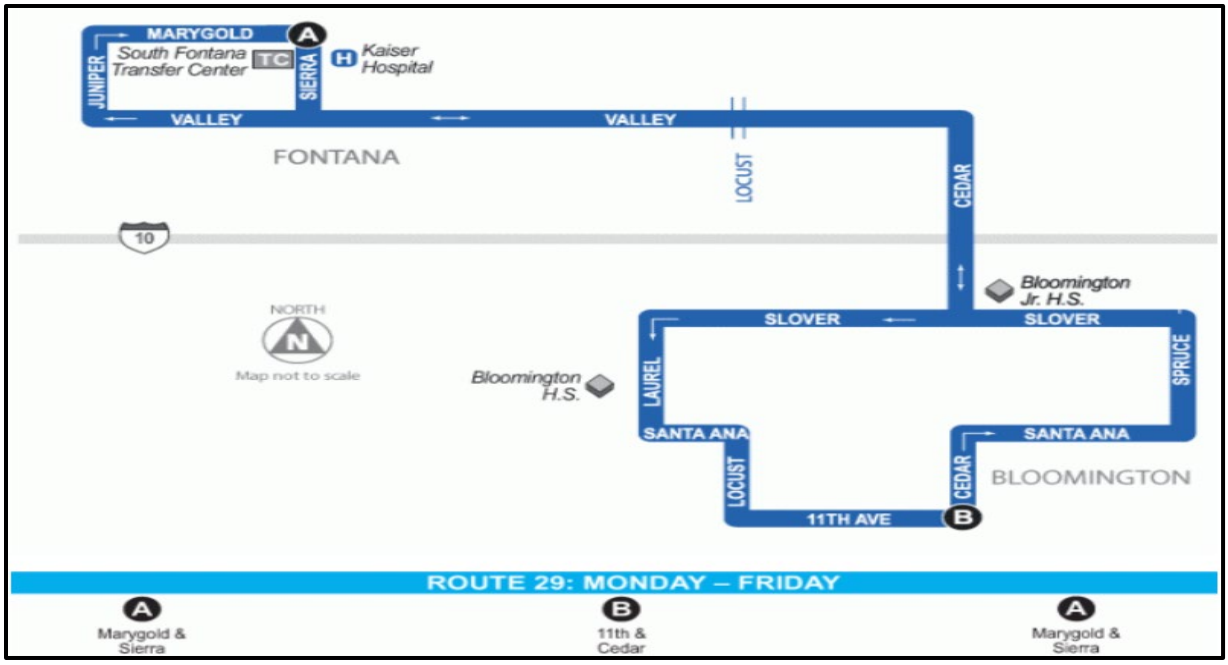

Figure 8: Omni Trans Route 29 Plan

The project will be providing an ADA path for the bus stop as part of the sidewalk improvements along the project frontage on Cedar Avenue and Santa Ana Avenue.

The bus stop should be temporarily relocated during construction through coordination with Omnitrans.

4.0 – Project Traffic

This study analyzes the forecast traffic impact of the proposed "Bloomington Commercial Center" project, located on a currently vacant 8.9-acre site on the southeast corner of Cedar Avenue and Santa Ana Avenue in the unincorporated community of Bloomington, San Bernardino County (County). The proposed project will consist of the following facilities:

- Gas Station with two (2) gas fueling canopies (one for standard gas and the other for diesel trucks, truck scale, and truck stopping area) with a 9,900 square foot convenience store
- 3,000 SF fast food restaurant with a drive-thru
- 2,800 SF fast food restaurant with a drive-thru

4.1 – Trip Generation

The site fits the criteria for a truck stop based on the Institute of Transportation Engineers (ITE). The ITE Trip Generation, 10th Edition defines a truck stop as a facility on or near major roadways providing refueling, food, and other services to motorists and truck drivers. Truck stops typically contain convenience stores, showers, restaurants, and on-site truck parking spaces. This description reflects the site plan (Figure 1). The project site will take access at one (1) right-in-right-out driveway along Cedar Avenue and two (2) right-in-left-out driveways along Santa Ana Avenue.

To determine the trips forecast to be generated by the proposed project, ITE Trip Generation Manual, 10th Edition rates were utilized in accordance with the San Bernardino County Guidelines. Based on County comments, the trip rate was determined utilizing the independent variable of gross floor area for Truck Stops - Usage Code 950. **Table 9** shows the trip generation rates used for the proposed project as well as the breakdown by vehicle type. The vehicle type breakdown is based on the Truck Trip Generation Study for truck stops prepared by the City of Fontana as shown below. Trip generation rates can be found in Appendix E. The vehicle mix for PCE was also applied for the truck wash facility on site.

Table 7: Vehicle Mix for Truck Stop

Vehicle Classification	Percentage of Trips	PCE Conversion
Passenger Vehicle	44.1%	1.0
Large 2-axle Truck	2.2%	1.5
3-Axle Truck	9.0%	2.0
4+ Axle Truck	44.6%	3.0

4.1.1 – Pass-By Trip Reduction

The proposed site will primarily be a fueling site with fast food restaurants and truck parking for truckers already present on the local roadway network based on the amount of warehousing existing in the area, as well as future warehousing sites that will be incorporated as cumulative projects during the analysis. The site will also service commuters on their way to and from work during the peak hour.

Based on the surrounding usages which will already generate high-trucking and pass-by trip percentages as denoted in Appendix E of the ITE Trip Generation Manual, a pass-by trip percentage of 55% is reasonable and conservative for this type of development. The following table shows various usages from the ITE similar to the truck stop usage and their average pass-by trip percentages.

Table 8: Pass-By Trip Credits for Similar Usages

Usage	Average Pass-By Trip Percentage
853 – Convenience Market w/ Gasoline Pumps	AM: 63% PM: 66%
934 – Fast-Food Restaurant w/ Drive Through	AM: 49% PM: 50%
945 – Gasoline Station with Convenience Store	AM: 62% PM: 56%

Table 9: Project Trip Generation Weekday (AM/PM Peak Hours and Daily)

Trip Generation									
Project			AM Peak Hour			PM Peak Hour			Daily
No.	Land Use	Quantity[1]	In	Out	Total	In	Out	Total	
1	Truck Stop	Rates	13.25	13.25	26.49	12.05	10.68	22.73	455.53
		15.70 GFA[2]	208	208	416	179	178	357	7152
	Pass by (55% AM/PM/Daily)		- 114	- 115	- 229	- 98	- 98	- 196	- 3934
	Subtotal Vehicular Trips		94	93	187	81	80	161	3218
	Subtotal Trips from Truck Usages		94	93	187	81	80	161	3218
Total Trips from Truck Usages			94	93	187	81	80	161	3218
Total Vehicular Trips with Trip Reduction and PCE Adjustment			**187**	**185**	**372**	**161**	**159**	**320**	**6410**

[1] Institute of Transportation Engineers (ITE), Trip Generation Manual, 10th Edition, 2017
[2] GFA = Gross Floor Area

Based on the proposed school trips during the PM peak hour of adjacent street being lower than the existing trips of the current site based on usage, a PM peak hour of adjacent street analysis is not warranted and will not be analyzed in this TIS. **Appendix E** includes calculation of trip generation.

4.2 – Trip Distribution and Assignment

The project trip distribution was developed based on the existing roadway network and surrounding land uses, existing traffic patterns and access to Interstate 10.

Figure 9 illustrates the project's trip distribution. As the surrounding area features industrial warehouses and residential communities, the distribution of truck and passenger vehicles was deemed similar. Both commuters and truckers will access the I-10 Freeway in a similar manner as well.

Utilizing the project trip distribution shown in **Figure 9**, the forecast project-generated trips were assigned to the roadway network. **Figure 10** shows the AM/PM peak hour project trip assignment for passenger vehicles and trucks, respectively.

Project Trip Distribution

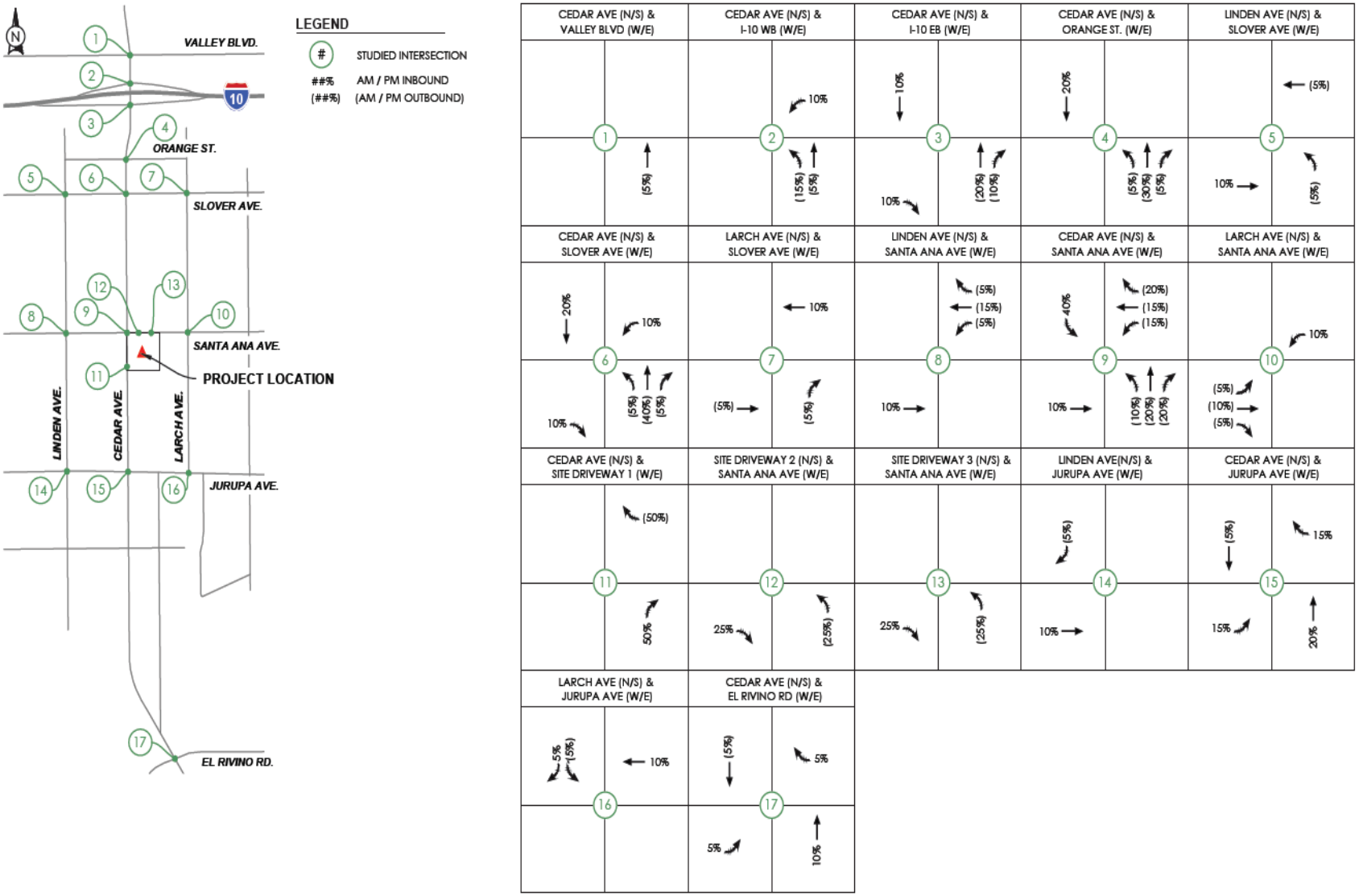

Figure 9: Project Trip Distribution for the Eighteen (18) Intersections

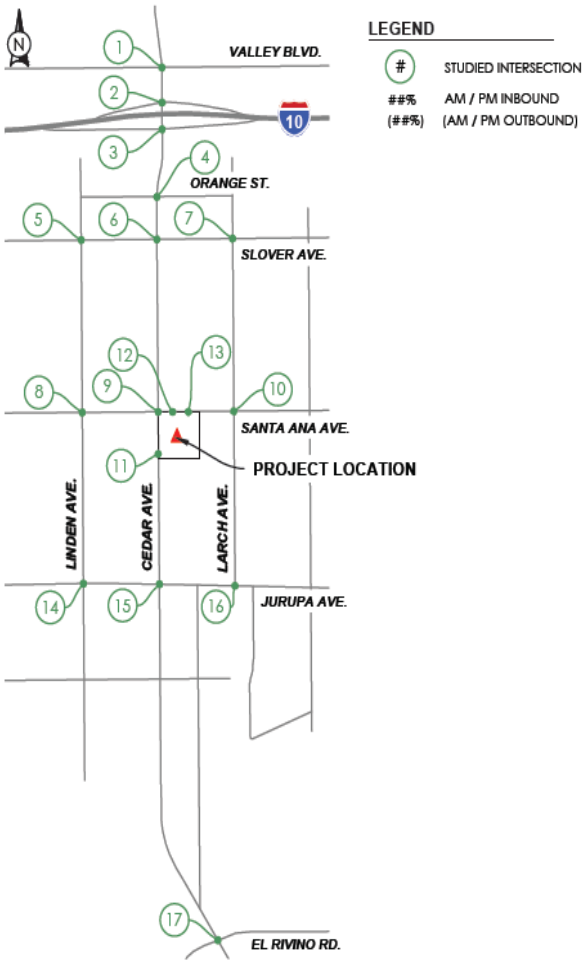

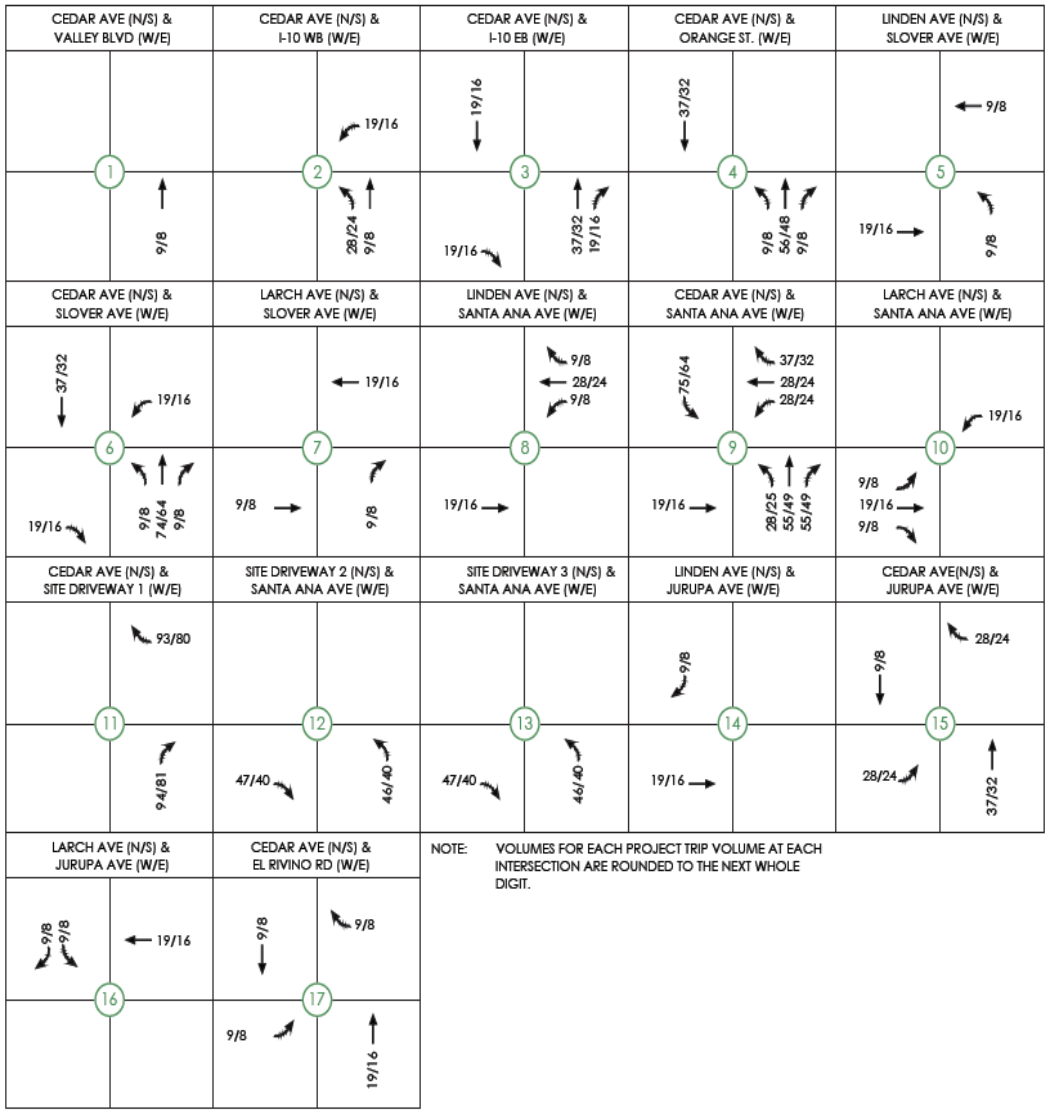

Figre 10: Project Trip Assignment for the Eighteen (18) Intersections

5.0 – Background Conditions (Opening Year) Analysis

Ambient growth refers to a growth rate applied to existing traffic volumes to account for other general traffic growth in and around the study area. For this analysis, the ambient growth rate is based on a 2.0% annual growth to the opening (2021) year and 1.5% annual ambient growth to the horizon (2040) year. This is a conservative ambient growth rate due to the amount of industrial development in the Bloomington area.

To determine the Opening Year 2021 conditions in the project study area, forecast project traffic associated with San Bernardino County, City of Rialto and the City of Fontana approved or pending projects were added to existing traffic volumes. County provided a list of accepted application projects that would generate traffic into the study area by the projects opening year (2021). Cumulative project traffic generation was calculated through the study area based on the ITE Trip Generation Manual, 10th Edition. The location of each cumulative project is shown in **Figure 11**.

The term "cumulative" in this study refers to cumulative development which includes pending and/or approved projects that are expected to be completed and occupied, after the date of existing counts but prior to the project's expected opening day (2021) that would contribute traffic within the project study area. Forecast project traffic associated with the City of Fontana, City of Rialto and San Bernardino County were identified and evaluated. Each of these agencies provided a list of projects that could potentially generate traffic within the study area by the project's opening year (2021). After reviewing each list, this study includes a total of ten (10) cumulative projects that will add traffic to the study intersections. These cumulative traffic volumes have been analyzed in the Opening Year (2021) conditions with and without the proposed project.

The following is a list of cumulative projects numbered according to **Figure 11**.

1. 174,800 SF Logistics Warehouse and Office - 10380 Alder Avenue Bloomington, CA 92316
2. 371,442 SF Industrial Building with 10,000 SF Office Area - Located at Northwest Corner of Intersection of Cedar Avenue / Orange Street
3. 184,700 SF Warehouse Building - Located at Northeast Corner of Intersection of Cedar Avenue / Orange Street
4. 6,300 SF Warehouse Distribution Facility - 17847 Slover Avenue Bloomington, CA 92316
5. Chevron Service Fueling Station - 18653 Slover Avenue Bloomington, CA 92316
6. 697,277 SF Warehouse - Located at the Northwest Corner of Cedar Avenue / Jurupa Avenue
7. 5,000 SF Convenience Store and Service Station - 11279 Cedar Avenue Bloomington, CA 92316
8. 505,906 SF Warehouse - Located on the Northside of El Rivino Road between Kiningham Drive

9. 525,110 SF Warehouse - Located at the Northeast Corner of Willow Avenue and Santa Ana Avenue
10. Truck Terminal Facility - Located at the Norheast Corner of Jurupa Avenue and Lilac Avenue

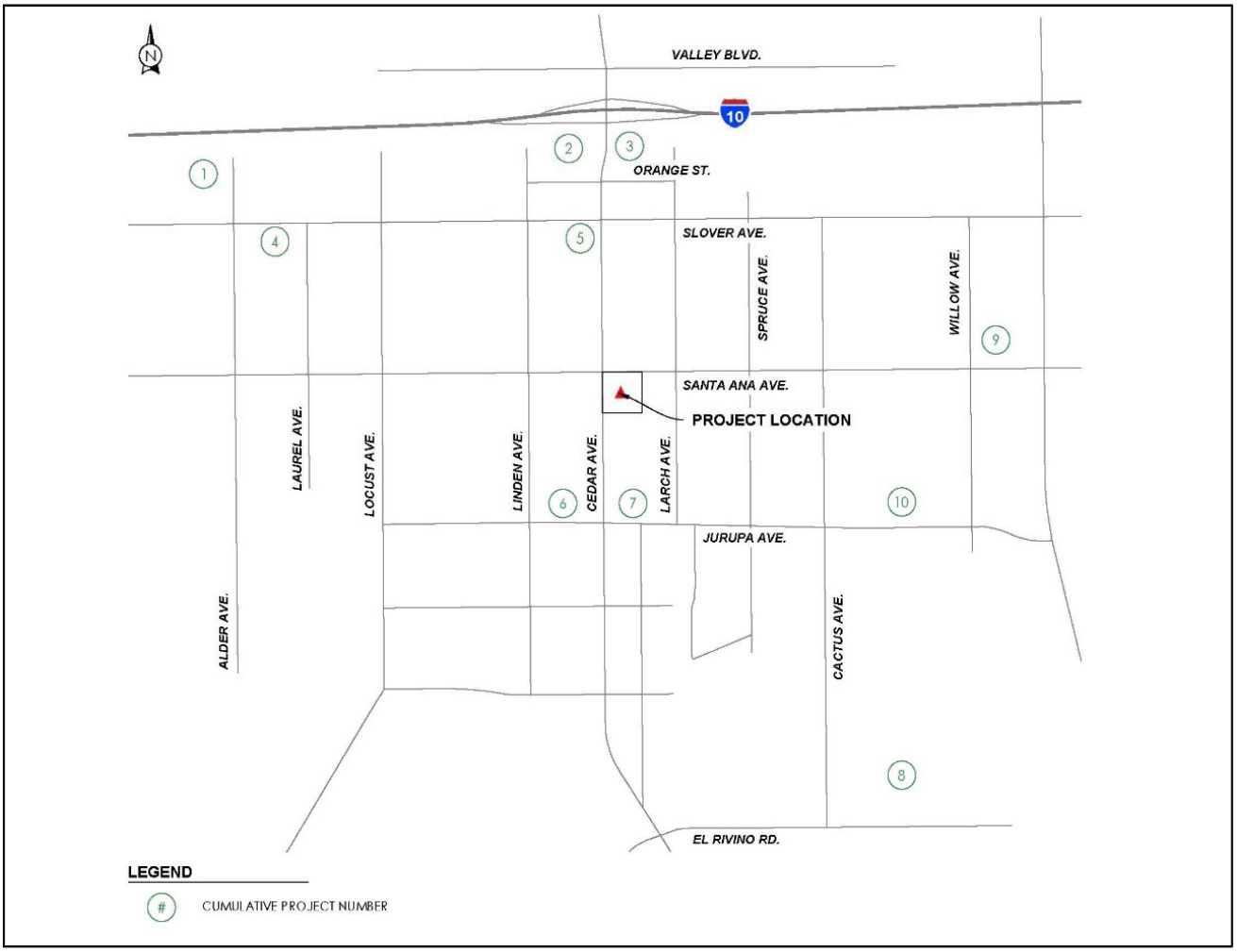

Figure 11: Cumulative Project Locations

To determine the Opening Year 2021 operating conditions, the cumulative project trips were added to the existing traffic volumes at the intersections within the project study area. A full breakdown of the cumulative trip project generation and distribution is included in the **Appendix E**.

Table 10 and 11 summarizes the Opening Year 2021 conditions peak hour intersection analysis using HCM methodology, without and with the proposed project. Detailed HCM calculation sheets are contained in **Appendix C**. **Figure 12 and 13** shows the Opening Year (2021) AM and PM peak hour intersection volumes for the without project conditions, respectively. **Figure 14 and 15** shows the Opening Year (2021) AM and PM peak hour intersection volumes with project conditions, respectively.

5.1 – No Project Analysis

The results of the Opening Year (2021) intersection level of service analysis at the study intersections are summarized in **Table 10**. Detailed HCM calculation worksheets are contained in **Appendix C**.

Table 10: Opening Year Intersection Level of Service

Intersection	Control	Without Project		Without Project	
		AM Peak Hour		PM Peak Hour	
		Delay (sec)	LOS	Delay (sec)	LOS
1. Cedar Ave. / Valley Blvd.	Signalized	17.0	B	17.2	B
2. Cedar Ave. / I-10 WB	Signalized	**96.7**	**F**	28.6	C
3. Cedar Ave. / I-10 EB	Signalized	51.3	D	49.6	D
4. Cedar Ave. / Orange St.	Signalized	**98.7**	**F**	46.3	D
5. Linden Ave. / Slover Ave.	AWSC	**101.5**	**F**	**46.2**	**E**
6. Cedar Ave. / Slover Ave.	Signalized	**239.5**	**F**	**129.7**	**F**
7. Larch Ave. / Slover Ave.	Signalized	6.1	A	8.0	A
8. Linden Ave. / Santa Ana Ave.	AWSC	14.3	B	14.8	B
9. Cedar Ave. / Santa Ana Ave.	Signalized	77.5	D	**94.4**	**F**
10. Larch Ave. / Santa Ana Ave.	AWSC	12.0	B	11.3	B
11. Driveway 1 /Cedar Ave.					
12. Driveway 2 / Santa Ana Ave.					
13. Driveway 3 / Santa Ana Ave.					
14. Jurupa Ave. / Linden Ave.	AWSC	13.2	B	11.9	B
15. Cedar Ave. / Jurupa Ave.	Signalized	39.8	D	41.2	D
16. Jurupa Ave. / Larch Ave.	TWSC	15.9	C	16.3	C
17. Cedar Avenue / El Rivino Road	Signalized	17.9	B	18.3	B

As shown in **Table 10**, the following intersections operate at a deficient level of service in the opening year scenario without the proposed project trips:

- Cedar Avenue / I-10 Westbound Ramps
- Cedar Avenue / Orange Street
- Linden Avenue / Slover Avenue
- Cedar Avenue / Slover Avenue
- Cedar Avenue / Santa Ana Avenue

5.2 – Plus Project Analysis

The results of the Opening Year (2021) intersection level of service analysis at the study intersections are summarized in **Table 11**. Detailed HCM calculation worksheets are contained in **Appendix C**.

Table 11: Opening Year Intersection Level of Service

Intersection	Control	With Project		With Project	
		AM Peak Hour		PM Peak Hour	
		Delay (sec)	LOS	Delay (sec)	LOS
1. Cedar Ave. / Valley Blvd.	Signalized	17.1	B	17.4	B
2. Cedar Ave. / I-10 WB	Signalized	**97.5**	**F**	29.2	C
3. Cedar Ave. / I-10 EB	Signalized	**56.7**	**E**	50.8	D
4. Cedar Ave. / Orange St.	Signalized	**105.4**	**F**	47.4	D
5. Linden Ave. / Slover Ave.	AWSC	**107.3**	**F**	**50.9**	**F**
6. Cedar Ave. / Slover Ave.	Signalized	**256.4**	**F**	**135.3**	**F**
7. Larch Ave. / Slover Ave.	TWSC	6.1	A	19.1	B
8. Linden Ave. / Santa Ana Ave.	AWSC	15.9	C	16.3	C
9. Cedar Ave. / Santa Ana Ave.	Signalized	**102.9**	**F**	**118.1**	**F**
10. Larch Ave. / Santa Ana Ave.	AWSC	13.2	B	12.0	B
11. Driveway 1 / Cedar Ave.		17.3	B	14.3	B

(Table continued on next page)

Table 11 Continued: Opening Year Intersection Level of Service

Intersection	Control	With Project AM Peak Hour		With Project PM Peak Hour	
		Delay (sec)	LOS	Delay (sec)	LOS
12. Driveway 2 / Santa Ana Ave.		11.9	B	14.0	B
13. Driveway 3 / Santa Ana Ave.		11.4	B	13.4	B
14. Jurupa Ave. / Linden Ave.	AWSC	14.1	B	12.4	B
15. Cedar Ave. / Jurupa Ave.	Signalized	40.5	D	42.1	D
16. Jurupa Ave. / Larch Ave.	TWSC	19.3	C	18.7	C
17. Cedar Avenue / El Rivino Road	Signalized	18.1	B	18.6	B

As shown in **Table 11**, the following intersections operate at a deficient level of service in the opening year scenario with the proposed project trips:

- Cedar Avenue / I-10 Westbound Ramps
- Cedar Avenue / I-10 Eastbound Ramps
- Cedar Avenue / Orange Street
- Linden Avenue / Slover Avenue
- Cedar Avenue / Slover Avenue
- Cedar Avenue / Santa Ana Avenue

Cedar Avenue / I-10 Westbound Ramps and Cedar Avenue / I-10 Eastbound Ramps are included in the SBCTA Rialto Sphere Nexus Study DIF program and therefore the project's fair share contribution will be to pay the DIF program fee for these intersection.

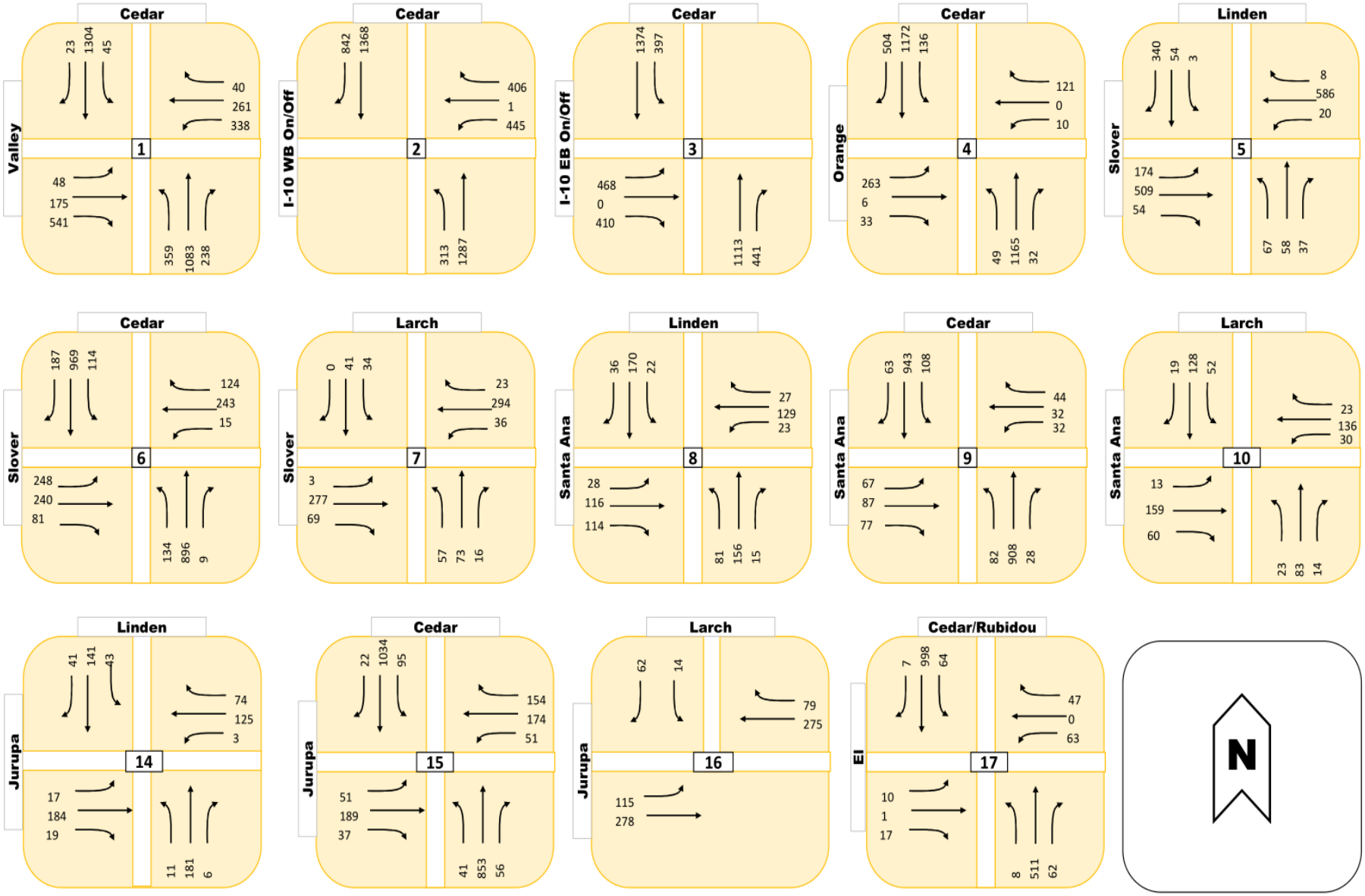

Figure 12: Trip Assignment for Opening Year AM Peak Hour (2021) without Project

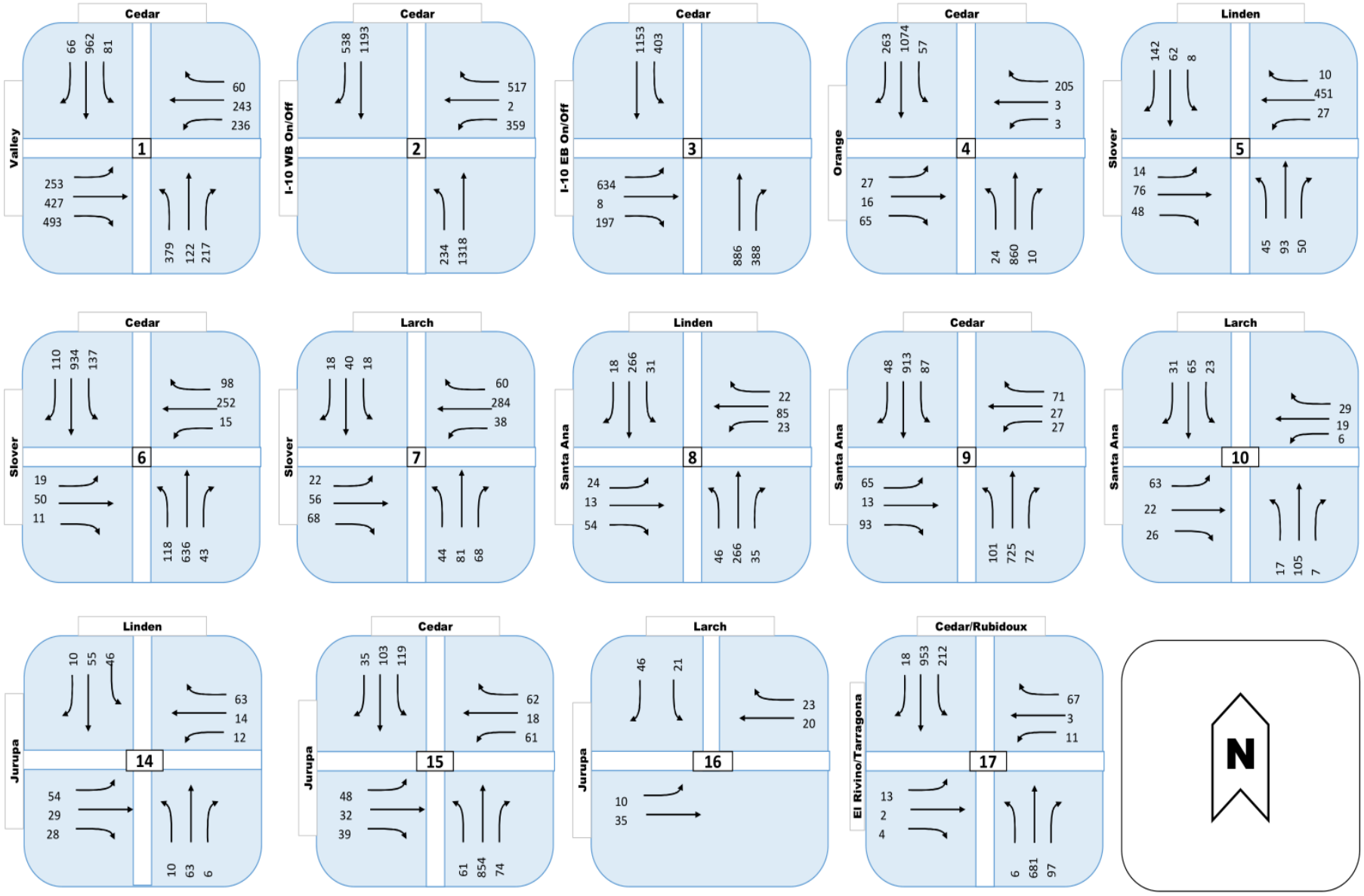

Figure 13: Trip Assignment for Opening Year PM Peak Hour (2021) without Project

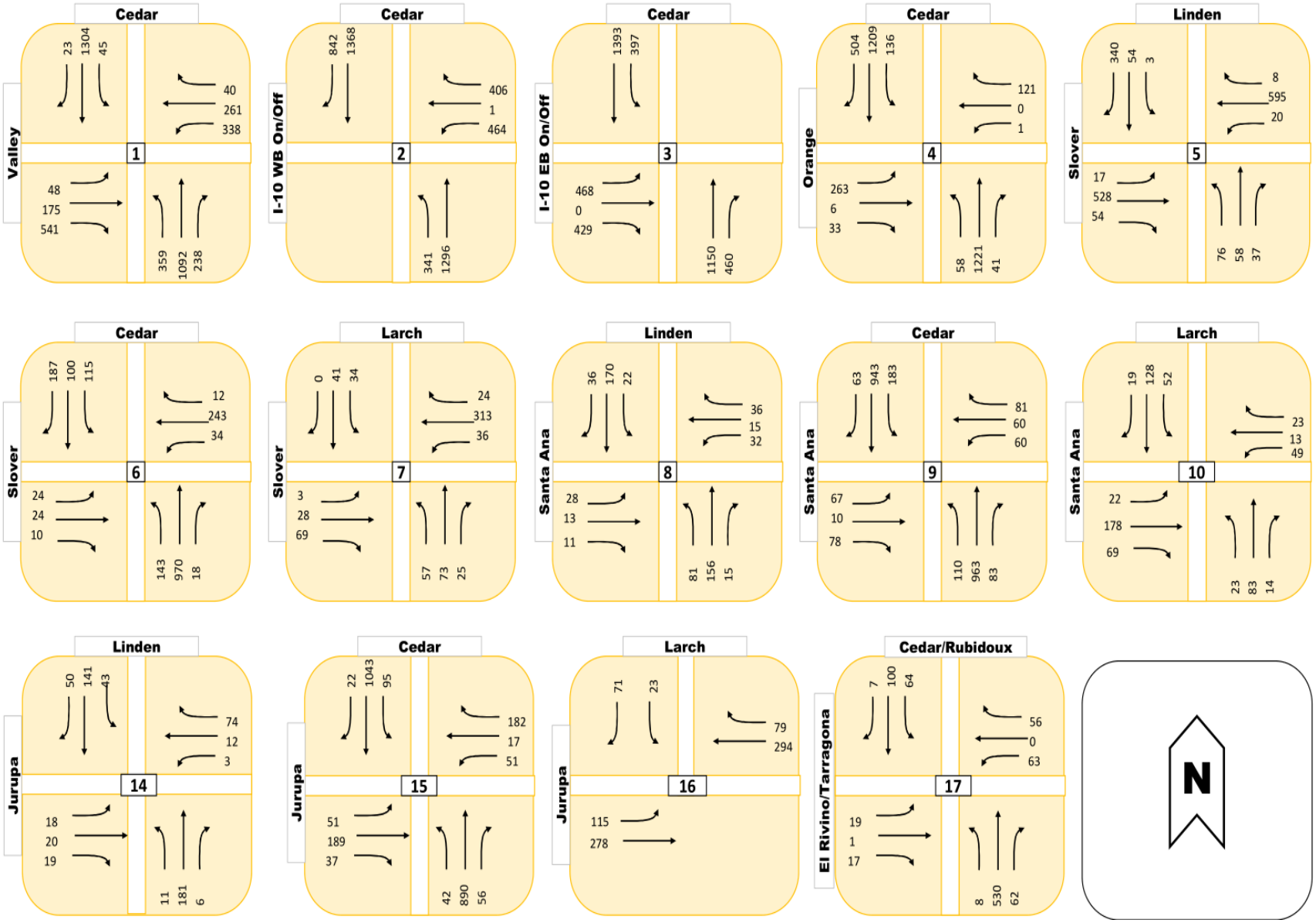

Figure 14: Trip Assignment for Opening Year AM Peak Hour (2021) with Project

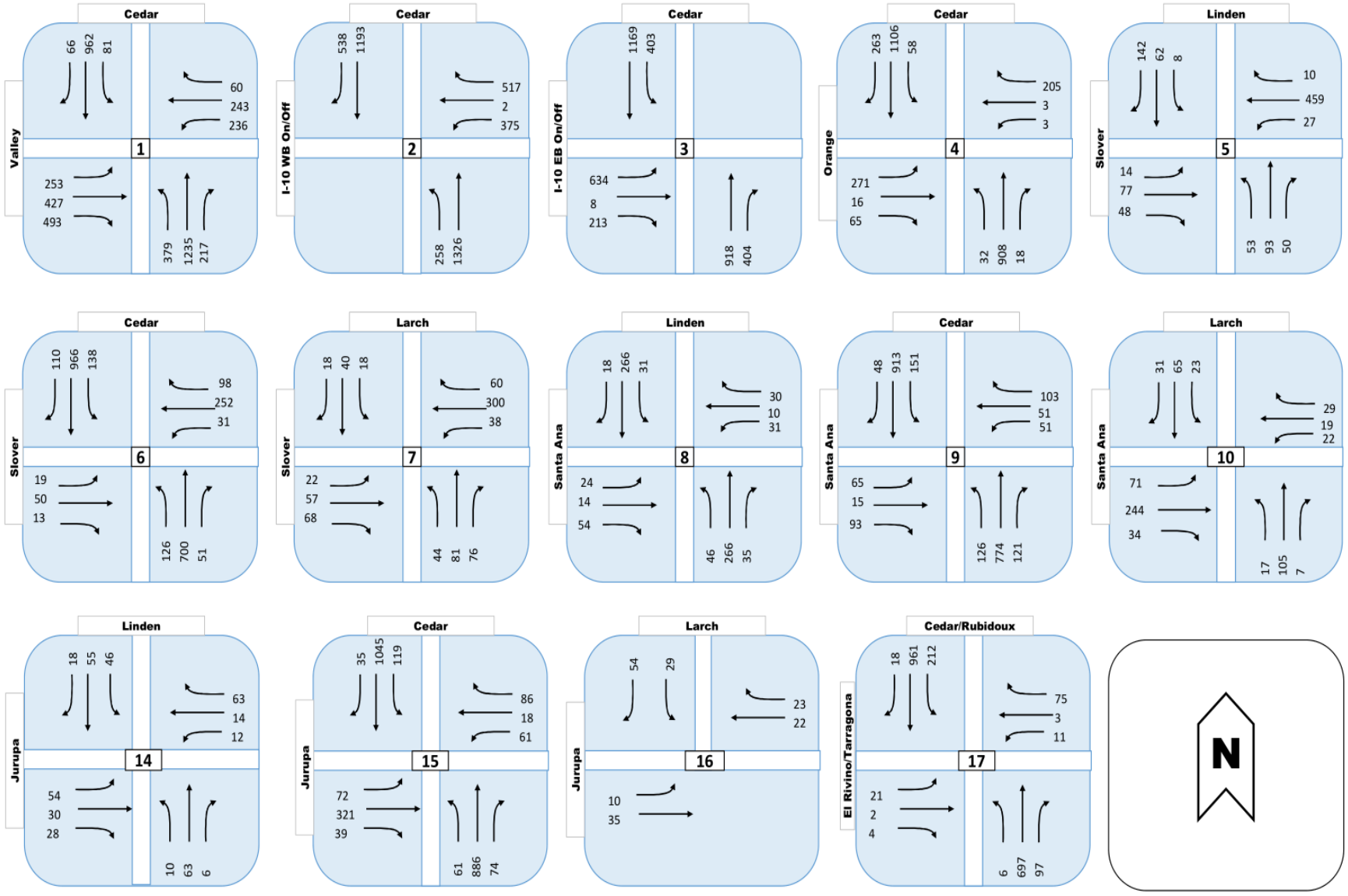

Figure 15: Trip Assignment for Opening Year PM Peak Hour (2021) with Project

6.0 – Cumulative Horizon Year Analysis

Analysis of Horizon year (2040) conditions is based on the build-out of the San Bernardino County General Plan land uses and Circulation Element roadway network. Horizon year (2040) forecast daily traffic volumes used in this analysis are based on an annual growth rate of 1.5% in lieu of the San Bernardino Transportation Analysis Traffic Model (SBTAM). The SBTAM was found to underestimate the level of development in the project area. All build-out roadway improvements in the project study area such as the I-10 / Cedar Avenue interchange improvements are included in the analysis of Horizon year (2040) conditions for mitigation measures.

Calculation of the horizon year background traffic is included in **Appendix E**.

Figure 16 and 17 shows the Horizon year (2040) AM and PM peak hour intersection volumes for the without project conditions, respectively. **Figure 18 and 19** shows the Horizon year (2040) AM and PM peak hour intersection volumes with project conditions, respectively.

Currently projected for the year 2025 is an improvement by the San Bernardino County Transportation Authority and Caltrans for the Interstate 10 / Cedar Avenue interchange. This improvement measure includes the following:

- Widening Cedar Avenue between Bloomington Avenue and Orange Street
- Widening the Cedar Avenue Overcrossing
- Realigning and/or widening the interchange entrance and exit ramps

The planned improvements are reflected in all horizon year analyses. **Appendix K** includes Future Caltrans Plans for Cedar Ave I-10 Interchange Improvements.

6.1 – No Project Analysis

The results of the Horizon year (2040) intersection level of service analysis at the study intersections are summarized in **Table 12 and 13**. Detailed HCM calculation worksheets are contained in **Appendix C**.

Table 12: Horizon year Intersection Level of Service without Project

Intersection	Control	Without Project		Without Project	
		AM Peak Hour		PM Peak Hour	
		Delay (sec)	LOS	Delay (sec)	LOS
1. Cedar Ave. / Valley Blvd.	Signalized	33.1	C	27.0	C
2. Cedar Ave. / I-10 WB	Signalized	**148.8**	**F**	42.3	D
3. Cedar Ave. / I-10 EB	Signalized	**79.5**	**E**	38.1	D
4. Cedar Ave. / Orange St.	Signalized	**69.6**	**E**	**83.3**	**F**
5. Linden Ave. / Slover Ave.	AWSC	**118.7**	**F**	**164.3**	**F**
6. Cedar Ave. / Slover Ave.	Signalized	**310.2**	**F**	**235.2**	**F**
7. Larch Ave. / Slover Ave.	Signalized	10.5	B	22.9	C
8. Linden Ave. / Santa Ana Ave.	AWSC	20.2	C	**68.2**	**F**
9. Cedar Ave. / Santa Ana Ave.	Signalized	**101.0**	**F**	**264.1**	**F**
10. Larch Ave. / Santa Ana Ave.	AWSC	12.5	B	21.4	C
11. Driveway 1 / Cedar Ave.					
12. Driveway 2 / Santa Ana Ave.					
13. Driveway 3 / Santa Ana Ave.					
14. Jurupa Ave. / Linden Ave.	AWSC	14.0	B	23.5	C
15. Cedar Ave. / Jurupa Ave.	Signalized	38.3	D	**65.3**	**E**
16. Jurupa Ave. / Larch Ave.	TWSC	14.0	B	53.5	D
17. Cedar Avenue / El Rivino Road	Signalized	26.8	C	57.0	D

As shown in **Table 12**, the following intersections operate at a deficient level of service in the horizon year scenario without the proposed project trips:

- Cedar Avenue / I-10 Westbound Ramps
- Cedar Avenue / I-10 Eastbound Ramps
- Cedar Avenue / Orange Street
- Linden Avenue / Slover Avenue
- Cedar Avenue / Slover Avenue
- Linden Avenue / Santa Ana Avenue
- Cedar Avenue / Santa Ana Avenue
- Cedar Avenue / Jurupa Avenue

6.2 – Plus Project Analysis

Table 13: Horizon year Intersection Level of Service with Project

Intersection	Control	With Project		With Project	
		AM Peak Hour		PM Peak Hour	
		Delay (sec)	LOS	Delay (sec)	LOS
1. Cedar Ave. / Valley Blvd.	Signalized	33.1	C	27.1	C
2. Cedar Ave. / I-10 WB	Signalized	**147.7**	**F**	41.2	D
3. Cedar Ave. / I-10 EB	Signalized	**86.2**	**F**	39.3	D
4. Cedar Ave. / Orange St.	Signalized	**83.6**	**F**	**83.7**	**F**
5. Linden Ave. / Slover Ave.	AWSC	**124.7**	**F**	**172.9**	**F**
6. Cedar Ave. / Slover Ave.	Signalized	**323.6**	**F**	**244.4**	**F**
7. Larch Ave. / Slover Ave.	TWSC	6.3	A	25.0	C
8. Linden Ave. / Santa Ana Ave.	AWSC	23.6	C	**80.1**	**F**
9. Cedar Ave. / Santa Ana Ave.	Signalized	**135.9**	**F**	**358.7**	**F**
10. Larch Ave. / Santa Ana Ave.	AWSC	13.5	B	25.8	D
11. Driveway 1 / Cedar Ave.		17.5	C	19.6	C

(Table continued on next page)

Table 13 Continued: Horizon year Intersection Level of Service with Project

Intersection	Control	With Project		With Project	
		AM Peak Hour		PM Peak Hour	
		Delay (sec)	LOS	Delay (sec)	LOS
12. Driveway 2 / Santa Ana Ave.		12.9	B	18.2	C
13. Driveway 3 / Santa Ana Ave.		12.1	B	17.3	C
14. Jurupa Ave. / Linden Ave.	AWSC	14.5	C	26.3	D
15. Cedar Ave. / Jurupa Ave.	Signalized	39.3	D	**73.8**	**E**
16. Jurupa Ave. / Larch Ave.	TWSC	15.8	C	**81.8**	**F**
17. Cedar Avenue / El Rivino Road	Signalized	27.5	C	**58.8**	**E**

As shown in **Table 13**, the following intersections operate at a deficient level of service in the horizon year scenario with the proposed project trips:

- Cedar Avenue / I-10 Westbound Ramps
- Cedar Avenue / I-10 Eastbound Ramps
- Cedar Avenue / Orange Street
- Linden Avenue / Slover Avenue
- Cedar Avenue / Slover Avenue
- Linden Avenue / Santa Ana Avenue
- Cedar Avenue / Santa Ana Avenue
- Cedar Avenue / Jurupa Avenue
- Larch Avenue / Jurupa Avenue
- Cedar Avenue / El Rivino Road

7.0 – Site Access Analysis

The project is proposed to have access on Santa Ana Avenue via two (2) right-in-left-out driveways. The site will also have an additional one (1) right-in-right-out driveways along Cedar Avenue.

The project plans to construct the southern portion of Santa Ana Avenue to its ultimate half-width section of 32 feet (curb to median) along the project's frontage.

Sight distance at each project access point should not be a problem but should be reviewed with respect to standard County of San Bernardino sight distance standards at the time of preparation of final grading, landscape and street improvement plans.

8.0 – Freeway Analysis

8.1 – Queueing Analysis

A queueing analysis was performed to determine whether the addition of Project traffic would lead to a spill-over onto the freeway. The analysis was performed for the existing conditions with and without the project, and the horizon year conditions with and without the project for the AM and PM peak hour. The results are shown in **Table 14 and 15.**

Detailed queueing worksheets can be found in **Appendix C**.

Table 14: Queueing Summary for Opening Year with and without Project

	95th Percentile Queue Length (ft) Without Project		**95th Percentile Queue Length (ft) With Project**		**Ramp Length (ft)**
	AM	PM	AM	PM	
I-10 WB Off Ramp	298	376	308	390	1,705
I-10 EB Off Ramp	508	614	535	625	1,625

Table 15: Queueing Summary for Horizon year with and without Project

	95th Percentile Queue Length (ft) Without Project		**95th Percentile Queue Length (ft) With Project**		**95th Percentile Queue Length (ft) With Mitigation**		**Ramp Length (ft)**
	AM	PM	AM	PM	AM	PM	
I-10 WB Off Ramp	280	423	293	423	293	423	1,705
I-10 EB Off Ramp	490	623	490	623	490	623	1,625

The 95th percentile for queue length is used to approximate a worst case scenario queue length. As seen in **Table 14 and 15**, none of the queue lengths exceed the length of the ramp with and without the project for the Opening Year (2021) and Horizon year (2040) scenarios. The results of the queue analysis indicate there is no requirement to adjust the ramp capacity for the purpose of queueing alleviation.

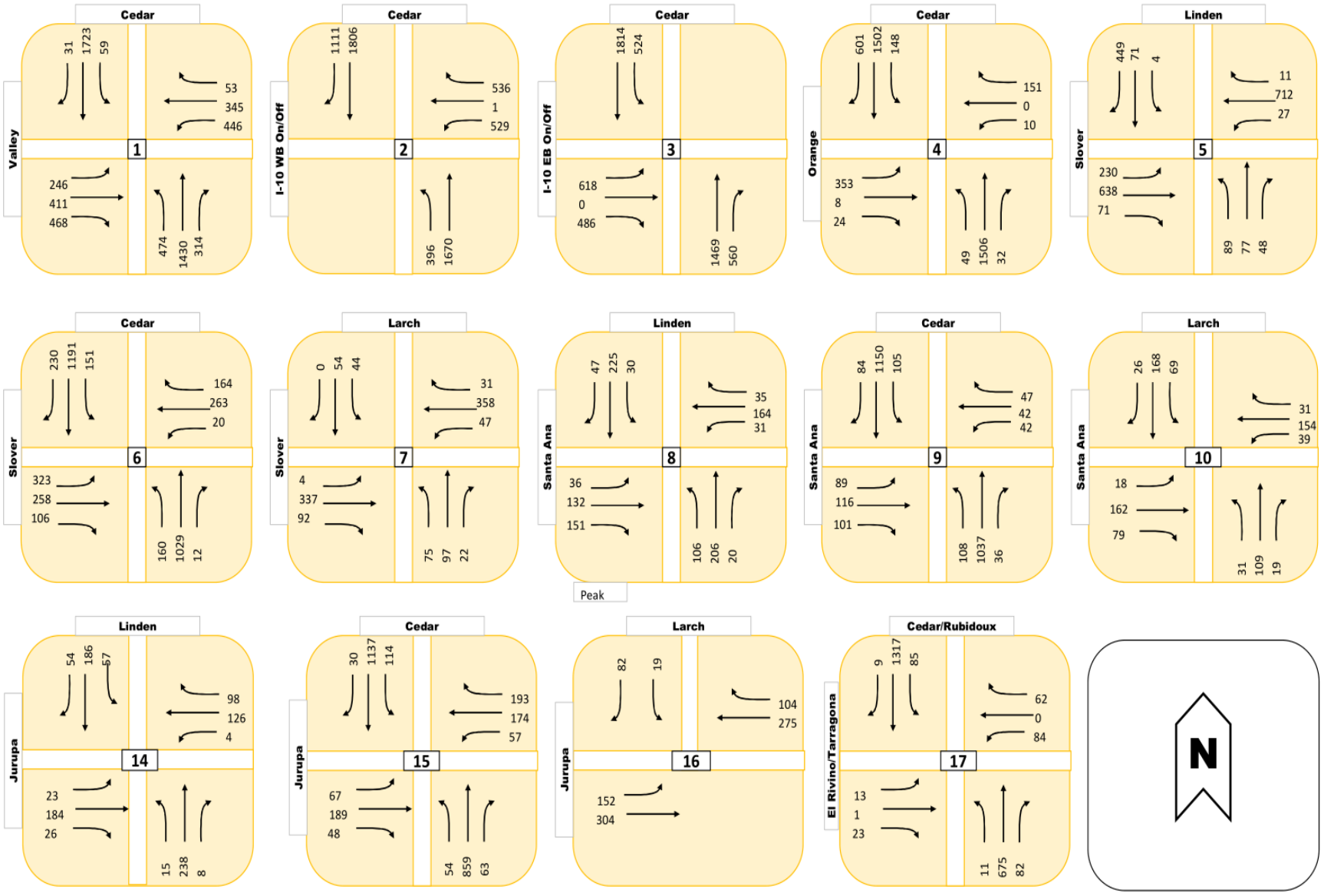

Figure 16: Trip Assignment for Horizon Year AM Peak Hour (2040) without Project

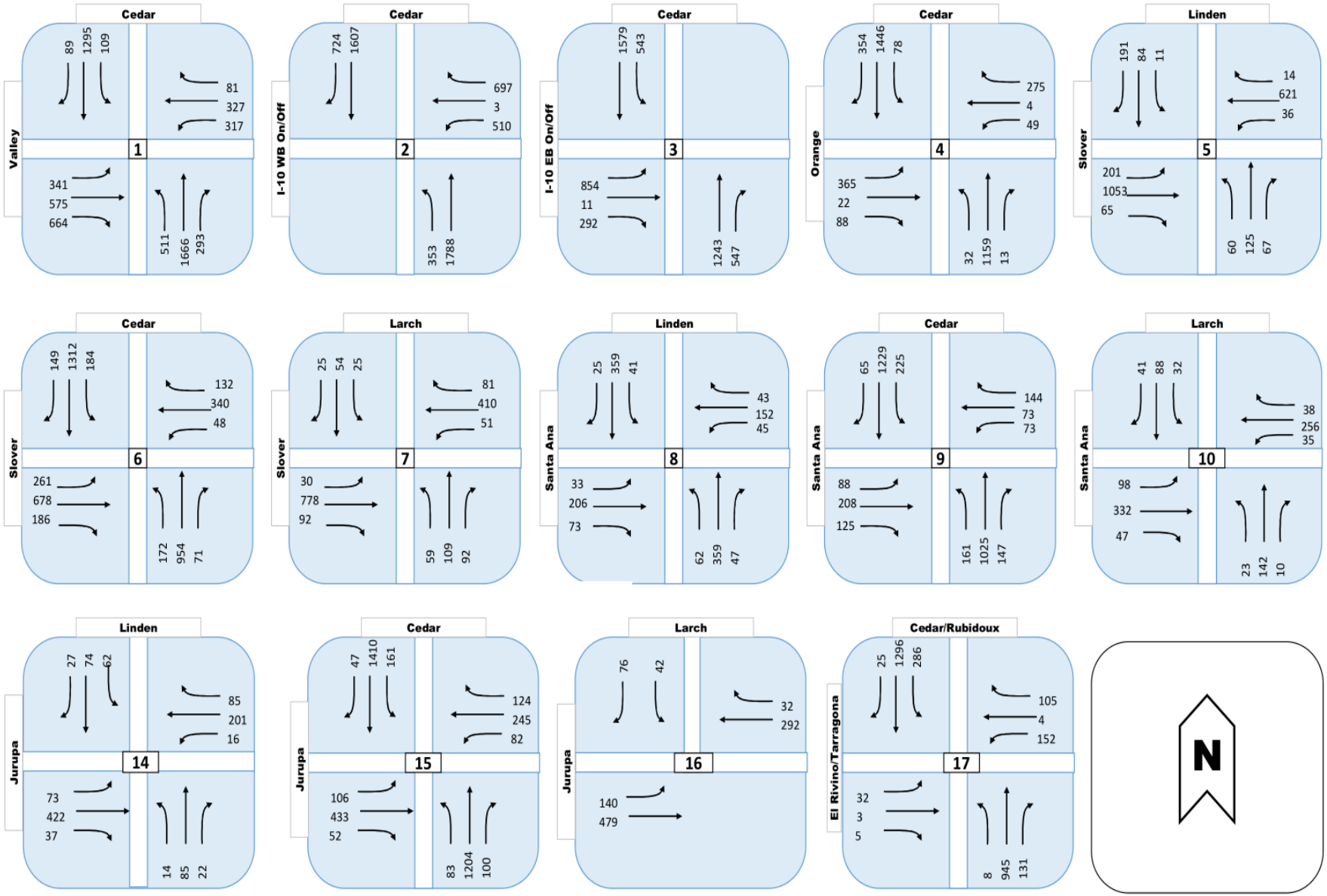

Figure 17: Trip Assignment for Horizon Year PM Peak Hour (2040) without Project

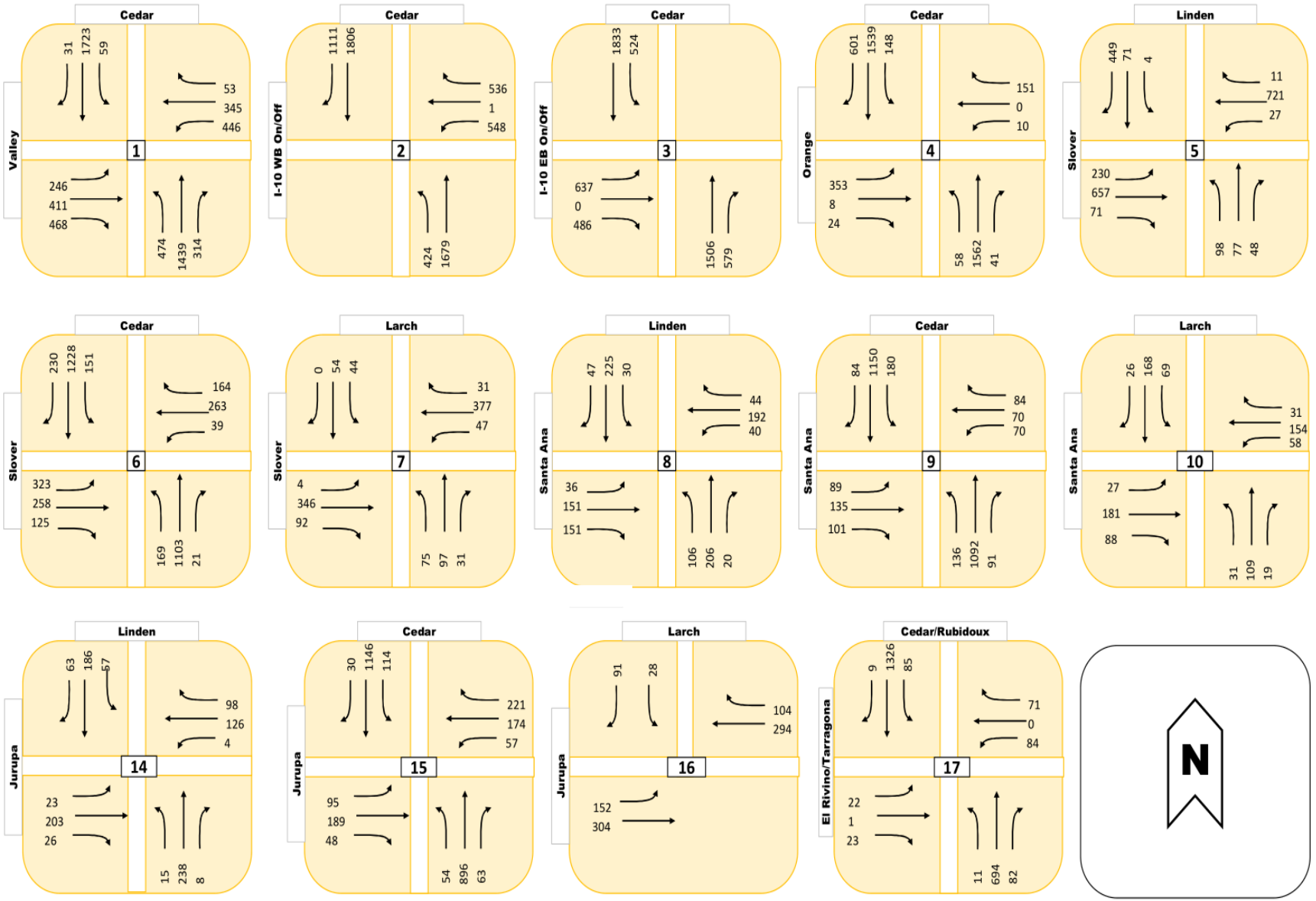

Figure 18: Trip Assignment for Horizon Year AM Peak Hour (2040) with Project

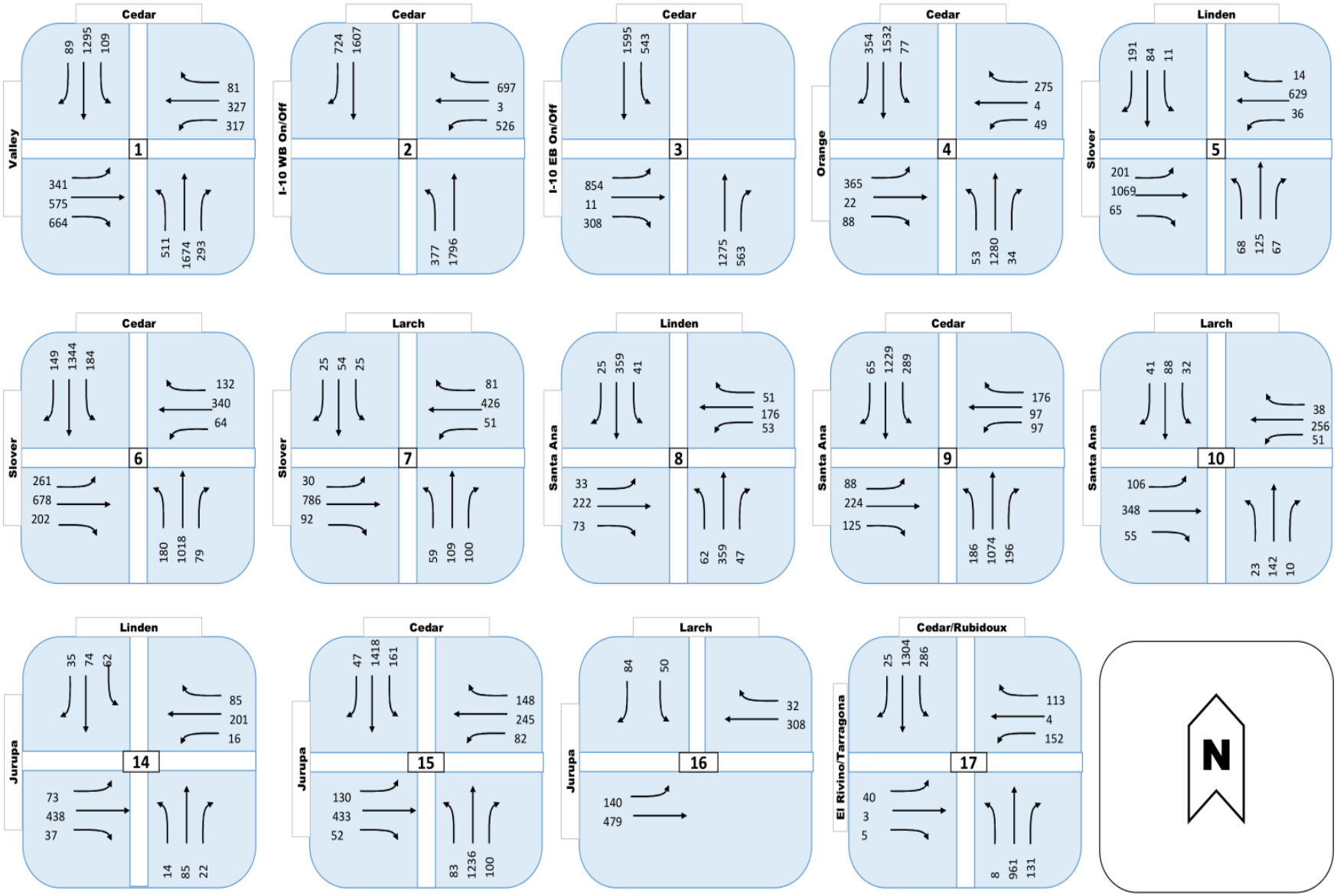

Figure 19: Trip Assignment for Horizon Year PM Peak Hour (2040) with Project

8.2 – Freeway Segment, Merging/Diverging, and Weaving Analysis

As mentioned in the SBCTA Congestion Management Program, an acceptable level of service (LOS) is LOS E or above for the I-10 Interchanges and freeway segments, otherwise the segment may require deficiency planning.

For freeway segments, existing freeway segment bidirectional volumes from the 2018 AADT Volume Data published by Caltrans was used for the analysis. In order to project the volumes to 2020, a 3.67 percent per annum growth rate was applied to the volume data, based off of the historical Caltrans data over the last 5 years. For ramp influence areas, vehicles entering and exiting a ramp are based on peak hour turning movement counts from the 2016 and 2017 AADT Ramp Data published by Caltrans.

The percentage of trucks at study area freeway segments is reflective of the historic truck volume percentages from Caltrans sources. For the project study area, trucks consist of 10.21 percent of the total peak hour volume. The resulting trucks were converted to PCEs using a 2.0 PCE as mentioned previously. **Table 16-A, 16-B, and 16-C** show existing peak hour PCE volumes at related freeway segments and freeway ramp merge/diverge areas, respectively. For weaving analysis **Table 16-D** shows existing peak hour PCE volumes for the neighboring interchange of Riverside Avenue and Cedar Avenue.

Horizon year analysis is based off of the 2040 SBTAM model for the traffic volumes relating to the Cedar Avenue / I-10 Interchange and the Riverside Avenue / I-10 Interchange.

Detailed Highway Capacity Software worksheets can be found in **Appendix I.**

Table 16-A: Freeway Segment Level of Service (LOS) Analysis

Segment Location		AM Peak Hour			PM Peak Hour		
		Demand Volume (vph)	Density (pc/mi/ln)	LOS	Demand Volume (vph)	Density (pc/mi/ln)	LOS
Existing	West of EB Off Ramp	5,159	23.8	C	**9,807**	-	**F**
	East of EB On Ramp	4,752	21.9	C	**9,400**	-	**F**
	East of WB Off Ramp	**10,516**	-	**F**	6,222	28.7	D
	West of WB On Ramp	**10,780**	-	**F**	6,485	29.9	D
Opening	West of EB Off Ramp	5,263	24.3	C	**10,003**	-	**F**
	East of EB On Ramp	4,847	22.4	C	**9,588**	-	**F**
	East of WB Off Ramp	**10,727**	-	**F**	6,346	29.3	D
	West of WB On Ramp	**10,995**	-	**F**	6,615	30.6	D

(Continued on Next Page)

Table 16-A continued: Freeway Segment Level of Service (LOS) Analysis

Segment Location		AM Peak Hour			PM Peak Hour		
		Demand Volume (vph)	Density (pc/mi/ln)	LOS	Demand Volume (vph)	Density (pc/mi/ln)	LOS
Opening + Project	West of EB Off Ramp	5,263	24.3	C	**10,003**	-	**F**
	East of EB On Ramp	4,847	22.4	C	**9,587**	-	**F**
	East of WB Off Ramp	**10,727**	-	**F**	6,346	29.3	D
	West of WB On Ramp	**11,008**	-	**F**	6,624	30.6	D
Horizon Year	West of EB Off Ramp	**13,410**	-	**F**	**29,352**	-	**F**
	East of EB On Ramp	**12,859**	-	**F**	**28,445**	-	**F**
	East of WB Off Ramp	**19,903**	-	**F**	**22,002**	-	**F**
	West of WB On Ramp	**20,073**	-	**F**	**22,434**	-	**F**
Horizon Year + Project	West of EB Off Ramp	**13,410**	-	**F**	**29,352**	-	**F**
	East of EB On Ramp	**12,893**	-	**F**	**27,978**	-	**F**
	East of WB Off Ramp	**19,903**	-	**F**	**22,002**	-	**F**
	West of WB On Ramp	**20,346**	-	**F**	**21,924**	-	**F**

As shown in **Table 16-A** the non-peak hour directional flow of traffic is eastbound for the PM peak hour and westbound for the AM peak hour. For these non-peak hour directions the freeway segment is found to operate at a deficient LOS for the existing, opening, and opening plus project years. For the horizon years, all analyzed freeway segments operate at a deficient level of service.

Table 16-B: Freeway Merging Level of Service (LOS) Analysis

Segment Location		AM Peak Hour			PM Peak Hour		
		Demand Volume (vph)	Avg. Density (pc/mi/ln)	LOS	Demand Volume (vph)	Avg. Density (pc/mi/ln)	LOS
Existing	EB On Ramp	3,713 1,040	19.8	C	**8,360** **1,040**	-	**F**
	WB On Ramp	**9,324** **1,455**	-	**F**	5,030 1,455	28.0	D
Opening	EB On Ramp	3,787 1,060	20.2	C	**8,527** **1,060**	-	**F**
	WB On Ramp	**9,511** **1,484**	-	**F**	5,130 1,484	28.6	D
Opening + Project	EB On Ramp	3,766 1,079	20.2	C	**8,511** **1,076**	-	**F**
	WB On Ramp	**9,491** **1,512**	-	**F**	**5,114** **1,508**	**28.7**	**D**
Horizon Year	EB On Ramp	**11,603** **1,290**	-	**F**	**26,390** **1,590**	-	**F**
	WB On Ramp	**18,688** **1,646**	-	**F**	**19,592** **2,322**	-	**F**
Horizon Year + Project	EB On Ramp	**11,575** **1,318**	-	**F**	**26,363** **1,615**	-	**F**
	WB On Ramp	**18,659** **1,687**	-	**F**	**19,565** **2,359**	-	**F**

Table 16-C: Freeway Diverging Level of Service (LOS) Analysis

Segment Location		AM Peak Hour			PM Peak Hour		
		Demand Volume (vph)	Avg. Density (pc/mi/ln)	LOS	Demand Volume (vph)	Avg. Density (pc/mi/ln)	LOS
Existing	EB Off Ramp	3,713 1,447	16.4	C	**8,360** **1,447**	**36.2**	**E**
	WB Off Ramp	**9,324** **1,192**	-	**F**	5,030 1,192	21.5	C
Opening	EB Off Ramp	3,787 1,476	16.7	C	**8,527** **1,476**	**37.0**	**E**
	WB Off Ramp	**9,511** **1,216**	-	**F**	5,130 1,216	21.9	C
Opening + Project	EB Off Ramp	3,766 1,495	16.7	C	**8,511** **1,492**	**36.9**	**E**
	WB Off Ramp	**9,491** **1,235**	-	**F**	**5,114** **1,232**	**21.9**	**C**
Horizon Year	EB Off Ramp	**11,603** **1,807**	-	**F**	**26,390** **2,962**	-	**F**
	WB Off Ramp	**18,688** **1,216**	-	**F**	**19,592** **2,410**	-	**F**
Horizon Year + Project	EB Off Ramp	**11,575** **1,835**	-	**F**	**26,363** **2,989**	-	**F**
	WB Off Ramp	**18,659** **1,244**	-	**F**	**19,565** **2,437**	-	**F**

As shown in **Table 16-B and 16-C**, the peak hour directional flow of traffic is eastbound for the PM peak hour and westbound for the AM peak hour. For these peak directions the freeway merging and diverging LOS is found to operate at a deficient LOS for the existing and opening year. For the opening year plus the Project, only the Eastbound On/Off ramps for the AM peak hour operates at a sufficient LOS and for horizon years, all analyzed freeway segments operate at a deficient level of service.

Table 16-D: Freeway Weaving Level of Service (LOS) Analysis

Segment Location			AM Peak Hour			PM Peak Hour		
			Demand Volume (vph)	Average Density (pc/mi/ln)	LOS	Demand Volume (vph)	Average Density (pc/mi/ln)	LOS
Existing	E/B	FF*	3,713	-	F	N/A	-	F
		RF*	1,040			N/A		
		FR*	1,445			N/A		
	W/B	FF	N/A	-	F	7,344	-	F
		RF	N/A			1,143		
		FR	N/A			1,192		
Opening	E/B	FF	3,787	-	F	N/A	-	F
		RF	1,060			N/A		
		FR	1,473			N/A		
	W/B	FF	N/A	-	F	7,491	-	F
		RF	N/A			1,166		
		FR	N/A			1,216		
Opening + Project	E/B	FF	3,766	-	F	N/A	-	F
		RF	1,079			N/A		
		FR	1,473			N/A		
	W/B	FF	N/A	-	F	7,491	-	F
		RF	N/A			1,166		
		FR	N/A			1,232		
Horizon	E/B	FF	N/A	-	F	N/A	-	F
		RF	N/A			N/A		
		FR	N/A			N/A		
	W/B	FF	N/A	-	F	N/A	-	F
		RF	N/A			N/A		
		FR	N/A			N/A		
Horizon + Project	E/B	FF	N/A	-	F	N/A	-	F
		RF	N/A			N/A		
		FR	N/A			N/A		
	W/B	FF	N/A	-	F	N/A	-	F
		RF	N/A			N/A		
		FR	N/A			N/A		

N/A: No Output Available, however can be assumed to be LOS F due to similar demand volumes
FF: Freeway to freeway
RF: Ramp to Freeway
FR: Freeway to Ramp

As shown in **Table 16-D**, the analyzed weaving segment between the I-10 interchange with Cedar Avenue and Riverside Avenue operates at a deficient level of service for the existing, opening, opening plus Project, and horizon year with and without the Project.

For the segments failing to operate at a sufficient LOS, mitigation measures will be required and are discussed in the following section of the report.

8.0 – Improvements and Recommendations

8.1 – Proposed Improvements at Impacted Intersections

Any signalized study intersection in the Valley or Mountain regions that is operating at an accept able LOS D or better without project traffic in which the addition of project traffic causes the intersection to degrade to an LOS E or F shall identify improvements to improve operations to LOS D or better.

Any signalized study intersection in the Valley or Mountain regions that is operating at LOS E or F without project traffic where the project increases delay by 5.0 or more seconds shall identify improvements to offset the increase in delay.

For unsignalized intersections, an operational improvement would be required if the study determines that either section a) or both sections b) and c) occur:

a) The addition of project related traffic causes the intersection to degrade from an LOS D or better to a LOS E or worse in the Valley and Mountain regions

OR

b) The project adds 5.0 seconds or more of delay to an intersection that is already projected to operate without project traffic at an LOS E or F in the Valley and Mountain regions

AND

c) One or both of the following conditions are met:

   a. The project adds ten (10) or more trips to any minor street approach

   b. The intersection meets the peak hour traffic signal warrant after the addition of project traffic.

If the conditions above are satisfied, improvements should be identified that achieve the following:

In the Valley and Mountain regions, improvements should be identified that would achieve LOS D or better for case a) above or to pre-project LOS and delay for case b) above.

The following intersections meet these requirements to be considered a significant impact and require mitigation and improvement measures:

- Cedar Avenue / I-10 Eastbound Ramps (PM Peak Hour Worst Case)
- Linden Avenue / Slover Avenue (AM Peak Hour Worst Case)
- Cedar Avenue / Slover Avenue (AM Peak Hour Worst Case)
- Cedar Avenue / Santa Ana Avenue (PM Peak Hour Worst Case)
- Cedar Avenue / Jurupa Avenue (PM Peak Hour Worst Case)
- Larch Avenue / Jurupa Avenue (PM Peak Hour Worst Case)
- Cedar Avenue / El Rivino Road (PM Peak Hour Worst Case)

Warrant Assessments for relevant intersections can be found in **Appendix H.**

Table 17: Mitigation Level of Service

Intersection	Before Mitigation (without Project)		After Mitigation (with Project)		Before Mitigation (without Project)		After Mitigation (with Project)	
	AM Peak Hour		AM Peak Hour		PM Peak Hour		PM Peak Hour	
	Delay (sec)	LOS	Delay (sec)	LOS	Delay (sec)	LOS	Delay (sec)	LOS
Horizon year (2040) Cedar Avenue / I-10 Eastbound Re-time the traffic signal timing splits	79.5	E	46.5	D	38.1	D	51.5	D
Horizon Year (2040) Linden Ave / Slover Ave Convert AWSC* to a signalized intersection	118.7	F	13.4	B	164.3	F	10.0	B
Horizon year (2040) Cedar Ave / Slover Ave Re-time the traffic signal timing splits	310.2	F	85.1	F	235.2	F	77.8	E
Horizon year (2040) Cedar Ave / Santa Ana Ave Restripe eastbound and westbound geometrics to include one (1) left- turn pocket and one (1) shared thru-right lane	101.0	F	33.4	C	264.1	F	85.7	F

* AWSC: All-way Stop Controlled

(Table continued on next page)

Table 17 continued: Mitigation Level of Service

Intersection	Before Mitigation (without Project)		After Mitigation (with Project)		Before Mitigation (without Project)		After Mitigation (with Project)	
	AM Peak Hour		AM Peak Hour		PM Peak Hour		PM Peak Hour	
	Delay (sec)	LOS	Delay (sec)	LOS	Delay (sec)	LOS	Delay (sec)	LOS
Horizon year (2040) Cedar Avenue / Jurupa Avenue Re-time the traffic signal timing splits	38.3	D	28.2	C	65.3	E	55.2	E
Horizon year (2040) Larch Avenue / Jurupa Avenue Restripe southbound geometries to include one (1) left-turn pocket and one (1) right-turn pocket	14.0	B	14.1	B	53.5	F	44.6	E
Horizon year (2040) Cedar Avenue / El Rivino No direct mitigation is needed for the intersection (Subject to the mitigation of the surrounding intersections)	26.8	C	27.5	C	57.0	E	58.8	E

8.1 – Proposed Improvements at Impacted Freeway Segments and Ramps

All of the freeway segments and ramps had at least one direction failing to meet the requirements set by the SBCTA Congestion Management plan for all scenario years for both the AM and PM peak hour. In order to improve the existing Level of Service (LOS) to acceptable standard, deficiency planning is required.

For the freeway segments, Minagar proposes to widen the segments to the east and west of the Cedar Avenue interchange by one (1) additional lane in each direction. However, due to the neighboring railroad tracks to the south and water channel to the north, land use right of way would need to be assessed for the viability of the mitigation measure.

A mitigation measure for the ramps in order to improve the merging and diverging segments involve increasing the number of lanes at the terminus of the on ramps and the beginning of the off ramps. Similarly, right of way assessments would be required to ensure the construction of ramps as feasible.

One possible mitigation measure for the weaving segment between Cedar Avenue and Riverside Avenue is to create an auxiliary lane for the eastbound and westbound directions. If the auxiliary lane were to be constructed, it would not be possible to construct lanes in addition to the auxiliary lane to the east of Cedar Avenue due to geometric limitations.

8.2 – Fair Share

The proposed Project's "fair share" of the recommended mitigation has been calculated based on the methodology outlined in the San Bernardino County's Traffic Impact Study Guidelines.

As both the opening year and horizon year scenarios require the same mitigation measure, the fair share percentage has been calculated for the horizon year scenario and can be found in **Table 12**.

$$\text{Project Fair Share (\%)} = \frac{\text{Project Trips at Intersection}}{\text{Project Trips + Horizon Year Development Trips}} \; x \; 100\%$$

Cedar Avenue / I-10 Westbound Ramps and Cedar Avenue / I-10 Eastbound Ramps are included in the SBCTA Rialto Sphere Nexus Study DIF program and therefore the project's fair share contribution will be to pay the DIF program fee for these intersections.

As the intersection of Linden Avenue and Slover Avenue is warranted a traffic signal for the Opening Year (2021) Scenario with and without the Project, it can be assumed that the Horizon year (2040) scenario is also warranted. Additionally, the developer would only be required to pay the fair share, as the intersection would already require the installation of a traffic signal to mitigate the effects of existing and future ambient growth at the intersection.

Table 12: Fair Share Percentage

Intersection / Scenario Year	AM Fair Share Percentage (%)	PM Fair Share Percentage (%)
Cedar Avenue / I-10 Eastbound Ramps	**Pay Development Impact Fee**	
Linden / Slover	1.5	**3.2**
Cedar / Slover	**11.3**	6.6
Cedar / Santa Ana	**25.0**	14.4
Cedar / Jurupa	**9.4**	4.1
Larch / Jurupa	**11.9**	6.7
Cedar / El Rivino	**5.6**	3.6

9.0 – Vehicle Miles Travelled (VMT) Analysis

California Senate Bill 743 (SB 743) directs the State Office of Planning and Research (OPR) to amend the California Environmental Quality Act (CEQA) Guidelines for evaluating transportation impacts to provide alternatives to Level of Service that "promote the reduction of greenhouse gas emissions, the development of multimodal transportation networks, and a diversity of land uses."

In December 2018, the California Natural Resources Agency certified and adopted the updated CEQA Guidelines package. The amended CEQA Guidelines, specifically Section 15064.3, recommend the use of Vehicle Miles Travelled (VMT) as the primary metric for the evaluation of transportation impacts associated with land use and transportation projects. In general terms, VMT quantifies the amount and distance of automobile travel attributable to a project or region. Agencies may currently opt-in to applying the updated CEQA guidelines for VMT analysis and implementation is required State-wide by July 1, 2020.

The updated CEQA Guidelines allow for lead agency discretion in establishing methodologies and thresholds provided there is substantial evidence to demonstrate that the established procedures promote the intended goals of the legislation. Where quantitative models or methods are unavailable, Section 15064.3 allows agencies to assess VMT qualitatively using factors such as availability of transit and proximity to other destinations.

The Technical Advisory on Evaluating Transportation Impacts in CEQA (State of California, December 2018) ["Technical Advisory"] provides technical considerations regarding methodologies and thresholds with a focus on office, residential, and retail developments as these projects tend to have the greatest influence on VMT. At publishing of this report, many jurisdictions are currently in the process of developing updated procedures for VMT analysis, however, few have fully implemented the new metric

9.1 – Project VMT per person/employee

As the project is classified as an inter-regional serving "truck stop," which is not a final destination, as are other regional retail projects, there is not a pre-defined standard by OPR for calculating VMT for this Project. Additionally, pursuant to CEQA requirements of accounting for the full impact of VMT outcomes without truncation or discounting, it would not be feasible to analyze the VMT of a truck stop, due to the high expected volume of inter-state trucks. Therefore, VMT analysis is irrelevant to this Traffic Impact Study.

San Bernardino County and other cities, which have approved VMT analysis (e.g. City of San Francisco, City of San Jose, City of Pasadena, City of San Diego) also do not have standards set for the calculation of VMT for truck stops and inter-city commuters and are therefore irrelevant to this study.

10.0 – Conclusions

This study analyzes the forecast traffic impact of the proposed "Bloomington Commercial Center" project, located on a currently vacant 8.9-acre site on the southeast corner of Cedar Avenue and Santa Ana Avenue in the unincorporated community of Bloomington, San Bernardino County (County). The revised proposed project will consist of the following facilities:

- Gas Station with two (2) gas fueling canopies (one for standard gas and one for diesel trucks, truck scale, and truck stopping area) with a 9,900 square foot convenience store
- 3,000 SF fast food restaurant with a drive-thru
- 2,800 SF fast food restaurant with a drive-thru

**The revised plan eliminated the three (3) previously planned facilities at the "Bloomington Commercial Center" Project, one (1) 4,000 SF car wash, one (1) 4,000 SF truck wash and one (1) 5,000 SF restaurant.*

The study identified ten (10) intersections performing below the County's acceptable Level of Service (LOS D or better) for the Horizon Year (2040) with the Project scenario. Those ten (10) intersections include:

- Cedar Avenue / I-10 Westbound Ramps
- Cedar Avenue / I-10 Eastbound Ramps
- Cedar Avenue / Orange Street
- Linden Avenue / Slover Avenue
- Cedar Avenue / Slover Avenue
- Linden Avenue / Santa Ana Avenue
- Cedar Avenue / Santa Ana Avenue
- Cedar Avenue / Jurupa Avenue
- Larch Avenue / Jurupa Avenue
- Cedar Avenue / El Rivino Road

Of the ten (10) intersections, seven (7) intersections met the County's thresholds of significance to require mitigation and improvement recommendations. Mitigation / Improvement measures were incorporated into each of these intersections to restore their performance to LOS D or better, or within five (5) seconds of pre-project delay or better if the intersection was already operating below LOS D prior to project impacts.

- Cedar Avenue / I-10 Eastbound Ramps (PM Peak Hour Worst Case)
- Linden Avenue / Slover Avenue (AM Peak Hour Worst Case)
- Cedar Avenue / Slover Avenue (AM Peak Hour Worst Case)
- Cedar Avenue / Santa Ana Avenue (PM Peak Hour Worst Case)
- Cedar Avenue / Jurupa Avenue (PM Peak Hour Worst Case)
- Larch Avenue / Jurupa Avenue (PM Peak Hour Worst Case)
- Cedar Avenue / El Rivino Road (PM Peak Hour Worst Case)

Mitigation / Improvement measures were also proposed for the Interstate 10 segments and on / off ramps to alleviate the existing and future freeway congestion by constructing additional lanes (e.g. auxiliary lane, ramp lane, etc.) The feasibility of this mitigation measure must be addressed by checking the existing Caltrans right-of-way and the lane and shoulder standards set by Caltrans.

A fair share percentage was determined for each intersection based on the County's requirements. As the Cedar Avenue / I-10 Eastbound Ramps are included in the SBCTA Rialto Sphere Nexus Study DIF program, the project's fair share contribution will be to pay the DIF program fee for these intersections.

As all the previously mentioned seven (7) intersections are mitigatable, *the Project has an insignificant impact on the local traffic network.*

Appendix A: Approved Scope of Work

Original Document

SCOPE FOR TRAFFIC STUDY

Project Name:	Truck Stop - SEC of Cedar Avenue and Santa Ana Ave

This Scope for Traffic Study acknowledges San Bernardino County Department of Public Works, Traffic Division requirements of traffic impact analysis for the project and is subject to change:

Project Address:	10951 Cedar Avenue		
Project Description:	Truck Stop Development		
City:	Unincorporated San Bernardino County (Bloomington, CA)		
Project Buildout Year:	2021	**Ambient Growth Rate per Year:**	1.5% (see attachment)
Closest Intersection (Xtn) to the Project			
Xtn N/S Street Name:	Cedar Avenue		
Xtn E/W Street Name:	Santa Ana Avenue		
Thomas Guide Pg+Grid:		**County Supervisorial District:**	5

	Engineer	**Developer**
Company:	Omar Sarsour Engineering	Chandi Group, USA
Name:	Omar Sarsour, PE	Mark Chappell, PE
Address:	820 S. San Mateo St.	42270 Spectrum St.
City, State, Zip Code:	Redlands, CA 92373	Indio, CA 92203
Phone #:	(909) 884-3222	(760) 396-9260 x125
Fax #:	N/A	(760) 396-5245
Email:	omarsarsour@gmail.com	mc@chandigroupusa.com

By: Omar Sarsour Engineering		**Reviewed By:**	
Print Name: Omar Sarsour, PE		**Print Name:**	
Consultant/Developer's Representative	**2/10/2020**	**Traffic Divsion Representative**	**Date**

Original Document

SCOPE FOR TRAFFIC STUDY

Project Name:	Truck Stop - SEC of Cedar Avenue and Santa Ana Ave

1. Traffic Distribution: Please insert or attach Figure(s) illustrating project trip distribution in percentages and volumes at the study intersections analyzed.

See Attachment

2. Trip Credit: Exact amount of credit subject to approval by Traffic Division.

Transportation Demand Management (TDM)	Yes/no	
Existing Active Land Use	Yes/no	
Previous Land Use	Yes/no	
Internal Trip Reduction	Yes/no	
Pass-by Trip Reduction	Yes/no	55% (See Attachment for justification)

3. Related Projects: Consultant should check with Planning in the San Bernardino County Department of Land Use Services and planning departments of adjoining Cities. Documentation of the consultation from these agencies shall be included in the traffic study. Related projects list shall be submitted to Traffic Division for our review and approval before being incorporated in the study.

The following cumulative projects are proposed to generate back up traffic volumes during the opening year. Cities consulted include City of Rialto and Fontana.

1. 174,800 SF Logistics Warehouse and Office - 10380 Alder Avenue Bloomington, CA 92316
2. 371,442 SF Industrial Building with 10,000 SF Office Area - Located at Northwest Corner of Intersection of Cedar Avenue / Orange Street
3. 184,700 SF Warehouse Building - Located at Northeast Corner of Intersection of Cedar Avenue / Orange Street
4. 6,300 SF Warehouse Distribution Facility - 17847 Slover Avenue Bloomington, CA 92316
5. Chevron Service Fueling Station - 18653 Slover Avenue Bloomington, CA 92316
6. 697,277 SF Warehouse - Located at the Northwest Corner of Cedar Avenue / Jurupa Avenue
7. 5,000 SF Convenience Store and Service Station - 11279 Cedar Avenue Bloomington, CA 92316
8. 505,906 SF Warehouse - Located on the Northside of El Rivino Road between Kiningham Drive
9. 525,110 SF Warehouse - Located at the Northeast Corner of Willow Avenue and Santa Ana Avenue
10. Truck Terminal Facility - Located at the Norheast Corner of Jurupa Avenue and Lilac Avenue

4. Freeway Analysis: The potential traffic impact on the following Freeway(s) must be considered.

Potentially: Merge Analysis - I-10 Eastbound On-Ramp / Cedar, Weaving Analysis - I-10 Westbound Off-Ramp / Cedar, Merge Analysis - I-10 Westbound On-Ramp / Cedar Avenue, Weaving Analysis - I-10 Eastbound Off-Ramp / Cedar

The applicant shall consult with the State of California Department of Transportation (Caltrans) to determine the California Environmental Quality Act levels of significance with regard to traffic impacts on Caltrans' freeway facilities. This consultation shall also include a determination of Caltrans requirements

Original Document

Project Name:	Truck Stop - SEC of Cedar Avenue and Santa Ana Ave

for the study of traffic impacts to its facilities and the mitigation of any such impacts. This analysis must follow the most current Caltrans' Guide for the Preparation of Traffic Impact Studies (December 2002) and can be obtained from http://www.dot.ca.gov/hq/traffops/developserv/operationalsystems/reports/tiguide.pdf. If Caltrans finds that the project has a significant impact on the freeway, Caltrans shall be requested to include the basis for this finding in their response. If fees are proposed to mitigate the freeway impact, Caltrans shall be requested to identify the specific project to which the fees will apply. These written comments from Caltrans shall be included with the traffic study and submitted to Public Works for review and approval. If a documented good faith effort is made to consult with Caltrans and written comments cannot be obtained from within a reasonable amount of time, an analysis of the freeway impact shall be made using HCM procedures. Appendix A of the SANBAG CMP outlines allowable modifications to these procedures. The SANBAG CMP can be viewed online at:
http://www.sanbag.ca.gov/planning/subr_congestion.html

Original Document

SCOPE FOR TRAFFIC STUDY

Project Name:	Truck Stop - SEC of Cedar Avenue and Santa Ana Ave

5. Trip Generation

Trip Generation Rate(s) Source: ITE Trip Generation	I – Institute of Transportation Engineers; S – San Diego Traffic Generators; C – County; O – Other:	Edition:	10th

Land Use Code	Land Use	Rate Based on	Qty	*AVTE vs	ADT	Weekday a.m. peak		Weekday p.m. peak		Weekend peak hour	
						In	Out	In	Out	In	Out
950	LU 950 - Truck Stop	**GFA**	21.29		9,698	282	282	256	227	N/A	N/A
948	LU 948 - Automated Car Wash (Truck Wash)	GFA	4		449	14	14	28	28	61	61
948	LU 948 - Automated Car Wash (Passenger Vehicles)	GFA	4		449	14	14	28	28	61	61
Note: All Truck Uses (including LU-950 Truck Stop and LU-948 Automated Car Wash for Trucks) converted to PCE per Fontana Truck Study for truck stops. Also a 55% pass-by credit has been applied to the site. Please see the attachment for justification and final total project trips calculation.											
TOTAL						**272**	**272**	**267**	**241**	**N/A**	**N/A**

Original Document

SCOPE FOR TRAFFIC STUDY

Project Name:	Truck Stop - SEC of Cedar Avenue and Santa Ana Ave

* - Average Vehicle Trip Ends.
For ITE Land Uses provide number and name of Land Use. e.g. LU 814 - Variety Store

6. Study Intersections: At minimum, the study shall include the following intersections. The list is subject to change after related projects, trip generation and distribution are determined. Consultant should check with adjoining Cities regarding their requirements in addition to the following County/City intersections. Documentation of the consultation from these agencies shall be included in the traffic study.

Xtn #	% County	Thomas Guide Page+Grid	N⎕ S/E⎕/W Street Name	City	Signalized	CMP
1	100		1. Cedar Ave / Valley	N/A	Yes/no	Yes/no
2	100		2. Cedar Ave / I-10 Westbound Interchange	N/A	Yes/no	Yes/no
3	100		3. Cedar Avenue / I-10 Eastbound Interchange	N/A	Yes/no	Yes/no
4	100		4. Cedar Avenue / Orange Street	N/A	Yes/no	Yes/no
5	100		5. Linden Avenue / Slover Avenue	N/A	Yes/no	Yes/no
6	100		6. Cedar Avenue / Slover Avenue	N/A	Yes/no	Yes/no
7	100		7. Larch Avenue / Slover Avenue	N/A	Yes/no	Yes/no
8	100		8. Linden Avenue / Santa Ana Avenue	N/A	Yes/no	Yes/no
9	100		9. Cedar Avenue / Santa Ana Avenue	N/A	Yes/no	Yes/no
10	100		10. Larch Avenue / Santa Ana Avenue	N/A	Yes/no	Yes/no
11	100		11. Linden Avenue / Jurupa Avenue	N/A	Yes/no	Yes/no

Original Document

SCOPE FOR TRAFFIC STUDY

Project Name:	Truck Stop - SEC of Cedar Avenue and Santa Ana Ave

12	100		12. Cedar Avenue / Jurupa Avenue	N/A	Yes/no	Yes/no
13	100		13. Larch Avenue / Jurupa Avenue	N/A	Yes/no	Yes/no
14	100		14. Cedar Avenue / El Rivino Road	N/A	Yes/no	Yes/no
15	100		Proposed Driveway 1 / Santa Ana Avenue (right-in-left out)	N/A	Yes/no	Yes/no
16	100		Proposed Driveway 2 / Santa Ana Avenue (right-in-left-out)	N/A	Yes/no	Yes/no
17	100		Proposed Driveway 3 / Cedar Avenue (right-in-right-out)	N/A	Yes/no	Yes/no
18	100		Proposed Driveway 4 / Cedar Avenue (right-in-right-out)	N/A	Yes/no	Yes/no

Cities to be consulted: City of Fontana, City of Rialto

Original Document

SCOPE FOR TRAFFIC STUDY

Project Name:	Truck Stop - SEC of Cedar Avenue and Santa Ana Ave

7. Other:

Traffic counts may be conducted immediately per the following:
• Must be taken on Tuesdays, Wednesdays or Thursdays.
• Must exclude holidays, and the first weekdays before and after the holiday.
• Must be taken on days when local schools or colleges are in session.
• Must be taken on days of good weather, and avoid atypical conditions (e.g., road construction, detours, or major traffic incidents).
• Traffic counts used for other traffic studies in the area shall **NOT** be reused again, unless 25% of the counts conducted for that particular traffic study are validated with new counts. The difference in volumes between the old and new counts at each corresponding movement should not be more than 10%.
• New traffic counts shall be checked to ensure the difference in volumes at corresponding approaches, if applicable, between two adjacent intersections is no more than 10% unless the difference can be justified.
• For all proposed mitigation measures, a conceptual plan for the improvements shall be submitted to our Traffic Studies section for review and approval prior to the approval of the Traffic Impact Analysis. All proposed improvements shall be within the right-of-way.
• For all cumulative mitigation measures, a cost estimate for the improvement shall be submitted.

This analysis must follow the most current Traffic Impact Study Guidelines for the County as stated in the County's Road Planning and Design Standards.

8. Fees

The County charges on an actual cost basis for review of traffic studies. An initial deposit of $2000 is required at the time that a land use application is filed with the Department of Land Use Services If the review costs exceed the initial deposit, the applicant will be expected to provide additional funds and the review will be suspended until the additional funds are deposited.

Original Document

Project Name:	Truck Stop - SEC of Cedar Avenue and Santa Ana Ave

9. Contact Information:

Please submit a signed copy of this scope for approval by the Traffic Division. Draft scopes may be sent electronically. Final scope with signature should be submitted in person or by US Mail to:

County of San Bernardino
Dept. of Public Works, Traffic Division
825 E. 3rd Street, Rm 115
San Bernardino, CA 92415-0835

Phone: 909-387-8186
Fax: 909-387-7809
Email: Anthony.Pham@dpw.sbcounty.gov

Original Document

OMAR SARSOUR
CIVIL + TRAFFIC ENGINEERING

February 10, 2020

County of San Bernardino, Public Works Dept.
825 East 3rd St.
San Bernardino, CA 92415

Scoping Agreement Memorandum
Traffic Impact Analysis – Truck Stop
10951 Cedar Avenue
Bloomington, CA

Subject: Scoping Agreement Memorandum

To County of San Bernardino, Public Works Department:

Omar Sarsour Engineering (OSE) has prepared this memorandum to propose the scope of a traffic impact analysis (TIA) for the development of a truck stop in Bloomington, CA (unincorporated San Bernardino County). The lead reviewing agency of this TIA is anticipated to be the County of San Bernardino (County).

Project Description

This study analyzes the forecast traffic impact of the proposed "Commercial Center / Truck Stop" project, located on a currently vacant 8.9-acre site on the southeast corner of Cedar Avenue and Santa Ana Avenue in the unincorporated community of Bloomington, San Bernardino County (County). The proposed project will consist of the following facilities:

- Gas Station with two (2) gas fueling canopies (one for standard gas and the other for diesel trucks, truck scale, and truck stopping area) with a 11,400 square foot convenience store
- 1,890 SF fast food restaurant with a drive-thru
- 3,000 SF fast food restaurant with a drive-thru
- 5,000 SF dine-in restaurant
- 4,000 SF automated carwash
- 4,000 SF truck wash

The site fits the criteria for a truck stop based on the Institute of Transportation Engineers (ITE). The ITE Trip Generation, 10th Edition defines a truck stop as a facility on or near major roadways providing refueling, food, and other services to motorists and truck drivers. Truck stops typically contain convenience stores, showers, restaurants, and on-site truck parking spaces. This description reflects the site plan (Figure 1). The project site will take access at two (2) right-in-right-out driveways along Cedar Avenue and two (2) right-in-left-out driveways along Santa Ana Avenue.

The site is located at 10951 Cedar Avenue, Bloomington, CA. Site access will be restricted to right-in-right-out turning movements at two driveways located along Cedar Avenue. The site will not be accessible from Santa Ana Avenue. The site is located approximately 0.8 miles from the I-10 Freeway.

Trip Generation

To determine the trips forecast to be generated by the proposed project, ITE Trip Generation Manual, 10th Edition rates were utilized in accordance with the San Bernardino County Guidelines. Based on County comments, the trip rate was determined utilizing the independent variable of gross floor area for Truck Stops - Usage Code 950. The trips for both car wash usages were developed separately under usage code 948 - Automated Car Wash. Table 8 shows the trip generation rates used for the proposed project

as well as the breakdown by vehicle type. The vehicle type breakdown is based on the Truck Trip Generation Study for truck stops prepared by the City of Fontana as shown below. The vehicle mix for PCE was also applied for the truck wash facility on site.

Table 1: Vehicle Mix for Truck Stop

Vehicle Classification	Percentage of Trips	PCE Conversion
Passenger Vehicle	44.1%	1.0
Large 2-axle Truck	2.2%	1.5
3-Axle Truck	9.0%	2.0
4+ Axle Truck	44.6%	3.0

Pass-By Trip Reduction

The proposed site will primarily be a fueling site with fast food restaurants and truck parking for truckers already present on the local roadway network based on the amount of warehousing existing in the area, as well as future warehousing sites that will be incorporated as cumulative projects during the analysis. The site will also service commuters on their way to and from work during the peak hour.

Based on the surrounding usages which will already generate high-trucking and pass-by trip percentages as denoted in Appendix E of the ITE Trip Generation Manual, a pass-by trip percentage of 55% is reasonable and conservative for this type of development. The following table shows various usages from the ITE similar to the truck stop usage and their average pass-by trip percentages.

Table 2: Pass-By Trip Credits for Similar Usages

Usage	Average Pass-By Trip Percentage
853 – Convenience Market w/ Gasoline Pumps	AM: 63% PM: 66%
934 – Fast-Food Restaurant w/ Drive Through	AM: 49% PM: 50%
945 – Gasoline Station with Convenience Store	AM: 62% PM: 56%

Table 3: Project Trip Generation Weekday

			AM Peak Hour			PM Peak Hour		
ITE Usage Code - 950 - Truck Stop			**In**	**Out**	**Total**	**In**	**Out**	**Total**
Rates	21.29	GFA	13.25	13.25	26.49	12.05	10.68	22.73
		Project Trips	*282*	*282*	*564*	*256*	*227*	*483*
Truck Carwash - 948 - Automated Car Wash								
Rates	4	GFA	3.55	3.55	7.10	7.10	7.10	14.20
		Project Trips	*14*	*14*	*28*	*28*	*28*	*56*
Passenger Carwash - 948 - Automated Car Wash								
Rates	4	GFA	3.55	3.55	7.10	7.10	7.10	14.20
		Project Trips	*14*	*14*	*28*	*28*	*28*	*56*
		Total Trips	*310*	*310*	*620*	*312*	*283*	*595*
		Total Trips from Truck Usages	*296*	*296*	*592*	*284*	*255*	*539*
		Total Trips in PCE	*604*	*604*	*1208*	*593*	*535*	*1128*
		TOTAL TRIPS WITH PASS-BY CREDIT	***272***	***272***	***544***	***267***	***241***	***508***

(ITE Trip Generation, 10th Edition) - Note: There is no ITE Trip Generation for AM Peak Hour Car Wash, so it was taken to be half of the PM Peak Hour.

Trip Distribution and Project Trip Assignments

The project trip distribution was developed based on the existing roadway network and surrounding land uses, existing traffic patterns and access to Interstate 10.

Figure 6 illustrates the project's trip distribution. As the surrounding area features industrial warehouses and residential communities, the distribution of truck and passenger vehicles was deemed similar. Both commuters and truckers will access the I-10 Freeway in a similar manner as well.

Utilizing the project trip distribution (attached), the forecast project-generated trips were assigned to the roadway network. An AM/PM peak hour project trip assignment exhibit for passenger vehicles and trucks, respectively, is attached.

Study Intersections

Based on the proposed trip distribution and trip generation, the following intersections have been identified for analysis:

1. Cedar Ave / Valley
2. Cedar Ave / I-10 Westbound Interchange
3. Cedar Avenue / I-10 Eastbound Interchange
4. Linden Avenue / Slover Avenue

5. Cedar Avenue / Slover Avenue
6. Larch Avenue / Slover Avenue
7. Linden Avenue / Santa Ana Avenue
8. Cedar Avenue / Santa Ana Avenue
9. Larch Avenue / Santa Ana Avenue
10. Site Driveway 1 / Santa Ana Avenue
11. Site Driveway 2 / Santa Ana Avenue
12. Cedar Avenue / Site Driveway 3
13. Cedar Avenue / Site Driveway 4
14. Linden Avenue / Jurupa Avenue
15. Cedar Avenue / Jurupa Avenue
16. Larch Avenue / Jurupa Avenue
17. Cedar Avenue / El Rivino Road
18. Cedar Avenue / Orange Street

Analysis Scenarios

The following analysis scenarios are proposed for the study:

1. Existing Year
2. Opening Year with Cumulative Projects
3. Opening Year with Cumulative Projects with Proposed Project
4. Future Year without Proposed Project
5. Future Year with Proposed Project

Future Year (2040) forecast daily traffic volumes used in this analysis will be based on the San Bernardino Transportation Analysis Traffic Model (SBTAM) or an annual ambient growth rate if the SBTAM model is found to underestimate the future growth in the region. All build-out roadway improvements in the project study area such as the I-10 / Cedar Avenue interchange improvements are included in the analysis of Future Year (2040) conditions for mitigation measures. A 1.5% ambient growth rate will be used for 2021 opening year.

Proposed Software / Analysis Standards

Analysis will be conducted using Trafficware Synchro 10 software in accordance with Highway Capacity Manual 6th Edition, SBCTA CMP Traffic Impact Analysis Guidelines, and County of San Bernardino Traffic Impact Analysis Guidelines.

Please feel free to let us know if you have any questions or comments. We look forward to finalizing the scope of work and discussing the analysis with the County soon.

Sincerely,

Omar Sarsour, PE, LSIT
omarsarsour@gmail.com
(909) 362-6790

Original Document

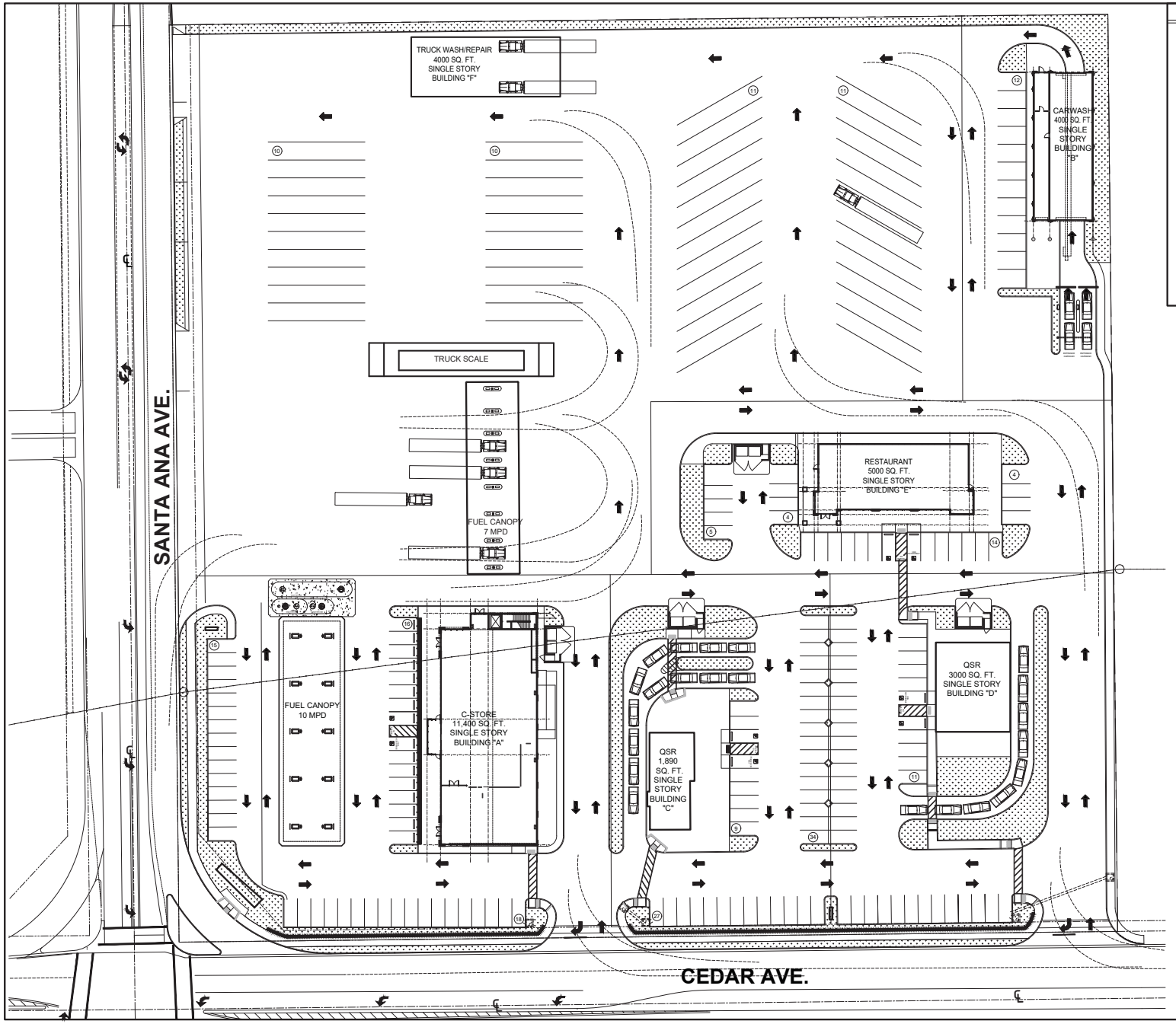

PROJECT DATA:

PARCEL 1:

LAND USE: COMMERCIAL
LOT SIZE: 8.9 ACRES

LOT COVERAGE:

LOT = 388,157.8597 SQ. FT. (8.9 ACRES)
29,290 / 388,157.8597 = 0.07

PROPOSED BUILDINGS:

BUILDING A: 11400 SQ. FT. CONVENIENCE STORE W/ 10 MPD FUEL STATION & 7 DIESEL BAYS
BUILDING B: 4,000 SQ. FT. CAR WASH
BUILDING C: 1,890 SQ. FT. FAST FOOD RESTAURANT W/ DRIVE THRU
BUILDING D: 3,000 SQ. FT. FAST FOOD RESTAURANT W/ DRIVE THRU
BUILDING E: 5,000 SQ. FT. RESTAURANT
BUILDING F: 4,000 SQ. FT. TRUCK WASH

PARKING ANALYSIS:

BUILDING TYPE	RATIO	AREA	PARKING REQUIRED
GENERAL RETAIL	1 / 250 SQ. FT.	11,400 SQ. FT.	46
RESTAURANT	1 / 200 SQ. FT.	1,890 SQ. FT.	10
RESTAURANT	1 / 200 SQ. FT.	3,000 SQ. FT.	15
GENERAL RETAIL	1 / 200 SQ. FT.	8,000 SQ. FT.	40
GAS STATION	1 PER PUMP ISLAND	10 PUMP ISLANDS	10
TRUCK STATION	1 PER PUMP ISLAND	7 PUMP ISLANDS	7

TOTAL PARKING REQUIRED = 128
TOTAL PARKING PROVIDED = 178

TOTAL ADA PARKING REQUIRED = 6
TOTAL ADA PARKING PROVIDED = 8

TOTAL TRUCK PARKING PROVIDED = 36

SITE PLAN OVERLAY
SCALE: 1" = 30.00'

CHANDI GROUP USA
42270 SPECTRUM STREET
INDIO CA 92203
OFFICE: (760)-396-9260
FAX: (760)-396-5245

DO NOT SCALE DRAWING. WRITTEN DIMENSIONS SHALL GOVERN. ALL DIMENSIONS AND CONDITIONS SHALL BE VERIFIED IN THE FIELD BY THE GENERAL CONTRACTOR AND/OR FRANCHISEE/OWNER. ANY DISCREPANCY IN DIMENSIONS SHALL BE BROUGHT TO THE IMMEDIATE ATTENTION OF YOUR AREA DEVELOPMENT AGENT OR DESIGNATED FIELD REPRESENTATIVE.

THE GENERAL CONTRACTOR AND EACH SUB-CONTRACTOR SHALL MAKE HIS OWN INSPECTIONS AND MEASUREMENTS. FWH AND SF SHALL NOT BE HELD RESPONSIBLE FOR THE ACCURACY OF DIMENSIONS AND FOR ERRORS AND OMISSIONS IN THE DRAWINGS IF WRITTEN CONFIRMATION HAD NOT BEEN RECEIVED BY THE FWH STORE DESIGN DEPARTMENT.

Proposed Commercial Center

SEC OF CEDAR AVE. & SANTA ANA. AVE.
BLOOMINGTON, CALIFORNIA

A CONCEPTUAL SITE PLAN FOR A

NO.	REVISION	DATE	BY

SHEET TITLE
SITE PLAN OVERLAY

SCALE
AS NOTED

DATE
7/29/2019

PROJECT NUMBER
CG-

SHEET NUMBER
SP.1

Original Document

Project Trip Distribution

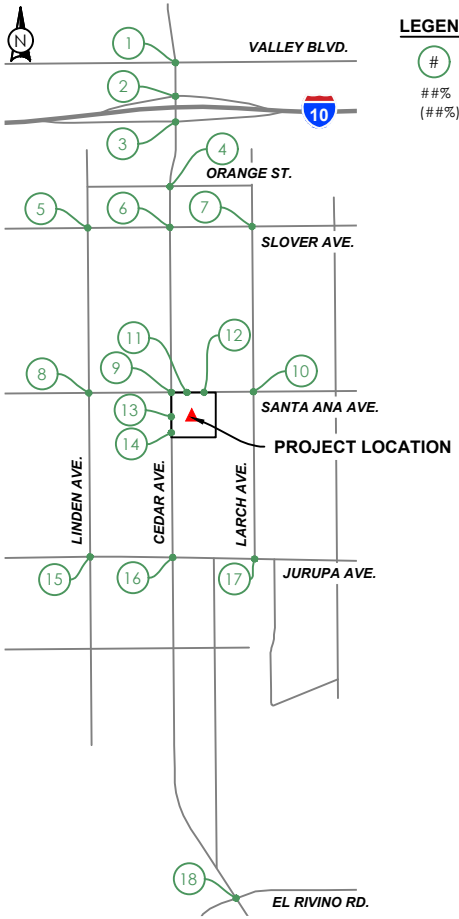

LEGEND

#	STUDIED INTERSECTION
##%	AM / PM INBOUND
(##%)	(AM / PM OUTBOUND)

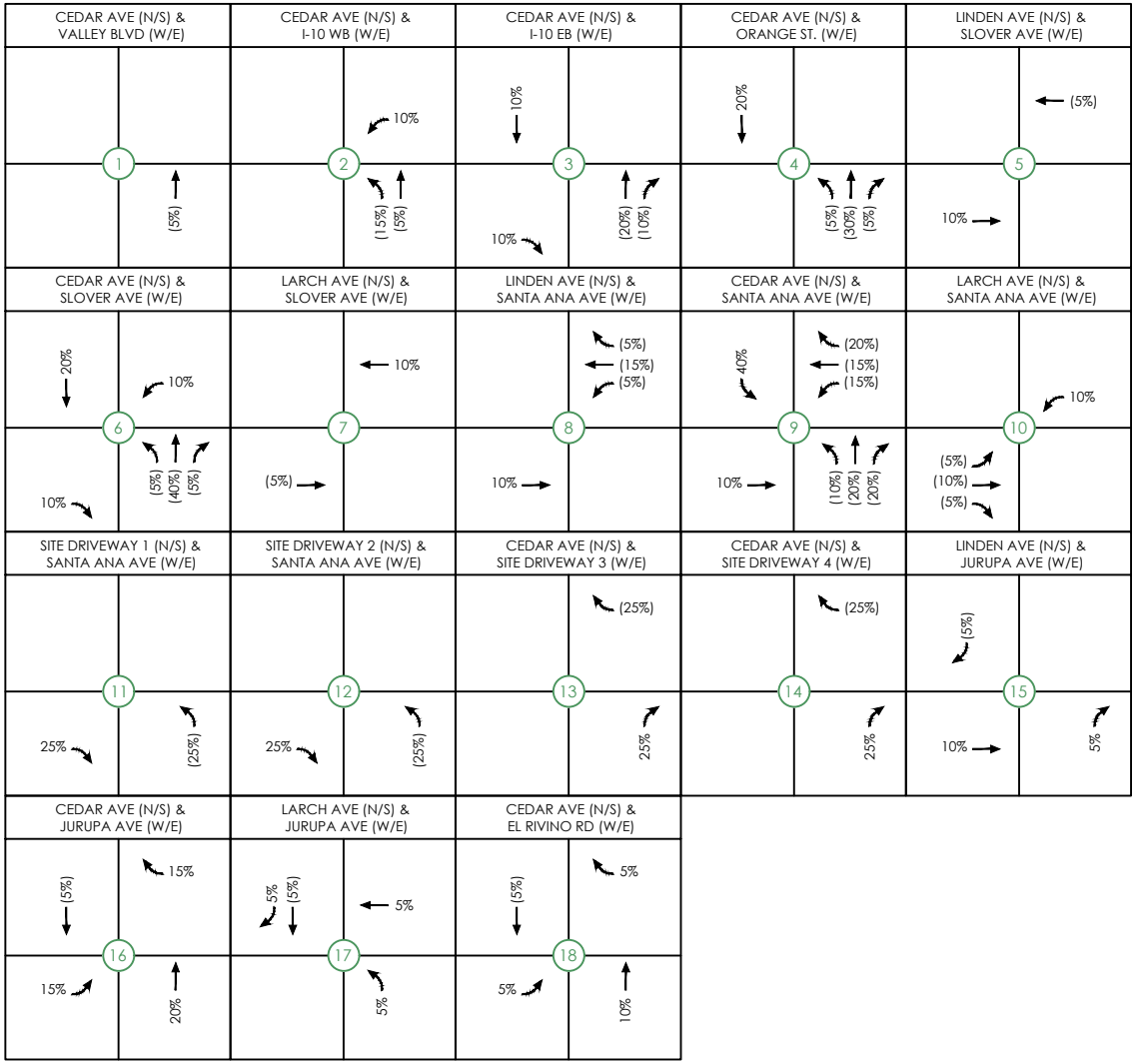

Original Document

Project Trip Assignment

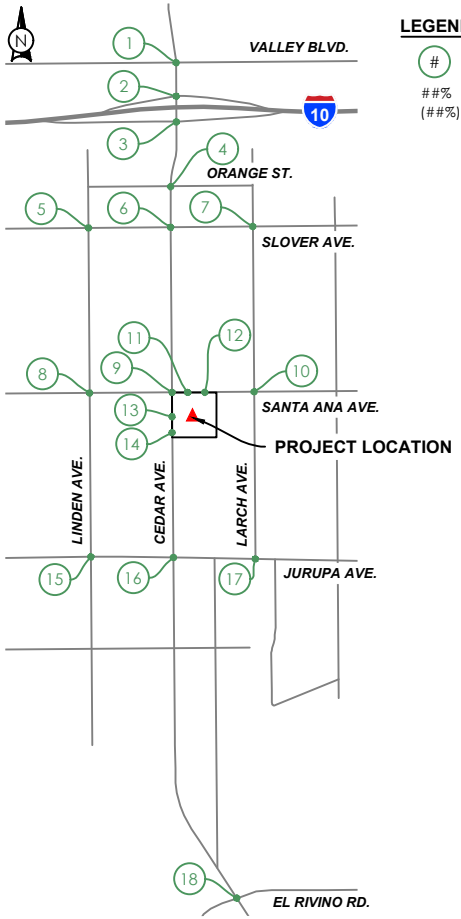

LEGEND

(#)	STUDIED INTERSECTION
##%	AM / PM INBOUND
(##%)	(AM / PM OUTBOUND)

CEDAR AVE (N/S) & VALLEY BLVD (W/E)	CEDAR AVE (N/S) & I-10 WB (W/E)	CEDAR AVE (N/S) & I-10 EB (W/E)	CEDAR AVE (N/S) & ORANGE ST. (W/E)	LINDEN AVE (N/S) & SLOVER AVE (W/E)
1: 14/13	2: 28/27; 41/37; 14/13	3: 28/27; 28/27; 55/49; 28/25	4: 55/54; 14/13; 82/73; 14/13	5: 14/13; 28/27
CEDAR AVE (N/S) & SLOVER AVE (W/E)	LARCH AVE (N/S) & SLOVER AVE (W/E)	LINDEN AVE (N/S) & SANTA ANA AVE (W/E)	CEDAR AVE (N/S) & SANTA ANA AVE (W/E)	LARCH AVE (N/S) & SANTA ANA AVE (W/E)
6: 55/54; 28/27; 28/27; 14/13; 109/97; 14/13	7: 28/27; 14/13	8: 14/13; 41/37; 14/13; 28/27	9: 109/107; 55/49; 41/37; 41/37; 28/27; 28/25; 55/49; 55/49	10: 28/27; 14/13; 28/25; 14/13
SITE DRIVEWAY 1 (N/S) & SANTA ANA AVE (W/E)	SITE DRIVEWAY 2 (N/S) & SANTA ANA AVE (W/E)	CEDAR AVE (N/S) & SITE DRIVEWAY 3 (W/E)	CEDAR AVE (N/S) & SITE DRIVEWAY 4 (W/E)	LINDEN AVE (N/S) & JURUPA AVE (W/E)
11: 68/67; 68/61	12: 68/67; 68/61	13: 68/61; 68/67	14: 68/61; 68/67	15: 14/13; 28/27; 14/14
CEDAR AVE (N/S) & JURUPA AVE (W/E)	LARCH AVE (N/S) & JURUPA AVE (W/E)	CEDAR AVE (N/S) & EL RIVINO RD (W/E)		
16: 14/13; 41/41; 41/41; 55/54	17: 14/14; 14/13; 14/14; 14/14	18: 14/13; 14/14; 14/14; 28/27		

NOTE: VOLUMES FOR EACH PROJECT TRIP VOLUME AT EACH INTERSECTION ARE ROUNDED UP TO THE NEXT WHOLE DIGIT.

SCOPE FOR TRAFFIC STUDY

Project Name:	"Bloomington Commercial Center," formerly "Truck Stop Development"

This Scope for Traffic Study acknowledges San Bernardino County Department of Public Works, Traffic Division requirements of traffic impact analysis for the project and is subject to change:

Project Address:	10951 Cedar Avenue		
Project Description:	"Bloomington Commercial Center" formerly "Truck Stop Development"		
City:	Unincorporated San Bernardino County (Bloomington, CA)		
Project Buildout Year:	2021	**Ambient Growth Rate per Year:**	1.5% (See Attachment)
Closest Intersection (Xtn) to the Project			
Xtn N/S Street Name:	Cedar Avenue		
Xtn E/W Street Name:	Santa Ana Avenue		
Thomas Guide Pg+Grid:		**County Supervisorial District:**	5

	Engineer	**Developer**
Company:	Minagar & Associates, Inc.	Chandi Group, USA
Name:	Fred Minagar, MS, RCE, PE, FITE	Mark Chappell, PE
Address:	23282 Mill Creek Dr.	42270 Spectrum St.
City, State, Zip Code:	Laguna Hills, CA 92653	Indio, CA 92203
Phone #:	(949) 707 – 1199 x2	(760) 396-9260 x125
Fax #:	N/A	(760) 396-5245
Email:	minagarf@minagarinc.com	mc@chandigroupusa.com

By: Minagar and Associates, Inc. — **Reviewed By:**

Print Name: Fred Minagar, MS, RCE, PE, FITE — **Print Name:**

Consultant/Developer's Representative 6**/18/2020** — **Traffic Divsion Representative** **Date**

SCOPE FOR TRAFFIC STUDY

Project Name:	**"Bloomington** Commercial Center", formerly "Truck Stop Development"

1. Traffic Distribution: Please insert or attach Figure(s) illustrating project trip distribution in percentages and volumes at the study intersections analyzed.

See Attachment

2. Trip Credit: Exact amount of credit subject to approval by Traffic Division.

Transportation Demand Management (TDM)	Yes/no	
Existing Active Land Use	Yes/no	
Previous Land Use	Yes/no	
Internal Trip Reduction	Yes/no	
Pass-by Trip Reduction	Yes/no	55% (See Attachment for justification)

3. Related Projects: Consultant should check with Planning in the San Bernardino County Department of Land Use Services and planning departments of adjoining Cities. Documentation of the consultation from these agencies shall be included in the traffic study. Related projects list shall be submitted to Traffic Division for our review and approval before being incorporated in the study.

The following cumulative projects are proposed to generate back up traffic volumes during the opening year. Cities consulted include City of Rialto and Fontana.

1. 174,800 SF Logistics Warehouse and Office - 10380 Alder Avenue Bloomington, CA 92316
2. 371,442 SF Industrial Building with 10,000 SF Office Area - Located at Northwest Corner of Intersection of Cedar Avenue / Orange Street
3. 184,700 SF Warehouse Building - Located at Northeast Corner of Intersection of Cedar Avenue / Orange Street
4. 6,300 SF Warehouse Distribution Facility - 17847 Slover Avenue Bloomington, CA 92316
5. Chevron Service Fueling Station - 18653 Slover Avenue Bloomington, CA 92316
6. 697,277 SF Warehouse - Located at the Northwest Corner of Cedar Avenue / Jurupa Avenue
7. 5,000 SF Convenience Store and Service Station - 11279 Cedar Avenue Bloomington, CA 92316
8. 505,906 SF Warehouse - Located on the Northside of El Rivino Road between Kiningham Drive
9. 525,110 SF Warehouse - Located at the Northeast Corner of Willow Avenue and Santa Ana Avenue
10. Truck Terminal Facility - Located at the Norheast Corner of Jurupa Avenue and Lilac Avenue

4. Freeway Analysis: The potential traffic impact on the following Freeway(s) must be considered.

Potentially: Merge Analysis - I-10 Eastbound On-Ramp / Cedar, Weaving Analysis - I-10 Westbound Off-Ramp / Cedar, Merge Analysis - I-10 Westbound On-Ramp / Cedar Avenue, Weaving Analysis - I10 Eastbound Off-Ramp / Cedar

SCOPE FOR TRAFFIC STUDY

Project Name:	**"Bloomington Commercial Center," formerly "Truck Stop Development"**

The applicant shall consult with the State of California Department of Transportation (Caltrans) to determine the California Environmental Quality Act levels of significance with regard to traffic impacts on Caltrans' freeway facilities. This consultation shall also include a determination of Caltrans requirements for the study of traffic impacts to its facilities and the mitigation of any such impacts. This analysis must follow the most current Caltrans' Guide for the Preparation of Traffic Impact Studies (December 2002) and can be obtained from http://www.dot.ca.gov/hq/traffops/developserv/operationalsystems/reports/tiguide.pdf. If Caltrans finds that the project has a significant impact on the freeway, Caltrans shall be requested to include the basis for this finding in their response. If fees are proposed to mitigate the freeway impact, Caltrans shall be requested to identify the specific project to which the fees will apply. These written comments from Caltrans shall be included with the traffic study and submitted to Public Works for review and approval. If a documented good faith effort is made to consult with Caltrans and written comments cannot be obtained from within a reasonable amount of time, an analysis of the freeway impact shall be made using HCM procedures. Appendix A of the SBCTA CMP outlines allowable modifications to these procedures. The SBCTA CMP can be viewed online at:
https://www.gosbcta.com/wp-content/uploads/2019/10/2016-Congestion-Management-Plan-.pdf

SCOPE FOR TRAFFIC STUDY

Project Name:	"Bloomington Commercial Center," formerly "Truck Stop Development"

5. Trip Generation

Trip Generation Rate(s) Source: ITE Trip Generation	I – Institute of Transportation Engineers; S – San Diego Traffic Generators; C – County; O – Other:	Edition:	10th

Land Use Code	Land Use	Rate Based on	Qty	*AVTE vs	ADT	Weekday a.m. peak		Weekday p.m. peak		Weekend peak hour	
						In	Out	In	Out	In	Out
950	LU 950 - Truck Stop	**GFA**	15.70		6,410	187	185	161	159	N/A	N/A
Note: All Truck Uses (including LU-950 Truck Stop and LU-948 Automated Car Wash for Trucks) converted to PCE per Fontana Truck Study for truck stops. Also a 55% pass-by credit has been applied to the site. Please see the attachment for justification and final total project trips calculation.											
TOTAL						**187**	**185**	**161**	**159**	**N/A**	**N/A**

SCOPE FOR TRAFFIC STUDY

Project Name:	"Bloomington Commercial Center," formerly "Truck Stop Development"

* - Average Vehicle Trip Ends.
For ITE Land Uses provide number and name of Land Use. e.g. LU 814 - Variety Store

6. Study Intersections: At minimum, the study shall include the following intersections. The list is subject to change after related projects, trip generation and distribution are determined. Consultant should check with adjoining Cities regarding their requirements in addition to the following County/City intersections. Documentation of the consultation from these agencies shall be included in the traffic study.

Xtn #	% County	Thomas Guide Page+Grid	N□ S/E□W Street Name	City	Signalized	CMP
1	100		1. Cedar Ave / Valley	N/A	Yes/no	Yes/no
2	100		2. Cedar Ave / I-10 Westbound Interchange	N/A	Yes/no	Yes/no
3	100		3. Cedar Avenue / I-10 Eastbound Interchange	N/A	Yes/no	Yes/no
4	100		4. Cedar Avenue / Orange Street	N/A	Yes/no	Yes/no
5	100		5. Linden Avenue / Slover Avenue	N/A	Yes/no	Yes/no
6	100		6. Cedar Avenue / Slover Avenue	N/A	Yes/no	Yes/no
7	100		7. Larch Avenue / Slover Avenue	N/A	Yes/no	Yes/no
8	100		8. Linden Avenue / Santa Ana Avenue	N/A	Yes/no	Yes/no
9	100		9. Cedar Avenue / Santa Ana Avenue	N/A	Yes/no	Yes/no
10	100		10. Larch Avenue / Santa Ana Avenue	N/A	Yes/no	Yes/no
11	100		11. Linden Avenue / Jurupa Avenue	N/A	Yes/no	Yes/no

Project Name:	"Bloomington Commercial Center," formerly "Truck Stop Development"

12	100		12. Cedar Avenue / Jurupa Avenue	N/A	Yes/no	Yes/no
13	100		13. Larch Avenue / Jurupa Avenue	N/A	Yes/no	Yes/no
14	100		14. Cedar Avenue / El Rivino Road	N/A	Yes/no	Yes/no
15	100		Proposed Driveway 1 / Santa Ana Avenue (right-in-left out)	N/A	Yes/no	Yes/no
16	100		Proposed Driveway 2 / Santa Ana Avenue (right-in-left-out)	N/A	Yes/no	Yes/no
17	100		Proposed Driveway 3 / Cedar Avenue (right-in-right-out)	N/A	Yes/no	Yes/no

SCOPE FOR TRAFFIC STUDY

Project Name:	"Bloomington Commercial Center," formerly "Truck Stop Development"

7. Other:

Traffic counts may be conducted immediately per the following:
□ Must be taken on Tuesdays, Wednesdays or Thursdays.
□ Must exclude holidays, and the first weekdays before and after the holiday.
□ Must be taken on days when local schools or colleges are in session.
□ Must be taken on days of good weather, and avoid atypical conditions (e.g., road construction, detours, or major traffic incidents).
□ Traffic counts used for other traffic studies in the area shall **NOT** be reused again, unless 25% of the counts conducted for that particular traffic study are validated with new counts. The difference in volumes between the old and new counts at each corresponding movement should not be more than 10%.
□ New traffic counts shall be checked to ensure the difference in volumes at corresponding approaches, if applicable, between two adjacent intersections is no more than 10% unless the difference can be justified.
□ For all proposed mitigation measures, a conceptual plan for the improvements shall be submitted to our Traffic Studies section for review and approval prior to the approval of the Traffic Impact Analysis. All proposed improvements shall be within the right-of-way.
□ For all cumulative mitigation measures, a cost estimate for the improvement shall be submitted.

This analysis must follow the most current Traffic Impact Study Guidelines for the County as stated in the County's Road Planning and Design Standards.

8. Fees

The County charges on an actual cost basis for review of traffic studies. An initial deposit of $2000 is required at the time that a land use application is filed with the Department of Land Use Services If the review costs exceed the initial deposit, the applicant will be expected to provide additional funds and the review will be suspended until the additional funds are deposited.

SCOPE FOR TRAFFIC STUDY

Project Name:	"Bloomington Commercial Center," formerly "Truck Stop Development"

9. Contact Information:

Please submit a signed copy of this scope for approval by the Traffic Division. Draft scopes may be sent electronically. Final scope with signature should be submitted in person or by US Mail to:

County of San Bernardino
Dept. of Public Works, Traffic Division
825 E. 3rd Street, Rm 115
San Bernardino, CA 92415-0835

Phone: 909-387-8186
Fax: 909-387-7809
Email: Anthony.Pham@dpw.sbcounty.gov

June 18, 2020

County of San Bernardino, Public Works Dept.
825 East 3rd St.
San Bernardino, CA 92415

Scoping Agreement Memorandum
Traffic Impact Analysis – Truck Stop
10951 Cedar Avenue
Bloomington, CA

Subject: Scoping Agreement Memorandum

To: County of San Bernardino, Public Works Department:

Minagar and Associates, Inc. has prepared this memorandum to propose the scope of a traffic impact analysis (TIA) for the development of a truck stop in Bloomington, CA (unincorporated San Bernardino County). The lead reviewing agency of this TIA is anticipated to be the County of San Bernardino (County).

Project Description

This study analyzes the forecast traffic impact of the proposed "Bloomington Commercial Center" project, located on a currently vacant 8.9-acre site on the southeast corner of Cedar Avenue and Santa Ana Avenue in the unincorporated community of Bloomington, San Bernardino County (County). The proposed project will consist of the following facilities:

- Gas Station with two (2) gas fueling canopies (one for standard gas and the other for diesel trucks, truck scale, and truck stopping area) with a 9900 square foot convenience store.
- 3,000 SF fast food restaurant with a drive-thru
- 2,800 SF fast food restaurant with a drive-thru

The site fits the criteria for a truck stop based on the Institute of Transportation Engineers (ITE). The ITE Trip Generation, 10th Edition defines a truck stop as a facility on or near major roadways providing refueling, food, and other services to motorists and truck drivers. Truck stops typically contain convenience stores, showers, restaurants, and on-site truck parking spaces. This description reflects the site plan (Figure 1). The project site will take access at one (1) right-in-right-out driveway along Cedar Avenue and two (2) right-in-left-out driveways along Santa Ana Avenue. The site is located approximately 0.8 miles from the I-10 Freeway.

Trip Generation

To determine the trips forecast to be generated by the proposed project, ITE Trip Generation Manual, 10th Edition rates were utilized in accordance with the San Bernardino County Guidelines. Based on County comments, the trip rate was determined utilizing the independent variable of gross floor area for Truck Stops - Usage Code 950. The trips for both car wash usages were developed separately under usage code 948 - Automated Car Wash. Table 8 shows the trip generation rates used for the proposed project as well as the breakdown by vehicle type. The vehicle type breakdown is based on the Truck Trip

Generation Study for truck stops prepared by the City of Fontana as shown below. The vehicle mix for PCE was also applied for the truck wash facility on site.

Table 1: Vehicle Mix for Truck Stop

Vehicle Classification	Percentage of Trips	PCE Conversion
Passenger Vehicle	44.1%	1.0
Large 2-axle Truck	2.2%	1.5
3-Axle Truck	9.0%	2.0
4+ Axle Truck	44.6%	3.0

Pass-By Trip Reduction

The proposed site will primarily be a fueling site with fast food restaurants and truck parking for truckers already present on the local roadway network based on the amount of warehousing existing in the area, as well as future warehousing sites that will be incorporated as cumulative projects during the analysis. The site will also service commuters on their way to and from work during the peak hour.

Based on the surrounding usages which will already generate high-trucking and pass-by trip percentages as denoted in Appendix E of the ITE Trip Generation Manual, a pass-by trip percentage of 55% is reasonable and conservative for this type of development. The following table shows various usages from the ITE similar to the truck stop usage and their average pass-by trip percentages.

Table 2: Pass-By Trip Credits for Similar Usages

Usage	Average Pass-By Trip Percentage
853 – Convenience Market w/ Gasoline Pumps	AM: 63% PM: 66%
934 – Fast-Food Restaurant w/ Drive Through	AM: 49% PM: 50%
945 – Gasoline Station with Convenience Store	AM: 62% PM: 56%

Table 3: Project Trip Generation Weekday (AM/PM Peak Hours and Daily)

Trip Generation									
Project			AM Peak Hour			PM Peak Hour			Daily
No.	Land Use	Quantity[1]	In	Out	Total	In	Out	Total	
1	Truck Stop	Rates	13.25	13.25	26.49	12.05	10.68	22.73	455.53
		15.70 GFA[2]	208	208	416	179	178	357	7152
	Pass by (55% AM/PM/Daily)		- 114	- 115	- 229	- 98	- 98	- 196	- 3934
	Subtotal Vehicular Trips		94	93	187	81	80	161	3218
	Subtotal Trips from Truck Usages		94	93	187	81	80	161	3218
Total Trips from Truck Usages			94	93	187	81	80	161	3218
Total Vehicular Trips with Trip Reduction and PCE Adjustment			**187**	**185**	**372**	**161**	**159**	**320**	**6410**

[1] Institute of Transportation Engineers (ITE), Trip Generation Manual, 10th Edition, 2017
[2] GFA = Gross Floor Area

Trip Distribution and Project Trip Assignments

The project trip distribution was developed based on the existing roadway network and surrounding land uses, existing traffic patterns and access to Interstate 10.

Figure 6 illustrates the project's trip distribution. As the surrounding area features industrial warehouses and residential communities, the distribution of truck and passenger vehicles was deemed similar. Both commuters and truckers will access the I-10 Freeway in a similar manner as well.

Utilizing the project trip distribution (attached), the forecast project-generated trips were assigned to the roadway network. An AM/PM peak hour project trip assignment exhibit for passenger vehicles and trucks, respectively, is attached.

Study Intersections

Based on the proposed trip distribution and trip generation, the following intersections have been identified for analysis:

1. Cedar Ave / Valley
2. Cedar Ave / I-10 Westbound Interchange
3. Cedar Avenue / I-10 Eastbound Interchange
4. Linden Avenue / Slover Avenue
5. Cedar Avenue / Slover Avenue
6. Larch Avenue / Slover Avenue
7. Linden Avenue / Santa Ana Avenue
8. Cedar Avenue / Santa Ana Avenue
9. Larch Avenue / Santa Ana Avenue
10. Site Driveway 1 / Cedar Avenue
11. Santa Ana Avenue / Site Driveway 2
12. Santa Ana Avenue / Site Driveway 3
13. Linden Avenue / Jurupa Avenue
14. Cedar Avenue / Jurupa Avenue
15. Larch Avenue / Jurupa Avenue
16. Cedar Avenue / El Rivino Road
17. Cedar Avenue / Orange Street

Analysis Scenarios

The following analysis scenarios are proposed for the study:

1. Existing Year
2. Opening Year with Cumulative Projects
3. Opening Year with Cumulative Projects with Proposed Project
4. Future Year without Proposed Project
5. Future Year with Proposed Project

Future Year (2040) forecast daily traffic volumes used in this analysis will be based on the San Bernardino Transportation Analysis Traffic Model (SBTAM) or an annual ambient growth rate if the SBTAM model is found to underestimate the future growth in the region. All build-out roadway improvements in the project study area such as the I-10 / Cedar Avenue interchange improvements are included in the analysis of Future Year (2040) conditions for mitigation measures. A 1.5% ambient growth rate will be used for 2021 opening year.

Proposed Software / Analysis Standards

Analysis will be conducted using Trafficware Synchro 10 software in accordance with Highway Capacity Manual 6th Edition, SBCTA CMP Traffic Impact Analysis Guidelines, and County of San Bernardino Traffic Impact Analysis Guidelines.

Please feel free to let us know if you have any questions or comments. We look forward to finalizing the scope of work and discussing the analysis with the County soon.

Sincerely,

MINAGAR & ASSOCIATES, INC.

(A California Corporation)

Fred Minagar, MS, RCE, PE, FITE

President/Project Manager

CONDITIONAL USE PERMIT–PLOT PLAN

IN THE UNINCORPORATED COMMUNITY OF BLOOMINGTON, IN THE COUNTY OF SAN BERNARDINO, STATE OF CALIFORNIA

BEING A SUBDIVISION OF THE WEST ½ OF LOT 380, ACCORDING TO MAP SHOWING SUBDIVISION OF LANDS BELONGING TO THE SEMI-TROPIC LAND AND WATER COMPANY, IN THE COUNTY OF SAN BERNARDINO, STATE OF CALIFORNIA, AS PER PLAT RECORDED IN BOOK 11,PAGE 12 OF MAPS, RECORDS OF SAID COUNTY.

LEGEND:

- CENTERLINE
- RIGHT–OF–WAY LINE
- PROPERTY LINE
- PROP. SIDEWALK
- PROP. CURB AND GUTTER
- PROP. SEWER
- PROP. WATER
- PROP. FIRE–WATER
- EXIST. CURB AND GUTTER
- EXIST. EDGE OF PAVEMENT
- EXIST. SWALE FLOWLINE
- EXIST. FENCE
- EXIST. VEGETATION LINE
- EXIST. SEWER
- EXIST. WATER
- EXIST. FIRE–WATER
- EXIST. UNDERGROUND ELECTRIC
- EXIST. OVERHEAD ELECTRIC
- EXIST. GAS
- 310 INDEX CONTOUR
- INTEGER CONTOUR
- 309.4 SPOT ELEVATION
- UTILITY POLE
- LIGHT POLE
- METER UTILITY
- P POST/BOLLARD
- SIGNS/FLAGS
- VALVE
- FIRE HYDRANT
- LANDSCAPE AREAS
- PATH OF TRAVEL
- PARKING LOT LIGHTS 20 FOOT TALL W/CONCRETE BASE

ABBREVIATIONS:

EP	EDGE OF PAVEMENT
TP	TOP OF PAVMENT
TC	TOP OF CURB
FS	FINISHED SURFACE
BW	BACK OF WALKWAY
PVMT.	PAVEMENT
FL	FLOWLINE
HP	HIGH POINT
FH	FIRE HYDRANT
PVC	POLY–VINYL CHLORIDE
CO	CLEAN–OUT
FF	FINISHED FLOOR
PE	PAD ELEVATION
AC	ASPHALTIC CONCRETE
AB	AGGREGATE BASE
C&G	CURB AND GUTTER
BCR	BEGIN CURB RETURN
ECR	END CURB RETURN
C/L	CENTER LINE
PROP.	PROPOSED
R/W	RIGHT OF WAY
S/W	SIDEWALK
PL	PROPERTY LINE
PP	POWER POLE
EX.	EXISTING
( )	EXISTING

UTILITIES:

CABLE TV AND INTERNET
SPECTRUM
10768 FOOTHILL BV., 170
855–558–6793

ELECTRICITY
SOUTHERN CALIFORNIA EDISON
7951 REDWOOD AVE.,
FONTANA, CA 92336
909–357–6103

NATURAL GAS
SOUTHERN CALIFORNIA GAS
9781 SIERRA AVE.
FONTANA, CA 92235
800–427–2200

WASTE DISPOSAL
BURRTEC WASTE AND RECYCLING SVCS.
1850 AGUA MANSA RD.
RIVERSIDE, CA 92509
951–786–0639

DOMESTIC WATER
WEST VALLEY WATER DISTRICT
855 W. BASELINE ROAD
RIALTO, CA 92376
909–875–1804

SANITARY SEWER
RIALTO WATER SERVICES
437 N. RIVERSIDE AVE.
RIALTO, CA 92376
909–820–2525

(IRRIGATION AND FARM TILE DRAIN LINES)
WEST VALLEY WATER DISTRICT
855 W. BASELINE ROAD
RIALTO, CA 92376
909–875–1804

Underground Service Alert
DIAL: 811
TWO WORKING DAYS BEFORE YOU DIG

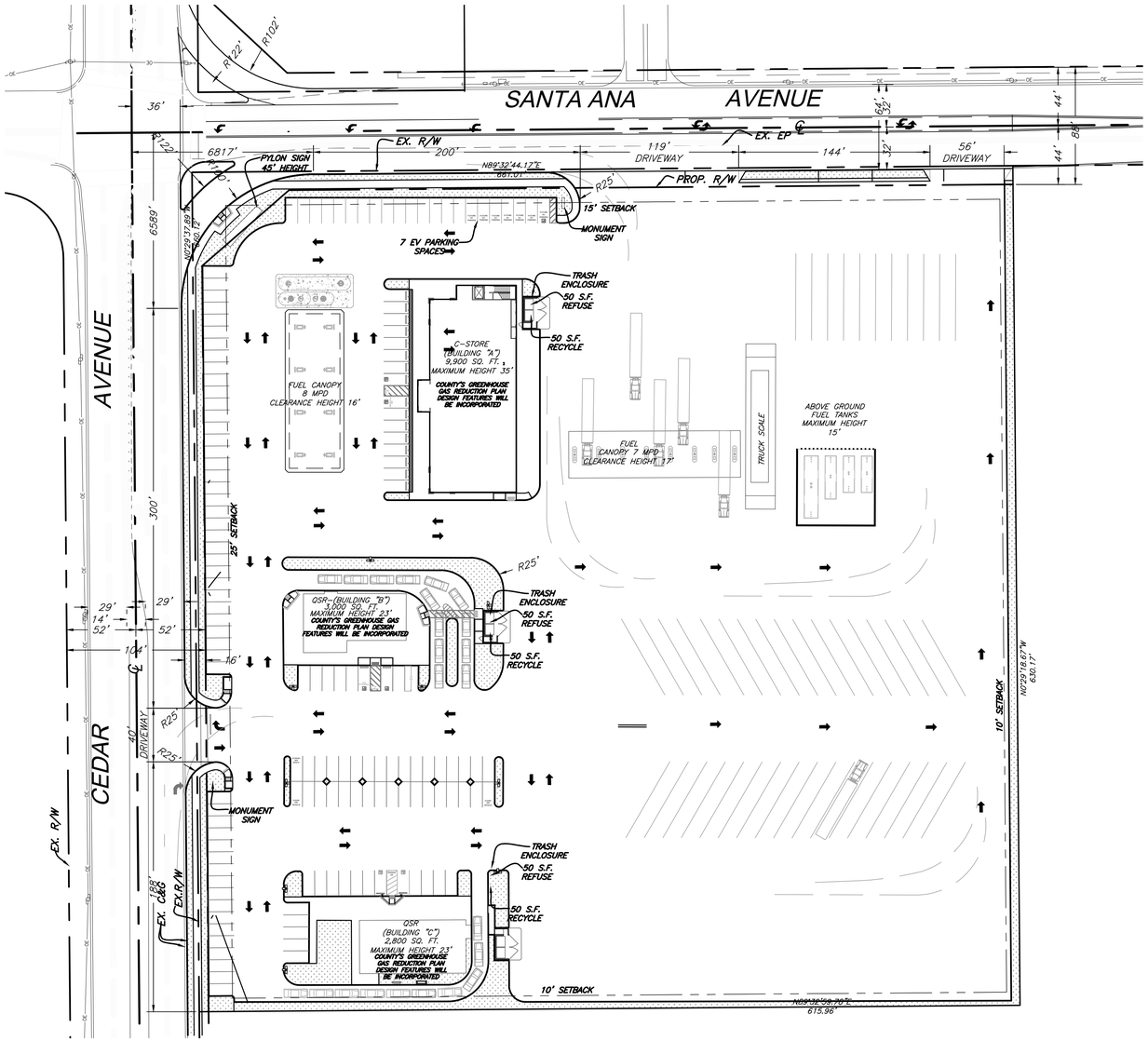

SCALE: 1"= 50'
0 25 50 100 150

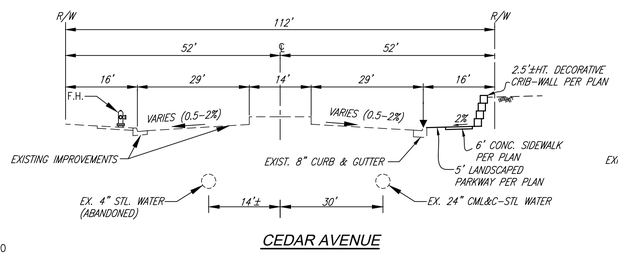

CEDAR AVENUE
NO SCALE

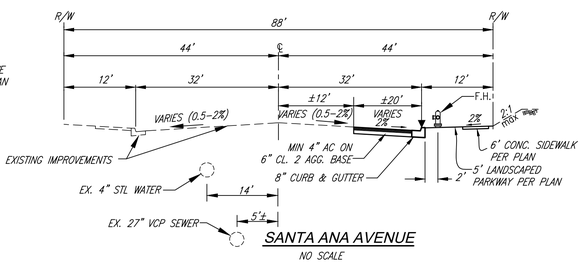

SANTA ANA AVENUE
NO SCALE

PARCEL:

LAND USE: COMMERCIAL
LOT SIZE: 8.9 ACRES

LOT COVERAGE:

LOT = 388,157.8597 SQ. FT. (8.9 ACRES)
15,700 / 388,157.8597 = 0.04

PROPOSED BUILDINGS:

BUILDING A: 9,900 SQ. FT. CONVENIENCE STORE W/ 8 MPD FUEL STATION & 7 DIESEL BAYS
BUILDING B: 3,000 SQ. FT. FAST FOOD RESTAURANT W/ DRIVE THRU
BUILDING C: 2,800 SQ. FT. FAST FOOD RESTAURANT W/ DRIVE THRU

PARKING ANALYSIS:

BUILDING TYPE	RATIO	AREA	SPACE REQ'D
GENERAL RETAIL	1 / 250 SQ. FT.	9,900 SQ. FT.	40
RESTAURANT	1 / 200 SQ. FT.	3,000 SQ. FT.	15
RESTAURANT	1 / 200 SQ. FT.	2,800 SQ. FT.	14
GAS STATION	1 PER PUMP ISLAND	8 PUMP ISLANDS	8
TRUCK STATION	1 PER PUMP ISLAND	7 PUMP ISLANDS	7

TOTAL PARKING REQUIRED = 84
TOTAL PARKING PROVIDED = 149

TOTAL ADA PARKING REQUIRED = 4
TOTAL ADA PARKING PROVIDED = 6

TOTAL TRUCK PARKING PROVIDED = 40

REGULATED NATIVE TREES OR PLANTS

IN COMPLIANCE WITH COUNTY CODE TITLE 8, DIVISION 8, THE SITE HAS BEEN SURVEYED FOR THE PRESENCE OF REGULATED NATIVE PLANTS AND TREES. AS OF THE TIME OF THIS SUBMITTAL, NO REGULATED NATIVE TREES OR PLANTS ARE FOUND WITHIN 100 FEET OF ANY AREA THAT WILL BE DISTURBED BY A PROPOSED ROADWAY, BUILDING SITE, OR OTHER LAND DISTURBING ACTIVITY ASSOCIATED WITH THIS PROJECT.

BASIS OF BEARINGS

CCS 83, ZONE 5 CALIFORNIA COORDINATE SYSTEM OF 1983

OFFICIAL USE ONLY

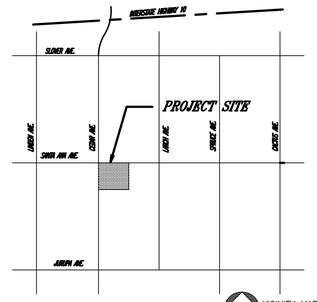

VICINITY MAP
N.T.S.

SITE ADDRESS:

10951 CEDAR AVENUE
BLOOMINGTON, CALIFORNIA 92316

EXISTING ZONING:

RS–1–AA SINGLE RESIDENTIAL / ADDITIONAL AGGRICULTURAL

EXISTING LAND USE:

VACANT LOT

PROPOSED LAND USE:

COMMERCIAL/RETAIL

LEGAL DESCRIPTION

THE WEST ½ OF LOT 380, ACCORDING TO MAP SHOWING SUBDIVISION OF LANDS BELONGING TO THE SEMI–TROPIC LAND AND WATER COMPANY, IN THE COUNTY OF SAN BERNARDINO, STATE OF CALIFORNIA, AS PER PLAT RECORDED IN BOOK 11, PAGE 12 OF MAPS, RECORDS OF SAID COUNTY.
EXCEPTING THEREFROM:
THE WEST 45 FEET AS DEEDED TO THE COUNTY OF SAN BERNARDINO, BY DOCUMENT RECORDED MARCH 22, 1957 IN BOOK 4186, PAGE 231 OF OFFICIAL RECORDS.
GROSS AND NET ACREAGE (8.9 ACRES)

ASSESSOR'S PARCEL NO:

0257–101–01

APPLICANT

BLACK GOLD BUILDERS GROUP, INC.
42270 SPECTRUM STREET INDIO,
CALIFORNIA 92203
(760) 396–9260

PROPERTY OWNER(S)

- HSIAO CHEN CHIU & SHUEH HUI WU CHIU 1/3 INTEREST
- HSIAO YEN CHIU & HUANG YU–CHIH CHIU TRUSTEES OF THE CHIU FAMILY TRUST, DATED 11–19–1998 1/3 INTEREST AS TENNANTS IN COMMON
- JEN WEI CHOW 1/3 INTEREST
  612 NORTH CLAREMONT STREET
  SAN MATEO, CA 94401
  (626) 377–6722

NO.	REVISION	APPROVED	DATE

BENCH MARK: CITY OF COLTON B.M. NO. 502 — ELEV.: ORTHO HT: (1070.912') NGVD29

LOCATION: 2" BRASS DISC SET IN CONC. S/W AT S/E. CORNER VALLEY BV. AND ACACIA AVE., 2.0' NW OF POWER POLE #1371579E AND 1.0' SOUTHEAST OF CURB

PREPARED UNDER THE DIRECT SUPERVISION OF: MARK CHAPPELL, PE R.C.E. NO: C-68972

Black Gold Engineering INC.
ENGINEERING • LAND SURVEY • DESIGN
42270 SPECTRUM STREET, INDIO, CALIFORNIA, 92203

DESIGN BY: MC	CITY CHECK	RIGHT-OF-WAY	INITIAL	DATE	
DRAWN BY: MC		TRAFFIC ENG'G			
REVIEWED BY: MC	DATE	FIELD ENG'G			

PREPARED BY: MARK CHAPPELL, PE
R.C.E. NO: C-68972 — DATE

APPROVED BY: CITY ENGINEER
R.C.E. NO. — DATE

COUNTY OF SAN BERNARDINO, CALIFORNIA
BLOOMINGTON COMMERCIAL CENTER

FILE NO.
DWG. NO.
CADD FILE NAME: TENTATIVE MAP.DWG
SHEET 1 OF 1 SHTS.

Project Trip Distribution

LEGEND

(#) STUDIED INTERSECTION

##% AM / PM INBOUND

(##%) (AM / PM OUTBOUND)

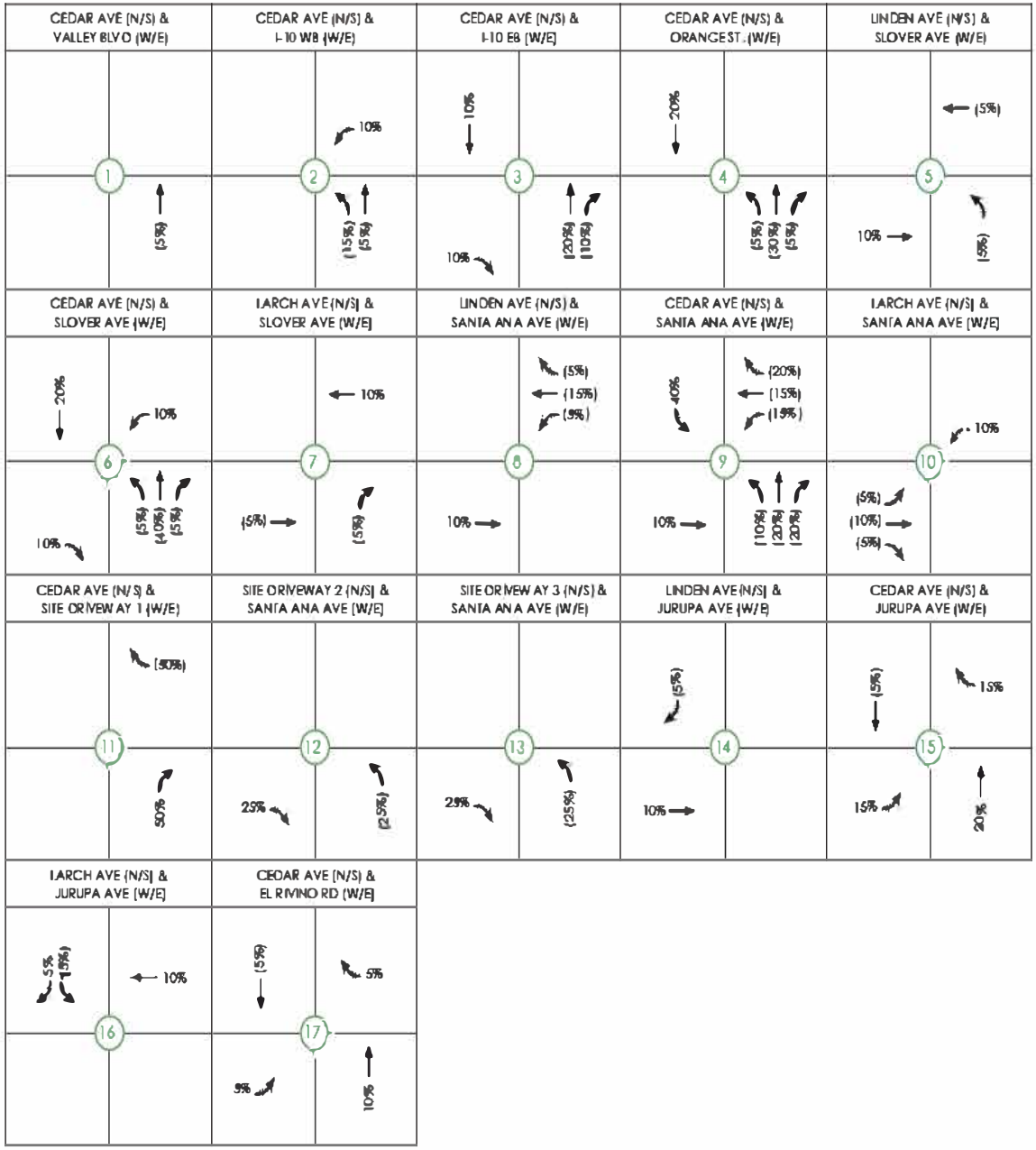

Project Trip Assignment

LEGEND

#	STUDIED INTERSECTION
##%	AM / PM INBOUND
(##%)	(AM / PM OUTBOUND)

CEDAR AVE (N/S) & VALLEY BLVD (W/E)	CEDAR AVE (N/S) & I-10 WB (W/E)	CEDAR AVE (N/S) & I-10 EB (W/E)	CEDAR AVE (N/S) & ORANGE ST. (W/E)	LINDEN AVE (N/S) & SLOVER AVE (W/E)
1 9/8	2 19/16 28/24 9/8	3 19/16 19/16 37/32 19/16	4 37/32 9/8 56/48 9/8	5 9/8 19/16 9/8
CEDAR AVE (N/S) & SLOVER AVE (W/E)	**LARCH AVE (N/S) & SLOVER AVE (W/E)**	**LINDEN AVE (N/S) & SANTA ANA AVE (W/E)**	**CEDAR AVE (N/S) & SANTA ANA AVE (W/E)**	**LARCH AVE (N/S) & SANTA ANA AVE (W/E)**
6 37/32 19/16 19/16 9/8 74/64 9/8	7 19/16 9/8 9/8	8 9/8 28/24 9/8 19/16	9 75/64 37/32 28/24 28/24 19/16 28/25 55/49 55/49	10 19/16 9/8 19/16 9/8
CEDAR AVE (N/S) & SITE DRIVEWAY 1 (W/E)	**SITE DRIVEWAY 2 (N/S) & SANTA ANA AVE (W/E)**	**SITE DRIVEWAY 3 (N/S) & SANTA ANA AVE (W/E)**	**LINDEN AVE (N/S) & JURUPA AVE (W/E)**	**CEDAR AVE(N/S) & JURUPA AVE (W/E)**
11 93/80 94/81	12 47/40 46/40	13 47/40 46/40	14 9/8 19/16	15 9/8 28/24 28/24 37/32
LARCH AVE (N/S) & JURUPA AVE (W/E)	**CEDAR AVE (N/S) & EL RIVINO RD (W/E)**			
16 9/8 9/8 19/16	17 9/8 9/8 9/8 19/16			

NOTE: VOLUMES FOR EACH PROJECT TRIP VOLUME AT EACH INTERSECTION ARE ROUNDED TO THE NEXT WHOLE DIGIT.

Appendix B: Traffic Counts

Counts Unlimited
PO Box 1178
Corona, CA 92878
(951) 268-6268

City of San Bernardino
N/S: Cedar Avenue
E/W: Valley Boulevard
Weather: Clear

File Name : 01_CSB_Cedar_Valley AM
Site Code : 04520047
Start Date : 1/23/2020
Page No : 1

Groups Printed- Passenger Vehicles - Large 2 Axle Vehicles - 3 Axle Vehicles - 4+ Axle Trucks

	Cedar Avenue Southbound				Valley Boulevard Westbound				Cedar Avenue Northbound				Valley Boulevard Eastbound				
Start Time	Left	Thru	Right	App. Total	Left	Thru	Right	App. Total	Left	Thru	Right	App. Total	Left	Thru	Right	App. Total	Int. Total
07:00 AM	3	330	4	337	80	36	5	121	64	271	41	376	7	24	120	151	985
07:15 AM	10	309	3	322	77	36	5	118	73	257	55	385	9	32	140	181	1006
07:30 AM	12	295	5	312	77	82	7	166	72	239	69	380	12	52	141	205	1063
07:45 AM	18	281	9	308	85	93	16	194	122	222	59	403	17	50	109	176	1081
Total	43	1215	21	1279	319	247	33	599	331	989	224	1544	45	158	510	713	4135
08:00 AM	6	290	7	303	96	56	6	158	92	195	45	332	11	29	100	140	933
08:15 AM	7	284	14	305	69	52	8	129	89	189	43	321	9	36	94	139	894
08:30 AM	13	262	19	294	58	44	7	109	86	179	42	307	15	26	90	131	841
08:45 AM	15	247	22	284	62	47	5	114	98	194	42	334	12	42	82	136	868
Total	41	1083	62	1186	285	199	26	510	365	757	172	1294	47	133	366	546	3536
Grand Total	84	2298	83	2465	604	446	59	1109	696	1746	396	2838	92	291	876	1259	7671
Apprch %	3.4	93.2	3.4		54.5	40.2	5.3		24.5	61.5	14		7.3	23.1	69.6		
Total %	1.1	30	1.1	32.1	7.9	5.8	0.8	14.5	9.1	22.8	5.2	37	1.2	3.8	11.4	16.4	
Passenger Vehicles	73	2155	77	2305	578	430	54	1062	655	1615	364	2634	87	267	842	1196	7197
% Passenger Vehicles	86.9	93.8	92.8	93.5	95.7	96.4	91.5	95.8	94.1	92.5	91.9	92.8	94.6	91.8	96.1	95	93.8
Large 2 Axle Vehicles	6	50	2	58	13	9	2	24	26	64	17	107	2	11	20	33	222
% Large 2 Axle Vehicles	7.1	2.2	2.4	2.4	2.2	2	3.4	2.2	3.7	3.7	4.3	3.8	2.2	3.8	2.3	2.6	2.9
3 Axle Vehicles	1	50	1	52	6	4	1	11	4	17	5	26	0	7	6	13	102
% 3 Axle Vehicles	1.2	2.2	1.2	2.1	1	0.9	1.7	1	0.6	1	1.3	0.9	0	2.4	0.7	1	1.3
4+ Axle Trucks	4	43	3	50	7	3	2	12	11	50	10	71	3	6	8	17	150
% 4+ Axle Trucks	4.8	1.9	3.6	2	1.2	0.7	3.4	1.1	1.6	2.9	2.5	2.5	3.3	2.1	0.9	1.4	2

	Cedar Avenue Southbound				Valley Boulevard Westbound				Cedar Avenue Northbound				Valley Boulevard Eastbound				
Start Time	Left	Thru	Right	App. Total	Left	Thru	Right	App. Total	Left	Thru	Right	App. Total	Left	Thru	Right	App. Total	Int. Total
Peak Hour Analysis From 07:00 AM to 08:45 AM - Peak 1 of 1																	
Peak Hour for Entire Intersection Begins at 07:00 AM																	
07:00 AM	3	**330**	4	**337**	80	36	5	121	64	**271**	41	376	7	24	120	151	985
07:15 AM	10	309	3	322	77	36	5	118	73	257	55	385	9	32	140	181	1006
07:30 AM	12	295	5	312	77	82	7	166	72	239	**69**	380	12	**52**	**141**	**205**	1063
07:45 AM	**18**	281	**9**	308	**85**	**93**	**16**	**194**	**122**	222	59	**403**	**17**	50	109	176	**1081**
Total Volume	43	1215	21	1279	319	247	33	599	331	989	224	1544	45	158	510	713	4135
% App. Total	3.4	95	1.6		53.3	41.2	5.5		21.4	64.1	14.5		6.3	22.2	71.5		
PHF	.597	.920	.583	.949	.938	.664	.516	.772	.678	.912	.812	.958	.662	.760	.904	.870	.956

Counts Unlimited
PO Box 1178
Corona, CA 92878
(951) 268-6268

City of San Bernardino
N/S: Cedar Avenue
E/W: Valley Boulevard
Weather: Clear

File Name : 01_CSB_Cedar_Valley AM
Site Code : 04520047
Start Date : 1/23/2020
Page No : 2

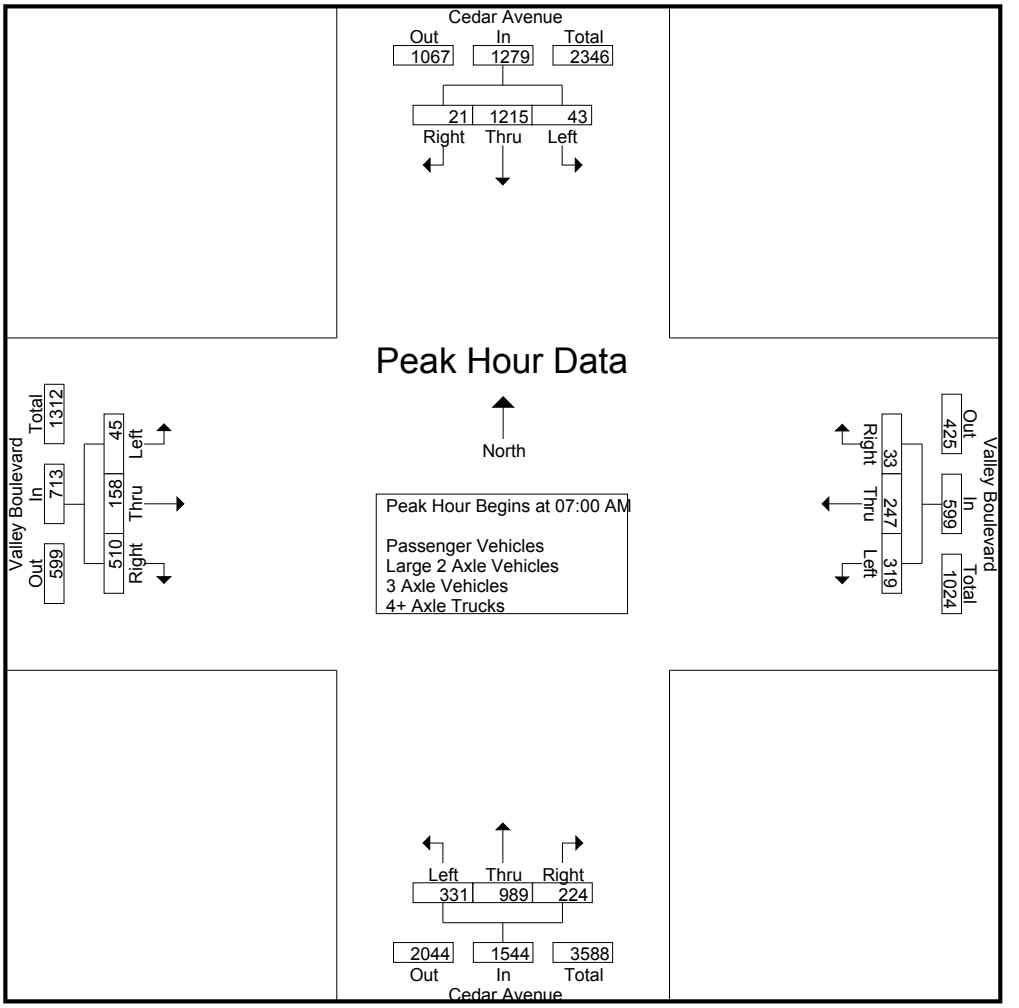

Peak Hour Analysis From 07:00 AM to 08:45 AM - Peak 1 of 1
Peak Hour for Each Approach Begins at:

	07:00 AM				07:30 AM				07:00 AM				07:00 AM			
+0 mins.	3	**330**	4	**337**	77	82	7	166	64	**271**	41	376	7	24	120	151
+15 mins.	10	309	3	322	85	**93**	**16**	**194**	73	257	55	385	9	32	140	181
+30 mins.	12	295	5	312	**96**	56	6	158	72	239	**69**	380	12	**52**	**141**	**205**
+45 mins.	**18**	281	**9**	308	69	52	8	129	**122**	222	59	**403**	**17**	50	109	176
Total Volume	43	1215	21	1279	327	283	37	647	331	989	224	1544	45	158	510	713
% App. Total	3.4	95	1.6		50.5	43.7	5.7		21.4	64.1	14.5		6.3	22.2	71.5	
PHF	.597	.920	.583	.949	.852	.761	.578	.834	.678	.912	.812	.958	.662	.760	.904	.870

Counts Unlimited
PO Box 1178
Corona, CA 92878
(951) 268-6268

City of San Bernardino
N/S: Cedar Avenue
E/W: Valley Boulevard
Weather: Clear

File Name : 01_CSB_Cedar_Valley AM
Site Code : 04520047
Start Date : 1/23/2020
Page No : 1

Groups Printed- Passenger Vehicles

	Cedar Avenue Southbound				Valley Boulevard Westbound				Cedar Avenue Northbound				Valley Boulevard Eastbound				
Start Time	Left	Thru	Right	App. Total	Left	Thru	Right	App. Total	Left	Thru	Right	App. Total	Left	Thru	Right	App. Total	Int. Total
07:00 AM	3	317	4	324	77	36	5	118	58	257	40	355	7	20	118	145	942
07:15 AM	10	292	3	305	74	32	4	110	69	248	53	370	9	29	135	173	958
07:30 AM	10	276	5	291	75	80	7	162	69	224	66	359	12	47	134	193	1005
07:45 AM	18	272	8	298	83	91	12	186	116	202	55	373	16	48	104	168	1025
Total	41	1157	20	1218	309	239	28	576	312	931	214	1457	44	144	491	679	3930
08:00 AM	5	268	5	278	93	55	6	154	88	178	37	303	11	25	94	130	865
08:15 AM	6	265	14	285	64	48	8	120	86	175	38	299	8	32	90	130	834
08:30 AM	11	243	19	273	52	43	7	102	77	158	37	272	13	26	89	128	775
08:45 AM	10	222	19	251	60	45	5	110	92	173	38	303	11	40	78	129	793
Total	32	998	57	1087	269	191	26	486	343	684	150	1177	43	123	351	517	3267
Grand Total	73	2155	77	2305	578	430	54	1062	655	1615	364	2634	87	267	842	1196	7197
Apprch %	3.2	93.5	3.3		54.4	40.5	5.1		24.9	61.3	13.8		7.3	22.3	70.4		
Total %	1	29.9	1.1	32	8	6	0.8	14.8	9.1	22.4	5.1	36.6	1.2	3.7	11.7	16.6	

	Cedar Avenue Southbound				Valley Boulevard Westbound				Cedar Avenue Northbound				Valley Boulevard Eastbound				
Start Time	Left	Thru	Right	App. Total	Left	Thru	Right	App. Total	Left	Thru	Right	App. Total	Left	Thru	Right	App. Total	Int. Total
Peak Hour Analysis From 07:00 AM to 07:45 AM - Peak 1 of 1																	
Peak Hour for Entire Intersection Begins at 07:00 AM																	
07:00 AM	3	**317**	4	**324**	77	36	5	118	58	**257**	40	355	7	20	118	145	942
07:15 AM	10	292	3	305	74	32	4	110	69	248	53	370	9	29	**135**	173	958
07:30 AM	10	276	5	291	75	80	7	162	69	224	**66**	359	12	47	134	**193**	1005
07:45 AM	**18**	272	**8**	298	**83**	**91**	**12**	**186**	**116**	202	55	**373**	**16**	**48**	104	168	**1025**
Total Volume	41	1157	20	1218	309	239	28	576	312	931	214	1457	44	144	491	679	3930
% App. Total	3.4	95	1.6		53.6	41.5	4.9		21.4	63.9	14.7		6.5	21.2	72.3		
PHF	.569	.912	.625	.940	.931	.657	.583	.774	.672	.906	.811	.977	.688	.750	.909	.880	.959

Counts Unlimited
PO Box 1178
Corona, CA 92878
(951) 268-6268

City of San Bernardino
N/S: Cedar Avenue
E/W: Valley Boulevard
Weather: Clear

File Name : 01_CSB_Cedar_Valley AM
Site Code : 04520047
Start Date : 1/23/2020
Page No : 2

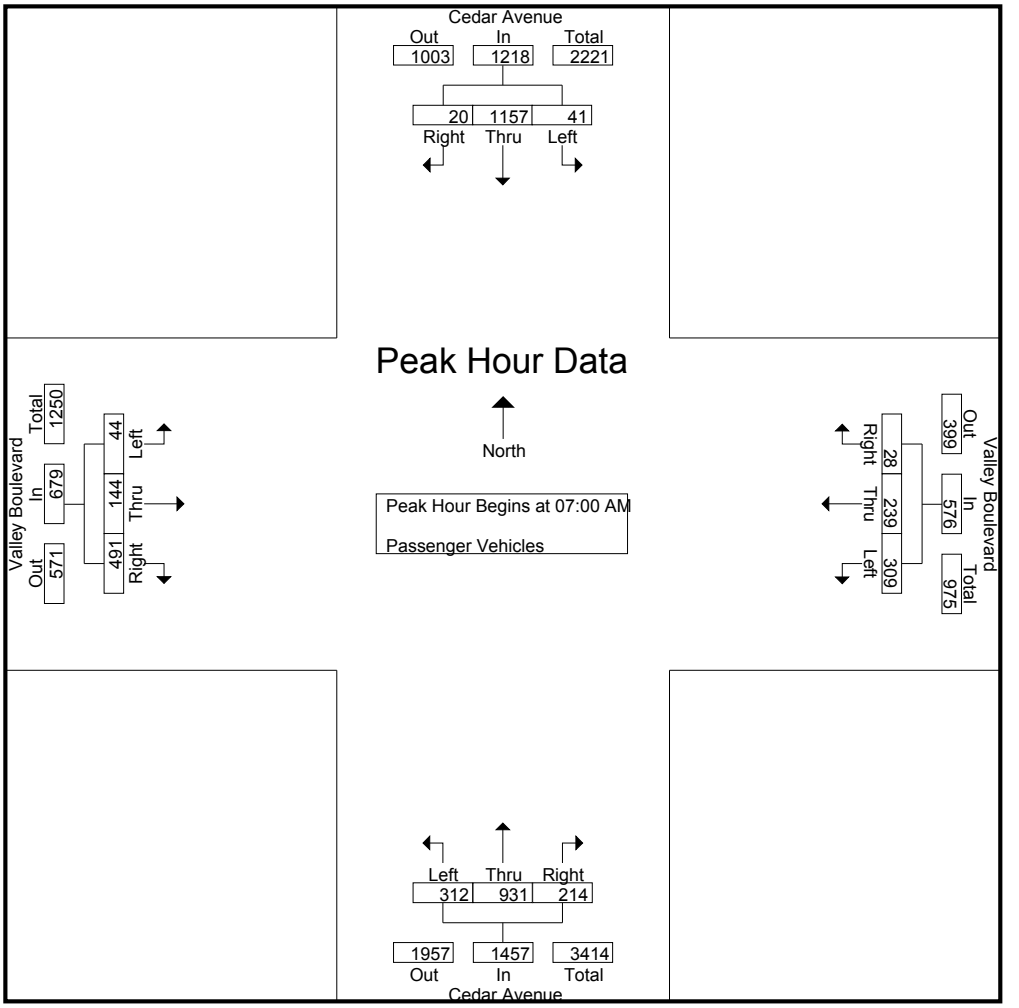

Peak Hour Analysis From 07:00 AM to 07:45 AM - Peak 1 of 1
Peak Hour for Each Approach Begins at:

	07:00 AM				07:00 AM				07:00 AM				07:00 AM			
+0 mins.	3	**317**	4	**324**	77	36	5	118	58	**257**	40	355	7	20	118	145
+15 mins.	10	292	3	305	74	32	4	110	69	248	53	370	9	29	**135**	173
+30 mins.	10	276	5	291	75	80	7	162	69	224	**66**	359	12	47	134	**193**
+45 mins.	**18**	272	**8**	298	**83**	**91**	**12**	**186**	**116**	202	55	**373**	**16**	**48**	104	168
Total Volume	41	1157	20	1218	309	239	28	576	312	931	214	1457	44	144	491	679
% App. Total	3.4	95	1.6		53.6	41.5	4.9		21.4	63.9	14.7		6.5	21.2	72.3	
PHF	.569	.912	.625	.940	.931	.657	.583	.774	.672	.906	.811	.977	.688	.750	.909	.880

Counts Unlimited
PO Box 1178
Corona, CA 92878
(951) 268-6268

City of San Bernardino
N/S: Cedar Avenue
E/W: Valley Boulevard
Weather: Clear

File Name : 01_CSB_Cedar_Valley AM
Site Code : 04520047
Start Date : 1/23/2020
Page No : 1

Groups Printed- Large 2 Axle Vehicles

	Cedar Avenue Southbound				Valley Boulevard Westbound				Cedar Avenue Northbound				Valley Boulevard Eastbound				
Start Time	Left	Thru	Right	App. Total	Left	Thru	Right	App. Total	Left	Thru	Right	App. Total	Left	Thru	Right	App. Total	Int. Total
07:00 AM	0	6	0	6	1	0	0	1	4	11	1	16	0	2	2	4	27
07:15 AM	0	6	0	6	2	3	0	5	2	3	1	6	0	0	3	3	20
07:30 AM	2	7	0	9	1	0	0	1	1	7	2	10	0	3	5	8	28
07:45 AM	0	2	0	2	1	1	2	4	4	3	3	10	0	1	1	2	18
Total	2	21	0	23	5	4	2	11	11	24	7	42	0	6	11	17	93
08:00 AM	0	8	1	9	1	1	0	2	2	14	4	20	0	2	2	4	35
08:15 AM	0	8	0	8	2	2	0	4	1	4	3	8	0	2	2	4	24
08:30 AM	0	5	0	5	4	1	0	5	8	10	2	20	1	0	1	2	32
08:45 AM	4	8	1	13	1	1	0	2	4	12	1	17	1	1	4	6	38
Total	4	29	2	35	8	5	0	13	15	40	10	65	2	5	9	16	129
Grand Total	6	50	2	58	13	9	2	24	26	64	17	107	2	11	20	33	222
Apprch %	10.3	86.2	3.4		54.2	37.5	8.3		24.3	59.8	15.9		6.1	33.3	60.6		
Total %	2.7	22.5	0.9	26.1	5.9	4.1	0.9	10.8	11.7	28.8	7.7	48.2	0.9	5	9	14.9	

	Cedar Avenue Southbound				Valley Boulevard Westbound				Cedar Avenue Northbound				Valley Boulevard Eastbound				
Start Time	Left	Thru	Right	App. Total	Left	Thru	Right	App. Total	Left	Thru	Right	App. Total	Left	Thru	Right	App. Total	Int. Total
Peak Hour Analysis From 07:00 AM to 07:45 AM - Peak 1 of 1																	
Peak Hour for Entire Intersection Begins at 07:00 AM																	
07:00 AM	0	6	0	6	1	0	0	1	**4**	**11**	1	**16**	0	2	2	4	27
07:15 AM	0	6	0	6	**2**	**3**	0	**5**	2	3	1	6	0	0	3	3	20
07:30 AM	**2**	**7**	0	**9**	1	0	0	1	1	7	2	10	0	**3**	**5**	**8**	**28**
07:45 AM	0	2	0	2	1	1	**2**	4	4	3	**3**	10	0	1	1	2	18
Total Volume	2	21	0	23	5	4	2	11	11	24	7	42	0	6	11	17	93
% App. Total	8.7	91.3	0		45.5	36.4	18.2		26.2	57.1	16.7		0	35.3	64.7		
PHF	.250	.750	.000	.639	.625	.333	.250	.550	.688	.545	.583	.656	.000	.500	.550	.531	.830

Counts Unlimited
PO Box 1178
Corona, CA 92878
(951) 268-6268

City of San Bernardino
N/S: Cedar Avenue
E/W: Valley Boulevard
Weather: Clear

File Name : 01_CSB_Cedar_Valley AM
Site Code : 04520047
Start Date : 1/23/2020
Page No : 2

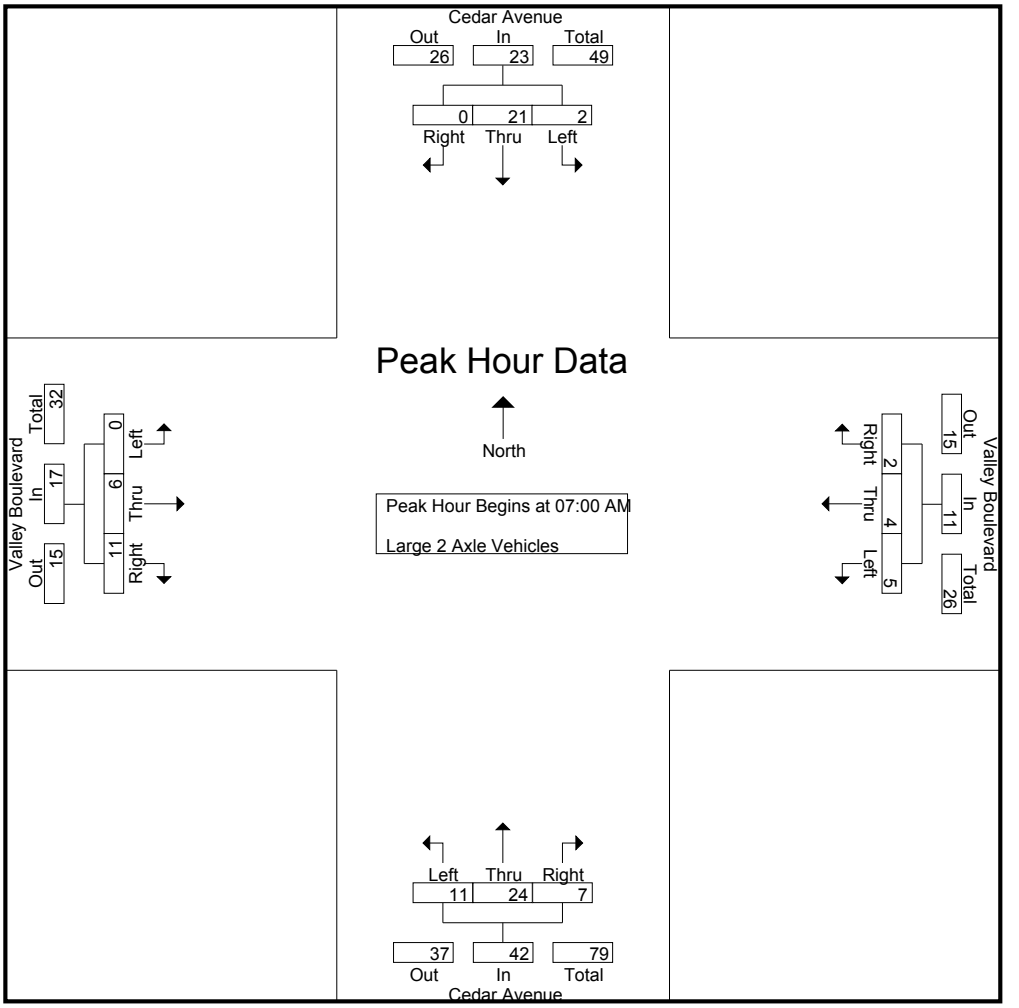

Peak Hour Analysis From 07:00 AM to 07:45 AM - Peak 1 of 1
Peak Hour for Each Approach Begins at:

	07:00 AM				07:00 AM				07:00 AM				07:00 AM			
+0 mins.	0	6	0	6	1	0	0	1	**4**	**11**	1	**16**	0	2	2	4
+15 mins.	0	6	0	6	**2**	**3**	0	**5**	2	3	1	6	0	0	3	3
+30 mins.	**2**	**7**	0	**9**	1	0	0	1	1	7	2	10	0	**3**	**5**	**8**
+45 mins.	0	2	0	2	1	1	**2**	4	4	3	**3**	10	0	1	1	2
Total Volume	2	21	0	23	5	4	2	11	11	24	7	42	0	6	11	17
% App. Total	8.7	91.3	0		45.5	36.4	18.2		26.2	57.1	16.7		0	35.3	64.7	
PHF	.250	.750	.000	.639	.625	.333	.250	.550	.688	.545	.583	.656	.000	.500	.550	.531

Counts Unlimited
PO Box 1178
Corona, CA 92878
(951) 268-6268

City of San Bernardino
N/S: Cedar Avenue
E/W: Valley Boulevard
Weather: Clear

File Name : 01_CSB_Cedar_Valley AM
Site Code : 04520047
Start Date : 1/23/2020
Page No : 1

Groups Printed- 3 Axle Vehicles

	Cedar Avenue Southbound				Valley Boulevard Westbound				Cedar Avenue Northbound				Valley Boulevard Eastbound				
Start Time	Left	Thru	Right	App. Total	Left	Thru	Right	App. Total	Left	Thru	Right	App. Total	Left	Thru	Right	App. Total	Int. Total
07:00 AM	0	6	0	6	1	0	0	1	1	0	0	1	0	2	0	2	10
07:15 AM	0	6	0	6	0	0	0	0	0	0	1	1	0	2	1	3	10
07:30 AM	0	7	0	7	0	0	0	0	0	4	0	4	0	0	0	0	11
07:45 AM	0	2	0	2	0	1	1	2	0	3	0	3	0	1	1	2	9
Total	0	21	0	21	1	1	1	3	1	7	1	9	0	5	2	7	40
08:00 AM	1	8	0	9	2	0	0	2	2	1	1	4	0	0	3	3	18
08:15 AM	0	8	0	8	2	2	0	4	1	4	0	5	0	1	1	2	19
08:30 AM	0	5	0	5	1	0	0	1	0	5	2	7	0	0	0	0	13
08:45 AM	0	8	1	9	0	1	0	1	0	0	1	1	0	1	0	1	12
Total	1	29	1	31	5	3	0	8	3	10	4	17	0	2	4	6	62
Grand Total	1	50	1	52	6	4	1	11	4	17	5	26	0	7	6	13	102
Apprch %	1.9	96.2	1.9		54.5	36.4	9.1		15.4	65.4	19.2		0	53.8	46.2		
Total %	1	49	1	51	5.9	3.9	1	10.8	3.9	16.7	4.9	25.5	0	6.9	5.9	12.7	

	Cedar Avenue Southbound				Valley Boulevard Westbound				Cedar Avenue Northbound				Valley Boulevard Eastbound				
Start Time	Left	Thru	Right	App. Total	Left	Thru	Right	App. Total	Left	Thru	Right	App. Total	Left	Thru	Right	App. Total	Int. Total
Peak Hour Analysis From 07:00 AM to 07:45 AM - Peak 1 of 1																	
Peak Hour for Entire Intersection Begins at 07:00 AM																	
07:00 AM	0	6	0	6	**1**	0	0	1	**1**	0	0	1	0	**2**	0	2	10
07:15 AM	0	6	0	6	0	0	0	0	0	0	**1**	1	0	2	**1**	**3**	10
07:30 AM	0	**7**	0	**7**	0	0	0	0	0	**4**	0	**4**	0	0	0	0	**11**
07:45 AM	0	2	0	2	0	**1**	**1**	**2**	0	3	0	3	0	1	1	2	9
Total Volume	0	21	0	21	1	1	1	3	1	7	1	9	0	5	2	7	40
% App. Total	0	100	0		33.3	33.3	33.3		11.1	77.8	11.1		0	71.4	28.6		
PHF	.000	.750	.000	.750	.250	.250	.250	.375	.250	.438	.250	.563	.000	.625	.500	.583	.909

Counts Unlimited
PO Box 1178
Corona, CA 92878
(951) 268-6268

City of San Bernardino
N/S: Cedar Avenue
E/W: Valley Boulevard
Weather: Clear

File Name : 01_CSB_Cedar_Valley AM
Site Code : 04520047
Start Date : 1/23/2020
Page No : 2

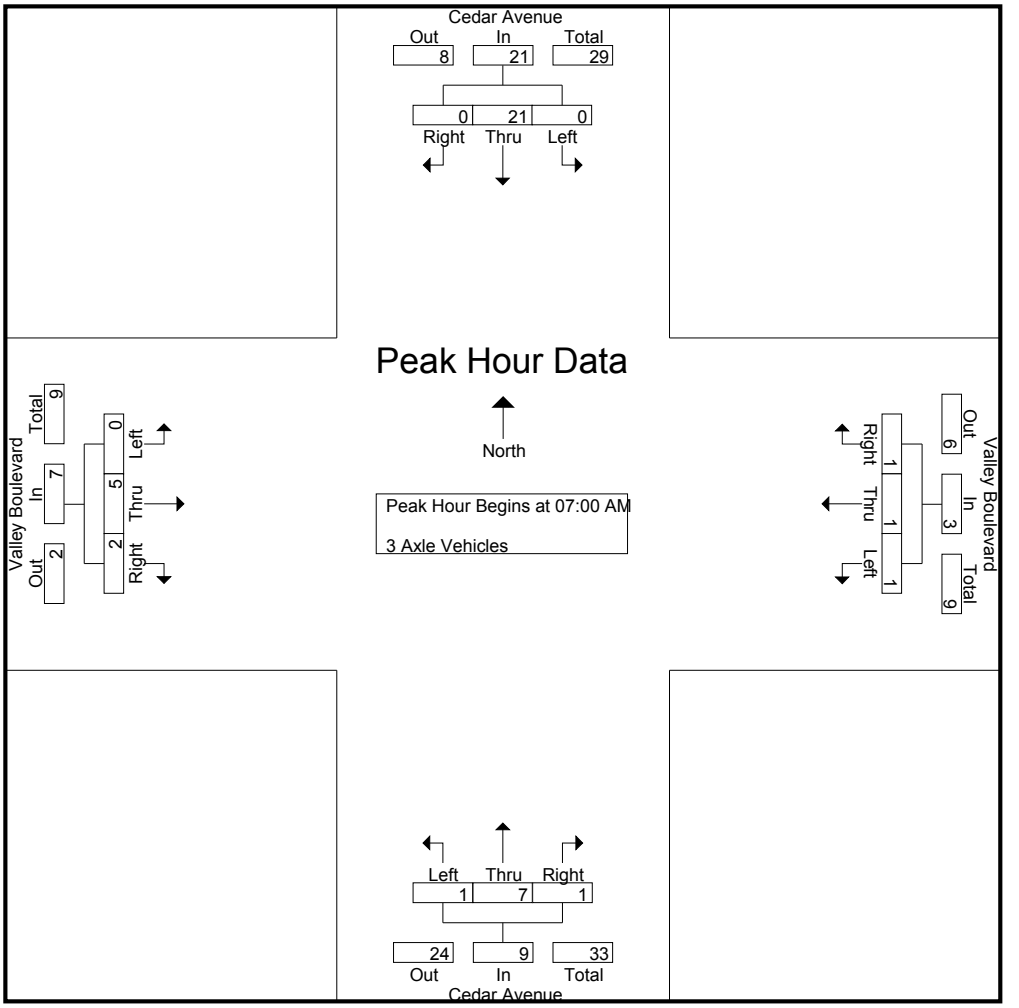

Peak Hour Analysis From 07:00 AM to 07:45 AM - Peak 1 of 1
Peak Hour for Each Approach Begins at:

	07:00 AM				07:00 AM				07:00 AM				07:00 AM			
+0 mins.	0	6	0	6	**1**	0	0	1	**1**	0	0	1	0	**2**	0	2
+15 mins.	0	6	0	6	0	0	0	0	0	0	**1**	1	0	2	**1**	**3**
+30 mins.	0	**7**	0	**7**	0	0	0	0	0	**4**	0	**4**	0	0	0	0
+45 mins.	0	2	0	2	0	**1**	**1**	**2**	0	3	0	3	0	1	1	2
Total Volume	0	21	0	21	1	1	1	3	1	7	1	9	0	5	2	7
% App. Total	0	100	0		33.3	33.3	33.3		11.1	77.8	11.1		0	71.4	28.6	
PHF	.000	.750	.000	.750	.250	.250	.250	.375	.250	.438	.250	.563	.000	.625	.500	.583

Counts Unlimited
PO Box 1178
Corona, CA 92878
(951) 268-6268

City of San Bernardino
N/S: Cedar Avenue
E/W: Valley Boulevard
Weather: Clear

File Name : 01_CSB_Cedar_Valley AM
Site Code : 04520047
Start Date : 1/23/2020
Page No : 1

Groups Printed- 4+ Axle Trucks

	Cedar Avenue Southbound				Valley Boulevard Westbound				Cedar Avenue Northbound				Valley Boulevard Eastbound				
Start Time	Left	Thru	Right	App. Total	Left	Thru	Right	App. Total	Left	Thru	Right	App. Total	Left	Thru	Right	App. Total	Int. Total
07:00 AM	0	1	0	1	1	0	0	1	1	3	0	4	0	0	0	0	6
07:15 AM	0	5	0	5	1	1	1	3	2	6	0	8	0	1	1	2	18
07:30 AM	0	5	0	5	1	2	0	3	2	4	1	7	0	2	2	4	19
07:45 AM	0	5	1	6	1	0	1	2	2	14	1	17	1	0	3	4	29
Total	0	16	1	17	4	3	2	9	7	27	2	36	1	3	6	10	72
08:00 AM	0	6	1	7	0	0	0	0	0	2	3	5	0	2	1	3	15
08:15 AM	1	3	0	4	1	0	0	1	1	6	2	9	1	1	1	3	17
08:30 AM	2	9	0	11	1	0	0	1	1	6	1	8	1	0	0	1	21
08:45 AM	1	9	1	11	1	0	0	1	2	9	2	13	0	0	0	0	25
Total	4	27	2	33	3	0	0	3	4	23	8	35	2	3	2	7	78
Grand Total	4	43	3	50	7	3	2	12	11	50	10	71	3	6	8	17	150
Apprch %	8	86	6		58.3	25	16.7		15.5	70.4	14.1		17.6	35.3	47.1		
Total %	2.7	28.7	2	33.3	4.7	2	1.3	8	7.3	33.3	6.7	47.3	2	4	5.3	11.3	

	Cedar Avenue Southbound				Valley Boulevard Westbound				Cedar Avenue Northbound				Valley Boulevard Eastbound				
Start Time	Left	Thru	Right	App. Total	Left	Thru	Right	App. Total	Left	Thru	Right	App. Total	Left	Thru	Right	App. Total	Int. Total
Peak Hour Analysis From 07:00 AM to 07:45 AM - Peak 1 of 1																	
Peak Hour for Entire Intersection Begins at 07:00 AM																	
07:00 AM	0	1	0	1	**1**	0	0	1	1	3	0	4	0	0	0	0	6
07:15 AM	0	**5**	0	5	1	1	**1**	**3**	**2**	6	0	8	0	1	1	2	18
07:30 AM	0	5	0	5	1	**2**	0	3	2	4	**1**	7	0	**2**	2	**4**	19
07:45 AM	0	5	**1**	**6**	1	0	1	2	2	**14**	1	**17**	**1**	0	**3**	4	**29**
Total Volume	0	16	1	17	4	3	2	9	7	27	2	36	1	3	6	10	72
% App. Total	0	94.1	5.9		44.4	33.3	22.2		19.4	75	5.6		10	30	60		
PHF	.000	.800	.250	.708	1.00	.375	.500	.750	.875	.482	.500	.529	.250	.375	.500	.625	.621

Counts Unlimited
PO Box 1178
Corona, CA 92878
(951) 268-6268

City of San Bernardino
N/S: Cedar Avenue
E/W: Valley Boulevard
Weather: Clear

File Name : 01_CSB_Cedar_Valley AM
Site Code : 04520047
Start Date : 1/23/2020
Page No : 2

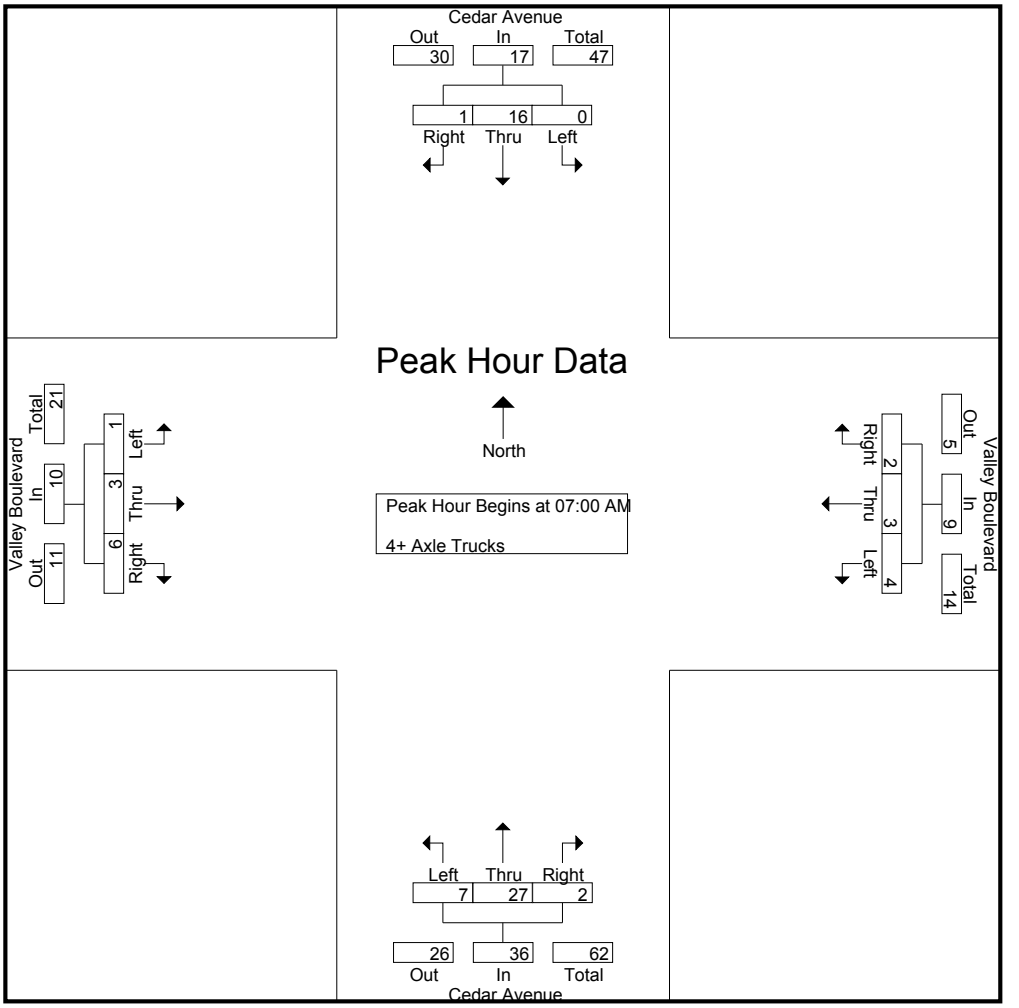

Peak Hour Analysis From 07:00 AM to 07:45 AM - Peak 1 of 1
Peak Hour for Each Approach Begins at:

	07:00 AM				07:00 AM				07:00 AM				07:00 AM			
+0 mins.	0	1	0	1	**1**	0	0	1	1	3	0	4	0	0	0	0
+15 mins.	0	**5**	0	5	1	1	**1**	**3**	**2**	6	0	8	0	1	1	2
+30 mins.	0	5	0	5	1	**2**	0	3	2	4	**1**	7	0	**2**	2	**4**
+45 mins.	0	5	**1**	**6**	1	0	1	2	2	**14**	1	**17**	**1**	0	**3**	4
Total Volume	0	16	1	17	4	3	2	9	7	27	2	36	1	3	6	10
% App. Total	0	94.1	5.9		44.4	33.3	22.2		19.4	75	5.6		10	30	60	
PHF	.000	.800	.250	.708	1.000	.375	.500	.750	.875	.482	.500	.529	.250	.375	.500	.625

Counts Unlimited
PO Box 1178
Corona, CA 92878
(951) 268-6268

City of San Bernardino
N/S: Cedar Avenue
E/W: Valley Boulevard
Weather: Clear

File Name : 01_CSB_Cedar_Valley PM
Site Code : 04520047
Start Date : 1/23/2020
Page No : 1

Groups Printed- Passenger Vehicles - Large 2 Axle Vehicles - 3 Axle Vehicles - 4+ Axle Trucks

	Cedar Avenue Southbound				Valley Boulevard Westbound				Cedar Avenue Northbound				Valley Boulevard Eastbound				
Start Time	Left	Thru	Right	App. Total	Left	Thru	Right	App. Total	Left	Thru	Right	App. Total	Left	Thru	Right	App. Total	Int. Total
04:00 PM	20	207	13	240	63	52	15	130	72	279	72	423	60	86	129	275	1068
04:15 PM	14	232	17	263	52	55	11	118	98	262	60	420	54	103	133	290	1091
04:30 PM	17	246	15	278	60	63	11	134	86	261	56	403	59	110	112	281	1096
04:45 PM	23	213	16	252	49	49	17	115	83	292	58	433	62	99	125	286	1086
Total	74	898	61	1033	224	219	54	497	339	1094	246	1679	235	398	499	1132	4341
05:00 PM	18	224	16	258	52	53	15	120	96	307	47	450	60	98	112	270	1098
05:15 PM	18	210	15	243	63	65	9	137	83	304	47	434	65	104	119	288	1102
05:30 PM	13	234	9	256	50	63	13	126	84	309	32	425	67	89	108	264	1071
05:45 PM	15	246	25	286	52	50	14	116	76	283	50	409	50	72	106	228	1039
Total	64	914	65	1043	217	231	51	499	339	1203	176	1718	242	363	445	1050	4310
Grand Total	138	1812	126	2076	441	450	105	996	678	2297	422	3397	477	761	944	2182	8651
Apprch %	6.6	87.3	6.1		44.3	45.2	10.5		20	67.6	12.4		21.9	34.9	43.3		
Total %	1.6	20.9	1.5	24	5.1	5.2	1.2	11.5	7.8	26.6	4.9	39.3	5.5	8.8	10.9	25.2	
Passenger Vehicles	131	1705	122	1958	431	435	96	962	644	2237	407	3288	471	746	907	2124	8332
% Passenger Vehicles	94.9	94.1	96.8	94.3	97.7	96.7	91.4	96.6	95	97.4	96.4	96.8	98.7	98	96.1	97.3	96.3
Large 2 Axle Vehicles	2	34	3	39	4	5	2	11	10	25	9	44	3	10	22	35	129
% Large 2 Axle Vehicles	1.4	1.9	2.4	1.9	0.9	1.1	1.9	1.1	1.5	1.1	2.1	1.3	0.6	1.3	2.3	1.6	1.5
3 Axle Vehicles	2	34	0	36	0	5	3	8	5	11	4	20	2	2	4	8	72
% 3 Axle Vehicles	1.4	1.9	0	1.7	0	1.1	2.9	0.8	0.7	0.5	0.9	0.6	0.4	0.3	0.4	0.4	0.8
4+ Axle Trucks	3	39	1	43	6	5	4	15	19	24	2	45	1	3	11	15	118
% 4+ Axle Trucks	2.2	2.2	0.8	2.1	1.4	1.1	3.8	1.5	2.8	1	0.5	1.3	0.2	0.4	1.2	0.7	1.4

	Cedar Avenue Southbound				Valley Boulevard Westbound				Cedar Avenue Northbound				Valley Boulevard Eastbound				
Start Time	Left	Thru	Right	App. Total	Left	Thru	Right	App. Total	Left	Thru	Right	App. Total	Left	Thru	Right	App. Total	Int. Total
Peak Hour Analysis From 04:00 PM to 05:45 PM - Peak 1 of 1																	
Peak Hour for Entire Intersection Begins at 04:30 PM																	
04:30 PM	17	**246**	15	**278**	60	63	11	134	86	261	56	403	59	**110**	112	281	1096
04:45 PM	**23**	213	**16**	252	49	49	**17**	115	83	292	**58**	433	62	99	**125**	286	1086
05:00 PM	18	224	16	258	52	53	15	120	**96**	**307**	47	**450**	60	98	112	270	1098
05:15 PM	18	210	15	243	**63**	**65**	9	**137**	83	304	47	434	**65**	104	119	**288**	**1102**
Total Volume	76	893	62	1031	224	230	52	506	348	1164	208	1720	246	411	468	1125	4382
% App. Total	7.4	86.6	6		44.3	45.5	10.3		20.2	67.7	12.1		21.9	36.5	41.6		
PHF	.826	.908	.969	.927	.889	.885	.765	.923	.906	.948	.897	.956	.946	.934	.936	.977	.994

Counts Unlimited
PO Box 1178
Corona, CA 92878
(951) 268-6268

City of San Bernardino
N/S: Cedar Avenue
E/W: Valley Boulevard
Weather: Clear

File Name : 01_CSB_Cedar_Valley PM
Site Code : 04520047
Start Date : 1/23/2020
Page No : 2

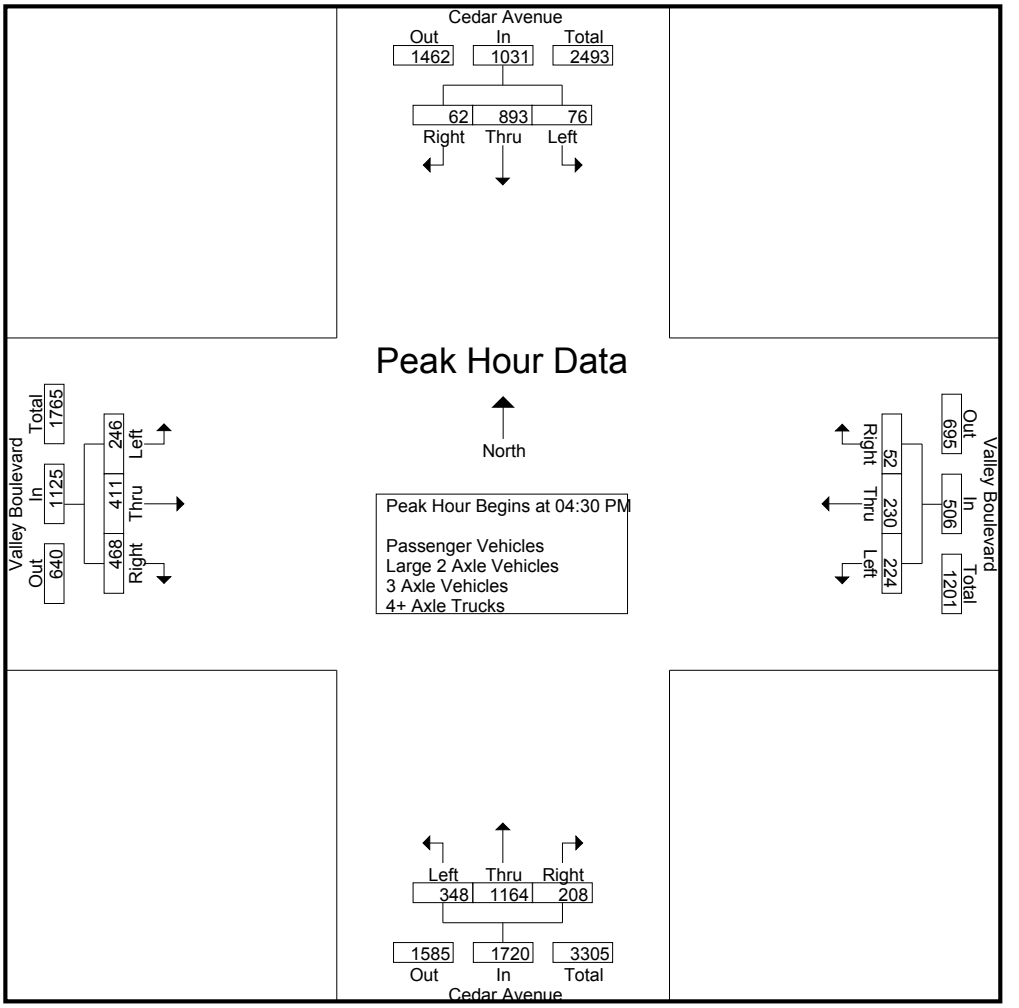

Peak Hour Analysis From 04:00 PM to 05:45 PM - Peak 1 of 1
Peak Hour for Each Approach Begins at:

	04:15 PM				04:30 PM				04:45 PM				04:00 PM			
+0 mins.	14	232	**17**	263	60	63	11	134	83	292	**58**	433	60	86	129	275
+15 mins.	17	**246**	15	**278**	49	49	**17**	115	**96**	307	47	**450**	54	103	**133**	**290**
+30 mins.	**23**	213	16	252	52	53	15	120	83	304	47	434	59	**110**	112	281
+45 mins.	18	224	16	258	**63**	**65**	9	**137**	84	**309**	32	425	**62**	99	125	286
Total Volume	72	915	64	1051	224	230	52	506	346	1212	184	1742	235	398	499	1132
% App. Total	6.9	87.1	6.1		44.3	45.5	10.3		19.9	69.6	10.6		20.8	35.2	44.1	
PHF	.783	.930	.941	.945	.889	.885	.765	.923	.901	.981	.793	.968	.948	.905	.938	.976

Counts Unlimited
PO Box 1178
Corona, CA 92878
(951) 268-6268

City of San Bernardino
N/S: Cedar Avenue
E/W: Valley Boulevard
Weather: Clear

File Name : 01_CSB_Cedar_Valley PM
Site Code : 04520047
Start Date : 1/23/2020
Page No : 1

Groups Printed- Passenger Vehicles

	Cedar Avenue Southbound				Valley Boulevard Westbound				Cedar Avenue Northbound				Valley Boulevard Eastbound				
Start Time	Left	Thru	Right	App. Total	Left	Thru	Right	App. Total	Left	Thru	Right	App. Total	Left	Thru	Right	App. Total	Int. Total
04:00 PM	20	172	13	205	58	48	14	120	70	272	70	412	59	83	123	265	1002
04:15 PM	13	222	15	250	52	52	9	113	93	250	55	398	52	100	129	281	1042
04:30 PM	17	237	14	268	58	62	10	130	78	252	55	385	58	109	104	271	1054
04:45 PM	22	210	16	248	49	45	14	108	80	283	57	420	61	98	121	280	1056
Total	72	841	58	971	217	207	47	471	321	1057	237	1615	230	390	477	1097	4154
05:00 PM	17	206	15	238	50	52	15	117	93	302	45	440	60	94	107	261	1056
05:15 PM	17	205	15	237	62	64	8	134	79	295	45	419	65	103	118	286	1076
05:30 PM	11	216	9	236	50	62	12	124	80	306	32	418	66	89	104	259	1037
05:45 PM	14	237	25	276	52	50	14	116	71	277	48	396	50	70	101	221	1009
Total	59	864	64	987	214	228	49	491	323	1180	170	1673	241	356	430	1027	4178
Grand Total	131	1705	122	1958	431	435	96	962	644	2237	407	3288	471	746	907	2124	8332
Apprch %	6.7	87.1	6.2		44.8	45.2	10		19.6	68	12.4		22.2	35.1	42.7		
Total %	1.6	20.5	1.5	23.5	5.2	5.2	1.2	11.5	7.7	26.8	4.9	39.5	5.7	9	10.9	25.5	

	Cedar Avenue Southbound				Valley Boulevard Westbound				Cedar Avenue Northbound				Valley Boulevard Eastbound				
Start Time	Left	Thru	Right	App. Total	Left	Thru	Right	App. Total	Left	Thru	Right	App. Total	Left	Thru	Right	App. Total	Int. Total
Peak Hour Analysis From 04:30 PM to 05:15 PM - Peak 1 of 1																	
Peak Hour for Entire Intersection Begins at 04:30 PM																	
04:30 PM	17	**237**	14	**268**	58	62	10	130	78	252	55	385	58	**109**	104	271	1054
04:45 PM	**22**	210	**16**	248	49	45	14	108	80	283	**57**	420	61	98	**121**	280	1056
05:00 PM	17	206	15	238	50	52	**15**	117	**93**	**302**	45	**440**	60	94	107	261	1056
05:15 PM	17	205	15	237	**62**	**64**	8	**134**	79	295	45	419	**65**	103	118	**286**	**1076**
Total Volume	73	858	60	991	219	223	47	489	330	1132	202	1664	244	404	450	1098	4242
% App. Total	7.4	86.6	6.1		44.8	45.6	9.6		19.8	68	12.1		22.2	36.8	41		
PHF	.830	.905	.938	.924	.883	.871	.783	.912	.887	.937	.886	.945	.938	.927	.930	.960	.986

Counts Unlimited
PO Box 1178
Corona, CA 92878
(951) 268-6268

City of San Bernardino
N/S: Cedar Avenue
E/W: Valley Boulevard
Weather: Clear

File Name : 01_CSB_Cedar_Valley PM
Site Code : 04520047
Start Date : 1/23/2020
Page No : 2

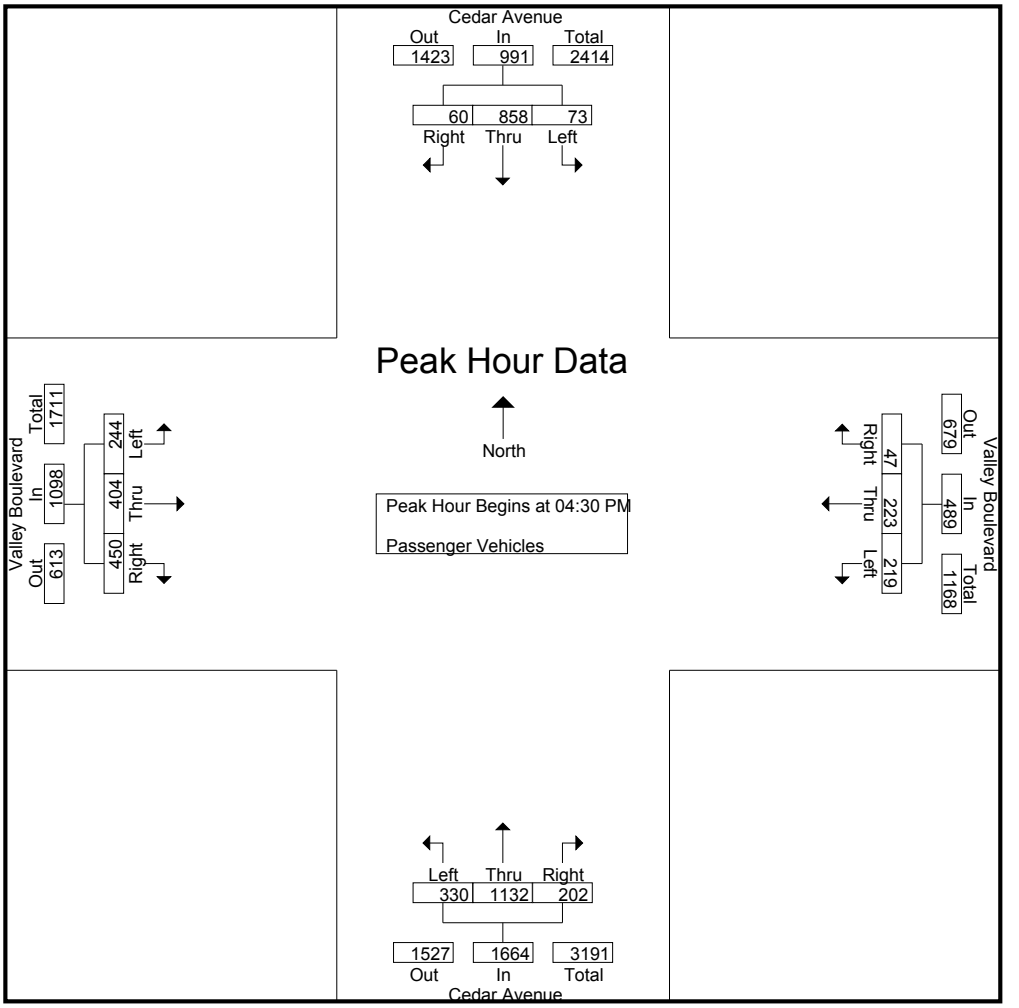

Peak Hour Analysis From 04:30 PM to 05:15 PM - Peak 1 of 1
Peak Hour for Each Approach Begins at:

	04:30 PM				04:30 PM				04:30 PM				04:30 PM			
+0 mins.	17	**237**	14	**268**	58	62	10	130	78	252	55	385	58	**109**	104	271
+15 mins.	**22**	210	**16**	248	49	45	14	108	80	283	**57**	420	61	98	**121**	280
+30 mins.	17	206	15	238	50	52	**15**	117	**93**	**302**	45	**440**	60	94	107	261
+45 mins.	17	205	15	237	**62**	**64**	8	**134**	79	295	45	419	**65**	103	118	**286**
Total Volume	73	858	60	991	219	223	47	489	330	1132	202	1664	244	404	450	1098
% App. Total	7.4	86.6	6.1		44.8	45.6	9.6		19.8	68	12.1		22.2	36.8	41	
PHF	.830	.905	.938	.924	.883	.871	.783	.912	.887	.937	.886	.945	.938	.927	.930	.960

Counts Unlimited
PO Box 1178
Corona, CA 92878
(951) 268-6268

City of San Bernardino
N/S: Cedar Avenue
E/W: Valley Boulevard
Weather: Clear

File Name : 01_CSB_Cedar_Valley PM
Site Code : 04520047
Start Date : 1/23/2020
Page No : 1

Groups Printed- Large 2 Axle Vehicles

	Cedar Avenue Southbound				Valley Boulevard Westbound				Cedar Avenue Northbound				Valley Boulevard Eastbound				
Start Time	Left	Thru	Right	App. Total	Left	Thru	Right	App. Total	Left	Thru	Right	App. Total	Left	Thru	Right	App. Total	Int. Total
04:00 PM	0	14	0	14	2	1	1	4	0	1	2	3	0	3	3	6	27
04:15 PM	0	2	2	4	0	2	0	2	0	8	3	11	2	2	2	6	23
04:30 PM	0	3	1	4	2	0	0	2	3	3	0	6	1	1	7	9	21
04:45 PM	0	0	0	0	0	1	1	2	1	4	0	5	0	0	1	1	8
Total	0	19	3	22	4	4	2	10	4	16	5	25	3	6	13	22	79
05:00 PM	1	5	0	6	0	0	0	0	1	1	1	3	0	2	3	5	14
05:15 PM	1	0	0	1	0	1	0	1	2	4	2	8	0	1	1	2	12
05:30 PM	0	7	0	7	0	0	0	0	0	1	0	1	0	0	2	2	10
05:45 PM	0	3	0	3	0	0	0	0	3	3	1	7	0	1	3	4	14
Total	2	15	0	17	0	1	0	1	6	9	4	19	0	4	9	13	50
Grand Total	2	34	3	39	4	5	2	11	10	25	9	44	3	10	22	35	129
Apprch %	5.1	87.2	7.7		36.4	45.5	18.2		22.7	56.8	20.5		8.6	28.6	62.9		
Total %	1.6	26.4	2.3	30.2	3.1	3.9	1.6	8.5	7.8	19.4	7	34.1	2.3	7.8	17.1	27.1	

	Cedar Avenue Southbound				Valley Boulevard Westbound				Cedar Avenue Northbound				Valley Boulevard Eastbound				
Start Time	Left	Thru	Right	App. Total	Left	Thru	Right	App. Total	Left	Thru	Right	App. Total	Left	Thru	Right	App. Total	Int. Total
Peak Hour Analysis From 04:30 PM to 05:15 PM - Peak 1 of 1																	
Peak Hour for Entire Intersection Begins at 04:30 PM																	
04:30 PM	0	3	**1**	4	**2**	0	0	**2**	**3**	3	0	6	**1**	1	**7**	**9**	**21**
04:45 PM	0	0	0	0	0	**1**	**1**	2	1	**4**	0	5	0	0	1	1	8
05:00 PM	**1**	**5**	0	**6**	0	0	0	0	1	1	1	3	0	**2**	3	5	14
05:15 PM	1	0	0	1	0	1	0	1	2	4	**2**	**8**	0	1	1	2	12
Total Volume	2	8	1	11	2	2	1	5	7	12	3	22	1	4	12	17	55
% App. Total	18.2	72.7	9.1		40	40	20		31.8	54.5	13.6		5.9	23.5	70.6		
PHF	.500	.400	.250	.458	.250	.500	.250	.625	.583	.750	.375	.688	.250	.500	.429	.472	.655

Counts Unlimited
PO Box 1178
Corona, CA 92878
(951) 268-6268

City of San Bernardino
N/S: Cedar Avenue
E/W: Valley Boulevard
Weather: Clear

File Name : 01_CSB_Cedar_Valley PM
Site Code : 04520047
Start Date : 1/23/2020
Page No : 2

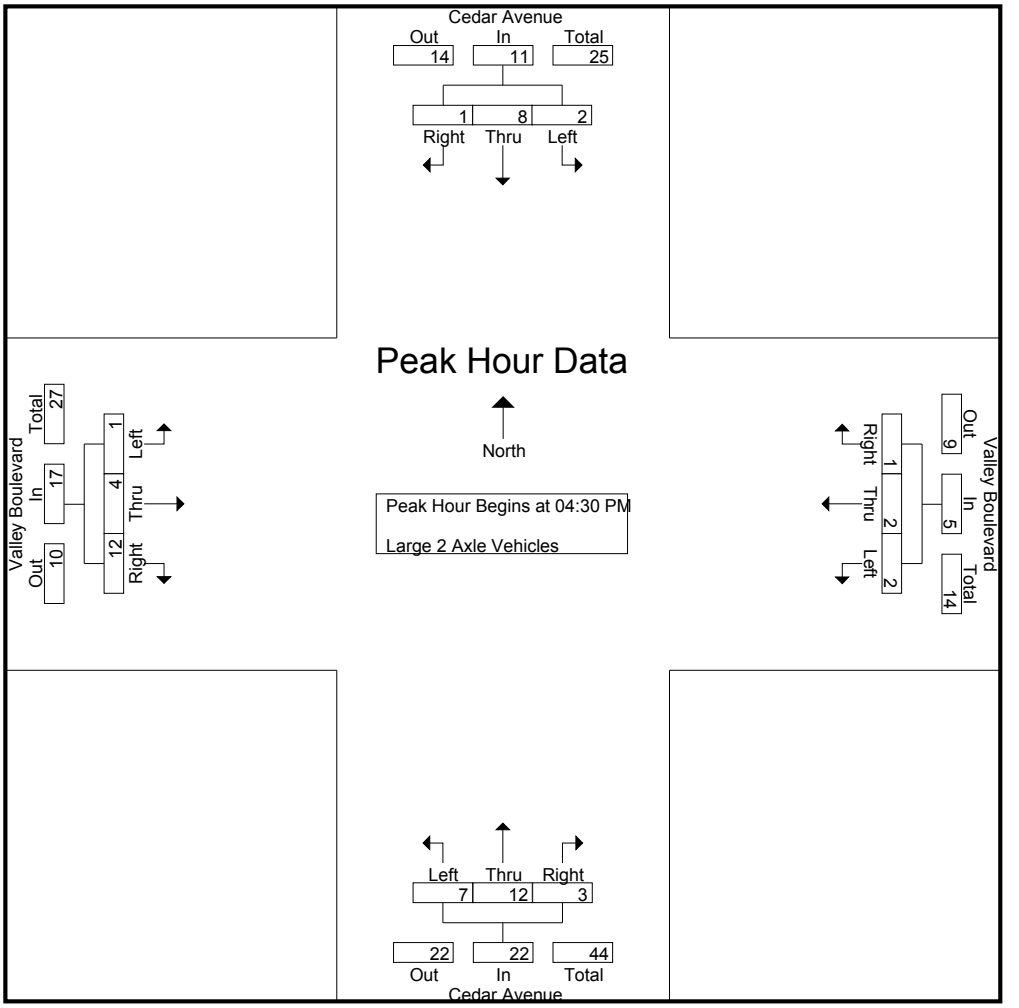

Peak Hour Analysis From 04:30 PM to 05:15 PM - Peak 1 of 1
Peak Hour for Each Approach Begins at:

	04:30 PM				04:30 PM				04:30 PM				04:30 PM			
+0 mins.	0	3	**1**	4	**2**	0	0	**2**	**3**	3	0	6	**1**	1	**7**	**9**
+15 mins.	0	0	0	0	0	**1**	**1**	2	1	**4**	0	5	0	0	1	1
+30 mins.	**1**	**5**	0	**6**	0	0	0	0	1	1	1	3	0	**2**	3	5
+45 mins.	1	0	0	1	0	1	0	1	2	4	**2**	**8**	0	1	1	2
Total Volume	2	8	1	11	2	2	1	5	7	12	3	22	1	4	12	17
% App. Total	18.2	72.7	9.1		40	40	20		31.8	54.5	13.6		5.9	23.5	70.6	
PHF	.500	.400	.250	.458	.250	.500	.250	.625	.583	.750	.375	.688	.250	.500	.429	.472

Counts Unlimited
PO Box 1178
Corona, CA 92878
(951) 268-6268

City of San Bernardino
N/S: Cedar Avenue
E/W: Valley Boulevard
Weather: Clear

File Name : 01_CSB_Cedar_Valley PM
Site Code : 04520047
Start Date : 1/23/2020
Page No : 1

Groups Printed- 3 Axle Vehicles

	Cedar Avenue Southbound				Valley Boulevard Westbound				Cedar Avenue Northbound				Valley Boulevard Eastbound				
Start Time	Left	Thru	Right	App. Total	Left	Thru	Right	App. Total	Left	Thru	Right	App. Total	Left	Thru	Right	App. Total	Int. Total
04:00 PM	0	14	0	14	0	1	0	1	1	2	0	3	0	0	0	0	18
04:15 PM	0	2	0	2	0	0	0	0	2	1	1	4	0	1	1	2	8
04:30 PM	0	3	0	3	0	1	0	1	0	1	1	2	0	0	1	1	7
04:45 PM	0	0	0	0	0	2	1	3	2	2	1	5	1	1	1	3	11
Total	0	19	0	19	0	4	1	5	5	6	3	14	1	2	3	6	44
05:00 PM	0	5	0	5	0	0	0	0	0	1	1	2	0	0	1	1	8
05:15 PM	0	0	0	0	0	0	1	1	0	3	0	3	0	0	0	0	4
05:30 PM	1	7	0	8	0	1	1	2	0	1	0	1	1	0	0	1	12
05:45 PM	1	3	0	4	0	0	0	0	0	0	0	0	0	0	0	0	4
Total	2	15	0	17	0	1	2	3	0	5	1	6	1	0	1	2	28
Grand Total	2	34	0	36	0	5	3	8	5	11	4	20	2	2	4	8	72
Apprch %	5.6	94.4	0		0	62.5	37.5		25	55	20		25	25	50		
Total %	2.8	47.2	0	50	0	6.9	4.2	11.1	6.9	15.3	5.6	27.8	2.8	2.8	5.6	11.1	

	Cedar Avenue Southbound				Valley Boulevard Westbound				Cedar Avenue Northbound				Valley Boulevard Eastbound				
Start Time	Left	Thru	Right	App. Total	Left	Thru	Right	App. Total	Left	Thru	Right	App. Total	Left	Thru	Right	App. Total	Int. Total
Peak Hour Analysis From 04:30 PM to 05:15 PM - Peak 1 of 1																	
Peak Hour for Entire Intersection Begins at 04:30 PM																	
04:30 PM	0	3	0	3	0	1	0	1	0	1	**1**	2	0	0	**1**	1	7
04:45 PM	0	0	0	0	0	**2**	**1**	**3**	**2**	2	1	**5**	**1**	**1**	1	**3**	**11**
05:00 PM	0	**5**	0	**5**	0	0	0	0	0	1	1	2	0	0	1	1	8
05:15 PM	0	0	0	0	0	0	1	1	0	**3**	0	3	0	0	0	0	4
Total Volume	0	8	0	8	0	3	2	5	2	7	3	12	1	1	3	5	30
% App. Total	0	100	0		0	60	40		16.7	58.3	25		20	20	60		
PHF	.000	.400	.000	.400	.000	.375	.500	.417	.250	.583	.750	.600	.250	.250	.750	.417	.682

Counts Unlimited
PO Box 1178
Corona, CA 92878
(951) 268-6268

City of San Bernardino
N/S: Cedar Avenue
E/W: Valley Boulevard
Weather: Clear

File Name : 01_CSB_Cedar_Valley PM
Site Code : 04520047
Start Date : 1/23/2020
Page No : 2

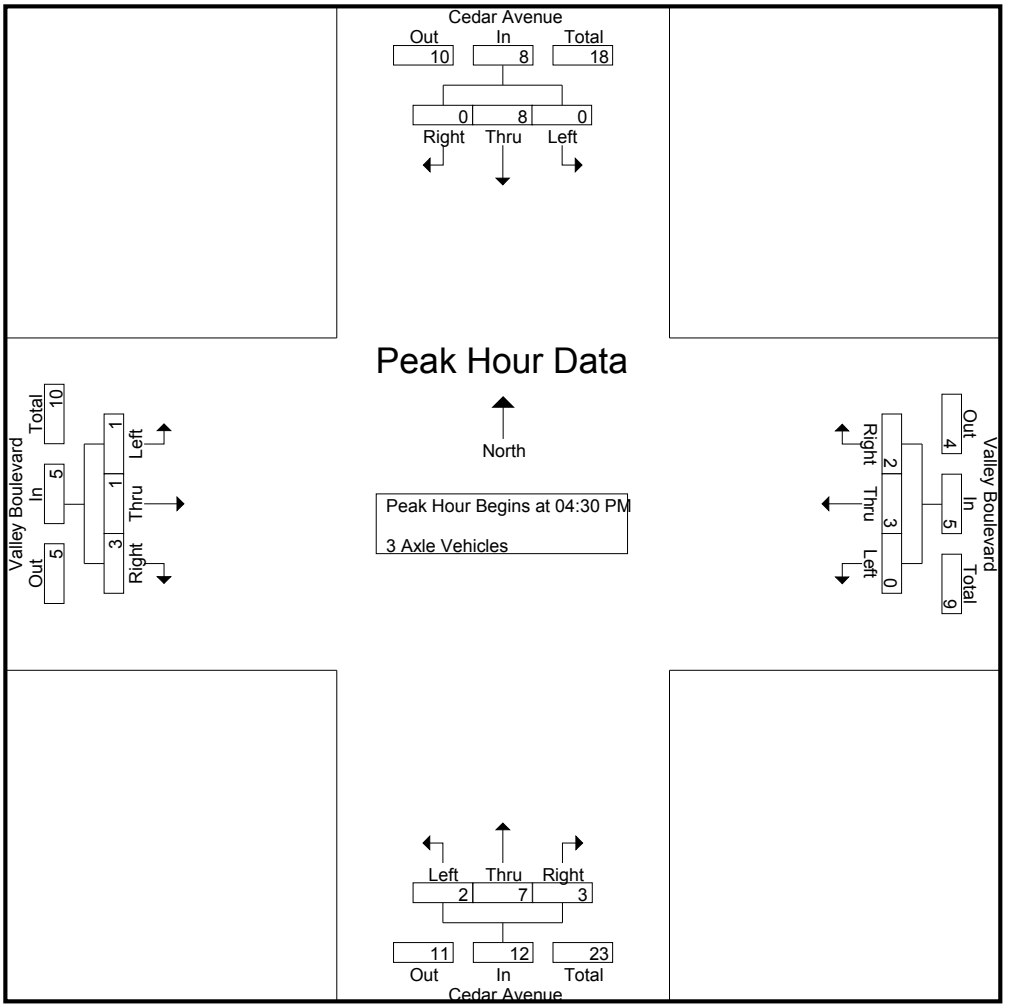

Peak Hour Analysis From 04:30 PM to 05:15 PM - Peak 1 of 1
Peak Hour for Each Approach Begins at:

	04:30 PM				04:30 PM				04:30 PM				04:30 PM			
+0 mins.	0	3	0	3	0	1	0	1	0	1	**1**	2	0	0	**1**	1
+15 mins.	0	0	0	0	0	**2**	**1**	**3**	**2**	2	1	**5**	**1**	**1**	1	**3**
+30 mins.	0	**5**	0	**5**	0	0	0	0	0	1	1	2	0	0	1	1
+45 mins.	0	0	0	0	0	0	1	1	0	**3**	0	3	0	0	0	0
Total Volume	0	8	0	8	0	3	2	5	2	7	3	12	1	1	3	5
% App. Total	0	100	0		0	60	40		16.7	58.3	25		20	20	60	
PHF	.000	.400	.000	.400	.000	.375	.500	.417	.250	.583	.750	.600	.250	.250	.750	.417

Counts Unlimited
PO Box 1178
Corona, CA 92878
(951) 268-6268

City of San Bernardino
N/S: Cedar Avenue
E/W: Valley Boulevard
Weather: Clear

File Name : 01_CSB_Cedar_Valley PM
Site Code : 04520047
Start Date : 1/23/2020
Page No : 1

Groups Printed- 4+ Axle Trucks

	Cedar Avenue Southbound				Valley Boulevard Westbound				Cedar Avenue Northbound				Valley Boulevard Eastbound				
Start Time	Left	Thru	Right	App. Total	Left	Thru	Right	App. Total	Left	Thru	Right	App. Total	Left	Thru	Right	App. Total	Int. Total
04:00 PM	0	7	0	7	3	2	0	5	1	4	0	5	1	0	3	4	21
04:15 PM	1	6	0	7	0	1	2	3	3	3	1	7	0	0	1	1	18
04:30 PM	0	3	0	3	0	0	1	1	5	5	0	10	0	0	0	0	14
04:45 PM	1	3	0	4	0	1	1	2	0	3	0	3	0	0	2	2	11
Total	2	19	0	21	3	4	4	11	9	15	1	25	1	0	6	7	64
05:00 PM	0	8	1	9	2	1	0	3	2	3	0	5	0	2	1	3	20
05:15 PM	0	5	0	5	1	0	0	1	2	2	0	4	0	0	0	0	10
05:30 PM	1	4	0	5	0	0	0	0	4	1	0	5	0	0	2	2	12
05:45 PM	0	3	0	3	0	0	0	0	2	3	1	6	0	1	2	3	12
Total	1	20	1	22	3	1	0	4	10	9	1	20	0	3	5	8	54
Grand Total	3	39	1	43	6	5	4	15	19	24	2	45	1	3	11	15	118
Apprch %	7	90.7	2.3		40	33.3	26.7		42.2	53.3	4.4		6.7	20	73.3		
Total %	2.5	33.1	0.8	36.4	5.1	4.2	3.4	12.7	16.1	20.3	1.7	38.1	0.8	2.5	9.3	12.7	

	Cedar Avenue Southbound				Valley Boulevard Westbound				Cedar Avenue Northbound				Valley Boulevard Eastbound				
Start Time	Left	Thru	Right	App. Total	Left	Thru	Right	App. Total	Left	Thru	Right	App. Total	Left	Thru	Right	App. Total	Int. Total
Peak Hour Analysis From 04:30 PM to 05:15 PM - Peak 1 of 1																	
Peak Hour for Entire Intersection Begins at 04:30 PM																	
04:30 PM	0	3	0	3	0	0	**1**	1	**5**	**5**	0	**10**	0	0	0	0	14
04:45 PM	**1**	3	0	4	0	**1**	1	2	0	3	0	3	0	0	**2**	2	11
05:00 PM	0	**8**	**1**	**9**	**2**	1	0	**3**	2	3	0	5	0	**2**	1	**3**	**20**
05:15 PM	0	5	0	5	1	0	0	1	2	2	0	4	0	0	0	0	10
Total Volume	1	19	1	21	3	2	2	7	9	13	0	22	0	2	3	5	55
% App. Total	4.8	90.5	4.8		42.9	28.6	28.6		40.9	59.1	0		0	40	60		
PHF	.250	.594	.250	.583	.375	.500	.500	.583	.450	.650	.000	.550	.000	.250	.375	.417	.688

Counts Unlimited
PO Box 1178
Corona, CA 92878
(951) 268-6268

City of San Bernardino
N/S: Cedar Avenue
E/W: Valley Boulevard
Weather: Clear

File Name : 01_CSB_Cedar_Valley PM
Site Code : 04520047
Start Date : 1/23/2020
Page No : 2

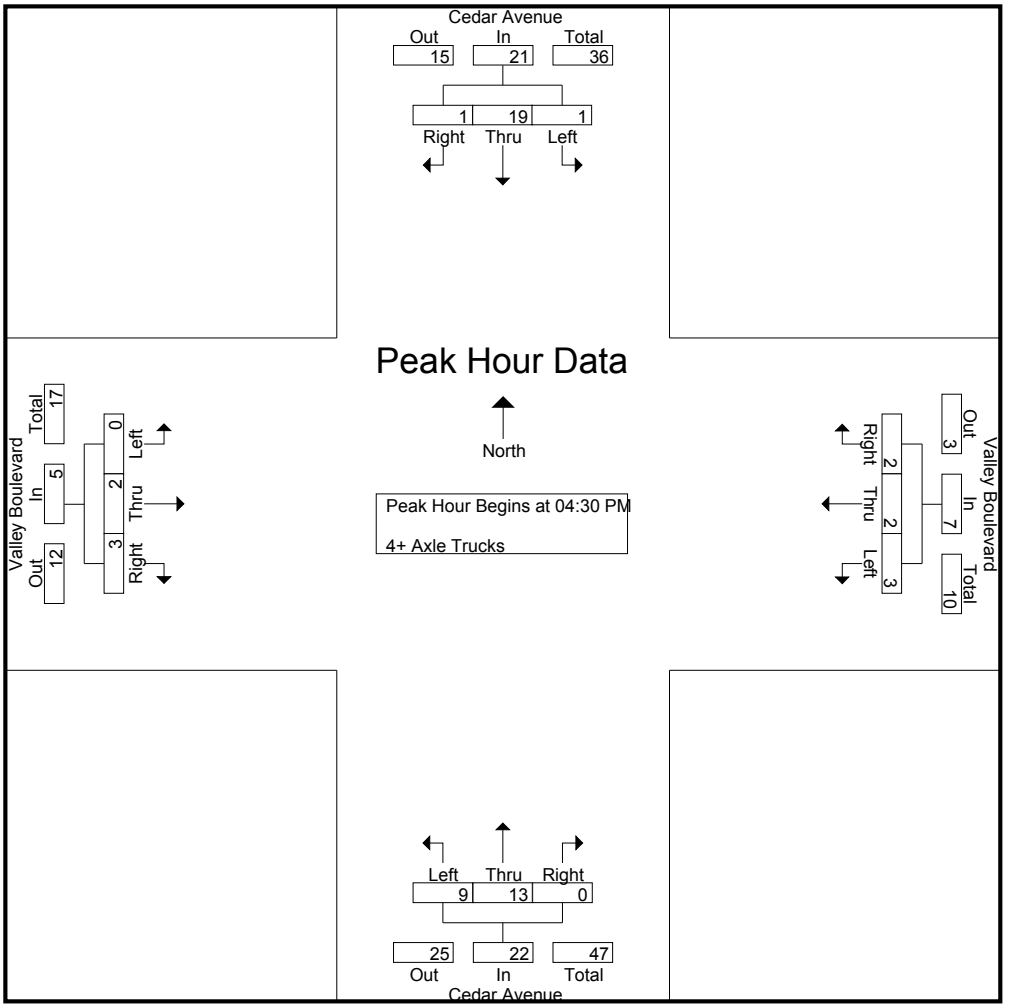

Peak Hour Analysis From 04:30 PM to 05:15 PM - Peak 1 of 1
Peak Hour for Each Approach Begins at:

	04:30 PM				04:30 PM				04:30 PM				04:30 PM			
+0 mins.	0	3	0	3	0	0	**1**	1	**5**	**5**	0	**10**	0	0	0	0
+15 mins.	**1**	3	0	4	0	**1**	1	2	0	3	0	3	0	0	**2**	2
+30 mins.	0	**8**	**1**	**9**	**2**	1	0	**3**	2	3	0	5	0	**2**	1	**3**
+45 mins.	0	5	0	5	1	0	0	1	2	2	0	4	0	0	0	0
Total Volume	1	19	1	21	3	2	2	7	9	13	0	22	0	2	3	5
% App. Total	4.8	90.5	4.8		42.9	28.6	28.6		40.9	59.1	0		0	40	60	
PHF	.250	.594	.250	.583	.375	.500	.500	.583	.450	.650	.000	.550	.000	.250	.375	.417

Counts Unlimited
PO Box 1178
Corona, CA 92878
(951) 268-6268

City of San Bernardino
N/S: Cedar Avenue
E/W: I-10 Westbound Ramps
Weather: Clear

File Name : 02_CSB_Cedar_10W AM
Site Code : 04520047
Start Date : 1/23/2020
Page No : 1

Groups Printed- Passenger Vehicles - Large 2 Axle Vehicles - 3 Axle Vehicles - 4+ Axle Trucks

	Cedar Avenue Southbound				I-10 Westbound Off Ramp Westbound				Cedar Avenue Northbound				I-10 Westbound On Ramp Eastbound				
Start Time	Left	Thru	Right	App. Total	Left	Thru	Right	App. Total	Left	Thru	Right	App. Total	Left	Thru	Right	App. Total	Int. Total
07:00 AM	0	319	205	524	101	0	111	212	68	277	0	345	0	0	0	0	1081
07:15 AM	0	325	205	530	81	0	79	160	55	298	0	353	0	0	0	0	1043
07:30 AM	0	314	192	506	80	1	81	162	61	300	0	361	0	0	0	0	1029
07:45 AM	0	304	189	493	88	0	106	194	50	299	0	349	0	0	0	0	1036
Total	0	1262	791	2053	350	1	377	728	234	1174	0	1408	0	0	0	0	4189
08:00 AM	0	270	208	478	87	2	100	189	43	239	0	282	0	0	0	0	949
08:15 AM	0	260	177	437	69	1	100	170	66	221	0	287	0	0	0	0	894
08:30 AM	0	255	151	406	64	0	76	140	73	233	0	306	0	0	0	0	852
08:45 AM	0	258	152	410	54	3	101	158	70	232	0	302	0	0	0	0	870
Total	0	1043	688	1731	274	6	377	657	252	925	0	1177	0	0	0	0	3565
Grand Total	0	2305	1479	3784	624	7	754	1385	486	2099	0	2585	0	0	0	0	7754
Apprch %	0	60.9	39.1		45.1	0.5	54.4		18.8	81.2	0		0	0	0		
Total %	0	29.7	19.1	48.8	8	0.1	9.7	17.9	6.3	27.1	0	33.3	0	0	0	0	
Passenger Vehicles	0	2153	1412	3565	566	6	713	1285	370	1929	0	2299	0	0	0	0	7149
% Passenger Vehicles	0	93.4	95.5	94.2	90.7	85.7	94.6	92.8	76.1	91.9	0	88.9	0	0	0	0	92.2
Large 2 Axle Vehicles	0	61	28	89	21	1	25	47	39	85	0	124	0	0	0	0	260
% Large 2 Axle Vehicles	0	2.6	1.9	2.4	3.4	14.3	3.3	3.4	8	4	0	4.8	0	0	0	0	3.4
3 Axle Vehicles	0	61	10	71	4	0	4	8	23	22	0	45	0	0	0	0	124
% 3 Axle Vehicles	0	2.6	0.7	1.9	0.6	0	0.5	0.6	4.7	1	0	1.7	0	0	0	0	1.6
4+ Axle Trucks	0	30	29	59	33	0	12	45	54	63	0	117	0	0	0	0	221
% 4+ Axle Trucks	0	1.3	2	1.6	5.3	0	1.6	3.2	11.1	3	0	4.5	0	0	0	0	2.9

	Cedar Avenue Southbound				I-10 Westbound Off Ramp Westbound				Cedar Avenue Northbound				I-10 Westbound On Ramp Eastbound				
Start Time	Left	Thru	Right	App. Total	Left	Thru	Right	App. Total	Left	Thru	Right	App. Total	Left	Thru	Right	App. Total	Int. Total
Peak Hour Analysis From 07:00 AM to 08:45 AM - Peak 1 of 1																	
Peak Hour for Entire Intersection Begins at 07:00 AM																	
07:00 AM	0	319	**205**	524	**101**	0	**111**	**212**	**68**	277	0	345	0	0	0	0	**1081**
07:15 AM	0	**325**	205	**530**	81	0	79	160	55	298	0	353	0	0	0	0	1043
07:30 AM	0	314	192	506	80	**1**	81	162	61	**300**	0	**361**	0	0	0	0	1029
07:45 AM	0	304	189	493	88	0	106	194	50	299	0	349	0	0	0	0	1036
Total Volume	0	1262	791	2053	350	1	377	728	234	1174	0	1408	0	0	0	0	4189
% App. Total	0	61.5	38.5		48.1	0.1	51.8		16.6	83.4	0		0	0	0		
PHF	.000	.971	.965	.968	.866	.250	.849	.858	.860	.978	.000	.975	.000	.000	.000	.000	.969

Counts Unlimited
PO Box 1178
Corona, CA 92878
(951) 268-6268

City of San Bernardino
N/S: Cedar Avenue
E/W: I-10 Westbound Ramps
Weather: Clear

File Name : 02_CSB_Cedar_10W AM
Site Code : 04520047
Start Date : 1/23/2020
Page No : 2

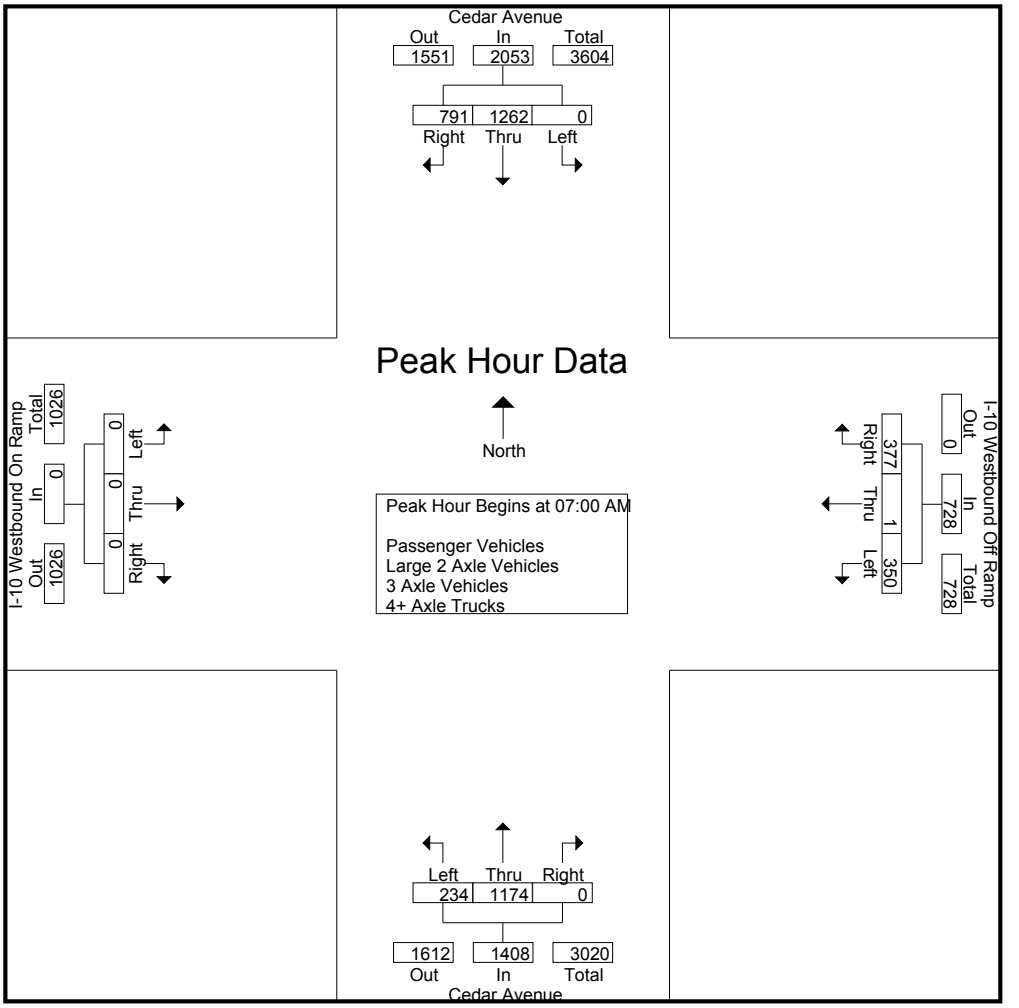

Peak Hour Analysis From 07:00 AM to 08:45 AM - Peak 1 of 1
Peak Hour for Each Approach Begins at:

	07:00 AM				07:00 AM				07:00 AM				07:00 AM			
+0 mins.	0	319	**205**	524	**101**	0	**111**	**212**	**68**	277	0	345	0	0	0	0
+15 mins.	0	**325**	205	**530**	81	0	79	160	55	298	0	353	0	0	0	0
+30 mins.	0	314	192	506	80	**1**	81	162	61	**300**	0	**361**	0	0	0	0
+45 mins.	0	304	189	493	88	0	106	194	50	299	0	349	0	0	0	0
Total Volume	0	1262	791	2053	350	1	377	728	234	1174	0	1408	0	0	0	0
% App. Total	0	61.5	38.5		48.1	0.1	51.8		16.6	83.4	0		0	0	0	
PHF	.000	.971	.965	.968	.866	.250	.849	.858	.860	.978	.000	.975	.000	.000	.000	.000

Counts Unlimited
PO Box 1178
Corona, CA 92878
(951) 268-6268

City of San Bernardino
N/S: Cedar Avenue
E/W: I-10 Westbound Ramps
Weather: Clear

File Name : 02_CSB_Cedar_10W AM
Site Code : 04520047
Start Date : 1/23/2020
Page No : 1

Groups Printed- Passenger Vehicles

	Cedar Avenue Southbound				I-10 Westbound Off Ramp Westbound				Cedar Avenue Northbound				I-10 Westbound On Ramp Eastbound				
Start Time	Left	Thru	Right	App. Total	Left	Thru	Right	App. Total	Left	Thru	Right	App. Total	Left	Thru	Right	App. Total	Int. Total
07:00 AM	0	304	198	502	93	0	103	196	55	262	0	317	0	0	0	0	1015
07:15 AM	0	304	196	500	74	0	77	151	48	286	0	334	0	0	0	0	985
07:30 AM	0	285	187	472	76	1	79	156	47	280	0	327	0	0	0	0	955
07:45 AM	0	291	183	474	79	0	98	177	39	275	0	314	0	0	0	0	965
Total	0	1184	764	1948	322	1	357	680	189	1103	0	1292	0	0	0	0	3920
08:00 AM	0	252	198	450	78	2	96	176	37	216	0	253	0	0	0	0	879
08:15 AM	0	246	167	413	61	1	94	156	48	206	0	254	0	0	0	0	823
08:30 AM	0	239	143	382	55	0	71	126	45	202	0	247	0	0	0	0	755
08:45 AM	0	232	140	372	50	2	95	147	51	202	0	253	0	0	0	0	772
Total	0	969	648	1617	244	5	356	605	181	826	0	1007	0	0	0	0	3229
Grand Total	0	2153	1412	3565	566	6	713	1285	370	1929	0	2299	0	0	0	0	7149
Apprch %	0	60.4	39.6		44	0.5	55.5		16.1	83.9	0		0	0	0		
Total %	0	30.1	19.8	49.9	7.9	0.1	10	18	5.2	27	0	32.2	0	0	0	0	

	Cedar Avenue Southbound				I-10 Westbound Off Ramp Westbound				Cedar Avenue Northbound				I-10 Westbound On Ramp Eastbound				
Start Time	Left	Thru	Right	App. Total	Left	Thru	Right	App. Total	Left	Thru	Right	App. Total	Left	Thru	Right	App. Total	Int. Total
Peak Hour Analysis From 07:00 AM to 07:45 AM - Peak 1 of 1																	
Peak Hour for Entire Intersection Begins at 07:00 AM																	
07:00 AM	0	**304**	**198**	**502**	**93**	0	**103**	**196**	**55**	262	0	317	0	0	0	0	**1015**
07:15 AM	0	304	196	500	74	0	77	151	48	**286**	0	**334**	0	0	0	0	985
07:30 AM	0	285	187	472	76	**1**	79	156	47	280	0	327	0	0	0	0	955
07:45 AM	0	291	183	474	79	0	98	177	39	275	0	314	0	0	0	0	965
Total Volume	0	1184	764	1948	322	1	357	680	189	1103	0	1292	0	0	0	0	3920
% App. Total	0	60.8	39.2		47.4	0.1	52.5		14.6	85.4	0		0	0	0		
PHF	.000	.974	.965	.970	.866	.250	.867	.867	.859	.964	.000	.967	.000	.000	.000	.000	.966

Counts Unlimited
PO Box 1178
Corona, CA 92878
(951) 268-6268

City of San Bernardino
N/S: Cedar Avenue
E/W: I-10 Westbound Ramps
Weather: Clear

File Name : 02_CSB_Cedar_10W AM
Site Code : 04520047
Start Date : 1/23/2020
Page No : 2

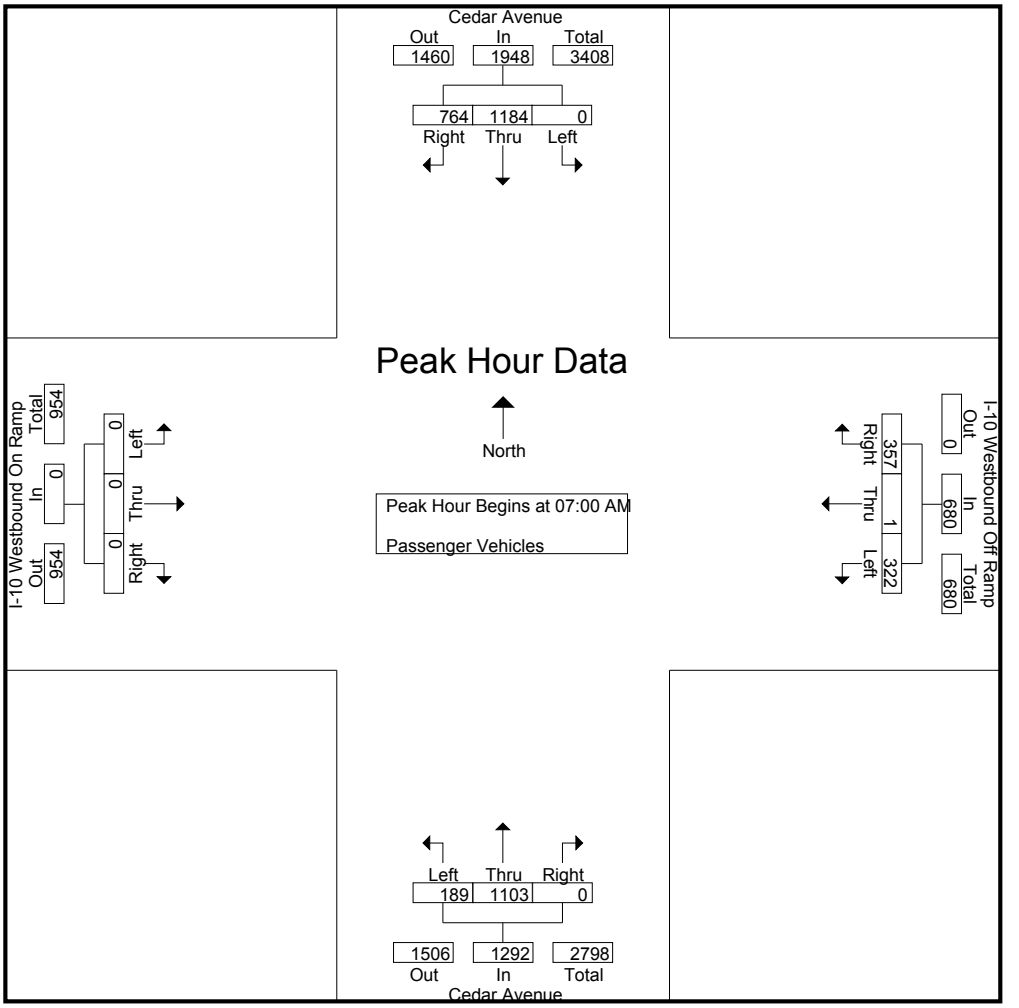

Peak Hour Analysis From 07:00 AM to 07:45 AM - Peak 1 of 1
Peak Hour for Each Approach Begins at:

	07:00 AM				07:00 AM				07:00 AM				07:00 AM			
+0 mins.	0	**304**	**198**	**502**	**93**	0	**103**	**196**	**55**	262	0	317	0	0	0	0
+15 mins.	0	304	196	500	74	0	77	151	48	**286**	0	**334**	0	0	0	0
+30 mins.	0	285	187	472	76	**1**	79	156	47	280	0	327	0	0	0	0
+45 mins.	0	291	183	474	79	0	98	177	39	275	0	314	0	0	0	0
Total Volume	0	1184	764	1948	322	1	357	680	189	1103	0	1292	0	0	0	0
% App. Total	0	60.8	39.2		47.4	0.1	52.5		14.6	85.4	0		0	0	0	
PHF	.000	.974	.965	.970	.866	.250	.867	.867	.859	.964	.000	.967	.000	.000	.000	.000

Counts Unlimited
PO Box 1178
Corona, CA 92878
(951) 268-6268

City of San Bernardino
N/S: Cedar Avenue
E/W: I-10 Westbound Ramps
Weather: Clear

File Name : 02_CSB_Cedar_10W AM
Site Code : 04520047
Start Date : 1/23/2020
Page No : 1

Groups Printed- Large 2 Axle Vehicles

	Cedar Avenue Southbound				I-10 Westbound Off Ramp Westbound				Cedar Avenue Northbound				I-10 Westbound On Ramp Eastbound				
Start Time	Left	Thru	Right	App. Total	Left	Thru	Right	App. Total	Left	Thru	Right	App. Total	Left	Thru	Right	App. Total	Int. Total
07:00 AM	0	6	2	8	0	0	6	6	2	11	0	13	0	0	0	0	27
07:15 AM	0	9	4	13	4	0	0	4	2	4	0	6	0	0	0	0	23
07:30 AM	0	12	2	14	1	0	2	3	6	8	0	14	0	0	0	0	31
07:45 AM	0	4	2	6	2	0	4	6	3	8	0	11	0	0	0	0	23
Total	0	31	10	41	7	0	12	19	13	31	0	44	0	0	0	0	104
08:00 AM	0	8	3	11	5	0	2	7	1	15	0	16	0	0	0	0	34
08:15 AM	0	5	8	13	3	0	2	5	9	6	0	15	0	0	0	0	33
08:30 AM	0	6	2	8	5	0	5	10	9	16	0	25	0	0	0	0	43
08:45 AM	0	11	5	16	1	1	4	6	7	17	0	24	0	0	0	0	46
Total	0	30	18	48	14	1	13	28	26	54	0	80	0	0	0	0	156
Grand Total	0	61	28	89	21	1	25	47	39	85	0	124	0	0	0	0	260
Apprch %	0	68.5	31.5		44.7	2.1	53.2		31.5	68.5	0		0	0	0		
Total %	0	23.5	10.8	34.2	8.1	0.4	9.6	18.1	15	32.7	0	47.7	0	0	0	0	

	Cedar Avenue Southbound				I-10 Westbound Off Ramp Westbound				Cedar Avenue Northbound				I-10 Westbound On Ramp Eastbound				
Start Time	Left	Thru	Right	App. Total	Left	Thru	Right	App. Total	Left	Thru	Right	App. Total	Left	Thru	Right	App. Total	Int. Total
Peak Hour Analysis From 07:00 AM to 07:45 AM - Peak 1 of 1																	
Peak Hour for Entire Intersection Begins at 07:00 AM																	
07:00 AM	0	6	2	8	0	0	**6**	**6**	2	**11**	0	13	0	0	0	0	27
07:15 AM	0	9	**4**	13	**4**	0	0	4	2	4	0	6	0	0	0	0	23
07:30 AM	0	**12**	2	**14**	1	0	2	3	**6**	8	0	**14**	0	0	0	0	**31**
07:45 AM	0	4	2	6	2	0	4	6	3	8	0	11	0	0	0	0	23
Total Volume	0	31	10	41	7	0	12	19	13	31	0	44	0	0	0	0	104
% App. Total	0	75.6	24.4		36.8	0	63.2		29.5	70.5	0		0	0	0		
PHF	.000	.646	.625	.732	.438	.000	.500	.792	.542	.705	.000	.786	.000	.000	.000	.000	.839

Counts Unlimited
PO Box 1178
Corona, CA 92878
(951) 268-6268

City of San Bernardino
N/S: Cedar Avenue
E/W: I-10 Westbound Ramps
Weather: Clear

File Name : 02_CSB_Cedar_10W AM
Site Code : 04520047
Start Date : 1/23/2020
Page No : 2

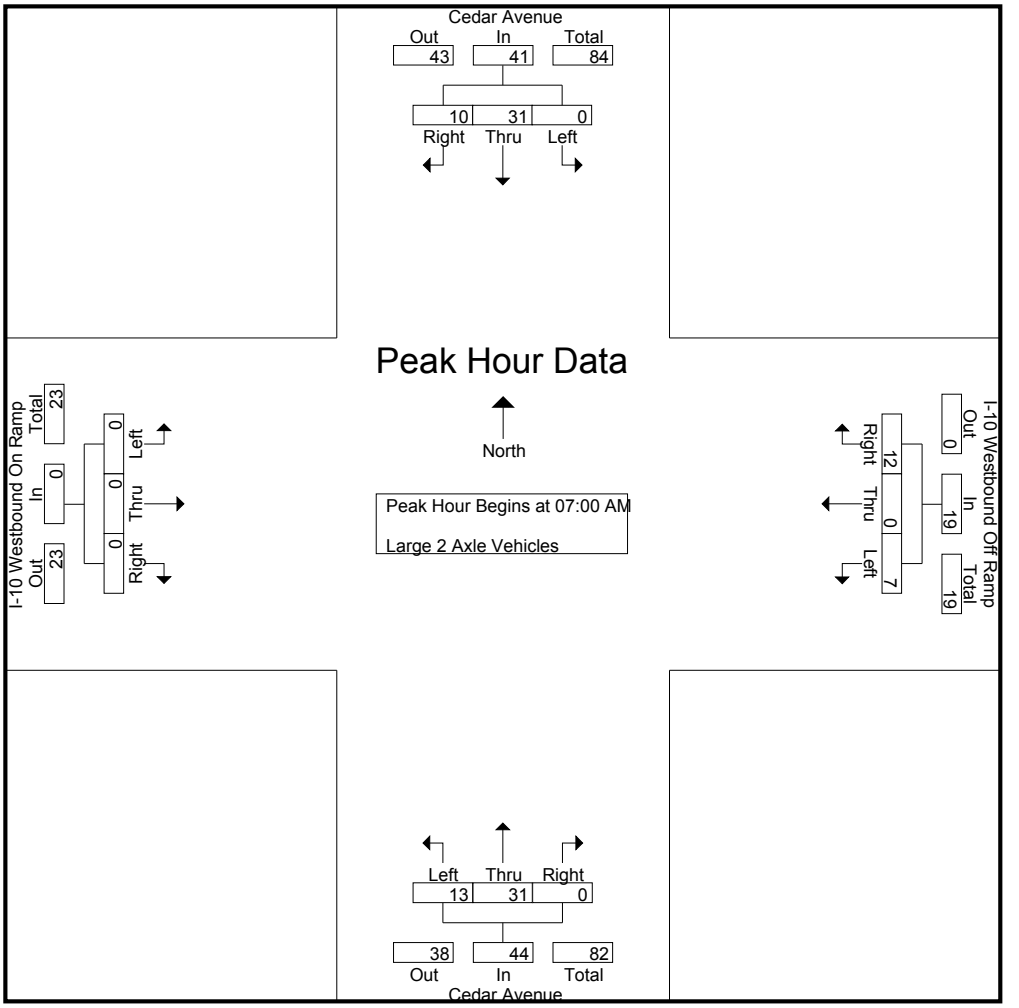

Peak Hour Analysis From 07:00 AM to 07:45 AM - Peak 1 of 1
Peak Hour for Each Approach Begins at:

	07:00 AM				07:00 AM				07:00 AM				07:00 AM			
+0 mins.	0	6	2	8	0	0	**6**	**6**	2	**11**	0	13	0	0	0	0
+15 mins.	0	9	**4**	13	**4**	0	0	4	2	4	0	6	0	0	0	0
+30 mins.	0	**12**	2	**14**	1	0	2	3	**6**	8	0	**14**	0	0	0	0
+45 mins.	0	4	2	6	2	0	4	6	3	8	0	11	0	0	0	0
Total Volume	0	31	10	41	7	0	12	19	13	31	0	44	0	0	0	0
% App. Total	0	75.6	24.4		36.8	0	63.2		29.5	70.5	0		0	0	0	
PHF	.000	.646	.625	.732	.438	.000	.500	.792	.542	.705	.000	.786	.000	.000	.000	.000

Counts Unlimited
PO Box 1178
Corona, CA 92878
(951) 268-6268

City of San Bernardino
N/S: Cedar Avenue
E/W: I-10 Westbound Ramps
Weather: Clear

File Name : 02_CSB_Cedar_10W AM
Site Code : 04520047
Start Date : 1/23/2020
Page No : 1

Groups Printed- 3 Axle Vehicles

	Cedar Avenue Southbound				I-10 Westbound Off Ramp Westbound				Cedar Avenue Northbound				I-10 Westbound On Ramp Eastbound				
Start Time	Left	Thru	Right	App. Total	Left	Thru	Right	App. Total	Left	Thru	Right	App. Total	Left	Thru	Right	App. Total	Int. Total
07:00 AM	0	6	3	9	2	0	0	2	5	0	0	5	0	0	0	0	16
07:15 AM	0	9	1	10	1	0	0	1	1	1	0	2	0	0	0	0	13
07:30 AM	0	12	1	13	0	0	0	0	3	5	0	8	0	0	0	0	21
07:45 AM	0	4	0	4	0	0	1	1	2	2	0	4	0	0	0	0	9
Total	0	31	5	36	3	0	1	4	11	8	0	19	0	0	0	0	59
08:00 AM	0	8	3	11	1	0	1	2	1	4	0	5	0	0	0	0	18
08:15 AM	0	5	1	6	0	0	1	1	1	3	0	4	0	0	0	0	11
08:30 AM	0	6	1	7	0	0	0	0	6	6	0	12	0	0	0	0	19
08:45 AM	0	11	0	11	0	0	1	1	4	1	0	5	0	0	0	0	17
Total	0	30	5	35	1	0	3	4	12	14	0	26	0	0	0	0	65
Grand Total	0	61	10	71	4	0	4	8	23	22	0	45	0	0	0	0	124
Apprch %	0	85.9	14.1		50	0	50		51.1	48.9	0		0	0	0		
Total %	0	49.2	8.1	57.3	3.2	0	3.2	6.5	18.5	17.7	0	36.3	0	0	0	0	

	Cedar Avenue Southbound				I-10 Westbound Off Ramp Westbound				Cedar Avenue Northbound				I-10 Westbound On Ramp Eastbound				
Start Time	Left	Thru	Right	App. Total	Left	Thru	Right	App. Total	Left	Thru	Right	App. Total	Left	Thru	Right	App. Total	Int. Total
Peak Hour Analysis From 07:00 AM to 07:45 AM - Peak 1 of 1																	
Peak Hour for Entire Intersection Begins at 07:00 AM																	
07:00 AM	0	6	**3**	9	**2**	0	0	**2**	**5**	0	0	5	0	0	0	0	16
07:15 AM	0	9	1	10	1	0	0	1	1	1	0	2	0	0	0	0	13
07:30 AM	0	**12**	1	**13**	0	0	0	0	3	**5**	0	**8**	0	0	0	0	**21**
07:45 AM	0	4	0	4	0	0	**1**	1	2	2	0	4	0	0	0	0	9
Total Volume	0	31	5	36	3	0	1	4	11	8	0	19	0	0	0	0	59
% App. Total	0	86.1	13.9		75	0	25		57.9	42.1	0		0	0	0		
PHF	.000	.646	.417	.692	.375	.000	.250	.500	.550	.400	.000	.594	.000	.000	.000	.000	.702

Counts Unlimited
PO Box 1178
Corona, CA 92878
(951) 268-6268

City of San Bernardino
N/S: Cedar Avenue
E/W: I-10 Westbound Ramps
Weather: Clear

File Name : 02_CSB_Cedar_10W AM
Site Code : 04520047
Start Date : 1/23/2020
Page No : 2

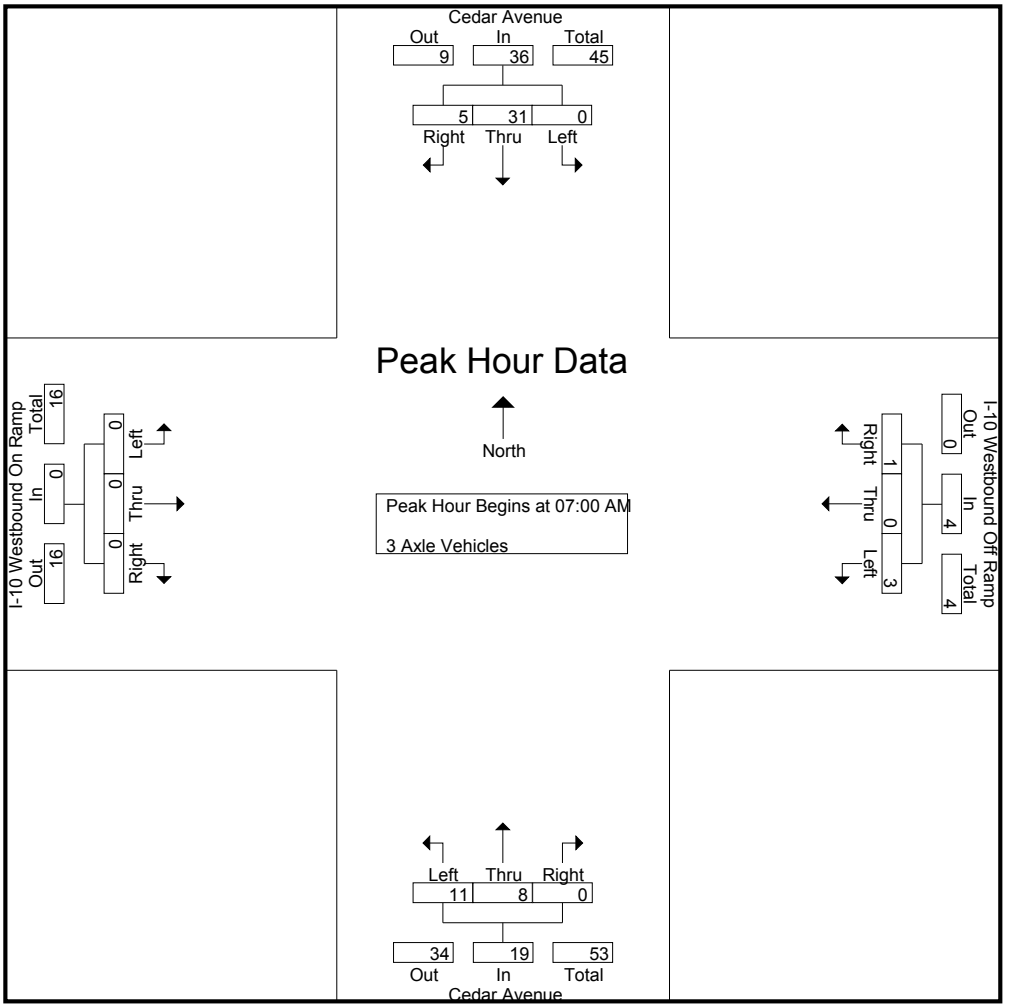

Peak Hour Analysis From 07:00 AM to 07:45 AM - Peak 1 of 1
Peak Hour for Each Approach Begins at:

	07:00 AM				07:00 AM				07:00 AM				07:00 AM			
+0 mins.	0	6	**3**	9	**2**	0	0	**2**	**5**	0	0	5	0	0	0	0
+15 mins.	0	9	1	10	1	0	0	1	1	1	0	2	0	0	0	0
+30 mins.	0	**12**	1	**13**	0	0	0	0	3	**5**	0	**8**	0	0	0	0
+45 mins.	0	4	0	4	0	0	**1**	1	2	2	0	4	0	0	0	0
Total Volume	0	31	5	36	3	0	1	4	11	8	0	19	0	0	0	0
% App. Total	0	86.1	13.9		75	0	25		57.9	42.1	0		0	0	0	
PHF	.000	.646	.417	.692	.375	.000	.250	.500	.550	.400	.000	.594	.000	.000	.000	.000

Counts Unlimited
PO Box 1178
Corona, CA 92878
(951) 268-6268

City of San Bernardino
N/S: Cedar Avenue
E/W: I-10 Westbound Ramps
Weather: Clear

File Name : 02_CSB_Cedar_10W AM
Site Code : 04520047
Start Date : 1/23/2020
Page No : 1

Groups Printed- 4+ Axle Trucks

	Cedar Avenue Southbound				I-10 Westbound Off Ramp Westbound				Cedar Avenue Northbound				I-10 Westbound On Ramp Eastbound				
Start Time	Left	Thru	Right	App. Total	Left	Thru	Right	App. Total	Left	Thru	Right	App. Total	Left	Thru	Right	App. Total	Int. Total
07:00 AM	0	3	2	5	6	0	2	8	6	4	0	10	0	0	0	0	23
07:15 AM	0	3	4	7	2	0	2	4	4	7	0	11	0	0	0	0	22
07:30 AM	0	5	2	7	3	0	0	3	5	7	0	12	0	0	0	0	22
07:45 AM	0	5	4	9	7	0	3	10	6	14	0	20	0	0	0	0	39
Total	0	16	12	28	18	0	7	25	21	32	0	53	0	0	0	0	106
08:00 AM	0	2	4	6	3	0	1	4	4	4	0	8	0	0	0	0	18
08:15 AM	0	4	1	5	5	0	3	8	8	6	0	14	0	0	0	0	27
08:30 AM	0	4	5	9	4	0	0	4	13	9	0	22	0	0	0	0	35
08:45 AM	0	4	7	11	3	0	1	4	8	12	0	20	0	0	0	0	35
Total	0	14	17	31	15	0	5	20	33	31	0	64	0	0	0	0	115
Grand Total	0	30	29	59	33	0	12	45	54	63	0	117	0	0	0	0	221
Apprch %	0	50.8	49.2		73.3	0	26.7		46.2	53.8	0		0	0	0		
Total %	0	13.6	13.1	26.7	14.9	0	5.4	20.4	24.4	28.5	0	52.9	0	0	0	0	

	Cedar Avenue Southbound				I-10 Westbound Off Ramp Westbound				Cedar Avenue Northbound				I-10 Westbound On Ramp Eastbound				
Start Time	Left	Thru	Right	App. Total	Left	Thru	Right	App. Total	Left	Thru	Right	App. Total	Left	Thru	Right	App. Total	Int. Total
Peak Hour Analysis From 07:00 AM to 07:45 AM - Peak 1 of 1																	
Peak Hour for Entire Intersection Begins at 07:00 AM																	
07:00 AM	0	3	2	5	6	0	2	8	**6**	4	0	10	0	0	0	0	23
07:15 AM	0	3	**4**	7	2	0	2	4	4	7	0	11	0	0	0	0	22
07:30 AM	0	**5**	2	7	3	0	0	3	5	7	0	12	0	0	0	0	22
07:45 AM	0	5	4	**9**	**7**	0	**3**	**10**	6	**14**	0	**20**	0	0	0	0	**39**
Total Volume	0	16	12	28	18	0	7	25	21	32	0	53	0	0	0	0	106
% App. Total	0	57.1	42.9		72	0	28		39.6	60.4	0		0	0	0		
PHF	.000	.800	.750	.778	.643	.000	.583	.625	.875	.571	.000	.663	.000	.000	.000	.000	.679

Counts Unlimited
PO Box 1178
Corona, CA 92878
(951) 268-6268

City of San Bernardino
N/S: Cedar Avenue
E/W: I-10 Westbound Ramps
Weather: Clear

File Name : 02_CSB_Cedar_10W AM
Site Code : 04520047
Start Date : 1/23/2020

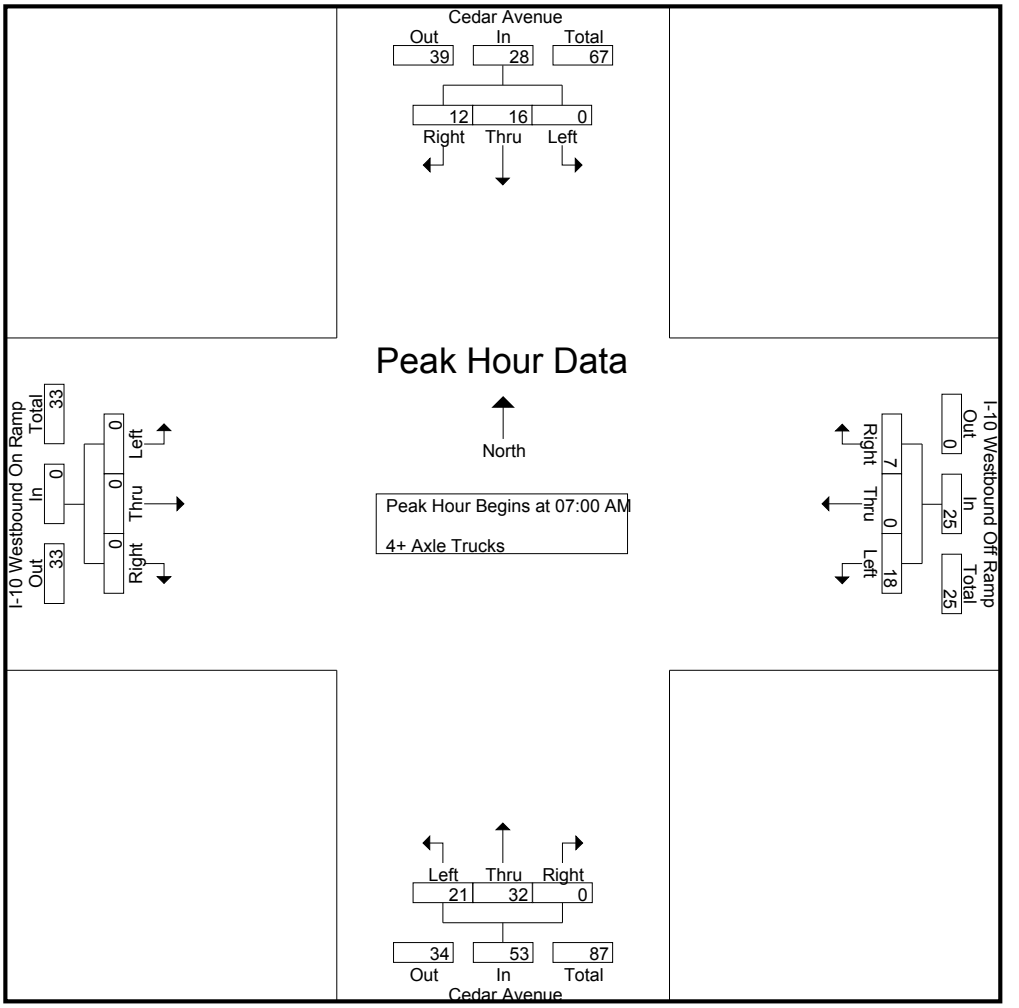

Peak Hour Analysis From 07:00 AM to 07:45 AM - Peak 1 of 1
Peak Hour for Each Approach Begins at:

	07:00 AM				07:00 AM				07:00 AM				07:00 AM			
+0 mins.	0	3	2	5	6	0	2	8	**6**	4	0	10	0	0	0	0
+15 mins.	0	3	**4**	7	2	0	2	4	4	7	0	11	0	0	0	0
+30 mins.	0	**5**	2	7	3	0	0	3	5	7	0	12	0	0	0	0
+45 mins.	0	5	4	**9**	**7**	0	**3**	**10**	6	**14**	0	**20**	0	0	0	0
Total Volume	0	16	12	28	18	0	7	25	21	32	0	53	0	0	0	0
% App. Total	0	57.1	42.9		72	0	28		39.6	60.4	0		0	0	0	
PHF	.000	.800	.750	.778	.643	.000	.583	.625	.875	.571	.000	.663	.000	.000	.000	.000

Counts Unlimited
PO Box 1178
Corona, CA 92878
(951) 268-6268

City of San Bernardino
N/S: Cedar Avenue
E/W: I-10 Westbound Ramps
Weather: Clear

File Name : 02_CSB_Cedar_10W PM
Site Code : 04520047
Start Date : 1/23/2020
Page No : 1

Groups Printed- Passenger Vehicles - Large 2 Axle Vehicles - 3 Axle Vehicles - 4+ Axle Trucks

	Cedar Avenue Southbound				I-10 Westbound Off Ramp Westbound				Cedar Avenue Northbound				I-10 Westbound On Ramp Eastbound				
Start Time	Left	Thru	Right	App. Total	Left	Thru	Right	App. Total	Left	Thru	Right	App. Total	Left	Thru	Right	App. Total	Int. Total
04:00 PM	0	282	116	398	63	0	107	170	43	319	0	362	0	0	0	0	930
04:15 PM	0	279	129	408	79	0	108	187	32	312	0	344	0	0	0	0	939
04:30 PM	0	273	135	408	78	1	101	180	50	308	0	358	0	0	0	0	946
04:45 PM	0	280	123	403	66	1	144	211	43	296	0	339	0	0	0	0	953
Total	0	1114	503	1617	286	2	460	748	168	1235	0	1403	0	0	0	0	3768
05:00 PM	0	262	119	381	75	0	122	197	32	330	0	362	0	0	0	0	940
05:15 PM	0	277	127	404	78	0	118	196	34	304	0	338	0	0	0	0	938
05:30 PM	0	251	136	387	69	0	127	196	33	303	0	336	0	0	0	0	919
05:45 PM	0	289	127	416	55	0	105	160	24	316	0	340	0	0	0	0	916
Total	0	1079	509	1588	277	0	472	749	123	1253	0	1376	0	0	0	0	3713
Grand Total	0	2193	1012	3205	563	2	932	1497	291	2488	0	2779	0	0	0	0	7481
Apprch %	0	68.4	31.6		37.6	0.1	62.3		10.5	89.5	0		0	0	0		
Total %	0	29.3	13.5	42.8	7.5	0	12.5	20	3.9	33.3	0	37.1	0	0	0	0	
Passenger Vehicles	0	2063	981	3044	513	2	893	1408	259	2409	0	2668	0	0	0	0	7120
% Passenger Vehicles	0	94.1	96.9	95	91.1	100	95.8	94.1	89	96.8	0	96	0	0	0	0	95.2
Large 2 Axle Vehicles	0	46	10	56	11	0	11	22	9	41	0	50	0	0	0	0	128
% Large 2 Axle Vehicles	0	2.1	1	1.7	2	0	1.2	1.5	3.1	1.6	0	1.8	0	0	0	0	1.7
3 Axle Vehicles	0	46	3	49	10	0	6	16	6	12	0	18	0	0	0	0	83
% 3 Axle Vehicles	0	2.1	0.3	1.5	1.8	0	0.6	1.1	2.1	0.5	0	0.6	0	0	0	0	1.1
4+ Axle Trucks	0	38	18	56	29	0	22	51	17	26	0	43	0	0	0	0	150
% 4+ Axle Trucks	0	1.7	1.8	1.7	5.2	0	2.4	3.4	5.8	1	0	1.5	0	0	0	0	2

	Cedar Avenue Southbound				I-10 Westbound Off Ramp Westbound				Cedar Avenue Northbound				I-10 Westbound On Ramp Eastbound				
Start Time	Left	Thru	Right	App. Total	Left	Thru	Right	App. Total	Left	Thru	Right	App. Total	Left	Thru	Right	App. Total	Int. Total
Peak Hour Analysis From 04:00 PM to 05:45 PM - Peak 1 of 1																	
Peak Hour for Entire Intersection Begins at 04:15 PM																	
04:15 PM	0	279	129	**408**	**79**	0	108	187	32	312	0	344	0	0	0	0	939
04:30 PM	0	273	**135**	408	78	**1**	101	180	**50**	308	0	358	0	0	0	0	946
04:45 PM	0	**280**	123	403	66	1	**144**	**211**	43	296	0	339	0	0	0	0	**953**
05:00 PM	0	262	119	381	75	0	122	197	32	**330**	0	**362**	0	0	0	0	940
Total Volume	0	1094	506	1600	298	2	475	775	157	1246	0	1403	0	0	0	0	3778
% App. Total	0	68.4	31.6		38.5	0.3	61.3		11.2	88.8	0		0	0	0		
PHF	.000	.977	.937	.980	.943	.500	.825	.918	.785	.944	.000	.969	.000	.000	.000	.000	.991

Counts Unlimited
PO Box 1178
Corona, CA 92878
(951) 268-6268

City of San Bernardino
N/S: Cedar Avenue
E/W: I-10 Westbound Ramps
Weather: Clear

File Name : 02_CSB_Cedar_10W PM
Site Code : 04520047
Start Date : 1/23/2020
Page No : 2

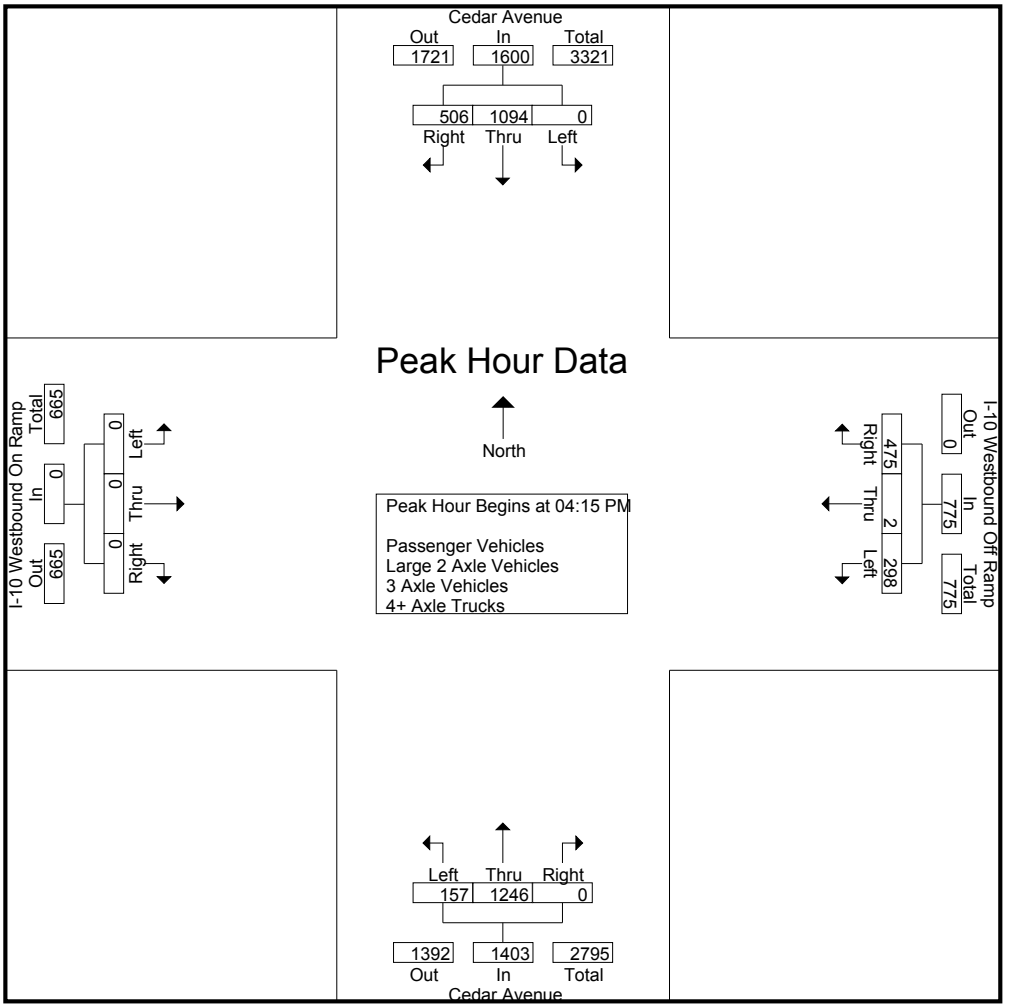

Peak Hour Analysis From 04:00 PM to 05:45 PM - Peak 1 of 1
Peak Hour for Each Approach Begins at:

	04:00 PM				04:45 PM				04:00 PM				04:00 PM			
+0 mins.	0	**282**	116	398	66	**1**	**144**	**211**	43	**319**	0	**362**	0	0	0	0
+15 mins.	0	279	129	**408**	75	0	122	197	32	312	0	344	0	0	0	0
+30 mins.	0	273	**135**	408	**78**	0	118	196	**50**	308	0	358	0	0	0	0
+45 mins.	0	280	123	403	69	0	127	196	43	296	0	339	0	0	0	0
Total Volume	0	1114	503	1617	288	1	511	800	168	1235	0	1403	0	0	0	0
% App. Total	0	68.9	31.1		36	0.1	63.9		12	88	0		0	0	0	
PHF	.000	.988	.931	.991	.923	.250	.887	.948	.840	.968	.000	.969	.000	.000	.000	.000

Counts Unlimited
PO Box 1178
Corona, CA 92878
(951) 268-6268

City of San Bernardino
N/S: Cedar Avenue
E/W: I-10 Westbound Ramps
Weather: Clear

File Name : 02_CSB_Cedar_10W PM
Site Code : 04520047
Start Date : 1/23/2020
Page No : 1

Groups Printed- Passenger Vehicles

	Cedar Avenue Southbound				I-10 Westbound Off Ramp Westbound				Cedar Avenue Northbound				I-10 Westbound On Ramp Eastbound				
Start Time	Left	Thru	Right	App. Total	Left	Thru	Right	App. Total	Left	Thru	Right	App. Total	Left	Thru	Right	App. Total	Int. Total
04:00 PM	0	251	112	363	54	0	101	155	38	311	0	349	0	0	0	0	867
04:15 PM	0	271	123	394	72	0	104	176	30	294	0	324	0	0	0	0	894
04:30 PM	0	254	134	388	72	1	95	168	43	297	0	340	0	0	0	0	896
04:45 PM	0	267	120	387	59	1	139	199	39	287	0	326	0	0	0	0	912
Total	0	1043	489	1532	257	2	439	698	150	1189	0	1339	0	0	0	0	3569
05:00 PM	0	238	115	353	69	0	116	185	28	324	0	352	0	0	0	0	890
05:15 PM	0	271	123	394	71	0	114	185	31	293	0	324	0	0	0	0	903
05:30 PM	0	236	129	365	65	0	124	189	30	296	0	326	0	0	0	0	880
05:45 PM	0	275	125	400	51	0	100	151	20	307	0	327	0	0	0	0	878
Total	0	1020	492	1512	256	0	454	710	109	1220	0	1329	0	0	0	0	3551
Grand Total	0	2063	981	3044	513	2	893	1408	259	2409	0	2668	0	0	0	0	7120
Apprch %	0	67.8	32.2		36.4	0.1	63.4		9.7	90.3	0		0	0	0		
Total %	0	29	13.8	42.8	7.2	0	12.5	19.8	3.6	33.8	0	37.5	0	0	0	0	

	Cedar Avenue Southbound				I-10 Westbound Off Ramp Westbound				Cedar Avenue Northbound				I-10 Westbound On Ramp Eastbound				
Start Time	Left	Thru	Right	App. Total	Left	Thru	Right	App. Total	Left	Thru	Right	App. Total	Left	Thru	Right	App. Total	Int. Total
Peak Hour Analysis From 04:15 PM to 05:00 PM - Peak 1 of 1																	
Peak Hour for Entire Intersection Begins at 04:15 PM																	
04:15 PM	0	**271**	123	**394**	**72**	0	104	176	30	294	0	324	0	0	0	0	894
04:30 PM	0	254	**134**	388	72	**1**	95	168	**43**	297	0	340	0	0	0	0	896
04:45 PM	0	267	120	387	59	1	**139**	**199**	39	287	0	326	0	0	0	0	**912**
05:00 PM	0	238	115	353	69	0	116	185	28	**324**	0	**352**	0	0	0	0	890
Total Volume	0	1030	492	1522	272	2	454	728	140	1202	0	1342	0	0	0	0	3592
% App. Total	0	67.7	32.3		37.4	0.3	62.4		10.4	89.6	0		0	0	0		
PHF	.000	.950	.918	.966	.944	.500	.817	.915	.814	.927	.000	.953	.000	.000	.000	.000	.985

Counts Unlimited
PO Box 1178
Corona, CA 92878
(951) 268-6268

City of San Bernardino
N/S: Cedar Avenue
E/W: I-10 Westbound Ramps
Weather: Clear

File Name : 02_CSB_Cedar_10W PM
Site Code : 04520047
Start Date : 1/23/2020
Page No : 2

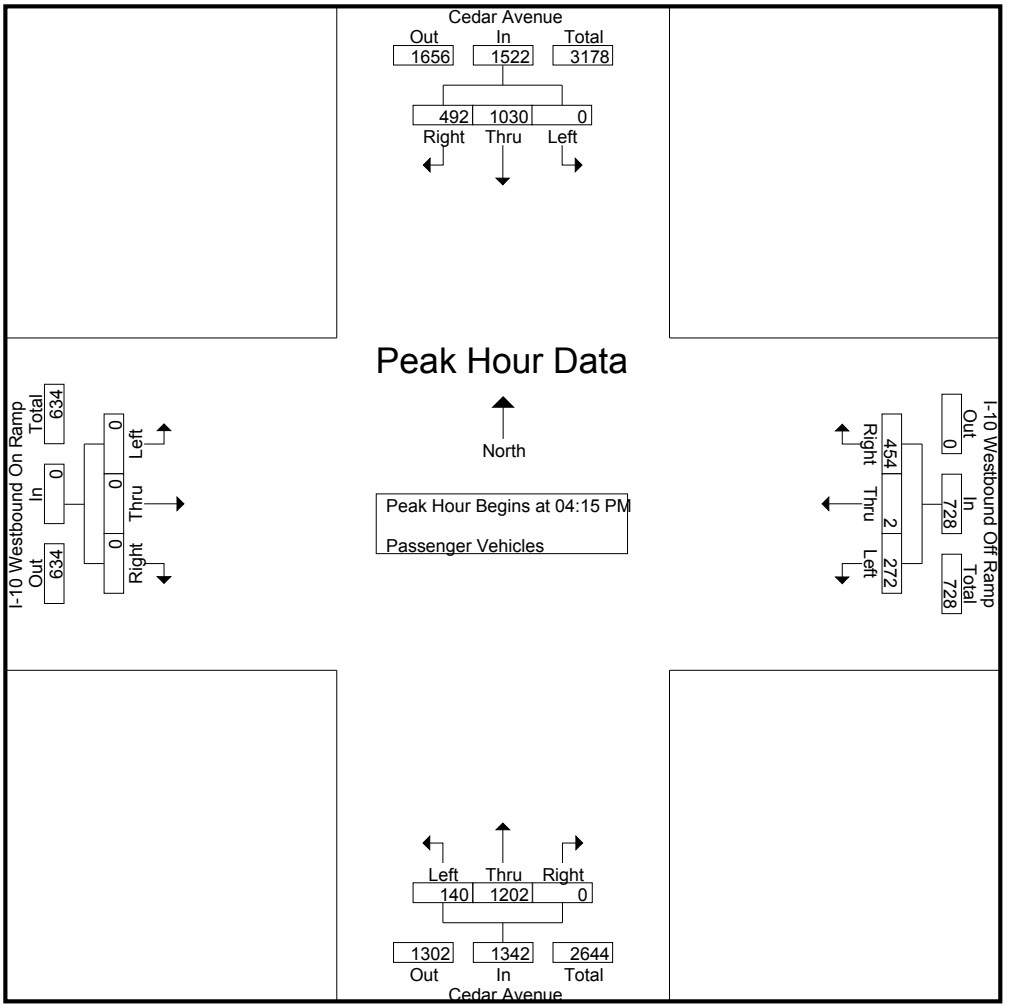

Peak Hour Analysis From 04:15 PM to 05:00 PM - Peak 1 of 1
Peak Hour for Each Approach Begins at:

	04:15 PM				04:15 PM				04:15 PM				04:15 PM			
+0 mins.	0	**271**	123	**394**	**72**	0	104	176	30	294	0	324	0	0	0	0
+15 mins.	0	254	**134**	388	72	**1**	95	168	**43**	297	0	340	0	0	0	0
+30 mins.	0	267	120	387	59	1	**139**	**199**	39	287	0	326	0	0	0	0
+45 mins.	0	238	115	353	69	0	116	185	28	**324**	0	**352**	0	0	0	0
Total Volume	0	1030	492	1522	272	2	454	728	140	1202	0	1342	0	0	0	0
% App. Total	0	67.7	32.3		37.4	0.3	62.4		10.4	89.6	0		0	0	0	
PHF	.000	.950	.918	.966	.944	.500	.817	.915	.814	.927	.000	.953	.000	.000	.000	.000

Counts Unlimited
PO Box 1178
Corona, CA 92878
(951) 268-6268

City of San Bernardino
N/S: Cedar Avenue
E/W: I-10 Westbound Ramps
Weather: Clear

File Name : 02_CSB_Cedar_10W PM
Site Code : 04520047
Start Date : 1/23/2020
Page No : 1

Groups Printed- Large 2 Axle Vehicles

	Cedar Avenue Southbound				I-10 Westbound Off Ramp Westbound				Cedar Avenue Northbound				I-10 Westbound On Ramp Eastbound				
Start Time	Left	Thru	Right	App. Total	Left	Thru	Right	App. Total	Left	Thru	Right	App. Total	Left	Thru	Right	App. Total	Int. Total
04:00 PM	0	13	2	15	1	0	2	3	2	2	0	4	0	0	0	0	22
04:15 PM	0	1	2	3	3	0	2	5	0	9	0	9	0	0	0	0	17
04:30 PM	0	8	1	9	2	0	1	3	1	4	0	5	0	0	0	0	17
04:45 PM	0	4	0	4	1	0	1	2	0	6	0	6	0	0	0	0	12
Total	0	26	5	31	7	0	6	13	3	21	0	24	0	0	0	0	68
05:00 PM	0	8	0	8	1	0	0	1	2	4	0	6	0	0	0	0	15
05:15 PM	0	2	0	2	2	0	2	4	0	7	0	7	0	0	0	0	13
05:30 PM	0	6	4	10	0	0	0	0	3	3	0	6	0	0	0	0	16
05:45 PM	0	4	1	5	1	0	3	4	1	6	0	7	0	0	0	0	16
Total	0	20	5	25	4	0	5	9	6	20	0	26	0	0	0	0	60
Grand Total	0	46	10	56	11	0	11	22	9	41	0	50	0	0	0	0	128
Apprch %	0	82.1	17.9		50	0	50		18	82	0		0	0	0		
Total %	0	35.9	7.8	43.8	8.6	0	8.6	17.2	7	32	0	39.1	0	0	0	0	

	Cedar Avenue Southbound				I-10 Westbound Off Ramp Westbound				Cedar Avenue Northbound				I-10 Westbound On Ramp Eastbound				
Start Time	Left	Thru	Right	App. Total	Left	Thru	Right	App. Total	Left	Thru	Right	App. Total	Left	Thru	Right	App. Total	Int. Total
Peak Hour Analysis From 04:15 PM to 05:00 PM - Peak 1 of 1																	
Peak Hour for Entire Intersection Begins at 04:15 PM																	
04:15 PM	0	1	**2**	3	**3**	0	**2**	**5**	0	**9**	0	**9**	0	0	0	0	**17**
04:30 PM	0	**8**	1	**9**	2	0	1	3	1	4	0	5	0	0	0	0	17
04:45 PM	0	4	0	4	1	0	1	2	0	6	0	6	0	0	0	0	12
05:00 PM	0	8	0	8	1	0	0	1	**2**	4	0	6	0	0	0	0	15
Total Volume	0	21	3	24	7	0	4	11	3	23	0	26	0	0	0	0	61
% App. Total	0	87.5	12.5		63.6	0	36.4		11.5	88.5	0		0	0	0		
PHF	.000	.656	.375	.667	.583	.000	.500	.550	.375	.639	.000	.722	.000	.000	.000	.000	.897

Counts Unlimited
PO Box 1178
Corona, CA 92878
(951) 268-6268

City of San Bernardino
N/S: Cedar Avenue
E/W: I-10 Westbound Ramps
Weather: Clear

File Name : 02_CSB_Cedar_10W PM
Site Code : 04520047
Start Date : 1/23/2020
Page No : 2

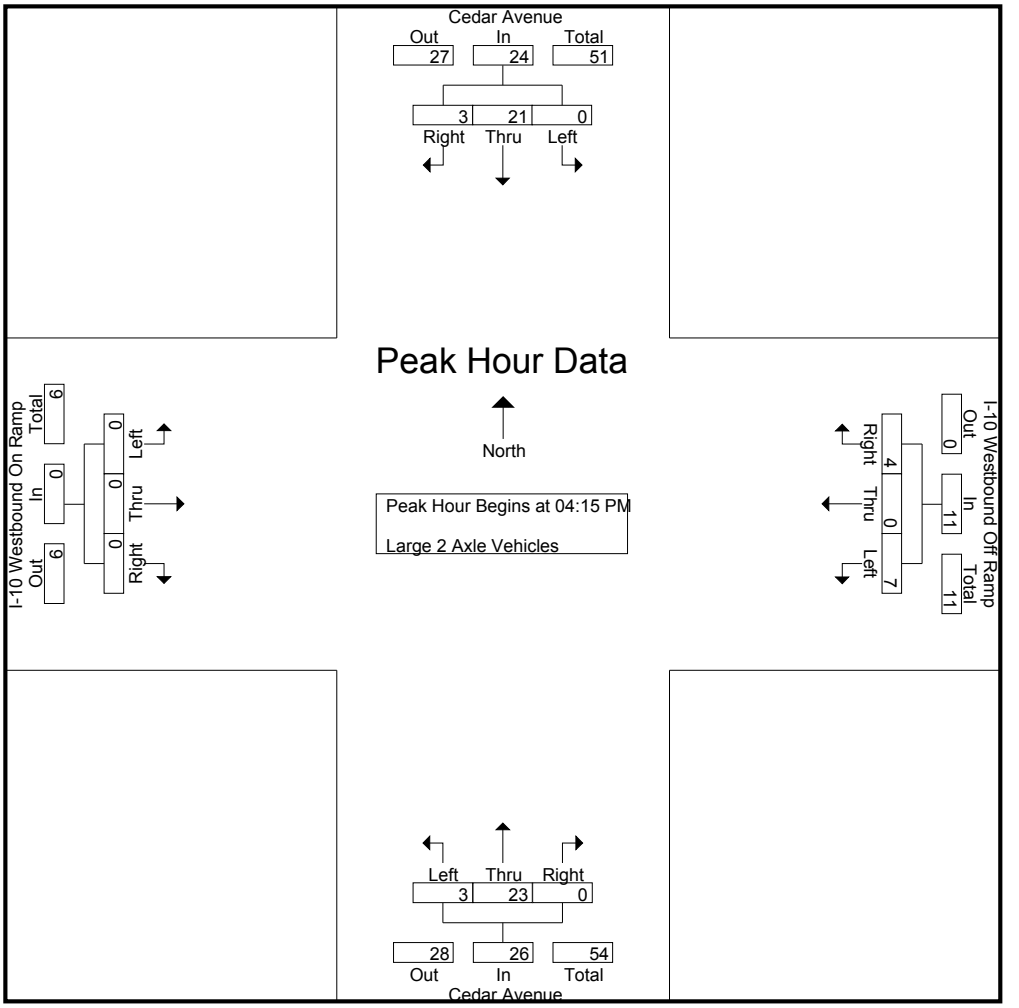

Peak Hour Analysis From 04:15 PM to 05:00 PM - Peak 1 of 1
Peak Hour for Each Approach Begins at:

	04:15 PM				04:15 PM				04:15 PM				04:15 PM			
+0 mins.	0	1	**2**	3	**3**	0	**2**	**5**	0	**9**	0	**9**	0	0	0	0
+15 mins.	0	**8**	1	**9**	2	0	1	3	1	4	0	5	0	0	0	0
+30 mins.	0	4	0	4	1	0	1	2	0	6	0	6	0	0	0	0
+45 mins.	0	8	0	8	1	0	0	1	**2**	4	0	6	0	0	0	0
Total Volume	0	21	3	24	7	0	4	11	3	23	0	26	0	0	0	0
% App. Total	0	87.5	12.5		63.6	0	36.4		11.5	88.5	0		0	0	0	
PHF	.000	.656	.375	.667	.583	.000	.500	.550	.375	.639	.000	.722	.000	.000	.000	.000

Counts Unlimited
PO Box 1178
Corona, CA 92878
(951) 268-6268

City of San Bernardino
N/S: Cedar Avenue
E/W: I-10 Westbound Ramps
Weather: Clear

File Name : 02_CSB_Cedar_10W PM
Site Code : 04520047
Start Date : 1/23/2020
Page No : 1

Groups Printed- 3 Axle Vehicles

	Cedar Avenue Southbound				I-10 Westbound Off Ramp Westbound				Cedar Avenue Northbound				I-10 Westbound On Ramp Eastbound				
Start Time	Left	Thru	Right	App. Total	Left	Thru	Right	App. Total	Left	Thru	Right	App. Total	Left	Thru	Right	App. Total	Int. Total
04:00 PM	0	13	0	13	1	0	2	3	1	2	0	3	0	0	0	0	19
04:15 PM	0	1	0	1	1	0	0	1	0	4	0	4	0	0	0	0	6
04:30 PM	0	8	0	8	1	0	1	2	0	1	0	1	0	0	0	0	11
04:45 PM	0	4	1	5	0	0	1	1	1	2	0	3	0	0	0	0	9
Total	0	26	1	27	3	0	4	7	2	9	0	11	0	0	0	0	45
05:00 PM	0	8	2	10	3	0	2	5	2	1	0	3	0	0	0	0	18
05:15 PM	0	2	0	2	2	0	0	2	1	1	0	2	0	0	0	0	6
05:30 PM	0	6	0	6	1	0	0	1	0	1	0	1	0	0	0	0	8
05:45 PM	0	4	0	4	1	0	0	1	1	0	0	1	0	0	0	0	6
Total	0	20	2	22	7	0	2	9	4	3	0	7	0	0	0	0	38
Grand Total	0	46	3	49	10	0	6	16	6	12	0	18	0	0	0	0	83
Apprch %	0	93.9	6.1		62.5	0	37.5		33.3	66.7	0		0	0	0		
Total %	0	55.4	3.6	59	12	0	7.2	19.3	7.2	14.5	0	21.7	0	0	0	0	

	Cedar Avenue Southbound				I-10 Westbound Off Ramp Westbound				Cedar Avenue Northbound				I-10 Westbound On Ramp Eastbound				
Start Time	Left	Thru	Right	App. Total	Left	Thru	Right	App. Total	Left	Thru	Right	App. Total	Left	Thru	Right	App. Total	Int. Total
Peak Hour Analysis From 04:15 PM to 05:00 PM - Peak 1 of 1																	
Peak Hour for Entire Intersection Begins at 04:15 PM																	
04:15 PM	0	1	0	1	1	0	0	1	0	**4**	0	**4**	0	0	0	0	6
04:30 PM	0	**8**	0	8	1	0	1	2	0	1	0	1	0	0	0	0	11
04:45 PM	0	4	1	5	0	0	1	1	1	2	0	3	0	0	0	0	9
05:00 PM	0	8	**2**	**10**	**3**	0	**2**	**5**	**2**	1	0	3	0	0	0	0	**18**
Total Volume	0	21	3	24	5	0	4	9	3	8	0	11	0	0	0	0	44
% App. Total	0	87.5	12.5		55.6	0	44.4		27.3	72.7	0		0	0	0		
PHF	.000	.656	.375	.600	.417	.000	.500	.450	.375	.500	.000	.688	.000	.000	.000	.000	.611

Counts Unlimited
PO Box 1178
Corona, CA 92878
(951) 268-6268

City of San Bernardino
N/S: Cedar Avenue
E/W: I-10 Westbound Ramps
Weather: Clear

File Name : 02_CSB_Cedar_10W PM
Site Code : 04520047
Start Date : 1/23/2020
Page No : 2

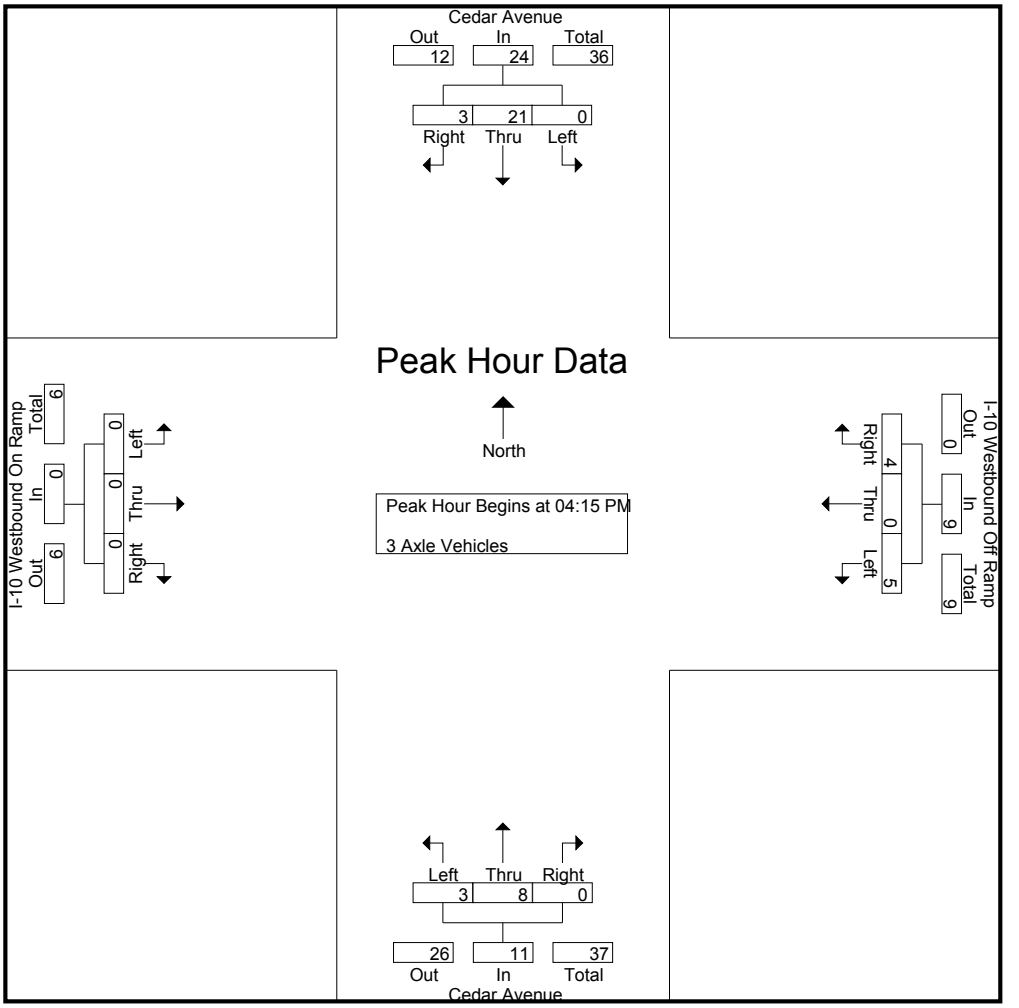

Peak Hour Analysis From 04:15 PM to 05:00 PM - Peak 1 of 1
Peak Hour for Each Approach Begins at:

	04:15 PM				04:15 PM				04:15 PM				04:15 PM			
+0 mins.	0	1	0	1	1	0	0	1	0	**4**	0	**4**	0	0	0	0
+15 mins.	0	**8**	0	8	1	0	1	2	0	1	0	1	0	0	0	0
+30 mins.	0	4	1	5	0	0	1	1	1	2	0	3	0	0	0	0
+45 mins.	0	8	**2**	**10**	**3**	0	**2**	**5**	**2**	1	0	3	0	0	0	0
Total Volume	0	21	3	24	5	0	4	9	3	8	0	11	0	0	0	0
% App. Total	0	87.5	12.5		55.6	0	44.4		27.3	72.7	0		0	0	0	
PHF	.000	.656	.375	.600	.417	.000	.500	.450	.375	.500	.000	.688	.000	.000	.000	.000

Counts Unlimited
PO Box 1178
Corona, CA 92878
(951) 268-6268

City of San Bernardino
N/S: Cedar Avenue
E/W: I-10 Westbound Ramps
Weather: Clear

File Name : 02_CSB_Cedar_10W PM
Site Code : 04520047
Start Date : 1/23/2020
Page No : 1

Groups Printed- 4+ Axle Trucks

	Cedar Avenue Southbound				I-10 Westbound Off Ramp Westbound				Cedar Avenue Northbound				I-10 Westbound On Ramp Eastbound				
Start Time	Left	Thru	Right	App. Total	Left	Thru	Right	App. Total	Left	Thru	Right	App. Total	Left	Thru	Right	App. Total	Int. Total
04:00 PM	0	5	2	7	7	0	2	9	2	4	0	6	0	0	0	0	22
04:15 PM	0	6	4	10	3	0	2	5	2	5	0	7	0	0	0	0	22
04:30 PM	0	3	0	3	3	0	4	7	6	6	0	12	0	0	0	0	22
04:45 PM	0	5	2	7	6	0	3	9	3	1	0	4	0	0	0	0	20
Total	0	19	8	27	19	0	11	30	13	16	0	29	0	0	0	0	86
05:00 PM	0	8	2	10	2	0	4	6	0	1	0	1	0	0	0	0	17
05:15 PM	0	2	4	6	3	0	2	5	2	3	0	5	0	0	0	0	16
05:30 PM	0	3	3	6	3	0	3	6	0	3	0	3	0	0	0	0	15
05:45 PM	0	6	1	7	2	0	2	4	2	3	0	5	0	0	0	0	16
Total	0	19	10	29	10	0	11	21	4	10	0	14	0	0	0	0	64
Grand Total	0	38	18	56	29	0	22	51	17	26	0	43	0	0	0	0	150
Apprch %	0	67.9	32.1		56.9	0	43.1		39.5	60.5	0		0	0	0		
Total %	0	25.3	12	37.3	19.3	0	14.7	34	11.3	17.3	0	28.7	0	0	0	0	

	Cedar Avenue Southbound				I-10 Westbound Off Ramp Westbound				Cedar Avenue Northbound				I-10 Westbound On Ramp Eastbound				
Start Time	Left	Thru	Right	App. Total	Left	Thru	Right	App. Total	Left	Thru	Right	App. Total	Left	Thru	Right	App. Total	Int. Total
Peak Hour Analysis From 04:15 PM to 05:00 PM - Peak 1 of 1																	
Peak Hour for Entire Intersection Begins at 04:15 PM																	
04:15 PM	0	6	**4**	**10**	3	0	2	5	2	5	0	7	0	0	0	0	**22**
04:30 PM	0	3	0	3	3	0	**4**	7	**6**	**6**	0	**12**	0	0	0	0	22
04:45 PM	0	5	2	7	**6**	0	3	**9**	3	1	0	4	0	0	0	0	20
05:00 PM	0	**8**	2	10	2	0	4	6	0	1	0	1	0	0	0	0	17
Total Volume	0	22	8	30	14	0	13	27	11	13	0	24	0	0	0	0	81
% App. Total	0	73.3	26.7		51.9	0	48.1		45.8	54.2	0		0	0	0		
PHF	.000	.688	.500	.750	.583	.000	.813	.750	.458	.542	.000	.500	.000	.000	.000	.000	.920

Counts Unlimited
PO Box 1178
Corona, CA 92878
(951) 268-6268

City of San Bernardino
N/S: Cedar Avenue
E/W: I-10 Westbound Ramps
Weather: Clear

File Name : 02_CSB_Cedar_10W PM
Site Code : 04520047
Start Date : 1/23/2020
Page No : 2

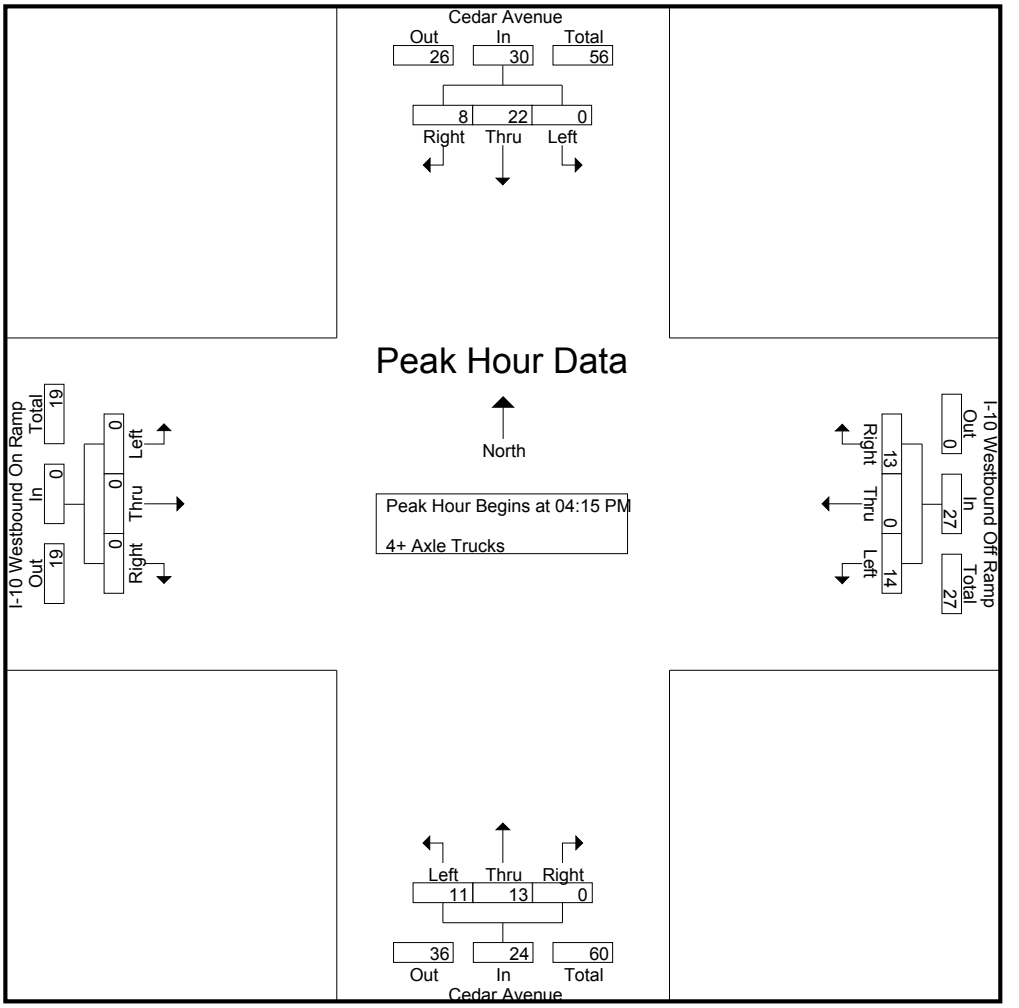

Peak Hour Analysis From 04:15 PM to 05:00 PM - Peak 1 of 1
Peak Hour for Each Approach Begins at:

	04:15 PM				04:15 PM				04:15 PM				04:15 PM			
+0 mins.	0	6	**4**	**10**	3	0	2	5	2	5	0	7	0	0	0	0
+15 mins.	0	3	0	3	3	0	**4**	7	**6**	**6**	0	**12**	0	0	0	0
+30 mins.	0	5	2	7	**6**	0	3	**9**	3	1	0	4	0	0	0	0
+45 mins.	0	**8**	2	10	2	0	4	6	0	1	0	1	0	0	0	0
Total Volume	0	22	8	30	14	0	13	27	11	13	0	24	0	0	0	0
% App. Total	0	73.3	26.7		51.9	0	48.1		45.8	54.2	0		0	0	0	
PHF	.000	.688	.500	.750	.583	.000	.813	.750	.458	.542	.000	.500	.000	.000	.000	.000

Counts Unlimited
PO Box 1178
Corona, CA 92878
(951) 268-6268

City of San Bernardino
N/S: Cedar Avenue
E/W: I-10 Eastbound Ramps
Weather: Clear

File Name : 03_CSB_Cedar_10E AM
Site Code : 04520047
Start Date : 1/23/2020
Page No : 1

Groups Printed- Passenger Vehicles - Large 2 Axle Vehicles - 3 Axle Vehicles - 4+ Axle Trucks

	Cedar Avenue Southbound				I-10 Eastbound On Ramp Westbound				Cedar Avenue Northbound				I-10 Eastbound Off Ramp Eastbound				
Start Time	Left	Thru	Right	App. Total	Left	Thru	Right	App. Total	Left	Thru	Right	App. Total	Left	Thru	Right	App. Total	Int. Total
07:00 AM	78	343	0	421	0	0	0	0	0	243	82	325	99	0	95	194	940
07:15 AM	83	323	0	406	0	0	0	0	0	252	104	356	102	0	63	165	927
07:30 AM	97	298	0	395	0	0	0	0	0	271	116	387	95	0	70	165	947
07:45 AM	101	298	0	399	0	0	0	0	0	240	78	318	108	0	62	170	887
Total	359	1262	0	1621	0	0	0	0	0	1006	380	1386	404	0	290	694	3701
08:00 AM	88	278	0	366	0	0	0	0	0	173	71	244	107	1	85	193	803
08:15 AM	89	241	0	330	0	0	0	0	0	210	65	275	84	0	92	176	781
08:30 AM	93	223	0	316	0	0	0	0	0	221	69	290	80	1	52	133	739
08:45 AM	86	226	0	312	0	0	0	0	0	203	52	255	93	0	46	139	706
Total	356	968	0	1324	0	0	0	0	0	807	257	1064	364	2	275	641	3029
Grand Total	715	2230	0	2945	0	0	0	0	0	1813	637	2450	768	2	565	1335	6730
Apprch %	24.3	75.7	0		0	0	0		0	74	26		57.5	0.1	42.3		
Total %	10.6	33.1	0	43.8	0	0	0	0	0	26.9	9.5	36.4	11.4	0	8.4	19.8	
Passenger Vehicles	675	2056	0	2731	0	0	0	0	0	1618	583	2201	682	2	461	1145	6077
% Passenger Vehicles	94.4	92.2	0	92.7	0	0	0	0	0	89.2	91.5	89.8	88.8	100	81.6	85.8	90.3
Large 2 Axle Vehicles	19	64	0	83	0	0	0	0	0	91	14	105	31	0	30	61	249
% Large 2 Axle Vehicles	2.7	2.9	0	2.8	0	0	0	0	0	5	2.2	4.3	4	0	5.3	4.6	3.7
3 Axle Vehicles	4	64	0	68	0	0	0	0	0	32	11	43	12	0	8	20	131
% 3 Axle Vehicles	0.6	2.9	0	2.3	0	0	0	0	0	1.8	1.7	1.8	1.6	0	1.4	1.5	1.9
4+ Axle Trucks	17	46	0	63	0	0	0	0	0	72	29	101	43	0	66	109	273
% 4+ Axle Trucks	2.4	2.1	0	2.1	0	0	0	0	0	4	4.6	4.1	5.6	0	11.7	8.2	4.1

	Cedar Avenue Southbound				I-10 Eastbound On Ramp Westbound				Cedar Avenue Northbound				I-10 Eastbound Off Ramp Eastbound				
Start Time	Left	Thru	Right	App. Total	Left	Thru	Right	App. Total	Left	Thru	Right	App. Total	Left	Thru	Right	App. Total	Int. Total
Peak Hour Analysis From 07:00 AM to 08:45 AM - Peak 1 of 1																	
Peak Hour for Entire Intersection Begins at 07:00 AM																	
07:00 AM	78	**343**	0	**421**	0	0	0	0	0	243	82	325	99	0	**95**	**194**	940
07:15 AM	83	323	0	406	0	0	0	0	0	252	104	356	102	0	63	165	927
07:30 AM	97	298	0	395	0	0	0	0	0	**271**	**116**	**387**	95	0	70	165	**947**
07:45 AM	**101**	298	0	399	0	0	0	0	0	240	78	318	**108**	0	62	170	887
Total Volume	359	1262	0	1621	0	0	0	0	0	1006	380	1386	404	0	290	694	3701
% App. Total	22.1	77.9	0		0	0	0		0	72.6	27.4		58.2	0	41.8		
PHF	.889	.920	.000	.963	.000	.000	.000	.000	.000	.928	.819	.895	.935	.000	.763	.894	.977

Counts Unlimited
PO Box 1178
Corona, CA 92878
(951) 268-6268

City of San Bernardino
N/S: Cedar Avenue
E/W: I-10 Eastbound Ramps
Weather: Clear

File Name : 03_CSB_Cedar_10E AM
Site Code : 04520047
Start Date : 1/23/2020
Page No : 2

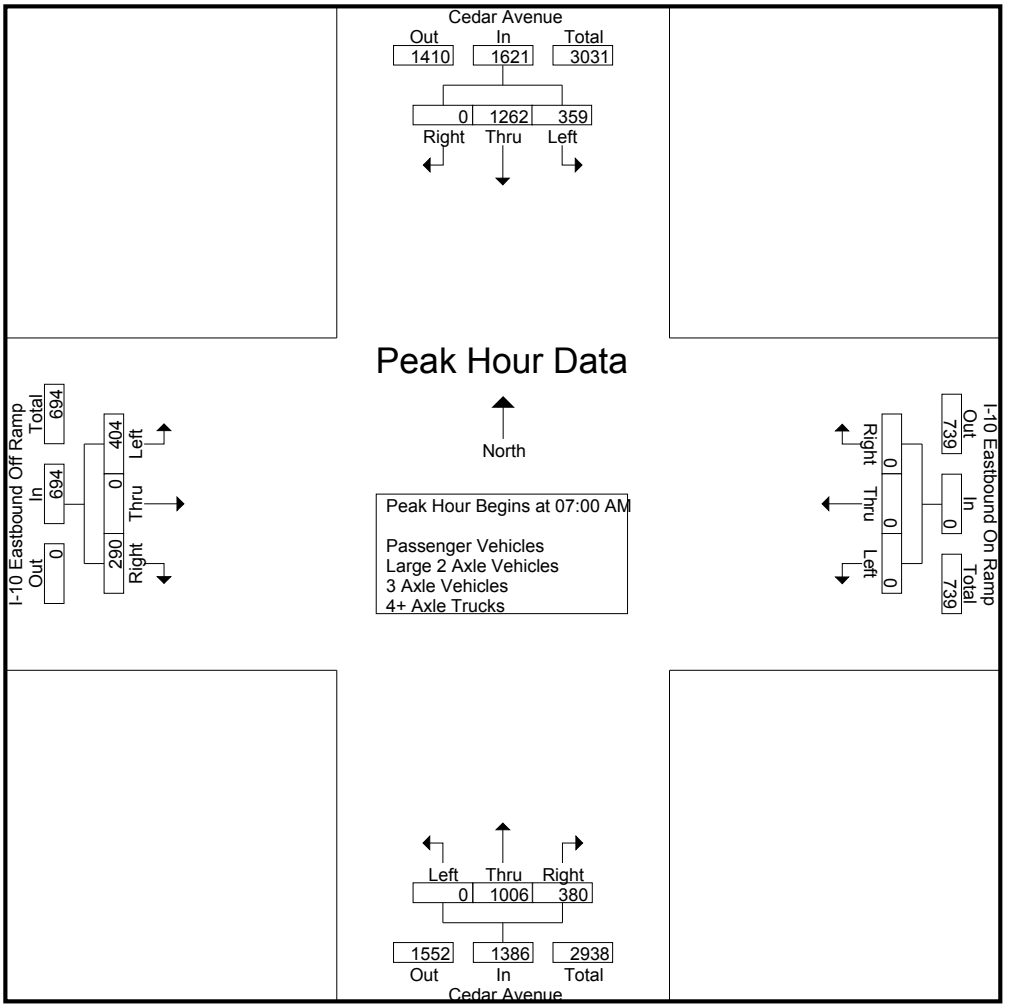

Peak Hour Analysis From 07:00 AM to 08:45 AM - Peak 1 of 1
Peak Hour for Each Approach Begins at:

	07:00 AM				07:00 AM				07:00 AM				07:30 AM			
+0 mins.	78	**343**	0	**421**	0	0	0	0	0	243	82	325	95	0	70	165
+15 mins.	83	323	0	406	0	0	0	0	0	252	104	356	**108**	0	62	170
+30 mins.	97	298	0	395	0	0	0	0	0	**271**	**116**	**387**	107	**1**	85	**193**
+45 mins.	**101**	298	0	399	0	0	0	0	0	240	78	318	84	0	**92**	176
Total Volume	359	1262	0	1621	0	0	0	0	0	1006	380	1386	394	1	309	704
% App. Total	22.1	77.9	0		0	0	0		0	72.6	27.4		56	0.1	43.9	
PHF	.889	.920	.000	.963	.000	.000	.000	.000	.000	.928	.819	.895	.912	.250	.840	.912

Counts Unlimited
PO Box 1178
Corona, CA 92878
(951) 268-6268

City of San Bernardino
N/S: Cedar Avenue
E/W: I-10 Eastbound Ramps
Weather: Clear

File Name : 03_CSB_Cedar_10E AM
Site Code : 04520047
Start Date : 1/23/2020
Page No : 1

Groups Printed- Passenger Vehicles

	Cedar Avenue Southbound				I-10 Eastbound On Ramp Westbound				Cedar Avenue Northbound				I-10 Eastbound Off Ramp Eastbound				
Start Time	Left	Thru	Right	App. Total	Left	Thru	Right	App. Total	Left	Thru	Right	App. Total	Left	Thru	Right	App. Total	Int. Total
07:00 AM	72	333	0	405	0	0	0	0	0	224	77	301	95	0	76	171	877
07:15 AM	77	299	0	376	0	0	0	0	0	238	100	338	96	0	51	147	861
07:30 AM	91	272	0	363	0	0	0	0	0	252	110	362	83	0	62	145	870
07:45 AM	96	282	0	378	0	0	0	0	0	217	69	286	95	0	53	148	812
Total	336	1186	0	1522	0	0	0	0	0	931	356	1287	369	0	242	611	3420
08:00 AM	83	249	0	332	0	0	0	0	0	153	64	217	96	1	72	169	718
08:15 AM	85	223	0	308	0	0	0	0	0	187	53	240	73	0	73	146	694
08:30 AM	89	198	0	287	0	0	0	0	0	179	62	241	63	1	40	104	632
08:45 AM	82	200	0	282	0	0	0	0	0	168	48	216	81	0	34	115	613
Total	339	870	0	1209	0	0	0	0	0	687	227	914	313	2	219	534	2657
Grand Total	675	2056	0	2731	0	0	0	0	0	1618	583	2201	682	2	461	1145	6077
Apprch %	24.7	75.3	0		0	0	0		0	73.5	26.5		59.6	0.2	40.3		
Total %	11.1	33.8	0	44.9	0	0	0	0	0	26.6	9.6	36.2	11.2	0	7.6	18.8	

	Cedar Avenue Southbound				I-10 Eastbound On Ramp Westbound				Cedar Avenue Northbound				I-10 Eastbound Off Ramp Eastbound				
Start Time	Left	Thru	Right	App. Total	Left	Thru	Right	App. Total	Left	Thru	Right	App. Total	Left	Thru	Right	App. Total	Int. Total
Peak Hour Analysis From 07:00 AM to 07:45 AM - Peak 1 of 1																	
Peak Hour for Entire Intersection Begins at 07:00 AM																	
07:00 AM	72	**333**	0	**405**	0	0	0	0	0	224	77	301	95	0	**76**	**171**	**877**
07:15 AM	77	299	0	376	0	0	0	0	0	238	100	338	**96**	0	51	147	861
07:30 AM	91	272	0	363	0	0	0	0	0	**252**	**110**	**362**	83	0	62	145	870
07:45 AM	**96**	282	0	378	0	0	0	0	0	217	69	286	95	0	53	148	812
Total Volume	336	1186	0	1522	0	0	0	0	0	931	356	1287	369	0	242	611	3420
% App. Total	22.1	77.9	0		0	0	0		0	72.3	27.7		60.4	0	39.6		
PHF	.875	.890	.000	.940	.000	.000	.000	.000	.000	.924	.809	.889	.961	.000	.796	.893	.975

Counts Unlimited
PO Box 1178
Corona, CA 92878
(951) 268-6268

City of San Bernardino
N/S: Cedar Avenue
E/W: I-10 Eastbound Ramps
Weather: Clear

File Name : 03_CSB_Cedar_10E AM
Site Code : 04520047
Start Date : 1/23/2020
Page No : 2

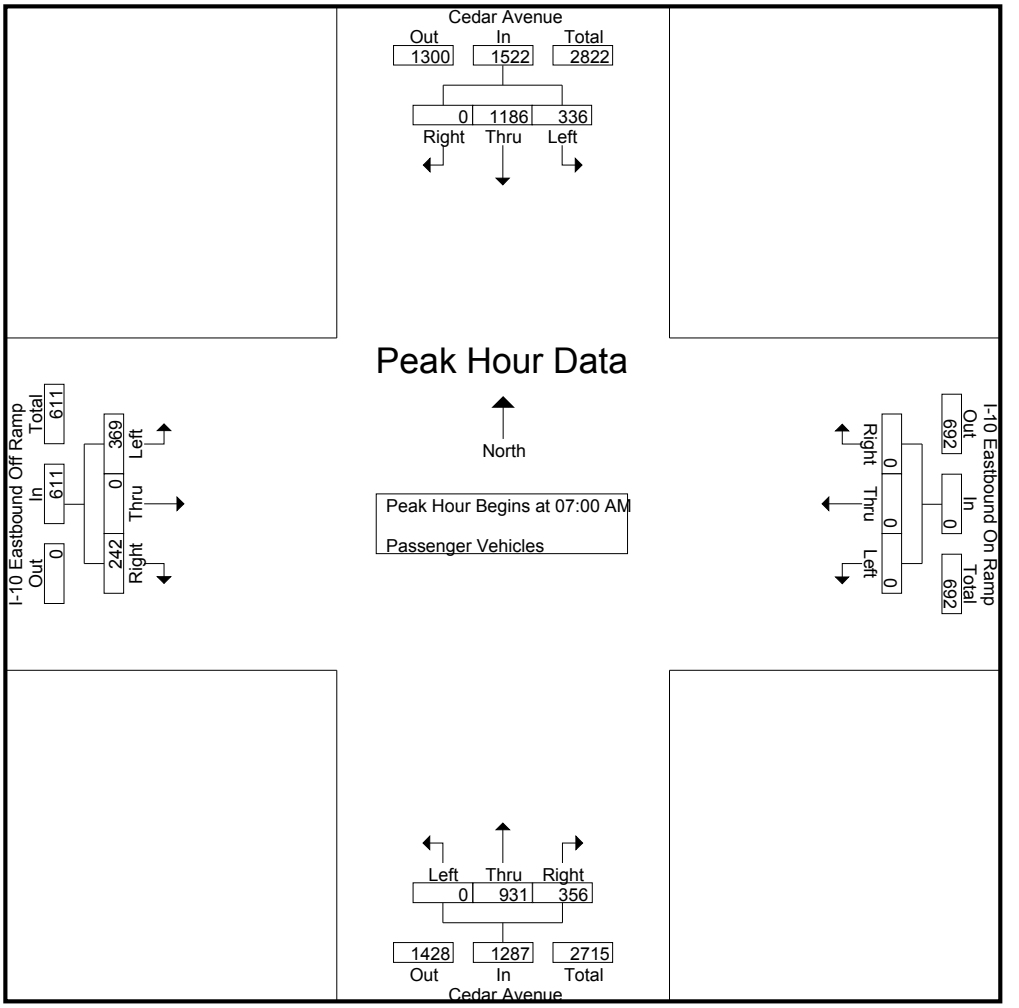

Peak Hour Analysis From 07:00 AM to 07:45 AM - Peak 1 of 1
Peak Hour for Each Approach Begins at:

	07:00 AM				07:00 AM				07:00 AM				07:00 AM			
+0 mins.	72	**333**	0	**405**	0	0	0	0	0	224	77	301	95	0	**76**	**171**
+15 mins.	77	299	0	376	0	0	0	0	0	238	100	338	**96**	0	51	147
+30 mins.	91	272	0	363	0	0	0	0	0	**252**	**110**	**362**	83	0	62	145
+45 mins.	**96**	282	0	378	0	0	0	0	0	217	69	286	95	0	53	148
Total Volume	336	1186	0	1522	0	0	0	0	0	931	356	1287	369	0	242	611
% App. Total	22.1	77.9	0		0	0	0		0	72.3	27.7		60.4	0	39.6	
PHF	.875	.890	.000	.940	.000	.000	.000	.000	.000	.924	.809	.889	.961	.000	.796	.893

Counts Unlimited
PO Box 1178
Corona, CA 92878
(951) 268-6268

City of San Bernardino
N/S: Cedar Avenue
E/W: I-10 Eastbound Ramps
Weather: Clear

File Name : 03_CSB_Cedar_10E AM
Site Code : 04520047
Start Date : 1/23/2020
Page No : 1

Groups Printed- Large 2 Axle Vehicles

	Cedar Avenue Southbound				I-10 Eastbound On Ramp Westbound				Cedar Avenue Northbound				I-10 Eastbound Off Ramp Eastbound				
Start Time	Left	Thru	Right	App. Total	Left	Thru	Right	App. Total	Left	Thru	Right	App. Total	Left	Thru	Right	App. Total	Int. Total
07:00 AM	4	2	0	6	0	0	0	0	0	8	0	8	2	0	5	7	21
07:15 AM	4	10	0	14	0	0	0	0	0	4	1	5	2	0	3	5	24
07:30 AM	2	11	0	13	0	0	0	0	0	12	1	13	2	0	1	3	29
07:45 AM	0	4	0	4	0	0	0	0	0	11	3	14	1	0	6	7	25
Total	10	27	0	37	0	0	0	0	0	35	5	40	7	0	15	22	99
08:00 AM	2	12	0	14	0	0	0	0	0	11	1	12	6	0	3	9	35
08:15 AM	3	5	0	8	0	0	0	0	0	9	6	15	4	0	4	8	31
08:30 AM	2	9	0	11	0	0	0	0	0	17	1	18	10	0	4	14	43
08:45 AM	2	11	0	13	0	0	0	0	0	19	1	20	4	0	4	8	41
Total	9	37	0	46	0	0	0	0	0	56	9	65	24	0	15	39	150
Grand Total	19	64	0	83	0	0	0	0	0	91	14	105	31	0	30	61	249
Apprch %	22.9	77.1	0		0	0	0		0	86.7	13.3		50.8	0	49.2		
Total %	7.6	25.7	0	33.3	0	0	0	0	0	36.5	5.6	42.2	12.4	0	12	24.5	

	Cedar Avenue Southbound				I-10 Eastbound On Ramp Westbound				Cedar Avenue Northbound				I-10 Eastbound Off Ramp Eastbound				
Start Time	Left	Thru	Right	App. Total	Left	Thru	Right	App. Total	Left	Thru	Right	App. Total	Left	Thru	Right	App. Total	Int. Total
Peak Hour Analysis From 07:00 AM to 07:45 AM - Peak 1 of 1																	
Peak Hour for Entire Intersection Begins at 07:00 AM																	
07:00 AM	**4**	2	0	6	0	0	0	0	0	8	0	8	**2**	0	5	**7**	21
07:15 AM	4	10	0	**14**	0	0	0	0	0	4	1	5	2	0	3	5	24
07:30 AM	2	**11**	0	13	0	0	0	0	0	**12**	1	13	2	0	1	3	**29**
07:45 AM	0	4	0	4	0	0	0	0	0	11	**3**	**14**	1	0	**6**	7	25
Total Volume	10	27	0	37	0	0	0	0	0	35	5	40	7	0	15	22	99
% App. Total	27	73	0		0	0	0		0	87.5	12.5		31.8	0	68.2		
PHF	.625	.614	.000	.661	.000	.000	.000	.000	.000	.729	.417	.714	.875	.000	.625	.786	.853

Counts Unlimited
PO Box 1178
Corona, CA 92878
(951) 268-6268

City of San Bernardino
N/S: Cedar Avenue
E/W: I-10 Eastbound Ramps
Weather: Clear

File Name : 03_CSB_Cedar_10E AM
Site Code : 04520047
Start Date : 1/23/2020
Page No : 2

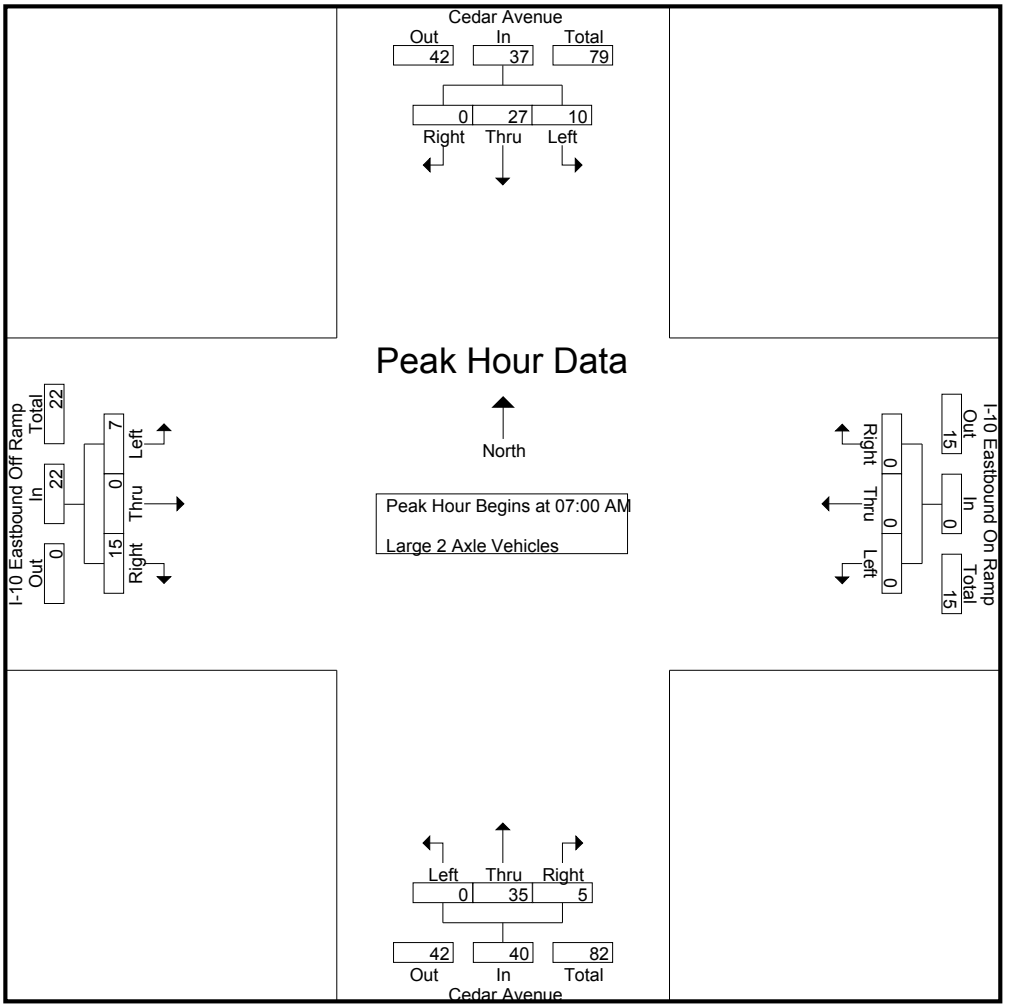

Peak Hour Analysis From 07:00 AM to 07:45 AM - Peak 1 of 1
Peak Hour for Each Approach Begins at:

	07:00 AM				07:00 AM				07:00 AM				07:00 AM			
+0 mins.	**4**	2	0	6	0	0	0	0	0	8	0	8	**2**	0	5	**7**
+15 mins.	4	10	0	**14**	0	0	0	0	0	4	1	5	2	0	3	5
+30 mins.	2	**11**	0	13	0	0	0	0	0	**12**	1	13	2	0	1	3
+45 mins.	0	4	0	4	0	0	0	0	0	11	**3**	**14**	1	0	**6**	7
Total Volume	10	27	0	37	0	0	0	0	0	35	5	40	7	0	15	22
% App. Total	27	73	0		0	0	0		0	87.5	12.5		31.8	0	68.2	
PHF	.625	.614	.000	.661	.000	.000	.000	.000	.000	.729	.417	.714	.875	.000	.625	.786

Counts Unlimited
PO Box 1178
Corona, CA 92878
(951) 268-6268

City of San Bernardino
N/S: Cedar Avenue
E/W: I-10 Eastbound Ramps
Weather: Clear

File Name : 03_CSB_Cedar_10E AM
Site Code : 04520047
Start Date : 1/23/2020
Page No : 1

Groups Printed- 3 Axle Vehicles

	Cedar Avenue Southbound				I-10 Eastbound On Ramp Westbound				Cedar Avenue Northbound				I-10 Eastbound Off Ramp Eastbound				
Start Time	Left	Thru	Right	App. Total	Left	Thru	Right	App. Total	Left	Thru	Right	App. Total	Left	Thru	Right	App. Total	Int. Total
07:00 AM	0	2	0	2	0	0	0	0	0	4	1	5	0	0	2	2	9
07:15 AM	0	10	0	10	0	0	0	0	0	2	1	3	0	0	1	1	14
07:30 AM	1	11	0	12	0	0	0	0	0	4	2	6	4	0	0	4	22
07:45 AM	0	4	0	4	0	0	0	0	0	3	1	4	1	0	0	1	9
Total	1	27	0	28	0	0	0	0	0	13	5	18	5	0	3	8	54
08:00 AM	2	12	0	14	0	0	0	0	0	3	3	6	2	0	2	4	24
08:15 AM	0	5	0	5	0	0	0	0	0	2	1	3	2	0	1	3	11
08:30 AM	1	9	0	10	0	0	0	0	0	10	2	12	2	0	1	3	25
08:45 AM	0	11	0	11	0	0	0	0	0	4	0	4	1	0	1	2	17
Total	3	37	0	40	0	0	0	0	0	19	6	25	7	0	5	12	77
Grand Total	4	64	0	68	0	0	0	0	0	32	11	43	12	0	8	20	131
Apprch %	5.9	94.1	0		0	0	0		0	74.4	25.6		60	0	40		
Total %	3.1	48.9	0	51.9	0	0	0	0	0	24.4	8.4	32.8	9.2	0	6.1	15.3	

	Cedar Avenue Southbound				I-10 Eastbound On Ramp Westbound				Cedar Avenue Northbound				I-10 Eastbound Off Ramp Eastbound				
Start Time	Left	Thru	Right	App. Total	Left	Thru	Right	App. Total	Left	Thru	Right	App. Total	Left	Thru	Right	App. Total	Int. Total
Peak Hour Analysis From 07:00 AM to 07:45 AM - Peak 1 of 1																	
Peak Hour for Entire Intersection Begins at 07:00 AM																	
07:00 AM	0	2	0	2	0	0	0	0	0	**4**	1	5	0	0	**2**	2	9
07:15 AM	0	10	0	10	0	0	0	0	0	2	1	3	0	0	1	1	14
07:30 AM	**1**	**11**	0	**12**	0	0	0	0	0	4	**2**	**6**	**4**	0	0	**4**	**22**
07:45 AM	0	4	0	4	0	0	0	0	0	3	1	4	1	0	0	1	9
Total Volume	1	27	0	28	0	0	0	0	0	13	5	18	5	0	3	8	54
% App. Total	3.6	96.4	0		0	0	0		0	72.2	27.8		62.5	0	37.5		
PHF	.250	.614	.000	.583	.000	.000	.000	.000	.000	.813	.625	.750	.313	.000	.375	.500	.614

Counts Unlimited
PO Box 1178
Corona, CA 92878
(951) 268-6268

City of San Bernardino
N/S: Cedar Avenue
E/W: I-10 Eastbound Ramps
Weather: Clear

File Name : 03_CSB_Cedar_10E AM
Site Code : 04520047
Start Date : 1/23/2020
Page No : 2

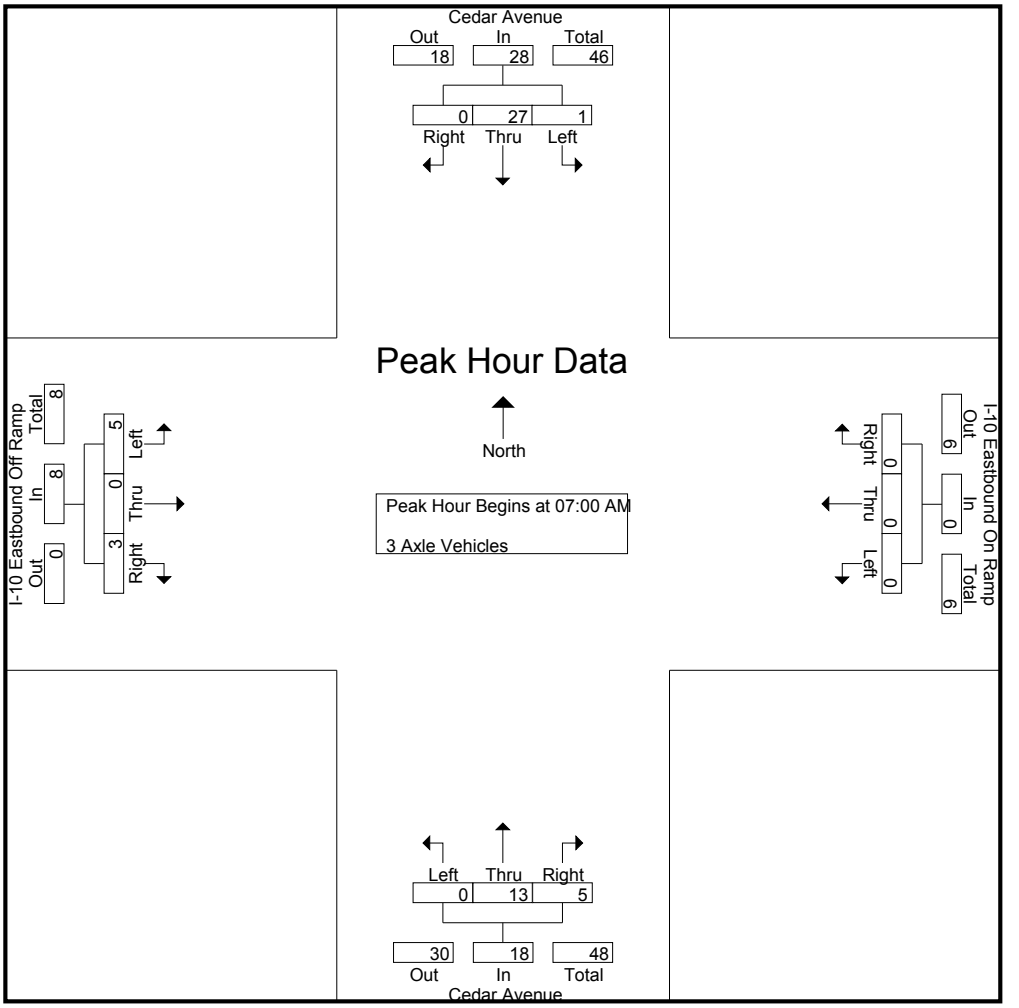

Peak Hour Analysis From 07:00 AM to 07:45 AM - Peak 1 of 1
Peak Hour for Each Approach Begins at:

	07:00 AM				07:00 AM				07:00 AM				07:00 AM			
+0 mins.	0	2	0	2	0	0	0	0	0	**4**	1	5	0	0	**2**	2
+15 mins.	0	10	0	10	0	0	0	0	0	2	1	3	0	0	1	1
+30 mins.	**1**	**11**	0	**12**	0	0	0	0	0	4	**2**	**6**	**4**	0	0	**4**
+45 mins.	0	4	0	4	0	0	0	0	0	3	1	4	1	0	0	1
Total Volume	1	27	0	28	0	0	0	0	0	13	5	18	5	0	3	8
% App. Total	3.6	96.4	0		0	0	0		0	72.2	27.8		62.5	0	37.5	
PHF	.250	.614	.000	.583	.000	.000	.000	.000	.000	.813	.625	.750	.313	.000	.375	.500

Counts Unlimited
PO Box 1178
Corona, CA 92878
(951) 268-6268

City of San Bernardino
N/S: Cedar Avenue
E/W: I-10 Eastbound Ramps
Weather: Clear

File Name : 03_CSB_Cedar_10E AM
Site Code : 04520047
Start Date : 1/23/2020
Page No : 1

Groups Printed- 4+ Axle Trucks

	Cedar Avenue Southbound				I-10 Eastbound On Ramp Westbound				Cedar Avenue Northbound				I-10 Eastbound Off Ramp Eastbound				
Start Time	Left	Thru	Right	App. Total	Left	Thru	Right	App. Total	Left	Thru	Right	App. Total	Left	Thru	Right	App. Total	Int. Total
07:00 AM	2	6	0	8	0	0	0	0	0	7	4	11	2	0	12	14	33
07:15 AM	2	4	0	6	0	0	0	0	0	8	2	10	4	0	8	12	28
07:30 AM	3	4	0	7	0	0	0	0	0	3	3	6	6	0	7	13	26
07:45 AM	5	8	0	13	0	0	0	0	0	9	5	14	11	0	3	14	41
Total	12	22	0	34	0	0	0	0	0	27	14	41	23	0	30	53	128
08:00 AM	1	5	0	6	0	0	0	0	0	6	3	9	3	0	8	11	26
08:15 AM	1	8	0	9	0	0	0	0	0	12	5	17	5	0	14	19	45
08:30 AM	1	7	0	8	0	0	0	0	0	15	4	19	5	0	7	12	39
08:45 AM	2	4	0	6	0	0	0	0	0	12	3	15	7	0	7	14	35
Total	5	24	0	29	0	0	0	0	0	45	15	60	20	0	36	56	145
Grand Total	17	46	0	63	0	0	0	0	0	72	29	101	43	0	66	109	273
Apprch %	27	73	0		0	0	0		0	71.3	28.7		39.4	0	60.6		
Total %	6.2	16.8	0	23.1	0	0	0	0	0	26.4	10.6	37	15.8	0	24.2	39.9	

	Cedar Avenue Southbound				I-10 Eastbound On Ramp Westbound				Cedar Avenue Northbound				I-10 Eastbound Off Ramp Eastbound				
Start Time	Left	Thru	Right	App. Total	Left	Thru	Right	App. Total	Left	Thru	Right	App. Total	Left	Thru	Right	App. Total	Int. Total
Peak Hour Analysis From 07:00 AM to 07:45 AM - Peak 1 of 1																	
Peak Hour for Entire Intersection Begins at 07:00 AM																	
07:00 AM	2	6	0	8	0	0	0	0	0	7	4	11	2	0	**12**	**14**	33
07:15 AM	2	4	0	6	0	0	0	0	0	8	2	10	4	0	8	12	28
07:30 AM	3	4	0	7	0	0	0	0	0	3	3	6	6	0	7	13	26
07:45 AM	**5**	**8**	0	**13**	0	0	0	0	0	**9**	**5**	**14**	**11**	0	3	14	**41**
Total Volume	12	22	0	34	0	0	0	0	0	27	14	41	23	0	30	53	128
% App. Total	35.3	64.7	0		0	0	0		0	65.9	34.1		43.4	0	56.6		
PHF	.600	.688	.000	.654	.000	.000	.000	.000	.000	.750	.700	.732	.523	.000	.625	.946	.780

Counts Unlimited
PO Box 1178
Corona, CA 92878
(951) 268-6268

City of San Bernardino
N/S: Cedar Avenue
E/W: I-10 Eastbound Ramps
Weather: Clear

File Name : 03_CSB_Cedar_10E AM
Site Code : 04520047
Start Date : 1/23/2020
Page No : 2

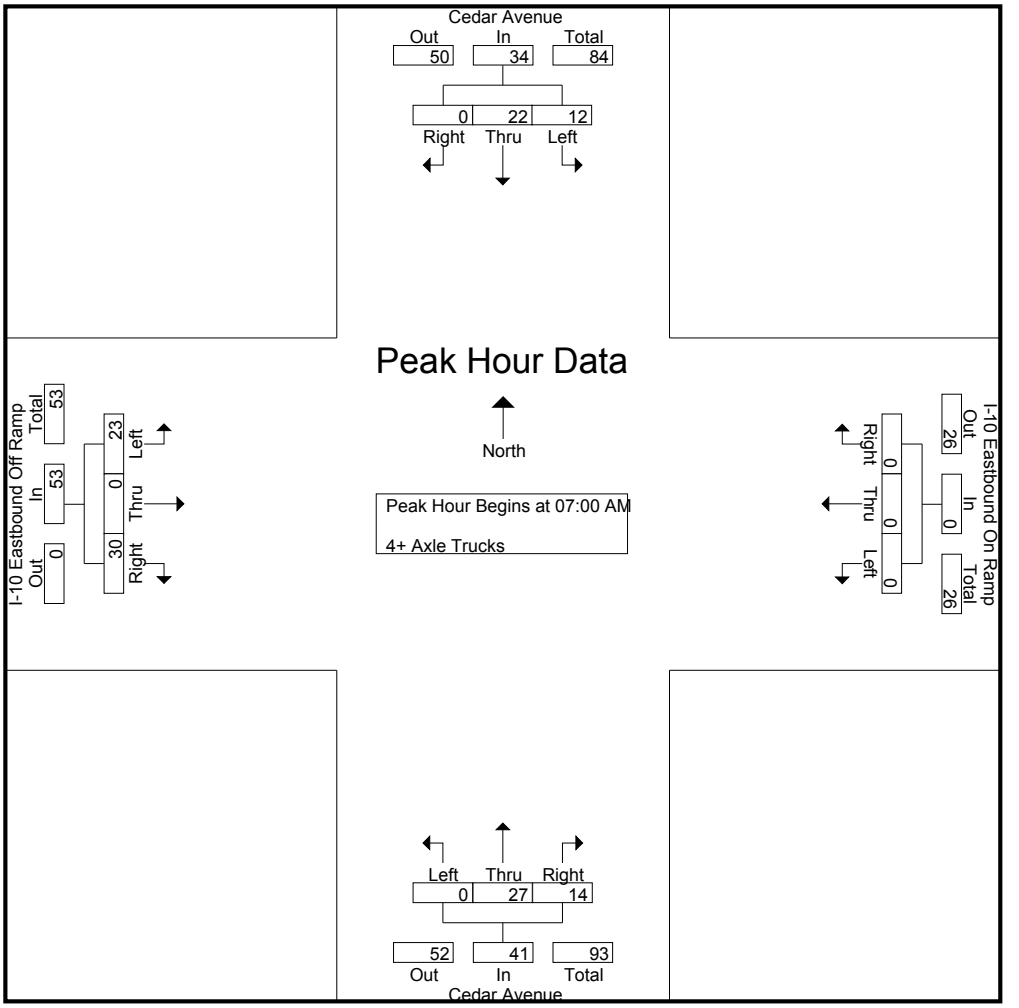

Peak Hour Analysis From 07:00 AM to 07:45 AM - Peak 1 of 1
Peak Hour for Each Approach Begins at:

	07:00 AM				07:00 AM				07:00 AM				07:00 AM			
+0 mins.	2	6	0	8	0	0	0	0	0	7	4	11	2	0	**12**	**14**
+15 mins.	2	4	0	6	0	0	0	0	0	8	2	10	4	0	8	12
+30 mins.	3	4	0	7	0	0	0	0	0	3	3	6	6	0	7	13
+45 mins.	**5**	**8**	0	**13**	0	0	0	0	0	**9**	**5**	**14**	**11**	0	3	14
Total Volume	12	22	0	34	0	0	0	0	0	27	14	41	23	0	30	53
% App. Total	35.3	64.7	0		0	0	0		0	65.9	34.1		43.4	0	56.6	
PHF	.600	.688	.000	.654	.000	.000	.000	.000	.000	.750	.700	.732	.523	.000	.625	.946

Counts Unlimited
PO Box 1178
Corona, CA 92878
(951) 268-6268

City of San Bernardino
N/S: Cedar Avenue
E/W: I-10 Eastbound Ramps
Weather: Clear

File Name : 03_CSB_Cedar_10E PM
Site Code : 04520047
Start Date : 1/23/2020
Page No : 1

Groups Printed- Passenger Vehicles - Large 2 Axle Vehicles - 3 Axle Vehicles - 4+ Axle Trucks

	Cedar Avenue Southbound				I-10 Eastbound On Ramp Westbound				Cedar Avenue Northbound				I-10 Eastbound Off Ramp Eastbound				
Start Time	Left	Thru	Right	App. Total	Left	Thru	Right	App. Total	Left	Thru	Right	App. Total	Left	Thru	Right	App. Total	Int. Total
04:00 PM	100	247	0	347	0	0	0	0	0	206	73	279	161	0	36	197	823
04:15 PM	103	260	0	363	0	0	0	0	0	198	78	276	147	3	38	188	827
04:30 PM	96	251	0	347	0	0	0	0	0	223	89	312	137	2	24	163	822
04:45 PM	76	274	0	350	0	0	0	0	0	188	59	247	151	2	30	183	780
Total	375	1032	0	1407	0	0	0	0	0	815	299	1114	596	7	128	731	3252
05:00 PM	88	253	0	341	0	0	0	0	0	191	75	266	174	4	30	208	815
05:15 PM	100	265	0	365	0	0	0	0	0	188	67	255	152	2	34	188	808
05:30 PM	77	236	0	313	0	0	0	0	0	180	61	241	155	1	32	188	742
05:45 PM	104	247	0	351	0	0	0	0	0	184	67	251	157	1	31	189	791
Total	369	1001	0	1370	0	0	0	0	0	743	270	1013	638	8	127	773	3156
Grand Total	744	2033	0	2777	0	0	0	0	0	1558	569	2127	1234	15	255	1504	6408
Apprch %	26.8	73.2	0		0	0	0		0	73.2	26.8		82	1	17		
Total %	11.6	31.7	0	43.3	0	0	0	0	0	24.3	8.9	33.2	19.3	0.2	4	23.5	
Passenger Vehicles	718	1881	0	2599	0	0	0	0	0	1486	536	2022	1194	12	198	1404	6025
% Passenger Vehicles	96.5	92.5	0	93.6	0	0	0	0	0	95.4	94.2	95.1	96.8	80	77.6	93.4	94
Large 2 Axle Vehicles	11	48	0	59	0	0	0	0	0	36	21	57	15	2	21	38	154
% Large 2 Axle Vehicles	1.5	2.4	0	2.1	0	0	0	0	0	2.3	3.7	2.7	1.2	13.3	8.2	2.5	2.4
3 Axle Vehicles	1	48	0	49	0	0	0	0	0	9	3	12	9	0	6	15	76
% 3 Axle Vehicles	0.1	2.4	0	1.8	0	0	0	0	0	0.6	0.5	0.6	0.7	0	2.4	1	1.2
4+ Axle Trucks	14	56	0	70	0	0	0	0	0	27	9	36	16	1	30	47	153
% 4+ Axle Trucks	1.9	2.8	0	2.5	0	0	0	0	0	1.7	1.6	1.7	1.3	6.7	11.8	3.1	2.4

	Cedar Avenue Southbound				I-10 Eastbound On Ramp Westbound				Cedar Avenue Northbound				I-10 Eastbound Off Ramp Eastbound				
Start Time	Left	Thru	Right	App. Total	Left	Thru	Right	App. Total	Left	Thru	Right	App. Total	Left	Thru	Right	App. Total	Int. Total
Peak Hour Analysis From 04:00 PM to 05:45 PM - Peak 1 of 1																	
Peak Hour for Entire Intersection Begins at 04:00 PM																	
04:00 PM	100	247	0	347	0	0	0	0	0	206	73	279	**161**	0	36	**197**	823
04:15 PM	**103**	260	0	**363**	0	0	0	0	0	198	78	276	147	**3**	**38**	188	**827**
04:30 PM	96	251	0	347	0	0	0	0	0	**223**	**89**	**312**	137	2	24	163	822
04:45 PM	76	**274**	0	350	0	0	0	0	0	188	59	247	151	2	30	183	780
Total Volume	375	1032	0	1407	0	0	0	0	0	815	299	1114	596	7	128	731	3252
% App. Total	26.7	73.3	0		0	0	0		0	73.2	26.8		81.5	1	17.5		
PHF	.910	.942	.000	.969	.000	.000	.000	.000	.000	.914	.840	.893	.925	.583	.842	.928	.983

Counts Unlimited
PO Box 1178
Corona, CA 92878
(951) 268-6268

City of San Bernardino
N/S: Cedar Avenue
E/W: I-10 Eastbound Ramps
Weather: Clear

File Name : 03_CSB_Cedar_10E PM
Site Code : 04520047
Start Date : 1/23/2020
Page No : 2

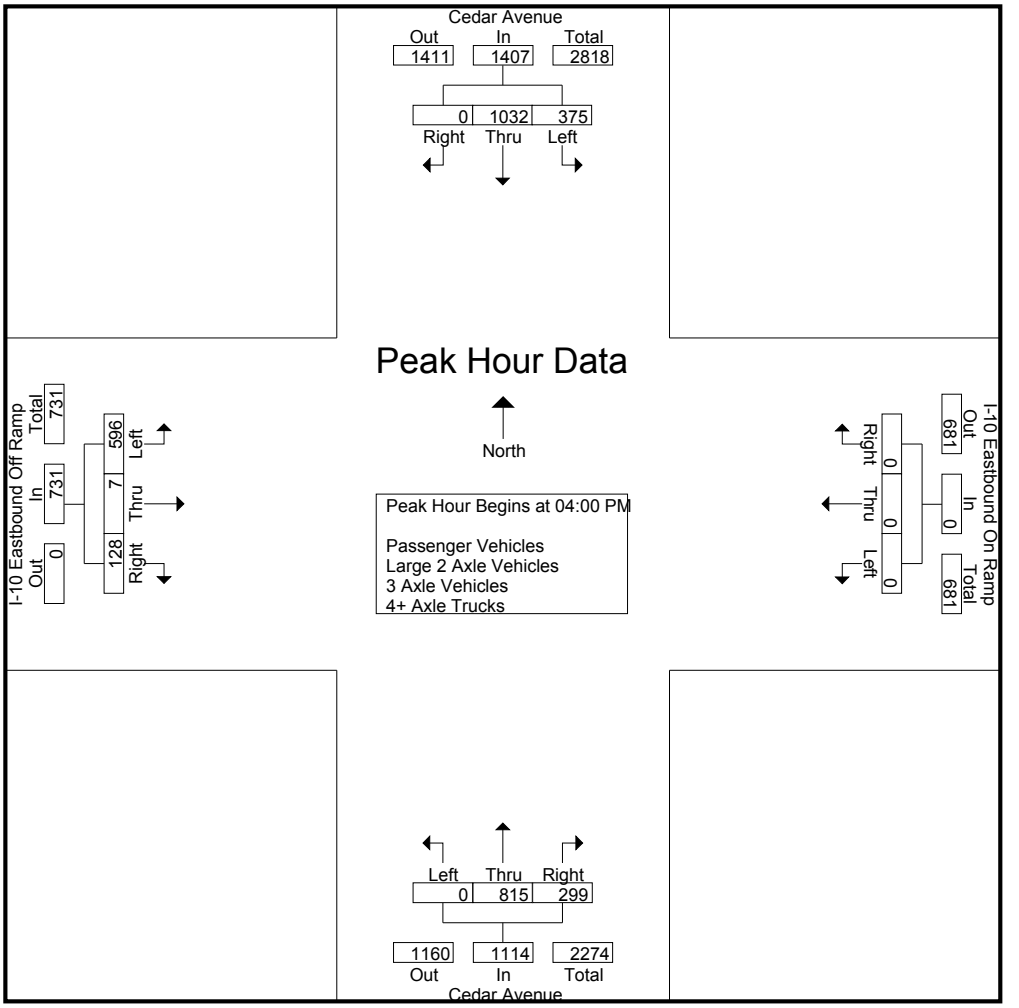

Peak Hour Analysis From 04:00 PM to 05:45 PM - Peak 1 of 1
Peak Hour for Each Approach Begins at:

	04:00 PM				04:00 PM				04:00 PM				05:00 PM			
+0 mins.	100	247	0	347	0	0	0	0	0	206	73	279	**174**	**4**	30	**208**
+15 mins.	**103**	260	0	**363**	0	0	0	0	0	198	78	276	152	2	**34**	188
+30 mins.	96	251	0	347	0	0	0	0	0	**223**	**89**	**312**	155	1	32	188
+45 mins.	76	**274**	0	350	0	0	0	0	0	188	59	247	157	1	31	189
Total Volume	375	1032	0	1407	0	0	0	0	0	815	299	1114	638	8	127	773
% App. Total	26.7	73.3	0		0	0	0		0	73.2	26.8		82.5	1	16.4	
PHF	.910	.942	.000	.969	.000	.000	.000	.000	.000	.914	.840	.893	.917	.500	.934	.929

Counts Unlimited
PO Box 1178
Corona, CA 92878
(951) 268-6268

City of San Bernardino
N/S: Cedar Avenue
E/W: I-10 Eastbound Ramps
Weather: Clear

File Name : 03_CSB_Cedar_10E PM
Site Code : 04520047
Start Date : 1/23/2020
Page No : 1

Groups Printed- Passenger Vehicles

	Cedar Avenue Southbound				I-10 Eastbound On Ramp Westbound				Cedar Avenue Northbound				I-10 Eastbound Off Ramp Eastbound				
Start Time	Left	Thru	Right	App. Total	Left	Thru	Right	App. Total	Left	Thru	Right	App. Total	Left	Thru	Right	App. Total	Int. Total
04:00 PM	93	215	0	308	0	0	0	0	0	197	67	264	156	0	29	185	757
04:15 PM	102	245	0	347	0	0	0	0	0	187	72	259	138	3	29	170	776
04:30 PM	92	235	0	327	0	0	0	0	0	209	82	291	133	1	13	147	765
04:45 PM	73	257	0	330	0	0	0	0	0	180	54	234	147	1	22	170	734
Total	360	952	0	1312	0	0	0	0	0	773	275	1048	574	5	93	672	3032
05:00 PM	84	227	0	311	0	0	0	0	0	184	73	257	171	3	24	198	766
05:15 PM	100	249	0	349	0	0	0	0	0	179	65	244	146	2	27	175	768
05:30 PM	73	224	0	297	0	0	0	0	0	174	60	234	152	1	28	181	712
05:45 PM	101	229	0	330	0	0	0	0	0	176	63	239	151	1	26	178	747
Total	358	929	0	1287	0	0	0	0	0	713	261	974	620	7	105	732	2993
Grand Total	718	1881	0	2599	0	0	0	0	0	1486	536	2022	1194	12	198	1404	6025
Apprch %	27.6	72.4	0		0	0	0		0	73.5	26.5		85	0.9	14.1		
Total %	11.9	31.2	0	43.1	0	0	0	0	0	24.7	8.9	33.6	19.8	0.2	3.3	23.3	

	Cedar Avenue Southbound				I-10 Eastbound On Ramp Westbound				Cedar Avenue Northbound				I-10 Eastbound Off Ramp Eastbound				
Start Time	Left	Thru	Right	App. Total	Left	Thru	Right	App. Total	Left	Thru	Right	App. Total	Left	Thru	Right	App. Total	Int. Total
Peak Hour Analysis From 04:00 PM to 04:45 PM - Peak 1 of 1																	
Peak Hour for Entire Intersection Begins at 04:00 PM																	
04:00 PM	93	215	0	308	0	0	0	0	0	197	67	264	**156**	0	**29**	**185**	757
04:15 PM	**102**	245	0	**347**	0	0	0	0	0	187	72	259	138	**3**	29	170	**776**
04:30 PM	92	235	0	327	0	0	0	0	0	**209**	**82**	**291**	133	1	13	147	765
04:45 PM	73	**257**	0	330	0	0	0	0	0	180	54	234	147	1	22	170	734
Total Volume	360	952	0	1312	0	0	0	0	0	773	275	1048	574	5	93	672	3032
% App. Total	27.4	72.6	0		0	0	0		0	73.8	26.2		85.4	0.7	13.8		
PHF	.882	.926	.000	.945	.000	.000	.000	.000	.000	.925	.838	.900	.920	.417	.802	.908	.977

Counts Unlimited
PO Box 1178
Corona, CA 92878
(951) 268-6268

City of San Bernardino
N/S: Cedar Avenue
E/W: I-10 Eastbound Ramps
Weather: Clear

File Name : 03_CSB_Cedar_10E PM
Site Code : 04520047
Start Date : 1/23/2020
Page No : 2

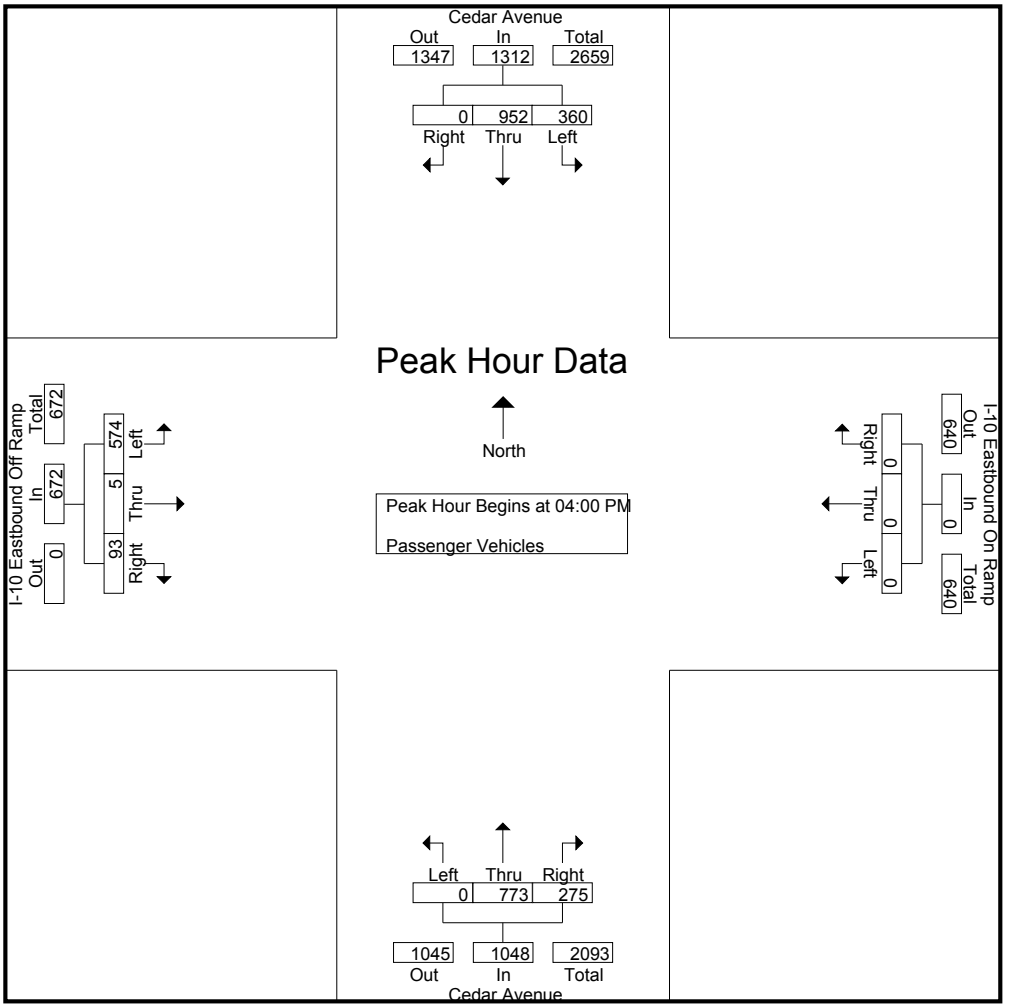

Peak Hour Analysis From 04:00 PM to 04:45 PM - Peak 1 of 1
Peak Hour for Each Approach Begins at:

	04:00 PM				04:00 PM				04:00 PM				04:00 PM			
+0 mins.	93	215	0	308	0	0	0	0	0	197	67	264	**156**	0	**29**	**185**
+15 mins.	**102**	245	0	**347**	0	0	0	0	0	187	72	259	138	**3**	29	170
+30 mins.	92	235	0	327	0	0	0	0	0	**209**	**82**	**291**	133	1	13	147
+45 mins.	73	**257**	0	330	0	0	0	0	0	180	54	234	147	1	22	170
Total Volume	360	952	0	1312	0	0	0	0	0	773	275	1048	574	5	93	672
% App. Total	27.4	72.6	0		0	0	0		0	73.8	26.2		85.4	0.7	13.8	
PHF	.882	.926	.000	.945	.000	.000	.000	.000	.000	.925	.838	.900	.920	.417	.802	.908

Counts Unlimited
PO Box 1178
Corona, CA 92878
(951) 268-6268

City of San Bernardino
N/S: Cedar Avenue
E/W: I-10 Eastbound Ramps
Weather: Clear

File Name : 03_CSB_Cedar_10E PM
Site Code : 04520047
Start Date : 1/23/2020
Page No : 1

Groups Printed- Large 2 Axle Vehicles

	Cedar Avenue Southbound				I-10 Eastbound On Ramp Westbound				Cedar Avenue Northbound				I-10 Eastbound Off Ramp Eastbound				
Start Time	Left	Thru	Right	App. Total	Left	Thru	Right	App. Total	Left	Thru	Right	App. Total	Left	Thru	Right	App. Total	Int. Total
04:00 PM	2	11	0	13	0	0	0	0	0	3	4	7	1	0	3	4	24
04:15 PM	1	3	0	4	0	0	0	0	0	4	3	7	5	0	1	6	17
04:30 PM	2	6	0	8	0	0	0	0	0	7	4	11	0	1	3	4	23
04:45 PM	1	5	0	6	0	0	0	0	0	3	4	7	2	1	3	6	19
Total	6	25	0	31	0	0	0	0	0	17	15	32	8	2	10	20	83
05:00 PM	1	9	0	10	0	0	0	0	0	5	2	7	1	0	4	5	22
05:15 PM	0	5	0	5	0	0	0	0	0	4	2	6	3	0	4	7	18
05:30 PM	3	4	0	7	0	0	0	0	0	5	0	5	1	0	2	3	15
05:45 PM	1	5	0	6	0	0	0	0	0	5	2	7	2	0	1	3	16
Total	5	23	0	28	0	0	0	0	0	19	6	25	7	0	11	18	71
Grand Total	11	48	0	59	0	0	0	0	0	36	21	57	15	2	21	38	154
Apprch %	18.6	81.4	0		0	0	0		0	63.2	36.8		39.5	5.3	55.3		
Total %	7.1	31.2	0	38.3	0	0	0	0	0	23.4	13.6	37	9.7	1.3	13.6	24.7	

	Cedar Avenue Southbound				I-10 Eastbound On Ramp Westbound				Cedar Avenue Northbound				I-10 Eastbound Off Ramp Eastbound				
Start Time	Left	Thru	Right	App. Total	Left	Thru	Right	App. Total	Left	Thru	Right	App. Total	Left	Thru	Right	App. Total	Int. Total
Peak Hour Analysis From 04:00 PM to 04:45 PM - Peak 1 of 1																	
Peak Hour for Entire Intersection Begins at 04:00 PM																	
04:00 PM	**2**	**11**	0	**13**	0	0	0	0	0	3	**4**	7	1	0	**3**	4	**24**
04:15 PM	1	3	0	4	0	0	0	0	0	4	3	7	**5**	0	1	**6**	17
04:30 PM	2	6	0	8	0	0	0	0	0	**7**	4	**11**	0	**1**	3	4	23
04:45 PM	1	5	0	6	0	0	0	0	0	3	4	7	2	1	3	6	19
Total Volume	6	25	0	31	0	0	0	0	0	17	15	32	8	2	10	20	83
% App. Total	19.4	80.6	0		0	0	0		0	53.1	46.9		40	10	50		
PHF	.750	.568	.000	.596	.000	.000	.000	.000	.000	.607	.938	.727	.400	.500	.833	.833	.865

Counts Unlimited
PO Box 1178
Corona, CA 92878
(951) 268-6268

City of San Bernardino
N/S: Cedar Avenue
E/W: I-10 Eastbound Ramps
Weather: Clear

File Name : 03_CSB_Cedar_10E PM
Site Code : 04520047
Start Date : 1/23/2020
Page No : 2

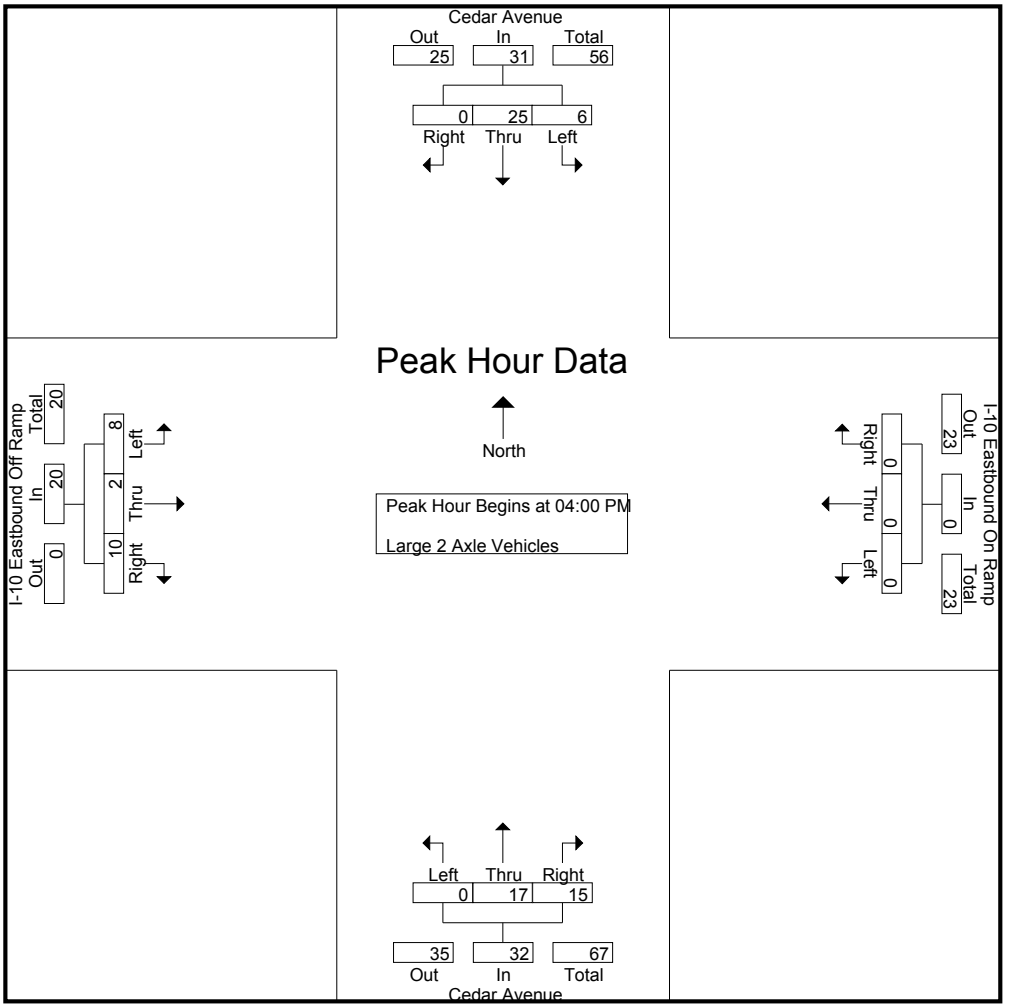

Peak Hour Analysis From 04:00 PM to 04:45 PM - Peak 1 of 1
Peak Hour for Each Approach Begins at:

	04:00 PM				04:00 PM				04:00 PM				04:00 PM			
+0 mins.	**2**	**11**	0	**13**	0	0	0	0	0	3	**4**	7	1	0	**3**	4
+15 mins.	1	3	0	4	0	0	0	0	0	4	3	7	**5**	0	1	**6**
+30 mins.	2	6	0	8	0	0	0	0	0	**7**	4	**11**	0	**1**	3	4
+45 mins.	1	5	0	6	0	0	0	0	0	3	4	7	2	1	3	6
Total Volume	6	25	0	31	0	0	0	0	0	17	15	32	8	2	10	20
% App. Total	19.4	80.6	0		0	0	0		0	53.1	46.9		40	10	50	
PHF	.750	.568	.000	.596	.000	.000	.000	.000	.000	.607	.938	.727	.400	.500	.833	.833

Counts Unlimited
PO Box 1178
Corona, CA 92878
(951) 268-6268

City of San Bernardino
N/S: Cedar Avenue
E/W: I-10 Eastbound Ramps
Weather: Clear

File Name : 03_CSB_Cedar_10E PM
Site Code : 04520047
Start Date : 1/23/2020
Page No : 1

Groups Printed- 3 Axle Vehicles

	Cedar Avenue Southbound				I-10 Eastbound On Ramp Westbound				Cedar Avenue Northbound				I-10 Eastbound Off Ramp Eastbound				
Start Time	Left	Thru	Right	App. Total	Left	Thru	Right	App. Total	Left	Thru	Right	App. Total	Left	Thru	Right	App. Total	Int. Total
04:00 PM	1	11	0	12	0	0	0	0	0	1	0	1	2	0	3	5	18
04:15 PM	0	3	0	3	0	0	0	0	0	3	1	4	1	0	2	3	10
04:30 PM	0	6	0	6	0	0	0	0	0	0	0	0	1	0	0	1	7
04:45 PM	0	5	0	5	0	0	0	0	0	1	0	1	2	0	1	3	9
Total	1	25	0	26	0	0	0	0	0	5	1	6	6	0	6	12	44
05:00 PM	0	9	0	9	0	0	0	0	0	1	0	1	2	0	0	2	12
05:15 PM	0	5	0	5	0	0	0	0	0	1	0	1	1	0	0	1	7
05:30 PM	0	4	0	4	0	0	0	0	0	1	1	2	0	0	0	0	6
05:45 PM	0	5	0	5	0	0	0	0	0	1	1	2	0	0	0	0	7
Total	0	23	0	23	0	0	0	0	0	4	2	6	3	0	0	3	32
Grand Total	1	48	0	49	0	0	0	0	0	9	3	12	9	0	6	15	76
Apprch %	2	98	0		0	0	0		0	75	25		60	0	40		
Total %	1.3	63.2	0	64.5	0	0	0	0	0	11.8	3.9	15.8	11.8	0	7.9	19.7	

	Cedar Avenue Southbound				I-10 Eastbound On Ramp Westbound				Cedar Avenue Northbound				I-10 Eastbound Off Ramp Eastbound				
Start Time	Left	Thru	Right	App. Total	Left	Thru	Right	App. Total	Left	Thru	Right	App. Total	Left	Thru	Right	App. Total	Int. Total
Peak Hour Analysis From 04:00 PM to 04:45 PM - Peak 1 of 1																	
Peak Hour for Entire Intersection Begins at 04:00 PM																	
04:00 PM	**1**	**11**	0	**12**	0	0	0	0	0	1	0	1	**2**	0	**3**	**5**	**18**
04:15 PM	0	3	0	3	0	0	0	0	0	**3**	**1**	**4**	1	0	2	3	10
04:30 PM	0	6	0	6	0	0	0	0	0	0	0	0	1	0	0	1	7
04:45 PM	0	5	0	5	0	0	0	0	0	1	0	1	2	0	1	3	9
Total Volume	1	25	0	26	0	0	0	0	0	5	1	6	6	0	6	12	44
% App. Total	3.8	96.2	0		0	0	0		0	83.3	16.7		50	0	50		
PHF	.250	.568	.000	.542	.000	.000	.000	.000	.000	.417	.250	.375	.750	.000	.500	.600	.611

Counts Unlimited
PO Box 1178
Corona, CA 92878
(951) 268-6268

City of San Bernardino
N/S: Cedar Avenue
E/W: I-10 Eastbound Ramps
Weather: Clear

File Name : 03_CSB_Cedar_10E PM
Site Code : 04520047
Start Date : 1/23/2020
Page No : 2

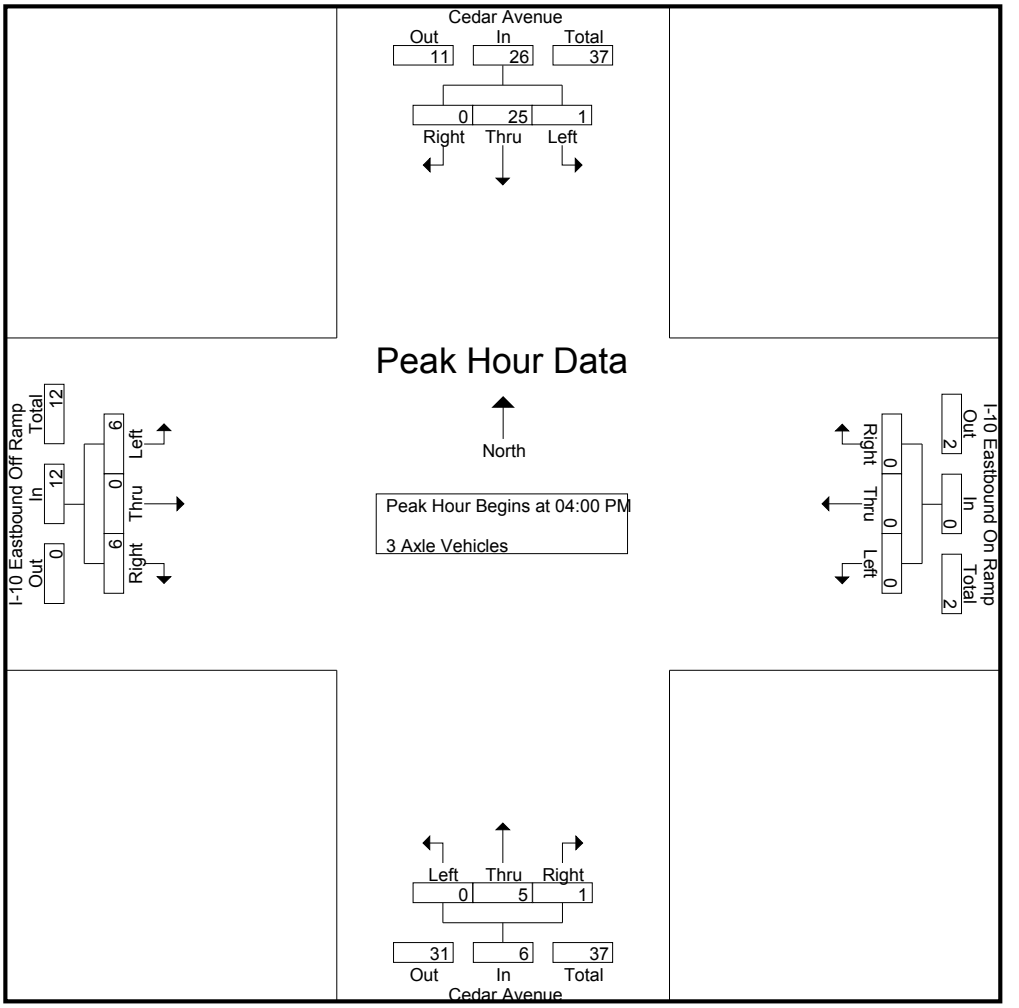

Peak Hour Analysis From 04:00 PM to 04:45 PM - Peak 1 of 1
Peak Hour for Each Approach Begins at:

	04:00 PM				04:00 PM				04:00 PM				04:00 PM			
+0 mins.	**1**	**11**	0	**12**	0	0	0	0	0	1	0	1	**2**	0	**3**	**5**
+15 mins.	0	3	0	3	0	0	0	0	0	**3**	**1**	**4**	1	0	2	3
+30 mins.	0	6	0	6	0	0	0	0	0	0	0	0	1	0	0	1
+45 mins.	0	5	0	5	0	0	0	0	0	1	0	1	2	0	1	3
Total Volume	1	25	0	26	0	0	0	0	0	5	1	6	6	0	6	12
% App. Total	3.8	96.2	0		0	0	0		0	83.3	16.7		50	0	50	
PHF	.250	.568	.000	.542	.000	.000	.000	.000	.000	.417	.250	.375	.750	.000	.500	.600

Counts Unlimited
PO Box 1178
Corona, CA 92878
(951) 268-6268

City of San Bernardino
N/S: Cedar Avenue
E/W: I-10 Eastbound Ramps
Weather: Clear

File Name : 03_CSB_Cedar_10E PM
Site Code : 04520047
Start Date : 1/23/2020
Page No : 1

Groups Printed- 4+ Axle Trucks

	Cedar Avenue Southbound				I-10 Eastbound On Ramp Westbound				Cedar Avenue Northbound				I-10 Eastbound Off Ramp Eastbound				
Start Time	Left	Thru	Right	App. Total	Left	Thru	Right	App. Total	Left	Thru	Right	App. Total	Left	Thru	Right	App. Total	Int. Total
04:00 PM	4	10	0	14	0	0	0	0	0	5	2	7	2	0	1	3	24
04:15 PM	0	9	0	9	0	0	0	0	0	4	2	6	3	0	6	9	24
04:30 PM	2	4	0	6	0	0	0	0	0	7	3	10	3	0	8	11	27
04:45 PM	2	7	0	9	0	0	0	0	0	4	1	5	0	0	4	4	18
Total	8	30	0	38	0	0	0	0	0	20	8	28	8	0	19	27	93
05:00 PM	3	8	0	11	0	0	0	0	0	1	0	1	0	1	2	3	15
05:15 PM	0	6	0	6	0	0	0	0	0	4	0	4	2	0	3	5	15
05:30 PM	1	4	0	5	0	0	0	0	0	0	0	0	2	0	2	4	9
05:45 PM	2	8	0	10	0	0	0	0	0	2	1	3	4	0	4	8	21
Total	6	26	0	32	0	0	0	0	0	7	1	8	8	1	11	20	60
Grand Total	14	56	0	70	0	0	0	0	0	27	9	36	16	1	30	47	153
Apprch %	20	80	0		0	0	0		0	75	25		34	2.1	63.8		
Total %	9.2	36.6	0	45.8	0	0	0	0	0	17.6	5.9	23.5	10.5	0.7	19.6	30.7	

	Cedar Avenue Southbound				I-10 Eastbound On Ramp Westbound				Cedar Avenue Northbound				I-10 Eastbound Off Ramp Eastbound				
Start Time	Left	Thru	Right	App. Total	Left	Thru	Right	App. Total	Left	Thru	Right	App. Total	Left	Thru	Right	App. Total	Int. Total
Peak Hour Analysis From 04:00 PM to 04:45 PM - Peak 1 of 1																	
Peak Hour for Entire Intersection Begins at 04:00 PM																	
04:00 PM	**4**	**10**	0	**14**	0	0	0	0	0	5	2	7	2	0	1	3	24
04:15 PM	0	9	0	9	0	0	0	0	0	4	2	6	**3**	0	6	9	24
04:30 PM	2	4	0	6	0	0	0	0	0	**7**	**3**	**10**	3	0	**8**	**11**	**27**
04:45 PM	2	7	0	9	0	0	0	0	0	4	1	5	0	0	4	4	18
Total Volume	8	30	0	38	0	0	0	0	0	20	8	28	8	0	19	27	93
% App. Total	21.1	78.9	0		0	0	0		0	71.4	28.6		29.6	0	70.4		
PHF	.500	.750	.000	.679	.000	.000	.000	.000	.000	.714	.667	.700	.667	.000	.594	.614	.861

Counts Unlimited
PO Box 1178
Corona, CA 92878
(951) 268-6268

City of San Bernardino
N/S: Cedar Avenue
E/W: I-10 Eastbound Ramps
Weather: Clear

File Name : 03_CSB_Cedar_10E PM
Site Code : 04520047
Start Date : 1/23/2020
Page No : 2

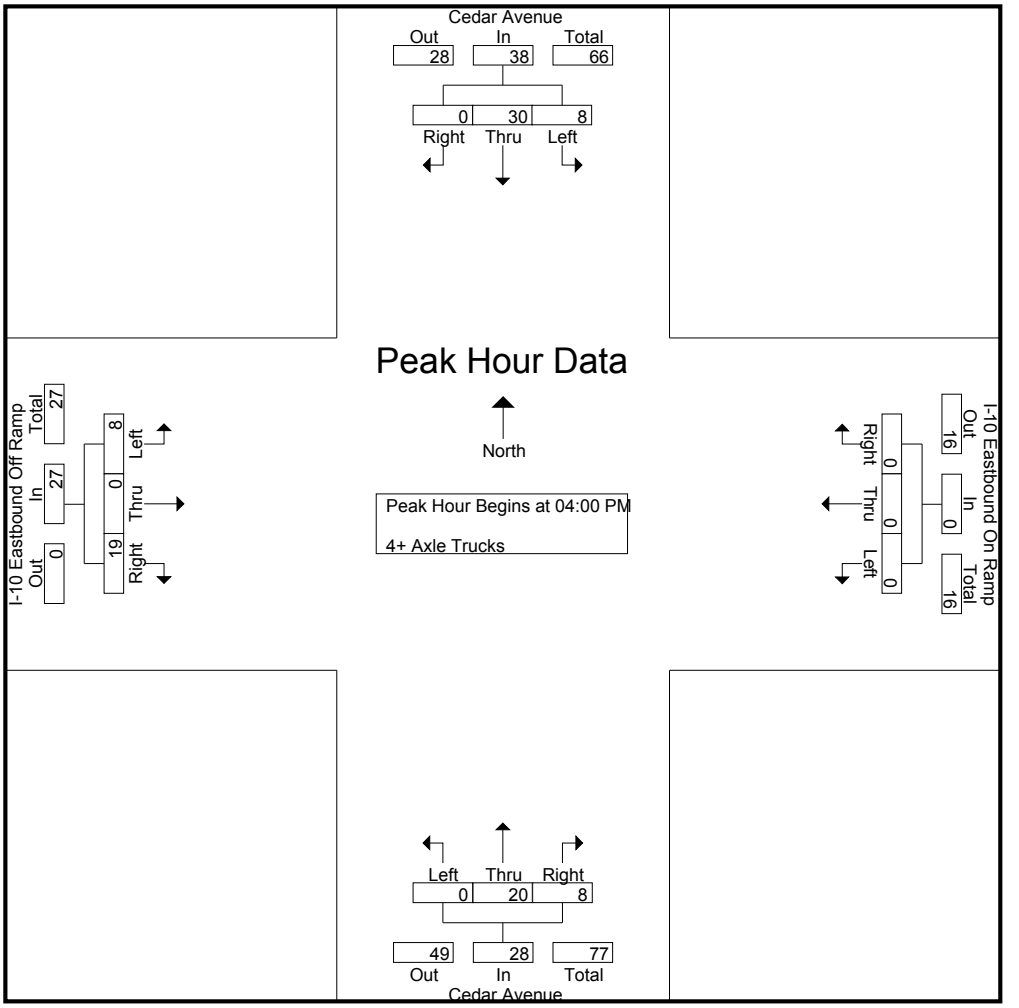

Peak Hour Analysis From 04:00 PM to 04:45 PM - Peak 1 of 1
Peak Hour for Each Approach Begins at:

	04:00 PM				04:00 PM				04:00 PM				04:00 PM			
+0 mins.	**4**	**10**	0	**14**	0	0	0	0	0	5	2	7	2	0	1	3
+15 mins.	0	9	0	9	0	0	0	0	0	4	2	6	**3**	0	6	9
+30 mins.	2	4	0	6	0	0	0	0	0	**7**	**3**	**10**	3	0	**8**	**11**
+45 mins.	2	7	0	9	0	0	0	0	0	4	1	5	0	0	4	4
Total Volume	8	30	0	38	0	0	0	0	0	20	8	28	8	0	19	27
% App. Total	21.1	78.9	0		0	0	0		0	71.4	28.6		29.6	0	70.4	
PHF	.500	.750	.000	.679	.000	.000	.000	.000	.000	.714	.667	.700	.667	.000	.594	.614

Counts Unlimited
PO Box 1178
Corona, CA 92878
(951) 268-6268

City of San Bernardino
N/S: Linden Avenue
E/W: Slover Avenue
Weather: Clear

File Name : 04_CSB_Linden_Slover AM
Site Code : 04520047
Start Date : 1/23/2020
Page No : 1

Groups Printed- Passenger Vehicles - Large 2 Axle Vehicles - 3 Axle Vehicles - 4+ Axle Trucks

	Linden Avenue Southbound				Slover Avenue Westbound				Linden Avenue Northbound				Slover Avenue Eastbound				
Start Time	Left	Thru	Right	App. Total	Left	Thru	Right	App. Total	Left	Thru	Right	App. Total	Left	Thru	Right	App. Total	Int. Total
07:00 AM	0	10	100	110	6	160	2	168	22	10	4	36	50	107	9	166	480
07:15 AM	0	15	97	112	7	126	2	135	22	19	11	52	67	149	22	238	537
07:30 AM	1	15	62	78	6	74	0	80	15	17	13	45	38	105	18	161	364
07:45 AM	0	11	67	78	0	97	0	97	7	11	7	25	13	76	4	93	293
Total	1	51	326	378	19	457	4	480	66	57	35	158	168	437	53	658	1674
08:00 AM	1	8	52	61	4	86	1	91	6	12	4	22	17	73	4	94	268
08:15 AM	0	8	57	65	1	80	0	81	5	4	6	15	24	80	1	105	266
08:30 AM	0	10	29	39	0	57	2	59	5	14	7	26	17	52	5	74	198
08:45 AM	0	7	45	52	1	54	0	55	5	10	4	19	9	53	3	65	191
Total	1	33	183	217	6	277	3	286	21	40	21	82	67	258	13	338	923
Grand Total	2	84	509	595	25	734	7	766	87	97	56	240	235	695	66	996	2597
Apprch %	0.3	14.1	85.5		3.3	95.8	0.9		36.2	40.4	23.3		23.6	69.8	6.6		
Total %	0.1	3.2	19.6	22.9	1	28.3	0.3	29.5	3.4	3.7	2.2	9.2	9	26.8	2.5	38.4	
Passenger Vehicles	1	82	493	576	23	638	5	666	87	94	55	236	232	628	66	926	2404
% Passenger Vehicles	50	97.6	96.9	96.8	92	86.9	71.4	86.9	100	96.9	98.2	98.3	98.7	90.4	100	93	92.6
Large 2 Axle Vehicles	0	1	8	9	2	21	0	23	0	3	1	4	1	20	0	21	57
% Large 2 Axle Vehicles	0	1.2	1.6	1.5	8	2.9	0	3	0	3.1	1.8	1.7	0.4	2.9	0	2.1	2.2
3 Axle Vehicles	0	1	2	3	0	19	0	19	0	0	0	0	1	25	0	26	48
% 3 Axle Vehicles	0	1.2	0.4	0.5	0	2.6	0	2.5	0	0	0	0	0.4	3.6	0	2.6	1.8
4+ Axle Trucks	1	0	6	7	0	56	2	58	0	0	0	0	1	22	0	23	88
% 4+ Axle Trucks	50	0	1.2	1.2	0	7.6	28.6	7.6	0	0	0	0	0.4	3.2	0	2.3	3.4

	Linden Avenue Southbound				Slover Avenue Westbound				Linden Avenue Northbound				Slover Avenue Eastbound				
Start Time	Left	Thru	Right	App. Total	Left	Thru	Right	App. Total	Left	Thru	Right	App. Total	Left	Thru	Right	App. Total	Int. Total
Peak Hour Analysis From 07:00 AM to 08:45 AM - Peak 1 of 1																	
Peak Hour for Entire Intersection Begins at 07:00 AM																	
07:00 AM	0	10	**100**	110	6	**160**	**2**	**168**	**22**	10	4	36	50	107	9	166	480
07:15 AM	0	**15**	97	**112**	**7**	126	2	135	22	**19**	11	**52**	**67**	**149**	**22**	**238**	**537**
07:30 AM	**1**	15	62	78	6	74	0	80	15	17	**13**	45	38	105	18	161	364
07:45 AM	0	11	67	78	0	97	0	97	7	11	7	25	13	76	4	93	293
Total Volume	1	51	326	378	19	457	4	480	66	57	35	158	168	437	53	658	1674
% App. Total	0.3	13.5	86.2		4	95.2	0.8		41.8	36.1	22.2		25.5	66.4	8.1		
PHF	.250	.850	.815	.844	.679	.714	.500	.714	.750	.750	.673	.760	.627	.733	.602	.691	.779

Counts Unlimited
PO Box 1178
Corona, CA 92878
(951) 268-6268

City of San Bernardino
N/S: Linden Avenue
E/W: Slover Avenue
Weather: Clear

File Name : 04_CSB_Linden_Slover AM
Site Code : 04520047
Start Date : 1/23/2020
Page No : 2

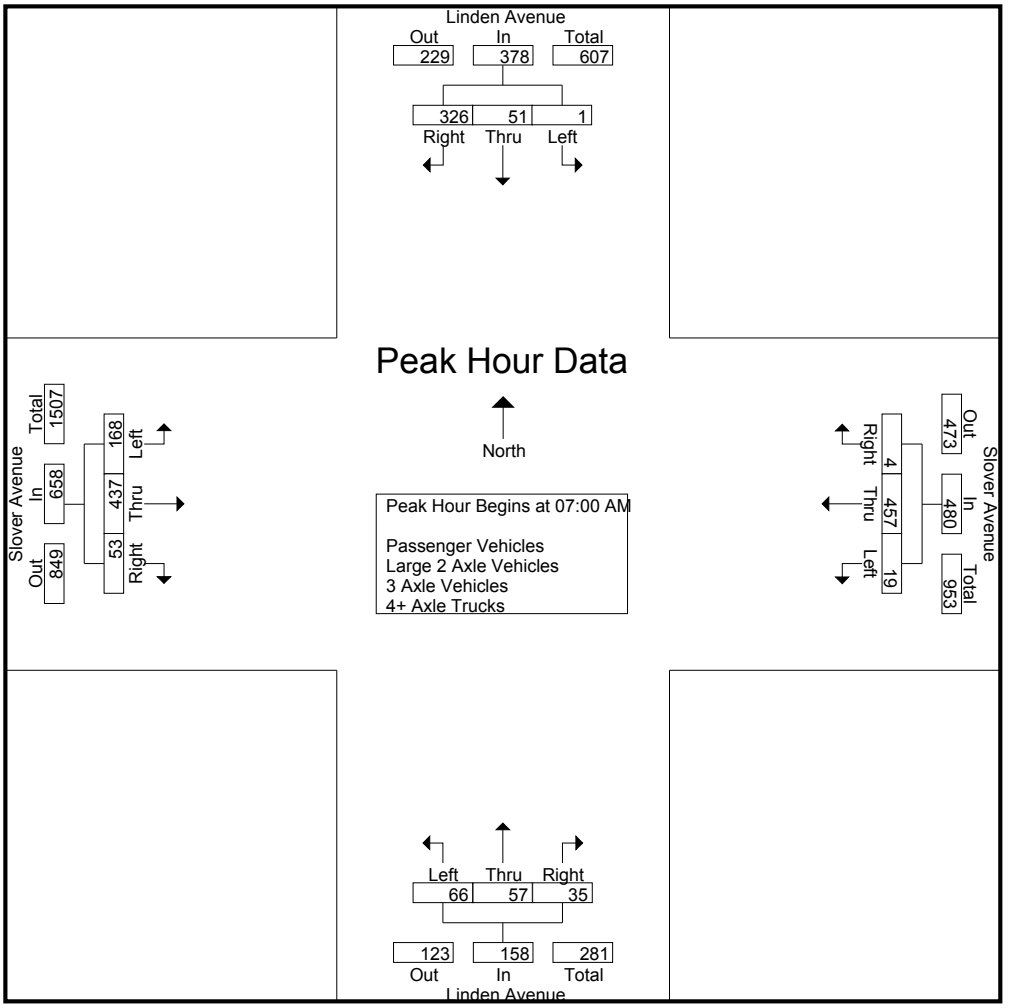

Peak Hour Analysis From 07:00 AM to 08:45 AM - Peak 1 of 1
Peak Hour for Each Approach Begins at:

	07:00 AM				07:00 AM				07:00 AM				07:00 AM			
+0 mins.	0	10	**100**	110	6	**160**	**2**	**168**	**22**	10	4	36	50	107	9	166
+15 mins.	0	**15**	97	**112**	**7**	126	2	135	22	**19**	11	**52**	**67**	**149**	**22**	**238**
+30 mins.	**1**	15	62	78	6	74	0	80	15	17	**13**	45	38	105	18	161
+45 mins.	0	11	67	78	0	97	0	97	7	11	7	25	13	76	4	93
Total Volume	1	51	326	378	19	457	4	480	66	57	35	158	168	437	53	658
% App. Total	0.3	13.5	86.2		4	95.2	0.8		41.8	36.1	22.2		25.5	66.4	8.1	
PHF	.250	.850	.815	.844	.679	.714	.500	.714	.750	.750	.673	.760	.627	.733	.602	.691

Counts Unlimited
PO Box 1178
Corona, CA 92878
(951) 268-6268

City of San Bernardino
N/S: Linden Avenue
E/W: Slover Avenue
Weather: Clear

File Name : 04_CSB_Linden_Slover AM
Site Code : 04520047
Start Date : 1/23/2020
Page No : 1

Groups Printed- Passenger Vehicles

	Linden Avenue Southbound				Slover Avenue Westbound				Linden Avenue Northbound				Slover Avenue Eastbound				
Start Time	Left	Thru	Right	App. Total	Left	Thru	Right	App. Total	Left	Thru	Right	App. Total	Left	Thru	Right	App. Total	Int. Total
07:00 AM	0	10	98	108	6	145	1	152	22	10	4	36	50	98	9	157	453
07:15 AM	0	15	97	112	6	114	1	121	22	19	11	52	67	142	22	231	516
07:30 AM	0	15	59	74	6	63	0	69	15	17	12	44	38	92	18	148	335
07:45 AM	0	9	65	74	0	84	0	84	7	11	7	25	11	70	4	85	268
Total	0	49	319	368	18	406	2	426	66	57	34	157	166	402	53	621	1572
08:00 AM	1	8	51	60	3	76	1	80	6	10	4	20	17	63	4	84	244
08:15 AM	0	8	54	62	1	71	0	72	5	3	6	14	23	72	1	96	244
08:30 AM	0	10	27	37	0	47	2	49	5	14	7	26	17	44	5	66	178
08:45 AM	0	7	42	49	1	38	0	39	5	10	4	19	9	47	3	59	166
Total	1	33	174	208	5	232	3	240	21	37	21	79	66	226	13	305	832
Grand Total	1	82	493	576	23	638	5	666	87	94	55	236	232	628	66	926	2404
Apprch %	0.2	14.2	85.6		3.5	95.8	0.8		36.9	39.8	23.3		25.1	67.8	7.1		
Total %	0	3.4	20.5	24	1	26.5	0.2	27.7	3.6	3.9	2.3	9.8	9.7	26.1	2.7	38.5	

	Linden Avenue Southbound				Slover Avenue Westbound				Linden Avenue Northbound				Slover Avenue Eastbound				
Start Time	Left	Thru	Right	App. Total	Left	Thru	Right	App. Total	Left	Thru	Right	App. Total	Left	Thru	Right	App. Total	Int. Total
Peak Hour Analysis From 07:00 AM to 07:45 AM - Peak 1 of 1																	
Peak Hour for Entire Intersection Begins at 07:00 AM																	
07:00 AM	0	10	**98**	108	**6**	**145**	**1**	**152**	**22**	10	4	36	50	98	9	157	453
07:15 AM	0	**15**	97	**112**	6	114	1	121	22	**19**	11	**52**	**67**	**142**	**22**	**231**	**516**
07:30 AM	0	15	59	74	6	63	0	69	15	17	**12**	44	38	92	18	148	335
07:45 AM	0	9	65	74	0	84	0	84	7	11	7	25	11	70	4	85	268
Total Volume	0	49	319	368	18	406	2	426	66	57	34	157	166	402	53	621	1572
% App. Total	0	13.3	86.7		4.2	95.3	0.5		42	36.3	21.7		26.7	64.7	8.5		
PHF	.000	.817	.814	.821	.750	.700	.500	.701	.750	.750	.708	.755	.619	.708	.602	.672	.762

Counts Unlimited
PO Box 1178
Corona, CA 92878
(951) 268-6268

City of San Bernardino
N/S: Linden Avenue
E/W: Slover Avenue
Weather: Clear

File Name : 04_CSB_Linden_Slover AM
Site Code : 04520047
Start Date : 1/23/2020
Page No : 2

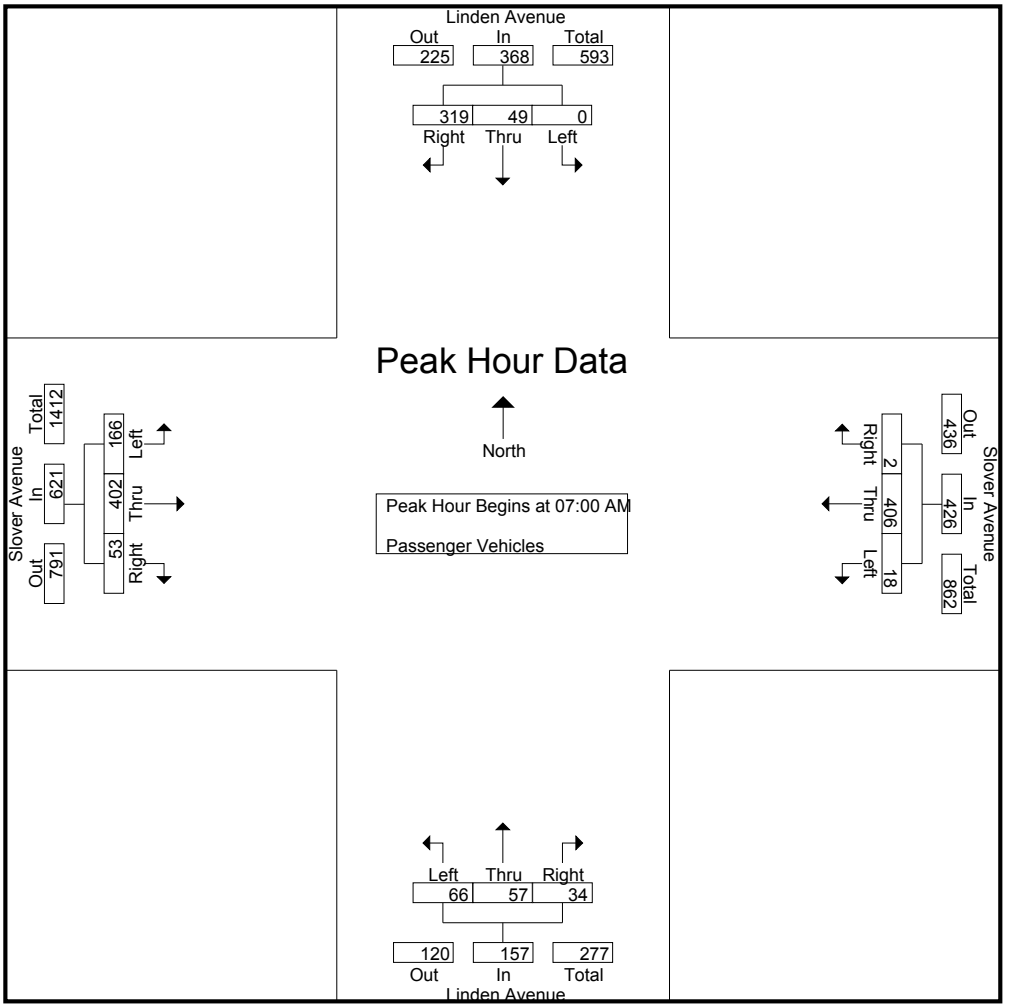

Peak Hour Analysis From 07:00 AM to 07:45 AM - Peak 1 of 1
Peak Hour for Each Approach Begins at:

	07:00 AM				07:00 AM				07:00 AM				07:00 AM			
+0 mins.	0	10	**98**	108	**6**	**145**	**1**	**152**	**22**	10	4	36	50	98	9	157
+15 mins.	0	**15**	97	**112**	6	114	1	121	22	**19**	11	**52**	**67**	**142**	**22**	**231**
+30 mins.	0	15	59	74	6	63	0	69	15	17	**12**	44	38	92	18	148
+45 mins.	0	9	65	74	0	84	0	84	7	11	7	25	11	70	4	85
Total Volume	0	49	319	368	18	406	2	426	66	57	34	157	166	402	53	621
% App. Total	0	13.3	86.7		4.2	95.3	0.5		42	36.3	21.7		26.7	64.7	8.5	
PHF	.000	.817	.814	.821	.750	.700	.500	.701	.750	.750	.708	.755	.619	.708	.602	.672

Counts Unlimited
PO Box 1178
Corona, CA 92878
(951) 268-6268

City of San Bernardino
N/S: Linden Avenue
E/W: Slover Avenue
Weather: Clear

File Name : 04_CSB_Linden_Slover AM
Site Code : 04520047
Start Date : 1/23/2020
Page No : 1

Groups Printed- Large 2 Axle Vehicles

	Linden Avenue Southbound				Slover Avenue Westbound				Linden Avenue Northbound				Slover Avenue Eastbound				
Start Time	Left	Thru	Right	App. Total	Left	Thru	Right	App. Total	Left	Thru	Right	App. Total	Left	Thru	Right	App. Total	Int. Total
07:00 AM	0	0	2	2	0	2	0	2	0	0	0	0	0	2	0	2	6
07:15 AM	0	0	0	0	1	3	0	4	0	0	0	0	0	1	0	1	5
07:30 AM	0	0	1	1	0	3	0	3	0	0	1	1	0	6	0	6	11
07:45 AM	0	1	1	2	0	4	0	4	0	0	0	0	1	3	0	4	10
Total	0	1	4	5	1	12	0	13	0	0	1	1	1	12	0	13	32
08:00 AM	0	0	1	1	1	3	0	4	0	2	0	2	0	2	0	2	9
08:15 AM	0	0	0	0	0	1	0	1	0	1	0	1	0	0	0	0	2
08:30 AM	0	0	2	2	0	3	0	3	0	0	0	0	0	4	0	4	9
08:45 AM	0	0	1	1	0	2	0	2	0	0	0	0	0	2	0	2	5
Total	0	0	4	4	1	9	0	10	0	3	0	3	0	8	0	8	25
Grand Total	0	1	8	9	2	21	0	23	0	3	1	4	1	20	0	21	57
Apprch %	0	11.1	88.9		8.7	91.3	0		0	75	25		4.8	95.2	0		
Total %	0	1.8	14	15.8	3.5	36.8	0	40.4	0	5.3	1.8	7	1.8	35.1	0	36.8	

	Linden Avenue Southbound				Slover Avenue Westbound				Linden Avenue Northbound				Slover Avenue Eastbound				
Start Time	Left	Thru	Right	App. Total	Left	Thru	Right	App. Total	Left	Thru	Right	App. Total	Left	Thru	Right	App. Total	Int. Total
Peak Hour Analysis From 07:00 AM to 07:45 AM - Peak 1 of 1																	
Peak Hour for Entire Intersection Begins at 07:00 AM																	
07:00 AM	0	0	**2**	**2**	0	2	0	2	0	0	0	0	0	2	0	2	6
07:15 AM	0	0	0	0	**1**	3	0	**4**	0	0	0	0	0	1	0	1	5
07:30 AM	0	0	1	1	0	3	0	3	0	0	**1**	**1**	0	**6**	0	**6**	**11**
07:45 AM	0	**1**	1	2	0	**4**	0	4	0	0	0	0	**1**	3	0	4	10
Total Volume	0	1	4	5	1	12	0	13	0	0	1	1	1	12	0	13	32
% App. Total	0	20	80		7.7	92.3	0		0	0	100		7.7	92.3	0		
PHF	.000	.250	.500	.625	.250	.750	.000	.813	.000	.000	.250	.250	.250	.500	.000	.542	.727

Counts Unlimited
PO Box 1178
Corona, CA 92878
(951) 268-6268

City of San Bernardino
N/S: Linden Avenue
E/W: Slover Avenue
Weather: Clear

File Name : 04_CSB_Linden_Slover AM
Site Code : 04520047
Start Date : 1/23/2020
Page No : 2

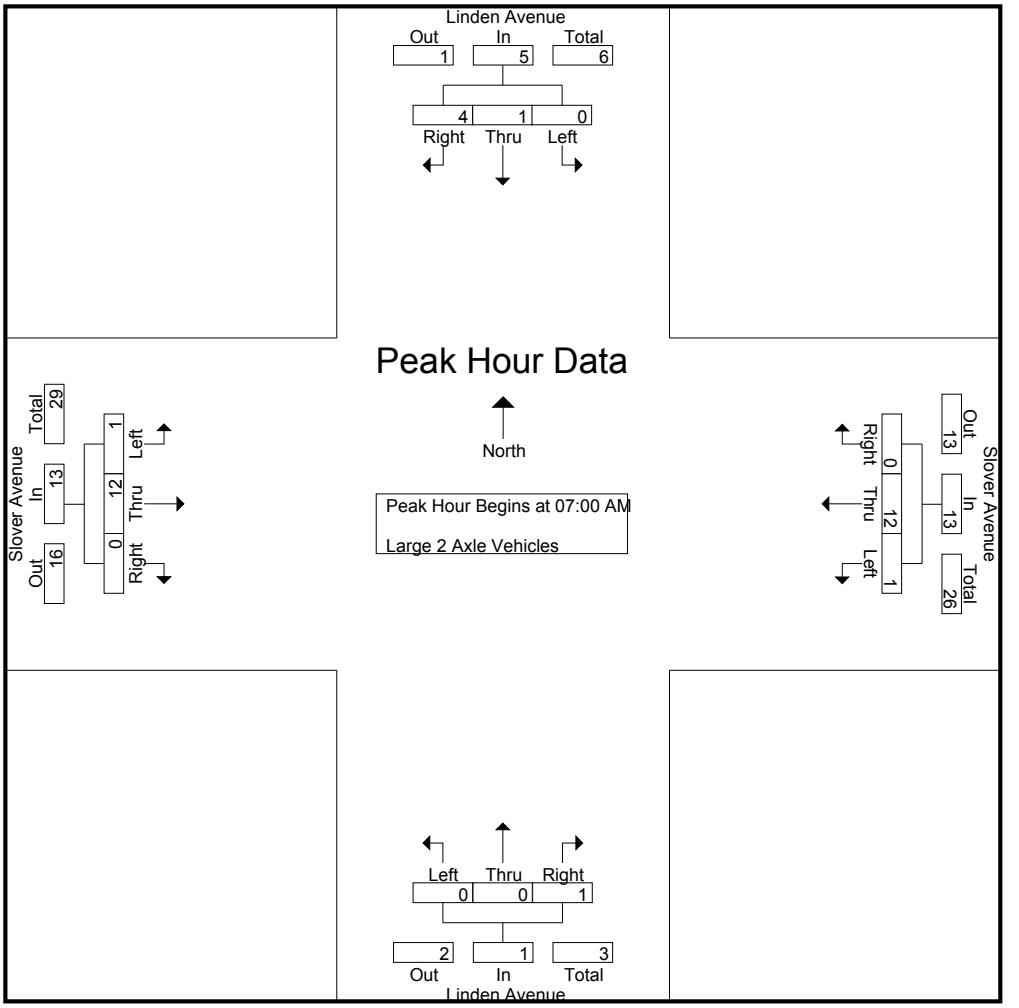

Peak Hour Analysis From 07:00 AM to 07:45 AM - Peak 1 of 1
Peak Hour for Each Approach Begins at:

	07:00 AM				07:00 AM				07:00 AM				07:00 AM			
+0 mins.	0	0	**2**	**2**	0	2	0	2	0	0	0	0	0	2	0	2
+15 mins.	0	0	0	0	**1**	3	0	**4**	0	0	0	0	0	1	0	1
+30 mins.	0	0	1	1	0	3	0	3	0	0	**1**	**1**	0	**6**	0	**6**
+45 mins.	0	**1**	1	2	0	**4**	0	4	0	0	0	0	**1**	3	0	4
Total Volume	0	1	4	5	1	12	0	13	0	0	1	1	1	12	0	13
% App. Total	0	20	80		7.7	92.3	0		0	0	100		7.7	92.3	0	
PHF	.000	.250	.500	.625	.250	.750	.000	.813	.000	.000	.250	.250	.250	.500	.000	.542

Counts Unlimited
PO Box 1178
Corona, CA 92878
(951) 268-6268

City of San Bernardino
N/S: Linden Avenue
E/W: Slover Avenue
Weather: Clear

File Name : 04_CSB_Linden_Slover AM
Site Code : 04520047
Start Date : 1/23/2020
Page No : 1

Groups Printed- 3 Axle Vehicles

	Linden Avenue Southbound				Slover Avenue Westbound				Linden Avenue Northbound				Slover Avenue Eastbound				
Start Time	Left	Thru	Right	App. Total	Left	Thru	Right	App. Total	Left	Thru	Right	App. Total	Left	Thru	Right	App. Total	Int. Total
07:00 AM	0	0	0	0	0	5	0	5	0	0	0	0	0	5	0	5	10
07:15 AM	0	0	0	0	0	3	0	3	0	0	0	0	0	4	0	4	7
07:30 AM	0	0	0	0	0	2	0	2	0	0	0	0	0	4	0	4	6
07:45 AM	0	1	1	2	0	2	0	2	0	0	0	0	0	2	0	2	6
Total	0	1	1	2	0	12	0	12	0	0	0	0	0	15	0	15	29
08:00 AM	0	0	0	0	0	0	0	0	0	0	0	0	0	4	0	4	4
08:15 AM	0	0	1	1	0	0	0	0	0	0	0	0	1	2	0	3	4
08:30 AM	0	0	0	0	0	0	0	0	0	0	0	0	0	2	0	2	2
08:45 AM	0	0	0	0	0	7	0	7	0	0	0	0	0	2	0	2	9
Total	0	0	1	1	0	7	0	7	0	0	0	0	1	10	0	11	19
Grand Total	0	1	2	3	0	19	0	19	0	0	0	0	1	25	0	26	48
Apprch %	0	33.3	66.7		0	100	0		0	0	0		3.8	96.2	0		
Total %	0	2.1	4.2	6.2	0	39.6	0	39.6	0	0	0	0	2.1	52.1	0	54.2	

	Linden Avenue Southbound				Slover Avenue Westbound				Linden Avenue Northbound				Slover Avenue Eastbound				
Start Time	Left	Thru	Right	App. Total	Left	Thru	Right	App. Total	Left	Thru	Right	App. Total	Left	Thru	Right	App. Total	Int. Total
Peak Hour Analysis From 07:00 AM to 07:45 AM - Peak 1 of 1																	
Peak Hour for Entire Intersection Begins at 07:00 AM																	
07:00 AM	0	0	0	0	0	**5**	0	**5**	0	0	0	0	0	**5**	0	**5**	**10**
07:15 AM	0	0	0	0	0	3	0	3	0	0	0	0	0	4	0	4	7
07:30 AM	0	0	0	0	0	2	0	2	0	0	0	0	0	4	0	4	6
07:45 AM	0	**1**	**1**	**2**	0	2	0	2	0	0	0	0	0	2	0	2	6
Total Volume	0	1	1	2	0	12	0	12	0	0	0	0	0	15	0	15	29
% App. Total	0	50	50		0	100	0		0	0	0		0	100	0		
PHF	.000	.250	.250	.250	.000	.600	.000	.600	.000	.000	.000	.000	.000	.750	.000	.750	.725

Counts Unlimited
PO Box 1178
Corona, CA 92878
(951) 268-6268

City of San Bernardino
N/S: Linden Avenue
E/W: Slover Avenue
Weather: Clear

File Name : 04_CSB_Linden_Slover AM
Site Code : 04520047
Start Date : 1/23/2020
Page No : 2

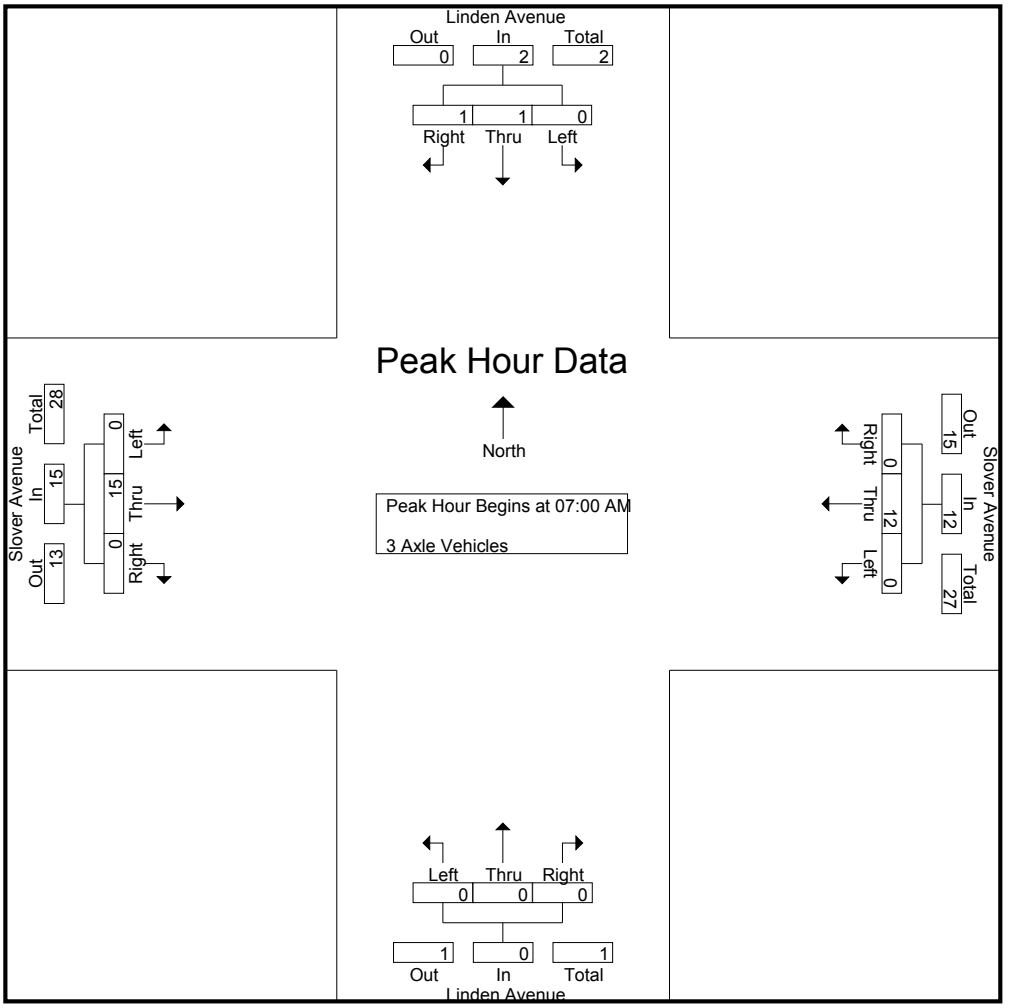

Peak Hour Analysis From 07:00 AM to 07:45 AM - Peak 1 of 1
Peak Hour for Each Approach Begins at:

	07:00 AM				07:00 AM				07:00 AM				07:00 AM			
+0 mins.	0	0	0	0	0	**5**	0	**5**	0	0	0	0	0	**5**	0	**5**
+15 mins.	0	0	0	0	0	3	0	3	0	0	0	0	0	4	0	4
+30 mins.	0	0	0	0	0	2	0	2	0	0	0	0	0	4	0	4
+45 mins.	0	**1**	**1**	**2**	0	2	0	2	0	0	0	0	0	2	0	2
Total Volume	0	1	1	2	0	12	0	12	0	0	0	0	0	15	0	15
% App. Total	0	50	50		0	100	0		0	0	0		0	100	0	
PHF	.000	.250	.250	.250	.000	.600	.000	.600	.000	.000	.000	.000	.000	.750	.000	.750

Counts Unlimited
PO Box 1178
Corona, CA 92878
(951) 268-6268

City of San Bernardino
N/S: Linden Avenue
E/W: Slover Avenue
Weather: Clear

File Name : 04_CSB_Linden_Slover AM
Site Code : 04520047
Start Date : 1/23/2020
Page No : 1

Groups Printed- 4+ Axle Trucks

	Linden Avenue Southbound				Slover Avenue Westbound				Linden Avenue Northbound				Slover Avenue Eastbound				
Start Time	Left	Thru	Right	App. Total	Left	Thru	Right	App. Total	Left	Thru	Right	App. Total	Left	Thru	Right	App. Total	Int. Total
07:00 AM	0	0	0	0	0	8	1	9	0	0	0	0	0	2	0	2	11
07:15 AM	0	0	0	0	0	6	1	7	0	0	0	0	0	2	0	2	9
07:30 AM	1	0	2	3	0	6	0	6	0	0	0	0	0	3	0	3	12
07:45 AM	0	0	0	0	0	7	0	7	0	0	0	0	1	1	0	2	9
Total	1	0	2	3	0	27	2	29	0	0	0	0	1	8	0	9	41
08:00 AM	0	0	0	0	0	7	0	7	0	0	0	0	0	4	0	4	11
08:15 AM	0	0	2	2	0	8	0	8	0	0	0	0	0	6	0	6	16
08:30 AM	0	0	0	0	0	7	0	7	0	0	0	0	0	2	0	2	9
08:45 AM	0	0	2	2	0	7	0	7	0	0	0	0	0	2	0	2	11
Total	0	0	4	4	0	29	0	29	0	0	0	0	0	14	0	14	47
Grand Total	1	0	6	7	0	56	2	58	0	0	0	0	1	22	0	23	88
Apprch %	14.3	0	85.7		0	96.6	3.4		0	0	0		4.3	95.7	0		
Total %	1.1	0	6.8	8	0	63.6	2.3	65.9	0	0	0	0	1.1	25	0	26.1	

	Linden Avenue Southbound				Slover Avenue Westbound				Linden Avenue Northbound				Slover Avenue Eastbound				
Start Time	Left	Thru	Right	App. Total	Left	Thru	Right	App. Total	Left	Thru	Right	App. Total	Left	Thru	Right	App. Total	Int. Total
Peak Hour Analysis From 07:00 AM to 07:45 AM - Peak 1 of 1																	
Peak Hour for Entire Intersection Begins at 07:00 AM																	
07:00 AM	0	0	0	0	0	**8**	**1**	**9**	0	0	0	0	0	2	0	2	11
07:15 AM	0	0	0	0	0	6	1	7	0	0	0	0	0	2	0	2	9
07:30 AM	**1**	0	**2**	**3**	0	6	0	6	0	0	0	0	0	**3**	0	**3**	**12**
07:45 AM	0	0	0	0	0	7	0	7	0	0	0	0	**1**	1	0	2	9
Total Volume	1	0	2	3	0	27	2	29	0	0	0	0	1	8	0	9	41
% App. Total	33.3	0	66.7		0	93.1	6.9		0	0	0		11.1	88.9	0		
PHF	.250	.000	.250	.250	.000	.844	.500	.806	.000	.000	.000	.000	.250	.667	.000	.750	.854

Counts Unlimited
PO Box 1178
Corona, CA 92878
(951) 268-6268

City of San Bernardino
N/S: Linden Avenue
E/W: Slover Avenue
Weather: Clear

File Name : 04_CSB_Linden_Slover AM
Site Code : 04520047
Start Date : 1/23/2020
Page No : 2

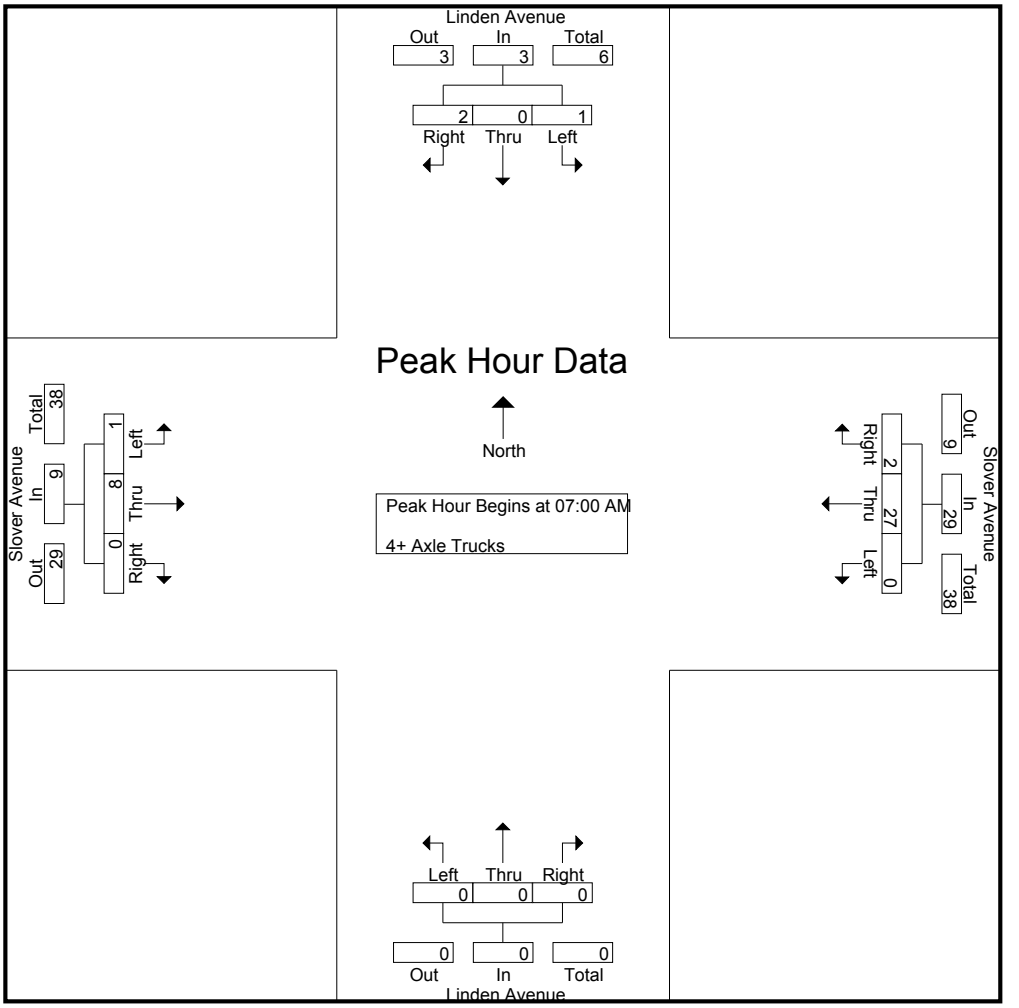

Peak Hour Analysis From 07:00 AM to 07:45 AM - Peak 1 of 1
Peak Hour for Each Approach Begins at:

	07:00 AM				07:00 AM				07:00 AM				07:00 AM			
+0 mins.	0	0	0	0	0	**8**	**1**	**9**	0	0	0	0	0	2	0	2
+15 mins.	0	0	0	0	0	6	1	7	0	0	0	0	0	2	0	2
+30 mins.	**1**	0	**2**	**3**	0	6	0	6	0	0	0	0	0	**3**	0	**3**
+45 mins.	0	0	0	0	0	7	0	7	0	0	0	0	**1**	1	0	2
Total Volume	1	0	2	3	0	27	2	29	0	0	0	0	1	8	0	9
% App. Total	33.3	0	66.7		0	93.1	6.9		0	0	0		11.1	88.9	0	
PHF	.250	.000	.250	.250	.000	.844	.500	.806	.000	.000	.000	.000	.250	.667	.000	.750

Counts Unlimited
PO Box 1178
Corona, CA 92878
(951) 268-6268

City of San Bernardino
N/S: Linden Avenue
E/W: Slover Avenue
Weather: Clear

File Name : 04_CSB_Linden_Slover PM
Site Code : 04520047
Start Date : 1/23/2020
Page No : 1

Groups Printed- Passenger Vehicles - Large 2 Axle Vehicles - 3 Axle Vehicles - 4+ Axle Trucks

	Linden Avenue Southbound				Slover Avenue Westbound				Linden Avenue Northbound				Slover Avenue Eastbound				
Start Time	Left	Thru	Right	App. Total	Left	Thru	Right	App. Total	Left	Thru	Right	App. Total	Left	Thru	Right	App. Total	Int. Total
04:00 PM	4	20	30	54	7	86	1	94	13	15	17	45	28	162	14	204	397
04:15 PM	1	12	30	43	6	78	5	89	18	13	21	52	34	148	11	193	377
04:30 PM	1	18	32	51	3	86	4	93	10	21	14	45	30	135	11	176	365
04:45 PM	2	17	41	60	8	80	0	88	10	25	14	49	39	164	15	218	415
Total	8	67	133	208	24	330	10	364	51	74	66	191	131	609	51	791	1554
05:00 PM	0	11	30	41	5	96	2	103	8	22	16	46	36	160	10	206	396
05:15 PM	2	16	28	46	8	97	2	107	13	22	8	43	30	146	7	183	379
05:30 PM	1	17	33	51	3	74	2	79	11	21	10	42	30	150	14	194	366
05:45 PM	1	23	30	54	9	80	3	92	16	21	13	50	39	120	6	165	361
Total	4	67	121	192	25	347	9	381	48	86	47	181	135	576	37	748	1502
Grand Total	12	134	254	400	49	677	19	745	99	160	113	372	266	1185	88	1539	3056
Apprch %	3	33.5	63.5		6.6	90.9	2.6		26.6	43	30.4		17.3	77	5.7		
Total %	0.4	4.4	8.3	13.1	1.6	22.2	0.6	24.4	3.2	5.2	3.7	12.2	8.7	38.8	2.9	50.4	
Passenger Vehicles	6	130	247	383	48	590	13	651	97	156	110	363	250	1063	85	1398	2795
% Passenger Vehicles	50	97	97.2	95.8	98	87.1	68.4	87.4	98	97.5	97.3	97.6	94	89.7	96.6	90.8	91.5
Large 2 Axle Vehicles	0	2	2	4	0	22	0	22	1	3	2	6	5	40	2	47	79
% Large 2 Axle Vehicles	0	1.5	0.8	1	0	3.2	0	3	1	1.9	1.8	1.6	1.9	3.4	2.3	3.1	2.6
3 Axle Vehicles	1	2	1	4	0	20	0	20	0	1	0	1	3	31	0	34	59
% 3 Axle Vehicles	8.3	1.5	0.4	1	0	3	0	2.7	0	0.6	0	0.3	1.1	2.6	0	2.2	1.9
4+ Axle Trucks	5	0	4	9	1	45	6	52	1	0	1	2	8	51	1	60	123
% 4+ Axle Trucks	41.7	0	1.6	2.2	2	6.6	31.6	7	1	0	0.9	0.5	3	4.3	1.1	3.9	4

	Linden Avenue Southbound				Slover Avenue Westbound				Linden Avenue Northbound				Slover Avenue Eastbound				
Start Time	Left	Thru	Right	App. Total	Left	Thru	Right	App. Total	Left	Thru	Right	App. Total	Left	Thru	Right	App. Total	Int. Total
Peak Hour Analysis From 04:00 PM to 05:45 PM - Peak 1 of 1																	
Peak Hour for Entire Intersection Begins at 04:45 PM																	
04:45 PM	**2**	**17**	**41**	**60**	**8**	80	0	88	10	**25**	14	**49**	**39**	**164**	**15**	**218**	**415**
05:00 PM	0	11	30	41	5	96	**2**	103	8	22	**16**	46	36	160	10	206	396
05:15 PM	2	16	28	46	8	**97**	2	**107**	**13**	22	8	43	30	146	7	183	379
05:30 PM	1	17	33	51	3	74	2	79	11	21	10	42	30	150	14	194	366
Total Volume	5	61	132	198	24	347	6	377	42	90	48	180	135	620	46	801	1556
% App. Total	2.5	30.8	66.7		6.4	92	1.6		23.3	50	26.7		16.9	77.4	5.7		
PHF	.625	.897	.805	.825	.750	.894	.750	.881	.808	.900	.750	.918	.865	.945	.767	.919	.937

Counts Unlimited
PO Box 1178
Corona, CA 92878
(951) 268-6268

City of San Bernardino
N/S: Linden Avenue
E/W: Slover Avenue
Weather: Clear

File Name : 04_CSB_Linden_Slover PM
Site Code : 04520047
Start Date : 1/23/2020
Page No : 2

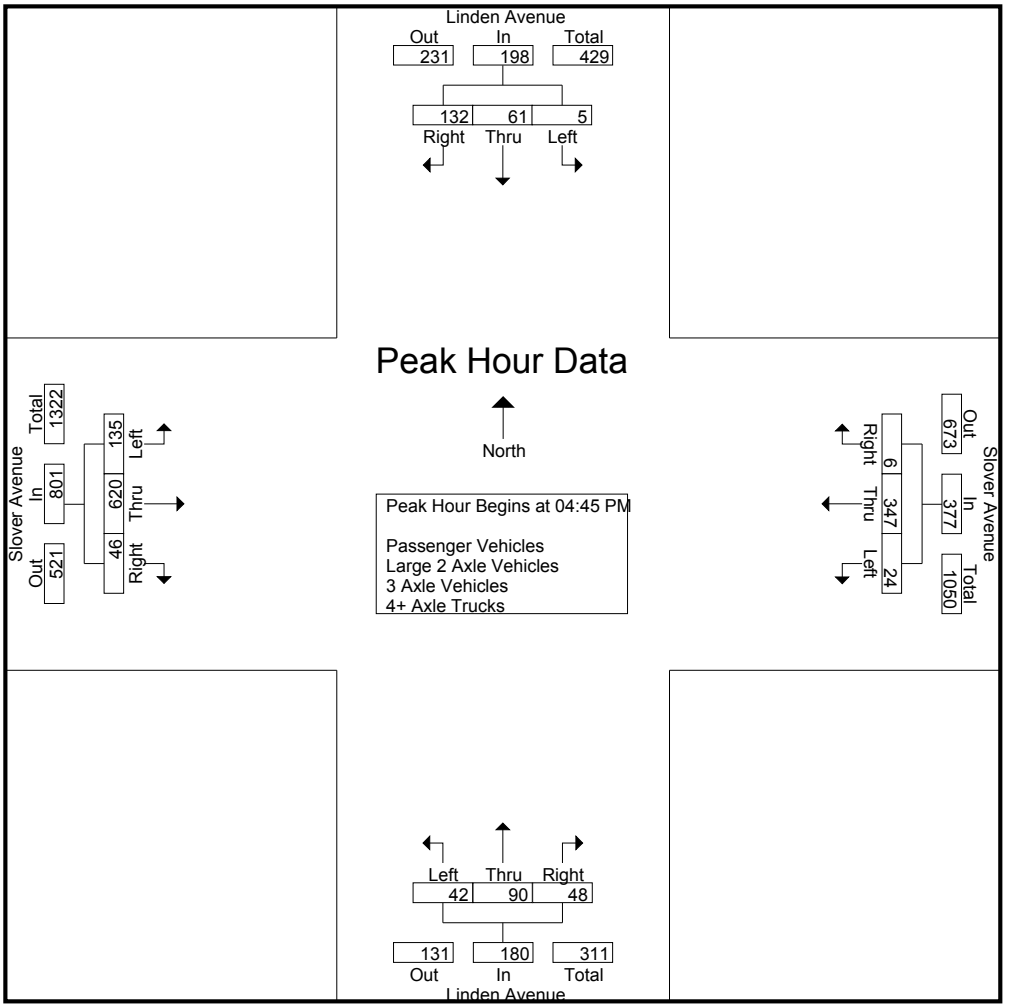

Peak Hour Analysis From 04:00 PM to 05:45 PM - Peak 1 of 1
Peak Hour for Each Approach Begins at:

	04:00 PM				04:30 PM				04:15 PM				04:45 PM			
+0 mins.	**4**	**20**	30	54	3	86	**4**	93	**18**	13	**21**	**52**	**39**	**164**	**15**	**218**
+15 mins.	1	12	30	43	**8**	80	0	88	10	21	14	45	36	160	10	206
+30 mins.	1	18	32	51	5	96	2	103	10	**25**	14	49	30	146	7	183
+45 mins.	2	17	**41**	**60**	8	**97**	2	**107**	8	22	16	46	30	150	14	194
Total Volume	8	67	133	208	24	359	8	391	46	81	65	192	135	620	46	801
% App. Total	3.8	32.2	63.9		6.1	91.8	2		24	42.2	33.9		16.9	77.4	5.7	
PHF	.500	.838	.811	.867	.750	.925	.500	.914	.639	.810	.774	.923	.865	.945	.767	.919

Counts Unlimited
PO Box 1178
Corona, CA 92878
(951) 268-6268

City of San Bernardino
N/S: Linden Avenue
E/W: Slover Avenue
Weather: Clear

File Name : 04_CSB_Linden_Slover PM
Site Code : 04520047
Start Date : 1/23/2020
Page No : 1

Groups Printed- Passenger Vehicles

	Linden Avenue Southbound				Slover Avenue Westbound				Linden Avenue Northbound				Slover Avenue Eastbound				
Start Time	Left	Thru	Right	App. Total	Left	Thru	Right	App. Total	Left	Thru	Right	App. Total	Left	Thru	Right	App. Total	Int. Total
04:00 PM	1	18	30	49	7	74	1	82	13	14	17	44	26	142	14	182	357
04:15 PM	1	10	30	41	6	67	2	75	18	13	20	51	32	136	11	179	346
04:30 PM	0	18	30	48	3	76	3	82	9	20	14	43	28	123	11	162	335
04:45 PM	2	17	39	58	8	71	0	79	9	25	13	47	37	141	14	192	376
Total	4	63	129	196	24	288	6	318	49	72	64	185	123	542	50	715	1414
05:00 PM	0	11	28	39	5	84	1	90	8	21	15	44	34	147	10	191	364
05:15 PM	1	16	28	45	7	86	1	94	13	21	8	42	29	125	7	161	342
05:30 PM	0	17	32	49	3	65	2	70	11	21	10	42	27	137	13	177	338
05:45 PM	1	23	30	54	9	67	3	79	16	21	13	50	37	112	5	154	337
Total	2	67	118	187	24	302	7	333	48	84	46	178	127	521	35	683	1381
Grand Total	6	130	247	383	48	590	13	651	97	156	110	363	250	1063	85	1398	2795
Apprch %	1.6	33.9	64.5		7.4	90.6	2		26.7	43	30.3		17.9	76	6.1		
Total %	0.2	4.7	8.8	13.7	1.7	21.1	0.5	23.3	3.5	5.6	3.9	13	8.9	38	3	50	

	Linden Avenue Southbound				Slover Avenue Westbound				Linden Avenue Northbound				Slover Avenue Eastbound				
Start Time	Left	Thru	Right	App. Total	Left	Thru	Right	App. Total	Left	Thru	Right	App. Total	Left	Thru	Right	App. Total	Int. Total
Peak Hour Analysis From 04:45 PM to 05:30 PM - Peak 1 of 1																	
Peak Hour for Entire Intersection Begins at 04:45 PM																	
04:45 PM	**2**	**17**	**39**	**58**	**8**	71	0	79	9	**25**	13	**47**	**37**	141	**14**	**192**	**376**
05:00 PM	0	11	28	39	5	84	1	90	8	21	**15**	44	34	**147**	10	191	364
05:15 PM	1	16	28	45	7	**86**	1	**94**	**13**	21	8	42	29	125	7	161	342
05:30 PM	0	17	32	49	3	65	**2**	70	11	21	10	42	27	137	13	177	338
Total Volume	3	61	127	191	23	306	4	333	41	88	46	175	127	550	44	721	1420
% App. Total	1.6	31.9	66.5		6.9	91.9	1.2		23.4	50.3	26.3		17.6	76.3	6.1		
PHF	.375	.897	.814	.823	.719	.890	.500	.886	.788	.880	.767	.931	.858	.935	.786	.939	.944

Counts Unlimited
PO Box 1178
Corona, CA 92878
(951) 268-6268

City of San Bernardino
N/S: Linden Avenue
E/W: Slover Avenue
Weather: Clear

File Name : 04_CSB_Linden_Slover PM
Site Code : 04520047
Start Date : 1/23/2020
Page No : 2

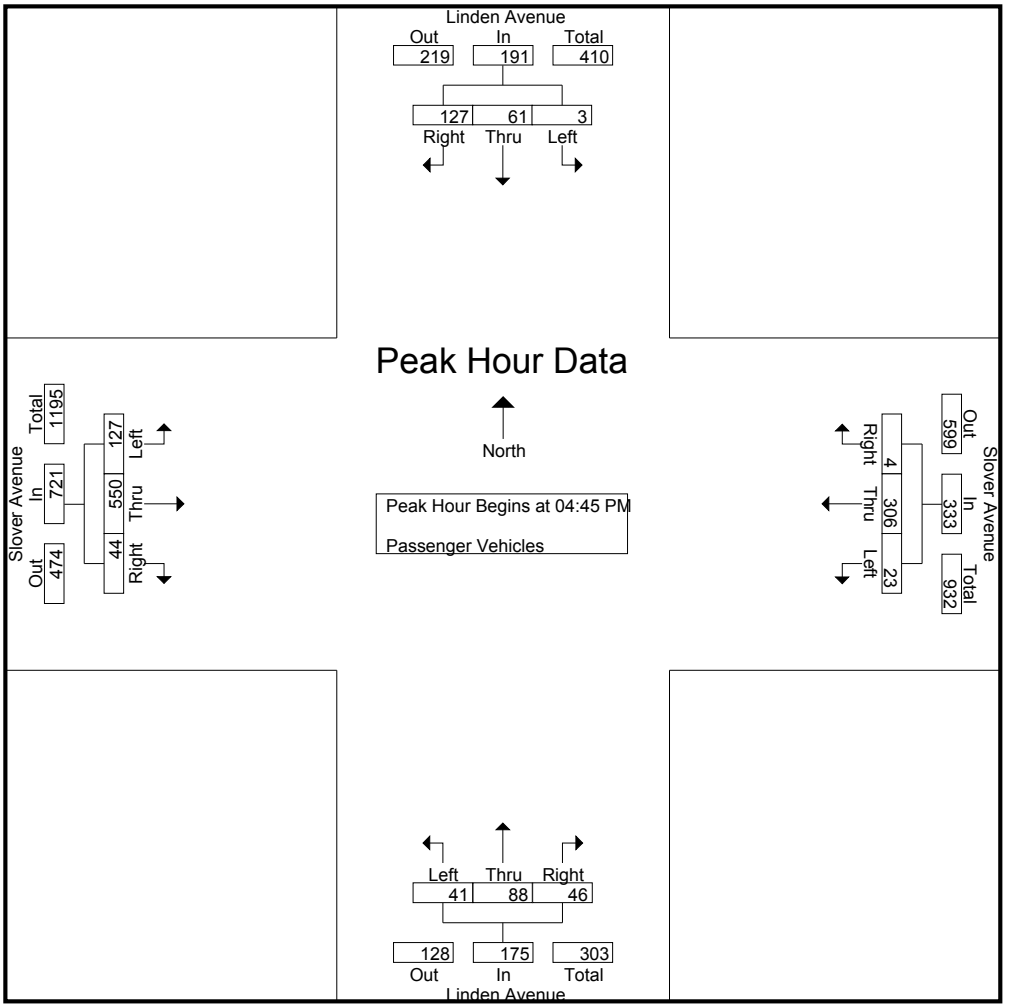

Peak Hour Analysis From 04:45 PM to 05:30 PM - Peak 1 of 1
Peak Hour for Each Approach Begins at:

	04:45 PM				04:45 PM				04:45 PM				04:45 PM			
+0 mins.	**2**	**17**	**39**	**58**	**8**	71	0	79	9	**25**	13	**47**	**37**	141	**14**	**192**
+15 mins.	0	11	28	39	5	84	1	90	8	21	**15**	44	34	**147**	10	191
+30 mins.	1	16	28	45	7	**86**	1	**94**	**13**	21	8	42	29	125	7	161
+45 mins.	0	17	32	49	3	65	**2**	70	11	21	10	42	27	137	13	177
Total Volume	3	61	127	191	23	306	4	333	41	88	46	175	127	550	44	721
% App. Total	1.6	31.9	66.5		6.9	91.9	1.2		23.4	50.3	26.3		17.6	76.3	6.1	
PHF	.375	.897	.814	.823	.719	.890	.500	.886	.788	.880	.767	.931	.858	.935	.786	.939

Counts Unlimited
PO Box 1178
Corona, CA 92878
(951) 268-6268

City of San Bernardino
N/S: Linden Avenue
E/W: Slover Avenue
Weather: Clear

File Name : 04_CSB_Linden_Slover PM
Site Code : 04520047
Start Date : 1/23/2020
Page No : 1

Groups Printed- Large 2 Axle Vehicles

	Linden Avenue Southbound				Slover Avenue Westbound				Linden Avenue Northbound				Slover Avenue Eastbound				
Start Time	Left	Thru	Right	App. Total	Left	Thru	Right	App. Total	Left	Thru	Right	App. Total	Left	Thru	Right	App. Total	Int. Total
04:00 PM	0	1	0	1	0	2	0	2	0	0	0	0	0	8	0	8	11
04:15 PM	0	1	0	1	0	4	0	4	0	0	0	0	1	7	0	8	13
04:30 PM	0	0	0	0	0	5	0	5	1	1	0	2	0	2	0	2	9
04:45 PM	0	0	0	0	0	2	0	2	0	0	1	1	0	10	1	11	14
Total	0	2	0	2	0	13	0	13	1	1	1	3	1	27	1	29	47
05:00 PM	0	0	1	1	0	2	0	2	0	1	1	2	0	2	0	2	7
05:15 PM	0	0	0	0	0	2	0	2	0	1	0	1	1	5	0	6	9
05:30 PM	0	0	1	1	0	1	0	1	0	0	0	0	2	4	1	7	9
05:45 PM	0	0	0	0	0	4	0	4	0	0	0	0	1	2	0	3	7
Total	0	0	2	2	0	9	0	9	0	2	1	3	4	13	1	18	32
Grand Total	0	2	2	4	0	22	0	22	1	3	2	6	5	40	2	47	79
Apprch %	0	50	50		0	100	0		16.7	50	33.3		10.6	85.1	4.3		
Total %	0	2.5	2.5	5.1	0	27.8	0	27.8	1.3	3.8	2.5	7.6	6.3	50.6	2.5	59.5	

	Linden Avenue Southbound				Slover Avenue Westbound				Linden Avenue Northbound				Slover Avenue Eastbound				
Start Time	Left	Thru	Right	App. Total	Left	Thru	Right	App. Total	Left	Thru	Right	App. Total	Left	Thru	Right	App. Total	Int. Total
Peak Hour Analysis From 04:45 PM to 05:30 PM - Peak 1 of 1																	
Peak Hour for Entire Intersection Begins at 04:45 PM																	
04:45 PM	0	0	0	0	0	**2**	0	**2**	0	0	**1**	1	0	**10**	**1**	**11**	**14**
05:00 PM	0	0	**1**	**1**	0	2	0	2	0	**1**	1	**2**	0	2	0	2	7
05:15 PM	0	0	0	0	0	2	0	2	0	1	0	1	1	5	0	6	9
05:30 PM	0	0	1	1	0	1	0	1	0	0	0	0	**2**	4	1	7	9
Total Volume	0	0	2	2	0	7	0	7	0	2	2	4	3	21	2	26	39
% App. Total	0	0	100		0	100	0		0	50	50		11.5	80.8	7.7		
PHF	.000	.000	.500	.500	.000	.875	.000	.875	.000	.500	.500	.500	.375	.525	.500	.591	.696

Counts Unlimited
PO Box 1178
Corona, CA 92878
(951) 268-6268

City of San Bernardino
N/S: Linden Avenue
E/W: Slover Avenue
Weather: Clear

File Name : 04_CSB_Linden_Slover PM
Site Code : 04520047
Start Date : 1/23/2020
Page No : 2

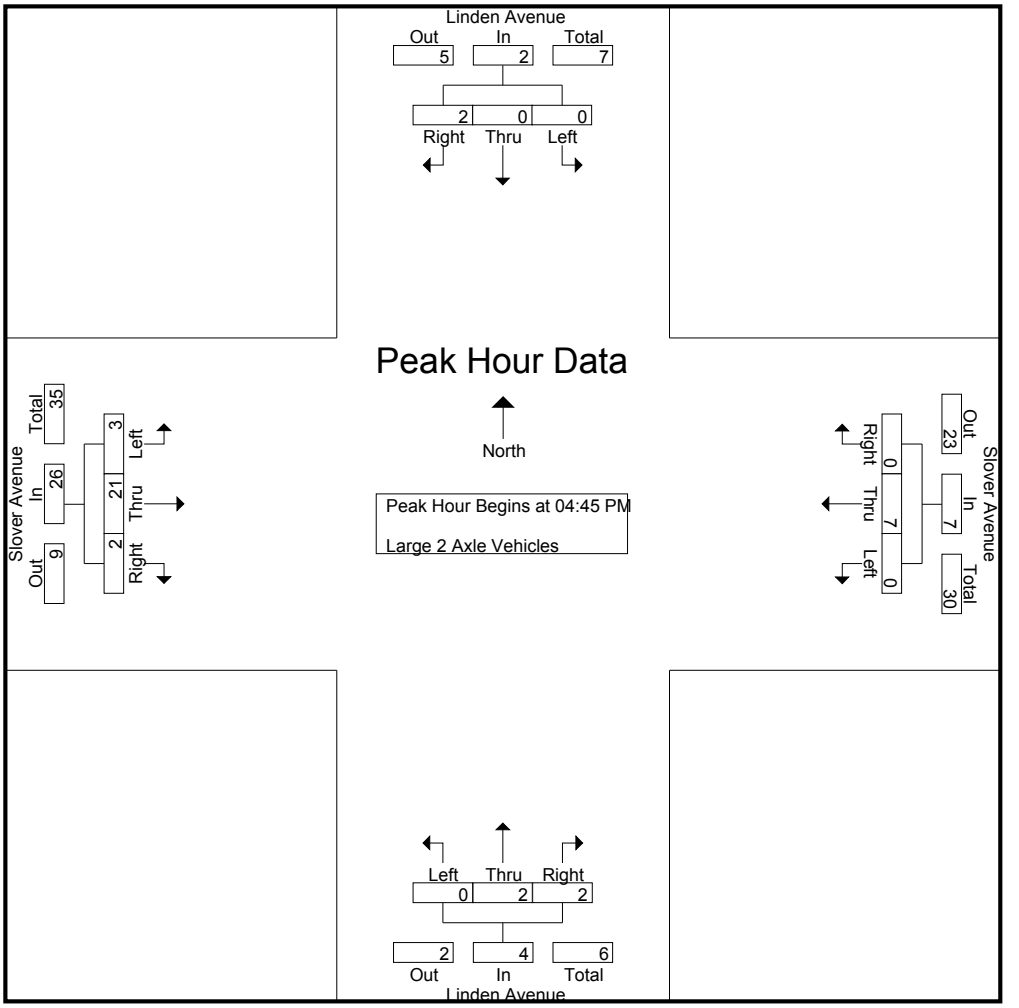

Peak Hour Analysis From 04:45 PM to 05:30 PM - Peak 1 of 1
Peak Hour for Each Approach Begins at:

	04:45 PM				04:45 PM				04:45 PM				04:45 PM			
+0 mins.	0	0	0	0	0	**2**	0	**2**	0	0	**1**	1	0	**10**	**1**	**11**
+15 mins.	0	0	**1**	**1**	0	2	0	2	0	**1**	1	**2**	0	2	0	2
+30 mins.	0	0	0	0	0	2	0	2	0	1	0	1	1	5	0	6
+45 mins.	0	0	1	1	0	1	0	1	0	0	0	0	**2**	4	1	7
Total Volume	0	0	2	2	0	7	0	7	0	2	2	4	3	21	2	26
% App. Total	0	0	100		0	100	0		0	50	50		11.5	80.8	7.7	
PHF	.000	.000	.500	.500	.000	.875	.000	.875	.000	.500	.500	.500	.375	.525	.500	.591

Counts Unlimited
PO Box 1178
Corona, CA 92878
(951) 268-6268

City of San Bernardino
N/S: Linden Avenue
E/W: Slover Avenue
Weather: Clear

File Name : 04_CSB_Linden_Slover PM
Site Code : 04520047
Start Date : 1/23/2020
Page No : 1

Groups Printed- 3 Axle Vehicles

	Linden Avenue Southbound				Slover Avenue Westbound				Linden Avenue Northbound				Slover Avenue Eastbound				
Start Time	Left	Thru	Right	App. Total	Left	Thru	Right	App. Total	Left	Thru	Right	App. Total	Left	Thru	Right	App. Total	Int. Total
04:00 PM	0	1	0	1	0	5	0	5	0	1	0	1	0	3	0	3	10
04:15 PM	0	1	0	1	0	2	0	2	0	0	0	0	0	2	0	2	5
04:30 PM	0	0	1	1	0	2	0	2	0	0	0	0	1	6	0	7	10
04:45 PM	0	0	0	0	0	3	0	3	0	0	0	0	0	2	0	2	5
Total	0	2	1	3	0	12	0	12	0	1	0	1	1	13	0	14	30
05:00 PM	0	0	0	0	0	5	0	5	0	0	0	0	1	6	0	7	12
05:15 PM	0	0	0	0	0	2	0	2	0	0	0	0	0	5	0	5	7
05:30 PM	1	0	0	1	0	1	0	1	0	0	0	0	0	5	0	5	7
05:45 PM	0	0	0	0	0	0	0	0	0	0	0	0	1	2	0	3	3
Total	1	0	0	1	0	8	0	8	0	0	0	0	2	18	0	20	29
Grand Total	1	2	1	4	0	20	0	20	0	1	0	1	3	31	0	34	59
Apprch %	25	50	25		0	100	0		0	100	0		8.8	91.2	0		
Total %	1.7	3.4	1.7	6.8	0	33.9	0	33.9	0	1.7	0	1.7	5.1	52.5	0	57.6	

	Linden Avenue Southbound				Slover Avenue Westbound				Linden Avenue Northbound				Slover Avenue Eastbound				
Start Time	Left	Thru	Right	App. Total	Left	Thru	Right	App. Total	Left	Thru	Right	App. Total	Left	Thru	Right	App. Total	Int. Total
Peak Hour Analysis From 04:45 PM to 05:30 PM - Peak 1 of 1																	
Peak Hour for Entire Intersection Begins at 04:45 PM																	
04:45 PM	0	0	0	0	0	3	0	3	0	0	0	0	0	2	0	2	5
05:00 PM	0	0	0	0	0	**5**	0	**5**	0	0	0	0	**1**	**6**	0	**7**	**12**
05:15 PM	0	0	0	0	0	2	0	2	0	0	0	0	0	5	0	5	7
05:30 PM	**1**	0	0	**1**	0	1	0	1	0	0	0	0	0	5	0	5	7
Total Volume	1	0	0	1	0	11	0	11	0	0	0	0	1	18	0	19	31
% App. Total	100	0	0		0	100	0		0	0	0		5.3	94.7	0		
PHF	.250	.000	.000	.250	.000	.550	.000	.550	.000	.000	.000	.000	.250	.750	.000	.679	.646

Counts Unlimited
PO Box 1178
Corona, CA 92878
(951) 268-6268

City of San Bernardino
N/S: Linden Avenue
E/W: Slover Avenue
Weather: Clear

File Name : 04_CSB_Linden_Slover PM
Site Code : 04520047
Start Date : 1/23/2020
Page No : 2

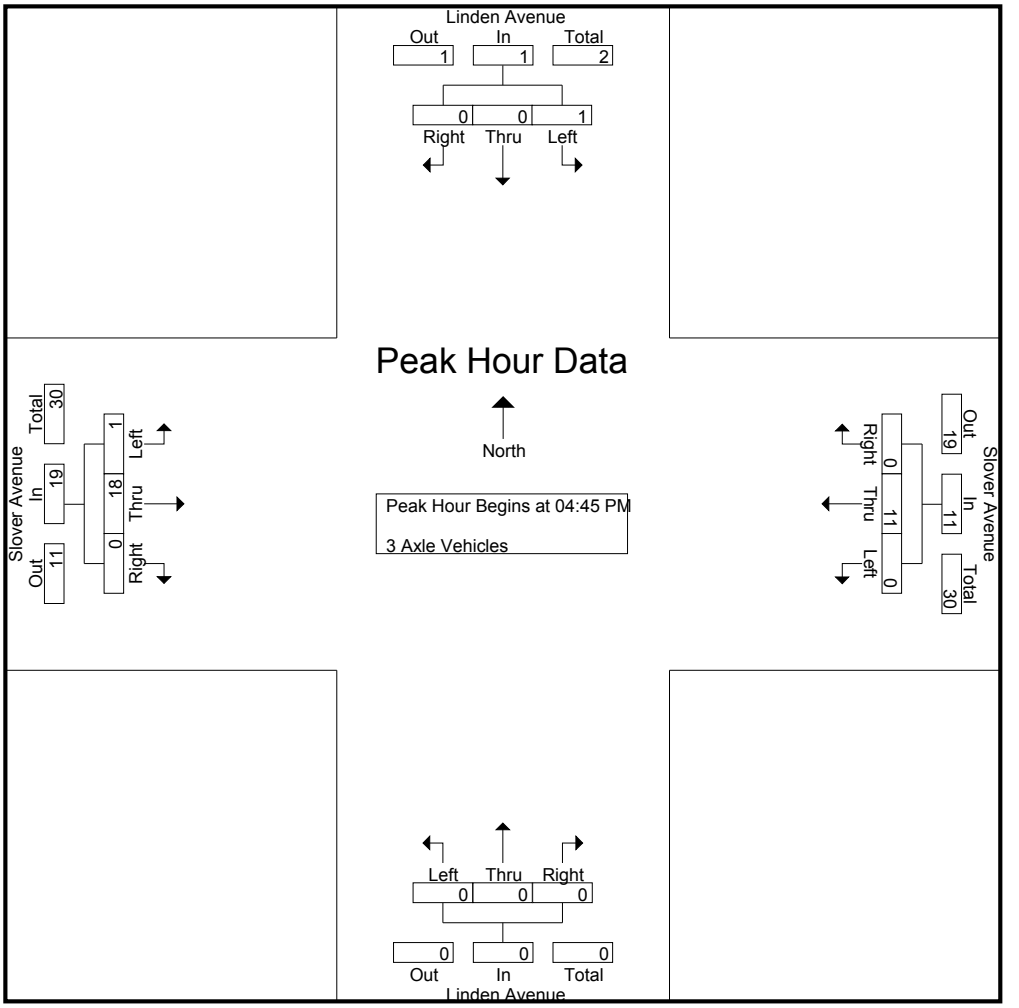

Peak Hour Analysis From 04:45 PM to 05:30 PM - Peak 1 of 1
Peak Hour for Each Approach Begins at:

	04:45 PM				04:45 PM				04:45 PM				04:45 PM			
+0 mins.	0	0	0	0	0	3	0	3	0	0	0	0	0	2	0	2
+15 mins.	0	0	0	0	0	**5**	0	**5**	0	0	0	0	**1**	**6**	0	**7**
+30 mins.	0	0	0	0	0	2	0	2	0	0	0	0	0	5	0	5
+45 mins.	**1**	0	0	**1**	0	1	0	1	0	0	0	0	0	5	0	5
Total Volume	1	0	0	1	0	11	0	11	0	0	0	0	1	18	0	19
% App. Total	100	0	0		0	100	0		0	0	0		5.3	94.7	0	
PHF	.250	.000	.000	.250	.000	.550	.000	.550	.000	.000	.000	.000	.250	.750	.000	.679

Counts Unlimited
PO Box 1178
Corona, CA 92878
(951) 268-6268

City of San Bernardino
N/S: Linden Avenue
E/W: Slover Avenue
Weather: Clear

File Name : 04_CSB_Linden_Slover PM
Site Code : 04520047
Start Date : 1/23/2020
Page No : 1

Groups Printed- 4+ Axle Trucks

	Linden Avenue Southbound				Slover Avenue Westbound				Linden Avenue Northbound				Slover Avenue Eastbound				
Start Time	Left	Thru	Right	App. Total	Left	Thru	Right	App. Total	Left	Thru	Right	App. Total	Left	Thru	Right	App. Total	Int. Total
04:00 PM	3	0	0	3	0	5	0	5	0	0	0	0	2	9	0	11	19
04:15 PM	0	0	0	0	0	5	3	8	0	0	1	1	1	3	0	4	13
04:30 PM	1	0	1	2	0	3	1	4	0	0	0	0	1	4	0	5	11
04:45 PM	0	0	2	2	0	4	0	4	1	0	0	1	2	11	0	13	20
Total	4	0	3	7	0	17	4	21	1	0	1	2	6	27	0	33	63
05:00 PM	0	0	1	1	0	5	1	6	0	0	0	0	1	5	0	6	13
05:15 PM	1	0	0	1	1	7	1	9	0	0	0	0	0	11	0	11	21
05:30 PM	0	0	0	0	0	7	0	7	0	0	0	0	1	4	0	5	12
05:45 PM	0	0	0	0	0	9	0	9	0	0	0	0	0	4	1	5	14
Total	1	0	1	2	1	28	2	31	0	0	0	0	2	24	1	27	60
Grand Total	5	0	4	9	1	45	6	52	1	0	1	2	8	51	1	60	123
Apprch %	55.6	0	44.4		1.9	86.5	11.5		50	0	50		13.3	85	1.7		
Total %	4.1	0	3.3	7.3	0.8	36.6	4.9	42.3	0.8	0	0.8	1.6	6.5	41.5	0.8	48.8	

	Linden Avenue Southbound				Slover Avenue Westbound				Linden Avenue Northbound				Slover Avenue Eastbound				
Start Time	Left	Thru	Right	App. Total	Left	Thru	Right	App. Total	Left	Thru	Right	App. Total	Left	Thru	Right	App. Total	Int. Total
Peak Hour Analysis From 04:45 PM to 05:30 PM - Peak 1 of 1																	
Peak Hour for Entire Intersection Begins at 04:45 PM																	
04:45 PM	0	0	**2**	**2**	0	4	0	4	**1**	0	0	**1**	**2**	**11**	0	**13**	20
05:00 PM	0	0	1	1	0	5	**1**	6	0	0	0	0	1	5	0	6	13
05:15 PM	**1**	0	0	1	**1**	**7**	1	**9**	0	0	0	0	0	11	0	11	**21**
05:30 PM	0	0	0	0	0	7	0	7	0	0	0	0	1	4	0	5	12
Total Volume	1	0	3	4	1	23	2	26	1	0	0	1	4	31	0	35	66
% App. Total	25	0	75		3.8	88.5	7.7		100	0	0		11.4	88.6	0		
PHF	.250	.000	.375	.500	.250	.821	.500	.722	.250	.000	.000	.250	.500	.705	.000	.673	.786

Counts Unlimited
PO Box 1178
Corona, CA 92878
(951) 268-6268

City of San Bernardino
N/S: Linden Avenue
E/W: Slover Avenue
Weather: Clear

File Name : 04_CSB_Linden_Slover PM
Site Code : 04520047
Start Date : 1/23/2020
Page No : 2

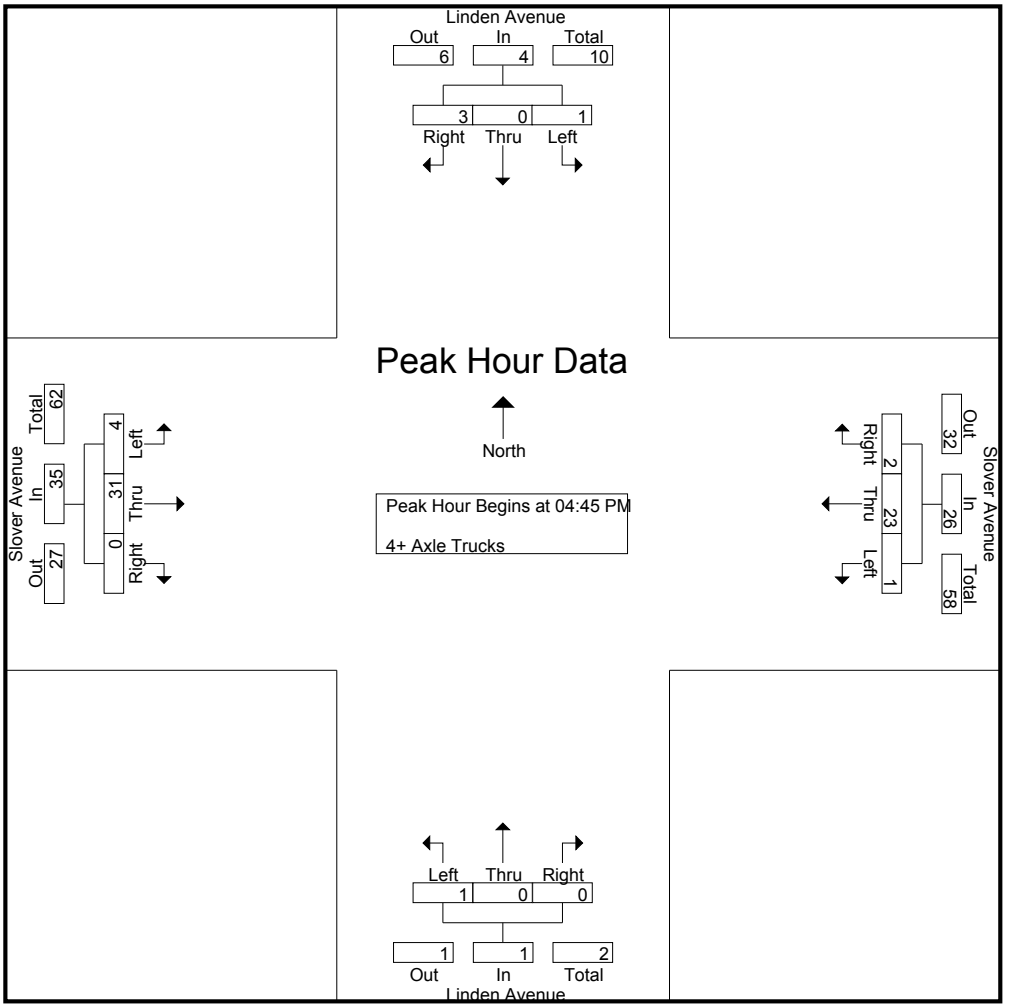

Peak Hour Analysis From 04:45 PM to 05:30 PM - Peak 1 of 1
Peak Hour for Each Approach Begins at:

	04:45 PM				04:45 PM				04:45 PM				04:45 PM			
+0 mins.	0	0	**2**	**2**	0	4	0	4	**1**	0	0	**1**	**2**	**11**	0	**13**
+15 mins.	0	0	1	1	0	5	**1**	6	0	0	0	0	1	5	0	6
+30 mins.	**1**	0	0	1	**1**	**7**	1	**9**	0	0	0	0	0	11	0	11
+45 mins.	0	0	0	0	0	7	0	7	0	0	0	0	1	4	0	5
Total Volume	1	0	3	4	1	23	2	26	1	0	0	1	4	31	0	35
% App. Total	25	0	75		3.8	88.5	7.7		100	0	0		11.4	88.6	0	
PHF	.250	.000	.375	.500	.250	.821	.500	.722	.250	.000	.000	.250	.500	.705	.000	.673

Counts Unlimited
PO Box 1178
Corona, CA 92878
(951) 268-6268

City of San Bernardino
N/S: Cedar Avenue
E/W: Slover Avenue
Weather: Clear

File Name : 05_CSB_Cedar_Slover AM
Site Code : 04520047
Start Date : 1/23/2020
Page No : 1

Groups Printed- Passenger Vehicles - Large 2 Axle Vehicles - 3 Axle Vehicles - 4+ Axle Trucks

	Cedar Avenue Southbound				Slover Avenue Westbound				Cedar Avenue Northbound				Slover Avenue Eastbound				
Start Time	Left	Thru	Right	App. Total	Left	Thru	Right	App. Total	Left	Thru	Right	App. Total	Left	Thru	Right	App. Total	Int. Total
07:00 AM	19	188	43	250	2	59	22	83	38	164	1	203	50	30	9	89	625
07:15 AM	20	199	31	250	7	54	20	81	25	172	2	199	65	61	32	158	688
07:30 AM	29	204	30	263	4	27	27	58	20	176	2	198	69	45	22	136	655
07:45 AM	21	217	29	267	1	31	22	54	24	191	4	219	42	37	6	85	625
Total	89	808	133	1030	14	171	91	276	107	703	9	819	226	173	69	468	2593
08:00 AM	25	184	31	240	3	23	33	59	13	117	1	131	51	27	14	92	522
08:15 AM	24	187	35	246	3	21	33	57	14	150	3	167	46	21	8	75	545
08:30 AM	16	173	21	210	1	20	28	49	12	160	7	179	40	24	5	69	507
08:45 AM	15	163	21	199	4	19	29	52	9	143	0	152	34	15	6	55	458
Total	80	707	108	895	11	83	123	217	48	570	11	629	171	87	33	291	2032
Grand Total	169	1515	241	1925	25	254	214	493	155	1273	20	1448	397	260	102	759	4625
Apprch %	8.8	78.7	12.5		5.1	51.5	43.4		10.7	87.9	1.4		52.3	34.3	13.4		
Total %	3.7	32.8	5.2	41.6	0.5	5.5	4.6	10.7	3.4	27.5	0.4	31.3	8.6	5.6	2.2	16.4	
Passenger Vehicles	135	1365	199	1699	22	213	150	385	139	1158	17	1314	370	231	86	687	4085
% Passenger Vehicles	79.9	90.1	82.6	88.3	88	83.9	70.1	78.1	89.7	91	85	90.7	93.2	88.8	84.3	90.5	88.3
Large 2 Axle Vehicles	8	52	8	68	2	12	34	48	4	50	2	56	9	7	2	18	190
% Large 2 Axle Vehicles	4.7	3.4	3.3	3.5	8	4.7	15.9	9.7	2.6	3.9	10	3.9	2.3	2.7	2	2.4	4.1
3 Axle Vehicles	5	52	2	59	0	15	9	24	2	18	0	20	10	15	6	31	134
% 3 Axle Vehicles	3	3.4	0.8	3.1	0	5.9	4.2	4.9	1.3	1.4	0	1.4	2.5	5.8	5.9	4.1	2.9
4+ Axle Trucks	21	46	32	99	1	14	21	36	10	47	1	58	8	7	8	23	216
% 4+ Axle Trucks	12.4	3	13.3	5.1	4	5.5	9.8	7.3	6.5	3.7	5	4	2	2.7	7.8	3	4.7

	Cedar Avenue Southbound				Slover Avenue Westbound				Cedar Avenue Northbound				Slover Avenue Eastbound				
Start Time	Left	Thru	Right	App. Total	Left	Thru	Right	App. Total	Left	Thru	Right	App. Total	Left	Thru	Right	App. Total	Int. Total
Peak Hour Analysis From 07:00 AM to 08:45 AM - Peak 1 of 1																	
Peak Hour for Entire Intersection Begins at 07:00 AM																	
07:00 AM	19	188	**43**	250	2	**59**	22	**83**	**38**	164	1	203	50	30	9	89	625
07:15 AM	20	199	31	250	**7**	54	20	81	25	172	2	199	65	**61**	**32**	**158**	**688**
07:30 AM	**29**	204	30	263	4	27	**27**	58	20	176	2	198	**69**	45	22	136	655
07:45 AM	21	**217**	29	**267**	1	31	22	54	24	**191**	**4**	**219**	42	37	6	85	625
Total Volume	89	808	133	1030	14	171	91	276	107	703	9	819	226	173	69	468	2593
% App. Total	8.6	78.4	12.9		5.1	62	33		13.1	85.8	1.1		48.3	37	14.7		
PHF	.767	.931	.773	.964	.500	.725	.843	.831	.704	.920	.563	.935	.819	.709	.539	.741	.942

Counts Unlimited
PO Box 1178
Corona, CA 92878
(951) 268-6268

City of San Bernardino
N/S: Cedar Avenue
E/W: Slover Avenue
Weather: Clear

File Name : 05_CSB_Cedar_Slover AM
Site Code : 04520047
Start Date : 1/23/2020
Page No : 2

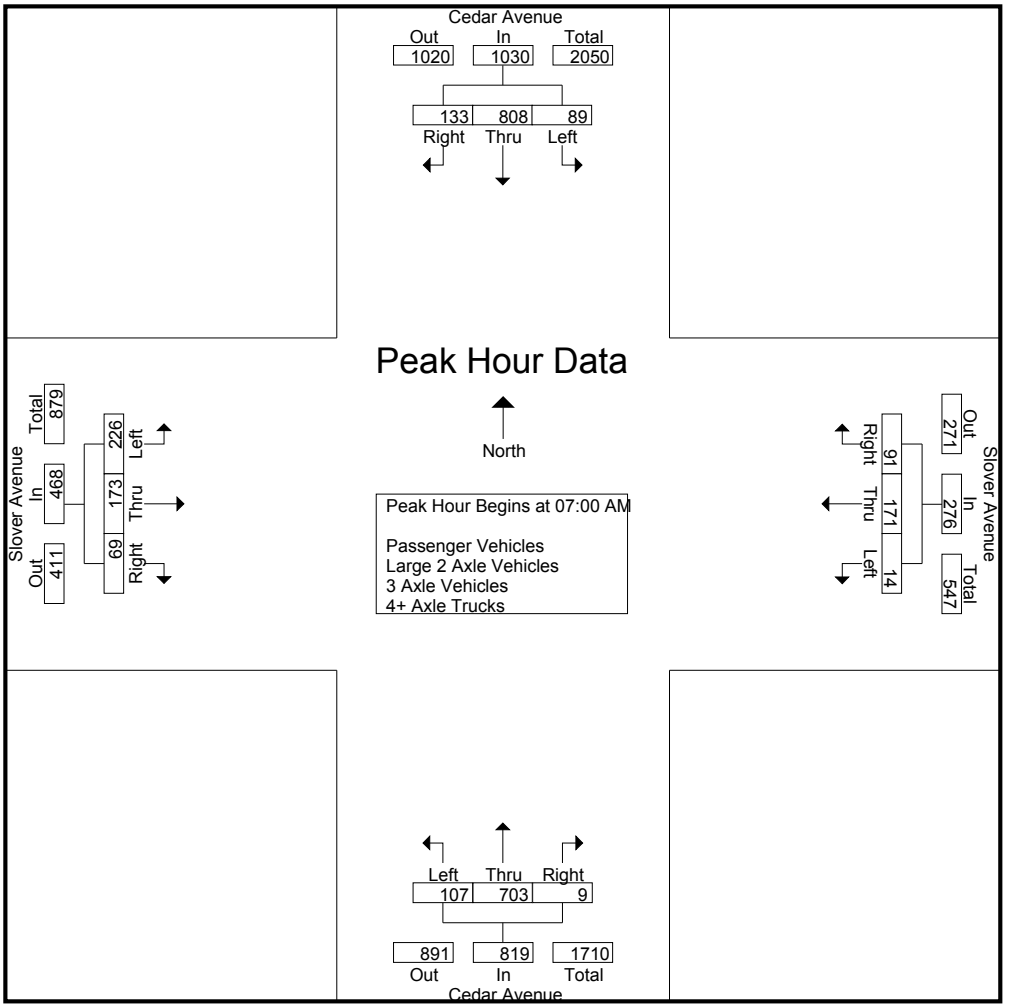

Peak Hour Analysis From 07:00 AM to 08:45 AM - Peak 1 of 1
Peak Hour for Each Approach Begins at:

	07:00 AM				07:00 AM				07:00 AM				07:15 AM			
+0 mins.	19	188	**43**	250	2	**59**	22	**83**	**38**	164	1	203	65	**61**	**32**	**158**
+15 mins.	20	199	31	250	**7**	54	20	81	25	172	2	199	**69**	45	22	136
+30 mins.	**29**	204	30	263	4	27	**27**	58	20	176	2	198	42	37	6	85
+45 mins.	21	**217**	29	**267**	1	31	22	54	24	**191**	**4**	**219**	51	27	14	92
Total Volume	89	808	133	1030	14	171	91	276	107	703	9	819	227	170	74	471
% App. Total	8.6	78.4	12.9		5.1	62	33		13.1	85.8	1.1		48.2	36.1	15.7	
PHF	.767	.931	.773	.964	.500	.725	.843	.831	.704	.920	.563	.935	.822	.697	.578	.745

Counts Unlimited
PO Box 1178
Corona, CA 92878
(951) 268-6268

City of San Bernardino
N/S: Cedar Avenue
E/W: Slover Avenue
Weather: Clear

File Name : 05_CSB_Cedar_Slover AM
Site Code : 04520047
Start Date : 1/23/2020
Page No : 1

Groups Printed- Passenger Vehicles

	Cedar Avenue Southbound				Slover Avenue Westbound				Cedar Avenue Northbound				Slover Avenue Eastbound				
Start Time	Left	Thru	Right	App. Total	Left	Thru	Right	App. Total	Left	Thru	Right	App. Total	Left	Thru	Right	App. Total	Int. Total
07:00 AM	13	178	33	224	2	53	16	71	37	147	1	185	47	25	8	80	560
07:15 AM	16	179	26	221	6	49	15	70	24	162	2	188	63	57	31	151	630
07:30 AM	24	185	25	234	4	21	19	44	19	169	2	190	63	41	16	120	588
07:45 AM	20	200	26	246	1	27	17	45	19	176	4	199	39	34	6	79	569
Total	73	742	110	925	13	150	67	230	99	654	9	762	212	157	61	430	2347
08:00 AM	20	160	25	205	2	20	24	46	11	106	0	117	46	24	12	82	450
08:15 AM	18	173	30	221	3	17	23	43	13	136	2	151	41	17	6	64	479
08:30 AM	12	148	17	177	1	16	19	36	10	137	6	153	38	20	3	61	427
08:45 AM	12	142	17	171	3	10	17	30	6	125	0	131	33	13	4	50	382
Total	62	623	89	774	9	63	83	155	40	504	8	552	158	74	25	257	1738
Grand Total	135	1365	199	1699	22	213	150	385	139	1158	17	1314	370	231	86	687	4085
Apprch %	7.9	80.3	11.7		5.7	55.3	39		10.6	88.1	1.3		53.9	33.6	12.5		
Total %	3.3	33.4	4.9	41.6	0.5	5.2	3.7	9.4	3.4	28.3	0.4	32.2	9.1	5.7	2.1	16.8	

	Cedar Avenue Southbound				Slover Avenue Westbound				Cedar Avenue Northbound				Slover Avenue Eastbound				
Start Time	Left	Thru	Right	App. Total	Left	Thru	Right	App. Total	Left	Thru	Right	App. Total	Left	Thru	Right	App. Total	Int. Total
Peak Hour Analysis From 07:00 AM to 07:45 AM - Peak 1 of 1																	
Peak Hour for Entire Intersection Begins at 07:00 AM																	
07:00 AM	13	178	**33**	224	2	**53**	16	**71**	**37**	147	1	185	47	25	8	80	560
07:15 AM	16	179	26	221	**6**	49	15	70	24	162	2	188	**63**	**57**	**31**	**151**	**630**
07:30 AM	**24**	185	25	234	4	21	**19**	44	19	169	2	190	63	41	16	120	588
07:45 AM	20	**200**	26	**246**	1	27	17	45	19	**176**	**4**	**199**	39	34	6	79	569
Total Volume	73	742	110	925	13	150	67	230	99	654	9	762	212	157	61	430	2347
% App. Total	7.9	80.2	11.9		5.7	65.2	29.1		13	85.8	1.2		49.3	36.5	14.2		
PHF	.760	.928	.833	.940	.542	.708	.882	.810	.669	.929	.563	.957	.841	.689	.492	.712	.931

Counts Unlimited
PO Box 1178
Corona, CA 92878
(951) 268-6268

City of San Bernardino
N/S: Cedar Avenue
E/W: Slover Avenue
Weather: Clear

File Name : 05_CSB_Cedar_Slover AM
Site Code : 04520047
Start Date : 1/23/2020
Page No : 2

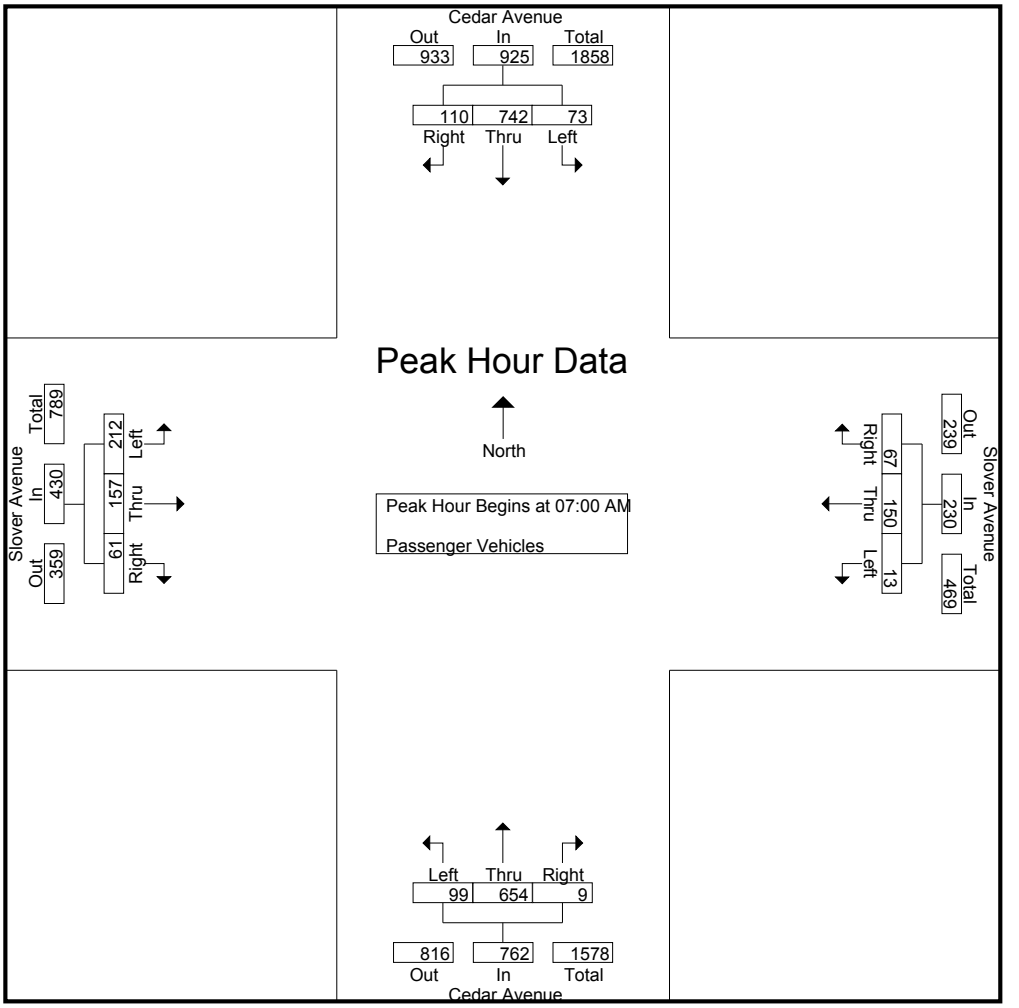

Peak Hour Analysis From 07:00 AM to 07:45 AM - Peak 1 of 1
Peak Hour for Each Approach Begins at:

	07:00 AM				07:00 AM				07:00 AM				07:00 AM			
+0 mins.	13	178	**33**	224	2	**53**	16	**71**	**37**	147	1	185	47	25	8	80
+15 mins.	16	179	26	221	**6**	49	15	70	24	162	2	188	**63**	**57**	**31**	**151**
+30 mins.	**24**	185	25	234	4	21	**19**	44	19	169	2	190	63	41	16	120
+45 mins.	20	**200**	26	**246**	1	27	17	45	19	**176**	**4**	**199**	39	34	6	79
Total Volume	73	742	110	925	13	150	67	230	99	654	9	762	212	157	61	430
% App. Total	7.9	80.2	11.9		5.7	65.2	29.1		13	85.8	1.2		49.3	36.5	14.2	
PHF	.760	.928	.833	.940	.542	.708	.882	.810	.669	.929	.563	.957	.841	.689	.492	.712

Counts Unlimited
PO Box 1178
Corona, CA 92878
(951) 268-6268

City of San Bernardino
N/S: Cedar Avenue
E/W: Slover Avenue
Weather: Clear

File Name : 05_CSB_Cedar_Slover AM
Site Code : 04520047
Start Date : 1/23/2020
Page No : 1

Groups Printed- Large 2 Axle Vehicles

	Cedar Avenue Southbound				Slover Avenue Westbound				Cedar Avenue Northbound				Slover Avenue Eastbound				
Start Time	Left	Thru	Right	App. Total	Left	Thru	Right	App. Total	Left	Thru	Right	App. Total	Left	Thru	Right	App. Total	Int. Total
07:00 AM	2	2	2	6	0	1	1	2	0	5	0	5	1	0	0	1	14
07:15 AM	0	7	1	8	1	1	1	3	0	3	0	3	0	1	0	1	15
07:30 AM	3	7	1	11	0	3	5	8	1	7	0	8	1	1	2	4	31
07:45 AM	0	6	1	7	0	1	1	2	1	8	0	9	2	1	0	3	21
Total	5	22	5	32	1	6	8	15	2	23	0	25	4	3	2	9	81
08:00 AM	1	9	2	12	1	0	4	5	1	6	0	7	2	0	0	2	26
08:15 AM	1	3	0	4	0	2	6	8	0	6	1	7	1	1	0	2	21
08:30 AM	1	9	1	11	0	2	8	10	0	6	1	7	1	3	0	4	32
08:45 AM	0	9	0	9	0	2	8	10	1	9	0	10	1	0	0	1	30
Total	3	30	3	36	1	6	26	33	2	27	2	31	5	4	0	9	109
Grand Total	8	52	8	68	2	12	34	48	4	50	2	56	9	7	2	18	190
Apprch %	11.8	76.5	11.8		4.2	25	70.8		7.1	89.3	3.6		50	38.9	11.1		
Total %	4.2	27.4	4.2	35.8	1.1	6.3	17.9	25.3	2.1	26.3	1.1	29.5	4.7	3.7	1.1	9.5	

	Cedar Avenue Southbound				Slover Avenue Westbound				Cedar Avenue Northbound				Slover Avenue Eastbound				
Start Time	Left	Thru	Right	App. Total	Left	Thru	Right	App. Total	Left	Thru	Right	App. Total	Left	Thru	Right	App. Total	Int. Total
Peak Hour Analysis From 07:00 AM to 07:45 AM - Peak 1 of 1																	
Peak Hour for Entire Intersection Begins at 07:00 AM																	
07:00 AM	2	2	**2**	6	0	1	1	2	0	5	0	5	1	0	0	1	14
07:15 AM	0	**7**	1	8	**1**	1	1	3	0	3	0	3	0	**1**	0	1	15
07:30 AM	**3**	7	1	**11**	0	**3**	**5**	**8**	**1**	7	0	8	1	1	**2**	**4**	**31**
07:45 AM	0	6	1	7	0	1	1	2	1	**8**	0	**9**	**2**	1	0	3	21
Total Volume	5	22	5	32	1	6	8	15	2	23	0	25	4	3	2	9	81
% App. Total	15.6	68.8	15.6		6.7	40	53.3		8	92	0		44.4	33.3	22.2		
PHF	.417	.786	.625	.727	.250	.500	.400	.469	.500	.719	.000	.694	.500	.750	.250	.563	.653

Counts Unlimited
PO Box 1178
Corona, CA 92878
(951) 268-6268

City of San Bernardino
N/S: Cedar Avenue
E/W: Slover Avenue
Weather: Clear

File Name : 05_CSB_Cedar_Slover AM
Site Code : 04520047
Start Date : 1/23/2020
Page No : 2

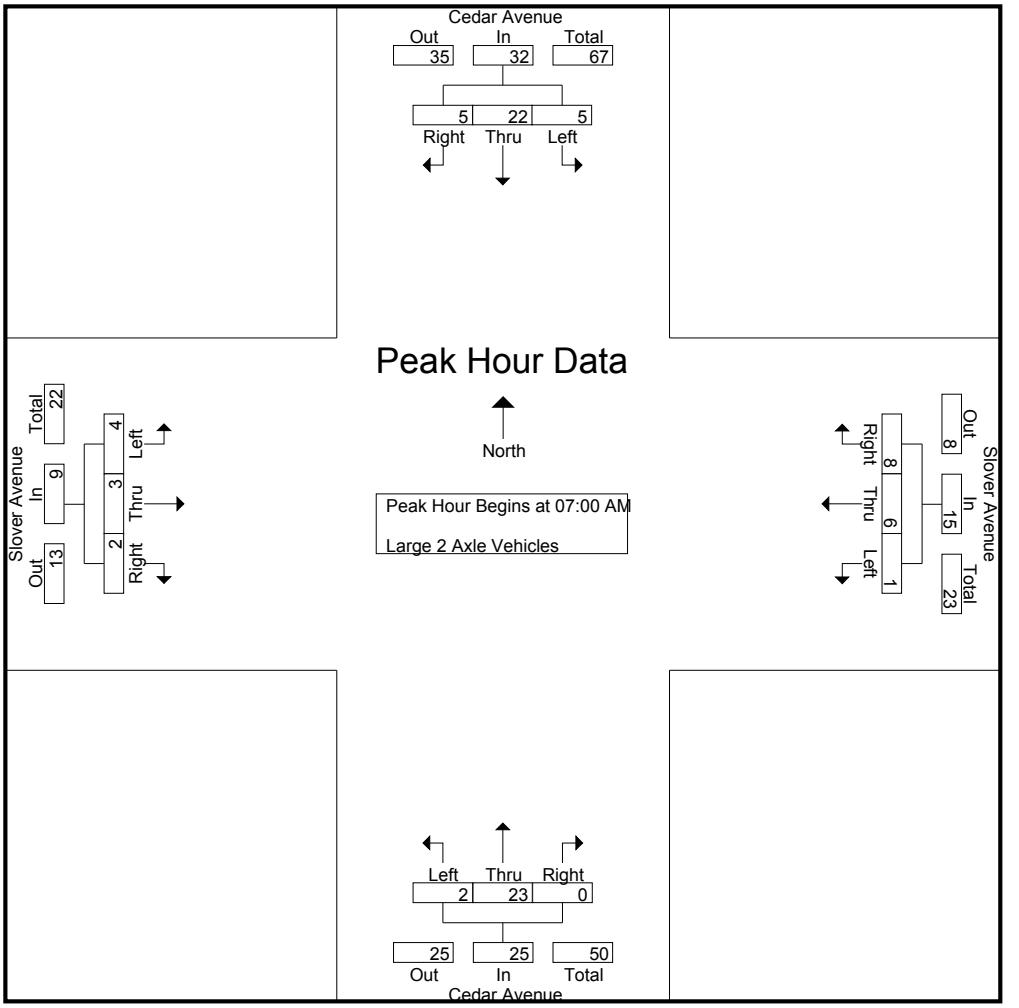

Peak Hour Analysis From 07:00 AM to 07:45 AM - Peak 1 of 1
Peak Hour for Each Approach Begins at:

	07:00 AM				07:00 AM				07:00 AM				07:00 AM			
+0 mins.	2	2	**2**	6	0	1	1	2	0	5	0	5	1	0	0	1
+15 mins.	0	**7**	1	8	**1**	1	1	3	0	3	0	3	0	**1**	0	1
+30 mins.	**3**	7	1	**11**	0	**3**	**5**	**8**	**1**	7	0	8	1	1	**2**	**4**
+45 mins.	0	6	1	7	0	1	1	2	1	**8**	0	**9**	**2**	1	0	3
Total Volume	5	22	5	32	1	6	8	15	2	23	0	25	4	3	2	9
% App. Total	15.6	68.8	15.6		6.7	40	53.3		8	92	0		44.4	33.3	22.2	
PHF	.417	.786	.625	.727	.250	.500	.400	.469	.500	.719	.000	.694	.500	.750	.250	.563

Counts Unlimited
PO Box 1178
Corona, CA 92878
(951) 268-6268

City of San Bernardino
N/S: Cedar Avenue
E/W: Slover Avenue
Weather: Clear

File Name : 05_CSB_Cedar_Slover AM
Site Code : 04520047
Start Date : 1/23/2020
Page No : 1

Groups Printed- 3 Axle Vehicles

	Cedar Avenue Southbound				Slover Avenue Westbound				Cedar Avenue Northbound				Slover Avenue Eastbound				
Start Time	Left	Thru	Right	App. Total	Left	Thru	Right	App. Total	Left	Thru	Right	App. Total	Left	Thru	Right	App. Total	Int. Total
07:00 AM	1	2	0	3	0	4	2	6	0	2	0	2	2	3	0	5	16
07:15 AM	1	7	1	9	0	3	1	4	0	0	0	0	1	3	1	5	18
07:30 AM	0	7	0	7	0	1	1	2	0	0	0	0	4	1	2	7	16
07:45 AM	0	6	0	6	0	1	1	2	1	1	0	2	1	2	0	3	13
Total	2	22	1	25	0	9	5	14	1	3	0	4	8	9	3	20	63
08:00 AM	1	9	0	10	0	0	2	2	0	1	0	1	1	2	1	4	17
08:15 AM	2	3	0	5	0	0	0	0	0	2	0	2	0	2	1	3	10
08:30 AM	0	9	0	9	0	1	1	2	0	9	0	9	1	0	1	2	22
08:45 AM	0	9	1	10	0	5	1	6	1	3	0	4	0	2	0	2	22
Total	3	30	1	34	0	6	4	10	1	15	0	16	2	6	3	11	71
Grand Total	5	52	2	59	0	15	9	24	2	18	0	20	10	15	6	31	134
Apprch %	8.5	88.1	3.4		0	62.5	37.5		10	90	0		32.3	48.4	19.4		
Total %	3.7	38.8	1.5	44	0	11.2	6.7	17.9	1.5	13.4	0	14.9	7.5	11.2	4.5	23.1	

	Cedar Avenue Southbound				Slover Avenue Westbound				Cedar Avenue Northbound				Slover Avenue Eastbound				
Start Time	Left	Thru	Right	App. Total	Left	Thru	Right	App. Total	Left	Thru	Right	App. Total	Left	Thru	Right	App. Total	Int. Total
Peak Hour Analysis From 07:00 AM to 07:45 AM - Peak 1 of 1																	
Peak Hour for Entire Intersection Begins at 07:00 AM																	
07:00 AM	**1**	2	0	3	0	**4**	**2**	**6**	0	**2**	0	**2**	2	**3**	0	5	16
07:15 AM	1	**7**	**1**	**9**	0	3	1	4	0	0	0	0	1	3	1	5	**18**
07:30 AM	0	7	0	7	0	1	1	2	0	0	0	0	**4**	1	**2**	**7**	16
07:45 AM	0	6	0	6	0	1	1	2	**1**	1	0	2	1	2	0	3	13
Total Volume	2	22	1	25	0	9	5	14	1	3	0	4	8	9	3	20	63
% App. Total	8	88	4		0	64.3	35.7		25	75	0		40	45	15		
PHF	.500	.786	.250	.694	.000	.563	.625	.583	.250	.375	.000	.500	.500	.750	.375	.714	.875

Counts Unlimited
PO Box 1178
Corona, CA 92878
(951) 268-6268

City of San Bernardino
N/S: Cedar Avenue
E/W: Slover Avenue
Weather: Clear

File Name : 05_CSB_Cedar_Slover AM
Site Code : 04520047
Start Date : 1/23/2020
Page No : 2

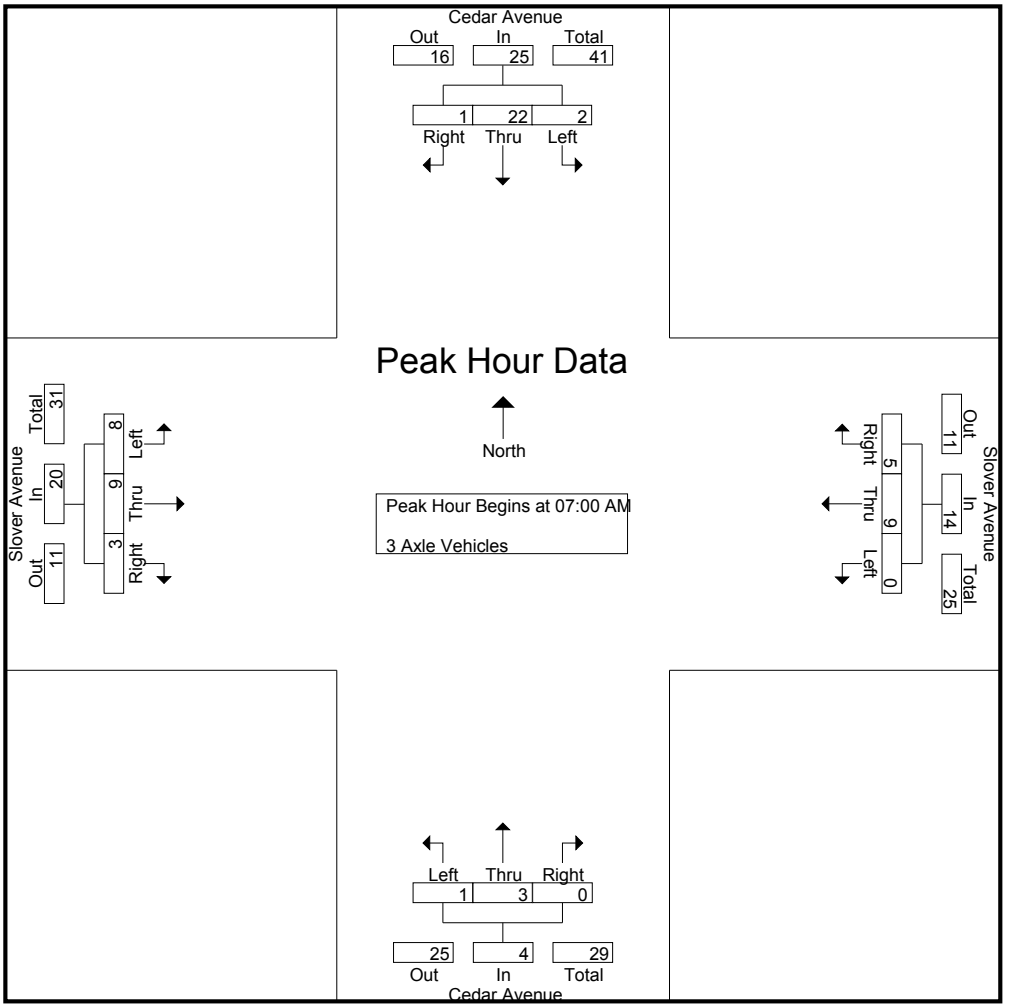

Peak Hour Analysis From 07:00 AM to 07:45 AM - Peak 1 of 1
Peak Hour for Each Approach Begins at:

	07:00 AM				07:00 AM				07:00 AM				07:00 AM			
+0 mins.	**1**	2	0	3	0	**4**	**2**	**6**	0	**2**	0	**2**	2	**3**	0	5
+15 mins.	1	**7**	**1**	**9**	0	3	1	4	0	0	0	0	1	3	1	5
+30 mins.	0	7	0	7	0	1	1	2	0	0	0	0	**4**	1	**2**	**7**
+45 mins.	0	6	0	6	0	1	1	2	**1**	1	0	2	1	2	0	3
Total Volume	2	22	1	25	0	9	5	14	1	3	0	4	8	9	3	20
% App. Total	8	88	4		0	64.3	35.7		25	75	0		40	45	15	
PHF	.500	.786	.250	.694	.000	.563	.625	.583	.250	.375	.000	.500	.500	.750	.375	.714

Counts Unlimited
PO Box 1178
Corona, CA 92878
(951) 268-6268

City of San Bernardino
N/S: Cedar Avenue
E/W: Slover Avenue
Weather: Clear

File Name : 05_CSB_Cedar_Slover AM
Site Code : 04520047
Start Date : 1/23/2020
Page No : 1

Groups Printed- 4+ Axle Trucks

	Cedar Avenue Southbound				Slover Avenue Westbound				Cedar Avenue Northbound				Slover Avenue Eastbound				
Start Time	Left	Thru	Right	App. Total	Left	Thru	Right	App. Total	Left	Thru	Right	App. Total	Left	Thru	Right	App. Total	Int. Total
07:00 AM	3	6	8	17	0	1	3	4	1	10	0	11	0	2	1	3	35
07:15 AM	3	6	3	12	0	1	3	4	1	7	0	8	1	0	0	1	25
07:30 AM	2	5	4	11	0	2	2	4	0	0	0	0	1	2	2	5	20
07:45 AM	1	5	2	8	0	2	3	5	3	6	0	9	0	0	0	0	22
Total	9	22	17	48	0	6	11	17	5	23	0	28	2	4	3	9	102
08:00 AM	3	6	4	13	0	3	3	6	1	4	1	6	2	1	1	4	29
08:15 AM	3	8	5	16	0	2	4	6	1	6	0	7	4	1	1	6	35
08:30 AM	3	7	3	13	0	1	0	1	2	8	0	10	0	1	1	2	26
08:45 AM	3	3	3	9	1	2	3	6	1	6	0	7	0	0	2	2	24
Total	12	24	15	51	1	8	10	19	5	24	1	30	6	3	5	14	114
Grand Total	21	46	32	99	1	14	21	36	10	47	1	58	8	7	8	23	216
Apprch %	21.2	46.5	32.3		2.8	38.9	58.3		17.2	81	1.7		34.8	30.4	34.8		
Total %	9.7	21.3	14.8	45.8	0.5	6.5	9.7	16.7	4.6	21.8	0.5	26.9	3.7	3.2	3.7	10.6	

	Cedar Avenue Southbound				Slover Avenue Westbound				Cedar Avenue Northbound				Slover Avenue Eastbound				
Start Time	Left	Thru	Right	App. Total	Left	Thru	Right	App. Total	Left	Thru	Right	App. Total	Left	Thru	Right	App. Total	Int. Total
Peak Hour Analysis From 07:00 AM to 07:45 AM - Peak 1 of 1																	
Peak Hour for Entire Intersection Begins at 07:00 AM																	
07:00 AM	**3**	**6**	**8**	**17**	0	1	**3**	4	1	**10**	0	**11**	0	**2**	1	3	**35**
07:15 AM	3	6	3	12	0	1	3	4	1	7	0	8	**1**	0	0	1	25
07:30 AM	2	5	4	11	0	**2**	2	4	0	0	0	0	1	2	**2**	**5**	20
07:45 AM	1	5	2	8	0	2	3	**5**	**3**	6	0	9	0	0	0	0	22
Total Volume	9	22	17	48	0	6	11	17	5	23	0	28	2	4	3	9	102
% App. Total	18.8	45.8	35.4		0	35.3	64.7		17.9	82.1	0		22.2	44.4	33.3		
PHF	.750	.917	.531	.706	.000	.750	.917	.850	.417	.575	.000	.636	.500	.500	.375	.450	.729

Counts Unlimited
PO Box 1178
Corona, CA 92878
(951) 268-6268

City of San Bernardino
N/S: Cedar Avenue
E/W: Slover Avenue
Weather: Clear

File Name : 05_CSB_Cedar_Slover AM
Site Code : 04520047
Start Date : 1/23/2020
Page No : 2

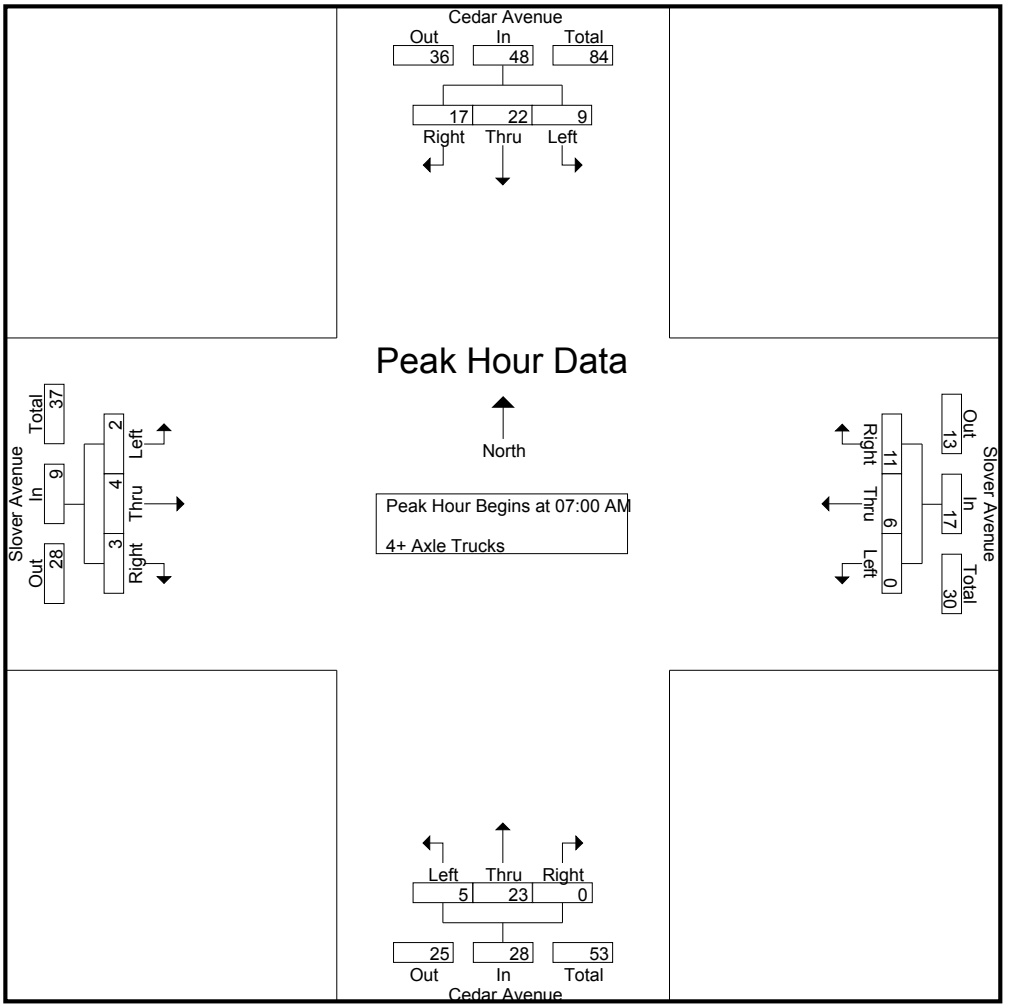

Peak Hour Analysis From 07:00 AM to 07:45 AM - Peak 1 of 1
Peak Hour for Each Approach Begins at:

	07:00 AM				07:00 AM				07:00 AM				07:00 AM			
+0 mins.	**3**	**6**	**8**	**17**	0	1	**3**	4	1	**10**	0	**11**	0	**2**	1	3
+15 mins.	3	6	3	12	0	1	3	4	1	7	0	8	**1**	0	0	1
+30 mins.	2	5	4	11	0	**2**	2	4	0	0	0	0	1	2	**2**	**5**
+45 mins.	1	5	2	8	0	2	3	**5**	**3**	6	0	9	0	0	0	0
Total Volume	9	22	17	48	0	6	11	17	5	23	0	28	2	4	3	9
% App. Total	18.8	45.8	35.4		0	35.3	64.7		17.9	82.1	0		22.2	44.4	33.3	
PHF	.750	.917	.531	.706	.000	.750	.917	.850	.417	.575	.000	.636	.500	.500	.375	.450

Counts Unlimited
PO Box 1178
Corona, CA 92878
(951) 268-6268

City of San Bernardino
N/S: Cedar Avenue
E/W: Slover Avenue
Weather: Clear

File Name : 05_CSB_Cedar_Slover PM
Site Code : 04520047
Start Date : 1/23/2020
Page No : 1

Groups Printed- Passenger Vehicles - Large 2 Axle Vehicles - 3 Axle Vehicles - 4+ Axle Trucks

	Cedar Avenue Southbound				Slover Avenue Westbound				Cedar Avenue Northbound				Slover Avenue Eastbound				
Start Time	Left	Thru	Right	App. Total	Left	Thru	Right	App. Total	Left	Thru	Right	App. Total	Left	Thru	Right	App. Total	Int. Total
04:00 PM	15	182	19	216	5	46	29	80	14	88	9	111	48	109	24	181	588
04:15 PM	22	196	17	235	3	37	22	62	20	143	5	168	34	100	27	161	626
04:30 PM	29	164	28	221	3	50	19	72	21	149	8	178	51	83	11	145	616
04:45 PM	18	192	21	231	2	32	14	48	24	112	12	148	37	112	33	182	609
Total	84	734	85	903	13	165	84	262	79	492	34	605	170	404	95	669	2439
05:00 PM	18	183	19	220	5	40	22	67	33	112	13	158	52	92	30	174	619
05:15 PM	22	196	25	243	5	45	12	62	20	110	15	145	37	77	39	153	603
05:30 PM	17	157	16	190	3	40	11	54	23	106	3	132	24	105	25	154	530
05:45 PM	15	192	25	232	1	34	21	56	18	104	7	129	38	82	28	148	565
Total	72	728	85	885	14	159	66	239	94	432	38	564	151	356	122	629	2317
Grand Total	156	1462	170	1788	27	324	150	501	173	924	72	1169	321	760	217	1298	4756
Apprch %	8.7	81.8	9.5		5.4	64.7	29.9		14.8	79	6.2		24.7	58.6	16.7		
Total %	3.3	30.7	3.6	37.6	0.6	6.8	3.2	10.5	3.6	19.4	1.5	24.6	6.7	16	4.6	27.3	
Passenger Vehicles	107	1378	155	1640	24	265	118	407	154	885	70	1109	311	661	192	1164	4320
% Passenger Vehicles	68.6	94.3	91.2	91.7	88.9	81.8	78.7	81.2	89	95.8	97.2	94.9	96.9	87	88.5	89.7	90.8
Large 2 Axle Vehicles	16	27	5	48	2	14	12	28	2	23	0	25	6	28	8	42	143
% Large 2 Axle Vehicles	10.3	1.8	2.9	2.7	7.4	4.3	8	5.6	1.2	2.5	0	2.1	1.9	3.7	3.7	3.2	3
3 Axle Vehicles	5	27	0	32	1	17	5	23	4	5	0	9	1	29	5	35	99
% 3 Axle Vehicles	3.2	1.8	0	1.8	3.7	5.2	3.3	4.6	2.3	0.5	0	0.8	0.3	3.8	2.3	2.7	2.1
4+ Axle Trucks	28	30	10	68	0	28	15	43	13	11	2	26	3	42	12	57	194
% 4+ Axle Trucks	17.9	2.1	5.9	3.8	0	8.6	10	8.6	7.5	1.2	2.8	2.2	0.9	5.5	5.5	4.4	4.1

	Cedar Avenue Southbound				Slover Avenue Westbound				Cedar Avenue Northbound				Slover Avenue Eastbound				
Start Time	Left	Thru	Right	App. Total	Left	Thru	Right	App. Total	Left	Thru	Right	App. Total	Left	Thru	Right	App. Total	Int. Total
Peak Hour Analysis From 04:00 PM to 05:45 PM - Peak 1 of 1																	
Peak Hour for Entire Intersection Begins at 04:15 PM																	
04:15 PM	22	**196**	17	**235**	3	37	**22**	62	20	143	5	168	34	100	27	161	**626**
04:30 PM	**29**	164	**28**	221	3	**50**	19	**72**	21	**149**	8	**178**	51	83	11	145	616
04:45 PM	18	192	21	231	2	32	14	48	24	112	12	148	37	**112**	**33**	**182**	609
05:00 PM	18	183	19	220	**5**	40	22	67	**33**	112	**13**	158	**52**	92	30	174	619
Total Volume	87	735	85	907	13	159	77	249	98	516	38	652	174	387	101	662	2470
% App. Total	9.6	81	9.4		5.2	63.9	30.9		15	79.1	5.8		26.3	58.5	15.3		
PHF	.750	.938	.759	.965	.650	.795	.875	.865	.742	.866	.731	.916	.837	.864	.765	.909	.986

Counts Unlimited
PO Box 1178
Corona, CA 92878
(951) 268-6268

City of San Bernardino
N/S: Cedar Avenue
E/W: Slover Avenue
Weather: Clear

File Name : 05_CSB_Cedar_Slover PM
Site Code : 04520047
Start Date : 1/23/2020
Page No : 2

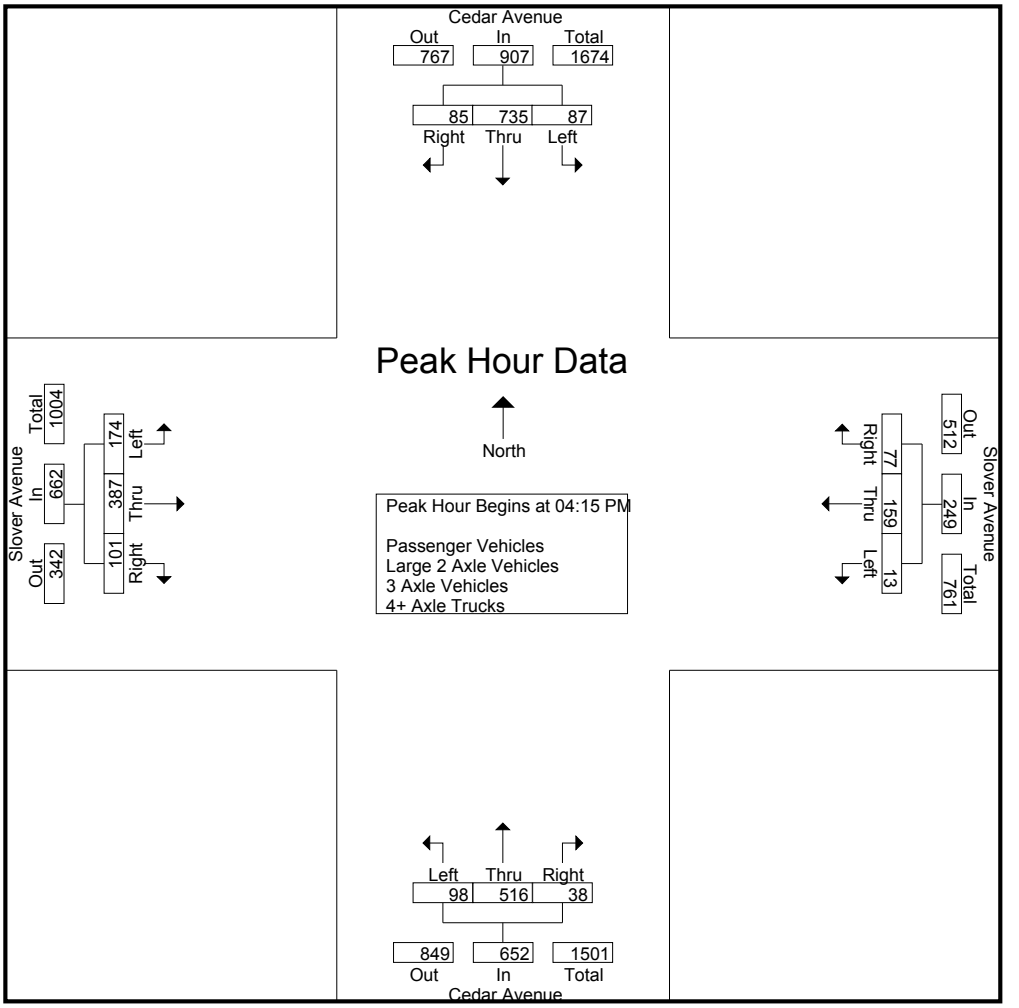

Peak Hour Analysis From 04:00 PM to 05:45 PM - Peak 1 of 1
Peak Hour for Each Approach Begins at:

	04:30 PM				04:00 PM				04:15 PM				04:00 PM			
+0 mins.	**29**	164	**28**	221	**5**	46	**29**	**80**	20	143	5	168	48	109	24	181
+15 mins.	18	192	21	231	3	37	22	62	21	**149**	8	**178**	34	100	27	161
+30 mins.	18	183	19	220	3	**50**	19	72	24	112	12	148	**51**	83	11	145
+45 mins.	22	**196**	25	**243**	2	32	14	48	**33**	112	**13**	158	37	**112**	**33**	**182**
Total Volume	87	735	93	915	13	165	84	262	98	516	38	652	170	404	95	669
% App. Total	9.5	80.3	10.2		5	63	32.1		15	79.1	5.8		25.4	60.4	14.2	
PHF	.750	.938	.830	.941	.650	.825	.724	.819	.742	.866	.731	.916	.833	.902	.720	.919

Counts Unlimited
PO Box 1178
Corona, CA 92878
(951) 268-6268

City of San Bernardino
N/S: Cedar Avenue
E/W: Slover Avenue
Weather: Clear

File Name : 05_CSB_Cedar_Slover PM
Site Code : 04520047
Start Date : 1/23/2020
Page No : 1

Groups Printed- Passenger Vehicles

	Cedar Avenue Southbound				Slover Avenue Westbound				Cedar Avenue Northbound				Slover Avenue Eastbound				
Start Time	Left	Thru	Right	App. Total	Left	Thru	Right	App. Total	Left	Thru	Right	App. Total	Left	Thru	Right	App. Total	Int. Total
04:00 PM	13	163	16	192	5	41	23	69	12	85	9	106	46	92	20	158	525
04:15 PM	9	190	16	215	3	27	13	43	17	136	5	158	31	92	23	146	562
04:30 PM	20	151	26	197	2	41	17	60	19	139	8	166	51	72	10	133	556
04:45 PM	13	181	19	213	2	29	12	43	23	105	11	139	36	95	27	158	553
Total	55	685	77	817	12	138	65	215	71	465	33	569	164	351	80	595	2196
05:00 PM	13	171	17	201	3	32	21	56	30	109	12	151	51	81	30	162	570
05:15 PM	15	186	22	223	5	38	9	52	16	106	15	137	35	61	31	127	539
05:30 PM	11	157	15	183	3	30	8	41	21	104	3	128	24	93	24	141	493
05:45 PM	13	179	24	216	1	27	15	43	16	101	7	124	37	75	27	139	522
Total	52	693	78	823	12	127	53	192	83	420	37	540	147	310	112	569	2124
Grand Total	107	1378	155	1640	24	265	118	407	154	885	70	1109	311	661	192	1164	4320
Apprch %	6.5	84	9.5		5.9	65.1	29		13.9	79.8	6.3		26.7	56.8	16.5		
Total %	2.5	31.9	3.6	38	0.6	6.1	2.7	9.4	3.6	20.5	1.6	25.7	7.2	15.3	4.4	26.9	

	Cedar Avenue Southbound				Slover Avenue Westbound				Cedar Avenue Northbound				Slover Avenue Eastbound				
Start Time	Left	Thru	Right	App. Total	Left	Thru	Right	App. Total	Left	Thru	Right	App. Total	Left	Thru	Right	App. Total	Int. Total
Peak Hour Analysis From 04:15 PM to 05:00 PM - Peak 1 of 1																	
Peak Hour for Entire Intersection Begins at 04:15 PM																	
04:15 PM	9	**190**	16	**215**	**3**	27	13	43	17	136	5	158	31	92	23	146	562
04:30 PM	**20**	151	**26**	197	2	**41**	17	**60**	19	**139**	8	**166**	**51**	72	10	133	556
04:45 PM	13	181	19	213	2	29	12	43	23	105	11	139	36	**95**	27	158	553
05:00 PM	13	171	17	201	3	32	**21**	56	**30**	109	**12**	151	51	81	**30**	**162**	**570**
Total Volume	55	693	78	826	10	129	63	202	89	489	36	614	169	340	90	599	2241
% App. Total	6.7	83.9	9.4		5	63.9	31.2		14.5	79.6	5.9		28.2	56.8	15		
PHF	.688	.912	.750	.960	.833	.787	.750	.842	.742	.879	.750	.925	.828	.895	.750	.924	.983

Counts Unlimited
PO Box 1178
Corona, CA 92878
(951) 268-6268

City of San Bernardino
N/S: Cedar Avenue
E/W: Slover Avenue
Weather: Clear

File Name : 05_CSB_Cedar_Slover PM
Site Code : 04520047
Start Date : 1/23/2020
Page No : 2

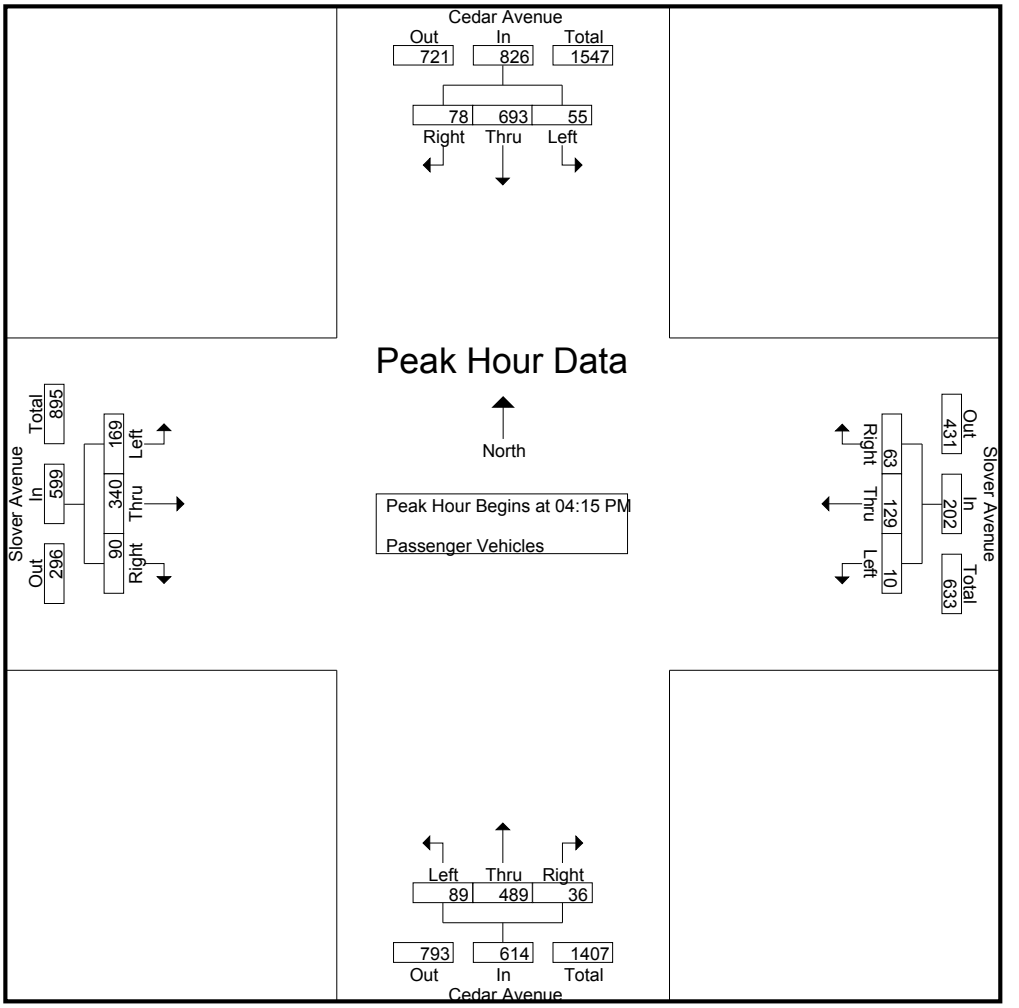

Peak Hour Analysis From 04:15 PM to 05:00 PM - Peak 1 of 1
Peak Hour for Each Approach Begins at:

	04:15 PM				04:15 PM				04:15 PM				04:15 PM			
+0 mins.	9	**190**	16	**215**	**3**	27	13	43	17	136	5	158	31	92	23	146
+15 mins.	**20**	151	**26**	197	2	**41**	17	**60**	19	**139**	8	**166**	**51**	72	10	133
+30 mins.	13	181	19	213	2	29	12	43	23	105	11	139	36	**95**	27	158
+45 mins.	13	171	17	201	3	32	**21**	56	**30**	109	**12**	151	51	81	**30**	**162**
Total Volume	55	693	78	826	10	129	63	202	89	489	36	614	169	340	90	599
% App. Total	6.7	83.9	9.4		5	63.9	31.2		14.5	79.6	5.9		28.2	56.8	15	
PHF	.688	.912	.750	.960	.833	.787	.750	.842	.742	.879	.750	.925	.828	.895	.750	.924

Counts Unlimited
PO Box 1178
Corona, CA 92878
(951) 268-6268

City of San Bernardino
N/S: Cedar Avenue
E/W: Slover Avenue
Weather: Clear

File Name : 05_CSB_Cedar_Slover PM
Site Code : 04520047
Start Date : 1/23/2020
Page No : 1

Groups Printed- Large 2 Axle Vehicles

	Cedar Avenue Southbound				Slover Avenue Westbound				Cedar Avenue Northbound				Slover Avenue Eastbound				
Start Time	Left	Thru	Right	App. Total	Left	Thru	Right	App. Total	Left	Thru	Right	App. Total	Left	Thru	Right	App. Total	Int. Total
04:00 PM	2	7	1	10	0	2	3	5	0	3	0	3	1	6	2	9	27
04:15 PM	2	1	0	3	0	3	4	7	0	2	0	2	2	4	3	9	21
04:30 PM	3	4	1	8	1	3	0	4	1	6	0	7	0	2	0	2	21
04:45 PM	1	3	1	5	0	0	0	0	0	4	0	4	1	6	1	8	17
Total	8	15	3	26	1	8	7	16	1	15	0	16	4	18	6	28	86
05:00 PM	2	4	0	6	1	2	1	4	0	2	0	2	1	4	0	5	17
05:15 PM	3	4	1	8	0	1	1	2	0	2	0	2	1	3	1	5	17
05:30 PM	3	0	0	3	0	2	2	4	0	1	0	1	0	2	1	3	11
05:45 PM	0	4	1	5	0	1	1	2	1	3	0	4	0	1	0	1	12
Total	8	12	2	22	1	6	5	12	1	8	0	9	2	10	2	14	57
Grand Total	16	27	5	48	2	14	12	28	2	23	0	25	6	28	8	42	143
Apprch %	33.3	56.2	10.4		7.1	50	42.9		8	92	0		14.3	66.7	19		
Total %	11.2	18.9	3.5	33.6	1.4	9.8	8.4	19.6	1.4	16.1	0	17.5	4.2	19.6	5.6	29.4	

	Cedar Avenue Southbound				Slover Avenue Westbound				Cedar Avenue Northbound				Slover Avenue Eastbound				
Start Time	Left	Thru	Right	App. Total	Left	Thru	Right	App. Total	Left	Thru	Right	App. Total	Left	Thru	Right	App. Total	Int. Total
Peak Hour Analysis From 04:15 PM to 05:00 PM - Peak 1 of 1																	
Peak Hour for Entire Intersection Begins at 04:15 PM																	
04:15 PM	2	1	0	3	0	**3**	**4**	**7**	0	2	0	2	**2**	4	**3**	**9**	**21**
04:30 PM	**3**	**4**	**1**	**8**	**1**	3	0	4	**1**	**6**	0	**7**	0	2	0	2	21
04:45 PM	1	3	1	5	0	0	0	0	0	4	0	4	1	**6**	1	8	17
05:00 PM	2	4	0	6	1	2	1	4	0	2	0	2	1	4	0	5	17
Total Volume	8	12	2	22	2	8	5	15	1	14	0	15	4	16	4	24	76
% App. Total	36.4	54.5	9.1		13.3	53.3	33.3		6.7	93.3	0		16.7	66.7	16.7		
PHF	.667	.750	.500	.688	.500	.667	.313	.536	.250	.583	.000	.536	.500	.667	.333	.667	.905

Counts Unlimited
PO Box 1178
Corona, CA 92878
(951) 268-6268

City of San Bernardino
N/S: Cedar Avenue
E/W: Slover Avenue
Weather: Clear

File Name : 05_CSB_Cedar_Slover PM
Site Code : 04520047
Start Date : 1/23/2020
Page No : 2

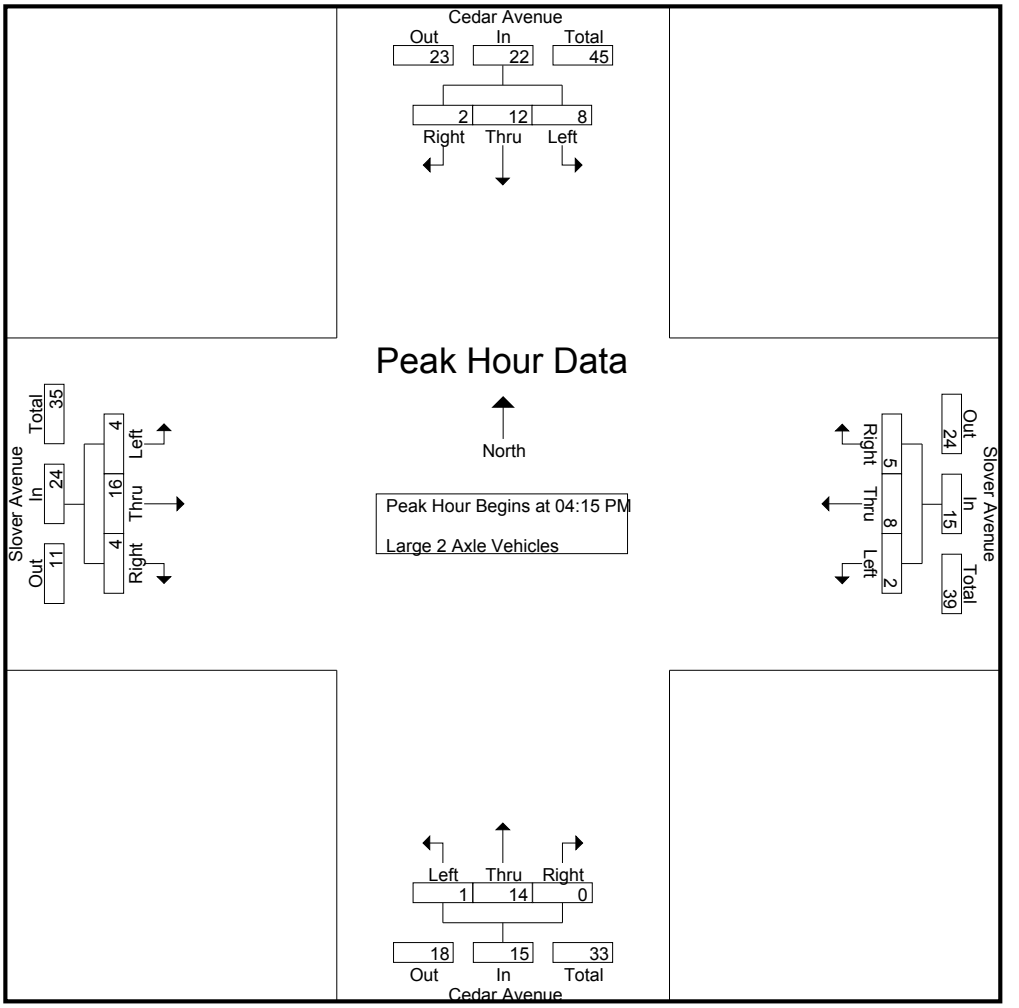

Peak Hour Analysis From 04:15 PM to 05:00 PM - Peak 1 of 1
Peak Hour for Each Approach Begins at:

	04:15 PM				04:15 PM				04:15 PM				04:15 PM			
+0 mins.	2	1	0	3	0	**3**	**4**	**7**	0	2	0	2	**2**	4	**3**	**9**
+15 mins.	**3**	**4**	**1**	**8**	**1**	3	0	4	**1**	**6**	0	**7**	0	2	0	2
+30 mins.	1	3	1	5	0	0	0	0	0	4	0	4	1	**6**	1	8
+45 mins.	2	4	0	6	1	2	1	4	0	2	0	2	1	4	0	5
Total Volume	8	12	2	22	2	8	5	15	1	14	0	15	4	16	4	24
% App. Total	36.4	54.5	9.1		13.3	53.3	33.3		6.7	93.3	0		16.7	66.7	16.7	
PHF	.667	.750	.500	.688	.500	.667	.313	.536	.250	.583	.000	.536	.500	.667	.333	.667

Counts Unlimited
PO Box 1178
Corona, CA 92878
(951) 268-6268

City of San Bernardino
N/S: Cedar Avenue
E/W: Slover Avenue
Weather: Clear

File Name : 05_CSB_Cedar_Slover PM
Site Code : 04520047
Start Date : 1/23/2020
Page No : 1

Groups Printed- 3 Axle Vehicles

	Cedar Avenue Southbound				Slover Avenue Westbound				Cedar Avenue Northbound				Slover Avenue Eastbound				
Start Time	Left	Thru	Right	App. Total	Left	Thru	Right	App. Total	Left	Thru	Right	App. Total	Left	Thru	Right	App. Total	Int. Total
04:00 PM	0	7	0	7	0	2	2	4	0	0	0	0	0	2	1	3	14
04:15 PM	3	1	0	4	0	2	2	4	1	1	0	2	0	1	0	1	11
04:30 PM	1	4	0	5	0	3	0	3	0	0	0	0	0	6	0	6	14
04:45 PM	1	3	0	4	0	2	0	2	1	1	0	2	0	3	1	4	12
Total	5	15	0	20	0	9	4	13	2	2	0	4	0	12	2	14	51
05:00 PM	0	4	0	4	1	3	0	4	2	1	0	3	0	4	0	4	15
05:15 PM	0	4	0	4	0	3	1	4	0	1	0	1	0	3	3	6	15
05:30 PM	0	0	0	0	0	2	0	2	0	1	0	1	0	6	0	6	9
05:45 PM	0	4	0	4	0	0	0	0	0	0	0	0	1	4	0	5	9
Total	0	12	0	12	1	8	1	10	2	3	0	5	1	17	3	21	48
Grand Total	5	27	0	32	1	17	5	23	4	5	0	9	1	29	5	35	99
Apprch %	15.6	84.4	0		4.3	73.9	21.7		44.4	55.6	0		2.9	82.9	14.3		
Total %	5.1	27.3	0	32.3	1	17.2	5.1	23.2	4	5.1	0	9.1	1	29.3	5.1	35.4	

	Cedar Avenue Southbound				Slover Avenue Westbound				Cedar Avenue Northbound				Slover Avenue Eastbound				
Start Time	Left	Thru	Right	App. Total	Left	Thru	Right	App. Total	Left	Thru	Right	App. Total	Left	Thru	Right	App. Total	Int. Total
Peak Hour Analysis From 04:15 PM to 05:00 PM - Peak 1 of 1																	
Peak Hour for Entire Intersection Begins at 04:15 PM																	
04:15 PM	**3**	1	0	4	0	2	**2**	**4**	1	**1**	0	2	0	1	0	1	11
04:30 PM	1	**4**	0	**5**	0	**3**	0	3	0	0	0	0	0	**6**	0	**6**	14
04:45 PM	1	3	0	4	0	2	0	2	1	1	0	2	0	3	**1**	4	12
05:00 PM	0	4	0	4	**1**	3	0	4	**2**	1	0	**3**	0	4	0	4	**15**
Total Volume	5	12	0	17	1	10	2	13	4	3	0	7	0	14	1	15	52
% App. Total	29.4	70.6	0		7.7	76.9	15.4		57.1	42.9	0		0	93.3	6.7		
PHF	.417	.750	.000	.850	.250	.833	.250	.813	.500	.750	.000	.583	.000	.583	.250	.625	.867

Counts Unlimited
PO Box 1178
Corona, CA 92878
(951) 268-6268

City of San Bernardino
N/S: Cedar Avenue
E/W: Slover Avenue
Weather: Clear

File Name : 05_CSB_Cedar_Slover PM
Site Code : 04520047
Start Date : 1/23/2020
Page No : 2

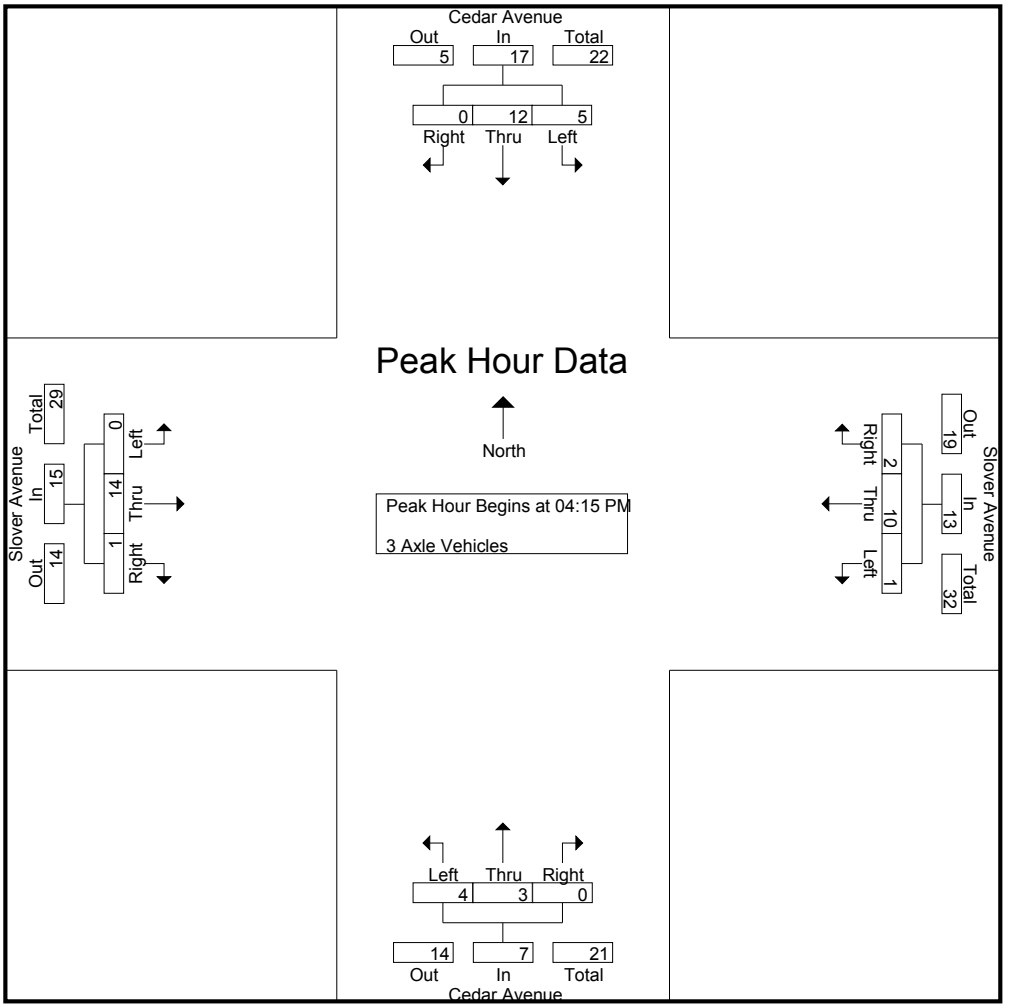

Peak Hour Analysis From 04:15 PM to 05:00 PM - Peak 1 of 1
Peak Hour for Each Approach Begins at:

	04:15 PM				04:15 PM				04:15 PM				04:15 PM			
+0 mins.	**3**	1	0	4	0	2	**2**	**4**	1	**1**	0	2	0	1	0	1
+15 mins.	1	**4**	0	**5**	0	**3**	0	3	0	0	0	0	0	**6**	0	**6**
+30 mins.	1	3	0	4	0	2	0	2	1	1	0	2	0	3	**1**	4
+45 mins.	0	4	0	4	**1**	3	0	4	**2**	1	0	**3**	0	4	0	4
Total Volume	5	12	0	17	1	10	2	13	4	3	0	7	0	14	1	15
% App. Total	29.4	70.6	0		7.7	76.9	15.4		57.1	42.9	0		0	93.3	6.7	
PHF	.417	.750	.000	.850	.250	.833	.250	.813	.500	.750	.000	.583	.000	.583	.250	.625

Counts Unlimited
PO Box 1178
Corona, CA 92878
(951) 268-6268

City of San Bernardino
N/S: Cedar Avenue
E/W: Slover Avenue
Weather: Clear

File Name : 05_CSB_Cedar_Slover PM
Site Code : 04520047
Start Date : 1/23/2020
Page No : 1

Groups Printed- 4+ Axle Trucks

	Cedar Avenue Southbound				Slover Avenue Westbound				Cedar Avenue Northbound				Slover Avenue Eastbound				
Start Time	Left	Thru	Right	App. Total	Left	Thru	Right	App. Total	Left	Thru	Right	App. Total	Left	Thru	Right	App. Total	Int. Total
04:00 PM	0	5	2	7	0	1	1	2	2	0	0	2	1	9	1	11	22
04:15 PM	8	4	1	13	0	5	3	8	2	4	0	6	1	3	1	5	32
04:30 PM	5	5	1	11	0	3	2	5	1	4	0	5	0	3	1	4	25
04:45 PM	3	5	1	9	0	1	2	3	0	2	1	3	0	8	4	12	27
Total	16	19	5	40	0	10	8	18	5	10	1	16	2	23	7	32	106
05:00 PM	3	4	2	9	0	3	0	3	1	0	1	2	0	3	0	3	17
05:15 PM	4	2	2	8	0	3	1	4	4	1	0	5	1	10	4	15	32
05:30 PM	3	0	1	4	0	6	1	7	2	0	0	2	0	4	0	4	17
05:45 PM	2	5	0	7	0	6	5	11	1	0	0	1	0	2	1	3	22
Total	12	11	5	28	0	18	7	25	8	1	1	10	1	19	5	25	88
Grand Total	28	30	10	68	0	28	15	43	13	11	2	26	3	42	12	57	194
Apprch %	41.2	44.1	14.7		0	65.1	34.9		50	42.3	7.7		5.3	73.7	21.1		
Total %	14.4	15.5	5.2	35.1	0	14.4	7.7	22.2	6.7	5.7	1	13.4	1.5	21.6	6.2	29.4	

	Cedar Avenue Southbound				Slover Avenue Westbound				Cedar Avenue Northbound				Slover Avenue Eastbound				
Start Time	Left	Thru	Right	App. Total	Left	Thru	Right	App. Total	Left	Thru	Right	App. Total	Left	Thru	Right	App. Total	Int. Total
Peak Hour Analysis From 04:15 PM to 05:00 PM - Peak 1 of 1																	
Peak Hour for Entire Intersection Begins at 04:15 PM																	
04:15 PM	**8**	4	1	**13**	0	**5**	**3**	**8**	**2**	**4**	0	**6**	**1**	3	1	5	**32**
04:30 PM	5	**5**	1	11	0	3	2	5	1	4	0	5	0	3	1	4	25
04:45 PM	3	5	1	9	0	1	2	3	0	2	**1**	3	0	**8**	**4**	**12**	27
05:00 PM	3	4	**2**	9	0	3	0	3	1	0	1	2	0	3	0	3	17
Total Volume	19	18	5	42	0	12	7	19	4	10	2	16	1	17	6	24	101
% App. Total	45.2	42.9	11.9		0	63.2	36.8		25	62.5	12.5		4.2	70.8	25		
PHF	.594	.900	.625	.808	.000	.600	.583	.594	.500	.625	.500	.667	.250	.531	.375	.500	.789

Counts Unlimited
PO Box 1178
Corona, CA 92878
(951) 268-6268

City of San Bernardino
N/S: Cedar Avenue
E/W: Slover Avenue
Weather: Clear

File Name : 05_CSB_Cedar_Slover PM
Site Code : 04520047
Start Date : 1/23/2020
Page No : 2

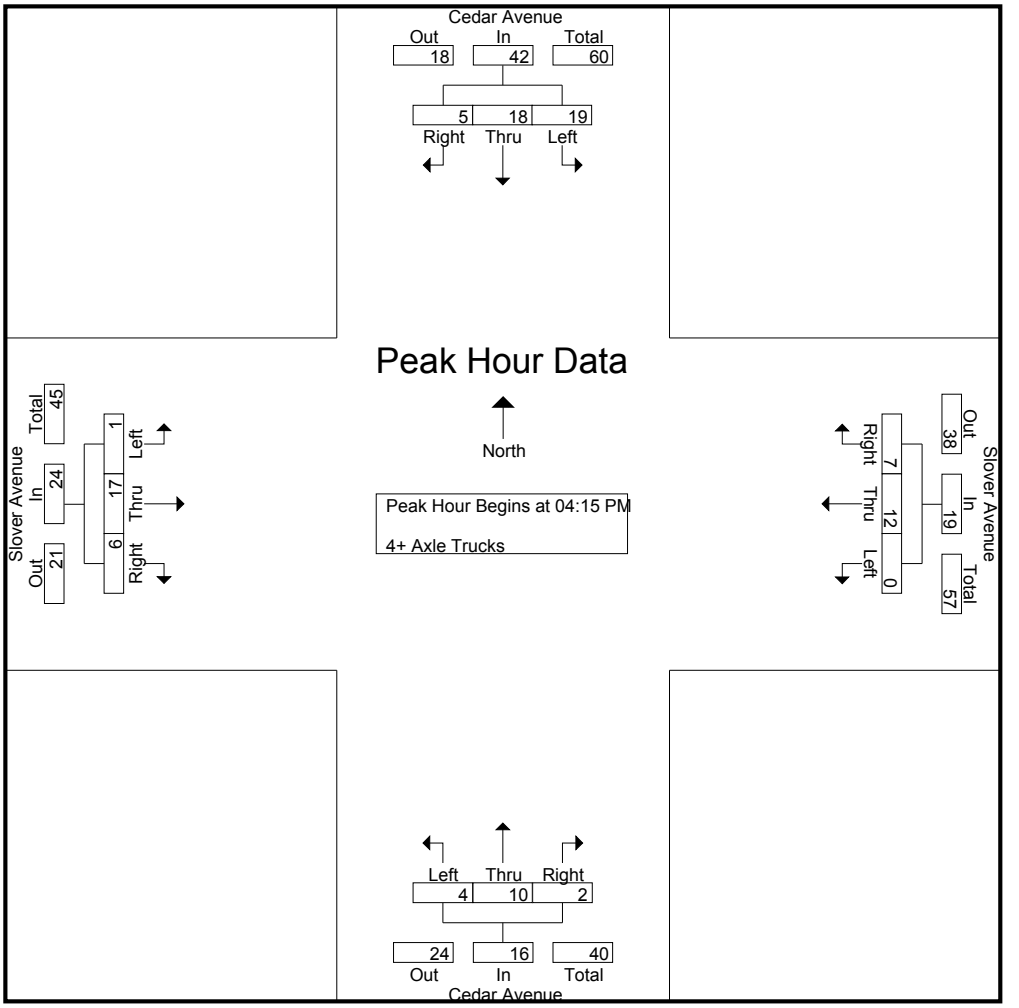

Peak Hour Analysis From 04:15 PM to 05:00 PM - Peak 1 of 1
Peak Hour for Each Approach Begins at:

	04:15 PM				04:15 PM				04:15 PM				04:15 PM			
+0 mins.	**8**	4	1	**13**	0	**5**	**3**	**8**	**2**	**4**	0	**6**	**1**	3	1	5
+15 mins.	5	**5**	1	11	0	3	2	5	1	4	0	5	0	3	1	4
+30 mins.	3	5	1	9	0	1	2	3	0	2	**1**	3	0	**8**	**4**	**12**
+45 mins.	3	4	**2**	9	0	3	0	3	1	0	1	2	0	3	0	3
Total Volume	19	18	5	42	0	12	7	19	4	10	2	16	1	17	6	24
% App. Total	45.2	42.9	11.9		0	63.2	36.8		25	62.5	12.5		4.2	70.8	25	
PHF	.594	.900	.625	.808	.000	.600	.583	.594	.500	.625	.500	.667	.250	.531	.375	.500

Counts Unlimited
PO Box 1178
Corona, CA 92878
(951) 268-6268

City of San Bernardino
N/S: Larch Avenue
E/W: Slover Avenue
Weather: Clear

File Name : 06_CSB_Larch_Slover AM
Site Code : 04520047
Start Date : 1/23/2020
Page No : 1

Groups Printed- Passenger Vehicles - Large 2 Axle Vehicles - 3 Axle Vehicles - 4+ Axle Trucks

	Larch Avenue Southbound				Slover Avenue Westbound				Larch Avenue Northbound				Slover Avenue Eastbound				
Start Time	Left	Thru	Right	App. Total	Left	Thru	Right	App. Total	Left	Thru	Right	App. Total	Left	Thru	Right	App. Total	Int. Total
07:00 AM	15	12	0	27	11	65	4	80	24	14	2	40	1	41	10	52	199
07:15 AM	5	14	0	19	13	52	4	69	14	20	5	39	0	56	32	88	215
07:30 AM	6	10	0	16	9	46	8	63	11	29	5	45	1	60	10	71	195
07:45 AM	7	4	0	11	2	48	4	54	6	8	4	18	1	50	15	66	149
Total	33	40	0	73	35	211	20	266	55	71	16	142	3	207	67	277	758
08:00 AM	12	12	2	26	2	48	10	60	9	17	1	27	2	46	6	54	167
08:15 AM	4	5	0	9	1	51	5	57	7	13	5	25	5	40	6	51	142
08:30 AM	6	7	6	19	3	41	4	48	5	9	4	18	8	34	5	47	132
08:45 AM	8	7	2	17	1	42	8	51	7	8	1	16	3	23	5	31	115
Total	30	31	10	71	7	182	27	216	28	47	11	86	18	143	22	183	556
Grand Total	63	71	10	144	42	393	47	482	83	118	27	228	21	350	89	460	1314
Apprch %	43.8	49.3	6.9		8.7	81.5	9.8		36.4	51.8	11.8		4.6	76.1	19.3		
Total %	4.8	5.4	0.8	11	3.2	29.9	3.6	36.7	6.3	9	2.1	17.4	1.6	26.6	6.8	35	
Passenger Vehicles	61	71	7	139	42	288	43	373	80	116	27	223	21	285	86	392	1127
% Passenger Vehicles	96.8	100	70	96.5	100	73.3	91.5	77.4	96.4	98.3	100	97.8	100	81.4	96.6	85.2	85.8
Large 2 Axle Vehicles	2	0	2	4	0	42	3	45	3	2	0	5	0	17	3	20	74
% Large 2 Axle Vehicles	3.2	0	20	2.8	0	10.7	6.4	9.3	3.6	1.7	0	2.2	0	4.9	3.4	4.3	5.6
3 Axle Vehicles	0	0	0	0	0	23	0	23	0	0	0	0	0	17	0	17	40
% 3 Axle Vehicles	0	0	0	0	0	5.9	0	4.8	0	0	0	0	0	4.9	0	3.7	3
4+ Axle Trucks	0	0	1	1	0	40	1	41	0	0	0	0	0	31	0	31	73
% 4+ Axle Trucks	0	0	10	0.7	0	10.2	2.1	8.5	0	0	0	0	0	8.9	0	6.7	5.6

	Larch Avenue Southbound				Slover Avenue Westbound				Larch Avenue Northbound				Slover Avenue Eastbound				
Start Time	Left	Thru	Right	App. Total	Left	Thru	Right	App. Total	Left	Thru	Right	App. Total	Left	Thru	Right	App. Total	Int. Total
Peak Hour Analysis From 07:00 AM to 08:45 AM - Peak 1 of 1																	
Peak Hour for Entire Intersection Begins at 07:00 AM																	
07:00 AM	**15**	12	0	**27**	11	**65**	4	**80**	**24**	14	2	40	**1**	41	10	52	199
07:15 AM	5	**14**	0	19	**13**	52	4	69	14	20	**5**	39	0	56	**32**	**88**	**215**
07:30 AM	6	10	0	16	9	46	**8**	63	11	**29**	5	**45**	1	**60**	10	71	195
07:45 AM	7	4	0	11	2	48	4	54	6	8	4	18	1	50	15	66	149
Total Volume	33	40	0	73	35	211	20	266	55	71	16	142	3	207	67	277	758
% App. Total	45.2	54.8	0		13.2	79.3	7.5		38.7	50	11.3		1.1	74.7	24.2		
PHF	.550	.714	.000	.676	.673	.812	.625	.831	.573	.612	.800	.789	.750	.863	.523	.787	.881

Counts Unlimited
PO Box 1178
Corona, CA 92878
(951) 268-6268

City of San Bernardino
N/S: Larch Avenue
E/W: Slover Avenue
Weather: Clear

File Name : 06_CSB_Larch_Slover AM
Site Code : 04520047
Start Date : 1/23/2020
Page No : 2

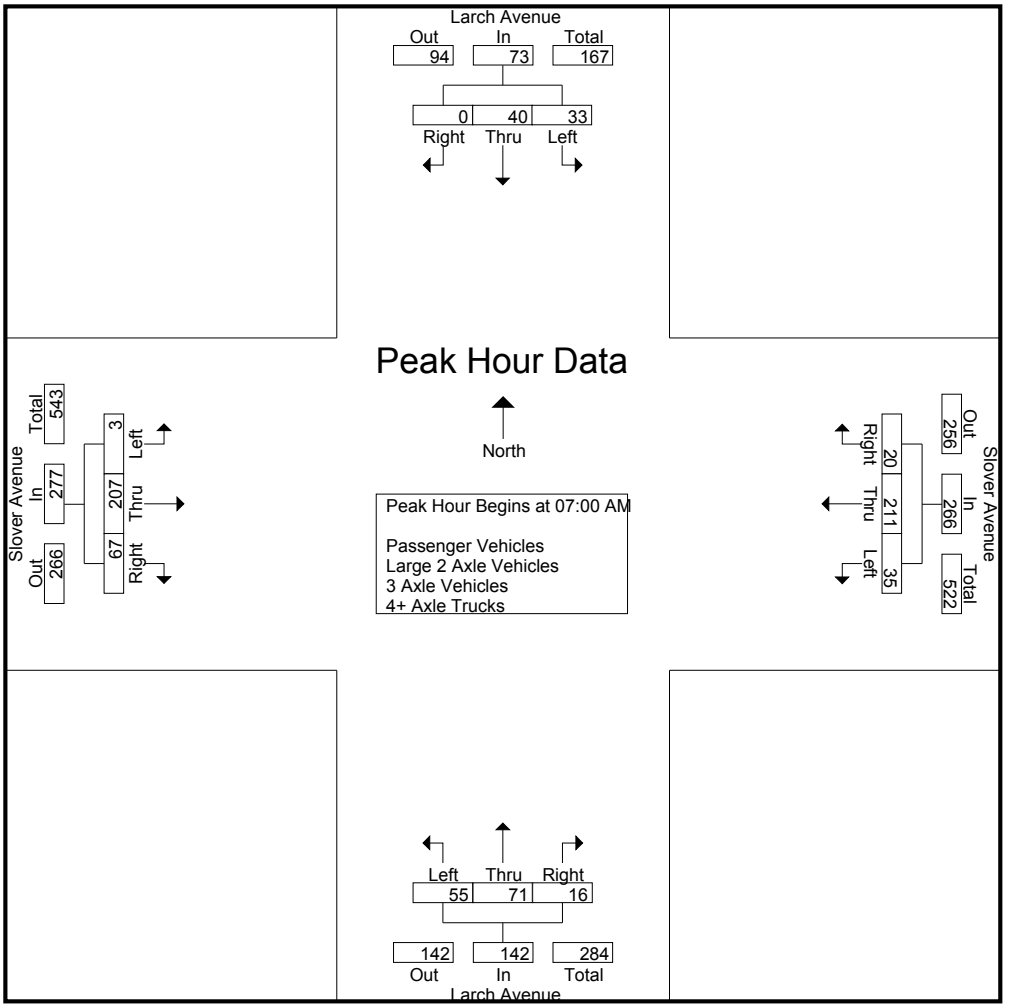

Peak Hour Analysis From 07:00 AM to 08:45 AM - Peak 1 of 1
Peak Hour for Each Approach Begins at:

	07:00 AM				07:00 AM				07:00 AM				07:15 AM			
+0 mins.	**15**	12	0	**27**	11	**65**	4	**80**	**24**	14	2	40	0	56	**32**	**88**
+15 mins.	5	**14**	0	19	**13**	52	4	69	14	20	**5**	39	1	**60**	10	71
+30 mins.	6	10	0	16	9	46	**8**	63	11	**29**	5	**45**	1	50	15	66
+45 mins.	7	4	0	11	2	48	4	54	6	8	4	18	**2**	46	6	54
Total Volume	33	40	0	73	35	211	20	266	55	71	16	142	4	212	63	279
% App. Total	45.2	54.8	0		13.2	79.3	7.5		38.7	50	11.3		1.4	76	22.6	
PHF	.550	.714	.000	.676	.673	.812	.625	.831	.573	.612	.800	.789	.500	.883	.492	.793

Counts Unlimited
PO Box 1178
Corona, CA 92878
(951) 268-6268

City of San Bernardino
N/S: Larch Avenue
E/W: Slover Avenue
Weather: Clear

File Name : 06_CSB_Larch_Slover AM
Site Code : 04520047
Start Date : 1/23/2020
Page No : 1

Groups Printed- Passenger Vehicles

	Larch Avenue Southbound				Slover Avenue Westbound				Larch Avenue Northbound				Slover Avenue Eastbound				
Start Time	Left	Thru	Right	App. Total	Left	Thru	Right	App. Total	Left	Thru	Right	App. Total	Left	Thru	Right	App. Total	Int. Total
07:00 AM	15	12	0	27	11	54	4	69	24	14	2	40	1	30	10	41	177
07:15 AM	5	14	0	19	13	42	4	59	14	20	5	39	0	47	32	79	196
07:30 AM	6	10	0	16	9	32	7	48	10	28	5	43	1	51	9	61	168
07:45 AM	7	4	0	11	2	39	3	44	6	8	4	18	1	47	14	62	135
Total	33	40	0	73	35	167	18	220	54	70	16	140	3	175	65	243	676
08:00 AM	12	12	0	24	2	38	10	50	9	17	1	27	2	38	5	45	146
08:15 AM	4	5	0	9	1	38	4	43	6	13	5	24	5	29	6	40	116
08:30 AM	6	7	6	19	3	21	3	27	5	9	4	18	8	25	5	38	102
08:45 AM	6	7	1	14	1	24	8	33	6	7	1	14	3	18	5	26	87
Total	28	31	7	66	7	121	25	153	26	46	11	83	18	110	21	149	451
Grand Total	61	71	7	139	42	288	43	373	80	116	27	223	21	285	86	392	1127
Apprch %	43.9	51.1	5		11.3	77.2	11.5		35.9	52	12.1		5.4	72.7	21.9		
Total %	5.4	6.3	0.6	12.3	3.7	25.6	3.8	33.1	7.1	10.3	2.4	19.8	1.9	25.3	7.6	34.8	

	Larch Avenue Southbound				Slover Avenue Westbound				Larch Avenue Northbound				Slover Avenue Eastbound				
Start Time	Left	Thru	Right	App. Total	Left	Thru	Right	App. Total	Left	Thru	Right	App. Total	Left	Thru	Right	App. Total	Int. Total
Peak Hour Analysis From 07:00 AM to 07:45 AM - Peak 1 of 1																	
Peak Hour for Entire Intersection Begins at 07:00 AM																	
07:00 AM	**15**	12	0	**27**	11	**54**	4	**69**	**24**	14	2	40	**1**	30	10	41	177
07:15 AM	5	**14**	0	19	**13**	42	4	59	14	20	**5**	39	0	47	**32**	**79**	**196**
07:30 AM	6	10	0	16	9	32	**7**	48	10	**28**	5	**43**	1	**51**	9	61	168
07:45 AM	7	4	0	11	2	39	3	44	6	8	4	18	1	47	14	62	135
Total Volume	33	40	0	73	35	167	18	220	54	70	16	140	3	175	65	243	676
% App. Total	45.2	54.8	0		15.9	75.9	8.2		38.6	50	11.4		1.2	72	26.7		
PHF	.550	.714	.000	.676	.673	.773	.643	.797	.563	.625	.800	.814	.750	.858	.508	.769	.862

Counts Unlimited
PO Box 1178
Corona, CA 92878
(951) 268-6268

City of San Bernardino
N/S: Larch Avenue
E/W: Slover Avenue
Weather: Clear

File Name : 06_CSB_Larch_Slover AM
Site Code : 04520047
Start Date : 1/23/2020
Page No : 2

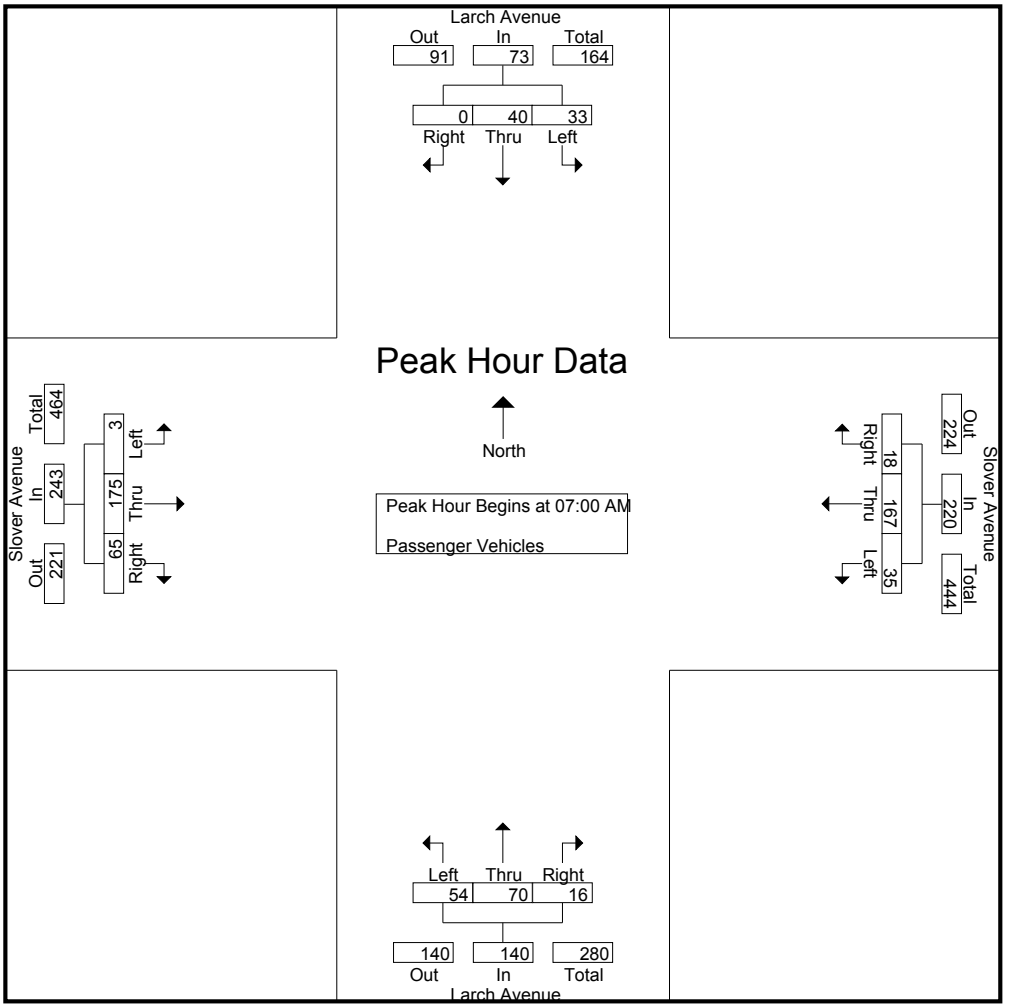

Peak Hour Analysis From 07:00 AM to 07:45 AM - Peak 1 of 1
Peak Hour for Each Approach Begins at:

	07:00 AM				07:00 AM				07:00 AM				07:00 AM			
+0 mins.	**15**	12	0	**27**	11	**54**	4	**69**	**24**	14	2	40	**1**	30	10	41
+15 mins.	5	**14**	0	19	**13**	42	4	59	14	20	**5**	39	0	47	**32**	**79**
+30 mins.	6	10	0	16	9	32	**7**	48	10	**28**	5	**43**	1	**51**	9	61
+45 mins.	7	4	0	11	2	39	3	44	6	8	4	18	1	47	14	62
Total Volume	33	40	0	73	35	167	18	220	54	70	16	140	3	175	65	243
% App. Total	45.2	54.8	0		15.9	75.9	8.2		38.6	50	11.4		1.2	72	26.7	
PHF	.550	.714	.000	.676	.673	.773	.643	.797	.563	.625	.800	.814	.750	.858	.508	.769

Counts Unlimited
PO Box 1178
Corona, CA 92878
(951) 268-6268

City of San Bernardino
N/S: Larch Avenue
E/W: Slover Avenue
Weather: Clear

File Name : 06_CSB_Larch_Slover AM
Site Code : 04520047
Start Date : 1/23/2020
Page No : 1

Groups Printed- Large 2 Axle Vehicles

	Larch Avenue Southbound				Slover Avenue Westbound				Larch Avenue Northbound				Slover Avenue Eastbound				
Start Time	Left	Thru	Right	App. Total	Left	Thru	Right	App. Total	Left	Thru	Right	App. Total	Left	Thru	Right	App. Total	Int. Total
07:00 AM	0	0	0	0	0	2	0	2	0	0	0	0	0	2	0	2	4
07:15 AM	0	0	0	0	0	1	0	1	0	0	0	0	0	2	0	2	3
07:30 AM	0	0	0	0	0	7	1	8	1	1	0	2	0	4	1	5	15
07:45 AM	0	0	0	0	0	2	0	2	0	0	0	0	0	0	1	1	3
Total	0	0	0	0	0	12	1	13	1	1	0	2	0	8	2	10	25
08:00 AM	0	0	1	1	0	3	0	3	0	0	0	0	0	1	1	2	6
08:15 AM	0	0	0	0	0	7	1	8	1	0	0	1	0	3	0	3	12
08:30 AM	0	0	0	0	0	12	1	13	0	0	0	0	0	5	0	5	18
08:45 AM	2	0	1	3	0	8	0	8	1	1	0	2	0	0	0	0	13
Total	2	0	2	4	0	30	2	32	2	1	0	3	0	9	1	10	49
Grand Total	2	0	2	4	0	42	3	45	3	2	0	5	0	17	3	20	74
Apprch %	50	0	50		0	93.3	6.7		60	40	0		0	85	15		
Total %	2.7	0	2.7	5.4	0	56.8	4.1	60.8	4.1	2.7	0	6.8	0	23	4.1	27	

	Larch Avenue Southbound				Slover Avenue Westbound				Larch Avenue Northbound				Slover Avenue Eastbound				
Start Time	Left	Thru	Right	App. Total	Left	Thru	Right	App. Total	Left	Thru	Right	App. Total	Left	Thru	Right	App. Total	Int. Total
Peak Hour Analysis From 07:00 AM to 07:45 AM - Peak 1 of 1																	
Peak Hour for Entire Intersection Begins at 07:00 AM																	
07:00 AM	0	0	0	0	0	2	0	2	0	0	0	0	0	2	0	2	4
07:15 AM	0	0	0	0	0	1	0	1	0	0	0	0	0	2	0	2	3
07:30 AM	0	0	0	0	0	**7**	**1**	**8**	**1**	**1**	0	**2**	0	**4**	**1**	**5**	**15**
07:45 AM	0	0	0	0	0	2	0	2	0	0	0	0	0	0	1	1	3
Total Volume	0	0	0	0	0	12	1	13	1	1	0	2	0	8	2	10	25
% App. Total	0	0	0		0	92.3	7.7		50	50	0		0	80	20		
PHF	.000	.000	.000	.000	.000	.429	.250	.406	.250	.250	.000	.250	.000	.500	.500	.500	.417

Counts Unlimited
PO Box 1178
Corona, CA 92878
(951) 268-6268

City of San Bernardino
N/S: Larch Avenue
E/W: Slover Avenue
Weather: Clear

File Name : 06_CSB_Larch_Slover AM
Site Code : 04520047
Start Date : 1/23/2020
Page No : 2

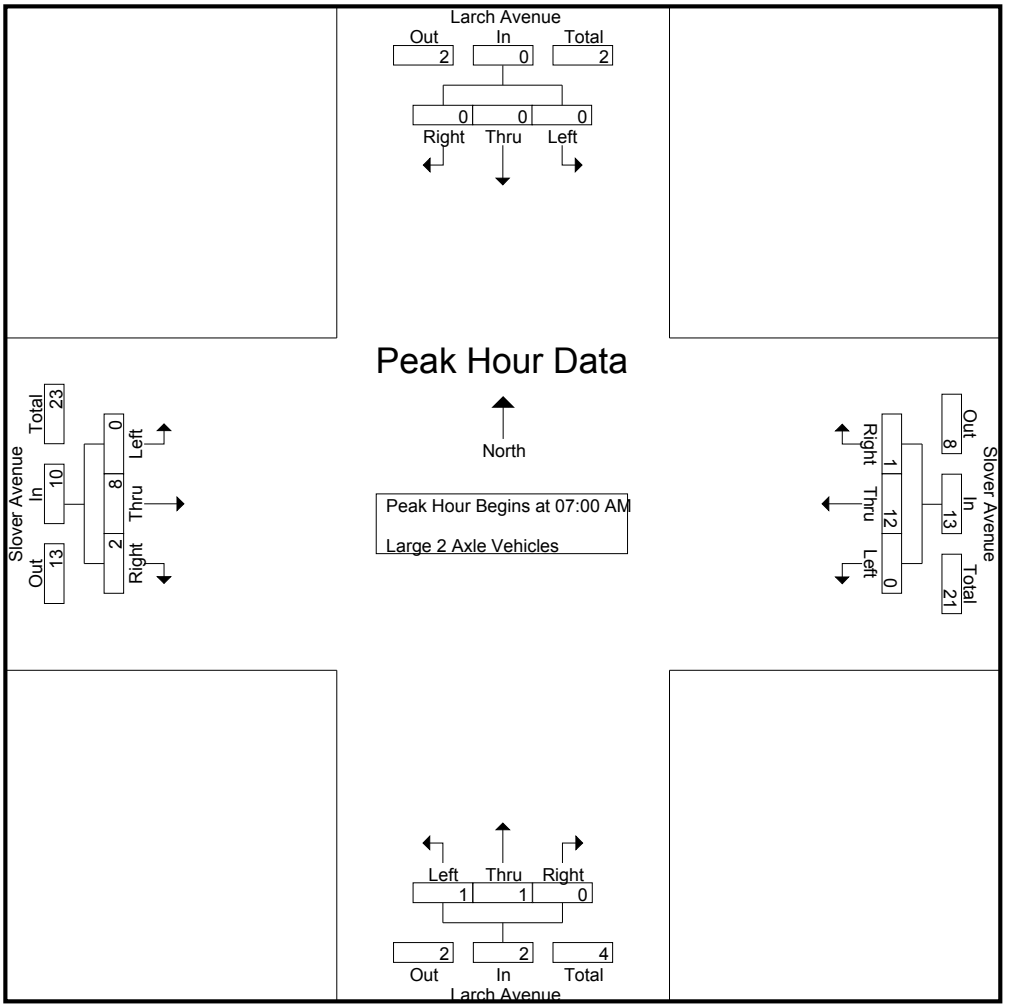

Peak Hour Analysis From 07:00 AM to 07:45 AM - Peak 1 of 1
Peak Hour for Each Approach Begins at:

	07:00 AM				07:00 AM				07:00 AM				07:00 AM			
+0 mins.	0	0	0	0	0	2	0	2	0	0	0	0	0	2	0	2
+15 mins.	0	0	0	0	0	1	0	1	0	0	0	0	0	2	0	2
+30 mins.	0	0	0	0	0	**7**	**1**	**8**	**1**	**1**	0	**2**	0	**4**	**1**	**5**
+45 mins.	0	0	0	0	0	2	0	2	0	0	0	0	0	0	1	1
Total Volume	0	0	0	0	0	12	1	13	1	1	0	2	0	8	2	10
% App. Total	0	0	0		0	92.3	7.7		50	50	0		0	80	20	
PHF	.000	.000	.000	.000	.000	.429	.250	.406	.250	.250	.000	.250	.000	.500	.500	.500

Counts Unlimited
PO Box 1178
Corona, CA 92878
(951) 268-6268

City of San Bernardino
N/S: Larch Avenue
E/W: Slover Avenue
Weather: Clear

File Name : 06_CSB_Larch_Slover AM
Site Code : 04520047
Start Date : 1/23/2020
Page No : 1

Groups Printed- 3 Axle Vehicles

	Larch Avenue Southbound				Slover Avenue Westbound				Larch Avenue Northbound				Slover Avenue Eastbound				
Start Time	Left	Thru	Right	App. Total	Left	Thru	Right	App. Total	Left	Thru	Right	App. Total	Left	Thru	Right	App. Total	Int. Total
07:00 AM	0	0	0	0	0	5	0	5	0	0	0	0	0	4	0	4	9
07:15 AM	0	0	0	0	0	5	0	5	0	0	0	0	0	3	0	3	8
07:30 AM	0	0	0	0	0	3	0	3	0	0	0	0	0	0	0	0	3
07:45 AM	0	0	0	0	0	2	0	2	0	0	0	0	0	2	0	2	4
Total	0	0	0	0	0	15	0	15	0	0	0	0	0	9	0	9	24
08:00 AM	0	0	0	0	0	2	0	2	0	0	0	0	0	2	0	2	4
08:15 AM	0	0	0	0	0	0	0	0	0	0	0	0	0	4	0	4	4
08:30 AM	0	0	0	0	0	2	0	2	0	0	0	0	0	0	0	0	2
08:45 AM	0	0	0	0	0	4	0	4	0	0	0	0	0	2	0	2	6
Total	0	0	0	0	0	8	0	8	0	0	0	0	0	8	0	8	16
Grand Total	0	0	0	0	0	23	0	23	0	0	0	0	0	17	0	17	40
Apprch %	0	0	0		0	100	0		0	0	0		0	100	0		
Total %	0	0	0	0	0	57.5	0	57.5	0	0	0	0	0	42.5	0	42.5	

	Larch Avenue Southbound				Slover Avenue Westbound				Larch Avenue Northbound				Slover Avenue Eastbound				
Start Time	Left	Thru	Right	App. Total	Left	Thru	Right	App. Total	Left	Thru	Right	App. Total	Left	Thru	Right	App. Total	Int. Total
Peak Hour Analysis From 07:00 AM to 07:45 AM - Peak 1 of 1																	
Peak Hour for Entire Intersection Begins at 07:00 AM																	
07:00 AM	0	0	0	0	0	**5**	0	**5**	0	0	0	0	0	**4**	0	**4**	**9**
07:15 AM	0	0	0	0	0	5	0	5	0	0	0	0	0	3	0	3	8
07:30 AM	0	0	0	0	0	3	0	3	0	0	0	0	0	0	0	0	3
07:45 AM	0	0	0	0	0	2	0	2	0	0	0	0	0	2	0	2	4
Total Volume	0	0	0	0	0	15	0	15	0	0	0	0	0	9	0	9	24
% App. Total	0	0	0		0	100	0		0	0	0		0	100	0		
PHF	.000	.000	.000	.000	.000	.750	.000	.750	.000	.000	.000	.000	.000	.563	.000	.563	.667

Counts Unlimited
PO Box 1178
Corona, CA 92878
(951) 268-6268

City of San Bernardino
N/S: Larch Avenue
E/W: Slover Avenue
Weather: Clear

File Name : 06_CSB_Larch_Slover AM
Site Code : 04520047
Start Date : 1/23/2020
Page No : 2

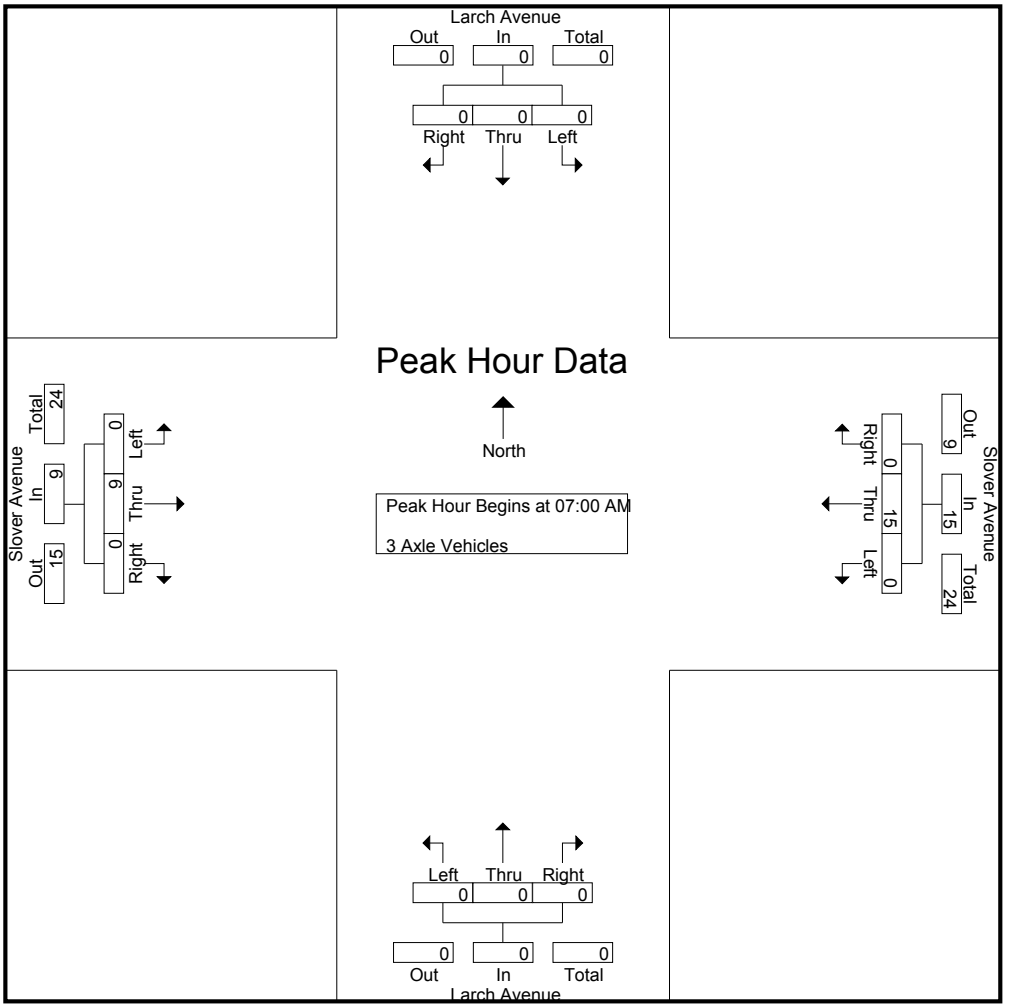

Peak Hour Analysis From 07:00 AM to 07:45 AM - Peak 1 of 1
Peak Hour for Each Approach Begins at:

	07:00 AM				07:00 AM				07:00 AM				07:00 AM			
+0 mins.	0	0	0	0	0	**5**	0	**5**	0	0	0	0	0	**4**	0	**4**
+15 mins.	0	0	0	0	0	5	0	5	0	0	0	0	0	3	0	3
+30 mins.	0	0	0	0	0	3	0	3	0	0	0	0	0	0	0	0
+45 mins.	0	0	0	0	0	2	0	2	0	0	0	0	0	2	0	2
Total Volume	0	0	0	0	0	15	0	15	0	0	0	0	0	9	0	9
% App. Total	0	0	0		0	100	0		0	0	0		0	100	0	
PHF	.000	.000	.000	.000	.000	.750	.000	.750	.000	.000	.000	.000	.000	.563	.000	.563

Counts Unlimited
PO Box 1178
Corona, CA 92878
(951) 268-6268

City of San Bernardino
N/S: Larch Avenue
E/W: Slover Avenue
Weather: Clear

File Name : 06_CSB_Larch_Slover AM
Site Code : 04520047
Start Date : 1/23/2020
Page No : 1

Groups Printed- 4+ Axle Trucks

	Larch Avenue Southbound				Slover Avenue Westbound				Larch Avenue Northbound				Slover Avenue Eastbound				
Start Time	Left	Thru	Right	App. Total	Left	Thru	Right	App. Total	Left	Thru	Right	App. Total	Left	Thru	Right	App. Total	Int. Total
07:00 AM	0	0	0	0	0	4	0	4	0	0	0	0	0	5	0	5	9
07:15 AM	0	0	0	0	0	4	0	4	0	0	0	0	0	4	0	4	8
07:30 AM	0	0	0	0	0	4	0	4	0	0	0	0	0	5	0	5	9
07:45 AM	0	0	0	0	0	5	1	6	0	0	0	0	0	1	0	1	7
Total	0	0	0	0	0	17	1	18	0	0	0	0	0	15	0	15	33
08:00 AM	0	0	1	1	0	5	0	5	0	0	0	0	0	5	0	5	11
08:15 AM	0	0	0	0	0	6	0	6	0	0	0	0	0	4	0	4	10
08:30 AM	0	0	0	0	0	6	0	6	0	0	0	0	0	4	0	4	10
08:45 AM	0	0	0	0	0	6	0	6	0	0	0	0	0	3	0	3	9
Total	0	0	1	1	0	23	0	23	0	0	0	0	0	16	0	16	40
Grand Total	0	0	1	1	0	40	1	41	0	0	0	0	0	31	0	31	73
Apprch %	0	0	100		0	97.6	2.4		0	0	0		0	100	0		
Total %	0	0	1.4	1.4	0	54.8	1.4	56.2	0	0	0	0	0	42.5	0	42.5	

	Larch Avenue Southbound				Slover Avenue Westbound				Larch Avenue Northbound				Slover Avenue Eastbound				
Start Time	Left	Thru	Right	App. Total	Left	Thru	Right	App. Total	Left	Thru	Right	App. Total	Left	Thru	Right	App. Total	Int. Total
Peak Hour Analysis From 07:00 AM to 07:45 AM - Peak 1 of 1																	
Peak Hour for Entire Intersection Begins at 07:00 AM																	
07:00 AM	0	0	0	0	0	4	0	4	0	0	0	0	0	**5**	0	**5**	**9**
07:15 AM	0	0	0	0	0	4	0	4	0	0	0	0	0	4	0	4	8
07:30 AM	0	0	0	0	0	4	0	4	0	0	0	0	0	5	0	5	9
07:45 AM	0	0	0	0	0	**5**	**1**	**6**	0	0	0	0	0	1	0	1	7
Total Volume	0	0	0	0	0	17	1	18	0	0	0	0	0	15	0	15	33
% App. Total	0	0	0		0	94.4	5.6		0	0	0		0	100	0		
PHF	.000	.000	.000	.000	.000	.850	.250	.750	.000	.000	.000	.000	.000	.750	.000	.750	.917

Counts Unlimited
PO Box 1178
Corona, CA 92878
(951) 268-6268

City of San Bernardino
N/S: Larch Avenue
E/W: Slover Avenue
Weather: Clear

File Name : 06_CSB_Larch_Slover AM
Site Code : 04520047
Start Date : 1/23/2020
Page No : 2

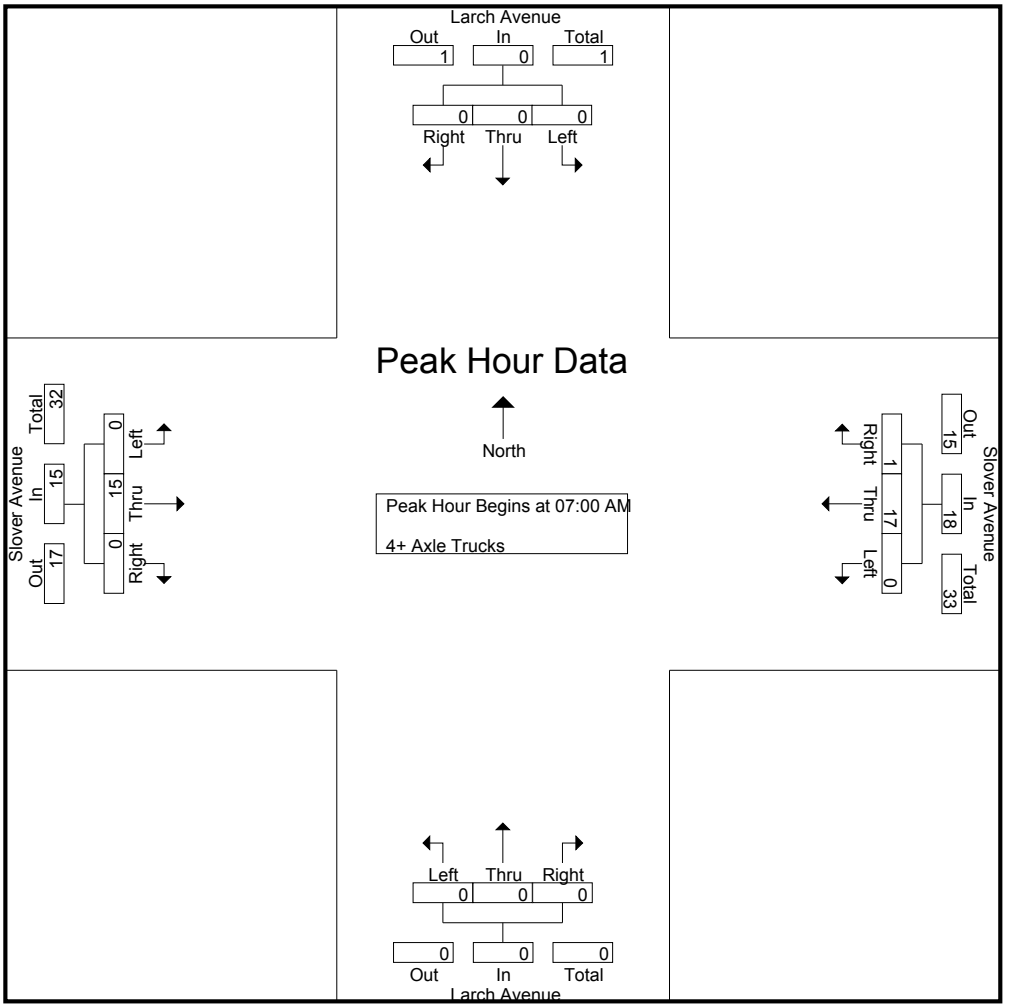

Peak Hour Analysis From 07:00 AM to 07:45 AM - Peak 1 of 1
Peak Hour for Each Approach Begins at:

	07:00 AM				07:00 AM				07:00 AM				07:00 AM			
+0 mins.	0	0	0	0	0	4	0	4	0	0	0	0	0	**5**	0	**5**
+15 mins.	0	0	0	0	0	4	0	4	0	0	0	0	0	4	0	4
+30 mins.	0	0	0	0	0	4	0	4	0	0	0	0	0	5	0	5
+45 mins.	0	0	0	0	0	**5**	**1**	**6**	0	0	0	0	0	1	0	1
Total Volume	0	0	0	0	0	17	1	18	0	0	0	0	0	15	0	15
% App. Total	0	0	0		0	94.4	5.6		0	0	0		0	100	0	
PHF	.000	.000	.000	.000	.000	.850	.250	.750	.000	.000	.000	.000	.000	.750	.000	.750

Counts Unlimited
PO Box 1178
Corona, CA 92878
(951) 268-6268

City of San Bernardino
N/S: Larch Avenue
E/W: Slover Avenue
Weather: Clear

File Name : 06_CSB_Larch_Slover PM
Site Code : 04520047
Start Date : 1/23/2020
Page No : 1

Groups Printed- Passenger Vehicles - Large 2 Axle Vehicles - 3 Axle Vehicles - 4+ Axle Trucks

	Larch Avenue Southbound				Slover Avenue Westbound				Larch Avenue Northbound				Slover Avenue Eastbound				
Start Time	Left	Thru	Right	App. Total	Left	Thru	Right	App. Total	Left	Thru	Right	App. Total	Left	Thru	Right	App. Total	Int. Total
04:00 PM	1	19	8	28	8	60	25	93	11	22	17	50	9	102	18	129	300
04:15 PM	8	4	3	15	12	45	6	63	11	17	17	45	4	104	15	123	246
04:30 PM	4	5	4	13	8	54	10	72	10	18	18	46	3	108	12	123	254
04:45 PM	4	6	2	12	8	40	13	61	8	21	12	41	6	115	17	138	252
Total	17	34	17	68	36	199	54	289	40	78	64	182	22	429	62	513	1052
05:00 PM	4	7	0	11	7	53	21	81	11	17	12	40	7	106	20	133	265
05:15 PM	11	6	1	18	13	60	10	83	7	34	11	52	8	90	15	113	266
05:30 PM	4	4	1	9	7	43	12	62	9	25	15	49	4	97	18	119	239
05:45 PM	3	10	0	13	6	46	9	61	6	16	7	29	8	83	19	110	213
Total	22	27	2	51	33	202	52	287	33	92	45	170	27	376	72	475	983
Grand Total	39	61	19	119	69	401	106	576	73	170	109	352	49	805	134	988	2035
Apprch %	32.8	51.3	16		12	69.6	18.4		20.7	48.3	31		5	81.5	13.6		
Total %	1.9	3	0.9	5.8	3.4	19.7	5.2	28.3	3.6	8.4	5.4	17.3	2.4	39.6	6.6	48.6	
Passenger Vehicles	36	55	17	108	67	311	103	481	70	167	107	344	47	668	122	837	1770
% Passenger Vehicles	92.3	90.2	89.5	90.8	97.1	77.6	97.2	83.5	95.9	98.2	98.2	97.7	95.9	83	91	84.7	87
Large 2 Axle Vehicles	3	3	1	7	2	27	1	30	2	3	1	6	1	35	8	44	87
% Large 2 Axle Vehicles	7.7	4.9	5.3	5.9	2.9	6.7	0.9	5.2	2.7	1.8	0.9	1.7	2	4.3	6	4.5	4.3
3 Axle Vehicles	0	3	1	4	0	20	0	20	0	0	0	0	1	31	3	35	59
% 3 Axle Vehicles	0	4.9	5.3	3.4	0	5	0	3.5	0	0	0	0	2	3.9	2.2	3.5	2.9
4+ Axle Trucks	0	0	0	0	0	43	2	45	1	0	1	2	0	71	1	72	119
% 4+ Axle Trucks	0	0	0	0	0	10.7	1.9	7.8	1.4	0	0.9	0.6	0	8.8	0.7	7.3	5.8

	Larch Avenue Southbound				Slover Avenue Westbound				Larch Avenue Northbound				Slover Avenue Eastbound				
Start Time	Left	Thru	Right	App. Total	Left	Thru	Right	App. Total	Left	Thru	Right	App. Total	Left	Thru	Right	App. Total	Int. Total
Peak Hour Analysis From 04:00 PM to 05:45 PM - Peak 1 of 1																	
Peak Hour for Entire Intersection Begins at 04:00 PM																	
04:00 PM	1	**19**	**8**	**28**	8	**60**	**25**	**93**	**11**	**22**	17	**50**	**9**	102	**18**	129	**300**
04:15 PM	**8**	4	3	15	**12**	45	6	63	11	17	17	45	4	104	15	123	246
04:30 PM	4	5	4	13	8	54	10	72	10	18	**18**	46	3	108	12	123	254
04:45 PM	4	6	2	12	8	40	13	61	8	21	12	41	6	**115**	17	**138**	252
Total Volume	17	34	17	68	36	199	54	289	40	78	64	182	22	429	62	513	1052
% App. Total	25	50	25		12.5	68.9	18.7		22	42.9	35.2		4.3	83.6	12.1		
PHF	.531	.447	.531	.607	.750	.829	.540	.777	.909	.886	.889	.910	.611	.933	.861	.929	.877

Counts Unlimited
PO Box 1178
Corona, CA 92878
(951) 268-6268

City of San Bernardino
N/S: Larch Avenue
E/W: Slover Avenue
Weather: Clear

File Name : 06_CSB_Larch_Slover PM
Site Code : 04520047
Start Date : 1/23/2020
Page No : 2

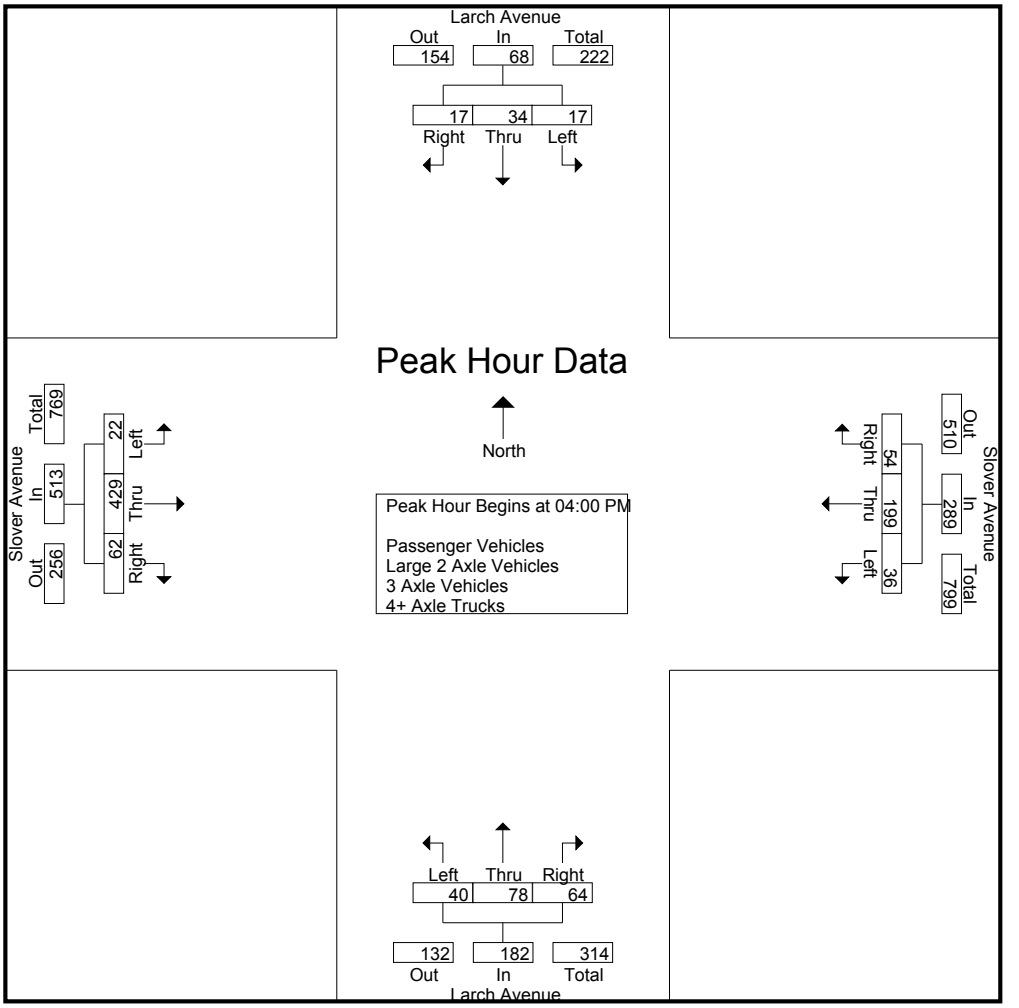

Peak Hour Analysis From 04:00 PM to 05:45 PM - Peak 1 of 1
Peak Hour for Each Approach Begins at:

	04:00 PM				04:30 PM				04:00 PM				04:15 PM			
+0 mins.	1	**19**	**8**	**28**	8	54	10	72	**11**	**22**	17	**50**	4	104	15	123
+15 mins.	**8**	4	3	15	8	40	13	61	11	17	17	45	3	108	12	123
+30 mins.	4	5	4	13	7	53	**21**	81	10	18	**18**	46	6	**115**	17	**138**
+45 mins.	4	6	2	12	**13**	**60**	10	**83**	8	21	12	41	**7**	106	**20**	133
Total Volume	17	34	17	68	36	207	54	297	40	78	64	182	20	433	64	517
% App. Total	25	50	25		12.1	69.7	18.2		22	42.9	35.2		3.9	83.8	12.4	
PHF	.531	.447	.531	.607	.692	.863	.643	.895	.909	.886	.889	.910	.714	.941	.800	.937

Counts Unlimited
PO Box 1178
Corona, CA 92878
(951) 268-6268

City of San Bernardino
N/S: Larch Avenue
E/W: Slover Avenue
Weather: Clear

File Name : 06_CSB_Larch_Slover PM
Site Code : 04520047
Start Date : 1/23/2020
Page No : 1

Groups Printed- Passenger Vehicles

	Larch Avenue Southbound				Slover Avenue Westbound				Larch Avenue Northbound				Slover Avenue Eastbound				
Start Time	Left	Thru	Right	App. Total	Left	Thru	Right	App. Total	Left	Thru	Right	App. Total	Left	Thru	Right	App. Total	Int. Total
04:00 PM	0	13	7	20	8	49	24	81	10	22	16	48	9	87	16	112	261
04:15 PM	8	4	3	15	10	29	5	44	9	17	16	42	4	86	12	102	203
04:30 PM	4	5	4	13	8	43	9	60	10	18	18	46	3	90	11	104	223
04:45 PM	4	6	2	12	8	34	13	55	8	20	12	40	6	92	17	115	222
Total	16	28	16	60	34	155	51	240	37	77	62	176	22	355	56	433	909
05:00 PM	3	7	0	10	7	42	21	70	11	17	12	40	6	92	16	114	234
05:15 PM	10	6	1	17	13	50	10	73	7	34	11	52	8	67	15	90	232
05:30 PM	4	4	0	8	7	29	12	48	9	25	15	49	3	81	16	100	205
05:45 PM	3	10	0	13	6	35	9	50	6	14	7	27	8	73	19	100	190
Total	20	27	1	48	33	156	52	241	33	90	45	168	25	313	66	404	861
Grand Total	36	55	17	108	67	311	103	481	70	167	107	344	47	668	122	837	1770
Apprch %	33.3	50.9	15.7		13.9	64.7	21.4		20.3	48.5	31.1		5.6	79.8	14.6		
Total %	2	3.1	1	6.1	3.8	17.6	5.8	27.2	4	9.4	6	19.4	2.7	37.7	6.9	47.3	

	Larch Avenue Southbound				Slover Avenue Westbound				Larch Avenue Northbound				Slover Avenue Eastbound				
Start Time	Left	Thru	Right	App. Total	Left	Thru	Right	App. Total	Left	Thru	Right	App. Total	Left	Thru	Right	App. Total	Int. Total
Peak Hour Analysis From 04:00 PM to 04:45 PM - Peak 1 of 1																	
Peak Hour for Entire Intersection Begins at 04:00 PM																	
04:00 PM	0	**13**	**7**	**20**	8	**49**	**24**	**81**	**10**	**22**	16	**48**	**9**	87	16	112	**261**
04:15 PM	**8**	4	3	15	**10**	29	5	44	9	17	16	42	4	86	12	102	203
04:30 PM	4	5	4	13	8	43	9	60	10	18	**18**	46	3	90	11	104	223
04:45 PM	4	6	2	12	8	34	13	55	8	20	12	40	6	**92**	**17**	**115**	222
Total Volume	16	28	16	60	34	155	51	240	37	77	62	176	22	355	56	433	909
% App. Total	26.7	46.7	26.7		14.2	64.6	21.2		21	43.8	35.2		5.1	82	12.9		
PHF	.500	.538	.571	.750	.850	.791	.531	.741	.925	.875	.861	.917	.611	.965	.824	.941	.871

Counts Unlimited
PO Box 1178
Corona, CA 92878
(951) 268-6268

City of San Bernardino
N/S: Larch Avenue
E/W: Slover Avenue
Weather: Clear

File Name : 06_CSB_Larch_Slover PM
Site Code : 04520047
Start Date : 1/23/2020
Page No : 2

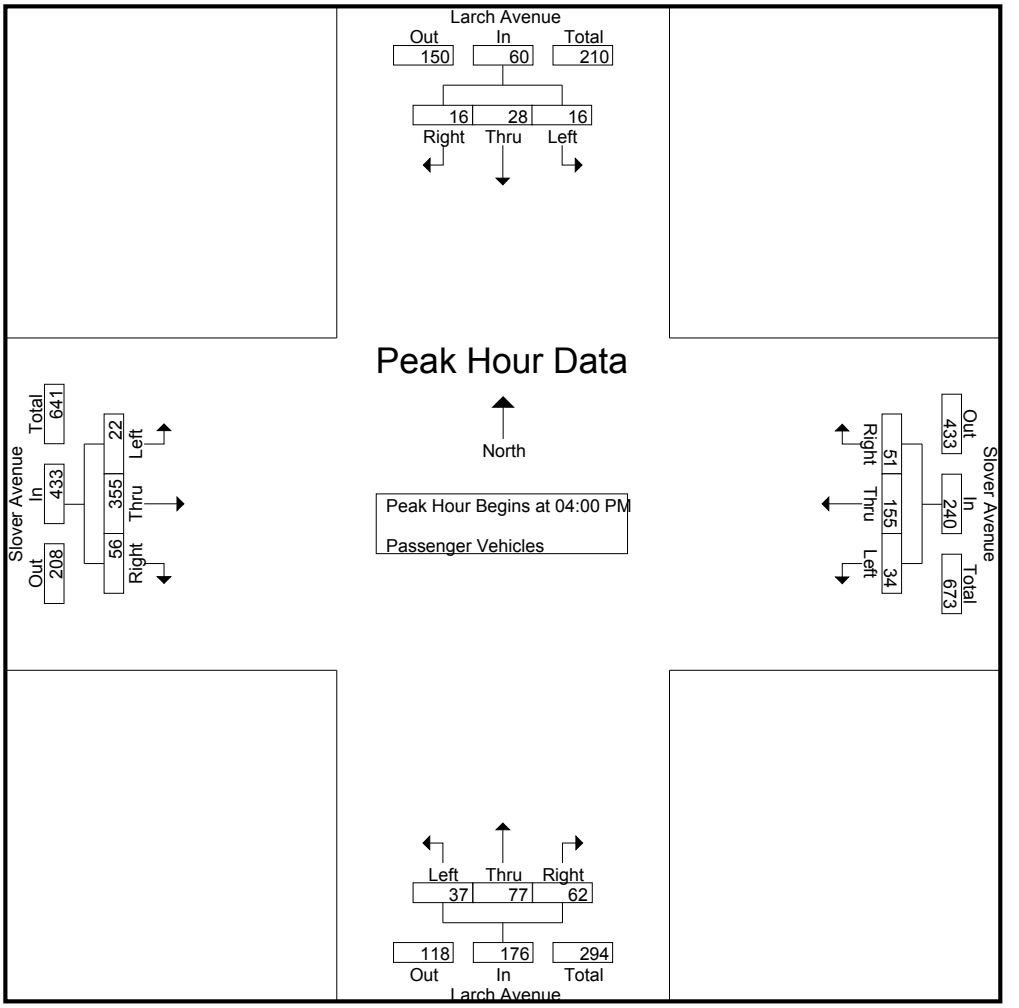

Peak Hour Analysis From 04:00 PM to 04:45 PM - Peak 1 of 1
Peak Hour for Each Approach Begins at:

	04:00 PM				04:00 PM				04:00 PM				04:00 PM			
+0 mins.	0	**13**	**7**	**20**	8	**49**	**24**	**81**	**10**	**22**	16	**48**	**9**	87	16	112
+15 mins.	**8**	4	3	15	**10**	29	5	44	9	17	16	42	4	86	12	102
+30 mins.	4	5	4	13	8	43	9	60	10	18	**18**	46	3	90	11	104
+45 mins.	4	6	2	12	8	34	13	55	8	20	12	40	6	**92**	**17**	**115**
Total Volume	16	28	16	60	34	155	51	240	37	77	62	176	22	355	56	433
% App. Total	26.7	46.7	26.7		14.2	64.6	21.2		21	43.8	35.2		5.1	82	12.9	
PHF	.500	.538	.571	.750	.850	.791	.531	.741	.925	.875	.861	.917	.611	.965	.824	.941

Counts Unlimited
PO Box 1178
Corona, CA 92878
(951) 268-6268

City of San Bernardino
N/S: Larch Avenue
E/W: Slover Avenue
Weather: Clear

File Name : 06_CSB_Larch_Slover PM
Site Code : 04520047
Start Date : 1/23/2020
Page No : 1

Groups Printed- Large 2 Axle Vehicles

	Larch Avenue Southbound				Slover Avenue Westbound				Larch Avenue Northbound				Slover Avenue Eastbound				
Start Time	Left	Thru	Right	App. Total	Left	Thru	Right	App. Total	Left	Thru	Right	App. Total	Left	Thru	Right	App. Total	Int. Total
04:00 PM	1	3	1	5	0	4	0	4	1	0	1	2	0	5	2	7	18
04:15 PM	0	0	0	0	2	6	1	9	1	0	0	1	0	3	2	5	15
04:30 PM	0	0	0	0	0	3	0	3	0	0	0	0	0	5	1	6	9
04:45 PM	0	0	0	0	0	1	0	1	0	1	0	1	0	6	0	6	8
Total	1	3	1	5	2	14	1	17	2	1	1	4	0	19	5	24	50
05:00 PM	1	0	0	1	0	5	0	5	0	0	0	0	1	3	2	6	12
05:15 PM	1	0	0	1	0	2	0	2	0	0	0	0	0	6	0	6	9
05:30 PM	0	0	0	0	0	4	0	4	0	0	0	0	0	4	1	5	9
05:45 PM	0	0	0	0	0	2	0	2	0	2	0	2	0	3	0	3	7
Total	2	0	0	2	0	13	0	13	0	2	0	2	1	16	3	20	37
Grand Total	3	3	1	7	2	27	1	30	2	3	1	6	1	35	8	44	87
Apprch %	42.9	42.9	14.3		6.7	90	3.3		33.3	50	16.7		2.3	79.5	18.2		
Total %	3.4	3.4	1.1	8	2.3	31	1.1	34.5	2.3	3.4	1.1	6.9	1.1	40.2	9.2	50.6	

	Larch Avenue Southbound				Slover Avenue Westbound				Larch Avenue Northbound				Slover Avenue Eastbound				
Start Time	Left	Thru	Right	App. Total	Left	Thru	Right	App. Total	Left	Thru	Right	App. Total	Left	Thru	Right	App. Total	Int. Total
Peak Hour Analysis From 04:00 PM to 04:45 PM - Peak 1 of 1																	
Peak Hour for Entire Intersection Begins at 04:00 PM																	
04:00 PM	**1**	**3**	**1**	**5**	0	4	0	4	**1**	0	**1**	**2**	0	5	**2**	**7**	**18**
04:15 PM	0	0	0	0	**2**	**6**	**1**	**9**	1	0	0	1	0	3	2	5	15
04:30 PM	0	0	0	0	0	3	0	3	0	0	0	0	0	5	1	6	9
04:45 PM	0	0	0	0	0	1	0	1	0	**1**	0	1	0	**6**	0	6	8
Total Volume	1	3	1	5	2	14	1	17	2	1	1	4	0	19	5	24	50
% App. Total	20	60	20		11.8	82.4	5.9		50	25	25		0	79.2	20.8		
PHF	.250	.250	.250	.250	.250	.583	.250	.472	.500	.250	.250	.500	.000	.792	.625	.857	.694

Counts Unlimited
PO Box 1178
Corona, CA 92878
(951) 268-6268

City of San Bernardino
N/S: Larch Avenue
E/W: Slover Avenue
Weather: Clear

File Name : 06_CSB_Larch_Slover PM
Site Code : 04520047
Start Date : 1/23/2020
Page No : 2

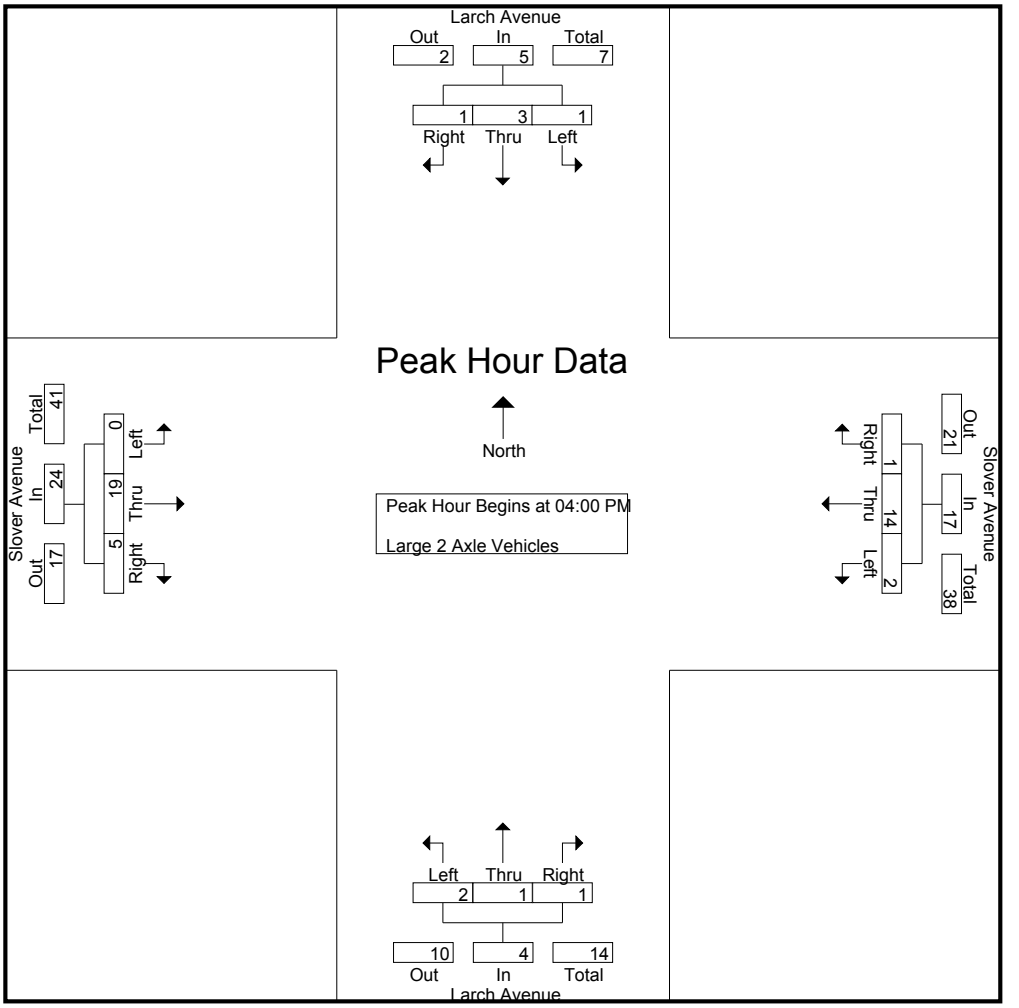

Peak Hour Analysis From 04:00 PM to 04:45 PM - Peak 1 of 1
Peak Hour for Each Approach Begins at:

	04:00 PM				04:00 PM				04:00 PM				04:00 PM			
+0 mins.	**1**	**3**	**1**	**5**	0	4	0	4	**1**	0	**1**	**2**	0	5	**2**	**7**
+15 mins.	0	0	0	0	**2**	**6**	**1**	**9**	1	0	0	1	0	3	2	5
+30 mins.	0	0	0	0	0	3	0	3	0	0	0	0	0	5	1	6
+45 mins.	0	0	0	0	0	1	0	1	0	**1**	0	1	0	**6**	0	6
Total Volume	1	3	1	5	2	14	1	17	2	1	1	4	0	19	5	24
% App. Total	20	60	20		11.8	82.4	5.9		50	25	25		0	79.2	20.8	
PHF	.250	.250	.250	.250	.250	.583	.250	.472	.500	.250	.250	.500	.000	.792	.625	.857

Counts Unlimited
PO Box 1178
Corona, CA 92878
(951) 268-6268

City of San Bernardino
N/S: Larch Avenue
E/W: Slover Avenue
Weather: Clear

File Name : 06_CSB_Larch_Slover PM
Site Code : 04520047
Start Date : 1/23/2020
Page No : 1

Groups Printed- 3 Axle Vehicles

	Larch Avenue Southbound				Slover Avenue Westbound				Larch Avenue Northbound				Slover Avenue Eastbound				
Start Time	Left	Thru	Right	App. Total	Left	Thru	Right	App. Total	Left	Thru	Right	App. Total	Left	Thru	Right	App. Total	Int. Total
04:00 PM	0	3	0	3	0	4	0	4	0	0	0	0	0	2	0	2	9
04:15 PM	0	0	0	0	0	3	0	3	0	0	0	0	0	5	0	5	8
04:30 PM	0	0	0	0	0	4	0	4	0	0	0	0	0	7	0	7	11
04:45 PM	0	0	0	0	0	2	0	2	0	0	0	0	0	3	0	3	5
Total	0	3	0	3	0	13	0	13	0	0	0	0	0	17	0	17	33
05:00 PM	0	0	0	0	0	3	0	3	0	0	0	0	0	4	2	6	9
05:15 PM	0	0	0	0	0	3	0	3	0	0	0	0	0	3	0	3	6
05:30 PM	0	0	1	1	0	1	0	1	0	0	0	0	1	4	1	6	8
05:45 PM	0	0	0	0	0	0	0	0	0	0	0	0	0	3	0	3	3
Total	0	0	1	1	0	7	0	7	0	0	0	0	1	14	3	18	26
Grand Total	0	3	1	4	0	20	0	20	0	0	0	0	1	31	3	35	59
Apprch %	0	75	25		0	100	0		0	0	0		2.9	88.6	8.6		
Total %	0	5.1	1.7	6.8	0	33.9	0	33.9	0	0	0	0	1.7	52.5	5.1	59.3	

	Larch Avenue Southbound				Slover Avenue Westbound				Larch Avenue Northbound				Slover Avenue Eastbound				
Start Time	Left	Thru	Right	App. Total	Left	Thru	Right	App. Total	Left	Thru	Right	App. Total	Left	Thru	Right	App. Total	Int. Total
Peak Hour Analysis From 04:00 PM to 04:45 PM - Peak 1 of 1																	
Peak Hour for Entire Intersection Begins at 04:00 PM																	
04:00 PM	0	**3**	0	**3**	0	**4**	0	**4**	0	0	0	0	0	2	0	2	9
04:15 PM	0	0	0	0	0	3	0	3	0	0	0	0	0	5	0	5	8
04:30 PM	0	0	0	0	0	4	0	4	0	0	0	0	0	**7**	0	**7**	**11**
04:45 PM	0	0	0	0	0	2	0	2	0	0	0	0	0	3	0	3	5
Total Volume	0	3	0	3	0	13	0	13	0	0	0	0	0	17	0	17	33
% App. Total	0	100	0		0	100	0		0	0	0		0	100	0		
PHF	.000	.250	.000	.250	.000	.813	.000	.813	.000	.000	.000	.000	.000	.607	.000	.607	.750

Counts Unlimited
PO Box 1178
Corona, CA 92878
(951) 268-6268

City of San Bernardino
N/S: Larch Avenue
E/W: Slover Avenue
Weather: Clear

File Name : 06_CSB_Larch_Slover PM
Site Code : 04520047
Start Date : 1/23/2020
Page No : 2

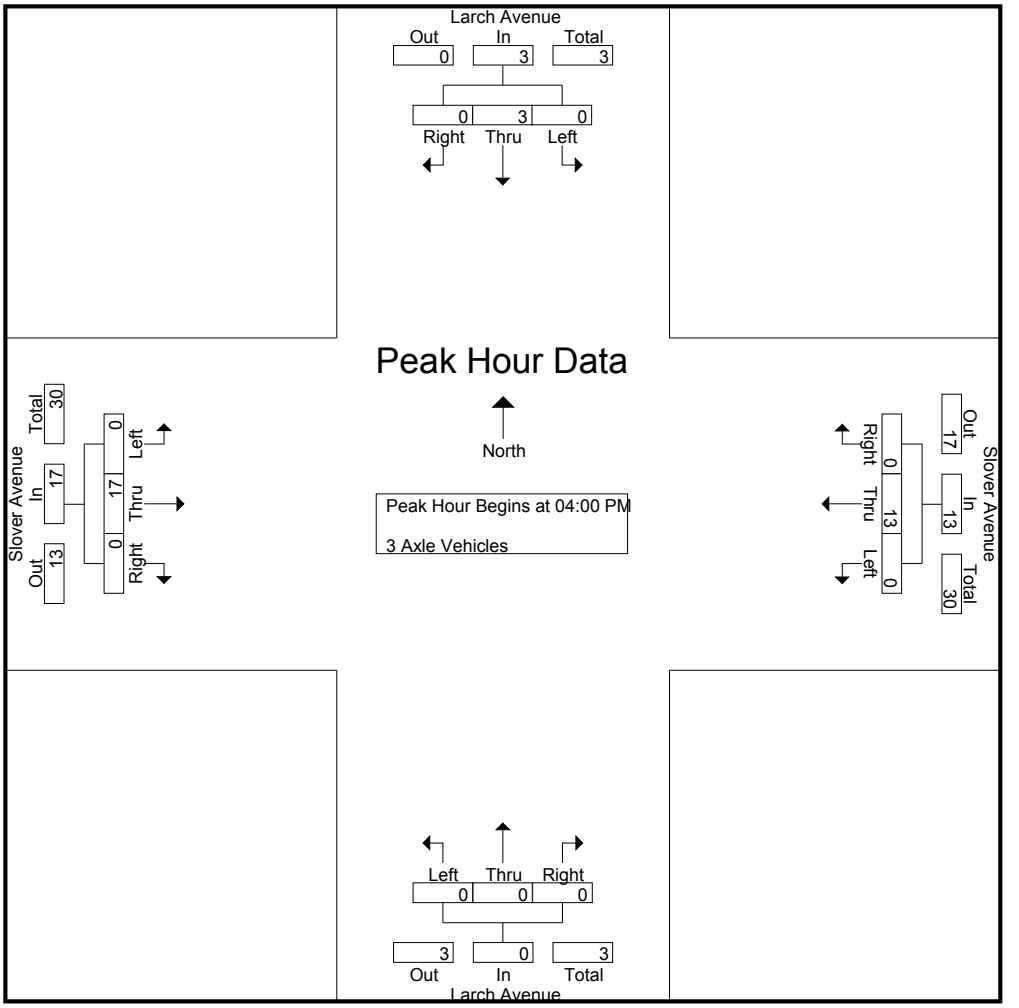

Peak Hour Analysis From 04:00 PM to 04:45 PM - Peak 1 of 1
Peak Hour for Each Approach Begins at:

	04:00 PM				04:00 PM				04:00 PM				04:00 PM			
+0 mins.	0	**3**	0	**3**	0	**4**	0	**4**	0	0	0	0	0	2	0	2
+15 mins.	0	0	0	0	0	3	0	3	0	0	0	0	0	5	0	5
+30 mins.	0	0	0	0	0	4	0	4	0	0	0	0	0	**7**	0	**7**
+45 mins.	0	0	0	0	0	2	0	2	0	0	0	0	0	3	0	3
Total Volume	0	3	0	3	0	13	0	13	0	0	0	0	0	17	0	17
% App. Total	0	100	0		0	100	0		0	0	0		0	100	0	
PHF	.000	.250	.000	.250	.000	.813	.000	.813	.000	.000	.000	.000	.000	.607	.000	.607

Counts Unlimited
PO Box 1178
Corona, CA 92878
(951) 268-6268

City of San Bernardino
N/S: Larch Avenue
E/W: Slover Avenue
Weather: Clear

File Name : 06_CSB_Larch_Slover PM
Site Code : 04520047
Start Date : 1/23/2020
Page No : 1

Groups Printed- 4+ Axle Trucks

	Larch Avenue Southbound				Slover Avenue Westbound				Larch Avenue Northbound				Slover Avenue Eastbound				
Start Time	Left	Thru	Right	App. Total	Left	Thru	Right	App. Total	Left	Thru	Right	App. Total	Left	Thru	Right	App. Total	Int. Total
04:00 PM	0	0	0	0	0	3	1	4	0	0	0	0	0	8	0	8	12
04:15 PM	0	0	0	0	0	7	0	7	1	0	1	2	0	10	1	11	20
04:30 PM	0	0	0	0	0	4	1	5	0	0	0	0	0	6	0	6	11
04:45 PM	0	0	0	0	0	3	0	3	0	0	0	0	0	14	0	14	17
Total	0	0	0	0	0	17	2	19	1	0	1	2	0	38	1	39	60
05:00 PM	0	0	0	0	0	3	0	3	0	0	0	0	0	7	0	7	10
05:15 PM	0	0	0	0	0	5	0	5	0	0	0	0	0	14	0	14	19
05:30 PM	0	0	0	0	0	9	0	9	0	0	0	0	0	8	0	8	17
05:45 PM	0	0	0	0	0	9	0	9	0	0	0	0	0	4	0	4	13
Total	0	0	0	0	0	26	0	26	0	0	0	0	0	33	0	33	59
Grand Total	0	0	0	0	0	43	2	45	1	0	1	2	0	71	1	72	119
Apprch %	0	0	0		0	95.6	4.4		50	0	50		0	98.6	1.4		
Total %	0	0	0	0	0	36.1	1.7	37.8	0.8	0	0.8	1.7	0	59.7	0.8	60.5	

	Larch Avenue Southbound				Slover Avenue Westbound				Larch Avenue Northbound				Slover Avenue Eastbound				
Start Time	Left	Thru	Right	App. Total	Left	Thru	Right	App. Total	Left	Thru	Right	App. Total	Left	Thru	Right	App. Total	Int. Total
Peak Hour Analysis From 04:00 PM to 04:45 PM - Peak 1 of 1																	
Peak Hour for Entire Intersection Begins at 04:00 PM																	
04:00 PM	0	0	0	0	0	3	**1**	4	0	0	0	0	0	8	0	8	12
04:15 PM	0	0	0	0	0	**7**	0	**7**	**1**	0	**1**	**2**	0	10	**1**	11	**20**
04:30 PM	0	0	0	0	0	4	1	5	0	0	0	0	0	6	0	6	11
04:45 PM	0	0	0	0	0	3	0	3	0	0	0	0	0	**14**	0	**14**	17
Total Volume	0	0	0	0	0	17	2	19	1	0	1	2	0	38	1	39	60
% App. Total	0	0	0		0	89.5	10.5		50	0	50		0	97.4	2.6		
PHF	.000	.000	.000	.000	.000	.607	.500	.679	.250	.000	.250	.250	.000	.679	.250	.696	.750

Counts Unlimited
PO Box 1178
Corona, CA 92878
(951) 268-6268

City of San Bernardino
N/S: Larch Avenue
E/W: Slover Avenue
Weather: Clear

File Name : 06_CSB_Larch_Slover PM
Site Code : 04520047
Start Date : 1/23/2020
Page No : 2

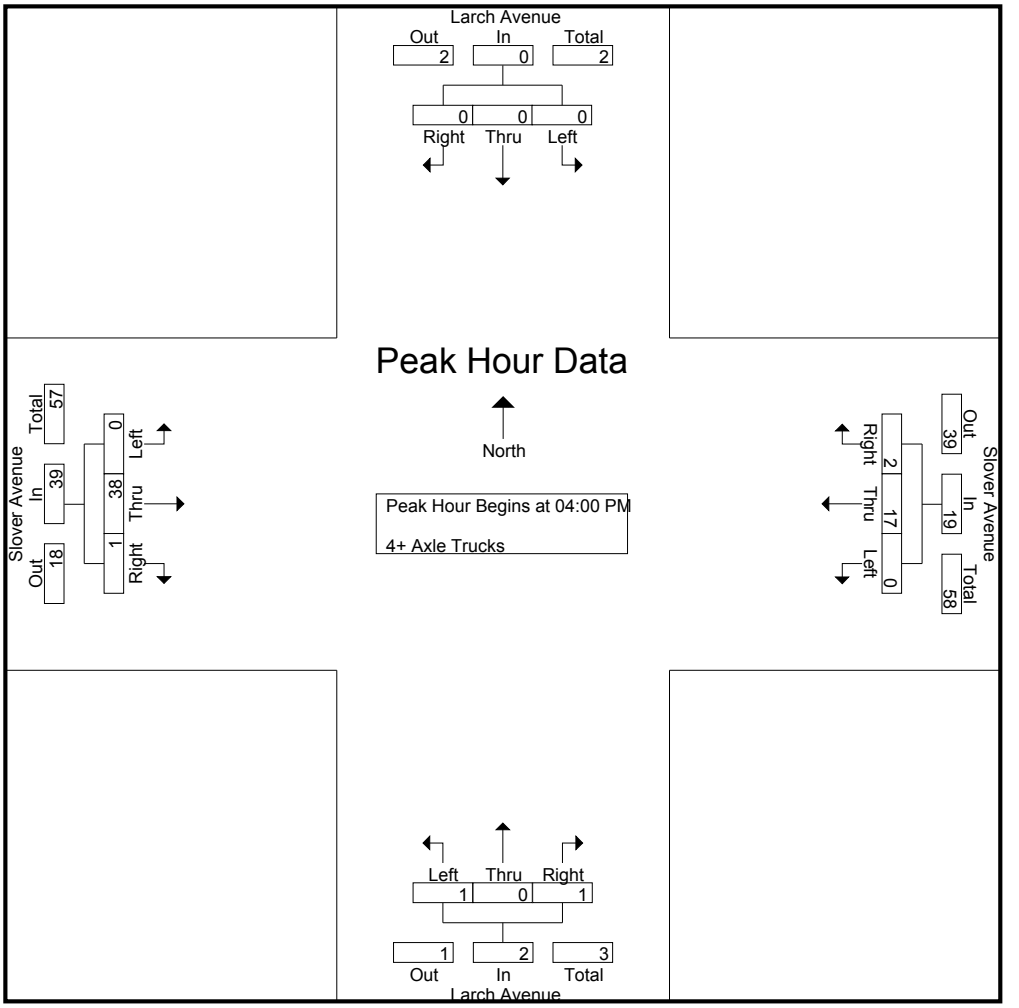

Peak Hour Analysis From 04:00 PM to 04:45 PM - Peak 1 of 1
Peak Hour for Each Approach Begins at:

	04:00 PM				04:00 PM				04:00 PM				04:00 PM			
+0 mins.	0	0	0	0	0	3	**1**	4	0	0	0	0	0	8	0	8
+15 mins.	0	0	0	0	0	**7**	0	**7**	**1**	0	**1**	**2**	0	10	**1**	11
+30 mins.	0	0	0	0	0	4	1	5	0	0	0	0	0	6	0	6
+45 mins.	0	0	0	0	0	3	0	3	0	0	0	0	0	**14**	0	**14**
Total Volume	0	0	0	0	0	17	2	19	1	0	1	2	0	38	1	39
% App. Total	0	0	0		0	89.5	10.5		50	0	50		0	97.4	2.6	
PHF	.000	.000	.000	.000	.000	.607	.500	.679	.250	.000	.250	.250	.000	.679	.250	.696

Counts Unlimited
PO Box 1178
Corona, CA 92878
(951) 268-6268

City of San Bernardino
N/S: Linden Avenue
E/W: Santa Ana Avenue
Weather: Clear

File Name : 07_CSB_Linden_Santa Ana AM
Site Code : 04520047
Start Date : 1/23/2020
Page No : 1

Groups Printed- Passenger Vehicles - Large 2 Axle Vehicles - 3 Axle Vehicles - 4+ Axle Trucks

	Linden Avenue Southbound				Santa Ana Avenue Westbound				Linden Avenue Northbound				Santa Ana Avenue Eastbound				
Start Time	Left	Thru	Right	App. Total	Left	Thru	Right	App. Total	Left	Thru	Right	App. Total	Left	Thru	Right	App. Total	Int. Total
07:00 AM	9	51	10	70	5	31	3	39	23	45	1	69	7	24	36	67	245
07:15 AM	10	54	12	76	5	40	8	53	25	46	4	75	10	26	20	56	260
07:30 AM	2	28	10	40	5	42	8	55	25	33	7	65	8	29	38	75	235
07:45 AM	1	28	3	32	7	8	7	22	5	21	3	29	2	18	17	37	120
Total	22	161	35	218	22	121	26	169	78	145	15	238	27	97	111	235	860
08:00 AM	4	31	2	37	4	5	5	14	8	31	4	43	6	8	5	19	113
08:15 AM	2	32	3	37	4	10	3	17	5	30	3	38	1	2	7	10	102
08:30 AM	1	30	3	34	5	9	3	17	5	20	4	29	3	5	3	11	91
08:45 AM	3	32	2	37	0	7	1	8	6	30	4	40	2	9	5	16	101
Total	10	125	10	145	13	31	12	56	24	111	15	150	12	24	20	56	407
Grand Total	32	286	45	363	35	152	38	225	102	256	30	388	39	121	131	291	1267
Apprch %	8.8	78.8	12.4		15.6	67.6	16.9		26.3	66	7.7		13.4	41.6	45		
Total %	2.5	22.6	3.6	28.7	2.8	12	3	17.8	8.1	20.2	2.4	30.6	3.1	9.6	10.3	23	
Passenger Vehicles	32	257	45	334	33	150	38	221	98	240	29	367	38	120	129	287	1209
% Passenger Vehicles	100	89.9	100	92	94.3	98.7	100	98.2	96.1	93.8	96.7	94.6	97.4	99.2	98.5	98.6	95.4
Large 2 Axle Vehicles	0	14	0	14	2	2	0	4	4	9	1	14	1	1	2	4	36
% Large 2 Axle Vehicles	0	4.9	0	3.9	5.7	1.3	0	1.8	3.9	3.5	3.3	3.6	2.6	0.8	1.5	1.4	2.8
3 Axle Vehicles	0	14	0	14	0	0	0	0	0	3	0	3	0	0	0	0	17
% 3 Axle Vehicles	0	4.9	0	3.9	0	0	0	0	0	1.2	0	0.8	0	0	0	0	1.3
4+ Axle Trucks	0	1	0	1	0	0	0	0	0	4	0	4	0	0	0	0	5
% 4+ Axle Trucks	0	0.3	0	0.3	0	0	0	0	0	1.6	0	1	0	0	0	0	0.4

	Linden Avenue Southbound				Santa Ana Avenue Westbound				Linden Avenue Northbound				Santa Ana Avenue Eastbound				
Start Time	Left	Thru	Right	App. Total	Left	Thru	Right	App. Total	Left	Thru	Right	App. Total	Left	Thru	Right	App. Total	Int. Total
Peak Hour Analysis From 07:00 AM to 08:45 AM - Peak 1 of 1																	
Peak Hour for Entire Intersection Begins at 07:00 AM																	
07:00 AM	9	51	10	70	5	31	3	39	23	45	1	69	7	24	36	67	245
07:15 AM	**10**	**54**	**12**	**76**	5	40	**8**	53	**25**	**46**	4	**75**	**10**	26	20	56	**260**
07:30 AM	2	28	10	40	5	**42**	8	**55**	25	33	**7**	65	8	**29**	**38**	**75**	235
07:45 AM	1	28	3	32	**7**	8	7	22	5	21	3	29	2	18	17	37	120
Total Volume	22	161	35	218	22	121	26	169	78	145	15	238	27	97	111	235	860
% App. Total	10.1	73.9	16.1		13	71.6	15.4		32.8	60.9	6.3		11.5	41.3	47.2		
PHF	.550	.745	.729	.717	.786	.720	.813	.768	.780	.788	.536	.793	.675	.836	.730	.783	.827

Counts Unlimited
PO Box 1178
Corona, CA 92878
(951) 268-6268

City of San Bernardino
N/S: Linden Avenue
E/W: Santa Ana Avenue
Weather: Clear

File Name : 07_CSB_Linden_Santa Ana AM
Site Code : 04520047
Start Date : 1/23/2020
Page No : 2

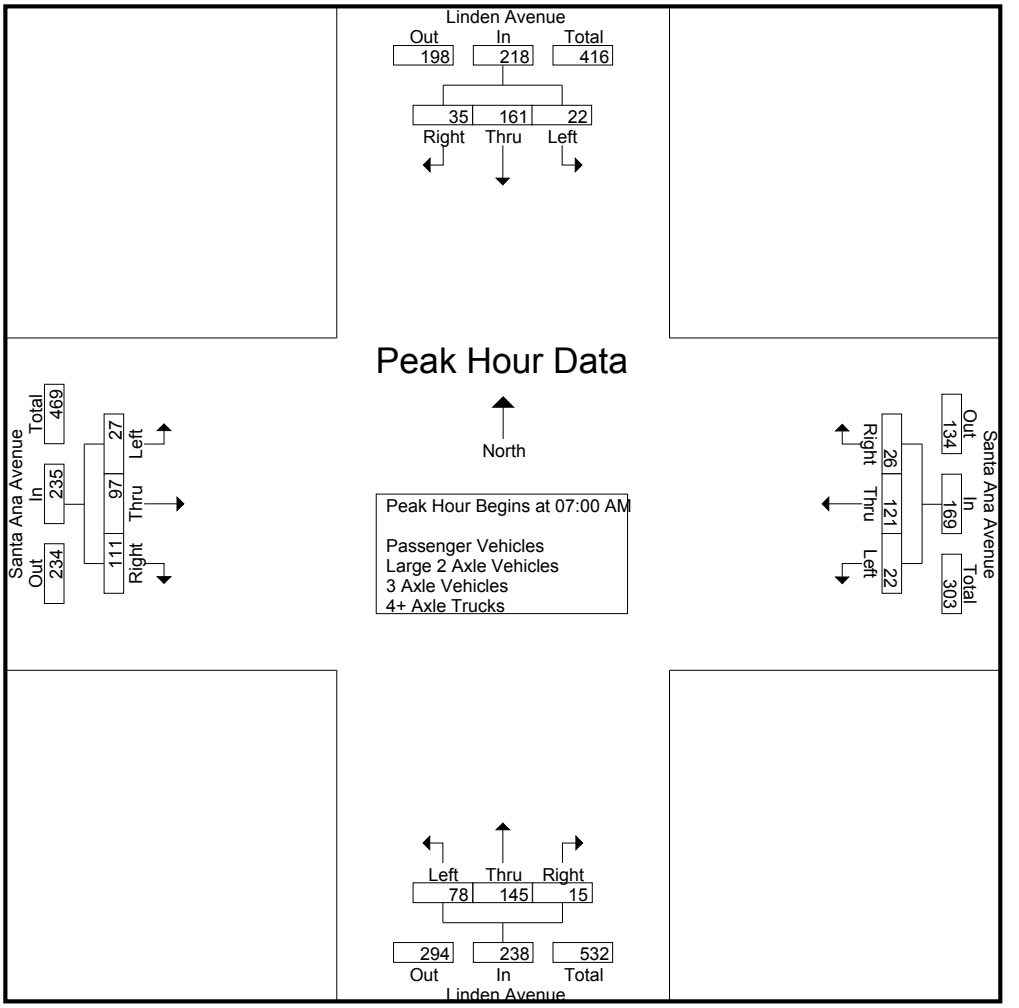

Peak Hour Analysis From 07:00 AM to 08:45 AM - Peak 1 of 1
Peak Hour for Each Approach Begins at:

	07:00 AM				07:00 AM				07:00 AM				07:00 AM			
+0 mins.	9	51	10	70	5	31	3	39	23	45	1	69	7	24	36	67
+15 mins.	**10**	**54**	**12**	**76**	5	40	**8**	53	**25**	**46**	4	**75**	**10**	26	20	56
+30 mins.	2	28	10	40	5	**42**	8	**55**	25	33	**7**	65	8	**29**	**38**	**75**
+45 mins.	1	28	3	32	**7**	8	7	22	5	21	3	29	2	18	17	37
Total Volume	22	161	35	218	22	121	26	169	78	145	15	238	27	97	111	235
% App. Total	10.1	73.9	16.1		13	71.6	15.4		32.8	60.9	6.3		11.5	41.3	47.2	
PHF	.550	.745	.729	.717	.786	.720	.813	.768	.780	.788	.536	.793	.675	.836	.730	.783

Counts Unlimited
PO Box 1178
Corona, CA 92878
(951) 268-6268

City of San Bernardino
N/S: Linden Avenue
E/W: Santa Ana Avenue
Weather: Clear

File Name : 07_CSB_Linden_Santa Ana AM
Site Code : 04520047
Start Date : 1/23/2020
Page No : 1

Groups Printed- Passenger Vehicles

	Linden Avenue Southbound				Santa Ana Avenue Westbound				Linden Avenue Northbound				Santa Ana Avenue Eastbound				
Start Time	Left	Thru	Right	App. Total	Left	Thru	Right	App. Total	Left	Thru	Right	App. Total	Left	Thru	Right	App. Total	Int. Total
07:00 AM	9	51	10	70	5	31	3	39	23	44	1	68	7	23	36	66	243
07:15 AM	10	54	12	76	5	38	8	51	24	45	4	73	10	26	19	55	255
07:30 AM	2	24	10	36	5	42	8	55	24	29	7	60	8	29	38	75	226
07:45 AM	1	24	3	28	6	8	7	21	5	19	3	27	2	18	17	37	113
Total	22	153	35	210	21	119	26	166	76	137	15	228	27	96	110	233	837
08:00 AM	4	27	2	33	3	5	5	13	6	29	4	39	5	8	5	18	103
08:15 AM	2	29	3	34	4	10	3	17	5	28	2	35	1	2	6	9	95
08:30 AM	1	22	3	26	5	9	3	17	5	17	4	26	3	5	3	11	80
08:45 AM	3	26	2	31	0	7	1	8	6	29	4	39	2	9	5	16	94
Total	10	104	10	124	12	31	12	55	22	103	14	139	11	24	19	54	372
Grand Total	32	257	45	334	33	150	38	221	98	240	29	367	38	120	129	287	1209
Apprch %	9.6	76.9	13.5		14.9	67.9	17.2		26.7	65.4	7.9		13.2	41.8	44.9		
Total %	2.6	21.3	3.7	27.6	2.7	12.4	3.1	18.3	8.1	19.9	2.4	30.4	3.1	9.9	10.7	23.7	

	Linden Avenue Southbound				Santa Ana Avenue Westbound				Linden Avenue Northbound				Santa Ana Avenue Eastbound				
Start Time	Left	Thru	Right	App. Total	Left	Thru	Right	App. Total	Left	Thru	Right	App. Total	Left	Thru	Right	App. Total	Int. Total
Peak Hour Analysis From 07:00 AM to 07:45 AM - Peak 1 of 1																	
Peak Hour for Entire Intersection Begins at 07:00 AM																	
07:00 AM	9	51	10	70	5	31	3	39	23	44	1	68	7	23	36	66	243
07:15 AM	**10**	**54**	**12**	**76**	5	38	**8**	51	**24**	**45**	4	**73**	**10**	26	19	55	**255**
07:30 AM	2	24	10	36	5	**42**	8	**55**	24	29	**7**	60	8	**29**	**38**	**75**	226
07:45 AM	1	24	3	28	**6**	8	7	21	5	19	3	27	2	18	17	37	113
Total Volume	22	153	35	210	21	119	26	166	76	137	15	228	27	96	110	233	837
% App. Total	10.5	72.9	16.7		12.7	71.7	15.7		33.3	60.1	6.6		11.6	41.2	47.2		
PHF	.550	.708	.729	.691	.875	.708	.813	.755	.792	.761	.536	.781	.675	.828	.724	.777	.821

Counts Unlimited
PO Box 1178
Corona, CA 92878
(951) 268-6268

City of San Bernardino
N/S: Linden Avenue
E/W: Santa Ana Avenue
Weather: Clear

File Name : 07_CSB_Linden_Santa Ana AM
Site Code : 04520047
Start Date : 1/23/2020
Page No : 2

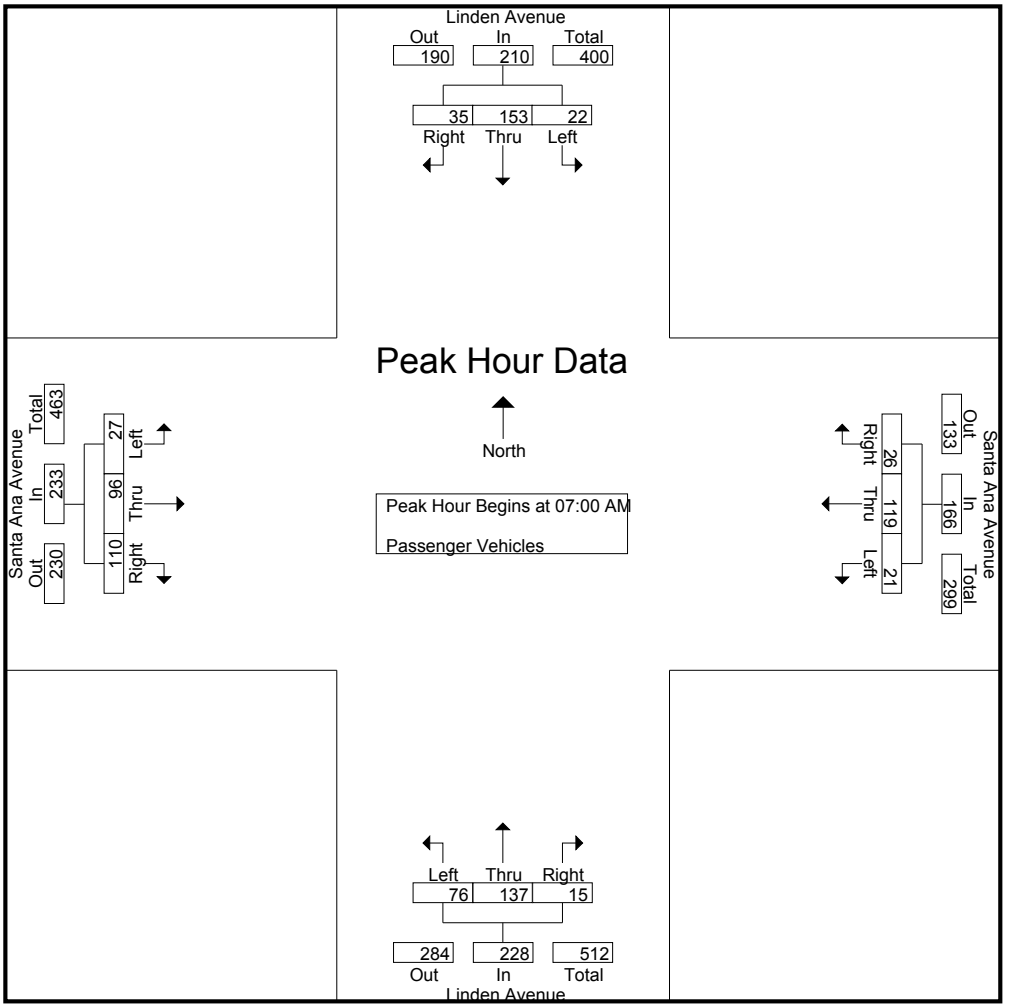

Peak Hour Analysis From 07:00 AM to 07:45 AM - Peak 1 of 1
Peak Hour for Each Approach Begins at:

	07:00 AM				07:00 AM				07:00 AM				07:00 AM			
+0 mins.	9	51	10	70	5	31	3	39	23	44	1	68	7	23	36	66
+15 mins.	**10**	**54**	**12**	**76**	5	38	**8**	51	**24**	**45**	4	**73**	**10**	26	19	55
+30 mins.	2	24	10	36	5	**42**	8	**55**	24	29	**7**	60	8	**29**	**38**	**75**
+45 mins.	1	24	3	28	**6**	8	7	21	5	19	3	27	2	18	17	37
Total Volume	22	153	35	210	21	119	26	166	76	137	15	228	27	96	110	233
% App. Total	10.5	72.9	16.7		12.7	71.7	15.7		33.3	60.1	6.6		11.6	41.2	47.2	
PHF	.550	.708	.729	.691	.875	.708	.813	.755	.792	.761	.536	.781	.675	.828	.724	.777

Counts Unlimited
PO Box 1178
Corona, CA 92878
(951) 268-6268

City of San Bernardino
N/S: Linden Avenue
E/W: Santa Ana Avenue
Weather: Clear

File Name : 07_CSB_Linden_Santa Ana AM
Site Code : 04520047
Start Date : 1/23/2020
Page No : 1

Groups Printed- Large 2 Axle Vehicles

	Linden Avenue Southbound				Santa Ana Avenue Westbound				Linden Avenue Northbound				Santa Ana Avenue Eastbound				
Start Time	Left	Thru	Right	App. Total	Left	Thru	Right	App. Total	Left	Thru	Right	App. Total	Left	Thru	Right	App. Total	Int. Total
07:00 AM	0	0	0	0	0	0	0	0	0	0	0	0	0	1	0	1	1
07:15 AM	0	0	0	0	0	2	0	2	1	1	0	2	0	0	1	1	5
07:30 AM	0	2	0	2	0	0	0	0	1	2	0	3	0	0	0	0	5
07:45 AM	0	2	0	2	1	0	0	1	0	2	0	2	0	0	0	0	5
Total	0	4	0	4	1	2	0	3	2	5	0	7	0	1	1	2	16
08:00 AM	0	2	0	2	1	0	0	1	2	0	0	2	1	0	0	1	6
08:15 AM	0	1	0	1	0	0	0	0	0	2	1	3	0	0	1	1	5
08:30 AM	0	4	0	4	0	0	0	0	0	1	0	1	0	0	0	0	5
08:45 AM	0	3	0	3	0	0	0	0	0	1	0	1	0	0	0	0	4
Total	0	10	0	10	1	0	0	1	2	4	1	7	1	0	1	2	20
Grand Total	0	14	0	14	2	2	0	4	4	9	1	14	1	1	2	4	36
Apprch %	0	100	0		50	50	0		28.6	64.3	7.1		25	25	50		
Total %	0	38.9	0	38.9	5.6	5.6	0	11.1	11.1	25	2.8	38.9	2.8	2.8	5.6	11.1	

	Linden Avenue Southbound				Santa Ana Avenue Westbound				Linden Avenue Northbound				Santa Ana Avenue Eastbound				
Start Time	Left	Thru	Right	App. Total	Left	Thru	Right	App. Total	Left	Thru	Right	App. Total	Left	Thru	Right	App. Total	Int. Total
Peak Hour Analysis From 07:00 AM to 07:45 AM - Peak 1 of 1																	
Peak Hour for Entire Intersection Begins at 07:00 AM																	
07:00 AM	0	0	0	0	0	0	0	0	0	0	0	0	0	**1**	0	**1**	1
07:15 AM	0	0	0	0	0	**2**	0	**2**	**1**	1	0	2	0	0	**1**	1	**5**
07:30 AM	0	**2**	0	**2**	0	0	0	0	1	**2**	0	**3**	0	0	0	0	5
07:45 AM	0	2	0	2	**1**	0	0	1	0	2	0	2	0	0	0	0	5
Total Volume	0	4	0	4	1	2	0	3	2	5	0	7	0	1	1	2	16
% App. Total	0	100	0		33.3	66.7	0		28.6	71.4	0		0	50	50		
PHF	.000	.500	.000	.500	.250	.250	.000	.375	.500	.625	.000	.583	.000	.250	.250	.500	.800

Counts Unlimited
PO Box 1178
Corona, CA 92878
(951) 268-6268

City of San Bernardino
N/S: Linden Avenue
E/W: Santa Ana Avenue
Weather: Clear

File Name : 07_CSB_Linden_Santa Ana AM
Site Code : 04520047
Start Date : 1/23/2020
Page No : 2

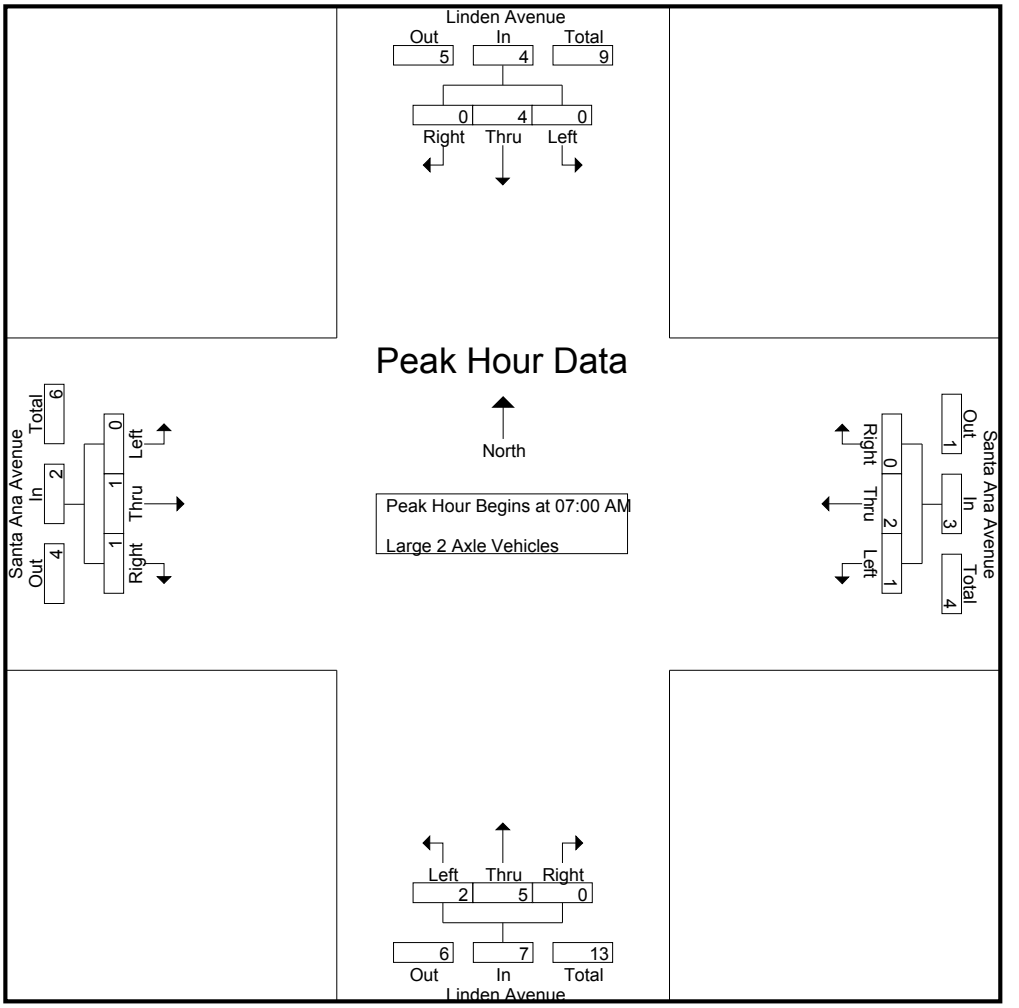

Peak Hour Analysis From 07:00 AM to 07:45 AM - Peak 1 of 1
Peak Hour for Each Approach Begins at:

	07:00 AM				07:00 AM				07:00 AM				07:00 AM			
+0 mins.	0	0	0	0	0	0	0	0	0	0	0	0	0	**1**	0	**1**
+15 mins.	0	0	0	0	0	**2**	0	**2**	**1**	1	0	2	0	0	**1**	1
+30 mins.	0	**2**	0	**2**	0	0	0	0	1	**2**	0	**3**	0	0	0	0
+45 mins.	0	2	0	2	**1**	0	0	1	0	2	0	2	0	0	0	0
Total Volume	0	4	0	4	1	2	0	3	2	5	0	7	0	1	1	2
% App. Total	0	100	0		33.3	66.7	0		28.6	71.4	0		0	50	50	
PHF	.000	.500	.000	.500	.250	.250	.000	.375	.500	.625	.000	.583	.000	.250	.250	.500

Counts Unlimited
PO Box 1178
Corona, CA 92878
(951) 268-6268

City of San Bernardino
N/S: Linden Avenue
E/W: Santa Ana Avenue
Weather: Clear

File Name : 07_CSB_Linden_Santa Ana AM
Site Code : 04520047
Start Date : 1/23/2020

Groups Printed- 3 Axle Vehicles

	Linden Avenue Southbound				Santa Ana Avenue Westbound				Linden Avenue Northbound				Santa Ana Avenue Eastbound				
Start Time	Left	Thru	Right	App. Total	Left	Thru	Right	App. Total	Left	Thru	Right	App. Total	Left	Thru	Right	App. Total	Int. Total
07:00 AM	0	0	0	0	0	0	0	0	0	1	0	1	0	0	0	0	1
07:15 AM	0	0	0	0	0	0	0	0	0	0	0	0	0	0	0	0	0
07:30 AM	0	2	0	2	0	0	0	0	0	0	0	0	0	0	0	0	2
07:45 AM	0	2	0	2	0	0	0	0	0	0	0	0	0	0	0	0	2
Total	0	4	0	4	0	0	0	0	0	1	0	1	0	0	0	0	5
08:00 AM	0	2	0	2	0	0	0	0	0	0	0	0	0	0	0	0	2
08:15 AM	0	1	0	1	0	0	0	0	0	0	0	0	0	0	0	0	1
08:30 AM	0	4	0	4	0	0	0	0	0	2	0	2	0	0	0	0	6
08:45 AM	0	3	0	3	0	0	0	0	0	0	0	0	0	0	0	0	3
Total	0	10	0	10	0	0	0	0	0	2	0	2	0	0	0	0	12
Grand Total	0	14	0	14	0	0	0	0	0	3	0	3	0	0	0	0	17
Apprch %	0	100	0		0	0	0		0	100	0		0	0	0		
Total %	0	82.4	0	82.4	0	0	0	0	0	17.6	0	17.6	0	0	0	0	

	Linden Avenue Southbound				Santa Ana Avenue Westbound				Linden Avenue Northbound				Santa Ana Avenue Eastbound				
Start Time	Left	Thru	Right	App. Total	Left	Thru	Right	App. Total	Left	Thru	Right	App. Total	Left	Thru	Right	App. Total	Int. Total
Peak Hour Analysis From 07:00 AM to 07:45 AM - Peak 1 of 1																	
Peak Hour for Entire Intersection Begins at 07:00 AM																	
07:00 AM	0	0	0	0	0	0	0	0	0	**1**	0	**1**	0	0	0	0	1
07:15 AM	0	0	0	0	0	0	0	0	0	0	0	0	0	0	0	0	0
07:30 AM	0	**2**	0	**2**	0	0	0	0	0	0	0	0	0	0	0	0	**2**
07:45 AM	0	2	0	2	0	0	0	0	0	0	0	0	0	0	0	0	2
Total Volume	0	4	0	4	0	0	0	0	0	1	0	1	0	0	0	0	5
% App. Total	0	100	0		0	0	0		0	100	0		0	0	0		
PHF	.000	.500	.000	.500	.000	.000	.000	.000	.000	.250	.000	.250	.000	.000	.000	.000	.625

Counts Unlimited
PO Box 1178
Corona, CA 92878
(951) 268-6268

City of San Bernardino
N/S: Linden Avenue
E/W: Santa Ana Avenue
Weather: Clear

File Name : 07_CSB_Linden_Santa Ana AM
Site Code : 04520047
Start Date : 1/23/2020
Page No : 2

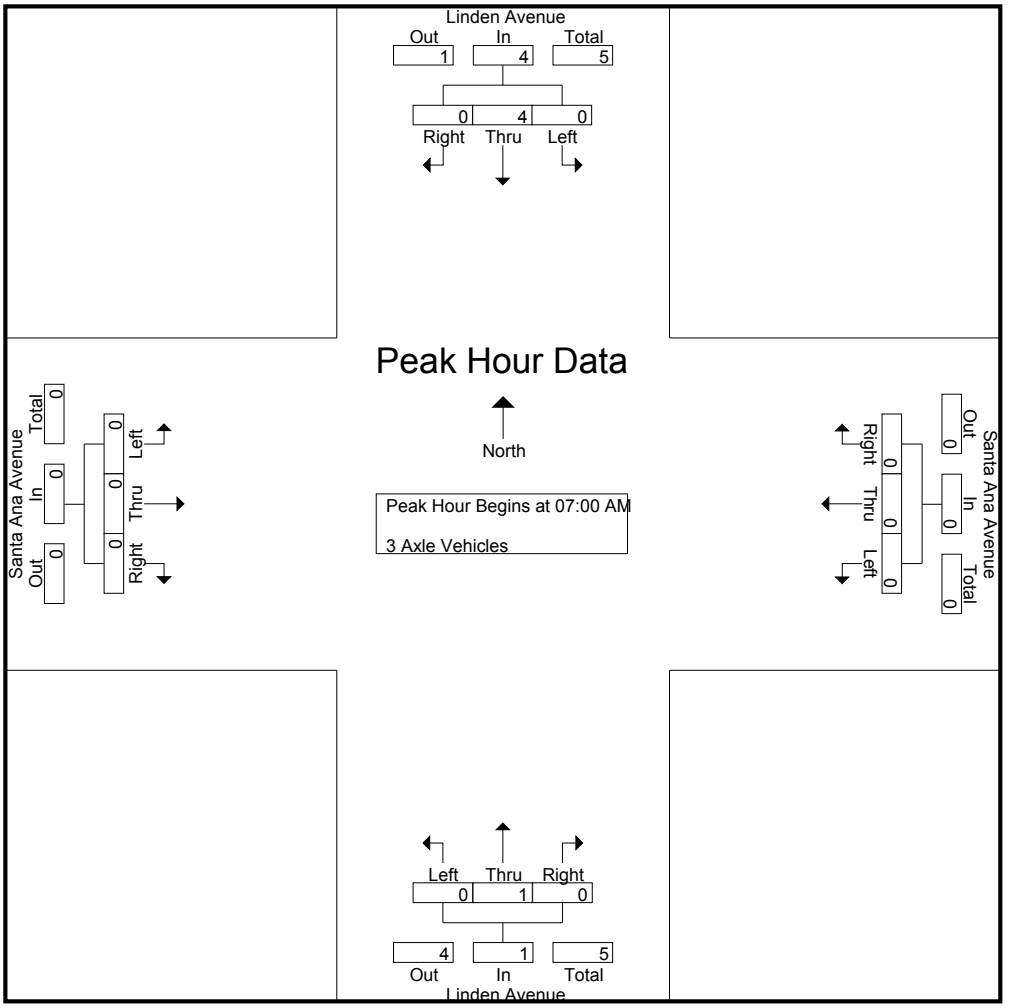

Peak Hour Analysis From 07:00 AM to 07:45 AM - Peak 1 of 1
Peak Hour for Each Approach Begins at:

	07:00 AM				07:00 AM				07:00 AM				07:00 AM			
+0 mins.	0	0	0	0	0	0	0	0	0	**1**	0	**1**	0	0	0	0
+15 mins.	0	0	0	0	0	0	0	0	0	0	0	0	0	0	0	0
+30 mins.	0	**2**	0	**2**	0	0	0	0	0	0	0	0	0	0	0	0
+45 mins.	0	2	0	2	0	0	0	0	0	0	0	0	0	0	0	0
Total Volume	0	4	0	4	0	0	0	0	0	1	0	1	0	0	0	0
% App. Total	0	100	0		0	0	0		0	100	0		0	0	0	
PHF	.000	.500	.000	.500	.000	.000	.000	.000	.000	.250	.000	.250	.000	.000	.000	.000

Counts Unlimited
PO Box 1178
Corona, CA 92878
(951) 268-6268

City of San Bernardino
N/S: Linden Avenue
E/W: Santa Ana Avenue
Weather: Clear

File Name : 07_CSB_Linden_Santa Ana AM
Site Code : 04520047
Start Date : 1/23/2020
Page No : 1

Groups Printed- 4+ Axle Trucks

	Linden Avenue Southbound				Santa Ana Avenue Westbound				Linden Avenue Northbound				Santa Ana Avenue Eastbound				
Start Time	Left	Thru	Right	App. Total	Left	Thru	Right	App. Total	Left	Thru	Right	App. Total	Left	Thru	Right	App. Total	Int. Total
07:00 AM	0	0	0	0	0	0	0	0	0	0	0	0	0	0	0	0	0
07:15 AM	0	0	0	0	0	0	0	0	0	0	0	0	0	0	0	0	0
07:30 AM	0	0	0	0	0	0	0	0	0	2	0	2	0	0	0	0	2
07:45 AM	0	0	0	0	0	0	0	0	0	0	0	0	0	0	0	0	0
Total	0	0	0	0	0	0	0	0	0	2	0	2	0	0	0	0	2
08:00 AM	0	0	0	0	0	0	0	0	0	2	0	2	0	0	0	0	2
08:15 AM	0	1	0	1	0	0	0	0	0	0	0	0	0	0	0	0	1
08:30 AM	0	0	0	0	0	0	0	0	0	0	0	0	0	0	0	0	0
08:45 AM	0	0	0	0	0	0	0	0	0	0	0	0	0	0	0	0	0
Total	0	1	0	1	0	0	0	0	0	2	0	2	0	0	0	0	3
Grand Total	0	1	0	1	0	0	0	0	0	4	0	4	0	0	0	0	5
Apprch %	0	100	0		0	0	0		0	100	0		0	0	0		
Total %	0	20	0	20	0	0	0	0	0	80	0	80	0	0	0	0	

	Linden Avenue Southbound				Santa Ana Avenue Westbound				Linden Avenue Northbound				Santa Ana Avenue Eastbound				
Start Time	Left	Thru	Right	App. Total	Left	Thru	Right	App. Total	Left	Thru	Right	App. Total	Left	Thru	Right	App. Total	Int. Total
Peak Hour Analysis From 07:00 AM to 07:45 AM - Peak 1 of 1																	
Peak Hour for Entire Intersection Begins at 07:00 AM																	
07:00 AM	0	0	0	0	0	0	0	0	0	0	0	0	0	0	0	0	0
07:15 AM	0	0	0	0	0	0	0	0	0	0	0	0	0	0	0	0	0
07:30 AM	0	0	0	0	0	0	0	0	0	**2**	0	**2**	0	0	0	0	**2**
07:45 AM	0	0	0	0	0	0	0	0	0	0	0	0	0	0	0	0	0
Total Volume	0	0	0	0	0	0	0	0	0	2	0	2	0	0	0	0	2
% App. Total	0	0	0		0	0	0		0	100	0		0	0	0		
PHF	.000	.000	.000	.000	.000	.000	.000	.000	.000	.250	.000	.250	.000	.000	.000	.000	.250

Counts Unlimited
PO Box 1178
Corona, CA 92878
(951) 268-6268

City of San Bernardino
N/S: Linden Avenue
E/W: Santa Ana Avenue
Weather: Clear

File Name : 07_CSB_Linden_Santa Ana AM
Site Code : 04520047
Start Date : 1/23/2020
Page No : 2

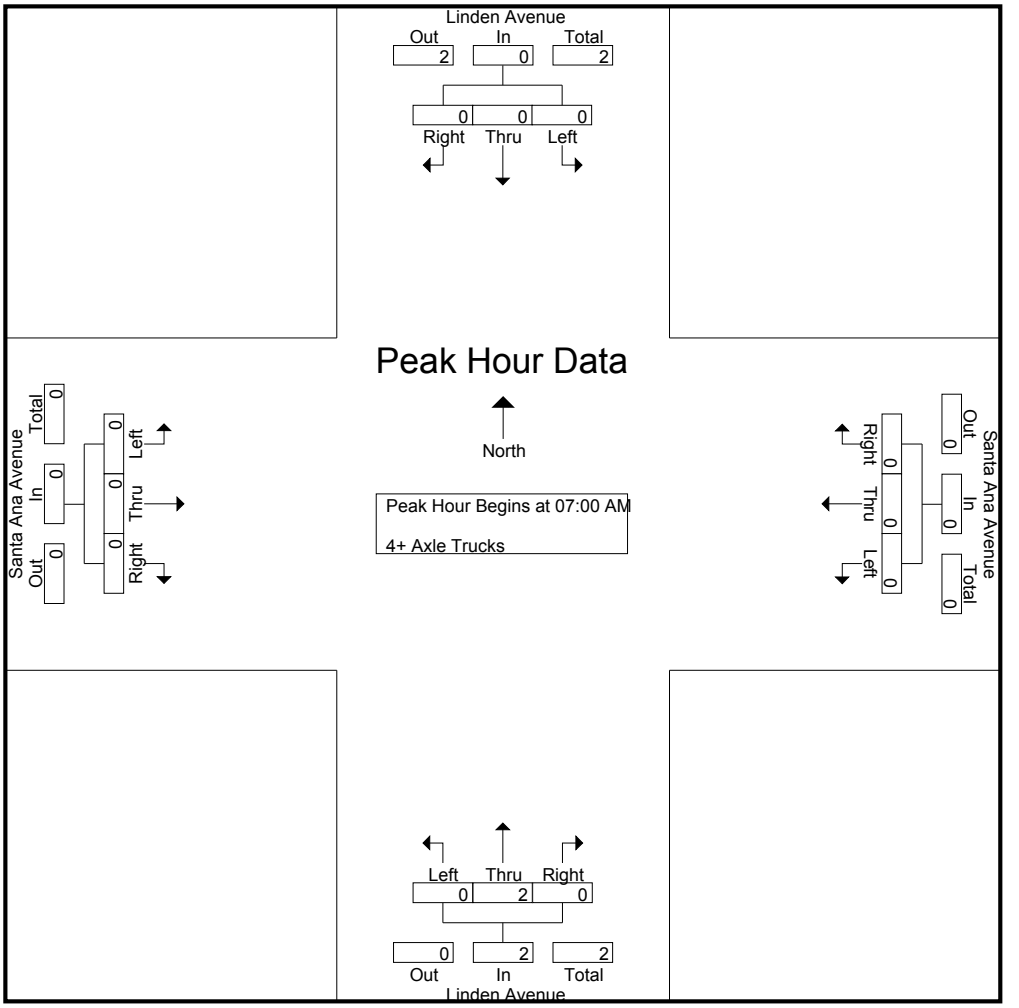

Peak Hour Analysis From 07:00 AM to 07:45 AM - Peak 1 of 1
Peak Hour for Each Approach Begins at:

	07:00 AM				07:00 AM				07:00 AM				07:00 AM			
+0 mins.	0	0	0	0	0	0	0	0	0	0	0	0	0	0	0	0
+15 mins.	0	0	0	0	0	0	0	0	0	0	0	0	0	0	0	0
+30 mins.	0	0	0	0	0	0	0	0	0	**2**	0	**2**	0	0	0	0
+45 mins.	0	0	0	0	0	0	0	0	0	0	0	0	0	0	0	0
Total Volume	0	0	0	0	0	0	0	0	0	2	0	2	0	0	0	0
% App. Total	0	0	0		0	0	0		0	100	0		0	0	0	
PHF	.000	.000	.000	.000	.000	.000	.000	.000	.000	.250	.000	.250	.000	.000	.000	.000

Counts Unlimited
PO Box 1178
Corona, CA 92878
(951) 268-6268

City of San Bernardino
N/S: Linden Avenue
E/W: Santa Ana Avenue
Weather: Clear

File Name : 07_CSB_Linden_Santa Ana PM
Site Code : 04520047
Start Date : 1/23/2020

Groups Printed- Passenger Vehicles - Large 2 Axle Vehicles - 3 Axle Vehicles - 4+ Axle Trucks

	Linden Avenue Southbound				Santa Ana Avenue Westbound				Linden Avenue Northbound				Santa Ana Avenue Eastbound				
Start Time	Left	Thru	Right	App. Total	Left	Thru	Right	App. Total	Left	Thru	Right	App. Total	Left	Thru	Right	App. Total	Int. Total
04:00 PM	14	60	6	80	4	21	5	30	6	55	9	70	5	27	15	47	227
04:15 PM	17	51	4	72	7	12	7	26	11	45	6	62	6	23	10	39	199
04:30 PM	11	60	2	73	1	13	4	18	14	60	5	79	11	38	10	59	229
04:45 PM	8	66	6	80	4	21	2	27	10	73	10	93	8	29	11	48	248
Total	50	237	18	305	16	67	18	101	41	233	30	304	30	117	46	193	903
05:00 PM	9	57	1	67	4	21	6	31	15	54	11	80	4	28	10	42	220
05:15 PM	8	52	3	63	7	13	9	29	10	58	8	76	6	32	19	57	225
05:30 PM	4	64	8	76	6	16	4	26	9	69	4	82	6	32	13	51	235
05:45 PM	14	61	2	77	10	14	5	29	7	59	4	70	6	27	11	44	220
Total	35	234	14	283	27	64	24	115	41	240	27	308	22	119	53	194	900
Grand Total	85	471	32	588	43	131	42	216	82	473	57	612	52	236	99	387	1803
Apprch %	14.5	80.1	5.4		19.9	60.6	19.4		13.4	77.3	9.3		13.4	61	25.6		
Total %	4.7	26.1	1.8	32.6	2.4	7.3	2.3	12	4.5	26.2	3.2	33.9	2.9	13.1	5.5	21.5	
Passenger Vehicles	81	432	30	543	42	129	40	211	79	457	55	591	52	231	97	380	1725
% Passenger Vehicles	95.3	91.7	93.8	92.3	97.7	98.5	95.2	97.7	96.3	96.6	96.5	96.6	100	97.9	98	98.2	95.7
Large 2 Axle Vehicles	2	18	1	21	0	2	1	3	3	13	1	17	0	4	2	6	47
% Large 2 Axle Vehicles	2.4	3.8	3.1	3.6	0	1.5	2.4	1.4	3.7	2.7	1.8	2.8	0	1.7	2	1.6	2.6
3 Axle Vehicles	2	18	0	20	0	0	0	0	0	0	0	0	0	0	0	0	20
% 3 Axle Vehicles	2.4	3.8	0	3.4	0	0	0	0	0	0	0	0	0	0	0	0	1.1
4+ Axle Trucks	0	3	1	4	1	0	1	2	0	3	1	4	0	1	0	1	11
% 4+ Axle Trucks	0	0.6	3.1	0.7	2.3	0	2.4	0.9	0	0.6	1.8	0.7	0	0.4	0	0.3	0.6

	Linden Avenue Southbound				Santa Ana Avenue Westbound				Linden Avenue Northbound				Santa Ana Avenue Eastbound				
Start Time	Left	Thru	Right	App. Total	Left	Thru	Right	App. Total	Left	Thru	Right	App. Total	Left	Thru	Right	App. Total	Int. Total
Peak Hour Analysis From 04:00 PM to 05:45 PM - Peak 1 of 1																	
Peak Hour for Entire Intersection Begins at 04:45 PM																	
04:45 PM	8	**66**	6	**80**	4	**21**	2	27	10	**73**	10	**93**	**8**	29	11	48	**248**
05:00 PM	**9**	57	1	67	4	21	6	**31**	**15**	54	**11**	80	4	28	10	42	220
05:15 PM	8	52	3	63	**7**	13	**9**	29	10	58	8	76	6	**32**	**19**	**57**	225
05:30 PM	4	64	**8**	76	6	16	4	26	9	69	4	82	6	32	13	51	235
Total Volume	29	239	18	286	21	71	21	113	44	254	33	331	24	121	53	198	928
% App. Total	10.1	83.6	6.3		18.6	62.8	18.6		13.3	76.7	10		12.1	61.1	26.8		
PHF	.806	.905	.563	.894	.750	.845	.583	.911	.733	.870	.750	.890	.750	.945	.697	.868	.935

Counts Unlimited
PO Box 1178
Corona, CA 92878
(951) 268-6268

City of San Bernardino
N/S: Linden Avenue
E/W: Santa Ana Avenue
Weather: Clear

File Name : 07_CSB_Linden_Santa Ana PM
Site Code : 04520047
Start Date : 1/23/2020
Page No : 2

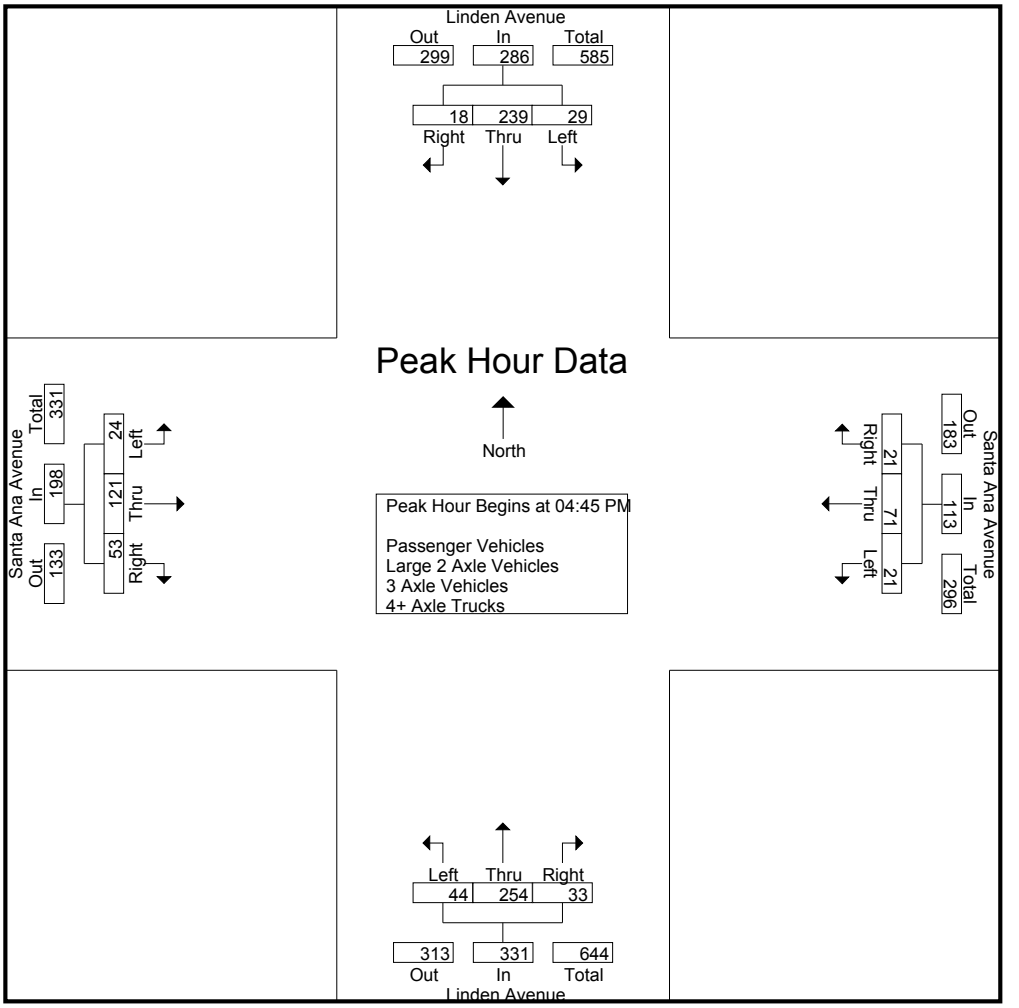

Peak Hour Analysis From 04:00 PM to 05:45 PM - Peak 1 of 1
Peak Hour for Each Approach Begins at:

	04:00 PM				05:00 PM				04:45 PM				04:30 PM			
+0 mins.	14	60	**6**	**80**	4	**21**	6	**31**	10	**73**	10	**93**	**11**	**38**	10	**59**
+15 mins.	**17**	51	4	72	7	13	**9**	29	**15**	54	**11**	80	8	29	11	48
+30 mins.	11	60	2	73	6	16	4	26	10	58	8	76	4	28	10	42
+45 mins.	8	**66**	6	80	**10**	14	5	29	9	69	4	82	6	32	**19**	57
Total Volume	50	237	18	305	27	64	24	115	44	254	33	331	29	127	50	206
% App. Total	16.4	77.7	5.9		23.5	55.7	20.9		13.3	76.7	10		14.1	61.7	24.3	
PHF	.735	.898	.750	.953	.675	.762	.667	.927	.733	.870	.750	.890	.659	.836	.658	.873

Counts Unlimited
PO Box 1178
Corona, CA 92878
(951) 268-6268

City of San Bernardino
N/S: Linden Avenue
E/W: Santa Ana Avenue
Weather: Clear

File Name : 07_CSB_Linden_Santa Ana PM
Site Code : 04520047
Start Date : 1/23/2020
Page No : 1

Groups Printed- Passenger Vehicles

	Linden Avenue Southbound				Santa Ana Avenue Westbound				Linden Avenue Northbound				Santa Ana Avenue Eastbound				
Start Time	Left	Thru	Right	App. Total	Left	Thru	Right	App. Total	Left	Thru	Right	App. Total	Left	Thru	Right	App. Total	Int. Total
04:00 PM	12	60	5	77	4	21	5	30	6	53	9	68	5	27	15	47	222
04:15 PM	17	49	3	69	7	11	7	25	10	42	5	57	6	23	9	38	189
04:30 PM	10	53	2	65	1	13	4	18	14	60	5	79	11	37	9	57	219
04:45 PM	8	60	6	74	4	21	2	27	10	72	10	92	8	28	11	47	240
Total	47	222	16	285	16	66	18	100	40	227	29	296	30	115	44	189	870
05:00 PM	9	51	1	61	4	21	5	30	13	51	10	74	4	27	10	41	206
05:15 PM	7	44	3	54	6	13	9	28	10	58	8	76	6	31	19	56	214
05:30 PM	4	58	8	70	6	15	4	25	9	66	4	79	6	32	13	51	225
05:45 PM	14	57	2	73	10	14	4	28	7	55	4	66	6	26	11	43	210
Total	34	210	14	258	26	63	22	111	39	230	26	295	22	116	53	191	855
Grand Total	81	432	30	543	42	129	40	211	79	457	55	591	52	231	97	380	1725
Apprch %	14.9	79.6	5.5		19.9	61.1	19		13.4	77.3	9.3		13.7	60.8	25.5		
Total %	4.7	25	1.7	31.5	2.4	7.5	2.3	12.2	4.6	26.5	3.2	34.3	3	13.4	5.6	22	

	Linden Avenue Southbound				Santa Ana Avenue Westbound				Linden Avenue Northbound				Santa Ana Avenue Eastbound				
Start Time	Left	Thru	Right	App. Total	Left	Thru	Right	App. Total	Left	Thru	Right	App. Total	Left	Thru	Right	App. Total	Int. Total
Peak Hour Analysis From 04:45 PM to 05:30 PM - Peak 1 of 1																	
Peak Hour for Entire Intersection Begins at 04:45 PM																	
04:45 PM	8	**60**	6	**74**	4	**21**	2	27	10	**72**	**10**	**92**	**8**	28	11	47	**240**
05:00 PM	**9**	51	1	61	4	21	5	**30**	**13**	51	10	74	4	27	10	41	206
05:15 PM	7	44	3	54	**6**	13	**9**	28	10	58	8	76	6	31	**19**	**56**	214
05:30 PM	4	58	**8**	70	6	15	4	25	9	66	4	79	6	**32**	13	51	225
Total Volume	28	213	18	259	20	70	20	110	42	247	32	321	24	118	53	195	885
% App. Total	10.8	82.2	6.9		18.2	63.6	18.2		13.1	76.9	10		12.3	60.5	27.2		
PHF	.778	.888	.563	.875	.833	.833	.556	.917	.808	.858	.800	.872	.750	.922	.697	.871	.922

Counts Unlimited
PO Box 1178
Corona, CA 92878
(951) 268-6268

City of San Bernardino
N/S: Linden Avenue
E/W: Santa Ana Avenue
Weather: Clear

File Name : 07_CSB_Linden_Santa Ana PM
Site Code : 04520047
Start Date : 1/23/2020
Page No : 2

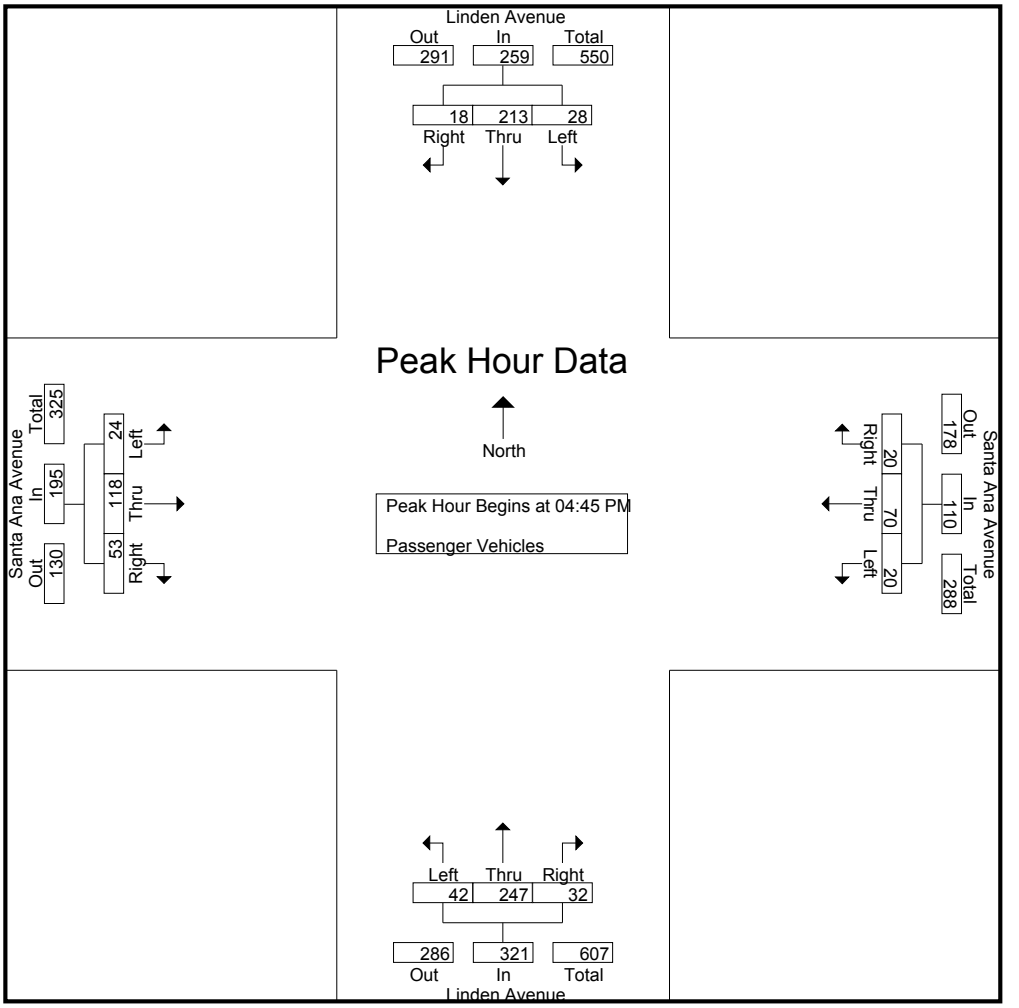

Peak Hour Analysis From 04:45 PM to 05:30 PM - Peak 1 of 1
Peak Hour for Each Approach Begins at:

	04:45 PM				04:45 PM				04:45 PM				04:45 PM			
+0 mins.	8	**60**	6	**74**	4	**21**	2	27	10	**72**	**10**	**92**	**8**	28	11	47
+15 mins.	**9**	51	1	61	4	21	5	**30**	**13**	51	10	74	4	27	10	41
+30 mins.	7	44	3	54	**6**	13	**9**	28	10	58	8	76	6	31	**19**	**56**
+45 mins.	4	58	**8**	70	6	15	4	25	9	66	4	79	6	**32**	13	51
Total Volume	28	213	18	259	20	70	20	110	42	247	32	321	24	118	53	195
% App. Total	10.8	82.2	6.9		18.2	63.6	18.2		13.1	76.9	10		12.3	60.5	27.2	
PHF	.778	.888	.563	.875	.833	.833	.556	.917	.808	.858	.800	.872	.750	.922	.697	.871

Counts Unlimited
PO Box 1178
Corona, CA 92878
(951) 268-6268

City of San Bernardino
N/S: Linden Avenue
E/W: Santa Ana Avenue
Weather: Clear

File Name : 07_CSB_Linden_Santa Ana PM
Site Code : 04520047
Start Date : 1/23/2020

Groups Printed- Large 2 Axle Vehicles

	Linden Avenue Southbound				Santa Ana Avenue Westbound				Linden Avenue Northbound				Santa Ana Avenue Eastbound				
Start Time	Left	Thru	Right	App. Total	Left	Thru	Right	App. Total	Left	Thru	Right	App. Total	Left	Thru	Right	App. Total	Int. Total
04:00 PM	0	0	0	0	0	0	0	0	0	2	0	2	0	0	0	0	2
04:15 PM	0	1	1	2	0	1	0	1	1	2	0	3	0	0	1	1	7
04:30 PM	1	3	0	4	0	0	0	0	0	0	0	0	0	1	1	2	6
04:45 PM	0	3	0	3	0	0	0	0	0	1	0	1	0	0	0	0	4
Total	1	7	1	9	0	1	0	1	1	5	0	6	0	1	2	3	19
05:00 PM	0	2	0	2	0	0	1	1	2	1	1	4	0	1	0	1	8
05:15 PM	1	4	0	5	0	0	0	0	0	0	0	0	0	1	0	1	6
05:30 PM	0	3	0	3	0	1	0	1	0	3	0	3	0	0	0	0	7
05:45 PM	0	2	0	2	0	0	0	0	0	4	0	4	0	1	0	1	7
Total	1	11	0	12	0	1	1	2	2	8	1	11	0	3	0	3	28
Grand Total	2	18	1	21	0	2	1	3	3	13	1	17	0	4	2	6	47
Apprch %	9.5	85.7	4.8		0	66.7	33.3		17.6	76.5	5.9		0	66.7	33.3		
Total %	4.3	38.3	2.1	44.7	0	4.3	2.1	6.4	6.4	27.7	2.1	36.2	0	8.5	4.3	12.8	

	Linden Avenue Southbound				Santa Ana Avenue Westbound				Linden Avenue Northbound				Santa Ana Avenue Eastbound				
Start Time	Left	Thru	Right	App. Total	Left	Thru	Right	App. Total	Left	Thru	Right	App. Total	Left	Thru	Right	App. Total	Int. Total
Peak Hour Analysis From 04:45 PM to 05:30 PM - Peak 1 of 1																	
Peak Hour for Entire Intersection Begins at 04:45 PM																	
04:45 PM	0	3	0	3	0	0	0	0	0	1	0	1	0	0	0	0	4
05:00 PM	0	2	0	2	0	0	**1**	**1**	**2**	1	**1**	**4**	0	**1**	0	**1**	**8**
05:15 PM	**1**	**4**	0	**5**	0	0	0	0	0	0	0	0	0	1	0	1	6
05:30 PM	0	3	0	3	0	**1**	0	1	0	**3**	0	3	0	0	0	0	7
Total Volume	1	12	0	13	0	1	1	2	2	5	1	8	0	2	0	2	25
% App. Total	7.7	92.3	0		0	50	50		25	62.5	12.5		0	100	0		
PHF	.250	.750	.000	.650	.000	.250	.250	.500	.250	.417	.250	.500	.000	.500	.000	.500	.781

Counts Unlimited
PO Box 1178
Corona, CA 92878
(951) 268-6268

City of San Bernardino
N/S: Linden Avenue
E/W: Santa Ana Avenue
Weather: Clear

File Name : 07_CSB_Linden_Santa Ana PM
Site Code : 04520047
Start Date : 1/23/2020
Page No : 2

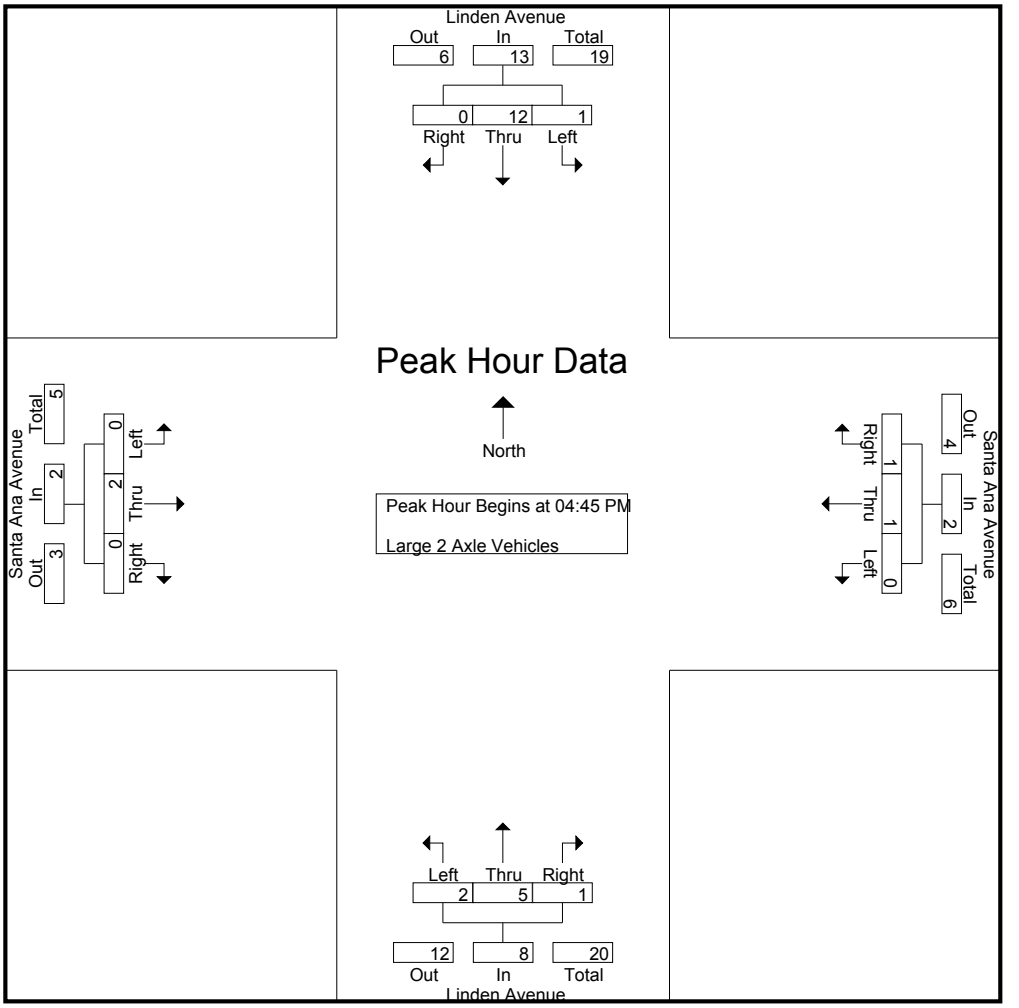

Peak Hour Analysis From 04:45 PM to 05:30 PM - Peak 1 of 1
Peak Hour for Each Approach Begins at:

	04:45 PM				04:45 PM				04:45 PM				04:45 PM			
+0 mins.	0	3	0	3	0	0	0	0	0	1	0	1	0	0	0	0
+15 mins.	0	2	0	2	0	0	**1**	**1**	**2**	1	**1**	**4**	0	**1**	0	**1**
+30 mins.	**1**	**4**	0	**5**	0	0	0	0	0	0	0	0	0	1	0	1
+45 mins.	0	3	0	3	0	**1**	0	1	0	**3**	0	3	0	0	0	0
Total Volume	1	12	0	13	0	1	1	2	2	5	1	8	0	2	0	2
% App. Total	7.7	92.3	0		0	50	50		25	62.5	12.5		0	100	0	
PHF	.250	.750	.000	.650	.000	.250	.250	.500	.250	.417	.250	.500	.000	.500	.000	.500

Counts Unlimited
PO Box 1178
Corona, CA 92878
(951) 268-6268

City of San Bernardino
N/S: Linden Avenue
E/W: Santa Ana Avenue
Weather: Clear

File Name : 07_CSB_Linden_Santa Ana PM
Site Code : 04520047
Start Date : 1/23/2020
Page No : 1

Groups Printed- 3 Axle Vehicles

	Linden Avenue Southbound				Santa Ana Avenue Westbound				Linden Avenue Northbound				Santa Ana Avenue Eastbound				
Start Time	Left	Thru	Right	App. Total	Left	Thru	Right	App. Total	Left	Thru	Right	App. Total	Left	Thru	Right	App. Total	Int. Total
04:00 PM	2	0	0	2	0	0	0	0	0	0	0	0	0	0	0	0	2
04:15 PM	0	1	0	1	0	0	0	0	0	0	0	0	0	0	0	0	1
04:30 PM	0	3	0	3	0	0	0	0	0	0	0	0	0	0	0	0	3
04:45 PM	0	3	0	3	0	0	0	0	0	0	0	0	0	0	0	0	3
Total	2	7	0	9	0	0	0	0	0	0	0	0	0	0	0	0	9
05:00 PM	0	2	0	2	0	0	0	0	0	0	0	0	0	0	0	0	2
05:15 PM	0	4	0	4	0	0	0	0	0	0	0	0	0	0	0	0	4
05:30 PM	0	3	0	3	0	0	0	0	0	0	0	0	0	0	0	0	3
05:45 PM	0	2	0	2	0	0	0	0	0	0	0	0	0	0	0	0	2
Total	0	11	0	11	0	0	0	0	0	0	0	0	0	0	0	0	11
Grand Total	2	18	0	20	0	0	0	0	0	0	0	0	0	0	0	0	20
Apprch %	10	90	0		0	0	0		0	0	0		0	0	0		
Total %	10	90	0	100	0	0	0	0	0	0	0	0	0	0	0	0	

	Linden Avenue Southbound				Santa Ana Avenue Westbound				Linden Avenue Northbound				Santa Ana Avenue Eastbound				
Start Time	Left	Thru	Right	App. Total	Left	Thru	Right	App. Total	Left	Thru	Right	App. Total	Left	Thru	Right	App. Total	Int. Total
Peak Hour Analysis From 04:45 PM to 05:30 PM - Peak 1 of 1																	
Peak Hour for Entire Intersection Begins at 04:45 PM																	
04:45 PM	0	3	0	3	0	0	0	0	0	0	0	0	0	0	0	0	3
05:00 PM	0	2	0	2	0	0	0	0	0	0	0	0	0	0	0	0	2
05:15 PM	0	**4**	0	**4**	0	0	0	0	0	0	0	0	0	0	0	0	**4**
05:30 PM	0	3	0	3	0	0	0	0	0	0	0	0	0	0	0	0	3
Total Volume	0	12	0	12	0	0	0	0	0	0	0	0	0	0	0	0	12
% App. Total	0	100	0		0	0	0		0	0	0		0	0	0		
PHF	.000	.750	.000	.750	.000	.000	.000	.000	.000	.000	.000	.000	.000	.000	.000	.000	.750

Counts Unlimited
PO Box 1178
Corona, CA 92878
(951) 268-6268

City of San Bernardino
N/S: Linden Avenue
E/W: Santa Ana Avenue
Weather: Clear

File Name : 07_CSB_Linden_Santa Ana PM
Site Code : 04520047
Start Date : 1/23/2020
Page No : 2

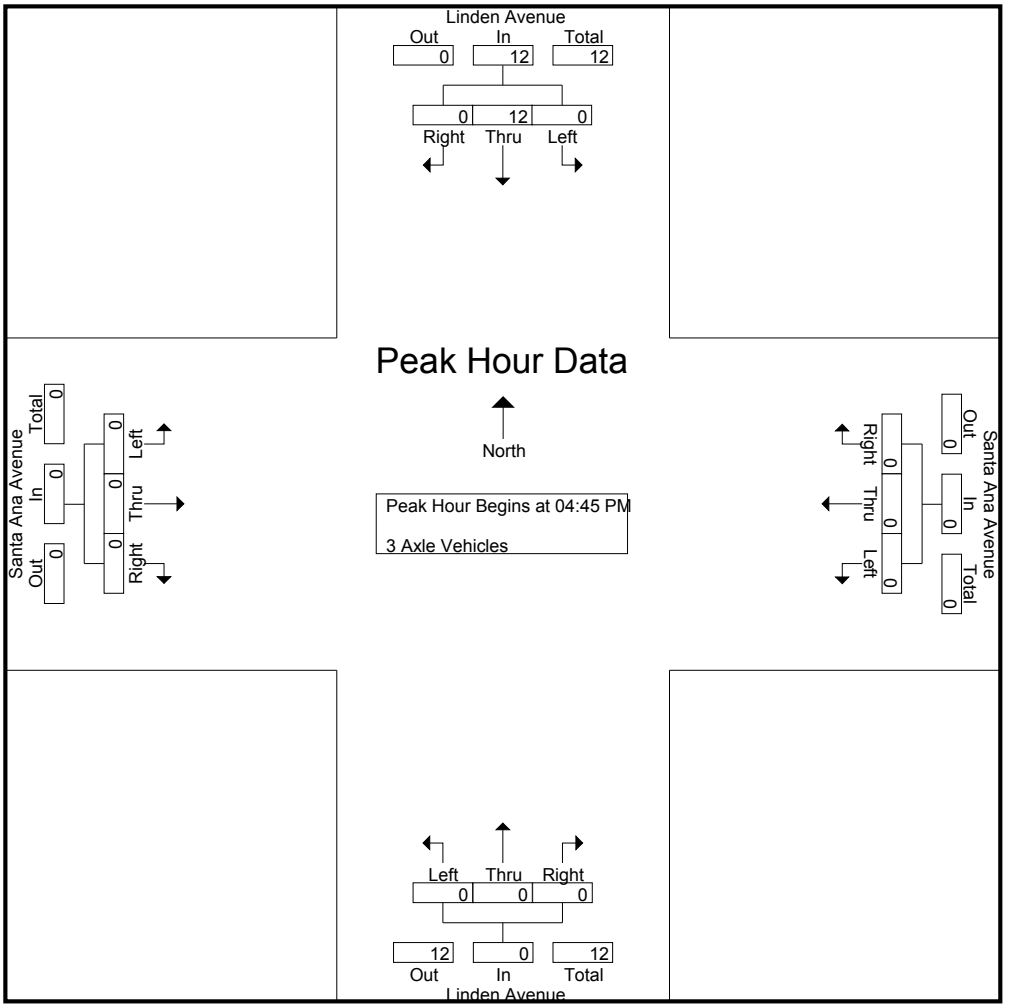

Peak Hour Analysis From 04:45 PM to 05:30 PM - Peak 1 of 1
Peak Hour for Each Approach Begins at:

	04:45 PM				04:45 PM				04:45 PM				04:45 PM			
+0 mins.	0	3	0	3	0	0	0	0	0	0	0	0	0	0	0	0
+15 mins.	0	2	0	2	0	0	0	0	0	0	0	0	0	0	0	0
+30 mins.	0	**4**	0	**4**	0	0	0	0	0	0	0	0	0	0	0	0
+45 mins.	0	3	0	3	0	0	0	0	0	0	0	0	0	0	0	0
Total Volume	0	12	0	12	0	0	0	0	0	0	0	0	0	0	0	0
% App. Total	0	100	0		0	0	0		0	0	0		0	0	0	
PHF	.000	.750	.000	.750	.000	.000	.000	.000	.000	.000	.000	.000	.000	.000	.000	.000

Counts Unlimited
PO Box 1178
Corona, CA 92878
(951) 268-6268

City of San Bernardino
N/S: Linden Avenue
E/W: Santa Ana Avenue
Weather: Clear

File Name : 07_CSB_Linden_Santa Ana PM
Site Code : 04520047
Start Date : 1/23/2020
Page No : 1

Groups Printed- 4+ Axle Trucks

	Linden Avenue Southbound				Santa Ana Avenue Westbound				Linden Avenue Northbound				Santa Ana Avenue Eastbound				
Start Time	Left	Thru	Right	App. Total	Left	Thru	Right	App. Total	Left	Thru	Right	App. Total	Left	Thru	Right	App. Total	Int. Total
04:00 PM	0	0	1	1	0	0	0	0	0	0	0	0	0	0	0	0	1
04:15 PM	0	0	0	0	0	0	0	0	0	1	1	2	0	0	0	0	2
04:30 PM	0	1	0	1	0	0	0	0	0	0	0	0	0	0	0	0	1
04:45 PM	0	0	0	0	0	0	0	0	0	0	0	0	0	1	0	1	1
Total	0	1	1	2	0	0	0	0	0	1	1	2	0	1	0	1	5
05:00 PM	0	2	0	2	0	0	0	0	0	2	0	2	0	0	0	0	4
05:15 PM	0	0	0	0	1	0	0	1	0	0	0	0	0	0	0	0	1
05:30 PM	0	0	0	0	0	0	0	0	0	0	0	0	0	0	0	0	0
05:45 PM	0	0	0	0	0	0	1	1	0	0	0	0	0	0	0	0	1
Total	0	2	0	2	1	0	1	2	0	2	0	2	0	0	0	0	6
Grand Total	0	3	1	4	1	0	1	2	0	3	1	4	0	1	0	1	11
Apprch %	0	75	25		50	0	50		0	75	25		0	100	0		
Total %	0	27.3	9.1	36.4	9.1	0	9.1	18.2	0	27.3	9.1	36.4	0	9.1	0	9.1	

	Linden Avenue Southbound				Santa Ana Avenue Westbound				Linden Avenue Northbound				Santa Ana Avenue Eastbound				
Start Time	Left	Thru	Right	App. Total	Left	Thru	Right	App. Total	Left	Thru	Right	App. Total	Left	Thru	Right	App. Total	Int. Total
Peak Hour Analysis From 04:45 PM to 05:30 PM - Peak 1 of 1																	
Peak Hour for Entire Intersection Begins at 04:45 PM																	
04:45 PM	0	0	0	0	0	0	0	0	0	0	0	0	0	**1**	0	**1**	1
05:00 PM	0	**2**	0	**2**	0	0	0	0	0	**2**	0	**2**	0	0	0	0	**4**
05:15 PM	0	0	0	0	**1**	0	0	**1**	0	0	0	0	0	0	0	0	1
05:30 PM	0	0	0	0	0	0	0	0	0	0	0	0	0	0	0	0	0
Total Volume	0	2	0	2	1	0	0	1	0	2	0	2	0	1	0	1	6
% App. Total	0	100	0		100	0	0		0	100	0		0	100	0		
PHF	.000	.250	.000	.250	.250	.000	.000	.250	.000	.250	.000	.250	.000	.250	.000	.250	.375

Counts Unlimited
PO Box 1178
Corona, CA 92878
(951) 268-6268

City of San Bernardino
N/S: Linden Avenue
E/W: Santa Ana Avenue
Weather: Clear

File Name : 07_CSB_Linden_Santa Ana PM
Site Code : 04520047
Start Date : 1/23/2020
Page No : 2

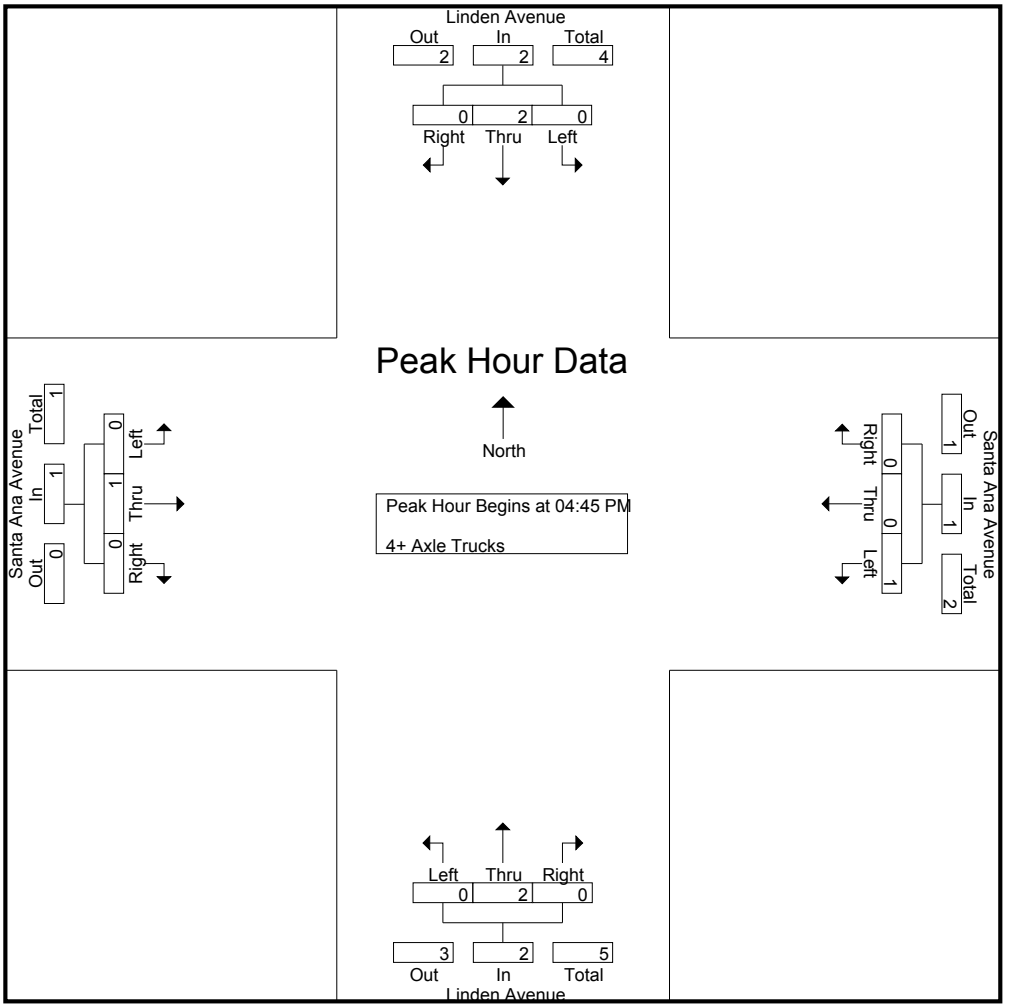

Peak Hour Analysis From 04:45 PM to 05:30 PM - Peak 1 of 1
Peak Hour for Each Approach Begins at:

	04:45 PM				04:45 PM				04:45 PM				04:45 PM			
+0 mins.	0	0	0	0	0	0	0	0	0	0	0	0	0	**1**	0	**1**
+15 mins.	0	**2**	0	**2**	0	0	0	0	0	**2**	0	**2**	0	0	0	0
+30 mins.	0	0	0	0	**1**	0	0	**1**	0	0	0	0	0	0	0	0
+45 mins.	0	0	0	0	0	0	0	0	0	0	0	0	0	0	0	0
Total Volume	0	2	0	2	1	0	0	1	0	2	0	2	0	1	0	1
% App. Total	0	100	0		100	0	0		0	100	0		0	100	0	
PHF	.000	.250	.000	.250	.250	.000	.000	.250	.000	.250	.000	.250	.000	.250	.000	.250

Counts Unlimited
PO Box 1178
Corona, CA 92878
(951) 268-6268

City of San Bernardino
N/S: Cedar Avenue
E/W: Santa Ana Avenue
Weather: Clear

File Name : 08_CSB_Cedar_Santa Ana AM
Site Code : 04520047
Start Date : 1/23/2020
Page No : 1

Groups Printed- Passenger Vehicles - Large 2 Axle Vehicles - 3 Axle Vehicles - 4+ Axle Trucks

	Cedar Avenue Southbound				Santa Ana Avenue Westbound				Cedar Avenue Northbound				Santa Ana Avenue Eastbound				
Start Time	Left	Thru	Right	App. Total	Left	Thru	Right	App. Total	Left	Thru	Right	App. Total	Left	Thru	Right	App. Total	Int. Total
07:00 AM	19	167	15	201	6	31	5	42	29	165	4	198	11	24	14	49	490
07:15 AM	17	213	20	250	4	28	12	44	25	165	4	194	24	28	17	69	557
07:30 AM	22	202	13	237	6	16	11	33	14	206	12	232	19	14	26	59	561
07:45 AM	10	196	13	219	5	9	4	18	9	167	2	178	8	14	12	34	449
Total	68	778	61	907	21	84	32	137	77	703	22	802	62	80	69	211	2057
08:00 AM	8	166	12	186	5	17	7	29	12	125	5	142	17	14	11	42	399
08:15 AM	8	160	19	187	2	12	3	17	10	137	2	149	11	9	13	33	386
08:30 AM	8	169	10	187	7	14	10	31	11	132	6	149	11	14	6	31	398
08:45 AM	2	138	6	146	2	17	8	27	14	124	2	140	9	14	12	35	348
Total	26	633	47	706	16	60	28	104	47	518	15	580	48	51	42	141	1531
Grand Total	94	1411	108	1613	37	144	60	241	124	1221	37	1382	110	131	111	352	3588
Apprch %	5.8	87.5	6.7		15.4	59.8	24.9		9	88.4	2.7		31.2	37.2	31.5		
Total %	2.6	39.3	3	45	1	4	1.7	6.7	3.5	34	1	38.5	3.1	3.7	3.1	9.8	
Passenger Vehicles	82	1264	102	1448	24	138	43	205	116	1107	28	1251	100	121	104	325	3229
% Passenger Vehicles	87.2	89.6	94.4	89.8	64.9	95.8	71.7	85.1	93.5	90.7	75.7	90.5	90.9	92.4	93.7	92.3	90
Large 2 Axle Vehicles	5	49	6	60	1	4	5	10	6	49	3	58	6	5	4	15	143
% Large 2 Axle Vehicles	5.3	3.5	5.6	3.7	2.7	2.8	8.3	4.1	4.8	4	8.1	4.2	5.5	3.8	3.6	4.3	4
3 Axle Vehicles	0	49	0	49	2	2	5	9	0	14	0	14	1	3	1	5	77
% 3 Axle Vehicles	0	3.5	0	3	5.4	1.4	8.3	3.7	0	1.1	0	1	0.9	2.3	0.9	1.4	2.1
4+ Axle Trucks	7	49	0	56	10	0	7	17	2	51	6	59	3	2	2	7	139
% 4+ Axle Trucks	7.4	3.5	0	3.5	27	0	11.7	7.1	1.6	4.2	16.2	4.3	2.7	1.5	1.8	2	3.9

	Cedar Avenue Southbound				Santa Ana Avenue Westbound				Cedar Avenue Northbound				Santa Ana Avenue Eastbound				
Start Time	Left	Thru	Right	App. Total	Left	Thru	Right	App. Total	Left	Thru	Right	App. Total	Left	Thru	Right	App. Total	Int. Total
Peak Hour Analysis From 07:00 AM to 08:45 AM - Peak 1 of 1																	
Peak Hour for Entire Intersection Begins at 07:00 AM																	
07:00 AM	19	167	15	201	**6**	**31**	5	42	**29**	165	4	198	11	24	14	49	490
07:15 AM	17	**213**	**20**	**250**	4	28	**12**	**44**	25	165	4	194	**24**	**28**	17	**69**	557
07:30 AM	**22**	202	13	237	6	16	11	33	14	**206**	**12**	**232**	19	14	**26**	59	**561**
07:45 AM	10	196	13	219	5	9	4	18	9	167	2	178	8	14	12	34	449
Total Volume	68	778	61	907	21	84	32	137	77	703	22	802	62	80	69	211	2057
% App. Total	7.5	85.8	6.7		15.3	61.3	23.4		9.6	87.7	2.7		29.4	37.9	32.7		
PHF	.773	.913	.763	.907	.875	.677	.667	.778	.664	.853	.458	.864	.646	.714	.663	.764	.917

Counts Unlimited
PO Box 1178
Corona, CA 92878
(951) 268-6268

City of San Bernardino
N/S: Cedar Avenue
E/W: Santa Ana Avenue
Weather: Clear

File Name : 08_CSB_Cedar_Santa Ana AM
Site Code : 04520047
Start Date : 1/23/2020
Page No : 2

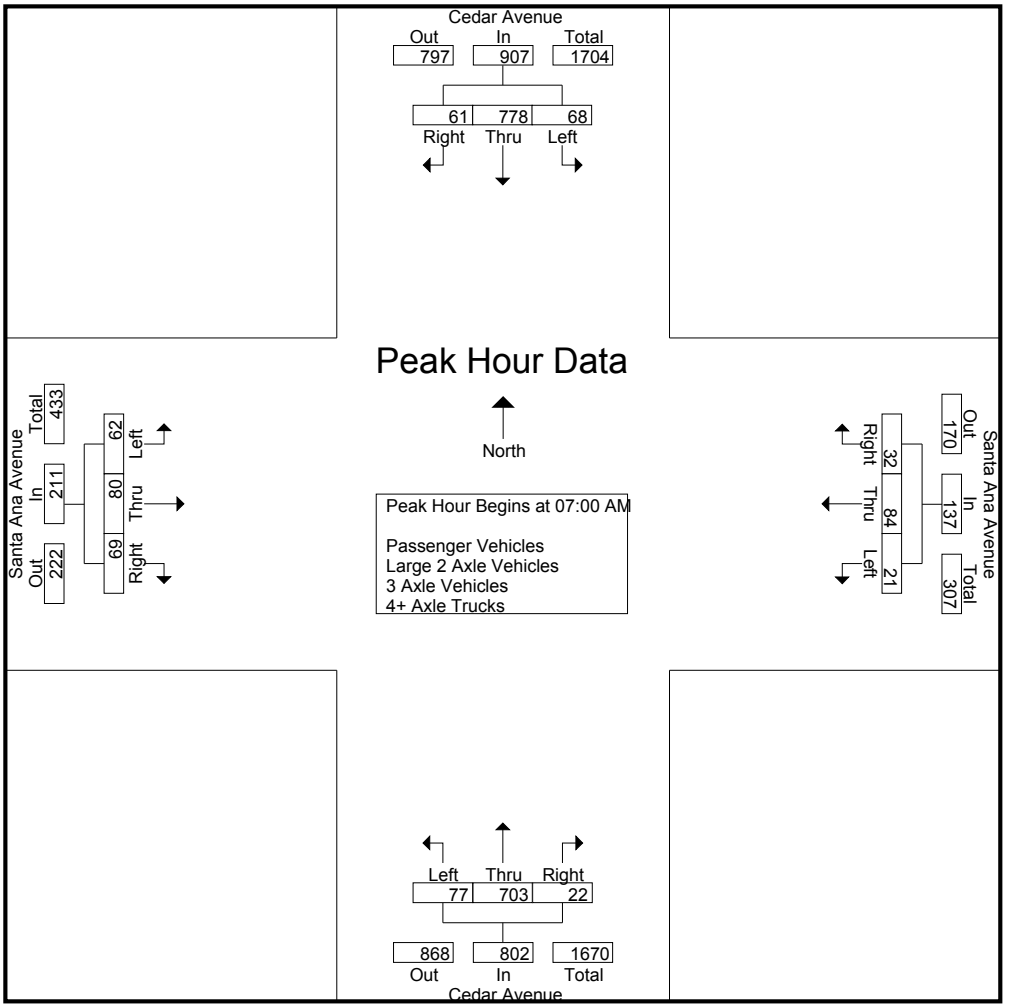

Peak Hour Analysis From 07:00 AM to 08:45 AM - Peak 1 of 1
Peak Hour for Each Approach Begins at:

	07:00 AM				07:00 AM				07:00 AM				07:00 AM			
+0 mins.	19	167	15	201	**6**	**31**	5	42	**29**	165	4	198	11	24	14	49
+15 mins.	17	**213**	**20**	**250**	4	28	**12**	**44**	25	165	4	194	**24**	**28**	17	**69**
+30 mins.	**22**	202	13	237	6	16	11	33	14	**206**	**12**	**232**	19	14	**26**	59
+45 mins.	10	196	13	219	5	9	4	18	9	167	2	178	8	14	12	34
Total Volume	68	778	61	907	21	84	32	137	77	703	22	802	62	80	69	211
% App. Total	7.5	85.8	6.7		15.3	61.3	23.4		9.6	87.7	2.7		29.4	37.9	32.7	
PHF	.773	.913	.763	.907	.875	.677	.667	.778	.664	.853	.458	.864	.646	.714	.663	.764

Counts Unlimited
PO Box 1178
Corona, CA 92878
(951) 268-6268

City of San Bernardino
N/S: Cedar Avenue
E/W: Santa Ana Avenue
Weather: Clear

File Name : 08_CSB_Cedar_Santa Ana AM
Site Code : 04520047
Start Date : 1/23/2020
Page No : 1

Groups Printed- Passenger Vehicles

	Cedar Avenue Southbound				Santa Ana Avenue Westbound				Cedar Avenue Northbound				Santa Ana Avenue Eastbound				
Start Time	Left	Thru	Right	App. Total	Left	Thru	Right	App. Total	Left	Thru	Right	App. Total	Left	Thru	Right	App. Total	Int. Total
07:00 AM	18	158	15	191	6	31	4	41	28	152	3	183	11	23	13	47	462
07:15 AM	15	193	20	228	2	27	12	41	25	151	4	180	23	25	17	65	514
07:30 AM	20	183	11	214	3	16	10	29	13	197	10	220	17	12	22	51	514
07:45 AM	8	181	13	202	4	8	3	15	8	152	2	162	7	14	12	33	412
Total	61	715	59	835	15	82	29	126	74	652	19	745	58	74	64	196	1902
08:00 AM	8	139	11	158	3	16	7	26	12	110	3	125	14	13	11	38	347
08:15 AM	4	153	18	175	1	11	2	14	9	120	2	131	11	9	11	31	351
08:30 AM	8	144	9	161	4	12	2	18	10	116	3	129	9	13	6	28	336
08:45 AM	1	113	5	119	1	17	3	21	11	109	1	121	8	12	12	32	293
Total	21	549	43	613	9	56	14	79	42	455	9	506	42	47	40	129	1327
Grand Total	82	1264	102	1448	24	138	43	205	116	1107	28	1251	100	121	104	325	3229
Apprch %	5.7	87.3	7		11.7	67.3	21		9.3	88.5	2.2		30.8	37.2	32		
Total %	2.5	39.1	3.2	44.8	0.7	4.3	1.3	6.3	3.6	34.3	0.9	38.7	3.1	3.7	3.2	10.1	

	Cedar Avenue Southbound				Santa Ana Avenue Westbound				Cedar Avenue Northbound				Santa Ana Avenue Eastbound				
Start Time	Left	Thru	Right	App. Total	Left	Thru	Right	App. Total	Left	Thru	Right	App. Total	Left	Thru	Right	App. Total	Int. Total
Peak Hour Analysis From 07:00 AM to 07:45 AM - Peak 1 of 1																	
Peak Hour for Entire Intersection Begins at 07:00 AM																	
07:00 AM	18	158	15	191	**6**	**31**	4	**41**	**28**	152	3	183	11	23	13	47	462
07:15 AM	15	**193**	**20**	**228**	2	27	**12**	41	25	151	4	180	**23**	**25**	17	**65**	**514**
07:30 AM	**20**	183	11	214	3	16	10	29	13	**197**	**10**	**220**	17	12	**22**	51	514
07:45 AM	8	181	13	202	4	8	3	15	8	152	2	162	7	14	12	33	412
Total Volume	61	715	59	835	15	82	29	126	74	652	19	745	58	74	64	196	1902
% App. Total	7.3	85.6	7.1		11.9	65.1	23		9.9	87.5	2.6		29.6	37.8	32.7		
PHF	.763	.926	.738	.916	.625	.661	.604	.768	.661	.827	.475	.847	.630	.740	.727	.754	.925

Counts Unlimited
PO Box 1178
Corona, CA 92878
(951) 268-6268

City of San Bernardino
N/S: Cedar Avenue
E/W: Santa Ana Avenue
Weather: Clear

File Name : 08_CSB_Cedar_Santa Ana AM
Site Code : 04520047
Start Date : 1/23/2020
Page No : 2

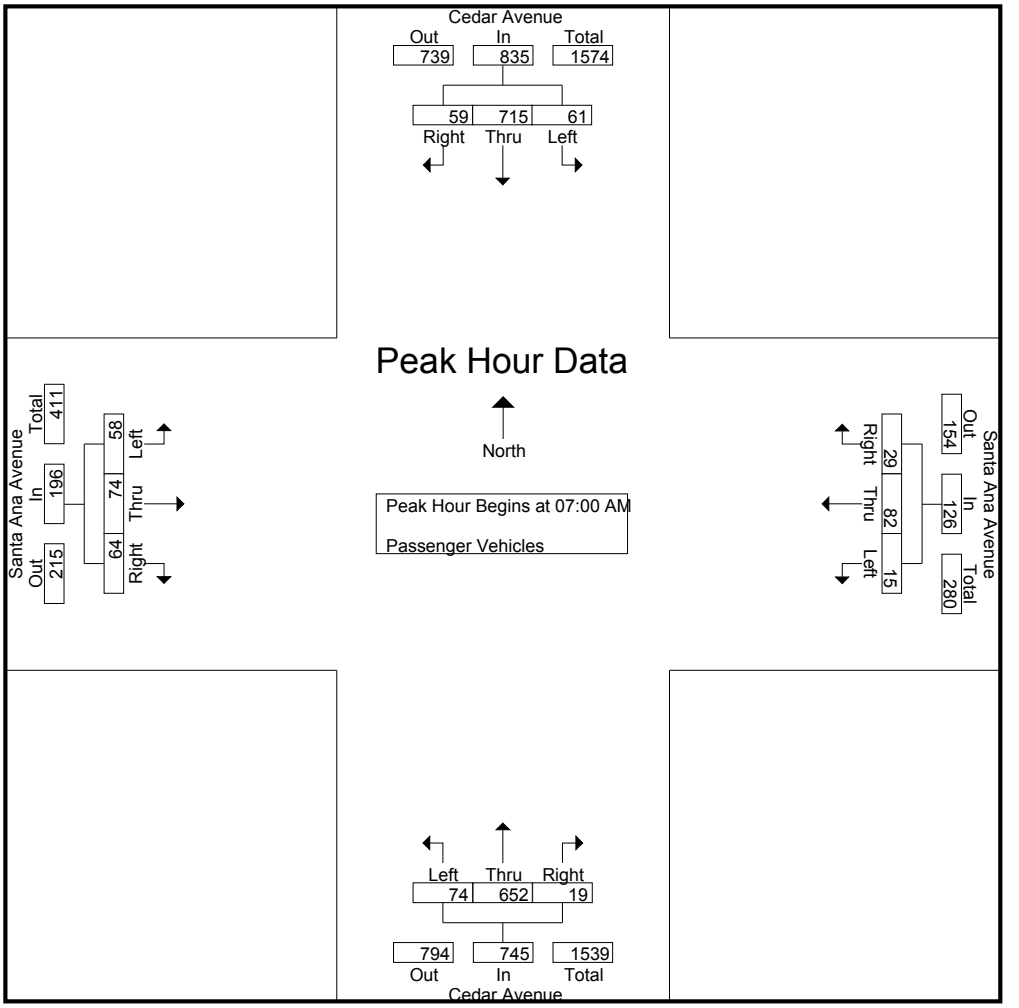

Peak Hour Analysis From 07:00 AM to 07:45 AM - Peak 1 of 1
Peak Hour for Each Approach Begins at:

	07:00 AM				07:00 AM				07:00 AM				07:00 AM			
+0 mins.	18	158	15	191	**6**	**31**	4	**41**	**28**	152	3	183	11	23	13	47
+15 mins.	15	**193**	**20**	**228**	2	27	**12**	41	25	151	4	180	**23**	**25**	17	**65**
+30 mins.	**20**	183	11	214	3	16	10	29	13	**197**	**10**	**220**	17	12	**22**	51
+45 mins.	8	181	13	202	4	8	3	15	8	152	2	162	7	14	12	33
Total Volume	61	715	59	835	15	82	29	126	74	652	19	745	58	74	64	196
% App. Total	7.3	85.6	7.1		11.9	65.1	23		9.9	87.5	2.6		29.6	37.8	32.7	
PHF	.763	.926	.738	.916	.625	.661	.604	.768	.661	.827	.475	.847	.630	.740	.727	.754

Counts Unlimited
PO Box 1178
Corona, CA 92878
(951) 268-6268

City of San Bernardino
N/S: Cedar Avenue
E/W: Santa Ana Avenue
Weather: Clear

File Name : 08_CSB_Cedar_Santa Ana AM
Site Code : 04520047
Start Date : 1/23/2020
Page No : 1

Groups Printed- Large 2 Axle Vehicles

	Cedar Avenue Southbound				Santa Ana Avenue Westbound				Cedar Avenue Northbound				Santa Ana Avenue Eastbound				
Start Time	Left	Thru	Right	App. Total	Left	Thru	Right	App. Total	Left	Thru	Right	App. Total	Left	Thru	Right	App. Total	Int. Total
07:00 AM	0	2	0	2	0	0	0	0	0	4	1	5	0	1	0	1	8
07:15 AM	2	7	0	9	0	0	0	0	0	7	0	7	1	0	0	1	17
07:30 AM	1	6	2	9	0	0	1	1	1	3	0	4	1	2	2	5	19
07:45 AM	1	5	0	6	0	1	1	2	1	7	0	8	1	0	0	1	17
Total	4	20	2	26	0	1	2	3	2	21	1	24	3	3	2	8	61
08:00 AM	0	10	1	11	1	1	0	2	0	7	1	8	2	0	0	2	23
08:15 AM	1	1	1	3	0	0	0	0	0	10	0	10	0	0	2	2	15
08:30 AM	0	8	1	9	0	2	1	3	1	5	1	7	1	0	0	1	20
08:45 AM	0	10	1	11	0	0	2	2	3	6	0	9	0	2	0	2	24
Total	1	29	4	34	1	3	3	7	4	28	2	34	3	2	2	7	82
Grand Total	5	49	6	60	1	4	5	10	6	49	3	58	6	5	4	15	143
Apprch %	8.3	81.7	10		10	40	50		10.3	84.5	5.2		40	33.3	26.7		
Total %	3.5	34.3	4.2	42	0.7	2.8	3.5	7	4.2	34.3	2.1	40.6	4.2	3.5	2.8	10.5	

	Cedar Avenue Southbound				Santa Ana Avenue Westbound				Cedar Avenue Northbound				Santa Ana Avenue Eastbound				
Start Time	Left	Thru	Right	App. Total	Left	Thru	Right	App. Total	Left	Thru	Right	App. Total	Left	Thru	Right	App. Total	Int. Total
Peak Hour Analysis From 07:00 AM to 07:45 AM - Peak 1 of 1																	
Peak Hour for Entire Intersection Begins at 07:00 AM																	
07:00 AM	0	2	0	2	0	0	0	0	0	4	**1**	5	0	1	0	1	8
07:15 AM	**2**	**7**	0	**9**	0	0	0	0	0	**7**	0	7	**1**	0	0	1	17
07:30 AM	1	6	**2**	9	0	0	**1**	1	**1**	3	0	4	1	**2**	**2**	**5**	**19**
07:45 AM	1	5	0	6	0	**1**	1	**2**	1	7	0	**8**	1	0	0	1	17
Total Volume	4	20	2	26	0	1	2	3	2	21	1	24	3	3	2	8	61
% App. Total	15.4	76.9	7.7		0	33.3	66.7		8.3	87.5	4.2		37.5	37.5	25		
PHF	.500	.714	.250	.722	.000	.250	.500	.375	.500	.750	.250	.750	.750	.375	.250	.400	.803

Counts Unlimited
PO Box 1178
Corona, CA 92878
(951) 268-6268

City of San Bernardino
N/S: Cedar Avenue
E/W: Santa Ana Avenue
Weather: Clear

File Name : 08_CSB_Cedar_Santa Ana AM
Site Code : 04520047
Start Date : 1/23/2020
Page No : 2

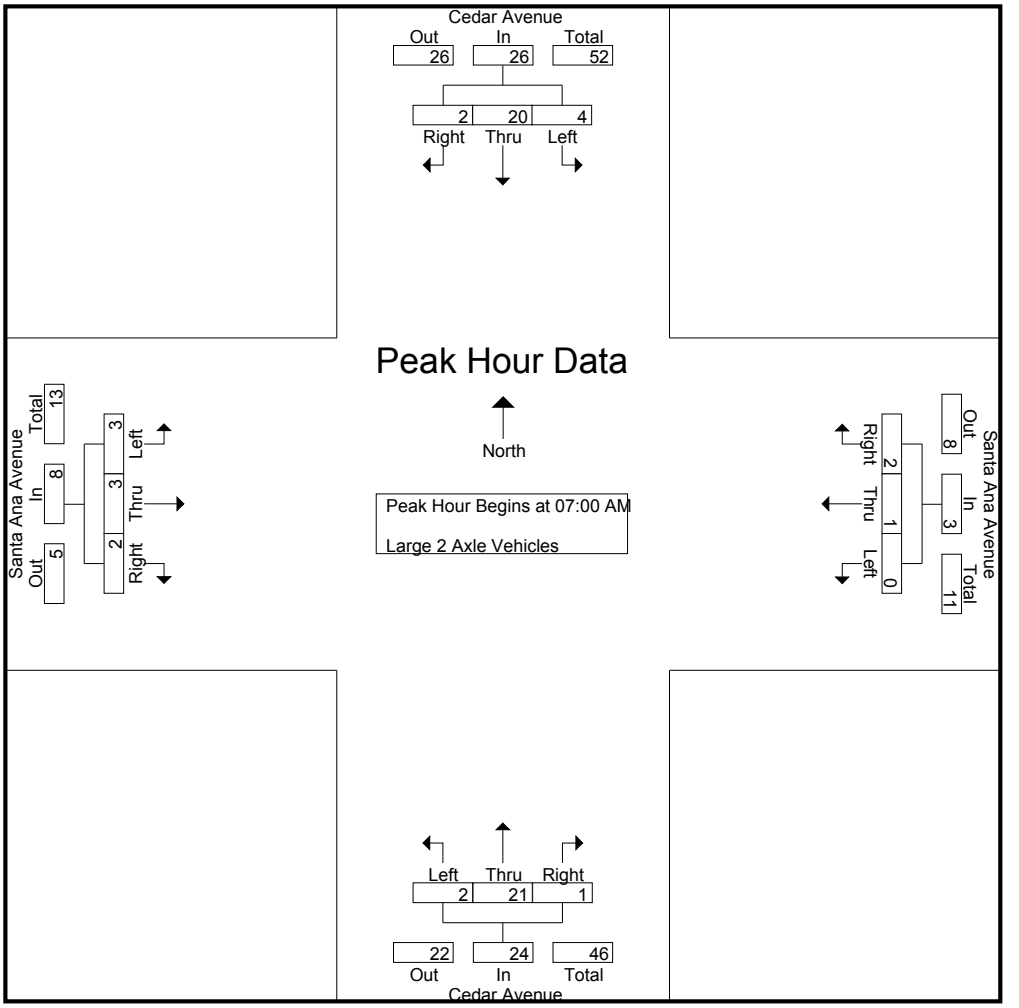

Peak Hour Analysis From 07:00 AM to 07:45 AM - Peak 1 of 1
Peak Hour for Each Approach Begins at:

	07:00 AM				07:00 AM				07:00 AM				07:00 AM			
+0 mins.	0	2	0	2	0	0	0	0	0	4	**1**	5	0	1	0	1
+15 mins.	**2**	**7**	0	**9**	0	0	0	0	0	**7**	0	7	**1**	0	0	1
+30 mins.	1	6	**2**	9	0	0	**1**	1	**1**	3	0	4	1	**2**	**2**	**5**
+45 mins.	1	5	0	6	0	**1**	1	**2**	1	7	0	**8**	1	0	0	1
Total Volume	4	20	2	26	0	1	2	3	2	21	1	24	3	3	2	8
% App. Total	15.4	76.9	7.7		0	33.3	66.7		8.3	87.5	4.2		37.5	37.5	25	
PHF	.500	.714	.250	.722	.000	.250	.500	.375	.500	.750	.250	.750	.750	.375	.250	.400

Counts Unlimited
PO Box 1178
Corona, CA 92878
(951) 268-6268

City of San Bernardino
N/S: Cedar Avenue
E/W: Santa Ana Avenue
Weather: Clear

File Name : 08_CSB_Cedar_Santa Ana AM
Site Code : 04520047
Start Date : 1/23/2020
Page No : 1

Groups Printed- 3 Axle Vehicles

	Cedar Avenue Southbound				Santa Ana Avenue Westbound				Cedar Avenue Northbound				Santa Ana Avenue Eastbound				
Start Time	Left	Thru	Right	App. Total	Left	Thru	Right	App. Total	Left	Thru	Right	App. Total	Left	Thru	Right	App. Total	Int. Total
07:00 AM	0	2	0	2	0	0	0	0	0	1	0	1	0	0	1	1	4
07:15 AM	0	7	0	7	0	1	0	1	0	0	0	0	0	2	0	2	10
07:30 AM	0	6	0	6	1	0	0	1	0	2	0	2	0	0	0	0	9
07:45 AM	0	5	0	5	1	0	0	1	0	1	0	1	0	0	0	0	7
Total	0	20	0	20	2	1	0	3	0	4	0	4	0	2	1	3	30
08:00 AM	0	10	0	10	0	0	0	0	0	2	0	2	0	0	0	0	12
08:15 AM	0	1	0	1	0	1	0	1	0	2	0	2	0	0	0	0	4
08:30 AM	0	8	0	8	0	0	4	4	0	3	0	3	1	1	0	2	17
08:45 AM	0	10	0	10	0	0	1	1	0	3	0	3	0	0	0	0	14
Total	0	29	0	29	0	1	5	6	0	10	0	10	1	1	0	2	47
Grand Total	0	49	0	49	2	2	5	9	0	14	0	14	1	3	1	5	77
Apprch %	0	100	0		22.2	22.2	55.6		0	100	0		20	60	20		
Total %	0	63.6	0	63.6	2.6	2.6	6.5	11.7	0	18.2	0	18.2	1.3	3.9	1.3	6.5	

	Cedar Avenue Southbound				Santa Ana Avenue Westbound				Cedar Avenue Northbound				Santa Ana Avenue Eastbound				
Start Time	Left	Thru	Right	App. Total	Left	Thru	Right	App. Total	Left	Thru	Right	App. Total	Left	Thru	Right	App. Total	Int. Total
Peak Hour Analysis From 07:00 AM to 07:45 AM - Peak 1 of 1																	
Peak Hour for Entire Intersection Begins at 07:00 AM																	
07:00 AM	0	2	0	2	0	0	0	0	0	1	0	1	0	0	**1**	1	4
07:15 AM	0	**7**	0	**7**	0	**1**	0	**1**	0	0	0	0	0	**2**	0	**2**	**10**
07:30 AM	0	6	0	6	**1**	0	0	1	0	**2**	0	**2**	0	0	0	0	9
07:45 AM	0	5	0	5	1	0	0	1	0	1	0	1	0	0	0	0	7
Total Volume	0	20	0	20	2	1	0	3	0	4	0	4	0	2	1	3	30
% App. Total	0	100	0		66.7	33.3	0		0	100	0		0	66.7	33.3		
PHF	.000	.714	.000	.714	.500	.250	.000	.750	.000	.500	.000	.500	.000	.250	.250	.375	.750

Counts Unlimited
PO Box 1178
Corona, CA 92878
(951) 268-6268

City of San Bernardino
N/S: Cedar Avenue
E/W: Santa Ana Avenue
Weather: Clear

File Name : 08_CSB_Cedar_Santa Ana AM
Site Code : 04520047
Start Date : 1/23/2020
Page No : 2

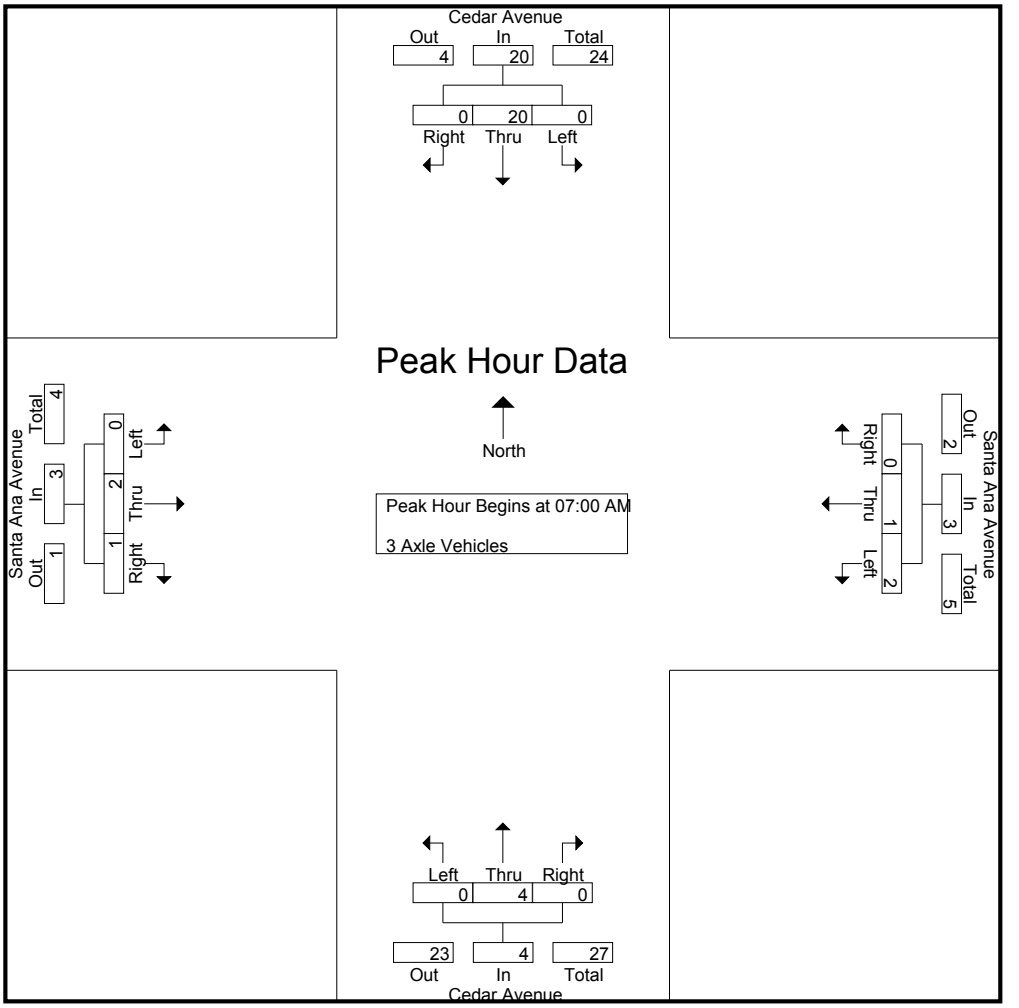

Peak Hour Analysis From 07:00 AM to 07:45 AM - Peak 1 of 1
Peak Hour for Each Approach Begins at:

	07:00 AM				07:00 AM				07:00 AM				07:00 AM			
+0 mins.	0	2	0	2	0	0	0	0	0	1	0	1	0	0	**1**	1
+15 mins.	0	**7**	0	**7**	0	**1**	0	**1**	0	0	0	0	0	**2**	0	**2**
+30 mins.	0	6	0	6	**1**	0	0	1	0	**2**	0	**2**	0	0	0	0
+45 mins.	0	5	0	5	1	0	0	1	0	1	0	1	0	0	0	0
Total Volume	0	20	0	20	2	1	0	3	0	4	0	4	0	2	1	3
% App. Total	0	100	0		66.7	33.3	0		0	100	0		0	66.7	33.3	
PHF	.000	.714	.000	.714	.500	.250	.000	.750	.000	.500	.000	.500	.000	.250	.250	.375

Counts Unlimited
PO Box 1178
Corona, CA 92878
(951) 268-6268

City of San Bernardino
N/S: Cedar Avenue
E/W: Santa Ana Avenue
Weather: Clear

File Name : 08_CSB_Cedar_Santa Ana AM
Site Code : 04520047
Start Date : 1/23/2020
Page No : 1

Groups Printed- 4+ Axle Trucks

	Cedar Avenue Southbound				Santa Ana Avenue Westbound				Cedar Avenue Northbound				Santa Ana Avenue Eastbound				
Start Time	Left	Thru	Right	App. Total	Left	Thru	Right	App. Total	Left	Thru	Right	App. Total	Left	Thru	Right	App. Total	Int. Total
07:00 AM	1	5	0	6	0	0	1	1	1	8	0	9	0	0	0	0	16
07:15 AM	0	6	0	6	2	0	0	2	0	7	0	7	0	1	0	1	16
07:30 AM	1	7	0	8	2	0	0	2	0	4	2	6	1	0	2	3	19
07:45 AM	1	5	0	6	0	0	0	0	0	7	0	7	0	0	0	0	13
Total	3	23	0	26	4	0	1	5	1	26	2	29	1	1	2	4	64
08:00 AM	0	7	0	7	1	0	0	1	0	6	1	7	1	1	0	2	17
08:15 AM	3	5	0	8	1	0	1	2	1	5	0	6	0	0	0	0	16
08:30 AM	0	9	0	9	3	0	3	6	0	8	2	10	0	0	0	0	25
08:45 AM	1	5	0	6	1	0	2	3	0	6	1	7	1	0	0	1	17
Total	4	26	0	30	6	0	6	12	1	25	4	30	2	1	0	3	75
Grand Total	7	49	0	56	10	0	7	17	2	51	6	59	3	2	2	7	139
Apprch %	12.5	87.5	0		58.8	0	41.2		3.4	86.4	10.2		42.9	28.6	28.6		
Total %	5	35.3	0	40.3	7.2	0	5	12.2	1.4	36.7	4.3	42.4	2.2	1.4	1.4	5	

	Cedar Avenue Southbound				Santa Ana Avenue Westbound				Cedar Avenue Northbound				Santa Ana Avenue Eastbound				
Start Time	Left	Thru	Right	App. Total	Left	Thru	Right	App. Total	Left	Thru	Right	App. Total	Left	Thru	Right	App. Total	Int. Total
Peak Hour Analysis From 07:00 AM to 07:45 AM - Peak 1 of 1																	
Peak Hour for Entire Intersection Begins at 07:00 AM																	
07:00 AM	**1**	5	0	6	0	0	**1**	1	**1**	**8**	0	**9**	0	0	0	0	16
07:15 AM	0	6	0	6	**2**	0	0	**2**	0	7	0	7	0	**1**	0	1	16
07:30 AM	1	**7**	0	**8**	2	0	0	2	0	4	**2**	6	**1**	0	**2**	**3**	**19**
07:45 AM	1	5	0	6	0	0	0	0	0	7	0	7	0	0	0	0	13
Total Volume	3	23	0	26	4	0	1	5	1	26	2	29	1	1	2	4	64
% App. Total	11.5	88.5	0		80	0	20		3.4	89.7	6.9		25	25	50		
PHF	.750	.821	.000	.813	.500	.000	.250	.625	.250	.813	.250	.806	.250	.250	.250	.333	.842

Counts Unlimited
PO Box 1178
Corona, CA 92878
(951) 268-6268

City of San Bernardino
N/S: Cedar Avenue
E/W: Santa Ana Avenue
Weather: Clear

File Name : 08_CSB_Cedar_Santa Ana AM
Site Code : 04520047
Start Date : 1/23/2020
Page No : 2

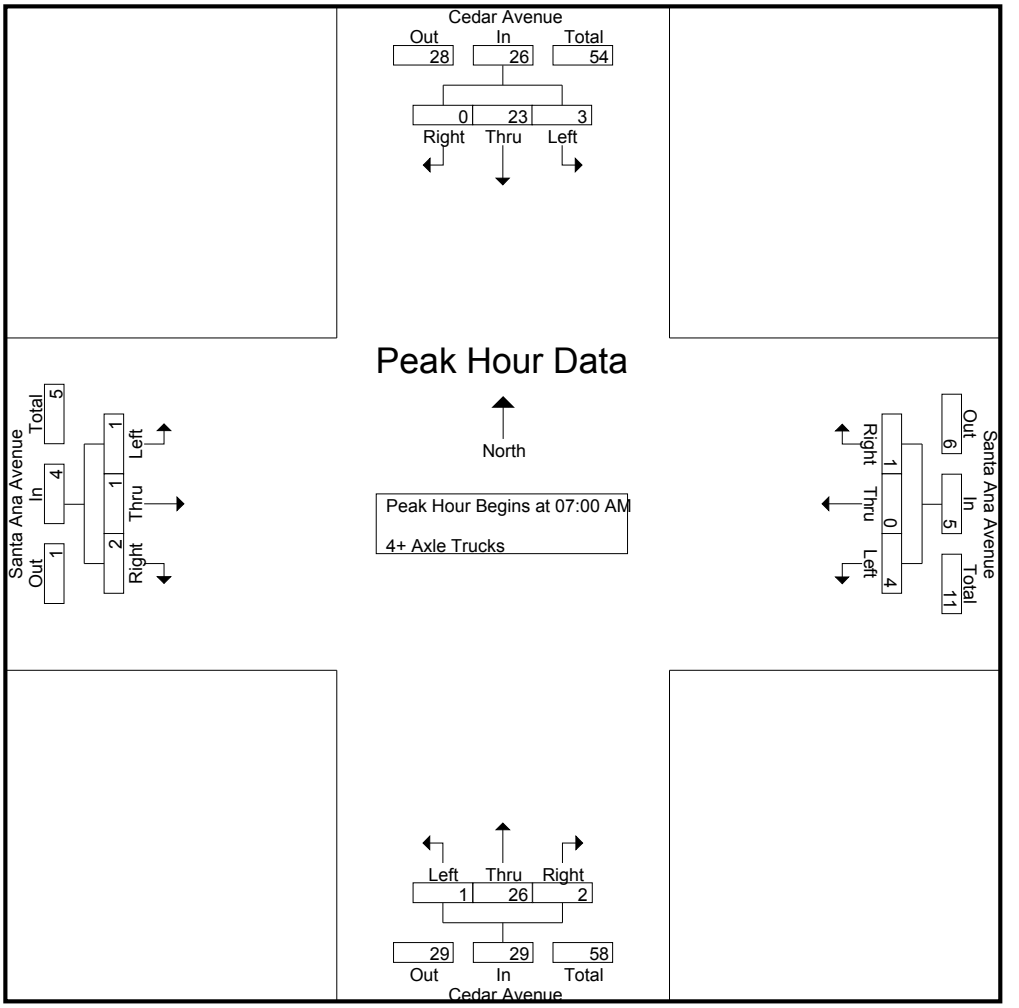

Peak Hour Analysis From 07:00 AM to 07:45 AM - Peak 1 of 1
Peak Hour for Each Approach Begins at:

	07:00 AM				07:00 AM				07:00 AM				07:00 AM			
+0 mins.	**1**	5	0	6	0	0	**1**	1	**1**	**8**	0	**9**	0	0	0	0
+15 mins.	0	6	0	6	**2**	0	0	**2**	0	7	0	7	0	**1**	0	1
+30 mins.	1	**7**	0	**8**	2	0	0	2	0	4	**2**	6	**1**	0	**2**	**3**
+45 mins.	1	5	0	6	0	0	0	0	0	7	0	7	0	0	0	0
Total Volume	3	23	0	26	4	0	1	5	1	26	2	29	1	1	2	4
% App. Total	11.5	88.5	0		80	0	20		3.4	89.7	6.9		25	25	50	
PHF	.750	.821	.000	.813	.500	.000	.250	.625	.250	.813	.250	.806	.250	.250	.250	.333

Counts Unlimited
PO Box 1178
Corona, CA 92878
(951) 268-6268

City of San Bernardino
N/S: Cedar Avenue
E/W: Santa Ana Avenue
Weather: Clear

File Name : 08_CSB_Cedar_Santa Ana PM
Site Code : 04520047
Start Date : 1/23/2020
Page No : 1

Groups Printed- Passenger Vehicles - Large 2 Axle Vehicles - 3 Axle Vehicles - 4+ Axle Trucks

	Cedar Avenue Southbound				Santa Ana Avenue Westbound				Cedar Avenue Northbound				Santa Ana Avenue Eastbound				
Start Time	Left	Thru	Right	App. Total	Left	Thru	Right	App. Total	Left	Thru	Right	App. Total	Left	Thru	Right	App. Total	Int. Total
04:00 PM	9	174	20	203	6	25	11	42	29	138	13	180	22	32	21	75	500
04:15 PM	11	209	11	231	7	30	4	41	22	128	15	165	7	30	23	60	497
04:30 PM	7	158	11	176	5	35	8	48	21	158	13	192	13	30	24	67	483
04:45 PM	15	185	10	210	9	28	11	48	24	139	8	171	10	33	30	73	502
Total	42	726	52	820	27	118	34	179	96	563	49	708	52	125	98	275	1982
05:00 PM	19	171	17	207	7	29	10	46	21	136	20	177	17	33	12	62	492
05:15 PM	19	201	6	226	5	28	4	37	25	150	14	189	14	26	21	61	513
05:30 PM	10	162	13	185	3	28	6	37	25	153	20	198	20	36	26	82	502
05:45 PM	9	157	6	172	5	32	9	46	25	122	7	154	14	32	18	64	436
Total	57	691	42	790	20	117	29	166	96	561	61	718	65	127	77	269	1943
Grand Total	99	1417	94	1610	47	235	63	345	192	1124	110	1426	117	252	175	544	3925
Apprch %	6.1	88	5.8		13.6	68.1	18.3		13.5	78.8	7.7		21.5	46.3	32.2		
Total %	2.5	36.1	2.4	41	1.2	6	1.6	8.8	4.9	28.6	2.8	36.3	3	6.4	4.5	13.9	
Passenger Vehicles	83	1331	89	1503	44	227	51	322	181	1067	96	1344	115	239	172	526	3695
% Passenger Vehicles	83.8	93.9	94.7	93.4	93.6	96.6	81	93.3	94.3	94.9	87.3	94.2	98.3	94.8	98.3	96.7	94.1
Large 2 Axle Vehicles	5	27	4	36	2	6	3	11	6	26	4	36	1	9	2	12	95
% Large 2 Axle Vehicles	5.1	1.9	4.3	2.2	4.3	2.6	4.8	3.2	3.1	2.3	3.6	2.5	0.9	3.6	1.1	2.2	2.4
3 Axle Vehicles	4	27	1	32	1	2	4	7	2	8	5	15	0	1	1	2	56
% 3 Axle Vehicles	4	1.9	1.1	2	2.1	0.9	6.3	2	1	0.7	4.5	1.1	0	0.4	0.6	0.4	1.4
4+ Axle Trucks	7	32	0	39	0	0	5	5	3	23	5	31	1	3	0	4	79
% 4+ Axle Trucks	7.1	2.3	0	2.4	0	0	7.9	1.4	1.6	2	4.5	2.2	0.9	1.2	0	0.7	2

	Cedar Avenue Southbound				Santa Ana Avenue Westbound				Cedar Avenue Northbound				Santa Ana Avenue Eastbound				
Start Time	Left	Thru	Right	App. Total	Left	Thru	Right	App. Total	Left	Thru	Right	App. Total	Left	Thru	Right	App. Total	Int. Total
Peak Hour Analysis From 04:00 PM to 05:45 PM - Peak 1 of 1																	
Peak Hour for Entire Intersection Begins at 04:45 PM																	
04:45 PM	15	185	10	210	**9**	28	**11**	**48**	24	139	8	171	10	33	**30**	73	502
05:00 PM	**19**	171	**17**	207	7	**29**	10	46	21	136	**20**	177	17	33	12	62	492
05:15 PM	19	**201**	6	**226**	5	28	4	37	**25**	150	14	189	14	26	21	61	**513**
05:30 PM	10	162	13	185	3	28	6	37	25	**153**	20	**198**	**20**	**36**	26	**82**	502
Total Volume	63	719	46	828	24	113	31	168	95	578	62	735	61	128	89	278	2009
% App. Total	7.6	86.8	5.6		14.3	67.3	18.5		12.9	78.6	8.4		21.9	46	32		
PHF	.829	.894	.676	.916	.667	.974	.705	.875	.950	.944	.775	.928	.763	.889	.742	.848	.979

Counts Unlimited
PO Box 1178
Corona, CA 92878
(951) 268-6268

City of San Bernardino
N/S: Cedar Avenue
E/W: Santa Ana Avenue
Weather: Clear

File Name : 08_CSB_Cedar_Santa Ana PM
Site Code : 04520047
Start Date : 1/23/2020
Page No : 2

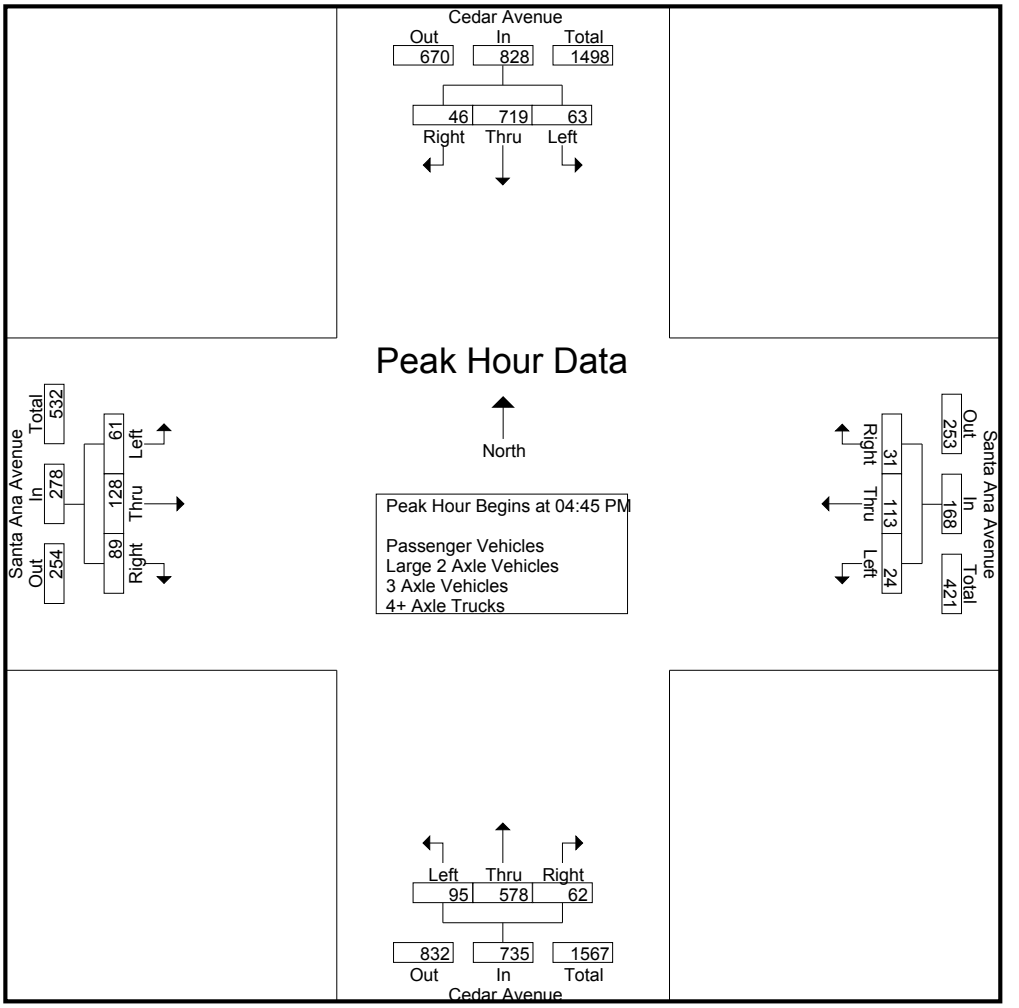

Peak Hour Analysis From 04:00 PM to 05:45 PM - Peak 1 of 1
Peak Hour for Each Approach Begins at:

	04:45 PM				04:15 PM				04:45 PM				04:45 PM			
+0 mins.	15	185	10	210	7	30	4	41	24	139	8	171	10	33	**30**	73
+15 mins.	**19**	171	**17**	207	5	**35**	8	**48**	21	136	**20**	177	17	33	12	62
+30 mins.	19	**201**	6	**226**	**9**	28	**11**	48	**25**	150	14	189	14	26	21	61
+45 mins.	10	162	13	185	7	29	10	46	25	**153**	20	**198**	**20**	**36**	26	**82**
Total Volume	63	719	46	828	28	122	33	183	95	578	62	735	61	128	89	278
% App. Total	7.6	86.8	5.6		15.3	66.7	18		12.9	78.6	8.4		21.9	46	32	
PHF	.829	.894	.676	.916	.778	.871	.750	.953	.950	.944	.775	.928	.763	.889	.742	.848

Counts Unlimited
PO Box 1178
Corona, CA 92878
(951) 268-6268

City of San Bernardino
N/S: Cedar Avenue
E/W: Santa Ana Avenue
Weather: Clear

File Name : 08_CSB_Cedar_Santa Ana PM
Site Code : 04520047
Start Date : 1/23/2020
Page No : 1

Groups Printed- Passenger Vehicles

	Cedar Avenue Southbound				Santa Ana Avenue Westbound				Cedar Avenue Northbound				Santa Ana Avenue Eastbound				
Start Time	Left	Thru	Right	App. Total	Left	Thru	Right	App. Total	Left	Thru	Right	App. Total	Left	Thru	Right	App. Total	Int. Total
04:00 PM	7	153	20	180	5	25	9	39	26	129	10	165	22	30	21	73	457
04:15 PM	10	201	10	221	7	29	3	39	22	123	11	156	7	27	22	56	472
04:30 PM	5	149	9	163	5	33	6	44	18	150	13	181	13	30	24	67	455
04:45 PM	12	170	9	191	9	28	8	45	23	131	6	160	10	32	29	71	467
Total	34	673	48	755	26	115	26	167	89	533	40	662	52	119	96	267	1851
05:00 PM	17	162	17	196	6	27	9	42	20	132	16	168	16	31	12	59	465
05:15 PM	15	188	6	209	4	26	3	33	23	142	13	178	14	26	21	61	481
05:30 PM	9	162	13	184	3	27	5	35	24	145	20	189	19	35	25	79	487
05:45 PM	8	146	5	159	5	32	8	45	25	115	7	147	14	28	18	60	411
Total	49	658	41	748	18	112	25	155	92	534	56	682	63	120	76	259	1844
Grand Total	83	1331	89	1503	44	227	51	322	181	1067	96	1344	115	239	172	526	3695
Apprch %	5.5	88.6	5.9		13.7	70.5	15.8		13.5	79.4	7.1		21.9	45.4	32.7		
Total %	2.2	36	2.4	40.7	1.2	6.1	1.4	8.7	4.9	28.9	2.6	36.4	3.1	6.5	4.7	14.2	

	Cedar Avenue Southbound				Santa Ana Avenue Westbound				Cedar Avenue Northbound				Santa Ana Avenue Eastbound				
Start Time	Left	Thru	Right	App. Total	Left	Thru	Right	App. Total	Left	Thru	Right	App. Total	Left	Thru	Right	App. Total	Int. Total
Peak Hour Analysis From 04:45 PM to 05:30 PM - Peak 1 of 1																	
Peak Hour for Entire Intersection Begins at 04:45 PM																	
04:45 PM	12	170	9	191	**9**	**28**	8	**45**	23	131	6	160	10	32	**29**	71	467
05:00 PM	**17**	162	**17**	196	6	27	**9**	42	20	132	16	168	16	31	12	59	465
05:15 PM	15	**188**	6	**209**	4	26	3	33	23	142	13	178	14	26	21	61	481
05:30 PM	9	162	13	184	3	27	5	35	**24**	**145**	**20**	**189**	**19**	**35**	25	**79**	**487**
Total Volume	53	682	45	780	22	108	25	155	90	550	55	695	59	124	87	270	1900
% App. Total	6.8	87.4	5.8		14.2	69.7	16.1		12.9	79.1	7.9		21.9	45.9	32.2		
PHF	.779	.907	.662	.933	.611	.964	.694	.861	.938	.948	.688	.919	.776	.886	.750	.854	.975

Counts Unlimited
PO Box 1178
Corona, CA 92878
(951) 268-6268

City of San Bernardino
N/S: Cedar Avenue
E/W: Santa Ana Avenue
Weather: Clear

File Name : 08_CSB_Cedar_Santa Ana PM
Site Code : 04520047
Start Date : 1/23/2020
Page No : 2

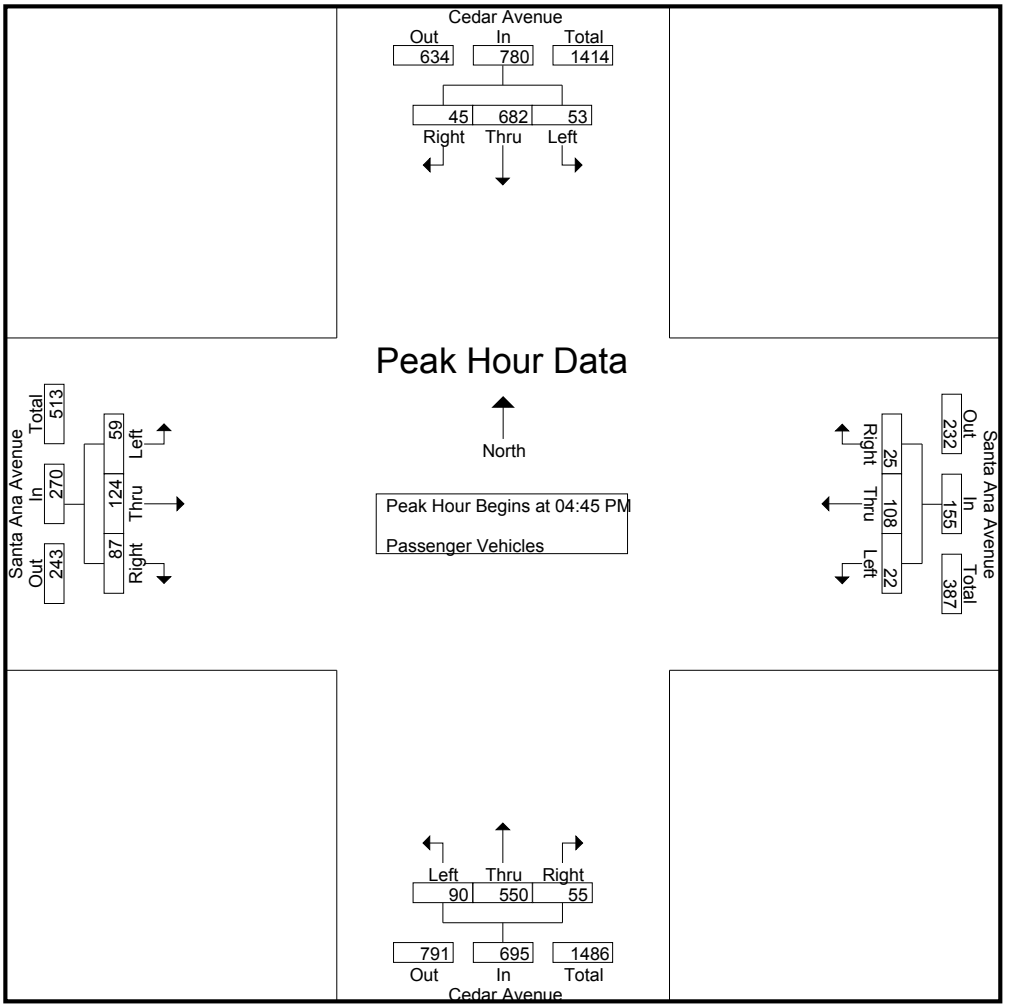

Peak Hour Analysis From 04:45 PM to 05:30 PM - Peak 1 of 1
Peak Hour for Each Approach Begins at:

	04:45 PM				04:45 PM				04:45 PM				04:45 PM			
+0 mins.	12	170	9	191	**9**	**28**	8	**45**	23	131	6	160	10	32	**29**	71
+15 mins.	**17**	162	**17**	196	6	27	**9**	42	20	132	16	168	16	31	12	59
+30 mins.	15	**188**	6	**209**	4	26	3	33	23	142	13	178	14	26	21	61
+45 mins.	9	162	13	184	3	27	5	35	**24**	**145**	**20**	**189**	**19**	**35**	25	**79**
Total Volume	53	682	45	780	22	108	25	155	90	550	55	695	59	124	87	270
% App. Total	6.8	87.4	5.8		14.2	69.7	16.1		12.9	79.1	7.9		21.9	45.9	32.2	
PHF	.779	.907	.662	.933	.611	.964	.694	.861	.938	.948	.688	.919	.776	.886	.750	.854

Counts Unlimited
PO Box 1178
Corona, CA 92878
(951) 268-6268

City of San Bernardino
N/S: Cedar Avenue
E/W: Santa Ana Avenue
Weather: Clear

File Name : 08_CSB_Cedar_Santa Ana PM
Site Code : 04520047
Start Date : 1/23/2020
Page No : 1

Groups Printed- Large 2 Axle Vehicles

	Cedar Avenue Southbound				Santa Ana Avenue Westbound				Cedar Avenue Northbound				Santa Ana Avenue Eastbound				
Start Time	Left	Thru	Right	App. Total	Left	Thru	Right	App. Total	Left	Thru	Right	App. Total	Left	Thru	Right	App. Total	Int. Total
04:00 PM	2	8	0	10	1	0	1	2	0	2	1	3	0	2	0	2	17
04:15 PM	0	2	1	3	0	1	1	2	0	1	2	3	0	1	1	2	10
04:30 PM	0	3	1	4	0	2	1	3	2	5	0	7	0	0	0	0	14
04:45 PM	2	3	1	6	0	0	0	0	1	4	0	5	0	1	0	1	12
Total	4	16	3	23	1	3	3	7	3	12	3	18	0	4	1	5	53
05:00 PM	1	3	0	4	1	0	0	1	0	1	1	2	0	1	0	1	8
05:15 PM	0	4	0	4	0	2	0	2	2	4	0	6	0	0	0	0	12
05:30 PM	0	0	0	0	0	1	0	1	1	5	0	6	1	1	1	3	10
05:45 PM	0	4	1	5	0	0	0	0	0	4	0	4	0	3	0	3	12
Total	1	11	1	13	1	3	0	4	3	14	1	18	1	5	1	7	42
Grand Total	5	27	4	36	2	6	3	11	6	26	4	36	1	9	2	12	95
Apprch %	13.9	75	11.1		18.2	54.5	27.3		16.7	72.2	11.1		8.3	75	16.7		
Total %	5.3	28.4	4.2	37.9	2.1	6.3	3.2	11.6	6.3	27.4	4.2	37.9	1.1	9.5	2.1	12.6	

	Cedar Avenue Southbound				Santa Ana Avenue Westbound				Cedar Avenue Northbound				Santa Ana Avenue Eastbound				
Start Time	Left	Thru	Right	App. Total	Left	Thru	Right	App. Total	Left	Thru	Right	App. Total	Left	Thru	Right	App. Total	Int. Total
Peak Hour Analysis From 04:45 PM to 05:30 PM - Peak 1 of 1																	
Peak Hour for Entire Intersection Begins at 04:45 PM																	
04:45 PM	**2**	3	**1**	**6**	0	0	0	0	1	4	0	5	0	**1**	0	1	**12**
05:00 PM	1	3	0	4	**1**	0	0	1	0	1	**1**	2	0	1	0	1	8
05:15 PM	0	**4**	0	4	0	**2**	0	**2**	**2**	4	0	**6**	0	0	0	0	12
05:30 PM	0	0	0	0	0	1	0	1	1	**5**	0	6	**1**	1	**1**	**3**	10
Total Volume	3	10	1	14	1	3	0	4	4	14	1	19	1	3	1	5	42
% App. Total	21.4	71.4	7.1		25	75	0		21.1	73.7	5.3		20	60	20		
PHF	.375	.625	.250	.583	.250	.375	.000	.500	.500	.700	.250	.792	.250	.750	.250	.417	.875

Counts Unlimited
PO Box 1178
Corona, CA 92878
(951) 268-6268

City of San Bernardino
N/S: Cedar Avenue
E/W: Santa Ana Avenue
Weather: Clear

File Name : 08_CSB_Cedar_Santa Ana PM
Site Code : 04520047
Start Date : 1/23/2020
Page No : 2

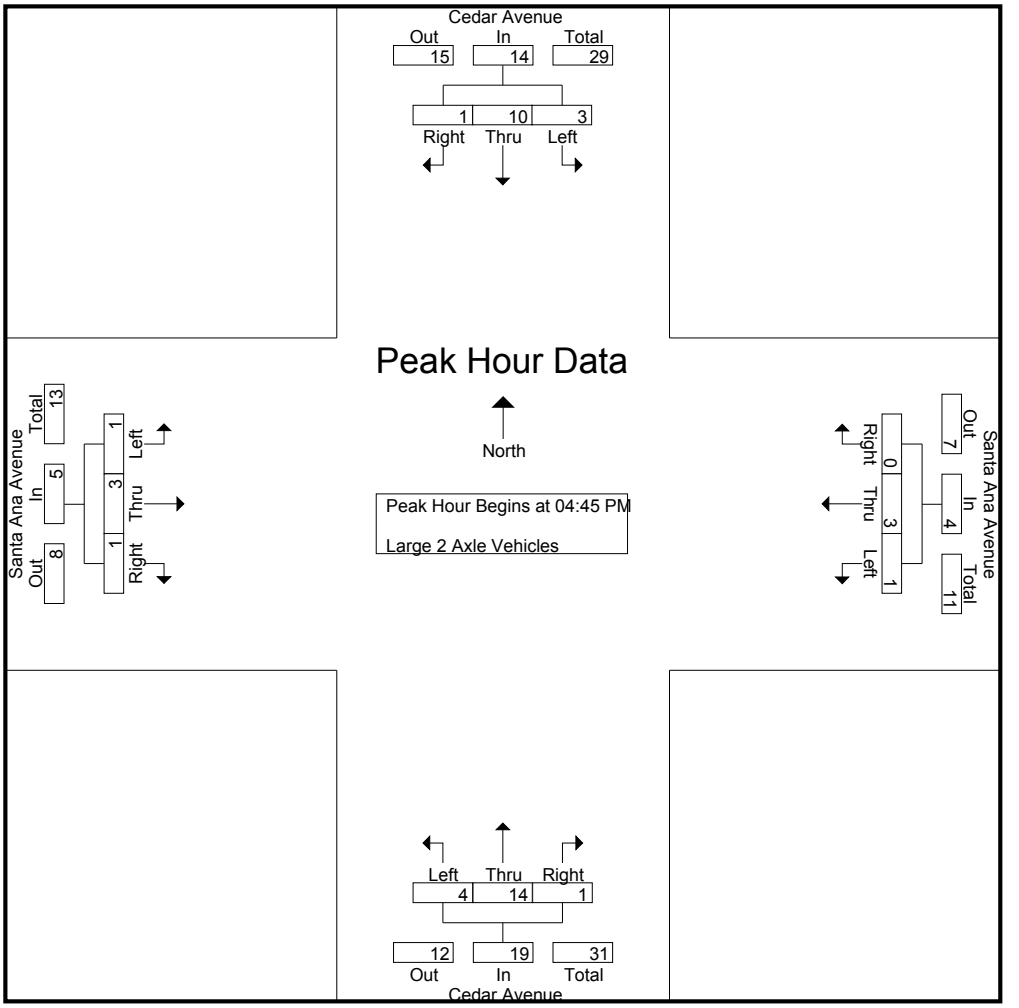

Peak Hour Analysis From 04:45 PM to 05:30 PM - Peak 1 of 1
Peak Hour for Each Approach Begins at:

	04:45 PM				04:45 PM				04:45 PM				04:45 PM			
+0 mins.	**2**	3	**1**	**6**	0	0	0	0	1	4	0	5	0	**1**	0	1
+15 mins.	1	3	0	4	**1**	0	0	1	0	1	**1**	2	0	1	0	1
+30 mins.	0	**4**	0	4	0	**2**	0	**2**	**2**	4	0	**6**	0	0	0	0
+45 mins.	0	0	0	0	0	1	0	1	1	**5**	0	6	**1**	1	**1**	**3**
Total Volume	3	10	1	14	1	3	0	4	4	14	1	19	1	3	1	5
% App. Total	21.4	71.4	7.1		25	75	0		21.1	73.7	5.3		20	60	20	
PHF	.375	.625	.250	.583	.250	.375	.000	.500	.500	.700	.250	.792	.250	.750	.250	.417

Counts Unlimited
PO Box 1178
Corona, CA 92878
(951) 268-6268

City of San Bernardino
N/S: Cedar Avenue
E/W: Santa Ana Avenue
Weather: Clear

File Name : 08_CSB_Cedar_Santa Ana PM
Site Code : 04520047
Start Date : 1/23/2020
Page No : 1

Groups Printed- 3 Axle Vehicles

	Cedar Avenue Southbound				Santa Ana Avenue Westbound				Cedar Avenue Northbound				Santa Ana Avenue Eastbound				
Start Time	Left	Thru	Right	App. Total	Left	Thru	Right	App. Total	Left	Thru	Right	App. Total	Left	Thru	Right	App. Total	Int. Total
04:00 PM	0	8	0	8	0	0	1	1	2	2	0	4	0	0	0	0	13
04:15 PM	0	2	0	2	0	0	0	0	0	0	1	1	0	1	0	1	4
04:30 PM	0	3	1	4	0	0	0	0	0	1	0	1	0	0	0	0	5
04:45 PM	1	3	0	4	0	0	1	1	0	3	0	3	0	0	1	1	9
Total	1	16	1	18	0	0	2	2	2	6	1	9	0	1	1	2	31
05:00 PM	0	3	0	3	0	2	1	3	0	0	3	3	0	0	0	0	9
05:15 PM	2	4	0	6	1	0	0	1	0	1	1	2	0	0	0	0	9
05:30 PM	1	0	0	1	0	0	0	0	0	1	0	1	0	0	0	0	2
05:45 PM	0	4	0	4	0	0	1	1	0	0	0	0	0	0	0	0	5
Total	3	11	0	14	1	2	2	5	0	2	4	6	0	0	0	0	25
Grand Total	4	27	1	32	1	2	4	7	2	8	5	15	0	1	1	2	56
Apprch %	12.5	84.4	3.1		14.3	28.6	57.1		13.3	53.3	33.3		0	50	50		
Total %	7.1	48.2	1.8	57.1	1.8	3.6	7.1	12.5	3.6	14.3	8.9	26.8	0	1.8	1.8	3.6	

	Cedar Avenue Southbound				Santa Ana Avenue Westbound				Cedar Avenue Northbound				Santa Ana Avenue Eastbound				
Start Time	Left	Thru	Right	App. Total	Left	Thru	Right	App. Total	Left	Thru	Right	App. Total	Left	Thru	Right	App. Total	Int. Total
Peak Hour Analysis From 04:45 PM to 05:30 PM - Peak 1 of 1																	
Peak Hour for Entire Intersection Begins at 04:45 PM																	
04:45 PM	1	3	0	4	0	0	**1**	1	0	**3**	0	**3**	0	0	**1**	**1**	**9**
05:00 PM	0	3	0	3	0	**2**	1	**3**	0	0	**3**	3	0	0	0	0	9
05:15 PM	**2**	**4**	0	**6**	**1**	0	0	1	0	1	1	2	0	0	0	0	9
05:30 PM	1	0	0	1	0	0	0	0	0	1	0	1	0	0	0	0	2
Total Volume	4	10	0	14	1	2	2	5	0	5	4	9	0	0	1	1	29
% App. Total	28.6	71.4	0		20	40	40		0	55.6	44.4		0	0	100		
PHF	.500	.625	.000	.583	.250	.250	.500	.417	.000	.417	.333	.750	.000	.000	.250	.250	.806

Counts Unlimited
PO Box 1178
Corona, CA 92878
(951) 268-6268

City of San Bernardino
N/S: Cedar Avenue
E/W: Santa Ana Avenue
Weather: Clear

File Name : 08_CSB_Cedar_Santa Ana PM
Site Code : 04520047
Start Date : 1/23/2020
Page No : 2

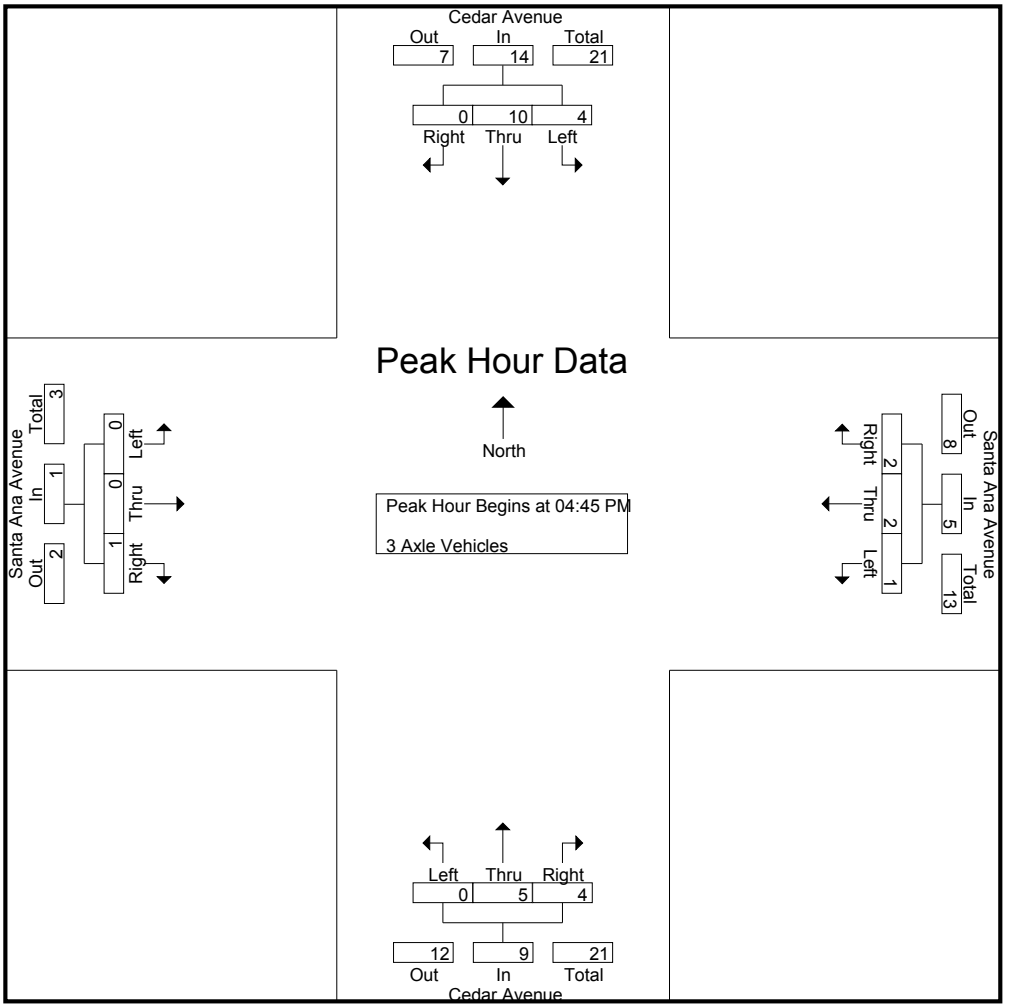

Peak Hour Analysis From 04:45 PM to 05:30 PM - Peak 1 of 1
Peak Hour for Each Approach Begins at:

	04:45 PM				04:45 PM				04:45 PM				04:45 PM			
+0 mins.	1	3	0	4	0	0	**1**	1	0	**3**	0	**3**	0	0	**1**	**1**
+15 mins.	0	3	0	3	0	**2**	1	**3**	0	0	**3**	3	0	0	0	0
+30 mins.	**2**	**4**	0	**6**	**1**	0	0	1	0	1	1	2	0	0	0	0
+45 mins.	1	0	0	1	0	0	0	0	0	1	0	1	0	0	0	0
Total Volume	4	10	0	14	1	2	2	5	0	5	4	9	0	0	1	1
% App. Total	28.6	71.4	0		20	40	40		0	55.6	44.4		0	0	100	
PHF	.500	.625	.000	.583	.250	.250	.500	.417	.000	.417	.333	.750	.000	.000	.250	.250

Counts Unlimited
PO Box 1178
Corona, CA 92878
(951) 268-6268

City of San Bernardino
N/S: Cedar Avenue
E/W: Santa Ana Avenue
Weather: Clear

File Name : 08_CSB_Cedar_Santa Ana PM
Site Code : 04520047
Start Date : 1/23/2020
Page No : 1

Groups Printed- 4+ Axle Trucks

	Cedar Avenue Southbound				Santa Ana Avenue Westbound				Cedar Avenue Northbound				Santa Ana Avenue Eastbound				
Start Time	Left	Thru	Right	App. Total	Left	Thru	Right	App. Total	Left	Thru	Right	App. Total	Left	Thru	Right	App. Total	Int. Total
04:00 PM	0	5	0	5	0	0	0	0	1	5	2	8	0	0	0	0	13
04:15 PM	1	4	0	5	0	0	0	0	0	4	1	5	0	1	0	1	11
04:30 PM	2	3	0	5	0	0	1	1	1	2	0	3	0	0	0	0	9
04:45 PM	0	9	0	9	0	0	2	2	0	1	2	3	0	0	0	0	14
Total	3	21	0	24	0	0	3	3	2	12	5	19	0	1	0	1	47
05:00 PM	1	3	0	4	0	0	0	0	1	3	0	4	1	1	0	2	10
05:15 PM	2	5	0	7	0	0	1	1	0	3	0	3	0	0	0	0	11
05:30 PM	0	0	0	0	0	0	1	1	0	2	0	2	0	0	0	0	3
05:45 PM	1	3	0	4	0	0	0	0	0	3	0	3	0	1	0	1	8
Total	4	11	0	15	0	0	2	2	1	11	0	12	1	2	0	3	32
Grand Total	7	32	0	39	0	0	5	5	3	23	5	31	1	3	0	4	79
Apprch %	17.9	82.1	0		0	0	100		9.7	74.2	16.1		25	75	0		
Total %	8.9	40.5	0	49.4	0	0	6.3	6.3	3.8	29.1	6.3	39.2	1.3	3.8	0	5.1	

	Cedar Avenue Southbound				Santa Ana Avenue Westbound				Cedar Avenue Northbound				Santa Ana Avenue Eastbound				
Start Time	Left	Thru	Right	App. Total	Left	Thru	Right	App. Total	Left	Thru	Right	App. Total	Left	Thru	Right	App. Total	Int. Total
Peak Hour Analysis From 04:45 PM to 05:30 PM - Peak 1 of 1																	
Peak Hour for Entire Intersection Begins at 04:45 PM																	
04:45 PM	0	**9**	0	**9**	0	0	**2**	**2**	0	1	**2**	3	0	0	0	0	**14**
05:00 PM	1	3	0	4	0	0	0	0	**1**	**3**	0	**4**	**1**	**1**	0	**2**	10
05:15 PM	**2**	5	0	7	0	0	1	1	0	3	0	3	0	0	0	0	11
05:30 PM	0	0	0	0	0	0	1	1	0	2	0	2	0	0	0	0	3
Total Volume	3	17	0	20	0	0	4	4	1	9	2	12	1	1	0	2	38
% App. Total	15	85	0		0	0	100		8.3	75	16.7		50	50	0		
PHF	.375	.472	.000	.556	.000	.000	.500	.500	.250	.750	.250	.750	.250	.250	.000	.250	.679

Counts Unlimited
PO Box 1178
Corona, CA 92878
(951) 268-6268

City of San Bernardino
N/S: Cedar Avenue
E/W: Santa Ana Avenue
Weather: Clear

File Name : 08_CSB_Cedar_Santa Ana PM
Site Code : 04520047
Start Date : 1/23/2020
Page No : 2

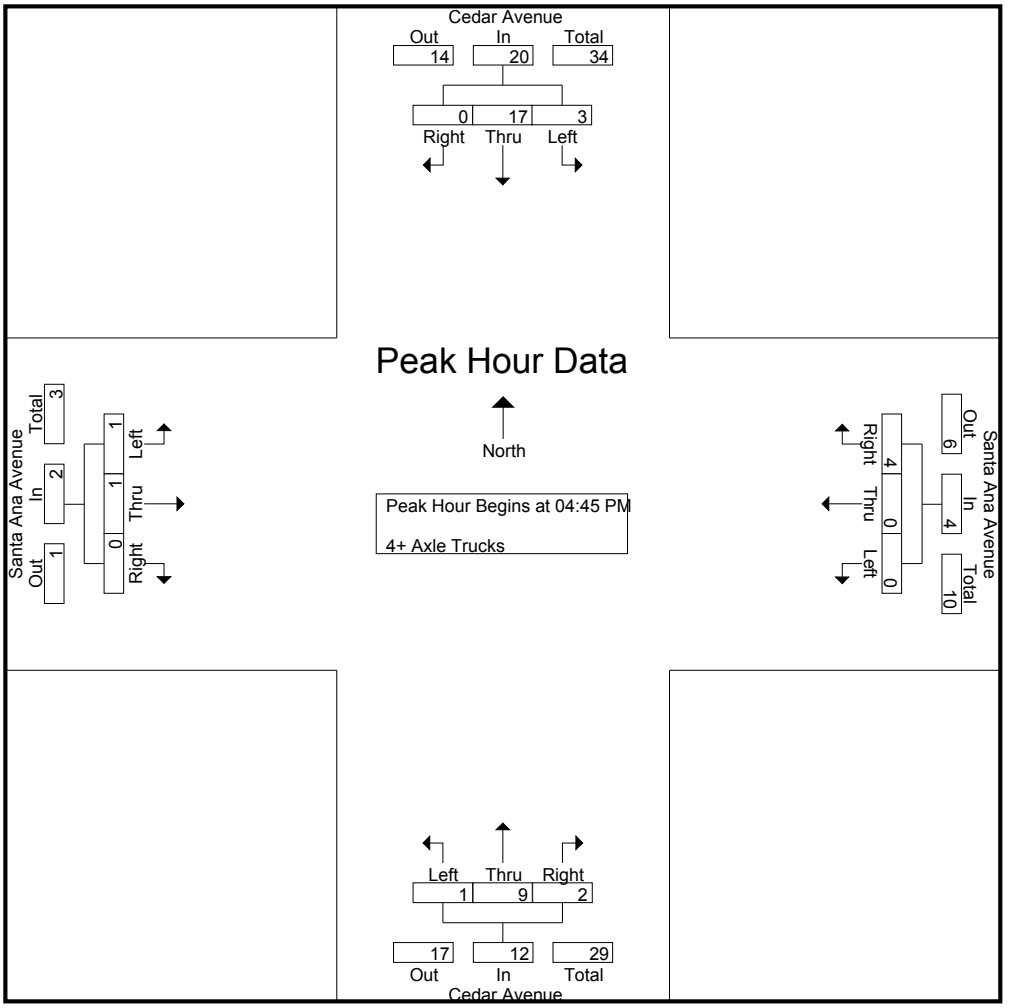

Peak Hour Analysis From 04:45 PM to 05:30 PM - Peak 1 of 1
Peak Hour for Each Approach Begins at:

	04:45 PM				04:45 PM				04:45 PM				04:45 PM			
+0 mins.	0	**9**	0	**9**	0	0	**2**	**2**	0	1	**2**	3	0	0	0	0
+15 mins.	1	3	0	4	0	0	0	0	**1**	**3**	0	**4**	**1**	**1**	0	**2**
+30 mins.	**2**	5	0	7	0	0	1	1	0	3	0	3	0	0	0	0
+45 mins.	0	0	0	0	0	0	1	1	0	2	0	2	0	0	0	0
Total Volume	3	17	0	20	0	0	4	4	1	9	2	12	1	1	0	2
% App. Total	15	85	0		0	0	100		8.3	75	16.7		50	50	0	
PHF	.375	.472	.000	.556	.000	.000	.500	.500	.250	.750	.250	.750	.250	.250	.000	.250

Counts Unlimited
PO Box 1178
Corona, CA 92878
(951) 268-6268

City of San Bernardino
N/S: Larch Avenue
E/W: Santa Ana Avenue
Weather: Clear

File Name : 09_CSB_Larch_Santa Ana AM
Site Code : 04520047
Start Date : 1/23/2020
Page No : 1

Groups Printed- Passenger Vehicles - Large 2 Axle Vehicles - 3 Axle Vehicles - 4+ Axle Trucks

	Larch Avenue Southbound				Santa Ana Avenue Westbound				Larch Avenue Northbound				Santa Ana Avenue Eastbound				
Start Time	Left	Thru	Right	App. Total	Left	Thru	Right	App. Total	Left	Thru	Right	App. Total	Left	Thru	Right	App. Total	Int. Total
07:00 AM	13	28	9	50	7	36	10	53	6	16	2	24	1	31	15	47	174
07:15 AM	16	48	1	65	11	26	5	42	5	17	2	24	3	28	16	47	178
07:30 AM	11	39	5	55	11	22	5	38	7	35	6	48	6	31	18	55	196
07:45 AM	10	9	3	22	0	14	3	17	5	12	4	21	1	16	7	24	84
Total	50	124	18	192	29	98	23	150	23	80	14	117	11	106	56	173	632
08:00 AM	14	6	3	23	4	8	5	17	14	14	5	33	5	15	8	28	101
08:15 AM	6	6	2	14	1	15	6	22	3	8	1	12	3	14	4	21	69
08:30 AM	3	9	3	15	1	20	2	23	4	7	3	14	1	24	1	26	78
08:45 AM	2	3	5	10	0	23	1	24	4	2	1	7	3	17	1	21	62
Total	25	24	13	62	6	66	14	86	25	31	10	66	12	70	14	96	310
Grand Total	75	148	31	254	35	164	37	236	48	111	24	183	23	176	70	269	942
Apprch %	29.5	58.3	12.2		14.8	69.5	15.7		26.2	60.7	13.1		8.6	65.4	26		
Total %	8	15.7	3.3	27	3.7	17.4	3.9	25.1	5.1	11.8	2.5	19.4	2.4	18.7	7.4	28.6	
Passenger Vehicles	74	147	29	250	34	132	36	202	44	109	23	176	22	150	68	240	868
% Passenger Vehicles	98.7	99.3	93.5	98.4	97.1	80.5	97.3	85.6	91.7	98.2	95.8	96.2	95.7	85.2	97.1	89.2	92.1
Large 2 Axle Vehicles	1	1	2	4	1	9	1	11	0	2	1	3	0	9	1	10	28
% Large 2 Axle Vehicles	1.3	0.7	6.5	1.6	2.9	5.5	2.7	4.7	0	1.8	4.2	1.6	0	5.1	1.4	3.7	3
3 Axle Vehicles	0	0	0	0	0	9	0	9	1	0	0	1	0	4	0	4	14
% 3 Axle Vehicles	0	0	0	0	0	5.5	0	3.8	2.1	0	0	0.5	0	2.3	0	1.5	1.5
4+ Axle Trucks	0	0	0	0	0	14	0	14	3	0	0	3	1	13	1	15	32
% 4+ Axle Trucks	0	0	0	0	0	8.5	0	5.9	6.2	0	0	1.6	4.3	7.4	1.4	5.6	3.4

	Larch Avenue Southbound				Santa Ana Avenue Westbound				Larch Avenue Northbound				Santa Ana Avenue Eastbound				
Start Time	Left	Thru	Right	App. Total	Left	Thru	Right	App. Total	Left	Thru	Right	App. Total	Left	Thru	Right	App. Total	Int. Total
Peak Hour Analysis From 07:00 AM to 08:45 AM - Peak 1 of 1																	
Peak Hour for Entire Intersection Begins at 07:00 AM																	
07:00 AM	13	28	9	50	7	36	10	53	6	16	2	24	1	31	15	47	174
07:15 AM	16	48	1	65	11	26	5	42	5	17	2	24	3	28	16	47	178
07:30 AM	11	39	5	55	11	22	5	38	7	35	6	48	6	31	18	55	196
07:45 AM	10	9	3	22	0	14	3	17	5	12	4	21	1	16	7	24	84
Total Volume	50	124	18	192	29	98	23	150	23	80	14	117	11	106	56	173	632
% App. Total	26	64.6	9.4		19.3	65.3	15.3		19.7	68.4	12		6.4	61.3	32.4		
PHF	.781	.646	.500	.738	.659	.681	.575	.708	.821	.571	.583	.609	.458	.855	.778	.786	.806

Counts Unlimited
PO Box 1178
Corona, CA 92878
(951) 268-6268

City of San Bernardino
N/S: Larch Avenue
E/W: Santa Ana Avenue
Weather: Clear

File Name : 09_CSB_Larch_Santa Ana AM
Site Code : 04520047
Start Date : 1/23/2020
Page No : 2

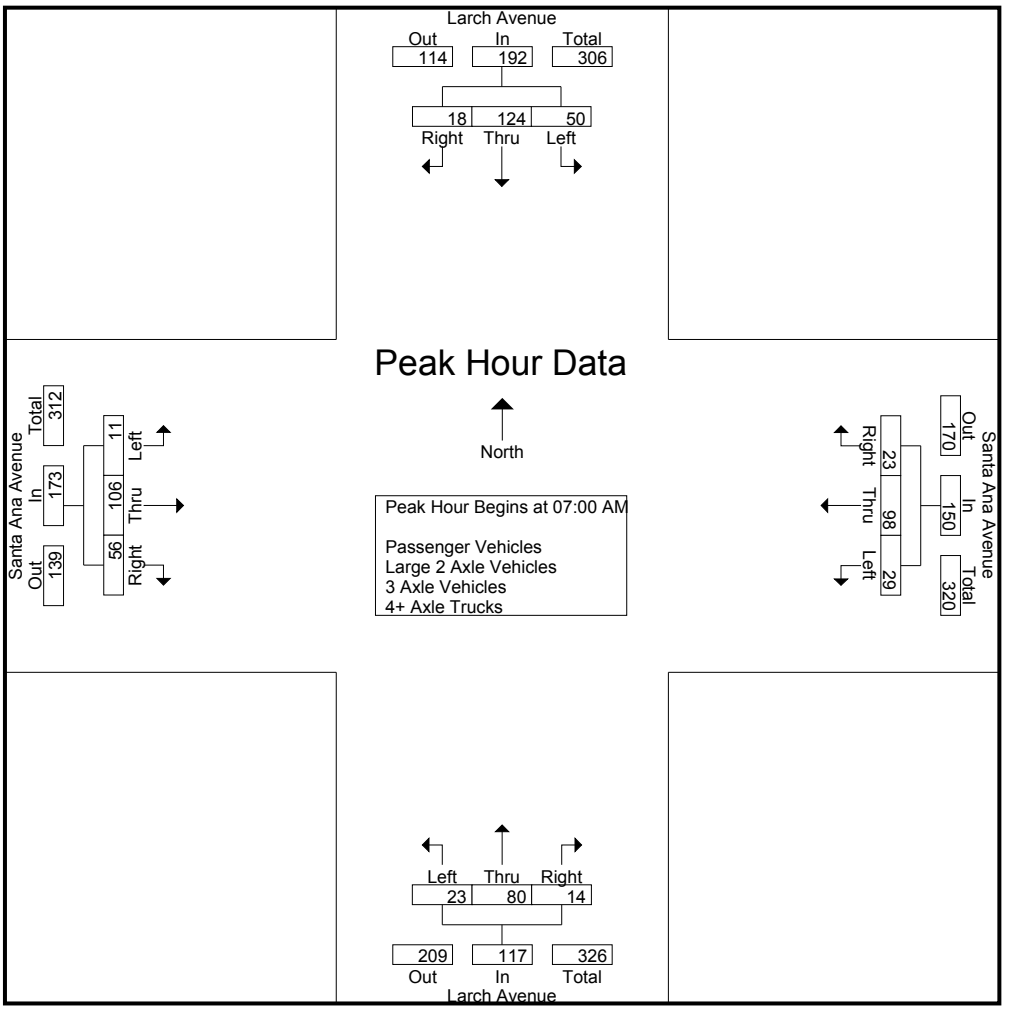

Peak Hour Analysis From 07:00 AM to 08:45 AM - Peak 1 of 1
Peak Hour for Each Approach Begins at:

	07:00 AM				07:00 AM				07:15 AM				07:00 AM			
+0 mins.	13	28	9	50	7	36	10	53	5	17	2	24	1	31	15	47
+15 mins.	16	48	1	65	11	26	5	42	7	35	6	48	3	28	16	47
+30 mins.	11	39	5	55	11	22	5	38	5	12	4	21	6	31	18	55
+45 mins.	10	9	3	22	0	14	3	17	14	14	5	33	1	16	7	24
Total Volume	50	124	18	192	29	98	23	150	31	78	17	126	11	106	56	173
% App. Total	26	64.6	9.4		19.3	65.3	15.3		24.6	61.9	13.5		6.4	61.3	32.4	
PHF	.781	.646	.500	.738	.659	.681	.575	.708	.554	.557	.708	.656	.458	.855	.778	.786

Counts Unlimited
PO Box 1178
Corona, CA 92878
(951) 268-6268

City of San Bernardino
N/S: Larch Avenue
E/W: Santa Ana Avenue
Weather: Clear

File Name : 09_CSB_Larch_Santa Ana AM
Site Code : 04520047
Start Date : 1/23/2020
Page No : 1

Groups Printed- Passenger Vehicles

	Larch Avenue Southbound				Santa Ana Avenue Westbound				Larch Avenue Northbound				Santa Ana Avenue Eastbound				
Start Time	Left	Thru	Right	App. Total	Left	Thru	Right	App. Total	Left	Thru	Right	App. Total	Left	Thru	Right	App. Total	Int. Total
07:00 AM	13	27	9	49	7	35	10	52	6	16	2	24	1	30	14	45	170
07:15 AM	16	48	1	65	11	24	5	40	5	17	2	24	3	23	16	42	171
07:30 AM	11	39	5	55	11	16	5	32	7	34	6	47	5	28	17	50	184
07:45 AM	9	9	2	20	0	10	3	13	5	12	4	21	1	14	7	22	76
Total	49	123	17	189	29	85	23	137	23	79	14	116	10	95	54	159	601
08:00 AM	14	6	2	22	3	7	5	15	14	14	5	33	5	13	8	26	96
08:15 AM	6	6	2	14	1	11	6	18	3	7	1	11	3	9	4	16	59
08:30 AM	3	9	3	15	1	12	2	15	1	7	3	11	1	21	1	23	64
08:45 AM	2	3	5	10	0	17	0	17	3	2	0	5	3	12	1	16	48
Total	25	24	12	61	5	47	13	65	21	30	9	60	12	55	14	81	267
Grand Total	74	147	29	250	34	132	36	202	44	109	23	176	22	150	68	240	868
Apprch %	29.6	58.8	11.6		16.8	65.3	17.8		25	61.9	13.1		9.2	62.5	28.3		
Total %	8.5	16.9	3.3	28.8	3.9	15.2	4.1	23.3	5.1	12.6	2.6	20.3	2.5	17.3	7.8	27.6	

	Larch Avenue Southbound				Santa Ana Avenue Westbound				Larch Avenue Northbound				Santa Ana Avenue Eastbound				
Start Time	Left	Thru	Right	App. Total	Left	Thru	Right	App. Total	Left	Thru	Right	App. Total	Left	Thru	Right	App. Total	Int. Total
Peak Hour Analysis From 07:00 AM to 07:45 AM - Peak 1 of 1																	
Peak Hour for Entire Intersection Begins at 07:00 AM																	
07:00 AM	13	27	9	49	7	35	10	52	6	16	2	24	1	30	14	45	170
07:15 AM	16	48	1	65	11	24	5	40	5	17	2	24	3	23	16	42	171
07:30 AM	11	39	5	55	11	16	5	32	7	34	6	47	5	28	17	50	184
07:45 AM	9	9	2	20	0	10	3	13	5	12	4	21	1	14	7	22	76
Total Volume	49	123	17	189	29	85	23	137	23	79	14	116	10	95	54	159	601
% App. Total	25.9	65.1	9		21.2	62	16.8		19.8	68.1	12.1		6.3	59.7	34		
PHF	.766	.641	.472	.727	.659	.607	.575	.659	.821	.581	.583	.617	.500	.792	.794	.795	.817

Counts Unlimited
PO Box 1178
Corona, CA 92878
(951) 268-6268

City of San Bernardino
N/S: Larch Avenue
E/W: Santa Ana Avenue
Weather: Clear

File Name : 09_CSB_Larch_Santa Ana AM
Site Code : 04520047
Start Date : 1/23/2020
Page No : 2

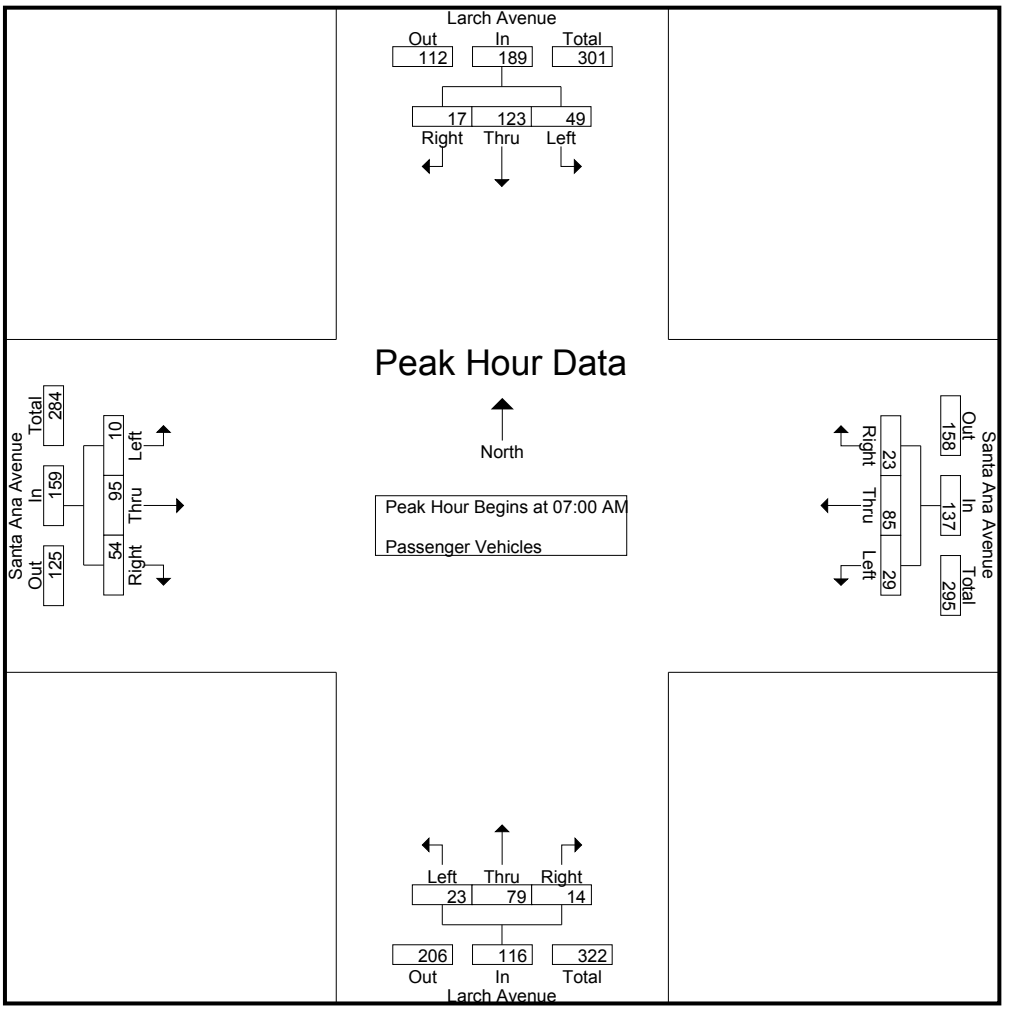

Peak Hour Analysis From 07:00 AM to 07:45 AM - Peak 1 of 1
Peak Hour for Each Approach Begins at:

	07:00 AM				07:00 AM				07:00 AM				07:00 AM			
+0 mins.	13	27	9	49	7	35	10	52	6	16	2	24	1	30	14	45
+15 mins.	16	48	1	65	11	24	5	40	5	17	2	24	3	23	16	42
+30 mins.	11	39	5	55	11	16	5	32	7	34	6	47	5	28	17	50
+45 mins.	9	9	2	20	0	10	3	13	5	12	4	21	1	14	7	22
Total Volume	49	123	17	189	29	85	23	137	23	79	14	116	10	95	54	159
% App. Total	25.9	65.1	9		21.2	62	16.8		19.8	68.1	12.1		6.3	59.7	34	
PHF	.766	.641	.472	.727	.659	.607	.575	.659	.821	.581	.583	.617	.500	.792	.794	.795

Counts Unlimited
PO Box 1178
Corona, CA 92878
(951) 268-6268

City of San Bernardino
N/S: Larch Avenue
E/W: Santa Ana Avenue
Weather: Clear

File Name : 09_CSB_Larch_Santa Ana AM
Site Code : 04520047
Start Date : 1/23/2020
Page No : 1

Groups Printed- Large 2 Axle Vehicles

	Larch Avenue Southbound				Santa Ana Avenue Westbound				Larch Avenue Northbound				Santa Ana Avenue Eastbound				
Start Time	Left	Thru	Right	App. Total	Left	Thru	Right	App. Total	Left	Thru	Right	App. Total	Left	Thru	Right	App. Total	Int. Total
07:00 AM	0	1	0	1	0	0	0	0	0	0	0	0	0	0	0	0	1
07:15 AM	0	0	0	0	0	0	0	0	0	0	0	0	0	2	0	2	2
07:30 AM	0	0	0	0	0	2	0	2	0	1	0	1	0	1	1	2	5
07:45 AM	1	0	1	2	0	2	0	2	0	0	0	0	0	1	0	1	5
Total	1	1	1	3	0	4	0	4	0	1	0	1	0	4	1	5	13
08:00 AM	0	0	1	1	1	0	0	1	0	0	0	0	0	0	0	0	2
08:15 AM	0	0	0	0	0	1	0	1	0	1	0	1	0	2	0	2	4
08:30 AM	0	0	0	0	0	2	0	2	0	0	0	0	0	1	0	1	3
08:45 AM	0	0	0	0	0	2	1	3	0	0	1	1	0	2	0	2	6
Total	0	0	1	1	1	5	1	7	0	1	1	2	0	5	0	5	15
Grand Total	1	1	2	4	1	9	1	11	0	2	1	3	0	9	1	10	28
Apprch %	25	25	50		9.1	81.8	9.1		0	66.7	33.3		0	90	10		
Total %	3.6	3.6	7.1	14.3	3.6	32.1	3.6	39.3	0	7.1	3.6	10.7	0	32.1	3.6	35.7	

	Larch Avenue Southbound				Santa Ana Avenue Westbound				Larch Avenue Northbound				Santa Ana Avenue Eastbound				
Start Time	Left	Thru	Right	App. Total	Left	Thru	Right	App. Total	Left	Thru	Right	App. Total	Left	Thru	Right	App. Total	Int. Total
Peak Hour Analysis From 07:00 AM to 07:45 AM - Peak 1 of 1																	
Peak Hour for Entire Intersection Begins at 07:00 AM																	
07:00 AM	0	1	0	1	0	0	0	0	0	0	0	0	0	0	0	0	1
07:15 AM	0	0	0	0	0	0	0	0	0	0	0	0	0	2	0	2	2
07:30 AM	0	0	0	0	0	2	0	2	0	1	0	1	0	1	1	2	5
07:45 AM	1	0	1	2	0	2	0	2	0	0	0	0	0	1	0	1	5
Total Volume	1	1	1	3	0	4	0	4	0	1	0	1	0	4	1	5	13
% App. Total	33.3	33.3	33.3		0	100	0		0	100	0		0	80	20		
PHF	.250	.250	.250	.375	.000	.500	.000	.500	.000	.250	.000	.250	.000	.500	.250	.625	.650

Counts Unlimited
PO Box 1178
Corona, CA 92878
(951) 268-6268

City of San Bernardino
N/S: Larch Avenue
E/W: Santa Ana Avenue
Weather: Clear

File Name : 09_CSB_Larch_Santa Ana AM
Site Code : 04520047
Start Date : 1/23/2020
Page No : 2

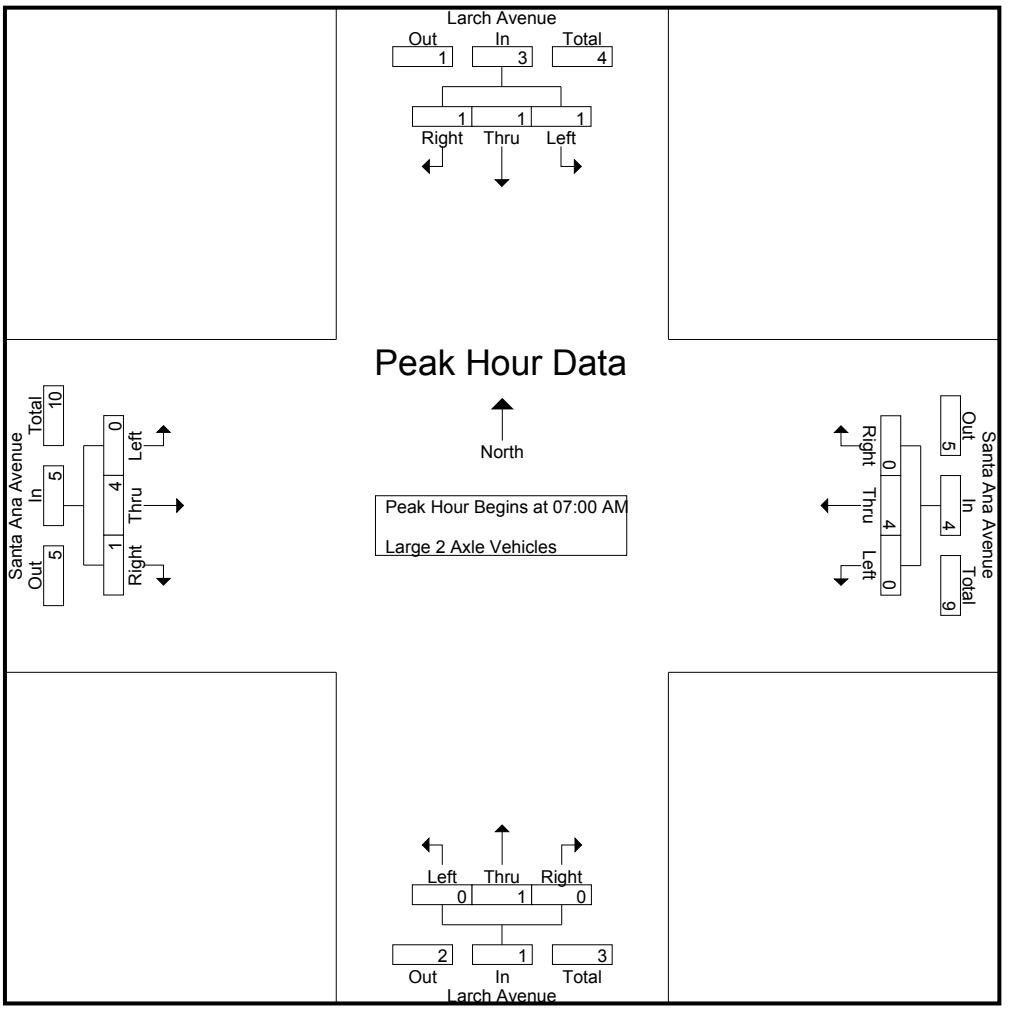

Peak Hour Analysis From 07:00 AM to 07:45 AM - Peak 1 of 1
Peak Hour for Each Approach Begins at:

	07:00 AM				07:00 AM				07:00 AM				07:00 AM			
+0 mins.	0	1	0	1	0	0	0	0	0	0	0	0	0	0	0	0
+15 mins.	0	0	0	0	0	0	0	0	0	0	0	0	0	2	0	2
+30 mins.	0	0	0	0	0	2	0	2	0	1	0	1	0	1	1	2
+45 mins.	1	0	1	2	0	2	0	2	0	0	0	0	0	1	0	1
Total Volume	1	1	1	3	0	4	0	4	0	1	0	1	0	4	1	5
% App. Total	33.3	33.3	33.3		0	100	0		0	100	0		0	80	20	
PHF	.250	.250	.250	.375	.000	.500	.000	.500	.000	.250	.000	.250	.000	.500	.250	.625

Counts Unlimited
PO Box 1178
Corona, CA 92878
(951) 268-6268

City of San Bernardino
N/S: Larch Avenue
E/W: Santa Ana Avenue
Weather: Clear

File Name : 09_CSB_Larch_Santa Ana AM
Site Code : 04520047
Start Date : 1/23/2020
Page No : 1

Groups Printed- 3 Axle Vehicles

	Larch Avenue Southbound				Santa Ana Avenue Westbound				Larch Avenue Northbound				Santa Ana Avenue Eastbound				
Start Time	Left	Thru	Right	App. Total	Left	Thru	Right	App. Total	Left	Thru	Right	App. Total	Left	Thru	Right	App. Total	Int. Total
07:00 AM	0	0	0	0	0	0	0	0	0	0	0	0	0	0	0	0	0
07:15 AM	0	0	0	0	0	0	0	0	0	0	0	0	0	2	0	2	2
07:30 AM	0	0	0	0	0	2	0	2	0	0	0	0	0	0	0	0	2
07:45 AM	0	0	0	0	0	2	0	2	0	0	0	0	0	0	0	0	2
Total	0	0	0	0	0	4	0	4	0	0	0	0	0	2	0	2	6
08:00 AM	0	0	0	0	0	0	0	0	0	0	0	0	0	1	0	1	1
08:15 AM	0	0	0	0	0	1	0	1	0	0	0	0	0	0	0	0	1
08:30 AM	0	0	0	0	0	2	0	2	1	0	0	1	0	1	0	1	4
08:45 AM	0	0	0	0	0	2	0	2	0	0	0	0	0	0	0	0	2
Total	0	0	0	0	0	5	0	5	1	0	0	1	0	2	0	2	8
Grand Total	0	0	0	0	0	9	0	9	1	0	0	1	0	4	0	4	14
Apprch %	0	0	0		0	100	0		100	0	0		0	100	0		
Total %	0	0	0	0	0	64.3	0	64.3	7.1	0	0	7.1	0	28.6	0	28.6	

	Larch Avenue Southbound				Santa Ana Avenue Westbound				Larch Avenue Northbound				Santa Ana Avenue Eastbound				
Start Time	Left	Thru	Right	App. Total	Left	Thru	Right	App. Total	Left	Thru	Right	App. Total	Left	Thru	Right	App. Total	Int. Total
Peak Hour Analysis From 07:00 AM to 07:45 AM - Peak 1 of 1																	
Peak Hour for Entire Intersection Begins at 07:00 AM																	
07:00 AM	0	0	0	0	0	0	0	0	0	0	0	0	0	0	0	0	0
07:15 AM	0	0	0	0	0	0	0	0	0	0	0	0	0	2	0	2	2
07:30 AM	0	0	0	0	0	2	0	2	0	0	0	0	0	0	0	0	2
07:45 AM	0	0	0	0	0	2	0	2	0	0	0	0	0	0	0	0	2
Total Volume	0	0	0	0	0	4	0	4	0	0	0	0	0	2	0	2	6
% App. Total	0	0	0		0	100	0		0	0	0		0	100	0		
PHF	.000	.000	.000	.000	.000	.500	.000	.500	.000	.000	.000	.000	.000	.250	.000	.250	.750

Counts Unlimited
PO Box 1178
Corona, CA 92878
(951) 268-6268

City of San Bernardino
N/S: Larch Avenue
E/W: Santa Ana Avenue
Weather: Clear

File Name : 09_CSB_Larch_Santa Ana AM
Site Code : 04520047
Start Date : 1/23/2020
Page No : 2

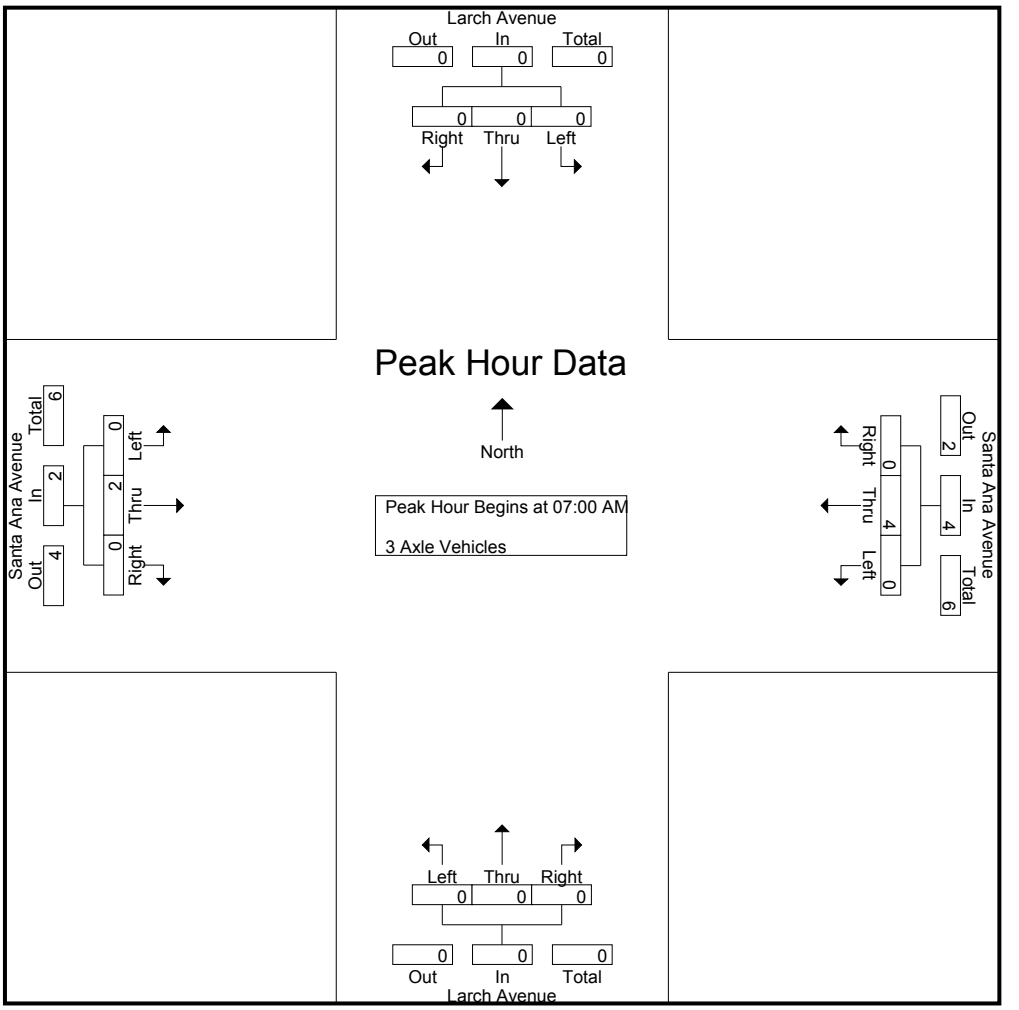

Peak Hour Analysis From 07:00 AM to 07:45 AM - Peak 1 of 1
Peak Hour for Each Approach Begins at:

	07:00 AM				07:00 AM				07:00 AM				07:00 AM			
+0 mins.	0	0	0	0	0	0	0	0	0	0	0	0	0	0	0	0
+15 mins.	0	0	0	0	0	0	0	0	0	0	0	0	0	2	0	2
+30 mins.	0	0	0	0	0	2	0	2	0	0	0	0	0	0	0	0
+45 mins.	0	0	0	0	0	2	0	2	0	0	0	0	0	0	0	0
Total Volume	0	0	0	0	0	4	0	4	0	0	0	0	0	2	0	2
% App. Total	0	0	0		0	100	0		0	0	0		0	100	0	
PHF	.000	.000	.000	.000	.000	.500	.000	.500	.000	.000	.000	.000	.000	.250	.000	.250

Counts Unlimited
PO Box 1178
Corona, CA 92878
(951) 268-6268

City of San Bernardino
N/S: Larch Avenue
E/W: Santa Ana Avenue
Weather: Clear

File Name : 09_CSB_Larch_Santa Ana AM
Site Code : 04520047
Start Date : 1/23/2020
Page No : 1

Groups Printed- 4+ Axle Trucks

	Larch Avenue Southbound				Santa Ana Avenue Westbound				Larch Avenue Northbound				Santa Ana Avenue Eastbound				
Start Time	Left	Thru	Right	App. Total	Left	Thru	Right	App. Total	Left	Thru	Right	App. Total	Left	Thru	Right	App. Total	Int. Total
07:00 AM	0	0	0	0	0	1	0	1	0	0	0	0	0	1	1	2	3
07:15 AM	0	0	0	0	0	2	0	2	0	0	0	0	0	1	0	1	3
07:30 AM	0	0	0	0	0	2	0	2	0	0	0	0	1	2	0	3	5
07:45 AM	0	0	0	0	0	0	0	0	0	0	0	0	0	1	0	1	1
Total	0	0	0	0	0	5	0	5	0	0	0	0	1	5	1	7	12
08:00 AM	0	0	0	0	0	1	0	1	0	0	0	0	0	1	0	1	2
08:15 AM	0	0	0	0	0	2	0	2	0	0	0	0	0	3	0	3	5
08:30 AM	0	0	0	0	0	4	0	4	2	0	0	2	0	1	0	1	7
08:45 AM	0	0	0	0	0	2	0	2	1	0	0	1	0	3	0	3	6
Total	0	0	0	0	0	9	0	9	3	0	0	3	0	8	0	8	20
Grand Total	0	0	0	0	0	14	0	14	3	0	0	3	1	13	1	15	32
Apprch %	0	0	0		0	100	0		100	0	0		6.7	86.7	6.7		
Total %	0	0	0	0	0	43.8	0	43.8	9.4	0	0	9.4	3.1	40.6	3.1	46.9	

	Larch Avenue Southbound				Santa Ana Avenue Westbound				Larch Avenue Northbound				Santa Ana Avenue Eastbound				
Start Time	Left	Thru	Right	App. Total	Left	Thru	Right	App. Total	Left	Thru	Right	App. Total	Left	Thru	Right	App. Total	Int. Total
Peak Hour Analysis From 07:00 AM to 07:45 AM - Peak 1 of 1																	
Peak Hour for Entire Intersection Begins at 07:00 AM																	
07:00 AM	0	0	0	0	0	1	0	1	0	0	0	0	0	1	1	2	3
07:15 AM	0	0	0	0	0	2	0	2	0	0	0	0	0	1	0	1	3
07:30 AM	0	0	0	0	0	2	0	2	0	0	0	0	1	2	0	3	5
07:45 AM	0	0	0	0	0	0	0	0	0	0	0	0	0	1	0	1	1
Total Volume	0	0	0	0	0	5	0	5	0	0	0	0	1	5	1	7	12
% App. Total	0	0	0		0	100	0		0	0	0		14.3	71.4	14.3		
PHF	.000	.000	.000	.000	.000	.625	.000	.625	.000	.000	.000	.000	.250	.625	.250	.583	.600

Counts Unlimited
PO Box 1178
Corona, CA 92878
(951) 268-6268

City of San Bernardino
N/S: Larch Avenue
E/W: Santa Ana Avenue
Weather: Clear

File Name : 09_CSB_Larch_Santa Ana AM
Site Code : 04520047
Start Date : 1/23/2020
Page No : 2

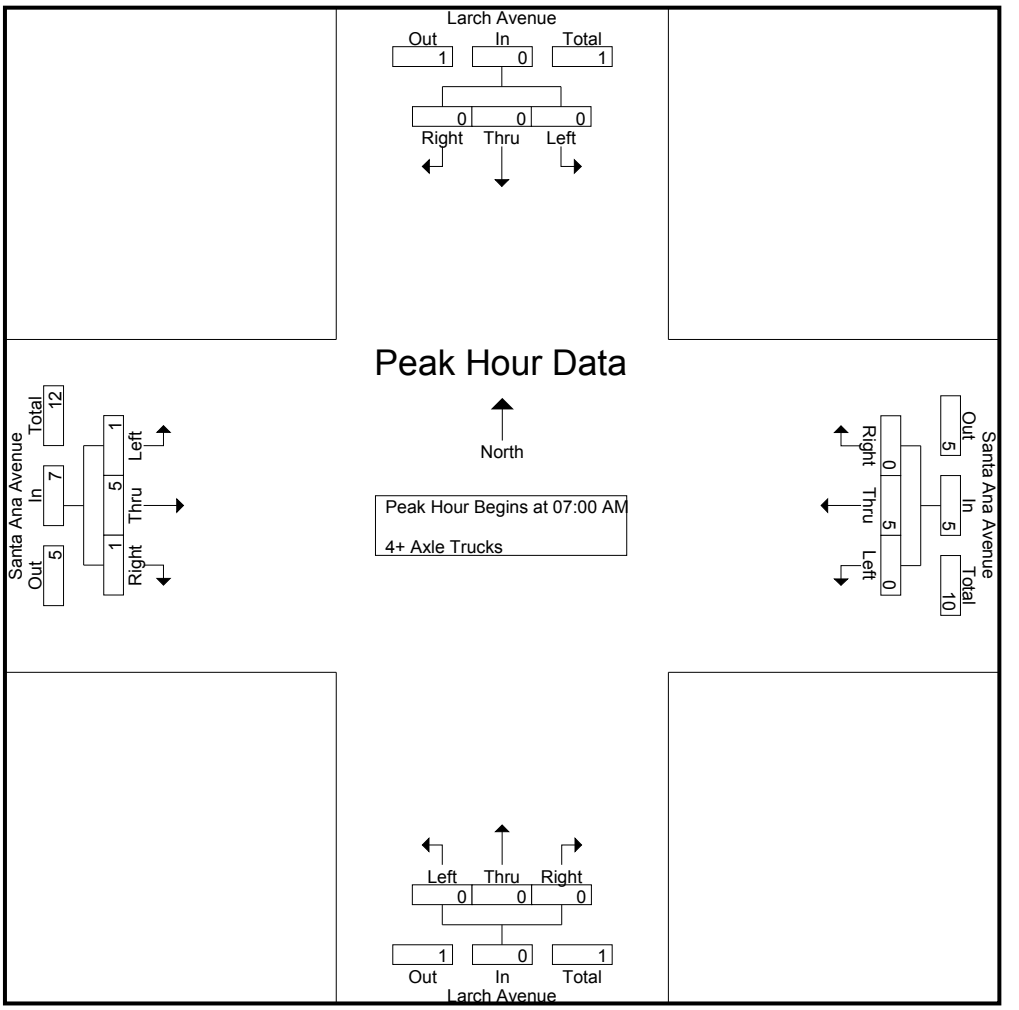

Peak Hour Analysis From 07:00 AM to 07:45 AM - Peak 1 of 1
Peak Hour for Each Approach Begins at:

	07:00 AM				07:00 AM				07:00 AM				07:00 AM			
+0 mins.	0	0	0	0	0	1	0	1	0	0	0	0	0	1	1	2
+15 mins.	0	0	0	0	0	2	0	2	0	0	0	0	0	1	0	1
+30 mins.	0	0	0	0	0	2	0	2	0	0	0	0	1	2	0	3
+45 mins.	0	0	0	0	0	0	0	0	0	0	0	0	0	1	0	1
Total Volume	0	0	0	0	0	5	0	5	0	0	0	0	1	5	1	7
% App. Total	0	0	0		0	100	0		0	0	0		14.3	71.4	14.3	
PHF	.000	.000	.000	.000	.000	.625	.000	.625	.000	.000	.000	.000	.250	.625	.250	.583

Counts Unlimited
PO Box 1178
Corona, CA 92878
(951) 268-6268

City of San Bernardino
N/S: Larch Avenue
E/W: Santa Ana Avenue
Weather: Clear

File Name : 09_CSB_Larch_Santa Ana PM
Site Code : 04520047
Start Date : 1/23/2020
Page No : 1

Groups Printed- Passenger Vehicles - Large 2 Axle Vehicles - 3 Axle Vehicles - 4+ Axle Trucks

	Larch Avenue Southbound				Santa Ana Avenue Westbound				Larch Avenue Northbound				Santa Ana Avenue Eastbound				
Start Time	Left	Thru	Right	App. Total	Left	Thru	Right	App. Total	Left	Thru	Right	App. Total	Left	Thru	Right	App. Total	Int. Total
04:00 PM	3	13	13	29	5	35	9	49	3	21	1	25	12	34	6	52	155
04:15 PM	5	11	8	24	1	32	4	37	1	21	3	25	13	38	4	55	141
04:30 PM	7	11	5	23	4	37	8	49	4	22	4	30	15	29	4	48	150
04:45 PM	4	6	9	19	1	36	6	43	4	29	2	35	11	45	6	62	159
Total	19	41	35	95	11	140	27	178	12	93	10	115	51	146	20	217	605
05:00 PM	8	18	5	31	0	33	7	40	4	20	1	25	15	49	8	72	168
05:15 PM	4	20	3	27	2	36	7	45	1	28	3	32	17	42	7	66	170
05:30 PM	5	19	12	36	3	30	8	41	8	26	1	35	19	44	1	64	176
05:45 PM	5	13	5	23	4	37	5	46	2	12	6	20	8	37	4	49	138
Total	22	70	25	117	9	136	27	172	15	86	11	112	59	172	20	251	652
Grand Total	41	111	60	212	20	276	54	350	27	179	21	227	110	318	40	468	1257
Apprch %	19.3	52.4	28.3		5.7	78.9	15.4		11.9	78.9	9.3		23.5	67.9	8.5		
Total %	3.3	8.8	4.8	16.9	1.6	22	4.3	27.8	2.1	14.2	1.7	18.1	8.8	25.3	3.2	37.2	
Passenger Vehicles	37	103	57	197	17	255	54	326	26	176	20	222	109	278	37	424	1169
% Passenger Vehicles	90.2	92.8	95	92.9	85	92.4	100	93.1	96.3	98.3	95.2	97.8	99.1	87.4	92.5	90.6	93
Large 2 Axle Vehicles	3	7	3	13	1	8	0	9	1	3	1	5	0	17	1	18	45
% Large 2 Axle Vehicles	7.3	6.3	5	6.1	5	2.9	0	2.6	3.7	1.7	4.8	2.2	0	5.3	2.5	3.8	3.6
3 Axle Vehicles	1	1	0	2	0	8	0	8	0	0	0	0	0	11	1	12	22
% 3 Axle Vehicles	2.4	0.9	0	0.9	0	2.9	0	2.3	0	0	0	0	0	3.5	2.5	2.6	1.8
4+ Axle Trucks	0	0	0	0	2	5	0	7	0	0	0	0	1	12	1	14	21
% 4+ Axle Trucks	0	0	0	0	10	1.8	0	2	0	0	0	0	0.9	3.8	2.5	3	1.7

	Larch Avenue Southbound				Santa Ana Avenue Westbound				Larch Avenue Northbound				Santa Ana Avenue Eastbound				
Start Time	Left	Thru	Right	App. Total	Left	Thru	Right	App. Total	Left	Thru	Right	App. Total	Left	Thru	Right	App. Total	Int. Total
Peak Hour Analysis From 04:00 PM to 05:45 PM - Peak 1 of 1																	
Peak Hour for Entire Intersection Begins at 04:45 PM																	
04:45 PM	4	6	9	19	1	36	6	43	4	29	2	35	11	45	6	62	159
05:00 PM	8	18	5	31	0	33	7	40	4	20	1	25	15	49	8	72	168
05:15 PM	4	20	3	27	2	36	7	45	1	28	3	32	17	42	7	66	170
05:30 PM	5	19	12	36	3	30	8	41	8	26	1	35	19	44	1	64	176
Total Volume	21	63	29	113	6	135	28	169	17	103	7	127	62	180	22	264	673
% App. Total	18.6	55.8	25.7		3.6	79.9	16.6		13.4	81.1	5.5		23.5	68.2	8.3		
PHF	.656	.788	.604	.785	.500	.938	.875	.939	.531	.888	.583	.907	.816	.918	.688	.917	.956

Counts Unlimited
PO Box 1178
Corona, CA 92878
(951) 268-6268

City of San Bernardino
N/S: Larch Avenue
E/W: Santa Ana Avenue
Weather: Clear

File Name : 09_CSB_Larch_Santa Ana PM
Site Code : 04520047
Start Date : 1/23/2020
Page No : 2

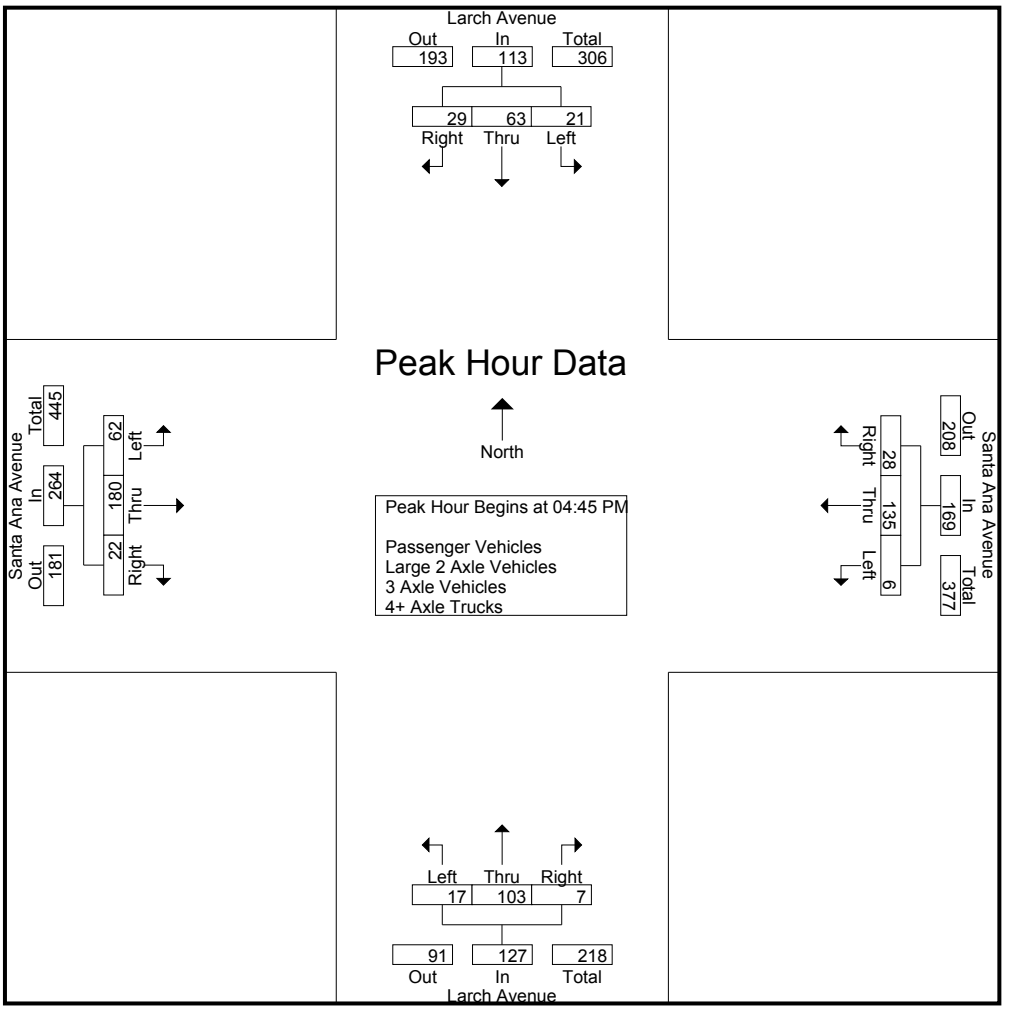

Peak Hour Analysis From 04:00 PM to 05:45 PM - Peak 1 of 1
Peak Hour for Each Approach Begins at:

	05:00 PM				04:00 PM				04:45 PM				04:45 PM			
+0 mins.	8	18	5	31	5	35	9	49	4	29	2	35	11	45	6	62
+15 mins.	4	20	3	27	1	32	4	37	4	20	1	25	15	49	8	72
+30 mins.	5	19	12	36	4	37	8	49	1	28	3	32	17	42	7	66
+45 mins.	5	13	5	23	1	36	6	43	8	26	1	35	19	44	1	64
Total Volume	22	70	25	117	11	140	27	178	17	103	7	127	62	180	22	264
% App. Total	18.8	59.8	21.4		6.2	78.7	15.2		13.4	81.1	5.5		23.5	68.2	8.3	
PHF	.688	.875	.521	.813	.550	.946	.750	.908	.531	.888	.583	.907	.816	.918	.688	.917

Counts Unlimited
PO Box 1178
Corona, CA 92878
(951) 268-6268

City of San Bernardino
N/S: Larch Avenue
E/W: Santa Ana Avenue
Weather: Clear

File Name : 09_CSB_Larch_Santa Ana PM
Site Code : 04520047
Start Date : 1/23/2020
Page No : 1

Groups Printed- Passenger Vehicles

	Larch Avenue Southbound				Santa Ana Avenue Westbound				Larch Avenue Northbound				Santa Ana Avenue Eastbound				
Start Time	Left	Thru	Right	App. Total	Left	Thru	Right	App. Total	Left	Thru	Right	App. Total	Left	Thru	Right	App. Total	Int. Total
04:00 PM	3	11	12	26	3	35	9	47	2	20	1	23	12	28	5	45	141
04:15 PM	4	7	8	19	1	26	4	31	1	20	3	24	12	30	4	46	120
04:30 PM	7	10	4	21	3	33	8	44	4	22	4	30	15	27	4	46	141
04:45 PM	4	6	9	19	1	35	6	42	4	29	2	35	11	40	5	56	152
Total	18	34	33	85	8	129	27	164	11	91	10	112	50	125	18	193	554
05:00 PM	6	18	4	28	0	31	7	38	4	20	1	25	15	41	8	64	155
05:15 PM	4	20	3	27	2	31	7	40	1	28	3	32	17	39	6	62	161
05:30 PM	4	18	12	34	3	27	8	38	8	26	1	35	19	41	1	61	168
05:45 PM	5	13	5	23	4	37	5	46	2	11	5	18	8	32	4	44	131
Total	19	69	24	112	9	126	27	162	15	85	10	110	59	153	19	231	615
Grand Total	37	103	57	197	17	255	54	326	26	176	20	222	109	278	37	424	1169
Apprch %	18.8	52.3	28.9		5.2	78.2	16.6		11.7	79.3	9		25.7	65.6	8.7		
Total %	3.2	8.8	4.9	16.9	1.5	21.8	4.6	27.9	2.2	15.1	1.7	19	9.3	23.8	3.2	36.3	

	Larch Avenue Southbound				Santa Ana Avenue Westbound				Larch Avenue Northbound				Santa Ana Avenue Eastbound				
Start Time	Left	Thru	Right	App. Total	Left	Thru	Right	App. Total	Left	Thru	Right	App. Total	Left	Thru	Right	App. Total	Int. Total
Peak Hour Analysis From 04:45 PM to 05:30 PM - Peak 1 of 1																	
Peak Hour for Entire Intersection Begins at 04:45 PM																	
04:45 PM	4	6	9	19	1	35	6	42	4	29	2	35	11	40	5	56	152
05:00 PM	6	18	4	28	0	31	7	38	4	20	1	25	15	41	8	64	155
05:15 PM	4	20	3	27	2	31	7	40	1	28	3	32	17	39	6	62	161
05:30 PM	4	18	12	34	3	27	8	38	8	26	1	35	19	41	1	61	168
Total Volume	18	62	28	108	6	124	28	158	17	103	7	127	62	161	20	243	636
% App. Total	16.7	57.4	25.9		3.8	78.5	17.7		13.4	81.1	5.5		25.5	66.3	8.2		
PHF	.750	.775	.583	.794	.500	.886	.875	.940	.531	.888	.583	.907	.816	.982	.625	.949	.946

Counts Unlimited
PO Box 1178
Corona, CA 92878
(951) 268-6268

City of San Bernardino
N/S: Larch Avenue
E/W: Santa Ana Avenue
Weather: Clear

File Name : 09_CSB_Larch_Santa Ana PM
Site Code : 04520047
Start Date : 1/23/2020
Page No : 2

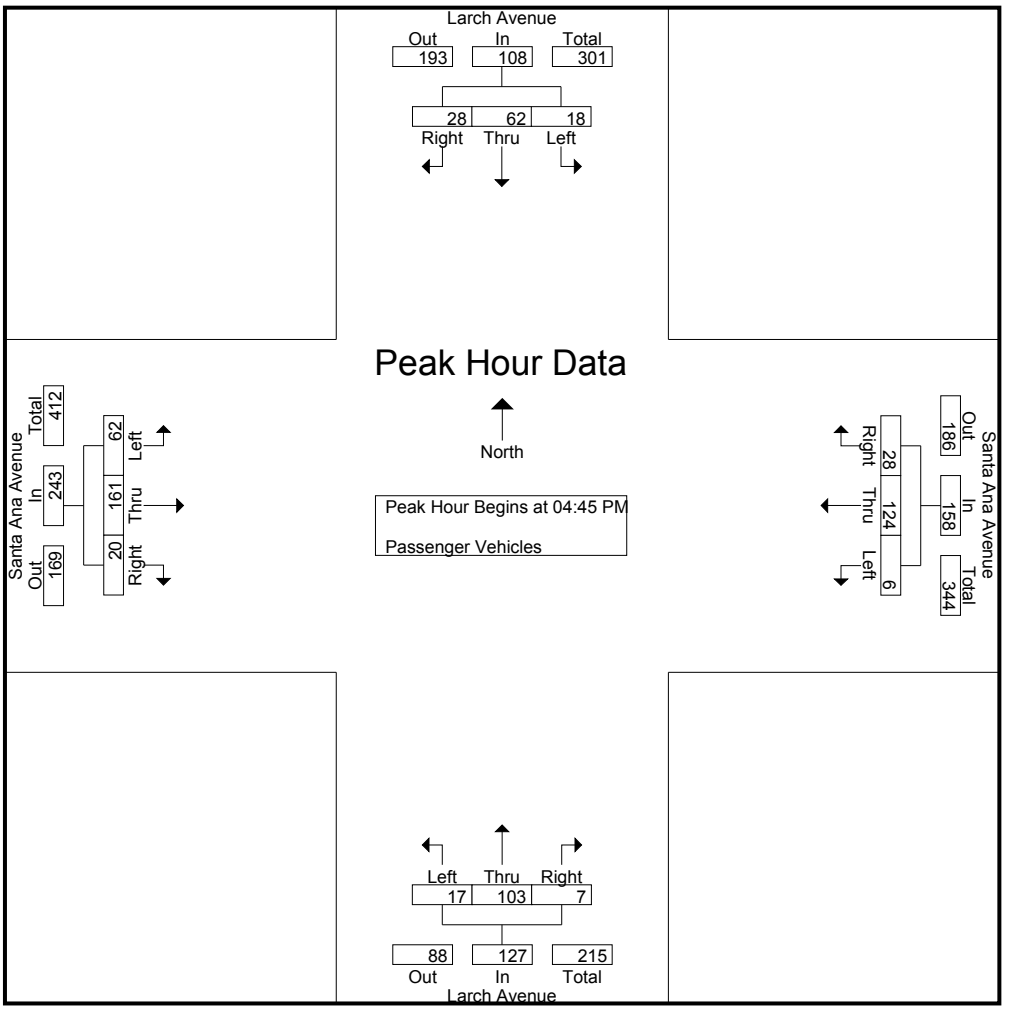

Peak Hour Analysis From 04:45 PM to 05:30 PM - Peak 1 of 1
Peak Hour for Each Approach Begins at:

	04:45 PM				04:45 PM				04:45 PM				04:45 PM			
+0 mins.	4	6	9	19	1	35	6	42	4	29	2	35	11	40	5	56
+15 mins.	6	18	4	28	0	31	7	38	4	20	1	25	15	41	8	64
+30 mins.	4	20	3	27	2	31	7	40	1	28	3	32	17	39	6	62
+45 mins.	4	18	12	34	3	27	8	38	8	26	1	35	19	41	1	61
Total Volume	18	62	28	108	6	124	28	158	17	103	7	127	62	161	20	243
% App. Total	16.7	57.4	25.9		3.8	78.5	17.7		13.4	81.1	5.5		25.5	66.3	8.2	
PHF	.750	.775	.583	.794	.500	.886	.875	.940	.531	.888	.583	.907	.816	.982	.625	.949

Counts Unlimited
PO Box 1178
Corona, CA 92878
(951) 268-6268

City of San Bernardino
N/S: Larch Avenue
E/W: Santa Ana Avenue
Weather: Clear

File Name : 09_CSB_Larch_Santa Ana PM
Site Code : 04520047
Start Date : 1/23/2020
Page No : 1

Groups Printed- Large 2 Axle Vehicles

	Larch Avenue Southbound				Santa Ana Avenue Westbound				Larch Avenue Northbound				Santa Ana Avenue Eastbound				
Start Time	Left	Thru	Right	App. Total	Left	Thru	Right	App. Total	Left	Thru	Right	App. Total	Left	Thru	Right	App. Total	Int. Total
04:00 PM	0	2	1	3	1	0	0	1	1	1	0	2	0	5	0	5	11
04:15 PM	1	4	0	5	0	3	0	3	0	1	0	1	0	3	0	3	12
04:30 PM	0	1	1	2	0	1	0	1	0	0	0	0	0	0	0	0	3
04:45 PM	0	0	0	0	0	0	0	0	0	0	0	0	0	2	1	3	3
Total	1	7	2	10	1	4	0	5	1	2	0	3	0	10	1	11	29
05:00 PM	1	0	1	2	0	1	0	1	0	0	0	0	0	3	0	3	6
05:15 PM	0	0	0	0	0	2	0	2	0	0	0	0	0	0	0	0	2
05:30 PM	1	0	0	1	0	1	0	1	0	0	0	0	0	1	0	1	3
05:45 PM	0	0	0	0	0	0	0	0	0	1	1	2	0	3	0	3	5
Total	2	0	1	3	0	4	0	4	0	1	1	2	0	7	0	7	16
Grand Total	3	7	3	13	1	8	0	9	1	3	1	5	0	17	1	18	45
Apprch %	23.1	53.8	23.1		11.1	88.9	0		20	60	20		0	94.4	5.6		
Total %	6.7	15.6	6.7	28.9	2.2	17.8	0	20	2.2	6.7	2.2	11.1	0	37.8	2.2	40	

	Larch Avenue Southbound				Santa Ana Avenue Westbound				Larch Avenue Northbound				Santa Ana Avenue Eastbound				
Start Time	Left	Thru	Right	App. Total	Left	Thru	Right	App. Total	Left	Thru	Right	App. Total	Left	Thru	Right	App. Total	Int. Total
Peak Hour Analysis From 04:45 PM to 05:30 PM - Peak 1 of 1																	
Peak Hour for Entire Intersection Begins at 04:45 PM																	
04:45 PM	0	0	0	0	0	0	0	0	0	0	0	0	0	2	1	3	3
05:00 PM	1	0	1	2	0	1	0	1	0	0	0	0	0	3	0	3	6
05:15 PM	0	0	0	0	0	2	0	2	0	0	0	0	0	0	0	0	2
05:30 PM	1	0	0	1	0	1	0	1	0	0	0	0	0	1	0	1	3
Total Volume	2	0	1	3	0	4	0	4	0	0	0	0	0	6	1	7	14
% App. Total	66.7	0	33.3		0	100	0		0	0	0		0	85.7	14.3		
PHF	.500	.000	.250	.375	.000	.500	.000	.500	.000	.000	.000	.000	.000	.500	.250	.583	.583

Counts Unlimited
PO Box 1178
Corona, CA 92878
(951) 268-6268

City of San Bernardino
N/S: Larch Avenue
E/W: Santa Ana Avenue
Weather: Clear

File Name : 09_CSB_Larch_Santa Ana PM
Site Code : 04520047
Start Date : 1/23/2020
Page No : 2

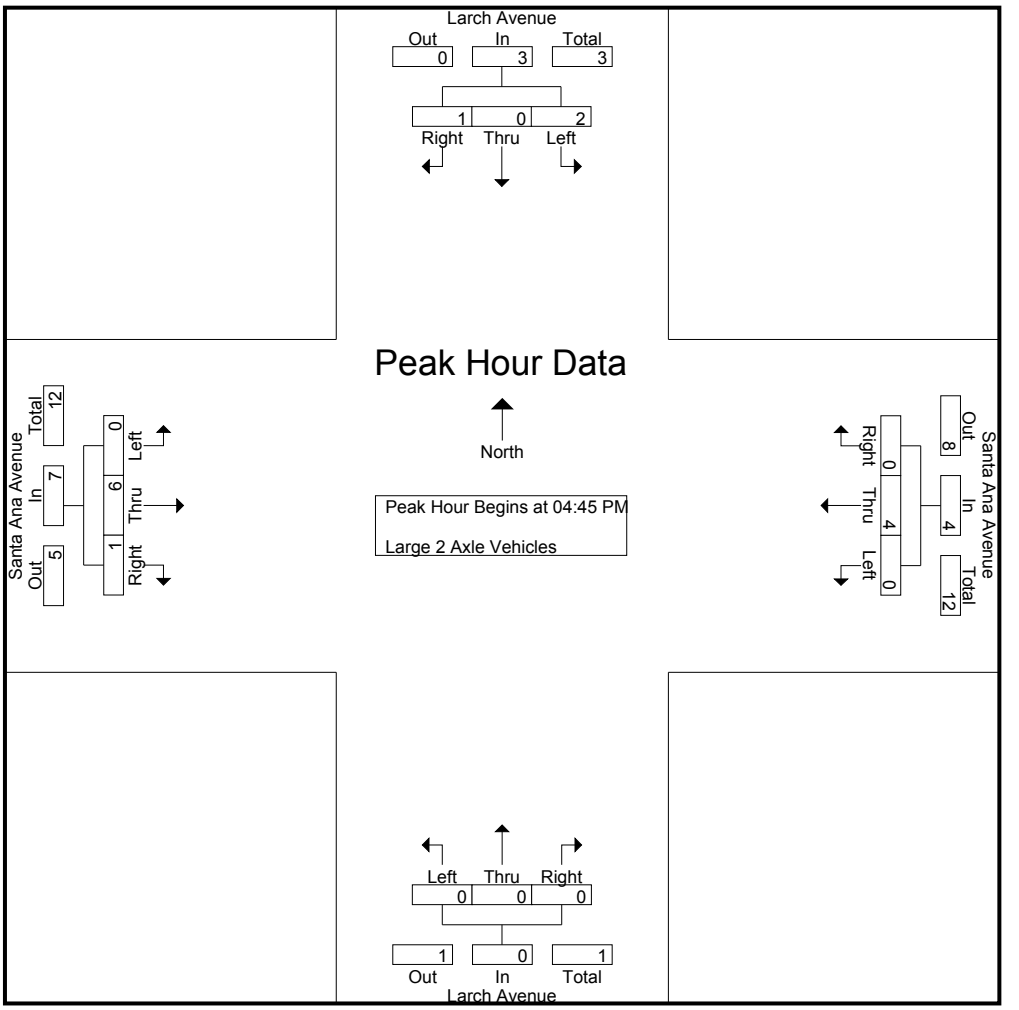

Peak Hour Analysis From 04:45 PM to 05:30 PM - Peak 1 of 1
Peak Hour for Each Approach Begins at:

	04:45 PM				04:45 PM				04:45 PM				04:45 PM			
+0 mins.	0	0	0	0	0	0	0	0	0	0	0	0	0	2	1	3
+15 mins.	1	0	1	2	0	1	0	1	0	0	0	0	0	3	0	3
+30 mins.	0	0	0	0	0	2	0	2	0	0	0	0	0	0	0	0
+45 mins.	1	0	0	1	0	1	0	1	0	0	0	0	0	1	0	1
Total Volume	2	0	1	3	0	4	0	4	0	0	0	0	0	6	1	7
% App. Total	66.7	0	33.3		0	100	0		0	0	0		0	85.7	14.3	
PHF	.500	.000	.250	.375	.000	.500	.000	.500	.000	.000	.000	.000	.000	.500	.250	.583

Counts Unlimited
PO Box 1178
Corona, CA 92878
(951) 268-6268

City of San Bernardino
N/S: Larch Avenue
E/W: Santa Ana Avenue
Weather: Clear

File Name : 09_CSB_Larch_Santa Ana PM
Site Code : 04520047
Start Date : 1/23/2020
Page No : 1

Groups Printed- 3 Axle Vehicles

	Larch Avenue Southbound				Santa Ana Avenue Westbound				Larch Avenue Northbound				Santa Ana Avenue Eastbound				
Start Time	Left	Thru	Right	App. Total	Left	Thru	Right	App. Total	Left	Thru	Right	App. Total	Left	Thru	Right	App. Total	Int. Total
04:00 PM	0	0	0	0	0	0	0	0	0	0	0	0	0	0	1	1	1
04:15 PM	0	0	0	0	0	3	0	3	0	0	0	0	0	2	0	2	5
04:30 PM	0	0	0	0	0	1	0	1	0	0	0	0	0	0	0	0	1
04:45 PM	0	0	0	0	0	0	0	0	0	0	0	0	0	1	0	1	1
Total	0	0	0	0	0	4	0	4	0	0	0	0	0	3	1	4	8
05:00 PM	1	0	0	1	0	1	0	1	0	0	0	0	0	3	0	3	5
05:15 PM	0	0	0	0	0	2	0	2	0	0	0	0	0	2	0	2	4
05:30 PM	0	1	0	1	0	1	0	1	0	0	0	0	0	2	0	2	4
05:45 PM	0	0	0	0	0	0	0	0	0	0	0	0	0	1	0	1	1
Total	1	1	0	2	0	4	0	4	0	0	0	0	0	8	0	8	14
Grand Total	1	1	0	2	0	8	0	8	0	0	0	0	0	11	1	12	22
Apprch %	50	50	0		0	100	0		0	0	0		0	91.7	8.3		
Total %	4.5	4.5	0	9.1	0	36.4	0	36.4	0	0	0	0	0	50	4.5	54.5	

	Larch Avenue Southbound				Santa Ana Avenue Westbound				Larch Avenue Northbound				Santa Ana Avenue Eastbound				
Start Time	Left	Thru	Right	App. Total	Left	Thru	Right	App. Total	Left	Thru	Right	App. Total	Left	Thru	Right	App. Total	Int. Total
Peak Hour Analysis From 04:45 PM to 05:30 PM - Peak 1 of 1																	
Peak Hour for Entire Intersection Begins at 04:45 PM																	
04:45 PM	0	0	0	0	0	0	0	0	0	0	0	0	0	1	0	1	1
05:00 PM	1	0	0	1	0	1	0	1	0	0	0	0	0	3	0	3	5
05:15 PM	0	0	0	0	0	2	0	2	0	0	0	0	0	2	0	2	4
05:30 PM	0	1	0	1	0	1	0	1	0	0	0	0	0	2	0	2	4
Total Volume	1	1	0	2	0	4	0	4	0	0	0	0	0	8	0	8	14
% App. Total	50	50	0		0	100	0		0	0	0		0	100	0		
PHF	.250	.250	.000	.500	.000	.500	.000	.500	.000	.000	.000	.000	.000	.667	.000	.667	.700

Counts Unlimited
PO Box 1178
Corona, CA 92878
(951) 268-6268

City of San Bernardino
N/S: Larch Avenue
E/W: Santa Ana Avenue
Weather: Clear

File Name : 09_CSB_Larch_Santa Ana PM
Site Code : 04520047
Start Date : 1/23/2020
Page No : 2

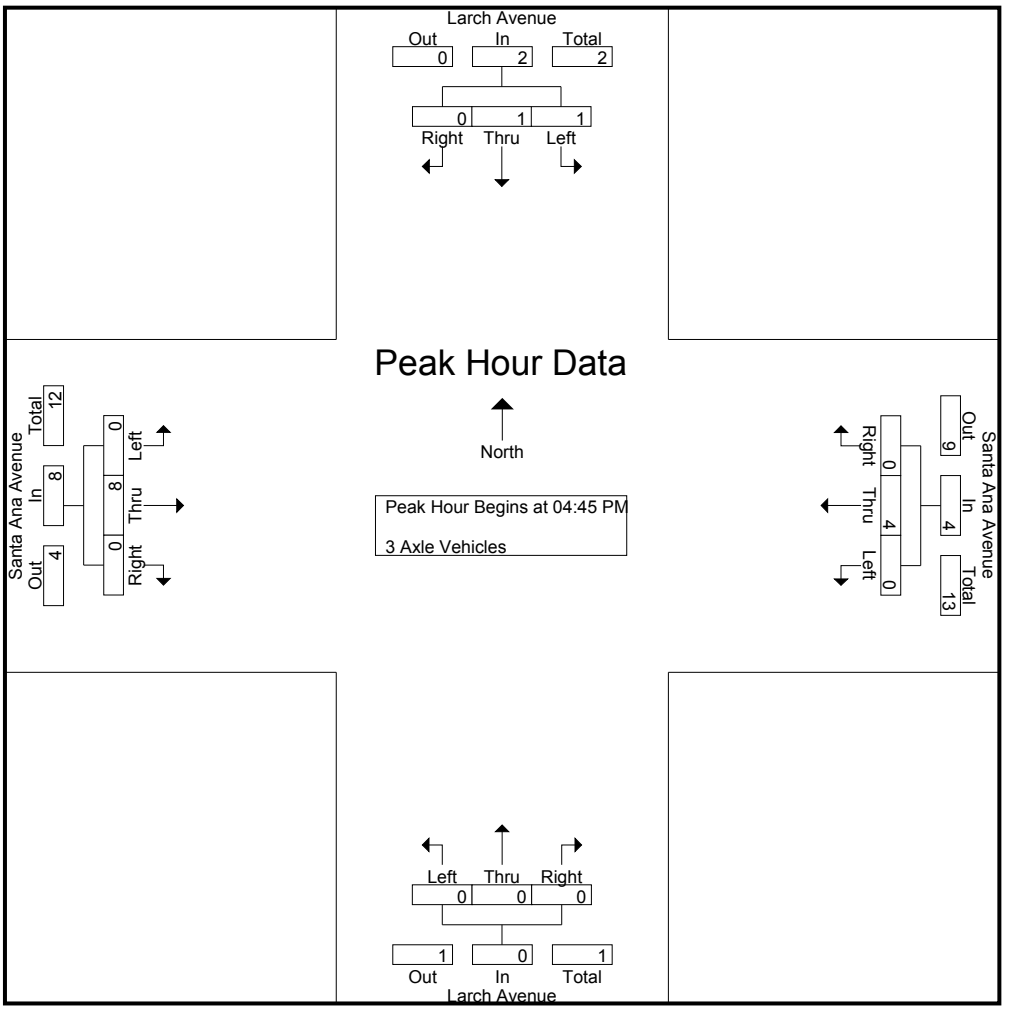

Peak Hour Analysis From 04:45 PM to 05:30 PM - Peak 1 of 1
Peak Hour for Each Approach Begins at:

	04:45 PM				04:45 PM				04:45 PM				04:45 PM			
+0 mins.	0	0	0	0	0	0	0	0	0	0	0	0	0	1	0	1
+15 mins.	1	0	0	1	0	1	0	1	0	0	0	0	0	3	0	3
+30 mins.	0	0	0	0	0	2	0	2	0	0	0	0	0	2	0	2
+45 mins.	0	1	0	1	0	1	0	1	0	0	0	0	0	2	0	2
Total Volume	1	1	0	2	0	4	0	4	0	0	0	0	0	8	0	8
% App. Total	50	50	0		0	100	0		0	0	0		0	100	0	
PHF	.250	.250	.000	.500	.000	.500	.000	.500	.000	.000	.000	.000	.000	.667	.000	.667

Counts Unlimited
PO Box 1178
Corona, CA 92878
(951) 268-6268

City of San Bernardino
N/S: Larch Avenue
E/W: Santa Ana Avenue
Weather: Clear

File Name : 09_CSB_Larch_Santa Ana PM
Site Code : 04520047
Start Date : 1/23/2020
Page No : 1

Groups Printed- 4+ Axle Trucks

	Larch Avenue Southbound				Santa Ana Avenue Westbound				Larch Avenue Northbound				Santa Ana Avenue Eastbound				
Start Time	Left	Thru	Right	App. Total	Left	Thru	Right	App. Total	Left	Thru	Right	App. Total	Left	Thru	Right	App. Total	Int. Total
04:00 PM	0	0	0	0	1	0	0	1	0	0	0	0	0	1	0	1	2
04:15 PM	0	0	0	0	0	0	0	0	0	0	0	0	1	3	0	4	4
04:30 PM	0	0	0	0	1	2	0	3	0	0	0	0	0	2	0	2	5
04:45 PM	0	0	0	0	0	1	0	1	0	0	0	0	0	2	0	2	3
Total	0	0	0	0	2	3	0	5	0	0	0	0	1	8	0	9	14
05:00 PM	0	0	0	0	0	0	0	0	0	0	0	0	0	2	0	2	2
05:15 PM	0	0	0	0	0	1	0	1	0	0	0	0	0	1	1	2	3
05:30 PM	0	0	0	0	0	1	0	1	0	0	0	0	0	0	0	0	1
05:45 PM	0	0	0	0	0	0	0	0	0	0	0	0	0	1	0	1	1
Total	0	0	0	0	0	2	0	2	0	0	0	0	0	4	1	5	7
Grand Total	0	0	0	0	2	5	0	7	0	0	0	0	1	12	1	14	21
Apprch %	0	0	0		28.6	71.4	0		0	0	0		7.1	85.7	7.1		
Total %	0	0	0	0	9.5	23.8	0	33.3	0	0	0	0	4.8	57.1	4.8	66.7	

	Larch Avenue Southbound				Santa Ana Avenue Westbound				Larch Avenue Northbound				Santa Ana Avenue Eastbound				
Start Time	Left	Thru	Right	App. Total	Left	Thru	Right	App. Total	Left	Thru	Right	App. Total	Left	Thru	Right	App. Total	Int. Total
Peak Hour Analysis From 04:45 PM to 05:30 PM - Peak 1 of 1																	
Peak Hour for Entire Intersection Begins at 04:45 PM																	
04:45 PM	0	0	0	0	0	1	0	1	0	0	0	0	0	2	0	2	3
05:00 PM	0	0	0	0	0	0	0	0	0	0	0	0	0	2	0	2	2
05:15 PM	0	0	0	0	0	1	0	1	0	0	0	0	0	1	1	2	3
05:30 PM	0	0	0	0	0	1	0	1	0	0	0	0	0	0	0	0	1
Total Volume	0	0	0	0	0	3	0	3	0	0	0	0	0	5	1	6	9
% App. Total	0	0	0		0	100	0		0	0	0		0	83.3	16.7		
PHF	.000	.000	.000	.000	.000	.750	.000	.750	.000	.000	.000	.000	.000	.625	.250	.750	.750

Counts Unlimited
PO Box 1178
Corona, CA 92878
(951) 268-6268

City of San Bernardino
N/S: Larch Avenue
E/W: Santa Ana Avenue
Weather: Clear

File Name : 09_CSB_Larch_Santa Ana PM
Site Code : 04520047
Start Date : 1/23/2020
Page No : 2

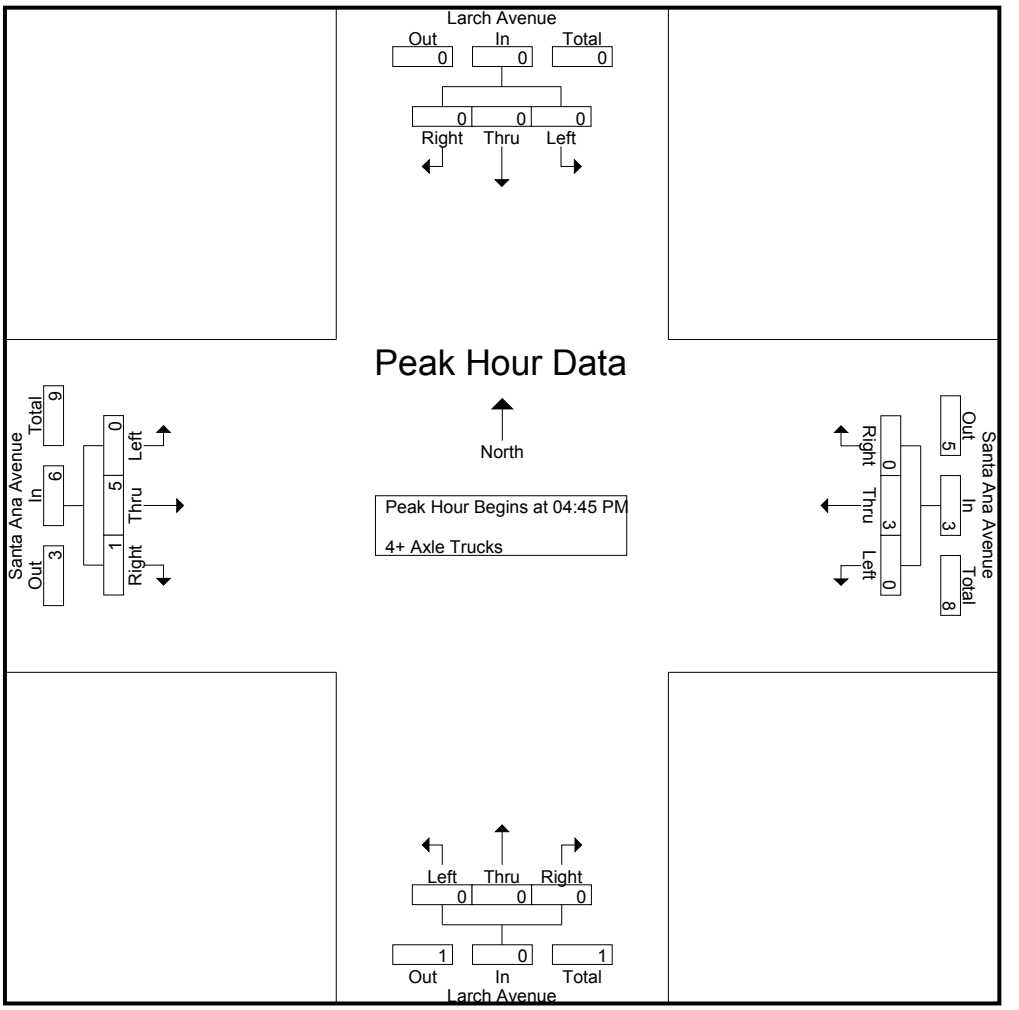

Peak Hour Analysis From 04:45 PM to 05:30 PM - Peak 1 of 1
Peak Hour for Each Approach Begins at:

	04:45 PM				04:45 PM				04:45 PM				04:45 PM			
+0 mins.	0	0	0	0	0	1	0	1	0	0	0	0	0	2	0	2
+15 mins.	0	0	0	0	0	0	0	0	0	0	0	0	0	2	0	2
+30 mins.	0	0	0	0	0	1	0	1	0	0	0	0	0	1	1	2
+45 mins.	0	0	0	0	0	1	0	1	0	0	0	0	0	0	0	0
Total Volume	0	0	0	0	0	3	0	3	0	0	0	0	0	5	1	6
% App. Total	0	0	0		0	100	0		0	0	0		0	83.3	16.7	
PHF	.000	.000	.000	.000	.000	.750	.000	.750	.000	.000	.000	.000	.000	.625	.250	.750

Counts Unlimited
PO Box 1178
Corona, CA 92878
(951) 268-6268

City of San Bernardino
N/S: Linden Avenue
E/W: Jurupa Avenue
Weather: Clear

File Name : 12_CSB_Linden_Jurupa AM
Site Code : 04520047
Start Date : 1/23/2020
Page No : 1

Groups Printed- Passenger Vehicles - Large 2 Axle Vehicles - 3 Axle Vehicles - 4+ Axle Trucks

	Linden Avenue Southbound				Jurupa Avenue Westbound				Linden Avenue Northbound				Jurupa Avenue Eastbound				
Start Time	Left	Thru	Right	App. Total	Left	Thru	Right	App. Total	Left	Thru	Right	App. Total	Left	Thru	Right	App. Total	Int. Total
07:00 AM	7	21	10	38	2	25	31	58	4	50	0	54	8	25	2	35	185
07:15 AM	14	37	5	56	0	15	16	31	5	57	2	64	7	33	6	46	197
07:30 AM	12	53	22	87	0	23	23	46	1	55	2	58	0	24	7	31	222
07:45 AM	9	24	2	35	1	27	2	30	1	13	2	16	2	29	4	35	116
Total	42	135	39	216	3	90	72	165	11	175	6	192	17	111	19	147	720
08:00 AM	5	15	4	24	3	10	5	18	2	8	0	10	1	16	1	18	70
08:15 AM	8	2	2	12	1	16	5	22	4	4	1	9	0	10	4	14	57
08:30 AM	3	4	2	9	1	10	5	16	2	10	1	13	1	12	3	16	54
08:45 AM	3	3	0	6	0	18	5	23	2	8	2	12	2	12	3	17	58
Total	19	24	8	51	5	54	20	79	10	30	4	44	4	50	11	65	239
Grand Total	61	159	47	267	8	144	92	244	21	205	10	236	21	161	30	212	959
Apprch %	22.8	59.6	17.6		3.3	59	37.7		8.9	86.9	4.2		9.9	75.9	14.2		
Total %	6.4	16.6	4.9	27.8	0.8	15	9.6	25.4	2.2	21.4	1	24.6	2.2	16.8	3.1	22.1	
Passenger Vehicles	61	155	46	262	8	138	88	234	21	203	10	234	21	151	30	202	932
% Passenger Vehicles	100	97.5	97.9	98.1	100	95.8	95.7	95.9	100	99	100	99.2	100	93.8	100	95.3	97.2
Large 2 Axle Vehicles	0	3	0	3	0	6	4	10	0	1	0	1	0	4	0	4	18
% Large 2 Axle Vehicles	0	1.9	0	1.1	0	4.2	4.3	4.1	0	0.5	0	0.4	0	2.5	0	1.9	1.9
3 Axle Vehicles	0	1	1	2	0	0	0	0	0	1	0	1	0	3	0	3	6
% 3 Axle Vehicles	0	0.6	2.1	0.7	0	0	0	0	0	0.5	0	0.4	0	1.9	0	1.4	0.6
4+ Axle Trucks	0	0	0	0	0	0	0	0	0	0	0	0	0	3	0	3	3
% 4+ Axle Trucks	0	0	0	0	0	0	0	0	0	0	0	0	0	1.9	0	1.4	0.3

	Linden Avenue Southbound				Jurupa Avenue Westbound				Linden Avenue Northbound				Jurupa Avenue Eastbound				
Start Time	Left	Thru	Right	App. Total	Left	Thru	Right	App. Total	Left	Thru	Right	App. Total	Left	Thru	Right	App. Total	Int. Total
Peak Hour Analysis From 07:00 AM to 08:45 AM - Peak 1 of 1																	
Peak Hour for Entire Intersection Begins at 07:00 AM																	
07:00 AM	7	21	10	38	**2**	25	**31**	**58**	4	50	0	54	**8**	25	2	35	185
07:15 AM	**14**	37	5	56	0	15	16	31	**5**	**57**	**2**	**64**	7	**33**	6	**46**	197
07:30 AM	12	**53**	**22**	**87**	0	23	23	46	1	55	2	58	0	24	**7**	31	**222**
07:45 AM	9	24	2	35	1	**27**	2	30	1	13	2	16	2	29	4	35	116
Total Volume	42	135	39	216	3	90	72	165	11	175	6	192	17	111	19	147	720
% App. Total	19.4	62.5	18.1		1.8	54.5	43.6		5.7	91.1	3.1		11.6	75.5	12.9		
PHF	.750	.637	.443	.621	.375	.833	.581	.711	.550	.768	.750	.750	.531	.841	.679	.799	.811

Counts Unlimited
PO Box 1178
Corona, CA 92878
(951) 268-6268

City of San Bernardino
N/S: Linden Avenue
E/W: Jurupa Avenue
Weather: Clear

File Name : 12_CSB_Linden_Jurupa AM
Site Code : 04520047
Start Date : 1/23/2020
Page No : 2

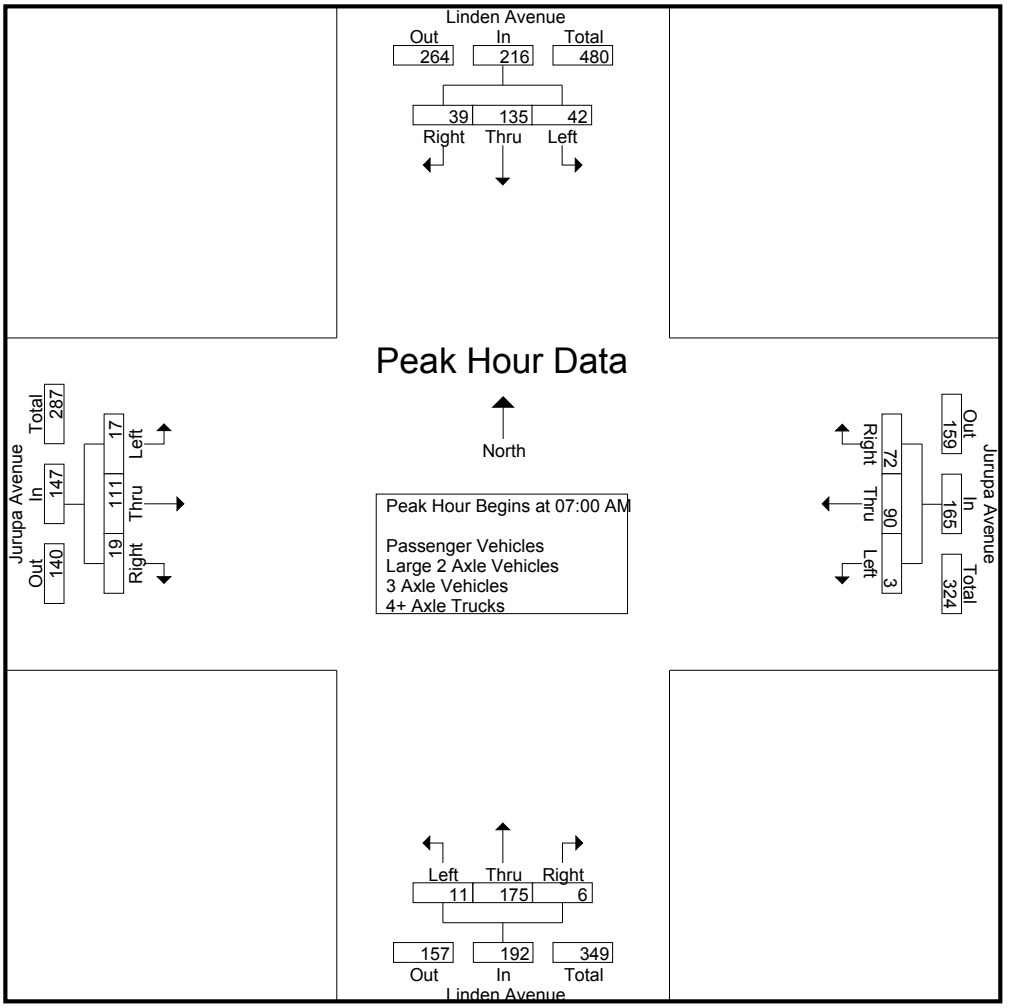

Peak Hour Analysis From 07:00 AM to 08:45 AM - Peak 1 of 1
Peak Hour for Each Approach Begins at:

	07:00 AM				07:00 AM				07:00 AM				07:00 AM			
+0 mins.	7	21	10	38	**2**	25	**31**	**58**	4	50	0	54	**8**	25	2	35
+15 mins.	**14**	37	5	56	0	15	16	31	**5**	**57**	**2**	**64**	7	**33**	6	**46**
+30 mins.	12	**53**	**22**	**87**	0	23	23	46	1	55	2	58	0	24	**7**	31
+45 mins.	9	24	2	35	1	**27**	2	30	1	13	2	16	2	29	4	35
Total Volume	42	135	39	216	3	90	72	165	11	175	6	192	17	111	19	147
% App. Total	19.4	62.5	18.1		1.8	54.5	43.6		5.7	91.1	3.1		11.6	75.5	12.9	
PHF	.750	.637	.443	.621	.375	.833	.581	.711	.550	.768	.750	.750	.531	.841	.679	.799

Counts Unlimited
PO Box 1178
Corona, CA 92878
(951) 268-6268

City of San Bernardino
N/S: Linden Avenue
E/W: Jurupa Avenue
Weather: Clear

File Name : 12_CSB_Linden_Jurupa AM
Site Code : 04520047
Start Date : 1/23/2020
Page No : 1

Groups Printed- Passenger Vehicles

	Linden Avenue Southbound				Jurupa Avenue Westbound				Linden Avenue Northbound				Jurupa Avenue Eastbound				
Start Time	Left	Thru	Right	App. Total	Left	Thru	Right	App. Total	Left	Thru	Right	App. Total	Left	Thru	Right	App. Total	Int. Total
07:00 AM	7	19	10	36	2	24	30	56	4	50	0	54	8	24	2	34	180
07:15 AM	14	37	5	56	0	14	15	29	5	56	2	63	7	31	6	44	192
07:30 AM	12	53	21	86	0	22	23	45	1	55	2	58	0	23	7	30	219
07:45 AM	9	22	2	33	1	26	2	29	1	12	2	15	2	27	4	33	110
Total	42	131	38	211	3	86	70	159	11	173	6	190	17	105	19	141	701
08:00 AM	5	15	4	24	3	9	3	15	2	8	0	10	1	16	1	18	67
08:15 AM	8	2	2	12	1	16	5	22	4	4	1	9	0	9	4	13	56
08:30 AM	3	4	2	9	1	10	5	16	2	10	1	13	1	10	3	14	52
08:45 AM	3	3	0	6	0	17	5	22	2	8	2	12	2	11	3	16	56
Total	19	24	8	51	5	52	18	75	10	30	4	44	4	46	11	61	231
Grand Total	61	155	46	262	8	138	88	234	21	203	10	234	21	151	30	202	932
Apprch %	23.3	59.2	17.6		3.4	59	37.6		9	86.8	4.3		10.4	74.8	14.9		
Total %	6.5	16.6	4.9	28.1	0.9	14.8	9.4	25.1	2.3	21.8	1.1	25.1	2.3	16.2	3.2	21.7	

	Linden Avenue Southbound				Jurupa Avenue Westbound				Linden Avenue Northbound				Jurupa Avenue Eastbound				
Start Time	Left	Thru	Right	App. Total	Left	Thru	Right	App. Total	Left	Thru	Right	App. Total	Left	Thru	Right	App. Total	Int. Total
Peak Hour Analysis From 07:00 AM to 07:45 AM - Peak 1 of 1																	
Peak Hour for Entire Intersection Begins at 07:00 AM																	
07:00 AM	7	19	10	36	**2**	24	**30**	**56**	4	50	0	54	**8**	24	2	34	180
07:15 AM	**14**	37	5	56	0	14	15	29	**5**	**56**	**2**	**63**	7	**31**	6	**44**	192
07:30 AM	12	**53**	**21**	**86**	0	22	23	45	1	55	2	58	0	23	**7**	30	**219**
07:45 AM	9	22	2	33	1	**26**	2	29	1	12	2	15	2	27	4	33	110
Total Volume	42	131	38	211	3	86	70	159	11	173	6	190	17	105	19	141	701
% App. Total	19.9	62.1	18		1.9	54.1	44		5.8	91.1	3.2		12.1	74.5	13.5		
PHF	.750	.618	.452	.613	.375	.827	.583	.710	.550	.772	.750	.754	.531	.847	.679	.801	.800

Counts Unlimited
PO Box 1178
Corona, CA 92878
(951) 268-6268

City of San Bernardino
N/S: Linden Avenue
E/W: Jurupa Avenue
Weather: Clear

File Name : 12_CSB_Linden_Jurupa AM
Site Code : 04520047
Start Date : 1/23/2020
Page No : 2

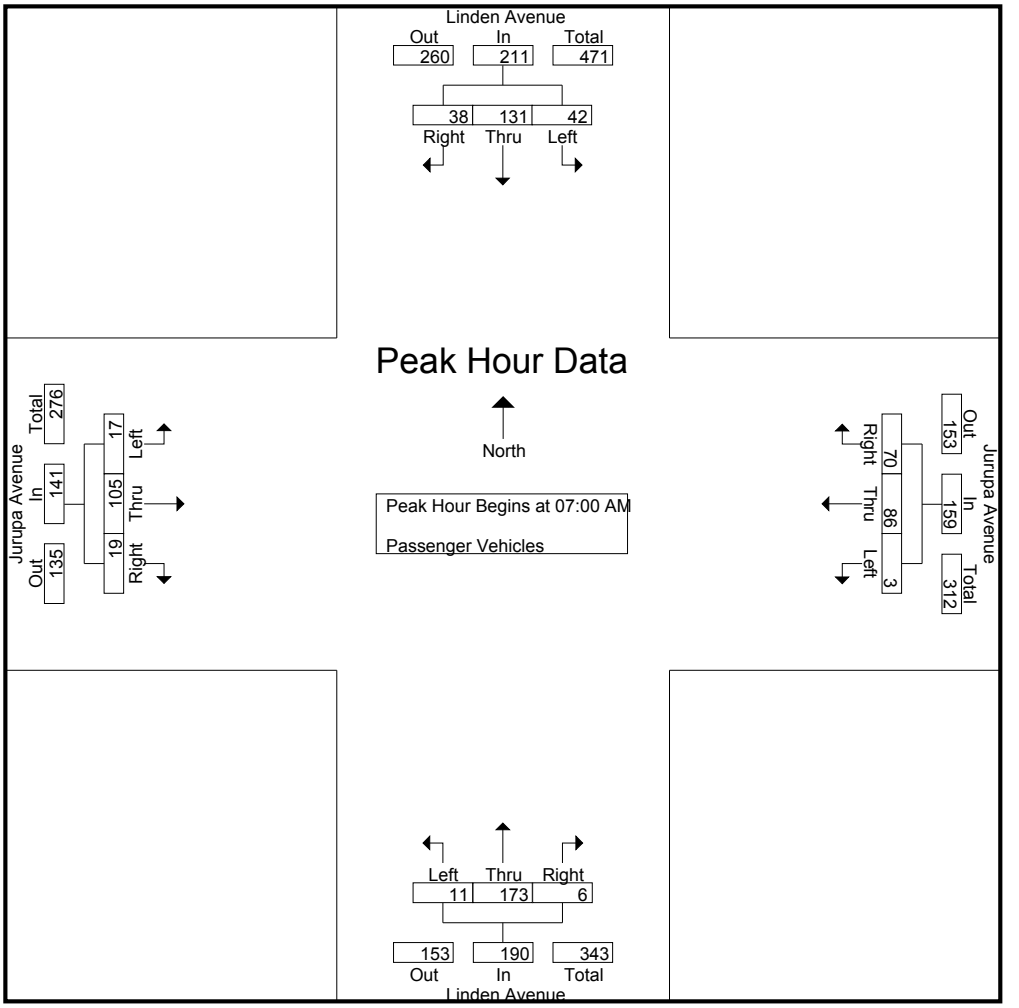

Peak Hour Analysis From 07:00 AM to 07:45 AM - Peak 1 of 1
Peak Hour for Each Approach Begins at:

	07:00 AM				07:00 AM				07:00 AM				07:00 AM			
+0 mins.	7	19	10	36	**2**	24	**30**	**56**	4	50	0	54	**8**	24	2	34
+15 mins.	**14**	37	5	56	0	14	15	29	**5**	**56**	**2**	**63**	7	**31**	6	**44**
+30 mins.	12	**53**	**21**	**86**	0	22	23	45	1	55	2	58	0	23	**7**	30
+45 mins.	9	22	2	33	1	**26**	2	29	1	12	2	15	2	27	4	33
Total Volume	42	131	38	211	3	86	70	159	11	173	6	190	17	105	19	141
% App. Total	19.9	62.1	18		1.9	54.1	44		5.8	91.1	3.2		12.1	74.5	13.5	
PHF	.750	.618	.452	.613	.375	.827	.583	.710	.550	.772	.750	.754	.531	.847	.679	.801

Counts Unlimited
PO Box 1178
Corona, CA 92878
(951) 268-6268

City of San Bernardino
N/S: Linden Avenue
E/W: Jurupa Avenue
Weather: Clear

File Name : 12_CSB_Linden_Jurupa AM
Site Code : 04520047
Start Date : 1/23/2020
Page No : 1

Groups Printed- Large 2 Axle Vehicles

	Linden Avenue Southbound				Jurupa Avenue Westbound				Linden Avenue Northbound				Jurupa Avenue Eastbound				
Start Time	Left	Thru	Right	App. Total	Left	Thru	Right	App. Total	Left	Thru	Right	App. Total	Left	Thru	Right	App. Total	Int. Total
07:00 AM	0	2	0	2	0	1	1	2	0	0	0	0	0	0	0	0	4
07:15 AM	0	0	0	0	0	1	1	2	0	0	0	0	0	2	0	2	4
07:30 AM	0	0	0	0	0	1	0	1	0	0	0	0	0	1	0	1	2
07:45 AM	0	1	0	1	0	1	0	1	0	1	0	1	0	0	0	0	3
Total	0	3	0	3	0	4	2	6	0	1	0	1	0	3	0	3	13
08:00 AM	0	0	0	0	0	1	2	3	0	0	0	0	0	0	0	0	3
08:15 AM	0	0	0	0	0	0	0	0	0	0	0	0	0	0	0	0	0
08:30 AM	0	0	0	0	0	0	0	0	0	0	0	0	0	1	0	1	1
08:45 AM	0	0	0	0	0	1	0	1	0	0	0	0	0	0	0	0	1
Total	0	0	0	0	0	2	2	4	0	0	0	0	0	1	0	1	5
Grand Total	0	3	0	3	0	6	4	10	0	1	0	1	0	4	0	4	18
Apprch %	0	100	0		0	60	40		0	100	0		0	100	0		
Total %	0	16.7	0	16.7	0	33.3	22.2	55.6	0	5.6	0	5.6	0	22.2	0	22.2	

	Linden Avenue Southbound				Jurupa Avenue Westbound				Linden Avenue Northbound				Jurupa Avenue Eastbound				
Start Time	Left	Thru	Right	App. Total	Left	Thru	Right	App. Total	Left	Thru	Right	App. Total	Left	Thru	Right	App. Total	Int. Total
Peak Hour Analysis From 07:00 AM to 07:45 AM - Peak 1 of 1																	
Peak Hour for Entire Intersection Begins at 07:00 AM																	
07:00 AM	0	**2**	0	**2**	0	**1**	**1**	**2**	0	0	0	0	0	0	0	0	**4**
07:15 AM	0	0	0	0	0	1	1	2	0	0	0	0	0	**2**	0	**2**	4
07:30 AM	0	0	0	0	0	1	0	1	0	0	0	0	0	1	0	1	2
07:45 AM	0	1	0	1	0	1	0	1	0	**1**	0	**1**	0	0	0	0	3
Total Volume	0	3	0	3	0	4	2	6	0	1	0	1	0	3	0	3	13
% App. Total	0	100	0		0	66.7	33.3		0	100	0		0	100	0		
PHF	.000	.375	.000	.375	.000	1.00	.500	.750	.000	.250	.000	.250	.000	.375	.000	.375	.813

Counts Unlimited
PO Box 1178
Corona, CA 92878
(951) 268-6268

City of San Bernardino
N/S: Linden Avenue
E/W: Jurupa Avenue
Weather: Clear

File Name : 12_CSB_Linden_Jurupa AM
Site Code : 04520047
Start Date : 1/23/2020
Page No : 2

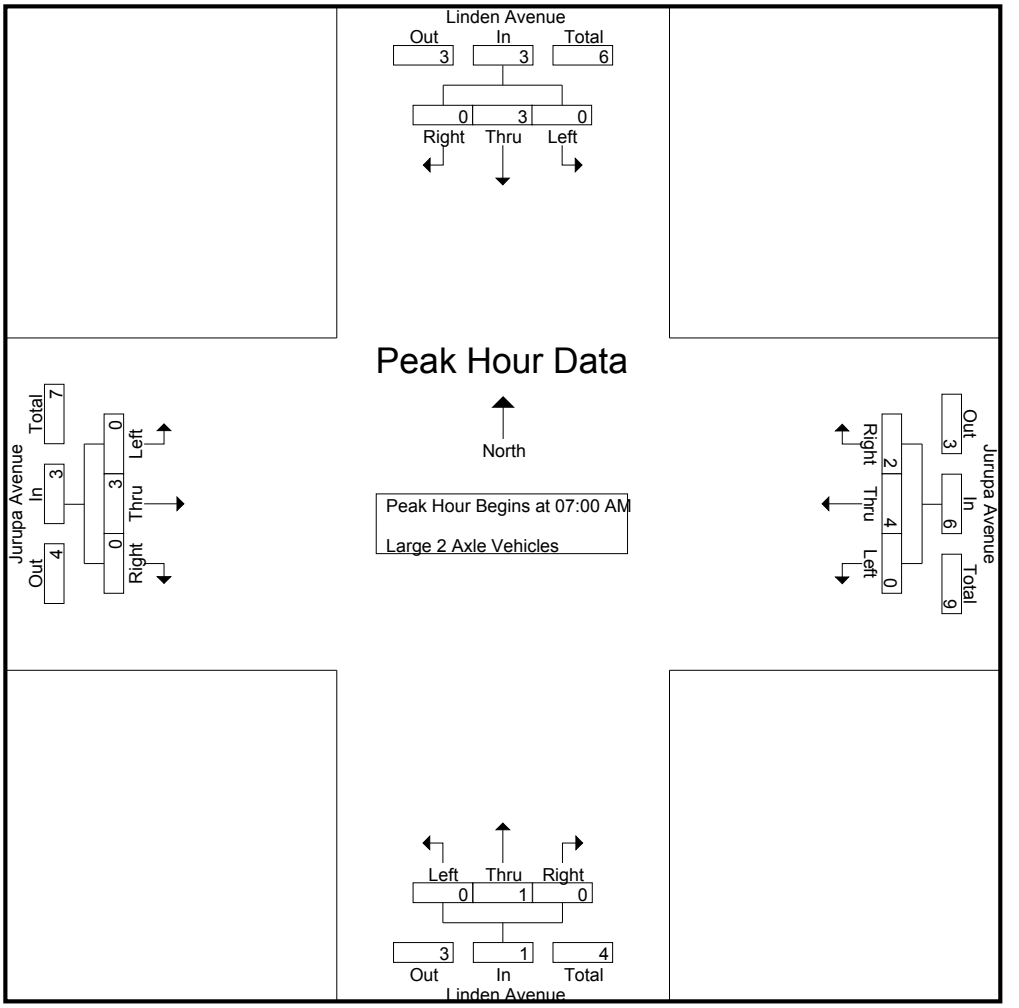

Peak Hour Analysis From 07:00 AM to 07:45 AM - Peak 1 of 1
Peak Hour for Each Approach Begins at:

	07:00 AM				07:00 AM				07:00 AM				07:00 AM			
+0 mins.	0	**2**	0	**2**	0	**1**	**1**	**2**	0	0	0	0	0	0	0	0
+15 mins.	0	0	0	0	0	1	1	2	0	0	0	0	0	**2**	0	**2**
+30 mins.	0	0	0	0	0	1	0	1	0	0	0	0	0	1	0	1
+45 mins.	0	1	0	1	0	1	0	1	0	**1**	0	**1**	0	0	0	0
Total Volume	0	3	0	3	0	4	2	6	0	1	0	1	0	3	0	3
% App. Total	0	100	0		0	66.7	33.3		0	100	0		0	100	0	
PHF	.000	.375	.000	.375	.000	1.000	.500	.750	.000	.250	.000	.250	.000	.375	.000	.375

Counts Unlimited
PO Box 1178
Corona, CA 92878
(951) 268-6268

City of San Bernardino
N/S: Linden Avenue
E/W: Jurupa Avenue
Weather: Clear

File Name : 12_CSB_Linden_Jurupa AM
Site Code : 04520047
Start Date : 1/23/2020
Page No : 1

Groups Printed- 3 Axle Vehicles

	Linden Avenue Southbound				Jurupa Avenue Westbound				Linden Avenue Northbound				Jurupa Avenue Eastbound				
Start Time	Left	Thru	Right	App. Total	Left	Thru	Right	App. Total	Left	Thru	Right	App. Total	Left	Thru	Right	App. Total	Int. Total
07:00 AM	0	0	0	0	0	0	0	0	0	0	0	0	0	0	0	0	0
07:15 AM	0	0	0	0	0	0	0	0	0	1	0	1	0	0	0	0	1
07:30 AM	0	0	1	1	0	0	0	0	0	0	0	0	0	0	0	0	1
07:45 AM	0	1	0	1	0	0	0	0	0	0	0	0	0	2	0	2	3
Total	0	1	1	2	0	0	0	0	0	1	0	1	0	2	0	2	5
08:00 AM	0	0	0	0	0	0	0	0	0	0	0	0	0	0	0	0	0
08:15 AM	0	0	0	0	0	0	0	0	0	0	0	0	0	1	0	1	1
08:30 AM	0	0	0	0	0	0	0	0	0	0	0	0	0	0	0	0	0
08:45 AM	0	0	0	0	0	0	0	0	0	0	0	0	0	0	0	0	0
Total	0	0	0	0	0	0	0	0	0	0	0	0	0	1	0	1	1
Grand Total	0	1	1	2	0	0	0	0	0	1	0	1	0	3	0	3	6
Apprch %	0	50	50		0	0	0		0	100	0		0	100	0		
Total %	0	16.7	16.7	33.3	0	0	0	0	0	16.7	0	16.7	0	50	0	50	

	Linden Avenue Southbound				Jurupa Avenue Westbound				Linden Avenue Northbound				Jurupa Avenue Eastbound				
Start Time	Left	Thru	Right	App. Total	Left	Thru	Right	App. Total	Left	Thru	Right	App. Total	Left	Thru	Right	App. Total	Int. Total
Peak Hour Analysis From 07:00 AM to 07:45 AM - Peak 1 of 1																	
Peak Hour for Entire Intersection Begins at 07:00 AM																	
07:00 AM	0	0	0	0	0	0	0	0	0	0	0	0	0	0	0	0	0
07:15 AM	0	0	0	0	0	0	0	0	0	**1**	0	**1**	0	0	0	0	1
07:30 AM	0	0	**1**	**1**	0	0	0	0	0	0	0	0	0	0	0	0	1
07:45 AM	0	**1**	0	1	0	0	0	0	0	0	0	0	0	**2**	0	**2**	**3**
Total Volume	0	1	1	2	0	0	0	0	0	1	0	1	0	2	0	2	5
% App. Total	0	50	50		0	0	0		0	100	0		0	100	0		
PHF	.000	.250	.250	.500	.000	.000	.000	.000	.000	.250	.000	.250	.000	.250	.000	.250	.417

Counts Unlimited
PO Box 1178
Corona, CA 92878
(951) 268-6268

City of San Bernardino
N/S: Linden Avenue
E/W: Jurupa Avenue
Weather: Clear

File Name : 12_CSB_Linden_Jurupa AM
Site Code : 04520047
Start Date : 1/23/2020
Page No : 2

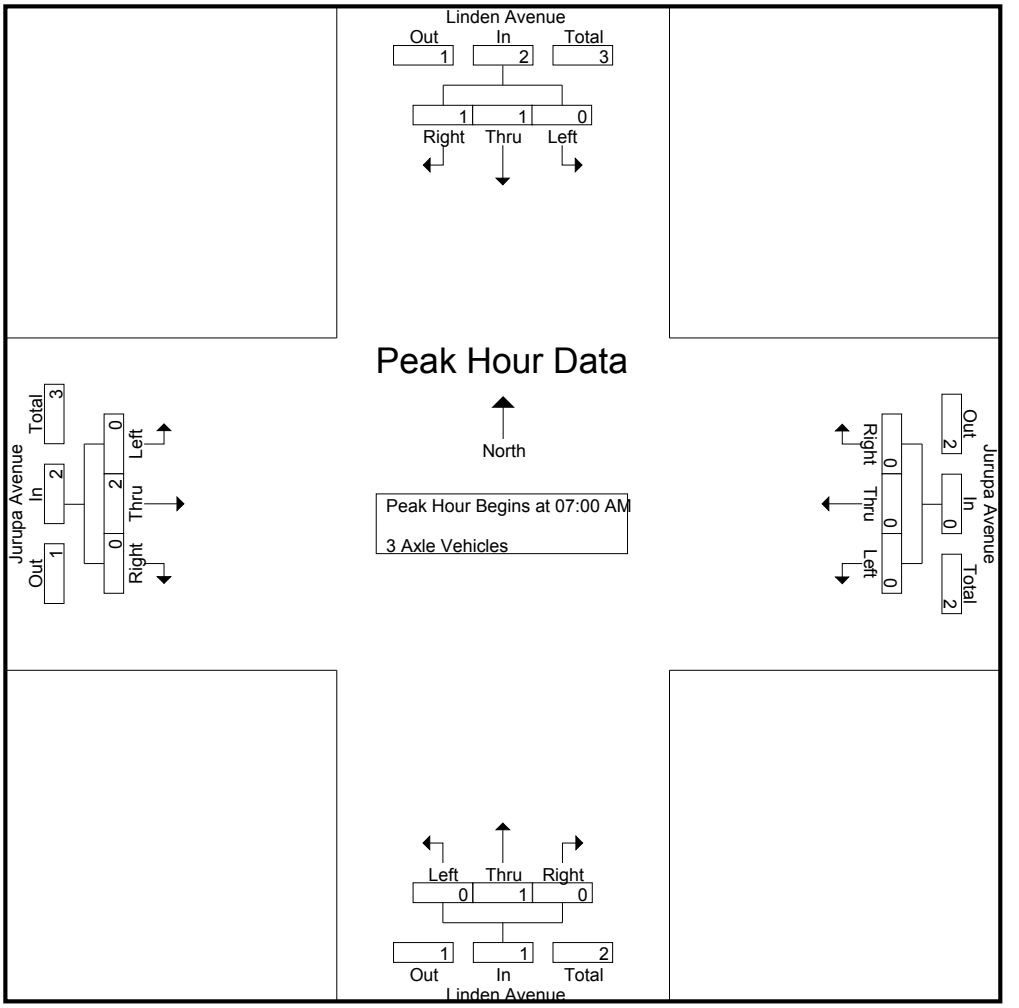

Peak Hour Analysis From 07:00 AM to 07:45 AM - Peak 1 of 1
Peak Hour for Each Approach Begins at:

	07:00 AM				07:00 AM				07:00 AM				07:00 AM			
+0 mins.	0	0	0	0	0	0	0	0	0	0	0	0	0	0	0	0
+15 mins.	0	0	0	0	0	0	0	0	0	**1**	0	**1**	0	0	0	0
+30 mins.	0	0	**1**	**1**	0	0	0	0	0	0	0	0	0	0	0	0
+45 mins.	0	**1**	0	1	0	0	0	0	0	0	0	0	0	**2**	0	**2**
Total Volume	0	1	1	2	0	0	0	0	0	1	0	1	0	2	0	2
% App. Total	0	50	50		0	0	0		0	100	0		0	100	0	
PHF	.000	.250	.250	.500	.000	.000	.000	.000	.000	.250	.000	.250	.000	.250	.000	.250

Counts Unlimited
PO Box 1178
Corona, CA 92878
(951) 268-6268

City of San Bernardino
N/S: Linden Avenue
E/W: Jurupa Avenue
Weather: Clear

File Name : 12_CSB_Linden_Jurupa AM
Site Code : 04520047
Start Date : 1/23/2020
Page No : 1

Groups Printed- 4+ Axle Trucks

	Linden Avenue Southbound				Jurupa Avenue Westbound				Linden Avenue Northbound				Jurupa Avenue Eastbound				
Start Time	Left	Thru	Right	App. Total	Left	Thru	Right	App. Total	Left	Thru	Right	App. Total	Left	Thru	Right	App. Total	Int. Total
07:00 AM	0	0	0	0	0	0	0	0	0	0	0	0	0	1	0	1	1
07:15 AM	0	0	0	0	0	0	0	0	0	0	0	0	0	0	0	0	0
07:30 AM	0	0	0	0	0	0	0	0	0	0	0	0	0	0	0	0	0
07:45 AM	0	0	0	0	0	0	0	0	0	0	0	0	0	0	0	0	0
Total	0	0	0	0	0	0	0	0	0	0	0	0	0	1	0	1	1
08:00 AM	0	0	0	0	0	0	0	0	0	0	0	0	0	0	0	0	0
08:15 AM	0	0	0	0	0	0	0	0	0	0	0	0	0	0	0	0	0
08:30 AM	0	0	0	0	0	0	0	0	0	0	0	0	0	1	0	1	1
08:45 AM	0	0	0	0	0	0	0	0	0	0	0	0	0	1	0	1	1
Total	0	0	0	0	0	0	0	0	0	0	0	0	0	2	0	2	2
Grand Total	0	0	0	0	0	0	0	0	0	0	0	0	0	3	0	3	3
Apprch %	0	0	0		0	0	0		0	0	0		0	100	0		
Total %	0	0	0	0	0	0	0	0	0	0	0	0	0	100	0	100	

	Linden Avenue Southbound				Jurupa Avenue Westbound				Linden Avenue Northbound				Jurupa Avenue Eastbound				
Start Time	Left	Thru	Right	App. Total	Left	Thru	Right	App. Total	Left	Thru	Right	App. Total	Left	Thru	Right	App. Total	Int. Total
Peak Hour Analysis From 07:00 AM to 07:45 AM - Peak 1 of 1																	
Peak Hour for Entire Intersection Begins at 07:00 AM																	
07:00 AM	0	0	0	0	0	0	0	0	0	0	0	0	0	**1**	0	**1**	**1**
07:15 AM	0	0	0	0	0	0	0	0	0	0	0	0	0	0	0	0	0
07:30 AM	0	0	0	0	0	0	0	0	0	0	0	0	0	0	0	0	0
07:45 AM	0	0	0	0	0	0	0	0	0	0	0	0	0	0	0	0	0
Total Volume	0	0	0	0	0	0	0	0	0	0	0	0	0	1	0	1	1
% App. Total	0	0	0		0	0	0		0	0	0		0	100	0		
PHF	.000	.000	.000	.000	.000	.000	.000	.000	.000	.000	.000	.000	.000	.250	.000	.250	.250

Counts Unlimited
PO Box 1178
Corona, CA 92878
(951) 268-6268

City of San Bernardino
N/S: Linden Avenue
E/W: Jurupa Avenue
Weather: Clear

File Name : 12_CSB_Linden_Jurupa AM
Site Code : 04520047
Start Date : 1/23/2020
Page No : 2

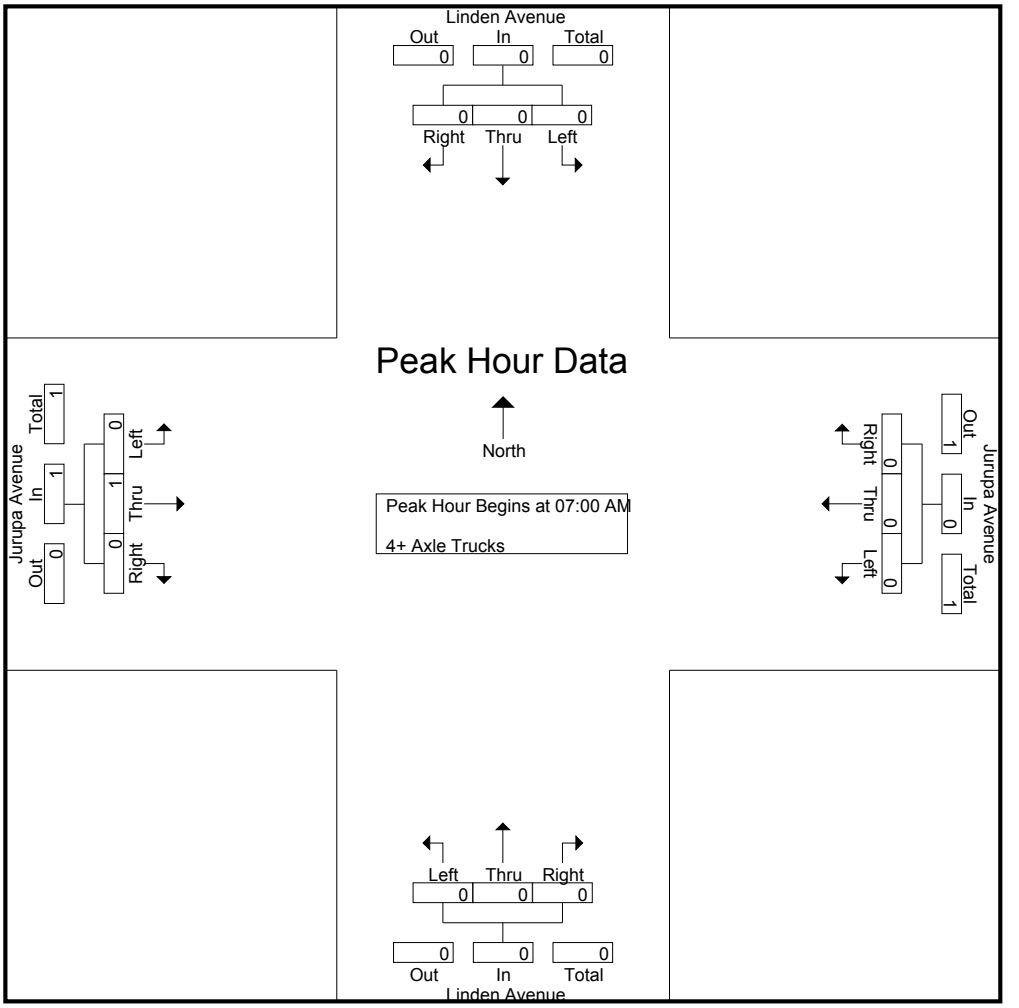

Peak Hour Analysis From 07:00 AM to 07:45 AM - Peak 1 of 1
Peak Hour for Each Approach Begins at:

	07:00 AM				07:00 AM				07:00 AM				07:00 AM			
+0 mins.	0	0	0	0	0	0	0	0	0	0	0	0	0	**1**	0	**1**
+15 mins.	0	0	0	0	0	0	0	0	0	0	0	0	0	0	0	0
+30 mins.	0	0	0	0	0	0	0	0	0	0	0	0	0	0	0	0
+45 mins.	0	0	0	0	0	0	0	0	0	0	0	0	0	0	0	0
Total Volume	0	0	0	0	0	0	0	0	0	0	0	0	0	1	0	1
% App. Total	0	0	0		0	0	0		0	0	0		0	100	0	
PHF	.000	.000	.000	.000	.000	.000	.000	.000	.000	.000	.000	.000	.000	.250	.000	.250

Counts Unlimited
PO Box 1178
Corona, CA 92878
(951) 268-6268

City of San Bernardino
N/S: Linden Avenue
E/W: Jurupa Avenue
Weather: Clear

File Name : 12_CSB_Linden_Jurupa PM
Site Code : 04520047
Start Date : 1/23/2020
Page No : 1

Groups Printed- Passenger Vehicles - Large 2 Axle Vehicles - 3 Axle Vehicles - 4+ Axle Trucks

	Linden Avenue Southbound				Jurupa Avenue Westbound				Linden Avenue Northbound				Jurupa Avenue Eastbound				
Start Time	Left	Thru	Right	App. Total	Left	Thru	Right	App. Total	Left	Thru	Right	App. Total	Left	Thru	Right	App. Total	Int. Total
04:00 PM	18	22	3	43	5	20	13	38	2	16	1	19	14	58	10	82	182
04:15 PM	11	24	3	38	2	13	13	28	1	12	2	15	13	65	6	84	165
04:30 PM	5	19	3	27	3	31	7	41	1	11	7	19	14	48	3	65	152
04:45 PM	5	15	0	20	4	19	16	39	5	19	0	24	9	43	9	61	144
Total	39	80	9	128	14	83	49	146	9	58	10	77	50	214	28	292	643
05:00 PM	9	12	1	22	5	20	14	39	2	13	0	15	8	49	7	64	140
05:15 PM	8	11	3	22	2	20	22	44	0	9	3	12	15	65	10	90	168
05:30 PM	21	15	5	41	2	24	12	38	5	20	2	27	13	50	2	65	171
05:45 PM	7	16	1	24	1	13	14	28	3	19	1	23	16	70	8	94	169
Total	45	54	10	109	10	77	62	149	10	61	6	77	52	234	27	313	648
Grand Total	84	134	19	237	24	160	111	295	19	119	16	154	102	448	55	605	1291
Apprch %	35.4	56.5	8		8.1	54.2	37.6		12.3	77.3	10.4		16.9	74	9.1		
Total %	6.5	10.4	1.5	18.4	1.9	12.4	8.6	22.9	1.5	9.2	1.2	11.9	7.9	34.7	4.3	46.9	
Passenger Vehicles	84	134	18	236	23	155	108	286	19	117	16	152	100	406	55	561	1235
% Passenger Vehicles	100	100	94.7	99.6	95.8	96.9	97.3	96.9	100	98.3	100	98.7	98	90.6	100	92.7	95.7
Large 2 Axle Vehicles	0	0	1	1	0	3	3	6	0	2	0	2	1	32	0	33	42
% Large 2 Axle Vehicles	0	0	5.3	0.4	0	1.9	2.7	2	0	1.7	0	1.3	1	7.1	0	5.5	3.3
3 Axle Vehicles	0	0	0	0	0	0	0	0	0	0	0	0	0	3	0	3	3
% 3 Axle Vehicles	0	0	0	0	0	0	0	0	0	0	0	0	0	0.7	0	0.5	0.2
4+ Axle Trucks	0	0	0	0	1	2	0	3	0	0	0	0	1	7	0	8	11
% 4+ Axle Trucks	0	0	0	0	4.2	1.2	0	1	0	0	0	0	1	1.6	0	1.3	0.9

	Linden Avenue Southbound				Jurupa Avenue Westbound				Linden Avenue Northbound				Jurupa Avenue Eastbound				
Start Time	Left	Thru	Right	App. Total	Left	Thru	Right	App. Total	Left	Thru	Right	App. Total	Left	Thru	Right	App. Total	Int. Total
Peak Hour Analysis From 04:00 PM to 05:45 PM - Peak 1 of 1																	
Peak Hour for Entire Intersection Begins at 05:00 PM																	
05:00 PM	9	12	1	22	**5**	20	14	39	2	13	0	15	8	49	7	64	140
05:15 PM	8	11	3	22	2	20	**22**	**44**	0	9	**3**	12	15	65	**10**	90	168
05:30 PM	**21**	15	**5**	**41**	2	**24**	12	38	**5**	**20**	2	**27**	13	50	2	65	**171**
05:45 PM	7	**16**	1	24	1	13	14	28	3	19	1	23	**16**	**70**	8	**94**	169
Total Volume	45	54	10	109	10	77	62	149	10	61	6	77	52	234	27	313	648
% App. Total	41.3	49.5	9.2		6.7	51.7	41.6		13	79.2	7.8		16.6	74.8	8.6		
PHF	.536	.844	.500	.665	.500	.802	.705	.847	.500	.763	.500	.713	.813	.836	.675	.832	.947

Counts Unlimited
PO Box 1178
Corona, CA 92878
(951) 268-6268

City of San Bernardino
N/S: Linden Avenue
E/W: Jurupa Avenue
Weather: Clear

File Name : 12_CSB_Linden_Jurupa PM
Site Code : 04520047
Start Date : 1/23/2020
Page No : 2

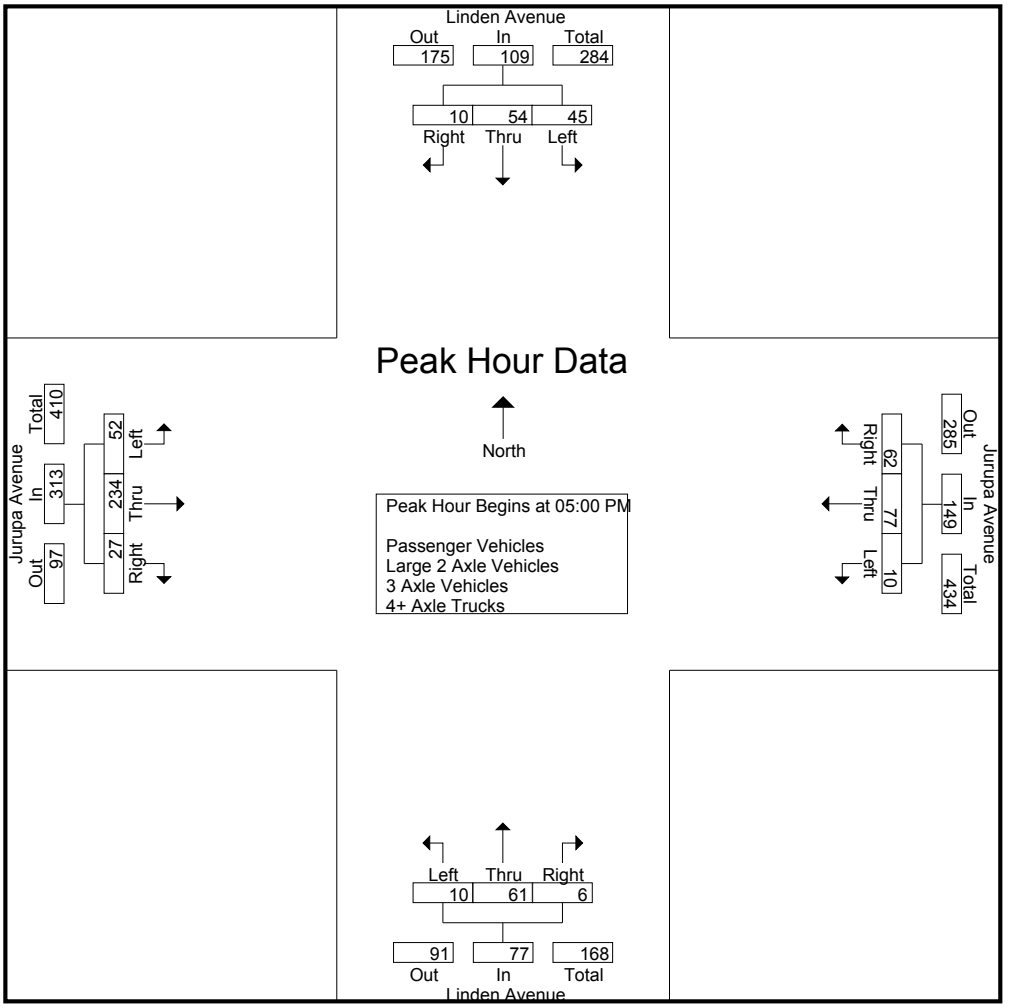

Peak Hour Analysis From 04:00 PM to 05:45 PM - Peak 1 of 1
Peak Hour for Each Approach Begins at:

	04:00 PM				04:30 PM				04:45 PM				05:00 PM			
+0 mins.	**18**	22	**3**	**43**	3	**31**	7	41	**5**	19	0	24	8	49	7	64
+15 mins.	11	**24**	3	38	4	19	16	39	2	13	0	15	15	65	**10**	90
+30 mins.	5	19	3	27	**5**	20	14	39	0	9	**3**	12	13	50	2	65
+45 mins.	5	15	0	20	2	20	**22**	**44**	5	**20**	2	**27**	**16**	**70**	8	**94**
Total Volume	39	80	9	128	14	90	59	163	12	61	5	78	52	234	27	313
% App. Total	30.5	62.5	7		8.6	55.2	36.2		15.4	78.2	6.4		16.6	74.8	8.6	
PHF	.542	.833	.750	.744	.700	.726	.670	.926	.600	.763	.417	.722	.813	.836	.675	.832

Counts Unlimited
PO Box 1178
Corona, CA 92878
(951) 268-6268

City of San Bernardino
N/S: Linden Avenue
E/W: Jurupa Avenue
Weather: Clear

File Name : 12_CSB_Linden_Jurupa PM
Site Code : 04520047
Start Date : 1/23/2020
Page No : 1

Groups Printed- Passenger Vehicles

	Linden Avenue Southbound				Jurupa Avenue Westbound				Linden Avenue Northbound				Jurupa Avenue Eastbound				
Start Time	Left	Thru	Right	App. Total	Left	Thru	Right	App. Total	Left	Thru	Right	App. Total	Left	Thru	Right	App. Total	Int. Total
04:00 PM	18	22	3	43	5	18	11	34	2	16	1	19	13	53	10	76	172
04:15 PM	11	24	2	37	2	13	13	28	1	12	2	15	13	58	6	77	157
04:30 PM	5	19	3	27	3	30	6	39	1	10	7	18	14	45	3	62	146
04:45 PM	5	15	0	20	4	18	16	38	5	19	0	24	9	39	9	57	139
Total	39	80	8	127	14	79	46	139	9	57	10	76	49	195	28	272	614
05:00 PM	9	12	1	22	5	20	14	39	2	13	0	15	8	43	7	58	134
05:15 PM	8	11	3	22	2	20	22	44	0	9	3	12	15	59	10	84	162
05:30 PM	21	15	5	41	1	23	12	36	5	20	2	27	12	46	2	60	164
05:45 PM	7	16	1	24	1	13	14	28	3	18	1	22	16	63	8	87	161
Total	45	54	10	109	9	76	62	147	10	60	6	76	51	211	27	289	621
Grand Total	84	134	18	236	23	155	108	286	19	117	16	152	100	406	55	561	1235
Apprch %	35.6	56.8	7.6		8	54.2	37.8		12.5	77	10.5		17.8	72.4	9.8		
Total %	6.8	10.9	1.5	19.1	1.9	12.6	8.7	23.2	1.5	9.5	1.3	12.3	8.1	32.9	4.5	45.4	

	Linden Avenue Southbound				Jurupa Avenue Westbound				Linden Avenue Northbound				Jurupa Avenue Eastbound				
Start Time	Left	Thru	Right	App. Total	Left	Thru	Right	App. Total	Left	Thru	Right	App. Total	Left	Thru	Right	App. Total	Int. Total
Peak Hour Analysis From 05:00 PM to 05:45 PM - Peak 1 of 1																	
Peak Hour for Entire Intersection Begins at 05:00 PM																	
05:00 PM	9	12	1	22	**5**	20	14	39	2	13	0	15	8	43	7	58	134
05:15 PM	8	11	3	22	2	20	**22**	**44**	0	9	**3**	12	15	59	**10**	84	162
05:30 PM	**21**	15	**5**	**41**	1	**23**	12	36	**5**	**20**	2	**27**	12	46	2	60	**164**
05:45 PM	7	**16**	1	24	1	13	14	28	3	18	1	22	**16**	**63**	8	**87**	161
Total Volume	45	54	10	109	9	76	62	147	10	60	6	76	51	211	27	289	621
% App. Total	41.3	49.5	9.2		6.1	51.7	42.2		13.2	78.9	7.9		17.6	73	9.3		
PHF	.536	.844	.500	.665	.450	.826	.705	.835	.500	.750	.500	.704	.797	.837	.675	.830	.947

Counts Unlimited
PO Box 1178
Corona, CA 92878
(951) 268-6268

City of San Bernardino
N/S: Linden Avenue
E/W: Jurupa Avenue
Weather: Clear

File Name : 12_CSB_Linden_Jurupa PM
Site Code : 04520047
Start Date : 1/23/2020
Page No : 2

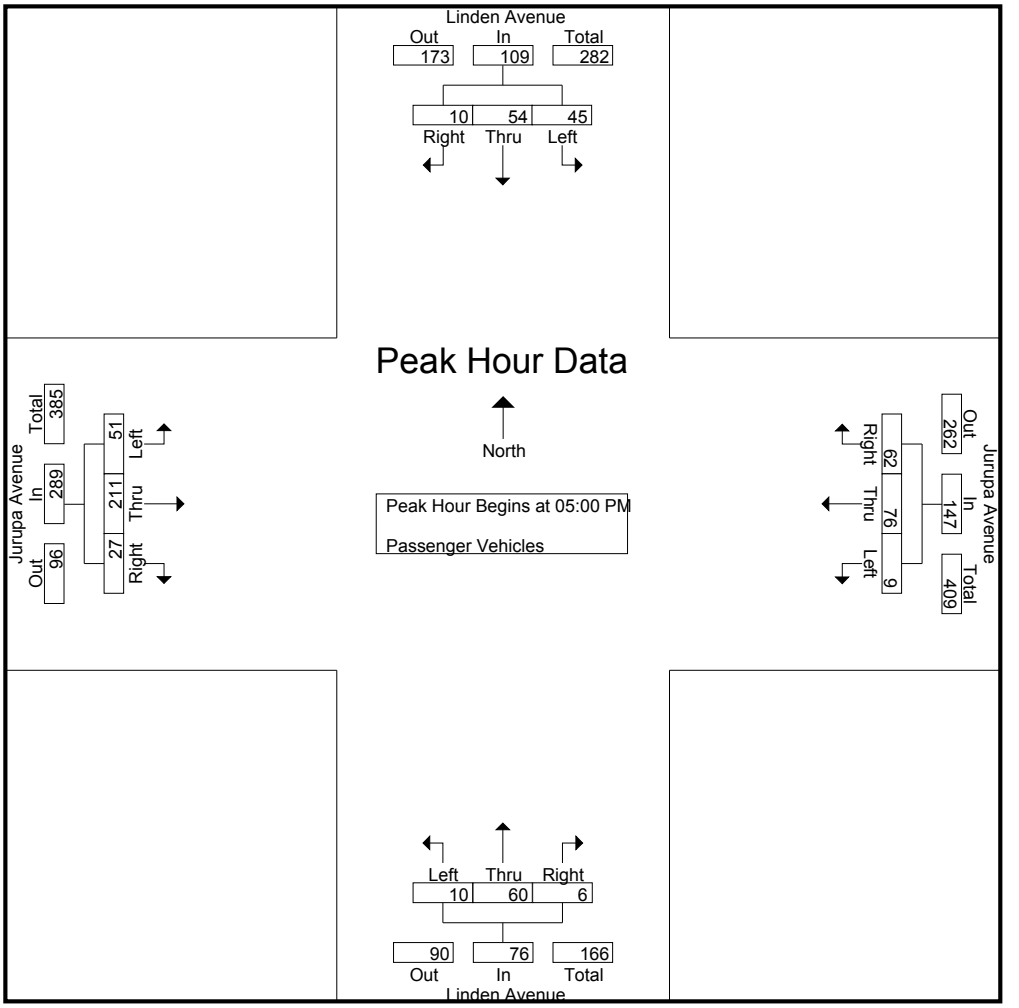

Peak Hour Analysis From 05:00 PM to 05:45 PM - Peak 1 of 1
Peak Hour for Each Approach Begins at:

	05:00 PM				05:00 PM				05:00 PM				05:00 PM			
+0 mins.	9	12	1	22	**5**	20	14	39	2	13	0	15	8	43	7	58
+15 mins.	8	11	3	22	2	20	**22**	**44**	0	9	**3**	12	15	59	**10**	84
+30 mins.	**21**	15	**5**	**41**	1	**23**	12	36	**5**	**20**	2	**27**	12	46	2	60
+45 mins.	7	**16**	1	24	1	13	14	28	3	18	1	22	**16**	**63**	8	**87**
Total Volume	45	54	10	109	9	76	62	147	10	60	6	76	51	211	27	289
% App. Total	41.3	49.5	9.2		6.1	51.7	42.2		13.2	78.9	7.9		17.6	73	9.3	
PHF	.536	.844	.500	.665	.450	.826	.705	.835	.500	.750	.500	.704	.797	.837	.675	.830

Counts Unlimited
PO Box 1178
Corona, CA 92878
(951) 268-6268

City of San Bernardino
N/S: Linden Avenue
E/W: Jurupa Avenue
Weather: Clear

File Name : 12_CSB_Linden_Jurupa PM
Site Code : 04520047
Start Date : 1/23/2020
Page No : 1

Groups Printed- Large 2 Axle Vehicles

	Linden Avenue Southbound				Jurupa Avenue Westbound				Linden Avenue Northbound				Jurupa Avenue Eastbound				
Start Time	Left	Thru	Right	App. Total	Left	Thru	Right	App. Total	Left	Thru	Right	App. Total	Left	Thru	Right	App. Total	Int. Total
04:00 PM	0	0	0	0	0	1	2	3	0	0	0	0	0	2	0	2	5
04:15 PM	0	0	1	1	0	0	0	0	0	0	0	0	0	5	0	5	6
04:30 PM	0	0	0	0	0	1	1	2	0	1	0	1	0	1	0	1	4
04:45 PM	0	0	0	0	0	0	0	0	0	0	0	0	0	3	0	3	3
Total	0	0	1	1	0	2	3	5	0	1	0	1	0	11	0	11	18
05:00 PM	0	0	0	0	0	0	0	0	0	0	0	0	0	6	0	6	6
05:15 PM	0	0	0	0	0	0	0	0	0	0	0	0	0	6	0	6	6
05:30 PM	0	0	0	0	0	1	0	1	0	0	0	0	1	3	0	4	5
05:45 PM	0	0	0	0	0	0	0	0	0	1	0	1	0	6	0	6	7
Total	0	0	0	0	0	1	0	1	0	1	0	1	1	21	0	22	24
Grand Total	0	0	1	1	0	3	3	6	0	2	0	2	1	32	0	33	42
Apprch %	0	0	100		0	50	50		0	100	0		3	97	0		
Total %	0	0	2.4	2.4	0	7.1	7.1	14.3	0	4.8	0	4.8	2.4	76.2	0	78.6	

	Linden Avenue Southbound				Jurupa Avenue Westbound				Linden Avenue Northbound				Jurupa Avenue Eastbound				
Start Time	Left	Thru	Right	App. Total	Left	Thru	Right	App. Total	Left	Thru	Right	App. Total	Left	Thru	Right	App. Total	Int. Total
Peak Hour Analysis From 05:00 PM to 05:45 PM - Peak 1 of 1																	
Peak Hour for Entire Intersection Begins at 05:00 PM																	
05:00 PM	0	0	0	0	0	0	0	0	0	0	0	0	0	**6**	0	**6**	6
05:15 PM	0	0	0	0	0	0	0	0	0	0	0	0	0	6	0	6	6
05:30 PM	0	0	0	0	0	**1**	0	**1**	0	0	0	0	**1**	3	0	4	5
05:45 PM	0	0	0	0	0	0	0	0	0	**1**	0	**1**	0	6	0	6	**7**
Total Volume	0	0	0	0	0	1	0	1	0	1	0	1	1	21	0	22	24
% App. Total	0	0	0		0	100	0		0	100	0		4.5	95.5	0		
PHF	.000	.000	.000	.000	.000	.250	.000	.250	.000	.250	.000	.250	.250	.875	.000	.917	.857

Counts Unlimited
PO Box 1178
Corona, CA 92878
(951) 268-6268

City of San Bernardino
N/S: Linden Avenue
E/W: Jurupa Avenue
Weather: Clear

File Name : 12_CSB_Linden_Jurupa PM
Site Code : 04520047
Start Date : 1/23/2020
Page No : 2

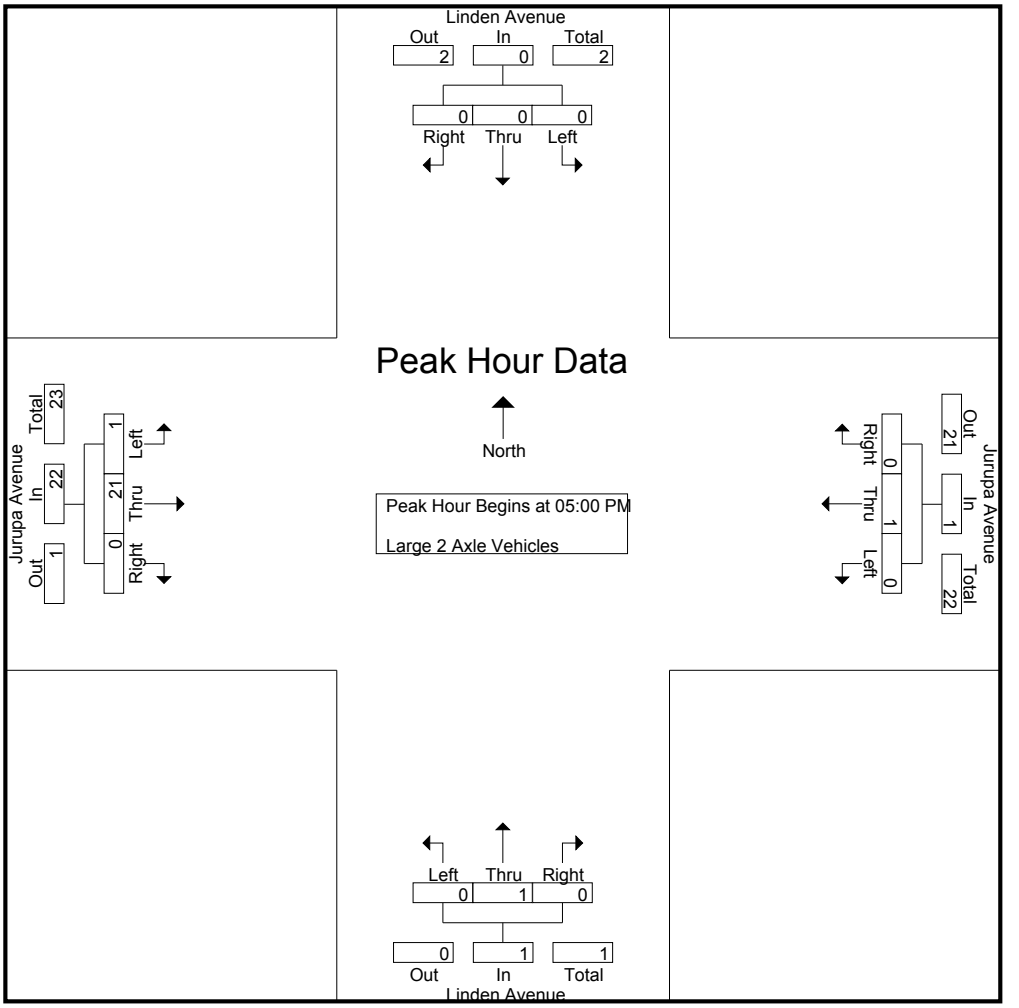

Peak Hour Analysis From 05:00 PM to 05:45 PM - Peak 1 of 1
Peak Hour for Each Approach Begins at:

	05:00 PM				05:00 PM				05:00 PM				05:00 PM			
+0 mins.	0	0	0	0	0	0	0	0	0	0	0	0	0	**6**	0	**6**
+15 mins.	0	0	0	0	0	0	0	0	0	0	0	0	0	6	0	6
+30 mins.	0	0	0	0	0	**1**	0	**1**	0	0	0	0	**1**	3	0	4
+45 mins.	0	0	0	0	0	0	0	0	0	**1**	0	**1**	0	6	0	6
Total Volume	0	0	0	0	0	1	0	1	0	1	0	1	1	21	0	22
% App. Total	0	0	0		0	100	0		0	100	0		4.5	95.5	0	
PHF	.000	.000	.000	.000	.000	.250	.000	.250	.000	.250	.000	.250	.250	.875	.000	.917

Counts Unlimited
PO Box 1178
Corona, CA 92878
(951) 268-6268

City of San Bernardino
N/S: Linden Avenue
E/W: Jurupa Avenue
Weather: Clear

File Name : 12_CSB_Linden_Jurupa PM
Site Code : 04520047
Start Date : 1/23/2020
Page No : 1

Groups Printed- 3 Axle Vehicles

	Linden Avenue Southbound				Jurupa Avenue Westbound				Linden Avenue Northbound				Jurupa Avenue Eastbound				
Start Time	Left	Thru	Right	App. Total	Left	Thru	Right	App. Total	Left	Thru	Right	App. Total	Left	Thru	Right	App. Total	Int. Total
04:00 PM	0	0	0	0	0	0	0	0	0	0	0	0	0	0	0	0	0
04:15 PM	0	0	0	0	0	0	0	0	0	0	0	0	0	1	0	1	1
04:30 PM	0	0	0	0	0	0	0	0	0	0	0	0	0	1	0	1	1
04:45 PM	0	0	0	0	0	0	0	0	0	0	0	0	0	0	0	0	0
Total	0	0	0	0	0	0	0	0	0	0	0	0	0	2	0	2	2
05:00 PM	0	0	0	0	0	0	0	0	0	0	0	0	0	0	0	0	0
05:15 PM	0	0	0	0	0	0	0	0	0	0	0	0	0	0	0	0	0
05:30 PM	0	0	0	0	0	0	0	0	0	0	0	0	0	1	0	1	1
05:45 PM	0	0	0	0	0	0	0	0	0	0	0	0	0	0	0	0	0
Total	0	0	0	0	0	0	0	0	0	0	0	0	0	1	0	1	1
Grand Total	0	0	0	0	0	0	0	0	0	0	0	0	0	3	0	3	3
Apprch %	0	0	0		0	0	0		0	0	0		0	100	0		
Total %	0	0	0	0	0	0	0	0	0	0	0	0	0	100	0	100	

	Linden Avenue Southbound				Jurupa Avenue Westbound				Linden Avenue Northbound				Jurupa Avenue Eastbound				
Start Time	Left	Thru	Right	App. Total	Left	Thru	Right	App. Total	Left	Thru	Right	App. Total	Left	Thru	Right	App. Total	Int. Total
Peak Hour Analysis From 05:00 PM to 05:45 PM - Peak 1 of 1																	
Peak Hour for Entire Intersection Begins at 05:00 PM																	
05:00 PM	0	0	0	0	0	0	0	0	0	0	0	0	0	0	0	0	0
05:15 PM	0	0	0	0	0	0	0	0	0	0	0	0	0	0	0	0	0
05:30 PM	0	0	0	0	0	0	0	0	0	0	0	0	0	**1**	0	**1**	**1**
05:45 PM	0	0	0	0	0	0	0	0	0	0	0	0	0	0	0	0	0
Total Volume	0	0	0	0	0	0	0	0	0	0	0	0	0	1	0	1	1
% App. Total	0	0	0		0	0	0		0	0	0		0	100	0		
PHF	.000	.000	.000	.000	.000	.000	.000	.000	.000	.000	.000	.000	.000	.250	.000	.250	.250

Counts Unlimited
PO Box 1178
Corona, CA 92878
(951) 268-6268

City of San Bernardino
N/S: Linden Avenue
E/W: Jurupa Avenue
Weather: Clear

File Name : 12_CSB_Linden_Jurupa PM
Site Code : 04520047
Start Date : 1/23/2020
Page No : 2

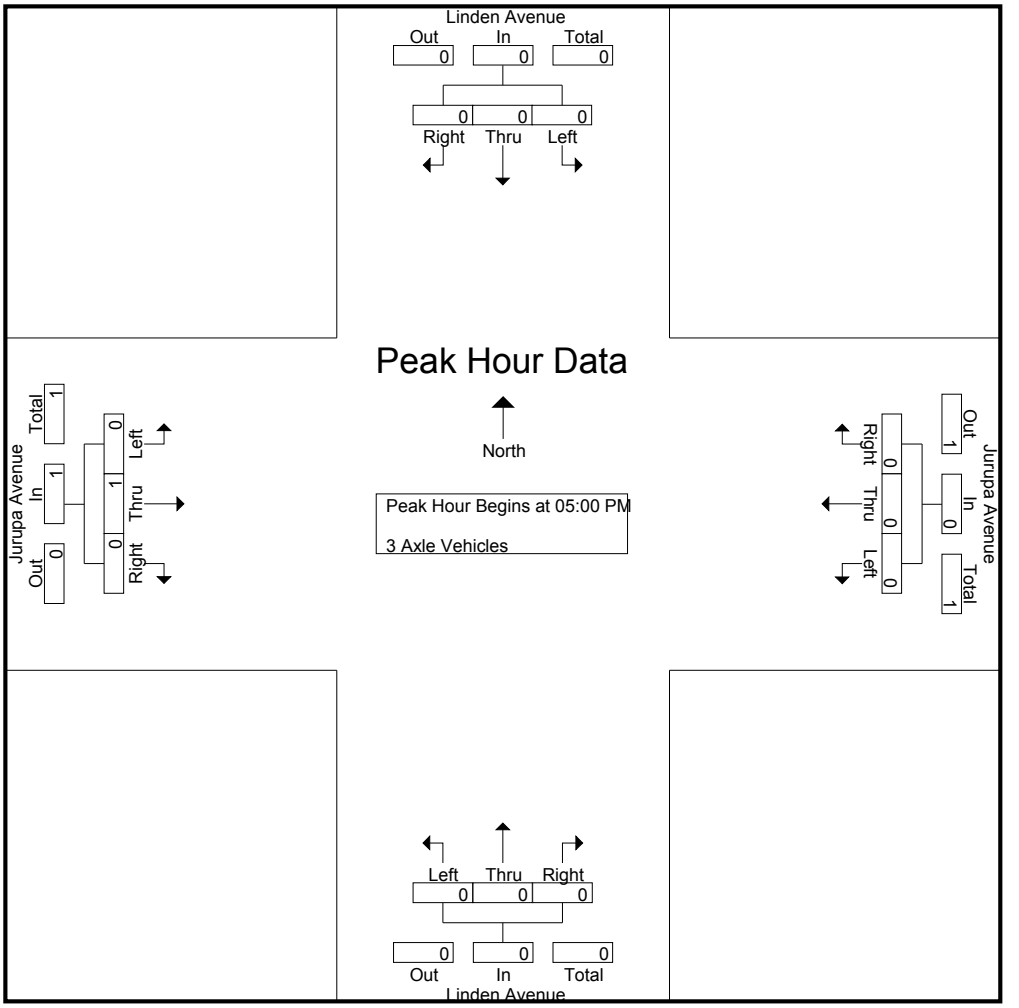

Peak Hour Analysis From 05:00 PM to 05:45 PM - Peak 1 of 1
Peak Hour for Each Approach Begins at:

	05:00 PM				05:00 PM				05:00 PM				05:00 PM			
+0 mins.	0	0	0	0	0	0	0	0	0	0	0	0	0	0	0	0
+15 mins.	0	0	0	0	0	0	0	0	0	0	0	0	0	0	0	0
+30 mins.	0	0	0	0	0	0	0	0	0	0	0	0	0	**1**	0	**1**
+45 mins.	0	0	0	0	0	0	0	0	0	0	0	0	0	0	0	0
Total Volume	0	0	0	0	0	0	0	0	0	0	0	0	0	1	0	1
% App. Total	0	0	0		0	0	0		0	0	0		0	100	0	
PHF	.000	.000	.000	.000	.000	.000	.000	.000	.000	.000	.000	.000	.000	.250	.000	.250

Counts Unlimited
PO Box 1178
Corona, CA 92878
(951) 268-6268

City of San Bernardino
N/S: Linden Avenue
E/W: Jurupa Avenue
Weather: Clear

File Name : 12_CSB_Linden_Jurupa PM
Site Code : 04520047
Start Date : 1/23/2020
Page No : 1

Groups Printed- 4+ Axle Trucks

	Linden Avenue Southbound				Jurupa Avenue Westbound				Linden Avenue Northbound				Jurupa Avenue Eastbound				
Start Time	Left	Thru	Right	App. Total	Left	Thru	Right	App. Total	Left	Thru	Right	App. Total	Left	Thru	Right	App. Total	Int. Total
04:00 PM	0	0	0	0	0	1	0	1	0	0	0	0	1	3	0	4	5
04:15 PM	0	0	0	0	0	0	0	0	0	0	0	0	0	1	0	1	1
04:30 PM	0	0	0	0	0	0	0	0	0	0	0	0	0	1	0	1	1
04:45 PM	0	0	0	0	0	1	0	1	0	0	0	0	0	1	0	1	2
Total	0	0	0	0	0	2	0	2	0	0	0	0	1	6	0	7	9
05:00 PM	0	0	0	0	0	0	0	0	0	0	0	0	0	0	0	0	0
05:15 PM	0	0	0	0	0	0	0	0	0	0	0	0	0	0	0	0	0
05:30 PM	0	0	0	0	1	0	0	1	0	0	0	0	0	0	0	0	1
05:45 PM	0	0	0	0	0	0	0	0	0	0	0	0	0	1	0	1	1
Total	0	0	0	0	1	0	0	1	0	0	0	0	0	1	0	1	2
Grand Total	0	0	0	0	1	2	0	3	0	0	0	0	1	7	0	8	11
Apprch %	0	0	0		33.3	66.7	0		0	0	0		12.5	87.5	0		
Total %	0	0	0	0	9.1	18.2	0	27.3	0	0	0	0	9.1	63.6	0	72.7	

	Linden Avenue Southbound				Jurupa Avenue Westbound				Linden Avenue Northbound				Jurupa Avenue Eastbound				
Start Time	Left	Thru	Right	App. Total	Left	Thru	Right	App. Total	Left	Thru	Right	App. Total	Left	Thru	Right	App. Total	Int. Total
Peak Hour Analysis From 05:00 PM to 05:45 PM - Peak 1 of 1																	
Peak Hour for Entire Intersection Begins at 05:00 PM																	
05:00 PM	0	0	0	0	0	0	0	0	0	0	0	0	0	0	0	0	0
05:15 PM	0	0	0	0	0	0	0	0	0	0	0	0	0	0	0	0	0
05:30 PM	0	0	0	0	**1**	0	0	**1**	0	0	0	0	0	0	0	0	**1**
05:45 PM	0	0	0	0	0	0	0	0	0	0	0	0	0	**1**	0	**1**	1
Total Volume	0	0	0	0	1	0	0	1	0	0	0	0	0	1	0	1	2
% App. Total	0	0	0		100	0	0		0	0	0		0	100	0		
PHF	.000	.000	.000	.000	.250	.000	.000	.250	.000	.000	.000	.000	.000	.250	.000	.250	.500

Counts Unlimited
PO Box 1178
Corona, CA 92878
(951) 268-6268

City of San Bernardino
N/S: Linden Avenue
E/W: Jurupa Avenue
Weather: Clear

File Name : 12_CSB_Linden_Jurupa PM
Site Code : 04520047
Start Date : 1/23/2020
Page No : 2

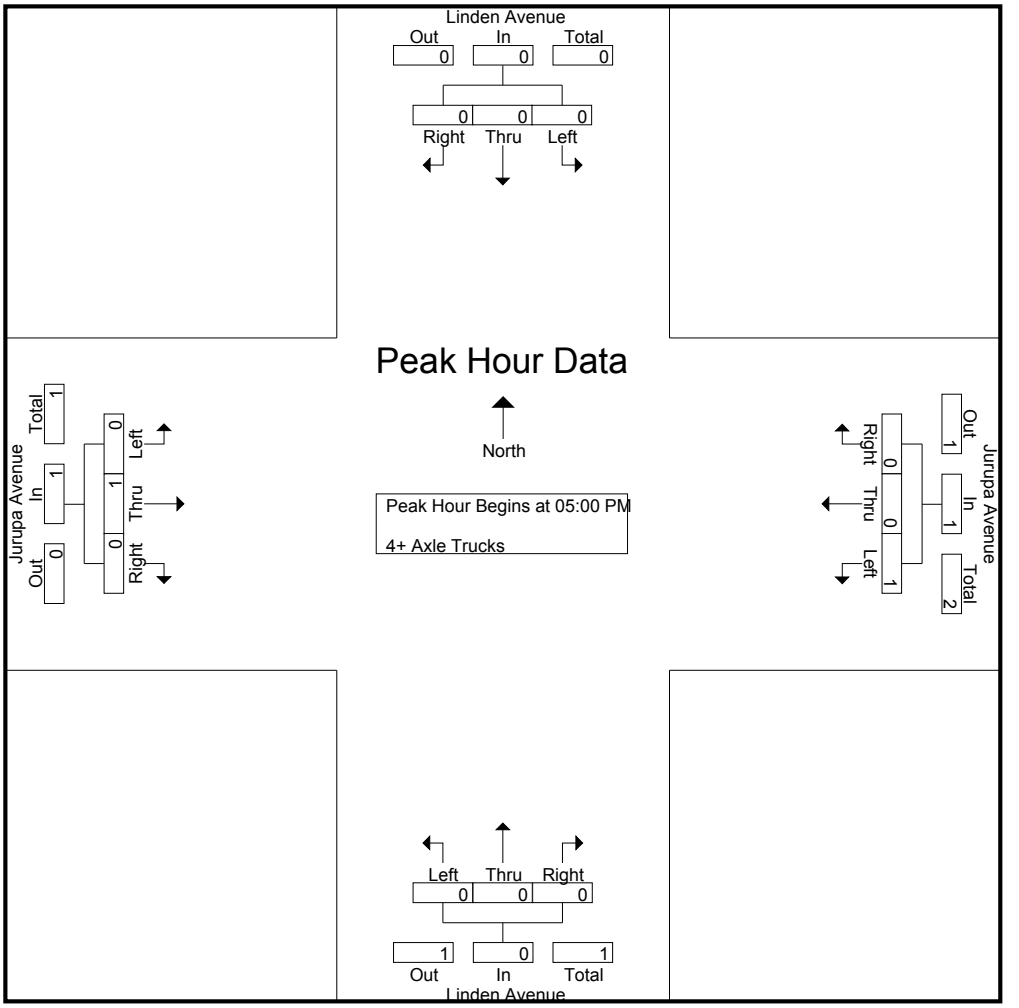

Peak Hour Analysis From 05:00 PM to 05:45 PM - Peak 1 of 1
Peak Hour for Each Approach Begins at:

	05:00 PM				05:00 PM				05:00 PM				05:00 PM			
+0 mins.	0	0	0	0	0	0	0	0	0	0	0	0	0	0	0	0
+15 mins.	0	0	0	0	0	0	0	0	0	0	0	0	0	0	0	0
+30 mins.	0	0	0	0	**1**	0	0	**1**	0	0	0	0	0	0	0	0
+45 mins.	0	0	0	0	0	0	0	0	0	0	0	0	0	**1**	0	**1**
Total Volume	0	0	0	0	1	0	0	1	0	0	0	0	0	1	0	1
% App. Total	0	0	0		100	0	0		0	0	0		0	100	0	
PHF	.000	.000	.000	.000	.250	.000	.000	.250	.000	.000	.000	.000	.000	.250	.000	.250

Counts Unlimited
PO Box 1178
Corona, CA 92878
(951) 268-6268

City of San Bernardino
N/S: Cedar Avenue
E/W: Jurupa Avenue
Weather: Clear

File Name : 13_CSB_Cedar_Jurupa AM
Site Code : 04520047
Start Date : 1/23/2020
Page No : 1

Groups Printed- Passenger Vehicles - Large 2 Axle Vehicles - 3 Axle Vehicles - 4+ Axle Trucks

	Cedar Avenue Southbound				Jurupa Avenue Westbound				Cedar Avenue Northbound				Jurupa Avenue Eastbound				
Start Time	Left	Thru	Right	App. Total	Left	Thru	Right	App. Total	Left	Thru	Right	App. Total	Left	Thru	Right	App. Total	Int. Total
07:00 AM	7	178	5	190	11	27	30	68	13	162	3	178	11	21	2	34	470
07:15 AM	29	212	5	246	14	10	36	60	8	136	15	159	13	22	14	49	514
07:30 AM	26	222	7	255	12	22	69	103	13	154	19	186	12	23	8	43	587
07:45 AM	22	183	5	210	4	15	7	26	4	143	9	156	12	23	9	44	436
Total	84	795	22	901	41	74	142	257	38	595	46	679	48	89	33	170	2007
08:00 AM	10	155	4	169	12	13	10	35	3	119	7	129	8	13	5	26	359
08:15 AM	19	146	6	171	12	14	10	36	4	126	12	142	4	13	5	22	371
08:30 AM	22	141	5	168	10	5	15	30	1	125	9	135	11	7	2	20	353
08:45 AM	19	116	9	144	10	13	14	37	4	116	6	126	10	11	1	22	329
Total	70	558	24	652	44	45	49	138	12	486	34	532	33	44	13	90	1412
Grand Total	154	1353	46	1553	85	119	191	395	50	1081	80	1211	81	133	46	260	3419
Apprch %	9.9	87.1	3		21.5	30.1	48.4		4.1	89.3	6.6		31.2	51.2	17.7		
Total %	4.5	39.6	1.3	45.4	2.5	3.5	5.6	11.6	1.5	31.6	2.3	35.4	2.4	3.9	1.3	7.6	
Passenger Vehicles	150	1239	42	1431	79	113	189	381	47	994	76	1117	78	129	41	248	3177
% Passenger Vehicles	97.4	91.6	91.3	92.1	92.9	95	99	96.5	94	92	95	92.2	96.3	97	89.1	95.4	92.9
Large 2 Axle Vehicles	2	41	4	47	6	6	2	14	2	38	4	44	0	4	3	7	112
% Large 2 Axle Vehicles	1.3	3	8.7	3	7.1	5	1	3.5	4	3.5	5	3.6	0	3	6.5	2.7	3.3
3 Axle Vehicles	1	25	0	26	0	0	0	0	1	21	0	22	1	0	2	3	51
% 3 Axle Vehicles	0.6	1.8	0	1.7	0	0	0	0	2	1.9	0	1.8	1.2	0	4.3	1.2	1.5
4+ Axle Trucks	1	48	0	49	0	0	0	0	0	28	0	28	2	0	0	2	79
% 4+ Axle Trucks	0.6	3.5	0	3.2	0	0	0	0	0	2.6	0	2.3	2.5	0	0	0.8	2.3

	Cedar Avenue Southbound				Jurupa Avenue Westbound				Cedar Avenue Northbound				Jurupa Avenue Eastbound				
Start Time	Left	Thru	Right	App. Total	Left	Thru	Right	App. Total	Left	Thru	Right	App. Total	Left	Thru	Right	App. Total	Int. Total
Peak Hour Analysis From 07:00 AM to 08:45 AM - Peak 1 of 1																	
Peak Hour for Entire Intersection Begins at 07:00 AM																	
07:00 AM	7	178	5	190	11	**27**	30	68	**13**	**162**	3	178	11	21	2	34	470
07:15 AM	**29**	212	5	246	**14**	10	36	60	8	136	15	159	**13**	22	**14**	**49**	514
07:30 AM	26	**222**	**7**	**255**	12	22	**69**	**103**	13	154	**19**	**186**	12	**23**	8	43	**587**
07:45 AM	22	183	5	210	4	15	7	26	4	143	9	156	12	23	9	44	436
Total Volume	84	795	22	901	41	74	142	257	38	595	46	679	48	89	33	170	2007
% App. Total	9.3	88.2	2.4		16	28.8	55.3		5.6	87.6	6.8		28.2	52.4	19.4		
PHF	.724	.895	.786	.883	.732	.685	.514	.624	.731	.918	.605	.913	.923	.967	.589	.867	.855

Counts Unlimited
PO Box 1178
Corona, CA 92878
(951) 268-6268

City of San Bernardino
N/S: Cedar Avenue
E/W: Jurupa Avenue
Weather: Clear

File Name : 13_CSB_Cedar_Jurupa AM
Site Code : 04520047
Start Date : 1/23/2020
Page No : 2

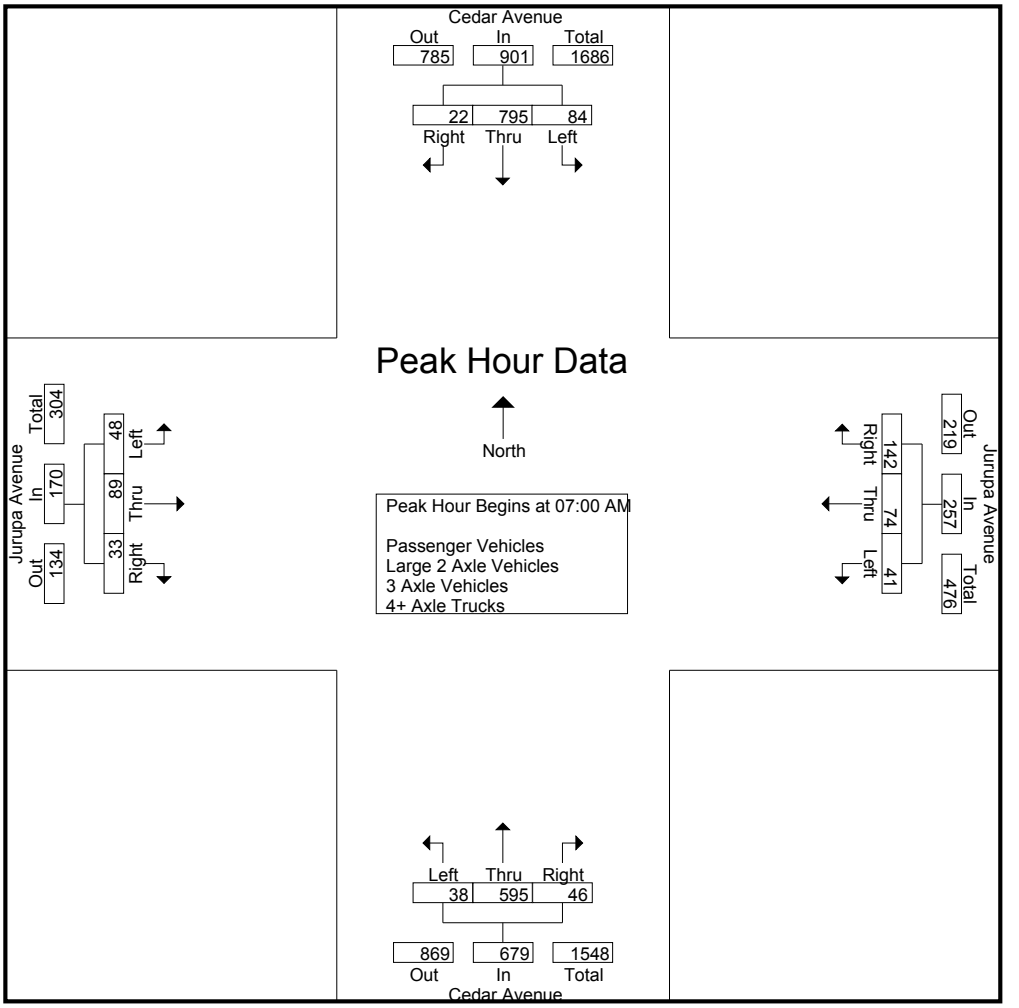

Peak Hour Analysis From 07:00 AM to 08:45 AM - Peak 1 of 1
Peak Hour for Each Approach Begins at:

	07:00 AM				07:00 AM				07:00 AM				07:00 AM			
+0 mins.	7	178	5	190	11	**27**	30	68	**13**	**162**	3	178	11	21	2	34
+15 mins.	**29**	212	5	246	**14**	10	36	60	8	136	15	159	**13**	22	**14**	**49**
+30 mins.	26	**222**	**7**	**255**	12	22	**69**	**103**	13	154	**19**	**186**	12	**23**	8	43
+45 mins.	22	183	5	210	4	15	7	26	4	143	9	156	12	23	9	44
Total Volume	84	795	22	901	41	74	142	257	38	595	46	679	48	89	33	170
% App. Total	9.3	88.2	2.4		16	28.8	55.3		5.6	87.6	6.8		28.2	52.4	19.4	
PHF	.724	.895	.786	.883	.732	.685	.514	.624	.731	.918	.605	.913	.923	.967	.589	.867

Counts Unlimited
PO Box 1178
Corona, CA 92878
(951) 268-6268

City of San Bernardino
N/S: Cedar Avenue
E/W: Jurupa Avenue
Weather: Clear

File Name : 13_CSB_Cedar_Jurupa AM
Site Code : 04520047
Start Date : 1/23/2020
Page No : 1

Groups Printed- Passenger Vehicles

	Cedar Avenue Southbound				Jurupa Avenue Westbound				Cedar Avenue Northbound				Jurupa Avenue Eastbound				
Start Time	Left	Thru	Right	App. Total	Left	Thru	Right	App. Total	Left	Thru	Right	App. Total	Left	Thru	Right	App. Total	Int. Total
07:00 AM	7	170	5	182	10	26	30	66	11	147	3	161	10	21	2	33	442
07:15 AM	28	201	5	234	14	8	36	58	7	129	14	150	13	21	12	46	488
07:30 AM	26	209	7	242	12	21	68	101	13	146	19	178	12	22	8	42	563
07:45 AM	22	171	5	198	3	15	7	25	4	136	9	149	12	23	7	42	414
Total	83	751	22	856	39	70	141	250	35	558	45	638	47	87	29	163	1907
08:00 AM	9	139	3	151	11	11	10	32	3	107	7	117	8	12	5	25	325
08:15 AM	18	130	4	152	9	14	10	33	4	114	10	128	3	13	4	20	333
08:30 AM	22	118	5	145	10	5	15	30	1	110	8	119	10	7	2	19	313
08:45 AM	18	101	8	127	10	13	13	36	4	105	6	115	10	10	1	21	299
Total	67	488	20	575	40	43	48	131	12	436	31	479	31	42	12	85	1270
Grand Total	150	1239	42	1431	79	113	189	381	47	994	76	1117	78	129	41	248	3177
Apprch %	10.5	86.6	2.9		20.7	29.7	49.6		4.2	89	6.8		31.5	52	16.5		
Total %	4.7	39	1.3	45	2.5	3.6	5.9	12	1.5	31.3	2.4	35.2	2.5	4.1	1.3	7.8	

	Cedar Avenue Southbound				Jurupa Avenue Westbound				Cedar Avenue Northbound				Jurupa Avenue Eastbound				
Start Time	Left	Thru	Right	App. Total	Left	Thru	Right	App. Total	Left	Thru	Right	App. Total	Left	Thru	Right	App. Total	Int. Total
Peak Hour Analysis From 07:00 AM to 07:45 AM - Peak 1 of 1																	
Peak Hour for Entire Intersection Begins at 07:00 AM																	
07:00 AM	7	170	5	182	10	**26**	30	66	11	**147**	3	161	10	21	2	33	442
07:15 AM	**28**	201	5	234	**14**	8	36	58	7	129	14	150	**13**	21	**12**	**46**	488
07:30 AM	26	**209**	**7**	**242**	12	21	**68**	**101**	**13**	146	**19**	**178**	12	22	8	42	**563**
07:45 AM	22	171	5	198	3	15	7	25	4	136	9	149	12	**23**	7	42	414
Total Volume	83	751	22	856	39	70	141	250	35	558	45	638	47	87	29	163	1907
% App. Total	9.7	87.7	2.6		15.6	28	56.4		5.5	87.5	7.1		28.8	53.4	17.8		
PHF	.741	.898	.786	.884	.696	.673	.518	.619	.673	.949	.592	.896	.904	.946	.604	.886	.847

Counts Unlimited
PO Box 1178
Corona, CA 92878
(951) 268-6268

City of San Bernardino
N/S: Cedar Avenue
E/W: Jurupa Avenue
Weather: Clear

File Name : 13_CSB_Cedar_Jurupa AM
Site Code : 04520047
Start Date : 1/23/2020
Page No : 2

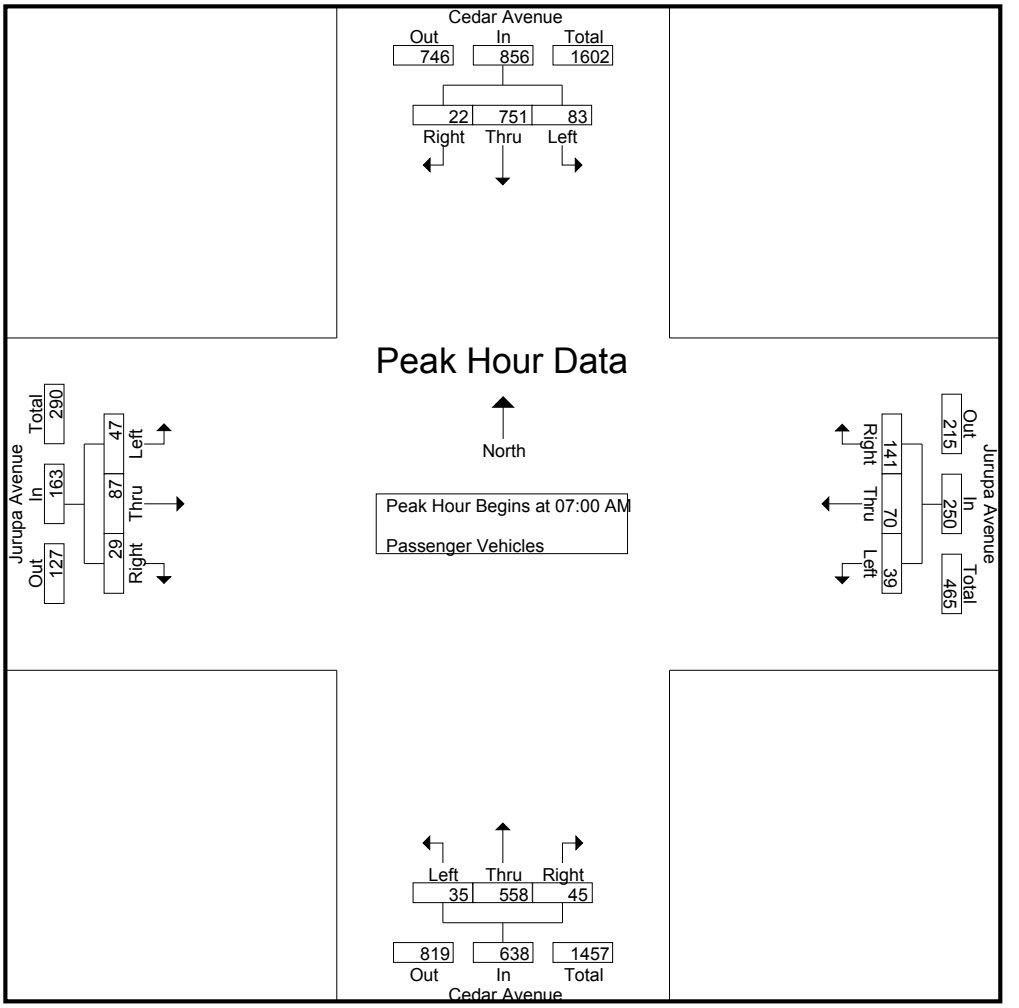

Peak Hour Analysis From 07:00 AM to 07:45 AM - Peak 1 of 1
Peak Hour for Each Approach Begins at:

	07:00 AM				07:00 AM				07:00 AM				07:00 AM			
+0 mins.	7	170	5	182	10	**26**	30	66	11	**147**	3	161	10	21	2	33
+15 mins.	**28**	201	5	234	**14**	8	36	58	7	129	14	150	**13**	21	**12**	**46**
+30 mins.	26	**209**	**7**	**242**	12	21	**68**	**101**	**13**	146	**19**	**178**	12	22	8	42
+45 mins.	22	171	5	198	3	15	7	25	4	136	9	149	12	**23**	7	42
Total Volume	83	751	22	856	39	70	141	250	35	558	45	638	47	87	29	163
% App. Total	9.7	87.7	2.6		15.6	28	56.4		5.5	87.5	7.1		28.8	53.4	17.8	
PHF	.741	.898	.786	.884	.696	.673	.518	.619	.673	.949	.592	.896	.904	.946	.604	.886

Counts Unlimited
PO Box 1178
Corona, CA 92878
(951) 268-6268

City of San Bernardino
N/S: Cedar Avenue
E/W: Jurupa Avenue
Weather: Clear

File Name : 13_CSB_Cedar_Jurupa AM
Site Code : 04520047
Start Date : 1/23/2020
Page No : 1

Groups Printed- Large 2 Axle Vehicles

	Cedar Avenue Southbound				Jurupa Avenue Westbound				Cedar Avenue Northbound				Jurupa Avenue Eastbound				
Start Time	Left	Thru	Right	App. Total	Left	Thru	Right	App. Total	Left	Thru	Right	App. Total	Left	Thru	Right	App. Total	Int. Total
07:00 AM	0	3	0	3	1	1	0	2	2	8	0	10	0	0	0	0	15
07:15 AM	1	6	0	7	0	2	0	2	0	3	1	4	0	1	2	3	16
07:30 AM	0	4	0	4	0	1	1	2	0	2	0	2	0	1	0	1	9
07:45 AM	0	5	0	5	1	0	0	1	0	2	0	2	0	0	0	0	8
Total	1	18	0	19	2	4	1	7	2	15	1	18	0	2	2	4	48
08:00 AM	0	7	1	8	1	2	0	3	0	4	0	4	0	1	0	1	16
08:15 AM	0	5	2	7	3	0	0	3	0	6	2	8	0	0	1	1	19
08:30 AM	0	7	0	7	0	0	0	0	0	8	1	9	0	0	0	0	16
08:45 AM	1	4	1	6	0	0	1	1	0	5	0	5	0	1	0	1	13
Total	1	23	4	28	4	2	1	7	0	23	3	26	0	2	1	3	64
Grand Total	2	41	4	47	6	6	2	14	2	38	4	44	0	4	3	7	112
Apprch %	4.3	87.2	8.5		42.9	42.9	14.3		4.5	86.4	9.1		0	57.1	42.9		
Total %	1.8	36.6	3.6	42	5.4	5.4	1.8	12.5	1.8	33.9	3.6	39.3	0	3.6	2.7	6.2	

	Cedar Avenue Southbound				Jurupa Avenue Westbound				Cedar Avenue Northbound				Jurupa Avenue Eastbound				
Start Time	Left	Thru	Right	App. Total	Left	Thru	Right	App. Total	Left	Thru	Right	App. Total	Left	Thru	Right	App. Total	Int. Total
Peak Hour Analysis From 07:00 AM to 07:45 AM - Peak 1 of 1																	
Peak Hour for Entire Intersection Begins at 07:00 AM																	
07:00 AM	0	3	0	3	**1**	1	0	**2**	**2**	**8**	0	**10**	0	0	0	0	15
07:15 AM	**1**	**6**	0	**7**	0	**2**	0	2	0	3	**1**	4	0	**1**	**2**	**3**	**16**
07:30 AM	0	4	0	4	0	1	**1**	2	0	2	0	2	0	1	0	1	9
07:45 AM	0	5	0	5	1	0	0	1	0	2	0	2	0	0	0	0	8
Total Volume	1	18	0	19	2	4	1	7	2	15	1	18	0	2	2	4	48
% App. Total	5.3	94.7	0		28.6	57.1	14.3		11.1	83.3	5.6		0	50	50		
PHF	.250	.750	.000	.679	.500	.500	.250	.875	.250	.469	.250	.450	.000	.500	.250	.333	.750

Counts Unlimited
PO Box 1178
Corona, CA 92878
(951) 268-6268

City of San Bernardino
N/S: Cedar Avenue
E/W: Jurupa Avenue
Weather: Clear

File Name : 13_CSB_Cedar_Jurupa AM
Site Code : 04520047
Start Date : 1/23/2020
Page No : 2

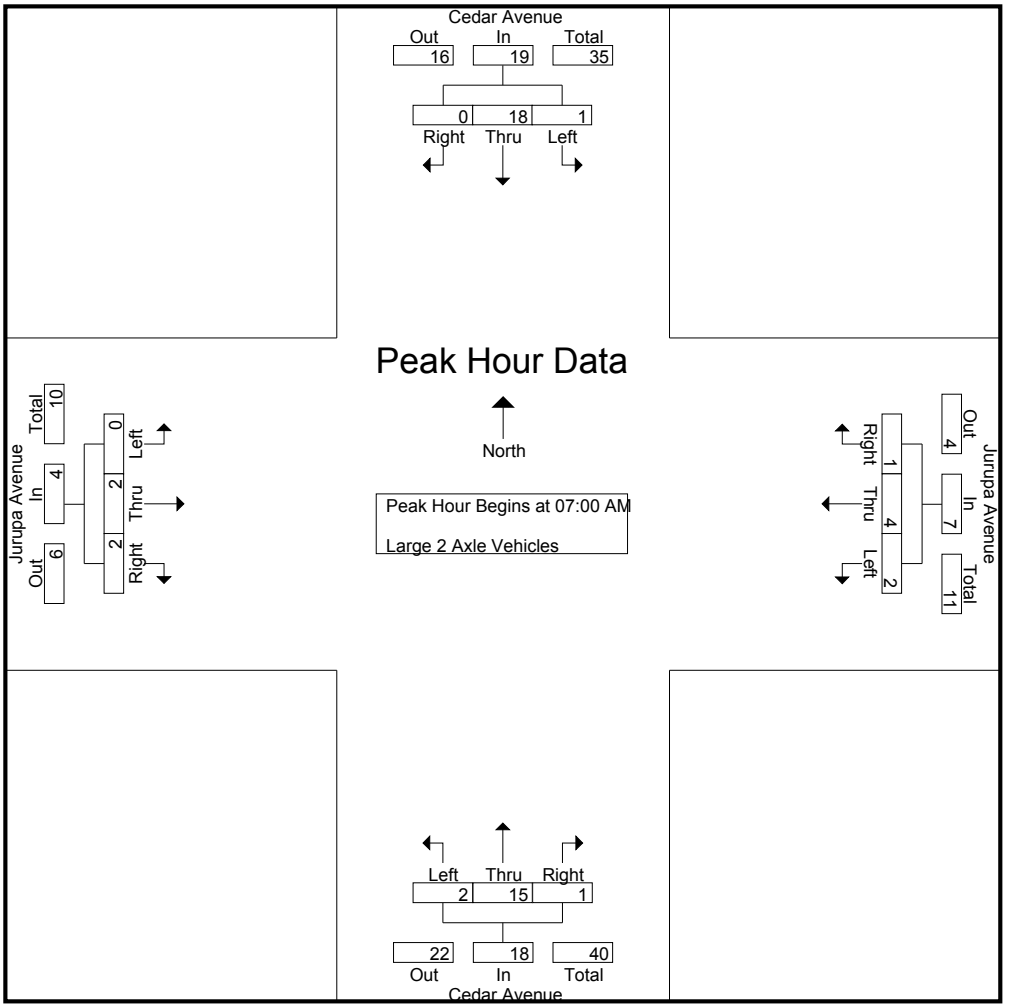

Peak Hour Analysis From 07:00 AM to 07:45 AM - Peak 1 of 1
Peak Hour for Each Approach Begins at:

	07:00 AM				07:00 AM				07:00 AM				07:00 AM			
+0 mins.	0	3	0	3	**1**	1	0	**2**	**2**	**8**	0	**10**	0	0	0	0
+15 mins.	**1**	**6**	0	**7**	0	**2**	0	2	0	3	**1**	4	0	**1**	**2**	**3**
+30 mins.	0	4	0	4	0	1	**1**	2	0	2	0	2	0	1	0	1
+45 mins.	0	5	0	5	1	0	0	1	0	2	0	2	0	0	0	0
Total Volume	1	18	0	19	2	4	1	7	2	15	1	18	0	2	2	4
% App. Total	5.3	94.7	0		28.6	57.1	14.3		11.1	83.3	5.6		0	50	50	
PHF	.250	.750	.000	.679	.500	.500	.250	.875	.250	.469	.250	.450	.000	.500	.250	.333

Counts Unlimited
PO Box 1178
Corona, CA 92878
(951) 268-6268

City of San Bernardino
N/S: Cedar Avenue
E/W: Jurupa Avenue
Weather: Clear

File Name : 13_CSB_Cedar_Jurupa AM
Site Code : 04520047
Start Date : 1/23/2020
Page No : 1

Groups Printed- 3 Axle Vehicles

	Cedar Avenue Southbound				Jurupa Avenue Westbound				Cedar Avenue Northbound				Jurupa Avenue Eastbound				
Start Time	Left	Thru	Right	App. Total	Left	Thru	Right	App. Total	Left	Thru	Right	App. Total	Left	Thru	Right	App. Total	Int. Total
07:00 AM	0	2	0	2	0	0	0	0	0	3	0	3	0	0	0	0	5
07:15 AM	0	2	0	2	0	0	0	0	1	1	0	2	0	0	0	0	4
07:30 AM	0	7	0	7	0	0	0	0	0	3	0	3	0	0	0	0	10
07:45 AM	0	1	0	1	0	0	0	0	0	2	0	2	0	0	2	2	5
Total	0	12	0	12	0	0	0	0	1	9	0	10	0	0	2	2	24
08:00 AM	0	4	0	4	0	0	0	0	0	2	0	2	0	0	0	0	6
08:15 AM	1	3	0	4	0	0	0	0	0	4	0	4	1	0	0	1	9
08:30 AM	0	4	0	4	0	0	0	0	0	3	0	3	0	0	0	0	7
08:45 AM	0	2	0	2	0	0	0	0	0	3	0	3	0	0	0	0	5
Total	1	13	0	14	0	0	0	0	0	12	0	12	1	0	0	1	27
Grand Total	1	25	0	26	0	0	0	0	1	21	0	22	1	0	2	3	51
Apprch %	3.8	96.2	0		0	0	0		4.5	95.5	0		33.3	0	66.7		
Total %	2	49	0	51	0	0	0	0	2	41.2	0	43.1	2	0	3.9	5.9	

	Cedar Avenue Southbound				Jurupa Avenue Westbound				Cedar Avenue Northbound				Jurupa Avenue Eastbound				
Start Time	Left	Thru	Right	App. Total	Left	Thru	Right	App. Total	Left	Thru	Right	App. Total	Left	Thru	Right	App. Total	Int. Total
Peak Hour Analysis From 07:00 AM to 07:45 AM - Peak 1 of 1																	
Peak Hour for Entire Intersection Begins at 07:00 AM																	
07:00 AM	0	2	0	2	0	0	0	0	0	**3**	0	**3**	0	0	0	0	5
07:15 AM	0	2	0	2	0	0	0	0	**1**	1	0	2	0	0	0	0	4
07:30 AM	0	**7**	0	**7**	0	0	0	0	0	3	0	3	0	0	0	0	**10**
07:45 AM	0	1	0	1	0	0	0	0	0	2	0	2	0	0	**2**	**2**	5
Total Volume	0	12	0	12	0	0	0	0	1	9	0	10	0	0	2	2	24
% App. Total	0	100	0		0	0	0		10	90	0		0	0	100		
PHF	.000	.429	.000	.429	.000	.000	.000	.000	.250	.750	.000	.833	.000	.000	.250	.250	.600

Counts Unlimited
PO Box 1178
Corona, CA 92878
(951) 268-6268

City of San Bernardino
N/S: Cedar Avenue
E/W: Jurupa Avenue
Weather: Clear

File Name : 13_CSB_Cedar_Jurupa AM
Site Code : 04520047
Start Date : 1/23/2020
Page No : 2

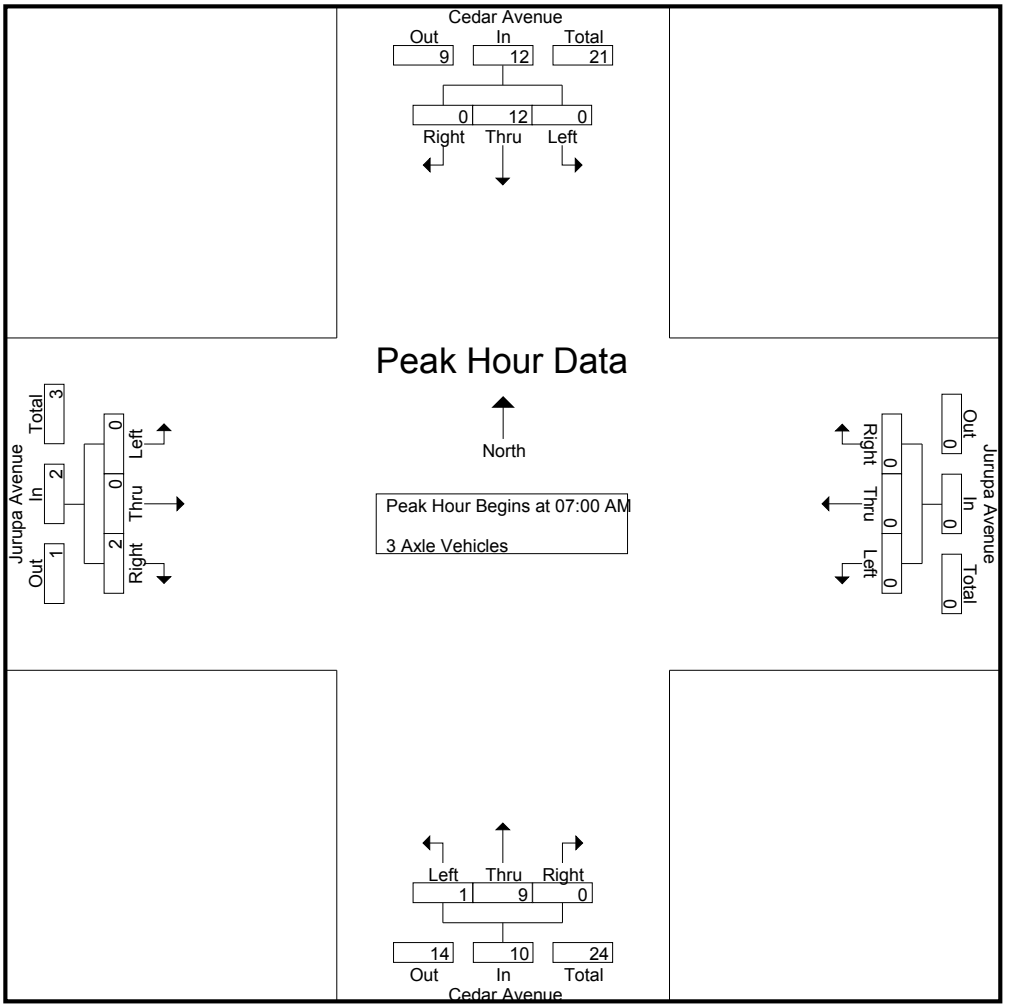

Peak Hour Analysis From 07:00 AM to 07:45 AM - Peak 1 of 1
Peak Hour for Each Approach Begins at:

	07:00 AM				07:00 AM				07:00 AM				07:00 AM			
+0 mins.	0	2	0	2	0	0	0	0	0	**3**	0	**3**	0	0	0	0
+15 mins.	0	2	0	2	0	0	0	0	**1**	1	0	2	0	0	0	0
+30 mins.	0	**7**	0	**7**	0	0	0	0	0	3	0	3	0	0	0	0
+45 mins.	0	1	0	1	0	0	0	0	0	2	0	2	0	0	**2**	**2**
Total Volume	0	12	0	12	0	0	0	0	1	9	0	10	0	0	2	2
% App. Total	0	100	0		0	0	0		10	90	0		0	0	100	
PHF	.000	.429	.000	.429	.000	.000	.000	.000	.250	.750	.000	.833	.000	.000	.250	.250

Counts Unlimited
PO Box 1178
Corona, CA 92878
(951) 268-6268

City of San Bernardino
N/S: Cedar Avenue
E/W: Jurupa Avenue
Weather: Clear

File Name : 13_CSB_Cedar_Jurupa AM
Site Code : 04520047
Start Date : 1/23/2020
Page No : 1

Groups Printed- 4+ Axle Trucks

	Cedar Avenue Southbound				Jurupa Avenue Westbound				Cedar Avenue Northbound				Jurupa Avenue Eastbound				
Start Time	Left	Thru	Right	App. Total	Left	Thru	Right	App. Total	Left	Thru	Right	App. Total	Left	Thru	Right	App. Total	Int. Total
07:00 AM	0	3	0	3	0	0	0	0	0	4	0	4	1	0	0	1	8
07:15 AM	0	3	0	3	0	0	0	0	0	3	0	3	0	0	0	0	6
07:30 AM	0	2	0	2	0	0	0	0	0	3	0	3	0	0	0	0	5
07:45 AM	0	6	0	6	0	0	0	0	0	3	0	3	0	0	0	0	9
Total	0	14	0	14	0	0	0	0	0	13	0	13	1	0	0	1	28
08:00 AM	1	5	0	6	0	0	0	0	0	6	0	6	0	0	0	0	12
08:15 AM	0	8	0	8	0	0	0	0	0	2	0	2	0	0	0	0	10
08:30 AM	0	12	0	12	0	0	0	0	0	4	0	4	1	0	0	1	17
08:45 AM	0	9	0	9	0	0	0	0	0	3	0	3	0	0	0	0	12
Total	1	34	0	35	0	0	0	0	0	15	0	15	1	0	0	1	51
Grand Total	1	48	0	49	0	0	0	0	0	28	0	28	2	0	0	2	79
Apprch %	2	98	0		0	0	0		0	100	0		100	0	0		
Total %	1.3	60.8	0	62	0	0	0	0	0	35.4	0	35.4	2.5	0	0	2.5	

	Cedar Avenue Southbound				Jurupa Avenue Westbound				Cedar Avenue Northbound				Jurupa Avenue Eastbound				
Start Time	Left	Thru	Right	App. Total	Left	Thru	Right	App. Total	Left	Thru	Right	App. Total	Left	Thru	Right	App. Total	Int. Total
Peak Hour Analysis From 07:00 AM to 07:45 AM - Peak 1 of 1																	
Peak Hour for Entire Intersection Begins at 07:00 AM																	
07:00 AM	0	3	0	3	0	0	0	0	0	**4**	0	**4**	**1**	0	0	**1**	8
07:15 AM	0	3	0	3	0	0	0	0	0	3	0	3	0	0	0	0	6
07:30 AM	0	2	0	2	0	0	0	0	0	3	0	3	0	0	0	0	5
07:45 AM	0	**6**	0	**6**	0	0	0	0	0	3	0	3	0	0	0	0	**9**
Total Volume	0	14	0	14	0	0	0	0	0	13	0	13	1	0	0	1	28
% App. Total	0	100	0		0	0	0		0	100	0		100	0	0		
PHF	.000	.583	.000	.583	.000	.000	.000	.000	.000	.813	.000	.813	.250	.000	.000	.250	.778

Counts Unlimited
PO Box 1178
Corona, CA 92878
(951) 268-6268

City of San Bernardino
N/S: Cedar Avenue
E/W: Jurupa Avenue
Weather: Clear

File Name : 13_CSB_Cedar_Jurupa AM
Site Code : 04520047
Start Date : 1/23/2020
Page No : 2

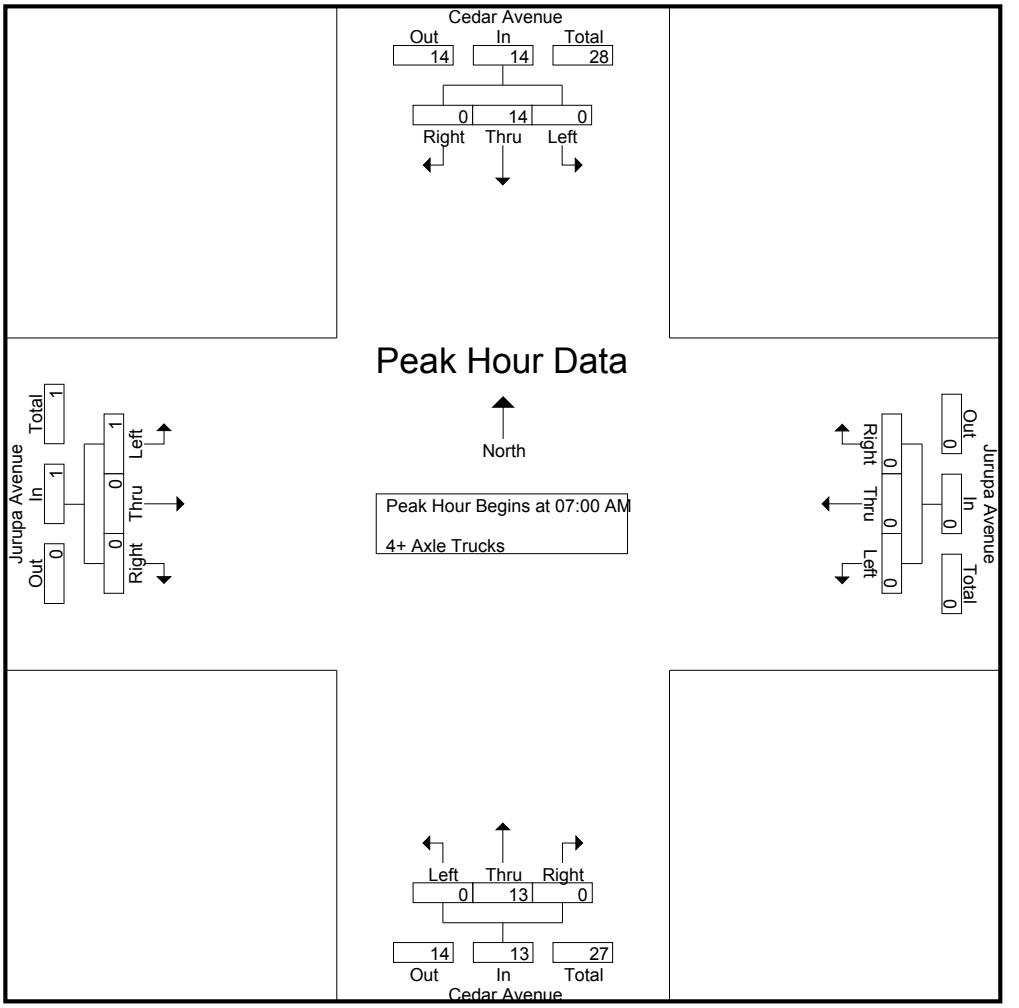

Peak Hour Analysis From 07:00 AM to 07:45 AM - Peak 1 of 1
Peak Hour for Each Approach Begins at:

	07:00 AM				07:00 AM				07:00 AM				07:00 AM			
+0 mins.	0	3	0	3	0	0	0	0	0	**4**	0	**4**	**1**	0	0	**1**
+15 mins.	0	3	0	3	0	0	0	0	0	3	0	3	0	0	0	0
+30 mins.	0	2	0	2	0	0	0	0	0	3	0	3	0	0	0	0
+45 mins.	0	**6**	0	**6**	0	0	0	0	0	3	0	3	0	0	0	0
Total Volume	0	14	0	14	0	0	0	0	0	13	0	13	1	0	0	1
% App. Total	0	100	0		0	0	0		0	100	0		100	0	0	
PHF	.000	.583	.000	.583	.000	.000	.000	.000	.000	.813	.000	.813	.250	.000	.000	.250

Counts Unlimited
PO Box 1178
Corona, CA 92878
(951) 268-6268

City of San Bernardino
N/S: Cedar Avenue
E/W: Jurupa Avenue
Weather: Clear

File Name : 13_CSB_Cedar_Jurupa PM
Site Code : 04520047
Start Date : 1/23/2020
Page No : 1

Groups Printed- Passenger Vehicles - Large 2 Axle Vehicles - 3 Axle Vehicles - 4+ Axle Trucks

	Cedar Avenue Southbound				Jurupa Avenue Westbound				Cedar Avenue Northbound				Jurupa Avenue Eastbound				
Start Time	Left	Thru	Right	App. Total	Left	Thru	Right	App. Total	Left	Thru	Right	App. Total	Left	Thru	Right	App. Total	Int. Total
04:00 PM	24	181	13	218	15	17	12	44	16	121	23	160	8	56	9	73	495
04:15 PM	33	167	5	205	12	14	14	40	10	127	12	149	14	63	10	87	481
04:30 PM	28	176	8	212	16	20	16	52	18	159	11	188	13	44	7	64	516
04:45 PM	20	190	8	218	8	17	10	35	12	185	13	210	6	32	12	50	513
Total	105	714	34	853	51	68	52	171	56	592	59	707	41	195	38	274	2005
05:00 PM	27	166	6	199	13	23	13	49	9	132	10	151	10	41	7	58	457
05:15 PM	20	162	16	198	5	19	14	38	10	148	17	175	9	54	11	74	485
05:30 PM	23	133	12	168	12	19	16	47	11	188	20	219	9	65	9	83	517
05:45 PM	25	161	6	192	7	17	10	34	12	142	16	170	15	54	12	81	477
Total	95	622	40	757	37	78	53	168	42	610	63	715	43	214	39	296	1936
Grand Total	200	1336	74	1610	88	146	105	339	98	1202	122	1422	84	409	77	570	3941
Apprch %	12.4	83	4.6		26	43.1	31		6.9	84.5	8.6		14.7	71.8	13.5		
Total %	5.1	33.9	1.9	40.9	2.2	3.7	2.7	8.6	2.5	30.5	3.1	36.1	2.1	10.4	2	14.5	
Passenger Vehicles	193	1266	73	1532	85	143	100	328	94	1131	113	1338	80	377	75	532	3730
% Passenger Vehicles	96.5	94.8	98.6	95.2	96.6	97.9	95.2	96.8	95.9	94.1	92.6	94.1	95.2	92.2	97.4	93.3	94.6
Large 2 Axle Vehicles	4	27	0	31	2	3	3	8	3	26	6	35	1	28	1	30	104
% Large 2 Axle Vehicles	2	2	0	1.9	2.3	2.1	2.9	2.4	3.1	2.2	4.9	2.5	1.2	6.8	1.3	5.3	2.6
3 Axle Vehicles	1	19	0	20	0	0	2	2	0	21	0	21	1	1	1	3	46
% 3 Axle Vehicles	0.5	1.4	0	1.2	0	0	1.9	0.6	0	1.7	0	1.5	1.2	0.2	1.3	0.5	1.2
4+ Axle Trucks	2	24	1	27	1	0	0	1	1	24	3	28	2	3	0	5	61
% 4+ Axle Trucks	1	1.8	1.4	1.7	1.1	0	0	0.3	1	2	2.5	2	2.4	0.7	0	0.9	1.5

	Cedar Avenue Southbound				Jurupa Avenue Westbound				Cedar Avenue Northbound				Jurupa Avenue Eastbound				
Start Time	Left	Thru	Right	App. Total	Left	Thru	Right	App. Total	Left	Thru	Right	App. Total	Left	Thru	Right	App. Total	Int. Total
Peak Hour Analysis From 04:00 PM to 05:45 PM - Peak 1 of 1																	
Peak Hour for Entire Intersection Begins at 04:00 PM																	
04:00 PM	24	181	**13**	**218**	15	17	12	44	16	121	**23**	160	8	56	9	73	495
04:15 PM	**33**	167	5	205	12	14	14	40	10	127	12	149	**14**	**63**	10	**87**	481
04:30 PM	28	176	8	212	**16**	**20**	**16**	**52**	**18**	159	11	188	13	44	7	64	**516**
04:45 PM	20	**190**	8	218	8	17	10	35	12	**185**	13	**210**	6	32	**12**	50	513
Total Volume	105	714	34	853	51	68	52	171	56	592	59	707	41	195	38	274	2005
% App. Total	12.3	83.7	4		29.8	39.8	30.4		7.9	83.7	8.3		15	71.2	13.9		
PHF	.795	.939	.654	.978	.797	.850	.813	.822	.778	.800	.641	.842	.732	.774	.792	.787	.971

Counts Unlimited
PO Box 1178
Corona, CA 92878
(951) 268-6268

City of San Bernardino
N/S: Cedar Avenue
E/W: Jurupa Avenue
Weather: Clear

File Name : 13_CSB_Cedar_Jurupa PM
Site Code : 04520047
Start Date : 1/23/2020
Page No : 2

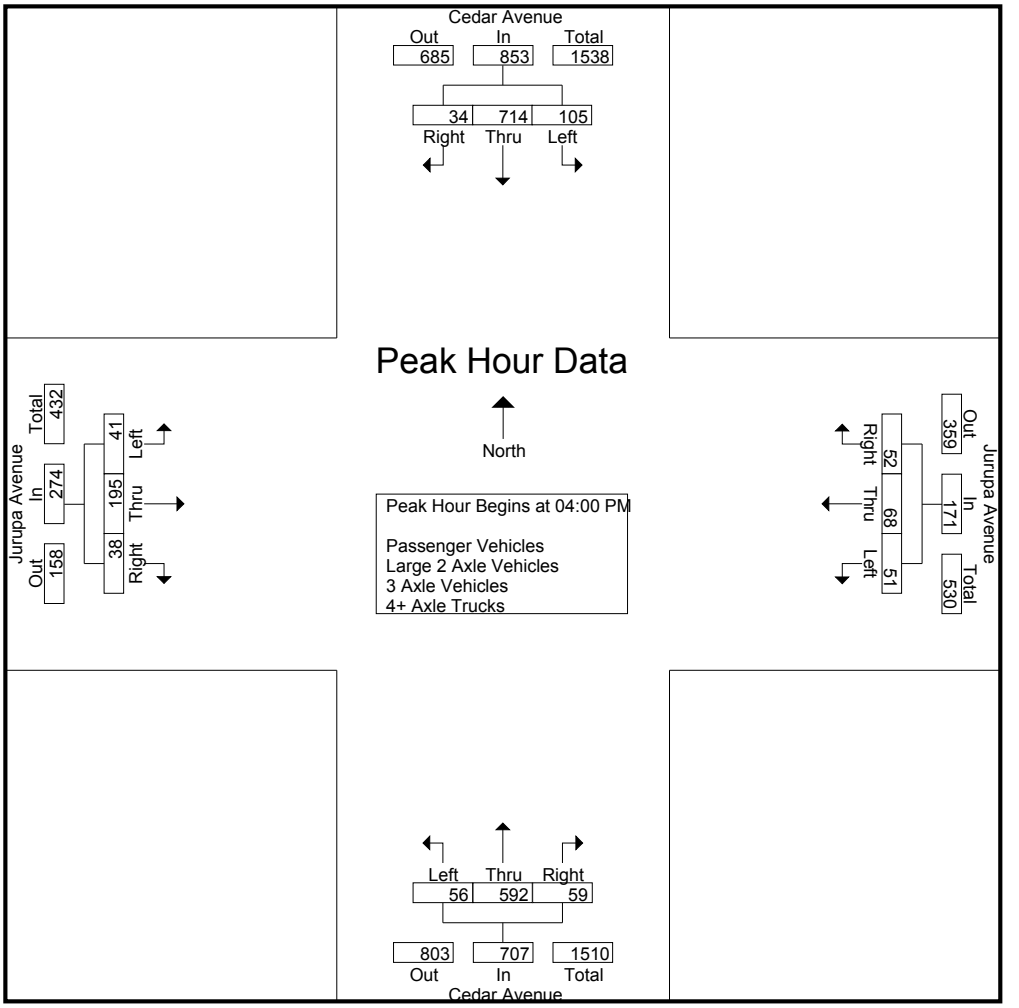

Peak Hour Analysis From 04:00 PM to 05:45 PM - Peak 1 of 1
Peak Hour for Each Approach Begins at:

	04:00 PM				04:15 PM				04:45 PM				05:00 PM			
+0 mins.	24	181	**13**	**218**	12	14	14	40	**12**	185	13	210	10	41	7	58
+15 mins.	**33**	167	5	205	**16**	20	**16**	**52**	9	132	10	151	9	54	11	74
+30 mins.	28	176	8	212	8	17	10	35	10	148	17	175	9	**65**	9	**83**
+45 mins.	20	**190**	8	218	13	**23**	13	49	11	**188**	**20**	**219**	**15**	54	**12**	81
Total Volume	105	714	34	853	49	74	53	176	42	653	60	755	43	214	39	296
% App. Total	12.3	83.7	4		27.8	42	30.1		5.6	86.5	7.9		14.5	72.3	13.2	
PHF	.795	.939	.654	.978	.766	.804	.828	.846	.875	.868	.750	.862	.717	.823	.813	.892

Counts Unlimited
PO Box 1178
Corona, CA 92878
(951) 268-6268

City of San Bernardino
N/S: Cedar Avenue
E/W: Jurupa Avenue
Weather: Clear

File Name : 13_CSB_Cedar_Jurupa PM
Site Code : 04520047
Start Date : 1/23/2020
Page No : 1

Groups Printed- Passenger Vehicles

	Cedar Avenue Southbound				Jurupa Avenue Westbound				Cedar Avenue Northbound				Jurupa Avenue Eastbound				
Start Time	Left	Thru	Right	App. Total	Left	Thru	Right	App. Total	Left	Thru	Right	App. Total	Left	Thru	Right	App. Total	Int. Total
04:00 PM	23	166	13	202	15	17	12	44	13	112	21	146	7	53	9	69	461
04:15 PM	32	157	5	194	11	12	13	36	10	116	11	137	12	58	10	80	447
04:30 PM	27	168	8	203	15	19	16	50	18	148	8	174	12	42	7	61	488
04:45 PM	19	177	8	204	8	17	10	35	11	171	13	195	6	28	12	46	480
Total	101	668	34	803	49	65	51	165	52	547	53	652	37	181	38	256	1876
05:00 PM	26	157	6	189	13	23	13	49	9	127	10	146	10	36	7	53	437
05:15 PM	19	154	16	189	4	19	12	35	10	142	16	168	9	50	10	69	461
05:30 PM	23	128	11	162	12	19	15	46	11	178	19	208	9	62	9	80	496
05:45 PM	24	159	6	189	7	17	9	33	12	137	15	164	15	48	11	74	460
Total	92	598	39	729	36	78	49	163	42	584	60	686	43	196	37	276	1854
Grand Total	193	1266	73	1532	85	143	100	328	94	1131	113	1338	80	377	75	532	3730
Apprch %	12.6	82.6	4.8		25.9	43.6	30.5		7	84.5	8.4		15	70.9	14.1		
Total %	5.2	33.9	2	41.1	2.3	3.8	2.7	8.8	2.5	30.3	3	35.9	2.1	10.1	2	14.3	

	Cedar Avenue Southbound				Jurupa Avenue Westbound				Cedar Avenue Northbound				Jurupa Avenue Eastbound				
Start Time	Left	Thru	Right	App. Total	Left	Thru	Right	App. Total	Left	Thru	Right	App. Total	Left	Thru	Right	App. Total	Int. Total
Peak Hour Analysis From 04:00 PM to 04:45 PM - Peak 1 of 1																	
Peak Hour for Entire Intersection Begins at 04:00 PM																	
04:00 PM	23	166	**13**	202	**15**	17	12	44	13	112	**21**	146	7	53	9	69	461
04:15 PM	**32**	157	5	194	11	12	13	36	10	116	11	137	**12**	**58**	10	**80**	447
04:30 PM	27	168	8	203	15	**19**	**16**	**50**	**18**	148	8	174	12	42	7	61	**488**
04:45 PM	19	**177**	8	**204**	8	17	10	35	11	**171**	13	**195**	6	28	**12**	46	480
Total Volume	101	668	34	803	49	65	51	165	52	547	53	652	37	181	38	256	1876
% App. Total	12.6	83.2	4.2		29.7	39.4	30.9		8	83.9	8.1		14.5	70.7	14.8		
PHF	.789	.944	.654	.984	.817	.855	.797	.825	.722	.800	.631	.836	.771	.780	.792	.800	.961

Counts Unlimited
PO Box 1178
Corona, CA 92878
(951) 268-6268

City of San Bernardino
N/S: Cedar Avenue
E/W: Jurupa Avenue
Weather: Clear

File Name : 13_CSB_Cedar_Jurupa PM
Site Code : 04520047
Start Date : 1/23/2020
Page No : 2

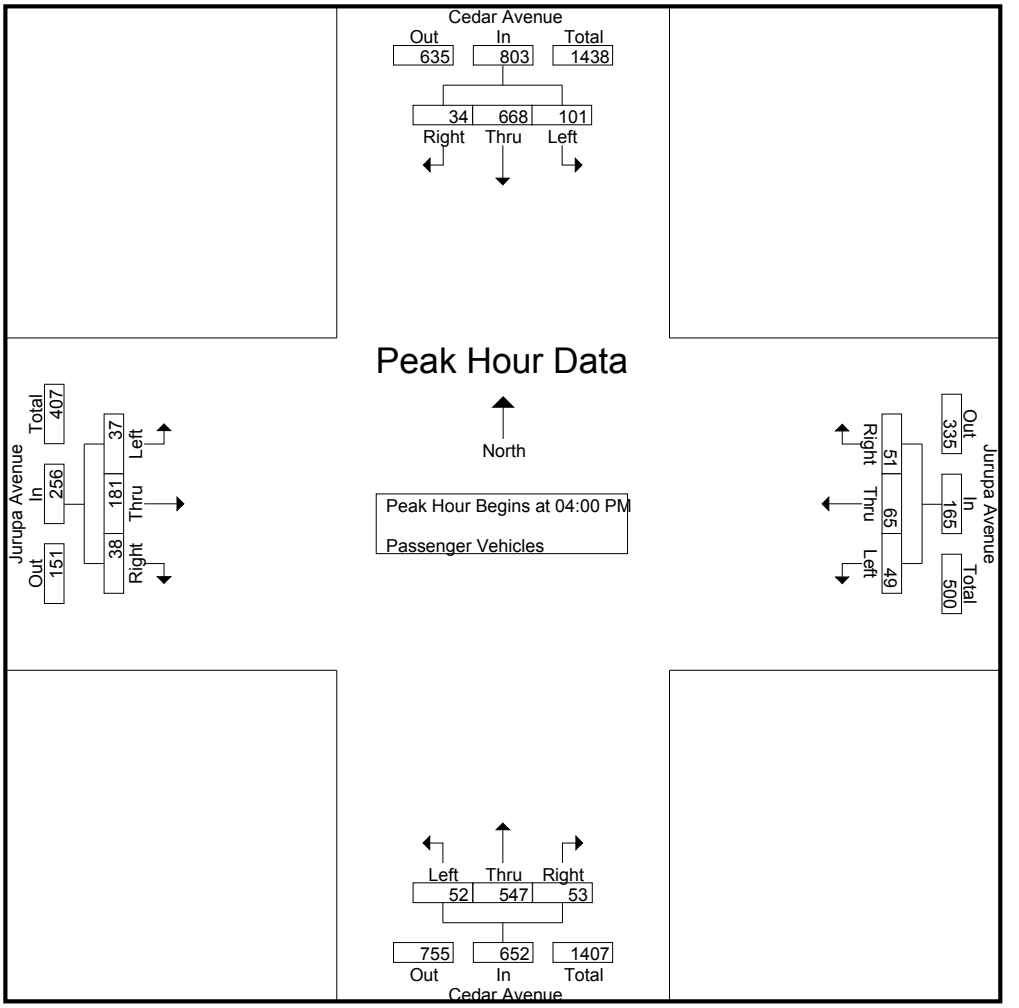

Peak Hour Analysis From 04:00 PM to 04:45 PM - Peak 1 of 1
Peak Hour for Each Approach Begins at:

	04:00 PM				04:00 PM				04:00 PM				04:00 PM			
+0 mins.	23	166	**13**	202	**15**	17	12	44	13	112	**21**	146	7	53	9	69
+15 mins.	**32**	157	5	194	11	12	13	36	10	116	11	137	**12**	**58**	10	**80**
+30 mins.	27	168	8	203	15	**19**	**16**	**50**	**18**	148	8	174	12	42	7	61
+45 mins.	19	**177**	8	**204**	8	17	10	35	11	**171**	13	**195**	6	28	**12**	46
Total Volume	101	668	34	803	49	65	51	165	52	547	53	652	37	181	38	256
% App. Total	12.6	83.2	4.2		29.7	39.4	30.9		8	83.9	8.1		14.5	70.7	14.8	
PHF	.789	.944	.654	.984	.817	.855	.797	.825	.722	.800	.631	.836	.771	.780	.792	.800

Counts Unlimited
PO Box 1178
Corona, CA 92878
(951) 268-6268

City of San Bernardino
N/S: Cedar Avenue
E/W: Jurupa Avenue
Weather: Clear

File Name : 13_CSB_Cedar_Jurupa PM
Site Code : 04520047
Start Date : 1/23/2020
Page No : 1

Groups Printed- Large 2 Axle Vehicles

	Cedar Avenue Southbound				Jurupa Avenue Westbound				Cedar Avenue Northbound				Jurupa Avenue Eastbound				
Start Time	Left	Thru	Right	App. Total	Left	Thru	Right	App. Total	Left	Thru	Right	App. Total	Left	Thru	Right	App. Total	Int. Total
04:00 PM	1	6	0	7	0	0	0	0	3	3	2	8	0	2	0	2	17
04:15 PM	1	4	0	5	1	2	1	4	0	5	1	6	1	4	0	5	20
04:30 PM	0	5	0	5	1	1	0	2	0	7	1	8	0	1	0	1	16
04:45 PM	0	3	0	3	0	0	0	0	0	2	0	2	0	3	0	3	8
Total	2	18	0	20	2	3	1	6	3	17	4	24	1	10	0	11	61
05:00 PM	0	4	0	4	0	0	0	0	0	2	0	2	0	5	0	5	11
05:15 PM	1	3	0	4	0	0	1	1	0	2	0	2	0	4	1	5	12
05:30 PM	0	1	0	1	0	0	1	1	0	4	1	5	0	3	0	3	10
05:45 PM	1	1	0	2	0	0	0	0	0	1	1	2	0	6	0	6	10
Total	2	9	0	11	0	0	2	2	0	9	2	11	0	18	1	19	43
Grand Total	4	27	0	31	2	3	3	8	3	26	6	35	1	28	1	30	104
Apprch %	12.9	87.1	0		25	37.5	37.5		8.6	74.3	17.1		3.3	93.3	3.3		
Total %	3.8	26	0	29.8	1.9	2.9	2.9	7.7	2.9	25	5.8	33.7	1	26.9	1	28.8	

	Cedar Avenue Southbound				Jurupa Avenue Westbound				Cedar Avenue Northbound				Jurupa Avenue Eastbound				
Start Time	Left	Thru	Right	App. Total	Left	Thru	Right	App. Total	Left	Thru	Right	App. Total	Left	Thru	Right	App. Total	Int. Total
Peak Hour Analysis From 04:00 PM to 04:45 PM - Peak 1 of 1																	
Peak Hour for Entire Intersection Begins at 04:00 PM																	
04:00 PM	**1**	**6**	0	**7**	0	0	0	0	**3**	3	**2**	**8**	0	2	0	2	17
04:15 PM	1	4	0	5	**1**	**2**	**1**	**4**	0	5	1	6	**1**	**4**	0	**5**	**20**
04:30 PM	0	5	0	5	1	1	0	2	0	**7**	1	8	0	1	0	1	16
04:45 PM	0	3	0	3	0	0	0	0	0	2	0	2	0	3	0	3	8
Total Volume	2	18	0	20	2	3	1	6	3	17	4	24	1	10	0	11	61
% App. Total	10	90	0		33.3	50	16.7		12.5	70.8	16.7		9.1	90.9	0		
PHF	.500	.750	.000	.714	.500	.375	.250	.375	.250	.607	.500	.750	.250	.625	.000	.550	.763

Counts Unlimited
PO Box 1178
Corona, CA 92878
(951) 268-6268

City of San Bernardino
N/S: Cedar Avenue
E/W: Jurupa Avenue
Weather: Clear

File Name : 13_CSB_Cedar_Jurupa PM
Site Code : 04520047
Start Date : 1/23/2020
Page No : 2

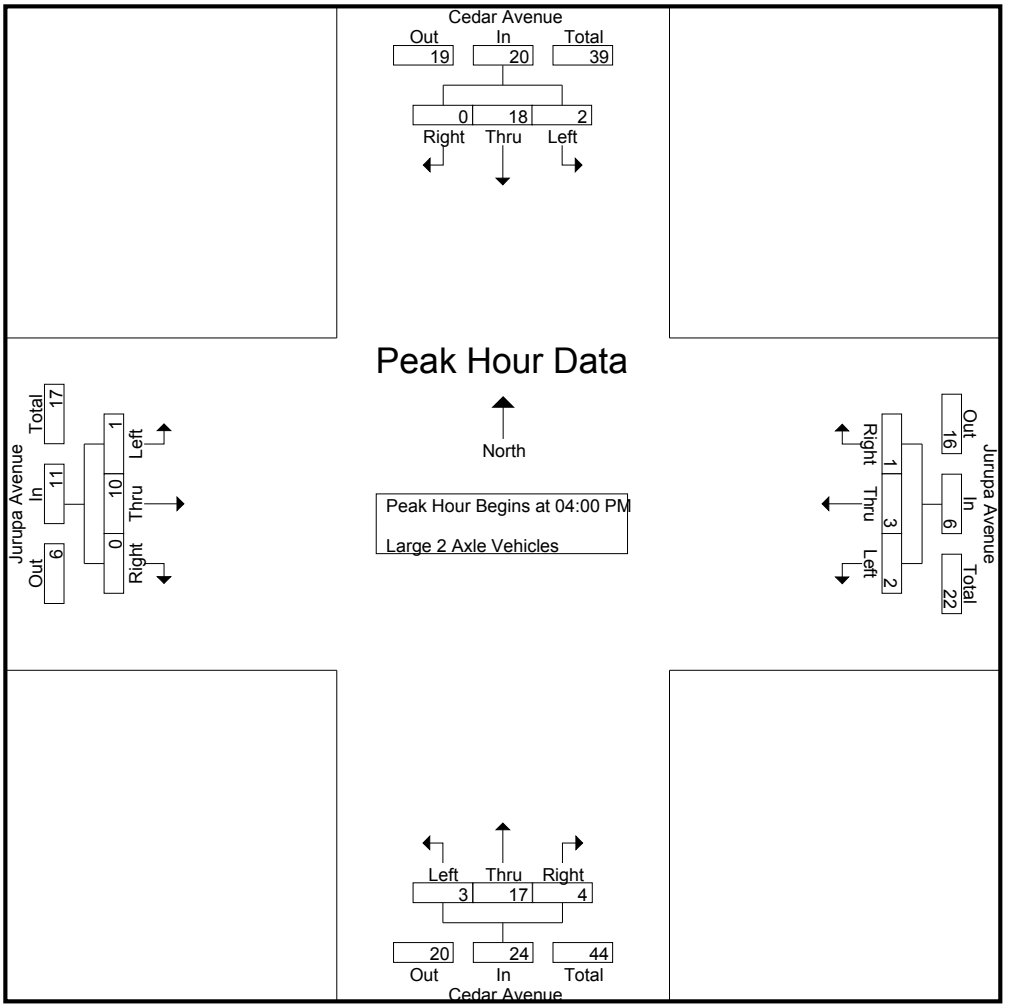

Peak Hour Analysis From 04:00 PM to 04:45 PM - Peak 1 of 1
Peak Hour for Each Approach Begins at:

	04:00 PM				04:00 PM				04:00 PM				04:00 PM			
+0 mins.	**1**	**6**	0	**7**	0	0	0	0	**3**	3	**2**	**8**	0	2	0	2
+15 mins.	1	4	0	5	**1**	**2**	**1**	**4**	0	5	1	6	**1**	**4**	0	**5**
+30 mins.	0	5	0	5	1	1	0	2	0	**7**	1	8	0	1	0	1
+45 mins.	0	3	0	3	0	0	0	0	0	2	0	2	0	3	0	3
Total Volume	2	18	0	20	2	3	1	6	3	17	4	24	1	10	0	11
% App. Total	10	90	0		33.3	50	16.7		12.5	70.8	16.7		9.1	90.9	0	
PHF	.500	.750	.000	.714	.500	.375	.250	.375	.250	.607	.500	.750	.250	.625	.000	.550

Counts Unlimited
PO Box 1178
Corona, CA 92878
(951) 268-6268

City of San Bernardino
N/S: Cedar Avenue
E/W: Jurupa Avenue
Weather: Clear

File Name : 13_CSB_Cedar_Jurupa PM
Site Code : 04520047
Start Date : 1/23/2020
Page No : 1

Groups Printed- 3 Axle Vehicles

	Cedar Avenue Southbound				Jurupa Avenue Westbound				Cedar Avenue Northbound				Jurupa Avenue Eastbound				
Start Time	Left	Thru	Right	App. Total	Left	Thru	Right	App. Total	Left	Thru	Right	App. Total	Left	Thru	Right	App. Total	Int. Total
04:00 PM	0	6	0	6	0	0	0	0	0	3	0	3	0	0	0	0	9
04:15 PM	0	3	0	3	0	0	0	0	0	1	0	1	0	1	0	1	5
04:30 PM	0	1	0	1	0	0	0	0	0	4	0	4	1	0	0	1	6
04:45 PM	1	4	0	5	0	0	0	0	0	7	0	7	0	0	0	0	12
Total	1	14	0	15	0	0	0	0	0	15	0	15	1	1	0	2	32
05:00 PM	0	2	0	2	0	0	0	0	0	1	0	1	0	0	0	0	3
05:15 PM	0	2	0	2	0	0	1	1	0	3	0	3	0	0	0	0	6
05:30 PM	0	0	0	0	0	0	0	0	0	1	0	1	0	0	0	0	1
05:45 PM	0	1	0	1	0	0	1	1	0	1	0	1	0	0	1	1	4
Total	0	5	0	5	0	0	2	2	0	6	0	6	0	0	1	1	14
Grand Total	1	19	0	20	0	0	2	2	0	21	0	21	1	1	1	3	46
Apprch %	5	95	0		0	0	100		0	100	0		33.3	33.3	33.3		
Total %	2.2	41.3	0	43.5	0	0	4.3	4.3	0	45.7	0	45.7	2.2	2.2	2.2	6.5	

	Cedar Avenue Southbound				Jurupa Avenue Westbound				Cedar Avenue Northbound				Jurupa Avenue Eastbound				
Start Time	Left	Thru	Right	App. Total	Left	Thru	Right	App. Total	Left	Thru	Right	App. Total	Left	Thru	Right	App. Total	Int. Total
Peak Hour Analysis From 04:00 PM to 04:45 PM - Peak 1 of 1																	
Peak Hour for Entire Intersection Begins at 04:00 PM																	
04:00 PM	0	**6**	0	**6**	0	0	0	0	0	3	0	3	0	0	0	0	9
04:15 PM	0	3	0	3	0	0	0	0	0	1	0	1	0	**1**	0	**1**	5
04:30 PM	0	1	0	1	0	0	0	0	0	4	0	4	**1**	0	0	1	6
04:45 PM	**1**	4	0	5	0	0	0	0	0	**7**	0	**7**	0	0	0	0	**12**
Total Volume	1	14	0	15	0	0	0	0	0	15	0	15	1	1	0	2	32
% App. Total	6.7	93.3	0		0	0	0		0	100	0		50	50	0		
PHF	.250	.583	.000	.625	.000	.000	.000	.000	.000	.536	.000	.536	.250	.250	.000	.500	.667

Counts Unlimited
PO Box 1178
Corona, CA 92878
(951) 268-6268

City of San Bernardino
N/S: Cedar Avenue
E/W: Jurupa Avenue
Weather: Clear

File Name : 13_CSB_Cedar_Jurupa PM
Site Code : 04520047
Start Date : 1/23/2020
Page No : 2

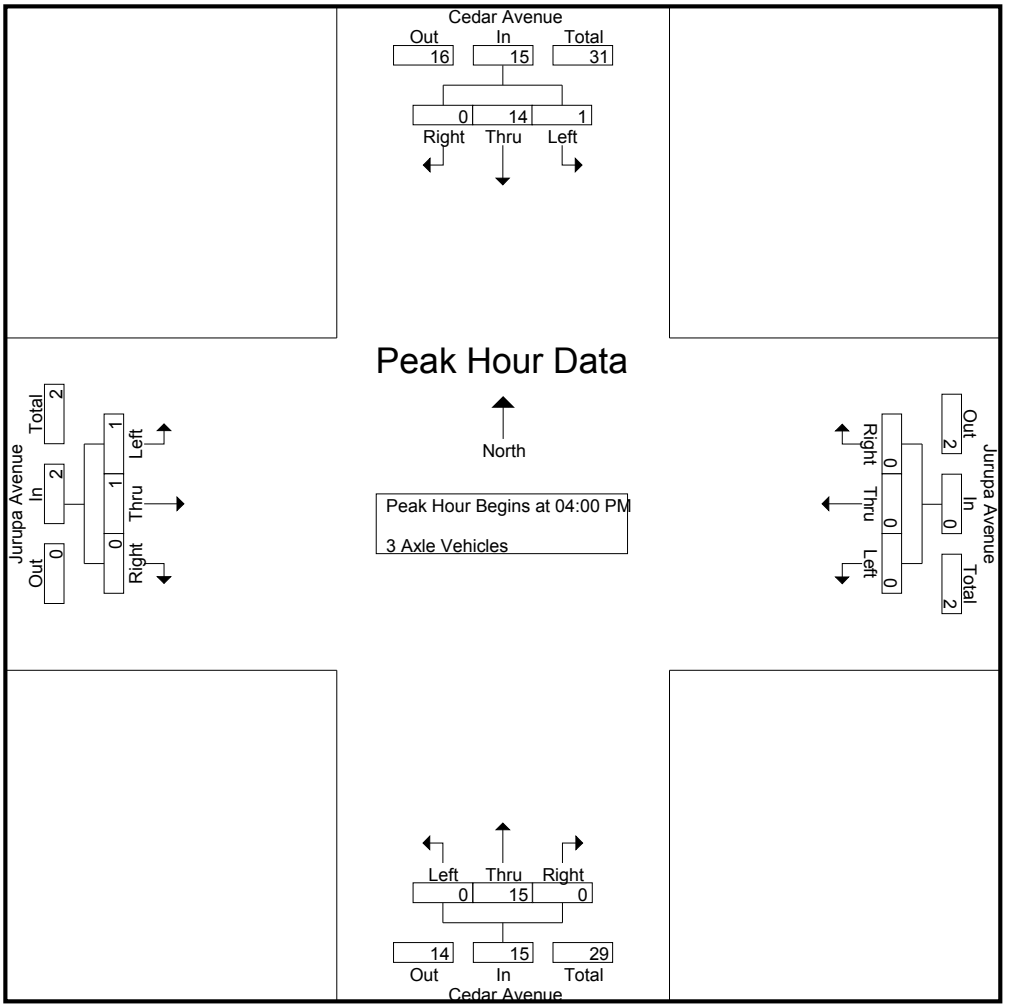

Peak Hour Analysis From 04:00 PM to 04:45 PM - Peak 1 of 1
Peak Hour for Each Approach Begins at:

	04:00 PM				04:00 PM				04:00 PM				04:00 PM			
+0 mins.	0	**6**	0	**6**	0	0	0	0	0	3	0	3	0	0	0	0
+15 mins.	0	3	0	3	0	0	0	0	0	1	0	1	0	**1**	0	**1**
+30 mins.	0	1	0	1	0	0	0	0	0	4	0	4	**1**	0	0	1
+45 mins.	**1**	4	0	5	0	0	0	0	0	**7**	0	**7**	0	0	0	0
Total Volume	1	14	0	15	0	0	0	0	0	15	0	15	1	1	0	2
% App. Total	6.7	93.3	0		0	0	0		0	100	0		50	50	0	
PHF	.250	.583	.000	.625	.000	.000	.000	.000	.000	.536	.000	.536	.250	.250	.000	.500

Counts Unlimited
PO Box 1178
Corona, CA 92878
(951) 268-6268

City of San Bernardino
N/S: Cedar Avenue
E/W: Jurupa Avenue
Weather: Clear

File Name : 13_CSB_Cedar_Jurupa PM
Site Code : 04520047
Start Date : 1/23/2020
Page No : 1

Groups Printed- 4+ Axle Trucks

	Cedar Avenue Southbound				Jurupa Avenue Westbound				Cedar Avenue Northbound				Jurupa Avenue Eastbound				
Start Time	Left	Thru	Right	App. Total	Left	Thru	Right	App. Total	Left	Thru	Right	App. Total	Left	Thru	Right	App. Total	Int. Total
04:00 PM	0	3	0	3	0	0	0	0	0	3	0	3	1	1	0	2	8
04:15 PM	0	3	0	3	0	0	0	0	0	5	0	5	1	0	0	1	9
04:30 PM	1	2	0	3	0	0	0	0	0	0	2	2	0	1	0	1	6
04:45 PM	0	6	0	6	0	0	0	0	1	5	0	6	0	1	0	1	13
Total	1	14	0	15	0	0	0	0	1	13	2	16	2	3	0	5	36
05:00 PM	1	3	0	4	0	0	0	0	0	2	0	2	0	0	0	0	6
05:15 PM	0	3	0	3	1	0	0	1	0	1	1	2	0	0	0	0	6
05:30 PM	0	4	1	5	0	0	0	0	0	5	0	5	0	0	0	0	10
05:45 PM	0	0	0	0	0	0	0	0	0	3	0	3	0	0	0	0	3
Total	1	10	1	12	1	0	0	1	0	11	1	12	0	0	0	0	25
Grand Total	2	24	1	27	1	0	0	1	1	24	3	28	2	3	0	5	61
Apprch %	7.4	88.9	3.7		100	0	0		3.6	85.7	10.7		40	60	0		
Total %	3.3	39.3	1.6	44.3	1.6	0	0	1.6	1.6	39.3	4.9	45.9	3.3	4.9	0	8.2	

	Cedar Avenue Southbound				Jurupa Avenue Westbound				Cedar Avenue Northbound				Jurupa Avenue Eastbound				
Start Time	Left	Thru	Right	App. Total	Left	Thru	Right	App. Total	Left	Thru	Right	App. Total	Left	Thru	Right	App. Total	Int. Total
Peak Hour Analysis From 04:00 PM to 04:45 PM - Peak 1 of 1																	
Peak Hour for Entire Intersection Begins at 04:00 PM																	
04:00 PM	0	3	0	3	0	0	0	0	0	3	0	3	**1**	**1**	0	**2**	8
04:15 PM	0	3	0	3	0	0	0	0	0	**5**	0	5	1	0	0	1	9
04:30 PM	**1**	2	0	3	0	0	0	0	0	0	**2**	2	0	1	0	1	6
04:45 PM	0	**6**	0	**6**	0	0	0	0	**1**	5	0	**6**	0	1	0	1	**13**
Total Volume	1	14	0	15	0	0	0	0	1	13	2	16	2	3	0	5	36
% App. Total	6.7	93.3	0		0	0	0		6.2	81.2	12.5		40	60	0		
PHF	.250	.583	.000	.625	.000	.000	.000	.000	.250	.650	.250	.667	.500	.750	.000	.625	.692

Counts Unlimited
PO Box 1178
Corona, CA 92878
(951) 268-6268

City of San Bernardino
N/S: Cedar Avenue
E/W: Jurupa Avenue
Weather: Clear

File Name : 13_CSB_Cedar_Jurupa PM
Site Code : 04520047
Start Date : 1/23/2020
Page No : 2

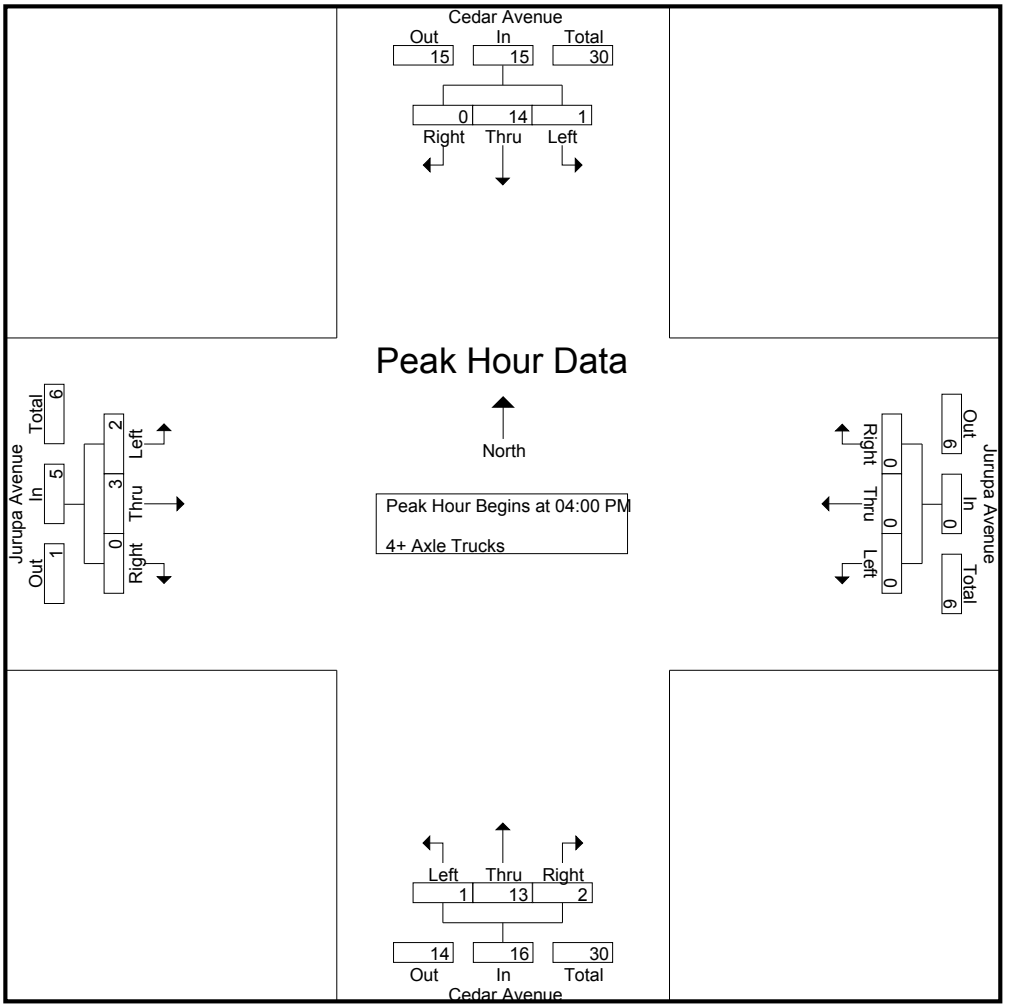

Peak Hour Analysis From 04:00 PM to 04:45 PM - Peak 1 of 1
Peak Hour for Each Approach Begins at:

	04:00 PM				04:00 PM				04:00 PM				04:00 PM			
+0 mins.	0	3	0	3	0	0	0	0	0	3	0	3	**1**	**1**	0	**2**
+15 mins.	0	3	0	3	0	0	0	0	0	**5**	0	5	1	0	0	1
+30 mins.	**1**	2	0	3	0	0	0	0	0	0	**2**	2	0	1	0	1
+45 mins.	0	**6**	0	**6**	0	0	0	0	**1**	5	0	**6**	0	1	0	1
Total Volume	1	14	0	15	0	0	0	0	1	13	2	16	2	3	0	5
% App. Total	6.7	93.3	0		0	0	0		6.2	81.2	12.5		40	60	0	
PHF	.250	.583	.000	.625	.000	.000	.000	.000	.250	.650	.250	.667	.500	.750	.000	.625

Counts Unlimited
PO Box 1178
Corona, CA 92878
(951) 268-6268

City of San Bernardino
N/S: Larch Avenue
E/W: Jurupa Avenue
Weather: Clear

File Name : 14_CSB_Larch_Jurupa AM
Site Code : 04520047
Start Date : 1/23/2020
Page No : 1

Groups Printed- Passenger Vehicles - Large 2 Axle Vehicles - 3 Axle Vehicles - 4+ Axle Trucks

	Larch Avenue Southbound			Jurupa Avenue Westbound			Jurupa Avenue Eastbound			
Start Time	Left	Right	App. Total	Thru	Right	App. Total	Left	Thru	App. Total	Int. Total
07:00 AM	4	10	14	41	17	58	23	35	58	130
07:15 AM	4	22	26	45	30	75	40	63	103	204
07:30 AM	4	21	25	58	26	84	33	84	117	226
07:45 AM	0	5	5	35	3	38	17	42	59	102
Total	12	58	70	179	76	255	113	224	337	662
08:00 AM	7	15	22	34	7	41	9	24	33	96
08:15 AM	4	6	10	31	2	33	5	37	42	85
08:30 AM	2	5	7	28	3	31	9	28	37	75
08:45 AM	3	0	3	38	1	39	3	29	32	74
Total	16	26	42	131	13	144	26	118	144	330
Grand Total	28	84	112	310	89	399	139	342	481	992
Apprch %	25	75		77.7	22.3		28.9	71.1		
Total %	2.8	8.5	11.3	31.2	9	40.2	14	34.5	48.5	
Passenger Vehicles	27	81	108	259	87	346	135	333	468	922
% Passenger Vehicles	96.4	96.4	96.4	83.5	97.8	86.7	97.1	97.4	97.3	92.9
Large 2 Axle Vehicles	0	2	2	24	1	25	4	7	11	38
% Large 2 Axle Vehicles	0	2.4	1.8	7.7	1.1	6.3	2.9	2	2.3	3.8
3 Axle Vehicles	0	0	0	24	1	25	0	2	2	27
% 3 Axle Vehicles	0	0	0	7.7	1.1	6.3	0	0.6	0.4	2.7
4+ Axle Trucks	1	1	2	3	0	3	0	0	0	5
% 4+ Axle Trucks	3.6	1.2	1.8	1	0	0.8	0	0	0	0.5

	Larch Avenue Southbound			Jurupa Avenue Westbound			Jurupa Avenue Eastbound			
Start Time	Left	Right	App. Total	Thru	Right	App. Total	Left	Thru	App. Total	Int. Total
Peak Hour Analysis From 07:00 AM to 08:45 AM - Peak 1 of 1										
Peak Hour for Entire Intersection Begins at 07:00 AM										
07:00 AM	**4**	10	14	41	17	58	23	35	58	130
07:15 AM	4	**22**	**26**	45	**30**	75	**40**	63	103	204
07:30 AM	4	21	25	**58**	26	**84**	33	**84**	**117**	**226**
07:45 AM	0	5	5	35	3	38	17	42	59	102
Total Volume	12	58	70	179	76	255	113	224	337	662
% App. Total	17.1	82.9		70.2	29.8		33.5	66.5		
PHF	.750	.659	.673	.772	.633	.759	.706	.667	.720	.732

Counts Unlimited
PO Box 1178
Corona, CA 92878
(951) 268-6268

City of San Bernardino
N/S: Larch Avenue
E/W: Jurupa Avenue
Weather: Clear

File Name : 14_CSB_Larch_Jurupa AM
Site Code : 04520047
Start Date : 1/23/2020
Page No : 2

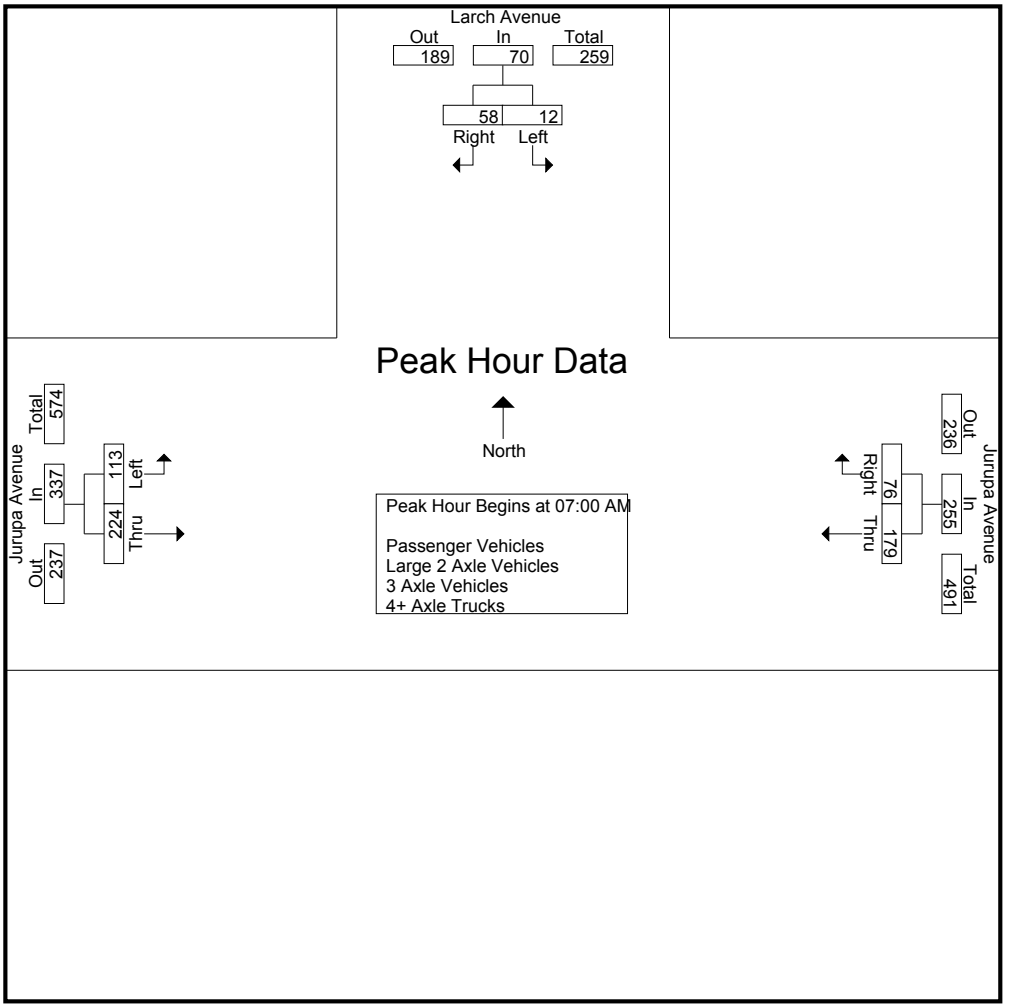

Peak Hour Analysis From 07:00 AM to 08:45 AM - Peak 1 of 1
Peak Hour for Each Approach Begins at:

	07:15 AM			07:00 AM			07:00 AM		
+0 mins.	4	**22**	**26**	41	17	58	23	35	58
+15 mins.	4	21	25	45	**30**	75	**40**	63	103
+30 mins.	0	5	5	**58**	26	**84**	33	**84**	**117**
+45 mins.	**7**	15	22	35	3	38	17	42	59
Total Volume	15	63	78	179	76	255	113	224	337
% App. Total	19.2	80.8		70.2	29.8		33.5	66.5	
PHF	.536	.716	.750	.772	.633	.759	.706	.667	.720

Counts Unlimited
PO Box 1178
Corona, CA 92878
(951) 268-6268

City of San Bernardino
N/S: Larch Avenue
E/W: Jurupa Avenue
Weather: Clear

File Name : 14_CSB_Larch_Jurupa AM
Site Code : 04520047
Start Date : 1/23/2020
Page No : 1

Groups Printed- Passenger Vehicles

	Larch Avenue Southbound			Jurupa Avenue Westbound			Jurupa Avenue Eastbound			
Start Time	Left	Right	App. Total	Thru	Right	App. Total	Left	Thru	App. Total	Int. Total
07:00 AM	3	8	11	41	17	58	23	35	58	127
07:15 AM	4	22	26	41	29	70	40	61	101	197
07:30 AM	4	20	24	56	26	82	33	83	116	222
07:45 AM	0	5	5	30	3	33	17	41	58	96
Total	11	55	66	168	75	243	113	220	333	642
08:00 AM	7	15	22	31	7	38	8	24	32	92
08:15 AM	4	6	10	16	2	18	4	33	37	65
08:30 AM	2	5	7	20	2	22	8	28	36	65
08:45 AM	3	0	3	24	1	25	2	28	30	58
Total	16	26	42	91	12	103	22	113	135	280
Grand Total	27	81	108	259	87	346	135	333	468	922
Apprch %	25	75		74.9	25.1		28.8	71.2		
Total %	2.9	8.8	11.7	28.1	9.4	37.5	14.6	36.1	50.8	

	Larch Avenue Southbound			Jurupa Avenue Westbound			Jurupa Avenue Eastbound			
Start Time	Left	Right	App. Total	Thru	Right	App. Total	Left	Thru	App. Total	Int. Total
Peak Hour Analysis From 07:00 AM to 07:45 AM - Peak 1 of 1										
Peak Hour for Entire Intersection Begins at 07:00 AM										
07:00 AM	3	8	11	41	17	58	23	35	58	127
07:15 AM	**4**	**22**	**26**	41	**29**	70	**40**	61	101	197
07:30 AM	4	20	24	**56**	26	**82**	33	**83**	**116**	**222**
07:45 AM	0	5	5	30	3	33	17	41	58	96
Total Volume	11	55	66	168	75	243	113	220	333	642
% App. Total	16.7	83.3		69.1	30.9		33.9	66.1		
PHF	.688	.625	.635	.750	.647	.741	.706	.663	.718	.723

Counts Unlimited
PO Box 1178
Corona, CA 92878
(951) 268-6268

City of San Bernardino
N/S: Larch Avenue
E/W: Jurupa Avenue
Weather: Clear

File Name : 14_CSB_Larch_Jurupa AM
Site Code : 04520047
Start Date : 1/23/2020
Page No : 2

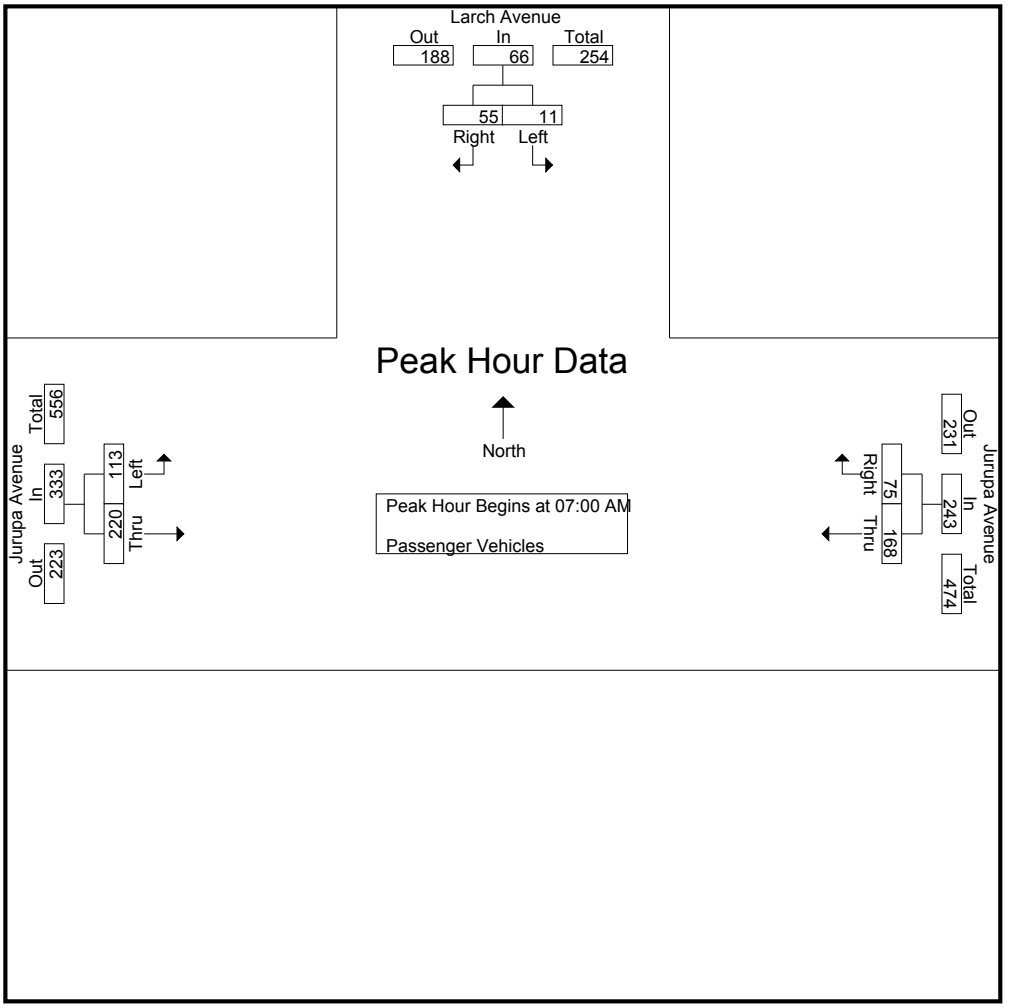

Peak Hour Analysis From 07:00 AM to 07:45 AM - Peak 1 of 1
Peak Hour for Each Approach Begins at:

	07:00 AM			07:00 AM			07:00 AM		
+0 mins.	3	8	11	41	17	58	23	35	58
+15 mins.	**4**	**22**	**26**	41	**29**	70	**40**	61	101
+30 mins.	4	20	24	**56**	26	**82**	33	**83**	**116**
+45 mins.	0	5	5	30	3	33	17	41	58
Total Volume	11	55	66	168	75	243	113	220	333
% App. Total	16.7	83.3		69.1	30.9		33.9	66.1	
PHF	.688	.625	.635	.750	.647	.741	.706	.663	.718

Counts Unlimited
PO Box 1178
Corona, CA 92878
(951) 268-6268

City of San Bernardino
N/S: Larch Avenue
E/W: Jurupa Avenue
Weather: Clear

File Name : 14_CSB_Larch_Jurupa AM
Site Code : 04520047
Start Date : 1/23/2020
Page No : 1

Groups Printed- Large 2 Axle Vehicles

	Larch Avenue Southbound			Jurupa Avenue Westbound			Jurupa Avenue Eastbound			
Start Time	Left	Right	App. Total	Thru	Right	App. Total	Left	Thru	App. Total	Int. Total
07:00 AM	0	1	1	0	0	0	0	0	0	1
07:15 AM	0	0	0	2	1	3	0	2	2	5
07:30 AM	0	1	1	1	0	1	0	1	1	3
07:45 AM	0	0	0	2	0	2	0	1	1	3
Total	0	2	2	5	1	6	0	4	4	12
08:00 AM	0	0	0	1	0	1	1	0	1	2
08:15 AM	0	0	0	7	0	7	1	2	3	10
08:30 AM	0	0	0	4	0	4	1	0	1	5
08:45 AM	0	0	0	7	0	7	1	1	2	9
Total	0	0	0	19	0	19	4	3	7	26
Grand Total	0	2	2	24	1	25	4	7	11	38
Apprch %	0	100		96	4		36.4	63.6		
Total %	0	5.3	5.3	63.2	2.6	65.8	10.5	18.4	28.9	

	Larch Avenue Southbound			Jurupa Avenue Westbound			Jurupa Avenue Eastbound			
Start Time	Left	Right	App. Total	Thru	Right	App. Total	Left	Thru	App. Total	Int. Total
Peak Hour Analysis From 07:00 AM to 07:45 AM - Peak 1 of 1										
Peak Hour for Entire Intersection Begins at 07:00 AM										
07:00 AM	0	**1**	**1**	0	0	0	0	0	0	1
07:15 AM	0	0	0	**2**	**1**	**3**	0	**2**	**2**	**5**
07:30 AM	0	1	1	1	0	1	0	1	1	3
07:45 AM	0	0	0	2	0	2	0	1	1	3
Total Volume	0	2	2	5	1	6	0	4	4	12
% App. Total	0	100		83.3	16.7		0	100		
PHF	.000	.500	.500	.625	.250	.500	.000	.500	.500	.600

Counts Unlimited
PO Box 1178
Corona, CA 92878
(951) 268-6268

City of San Bernardino
N/S: Larch Avenue
E/W: Jurupa Avenue
Weather: Clear

File Name : 14_CSB_Larch_Jurupa AM
Site Code : 04520047
Start Date : 1/23/2020
Page No : 2

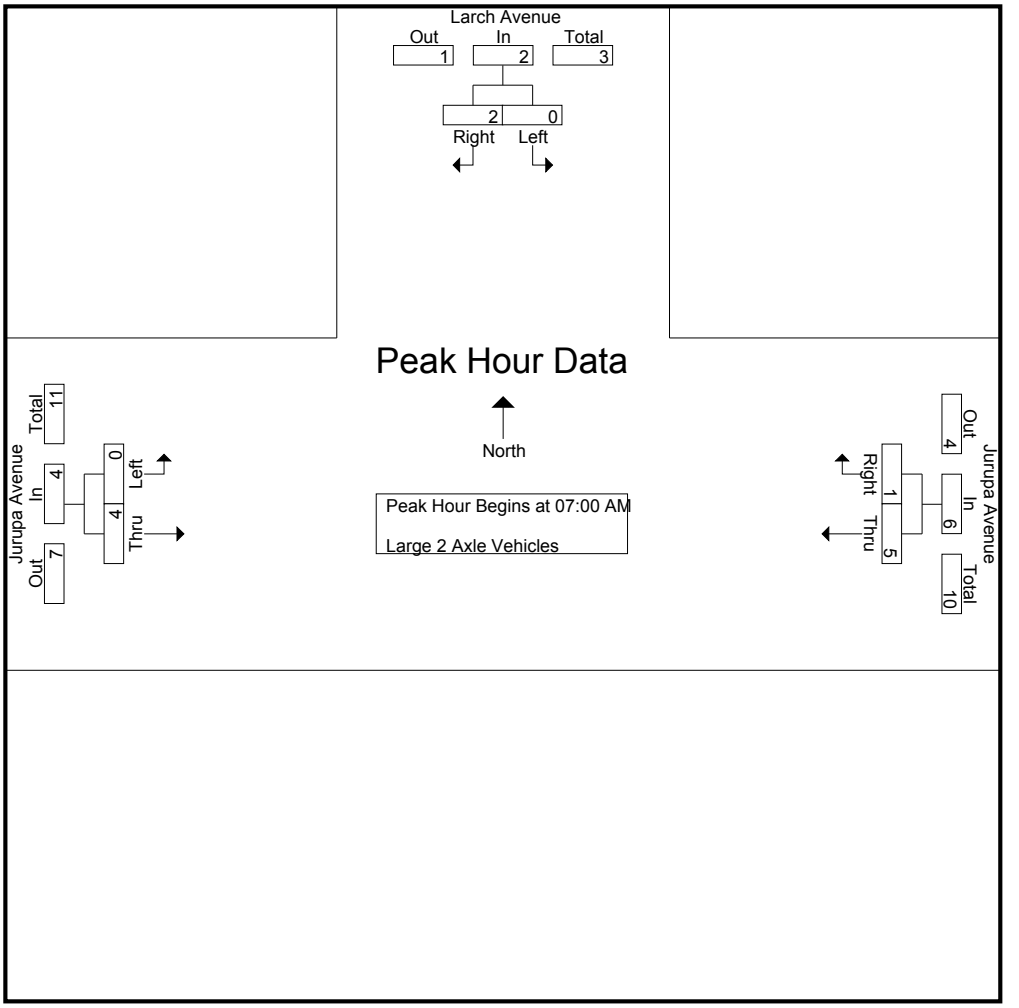

Peak Hour Analysis From 07:00 AM to 07:45 AM - Peak 1 of 1
Peak Hour for Each Approach Begins at:

	07:00 AM			07:00 AM			07:00 AM		
+0 mins.	0	**1**	**1**	0	0	0	0	0	0
+15 mins.	0	0	0	**2**	**1**	**3**	0	**2**	**2**
+30 mins.	0	1	1	1	0	1	0	1	1
+45 mins.	0	0	0	2	0	2	0	1	1
Total Volume	0	2	2	5	1	6	0	4	4
% App. Total	0	100		83.3	16.7		0	100	
PHF	.000	.500	.500	.625	.250	.500	.000	.500	.500

Counts Unlimited
PO Box 1178
Corona, CA 92878
(951) 268-6268

City of San Bernardino
N/S: Larch Avenue
E/W: Jurupa Avenue
Weather: Clear

File Name : 14_CSB_Larch_Jurupa AM
Site Code : 04520047
Start Date : 1/23/2020
Page No : 1

Groups Printed- 3 Axle Vehicles

	Larch Avenue Southbound			Jurupa Avenue Westbound			Jurupa Avenue Eastbound			
Start Time	Left	Right	App. Total	Thru	Right	App. Total	Left	Thru	App. Total	Int. Total
07:00 AM	0	0	0	0	0	0	0	0	0	0
07:15 AM	0	0	0	2	0	2	0	0	0	2
07:30 AM	0	0	0	1	0	1	0	0	0	1
07:45 AM	0	0	0	2	0	2	0	0	0	2
Total	0	0	0	5	0	5	0	0	0	5
08:00 AM	0	0	0	1	0	1	0	0	0	1
08:15 AM	0	0	0	7	0	7	0	2	2	9
08:30 AM	0	0	0	4	1	5	0	0	0	5
08:45 AM	0	0	0	7	0	7	0	0	0	7
Total	0	0	0	19	1	20	0	2	2	22
Grand Total	0	0	0	24	1	25	0	2	2	27
Apprch %	0	0		96	4		0	100		
Total %	0	0	0	88.9	3.7	92.6	0	7.4	7.4	

	Larch Avenue Southbound			Jurupa Avenue Westbound			Jurupa Avenue Eastbound			
Start Time	Left	Right	App. Total	Thru	Right	App. Total	Left	Thru	App. Total	Int. Total
Peak Hour Analysis From 07:00 AM to 07:45 AM - Peak 1 of 1										
Peak Hour for Entire Intersection Begins at 07:00 AM										
07:00 AM	0	0	0	0	0	0	0	0	0	0
07:15 AM	0	0	0	**2**	0	**2**	0	0	0	**2**
07:30 AM	0	0	0	1	0	1	0	0	0	1
07:45 AM	0	0	0	2	0	2	0	0	0	2
Total Volume	0	0	0	5	0	5	0	0	0	5
% App. Total	0	0		100	0		0	0		
PHF	.000	.000	.000	.625	.000	.625	.000	.000	.000	.625

Counts Unlimited
PO Box 1178
Corona, CA 92878
(951) 268-6268

City of San Bernardino
N/S: Larch Avenue
E/W: Jurupa Avenue
Weather: Clear

File Name : 14_CSB_Larch_Jurupa AM
Site Code : 04520047
Start Date : 1/23/2020
Page No : 2

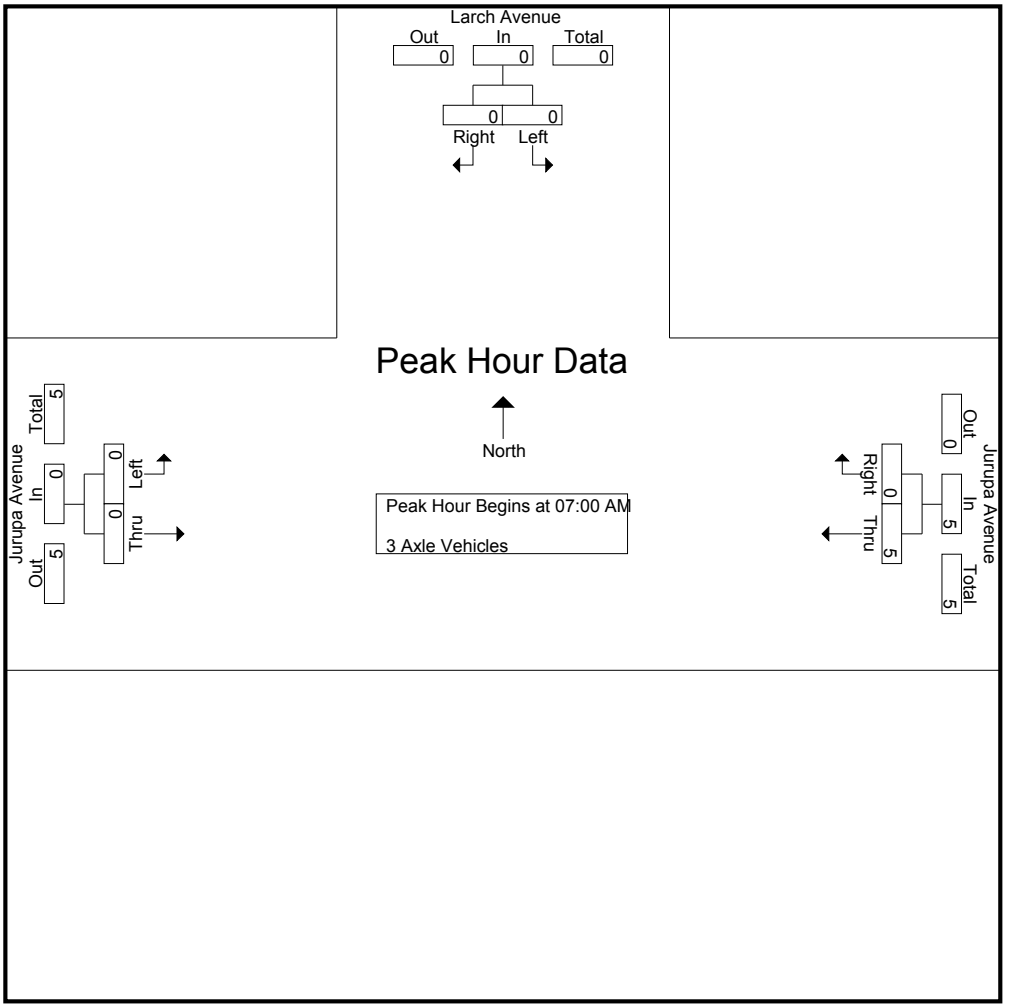

Peak Hour Analysis From 07:00 AM to 07:45 AM - Peak 1 of 1
Peak Hour for Each Approach Begins at:

	07:00 AM			07:00 AM			07:00 AM		
+0 mins.	0	0	0	0	0	0	0	0	0
+15 mins.	0	0	0	**2**	0	**2**	0	0	0
+30 mins.	0	0	0	1	0	1	0	0	0
+45 mins.	0	0	0	2	0	2	0	0	0
Total Volume	0	0	0	5	0	5	0	0	0
% App. Total	0	0		100	0		0	0	
PHF	.000	.000	.000	.625	.000	.625	.000	.000	.000

Counts Unlimited
PO Box 1178
Corona, CA 92878
(951) 268-6268

City of San Bernardino
N/S: Larch Avenue
E/W: Jurupa Avenue
Weather: Clear

File Name : 14_CSB_Larch_Jurupa AM
Site Code : 04520047
Start Date : 1/23/2020
Page No : 1

Groups Printed- 4+ Axle Trucks

	Larch Avenue Southbound			Jurupa Avenue Westbound			Jurupa Avenue Eastbound			
Start Time	Left	Right	App. Total	Thru	Right	App. Total	Left	Thru	App. Total	Int. Total
07:00 AM	1	1	2	0	0	0	0	0	0	2
07:15 AM	0	0	0	0	0	0	0	0	0	0
07:30 AM	0	0	0	0	0	0	0	0	0	0
07:45 AM	0	0	0	1	0	1	0	0	0	1
Total	1	1	2	1	0	1	0	0	0	3
08:00 AM	0	0	0	1	0	1	0	0	0	1
08:15 AM	0	0	0	1	0	1	0	0	0	1
08:30 AM	0	0	0	0	0	0	0	0	0	0
08:45 AM	0	0	0	0	0	0	0	0	0	0
Total	0	0	0	2	0	2	0	0	0	2
Grand Total	1	1	2	3	0	3	0	0	0	5
Apprch %	50	50		100	0		0	0		
Total %	20	20	40	60	0	60	0	0	0	

	Larch Avenue Southbound			Jurupa Avenue Westbound			Jurupa Avenue Eastbound			
Start Time	Left	Right	App. Total	Thru	Right	App. Total	Left	Thru	App. Total	Int. Total
Peak Hour Analysis From 07:00 AM to 07:45 AM - Peak 1 of 1										
Peak Hour for Entire Intersection Begins at 07:00 AM										
07:00 AM	**1**	**1**	**2**	0	0	0	0	0	0	**2**
07:15 AM	0	0	0	0	0	0	0	0	0	0
07:30 AM	0	0	0	0	0	0	0	0	0	0
07:45 AM	0	0	0	**1**	0	**1**	0	0	0	1
Total Volume	1	1	2	1	0	1	0	0	0	3
% App. Total	50	50		100	0		0	0		
PHF	.250	.250	.250	.250	.000	.250	.000	.000	.000	.375

Counts Unlimited
PO Box 1178
Corona, CA 92878
(951) 268-6268

City of San Bernardino
N/S: Larch Avenue
E/W: Jurupa Avenue
Weather: Clear

File Name : 14_CSB_Larch_Jurupa AM
Site Code : 04520047
Start Date : 1/23/2020
Page No : 2

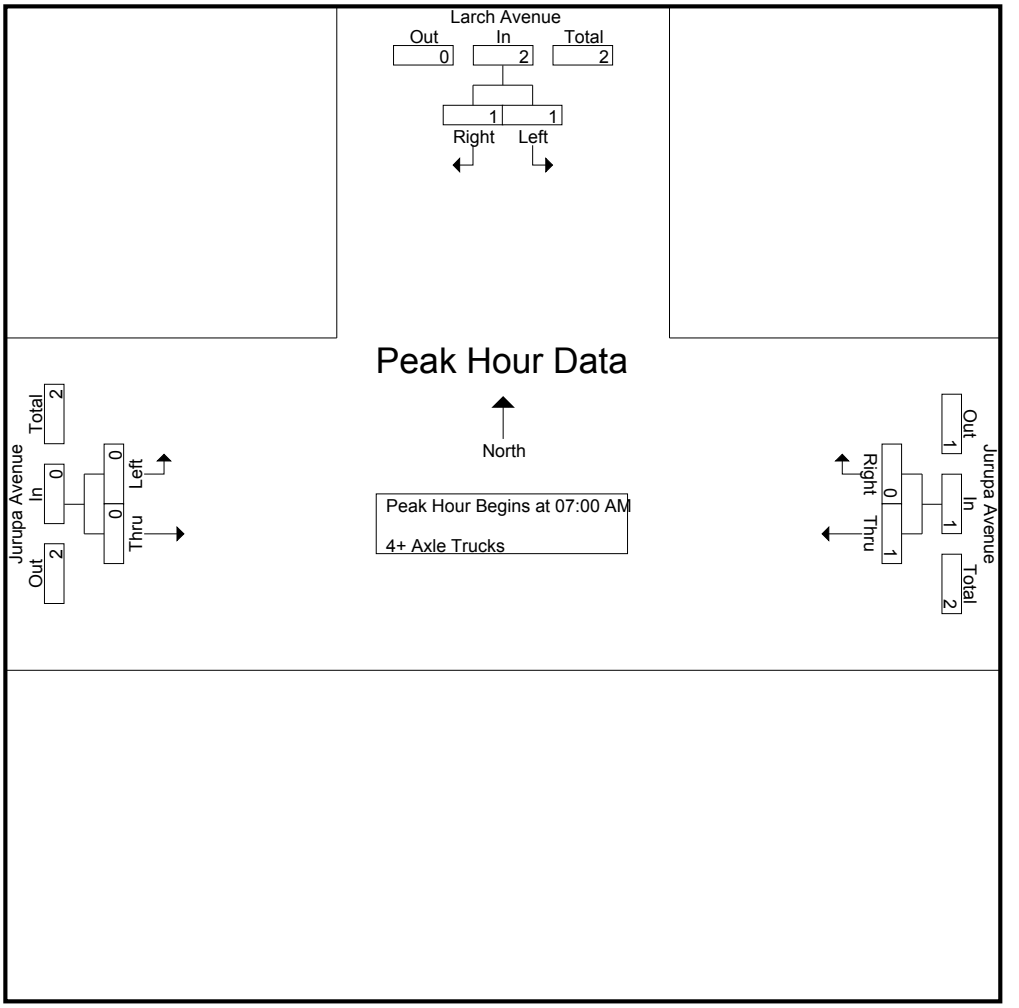

Peak Hour Analysis From 07:00 AM to 07:45 AM - Peak 1 of 1
Peak Hour for Each Approach Begins at:

	07:00 AM			07:00 AM			07:00 AM		
+0 mins.	**1**	**1**	**2**	0	0	0	0	0	0
+15 mins.	0	0	0	0	0	0	0	0	0
+30 mins.	0	0	0	0	0	0	0	0	0
+45 mins.	0	0	0	**1**	0	**1**	0	0	0
Total Volume	1	1	2	1	0	1	0	0	0
% App. Total	50	50		100	0		0	0	
PHF	.250	.250	.250	.250	.000	.250	.000	.000	.000

Counts Unlimited
PO Box 1178
Corona, CA 92878
(951) 268-6268

City of San Bernardino
N/S: Larch Avenue
E/W: Jurupa Avenue
Weather: Clear

File Name : 14_CSB_Larch_Jurupa PM
Site Code : 04520047
Start Date : 1/23/2020
Page No : 1

Groups Printed- Passenger Vehicles - Large 2 Axle Vehicles - 3 Axle Vehicles - 4+ Axle Trucks

	Larch Avenue Southbound			Jurupa Avenue Westbound			Jurupa Avenue Eastbound			
Start Time	Left	Right	App. Total	Thru	Right	App. Total	Left	Thru	App. Total	Int. Total
04:00 PM	1	3	4	17	1	18	14	36	50	72
04:15 PM	2	12	14	38	4	42	24	70	94	150
04:30 PM	2	11	13	31	11	42	22	50	72	127
04:45 PM	2	7	9	32	5	37	23	57	80	126
Total	7	33	40	118	21	139	83	213	296	475
05:00 PM	4	8	12	33	6	39	25	72	97	148
05:15 PM	6	13	19	31	7	38	30	82	112	169
05:30 PM	4	6	10	41	7	48	27	71	98	156
05:45 PM	7	16	23	38	3	41	16	59	75	139
Total	21	43	64	143	23	166	98	284	382	612
Grand Total	28	76	104	261	44	305	181	497	678	1087
Apprch %	26.9	73.1		85.6	14.4		26.7	73.3		
Total %	2.6	7	9.6	24	4	28.1	16.7	45.7	62.4	
Passenger Vehicles	27	69	96	247	44	291	178	452	630	1017
% Passenger Vehicles	96.4	90.8	92.3	94.6	100	95.4	98.3	90.9	92.9	93.6
Large 2 Axle Vehicles	1	4	5	6	0	6	2	37	39	50
% Large 2 Axle Vehicles	3.6	5.3	4.8	2.3	0	2	1.1	7.4	5.8	4.6
3 Axle Vehicles	0	0	0	6	0	6	0	0	0	6
% 3 Axle Vehicles	0	0	0	2.3	0	2	0	0	0	0.6
4+ Axle Trucks	0	3	3	2	0	2	1	8	9	14
% 4+ Axle Trucks	0	3.9	2.9	0.8	0	0.7	0.6	1.6	1.3	1.3

	Larch Avenue Southbound			Jurupa Avenue Westbound			Jurupa Avenue Eastbound			
Start Time	Left	Right	App. Total	Thru	Right	App. Total	Left	Thru	App. Total	Int. Total
Peak Hour Analysis From 04:00 PM to 05:45 PM - Peak 1 of 1										
Peak Hour for Entire Intersection Begins at 05:00 PM										
05:00 PM	4	8	12	33	6	39	25	72	97	148
05:15 PM	6	13	19	31	**7**	38	**30**	**82**	**112**	**169**
05:30 PM	4	6	10	**41**	7	**48**	27	71	98	156
05:45 PM	**7**	**16**	**23**	38	3	41	16	59	75	139
Total Volume	21	43	64	143	23	166	98	284	382	612
% App. Total	32.8	67.2		86.1	13.9		25.7	74.3		
PHF	.750	.672	.696	.872	.821	.865	.817	.866	.853	.905

Counts Unlimited
PO Box 1178
Corona, CA 92878
(951) 268-6268

City of San Bernardino
N/S: Larch Avenue
E/W: Jurupa Avenue
Weather: Clear

File Name : 14_CSB_Larch_Jurupa PM
Site Code : 04520047
Start Date : 1/23/2020
Page No : 2

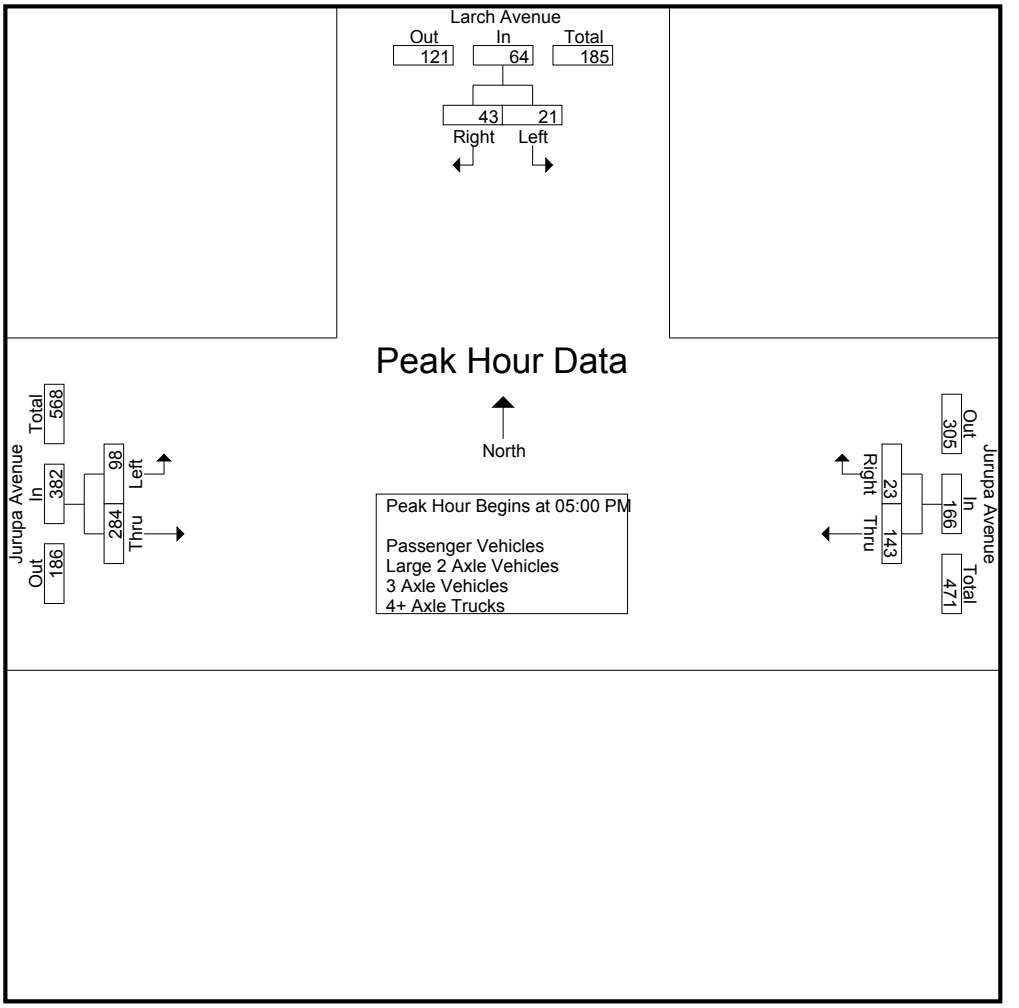

Peak Hour Analysis From 04:00 PM to 05:45 PM - Peak 1 of 1
Peak Hour for Each Approach Begins at:

	05:00 PM			05:00 PM			04:45 PM		
+0 mins.	4	8	12	33	6	39	23	57	80
+15 mins.	6	13	19	31	**7**	38	25	72	97
+30 mins.	4	6	10	**41**	7	**48**	**30**	**82**	**112**
+45 mins.	**7**	**16**	**23**	38	3	41	27	71	98
Total Volume	21	43	64	143	23	166	105	282	387
% App. Total	32.8	67.2		86.1	13.9		27.1	72.9	
PHF	.750	.672	.696	.872	.821	.865	.875	.860	.864

Counts Unlimited
PO Box 1178
Corona, CA 92878
(951) 268-6268

City of San Bernardino
N/S: Larch Avenue
E/W: Jurupa Avenue
Weather: Clear

File Name : 14_CSB_Larch_Jurupa PM
Site Code : 04520047
Start Date : 1/23/2020
Page No : 1

Groups Printed- Passenger Vehicles

	Larch Avenue Southbound			Jurupa Avenue Westbound			Jurupa Avenue Eastbound			
Start Time	Left	Right	App. Total	Thru	Right	App. Total	Left	Thru	App. Total	Int. Total
04:00 PM	1	2	3	17	1	18	14	31	45	66
04:15 PM	1	10	11	35	4	39	23	68	91	141
04:30 PM	2	9	11	29	11	40	22	47	69	120
04:45 PM	2	6	8	28	5	33	23	52	75	116
Total	6	27	33	109	21	130	82	198	280	443
05:00 PM	4	8	12	31	6	37	24	64	88	137
05:15 PM	6	13	19	28	7	35	30	75	105	159
05:30 PM	4	5	9	41	7	48	27	66	93	150
05:45 PM	7	16	23	38	3	41	15	49	64	128
Total	21	42	63	138	23	161	96	254	350	574
Grand Total	27	69	96	247	44	291	178	452	630	1017
Apprch %	28.1	71.9		84.9	15.1		28.3	71.7		
Total %	2.7	6.8	9.4	24.3	4.3	28.6	17.5	44.4	61.9	

	Larch Avenue Southbound			Jurupa Avenue Westbound			Jurupa Avenue Eastbound			
Start Time	Left	Right	App. Total	Thru	Right	App. Total	Left	Thru	App. Total	Int. Total
Peak Hour Analysis From 05:00 PM to 05:45 PM - Peak 1 of 1										
Peak Hour for Entire Intersection Begins at 05:00 PM										
05:00 PM	4	8	12	31	6	37	24	64	88	137
05:15 PM	6	13	19	28	**7**	35	**30**	**75**	**105**	**159**
05:30 PM	4	5	9	**41**	7	**48**	27	66	93	150
05:45 PM	**7**	**16**	**23**	38	3	41	15	49	64	128
Total Volume	21	42	63	138	23	161	96	254	350	574
% App. Total	33.3	66.7		85.7	14.3		27.4	72.6		
PHF	.750	.656	.685	.841	.821	.839	.800	.847	.833	.903

Counts Unlimited
PO Box 1178
Corona, CA 92878
(951) 268-6268

City of San Bernardino
N/S: Larch Avenue
E/W: Jurupa Avenue
Weather: Clear

File Name : 14_CSB_Larch_Jurupa PM
Site Code : 04520047
Start Date : 1/23/2020
Page No : 2

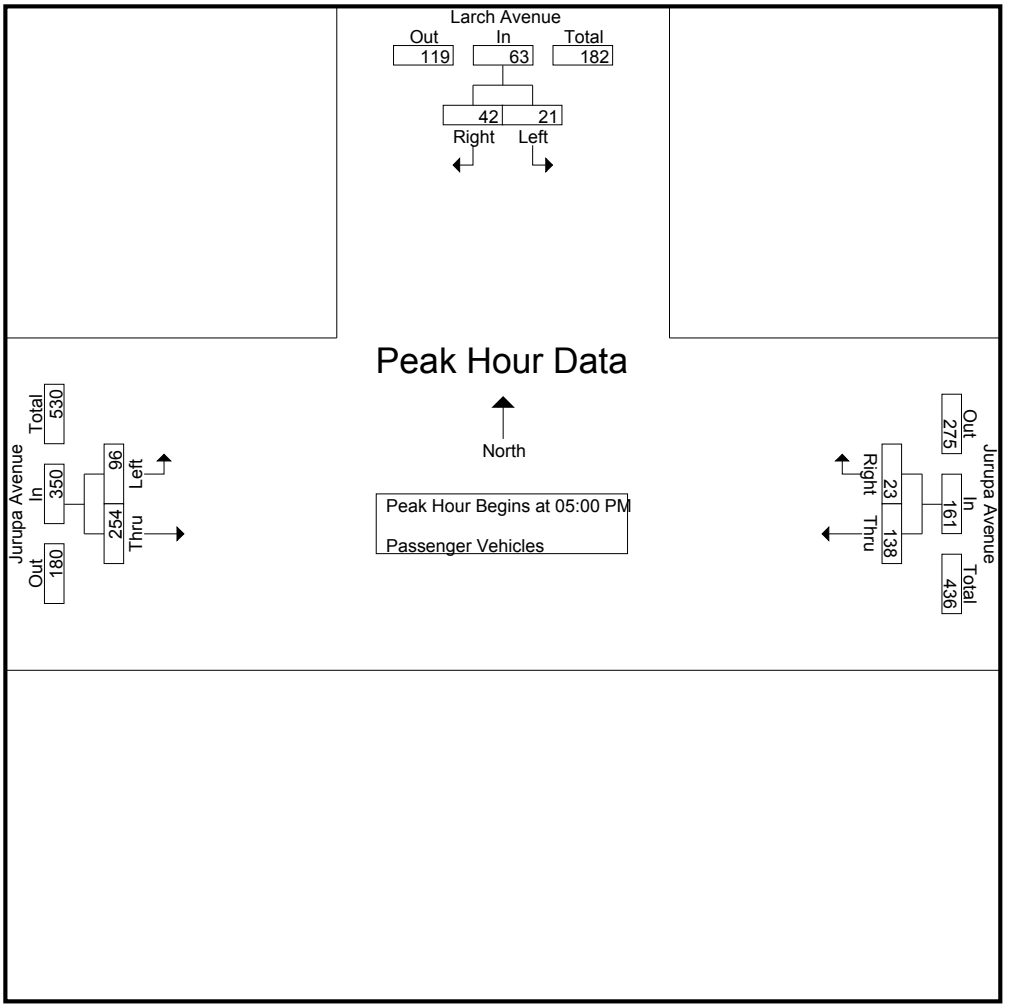

Peak Hour Analysis From 05:00 PM to 05:45 PM - Peak 1 of 1
Peak Hour for Each Approach Begins at:

	05:00 PM			05:00 PM			05:00 PM		
+0 mins.	4	8	12	31	6	37	24	64	88
+15 mins.	6	13	19	28	**7**	35	**30**	**75**	**105**
+30 mins.	4	5	9	**41**	7	**48**	27	66	93
+45 mins.	**7**	**16**	**23**	38	3	41	15	49	64
Total Volume	21	42	63	138	23	161	96	254	350
% App. Total	33.3	66.7		85.7	14.3		27.4	72.6	
PHF	.750	.656	.685	.841	.821	.839	.800	.847	.833

Counts Unlimited
PO Box 1178
Corona, CA 92878
(951) 268-6268

City of San Bernardino
N/S: Larch Avenue
E/W: Jurupa Avenue
Weather: Clear

File Name : 14_CSB_Larch_Jurupa PM
Site Code : 04520047
Start Date : 1/23/2020
Page No : 1

Groups Printed- Large 2 Axle Vehicles

	Larch Avenue Southbound			Jurupa Avenue Westbound			Jurupa Avenue Eastbound			
Start Time	Left	Right	App. Total	Thru	Right	App. Total	Left	Thru	App. Total	Int. Total
04:00 PM	0	1	1	0	0	0	0	3	3	4
04:15 PM	1	2	3	1	0	1	1	2	3	7
04:30 PM	0	1	1	1	0	1	0	2	2	4
04:45 PM	0	0	0	2	0	2	0	2	2	4
Total	1	4	5	4	0	4	1	9	10	19
05:00 PM	0	0	0	1	0	1	0	6	6	7
05:15 PM	0	0	0	1	0	1	0	7	7	8
05:30 PM	0	0	0	0	0	0	0	5	5	5
05:45 PM	0	0	0	0	0	0	1	10	11	11
Total	0	0	0	2	0	2	1	28	29	31
Grand Total	1	4	5	6	0	6	2	37	39	50
Apprch %	20	80		100	0		5.1	94.9		
Total %	2	8	10	12	0	12	4	74	78	

	Larch Avenue Southbound			Jurupa Avenue Westbound			Jurupa Avenue Eastbound			
Start Time	Left	Right	App. Total	Thru	Right	App. Total	Left	Thru	App. Total	Int. Total
Peak Hour Analysis From 05:00 PM to 05:45 PM - Peak 1 of 1										
Peak Hour for Entire Intersection Begins at 05:00 PM										
05:00 PM	0	0	0	**1**	0	**1**	0	6	6	7
05:15 PM	0	0	0	1	0	1	0	7	7	8
05:30 PM	0	0	0	0	0	0	0	5	5	5
05:45 PM	0	0	0	0	0	0	**1**	**10**	**11**	**11**
Total Volume	0	0	0	2	0	2	1	28	29	31
% App. Total	0	0		100	0		3.4	96.6		
PHF	.000	.000	.000	.500	.000	.500	.250	.700	.659	.705

Counts Unlimited
PO Box 1178
Corona, CA 92878
(951) 268-6268

City of San Bernardino
N/S: Larch Avenue
E/W: Jurupa Avenue
Weather: Clear

File Name : 14_CSB_Larch_Jurupa PM
Site Code : 04520047
Start Date : 1/23/2020
Page No : 2

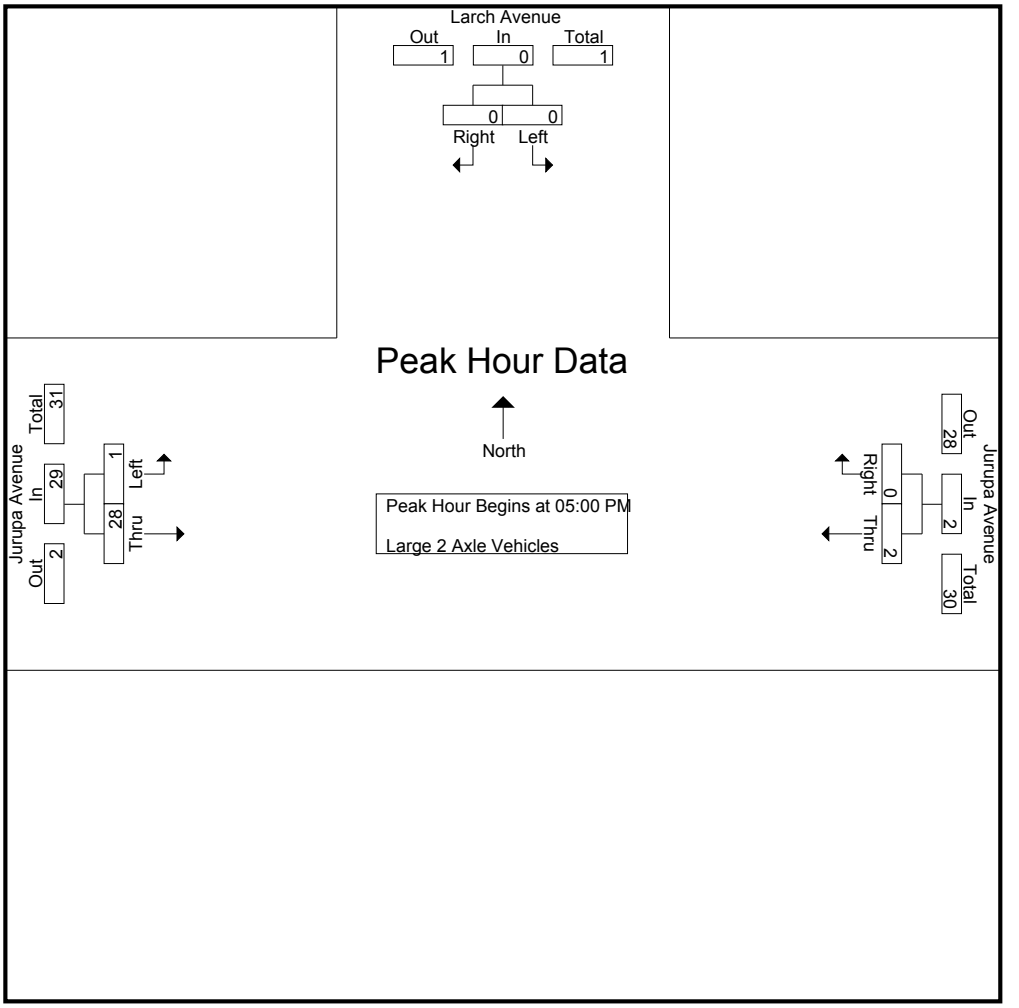

Peak Hour Analysis From 05:00 PM to 05:45 PM - Peak 1 of 1
Peak Hour for Each Approach Begins at:

	05:00 PM			05:00 PM			05:00 PM		
+0 mins.	0	0	0	**1**	0	**1**	0	6	6
+15 mins.	0	0	0	1	0	1	0	7	7
+30 mins.	0	0	0	0	0	0	0	5	5
+45 mins.	0	0	0	0	0	0	**1**	**10**	**11**
Total Volume	0	0	0	2	0	2	1	28	29
% App. Total	0	0		100	0		3.4	96.6	
PHF	.000	.000	.000	.500	.000	.500	.250	.700	.659

Counts Unlimited
PO Box 1178
Corona, CA 92878
(951) 268-6268

City of San Bernardino
N/S: Larch Avenue
E/W: Jurupa Avenue
Weather: Clear

File Name : 14_CSB_Larch_Jurupa PM
Site Code : 04520047
Start Date : 1/23/2020
Page No : 1

Groups Printed- 3 Axle Vehicles

	Larch Avenue Southbound			Jurupa Avenue Westbound			Jurupa Avenue Eastbound			
Start Time	Left	Right	App. Total	Thru	Right	App. Total	Left	Thru	App. Total	Int. Total
04:00 PM	0	0	0	0	0	0	0	0	0	0
04:15 PM	0	0	0	1	0	1	0	0	0	1
04:30 PM	0	0	0	1	0	1	0	0	0	1
04:45 PM	0	0	0	2	0	2	0	0	0	2
Total	0	0	0	4	0	4	0	0	0	4
05:00 PM	0	0	0	1	0	1	0	0	0	1
05:15 PM	0	0	0	1	0	1	0	0	0	1
05:30 PM	0	0	0	0	0	0	0	0	0	0
05:45 PM	0	0	0	0	0	0	0	0	0	0
Total	0	0	0	2	0	2	0	0	0	2
Grand Total	0	0	0	6	0	6	0	0	0	6
Apprch %	0	0		100	0		0	0		
Total %	0	0	0	100	0	100	0	0	0	

	Larch Avenue Southbound			Jurupa Avenue Westbound			Jurupa Avenue Eastbound			
Start Time	Left	Right	App. Total	Thru	Right	App. Total	Left	Thru	App. Total	Int. Total
Peak Hour Analysis From 05:00 PM to 05:45 PM - Peak 1 of 1										
Peak Hour for Entire Intersection Begins at 05:00 PM										
05:00 PM	0	0	0	**1**	0	**1**	0	0	0	**1**
05:15 PM	0	0	0	1	0	1	0	0	0	1
05:30 PM	0	0	0	0	0	0	0	0	0	0
05:45 PM	0	0	0	0	0	0	0	0	0	0
Total Volume	0	0	0	2	0	2	0	0	0	2
% App. Total	0	0		100	0		0	0		
PHF	.000	.000	.000	.500	.000	.500	.000	.000	.000	.500

Counts Unlimited
PO Box 1178
Corona, CA 92878
(951) 268-6268

City of San Bernardino
N/S: Larch Avenue
E/W: Jurupa Avenue
Weather: Clear

File Name : 14_CSB_Larch_Jurupa PM
Site Code : 04520047
Start Date : 1/23/2020
Page No : 2

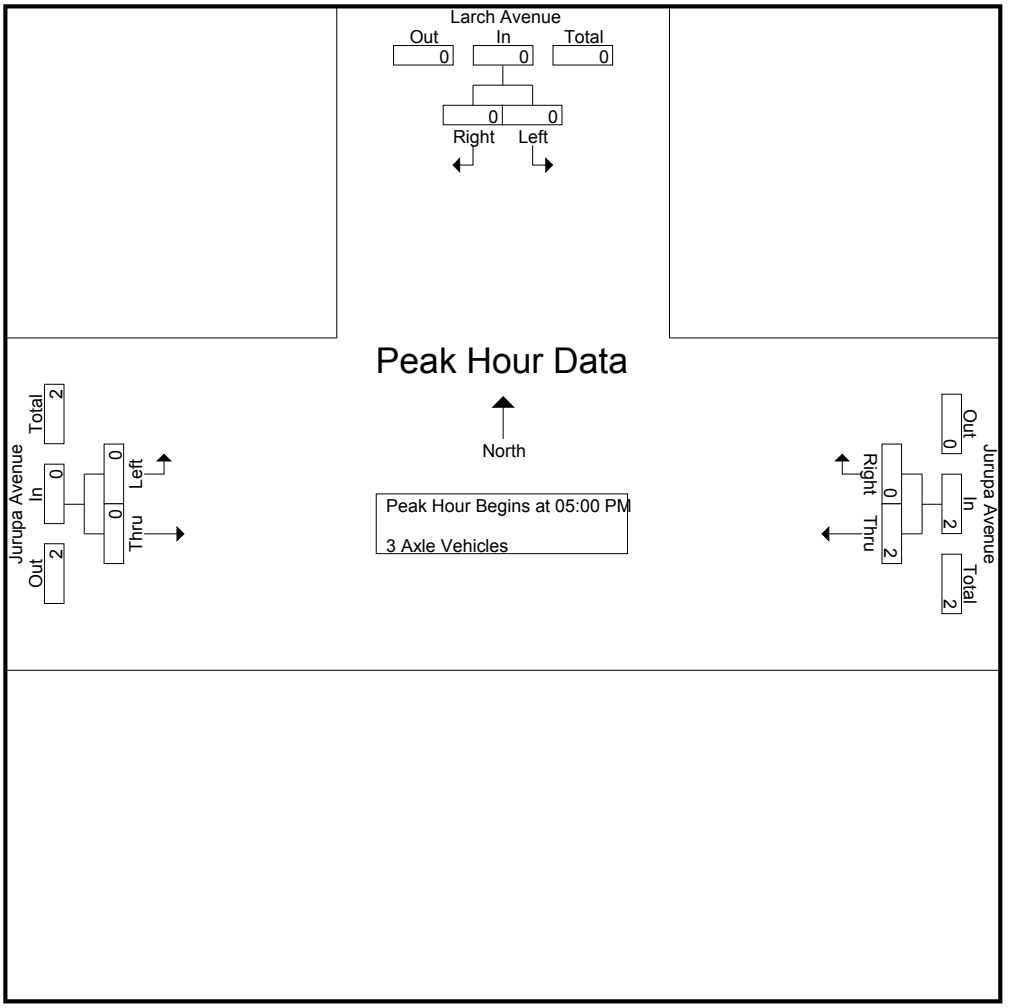

Peak Hour Analysis From 05:00 PM to 05:45 PM - Peak 1 of 1
Peak Hour for Each Approach Begins at:

	05:00 PM			05:00 PM			05:00 PM		
+0 mins.	0	0	0	**1**	0	**1**	0	0	0
+15 mins.	0	0	0	1	0	1	0	0	0
+30 mins.	0	0	0	0	0	0	0	0	0
+45 mins.	0	0	0	0	0	0	0	0	0
Total Volume	0	0	0	2	0	2	0	0	0
% App. Total	0	0		100	0		0	0	
PHF	.000	.000	.000	.500	.000	.500	.000	.000	.000

Counts Unlimited
PO Box 1178
Corona, CA 92878
(951) 268-6268

City of San Bernardino
N/S: Larch Avenue
E/W: Jurupa Avenue
Weather: Clear

File Name : 14_CSB_Larch_Jurupa PM
Site Code : 04520047
Start Date : 1/23/2020
Page No : 1

Groups Printed- 4+ Axle Trucks

	Larch Avenue Southbound			Jurupa Avenue Westbound			Jurupa Avenue Eastbound			
Start Time	Left	Right	App. Total	Thru	Right	App. Total	Left	Thru	App. Total	Int. Total
04:00 PM	0	0	0	0	0	0	0	2	2	2
04:15 PM	0	0	0	1	0	1	0	0	0	1
04:30 PM	0	1	1	0	0	0	0	1	1	2
04:45 PM	0	1	1	0	0	0	0	3	3	4
Total	0	2	2	1	0	1	0	6	6	9
05:00 PM	0	0	0	0	0	0	1	2	3	3
05:15 PM	0	0	0	1	0	1	0	0	0	1
05:30 PM	0	1	1	0	0	0	0	0	0	1
05:45 PM	0	0	0	0	0	0	0	0	0	0
Total	0	1	1	1	0	1	1	2	3	5
Grand Total	0	3	3	2	0	2	1	8	9	14
Apprch %	0	100		100	0		11.1	88.9		
Total %	0	21.4	21.4	14.3	0	14.3	7.1	57.1	64.3	

	Larch Avenue Southbound			Jurupa Avenue Westbound			Jurupa Avenue Eastbound			
Start Time	Left	Right	App. Total	Thru	Right	App. Total	Left	Thru	App. Total	Int. Total
Peak Hour Analysis From 05:00 PM to 05:45 PM - Peak 1 of 1										
Peak Hour for Entire Intersection Begins at 05:00 PM										
05:00 PM	0	0	0	0	0	0	**1**	**2**	**3**	**3**
05:15 PM	0	0	0	**1**	0	**1**	0	0	0	1
05:30 PM	0	**1**	**1**	0	0	0	0	0	0	1
05:45 PM	0	0	0	0	0	0	0	0	0	0
Total Volume	0	1	1	1	0	1	1	2	3	5
% App. Total	0	100		100	0		33.3	66.7		
PHF	.000	.250	.250	.250	.000	.250	.250	.250	.250	.417

Counts Unlimited
PO Box 1178
Corona, CA 92878
(951) 268-6268

City of San Bernardino
N/S: Larch Avenue
E/W: Jurupa Avenue
Weather: Clear

File Name : 14_CSB_Larch_Jurupa PM
Site Code : 04520047
Start Date : 1/23/2020
Page No : 2

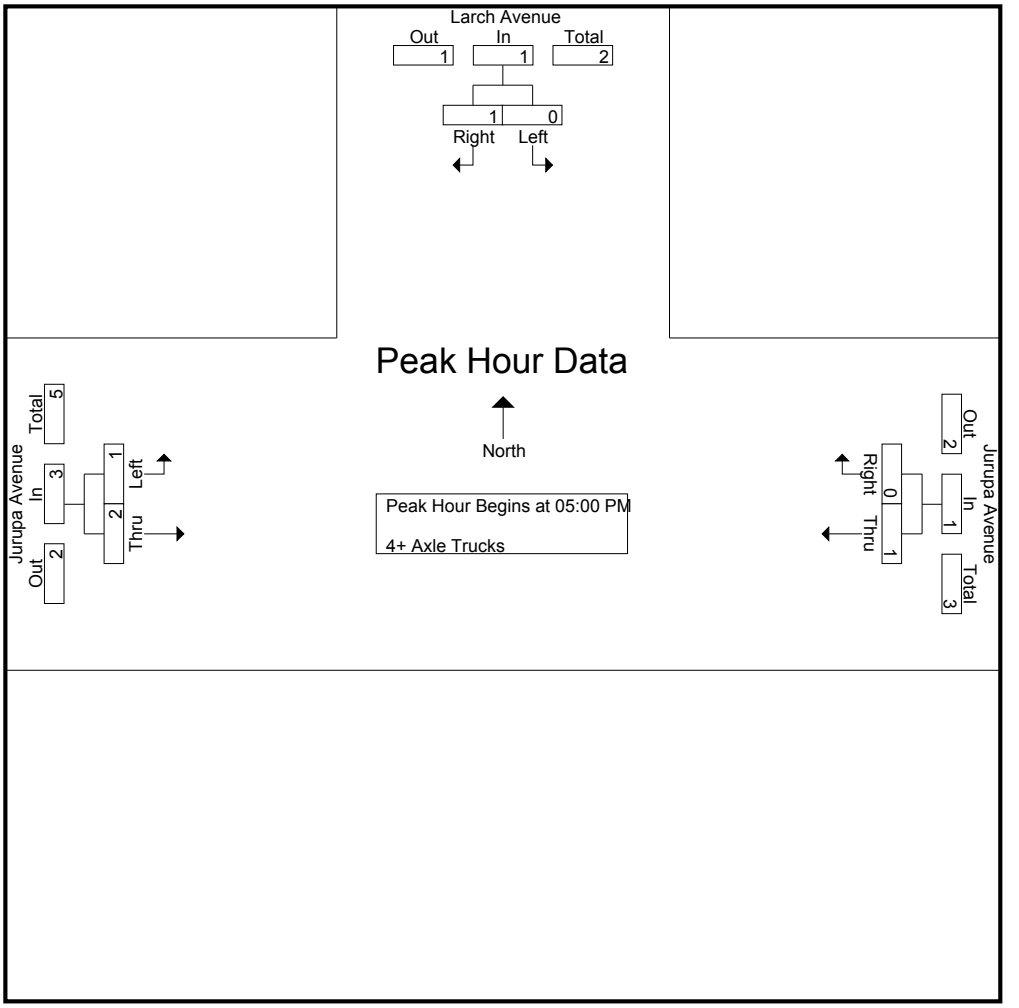

Peak Hour Analysis From 05:00 PM to 05:45 PM - Peak 1 of 1
Peak Hour for Each Approach Begins at:

	05:00 PM			05:00 PM			05:00 PM		
+0 mins.	0	0	0	0	0	0	**1**	**2**	**3**
+15 mins.	0	0	0	**1**	0	**1**	0	0	0
+30 mins.	0	**1**	**1**	0	0	0	0	0	0
+45 mins.	0	0	0	0	0	0	0	0	0
Total Volume	0	1	1	1	0	1	1	2	3
% App. Total	0	100		100	0		33.3	66.7	
PHF	.000	.250	.250	.250	.000	.250	.250	.250	.250

Counts Unlimited
PO Box 1178
Corona, CA 92878
(951) 268-6268

City of San Bernardino
N/S: Cedar Avenue/Rubidoux Boulevard
E/W: Tarragona Drive/El Rivino Road
Weather: Clear

File Name : 15_CSB_Cedar_El Rivino AM
Site Code : 04520047
Start Date : 1/23/2020
Page No : 1

Groups Printed- Passenger Vehicles - Large 2 Axle Vehicles - 3 Axle Vehicles - 4+ Axle Trucks

	Cedar Avenue Southbound				El Rivino Road Westbound				Rubidoux Boulevard Northbound				Tarragona Drive Eastbound				
Start Time	Left	Thru	Right	App. Total	Left	Thru	Right	App. Total	Left	Thru	Right	App. Total	Left	Thru	Right	App. Total	Int. Total
07:00 AM	15	172	3	190	14	1	11	26	0	101	12	113	4	1	5	10	339
07:15 AM	14	242	2	258	14	0	13	27	2	111	12	125	4	0	5	9	419
07:30 AM	12	272	2	286	13	0	10	23	1	124	7	132	2	0	4	6	447
07:45 AM	18	198	2	218	9	0	6	15	0	104	25	129	3	1	5	9	371
Total	59	884	9	952	50	1	40	91	3	440	56	499	13	2	19	34	1576
08:00 AM	14	182	0	196	14	0	7	21	3	116	14	133	1	0	2	3	353
08:15 AM	9	170	4	183	17	0	10	27	2	101	9	112	3	1	6	10	332
08:30 AM	7	141	0	148	16	0	4	20	2	107	10	119	3	1	3	7	294
08:45 AM	14	158	2	174	18	0	5	23	1	102	5	108	2	0	3	5	310
Total	44	651	6	701	65	0	26	91	8	426	38	472	9	2	14	25	1289
Grand Total	103	1535	15	1653	115	1	66	182	11	866	94	971	22	4	33	59	2865
Apprch %	6.2	92.9	0.9		63.2	0.5	36.3		1.1	89.2	9.7		37.3	6.8	55.9		
Total %	3.6	53.6	0.5	57.7	4	0	2.3	6.4	0.4	30.2	3.3	33.9	0.8	0.1	1.2	2.1	
Passenger Vehicles	92	1394	13	1499	60	1	51	112	10	788	85	883	22	4	30	56	2550
% Passenger Vehicles	89.3	90.8	86.7	90.7	52.2	100	77.3	61.5	90.9	91	90.4	90.9	100	100	90.9	94.9	89
Large 2 Axle Vehicles	6	40	2	48	38	0	9	47	0	25	5	30	0	0	3	3	128
% Large 2 Axle Vehicles	5.8	2.6	13.3	2.9	33	0	13.6	25.8	0	2.9	5.3	3.1	0	0	9.1	5.1	4.5
3 Axle Vehicles	2	40	0	42	8	0	1	9	0	8	1	9	0	0	0	0	60
% 3 Axle Vehicles	1.9	2.6	0	2.5	7	0	1.5	4.9	0	0.9	1.1	0.9	0	0	0	0	2.1
4+ Axle Trucks	3	61	0	64	9	0	5	14	1	45	3	49	0	0	0	0	127
% 4+ Axle Trucks	2.9	4	0	3.9	7.8	0	7.6	7.7	9.1	5.2	3.2	5	0	0	0	0	4.4

	Cedar Avenue Southbound				El Rivino Road Westbound				Rubidoux Boulevard Northbound				Tarragona Drive Eastbound				
Start Time	Left	Thru	Right	App. Total	Left	Thru	Right	App. Total	Left	Thru	Right	App. Total	Left	Thru	Right	App. Total	Int. Total
Peak Hour Analysis From 07:00 AM to 08:45 AM - Peak 1 of 1																	
Peak Hour for Entire Intersection Begins at 07:15 AM																	
07:15 AM	14	242	**2**	258	**14**	0	**13**	**27**	2	111	12	125	**4**	0	**5**	**9**	419
07:30 AM	12	**272**	2	**286**	13	0	10	23	1	**124**	7	132	2	0	4	6	**447**
07:45 AM	**18**	198	2	218	9	0	6	15	0	104	**25**	129	3	**1**	5	9	371
08:00 AM	14	182	0	196	14	0	7	21	**3**	116	14	**133**	1	0	2	3	353
Total Volume	58	894	6	958	50	0	36	86	6	455	58	519	10	1	16	27	1590
% App. Total	6.1	93.3	0.6		58.1	0	41.9		1.2	87.7	11.2		37	3.7	59.3		
PHF	.806	.822	.750	.837	.893	.000	.692	.796	.500	.917	.580	.976	.625	.250	.800	.750	.889

Counts Unlimited
PO Box 1178
Corona, CA 92878
(951) 268-6268

City of San Bernardino
N/S: Cedar Avenue/Rubidoux Boulevard
E/W: Tarragona Drive/El Rivino Road
Weather: Clear

File Name : 15_CSB_Cedar_El Rivino AM
Site Code : 04520047
Start Date : 1/23/2020

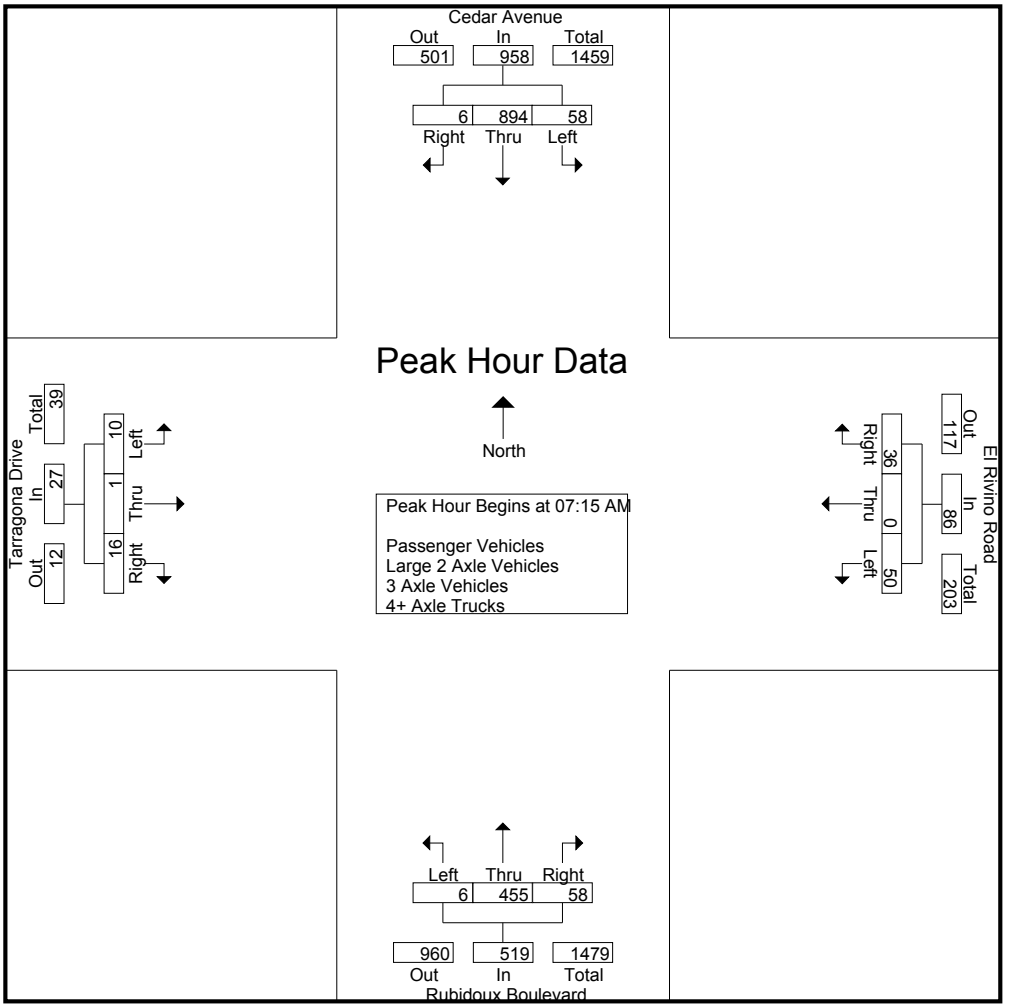

Peak Hour Analysis From 07:00 AM to 08:45 AM - Peak 1 of 1
Peak Hour for Each Approach Begins at:

	07:15 AM				07:00 AM				07:15 AM				07:00 AM			
+0 mins.	14	242	**2**	258	**14**	**1**	11	26	2	111	12	125	**4**	**1**	**5**	**10**
+15 mins.	12	**272**	2	**286**	14	0	**13**	**27**	1	**124**	7	132	4	0	5	9
+30 mins.	**18**	198	2	218	13	0	10	23	0	104	**25**	129	2	0	4	6
+45 mins.	14	182	0	196	9	0	6	15	**3**	116	14	**133**	3	1	5	9
Total Volume	58	894	6	958	50	1	40	91	6	455	58	519	13	2	19	34
% App. Total	6.1	93.3	0.6		54.9	1.1	44		1.2	87.7	11.2		38.2	5.9	55.9	
PHF	.806	.822	.750	.837	.893	.250	.769	.843	.500	.917	.580	.976	.813	.500	.950	.850

Counts Unlimited
PO Box 1178
Corona, CA 92878
(951) 268-6268

City of San Bernardino
N/S: Cedar Avenue/Rubidoux Boulevard
E/W: Tarragona Drive/El Rivino Road
Weather: Clear

File Name : 15_CSB_Cedar_El Rivino AM
Site Code : 04520047
Start Date : 1/23/2020
Page No : 1

Groups Printed- Passenger Vehicles

	Cedar Avenue Southbound				El Rivino Road Westbound				Rubidoux Boulevard Northbound				Tarragona Drive Eastbound				
Start Time	Left	Thru	Right	App. Total	Left	Thru	Right	App. Total	Left	Thru	Right	App. Total	Left	Thru	Right	App. Total	Int. Total
07:00 AM	11	163	3	177	9	1	9	19	0	92	11	103	4	1	5	10	309
07:15 AM	12	231	1	244	12	0	9	21	1	104	10	115	4	0	5	9	389
07:30 AM	11	250	1	262	7	0	7	14	1	117	7	125	2	0	3	5	406
07:45 AM	18	184	2	204	8	0	5	13	0	97	25	122	3	1	5	9	348
Total	52	828	7	887	36	1	30	67	2	410	53	465	13	2	18	33	1452
08:00 AM	11	167	0	178	12	0	7	19	3	100	13	116	1	0	2	3	316
08:15 AM	9	145	4	158	6	0	7	13	2	96	9	107	3	1	4	8	286
08:30 AM	7	125	0	132	2	0	3	5	2	93	7	102	3	1	3	7	246
08:45 AM	13	129	2	144	4	0	4	8	1	89	3	93	2	0	3	5	250
Total	40	566	6	612	24	0	21	45	8	378	32	418	9	2	12	23	1098
Grand Total	92	1394	13	1499	60	1	51	112	10	788	85	883	22	4	30	56	2550
Apprch %	6.1	93	0.9		53.6	0.9	45.5		1.1	89.2	9.6		39.3	7.1	53.6		
Total %	3.6	54.7	0.5	58.8	2.4	0	2	4.4	0.4	30.9	3.3	34.6	0.9	0.2	1.2	2.2	

	Cedar Avenue Southbound				El Rivino Road Westbound				Rubidoux Boulevard Northbound				Tarragona Drive Eastbound				
Start Time	Left	Thru	Right	App. Total	Left	Thru	Right	App. Total	Left	Thru	Right	App. Total	Left	Thru	Right	App. Total	Int. Total
Peak Hour Analysis From 07:15 AM to 08:00 AM - Peak 1 of 1																	
Peak Hour for Entire Intersection Begins at 07:15 AM																	
07:15 AM	12	231	1	244	**12**	0	**9**	**21**	1	104	10	115	**4**	0	**5**	**9**	389
07:30 AM	11	**250**	1	**262**	7	0	7	14	1	**117**	7	**125**	2	0	3	5	**406**
07:45 AM	**18**	184	**2**	204	8	0	5	13	0	97	**25**	122	3	**1**	5	9	348
08:00 AM	11	167	0	178	12	0	7	19	**3**	100	13	116	1	0	2	3	316
Total Volume	52	832	4	888	39	0	28	67	5	418	55	478	10	1	15	26	1459
% App. Total	5.9	93.7	0.5		58.2	0	41.8		1	87.4	11.5		38.5	3.8	57.7		
PHF	.722	.832	.500	.847	.813	.000	.778	.798	.417	.893	.550	.956	.625	.250	.750	.722	.898

Counts Unlimited
PO Box 1178
Corona, CA 92878
(951) 268-6268

City of San Bernardino
N/S: Cedar Avenue/Rubidoux Boulevard
E/W: Tarragona Drive/El Rivino Road
Weather: Clear

File Name : 15_CSB_Cedar_El Rivino AM
Site Code : 04520047
Start Date : 1/23/2020

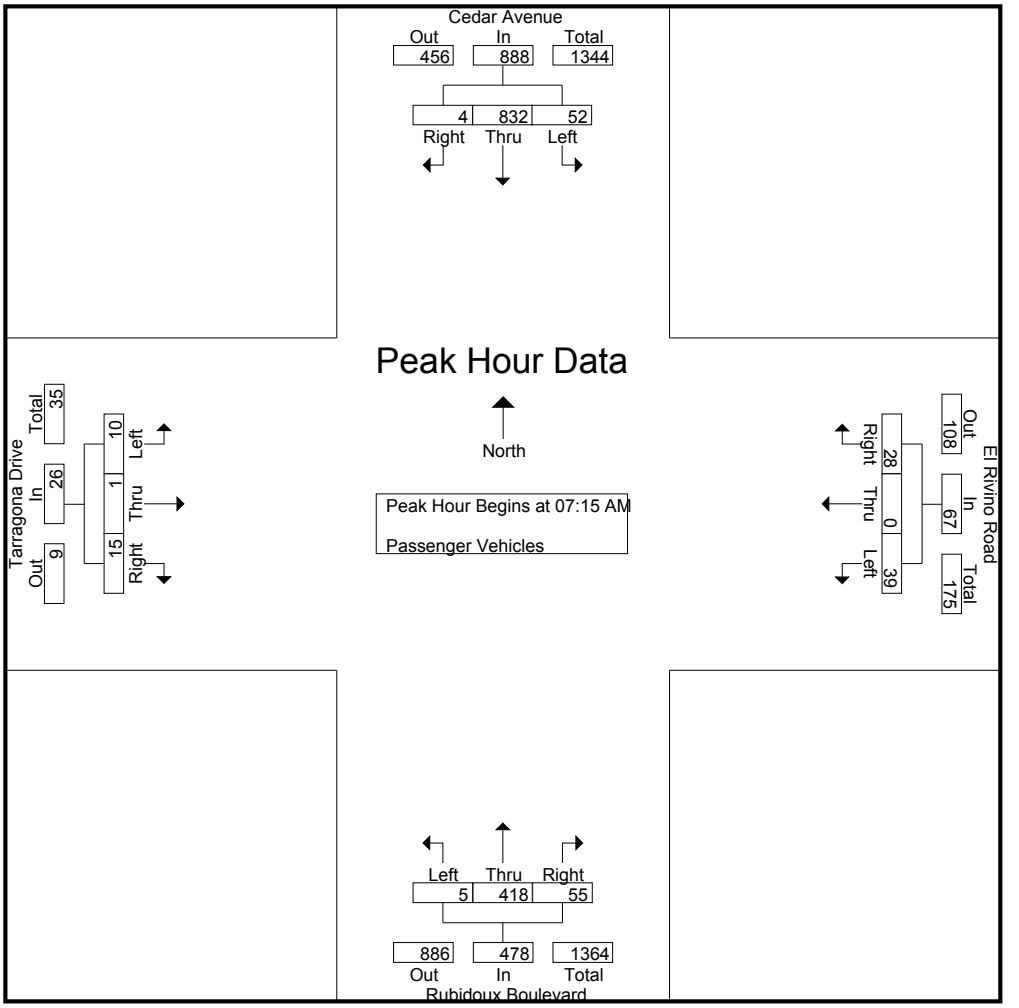

Peak Hour Analysis From 07:15 AM to 08:00 AM - Peak 1 of 1
Peak Hour for Each Approach Begins at:

	07:15 AM				07:15 AM				07:15 AM				07:15 AM			
+0 mins.	12	231	1	244	**12**	0	**9**	**21**	1	104	10	115	**4**	0	**5**	**9**
+15 mins.	11	**250**	1	**262**	7	0	7	14	1	**117**	7	**125**	2	0	3	5
+30 mins.	**18**	184	**2**	204	8	0	5	13	0	97	**25**	122	3	**1**	5	9
+45 mins.	11	167	0	178	12	0	7	19	**3**	100	13	116	1	0	2	3
Total Volume	52	832	4	888	39	0	28	67	5	418	55	478	10	1	15	26
% App. Total	5.9	93.7	0.5		58.2	0	41.8		1	87.4	11.5		38.5	3.8	57.7	
PHF	.722	.832	.500	.847	.813	.000	.778	.798	.417	.893	.550	.956	.625	.250	.750	.722

Counts Unlimited
PO Box 1178
Corona, CA 92878
(951) 268-6268

City of San Bernardino
N/S: Cedar Avenue/Rubidoux Boulevard
E/W: Tarragona Drive/El Rivino Road
Weather: Clear

File Name : 15_CSB_Cedar_El Rivino AM
Site Code : 04520047
Start Date : 1/23/2020
Page No : 1

Groups Printed- Large 2 Axle Vehicles

	Cedar Avenue Southbound				El Rivino Road Westbound				Rubidoux Boulevard Northbound				Tarragona Drive Eastbound				
Start Time	Left	Thru	Right	App. Total	Left	Thru	Right	App. Total	Left	Thru	Right	App. Total	Left	Thru	Right	App. Total	Int. Total
07:00 AM	1	2	0	3	0	0	2	2	0	1	0	1	0	0	0	0	6
07:15 AM	2	2	1	5	1	0	2	3	0	3	1	4	0	0	0	0	12
07:30 AM	1	5	1	7	3	0	1	4	0	2	0	2	0	0	1	1	14
07:45 AM	0	5	0	5	0	0	1	1	0	4	0	4	0	0	0	0	10
Total	4	14	2	20	4	0	6	10	0	10	1	11	0	0	1	1	42
08:00 AM	2	4	0	6	1	0	0	1	0	8	1	9	0	0	0	0	16
08:15 AM	0	8	0	8	10	0	1	11	0	0	0	0	0	0	2	2	21
08:30 AM	0	4	0	4	13	0	1	14	0	3	1	4	0	0	0	0	22
08:45 AM	0	10	0	10	10	0	1	11	0	4	2	6	0	0	0	0	27
Total	2	26	0	28	34	0	3	37	0	15	4	19	0	0	2	2	86
Grand Total	6	40	2	48	38	0	9	47	0	25	5	30	0	0	3	3	128
Apprch %	12.5	83.3	4.2		80.9	0	19.1		0	83.3	16.7		0	0	100		
Total %	4.7	31.2	1.6	37.5	29.7	0	7	36.7	0	19.5	3.9	23.4	0	0	2.3	2.3	

	Cedar Avenue Southbound				El Rivino Road Westbound				Rubidoux Boulevard Northbound				Tarragona Drive Eastbound				
Start Time	Left	Thru	Right	App. Total	Left	Thru	Right	App. Total	Left	Thru	Right	App. Total	Left	Thru	Right	App. Total	Int. Total
Peak Hour Analysis From 07:15 AM to 08:00 AM - Peak 1 of 1																	
Peak Hour for Entire Intersection Begins at 07:15 AM																	
07:15 AM	**2**	2	**1**	5	1	0	**2**	3	0	3	**1**	4	0	0	0	0	12
07:30 AM	1	**5**	1	**7**	**3**	0	1	**4**	0	2	0	2	0	0	**1**	**1**	14
07:45 AM	0	5	0	5	0	0	1	1	0	4	0	4	0	0	0	0	10
08:00 AM	2	4	0	6	1	0	0	1	0	**8**	1	**9**	0	0	0	0	**16**
Total Volume	5	16	2	23	5	0	4	9	0	17	2	19	0	0	1	1	52
% App. Total	21.7	69.6	8.7		55.6	0	44.4		0	89.5	10.5		0	0	100		
PHF	.625	.800	.500	.821	.417	.000	.500	.563	.000	.531	.500	.528	.000	.000	.250	.250	.813

Counts Unlimited
PO Box 1178
Corona, CA 92878
(951) 268-6268

City of San Bernardino
N/S: Cedar Avenue/Rubidoux Boulevard
E/W: Tarragona Drive/El Rivino Road
Weather: Clear

File Name : 15_CSB_Cedar_El Rivino AM
Site Code : 04520047
Start Date : 1/23/2020
Page No : 2

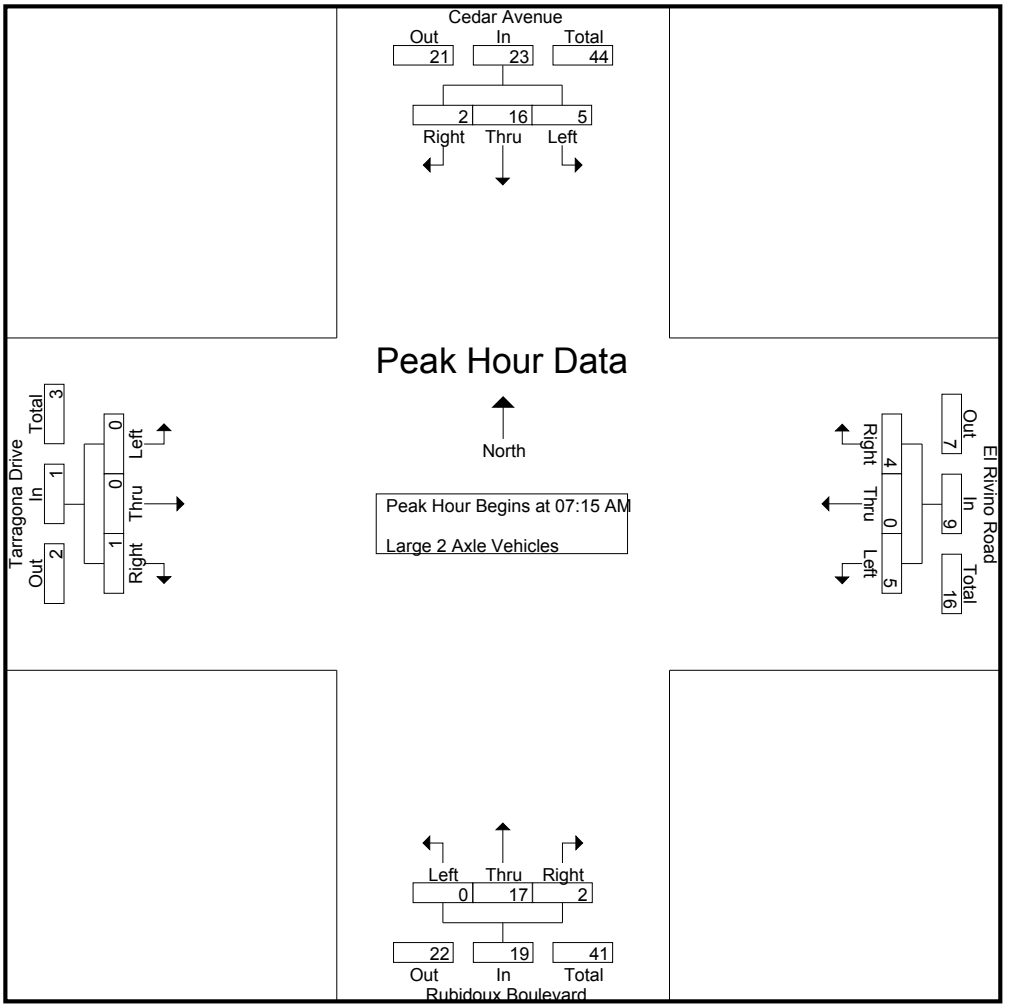

Peak Hour Analysis From 07:15 AM to 08:00 AM - Peak 1 of 1
Peak Hour for Each Approach Begins at:

	07:15 AM				07:15 AM				07:15 AM				07:15 AM			
+0 mins.	**2**	2	**1**	5	1	0	**2**	3	0	3	**1**	4	0	0	0	0
+15 mins.	1	**5**	1	**7**	**3**	0	1	**4**	0	2	0	2	0	0	**1**	**1**
+30 mins.	0	5	0	5	0	0	1	1	0	4	0	4	0	0	0	0
+45 mins.	2	4	0	6	1	0	0	1	0	**8**	1	**9**	0	0	0	0
Total Volume	5	16	2	23	5	0	4	9	0	17	2	19	0	0	1	1
% App. Total	21.7	69.6	8.7		55.6	0	44.4		0	89.5	10.5		0	0	100	
PHF	.625	.800	.500	.821	.417	.000	.500	.563	.000	.531	.500	.528	.000	.000	.250	.250

Counts Unlimited
PO Box 1178
Corona, CA 92878
(951) 268-6268

City of San Bernardino
N/S: Cedar Avenue/Rubidoux Boulevard
E/W: Tarragona Drive/El Rivino Road
Weather: Clear

File Name : 15_CSB_Cedar_El Rivino AM
Site Code : 04520047
Start Date : 1/23/2020

Groups Printed- 3 Axle Vehicles

	Cedar Avenue Southbound				El Rivino Road Westbound				Rubidoux Boulevard Northbound				Tarragona Drive Eastbound				
Start Time	Left	Thru	Right	App. Total	Left	Thru	Right	App. Total	Left	Thru	Right	App. Total	Left	Thru	Right	App. Total	Int. Total
07:00 AM	2	2	0	4	2	0	0	2	0	0	1	1	0	0	0	0	7
07:15 AM	0	2	0	2	1	0	0	1	0	0	0	0	0	0	0	0	3
07:30 AM	0	5	0	5	2	0	0	2	0	1	0	1	0	0	0	0	8
07:45 AM	0	5	0	5	0	0	0	0	0	0	0	0	0	0	0	0	5
Total	2	14	0	16	5	0	0	5	0	1	1	2	0	0	0	0	23
08:00 AM	0	4	0	4	0	0	0	0	0	2	0	2	0	0	0	0	6
08:15 AM	0	8	0	8	1	0	1	2	0	1	0	1	0	0	0	0	11
08:30 AM	0	4	0	4	0	0	0	0	0	2	0	2	0	0	0	0	6
08:45 AM	0	10	0	10	2	0	0	2	0	2	0	2	0	0	0	0	14
Total	0	26	0	26	3	0	1	4	0	7	0	7	0	0	0	0	37
Grand Total	2	40	0	42	8	0	1	9	0	8	1	9	0	0	0	0	60
Apprch %	4.8	95.2	0		88.9	0	11.1		0	88.9	11.1		0	0	0		
Total %	3.3	66.7	0	70	13.3	0	1.7	15	0	13.3	1.7	15	0	0	0	0	

	Cedar Avenue Southbound				El Rivino Road Westbound				Rubidoux Boulevard Northbound				Tarragona Drive Eastbound				
Start Time	Left	Thru	Right	App. Total	Left	Thru	Right	App. Total	Left	Thru	Right	App. Total	Left	Thru	Right	App. Total	Int. Total
Peak Hour Analysis From 07:15 AM to 08:00 AM - Peak 1 of 1																	
Peak Hour for Entire Intersection Begins at 07:15 AM																	
07:15 AM	0	2	0	2	1	0	0	1	0	0	0	0	0	0	0	0	3
07:30 AM	0	**5**	0	**5**	**2**	0	0	**2**	0	1	0	1	0	0	0	0	**8**
07:45 AM	0	5	0	5	0	0	0	0	0	0	0	0	0	0	0	0	5
08:00 AM	0	4	0	4	0	0	0	0	0	**2**	0	**2**	0	0	0	0	6
Total Volume	0	16	0	16	3	0	0	3	0	3	0	3	0	0	0	0	22
% App. Total	0	100	0		100	0	0		0	100	0		0	0	0		
PHF	.000	.800	.000	.800	.375	.000	.000	.375	.000	.375	.000	.375	.000	.000	.000	.000	.688

Counts Unlimited
PO Box 1178
Corona, CA 92878
(951) 268-6268

City of San Bernardino
N/S: Cedar Avenue/Rubidoux Boulevard
E/W: Tarragona Drive/El Rivino Road
Weather: Clear

File Name : 15_CSB_Cedar_El Rivino AM
Site Code : 04520047
Start Date : 1/23/2020
Page No : 2

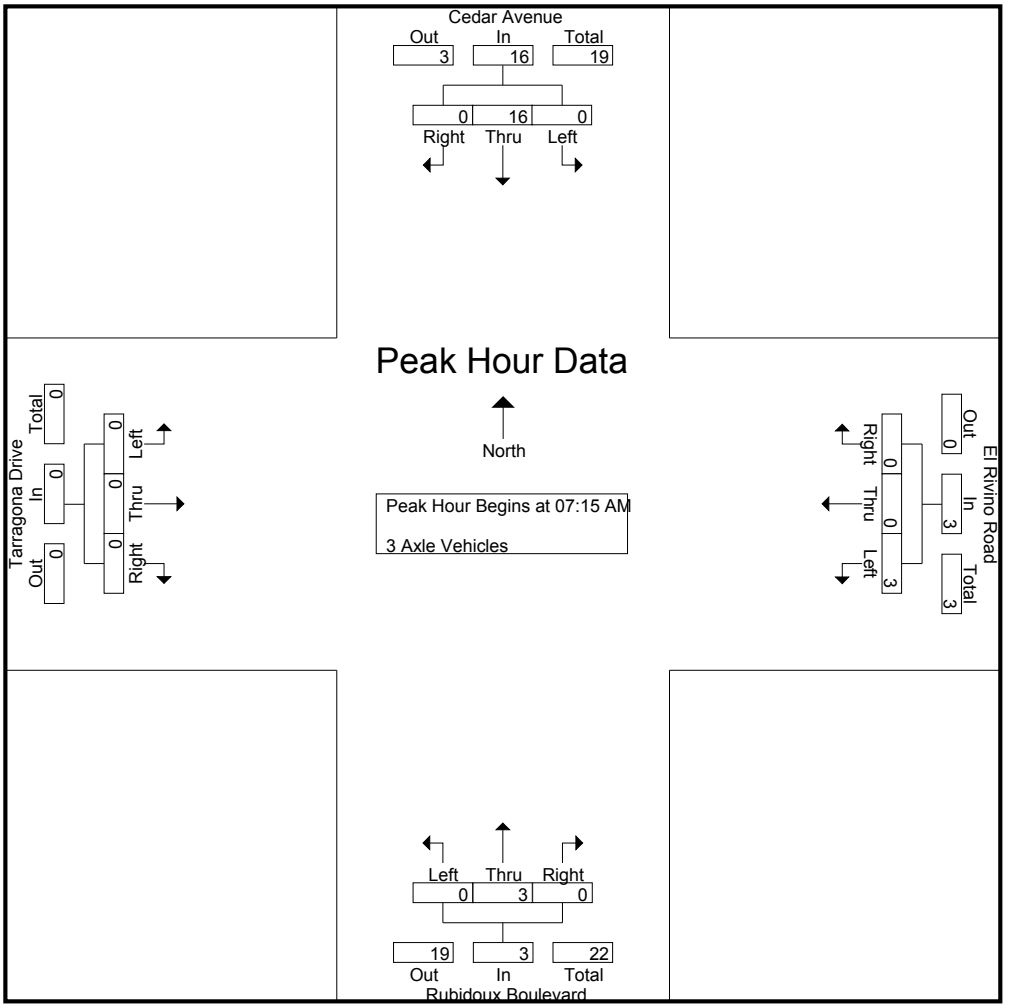

Peak Hour Analysis From 07:15 AM to 08:00 AM - Peak 1 of 1
Peak Hour for Each Approach Begins at:

	07:15 AM				07:15 AM				07:15 AM				07:15 AM			
+0 mins.	0	2	0	2	1	0	0	1	0	0	0	0	0	0	0	0
+15 mins.	0	**5**	0	**5**	**2**	0	0	**2**	0	1	0	1	0	0	0	0
+30 mins.	0	5	0	5	0	0	0	0	0	0	0	0	0	0	0	0
+45 mins.	0	4	0	4	0	0	0	0	0	**2**	0	**2**	0	0	0	0
Total Volume	0	16	0	16	3	0	0	3	0	3	0	3	0	0	0	0
% App. Total	0	100	0		100	0	0		0	100	0		0	0	0	
PHF	.000	.800	.000	.800	.375	.000	.000	.375	.000	.375	.000	.375	.000	.000	.000	.000

Counts Unlimited
PO Box 1178
Corona, CA 92878
(951) 268-6268

City of San Bernardino
N/S: Cedar Avenue/Rubidoux Boulevard
E/W: Tarragona Drive/El Rivino Road
Weather: Clear

File Name : 15_CSB_Cedar_El Rivino AM
Site Code : 04520047
Start Date : 1/23/2020
Page No : 1

Groups Printed- 4+ Axle Trucks

	Cedar Avenue Southbound				El Rivino Road Westbound				Rubidoux Boulevard Northbound				Tarragona Drive Eastbound				
Start Time	Left	Thru	Right	App. Total	Left	Thru	Right	App. Total	Left	Thru	Right	App. Total	Left	Thru	Right	App. Total	Int. Total
07:00 AM	1	5	0	6	3	0	0	3	0	8	0	8	0	0	0	0	17
07:15 AM	0	7	0	7	0	0	2	2	1	4	1	6	0	0	0	0	15
07:30 AM	0	12	0	12	1	0	2	3	0	4	0	4	0	0	0	0	19
07:45 AM	0	4	0	4	1	0	0	1	0	3	0	3	0	0	0	0	8
Total	1	28	0	29	5	0	4	9	1	19	1	21	0	0	0	0	59
08:00 AM	1	7	0	8	1	0	0	1	0	6	0	6	0	0	0	0	15
08:15 AM	0	9	0	9	0	0	1	1	0	4	0	4	0	0	0	0	14
08:30 AM	0	8	0	8	1	0	0	1	0	9	2	11	0	0	0	0	20
08:45 AM	1	9	0	10	2	0	0	2	0	7	0	7	0	0	0	0	19
Total	2	33	0	35	4	0	1	5	0	26	2	28	0	0	0	0	68
Grand Total	3	61	0	64	9	0	5	14	1	45	3	49	0	0	0	0	127
Apprch %	4.7	95.3	0		64.3	0	35.7		2	91.8	6.1		0	0	0		
Total %	2.4	48	0	50.4	7.1	0	3.9	11	0.8	35.4	2.4	38.6	0	0	0	0	

	Cedar Avenue Southbound				El Rivino Road Westbound				Rubidoux Boulevard Northbound				Tarragona Drive Eastbound				
Start Time	Left	Thru	Right	App. Total	Left	Thru	Right	App. Total	Left	Thru	Right	App. Total	Left	Thru	Right	App. Total	Int. Total
Peak Hour Analysis From 07:15 AM to 08:00 AM - Peak 1 of 1																	
Peak Hour for Entire Intersection Begins at 07:15 AM																	
07:15 AM	0	7	0	7	0	0	**2**	2	**1**	4	**1**	**6**	0	0	0	0	15
07:30 AM	0	**12**	0	**12**	**1**	0	2	**3**	0	4	0	4	0	0	0	0	**19**
07:45 AM	0	4	0	4	1	0	0	1	0	3	0	3	0	0	0	0	8
08:00 AM	**1**	7	0	8	1	0	0	1	0	**6**	0	6	0	0	0	0	15
Total Volume	1	30	0	31	3	0	4	7	1	17	1	19	0	0	0	0	57
% App. Total	3.2	96.8	0		42.9	0	57.1		5.3	89.5	5.3		0	0	0		
PHF	.250	.625	.000	.646	.750	.000	.500	.583	.250	.708	.250	.792	.000	.000	.000	.000	.750

Counts Unlimited
PO Box 1178
Corona, CA 92878
(951) 268-6268

City of San Bernardino
N/S: Cedar Avenue/Rubidoux Boulevard
E/W: Tarragona Drive/El Rivino Road
Weather: Clear

File Name : 15_CSB_Cedar_El Rivino AM
Site Code : 04520047
Start Date : 1/23/2020
Page No : 2

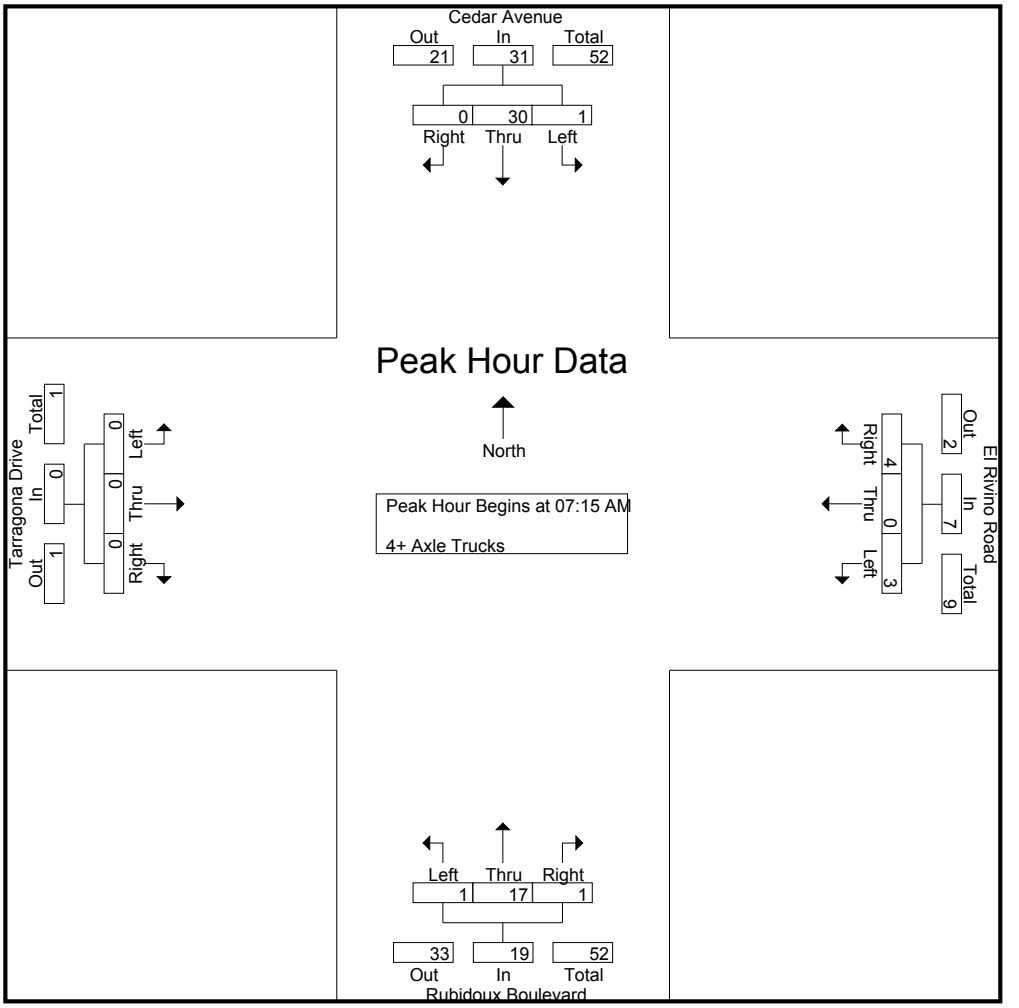

Peak Hour Analysis From 07:15 AM to 08:00 AM - Peak 1 of 1
Peak Hour for Each Approach Begins at:

	07:15 AM				07:15 AM				07:15 AM				07:15 AM			
+0 mins.	0	7	0	7	0	0	**2**	2	**1**	4	**1**	**6**	0	0	0	0
+15 mins.	0	**12**	0	**12**	**1**	0	2	**3**	0	4	0	4	0	0	0	0
+30 mins.	0	4	0	4	1	0	0	1	0	3	0	3	0	0	0	0
+45 mins.	**1**	7	0	8	1	0	0	1	0	**6**	0	6	0	0	0	0
Total Volume	1	30	0	31	3	0	4	7	1	17	1	19	0	0	0	0
% App. Total	3.2	96.8	0		42.9	0	57.1		5.3	89.5	5.3		0	0	0	
PHF	.250	.625	.000	.646	.750	.000	.500	.583	.250	.708	.250	.792	.000	.000	.000	.000

Counts Unlimited
PO Box 1178
Corona, CA 92878
(951) 268-6268

City of San Bernardino
N/S: Cedar Avenue/Rubidoux Boulevard
E/W: Tarragona Drive/El Rivino Road
Weather: Clear

File Name : 15_CSB_Cedar_El Rivino PM
Site Code : 04520047
Start Date : 1/23/2020
Page No : 1

Groups Printed- Passenger Vehicles - Large 2 Axle Vehicles - 3 Axle Vehicles - 4+ Axle Trucks

	Cedar Avenue Southbound				El Rivino Road Westbound				Rubidoux Boulevard Northbound				Tarragona Drive Eastbound				
Start Time	Left	Thru	Right	App. Total	Left	Thru	Right	App. Total	Left	Thru	Right	App. Total	Left	Thru	Right	App. Total	Int. Total
04:00 PM	22	216	4	242	30	2	18	50	1	169	10	180	2	0	1	3	475
04:15 PM	47	245	6	298	22	1	21	44	2	134	22	158	1	0	0	1	501
04:30 PM	50	175	3	228	26	1	14	41	2	176	7	185	1	0	1	2	456
04:45 PM	51	226	3	280	13	1	10	24	1	146	15	162	8	0	1	9	475
Total	170	862	16	1048	91	5	63	159	6	625	54	685	12	0	3	15	1907
05:00 PM	39	210	6	255	16	0	18	34	1	166	16	183	3	2	2	7	479
05:15 PM	37	212	1	250	14	0	17	31	0	169	16	185	4	0	0	4	470
05:30 PM	37	164	2	203	18	2	10	30	4	181	12	197	1	0	1	2	432
05:45 PM	23	202	4	229	17	1	12	30	2	143	12	157	5	0	0	5	421
Total	136	788	13	937	65	3	57	125	7	659	56	722	13	2	3	18	1802
Grand Total	306	1650	29	1985	156	8	120	284	13	1284	110	1407	25	2	6	33	3709
Apprch %	15.4	83.1	1.5		54.9	2.8	42.3		0.9	91.3	7.8		75.8	6.1	18.2		
Total %	8.3	44.5	0.8	53.5	4.2	0.2	3.2	7.7	0.4	34.6	3	37.9	0.7	0.1	0.2	0.9	
Passenger Vehicles	268	1545	29	1842	112	8	117	237	13	1212	70	1295	25	2	5	32	3406
% Passenger Vehicles	87.6	93.6	100	92.8	71.8	100	97.5	83.5	100	94.4	63.6	92	100	100	83.3	97	91.8
Large 2 Axle Vehicles	19	35	0	54	15	0	2	17	0	27	16	43	0	0	1	1	115
% Large 2 Axle Vehicles	6.2	2.1	0	2.7	9.6	0	1.7	6	0	2.1	14.5	3.1	0	0	16.7	3	3.1
3 Axle Vehicles	15	35	0	50	7	0	0	7	0	15	4	19	0	0	0	0	76
% 3 Axle Vehicles	4.9	2.1	0	2.5	4.5	0	0	2.5	0	1.2	3.6	1.4	0	0	0	0	2
4+ Axle Trucks	4	35	0	39	22	0	1	23	0	30	20	50	0	0	0	0	112
% 4+ Axle Trucks	1.3	2.1	0	2	14.1	0	0.8	8.1	0	2.3	18.2	3.6	0	0	0	0	3

	Cedar Avenue Southbound				El Rivino Road Westbound				Rubidoux Boulevard Northbound				Tarragona Drive Eastbound				
Start Time	Left	Thru	Right	App. Total	Left	Thru	Right	App. Total	Left	Thru	Right	App. Total	Left	Thru	Right	App. Total	Int. Total
Peak Hour Analysis From 04:00 PM to 05:45 PM - Peak 1 of 1																	
Peak Hour for Entire Intersection Begins at 04:15 PM																	
04:15 PM	47	**245**	**6**	**298**	22	**1**	**21**	**44**	**2**	134	**22**	158	1	0	0	1	**501**
04:30 PM	50	175	3	228	**26**	1	14	41	2	**176**	7	**185**	1	0	1	2	456
04:45 PM	**51**	226	3	280	13	1	10	24	1	146	15	162	**8**	0	1	**9**	475
05:00 PM	39	210	6	255	16	0	18	34	1	166	16	183	3	**2**	**2**	7	479
Total Volume	187	856	18	1061	77	3	63	143	6	622	60	688	13	2	4	19	1911
% App. Total	17.6	80.7	1.7		53.8	2.1	44.1		0.9	90.4	8.7		68.4	10.5	21.1		
PHF	.917	.873	.750	.890	.740	.750	.750	.813	.750	.884	.682	.930	.406	.250	.500	.528	.954

Counts Unlimited
PO Box 1178
Corona, CA 92878
(951) 268-6268

City of San Bernardino
N/S: Cedar Avenue/Rubidoux Boulevard
E/W: Tarragona Drive/El Rivino Road
Weather: Clear

File Name : 15_CSB_Cedar_El Rivino PM
Site Code : 04520047
Start Date : 1/23/2020
Page No : 2

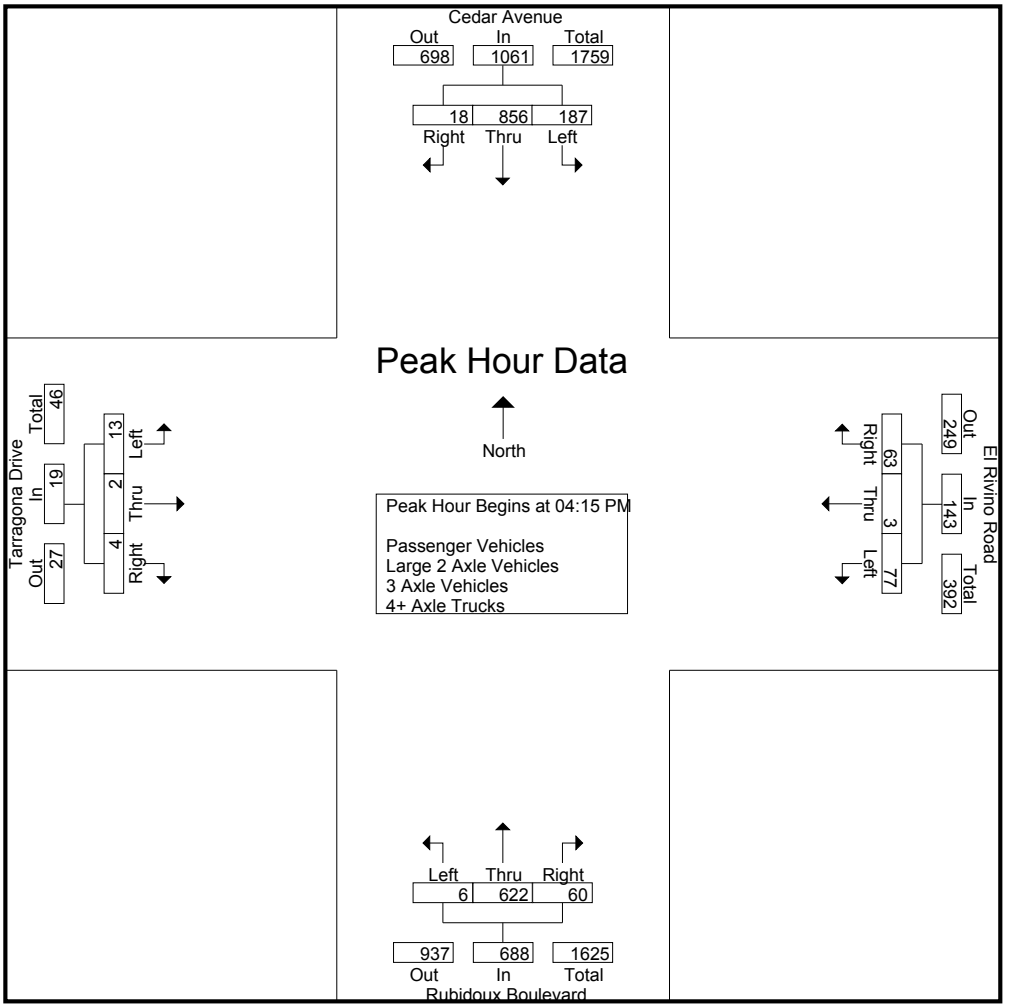

Peak Hour Analysis From 04:00 PM to 05:45 PM - Peak 1 of 1
Peak Hour for Each Approach Begins at:

	04:15 PM				04:00 PM				04:45 PM				04:30 PM			
+0 mins.	47	**245**	**6**	**298**	**30**	**2**	18	**50**	1	146	15	162	1	0	1	2
+15 mins.	50	175	3	228	22	1	**21**	44	1	166	**16**	183	**8**	0	1	**9**
+30 mins.	**51**	226	3	280	26	1	14	41	0	169	16	185	3	**2**	**2**	7
+45 mins.	39	210	6	255	13	1	10	24	**4**	**181**	12	**197**	4	0	0	4
Total Volume	187	856	18	1061	91	5	63	159	6	662	59	727	16	2	4	22
% App. Total	17.6	80.7	1.7		57.2	3.1	39.6		0.8	91.1	8.1		72.7	9.1	18.2	
PHF	.917	.873	.750	.890	.758	.625	.750	.795	.375	.914	.922	.923	.500	.250	.500	.611

Counts Unlimited
PO Box 1178
Corona, CA 92878
(951) 268-6268

City of San Bernardino
N/S: Cedar Avenue/Rubidoux Boulevard
E/W: Tarragona Drive/El Rivino Road
Weather: Clear

File Name : 15_CSB_Cedar_El Rivino PM
Site Code : 04520047
Start Date : 1/23/2020
Page No : 1

Groups Printed- Passenger Vehicles

	Cedar Avenue Southbound				El Rivino Road Westbound				Rubidoux Boulevard Northbound				Tarragona Drive Eastbound				
Start Time	Left	Thru	Right	App. Total	Left	Thru	Right	App. Total	Left	Thru	Right	App. Total	Left	Thru	Right	App. Total	Int. Total
04:00 PM	17	196	4	217	24	2	17	43	1	155	8	164	2	0	0	2	426
04:15 PM	39	217	6	262	14	1	20	35	2	123	17	142	1	0	0	1	440
04:30 PM	42	166	3	211	17	1	13	31	2	168	3	173	1	0	1	2	417
04:45 PM	45	209	3	257	11	1	10	22	1	135	8	144	8	0	1	9	432
Total	143	788	16	947	66	5	60	131	6	581	36	623	12	0	2	14	1715
05:00 PM	36	199	6	241	12	0	18	30	1	159	9	169	3	2	2	7	447
05:15 PM	34	198	1	233	11	0	17	28	0	161	9	170	4	0	0	4	435
05:30 PM	36	160	2	198	11	2	10	23	4	174	8	186	1	0	1	2	409
05:45 PM	19	200	4	223	12	1	12	25	2	137	8	147	5	0	0	5	400
Total	125	757	13	895	46	3	57	106	7	631	34	672	13	2	3	18	1691
Grand Total	268	1545	29	1842	112	8	117	237	13	1212	70	1295	25	2	5	32	3406
Apprch %	14.5	83.9	1.6		47.3	3.4	49.4		1	93.6	5.4		78.1	6.2	15.6		
Total %	7.9	45.4	0.9	54.1	3.3	0.2	3.4	7	0.4	35.6	2.1	38	0.7	0.1	0.1	0.9	

	Cedar Avenue Southbound				El Rivino Road Westbound				Rubidoux Boulevard Northbound				Tarragona Drive Eastbound				
Start Time	Left	Thru	Right	App. Total	Left	Thru	Right	App. Total	Left	Thru	Right	App. Total	Left	Thru	Right	App. Total	Int. Total
Peak Hour Analysis From 04:15 PM to 05:00 PM - Peak 1 of 1																	
Peak Hour for Entire Intersection Begins at 04:15 PM																	
04:15 PM	39	**217**	**6**	**262**	14	**1**	**20**	**35**	**2**	123	**17**	142	1	0	0	1	440
04:30 PM	42	166	3	211	**17**	1	13	31	2	**168**	3	**173**	1	0	1	2	417
04:45 PM	**45**	209	3	257	11	1	10	22	1	135	8	144	**8**	0	1	**9**	432
05:00 PM	36	199	6	241	12	0	18	30	1	159	9	169	3	**2**	**2**	7	**447**
Total Volume	162	791	18	971	54	3	61	118	6	585	37	628	13	2	4	19	1736
% App. Total	16.7	81.5	1.9		45.8	2.5	51.7		1	93.2	5.9		68.4	10.5	21.1		
PHF	.900	.911	.750	.927	.794	.750	.763	.843	.750	.871	.544	.908	.406	.250	.500	.528	.971

Counts Unlimited
PO Box 1178
Corona, CA 92878
(951) 268-6268

City of San Bernardino
N/S: Cedar Avenue/Rubidoux Boulevard
E/W: Tarragona Drive/El Rivino Road
Weather: Clear

File Name : 15_CSB_Cedar_El Rivino PM
Site Code : 04520047
Start Date : 1/23/2020

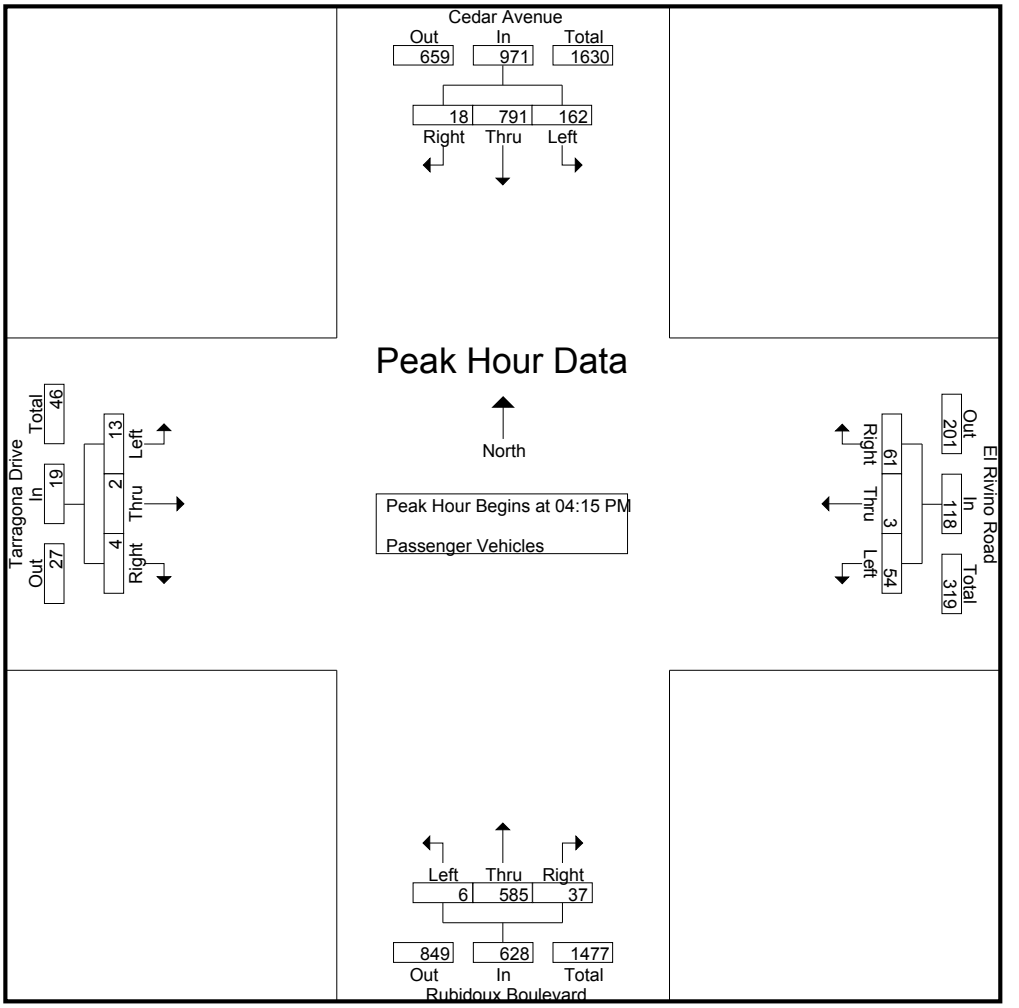

Peak Hour Analysis From 04:15 PM to 05:00 PM - Peak 1 of 1
Peak Hour for Each Approach Begins at:

	04:15 PM				04:15 PM				04:15 PM				04:15 PM			
+0 mins.	39	**217**	**6**	**262**	14	**1**	**20**	**35**	**2**	123	**17**	142	1	0	0	1
+15 mins.	42	166	3	211	**17**	1	13	31	2	**168**	3	**173**	1	0	1	2
+30 mins.	**45**	209	3	257	11	1	10	22	1	135	8	144	**8**	0	1	**9**
+45 mins.	36	199	6	241	12	0	18	30	1	159	9	169	3	**2**	**2**	7
Total Volume	162	791	18	971	54	3	61	118	6	585	37	628	13	2	4	19
% App. Total	16.7	81.5	1.9		45.8	2.5	51.7		1	93.2	5.9		68.4	10.5	21.1	
PHF	.900	.911	.750	.927	.794	.750	.763	.843	.750	.871	.544	.908	.406	.250	.500	.528

Counts Unlimited
PO Box 1178
Corona, CA 92878
(951) 268-6268

City of San Bernardino
N/S: Cedar Avenue/Rubidoux Boulevard
E/W: Tarragona Drive/El Rivino Road
Weather: Clear

File Name : 15_CSB_Cedar_El Rivino PM
Site Code : 04520047
Start Date : 1/23/2020
Page No : 1

Groups Printed- Large 2 Axle Vehicles

	Cedar Avenue Southbound				El Rivino Road Westbound				Rubidoux Boulevard Northbound				Tarragona Drive Eastbound				
Start Time	Left	Thru	Right	App. Total	Left	Thru	Right	App. Total	Left	Thru	Right	App. Total	Left	Thru	Right	App. Total	Int. Total
04:00 PM	4	7	0	11	3	0	1	4	0	2	0	2	0	0	1	1	18
04:15 PM	2	11	0	13	5	0	0	5	0	5	2	7	0	0	0	0	25
04:30 PM	4	3	0	7	0	0	1	1	0	5	1	6	0	0	0	0	14
04:45 PM	4	4	0	8	0	0	0	0	0	4	1	5	0	0	0	0	13
Total	14	25	0	39	8	0	2	10	0	16	4	20	0	0	1	1	70
05:00 PM	3	3	0	6	2	0	0	2	0	1	2	3	0	0	0	0	11
05:15 PM	0	6	0	6	0	0	0	0	0	3	4	7	0	0	0	0	13
05:30 PM	1	1	0	2	2	0	0	2	0	5	2	7	0	0	0	0	11
05:45 PM	1	0	0	1	3	0	0	3	0	2	4	6	0	0	0	0	10
Total	5	10	0	15	7	0	0	7	0	11	12	23	0	0	0	0	45
Grand Total	19	35	0	54	15	0	2	17	0	27	16	43	0	0	1	1	115
Apprch %	35.2	64.8	0		88.2	0	11.8		0	62.8	37.2		0	0	100		
Total %	16.5	30.4	0	47	13	0	1.7	14.8	0	23.5	13.9	37.4	0	0	0.9	0.9	

	Cedar Avenue Southbound				El Rivino Road Westbound				Rubidoux Boulevard Northbound				Tarragona Drive Eastbound				
Start Time	Left	Thru	Right	App. Total	Left	Thru	Right	App. Total	Left	Thru	Right	App. Total	Left	Thru	Right	App. Total	Int. Total
Peak Hour Analysis From 04:15 PM to 05:00 PM - Peak 1 of 1																	
Peak Hour for Entire Intersection Begins at 04:15 PM																	
04:15 PM	2	**11**	0	**13**	**5**	0	0	**5**	0	**5**	**2**	**7**	0	0	0	0	**25**
04:30 PM	**4**	3	0	7	0	0	**1**	1	0	5	1	6	0	0	0	0	14
04:45 PM	4	4	0	8	0	0	0	0	0	4	1	5	0	0	0	0	13
05:00 PM	3	3	0	6	2	0	0	2	0	1	2	3	0	0	0	0	11
Total Volume	13	21	0	34	7	0	1	8	0	15	6	21	0	0	0	0	63
% App. Total	38.2	61.8	0		87.5	0	12.5		0	71.4	28.6		0	0	0		
PHF	.813	.477	.000	.654	.350	.000	.250	.400	.000	.750	.750	.750	.000	.000	.000	.000	.630

Counts Unlimited
PO Box 1178
Corona, CA 92878
(951) 268-6268

City of San Bernardino
N/S: Cedar Avenue/Rubidoux Boulevard
E/W: Tarragona Drive/El Rivino Road
Weather: Clear

File Name : 15_CSB_Cedar_El Rivino PM
Site Code : 04520047
Start Date : 1/23/2020
Page No : 2

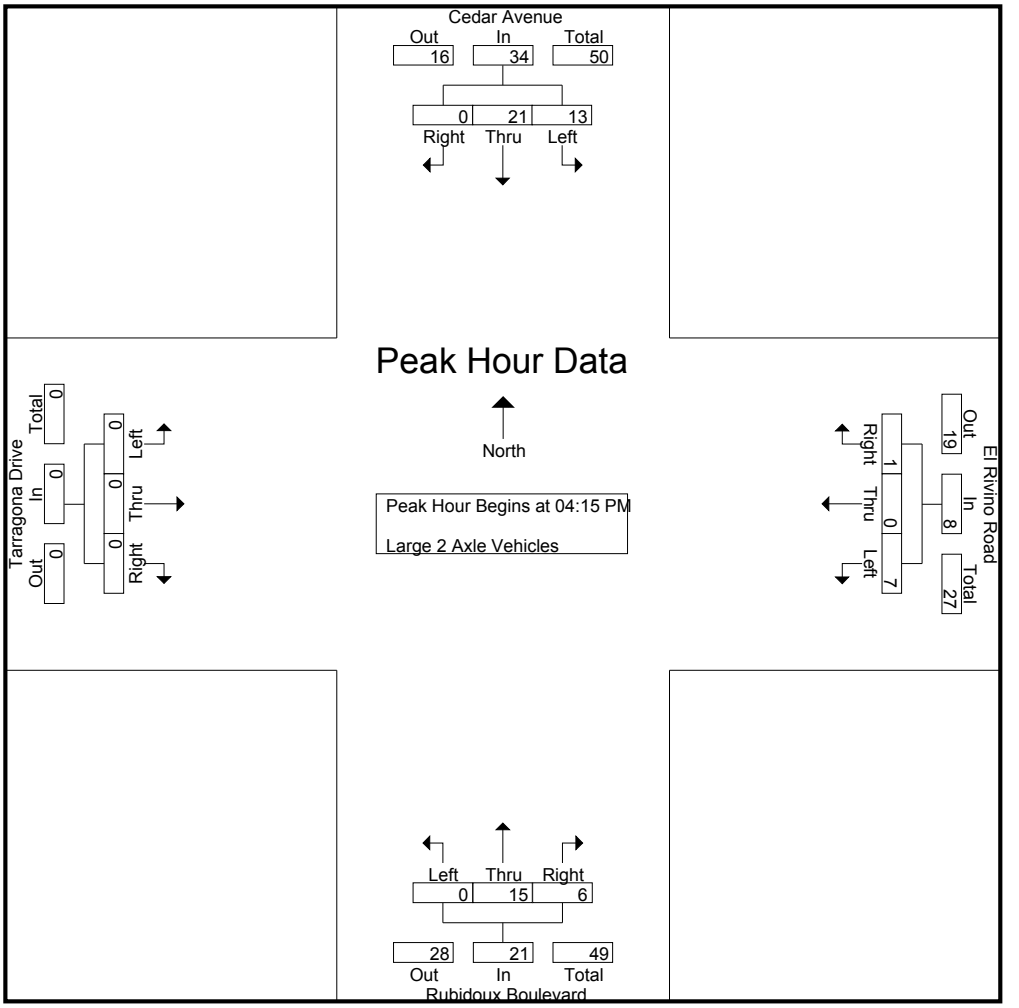

Peak Hour Analysis From 04:15 PM to 05:00 PM - Peak 1 of 1
Peak Hour for Each Approach Begins at:

	04:15 PM				04:15 PM				04:15 PM				04:15 PM			
+0 mins.	2	**11**	0	**13**	**5**	0	0	**5**	0	**5**	**2**	**7**	0	0	0	0
+15 mins.	**4**	3	0	7	0	0	**1**	1	0	5	1	6	0	0	0	0
+30 mins.	4	4	0	8	0	0	0	0	0	4	1	5	0	0	0	0
+45 mins.	3	3	0	6	2	0	0	2	0	1	2	3	0	0	0	0
Total Volume	13	21	0	34	7	0	1	8	0	15	6	21	0	0	0	0
% App. Total	38.2	61.8	0		87.5	0	12.5		0	71.4	28.6		0	0	0	
PHF	.813	.477	.000	.654	.350	.000	.250	.400	.000	.750	.750	.750	.000	.000	.000	.000

Counts Unlimited
PO Box 1178
Corona, CA 92878
(951) 268-6268

City of San Bernardino
N/S: Cedar Avenue/Rubidoux Boulevard
E/W: Tarragona Drive/El Rivino Road
Weather: Clear

File Name : 15_CSB_Cedar_El Rivino PM
Site Code : 04520047
Start Date : 1/23/2020
Page No : 1

Groups Printed- 3 Axle Vehicles

	Cedar Avenue Southbound				El Rivino Road Westbound				Rubidoux Boulevard Northbound				Tarragona Drive Eastbound				
Start Time	Left	Thru	Right	App. Total	Left	Thru	Right	App. Total	Left	Thru	Right	App. Total	Left	Thru	Right	App. Total	Int. Total
04:00 PM	1	7	0	8	1	0	0	1	0	4	0	4	0	0	0	0	13
04:15 PM	5	11	0	16	1	0	0	1	0	1	1	2	0	0	0	0	19
04:30 PM	3	3	0	6	1	0	0	1	0	1	1	2	0	0	0	0	9
04:45 PM	2	4	0	6	0	0	0	0	0	3	0	3	0	0	0	0	9
Total	11	25	0	36	3	0	0	3	0	9	2	11	0	0	0	0	50
05:00 PM	0	3	0	3	0	0	0	0	0	1	0	1	0	0	0	0	4
05:15 PM	2	6	0	8	1	0	0	1	0	2	2	4	0	0	0	0	13
05:30 PM	0	1	0	1	3	0	0	3	0	2	0	2	0	0	0	0	6
05:45 PM	2	0	0	2	0	0	0	0	0	1	0	1	0	0	0	0	3
Total	4	10	0	14	4	0	0	4	0	6	2	8	0	0	0	0	26
Grand Total	15	35	0	50	7	0	0	7	0	15	4	19	0	0	0	0	76
Apprch %	30	70	0		100	0	0		0	78.9	21.1		0	0	0		
Total %	19.7	46.1	0	65.8	9.2	0	0	9.2	0	19.7	5.3	25	0	0	0	0	

	Cedar Avenue Southbound				El Rivino Road Westbound				Rubidoux Boulevard Northbound				Tarragona Drive Eastbound				
Start Time	Left	Thru	Right	App. Total	Left	Thru	Right	App. Total	Left	Thru	Right	App. Total	Left	Thru	Right	App. Total	Int. Total
Peak Hour Analysis From 04:15 PM to 05:00 PM - Peak 1 of 1																	
Peak Hour for Entire Intersection Begins at 04:15 PM																	
04:15 PM	**5**	**11**	0	**16**	**1**	0	0	**1**	0	1	**1**	2	0	0	0	0	**19**
04:30 PM	3	3	0	6	1	0	0	1	0	1	1	2	0	0	0	0	9
04:45 PM	2	4	0	6	0	0	0	0	0	**3**	0	**3**	0	0	0	0	9
05:00 PM	0	3	0	3	0	0	0	0	0	1	0	1	0	0	0	0	4
Total Volume	10	21	0	31	2	0	0	2	0	6	2	8	0	0	0	0	41
% App. Total	32.3	67.7	0		100	0	0		0	75	25		0	0	0		
PHF	.500	.477	.000	.484	.500	.000	.000	.500	.000	.500	.500	.667	.000	.000	.000	.000	.539

Counts Unlimited
PO Box 1178
Corona, CA 92878
(951) 268-6268

City of San Bernardino
N/S: Cedar Avenue/Rubidoux Boulevard
E/W: Tarragona Drive/El Rivino Road
Weather: Clear

File Name : 15_CSB_Cedar_El Rivino PM
Site Code : 04520047
Start Date : 1/23/2020
Page No : 2

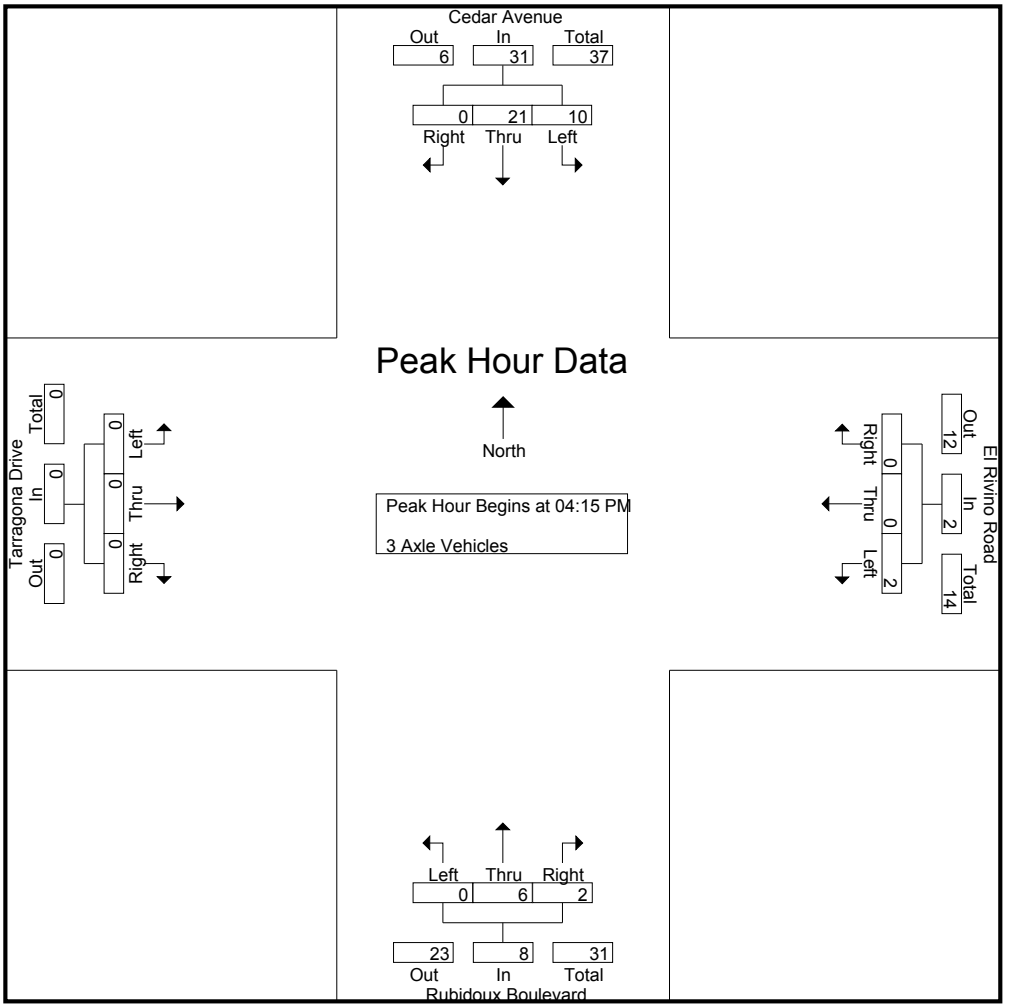

Peak Hour Analysis From 04:15 PM to 05:00 PM - Peak 1 of 1
Peak Hour for Each Approach Begins at:

	04:15 PM				04:15 PM				04:15 PM				04:15 PM			
+0 mins.	**5**	**11**	0	**16**	**1**	0	0	**1**	0	1	**1**	2	0	0	0	0
+15 mins.	3	3	0	6	1	0	0	1	0	1	1	2	0	0	0	0
+30 mins.	2	4	0	6	0	0	0	0	0	**3**	0	**3**	0	0	0	0
+45 mins.	0	3	0	3	0	0	0	0	0	1	0	1	0	0	0	0
Total Volume	10	21	0	31	2	0	0	2	0	6	2	8	0	0	0	0
% App. Total	32.3	67.7	0		100	0	0		0	75	25		0	0	0	
PHF	.500	.477	.000	.484	.500	.000	.000	.500	.000	.500	.500	.667	.000	.000	.000	.000

Counts Unlimited
PO Box 1178
Corona, CA 92878
(951) 268-6268

City of San Bernardino
N/S: Cedar Avenue/Rubidoux Boulevard
E/W: Tarragona Drive/El Rivino Road
Weather: Clear

File Name : 15_CSB_Cedar_El Rivino PM
Site Code : 04520047
Start Date : 1/23/2020
Page No : 1

Groups Printed- 4+ Axle Trucks

	Cedar Avenue Southbound				El Rivino Road Westbound				Rubidoux Boulevard Northbound				Tarragona Drive Eastbound				
Start Time	Left	Thru	Right	App. Total	Left	Thru	Right	App. Total	Left	Thru	Right	App. Total	Left	Thru	Right	App. Total	Int. Total
04:00 PM	0	6	0	6	2	0	0	2	0	8	2	10	0	0	0	0	18
04:15 PM	1	6	0	7	2	0	1	3	0	5	2	7	0	0	0	0	17
04:30 PM	1	3	0	4	8	0	0	8	0	2	2	4	0	0	0	0	16
04:45 PM	0	9	0	9	2	0	0	2	0	4	6	10	0	0	0	0	21
Total	2	24	0	26	14	0	1	15	0	19	12	31	0	0	0	0	72
05:00 PM	0	5	0	5	2	0	0	2	0	5	5	10	0	0	0	0	17
05:15 PM	1	2	0	3	2	0	0	2	0	3	1	4	0	0	0	0	9
05:30 PM	0	2	0	2	2	0	0	2	0	0	2	2	0	0	0	0	6
05:45 PM	1	2	0	3	2	0	0	2	0	3	0	3	0	0	0	0	8
Total	2	11	0	13	8	0	0	8	0	11	8	19	0	0	0	0	40
Grand Total	4	35	0	39	22	0	1	23	0	30	20	50	0	0	0	0	112
Apprch %	10.3	89.7	0		95.7	0	4.3		0	60	40		0	0	0		
Total %	3.6	31.2	0	34.8	19.6	0	0.9	20.5	0	26.8	17.9	44.6	0	0	0	0	

	Cedar Avenue Southbound				El Rivino Road Westbound				Rubidoux Boulevard Northbound				Tarragona Drive Eastbound				
Start Time	Left	Thru	Right	App. Total	Left	Thru	Right	App. Total	Left	Thru	Right	App. Total	Left	Thru	Right	App. Total	Int. Total
Peak Hour Analysis From 04:15 PM to 05:00 PM - Peak 1 of 1																	
Peak Hour for Entire Intersection Begins at 04:15 PM																	
04:15 PM	**1**	6	0	7	2	0	**1**	3	0	**5**	2	7	0	0	0	0	17
04:30 PM	1	3	0	4	**8**	0	0	**8**	0	2	2	4	0	0	0	0	16
04:45 PM	0	**9**	0	**9**	2	0	0	2	0	4	**6**	**10**	0	0	0	0	**21**
05:00 PM	0	5	0	5	2	0	0	2	0	5	5	10	0	0	0	0	17
Total Volume	2	23	0	25	14	0	1	15	0	16	15	31	0	0	0	0	71
% App. Total	8	92	0		93.3	0	6.7		0	51.6	48.4		0	0	0		
PHF	.500	.639	.000	.694	.438	.000	.250	.469	.000	.800	.625	.775	.000	.000	.000	.000	.845

Counts Unlimited
PO Box 1178
Corona, CA 92878
(951) 268-6268

City of San Bernardino
N/S: Cedar Avenue/Rubidoux Boulevard
E/W: Tarragona Drive/El Rivino Road
Weather: Clear

File Name : 15_CSB_Cedar_El Rivino PM
Site Code : 04520047
Start Date : 1/23/2020
Page No : 2

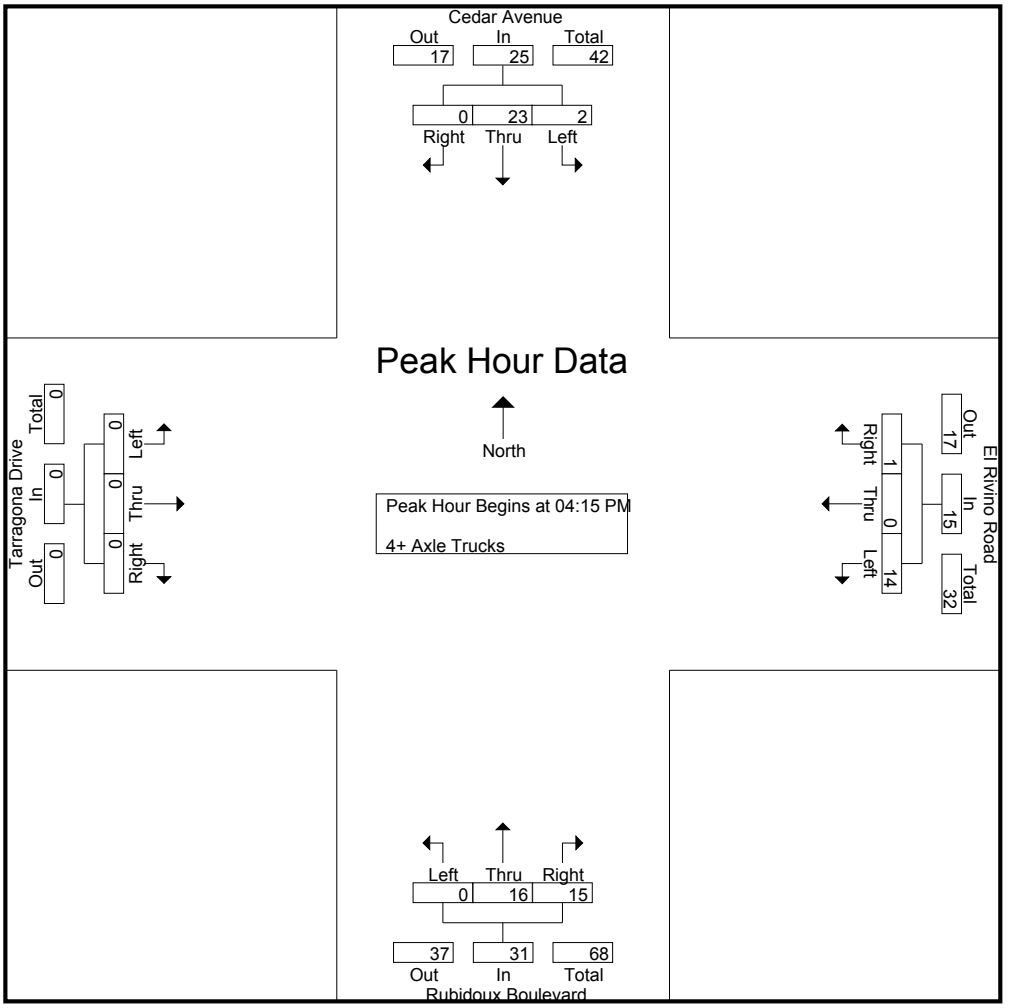

Peak Hour Analysis From 04:15 PM to 05:00 PM - Peak 1 of 1
Peak Hour for Each Approach Begins at:

	04:15 PM				04:15 PM				04:15 PM				04:15 PM			
+0 mins.	**1**	6	0	7	2	0	**1**	3	0	**5**	2	7	0	0	0	0
+15 mins.	1	3	0	4	**8**	0	0	**8**	0	2	2	4	0	0	0	0
+30 mins.	0	**9**	0	**9**	2	0	0	2	0	4	**6**	**10**	0	0	0	0
+45 mins.	0	5	0	5	2	0	0	2	0	5	5	10	0	0	0	0
Total Volume	2	23	0	25	14	0	1	15	0	16	15	31	0	0	0	0
% App. Total	8	92	0		93.3	0	6.7		0	51.6	48.4		0	0	0	
PHF	.500	.639	.000	.694	.438	.000	.250	.469	.000	.800	.625	.775	.000	.000	.000	.000

Counts Unlimited
PO Box 1178
Corona, CA 92878
(951) 268-6268

City of San Bernardino
N/S: Cedar Avenue
E/W: Orange Street
Weather: Clear

File Name : 16_CSB_Cedar_Orange AM
Site Code : 04520047
Start Date : 1/23/2020
Page No : 1

Groups Printed- Passenger Vehicles - Large 2 Axle Vehicles - 3 Axle Vehicles - 4+ Axle Trucks

	Cedar Avenue Southbound				Orange Street Westbound				Cedar Avenue Northbound				Orange Street Eastbound				
Start Time	Left	Thru	Right	App. Total	Left	Thru	Right	App. Total	Left	Thru	Right	App. Total	Left	Thru	Right	App. Total	Int. Total
07:00 AM	31	247	158	436	0	0	23	23	0	239	0	239	60	1	1	62	760
07:15 AM	28	239	118	385	1	0	31	32	0	247	0	247	85	3	5	93	757
07:30 AM	29	256	78	363	2	0	40	42	0	279	4	283	73	2	3	78	766
07:45 AM	22	259	75	356	0	0	15	15	0	253	3	256	32	0	1	33	660
Total	110	1001	429	1540	3	0	109	112	0	1018	7	1025	250	6	10	266	2943
08:00 AM	37	247	74	358	0	0	19	19	0	200	2	202	31	0	5	36	615
08:15 AM	18	237	79	334	1	0	17	18	0	225	2	227	30	0	0	30	609
08:30 AM	17	207	43	267	0	2	24	26	0	228	0	228	39	3	1	43	564
08:45 AM	21	198	49	268	0	1	18	19	0	204	2	206	28	2	1	31	524
Total	93	889	245	1227	1	3	78	82	0	857	6	863	128	5	7	140	2312
Grand Total	203	1890	674	2767	4	3	187	194	0	1875	13	1888	378	11	17	406	5255
Apprch %	7.3	68.3	24.4		2.1	1.5	96.4		0	99.3	0.7		93.1	2.7	4.2		
Total %	3.9	36	12.8	52.7	0.1	0.1	3.6	3.7	0	35.7	0.2	35.9	7.2	0.2	0.3	7.7	
Passenger Vehicles	199	1704	643	2546	4	3	183	190	0	1675	11	1686	347	11	9	367	4789
% Passenger Vehicles	98	90.2	95.4	92	100	100	97.9	97.9	0	89.3	84.6	89.3	91.8	100	52.9	90.4	91.1
Large 2 Axle Vehicles	3	76	11	90	0	0	3	3	0	86	2	88	5	0	0	5	186
% Large 2 Axle Vehicles	1.5	4	1.6	3.3	0	0	1.6	1.5	0	4.6	15.4	4.7	1.3	0	0	1.2	3.5
3 Axle Vehicles	0	14	3	17	0	0	0	0	0	36	0	36	6	0	1	7	60
% 3 Axle Vehicles	0	0.7	0.4	0.6	0	0	0	0	0	1.9	0	1.9	1.6	0	5.9	1.7	1.1
4+ Axle Trucks	1	96	17	114	0	0	1	1	0	78	0	78	20	0	7	27	220
% 4+ Axle Trucks	0.5	5.1	2.5	4.1	0	0	0.5	0.5	0	4.2	0	4.1	5.3	0	41.2	6.7	4.2

	Cedar Avenue Southbound				Orange Street Westbound				Cedar Avenue Northbound				Orange Street Eastbound				
Start Time	Left	Thru	Right	App. Total	Left	Thru	Right	App. Total	Left	Thru	Right	App. Total	Left	Thru	Right	App. Total	Int. Total
Peak Hour Analysis From 07:00 AM to 08:45 AM - Peak 1 of 1																	
Peak Hour for Entire Intersection Begins at 07:00 AM																	
07:00 AM	**31**	247	**158**	**436**	0	0	23	23	0	239	0	239	60	1	1	62	760
07:15 AM	28	239	118	385	1	0	31	32	0	247	0	247	**85**	**3**	**5**	**93**	757
07:30 AM	29	256	78	363	**2**	0	**40**	**42**	0	**279**	**4**	**283**	73	2	3	78	**766**
07:45 AM	22	**259**	75	356	0	0	15	15	0	253	3	256	32	0	1	33	660
Total Volume	110	1001	429	1540	3	0	109	112	0	1018	7	1025	250	6	10	266	2943
% App. Total	7.1	65	27.9		2.7	0	97.3		0	99.3	0.7		94	2.3	3.8		
PHF	.887	.966	.679	.883	.375	.000	.681	.667	.000	.912	.438	.905	.735	.500	.500	.715	.961

Counts Unlimited
PO Box 1178
Corona, CA 92878
(951) 268-6268

City of San Bernardino
N/S: Cedar Avenue
E/W: Orange Street
Weather: Clear

File Name : 16_CSB_Cedar_Orange AM
Site Code : 04520047
Start Date : 1/23/2020
Page No : 2

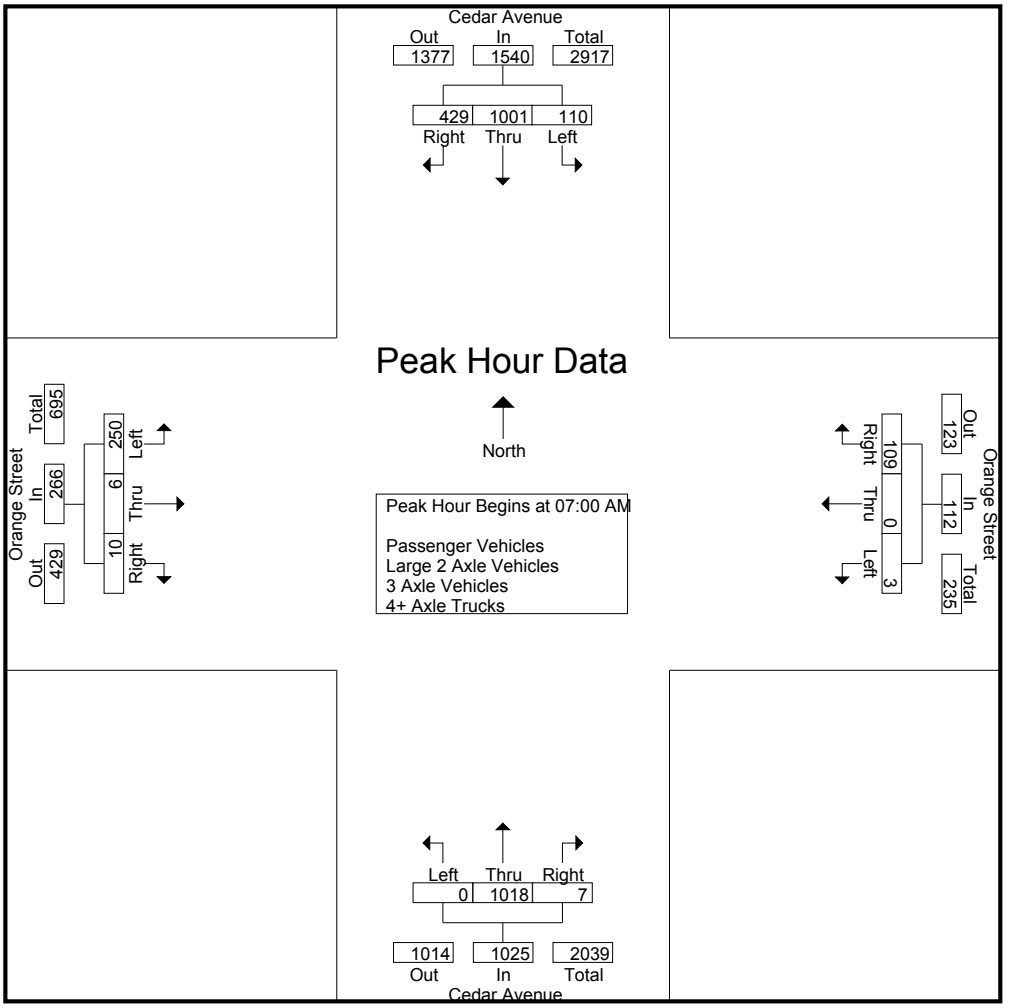

Peak Hour Analysis From 07:00 AM to 08:45 AM - Peak 1 of 1
Peak Hour for Each Approach Begins at:

	07:00 AM				07:00 AM				07:00 AM				07:00 AM			
+0 mins.	**31**	247	**158**	**436**	0	0	23	23	0	239	0	239	60	1	1	62
+15 mins.	28	239	118	385	1	0	31	32	0	247	0	247	**85**	**3**	**5**	**93**
+30 mins.	29	256	78	363	**2**	0	**40**	**42**	0	**279**	**4**	**283**	73	2	3	78
+45 mins.	22	**259**	75	356	0	0	15	15	0	253	3	256	32	0	1	33
Total Volume	110	1001	429	1540	3	0	109	112	0	1018	7	1025	250	6	10	266
% App. Total	7.1	65	27.9		2.7	0	97.3		0	99.3	0.7		94	2.3	3.8	
PHF	.887	.966	.679	.883	.375	.000	.681	.667	.000	.912	.438	.905	.735	.500	.500	.715

Counts Unlimited
PO Box 1178
Corona, CA 92878
(951) 268-6268

City of San Bernardino
N/S: Cedar Avenue
E/W: Orange Street
Weather: Clear

File Name : 16_CSB_Cedar_Orange AM
Site Code : 04520047
Start Date : 1/23/2020
Page No : 1

Groups Printed- Passenger Vehicles

	Cedar Avenue Southbound				Orange Street Westbound				Cedar Avenue Northbound				Orange Street Eastbound				
Start Time	Left	Thru	Right	App. Total	Left	Thru	Right	App. Total	Left	Thru	Right	App. Total	Left	Thru	Right	App. Total	Int. Total
07:00 AM	31	223	152	406	0	0	23	23	0	215	0	215	60	1	1	62	706
07:15 AM	28	213	116	357	1	0	31	32	0	232	0	232	83	3	3	89	710
07:30 AM	29	236	74	339	2	0	39	41	0	260	4	264	72	2	2	76	720
07:45 AM	22	240	73	335	0	0	14	14	0	229	2	231	28	0	0	28	608
Total	110	912	415	1437	3	0	107	110	0	936	6	942	243	6	6	255	2744
08:00 AM	35	219	70	324	0	0	19	19	0	177	2	179	28	0	2	30	552
08:15 AM	18	211	71	300	1	0	16	17	0	197	2	199	23	0	0	23	539
08:30 AM	17	185	39	241	0	2	23	25	0	192	0	192	31	3	0	34	492
08:45 AM	19	177	48	244	0	1	18	19	0	173	1	174	22	2	1	25	462
Total	89	792	228	1109	1	3	76	80	0	739	5	744	104	5	3	112	2045
Grand Total	199	1704	643	2546	4	3	183	190	0	1675	11	1686	347	11	9	367	4789
Apprch %	7.8	66.9	25.3		2.1	1.6	96.3		0	99.3	0.7		94.6	3	2.5		
Total %	4.2	35.6	13.4	53.2	0.1	0.1	3.8	4	0	35	0.2	35.2	7.2	0.2	0.2	7.7	

	Cedar Avenue Southbound				Orange Street Westbound				Cedar Avenue Northbound				Orange Street Eastbound				
Start Time	Left	Thru	Right	App. Total	Left	Thru	Right	App. Total	Left	Thru	Right	App. Total	Left	Thru	Right	App. Total	Int. Total
Peak Hour Analysis From 07:00 AM to 07:45 AM - Peak 1 of 1																	
Peak Hour for Entire Intersection Begins at 07:00 AM																	
07:00 AM	**31**	223	**152**	**406**	0	0	23	23	0	215	0	215	60	1	1	62	706
07:15 AM	28	213	116	357	1	0	31	32	0	232	0	232	**83**	**3**	**3**	**89**	710
07:30 AM	29	236	74	339	**2**	0	**39**	**41**	0	**260**	**4**	**264**	72	2	2	76	**720**
07:45 AM	22	**240**	73	335	0	0	14	14	0	229	2	231	28	0	0	28	608
Total Volume	110	912	415	1437	3	0	107	110	0	936	6	942	243	6	6	255	2744
% App. Total	7.7	63.5	28.9		2.7	0	97.3		0	99.4	0.6		95.3	2.4	2.4		
PHF	.887	.950	.683	.885	.375	.000	.686	.671	.000	.900	.375	.892	.732	.500	.500	.716	.953

Counts Unlimited
PO Box 1178
Corona, CA 92878
(951) 268-6268

City of San Bernardino
N/S: Cedar Avenue
E/W: Orange Street
Weather: Clear

File Name : 16_CSB_Cedar_Orange AM
Site Code : 04520047
Start Date : 1/23/2020
Page No : 2

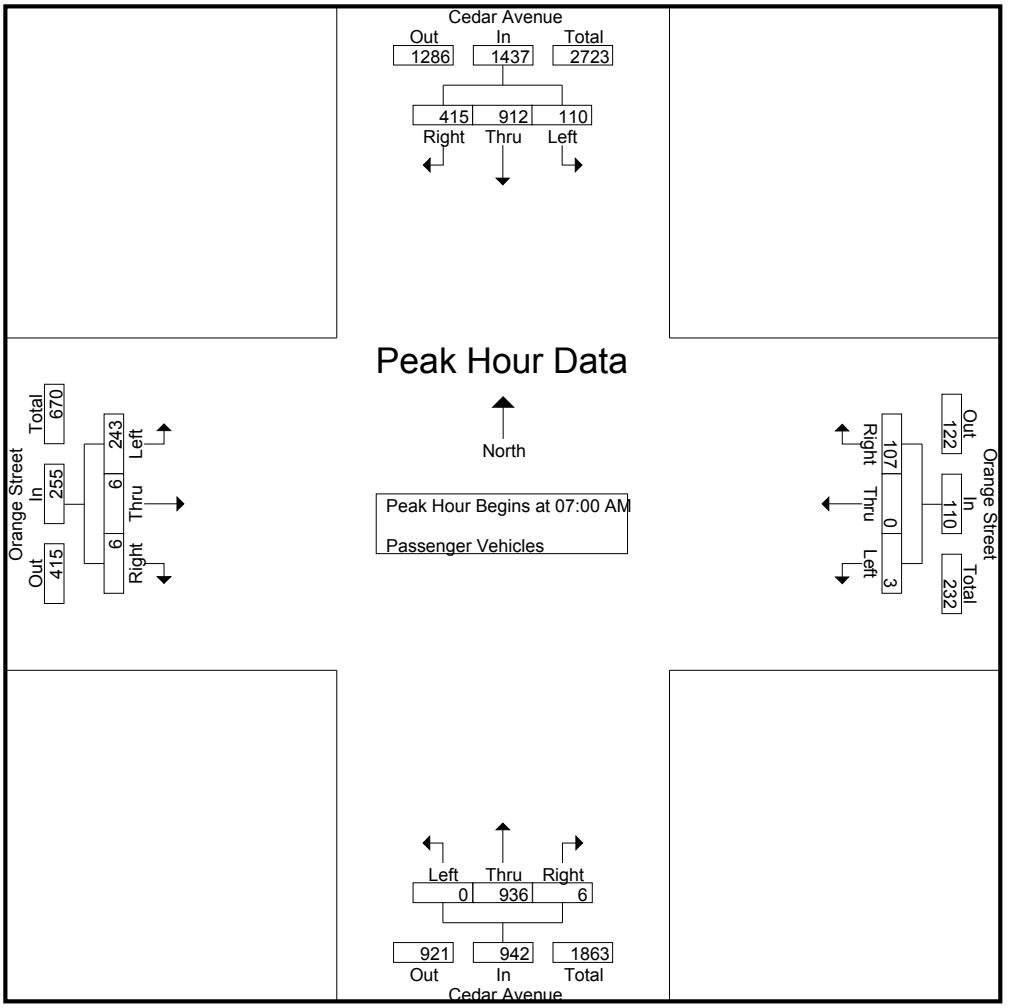

Peak Hour Analysis From 07:00 AM to 07:45 AM - Peak 1 of 1
Peak Hour for Each Approach Begins at:

	07:00 AM				07:00 AM				07:00 AM				07:00 AM			
+0 mins.	**31**	223	**152**	**406**	0	0	23	23	0	215	0	215	60	1	1	62
+15 mins.	28	213	116	357	1	0	31	32	0	232	0	232	**83**	**3**	**3**	**89**
+30 mins.	29	236	74	339	**2**	0	**39**	**41**	0	**260**	**4**	**264**	72	2	2	76
+45 mins.	22	**240**	73	335	0	0	14	14	0	229	2	231	28	0	0	28
Total Volume	110	912	415	1437	3	0	107	110	0	936	6	942	243	6	6	255
% App. Total	7.7	63.5	28.9		2.7	0	97.3		0	99.4	0.6		95.3	2.4	2.4	
PHF	.887	.950	.683	.885	.375	.000	.686	.671	.000	.900	.375	.892	.732	.500	.500	.716

Counts Unlimited
PO Box 1178
Corona, CA 92878
(951) 268-6268

City of San Bernardino
N/S: Cedar Avenue
E/W: Orange Street
Weather: Clear

File Name : 16_CSB_Cedar_Orange AM
Site Code : 04520047
Start Date : 1/23/2020
Page No : 1

Groups Printed- Large 2 Axle Vehicles

	Cedar Avenue Southbound				Orange Street Westbound				Cedar Avenue Northbound				Orange Street Eastbound				
Start Time	Left	Thru	Right	App. Total	Left	Thru	Right	App. Total	Left	Thru	Right	App. Total	Left	Thru	Right	App. Total	Int. Total
07:00 AM	0	4	3	7	0	0	0	0	0	6	0	6	0	0	0	0	13
07:15 AM	0	13	0	13	0	0	0	0	0	5	0	5	0	0	0	0	18
07:30 AM	0	11	2	13	0	0	1	1	0	9	0	9	0	0	0	0	23
07:45 AM	0	10	1	11	0	0	0	0	0	12	1	13	0	0	0	0	24
Total	0	38	6	44	0	0	1	1	0	32	1	33	0	0	0	0	78
08:00 AM	1	13	1	15	0	0	0	0	0	10	0	10	2	0	0	2	27
08:15 AM	0	6	3	9	0	0	1	1	0	13	0	13	2	0	0	2	25
08:30 AM	0	9	1	10	0	0	1	1	0	13	0	13	0	0	0	0	24
08:45 AM	2	10	0	12	0	0	0	0	0	18	1	19	1	0	0	1	32
Total	3	38	5	46	0	0	2	2	0	54	1	55	5	0	0	5	108
Grand Total	3	76	11	90	0	0	3	3	0	86	2	88	5	0	0	5	186
Apprch %	3.3	84.4	12.2		0	0	100		0	97.7	2.3		100	0	0		
Total %	1.6	40.9	5.9	48.4	0	0	1.6	1.6	0	46.2	1.1	47.3	2.7	0	0	2.7	

	Cedar Avenue Southbound				Orange Street Westbound				Cedar Avenue Northbound				Orange Street Eastbound				
Start Time	Left	Thru	Right	App. Total	Left	Thru	Right	App. Total	Left	Thru	Right	App. Total	Left	Thru	Right	App. Total	Int. Total
Peak Hour Analysis From 07:00 AM to 07:45 AM - Peak 1 of 1																	
Peak Hour for Entire Intersection Begins at 07:00 AM																	
07:00 AM	0	4	**3**	7	0	0	0	0	0	6	0	6	0	0	0	0	13
07:15 AM	0	**13**	0	**13**	0	0	0	0	0	5	0	5	0	0	0	0	18
07:30 AM	0	11	2	13	0	0	**1**	**1**	0	9	0	9	0	0	0	0	23
07:45 AM	0	10	1	11	0	0	0	0	0	**12**	**1**	**13**	0	0	0	0	**24**
Total Volume	0	38	6	44	0	0	1	1	0	32	1	33	0	0	0	0	78
% App. Total	0	86.4	13.6		0	0	100		0	97	3		0	0	0		
PHF	.000	.731	.500	.846	.000	.000	.250	.250	.000	.667	.250	.635	.000	.000	.000	.000	.813

Counts Unlimited
PO Box 1178
Corona, CA 92878
(951) 268-6268

City of San Bernardino
N/S: Cedar Avenue
E/W: Orange Street
Weather: Clear

File Name : 16_CSB_Cedar_Orange AM
Site Code : 04520047
Start Date : 1/23/2020
Page No : 2

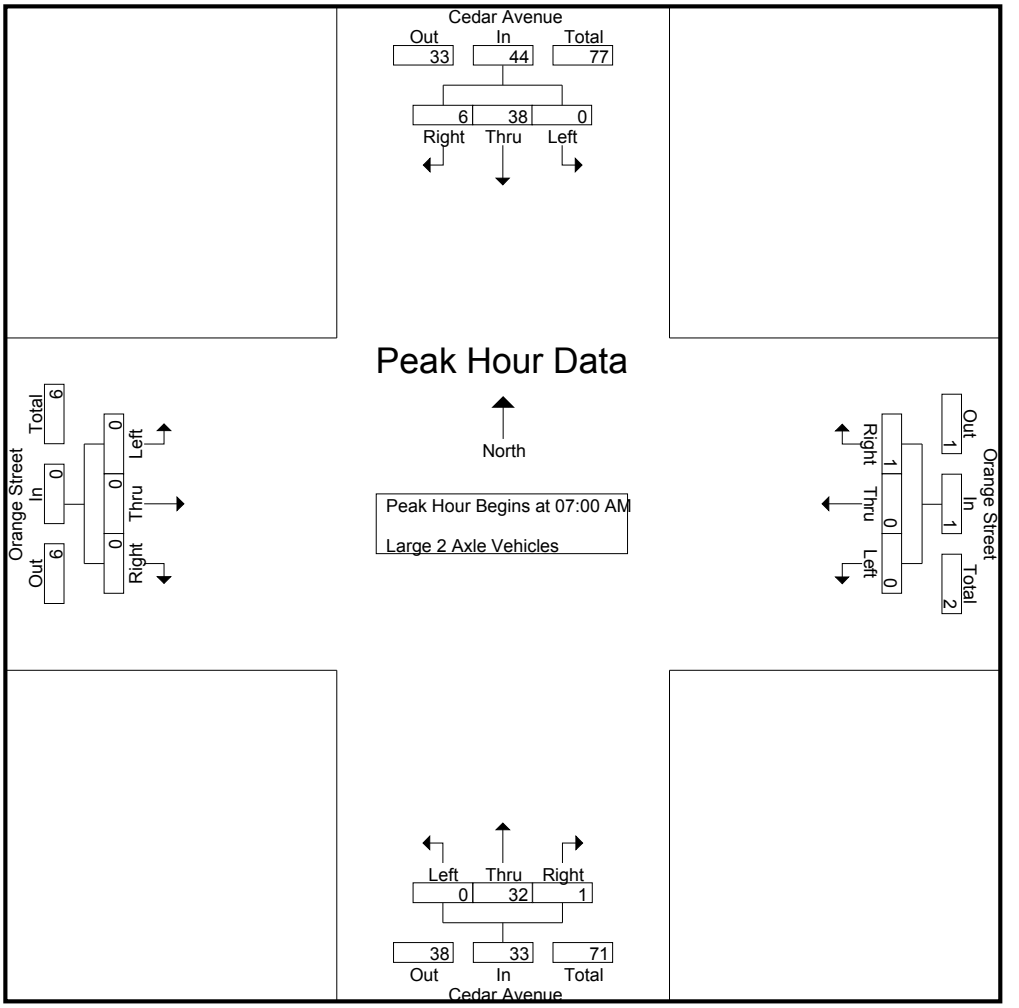

Peak Hour Analysis From 07:00 AM to 07:45 AM - Peak 1 of 1
Peak Hour for Each Approach Begins at:

	07:00 AM				07:00 AM				07:00 AM				07:00 AM			
+0 mins.	0	4	**3**	7	0	0	0	0	0	6	0	6	0	0	0	0
+15 mins.	0	**13**	0	**13**	0	0	0	0	0	5	0	5	0	0	0	0
+30 mins.	0	11	2	13	0	0	**1**	**1**	0	9	0	9	0	0	0	0
+45 mins.	0	10	1	11	0	0	0	0	0	**12**	**1**	**13**	0	0	0	0
Total Volume	0	38	6	44	0	0	1	1	0	32	1	33	0	0	0	0
% App. Total	0	86.4	13.6		0	0	100		0	97	3		0	0	0	
PHF	.000	.731	.500	.846	.000	.000	.250	.250	.000	.667	.250	.635	.000	.000	.000	.000

Counts Unlimited
PO Box 1178
Corona, CA 92878
(951) 268-6268

City of San Bernardino
N/S: Cedar Avenue
E/W: Orange Street
Weather: Clear

File Name : 16_CSB_Cedar_Orange AM
Site Code : 04520047
Start Date : 1/23/2020
Page No : 1

Groups Printed- 3 Axle Vehicles

	Cedar Avenue Southbound				Orange Street Westbound				Cedar Avenue Northbound				Orange Street Eastbound				
Start Time	Left	Thru	Right	App. Total	Left	Thru	Right	App. Total	Left	Thru	Right	App. Total	Left	Thru	Right	App. Total	Int. Total
07:00 AM	0	4	1	5	0	0	0	0	0	6	0	6	0	0	0	0	11
07:15 AM	0	2	1	3	0	0	0	0	0	2	0	2	1	0	0	1	6
07:30 AM	0	0	0	0	0	0	0	0	0	5	0	5	0	0	0	0	5
07:45 AM	0	1	0	1	0	0	0	0	0	3	0	3	1	0	0	1	5
Total	0	7	2	9	0	0	0	0	0	16	0	16	2	0	0	2	27
08:00 AM	0	3	0	3	0	0	0	0	0	4	0	4	1	0	1	2	9
08:15 AM	0	3	0	3	0	0	0	0	0	2	0	2	1	0	0	1	6
08:30 AM	0	0	1	1	0	0	0	0	0	11	0	11	1	0	0	1	13
08:45 AM	0	1	0	1	0	0	0	0	0	3	0	3	1	0	0	1	5
Total	0	7	1	8	0	0	0	0	0	20	0	20	4	0	1	5	33
Grand Total	0	14	3	17	0	0	0	0	0	36	0	36	6	0	1	7	60
Apprch %	0	82.4	17.6		0	0	0		0	100	0		85.7	0	14.3		
Total %	0	23.3	5	28.3	0	0	0	0	0	60	0	60	10	0	1.7	11.7	

	Cedar Avenue Southbound				Orange Street Westbound				Cedar Avenue Northbound				Orange Street Eastbound				
Start Time	Left	Thru	Right	App. Total	Left	Thru	Right	App. Total	Left	Thru	Right	App. Total	Left	Thru	Right	App. Total	Int. Total
Peak Hour Analysis From 07:00 AM to 07:45 AM - Peak 1 of 1																	
Peak Hour for Entire Intersection Begins at 07:00 AM																	
07:00 AM	0	**4**	**1**	**5**	0	0	0	0	0	**6**	0	**6**	0	0	0	0	**11**
07:15 AM	0	2	1	3	0	0	0	0	0	2	0	2	**1**	0	0	**1**	6
07:30 AM	0	0	0	0	0	0	0	0	0	5	0	5	0	0	0	0	5
07:45 AM	0	1	0	1	0	0	0	0	0	3	0	3	1	0	0	1	5
Total Volume	0	7	2	9	0	0	0	0	0	16	0	16	2	0	0	2	27
% App. Total	0	77.8	22.2		0	0	0		0	100	0		100	0	0		
PHF	.000	.438	.500	.450	.000	.000	.000	.000	.000	.667	.000	.667	.500	.000	.000	.500	.614

Counts Unlimited
PO Box 1178
Corona, CA 92878
(951) 268-6268

City of San Bernardino
N/S: Cedar Avenue
E/W: Orange Street
Weather: Clear

File Name : 16_CSB_Cedar_Orange AM
Site Code : 04520047
Start Date : 1/23/2020
Page No : 2

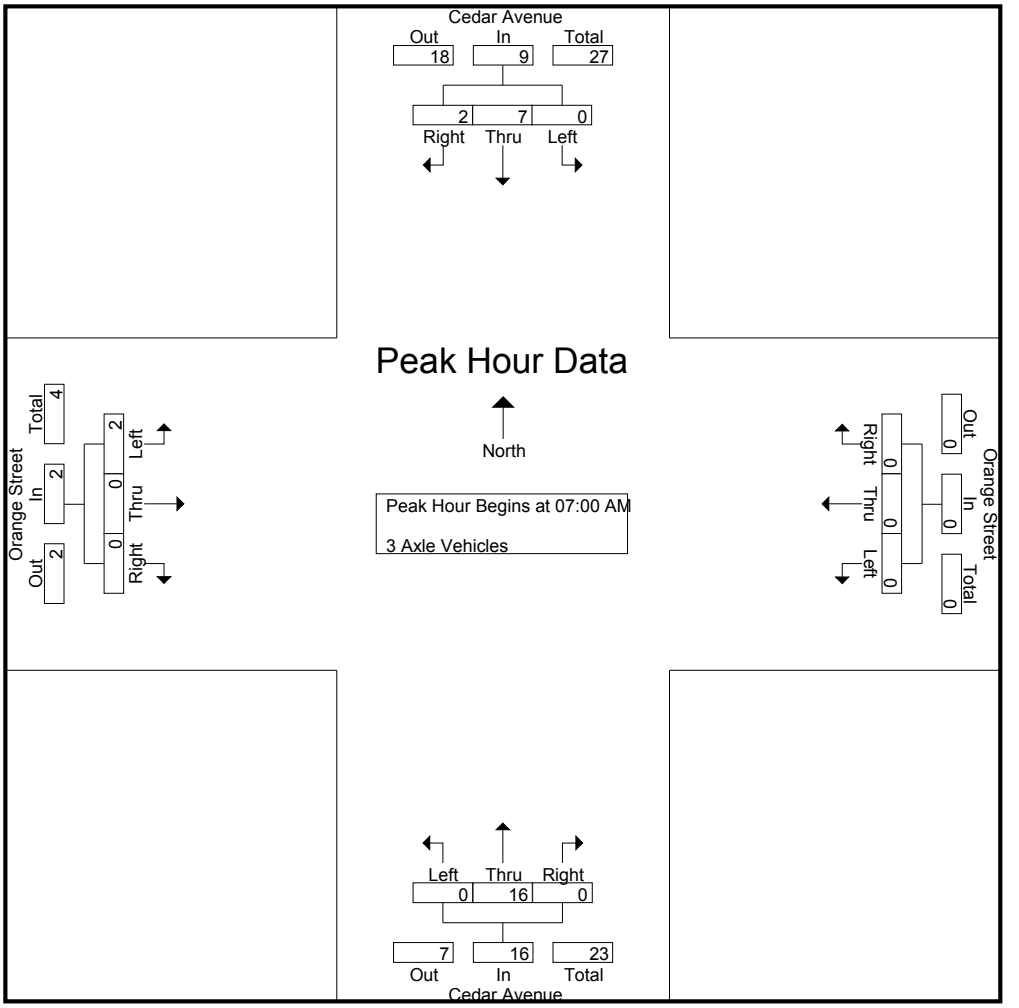

Peak Hour Analysis From 07:00 AM to 07:45 AM - Peak 1 of 1
Peak Hour for Each Approach Begins at:

	07:00 AM				07:00 AM				07:00 AM				07:00 AM			
+0 mins.	0	**4**	**1**	**5**	0	0	0	0	0	**6**	0	**6**	0	0	0	0
+15 mins.	0	2	1	3	0	0	0	0	0	2	0	2	**1**	0	0	**1**
+30 mins.	0	0	0	0	0	0	0	0	0	5	0	5	0	0	0	0
+45 mins.	0	1	0	1	0	0	0	0	0	3	0	3	1	0	0	1
Total Volume	0	7	2	9	0	0	0	0	0	16	0	16	2	0	0	2
% App. Total	0	77.8	22.2		0	0	0		0	100	0		100	0	0	
PHF	.000	.438	.500	.450	.000	.000	.000	.000	.000	.667	.000	.667	.500	.000	.000	.500

Counts Unlimited
PO Box 1178
Corona, CA 92878
(951) 268-6268

City of San Bernardino
N/S: Cedar Avenue
E/W: Orange Street
Weather: Clear

File Name : 16_CSB_Cedar_Orange AM
Site Code : 04520047
Start Date : 1/23/2020
Page No : 1

Groups Printed- 4+ Axle Trucks

	Cedar Avenue Southbound				Orange Street Westbound				Cedar Avenue Northbound				Orange Street Eastbound				
Start Time	Left	Thru	Right	App. Total	Left	Thru	Right	App. Total	Left	Thru	Right	App. Total	Left	Thru	Right	App. Total	Int. Total
07:00 AM	0	16	2	18	0	0	0	0	0	12	0	12	0	0	0	0	30
07:15 AM	0	11	1	12	0	0	0	0	0	8	0	8	1	0	2	3	23
07:30 AM	0	9	2	11	0	0	0	0	0	5	0	5	1	0	1	2	18
07:45 AM	0	8	1	9	0	0	1	1	0	9	0	9	3	0	1	4	23
Total	0	44	6	50	0	0	1	1	0	34	0	34	5	0	4	9	94
08:00 AM	1	12	3	16	0	0	0	0	0	9	0	9	0	0	2	2	27
08:15 AM	0	17	5	22	0	0	0	0	0	13	0	13	4	0	0	4	39
08:30 AM	0	13	2	15	0	0	0	0	0	12	0	12	7	0	1	8	35
08:45 AM	0	10	1	11	0	0	0	0	0	10	0	10	4	0	0	4	25
Total	1	52	11	64	0	0	0	0	0	44	0	44	15	0	3	18	126
Grand Total	1	96	17	114	0	0	1	1	0	78	0	78	20	0	7	27	220
Apprch %	0.9	84.2	14.9		0	0	100		0	100	0		74.1	0	25.9		
Total %	0.5	43.6	7.7	51.8	0	0	0.5	0.5	0	35.5	0	35.5	9.1	0	3.2	12.3	

	Cedar Avenue Southbound				Orange Street Westbound				Cedar Avenue Northbound				Orange Street Eastbound				
Start Time	Left	Thru	Right	App. Total	Left	Thru	Right	App. Total	Left	Thru	Right	App. Total	Left	Thru	Right	App. Total	Int. Total
Peak Hour Analysis From 07:00 AM to 07:45 AM - Peak 1 of 1																	
Peak Hour for Entire Intersection Begins at 07:00 AM																	
07:00 AM	0	**16**	**2**	**18**	0	0	0	0	0	**12**	0	**12**	0	0	0	0	**30**
07:15 AM	0	11	1	12	0	0	0	0	0	8	0	8	1	0	**2**	3	23
07:30 AM	0	9	2	11	0	0	0	0	0	5	0	5	1	0	1	2	18
07:45 AM	0	8	1	9	0	0	**1**	**1**	0	9	0	9	**3**	0	1	**4**	23
Total Volume	0	44	6	50	0	0	1	1	0	34	0	34	5	0	4	9	94
% App. Total	0	88	12		0	0	100		0	100	0		55.6	0	44.4		
PHF	.000	.688	.750	.694	.000	.000	.250	.250	.000	.708	.000	.708	.417	.000	.500	.563	.783

Counts Unlimited
PO Box 1178
Corona, CA 92878
(951) 268-6268

City of San Bernardino
N/S: Cedar Avenue
E/W: Orange Street
Weather: Clear

File Name : 16_CSB_Cedar_Orange AM
Site Code : 04520047
Start Date : 1/23/2020
Page No : 2

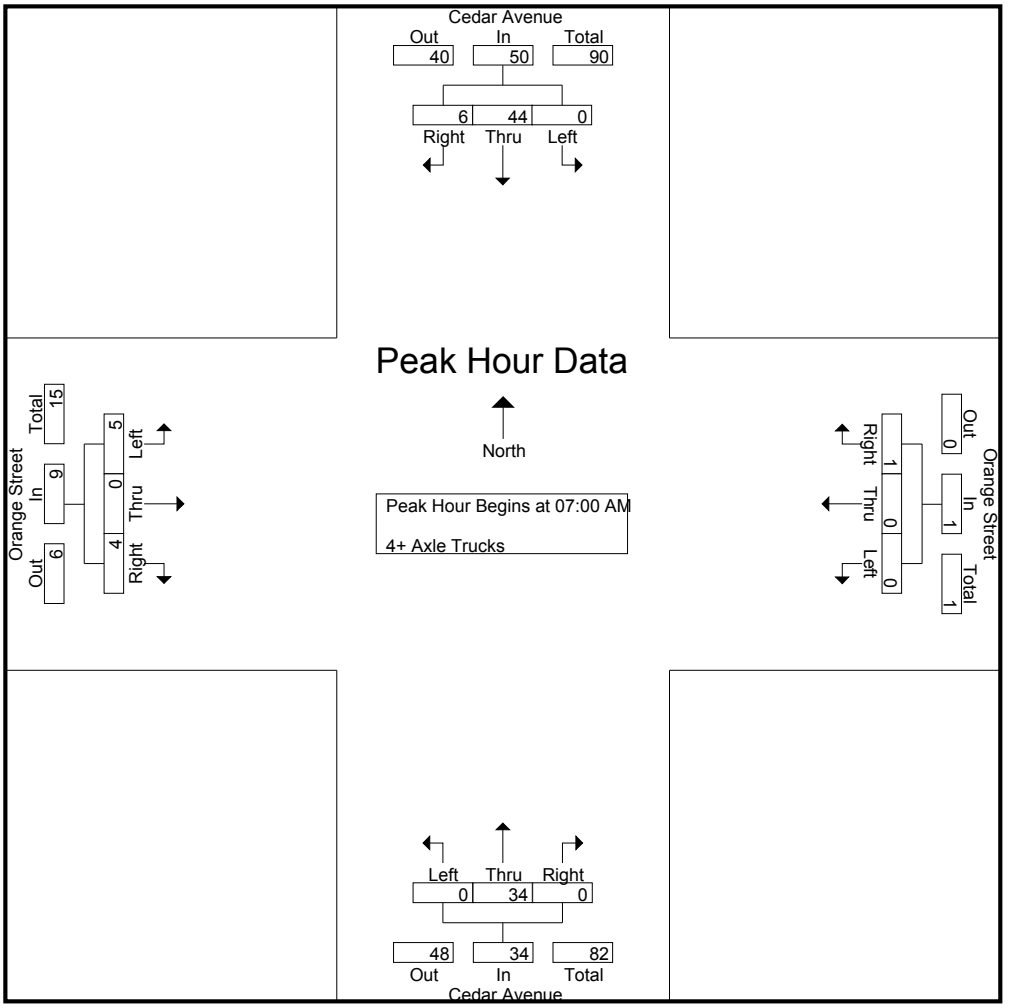

Peak Hour Analysis From 07:00 AM to 07:45 AM - Peak 1 of 1
Peak Hour for Each Approach Begins at:

	07:00 AM				07:00 AM				07:00 AM				07:00 AM			
+0 mins.	0	**16**	**2**	**18**	0	0	0	0	0	**12**	0	**12**	0	0	0	0
+15 mins.	0	11	1	12	0	0	0	0	0	8	0	8	1	0	**2**	3
+30 mins.	0	9	2	11	0	0	0	0	0	5	0	5	1	0	1	2
+45 mins.	0	8	1	9	0	0	**1**	**1**	0	9	0	9	**3**	0	1	**4**
Total Volume	0	44	6	50	0	0	1	1	0	34	0	34	5	0	4	9
% App. Total	0	88	12		0	0	100		0	100	0		55.6	0	44.4	
PHF	.000	.688	.750	.694	.000	.000	.250	.250	.000	.708	.000	.708	.417	.000	.500	.563

Counts Unlimited
PO Box 1178
Corona, CA 92878
(951) 268-6268

City of San Bernardino
N/S: Cedar Avenue
E/W: Orange Street
Weather: Clear

File Name : 16_CSB_Cedar_Orange PM
Site Code : 04520047
Start Date : 1/23/2020
Page No : 1

Groups Printed- Passenger Vehicles - Large 2 Axle Vehicles - 3 Axle Vehicles - 4+ Axle Trucks

	Cedar Avenue Southbound				Orange Street Westbound				Cedar Avenue Northbound				Orange Street Eastbound				
Start Time	Left	Thru	Right	App. Total	Left	Thru	Right	App. Total	Left	Thru	Right	App. Total	Left	Thru	Right	App. Total	Int. Total
04:00 PM	10	227	52	289	2	1	57	60	2	176	0	178	48	5	2	55	582
04:15 PM	14	228	42	284	3	1	37	41	2	198	0	200	49	0	2	51	576
04:30 PM	9	237	55	301	2	1	32	35	0	238	0	238	52	1	3	56	630
04:45 PM	13	222	69	304	1	0	44	45	1	141	1	143	51	10	6	67	559
Total	46	914	218	1178	8	3	170	181	5	753	1	759	200	16	13	229	2347
05:00 PM	9	221	40	270	0	0	46	46	2	182	0	184	46	2	5	53	553
05:15 PM	22	222	48	292	1	0	41	42	1	165	2	168	42	7	1	50	552
05:30 PM	13	204	55	272	0	0	48	48	0	135	0	135	68	4	1	73	528
05:45 PM	18	205	48	271	0	3	29	32	1	163	1	165	44	5	4	53	521
Total	62	852	191	1105	1	3	164	168	4	645	3	652	200	18	11	229	2154
Grand Total	108	1766	409	2283	9	6	334	349	9	1398	4	1411	400	34	24	458	4501
Apprch %	4.7	77.4	17.9		2.6	1.7	95.7		0.6	99.1	0.3		87.3	7.4	5.2		
Total %	2.4	39.2	9.1	50.7	0.2	0.1	7.4	7.8	0.2	31.1	0.1	31.3	8.9	0.8	0.5	10.2	
Passenger Vehicles	104	1615	386	2105	8	6	328	342	9	1320	4	1333	384	34	22	440	4220
% Passenger Vehicles	96.3	91.4	94.4	92.2	88.9	100	98.2	98	100	94.4	100	94.5	96	100	91.7	96.1	93.8
Large 2 Axle Vehicles	4	64	2	70	0	0	4	4	0	43	0	43	6	0	0	6	123
% Large 2 Axle Vehicles	3.7	3.6	0.5	3.1	0	0	1.2	1.1	0	3.1	0	3	1.5	0	0	1.3	2.7
3 Axle Vehicles	0	25	5	30	0	0	0	0	0	11	0	11	1	0	0	1	42
% 3 Axle Vehicles	0	1.4	1.2	1.3	0	0	0	0	0	0.8	0	0.8	0.2	0	0	0.2	0.9
4+ Axle Trucks	0	62	16	78	1	0	2	3	0	24	0	24	9	0	2	11	116
% 4+ Axle Trucks	0	3.5	3.9	3.4	11.1	0	0.6	0.9	0	1.7	0	1.7	2.2	0	8.3	2.4	2.6

	Cedar Avenue Southbound				Orange Street Westbound				Cedar Avenue Northbound				Orange Street Eastbound				
Start Time	Left	Thru	Right	App. Total	Left	Thru	Right	App. Total	Left	Thru	Right	App. Total	Left	Thru	Right	App. Total	Int. Total
Peak Hour Analysis From 04:00 PM to 05:45 PM - Peak 1 of 1																	
Peak Hour for Entire Intersection Begins at 04:00 PM																	
04:00 PM	10	227	52	289	2	**1**	**57**	**60**	**2**	176	0	178	48	5	2	55	582
04:15 PM	**14**	228	42	284	**3**	1	37	41	2	198	0	200	49	0	2	51	576
04:30 PM	9	**237**	55	301	2	1	32	35	0	**238**	0	**238**	**52**	1	3	56	**630**
04:45 PM	13	222	**69**	**304**	1	0	44	45	1	141	**1**	143	51	**10**	**6**	**67**	559
Total Volume	46	914	218	1178	8	3	170	181	5	753	1	759	200	16	13	229	2347
% App. Total	3.9	77.6	18.5		4.4	1.7	93.9		0.7	99.2	0.1		87.3	7	5.7		
PHF	.821	.964	.790	.969	.667	.750	.746	.754	.625	.791	.250	.797	.962	.400	.542	.854	.931

Counts Unlimited
PO Box 1178
Corona, CA 92878
(951) 268-6268

City of San Bernardino
N/S: Cedar Avenue
E/W: Orange Street
Weather: Clear

File Name : 16_CSB_Cedar_Orange PM
Site Code : 04520047
Start Date : 1/23/2020

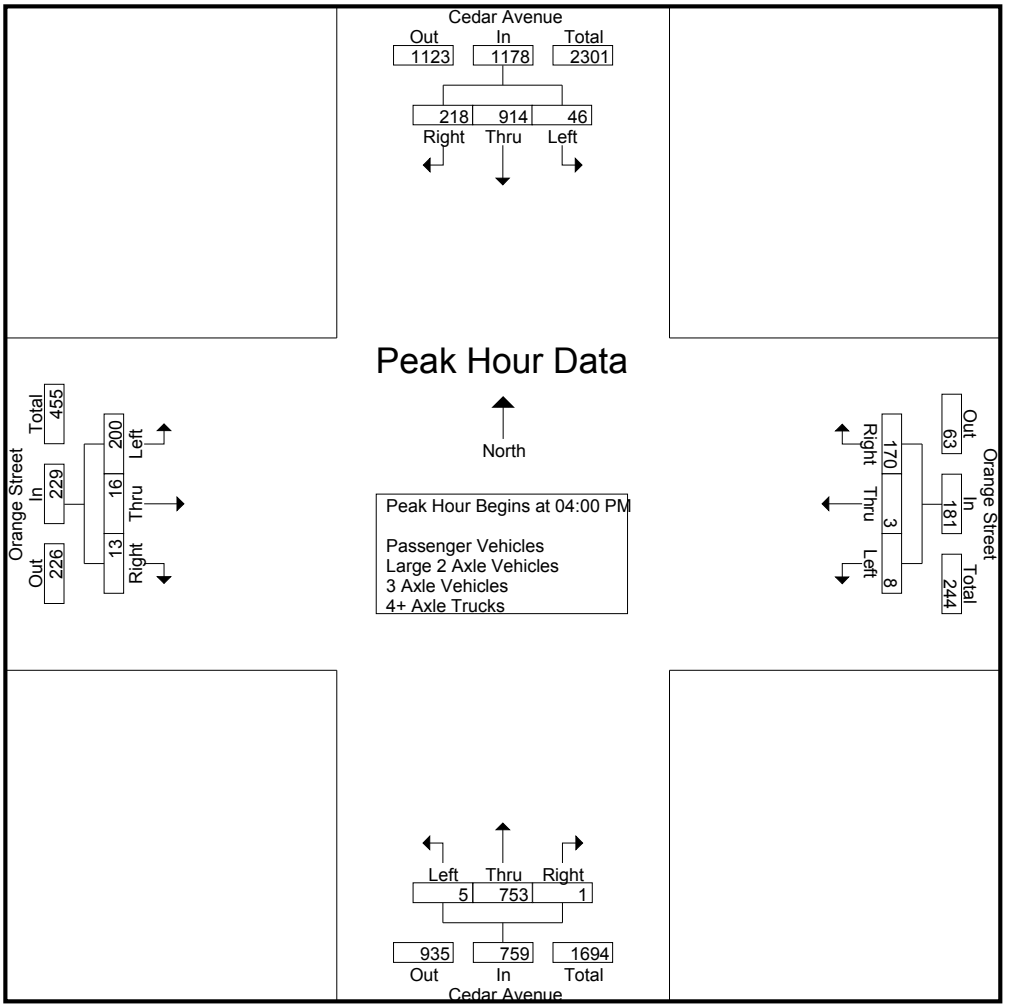

Peak Hour Analysis From 04:00 PM to 05:45 PM - Peak 1 of 1
Peak Hour for Each Approach Begins at:

	04:00 PM				04:00 PM				04:15 PM				04:45 PM			
+0 mins.	10	227	52	289	2	**1**	**57**	**60**	**2**	198	0	200	51	**10**	**6**	67
+15 mins.	**14**	228	42	284	**3**	1	37	41	0	**238**	0	**238**	46	2	5	53
+30 mins.	9	**237**	55	301	2	1	32	35	1	141	**1**	143	42	7	1	50
+45 mins.	13	222	**69**	**304**	1	0	44	45	2	182	0	184	**68**	4	1	**73**
Total Volume	46	914	218	1178	8	3	170	181	5	759	1	765	207	23	13	243
% App. Total	3.9	77.6	18.5		4.4	1.7	93.9		0.7	99.2	0.1		85.2	9.5	5.3	
PHF	.821	.964	.790	.969	.667	.750	.746	.754	.625	.797	.250	.804	.761	.575	.542	.832

Counts Unlimited
PO Box 1178
Corona, CA 92878
(951) 268-6268

City of San Bernardino
N/S: Cedar Avenue
E/W: Orange Street
Weather: Clear

File Name : 16_CSB_Cedar_Orange PM
Site Code : 04520047
Start Date : 1/23/2020
Page No : 1

Groups Printed- Passenger Vehicles

	Cedar Avenue Southbound				Orange Street Westbound				Cedar Avenue Northbound				Orange Street Eastbound				
Start Time	Left	Thru	Right	App. Total	Left	Thru	Right	App. Total	Left	Thru	Right	App. Total	Left	Thru	Right	App. Total	Int. Total
04:00 PM	8	203	49	260	2	1	56	59	2	163	0	165	45	5	2	52	536
04:15 PM	14	208	38	260	2	1	36	39	2	185	0	187	48	0	2	50	536
04:30 PM	9	210	54	273	2	1	31	34	0	221	0	221	49	1	3	53	581
04:45 PM	13	201	65	279	1	0	44	45	1	132	1	134	50	10	6	66	524
Total	44	822	206	1072	7	3	167	177	5	701	1	707	192	16	13	221	2177
05:00 PM	8	202	36	246	0	0	45	45	2	176	0	178	45	2	4	51	520
05:15 PM	21	206	47	274	1	0	41	42	1	158	2	161	39	7	1	47	524
05:30 PM	13	193	53	259	0	0	48	48	0	130	0	130	66	4	1	71	508
05:45 PM	18	192	44	254	0	3	27	30	1	155	1	157	42	5	3	50	491
Total	60	793	180	1033	1	3	161	165	4	619	3	626	192	18	9	219	2043
Grand Total	104	1615	386	2105	8	6	328	342	9	1320	4	1333	384	34	22	440	4220
Apprch %	4.9	76.7	18.3		2.3	1.8	95.9		0.7	99	0.3		87.3	7.7	5		
Total %	2.5	38.3	9.1	49.9	0.2	0.1	7.8	8.1	0.2	31.3	0.1	31.6	9.1	0.8	0.5	10.4	

	Cedar Avenue Southbound				Orange Street Westbound				Cedar Avenue Northbound				Orange Street Eastbound				
Start Time	Left	Thru	Right	App. Total	Left	Thru	Right	App. Total	Left	Thru	Right	App. Total	Left	Thru	Right	App. Total	Int. Total
Peak Hour Analysis From 04:00 PM to 04:45 PM - Peak 1 of 1																	
Peak Hour for Entire Intersection Begins at 04:00 PM																	
04:00 PM	8	203	49	260	**2**	**1**	**56**	**59**	**2**	163	0	165	45	5	2	52	536
04:15 PM	**14**	208	38	260	2	1	36	39	2	185	0	187	48	0	2	50	536
04:30 PM	9	**210**	54	273	2	1	31	34	0	**221**	0	**221**	49	1	3	53	**581**
04:45 PM	13	201	**65**	**279**	1	0	44	45	1	132	**1**	134	**50**	**10**	**6**	**66**	524
Total Volume	44	822	206	1072	7	3	167	177	5	701	1	707	192	16	13	221	2177
% App. Total	4.1	76.7	19.2		4	1.7	94.4		0.7	99.2	0.1		86.9	7.2	5.9		
PHF	.786	.979	.792	.961	.875	.750	.746	.750	.625	.793	.250	.800	.960	.400	.542	.837	.937

Counts Unlimited
PO Box 1178
Corona, CA 92878
(951) 268-6268

City of San Bernardino
N/S: Cedar Avenue
E/W: Orange Street
Weather: Clear

File Name : 16_CSB_Cedar_Orange PM
Site Code : 04520047
Start Date : 1/23/2020

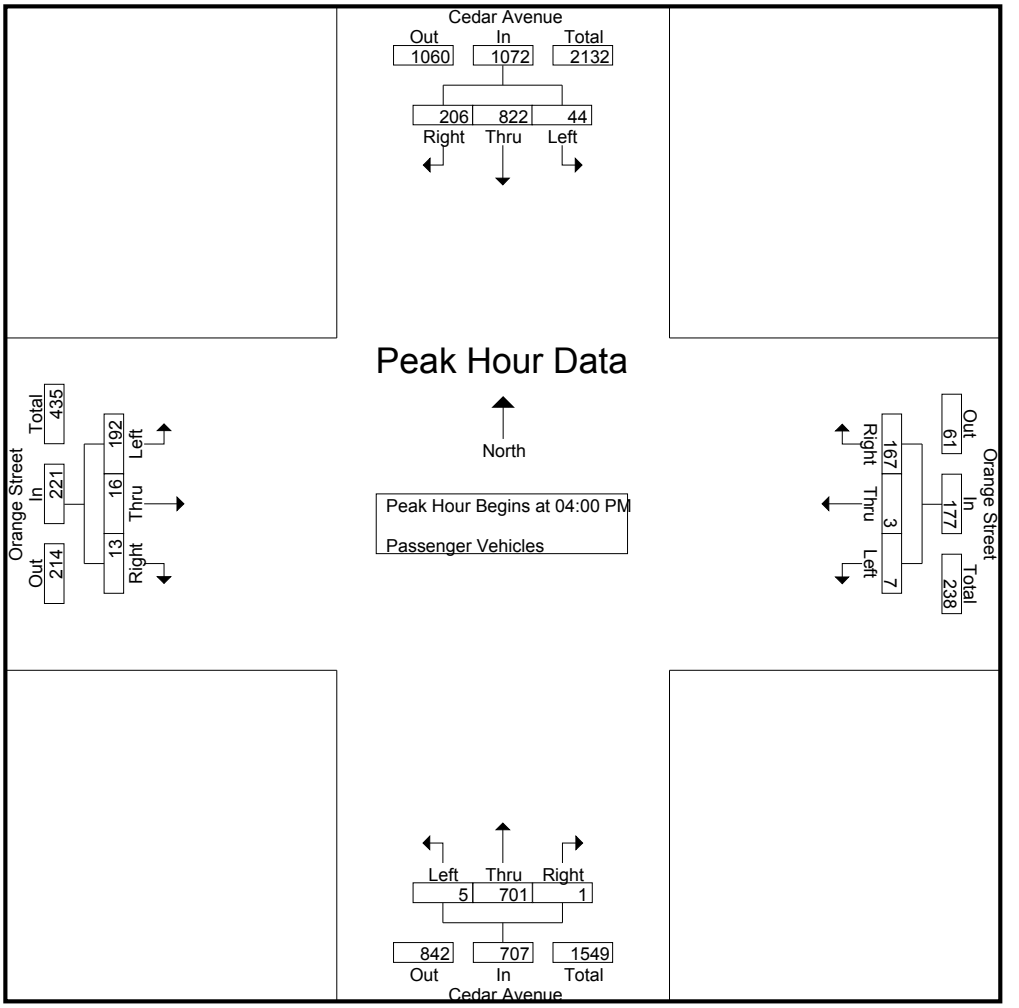

Peak Hour Analysis From 04:00 PM to 04:45 PM - Peak 1 of 1
Peak Hour for Each Approach Begins at:

	04:00 PM				04:00 PM				04:00 PM				04:00 PM			
+0 mins.	8	203	49	260	**2**	**1**	**56**	**59**	**2**	163	0	165	45	5	2	52
+15 mins.	**14**	208	38	260	2	1	36	39	2	185	0	187	48	0	2	50
+30 mins.	9	**210**	54	273	2	1	31	34	0	**221**	0	**221**	49	1	3	53
+45 mins.	13	201	**65**	**279**	1	0	44	45	1	132	**1**	134	**50**	**10**	**6**	**66**
Total Volume	44	822	206	1072	7	3	167	177	5	701	1	707	192	16	13	221
% App. Total	4.1	76.7	19.2		4	1.7	94.4		0.7	99.2	0.1		86.9	7.2	5.9	
PHF	.786	.979	.792	.961	.875	.750	.746	.750	.625	.793	.250	.800	.960	.400	.542	.837

Counts Unlimited
PO Box 1178
Corona, CA 92878
(951) 268-6268

City of San Bernardino
N/S: Cedar Avenue
E/W: Orange Street
Weather: Clear

File Name : 16_CSB_Cedar_Orange PM
Site Code : 04520047
Start Date : 1/23/2020
Page No : 1

Groups Printed- Large 2 Axle Vehicles

	Cedar Avenue Southbound				Orange Street Westbound				Cedar Avenue Northbound				Orange Street Eastbound				
Start Time	Left	Thru	Right	App. Total	Left	Thru	Right	App. Total	Left	Thru	Right	App. Total	Left	Thru	Right	App. Total	Int. Total
04:00 PM	2	13	0	15	0	0	0	0	0	10	0	10	0	0	0	0	25
04:15 PM	0	5	1	6	0	0	1	1	0	5	0	5	0	0	0	0	12
04:30 PM	0	14	0	14	0	0	0	0	0	12	0	12	1	0	0	1	27
04:45 PM	0	8	0	8	0	0	0	0	0	3	0	3	0	0	0	0	11
Total	2	40	1	43	0	0	1	1	0	30	0	30	1	0	0	1	75
05:00 PM	1	8	1	10	0	0	1	1	0	5	0	5	1	0	0	1	17
05:15 PM	1	6	0	7	0	0	0	0	0	3	0	3	2	0	0	2	12
05:30 PM	0	5	0	5	0	0	0	0	0	3	0	3	1	0	0	1	9
05:45 PM	0	5	0	5	0	0	2	2	0	2	0	2	1	0	0	1	10
Total	2	24	1	27	0	0	3	3	0	13	0	13	5	0	0	5	48
Grand Total	4	64	2	70	0	0	4	4	0	43	0	43	6	0	0	6	123
Apprch %	5.7	91.4	2.9		0	0	100		0	100	0		100	0	0		
Total %	3.3	52	1.6	56.9	0	0	3.3	3.3	0	35	0	35	4.9	0	0	4.9	

	Cedar Avenue Southbound				Orange Street Westbound				Cedar Avenue Northbound				Orange Street Eastbound				
Start Time	Left	Thru	Right	App. Total	Left	Thru	Right	App. Total	Left	Thru	Right	App. Total	Left	Thru	Right	App. Total	Int. Total
Peak Hour Analysis From 04:00 PM to 04:45 PM - Peak 1 of 1																	
Peak Hour for Entire Intersection Begins at 04:00 PM																	
04:00 PM	**2**	13	0	**15**	0	0	0	0	0	10	0	10	0	0	0	0	25
04:15 PM	0	5	**1**	6	0	0	**1**	**1**	0	5	0	5	0	0	0	0	12
04:30 PM	0	**14**	0	14	0	0	0	0	0	**12**	0	**12**	**1**	0	0	**1**	**27**
04:45 PM	0	8	0	8	0	0	0	0	0	3	0	3	0	0	0	0	11
Total Volume	2	40	1	43	0	0	1	1	0	30	0	30	1	0	0	1	75
% App. Total	4.7	93	2.3		0	0	100		0	100	0		100	0	0		
PHF	.250	.714	.250	.717	.000	.000	.250	.250	.000	.625	.000	.625	.250	.000	.000	.250	.694

Counts Unlimited
PO Box 1178
Corona, CA 92878
(951) 268-6268

City of San Bernardino
N/S: Cedar Avenue
E/W: Orange Street
Weather: Clear

File Name : 16_CSB_Cedar_Orange PM
Site Code : 04520047
Start Date : 1/23/2020
Page No : 2

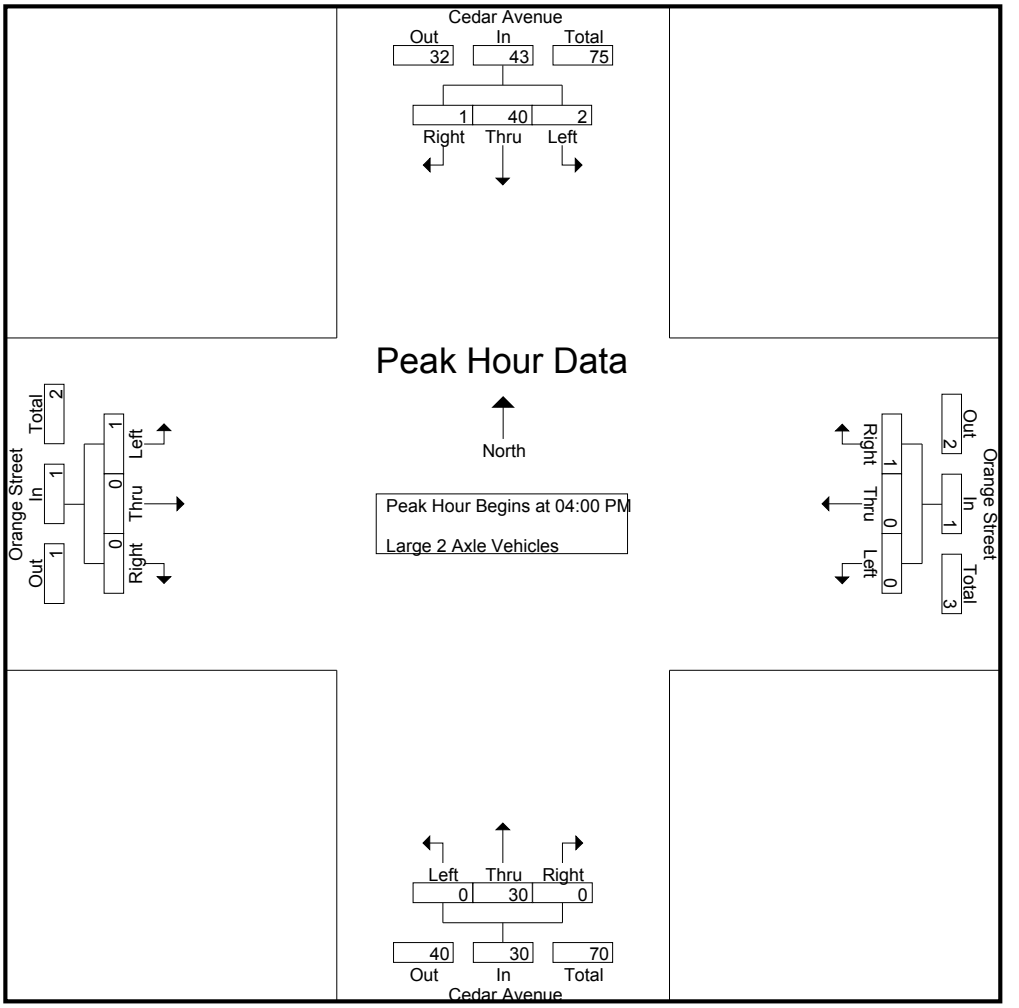

Peak Hour Analysis From 04:00 PM to 04:45 PM - Peak 1 of 1
Peak Hour for Each Approach Begins at:

	04:00 PM				04:00 PM				04:00 PM				04:00 PM			
+0 mins.	**2**	13	0	**15**	0	0	0	0	0	10	0	10	0	0	0	0
+15 mins.	0	5	**1**	6	0	0	**1**	**1**	0	5	0	5	0	0	0	0
+30 mins.	0	**14**	0	14	0	0	0	0	0	**12**	0	**12**	**1**	0	0	**1**
+45 mins.	0	8	0	8	0	0	0	0	0	3	0	3	0	0	0	0
Total Volume	2	40	1	43	0	0	1	1	0	30	0	30	1	0	0	1
% App. Total	4.7	93	2.3		0	0	100		0	100	0		100	0	0	
PHF	.250	.714	.250	.717	.000	.000	.250	.250	.000	.625	.000	.625	.250	.000	.000	.250

Counts Unlimited
PO Box 1178
Corona, CA 92878
(951) 268-6268

City of San Bernardino
N/S: Cedar Avenue
E/W: Orange Street
Weather: Clear

File Name : 16_CSB_Cedar_Orange PM
Site Code : 04520047
Start Date : 1/23/2020
Page No : 1

Groups Printed- 3 Axle Vehicles

	Cedar Avenue Southbound				Orange Street Westbound				Cedar Avenue Northbound				Orange Street Eastbound				
Start Time	Left	Thru	Right	App. Total	Left	Thru	Right	App. Total	Left	Thru	Right	App. Total	Left	Thru	Right	App. Total	Int. Total
04:00 PM	0	3	1	4	0	0	0	0	0	1	0	1	0	0	0	0	5
04:15 PM	0	5	0	5	0	0	0	0	0	3	0	3	0	0	0	0	8
04:30 PM	0	3	0	3	0	0	0	0	0	0	0	0	0	0	0	0	3
04:45 PM	0	5	1	6	0	0	0	0	0	1	0	1	0	0	0	0	7
Total	0	16	2	18	0	0	0	0	0	5	0	5	0	0	0	0	23
05:00 PM	0	3	1	4	0	0	0	0	0	1	0	1	0	0	0	0	5
05:15 PM	0	2	0	2	0	0	0	0	0	1	0	1	0	0	0	0	3
05:30 PM	0	1	1	2	0	0	0	0	0	2	0	2	1	0	0	1	5
05:45 PM	0	3	1	4	0	0	0	0	0	2	0	2	0	0	0	0	6
Total	0	9	3	12	0	0	0	0	0	6	0	6	1	0	0	1	19
Grand Total	0	25	5	30	0	0	0	0	0	11	0	11	1	0	0	1	42
Apprch %	0	83.3	16.7		0	0	0		0	100	0		100	0	0		
Total %	0	59.5	11.9	71.4	0	0	0	0	0	26.2	0	26.2	2.4	0	0	2.4	

	Cedar Avenue Southbound				Orange Street Westbound				Cedar Avenue Northbound				Orange Street Eastbound				
Start Time	Left	Thru	Right	App. Total	Left	Thru	Right	App. Total	Left	Thru	Right	App. Total	Left	Thru	Right	App. Total	Int. Total
Peak Hour Analysis From 04:00 PM to 04:45 PM - Peak 1 of 1																	
Peak Hour for Entire Intersection Begins at 04:00 PM																	
04:00 PM	0	3	**1**	4	0	0	0	0	0	1	0	1	0	0	0	0	5
04:15 PM	0	**5**	0	5	0	0	0	0	0	**3**	0	**3**	0	0	0	0	**8**
04:30 PM	0	3	0	3	0	0	0	0	0	0	0	0	0	0	0	0	3
04:45 PM	0	5	1	**6**	0	0	0	0	0	1	0	1	0	0	0	0	7
Total Volume	0	16	2	18	0	0	0	0	0	5	0	5	0	0	0	0	23
% App. Total	0	88.9	11.1		0	0	0		0	100	0		0	0	0		
PHF	.000	.800	.500	.750	.000	.000	.000	.000	.000	.417	.000	.417	.000	.000	.000	.000	.719

Counts Unlimited
PO Box 1178
Corona, CA 92878
(951) 268-6268

City of San Bernardino
N/S: Cedar Avenue
E/W: Orange Street
Weather: Clear

File Name : 16_CSB_Cedar_Orange PM
Site Code : 04520047
Start Date : 1/23/2020

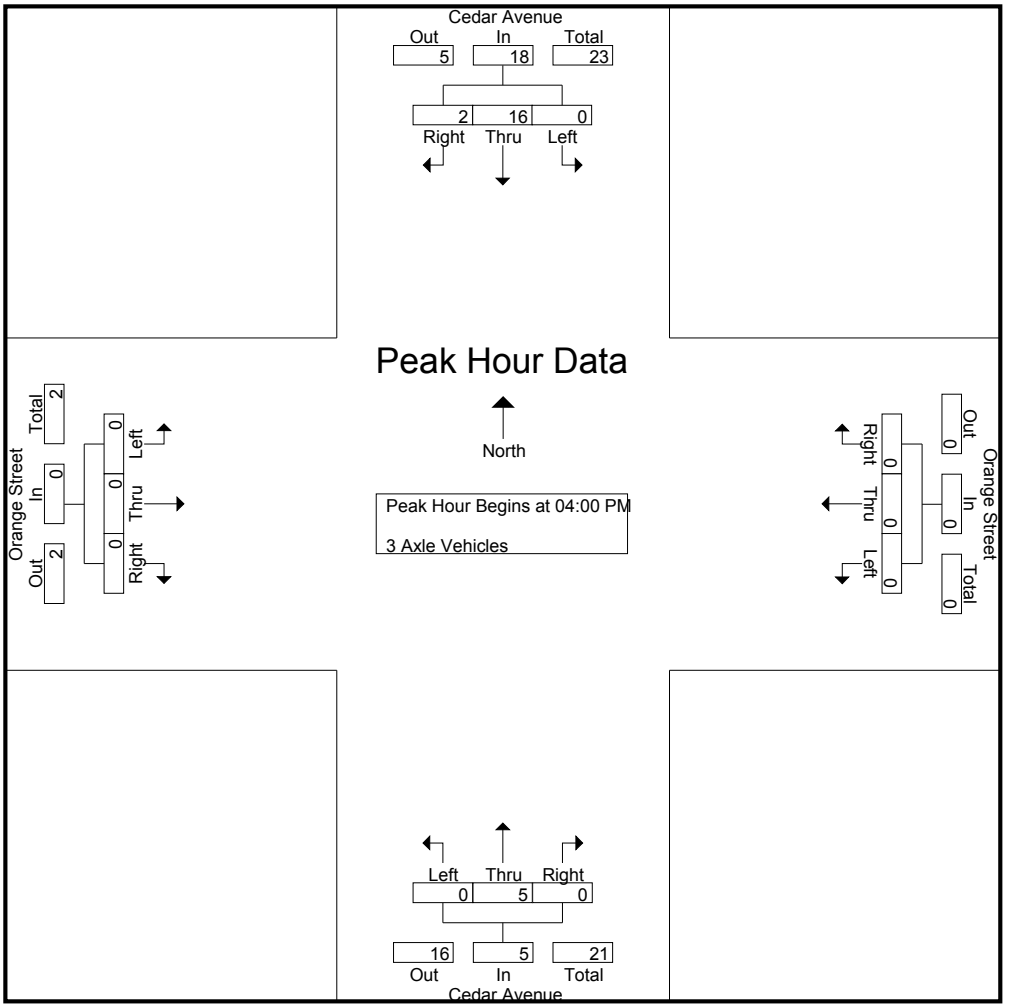

Peak Hour Analysis From 04:00 PM to 04:45 PM - Peak 1 of 1
Peak Hour for Each Approach Begins at:

	04:00 PM				04:00 PM				04:00 PM				04:00 PM			
+0 mins.	0	3	**1**	4	0	0	0	0	0	1	0	1	0	0	0	0
+15 mins.	0	**5**	0	5	0	0	0	0	0	**3**	0	**3**	0	0	0	0
+30 mins.	0	3	0	3	0	0	0	0	0	0	0	0	0	0	0	0
+45 mins.	0	5	1	**6**	0	0	0	0	0	1	0	1	0	0	0	0
Total Volume	0	16	2	18	0	0	0	0	0	5	0	5	0	0	0	0
% App. Total	0	88.9	11.1		0	0	0		0	100	0		0	0	0	
PHF	.000	.800	.500	.750	.000	.000	.000	.000	.000	.417	.000	.417	.000	.000	.000	.000

Counts Unlimited
PO Box 1178
Corona, CA 92878
(951) 268-6268

City of San Bernardino
N/S: Cedar Avenue
E/W: Orange Street
Weather: Clear

File Name : 16_CSB_Cedar_Orange PM
Site Code : 04520047
Start Date : 1/23/2020
Page No : 1

Groups Printed- 4+ Axle Trucks

	Cedar Avenue Southbound				Orange Street Westbound				Cedar Avenue Northbound				Orange Street Eastbound				
Start Time	Left	Thru	Right	App. Total	Left	Thru	Right	App. Total	Left	Thru	Right	App. Total	Left	Thru	Right	App. Total	Int. Total
04:00 PM	0	8	2	10	0	0	1	1	0	2	0	2	3	0	0	3	16
04:15 PM	0	10	3	13	1	0	0	1	0	5	0	5	1	0	0	1	20
04:30 PM	0	10	1	11	0	0	1	1	0	5	0	5	2	0	0	2	19
04:45 PM	0	8	3	11	0	0	0	0	0	5	0	5	1	0	0	1	17
Total	0	36	9	45	1	0	2	3	0	17	0	17	7	0	0	7	72
05:00 PM	0	8	2	10	0	0	0	0	0	0	0	0	0	0	1	1	11
05:15 PM	0	8	1	9	0	0	0	0	0	3	0	3	1	0	0	1	13
05:30 PM	0	5	1	6	0	0	0	0	0	0	0	0	0	0	0	0	6
05:45 PM	0	5	3	8	0	0	0	0	0	4	0	4	1	0	1	2	14
Total	0	26	7	33	0	0	0	0	0	7	0	7	2	0	2	4	44
Grand Total	0	62	16	78	1	0	2	3	0	24	0	24	9	0	2	11	116
Apprch %	0	79.5	20.5		33.3	0	66.7		0	100	0		81.8	0	18.2		
Total %	0	53.4	13.8	67.2	0.9	0	1.7	2.6	0	20.7	0	20.7	7.8	0	1.7	9.5	

	Cedar Avenue Southbound				Orange Street Westbound				Cedar Avenue Northbound				Orange Street Eastbound				
Start Time	Left	Thru	Right	App. Total	Left	Thru	Right	App. Total	Left	Thru	Right	App. Total	Left	Thru	Right	App. Total	Int. Total
Peak Hour Analysis From 04:00 PM to 04:45 PM - Peak 1 of 1																	
Peak Hour for Entire Intersection Begins at 04:00 PM																	
04:00 PM	0	8	2	10	0	0	**1**	**1**	0	2	0	2	**3**	0	0	**3**	16
04:15 PM	0	**10**	**3**	**13**	**1**	0	0	1	0	**5**	0	**5**	1	0	0	1	**20**
04:30 PM	0	10	1	11	0	0	1	1	0	5	0	5	2	0	0	2	19
04:45 PM	0	8	3	11	0	0	0	0	0	5	0	5	1	0	0	1	17
Total Volume	0	36	9	45	1	0	2	3	0	17	0	17	7	0	0	7	72
% App. Total	0	80	20		33.3	0	66.7		0	100	0		100	0	0		
PHF	.000	.900	.750	.865	.250	.000	.500	.750	.000	.850	.000	.850	.583	.000	.000	.583	.900

Counts Unlimited
PO Box 1178
Corona, CA 92878
(951) 268-6268

City of San Bernardino
N/S: Cedar Avenue
E/W: Orange Street
Weather: Clear

File Name : 16_CSB_Cedar_Orange PM
Site Code : 04520047
Start Date : 1/23/2020

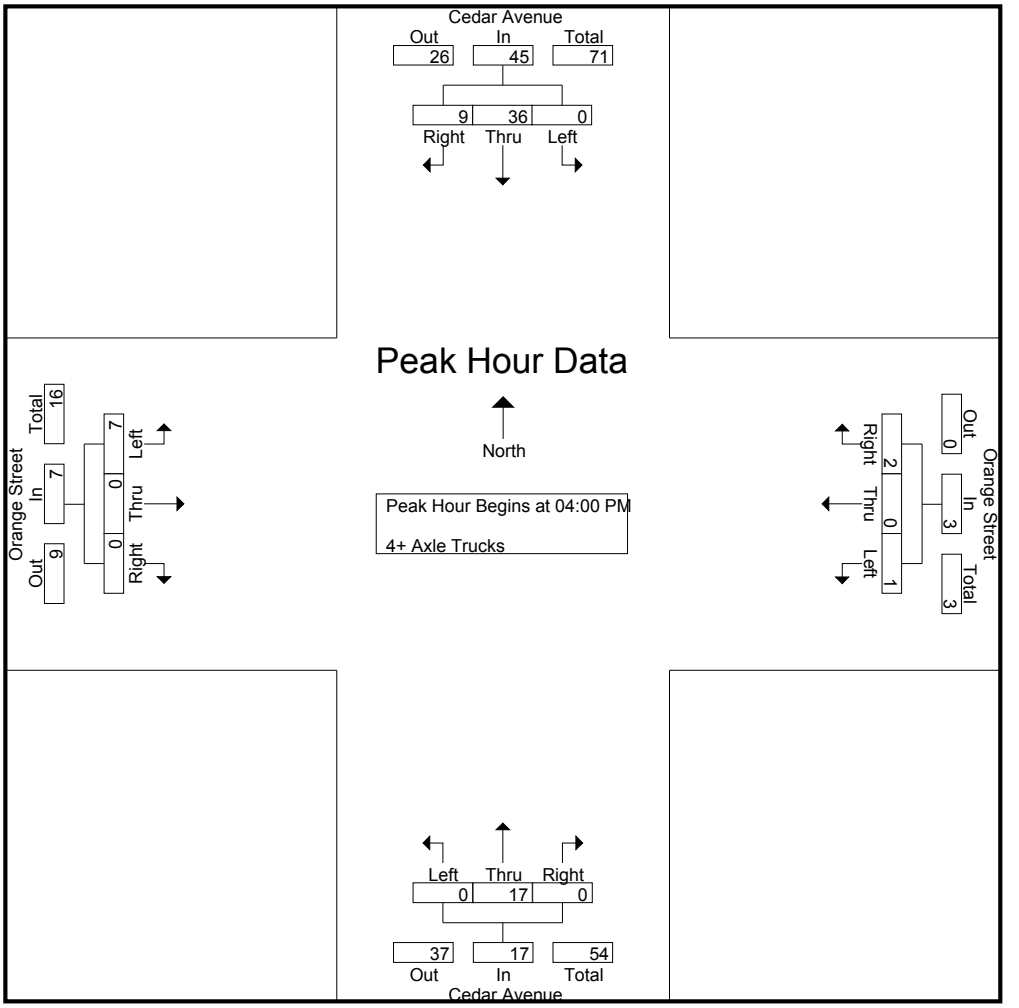

Peak Hour Analysis From 04:00 PM to 04:45 PM - Peak 1 of 1
Peak Hour for Each Approach Begins at:

	04:00 PM				04:00 PM				04:00 PM				04:00 PM			
+0 mins.	0	8	2	10	0	0	**1**	**1**	0	2	0	2	**3**	0	0	**3**
+15 mins.	0	**10**	**3**	**13**	**1**	0	0	1	0	**5**	0	**5**	1	0	0	1
+30 mins.	0	10	1	11	0	0	1	1	0	5	0	5	2	0	0	2
+45 mins.	0	8	3	11	0	0	0	0	0	5	0	5	1	0	0	1
Total Volume	0	36	9	45	1	0	2	3	0	17	0	17	7	0	0	7
% App. Total	0	80	20		33.3	0	66.7		0	100	0		100	0	0	
PHF	.000	.900	.750	.865	.250	.000	.500	.750	.000	.850	.000	.850	.583	.000	.000	.583

Appendix C: Intersection Analysis Worksheets

HCM 6th Signalized Intersection Summary
1: Cedar & Valley

06/16/2020

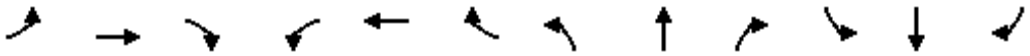

Movement	EBL	EBT	EBR	WBL	WBT	WBR	NBL	NBT	NBR	SBL	SBT	SBR
Lane Configurations												
Traffic Volume (veh/h)	47	172	530	33	256	39	352	1062	233	44	1279	23
Future Volume (veh/h)	47	172	530	33	256	39	352	1062	233	44	1279	23
Initial Q (Qb), veh	0	0	0	0	0	0	0	0	0	0	0	0
Ped-Bike Adj(A_pbT)	1.00		1.00	1.00		1.00	1.00		1.00	1.00		1.00
Parking Bus, Adj	1.00	1.00	1.00	1.00	1.00	1.00	1.00	1.00	1.00	1.00	1.00	1.00
Work Zone On Approach		No			No			No			No	
Adj Sat Flow, veh/h/ln	1575	1772	1772	1575	1772	1772	1575	1772	1772	1575	1772	1772
Adj Flow Rate, veh/h	49	179	552	34	267	41	367	1106	243	46	1332	24
Peak Hour Factor	0.96	0.96	0.96	0.96	0.96	0.96	0.96	0.96	0.96	0.96	0.96	0.96
Percent Heavy Veh, %	2	2	2	2	2	2	2	2	2	2	2	2
Cap, veh/h	946	709	1057	736	1172	178	442	1347	601	394	1957	35
Arrive On Green	0.40	0.40	0.40	0.40	0.40	0.40	0.40	0.40	0.40	0.40	0.40	0.40
Sat Flow, veh/h	1848	1772	2643	1250	2931	445	693	3367	1502	697	4893	88
Grp Volume(v), veh/h	49	179	552	34	152	156	367	1106	243	46	878	478
Grp Sat Flow(s),veh/h/ln	924	1772	1321	625	1683	1692	346	1683	1502	349	1612	1756
Q Serve(g_s), s	0.8	3.0	7.1	0.8	2.7	2.7	7.9	13.2	5.2	2.8	10.1	10.1
Cycle Q Clear(g_c), s	3.6	3.0	7.1	3.9	2.7	2.7	18.0	13.2	5.2	16.0	10.1	10.1
Prop In Lane	1.00		1.00	1.00		0.26	1.00		1.00	1.00		0.05
Lane Grp Cap(c), veh/h	946	709	1057	736	673	677	442	1347	601	394	1290	702
V/C Ratio(X)	0.05	0.25	0.52	0.05	0.23	0.23	0.83	0.82	0.40	0.12	0.68	0.68
Avail Cap(c_a), veh/h	946	709	1057	736	673	677	442	1347	601	394	1290	702
HCM Platoon Ratio	1.00	1.00	1.00	1.00	1.00	1.00	1.00	1.00	1.00	1.00	1.00	1.00
Upstream Filter(I)	1.00	1.00	1.00	1.00	1.00	1.00	1.00	1.00	1.00	1.00	1.00	1.00
Uniform Delay (d), s/veh	10.1	9.0	10.2	10.3	8.9	8.9	21.2	12.1	9.7	19.2	11.1	11.1
Incr Delay (d2), s/veh	0.1	0.9	1.8	0.1	0.8	0.8	16.5	5.7	2.0	0.6	2.9	5.3
Initial Q Delay(d3),s/veh	0.0	0.0	0.0	0.0	0.0	0.0	0.0	0.0	0.0	0.0	0.0	0.0
%ile BackOfQ(50%),veh/ln	0.1	1.1	1.9	0.1	0.9	0.9	2.8	4.9	1.7	0.2	3.3	4.1
Unsig. Movement Delay, s/veh												
LnGrp Delay(d),s/veh	10.2	9.9	12.1	10.4	9.7	9.7	37.7	17.8	11.7	19.8	14.0	16.4
LnGrp LOS	B	A	B	B	A	A	D	B	B	B	B	B
Approach Vol, veh/h		780			342			1716			1402	
Approach Delay, s/veh		11.5			9.8			21.2			15.0	
Approach LOS		B			A			C			B	

Timer - Assigned Phs		2		4		6		8				
Phs Duration (G+Y+Rc), s		22.5		22.5		22.5		22.5				
Change Period (Y+Rc), s		4.5		4.5		4.5		4.5				
Max Green Setting (Gmax), s		18.0		18.0		18.0		18.0				
Max Q Clear Time (g_c+I1), s		20.0		9.1		18.0		5.9				
Green Ext Time (p_c), s		0.0		2.6		0.0		1.6				

Intersection Summary												
HCM 6th Ctrl Delay			16.4									
HCM 6th LOS			B									

Movement	EBL	EBT	EBR	WBL	WBT	WBR	NBL	NBT	NBR	SBL	SBT	SBR
Lane Configurations												
Traffic Volume (veh/h)	0	0	0	393	1	398	294	1262	0	0	1341	825
Future Volume (veh/h)	0	0	0	393	1	398	294	1262	0	0	1341	825
Initial Q (Qb), veh				0	0	0	0	0	0	0	0	0
Ped-Bike Adj(A_pbT)				1.00		1.00	1.00		1.00	1.00		1.00
Parking Bus, Adj				1.00	1.00	1.00	1.00	1.00	1.00	1.00	1.00	1.00
Work Zone On Approach					No			No			No	
Adj Sat Flow, veh/h/ln				1575	1772	1772	1575	1772	0	0	1772	1772
Adj Flow Rate, veh/h				534	0	273	303	1301	0	0	1382	851
Peak Hour Factor				0.97	0.97	0.97	0.97	0.97	0.97	0.97	0.97	0.97
Percent Heavy Veh, %				2	2	2	2	2	0	0	2	2
Cap, veh/h				968	0	485	348	2005	0	0	1561	485
Arrive On Green				0.32	0.00	0.32	0.46	1.00	0.00	0.00	0.32	0.32
Sat Flow, veh/h				3000	0	1502	1500	3455	0	0	4997	1502
Grp Volume(v), veh/h				534	0	273	303	1301	0	0	1382	851
Grp Sat Flow(s),veh/h/ln				1500	0	1502	1500	1683	0	0	1612	1502
Q Serve(g_s), s				16.1	0.0	16.6	20.0	0.0	0.0	0.0	29.8	35.5
Cycle Q Clear(g_c), s				16.1	0.0	16.6	20.0	0.0	0.0	0.0	29.8	35.5
Prop In Lane				1.00		1.00	1.00		0.00	0.00		1.00
Lane Grp Cap(c), veh/h				968	0	485	348	2005	0	0	1561	485
V/C Ratio(X)				0.55	0.00	0.56	0.87	0.65	0.00	0.00	0.89	1.76
Avail Cap(c_a), veh/h				968	0	485	348	2005	0	0	1561	485
HCM Platoon Ratio				1.00	1.00	1.00	2.00	2.00	1.00	1.00	1.00	1.00
Upstream Filter(I)				1.00	0.00	1.00	1.00	1.00	0.00	0.00	1.00	1.00
Uniform Delay (d), s/veh				30.7	0.0	30.8	28.0	0.0	0.0	0.0	35.3	37.3
Incr Delay (d2), s/veh				2.3	0.0	4.7	24.6	1.6	0.0	0.0	7.7	348.6
Initial Q Delay(d3),s/veh				0.0	0.0	0.0	0.0	0.0	0.0	0.0	0.0	0.0
%ile BackOfQ(50%),veh/ln				6.1	0.0	6.6	7.8	0.5	0.0	0.0	12.6	59.7
Unsig. Movement Delay, s/veh												
LnGrp Delay(d),s/veh				33.0	0.0	35.5	52.6	1.6	0.0	0.0	43.1	385.9
LnGrp LOS				C	A	D	D	A	A	A	D	F
Approach Vol, veh/h					807			1604			2233	
Approach Delay, s/veh					33.8			11.3			173.7	
Approach LOS					C			B			F	

Timer - Assigned Phs	2		5	6		8
Phs Duration (G+Y+Rc), s	70.0		30.0	40.0		40.0
Change Period (Y+Rc), s	4.5		4.5	4.5		4.5
Max Green Setting (Gmax), s	65.5		25.5	35.5		35.5
Max Q Clear Time (g_c+I1), s	2.0		22.0	37.5		18.6
Green Ext Time (p_c), s	14.8		0.3	0.0		2.8

Intersection Summary	
HCM 6th Ctrl Delay	93.3
HCM 6th LOS	F

Notes

User approved volume balancing among the lanes for turning movement.

Movement	EBL	EBT	EBR	WBL	WBT	WBR	NBL	NBT	NBR	SBL	SBT	SBR
Lane Configurations												
Traffic Volume (veh/h)	459	0	361	0	0	0	0	1091	416	389	1347	0
Future Volume (veh/h)	459	0	361	0	0	0	0	1091	416	389	1347	0
Initial Q (Qb), veh	0	0	0				0	0	0	0	0	0
Ped-Bike Adj(A_pbT)	1.00		1.00				1.00		1.00	1.00		1.00
Parking Bus, Adj	1.00	1.00	1.00				1.00	1.00	1.00	1.00	1.00	1.00
Work Zone On Approach		No						No			No	
Adj Sat Flow, veh/h/ln	1575	1772	1772				0	1772	1772	1575	1772	0
Adj Flow Rate, veh/h	418	70	368				0	1113	424	397	1374	0
Peak Hour Factor	0.98	0.98	0.98				0.98	0.98	0.98	0.98	0.98	0.98
Percent Heavy Veh, %	2	2	2				0	2	2	2	2	0
Cap, veh/h	498	82	429				0	1165	362	457	1974	0
Arrive On Green	0.33	0.33	0.33				0.00	0.24	0.24	0.61	1.00	0.00
Sat Flow, veh/h	1500	246	1293				0	4997	1502	1500	3455	0
Grp Volume(v), veh/h	418	0	438				0	1113	424	397	1374	0
Grp Sat Flow(s),veh/h/ln	1500	0	1539				0	1612	1502	1500	1683	0
Q Serve(g_s), s	28.4	0.0	29.2				0.0	25.0	26.5	24.2	0.0	0.0
Cycle Q Clear(g_c), s	28.4	0.0	29.2				0.0	25.0	26.5	24.2	0.0	0.0
Prop In Lane	1.00		0.84				0.00		1.00	1.00		0.00
Lane Grp Cap(c), veh/h	498	0	511				0	1165	362	457	1974	0
V/C Ratio(X)	0.84	0.00	0.86				0.00	0.96	1.17	0.87	0.70	0.00
Avail Cap(c_a), veh/h	498	0	511				0	1165	362	457	1974	0
HCM Platoon Ratio	1.00	1.00	1.00				1.00	1.00	1.00	2.00	2.00	1.00
Upstream Filter(I)	1.00	0.00	1.00				0.00	1.00	1.00	1.00	1.00	0.00
Uniform Delay (d), s/veh	34.0	0.0	34.3				0.0	41.2	41.8	19.7	0.0	0.0
Incr Delay (d2), s/veh	15.6	0.0	16.8				0.0	17.6	102.9	19.6	2.1	0.0
Initial Q Delay(d3),s/veh	0.0	0.0	0.0				0.0	0.0	0.0	0.0	0.0	0.0
%ile BackOfQ(50%),veh/ln	12.3	0.0	13.1				0.0	11.7	20.0	7.7	0.6	0.0
Unsig. Movement Delay, s/veh												
LnGrp Delay(d),s/veh	49.6	0.0	51.1				0.0	58.7	144.7	39.3	2.1	0.0
LnGrp LOS	D	A	D				A	E	F	D	A	A
Approach Vol, veh/h		856						1537			1771	
Approach Delay, s/veh		50.4						82.4			10.4	
Approach LOS		D						F			B	

Timer - Assigned Phs	1	2		4		6
Phs Duration (G+Y+Rc), s	38.0	31.0		41.0		69.0
Change Period (Y+Rc), s	4.5	4.5		4.5		4.5
Max Green Setting (Gmax), s	33.5	26.5		36.5		64.5
Max Q Clear Time (g_c+I1), s	26.2	28.5		31.2		2.0
Green Ext Time (p_c), s	0.8	0.0		2.1		16.2

Intersection Summary	
HCM 6th Ctrl Delay	45.2
HCM 6th LOS	D

Notes

User approved volume balancing among the lanes for turning movement.

Movement	EBL	EBT	EBR	WBL	WBT	WBR	NBL	NBT	NBR	SBL	SBT	SBR
Lane Configurations												
Traffic Volume (veh/h)	243	6	6	3	0	107	0	963	6	110	912	415
Future Volume (veh/h)	243	6	6	3	0	107	0	963	6	110	912	415
Initial Q (Qb), veh	0	0	0	0	0	0	0	0	0	0	0	0
Ped-Bike Adj(A_pbT)	1.00		1.00	1.00		1.00	1.00		1.00	1.00		1.00
Parking Bus, Adj	1.00	1.00	1.00	1.00	1.00	1.00	1.00	1.00	1.00	1.00	1.00	1.00
Work Zone On Approach		No			No			No			No	
Adj Sat Flow, veh/h/ln	1575	1772	1772	1575	1772	1772	1575	1772	1772	1575	1772	1772
Adj Flow Rate, veh/h	253	6	6	3	0	111	0	1003	6	115	950	432
Peak Hour Factor	0.96	0.96	0.96	0.96	0.96	0.96	0.96	0.96	0.96	0.96	0.96	0.96
Percent Heavy Veh, %	2	2	2	2	2	2	2	2	2	2	2	2
Cap, veh/h	372	262	262	461	543	485	211	1419	8	211	935	419
Arrive On Green	0.32	0.32	0.32	0.32	0.00	0.32	0.00	0.83	0.83	0.14	0.41	0.41
Sat Flow, veh/h	1140	813	813	1246	1683	1502	1500	3431	21	1500	2259	1013
Grp Volume(v), veh/h	253	0	12	3	0	111	0	492	517	115	704	678
Grp Sat Flow(s),veh/h/ln	1140	0	1626	1246	1683	1502	1500	1683	1768	1500	1683	1589
Q Serve(g_s), s	23.0	0.0	0.6	0.2	0.0	5.9	0.0	13.4	13.4	7.8	45.5	45.5
Cycle Q Clear(g_c), s	28.9	0.0	0.6	0.7	0.0	5.9	0.0	13.4	13.4	7.8	45.5	45.5
Prop In Lane	1.00		0.50	1.00		1.00	1.00		0.01	1.00		0.64
Lane Grp Cap(c), veh/h	372	0	525	461	543	485	211	696	731	211	696	657
V/C Ratio(X)	0.68	0.00	0.02	0.01	0.00	0.23	0.00	0.71	0.71	0.54	1.01	1.03
Avail Cap(c_a), veh/h	372	0	525	461	543	485	211	696	731	211	696	657
HCM Platoon Ratio	1.00	1.00	1.00	1.00	1.00	1.00	2.00	2.00	2.00	1.00	1.00	1.00
Upstream Filter(I)	1.00	0.00	1.00	1.00	0.00	1.00	0.00	1.00	1.00	1.00	1.00	1.00
Uniform Delay (d), s/veh	37.8	0.0	25.4	25.7	0.0	27.2	0.0	6.7	6.7	44.0	32.3	32.3
Incr Delay (d2), s/veh	9.7	0.0	0.1	0.0	0.0	1.1	0.0	6.0	5.7	9.7	37.1	43.1
Initial Q Delay(d3),s/veh	0.0	0.0	0.0	0.0	0.0	0.0	0.0	0.0	0.0	0.0	0.0	0.0
%ile BackOfQ(50%),veh/ln	7.3	0.0	0.2	0.1	0.0	2.3	0.0	3.5	3.7	3.5	25.0	24.7
Unsig. Movement Delay, s/veh												
LnGrp Delay(d),s/veh	47.5	0.0	25.5	25.7	0.0	28.3	0.0	12.7	12.4	53.7	69.3	75.4
LnGrp LOS	D	A	C	C	A	C	A	B	B	D	F	F
Approach Vol, veh/h		265			114			1009			1497	
Approach Delay, s/veh		46.5			28.3			12.5			70.9	
Approach LOS		D			C			B			E	

Timer - Assigned Phs	1	2		4	5	6		8
Phs Duration (G+Y+Rc), s	20.0	50.0		40.0	20.0	50.0		40.0
Change Period (Y+Rc), s	4.5	4.5		4.5	4.5	4.5		4.5
Max Green Setting (Gmax), s	15.5	45.5		35.5	15.5	45.5		35.5
Max Q Clear Time (g_c+I1), s	9.8	15.4		30.9	0.0	47.5		7.9
Green Ext Time (p_c), s	0.1	7.7		0.4	0.0	0.0		0.7

Intersection Summary		
HCM 6th Ctrl Delay	46.5	
HCM 6th LOS	D	

Intersection	
Intersection Delay, s/veh	82.9
Intersection LOS	F

Movement	EBL	EBT	EBR	WBL	WBT	WBR	NBL	NBT	NBR	SBL	SBT	SBR
Lane Configurations												
Traffic Vol, veh/h	171	474	53	20	529	8	66	57	36	3	53	333
Future Vol, veh/h	171	474	53	20	529	8	66	57	36	3	53	333
Peak Hour Factor	0.78	0.78	0.78	0.78	0.78	0.78	0.78	0.78	0.78	0.78	0.78	0.78
Heavy Vehicles, %	2	2	2	2	2	2	2	2	2	2	2	2
Mvmt Flow	219	608	68	26	678	10	85	73	46	4	68	427
Number of Lanes	1	2	0	1	2	0	0	1	0	0	1	0

Approach	EB	WB	NB	SB
Opposing Approach	WB	EB	SB	NB
Opposing Lanes	3	3	1	1
Conflicting Approach Left	SB	NB	EB	WB
Conflicting Lanes Left	1	1	3	3
Conflicting Approach Right	NB	SB	WB	EB
Conflicting Lanes Right	1	1	3	3
HCM Control Delay	50.2	88.6	28.4	155.5
HCM LOS	F	F	D	F

Lane	NBLn1	EBLn1	EBLn2	EBLn3	WBLn1	WBLn2	WBLn3	SBLn1
Vol Left, %	42%	100%	0%	0%	100%	0%	0%	1%
Vol Thru, %	36%	0%	100%	75%	0%	100%	96%	14%
Vol Right, %	23%	0%	0%	25%	0%	0%	4%	86%
Sign Control	Stop	Stop	Stop	Stop	Stop	Stop	Stop	Stop
Traffic Vol by Lane	159	171	316	211	20	353	184	389
LT Vol	66	171	0	0	20	0	0	3
Through Vol	57	0	316	158	0	353	176	53
RT Vol	36	0	0	53	0	0	8	333
Lane Flow Rate	204	219	405	271	26	452	236	499
Geometry Grp	7	7	7	7	7	7	7	7
Degree of Util (X)	0.582	0.568	0.994	0.651	0.069	1.149	0.599	1.239
Departure Headway (Hd)	11.226	10.399	9.863	9.675	10.49	9.956	9.923	9.275
Convergence, Y/N	Yes	Yes	Yes	Yes	Yes	Yes	Yes	Yes
Cap	324	349	373	376	344	366	366	394
Service Time	8.926	8.099	7.563	7.375	8.19	7.656	7.623	6.975
HCM Lane V/C Ratio	0.63	0.628	1.086	0.721	0.076	1.235	0.645	1.266
HCM Control Delay	28.4	25.9	77.6	28.7	14	125.4	26.4	155.5
HCM Lane LOS	D	D	F	D	B	F	D	F
HCM 95th-tile Q	3.5	3.3	11.5	4.4	0.2	16.3	3.7	20.4

Movement	EBL	EBT	EBR	WBL	WBT	WBR	NBL	NBT	NBR	SBL	SBT	SBR
Lane Configurations												
Traffic Volume (veh/h)	240	192	79	15	195	122	119	764	9	112	885	171
Future Volume (veh/h)	240	192	79	15	195	122	119	764	9	112	885	171
Initial Q (Qb), veh	0	0	0	0	0	0	0	0	0	0	0	0
Ped-Bike Adj(A_pbT)	1.00		1.00	1.00		1.00	1.00		1.00	1.00		1.00
Parking Bus, Adj	1.00	1.00	1.00	1.00	1.00	1.00	1.00	1.00	1.00	1.00	1.00	1.00
Work Zone On Approach		No			No			No			No	
Adj Sat Flow, veh/h/ln	1575	1772	1772	1575	1772	1772	1575	1772	1772	1575	1772	1772
Adj Flow Rate, veh/h	255	204	84	16	207	130	127	813	10	119	941	182
Peak Hour Factor	0.94	0.94	0.94	0.94	0.94	0.94	0.94	0.94	0.94	0.94	0.94	0.94
Percent Heavy Veh, %	2	2	2	2	2	2	2	2	2	2	2	2
Cap, veh/h	184	802	319	211	726	436	252	882	11	143	524	101
Arrive On Green	0.12	0.34	0.34	0.14	0.36	0.36	0.06	0.09	0.09	0.06	0.12	0.12
Sat Flow, veh/h	1500	2351	936	1500	2022	1214	1500	3406	42	1500	2814	544
Grp Volume(v), veh/h	255	144	144	16	171	166	127	402	421	119	563	560
Grp Sat Flow(s),veh/h/ln	1500	1683	1604	1500	1683	1553	1500	1683	1764	1500	1683	1674
Q Serve(g_s), s	13.5	6.8	7.2	1.0	8.0	8.5	9.0	26.1	26.1	8.6	20.5	20.5
Cycle Q Clear(g_c), s	13.5	6.8	7.2	1.0	8.0	8.5	9.0	26.1	26.1	8.6	20.5	20.5
Prop In Lane	1.00		0.58	1.00		0.78	1.00		0.02	1.00		0.32
Lane Grp Cap(c), veh/h	184	574	547	211	604	558	252	436	457	143	314	312
V/C Ratio(X)	1.39	0.25	0.26	0.08	0.28	0.30	0.50	0.92	0.92	0.83	1.79	1.80
Avail Cap(c_a), veh/h	184	574	547	211	604	558	252	436	457	143	314	312
HCM Platoon Ratio	1.00	1.00	1.00	1.00	1.00	1.00	0.33	0.33	0.33	0.67	0.67	0.67
Upstream Filter(I)	1.00	1.00	1.00	1.00	1.00	1.00	1.00	1.00	1.00	1.00	1.00	1.00
Uniform Delay (d), s/veh	48.3	26.1	26.2	41.0	25.1	25.3	47.5	49.2	49.2	50.6	48.1	48.1
Incr Delay (d2), s/veh	203.3	1.0	1.2	0.7	1.2	1.4	7.0	27.3	26.4	40.4	369.7	370.8
Initial Q Delay(d3),s/veh	0.0	0.0	0.0	0.0	0.0	0.0	0.0	0.0	0.0	0.0	0.0	0.0
%ile BackOfQ(50%),veh/ln	15.4	2.9	2.9	0.4	3.4	3.3	4.1	15.1	15.7	4.9	41.1	41.0
Unsig. Movement Delay, s/veh												
LnGrp Delay(d),s/veh	251.5	27.2	27.4	41.7	26.3	26.7	54.5	76.5	75.6	91.0	417.8	418.9
LnGrp LOS	F	C	C	D	C	C	D	E	E	F	F	F
Approach Vol, veh/h		543			353			950			1242	
Approach Delay, s/veh		132.6			27.2			73.1			387.0	
Approach LOS		F			C			E			F	

Timer - Assigned Phs	1	2	3	4	5	6	7	8
Phs Duration (G+Y+Rc), s	15.0	33.0	20.0	42.0	23.0	25.0	18.0	44.0
Change Period (Y+Rc), s	4.5	4.5	4.5	4.5	4.5	4.5	4.5	4.5
Max Green Setting (Gmax), s	10.5	28.5	15.5	37.5	18.5	20.5	13.5	39.5
Max Q Clear Time (g_c+I1), s	10.6	28.1	3.0	9.2	11.0	22.5	15.5	10.5
Green Ext Time (p_c), s	0.0	0.2	0.0	1.8	0.2	0.0	0.0	2.1

Intersection Summary	
HCM 6th Ctrl Delay	204.6
HCM 6th LOS	F

Movement	EBL	EBT	EBR	WBL	WBT	WBR	NBL	NBT	NBR	SBL	SBT	SBR
Lane Configurations												
Traffic Volume (veh/h)	3	250	68	35	266	23	56	72	16	33	40	0
Future Volume (veh/h)	3	250	68	35	266	23	56	72	16	33	40	0
Initial Q (Qb), veh	0	0	0	0	0	0	0	0	0	0	0	0
Ped-Bike Adj(A_pbT)	1.00		1.00	1.00		1.00	1.00		1.00	1.00		1.00
Parking Bus, Adj	1.00	1.00	1.00	1.00	1.00	1.00	1.00	1.00	1.00	1.00	1.00	1.00
Work Zone On Approach		No			No			No			No	
Adj Sat Flow, veh/h/ln	1575	1772	1772	1575	1772	1772	1772	1772	1772	1772	1772	1772
Adj Flow Rate, veh/h	3	284	77	40	302	26	64	82	18	38	45	0
Peak Hour Factor	0.88	0.88	0.88	0.88	0.88	0.88	0.88	0.88	0.88	0.88	0.88	0.88
Percent Heavy Veh, %	2	2	2	2	2	2	2	2	2	2	2	2
Cap, veh/h	588	591	501	530	1047	90	350	227	42	363	268	0
Arrive On Green	0.33	0.33	0.33	0.33	0.33	0.33	0.24	0.24	0.24	0.24	0.24	0.00
Sat Flow, veh/h	935	1772	1502	907	3138	268	468	955	175	478	1126	0
Grp Volume(v), veh/h	3	284	77	40	161	167	164	0	0	83	0	0
Grp Sat Flow(s),veh/h/ln	935	1772	1502	907	1683	1724	1599	0	0	1604	0	0
Q Serve(g_s), s	0.0	2.7	0.8	0.8	1.5	1.5	0.6	0.0	0.0	0.0	0.0	0.0
Cycle Q Clear(g_c), s	1.6	2.7	0.8	3.4	1.5	1.5	1.7	0.0	0.0	0.8	0.0	0.0
Prop In Lane	1.00		1.00	1.00		0.16	0.39		0.11	0.46		0.00
Lane Grp Cap(c), veh/h	588	591	501	530	562	575	619	0	0	631	0	0
V/C Ratio(X)	0.01	0.48	0.15	0.08	0.29	0.29	0.27	0.00	0.00	0.13	0.00	0.00
Avail Cap(c_a), veh/h	1077	1518	1286	1004	1442	1477	1582	0	0	1569	0	0
HCM Platoon Ratio	1.00	1.00	1.00	1.00	1.00	1.00	1.00	1.00	1.00	1.00	1.00	1.00
Upstream Filter(I)	1.00	1.00	1.00	1.00	1.00	1.00	1.00	0.00	0.00	1.00	0.00	0.00
Uniform Delay (d), s/veh	5.7	5.6	4.9	6.9	5.2	5.2	6.7	0.0	0.0	6.4	0.0	0.0
Incr Delay (d2), s/veh	0.0	0.6	0.1	0.1	0.3	0.3	0.2	0.0	0.0	0.1	0.0	0.0
Initial Q Delay(d3),s/veh	0.0	0.0	0.0	0.0	0.0	0.0	0.0	0.0	0.0	0.0	0.0	0.0
%ile BackOfQ(50%),veh/ln	0.0	0.4	0.1	0.1	0.2	0.2	0.3	0.0	0.0	0.2	0.0	0.0
Unsig. Movement Delay, s/veh												
LnGrp Delay(d),s/veh	5.7	6.2	5.1	7.0	5.4	5.4	7.0	0.0	0.0	6.5	0.0	0.0
LnGrp LOS	A	A	A	A	A	A	A	A	A	A	A	A
Approach Vol, veh/h		364			368			164			83	
Approach Delay, s/veh		5.9			5.6			7.0			6.5	
Approach LOS		A			A			A			A	

Timer - Assigned Phs	2	4	6	8
Phs Duration (G+Y+Rc), s	9.5	11.5	9.5	11.5
Change Period (Y+Rc), s	4.5	4.5	4.5	4.5
Max Green Setting (Gmax), s	18.0	18.0	18.0	18.0
Max Q Clear Time (g_c+I1), s	3.7	4.7	2.8	5.4
Green Ext Time (p_c), s	0.7	1.6	0.3	1.7

Intersection Summary	
HCM 6th Ctrl Delay	6.0
HCM 6th LOS	A

Intersection	
Intersection Delay, s/veh	13.1
Intersection LOS	B

Movement	EBL	EBT	EBR	WBL	WBT	WBR	NBL	NBT	NBR	SBL	SBT	SBR
Lane Configurations												
Traffic Vol, veh/h	27	98	112	23	122	26	79	153	15	22	157	35
Future Vol, veh/h	27	98	112	23	122	26	79	153	15	22	157	35
Peak Hour Factor	0.86	0.86	0.86	0.86	0.86	0.86	0.86	0.86	0.86	0.86	0.86	0.86
Heavy Vehicles, %	2	2	2	2	2	2	2	2	2	2	2	2
Mvmt Flow	31	114	130	27	142	30	92	178	17	26	183	41
Number of Lanes	0	1	0	0	1	1	0	1	0	0	1	0

Approach	EB	WB	NB	SB
Opposing Approach	WB	EB	SB	NB
Opposing Lanes	2	1	1	1
Conflicting Approach Left	SB	NB	EB	WB
Conflicting Lanes Left	1	1	1	2
Conflicting Approach Right	NB	SB	WB	EB
Conflicting Lanes Right	1	1	2	1
HCM Control Delay	13.3	11.9	14	12.8
HCM LOS	B	B	B	B

Lane	NBLn1	EBLn1	WBLn1	WBLn2	SBLn1
Vol Left, %	32%	11%	16%	0%	10%
Vol Thru, %	62%	41%	84%	0%	73%
Vol Right, %	6%	47%	0%	100%	16%
Sign Control	Stop	Stop	Stop	Stop	Stop
Traffic Vol by Lane	247	237	145	26	214
LT Vol	79	27	23	0	22
Through Vol	153	98	122	0	157
RT Vol	15	112	0	26	35
Lane Flow Rate	287	276	169	30	249
Geometry Grp	2	5	7	7	2
Degree of Util (X)	0.466	0.44	0.311	0.049	0.402
Departure Headway (Hd)	5.836	5.747	6.638	5.843	5.811
Convergence, Y/N	Yes	Yes	Yes	Yes	Yes
Cap	612	620	538	607	615
Service Time	3.92	3.832	4.428	3.633	3.898
HCM Lane V/C Ratio	0.469	0.445	0.314	0.049	0.405
HCM Control Delay	14	13.3	12.4	8.9	12.8
HCM Lane LOS	B	B	B	A	B
HCM 95th-tile Q	2.5	2.2	1.3	0.2	1.9

Movement	EBL	EBT	EBR	WBL	WBT	WBR	NBL	NBT	NBR	SBL	SBT	SBR
Lane Configurations												
Traffic Volume (veh/h)	66	86	75	31	86	35	80	770	27	79	854	62
Future Volume (veh/h)	66	86	75	31	86	35	80	770	27	79	854	62
Initial Q (Qb), veh	0	0	0	0	0	0	0	0	0	0	0	0
Ped-Bike Adj(A_pbT)	1.00		1.00	1.00		1.00	1.00		1.00	1.00		1.00
Parking Bus, Adj	1.00	1.00	1.00	1.00	1.00	1.00	1.00	1.00	1.00	1.00	1.00	1.00
Work Zone On Approach		No			No			No			No	
Adj Sat Flow, veh/h/ln	1772	1772	1772	1772	1772	1772	1575	1772	1772	1575	1772	1772
Adj Flow Rate, veh/h	72	93	82	34	93	38	87	837	29	86	928	67
Peak Hour Factor	0.92	0.92	0.92	0.92	0.92	0.92	0.92	0.92	0.92	0.92	0.92	0.92
Percent Heavy Veh, %	2	2	2	2	2	2	2	2	2	2	2	2
Cap, veh/h	47	42	403	41	87	403	320	1554	54	211	1259	91
Arrive On Green	0.27	0.27	0.27	0.27	0.27	0.27	0.07	0.15	0.15	0.05	0.13	0.13
Sat Flow, veh/h	0	155	1502	0	325	1502	1500	3320	115	1500	3184	230
Grp Volume(v), veh/h	165	0	82	127	0	38	87	424	442	86	491	504
Grp Sat Flow(s),veh/h/ln	155	0	1502	325	0	1502	1500	1683	1751	1500	1683	1731
Q Serve(g_s), s	0.0	0.0	4.6	0.0	0.0	2.1	6.0	25.6	25.6	6.1	30.8	30.8
Cycle Q Clear(g_c), s	29.5	0.0	4.6	29.5	0.0	2.1	6.0	25.6	25.6	6.1	30.8	30.8
Prop In Lane	0.44		1.00	0.27		1.00	1.00		0.07	1.00		0.13
Lane Grp Cap(c), veh/h	89	0	403	129	0	403	320	788	820	211	666	684
V/C Ratio(X)	1.86	0.00	0.20	0.99	0.00	0.09	0.27	0.54	0.54	0.41	0.74	0.74
Avail Cap(c_a), veh/h	89	0	403	129	0	403	320	788	820	211	666	684
HCM Platoon Ratio	1.00	1.00	1.00	1.00	1.00	1.00	0.33	0.33	0.33	0.33	0.33	0.33
Upstream Filter(I)	1.00	0.00	1.00	1.00	0.00	1.00	1.00	1.00	1.00	1.00	1.00	1.00
Uniform Delay (d), s/veh	41.8	0.0	31.2	36.6	0.0	30.2	43.0	35.5	35.5	48.0	42.3	42.3
Incr Delay (d2), s/veh	427.7	0.0	1.1	75.8	0.0	0.5	2.1	2.6	2.5	5.7	7.1	7.0
Initial Q Delay(d3),s/veh	0.0	0.0	0.0	0.0	0.0	0.0	0.0	0.0	0.0	0.0	0.0	0.0
%ile BackOfQ(50%),veh/ln	18.0	0.0	1.8	5.4	0.0	0.8	2.5	12.1	12.6	2.7	15.2	15.6
Unsig. Movement Delay, s/veh												
LnGrp Delay(d),s/veh	469.5	0.0	32.3	112.4	0.0	30.7	45.1	38.2	38.1	53.7	49.5	49.3
LnGrp LOS	F	A	C	F	A	C	D	D	D	D	D	D
Approach Vol, veh/h		247			165			953			1081	
Approach Delay, s/veh		324.3			93.6			38.8			49.7	
Approach LOS		F			F			D			D	

Timer - Assigned Phs	1	2		4	5	6		8
Phs Duration (G+Y+Rc), s	30.0	56.0		34.0	28.0	48.0		34.0
Change Period (Y+Rc), s	4.5	4.5		4.5	4.5	4.5		4.5
Max Green Setting (Gmax), s	25.5	51.5		29.5	23.5	43.5		29.5
Max Q Clear Time (g_c+I1), s	31.5	27.6		31.5	8.0	32.8		31.5
Green Ext Time (p_c), s	0.1	5.9		0.0	0.2	4.7		0.0

Intersection Summary	
HCM 6th Ctrl Delay	76.1
HCM 6th LOS	E

Intersection	
Intersection Delay, s/veh	11
Intersection LOS	B

Movement	EBL	EBT	EBR	WBL	WBT	WBR	NBL	NBT	NBR	SBL	SBT	SBR
Lane Configurations												
Traffic Vol, veh/h	13	120	59	29	114	23	23	81	14	51	125	19
Future Vol, veh/h	13	120	59	29	114	23	23	81	14	51	125	19
Peak Hour Factor	0.81	0.81	0.81	0.81	0.81	0.81	0.81	0.81	0.81	0.81	0.81	0.81
Heavy Vehicles, %	2	2	2	2	2	2	2	2	2	2	2	2
Mvmt Flow	16	148	73	36	141	28	28	100	17	63	154	23
Number of Lanes	0	1	0	0	1	1	0	1	0	0	1	0

Approach	EB	WB	NB	SB
Opposing Approach	WB	EB	SB	NB
Opposing Lanes	2	1	1	1
Conflicting Approach Left	SB	NB	EB	WB
Conflicting Lanes Left	1	1	1	2
Conflicting Approach Right	NB	SB	WB	EB
Conflicting Lanes Right	1	1	2	1
HCM Control Delay	11.2	10.9	10.2	11.5
HCM LOS	B	B	B	B

Lane	NBLn1	EBLn1	WBLn1	WBLn2	SBLn1
Vol Left, %	19%	7%	20%	0%	26%
Vol Thru, %	69%	62%	80%	0%	64%
Vol Right, %	12%	31%	0%	100%	10%
Sign Control	Stop	Stop	Stop	Stop	Stop
Traffic Vol by Lane	118	192	143	23	195
LT Vol	23	13	29	0	51
Through Vol	81	120	114	0	125
RT Vol	14	59	0	23	19
Lane Flow Rate	146	237	177	28	241
Geometry Grp	2	5	7	7	2
Degree of Util (X)	0.224	0.349	0.296	0.041	0.361
Departure Headway (Hd)	5.54	5.301	6.04	5.227	5.4
Convergence, Y/N	Yes	Yes	Yes	Yes	Yes
Cap	647	678	595	684	664
Service Time	3.583	3.338	3.777	2.964	3.439
HCM Lane V/C Ratio	0.226	0.35	0.297	0.041	0.363
HCM Control Delay	10.2	11.2	11.3	8.2	11.5
HCM Lane LOS	B	B	B	A	B
HCM 95th-tile Q	0.9	1.6	1.2	0.1	1.6

Intersection	
Int Delay, s/veh	0

Movement	WBL	WBR	NBT	NBR	SBL	SBT
Lane Configurations						
Traffic Vol, veh/h	0	0	0	0	0	0
Future Vol, veh/h	0	0	0	0	0	0
Conflicting Peds, #/hr	0	0	0	0	0	0
Sign Control	Stop	Stop	Free	Free	Free	Free
RT Channelized	-	None	-	None	-	None
Storage Length	-	0	-	-	-	-
Veh in Median Storage, #	0	-	0	-	-	0
Grade, %	0	-	0	-	-	0
Peak Hour Factor	92	92	92	92	92	92
Heavy Vehicles, %	2	2	2	2	2	2
Mvmt Flow	0	0	0	0	0	0

Major/Minor	Minor1		Major1		Major2	
Conflicting Flow All	-	0	0	0	-	-
Stage 1	-	-	-	-	-	-
Stage 2	-	-	-	-	-	-
Critical Hdwy	-	6.94	-	-	-	-
Critical Hdwy Stg 1	-	-	-	-	-	-
Critical Hdwy Stg 2	-	-	-	-	-	-
Follow-up Hdwy	-	3.32	-	-	-	-
Pot Cap-1 Maneuver	0	-	-	-	0	-
Stage 1	0	-	-	-	0	-
Stage 2	0	-	-	-	0	-
Platoon blocked, %			-	-		-
Mov Cap-1 Maneuver	-	-	-	-	-	-
Mov Cap-2 Maneuver	-	-	-	-	-	-
Stage 1	-	-	-	-	-	-
Stage 2	-	-	-	-	-	-

Approach	WB	NB	SB
HCM Control Delay, s	0	0	0
HCM LOS	A		

Minor Lane/Major Mvmt	NBT	NBR	WBLn1	SBT
Capacity (veh/h)	-	-	-	-
HCM Lane V/C Ratio	-	-	-	-
HCM Control Delay (s)	-	-	0	-
HCM Lane LOS	-	-	A	-
HCM 95th %tile Q(veh)	-	-	-	-

Intersection	
Int Delay, s/veh	0

Movement	EBT	EBR	WBL	WBT	NBL	NBR
Lane Configurations						
Traffic Vol, veh/h	0	0	0	0	0	0
Future Vol, veh/h	0	0	0	0	0	0
Conflicting Peds, #/hr	0	0	0	0	0	0
Sign Control	Free	Free	Free	Free	Stop	Stop
RT Channelized	-	None	-	None	-	None
Storage Length	-	-	-	-	0	-
Veh in Median Storage, #	0	-	-	0	0	-
Grade, %	0	-	-	0	0	-
Peak Hour Factor	92	92	92	92	92	92
Heavy Vehicles, %	2	2	2	2	2	2
Mvmt Flow	0	0	0	0	0	0

Major/Minor	Major1		Major2		Minor1	
Conflicting Flow All	0	0	-	-	2	-
Stage 1	-	-	-	-	1	-
Stage 2	-	-	-	-	1	-
Critical Hdwy	-	-	-	-	6.63	-
Critical Hdwy Stg 1	-	-	-	-	5.43	-
Critical Hdwy Stg 2	-	-	-	-	5.83	-
Follow-up Hdwy	-	-	-	-	3.519	-
Pot Cap-1 Maneuver	-	-	0	-	1020	0
Stage 1	-	-	0	-	1022	0
Stage 2	-	-	0	-	1022	0
Platoon blocked, %	-	-		-		
Mov Cap-1 Maneuver	-	-	-	-	1020	-
Mov Cap-2 Maneuver	-	-	-	-	1020	-
Stage 1	-	-	-	-	1022	-
Stage 2	-	-	-	-	1022	-

Approach	EB	WB	NB
HCM Control Delay, s	0	0	0
HCM LOS			A

Minor Lane/Major Mvmt	NBLn1	EBT	EBR	WBT
Capacity (veh/h)	-	-	-	-
HCM Lane V/C Ratio	-	-	-	-
HCM Control Delay (s)	0	-	-	-
HCM Lane LOS	A	-	-	-
HCM 95th %tile Q(veh)	-	-	-	-

Movement	EBT	EBR	WBL	WBT	NBL	NBR
Lane Configurations						
Traffic Volume (veh/h)	0	0	0	0	0	0
Future Volume (veh/h)	0	0	0	0	0	0
Initial Q (Qb), veh	0	0	0	0		
Ped-Bike Adj(A_pbT)		1.00	1.00			
Parking Bus, Adj	1.00	1.00	1.00	1.00		
Work Zone On Approach	No			No		
Adj Sat Flow, veh/h/ln	1772	0	0	1772		
Adj Flow Rate, veh/h	0	0	0	0		
Peak Hour Factor	0.92	0.92	0.92	0.92		
Percent Heavy Veh, %	2	0	0	2		
Cap, veh/h	1418	0	0	2693		
Arrive On Green	0.00	0.00	0.00	0.00		
Sat Flow, veh/h	1772	0	0	3544		
Grp Volume(v), veh/h	0	0	0	0		
Grp Sat Flow(s),veh/h/ln	1772	0	0	1683		
Q Serve(g_s), s	0.0	0.0	0.0	0.0		
Cycle Q Clear(g_c), s	0.0	0.0	0.0	0.0		
Prop In Lane		0.00	0.00			
Lane Grp Cap(c), veh/h	1418	0	0	2693		
V/C Ratio(X)	0.00	0.00	0.00	0.00		
Avail Cap(c_a), veh/h	1418	0	0	2693		
HCM Platoon Ratio	1.00	1.00	1.00	1.00		
Upstream Filter(I)	0.00	0.00	0.00	0.00		
Uniform Delay (d), s/veh	0.0	0.0	0.0	0.0		
Incr Delay (d2), s/veh	0.0	0.0	0.0	0.0		
Initial Q Delay(d3),s/veh	0.0	0.0	0.0	0.0		
%ile BackOfQ(50%),veh/ln	0.0	0.0	0.0	0.0		
Unsig. Movement Delay, s/veh						
LnGrp Delay(d),s/veh	0.0	0.0	0.0	0.0		
LnGrp LOS	A	A	A	A		
Approach Vol, veh/h	0			0		
Approach Delay, s/veh	0.0			0.0		
Approach LOS						

Timer - Assigned Phs	4	8
Phs Duration (G+Y+Rc), s	22.5	22.5
Change Period (Y+Rc), s	4.5	4.5
Max Green Setting (Gmax), s	18.0	18.0
Max Q Clear Time (g_c+I1), s	0.0	0.0
Green Ext Time (p_c), s	0.0	0.0

Intersection Summary	
HCM 6th Ctrl Delay	0.0
HCM 6th LOS	A

Intersection	
Intersection Delay, s/veh	11.4
Intersection LOS	B

Movement	EBL	EBT	EBR	WBL	WBT	WBR	NBL	NBT	NBR	SBL	SBT	SBR
Lane Configurations												
Traffic Vol, veh/h	17	117	19	3	92	73	11	177	6	42	138	40
Future Vol, veh/h	17	117	19	3	92	73	11	177	6	42	138	40
Peak Hour Factor	0.81	0.81	0.81	0.81	0.81	0.81	0.81	0.81	0.81	0.81	0.81	0.81
Heavy Vehicles, %	2	2	2	2	2	2	2	2	2	2	2	2
Mvmt Flow	21	144	23	4	114	90	14	219	7	52	170	49
Number of Lanes	0	1	1	0	2	0	0	1	0	0	1	0

Approach	EB	WB	NB	SB
Opposing Approach	WB	EB	SB	NB
Opposing Lanes	2	2	1	1
Conflicting Approach Left	SB	NB	EB	WB
Conflicting Lanes Left	1	1	2	2
Conflicting Approach Right	NB	SB	WB	EB
Conflicting Lanes Right	1	1	2	2
HCM Control Delay	11.3	10.2	11.8	12.2
HCM LOS	B	B	B	B

Lane	NBLn1	EBLn1	EBLn2	WBLn1	WBLn2	SBLn1
Vol Left, %	6%	13%	0%	6%	0%	19%
Vol Thru, %	91%	87%	0%	94%	39%	63%
Vol Right, %	3%	0%	100%	0%	61%	18%
Sign Control	Stop	Stop	Stop	Stop	Stop	Stop
Traffic Vol by Lane	194	134	19	49	119	220
LT Vol	11	17	0	3	0	42
Through Vol	177	117	0	46	46	138
RT Vol	6	0	19	0	73	40
Lane Flow Rate	240	165	23	60	147	272
Geometry Grp	2	7	7	7	7	2
Degree of Util (X)	0.368	0.292	0.036	0.106	0.239	0.409
Departure Headway (Hd)	5.533	6.359	5.581	6.316	5.848	5.421
Convergence, Y/N	Yes	Yes	Yes	Yes	Yes	Yes
Cap	649	564	639	566	613	663
Service Time	3.584	4.113	3.335	4.069	3.6	3.469
HCM Lane V/C Ratio	0.37	0.293	0.036	0.106	0.24	0.41
HCM Control Delay	11.8	11.7	8.5	9.8	10.4	12.2
HCM Lane LOS	B	B	A	A	B	B
HCM 95th-tile Q	1.7	1.2	0.1	0.4	0.9	2

Movement	EBL	EBT	EBR	WBL	WBT	WBR	NBL	NBT	NBR	SBL	SBT	SBR
Lane Configurations												
Traffic Volume (veh/h)	50	96	36	42	76	143	40	638	47	85	844	22
Future Volume (veh/h)	50	96	36	42	76	143	40	638	47	85	844	22
Initial Q (Qb), veh	0	0	0	0	0	0	0	0	0	0	0	0
Ped-Bike Adj(A_pbT)	1.00		1.00	1.00		1.00	1.00		1.00	1.00		1.00
Parking Bus, Adj	1.00	1.00	1.00	1.00	1.00	1.00	1.00	1.00	1.00	1.00	1.00	1.00
Work Zone On Approach		No			No			No			No	
Adj Sat Flow, veh/h/ln	1772	1772	1772	1772	1772	1772	1575	1772	1772	1575	1772	1772
Adj Flow Rate, veh/h	58	112	42	49	88	166	47	742	55	99	981	26
Peak Hour Factor	0.86	0.86	0.86	0.86	0.86	0.86	0.86	0.86	0.86	0.86	0.86	0.86
Percent Heavy Veh, %	2	2	2	2	2	2	2	2	2	2	2	2
Cap, veh/h	189	384	156	164	273	379	211	1459	108	211	1538	41
Arrive On Green	0.28	0.28	0.28	0.28	0.28	0.28	0.14	0.46	0.46	0.05	0.15	0.15
Sat Flow, veh/h	496	1384	563	433	986	1366	1500	3177	235	1500	3350	89
Grp Volume(v), veh/h	99	0	113	137	0	166	47	393	404	99	493	514
Grp Sat Flow(s),veh/h/ln	932	0	1511	1419	0	1366	1500	1683	1730	1500	1683	1756
Q Serve(g_s), s	5.3	0.0	6.4	3.9	0.0	11.0	3.1	18.1	18.1	7.1	30.3	30.3
Cycle Q Clear(g_c), s	16.3	0.0	6.4	10.3	0.0	11.0	3.1	18.1	18.1	7.1	30.3	30.3
Prop In Lane	0.58		0.37	0.36		1.00	1.00		0.14	1.00		0.05
Lane Grp Cap(c), veh/h	310	0	419	438	0	379	211	773	794	211	773	806
V/C Ratio(X)	0.32	0.00	0.27	0.31	0.00	0.44	0.22	0.51	0.51	0.47	0.64	0.64
Avail Cap(c_a), veh/h	310	0	419	438	0	379	211	773	794	211	773	806
HCM Platoon Ratio	1.00	1.00	1.00	1.00	1.00	1.00	1.00	1.00	1.00	0.33	0.33	0.33
Upstream Filter(I)	1.00	0.00	1.00	1.00	0.00	1.00	1.00	1.00	1.00	1.00	1.00	1.00
Uniform Delay (d), s/veh	36.4	0.0	31.0	32.3	0.0	32.7	41.9	21.0	21.0	48.4	38.1	38.1
Incr Delay (d2), s/veh	2.7	0.0	1.6	1.9	0.0	3.7	2.4	2.4	2.3	7.3	4.0	3.8
Initial Q Delay(d3),s/veh	0.0	0.0	0.0	0.0	0.0	0.0	0.0	0.0	0.0	0.0	0.0	0.0
%ile BackOfQ(50%),veh/ln	2.6	0.0	2.5	3.2	0.0	4.0	1.3	7.5	7.7	3.2	14.5	15.1
Unsig. Movement Delay, s/veh												
LnGrp Delay(d),s/veh	39.1	0.0	32.6	34.2	0.0	36.4	44.3	23.4	23.3	55.7	42.1	41.9
LnGrp LOS	D	A	C	C	A	D	D	C	C	E	D	D
Approach Vol, veh/h		212			303			844			1106	
Approach Delay, s/veh		35.7			35.4			24.5			43.2	
Approach LOS		D			D			C			D	

Timer - Assigned Phs	1	2		4	5	6		8
Phs Duration (G+Y+Rc), s	20.0	55.0		35.0	20.0	55.0		35.0
Change Period (Y+Rc), s	4.5	4.5		4.5	4.5	4.5		4.5
Max Green Setting (Gmax), s	15.5	50.5		30.5	15.5	50.5		30.5
Max Q Clear Time (g_c+I1), s	19.1	20.1		18.3	5.1	32.3		13.0
Green Ext Time (p_c), s	0.1	5.7		0.9	0.0	6.4		1.7

Intersection Summary	
HCM 6th Ctrl Delay	35.2
HCM 6th LOS	D

Intersection	
Int Delay, s/veh	2.9

Movement	EBL	EBT	WBT	WBR	SBL	SBR
Lane Configurations						
Traffic Vol, veh/h	113	226	189	77	14	61
Future Vol, veh/h	113	226	189	77	14	61
Conflicting Peds, #/hr	0	0	0	0	0	0
Sign Control	Free	Free	Free	Free	Stop	Stop
RT Channelized	-	None	-	None	-	None
Storage Length	-	-	-	-	0	-
Veh in Median Storage, #	-	0	0	-	0	-
Grade, %	-	0	0	-	0	-
Peak Hour Factor	73	73	73	73	73	73
Heavy Vehicles, %	2	2	2	2	2	2
Mvmt Flow	155	310	259	105	19	84

Major/Minor	Major1		Major2		Minor2	
Conflicting Flow All	364	0	-	0	932	312
Stage 1	-	-	-	-	312	-
Stage 2	-	-	-	-	620	-
Critical Hdwy	4.12	-	-	-	6.42	6.22
Critical Hdwy Stg 1	-	-	-	-	5.42	-
Critical Hdwy Stg 2	-	-	-	-	5.42	-
Follow-up Hdwy	2.218	-	-	-	3.518	3.318
Pot Cap-1 Maneuver	1195	-	-	-	296	728
Stage 1	-	-	-	-	742	-
Stage 2	-	-	-	-	536	-
Platoon blocked, %		-	-	-		
Mov Cap-1 Maneuver	1195	-	-	-	250	728
Mov Cap-2 Maneuver	-	-	-	-	250	-
Stage 1	-	-	-	-	626	-
Stage 2	-	-	-	-	536	-

Approach	EB	WB	SB
HCM Control Delay, s	2.8	0	13.3
HCM LOS			B

Minor Lane/Major Mvmt	EBL	EBT	WBT	WBR	SBLn1
Capacity (veh/h)	1195	-	-	-	537
HCM Lane V/C Ratio	0.13	-	-	-	0.191
HCM Control Delay (s)	8.5	0	-	-	13.3
HCM Lane LOS	A	A	-	-	B
HCM 95th %tile Q(veh)	0.4	-	-	-	0.7

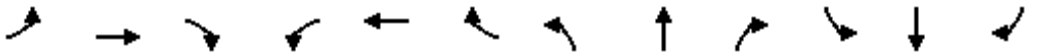

Movement	EBL	EBT	EBR	WBL	WBT	WBR	NBL	NBT	NBR	SBL	SBT	SBR
Lane Configurations												
Traffic Volume (veh/h)	10	1	17	62	0	46	8	501	61	63	978	7
Future Volume (veh/h)	10	1	17	62	0	46	8	501	61	63	978	7
Initial Q (Qb), veh	0	0	0	0	0	0	0	0	0	0	0	0
Ped-Bike Adj(A_pbT)	1.00		1.00	1.00		1.00	1.00		1.00	1.00		1.00
Parking Bus, Adj	1.00	1.00	1.00	1.00	1.00	1.00	1.00	1.00	1.00	1.00	1.00	1.00
Work Zone On Approach		No			No			No			No	
Adj Sat Flow, veh/h/ln	1772	1772	1772	1772	1772	1772	1575	1772	1772	1575	1772	1772
Adj Flow Rate, veh/h	11	1	19	70	0	52	9	563	69	71	1099	8
Peak Hour Factor	0.89	0.89	0.89	0.89	0.89	0.89	0.89	0.89	0.89	0.89	0.89	0.89
Percent Heavy Veh, %	2	2	2	2	2	2	2	2	2	2	2	2
Cap, veh/h	274	64	363	720	0	601	213	1208	148	345	1370	10
Arrive On Green	0.40	0.40	0.40	0.40	0.00	0.40	0.40	0.40	0.40	0.40	0.40	0.40
Sat Flow, veh/h	413	160	907	1401	0	1502	453	3020	369	707	3426	25
Grp Volume(v), veh/h	31	0	0	70	0	52	9	313	319	71	540	567
Grp Sat Flow(s),veh/h/ln	1480	0	0	1401	0	1502	453	1683	1705	707	1683	1767
Q Serve(g_s), s	0.0	0.0	0.0	0.8	0.0	1.0	0.8	6.2	6.2	3.7	12.8	12.8
Cycle Q Clear(g_c), s	0.5	0.0	0.0	1.3	0.0	1.0	13.6	6.2	6.2	9.9	12.8	12.8
Prop In Lane	0.35		0.61	1.00		1.00	1.00		0.22	1.00		0.01
Lane Grp Cap(c), veh/h	701	0	0	720	0	601	213	673	682	345	673	707
V/C Ratio(X)	0.04	0.00	0.00	0.10	0.00	0.09	0.04	0.47	0.47	0.21	0.80	0.80
Avail Cap(c_a), veh/h	701	0	0	720	0	601	213	673	682	345	673	707
HCM Platoon Ratio	1.00	1.00	1.00	1.00	1.00	1.00	1.00	1.00	1.00	1.00	1.00	1.00
Upstream Filter(I)	1.00	0.00	0.00	1.00	0.00	1.00	1.00	1.00	1.00	1.00	1.00	1.00
Uniform Delay (d), s/veh	8.3	0.0	0.0	8.5	0.0	8.4	17.9	10.0	10.0	13.6	11.9	11.9
Incr Delay (d2), s/veh	0.1	0.0	0.0	0.3	0.0	0.3	0.4	2.3	2.3	1.3	9.8	9.3
Initial Q Delay(d3),s/veh	0.0	0.0	0.0	0.0	0.0	0.0	0.0	0.0	0.0	0.0	0.0	0.0
%ile BackOfQ(50%),veh/ln	0.2	0.0	0.0	0.4	0.0	0.3	0.1	2.2	2.2	0.6	5.5	5.7
Unsig. Movement Delay, s/veh												
LnGrp Delay(d),s/veh	8.4	0.0	0.0	8.7	0.0	8.7	18.3	12.3	12.3	15.0	21.7	21.3
LnGrp LOS	A	A	A	A	A	A	B	B	B	B	C	C
Approach Vol, veh/h		31			122			641			1178	
Approach Delay, s/veh		8.4			8.7			12.3			21.1	
Approach LOS		A			A			B			C	
Timer - Assigned Phs		2		4		6		8				
Phs Duration (G+Y+Rc), s		22.5		22.5		22.5		22.5				
Change Period (Y+Rc), s		4.5		4.5		4.5		4.5				
Max Green Setting (Gmax), s		18.0		18.0		18.0		18.0				
Max Q Clear Time (g_c+I1), s		15.6		2.5		14.8		3.3				
Green Ext Time (p_c), s		1.0		0.1		2.1		0.4				
Intersection Summary												
HCM 6th Ctrl Delay			17.3									
HCM 6th LOS			B									

HCM 6th Signalized Intersection Summary
1: Cedar & Valley

06/16/2020

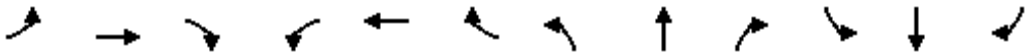

Movement	EBL	EBT	EBR	WBL	WBT	WBR	NBL	NBT	NBR	SBL	SBT	SBR
Lane Configurations												
Traffic Volume (veh/h)	248	418	483	231	238	59	372	1203	213	79	943	65
Future Volume (veh/h)	248	418	483	231	238	59	372	1203	213	79	943	65
Initial Q (Qb), veh	0	0	0	0	0	0	0	0	0	0	0	0
Ped-Bike Adj(A_pbT)	1.00		1.00	1.00		1.00	1.00		1.00	1.00		1.00
Parking Bus, Adj	1.00	1.00	1.00	1.00	1.00	1.00	1.00	1.00	1.00	1.00	1.00	1.00
Work Zone On Approach		No			No			No			No	
Adj Sat Flow, veh/h/ln	1575	1772	1772	1575	1772	1772	1575	1772	1772	1575	1772	1772
Adj Flow Rate, veh/h	251	422	488	233	240	60	376	1215	215	80	953	66
Peak Hour Factor	0.99	0.99	0.99	0.99	0.99	0.99	0.99	0.99	0.99	0.99	0.99	0.99
Percent Heavy Veh, %	2	2	2	2	2	2	2	2	2	2	2	2
Cap, veh/h	952	709	1057	545	1072	263	553	1347	601	359	1848	128
Arrive On Green	0.40	0.40	0.40	0.40	0.40	0.40	0.40	0.40	0.40	0.40	0.40	0.40
Sat Flow, veh/h	1861	1772	2643	1057	2680	657	954	3367	1502	645	4620	319
Grp Volume(v), veh/h	251	422	488	233	149	151	376	1215	215	80	665	354
Grp Sat Flow(s),veh/h/ln	931	1772	1321	529	1683	1654	477	1683	1502	323	1612	1714
Q Serve(g_s), s	4.6	8.4	6.1	9.6	2.6	2.7	11.0	15.2	4.5	2.8	7.0	7.0
Cycle Q Clear(g_c), s	7.3	8.4	6.1	18.0	2.6	2.7	18.0	15.2	4.5	18.0	7.0	7.0
Prop In Lane	1.00		1.00	1.00		0.40	1.00		1.00	1.00		0.19
Lane Grp Cap(c), veh/h	952	709	1057	545	673	661	553	1347	601	359	1290	686
V/C Ratio(X)	0.26	0.60	0.46	0.43	0.22	0.23	0.68	0.90	0.36	0.22	0.52	0.52
Avail Cap(c_a), veh/h	952	709	1057	545	673	661	553	1347	601	359	1290	686
HCM Platoon Ratio	1.00	1.00	1.00	1.00	1.00	1.00	1.00	1.00	1.00	1.00	1.00	1.00
Upstream Filter(I)	1.00	1.00	1.00	1.00	1.00	1.00	1.00	1.00	1.00	1.00	1.00	1.00
Uniform Delay (d), s/veh	11.3	10.6	9.9	17.9	8.9	8.9	19.1	12.7	9.5	21.8	10.2	10.2
Incr Delay (d2), s/veh	0.7	3.7	1.5	2.4	0.8	0.8	6.6	10.0	1.7	1.4	1.5	2.8
Initial Q Delay(d3),s/veh	0.0	0.0	0.0	0.0	0.0	0.0	0.0	0.0	0.0	0.0	0.0	0.0
%ile BackOfQ(50%),veh/ln	0.9	3.3	1.6	1.2	0.9	0.9	2.3	6.2	1.4	0.5	2.2	2.6
Unsig. Movement Delay, s/veh												
LnGrp Delay(d),s/veh	12.0	14.3	11.4	20.3	9.6	9.7	25.7	22.7	11.1	23.2	11.7	13.0
LnGrp LOS	B	B	B	C	A	A	C	C	B	C	B	B
Approach Vol, veh/h		1161			533			1806			1099	
Approach Delay, s/veh		12.6			14.3			22.0			12.9	
Approach LOS		B			B			C			B	

Timer - Assigned Phs		2		4		6		8				
Phs Duration (G+Y+Rc), s		22.5		22.5		22.5		22.5				
Change Period (Y+Rc), s		4.5		4.5		4.5		4.5				
Max Green Setting (Gmax), s		18.0		18.0		18.0		18.0				
Max Q Clear Time (g_c+I1), s		20.0		10.4		20.0		20.0				
Green Ext Time (p_c), s		0.0		3.7		0.0		0.0				

Intersection Summary												
HCM 6th Ctrl Delay			16.6									
HCM 6th LOS			B									

Movement	EBL	EBT	EBR	WBL	WBT	WBR	NBL	NBT	NBR	SBL	SBT	SBR
Lane Configurations												
Traffic Volume (veh/h)	0	0	0	335	2	507	184	1292	0	0	1170	527
Future Volume (veh/h)	0	0	0	335	2	507	184	1292	0	0	1170	527
Initial Q (Qb), veh				0	0	0	0	0	0	0	0	0
Ped-Bike Adj(A_pbT)				1.00		1.00	1.00		1.00	1.00		1.00
Parking Bus, Adj				1.00	1.00	1.00	1.00	1.00	1.00	1.00	1.00	1.00
Work Zone On Approach					No			No			No	
Adj Sat Flow, veh/h/ln				1575	1772	1772	1575	1772	0	0	1772	1772
Adj Flow Rate, veh/h				226	0	633	186	1305	0	0	1182	532
Peak Hour Factor				0.99	0.99	0.99	0.99	0.99	0.99	0.99	0.99	0.99
Percent Heavy Veh, %				2	2	2	2	2	0	0	2	2
Cap, veh/h				419	0	838	319	2174	0	0	1915	594
Arrive On Green				0.28	0.00	0.28	0.43	1.00	0.00	0.00	0.40	0.40
Sat Flow, veh/h				1500	0	3003	1500	3455	0	0	4997	1502
Grp Volume(v), veh/h				226	0	633	186	1305	0	0	1182	532
Grp Sat Flow(s),veh/h/ln				1500	0	1502	1500	1683	0	0	1612	1502
Q Serve(g_s), s				15.3	0.0	23.1	11.4	0.0	0.0	0.0	23.4	39.8
Cycle Q Clear(g_c), s				15.3	0.0	23.1	11.4	0.0	0.0	0.0	23.4	39.8
Prop In Lane				1.00		1.00	1.00		0.00	0.00		1.00
Lane Grp Cap(c), veh/h				419	0	838	319	2174	0	0	1915	594
V/C Ratio(X)				0.54	0.00	0.76	0.58	0.60	0.00	0.00	0.62	0.90
Avail Cap(c_a), veh/h				419	0	838	319	2174	0	0	1915	594
HCM Platoon Ratio				1.00	1.00	1.00	2.00	2.00	1.00	1.00	1.00	1.00
Upstream Filter(I)				1.00	0.00	1.00	1.00	1.00	0.00	0.00	1.00	1.00
Uniform Delay (d), s/veh				36.7	0.0	39.5	30.4	0.0	0.0	0.0	29.0	33.9
Incr Delay (d2), s/veh				4.9	0.0	6.3	7.6	1.2	0.0	0.0	1.5	18.5
Initial Q Delay(d3),s/veh				0.0	0.0	0.0	0.0	0.0	0.0	0.0	0.0	0.0
%ile BackOfQ(50%),veh/ln				6.2	0.0	9.2	4.2	0.4	0.0	0.0	9.3	17.3
Unsig. Movement Delay, s/veh												
LnGrp Delay(d),s/veh				41.6	0.0	45.8	38.0	1.2	0.0	0.0	30.5	52.5
LnGrp LOS				D	A	D	D	A	A	A	C	D
Approach Vol, veh/h					859			1491			1714	
Approach Delay, s/veh					44.7			5.8			37.3	
Approach LOS					D			A			D	

Timer - Assigned Phs	2		5	6		8
Phs Duration (G+Y+Rc), s	82.0		30.0	52.0		38.0
Change Period (Y+Rc), s	4.5		4.5	4.5		4.5
Max Green Setting (Gmax), s	77.5		25.5	47.5		33.5
Max Q Clear Time (g_c+I1), s	2.0		13.4	41.8		25.1
Green Ext Time (p_c), s	15.1		0.4	4.3		2.4

Intersection Summary	
HCM 6th Ctrl Delay	27.3
HCM 6th LOS	C

Notes

User approved volume balancing among the lanes for turning movement.

Movement	EBL	EBT	EBR	WBL	WBT	WBR	NBL	NBT	NBR	SBL	SBT	SBR
Lane Configurations												
Traffic Volume (veh/h)	622	8	177	0	0	0	0	869	324	395	1130	0
Future Volume (veh/h)	622	8	177	0	0	0	0	869	324	395	1130	0
Initial Q (Qb), veh	0	0	0				0	0	0	0	0	0
Ped-Bike Adj(A_pbT)	1.00		1.00				1.00		1.00	1.00		1.00
Parking Bus, Adj	1.00	1.00	1.00				1.00	1.00	1.00	1.00	1.00	1.00
Work Zone On Approach		No						No			No	
Adj Sat Flow, veh/h/ln	1575	1772	1772				0	1772	1772	1575	1772	0
Adj Flow Rate, veh/h	412	320	181				0	887	331	403	1153	0
Peak Hour Factor	0.98	0.98	0.98				0.98	0.98	0.98	0.98	0.98	0.98
Percent Heavy Veh, %	2	2	2				0	2	2	2	2	0
Cap, veh/h	431	306	173				0	1754	544	356	2146	0
Arrive On Green	0.29	0.29	0.29				0.00	0.36	0.36	0.47	1.00	0.00
Sat Flow, veh/h	1500	1063	601				0	4997	1502	1500	3455	0
Grp Volume(v), veh/h	412	0	501				0	887	331	403	1153	0
Grp Sat Flow(s),veh/h/ln	1500	0	1664				0	1612	1502	1500	1683	0
Q Serve(g_s), s	32.4	0.0	34.5				0.0	17.2	21.6	28.5	0.0	0.0
Cycle Q Clear(g_c), s	32.4	0.0	34.5				0.0	17.2	21.6	28.5	0.0	0.0
Prop In Lane	1.00		0.36				0.00		1.00	1.00		0.00
Lane Grp Cap(c), veh/h	431	0	478				0	1754	544	356	2146	0
V/C Ratio(X)	0.96	0.00	1.05				0.00	0.51	0.61	1.13	0.54	0.00
Avail Cap(c_a), veh/h	431	0	478				0	1754	544	356	2146	0
HCM Platoon Ratio	1.00	1.00	1.00				1.00	1.00	1.00	2.00	2.00	1.00
Upstream Filter(I)	1.00	0.00	1.00				0.00	1.00	1.00	1.00	1.00	0.00
Uniform Delay (d), s/veh	42.0	0.0	42.8				0.0	29.9	31.3	31.5	0.0	0.0
Incr Delay (d2), s/veh	33.5	0.0	54.1				0.0	1.0	5.0	88.2	1.0	0.0
Initial Q Delay(d3),s/veh	0.0	0.0	0.0				0.0	0.0	0.0	0.0	0.0	0.0
%ile BackOfQ(50%),veh/ln	15.9	0.0	21.2				0.0	6.8	8.5	16.7	0.3	0.0
Unsig. Movement Delay, s/veh												
LnGrp Delay(d),s/veh	75.5	0.0	96.9				0.0	30.9	36.3	119.7	1.0	0.0
LnGrp LOS	E	A	F				A	C	D	F	A	A
Approach Vol, veh/h		913						1218			1556	
Approach Delay, s/veh		87.2						32.4			31.7	
Approach LOS		F						C			C	

Timer - Assigned Phs	1	2		4		6
Phs Duration (G+Y+Rc), s	33.0	48.0		39.0		81.0
Change Period (Y+Rc), s	4.5	4.5		4.5		4.5
Max Green Setting (Gmax), s	28.5	43.5		34.5		76.5
Max Q Clear Time (g_c+I1), s	30.5	23.6		36.5		2.0
Green Ext Time (p_c), s	0.0	7.6		0.0		12.1

Intersection Summary	
HCM 6th Ctrl Delay	45.7
HCM 6th LOS	D

Notes

User approved volume balancing among the lanes for turning movement.

Movement	EBL	EBT	EBR	WBL	WBT	WBR	NBL	NBT	NBR	SBL	SBT	SBR
Lane Configurations												
Traffic Volume (veh/h)	215	16	13	10	3	175	5	807	1	47	1022	239
Future Volume (veh/h)	215	16	13	10	3	175	5	807	1	47	1022	239
Initial Q (Qb), veh	0	0	0	0	0	0	0	0	0	0	0	0
Ped-Bike Adj(A_pbT)	1.00		1.00	1.00		1.00	1.00		1.00	1.00		1.00
Parking Bus, Adj	1.00	1.00	1.00	1.00	1.00	1.00	1.00	1.00	1.00	1.00	1.00	1.00
Work Zone On Approach		No			No			No			No	
Adj Sat Flow, veh/h/ln	1575	1772	1772	1575	1772	1772	1575	1772	1772	1575	1772	1772
Adj Flow Rate, veh/h	231	17	14	11	3	188	5	868	1	51	1099	257
Peak Hour Factor	0.93	0.93	0.93	0.93	0.93	0.93	0.93	0.93	0.93	0.93	0.93	0.93
Percent Heavy Veh, %	2	2	2	2	2	2	2	2	2	2	2	2
Cap, veh/h	267	266	219	406	498	444	287	1596	2	494	1254	291
Arrive On Green	0.30	0.30	0.30	0.30	0.30	0.30	0.26	0.93	0.93	0.13	0.46	0.46
Sat Flow, veh/h	1060	899	740	1225	1683	1502	1500	3451	4	1500	2712	630
Grp Volume(v), veh/h	231	0	31	11	3	188	5	423	446	51	680	676
Grp Sat Flow(s),veh/h/ln	1060	0	1639	1225	1683	1502	1500	1683	1771	1500	1683	1658
Q Serve(g_s), s	23.4	0.0	1.6	0.8	0.2	12.1	0.1	4.6	4.6	1.7	43.7	44.4
Cycle Q Clear(g_c), s	35.5	0.0	1.6	2.4	0.2	12.1	0.1	4.6	4.6	1.7	43.7	44.4
Prop In Lane	1.00		0.45	1.00		1.00	1.00		0.00	1.00		0.38
Lane Grp Cap(c), veh/h	267	0	485	406	498	444	287	779	819	494	779	767
V/C Ratio(X)	0.87	0.00	0.06	0.03	0.01	0.42	0.02	0.54	0.54	0.10	0.87	0.88
Avail Cap(c_a), veh/h	267	0	485	406	498	444	287	779	819	494	779	767
HCM Platoon Ratio	1.00	1.00	1.00	1.00	1.00	1.00	2.00	2.00	2.00	1.00	1.00	1.00
Upstream Filter(I)	1.00	0.00	1.00	1.00	1.00	1.00	1.00	1.00	1.00	1.00	1.00	1.00
Uniform Delay (d), s/veh	49.5	0.0	30.3	31.2	29.8	34.0	15.6	2.6	2.6	10.5	29.1	29.3
Incr Delay (d2), s/veh	29.4	0.0	0.3	0.1	0.0	2.9	0.1	2.7	2.6	0.4	13.0	13.9
Initial Q Delay(d3),s/veh	0.0	0.0	0.0	0.0	0.0	0.0	0.0	0.0	0.0	0.0	0.0	0.0
%ile BackOfQ(50%),veh/ln	9.2	0.0	0.7	0.2	0.1	4.8	0.1	1.5	1.6	0.6	19.9	20.1
Unsig. Movement Delay, s/veh												
LnGrp Delay(d),s/veh	78.9	0.0	30.6	31.3	29.8	36.9	15.7	5.3	5.2	10.9	42.0	43.1
LnGrp LOS	E	A	C	C	C	D	B	A	A	B	D	D
Approach Vol, veh/h		262			202			874			1407	
Approach Delay, s/veh		73.2			36.5			5.3			41.4	
Approach LOS		E			D			A			D	

Timer - Assigned Phs	1	2		4	5	6		8
Phs Duration (G+Y+Rc), s	20.0	60.0		40.0	20.0	60.0		40.0
Change Period (Y+Rc), s	4.5	4.5		4.5	4.5	4.5		4.5
Max Green Setting (Gmax), s	15.5	55.5		35.5	15.5	55.5		35.5
Max Q Clear Time (g_c+I1), s	13.7	6.6		37.5	2.1	46.4		14.1
Green Ext Time (p_c), s	0.1	6.7		0.0	0.0	5.8		1.2

Intersection Summary	
HCM 6th Ctrl Delay	32.6
HCM 6th LOS	C

Intersection	
Intersection Delay, s/veh	35.3
Intersection LOS	E

Movement	EBL	EBT	EBR	WBL	WBT	WBR	NBL	NBT	NBR	SBL	SBT	SBR
Lane Configurations												
Traffic Vol, veh/h	146	711	47	26	408	10	44	91	49	8	61	139
Future Vol, veh/h	146	711	47	26	408	10	44	91	49	8	61	139
Peak Hour Factor	0.94	0.94	0.94	0.94	0.94	0.94	0.94	0.94	0.94	0.94	0.94	0.94
Heavy Vehicles, %	2	2	2	2	2	2	2	2	2	2	2	2
Mvmt Flow	155	756	50	28	434	11	47	97	52	9	65	148
Number of Lanes	1	2	0	1	2	0	0	1	0	0	1	0

Approach	EB	WB	NB	SB
Opposing Approach	WB	EB	SB	NB
Opposing Lanes	3	3	1	1
Conflicting Approach Left	SB	NB	EB	WB
Conflicting Lanes Left	1	1	3	3
Conflicting Approach Right	NB	SB	WB	EB
Conflicting Lanes Right	1	1	3	3
HCM Control Delay	49.9	19.9	18.9	19.2
HCM LOS	E	C	C	C

Lane	NBLn1	EBLn1	EBLn2	EBLn3	WBLn1	WBLn2	WBLn3	SBLn1
Vol Left, %	24%	100%	0%	0%	100%	0%	0%	4%
Vol Thru, %	49%	0%	100%	83%	0%	100%	93%	29%
Vol Right, %	27%	0%	0%	17%	0%	0%	7%	67%
Sign Control	Stop	Stop	Stop	Stop	Stop	Stop	Stop	Stop
Traffic Vol by Lane	184	146	474	284	26	272	146	208
LT Vol	44	146	0	0	26	0	0	8
Through Vol	91	0	474	237	0	272	136	61
RT Vol	49	0	0	47	0	0	10	139
Lane Flow Rate	196	155	504	302	28	289	155	221
Geometry Grp	7	7	7	7	7	7	7	7
Degree of Util (X)	0.463	0.342	1.038	0.612	0.064	0.629	0.335	0.503
Departure Headway (Hd)	8.794	7.93	7.412	7.292	8.615	8.095	8.045	8.333
Convergence, Y/N	Yes	Yes	Yes	Yes	Yes	Yes	Yes	Yes
Cap	413	455	494	499	418	449	450	436
Service Time	6.494	5.645	5.127	5.007	6.315	5.795	5.745	6.033
HCM Lane V/C Ratio	0.475	0.341	1.02	0.605	0.067	0.644	0.344	0.507
HCM Control Delay	18.9	14.7	78.2	20.9	11.9	23.5	14.7	19.2
HCM Lane LOS	C	B	F	C	B	C	B	C
HCM 95th-tile Q	2.4	1.5	14.9	4	0.2	4.2	1.5	2.8

Movement	EBL	EBT	EBR	WBL	WBT	WBR	NBL	NBT	NBR	SBL	SBT	SBR
Lane Configurations												
Traffic Volume (veh/h)	178	443	116	15	198	96	111	545	42	134	789	96
Future Volume (veh/h)	178	443	116	15	198	96	111	545	42	134	789	96
Initial Q (Qb), veh	0	0	0	0	0	0	0	0	0	0	0	0
Ped-Bike Adj(A_pbT)	1.00		1.00	1.00		1.00	1.00		1.00	1.00		1.00
Parking Bus, Adj	1.00	1.00	1.00	1.00	1.00	1.00	1.00	1.00	1.00	1.00	1.00	1.00
Work Zone On Approach		No			No			No			No	
Adj Sat Flow, veh/h/ln	1575	1772	1772	1575	1772	1772	1575	1772	1772	1575	1772	1772
Adj Flow Rate, veh/h	180	447	117	15	200	97	112	551	42	135	797	97
Peak Hour Factor	0.99	0.99	0.99	0.99	0.99	0.99	0.99	0.99	0.99	0.99	0.99	0.99
Percent Heavy Veh, %	2	2	2	2	2	2	2	2	2	2	2	2
Cap, veh/h	156	782	203	169	678	316	344	991	75	194	642	78
Arrive On Green	0.10	0.30	0.30	0.11	0.30	0.30	0.30	0.42	0.42	0.09	0.14	0.14
Sat Flow, veh/h	1500	2645	687	1500	2229	1039	1500	3171	241	1500	3021	368
Grp Volume(v), veh/h	180	283	281	15	149	148	112	292	301	135	444	450
Grp Sat Flow(s),veh/h/ln	1500	1683	1648	1500	1683	1585	1500	1683	1729	1500	1683	1706
Q Serve(g_s), s	12.5	17.1	17.3	1.1	8.1	8.6	6.9	15.8	15.9	10.5	25.5	25.5
Cycle Q Clear(g_c), s	12.5	17.1	17.3	1.1	8.1	8.6	6.9	15.8	15.9	10.5	25.5	25.5
Prop In Lane	1.00		0.42	1.00		0.66	1.00		0.14	1.00		0.22
Lane Grp Cap(c), veh/h	156	498	488	169	512	482	344	526	540	194	358	362
V/C Ratio(X)	1.15	0.57	0.58	0.09	0.29	0.31	0.33	0.56	0.56	0.70	1.24	1.24
Avail Cap(c_a), veh/h	156	498	488	169	512	482	344	526	540	194	358	362
HCM Platoon Ratio	1.00	1.00	1.00	1.00	1.00	1.00	1.33	1.33	1.33	0.67	0.67	0.67
Upstream Filter(I)	1.00	1.00	1.00	1.00	1.00	1.00	1.00	1.00	1.00	1.00	1.00	1.00
Uniform Delay (d), s/veh	53.8	35.8	35.9	47.7	31.9	32.0	34.6	28.7	28.7	52.5	51.5	51.5
Incr Delay (d2), s/veh	118.7	4.7	4.9	1.0	1.4	1.6	2.5	4.2	4.1	18.8	130.1	130.0
Initial Q Delay(d3),s/veh	0.0	0.0	0.0	0.0	0.0	0.0	0.0	0.0	0.0	0.0	0.0	0.0
%ile BackOfQ(50%),veh/ln	9.9	7.6	7.6	0.5	3.5	3.5	2.7	6.5	6.7	5.1	24.0	24.4
Unsig. Movement Delay, s/veh												
LnGrp Delay(d),s/veh	172.4	40.4	40.7	48.8	33.3	33.7	37.1	32.9	32.9	71.3	181.6	181.5
LnGrp LOS	F	D	D	D	C	C	D	C	C	E	F	F
Approach Vol, veh/h		744			312			705			1029	
Approach Delay, s/veh		72.5			34.2			33.5			167.1	
Approach LOS		E			C			C			F	

Timer - Assigned Phs	1	2	3	4	5	6	7	8
Phs Duration (G+Y+Rc), s	30.0	42.0	18.0	40.0	32.0	30.0	17.0	41.0
Change Period (Y+Rc), s	4.5	4.5	4.5	4.5	4.5	4.5	4.5	4.5
Max Green Setting (Gmax), s	25.5	37.5	13.5	35.5	27.5	25.5	12.5	36.5
Max Q Clear Time (g_c+I1), s	12.5	17.9	3.1	19.3	8.9	27.5	14.5	10.6
Green Ext Time (p_c), s	0.1	3.5	0.0	3.2	0.2	0.0	0.0	1.8

Intersection Summary	
HCM 6th Ctrl Delay	93.3
HCM 6th LOS	F

Movement	EBL	EBT	EBR	WBL	WBT	WBR	NBL	NBT	NBR	SBL	SBT	SBR
Lane Configurations												
Traffic Volume (veh/h)	22	532	67	37	253	59	43	79	67	18	39	18
Future Volume (veh/h)	22	532	67	37	253	59	43	79	67	18	39	18
Initial Q (Qb), veh	0	0	0	0	0	0	0	0	0	0	0	0
Ped-Bike Adj(A_pbT)	1.00		1.00	1.00		1.00	1.00		1.00	1.00		1.00
Parking Bus, Adj	1.00	1.00	1.00	1.00	1.00	1.00	1.00	1.00	1.00	1.00	1.00	1.00
Work Zone On Approach		No			No			No			No	
Adj Sat Flow, veh/h/ln	1575	1772	1772	1575	1772	1772	1772	1772	1772	1772	1772	1772
Adj Flow Rate, veh/h	25	605	76	42	288	67	49	90	76	20	44	20
Peak Hour Factor	0.88	0.88	0.88	0.88	0.88	0.88	0.88	0.88	0.88	0.88	0.88	0.88
Percent Heavy Veh, %	2	2	2	2	2	2	2	2	2	2	2	2
Cap, veh/h	612	806	683	373	1237	283	213	175	126	205	232	87
Arrive On Green	0.45	0.45	0.45	0.45	0.45	0.45	0.22	0.22	0.22	0.22	0.22	0.22
Sat Flow, veh/h	912	1772	1502	675	2720	623	246	783	562	207	1034	388
Grp Volume(v), veh/h	25	605	76	42	176	179	215	0	0	84	0	0
Grp Sat Flow(s),veh/h/ln	912	1772	1502	675	1683	1660	1591	0	0	1629	0	0
Q Serve(g_s), s	0.5	7.9	0.8	1.5	1.8	1.8	1.4	0.0	0.0	0.0	0.0	0.0
Cycle Q Clear(g_c), s	2.3	7.9	0.8	9.5	1.8	1.8	3.3	0.0	0.0	1.1	0.0	0.0
Prop In Lane	1.00		1.00	1.00		0.38	0.23		0.35	0.24		0.24
Lane Grp Cap(c), veh/h	612	806	683	373	766	755	514	0	0	524	0	0
V/C Ratio(X)	0.04	0.75	0.11	0.11	0.23	0.24	0.42	0.00	0.00	0.16	0.00	0.00
Avail Cap(c_a), veh/h	783	1138	964	500	1081	1066	1166	0	0	1168	0	0
HCM Platoon Ratio	1.00	1.00	1.00	1.00	1.00	1.00	1.00	1.00	1.00	1.00	1.00	1.00
Upstream Filter(I)	1.00	1.00	1.00	1.00	1.00	1.00	1.00	0.00	0.00	1.00	0.00	0.00
Uniform Delay (d), s/veh	5.4	6.3	4.4	10.2	4.7	4.7	9.7	0.0	0.0	8.9	0.0	0.0
Incr Delay (d2), s/veh	0.0	1.8	0.1	0.1	0.2	0.2	0.5	0.0	0.0	0.1	0.0	0.0
Initial Q Delay(d3),s/veh	0.0	0.0	0.0	0.0	0.0	0.0	0.0	0.0	0.0	0.0	0.0	0.0
%ile BackOfQ(50%),veh/ln	0.1	1.6	0.1	0.2	0.3	0.3	0.9	0.0	0.0	0.3	0.0	0.0
Unsig. Movement Delay, s/veh												
LnGrp Delay(d),s/veh	5.4	8.1	4.5	10.4	4.8	4.8	10.2	0.0	0.0	9.0	0.0	0.0
LnGrp LOS	A	A	A	B	A	A	B	A	A	A	A	A
Approach Vol, veh/h		706			397			215			84	
Approach Delay, s/veh		7.6			5.4			10.2			9.0	
Approach LOS		A			A			B			A	

Timer - Assigned Phs	2	4	6	8
Phs Duration (G+Y+Rc), s	10.8	17.2	10.8	17.2
Change Period (Y+Rc), s	4.5	4.5	4.5	4.5
Max Green Setting (Gmax), s	18.0	18.0	18.0	18.0
Max Q Clear Time (g_c+I1), s	5.3	9.9	3.1	11.5
Green Ext Time (p_c), s	1.0	2.8	0.3	1.3

Intersection Summary	
HCM 6th Ctrl Delay	7.5
HCM 6th LOS	A

Intersection	
Intersection Delay, s/veh	13.9
Intersection LOS	B

Movement	EBL	EBT	EBR	WBL	WBT	WBR	NBL	NBT	NBR	SBL	SBT	SBR
Lane Configurations												
Traffic Vol, veh/h	24	124	53	23	72	22	45	261	34	30	261	18
Future Vol, veh/h	24	124	53	23	72	22	45	261	34	30	261	18
Peak Hour Factor	0.94	0.94	0.94	0.94	0.94	0.94	0.94	0.94	0.94	0.94	0.94	0.94
Heavy Vehicles, %	2	2	2	2	2	2	2	2	2	2	2	2
Mvmt Flow	26	132	56	24	77	23	48	278	36	32	278	19
Number of Lanes	0	1	0	0	1	1	0	1	0	0	1	0

Approach	EB	WB	NB	SB
Opposing Approach	WB	EB	SB	NB
Opposing Lanes	2	1	1	1
Conflicting Approach Left	SB	NB	EB	WB
Conflicting Lanes Left	1	1	1	2
Conflicting Approach Right	NB	SB	WB	EB
Conflicting Lanes Right	1	1	2	1
HCM Control Delay	12.6	11.1	15.3	14.4
HCM LOS	B	B	C	B

Lane	NBLn1	EBLn1	WBLn1	WBLn2	SBLn1
Vol Left, %	13%	12%	24%	0%	10%
Vol Thru, %	77%	62%	76%	0%	84%
Vol Right, %	10%	26%	0%	100%	6%
Sign Control	Stop	Stop	Stop	Stop	Stop
Traffic Vol by Lane	340	201	95	22	309
LT Vol	45	24	23	0	30
Through Vol	261	124	72	0	261
RT Vol	34	53	0	22	18
Lane Flow Rate	362	214	101	23	329
Geometry Grp	2	5	7	7	2
Degree of Util (X)	0.555	0.361	0.196	0.04	0.51
Departure Headway (Hd)	5.519	6.078	6.964	6.125	5.587
Convergence, Y/N	Yes	Yes	Yes	Yes	Yes
Cap	651	588	511	579	641
Service Time	3.589	4.162	4.755	3.916	3.66
HCM Lane V/C Ratio	0.556	0.364	0.198	0.04	0.513
HCM Control Delay	15.3	12.6	11.5	9.2	14.4
HCM Lane LOS	C	B	B	A	B
HCM 95th-tile Q	3.4	1.6	0.7	0.1	2.9

Movement	EBL	EBT	EBR	WBL	WBT	WBR	NBL	NBT	NBR	SBL	SBT	SBR
Lane Configurations												
Traffic Volume (veh/h)	64	132	91	26	117	41	99	608	71	75	768	47
Future Volume (veh/h)	64	132	91	26	117	41	99	608	71	75	768	47
Initial Q (Qb), veh	0	0	0	0	0	0	0	0	0	0	0	0
Ped-Bike Adj(A_pbT)	1.00		1.00	1.00		1.00	1.00		1.00	1.00		1.00
Parking Bus, Adj	1.00	1.00	1.00	1.00	1.00	1.00	1.00	1.00	1.00	1.00	1.00	1.00
Work Zone On Approach		No			No			No			No	
Adj Sat Flow, veh/h/ln	1772	1772	1772	1772	1772	1772	1575	1772	1772	1575	1772	1772
Adj Flow Rate, veh/h	70	143	99	28	127	45	108	661	77	82	835	51
Peak Hour Factor	0.92	0.92	0.92	0.92	0.92	0.92	0.92	0.92	0.92	0.92	0.92	0.92
Percent Heavy Veh, %	2	2	2	2	2	2	2	2	2	2	2	2
Cap, veh/h	40	60	444	35	130	444	319	1405	163	194	1222	75
Arrive On Green	0.30	0.30	0.30	0.30	0.30	0.30	0.43	0.93	0.93	0.04	0.13	0.13
Sat Flow, veh/h	0	204	1502	0	440	1502	1500	3038	353	1500	3223	197
Grp Volume(v), veh/h	213	0	99	155	0	45	108	366	372	82	436	450
Grp Sat Flow(s),veh/h/ln	204	0	1502	440	0	1502	1500	1683	1708	1500	1683	1736
Q Serve(g_s), s	0.0	0.0	6.0	0.0	0.0	2.6	5.8	3.5	3.5	6.4	29.7	29.7
Cycle Q Clear(g_c), s	35.5	0.0	6.0	35.5	0.0	2.6	5.8	3.5	3.5	6.4	29.7	29.7
Prop In Lane	0.33		1.00	0.18		1.00	1.00		0.21	1.00		0.11
Lane Grp Cap(c), veh/h	100	0	444	165	0	444	319	779	790	194	638	658
V/C Ratio(X)	2.13	0.00	0.22	0.94	0.00	0.10	0.34	0.47	0.47	0.42	0.68	0.68
Avail Cap(c_a), veh/h	100	0	444	165	0	444	319	779	790	194	638	658
HCM Platoon Ratio	1.00	1.00	1.00	1.00	1.00	1.00	2.00	2.00	2.00	0.33	0.33	0.33
Upstream Filter(I)	1.00	0.00	1.00	1.00	0.00	1.00	1.00	1.00	1.00	1.00	1.00	1.00
Uniform Delay (d), s/veh	39.9	0.0	31.9	35.6	0.0	30.7	28.8	2.5	2.5	53.1	45.6	45.6
Incr Delay (d2), s/veh	539.1	0.0	1.2	55.0	0.0	0.5	2.9	2.0	2.0	6.6	5.8	5.7
Initial Q Delay(d3),s/veh	0.0	0.0	0.0	0.0	0.0	0.0	0.0	0.0	0.0	0.0	0.0	0.0
%ile BackOfQ(50%),veh/ln	18.0	0.0	0.1	6.0	0.0	1.0	2.2	1.2	1.2	2.9	14.5	14.9
Unsig. Movement Delay, s/veh												
LnGrp Delay(d),s/veh	579.0	0.0	33.0	90.5	0.0	31.1	31.7	4.6	4.6	59.7	51.4	51.3
LnGrp LOS	F	A	C	F	A	C	C	A	A	E	D	D
Approach Vol, veh/h		312			200			846			968	
Approach Delay, s/veh		405.7			77.2			8.0			52.1	
Approach LOS		F			E			A			D	

Timer - Assigned Phs	1	2		4	5	6		8
Phs Duration (G+Y+Rc), s	30.0	60.0		40.0	30.0	50.0		40.0
Change Period (Y+Rc), s	4.5	4.5		4.5	4.5	4.5		4.5
Max Green Setting (Gmax), s	25.5	55.5		35.5	25.5	45.5		35.5
Max Q Clear Time (g_c+I1), s	19.4	5.5		37.5	7.8	31.7		37.5
Green Ext Time (p_c), s	0.1	5.5		0.0	0.2	4.8		0.0

Intersection Summary	
HCM 6th Ctrl Delay	85.6
HCM 6th LOS	F

Intersection	
Intersection Delay, s/veh	10.4
Intersection LOS	B

Movement	EBL	EBT	EBR	WBL	WBT	WBR	NBL	NBT	NBR	SBL	SBT	SBR
Lane Configurations												
Traffic Vol, veh/h	62	201	25	6	147	28	17	103	7	23	64	30
Future Vol, veh/h	62	201	25	6	147	28	17	103	7	23	64	30
Peak Hour Factor	0.96	0.96	0.96	0.96	0.96	0.96	0.96	0.96	0.96	0.96	0.96	0.96
Heavy Vehicles, %	2	2	2	2	2	2	2	2	2	2	2	2
Mvmt Flow	65	209	26	6	153	29	18	107	7	24	67	31
Number of Lanes	0	1	0	0	1	1	0	1	0	0	1	0

Approach	EB	WB	NB	SB
Opposing Approach	WB	EB	SB	NB
Opposing Lanes	2	1	1	1
Conflicting Approach Left	SB	NB	EB	WB
Conflicting Lanes Left	1	1	1	2
Conflicting Approach Right	NB	SB	WB	EB
Conflicting Lanes Right	1	1	2	1
HCM Control Delay	11.5	9.8	9.8	9.5
HCM LOS	B	A	A	A

Lane	NBLn1	EBLn1	WBLn1	WBLn2	SBLn1
Vol Left, %	13%	22%	4%	0%	20%
Vol Thru, %	81%	70%	96%	0%	55%
Vol Right, %	6%	9%	0%	100%	26%
Sign Control	Stop	Stop	Stop	Stop	Stop
Traffic Vol by Lane	127	288	153	28	117
LT Vol	17	62	6	0	23
Through Vol	103	201	147	0	64
RT Vol	7	25	0	28	30
Lane Flow Rate	132	300	159	29	122
Geometry Grp	2	5	7	7	2
Degree of Util (X)	0.199	0.411	0.249	0.04	0.18
Departure Headway (Hd)	5.402	5.035	5.615	4.887	5.315
Convergence, Y/N	Yes	Yes	Yes	Yes	Yes
Cap	667	720	644	737	678
Service Time	3.416	3.035	3.315	2.587	3.33
HCM Lane V/C Ratio	0.198	0.417	0.247	0.039	0.18
HCM Control Delay	9.8	11.5	10.2	7.8	9.5
HCM Lane LOS	A	B	B	A	A
HCM 95th-tile Q	0.7	2	1	0.1	0.7

Intersection	
Int Delay, s/veh	0

Movement	WBL	WBR	NBT	NBR	SBL	SBT
Lane Configurations						
Traffic Vol, veh/h	0	0	0	0	0	0
Future Vol, veh/h	0	0	0	0	0	0
Conflicting Peds, #/hr	0	0	0	0	0	0
Sign Control	Stop	Stop	Free	Free	Free	Free
RT Channelized	-	None	-	None	-	None
Storage Length	-	0	-	-	-	-
Veh in Median Storage, #	0	-	0	-	-	0
Grade, %	0	-	0	-	-	0
Peak Hour Factor	92	92	92	92	92	92
Heavy Vehicles, %	2	2	2	2	2	2
Mvmt Flow	0	0	0	0	0	0

Major/Minor	Minor1		Major1		Major2	
Conflicting Flow All	-	0	0	0	-	-
Stage 1	-	-	-	-	-	-
Stage 2	-	-	-	-	-	-
Critical Hdwy	-	6.94	-	-	-	-
Critical Hdwy Stg 1	-	-	-	-	-	-
Critical Hdwy Stg 2	-	-	-	-	-	-
Follow-up Hdwy	-	3.32	-	-	-	-
Pot Cap-1 Maneuver	0	-	-	-	0	-
Stage 1	0	-	-	-	0	-
Stage 2	0	-	-	-	0	-
Platoon blocked, %			-	-		-
Mov Cap-1 Maneuver	-	-	-	-	-	-
Mov Cap-2 Maneuver	-	-	-	-	-	-
Stage 1	-	-	-	-	-	-
Stage 2	-	-	-	-	-	-

Approach	WB	NB	SB
HCM Control Delay, s	0	0	0
HCM LOS	A		

Minor Lane/Major Mvmt	NBT	NBR	WBLn1	SBT
Capacity (veh/h)	-	-	-	-
HCM Lane V/C Ratio	-	-	-	-
HCM Control Delay (s)	-	-	0	-
HCM Lane LOS	-	-	A	-
HCM 95th %tile Q(veh)	-	-	-	-

Intersection	
Int Delay, s/veh	0

Movement	EBT	EBR	WBL	WBT	NBL	NBR
Lane Configurations						
Traffic Vol, veh/h	0	0	0	0	0	0
Future Vol, veh/h	0	0	0	0	0	0
Conflicting Peds, #/hr	0	0	0	0	0	0
Sign Control	Free	Free	Free	Free	Stop	Stop
RT Channelized	-	None	-	None	-	None
Storage Length	-	-	-	-	0	-
Veh in Median Storage, #	0	-	-	0	0	-
Grade, %	0	-	-	0	0	-
Peak Hour Factor	92	92	92	92	92	92
Heavy Vehicles, %	2	2	2	2	2	2
Mvmt Flow	0	0	0	0	0	0

Major/Minor	Major1		Major2		Minor1	
Conflicting Flow All	0	0	-	-	2	-
Stage 1	-	-	-	-	1	-
Stage 2	-	-	-	-	1	-
Critical Hdwy	-	-	-	-	6.63	-
Critical Hdwy Stg 1	-	-	-	-	5.43	-
Critical Hdwy Stg 2	-	-	-	-	5.83	-
Follow-up Hdwy	-	-	-	-	3.519	-
Pot Cap-1 Maneuver	-	-	0	-	1020	0
Stage 1	-	-	0	-	1022	0
Stage 2	-	-	0	-	1022	0
Platoon blocked, %	-	-		-		
Mov Cap-1 Maneuver	-	-	-	-	1020	-
Mov Cap-2 Maneuver	-	-	-	-	1020	-
Stage 1	-	-	-	-	1022	-
Stage 2	-	-	-	-	1022	-

Approach	EB	WB	NB
HCM Control Delay, s	0	0	0
HCM LOS			A

Minor Lane/Major Mvmt	NBLn1	EBT	EBR	WBT
Capacity (veh/h)	-	-	-	-
HCM Lane V/C Ratio	-	-	-	-
HCM Control Delay (s)	0	-	-	-
HCM Lane LOS	A	-	-	-
HCM 95th %tile Q(veh)	-	-	-	-

Movement	EBT	EBR	WBL	WBT	NBL	NBR
Lane Configurations						
Traffic Volume (veh/h)	0	0	0	0	0	0
Future Volume (veh/h)	0	0	0	0	0	0
Initial Q (Qb), veh	0	0	0	0		
Ped-Bike Adj(A_pbT)		1.00	1.00			
Parking Bus, Adj	1.00	1.00	1.00	1.00		
Work Zone On Approach	No			No		
Adj Sat Flow, veh/h/ln	1772	0	0	1772		
Adj Flow Rate, veh/h	0	0	0	0		
Peak Hour Factor	0.92	0.92	0.92	0.92		
Percent Heavy Veh, %	2	0	0	2		
Cap, veh/h	1418	0	0	2693		
Arrive On Green	0.00	0.00	0.00	0.00		
Sat Flow, veh/h	1772	0	0	3544		
Grp Volume(v), veh/h	0	0	0	0		
Grp Sat Flow(s),veh/h/ln	1772	0	0	1683		
Q Serve(g_s), s	0.0	0.0	0.0	0.0		
Cycle Q Clear(g_c), s	0.0	0.0	0.0	0.0		
Prop In Lane		0.00	0.00			
Lane Grp Cap(c), veh/h	1418	0	0	2693		
V/C Ratio(X)	0.00	0.00	0.00	0.00		
Avail Cap(c_a), veh/h	1418	0	0	2693		
HCM Platoon Ratio	1.00	1.00	1.00	1.00		
Upstream Filter(I)	0.00	0.00	0.00	0.00		
Uniform Delay (d), s/veh	0.0	0.0	0.0	0.0		
Incr Delay (d2), s/veh	0.0	0.0	0.0	0.0		
Initial Q Delay(d3),s/veh	0.0	0.0	0.0	0.0		
%ile BackOfQ(50%),veh/ln	0.0	0.0	0.0	0.0		
Unsig. Movement Delay, s/veh						
LnGrp Delay(d),s/veh	0.0	0.0	0.0	0.0		
LnGrp LOS	A	A	A	A		
Approach Vol, veh/h	0			0		
Approach Delay, s/veh	0.0			0.0		
Approach LOS						

Timer - Assigned Phs	4	8
Phs Duration (G+Y+Rc), s	22.5	22.5
Change Period (Y+Rc), s	4.5	4.5
Max Green Setting (Gmax), s	18.0	18.0
Max Q Clear Time (g_c+I1), s	0.0	0.0
Green Ext Time (p_c), s	0.0	0.0

Intersection Summary	
HCM 6th Ctrl Delay	0.0
HCM 6th LOS	A

Intersection	
Intersection Delay, s/veh	10.6
Intersection LOS	B

Movement	EBL	EBT	EBR	WBL	WBT	WBR	NBL	NBT	NBR	SBL	SBT	SBR
Lane Configurations												
Traffic Vol, veh/h	53	248	27	12	78	62	10	62	6	45	54	10
Future Vol, veh/h	53	248	27	12	78	62	10	62	6	45	54	10
Peak Hour Factor	0.95	0.95	0.95	0.95	0.95	0.95	0.95	0.95	0.95	0.95	0.95	0.95
Heavy Vehicles, %	2	2	2	2	2	2	2	2	2	2	2	2
Mvmt Flow	56	261	28	13	82	65	11	65	6	47	57	11
Number of Lanes	0	1	1	0	2	0	0	1	0	0	1	0

Approach	EB	WB	NB	SB
Opposing Approach	WB	EB	SB	NB
Opposing Lanes	2	2	1	1
Conflicting Approach Left	SB	NB	EB	WB
Conflicting Lanes Left	1	1	2	2
Conflicting Approach Right	NB	SB	WB	EB
Conflicting Lanes Right	1	1	2	2
HCM Control Delay	12.2	8.7	9.1	9.5
HCM LOS	B	A	A	A

Lane	NBLn1	EBLn1	EBLn2	WBLn1	WBLn2	SBLn1
Vol Left, %	13%	18%	0%	24%	0%	41%
Vol Thru, %	79%	82%	0%	76%	39%	50%
Vol Right, %	8%	0%	100%	0%	61%	9%
Sign Control	Stop	Stop	Stop	Stop	Stop	Stop
Traffic Vol by Lane	78	301	27	51	101	109
LT Vol	10	53	0	12	0	45
Through Vol	62	248	0	39	39	54
RT Vol	6	0	27	0	62	10
Lane Flow Rate	82	317	28	54	106	115
Geometry Grp	2	7	7	7	7	2
Degree of Util (X)	0.121	0.466	0.036	0.082	0.147	0.169
Departure Headway (Hd)	5.324	5.296	4.502	5.518	4.966	5.317
Convergence, Y/N	Yes	Yes	Yes	Yes	Yes	Yes
Cap	668	678	789	645	716	669
Service Time	3.404	3.057	2.263	3.292	2.739	3.392
HCM Lane V/C Ratio	0.123	0.468	0.035	0.084	0.148	0.172
HCM Control Delay	9.1	12.6	7.4	8.8	8.6	9.5
HCM Lane LOS	A	B	A	A	A	A
HCM 95th-tile Q	0.4	2.5	0.1	0.3	0.5	0.6

Movement	EBL	EBT	EBR	WBL	WBT	WBR	NBL	NBT	NBR	SBL	SBT	SBR
Lane Configurations												
Traffic Volume (veh/h)	47	207	38	52	70	53	60	642	65	109	765	34
Future Volume (veh/h)	47	207	38	52	70	53	60	642	65	109	765	34
Initial Q (Qb), veh	0	0	0	0	0	0	0	0	0	0	0	0
Ped-Bike Adj(A_pbT)	1.00		1.00	1.00		1.00	1.00		1.00	1.00		1.00
Parking Bus, Adj	1.00	1.00	1.00	1.00	1.00	1.00	1.00	1.00	1.00	1.00	1.00	1.00
Work Zone On Approach		No			No			No			No	
Adj Sat Flow, veh/h/ln	1772	1772	1772	1772	1772	1772	1575	1772	1772	1575	1772	1772
Adj Flow Rate, veh/h	48	213	39	54	72	55	62	662	67	112	789	35
Peak Hour Factor	0.97	0.97	0.97	0.97	0.97	0.97	0.97	0.97	0.97	0.97	0.97	0.97
Percent Heavy Veh, %	2	2	2	2	2	2	2	2	2	2	2	2
Cap, veh/h	160	668	123	228	308	255	194	1299	131	256	1519	67
Arrive On Green	0.30	0.30	0.30	0.30	0.30	0.30	0.13	0.42	0.42	0.06	0.15	0.15
Sat Flow, veh/h	408	2258	415	607	1040	861	1500	3087	312	1500	3283	146
Grp Volume(v), veh/h	155	0	145	88	0	93	62	361	368	112	404	420
Grp Sat Flow(s),veh/h/ln	1543	0	1538	1050	0	1457	1500	1683	1716	1500	1683	1746
Q Serve(g_s), s	4.3	0.0	8.8	4.9	0.0	5.8	4.5	19.0	19.0	8.7	26.5	26.5
Cycle Q Clear(g_c), s	10.1	0.0	8.8	13.7	0.0	5.8	4.5	19.0	19.0	8.7	26.5	26.5
Prop In Lane	0.31		0.27	0.61		0.59	1.00		0.18	1.00		0.08
Lane Grp Cap(c), veh/h	496	0	455	359	0	431	194	708	722	256	779	807
V/C Ratio(X)	0.31	0.00	0.32	0.24	0.00	0.22	0.32	0.51	0.51	0.44	0.52	0.52
Avail Cap(c_a), veh/h	496	0	455	359	0	431	194	708	722	256	779	807
HCM Platoon Ratio	1.00	1.00	1.00	1.00	1.00	1.00	1.00	1.00	1.00	0.33	0.33	0.33
Upstream Filter(I)	1.00	0.00	1.00	1.00	0.00	1.00	1.00	1.00	1.00	1.00	1.00	1.00
Uniform Delay (d), s/veh	33.2	0.0	32.8	35.9	0.0	31.8	47.5	25.6	25.6	51.0	38.6	38.6
Incr Delay (d2), s/veh	1.6	0.0	1.8	1.6	0.0	1.1	4.3	2.6	2.6	5.3	2.5	2.4
Initial Q Delay(d3),s/veh	0.0	0.0	0.0	0.0	0.0	0.0	0.0	0.0	0.0	0.0	0.0	0.0
%ile BackOfQ(50%),veh/ln	3.8	0.0	3.5	2.3	0.0	2.2	1.9	8.0	8.2	3.8	12.5	13.0
Unsig. Movement Delay, s/veh												
LnGrp Delay(d),s/veh	34.8	0.0	34.7	37.5	0.0	32.9	51.8	28.2	28.2	56.4	41.0	41.0
LnGrp LOS	C	A	C	D	A	C	D	C	C	E	D	D
Approach Vol, veh/h		300			181			791			936	
Approach Delay, s/veh		34.7			35.2			30.1			42.8	
Approach LOS		C			D			C			D	

Timer - Assigned Phs	1	2		4	5	6		8
Phs Duration (G+Y+Rc), s	25.0	55.0		40.0	20.0	60.0		40.0
Change Period (Y+Rc), s	4.5	4.5		4.5	4.5	4.5		4.5
Max Green Setting (Gmax), s	20.5	50.5		35.5	15.5	55.5		35.5
Max Q Clear Time (g_c+I1), s	10.7	21.0		12.1	6.5	28.5		15.7
Green Ext Time (p_c), s	0.2	5.1		1.7	0.1	5.8		1.0

Intersection Summary	
HCM 6th Ctrl Delay	36.5
HCM 6th LOS	D

Intersection	
Int Delay, s/veh	2.7

Movement	EBL	EBT	WBT	WBR	SBL	SBR
Lane Configurations						
Traffic Vol, veh/h	102	302	148	23	21	45
Future Vol, veh/h	102	302	148	23	21	45
Conflicting Peds, #/hr	0	0	0	0	0	0
Sign Control	Free	Free	Free	Free	Stop	Stop
RT Channelized	-	None	-	None	-	None
Storage Length	-	-	-	-	0	-
Veh in Median Storage, #	-	0	0	-	0	-
Grade, %	-	0	0	-	0	-
Peak Hour Factor	73	73	73	73	73	73
Heavy Vehicles, %	2	2	2	2	2	2
Mvmt Flow	140	414	203	32	29	62

Major/Minor	Major1		Major2		Minor2	
Conflicting Flow All	235	0	-	0	913	219
Stage 1	-	-	-	-	219	-
Stage 2	-	-	-	-	694	-
Critical Hdwy	4.12	-	-	-	6.42	6.22
Critical Hdwy Stg 1	-	-	-	-	5.42	-
Critical Hdwy Stg 2	-	-	-	-	5.42	-
Follow-up Hdwy	2.218	-	-	-	3.518	3.318
Pot Cap-1 Maneuver	1332	-	-	-	304	821
Stage 1	-	-	-	-	817	-
Stage 2	-	-	-	-	496	-
Platoon blocked, %		-	-	-		
Mov Cap-1 Maneuver	1332	-	-	-	263	821
Mov Cap-2 Maneuver	-	-	-	-	263	-
Stage 1	-	-	-	-	706	-
Stage 2	-	-	-	-	496	-

Approach	EB	WB	SB
HCM Control Delay, s	2	0	14
HCM LOS			B

Minor Lane/Major Mvmt	EBL	EBT	WBT	WBR	SBLn1
Capacity (veh/h)	1332	-	-	-	490
HCM Lane V/C Ratio	0.105	-	-	-	0.185
HCM Control Delay (s)	8	0	-	-	14
HCM Lane LOS	A	A	-	-	B
HCM 95th %tile Q(veh)	0.4	-	-	-	0.7

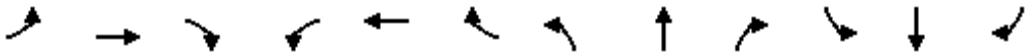

Movement	EBL	EBT	EBR	WBL	WBT	WBR	NBL	NBT	NBR	SBL	SBT	SBR
Lane Configurations												
Traffic Volume (veh/h)	13	2	4	111	3	66	6	668	95	208	934	18
Future Volume (veh/h)	13	2	4	111	3	66	6	668	95	208	934	18
Initial Q (Qb), veh	0	0	0	0	0	0	0	0	0	0	0	0
Ped-Bike Adj(A_pbT)	1.00		1.00	1.00		1.00	1.00		1.00	1.00		1.00
Parking Bus, Adj	1.00	1.00	1.00	1.00	1.00	1.00	1.00	1.00	1.00	1.00	1.00	1.00
Work Zone On Approach		No			No			No			No	
Adj Sat Flow, veh/h/ln	1772	1772	1772	1772	1772	1772	1575	1772	1772	1575	1772	1772
Adj Flow Rate, veh/h	14	2	4	117	3	69	6	703	100	219	983	19
Peak Hour Factor	0.95	0.95	0.95	0.95	0.95	0.95	0.95	0.95	0.95	0.95	0.95	0.95
Percent Heavy Veh, %	2	2	2	2	2	2	2	2	2	2	2	2
Cap, veh/h	482	75	105	721	16	601	237	1184	168	288	1351	26
Arrive On Green	0.40	0.40	0.40	0.40	0.40	0.40	0.40	0.40	0.40	0.40	0.40	0.40
Sat Flow, veh/h	865	189	263	1408	41	1502	500	2959	421	602	3378	65
Grp Volume(v), veh/h	20	0	0	120	0	69	6	400	403	219	490	512
Grp Sat Flow(s),veh/h/ln	1317	0	0	1449	0	1502	500	1683	1696	602	1683	1760
Q Serve(g_s), s	0.0	0.0	0.0	0.0	0.0	1.3	0.5	8.4	8.4	9.6	11.1	11.1
Cycle Q Clear(g_c), s	2.1	0.0	0.0	2.1	0.0	1.3	11.5	8.4	8.4	18.0	11.1	11.1
Prop In Lane	0.70		0.20	0.97		1.00	1.00		0.25	1.00		0.04
Lane Grp Cap(c), veh/h	663	0	0	738	0	601	237	673	678	288	673	704
V/C Ratio(X)	0.03	0.00	0.00	0.16	0.00	0.11	0.03	0.59	0.59	0.76	0.73	0.73
Avail Cap(c_a), veh/h	663	0	0	738	0	601	237	673	678	288	673	704
HCM Platoon Ratio	1.00	1.00	1.00	1.00	1.00	1.00	1.00	1.00	1.00	1.00	1.00	1.00
Upstream Filter(I)	1.00	0.00	0.00	1.00	0.00	1.00	1.00	1.00	1.00	1.00	1.00	1.00
Uniform Delay (d), s/veh	8.2	0.0	0.0	8.7	0.0	8.5	16.3	10.6	10.6	19.7	11.4	11.4
Incr Delay (d2), s/veh	0.1	0.0	0.0	0.5	0.0	0.4	0.2	3.8	3.8	17.1	6.8	6.5
Initial Q Delay(d3),s/veh	0.0	0.0	0.0	0.0	0.0	0.0	0.0	0.0	0.0	0.0	0.0	0.0
%ile BackOfQ(50%),veh/ln	0.1	0.0	0.0	0.7	0.0	0.4	0.1	3.1	3.1	3.5	4.4	4.6
Unsig. Movement Delay, s/veh												
LnGrp Delay(d),s/veh	8.3	0.0	0.0	9.2	0.0	8.9	16.5	14.4	14.4	36.8	18.2	17.9
LnGrp LOS	A	A	A	A	A	A	B	B	B	D	B	B
Approach Vol, veh/h		20			189			809			1221	
Approach Delay, s/veh		8.3			9.1			14.5			21.4	
Approach LOS		A			A			B			C	

Timer - Assigned Phs		2		4		6		8				
Phs Duration (G+Y+Rc), s		22.5		22.5		22.5		22.5				
Change Period (Y+Rc), s		4.5		4.5		4.5		4.5				
Max Green Setting (Gmax), s		18.0		18.0		18.0		18.0				
Max Q Clear Time (g_c+I1), s		13.5		4.1		20.0		4.1				
Green Ext Time (p_c), s		2.0		0.0		0.0		0.7				

Intersection Summary												
HCM 6th Ctrl Delay			17.7									
HCM 6th LOS			B									

HCM 6th Signalized Intersection Summary
1: Cedar & Valley

06/16/2020

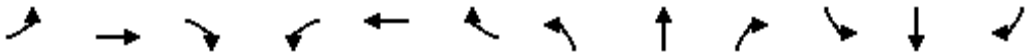

Movement	EBL	EBT	EBR	WBL	WBT	WBR	NBL	NBT	NBR	SBL	SBT	SBR
Lane Configurations												
Traffic Volume (veh/h)	48	175	541	338	261	40	359	1083	238	45	1304	23
Future Volume (veh/h)	48	175	541	338	261	40	359	1083	238	45	1304	23
Initial Q (Qb), veh	0	0	0	0	0	0	0	0	0	0	0	0
Ped-Bike Adj(A_pbT)	1.00		1.00	1.00		1.00	1.00		1.00	1.00		1.00
Parking Bus, Adj	1.00	1.00	1.00	1.00	1.00	1.00	1.00	1.00	1.00	1.00	1.00	1.00
Work Zone On Approach		No			No			No			No	
Adj Sat Flow, veh/h/ln	1575	1772	1772	1575	1772	1772	1575	1772	1772	1575	1772	1772
Adj Flow Rate, veh/h	50	182	564	352	272	42	374	1128	248	47	1358	24
Peak Hour Factor	0.96	0.96	0.96	0.96	0.96	0.96	0.96	0.96	0.96	0.96	0.96	0.96
Percent Heavy Veh, %	2	2	2	2	2	2	2	2	2	2	2	2
Cap, veh/h	941	709	1057	728	1171	179	435	1347	601	386	1958	35
Arrive On Green	0.40	0.40	0.40	0.40	0.40	0.40	0.40	0.40	0.40	0.40	0.40	0.40
Sat Flow, veh/h	1837	1772	2643	1233	2928	447	676	3367	1502	680	4895	87
Grp Volume(v), veh/h	50	182	564	352	155	159	374	1128	248	47	895	487
Grp Sat Flow(s),veh/h/ln	919	1772	1321	616	1683	1692	338	1683	1502	340	1612	1756
Q Serve(g_s), s	0.8	3.1	7.3	12.0	2.7	2.8	7.6	13.6	5.3	3.0	10.4	10.4
Cycle Q Clear(g_c), s	3.6	3.1	7.3	15.1	2.7	2.8	18.0	13.6	5.3	16.6	10.4	10.4
Prop In Lane	1.00		1.00	1.00		0.26	1.00		1.00	1.00		0.05
Lane Grp Cap(c), veh/h	941	709	1057	728	673	677	435	1347	601	386	1290	703
V/C Ratio(X)	0.05	0.26	0.53	0.48	0.23	0.24	0.86	0.84	0.41	0.12	0.69	0.69
Avail Cap(c_a), veh/h	941	709	1057	728	673	677	435	1347	601	386	1290	703
HCM Platoon Ratio	1.00	1.00	1.00	1.00	1.00	1.00	1.00	1.00	1.00	1.00	1.00	1.00
Upstream Filter(I)	1.00	1.00	1.00	1.00	1.00	1.00	1.00	1.00	1.00	1.00	1.00	1.00
Uniform Delay (d), s/veh	10.1	9.0	10.3	14.1	8.9	8.9	21.3	12.2	9.7	19.7	11.2	11.2
Incr Delay (d2), s/veh	0.1	0.9	1.9	2.3	0.8	0.8	19.5	6.3	2.1	0.6	3.1	5.6
Initial Q Delay(d3),s/veh	0.0	0.0	0.0	0.0	0.0	0.0	0.0	0.0	0.0	0.0	0.0	0.0
%ile BackOfQ(50%),veh/ln	0.2	1.1	1.9	1.6	0.9	1.0	3.0	5.1	1.7	0.2	3.4	4.2
Unsig. Movement Delay, s/veh												
LnGrp Delay(d),s/veh	10.3	9.9	12.2	16.4	9.7	9.8	40.8	18.5	11.8	20.3	14.3	16.8
LnGrp LOS	B	A	B	B	A	A	D	B	B	C	B	B
Approach Vol, veh/h		796			666			1750			1429	
Approach Delay, s/veh		11.6			13.2			22.3			15.3	
Approach LOS		B			B			C			B	

Timer - Assigned Phs		2		4		6		8				
Phs Duration (G+Y+Rc), s		22.5		22.5		22.5		22.5				
Change Period (Y+Rc), s		4.5		4.5		4.5		4.5				
Max Green Setting (Gmax), s		18.0		18.0		18.0		18.0				
Max Q Clear Time (g_c+I1), s		20.0		9.3		18.6		17.1				
Green Ext Time (p_c), s		0.0		2.6		0.0		0.5				

Intersection Summary												
HCM 6th Ctrl Delay			17.0									
HCM 6th LOS			B									

Movement	EBL	EBT	EBR	WBL	WBT	WBR	NBL	NBT	NBR	SBL	SBT	SBR
Lane Configurations												
Traffic Volume (veh/h)	0	0	0	445	1	406	313	1287	0	0	1368	842
Future Volume (veh/h)	0	0	0	445	1	406	313	1287	0	0	1368	842
Initial Q (Qb), veh				0	0	0	0	0	0	0	0	0
Ped-Bike Adj(A_pbT)				1.00		1.00	1.00		1.00	1.00		1.00
Parking Bus, Adj				1.00	1.00	1.00	1.00	1.00	1.00	1.00	1.00	1.00
Work Zone On Approach					No			No			No	
Adj Sat Flow, veh/h/ln				1575	1772	1772	1575	1772	0	0	1772	1772
Adj Flow Rate, veh/h				590	0	280	323	1327	0	0	1410	868
Peak Hour Factor				0.97	0.97	0.97	0.97	0.97	0.97	0.97	0.97	0.97
Percent Heavy Veh, %				2	2	2	2	2	0	0	2	2
Cap, veh/h				968	0	485	348	2005	0	0	1561	485
Arrive On Green				0.32	0.00	0.32	0.46	1.00	0.00	0.00	0.32	0.32
Sat Flow, veh/h				3000	0	1502	1500	3455	0	0	4997	1502
Grp Volume(v), veh/h				590	0	280	323	1327	0	0	1410	868
Grp Sat Flow(s),veh/h/ln				1500	0	1502	1500	1683	0	0	1612	1502
Q Serve(g_s), s				18.2	0.0	17.1	22.3	0.0	0.0	0.0	30.6	35.5
Cycle Q Clear(g_c), s				18.2	0.0	17.1	22.3	0.0	0.0	0.0	30.6	35.5
Prop In Lane				1.00		1.00	1.00		0.00	0.00		1.00
Lane Grp Cap(c), veh/h				968	0	485	348	2005	0	0	1561	485
V/C Ratio(X)				0.61	0.00	0.58	0.93	0.66	0.00	0.00	0.90	1.79
Avail Cap(c_a), veh/h				968	0	485	348	2005	0	0	1561	485
HCM Platoon Ratio				1.00	1.00	1.00	2.00	2.00	1.00	1.00	1.00	1.00
Upstream Filter(I)				1.00	0.00	1.00	1.00	1.00	0.00	0.00	1.00	1.00
Uniform Delay (d), s/veh				31.4	0.0	31.0	28.6	0.0	0.0	0.0	35.6	37.3
Incr Delay (d2), s/veh				2.9	0.0	5.0	33.2	1.7	0.0	0.0	8.9	364.2
Initial Q Delay(d3),s/veh				0.0	0.0	0.0	0.0	0.0	0.0	0.0	0.0	0.0
%ile BackOfQ(50%),veh/ln				6.9	0.0	6.8	9.2	0.5	0.0	0.0	13.1	61.8
Unsig. Movement Delay, s/veh												
LnGrp Delay(d),s/veh				34.3	0.0	36.0	61.8	1.7	0.0	0.0	44.5	401.5
LnGrp LOS				C	A	D	E	A	A	A	D	F
Approach Vol, veh/h					870			1650			2278	
Approach Delay, s/veh					34.8			13.5			180.5	
Approach LOS					C			B			F	

Timer - Assigned Phs	2		5	6		8
Phs Duration (G+Y+Rc), s	70.0		30.0	40.0		40.0
Change Period (Y+Rc), s	4.5		4.5	4.5		4.5
Max Green Setting (Gmax), s	65.5		25.5	35.5		35.5
Max Q Clear Time (g_c+I1), s	2.0		24.3	37.5		20.2
Green Ext Time (p_c), s	15.3		0.1	0.0		3.0

Intersection Summary		
HCM 6th Ctrl Delay	96.7	
HCM 6th LOS	F	

Notes

User approved volume balancing among the lanes for turning movement.

Movement	EBL	EBT	EBR	WBL	WBT	WBR	NBL	NBT	NBR	SBL	SBT	SBR
Lane Configurations												
Traffic Volume (veh/h)	468	0	410	0	0	0	0	1113	441	397	1374	0
Future Volume (veh/h)	468	0	410	0	0	0	0	1113	441	397	1374	0
Initial Q (Qb), veh	0	0	0				0	0	0	0	0	0
Ped-Bike Adj(A_pbT)	1.00		1.00				1.00		1.00	1.00		1.00
Parking Bus, Adj	1.00	1.00	1.00				1.00	1.00	1.00	1.00	1.00	1.00
Work Zone On Approach		No						No			No	
Adj Sat Flow, veh/h/ln	1575	1772	1772				0	1772	1772	1575	1772	0
Adj Flow Rate, veh/h	448	42	418				0	1136	450	405	1402	0
Peak Hour Factor	0.98	0.98	0.98				0.98	0.98	0.98	0.98	0.98	0.98
Percent Heavy Veh, %	2	2	2				0	2	2	2	2	0
Cap, veh/h	498	46	459				0	1165	362	457	1974	0
Arrive On Green	0.33	0.33	0.33				0.00	0.24	0.24	0.61	1.00	0.00
Sat Flow, veh/h	1500	139	1384				0	4997	1502	1500	3455	0
Grp Volume(v), veh/h	448	0	460				0	1136	450	405	1402	0
Grp Sat Flow(s),veh/h/ln	1500	0	1523				0	1612	1502	1500	1683	0
Q Serve(g_s), s	31.3	0.0	31.8				0.0	25.6	26.5	25.2	0.0	0.0
Cycle Q Clear(g_c), s	31.3	0.0	31.8				0.0	25.6	26.5	25.2	0.0	0.0
Prop In Lane	1.00		0.91				0.00		1.00	1.00		0.00
Lane Grp Cap(c), veh/h	498	0	505				0	1165	362	457	1974	0
V/C Ratio(X)	0.90	0.00	0.91				0.00	0.97	1.24	0.89	0.71	0.00
Avail Cap(c_a), veh/h	498	0	505				0	1165	362	457	1974	0
HCM Platoon Ratio	1.00	1.00	1.00				1.00	1.00	1.00	2.00	2.00	1.00
Upstream Filter(I)	1.00	0.00	1.00				0.00	1.00	1.00	1.00	1.00	0.00
Uniform Delay (d), s/veh	35.0	0.0	35.2				0.0	41.4	41.8	19.9	0.0	0.0
Incr Delay (d2), s/veh	21.9	0.0	23.0				0.0	21.0	131.0	21.6	2.2	0.0
Initial Q Delay(d3),s/veh	0.0	0.0	0.0				0.0	0.0	0.0	0.0	0.0	0.0
%ile BackOfQ(50%),veh/ln	14.2	0.0	14.8				0.0	12.3	22.8	8.2	0.6	0.0
Unsig. Movement Delay, s/veh												
LnGrp Delay(d),s/veh	56.9	0.0	58.2				0.0	62.4	172.8	41.5	2.2	0.0
LnGrp LOS	E	A	E				A	E	F	D	A	A
Approach Vol, veh/h		908						1586			1807	
Approach Delay, s/veh		57.6						93.7			11.0	
Approach LOS		E						F			B	

Timer - Assigned Phs	1	2	4	6
Phs Duration (G+Y+Rc), s	38.0	31.0	41.0	69.0
Change Period (Y+Rc), s	4.5	4.5	4.5	4.5
Max Green Setting (Gmax), s	33.5	26.5	36.5	64.5
Max Q Clear Time (g_c+I1), s	27.2	28.5	33.8	2.0
Green Ext Time (p_c), s	0.7	0.0	1.3	16.9

Intersection Summary	
HCM 6th Ctrl Delay	51.3
HCM 6th LOS	D

Notes

User approved volume balancing among the lanes for turning movement.

Movement	EBL	EBT	EBR	WBL	WBT	WBR	NBL	NBT	NBR	SBL	SBT	SBR
Lane Configurations												
Traffic Volume (veh/h)	263	6	33	10	0	121	49	1165	32	136	1172	504
Future Volume (veh/h)	263	6	33	10	0	121	49	1165	32	136	1172	504
Initial Q (Qb), veh	0	0	0	0	0	0	0	0	0	0	0	0
Ped-Bike Adj(A_pbT)	1.00		1.00	1.00		1.00	1.00		1.00	1.00		1.00
Parking Bus, Adj	1.00	1.00	1.00	1.00	1.00	1.00	1.00	1.00	1.00	1.00	1.00	1.00
Work Zone On Approach		No			No			No			No	
Adj Sat Flow, veh/h/ln	1575	1772	1772	1575	1772	1772	1575	1772	1772	1575	1772	1772
Adj Flow Rate, veh/h	274	6	34	10	0	126	51	1214	33	142	1221	525
Peak Hour Factor	0.96	0.96	0.96	0.96	0.96	0.96	0.96	0.96	0.96	0.96	0.96	0.96
Percent Heavy Veh, %	2	2	2	2	2	2	2	2	2	2	2	2
Cap, veh/h	359	74	422	436	543	485	211	1385	38	211	963	396
Arrive On Green	0.32	0.32	0.32	0.32	0.00	0.32	0.28	0.83	0.83	0.14	0.41	0.41
Sat Flow, veh/h	1124	231	1306	1215	1683	1502	1500	3348	91	1500	2327	956
Grp Volume(v), veh/h	274	0	40	10	0	126	51	610	637	142	868	878
Grp Sat Flow(s),veh/h/ln	1124	0	1537	1215	1683	1502	1500	1683	1756	1500	1683	1600
Q Serve(g_s), s	26.2	0.0	2.0	0.6	0.0	6.8	2.9	25.0	25.1	9.9	45.5	45.5
Cycle Q Clear(g_c), s	33.0	0.0	2.0	2.6	0.0	6.8	2.9	25.0	25.1	9.9	45.5	45.5
Prop In Lane	1.00		0.85	1.00		1.00	1.00		0.05	1.00		0.60
Lane Grp Cap(c), veh/h	359	0	496	436	543	485	211	696	726	211	696	662
V/C Ratio(X)	0.76	0.00	0.08	0.02	0.00	0.26	0.24	0.88	0.88	0.67	1.25	1.33
Avail Cap(c_a), veh/h	359	0	496	436	543	485	211	696	726	211	696	662
HCM Platoon Ratio	1.00	1.00	1.00	1.00	1.00	1.00	2.00	2.00	2.00	1.00	1.00	1.00
Upstream Filter(I)	1.00	0.00	1.00	1.00	0.00	1.00	1.00	1.00	1.00	1.00	1.00	1.00
Uniform Delay (d), s/veh	39.7	0.0	25.9	26.8	0.0	27.5	35.0	7.7	7.7	44.8	32.3	32.3
Incr Delay (d2), s/veh	14.3	0.0	0.3	0.1	0.0	1.3	2.7	14.5	14.1	15.8	122.5	157.6
Initial Q Delay(d3),s/veh	0.0	0.0	0.0	0.0	0.0	0.0	0.0	0.0	0.0	0.0	0.0	0.0
%ile BackOfQ(50%),veh/ln	8.6	0.0	0.8	0.2	0.0	2.6	1.2	5.8	6.0	4.6	41.5	45.9
Unsig. Movement Delay, s/veh												
LnGrp Delay(d),s/veh	54.1	0.0	26.2	26.9	0.0	28.8	37.7	22.3	21.8	60.6	154.8	189.9
LnGrp LOS	D	A	C	C	A	C	D	C	C	E	F	F
Approach Vol, veh/h		314			136			1298			1888	
Approach Delay, s/veh		50.5			28.7			22.7			164.0	
Approach LOS		D			C			C			F	

Timer - Assigned Phs	1	2		4	5	6		8
Phs Duration (G+Y+Rc), s	30.0	50.0		40.0	20.0	50.0		40.0
Change Period (Y+Rc), s	4.5	4.5		4.5	4.5	4.5		4.5
Max Green Setting (Gmax), s	25.5	45.5		35.5	15.5	45.5		35.5
Max Q Clear Time (g_c+I1), s	11.9	27.1		35.0	4.9	47.5		8.8
Green Ext Time (p_c), s	0.1	8.4		0.1	0.1	0.0		0.8

Intersection Summary	
HCM 6th Ctrl Delay	98.7
HCM 6th LOS	F

Intersection	
Intersection Delay, s/veh	101.5
Intersection LOS	F

Movement	EBL	EBT	EBR	WBL	WBT	WBR	NBL	NBT	NBR	SBL	SBT	SBR
Lane Configurations												
Traffic Vol, veh/h	174	509	54	20	586	8	67	58	37	3	54	340
Future Vol, veh/h	174	509	54	20	586	8	67	58	37	3	54	340
Peak Hour Factor	0.78	0.78	0.78	0.78	0.78	0.78	0.78	0.78	0.78	0.78	0.78	0.78
Heavy Vehicles, %	2	2	2	2	2	2	2	2	2	2	2	2
Mvmt Flow	223	653	69	26	751	10	86	74	47	4	69	436
Number of Lanes	1	2	0	1	2	0	0	1	0	0	1	0

Approach	EB	WB	NB	SB
Opposing Approach	WB	EB	SB	NB
Opposing Lanes	3	3	1	1
Conflicting Approach Left	SB	NB	EB	WB
Conflicting Lanes Left	1	1	3	3
Conflicting Approach Right	NB	SB	WB	EB
Conflicting Lanes Right	1	1	3	3
HCM Control Delay	62.8	120	30.1	173.8
HCM LOS	F	F	D	F

Lane	NBLn1	EBLn1	EBLn2	EBLn3	WBLn1	WBLn2	WBLn3	SBLn1
Vol Left, %	41%	100%	0%	0%	100%	0%	0%	1%
Vol Thru, %	36%	0%	100%	76%	0%	100%	96%	14%
Vol Right, %	23%	0%	0%	24%	0%	0%	4%	86%
Sign Control	Stop	Stop	Stop	Stop	Stop	Stop	Stop	Stop
Traffic Vol by Lane	162	174	339	224	20	391	203	397
LT Vol	67	174	0	0	20	0	0	3
Through Vol	58	0	339	170	0	391	195	54
RT Vol	37	0	0	54	0	0	8	340
Lane Flow Rate	208	223	435	287	26	501	261	509
Geometry Grp	7	7	7	7	7	7	7	7
Degree of Util (X)	0.596	0.582	1.075	0.695	0.069	1.273	0.66	1.283
Departure Headway (Hd)	11.613	10.586	10.05	9.868	10.664	10.129	10.099	9.555
Convergence, Y/N	Yes	Yes	Yes	Yes	Yes	Yes	Yes	Yes
Cap	314	344	365	370	338	361	360	387
Service Time	9.313	8.286	7.75	7.568	8.364	7.829	7.799	7.255
HCM Lane V/C Ratio	0.662	0.648	1.192	0.776	0.077	1.388	0.725	1.315
HCM Control Delay	30.1	27	101.4	32.2	14.2	172.1	30.4	173.8
HCM Lane LOS	D	D	F	D	B	F	D	F
HCM 95th-tile Q	3.6	3.5	13.8	5	0.2	20.4	4.5	21.7

Movement	EBL	EBT	EBR	WBL	WBT	WBR	NBL	NBT	NBR	SBL	SBT	SBR
Lane Configurations												
Traffic Volume (veh/h)	248	240	81	15	243	124	134	896	9	114	969	187
Future Volume (veh/h)	248	240	81	15	243	124	134	896	9	114	969	187
Initial Q (Qb), veh	0	0	0	0	0	0	0	0	0	0	0	0
Ped-Bike Adj(A_pbT)	1.00		1.00	1.00		1.00	1.00		1.00	1.00		1.00
Parking Bus, Adj	1.00	1.00	1.00	1.00	1.00	1.00	1.00	1.00	1.00	1.00	1.00	1.00
Work Zone On Approach		No			No			No			No	
Adj Sat Flow, veh/h/ln	1575	1772	1772	1575	1772	1772	1575	1772	1772	1575	1772	1772
Adj Flow Rate, veh/h	264	255	86	16	259	132	143	953	10	121	1031	199
Peak Hour Factor	0.94	0.94	0.94	0.94	0.94	0.94	0.94	0.94	0.94	0.94	0.94	0.94
Percent Heavy Veh, %	2	2	2	2	2	2	2	2	2	2	2	2
Cap, veh/h	184	848	279	211	784	387	252	884	9	143	525	101
Arrive On Green	0.12	0.34	0.34	0.14	0.36	0.36	0.06	0.09	0.09	0.06	0.12	0.12
Sat Flow, veh/h	1500	2488	819	1500	2182	1079	1500	3413	36	1500	2815	542
Grp Volume(v), veh/h	264	170	171	16	198	193	143	470	493	121	615	615
Grp Sat Flow(s),veh/h/ln	1500	1683	1624	1500	1683	1578	1500	1683	1765	1500	1683	1674
Q Serve(g_s), s	13.5	8.2	8.5	1.0	9.4	9.8	10.2	28.5	28.5	8.8	20.5	20.5
Cycle Q Clear(g_c), s	13.5	8.2	8.5	1.0	9.4	9.8	10.2	28.5	28.5	8.8	20.5	20.5
Prop In Lane	1.00		0.50	1.00		0.68	1.00		0.02	1.00		0.32
Lane Grp Cap(c), veh/h	184	574	554	211	604	567	252	436	457	143	314	312
V/C Ratio(X)	1.43	0.30	0.31	0.08	0.33	0.34	0.57	1.08	1.08	0.85	1.96	1.97
Avail Cap(c_a), veh/h	184	574	554	211	604	567	252	436	457	143	314	312
HCM Platoon Ratio	1.00	1.00	1.00	1.00	1.00	1.00	0.33	0.33	0.33	0.67	0.67	0.67
Upstream Filter(I)	1.00	1.00	1.00	1.00	1.00	1.00	1.00	1.00	1.00	1.00	1.00	1.00
Uniform Delay (d), s/veh	48.3	26.6	26.7	41.0	25.6	25.7	48.0	50.3	50.3	50.7	48.1	48.1
Incr Delay (d2), s/veh	223.5	1.3	1.4	0.7	1.4	1.6	8.9	65.5	64.5	42.6	444.3	447.7
Initial Q Delay(d3),s/veh	0.0	0.0	0.0	0.0	0.0	0.0	0.0	0.0	0.0	0.0	0.0	0.0
%ile BackOfQ(50%),veh/ln	16.4	3.5	3.5	0.4	4.0	3.9	4.7	20.8	21.7	5.1	47.6	47.6
Unsig. Movement Delay, s/veh												
LnGrp Delay(d),s/veh	271.8	27.9	28.1	41.7	27.0	27.4	57.0	115.8	114.8	93.2	492.4	495.8
LnGrp LOS	F	C	C	D	C	C	E	F	F	F	F	F
Approach Vol, veh/h		605			407			1106			1351	
Approach Delay, s/veh		134.4			27.8			107.8			458.2	
Approach LOS		F			C			F			F	

Timer - Assigned Phs	1	2	3	4	5	6	7	8
Phs Duration (G+Y+Rc), s	15.0	33.0	20.0	42.0	23.0	25.0	18.0	44.0
Change Period (Y+Rc), s	4.5	4.5	4.5	4.5	4.5	4.5	4.5	4.5
Max Green Setting (Gmax), s	10.5	28.5	15.5	37.5	18.5	20.5	13.5	39.5
Max Q Clear Time (g_c+I1), s	10.8	30.5	3.0	10.5	12.2	22.5	15.5	11.8
Green Ext Time (p_c), s	0.0	0.0	0.0	2.1	0.2	0.0	0.0	2.5

Intersection Summary	
HCM 6th Ctrl Delay	239.5
HCM 6th LOS	F

Movement	EBL	EBT	EBR	WBL	WBT	WBR	NBL	NBT	NBR	SBL	SBT	SBR
Lane Configurations												
Traffic Volume (veh/h)	3	277	69	36	294	23	57	73	16	34	41	0
Future Volume (veh/h)	3	277	69	36	294	23	57	73	16	34	41	0
Initial Q (Qb), veh	0	0	0	0	0	0	0	0	0	0	0	0
Ped-Bike Adj(A_pbT)	1.00		1.00	1.00		1.00	1.00		1.00	1.00		1.00
Parking Bus, Adj	1.00	1.00	1.00	1.00	1.00	1.00	1.00	1.00	1.00	1.00	1.00	1.00
Work Zone On Approach		No			No			No			No	
Adj Sat Flow, veh/h/ln	1575	1772	1772	1575	1772	1772	1772	1772	1772	1772	1772	1772
Adj Flow Rate, veh/h	3	315	78	41	334	26	65	83	18	39	47	0
Peak Hour Factor	0.88	0.88	0.88	0.88	0.88	0.88	0.88	0.88	0.88	0.88	0.88	0.88
Percent Heavy Veh, %	2	2	2	2	2	2	2	2	2	2	2	2
Cap, veh/h	583	624	529	520	1115	86	342	219	40	354	261	0
Arrive On Green	0.35	0.35	0.35	0.35	0.35	0.35	0.23	0.23	0.23	0.23	0.23	0.00
Sat Flow, veh/h	908	1772	1502	881	3166	245	474	949	173	482	1127	0
Grp Volume(v), veh/h	3	315	78	41	177	183	166	0	0	86	0	0
Grp Sat Flow(s),veh/h/ln	908	1772	1502	881	1683	1728	1596	0	0	1609	0	0
Q Serve(g_s), s	0.1	3.0	0.8	0.8	1.6	1.7	0.7	0.0	0.0	0.0	0.0	0.0
Cycle Q Clear(g_c), s	1.7	3.0	0.8	3.9	1.6	1.7	1.8	0.0	0.0	0.8	0.0	0.0
Prop In Lane	1.00		1.00	1.00		0.14	0.39		0.11	0.45		0.00
Lane Grp Cap(c), veh/h	583	624	529	520	593	609	601	0	0	614	0	0
V/C Ratio(X)	0.01	0.50	0.15	0.08	0.30	0.30	0.28	0.00	0.00	0.14	0.00	0.00
Avail Cap(c_a), veh/h	1019	1476	1250	943	1402	1439	1537	0	0	1527	0	0
HCM Platoon Ratio	1.00	1.00	1.00	1.00	1.00	1.00	1.00	1.00	1.00	1.00	1.00	1.00
Upstream Filter(I)	1.00	1.00	1.00	1.00	1.00	1.00	1.00	0.00	0.00	1.00	0.00	0.00
Uniform Delay (d), s/veh	5.7	5.5	4.8	7.0	5.1	5.1	7.1	0.0	0.0	6.7	0.0	0.0
Incr Delay (d2), s/veh	0.0	0.6	0.1	0.1	0.3	0.3	0.2	0.0	0.0	0.1	0.0	0.0
Initial Q Delay(d3),s/veh	0.0	0.0	0.0	0.0	0.0	0.0	0.0	0.0	0.0	0.0	0.0	0.0
%ile BackOfQ(50%),veh/ln	0.0	0.5	0.1	0.1	0.2	0.3	0.4	0.0	0.0	0.2	0.0	0.0
Unsig. Movement Delay, s/veh												
LnGrp Delay(d),s/veh	5.7	6.1	4.9	7.1	5.3	5.3	7.3	0.0	0.0	6.8	0.0	0.0
LnGrp LOS	A	A	A	A	A	A	A	A	A	A	A	A
Approach Vol, veh/h		396			401			166			86	
Approach Delay, s/veh		5.9			5.5			7.3			6.8	
Approach LOS		A			A			A			A	

Timer - Assigned Phs	2	4	6	8
Phs Duration (G+Y+Rc), s	9.5	12.1	9.5	12.1
Change Period (Y+Rc), s	4.5	4.5	4.5	4.5
Max Green Setting (Gmax), s	18.0	18.0	18.0	18.0
Max Q Clear Time (g_c+I1), s	3.8	5.0	2.8	5.9
Green Ext Time (p_c), s	0.7	1.7	0.3	1.8

Intersection Summary	
HCM 6th Ctrl Delay	6.1
HCM 6th LOS	A

Intersection	
Intersection Delay, s/veh	14.3
Intersection LOS	B

Movement	EBL	EBT	EBR	WBL	WBT	WBR	NBL	NBT	NBR	SBL	SBT	SBR
Lane Configurations												
Traffic Vol, veh/h	28	116	114	23	129	27	81	156	15	22	170	36
Future Vol, veh/h	28	116	114	23	129	27	81	156	15	22	170	36
Peak Hour Factor	0.86	0.86	0.86	0.86	0.86	0.86	0.86	0.86	0.86	0.86	0.86	0.86
Heavy Vehicles, %	2	2	2	2	2	2	2	2	2	2	2	2
Mvmt Flow	33	135	133	27	150	31	94	181	17	26	198	42
Number of Lanes	0	1	0	0	1	1	0	1	0	0	1	0

Approach	EB	WB	NB	SB
Opposing Approach	WB	EB	SB	NB
Opposing Lanes	2	1	1	1
Conflicting Approach Left	SB	NB	EB	WB
Conflicting Lanes Left	1	1	1	2
Conflicting Approach Right	NB	SB	WB	EB
Conflicting Lanes Right	1	1	2	1
HCM Control Delay	14.9	12.6	15.1	14
HCM LOS	B	B	C	B

Lane	NBLn1	EBLn1	WBLn1	WBLn2	SBLn1
Vol Left, %	32%	11%	15%	0%	10%
Vol Thru, %	62%	45%	85%	0%	75%
Vol Right, %	6%	44%	0%	100%	16%
Sign Control	Stop	Stop	Stop	Stop	Stop
Traffic Vol by Lane	252	258	152	27	228
LT Vol	81	28	23	0	22
Through Vol	156	116	129	0	170
RT Vol	15	114	0	27	36
Lane Flow Rate	293	300	177	31	265
Geometry Grp	2	5	7	7	2
Degree of Util (X)	0.499	0.5	0.339	0.053	0.448
Departure Headway (Hd)	6.127	6.005	6.915	6.122	6.09
Convergence, Y/N	Yes	Yes	Yes	Yes	Yes
Cap	589	600	520	584	591
Service Time	4.165	4.047	4.66	3.867	4.131
HCM Lane V/C Ratio	0.497	0.5	0.34	0.053	0.448
HCM Control Delay	15.1	14.9	13.2	9.2	14
HCM Lane LOS	C	B	B	A	B
HCM 95th-tile Q	2.8	2.8	1.5	0.2	2.3

Movement	EBL	EBT	EBR	WBL	WBT	WBR	NBL	NBT	NBR	SBL	SBT	SBR
Lane Configurations												
Traffic Volume (veh/h)	67	87	77	32	88	44	82	908	28	108	943	63
Future Volume (veh/h)	67	87	77	32	88	44	82	908	28	108	943	63
Initial Q (Qb), veh	0	0	0	0	0	0	0	0	0	0	0	0
Ped-Bike Adj(A_pbT)	1.00		1.00	1.00		1.00	1.00		1.00	1.00		1.00
Parking Bus, Adj	1.00	1.00	1.00	1.00	1.00	1.00	1.00	1.00	1.00	1.00	1.00	1.00
Work Zone On Approach		No			No			No			No	
Adj Sat Flow, veh/h/ln	1772	1772	1772	1772	1772	1772	1575	1772	1772	1575	1772	1772
Adj Flow Rate, veh/h	73	95	84	35	96	48	89	987	30	117	1025	68
Peak Hour Factor	0.92	0.92	0.92	0.92	0.92	0.92	0.92	0.92	0.92	0.92	0.92	0.92
Percent Heavy Veh, %	2	2	2	2	2	2	2	2	2	2	2	2
Cap, veh/h	47	42	403	41	87	403	320	1562	47	211	1267	84
Arrive On Green	0.27	0.27	0.27	0.27	0.27	0.27	0.07	0.15	0.15	0.05	0.13	0.13
Sat Flow, veh/h	0	156	1502	0	326	1502	1500	3336	101	1500	3204	213
Grp Volume(v), veh/h	168	0	84	131	0	48	89	498	519	117	538	555
Grp Sat Flow(s),veh/h/ln	156	0	1502	326	0	1502	1500	1683	1754	1500	1683	1734
Q Serve(g_s), s	0.0	0.0	4.8	0.0	0.0	2.7	6.2	30.5	30.5	8.4	34.2	34.2
Cycle Q Clear(g_c), s	29.5	0.0	4.8	29.5	0.0	2.7	6.2	30.5	30.5	8.4	34.2	34.2
Prop In Lane	0.43		1.00	0.27		1.00	1.00		0.06	1.00		0.12
Lane Grp Cap(c), veh/h	89	0	403	129	0	403	320	788	821	211	666	686
V/C Ratio(X)	1.89	0.00	0.21	1.02	0.00	0.12	0.28	0.63	0.63	0.55	0.81	0.81
Avail Cap(c_a), veh/h	89	0	403	129	0	403	320	788	821	211	666	686
HCM Platoon Ratio	1.00	1.00	1.00	1.00	1.00	1.00	0.33	0.33	0.33	0.33	0.33	0.33
Upstream Filter(I)	1.00	0.00	1.00	1.00	0.00	1.00	1.00	1.00	1.00	1.00	1.00	1.00
Uniform Delay (d), s/veh	41.7	0.0	31.2	36.8	0.0	30.4	43.1	37.6	37.6	49.1	43.8	43.8
Incr Delay (d2), s/veh	439.9	0.0	1.2	83.6	0.0	0.6	2.1	3.8	3.7	10.1	10.2	10.0
Initial Q Delay(d3),s/veh	0.0	0.0	0.0	0.0	0.0	0.0	0.0	0.0	0.0	0.0	0.0	0.0
%ile BackOfQ(50%),veh/ln	18.3	0.0	1.9	6.6	0.0	1.0	2.6	14.6	15.1	3.9	17.3	17.8
Unsig. Movement Delay, s/veh												
LnGrp Delay(d),s/veh	481.6	0.0	32.4	120.4	0.0	31.0	45.2	41.5	41.3	59.1	54.0	53.7
LnGrp LOS	F	A	C	F	A	C	D	D	D	E	D	D
Approach Vol, veh/h		252			179			1106			1210	
Approach Delay, s/veh		331.9			96.4			41.7			54.4	
Approach LOS		F			F			D			D	

Timer - Assigned Phs	1	2		4	5	6		8
Phs Duration (G+Y+Rc), s	30.0	56.0		34.0	28.0	48.0		34.0
Change Period (Y+Rc), s	4.5	4.5		4.5	4.5	4.5		4.5
Max Green Setting (Gmax), s	15.5	51.5		29.5	23.5	43.5		29.5
Max Q Clear Time (g_c+I1), s	10.4	32.5		31.5	8.2	36.2		31.5
Green Ext Time (p_c), s	0.1	6.6		0.0	0.2	4.0		0.0

Intersection Summary	
HCM 6th Ctrl Delay	77.5
HCM 6th LOS	E

Intersection	
Intersection Delay, s/veh	12
Intersection LOS	B

Movement	EBL	EBT	EBR	WBL	WBT	WBR	NBL	NBT	NBR	SBL	SBT	SBR
Lane Configurations												
Traffic Vol, veh/h	13	159	60	30	136	23	23	83	14	52	128	19
Future Vol, veh/h	13	159	60	30	136	23	23	83	14	52	128	19
Peak Hour Factor	0.81	0.81	0.81	0.81	0.81	0.81	0.81	0.81	0.81	0.81	0.81	0.81
Heavy Vehicles, %	2	2	2	2	2	2	2	2	2	2	2	2
Mvmt Flow	16	196	74	37	168	28	28	102	17	64	158	23
Number of Lanes	0	1	0	0	1	1	0	1	0	0	1	0

Approach	EB	WB	NB	SB
Opposing Approach	WB	EB	SB	NB
Opposing Lanes	2	1	1	1
Conflicting Approach Left	SB	NB	EB	WB
Conflicting Lanes Left	1	1	1	2
Conflicting Approach Right	NB	SB	WB	EB
Conflicting Lanes Right	1	1	2	1
HCM Control Delay	12.7	11.8	10.7	12.3
HCM LOS	B	B	B	B

Lane	NBLn1	EBLn1	WBLn1	WBLn2	SBLn1
Vol Left, %	19%	6%	18%	0%	26%
Vol Thru, %	69%	69%	82%	0%	64%
Vol Right, %	12%	26%	0%	100%	10%
Sign Control	Stop	Stop	Stop	Stop	Stop
Traffic Vol by Lane	120	232	166	23	199
LT Vol	23	13	30	0	52
Through Vol	83	159	136	0	128
RT Vol	14	60	0	23	19
Lane Flow Rate	148	286	205	28	246
Geometry Grp	2	5	7	7	2
Degree of Util (X)	0.24	0.434	0.352	0.042	0.387
Departure Headway (Hd)	5.833	5.461	6.183	5.381	5.669
Convergence, Y/N	Yes	Yes	Yes	Yes	Yes
Cap	613	656	580	663	634
Service Time	3.896	3.514	3.938	3.135	3.723
HCM Lane V/C Ratio	0.241	0.436	0.353	0.042	0.388
HCM Control Delay	10.7	12.7	12.3	8.4	12.3
HCM Lane LOS	B	B	B	A	B
HCM 95th-tile Q	0.9	2.2	1.6	0.1	1.8

Intersection	
Int Delay, s/veh	0

Movement	WBL	WBR	NBT	NBR	SBL	SBT
Lane Configurations						
Traffic Vol, veh/h	0	0	0	0	0	0
Future Vol, veh/h	0	0	0	0	0	0
Conflicting Peds, #/hr	0	0	0	0	0	0
Sign Control	Stop	Stop	Free	Free	Free	Free
RT Channelized	-	None	-	None	-	None
Storage Length	-	0	-	-	-	-
Veh in Median Storage, #	0	-	0	-	-	0
Grade, %	0	-	0	-	-	0
Peak Hour Factor	92	92	92	92	92	92
Heavy Vehicles, %	2	2	2	2	2	2
Mvmt Flow	0	0	0	0	0	0

Major/Minor	Minor1		Major1		Major2	
Conflicting Flow All	-	0	0	0	-	-
Stage 1	-	-	-	-	-	-
Stage 2	-	-	-	-	-	-
Critical Hdwy	-	6.94	-	-	-	-
Critical Hdwy Stg 1	-	-	-	-	-	-
Critical Hdwy Stg 2	-	-	-	-	-	-
Follow-up Hdwy	-	3.32	-	-	-	-
Pot Cap-1 Maneuver	0	-	-	-	0	-
Stage 1	0	-	-	-	0	-
Stage 2	0	-	-	-	0	-
Platoon blocked, %			-	-		-
Mov Cap-1 Maneuver	-	-	-	-	-	-
Mov Cap-2 Maneuver	-	-	-	-	-	-
Stage 1	-	-	-	-	-	-
Stage 2	-	-	-	-	-	-

Approach	WB	NB	SB
HCM Control Delay, s	0	0	0
HCM LOS	A		

Minor Lane/Major Mvmt	NBT	NBR	WBLn1	SBT
Capacity (veh/h)	-	-	-	-
HCM Lane V/C Ratio	-	-	-	-
HCM Control Delay (s)	-	-	0	-
HCM Lane LOS	-	-	A	-
HCM 95th %tile Q(veh)	-	-	-	-

Intersection	
Int Delay, s/veh	0

Movement	EBT	EBR	WBL	WBT	NBL	NBR
Lane Configurations						
Traffic Vol, veh/h	0	0	0	0	0	0
Future Vol, veh/h	0	0	0	0	0	0
Conflicting Peds, #/hr	0	0	0	0	0	0
Sign Control	Free	Free	Free	Free	Stop	Stop
RT Channelized	-	None	-	None	-	None
Storage Length	-	-	-	-	0	-
Veh in Median Storage, #	0	-	-	0	0	-
Grade, %	0	-	-	0	0	-
Peak Hour Factor	92	92	92	92	92	92
Heavy Vehicles, %	2	2	2	2	2	2
Mvmt Flow	0	0	0	0	0	0

Major/Minor	Major1		Major2		Minor1	
Conflicting Flow All	0	0	-	-	2	-
Stage 1	-	-	-	-	1	-
Stage 2	-	-	-	-	1	-
Critical Hdwy	-	-	-	-	6.63	-
Critical Hdwy Stg 1	-	-	-	-	5.43	-
Critical Hdwy Stg 2	-	-	-	-	5.83	-
Follow-up Hdwy	-	-	-	-	3.519	-
Pot Cap-1 Maneuver	-	-	0	-	1020	0
Stage 1	-	-	0	-	1022	0
Stage 2	-	-	0	-	1022	0
Platoon blocked, %	-	-		-		
Mov Cap-1 Maneuver	-	-	-	-	1020	-
Mov Cap-2 Maneuver	-	-	-	-	1020	-
Stage 1	-	-	-	-	1022	-
Stage 2	-	-	-	-	1022	-

Approach	EB	WB	NB
HCM Control Delay, s	0	0	0
HCM LOS			A

Minor Lane/Major Mvmt	NBLn1	EBT	EBR	WBT
Capacity (veh/h)	-	-	-	-
HCM Lane V/C Ratio	-	-	-	-
HCM Control Delay (s)	0	-	-	-
HCM Lane LOS	A	-	-	-
HCM 95th %tile Q(veh)	-	-	-	-

Movement	EBT	EBR	WBL	WBT	NBL	NBR
Lane Configurations						
Traffic Volume (veh/h)	0	0	0	0	0	0
Future Volume (veh/h)	0	0	0	0	0	0
Initial Q (Qb), veh	0	0	0	0		
Ped-Bike Adj(A_pbT)		1.00	1.00			
Parking Bus, Adj	1.00	1.00	1.00	1.00		
Work Zone On Approach	No			No		
Adj Sat Flow, veh/h/ln	1772	0	0	1772		
Adj Flow Rate, veh/h	0	0	0	0		
Peak Hour Factor	0.92	0.92	0.92	0.92		
Percent Heavy Veh, %	2	0	0	2		
Cap, veh/h	1418	0	0	2693		
Arrive On Green	0.00	0.00	0.00	0.00		
Sat Flow, veh/h	1772	0	0	3544		
Grp Volume(v), veh/h	0	0	0	0		
Grp Sat Flow(s),veh/h/ln	1772	0	0	1683		
Q Serve(g_s), s	0.0	0.0	0.0	0.0		
Cycle Q Clear(g_c), s	0.0	0.0	0.0	0.0		
Prop In Lane		0.00	0.00			
Lane Grp Cap(c), veh/h	1418	0	0	2693		
V/C Ratio(X)	0.00	0.00	0.00	0.00		
Avail Cap(c_a), veh/h	1418	0	0	2693		
HCM Platoon Ratio	1.00	1.00	1.00	1.00		
Upstream Filter(I)	0.00	0.00	0.00	0.00		
Uniform Delay (d), s/veh	0.0	0.0	0.0	0.0		
Incr Delay (d2), s/veh	0.0	0.0	0.0	0.0		
Initial Q Delay(d3),s/veh	0.0	0.0	0.0	0.0		
%ile BackOfQ(50%),veh/ln	0.0	0.0	0.0	0.0		
Unsig. Movement Delay, s/veh						
LnGrp Delay(d),s/veh	0.0	0.0	0.0	0.0		
LnGrp LOS	A	A	A	A		
Approach Vol, veh/h	0			0		
Approach Delay, s/veh	0.0			0.0		
Approach LOS						

Timer - Assigned Phs	4	8
Phs Duration (G+Y+Rc), s	22.5	22.5
Change Period (Y+Rc), s	4.5	4.5
Max Green Setting (Gmax), s	18.0	18.0
Max Q Clear Time (g_c+I1), s	0.0	0.0
Green Ext Time (p_c), s	0.0	0.0

Intersection Summary	
HCM 6th Ctrl Delay	0.0
HCM 6th LOS	A

Intersection	
Intersection Delay, s/veh	13.2
Intersection LOS	B

Movement	EBL	EBT	EBR	WBL	WBT	WBR	NBL	NBT	NBR	SBL	SBT	SBR
Lane Configurations												
Traffic Vol, veh/h	17	184	19	3	125	74	11	181	6	43	141	41
Future Vol, veh/h	17	184	19	3	125	74	11	181	6	43	141	41
Peak Hour Factor	0.81	0.81	0.81	0.81	0.81	0.81	0.81	0.81	0.81	0.81	0.81	0.81
Heavy Vehicles, %	2	2	2	2	2	2	2	2	2	2	2	2
Mvmt Flow	21	227	23	4	154	91	14	223	7	53	174	51
Number of Lanes	0	1	1	0	2	0	0	1	0	0	1	0

Approach	EB	WB	NB	SB
Opposing Approach	WB	EB	SB	NB
Opposing Lanes	2	2	1	1
Conflicting Approach Left	SB	NB	EB	WB
Conflicting Lanes Left	1	1	2	2
Conflicting Approach Right	NB	SB	WB	EB
Conflicting Lanes Right	1	1	2	2
HCM Control Delay	14.3	11.3	13.3	13.9
HCM LOS	B	B	B	B

Lane	NBLn1	EBLn1	EBLn2	WBLn1	WBLn2	SBLn1
Vol Left, %	6%	8%	0%	5%	0%	19%
Vol Thru, %	91%	92%	0%	95%	46%	63%
Vol Right, %	3%	0%	100%	0%	54%	18%
Sign Control	Stop	Stop	Stop	Stop	Stop	Stop
Traffic Vol by Lane	198	201	19	66	137	225
LT Vol	11	17	0	3	0	43
Through Vol	181	184	0	63	63	141
RT Vol	6	0	19	0	74	41
Lane Flow Rate	244	248	23	81	169	278
Geometry Grp	2	7	7	7	7	2
Degree of Util (X)	0.409	0.453	0.038	0.149	0.291	0.455
Departure Headway (Hd)	6.025	6.573	5.815	6.628	6.217	5.898
Convergence, Y/N	Yes	Yes	Yes	Yes	Yes	Yes
Cap	592	543	610	537	573	606
Service Time	4.12	4.363	3.604	4.423	4.012	3.989
HCM Lane V/C Ratio	0.412	0.457	0.038	0.151	0.295	0.459
HCM Control Delay	13.3	14.8	8.8	10.6	11.6	13.9
HCM Lane LOS	B	B	A	B	B	B
HCM 95th-tile Q	2	2.3	0.1	0.5	1.2	2.4

Movement	EBL	EBT	EBR	WBL	WBT	WBR	NBL	NBT	NBR	SBL	SBT	SBR
Lane Configurations												
Traffic Volume (veh/h)	51	189	37	51	174	154	41	853	56	95	1034	22
Future Volume (veh/h)	51	189	37	51	174	154	41	853	56	95	1034	22
Initial Q (Qb), veh	0	0	0	0	0	0	0	0	0	0	0	0
Ped-Bike Adj(A_pbT)	1.00		1.00	1.00		1.00	1.00		1.00	1.00		1.00
Parking Bus, Adj	1.00	1.00	1.00	1.00	1.00	1.00	1.00	1.00	1.00	1.00	1.00	1.00
Work Zone On Approach		No			No			No			No	
Adj Sat Flow, veh/h/ln	1772	1772	1772	1772	1772	1772	1575	1772	1772	1575	1772	1772
Adj Flow Rate, veh/h	59	220	43	59	202	179	48	992	65	110	1202	26
Peak Hour Factor	0.86	0.86	0.86	0.86	0.86	0.86	0.86	0.86	0.86	0.86	0.86	0.86
Percent Heavy Veh, %	2	2	2	2	2	2	2	2	2	2	2	2
Cap, veh/h	126	494	107	114	362	332	211	1472	96	211	1547	33
Arrive On Green	0.28	0.28	0.28	0.28	0.28	0.28	0.14	0.46	0.46	0.05	0.15	0.15
Sat Flow, veh/h	290	1782	385	265	1307	1196	1500	3207	210	1500	3369	73
Grp Volume(v), veh/h	150	0	172	231	0	209	48	521	536	110	600	628
Grp Sat Flow(s),veh/h/ln	914	0	1543	1370	0	1397	1500	1683	1734	1500	1683	1759
Q Serve(g_s), s	7.1	0.0	10.0	8.0	0.0	14.0	3.1	26.6	26.6	7.9	37.7	37.8
Cycle Q Clear(g_c), s	21.1	0.0	10.0	18.0	0.0	14.0	3.1	26.6	26.6	7.9	37.7	37.8
Prop In Lane	0.39		0.25	0.26		0.86	1.00		0.12	1.00		0.04
Lane Grp Cap(c), veh/h	299	0	428	421	0	387	211	773	796	211	773	807
V/C Ratio(X)	0.50	0.00	0.40	0.55	0.00	0.54	0.23	0.67	0.67	0.52	0.78	0.78
Avail Cap(c_a), veh/h	299	0	428	421	0	387	211	773	796	211	773	807
HCM Platoon Ratio	1.00	1.00	1.00	1.00	1.00	1.00	1.00	1.00	1.00	0.33	0.33	0.33
Upstream Filter(I)	1.00	0.00	1.00	1.00	0.00	1.00	1.00	1.00	1.00	1.00	1.00	1.00
Uniform Delay (d), s/veh	37.5	0.0	32.3	35.2	0.0	33.8	41.9	23.3	23.3	48.8	41.2	41.3
Incr Delay (d2), s/veh	5.9	0.0	2.8	5.1	0.0	5.3	2.5	4.7	4.5	8.9	7.5	7.3
Initial Q Delay(d3),s/veh	0.0	0.0	0.0	0.0	0.0	0.0	0.0	0.0	0.0	0.0	0.0	0.0
%ile BackOfQ(50%),veh/ln	4.2	0.0	4.1	6.1	0.0	5.3	1.3	11.3	11.6	3.6	18.6	19.4
Unsig. Movement Delay, s/veh												
LnGrp Delay(d),s/veh	43.3	0.0	35.2	40.3	0.0	39.1	44.4	28.0	27.8	57.7	48.8	48.5
LnGrp LOS	D	A	D	D	A	D	D	C	C	E	D	D
Approach Vol, veh/h		322			440			1105			1338	
Approach Delay, s/veh		38.9			39.7			28.6			49.4	
Approach LOS		D			D			C			D	

Timer - Assigned Phs	1	2		4	5	6		8
Phs Duration (G+Y+Rc), s	20.0	55.0		35.0	20.0	55.0		35.0
Change Period (Y+Rc), s	4.5	4.5		4.5	4.5	4.5		4.5
Max Green Setting (Gmax), s	15.5	50.5		30.5	15.5	50.5		30.5
Max Q Clear Time (g_c+I1), s	19.1	28.6		23.1	5.1	39.8		20.0
Green Ext Time (p_c), s	0.1	7.4		1.1	0.0	5.9		2.0

Intersection Summary		
HCM 6th Ctrl Delay		39.8
HCM 6th LOS		D

Intersection	
Int Delay, s/veh	2.7

Movement	EBL	EBT	WBT	WBR	SBL	SBR
Lane Configurations						
Traffic Vol, veh/h	115	278	275	79	14	62
Future Vol, veh/h	115	278	275	79	14	62
Conflicting Peds, #/hr	0	0	0	0	0	0
Sign Control	Free	Free	Free	Free	Stop	Stop
RT Channelized	-	None	-	None	-	None
Storage Length	-	-	-	-	0	-
Veh in Median Storage, #	-	0	0	-	0	-
Grade, %	-	0	0	-	0	-
Peak Hour Factor	73	73	73	73	73	73
Heavy Vehicles, %	2	2	2	2	2	2
Mvmt Flow	158	381	377	108	19	85

Major/Minor	Major1		Major2		Minor2	
Conflicting Flow All	485	0	-	0	1128	431
Stage 1	-	-	-	-	431	-
Stage 2	-	-	-	-	697	-
Critical Hdwy	4.12	-	-	-	6.42	6.22
Critical Hdwy Stg 1	-	-	-	-	5.42	-
Critical Hdwy Stg 2	-	-	-	-	5.42	-
Follow-up Hdwy	2.218	-	-	-	3.518	3.318
Pot Cap-1 Maneuver	1078	-	-	-	226	624
Stage 1	-	-	-	-	655	-
Stage 2	-	-	-	-	494	-
Platoon blocked, %		-	-	-		
Mov Cap-1 Maneuver	1078	-	-	-	184	624
Mov Cap-2 Maneuver	-	-	-	-	184	-
Stage 1	-	-	-	-	533	-
Stage 2	-	-	-	-	494	-

Approach	EB	WB	SB
HCM Control Delay, s	2.6	0	15.9
HCM LOS			C

Minor Lane/Major Mvmt	EBL	EBT	WBT	WBR	SBLn1
Capacity (veh/h)	1078	-	-	-	433
HCM Lane V/C Ratio	0.146	-	-	-	0.24
HCM Control Delay (s)	8.9	0	-	-	15.9
HCM Lane LOS	A	A	-	-	C
HCM 95th %tile Q(veh)	0.5	-	-	-	0.9

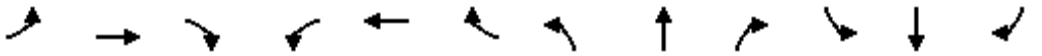

Movement	EBL	EBT	EBR	WBL	WBT	WBR	NBL	NBT	NBR	SBL	SBT	SBR
Lane Configurations												
Traffic Volume (veh/h)	10	1	17	63	0	47	8	511	62	64	998	7
Future Volume (veh/h)	10	1	17	63	0	47	8	511	62	64	998	7
Initial Q (Qb), veh	0	0	0	0	0	0	0	0	0	0	0	0
Ped-Bike Adj(A_pbT)	1.00		1.00	1.00		1.00	1.00		1.00	1.00		1.00
Parking Bus, Adj	1.00	1.00	1.00	1.00	1.00	1.00	1.00	1.00	1.00	1.00	1.00	1.00
Work Zone On Approach		No			No			No			No	
Adj Sat Flow, veh/h/ln	1772	1772	1772	1772	1772	1772	1575	1772	1772	1575	1772	1772
Adj Flow Rate, veh/h	11	1	19	71	0	53	9	574	70	72	1121	8
Peak Hour Factor	0.89	0.89	0.89	0.89	0.89	0.89	0.89	0.89	0.89	0.89	0.89	0.89
Percent Heavy Veh, %	2	2	2	2	2	2	2	2	2	2	2	2
Cap, veh/h	274	64	363	720	0	601	208	1209	147	341	1371	10
Arrive On Green	0.40	0.40	0.40	0.40	0.00	0.40	0.40	0.40	0.40	0.40	0.40	0.40
Sat Flow, veh/h	413	160	907	1401	0	1502	443	3021	368	699	3426	24
Grp Volume(v), veh/h	31	0	0	71	0	53	9	319	325	72	551	578
Grp Sat Flow(s),veh/h/ln	1480	0	0	1401	0	1502	443	1683	1706	699	1683	1768
Q Serve(g_s), s	0.0	0.0	0.0	0.8	0.0	1.0	0.8	6.3	6.4	3.8	13.1	13.1
Cycle Q Clear(g_c), s	0.5	0.0	0.0	1.3	0.0	1.0	14.0	6.3	6.4	10.2	13.1	13.1
Prop In Lane	0.35		0.61	1.00		1.00	1.00		0.22	1.00		0.01
Lane Grp Cap(c), veh/h	700	0	0	720	0	601	208	673	682	341	673	707
V/C Ratio(X)	0.04	0.00	0.00	0.10	0.00	0.09	0.04	0.47	0.48	0.21	0.82	0.82
Avail Cap(c_a), veh/h	700	0	0	720	0	601	208	673	682	341	673	707
HCM Platoon Ratio	1.00	1.00	1.00	1.00	1.00	1.00	1.00	1.00	1.00	1.00	1.00	1.00
Upstream Filter(I)	1.00	0.00	0.00	1.00	0.00	1.00	1.00	1.00	1.00	1.00	1.00	1.00
Uniform Delay (d), s/veh	8.3	0.0	0.0	8.5	0.0	8.4	18.3	10.0	10.0	13.8	12.0	12.0
Incr Delay (d2), s/veh	0.1	0.0	0.0	0.3	0.0	0.3	0.4	2.4	2.4	1.4	10.6	10.2
Initial Q Delay(d3),s/veh	0.0	0.0	0.0	0.0	0.0	0.0	0.0	0.0	0.0	0.0	0.0	0.0
%ile BackOfQ(50%),veh/ln	0.2	0.0	0.0	0.4	0.0	0.3	0.1	2.3	2.3	0.6	5.8	5.9
Unsig. Movement Delay, s/veh												
LnGrp Delay(d),s/veh	8.4	0.0	0.0	8.8	0.0	8.7	18.7	12.4	12.4	15.2	22.7	22.2
LnGrp LOS	A	A	A	A	A	A	B	B	B	B	C	C
Approach Vol, veh/h		31			124			653			1201	
Approach Delay, s/veh		8.4			8.7			12.5			22.0	
Approach LOS		A			A			B			C	

Timer - Assigned Phs		2		4		6		8				
Phs Duration (G+Y+Rc), s		22.5		22.5		22.5		22.5				
Change Period (Y+Rc), s		4.5		4.5		4.5		4.5				
Max Green Setting (Gmax), s		18.0		18.0		18.0		18.0				
Max Q Clear Time (g_c+I1), s		16.0		2.5		15.1		3.3				
Green Ext Time (p_c), s		0.8		0.1		2.0		0.4				

Intersection Summary												
HCM 6th Ctrl Delay			17.9									
HCM 6th LOS			B									

HCM 6th Signalized Intersection Summary
1: Cedar & Valley

06/16/2020

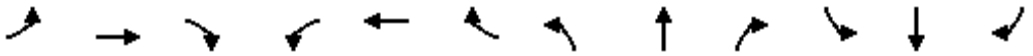

Movement	EBL	EBT	EBR	WBL	WBT	WBR	NBL	NBT	NBR	SBL	SBT	SBR
Lane Configurations												
Traffic Volume (veh/h)	253	427	493	236	243	60	379	1227	217	81	962	66
Future Volume (veh/h)	253	427	493	236	243	60	379	1227	217	81	962	66
Initial Q (Qb), veh	0	0	0	0	0	0	0	0	0	0	0	0
Ped-Bike Adj(A_pbT)	1.00		1.00	1.00		1.00	1.00		1.00	1.00		1.00
Parking Bus, Adj	1.00	1.00	1.00	1.00	1.00	1.00	1.00	1.00	1.00	1.00	1.00	1.00
Work Zone On Approach		No			No			No			No	
Adj Sat Flow, veh/h/ln	1575	1772	1772	1575	1772	1772	1575	1772	1772	1575	1772	1772
Adj Flow Rate, veh/h	256	431	498	238	245	61	383	1239	219	82	972	67
Peak Hour Factor	0.99	0.99	0.99	0.99	0.99	0.99	0.99	0.99	0.99	0.99	0.99	0.99
Percent Heavy Veh, %	2	2	2	2	2	2	2	2	2	2	2	2
Cap, veh/h	946	709	1057	535	1073	262	545	1347	601	352	1849	127
Arrive On Green	0.40	0.40	0.40	0.40	0.40	0.40	0.40	0.40	0.40	0.40	0.40	0.40
Sat Flow, veh/h	1851	1772	2643	1039	2683	655	936	3367	1502	628	4622	318
Grp Volume(v), veh/h	256	431	498	238	152	154	383	1239	219	82	678	361
Grp Sat Flow(s),veh/h/ln	925	1772	1321	519	1683	1654	468	1683	1502	314	1612	1715
Q Serve(g_s), s	4.8	8.7	6.3	9.3	2.7	2.8	10.8	15.7	4.6	2.3	7.2	7.2
Cycle Q Clear(g_c), s	7.6	8.7	6.3	18.0	2.7	2.8	18.0	15.7	4.6	18.0	7.2	7.2
Prop In Lane	1.00		1.00	1.00		0.40	1.00		1.00	1.00		0.19
Lane Grp Cap(c), veh/h	946	709	1057	535	673	662	545	1347	601	352	1290	686
V/C Ratio(X)	0.27	0.61	0.47	0.44	0.23	0.23	0.70	0.92	0.36	0.23	0.53	0.53
Avail Cap(c_a), veh/h	946	709	1057	535	673	662	545	1347	601	352	1290	686
HCM Platoon Ratio	1.00	1.00	1.00	1.00	1.00	1.00	1.00	1.00	1.00	1.00	1.00	1.00
Upstream Filter(I)	1.00	1.00	1.00	1.00	1.00	1.00	1.00	1.00	1.00	1.00	1.00	1.00
Uniform Delay (d), s/veh	11.4	10.7	10.0	18.3	8.9	8.9	19.3	12.8	9.5	22.1	10.3	10.3
Incr Delay (d2), s/veh	0.7	3.9	1.5	2.7	0.8	0.8	7.4	11.6	1.7	1.5	1.5	2.9
Initial Q Delay(d3),s/veh	0.0	0.0	0.0	0.0	0.0	0.0	0.0	0.0	0.0	0.0	0.0	0.0
%ile BackOfQ(50%),veh/ln	0.9	3.4	1.6	1.3	0.9	0.9	2.4	6.7	1.5	0.5	2.3	2.7
Unsig. Movement Delay, s/veh												
LnGrp Delay(d),s/veh	12.1	14.6	11.5	21.0	9.7	9.8	26.8	24.4	11.2	23.6	11.8	13.1
LnGrp LOS	B	B	B	C	A	A	C	C	B	C	B	B
Approach Vol, veh/h		1185			544			1841			1121	
Approach Delay, s/veh		12.7			14.6			23.3			13.1	
Approach LOS		B			B			C			B	

Timer - Assigned Phs		2		4		6		8				
Phs Duration (G+Y+Rc), s		22.5		22.5		22.5		22.5				
Change Period (Y+Rc), s		4.5		4.5		4.5		4.5				
Max Green Setting (Gmax), s		18.0		18.0		18.0		18.0				
Max Q Clear Time (g_c+I1), s		20.0		10.7		20.0		20.0				
Green Ext Time (p_c), s		0.0		3.7		0.0		0.0				

Intersection Summary												
HCM 6th Ctrl Delay			17.2									
HCM 6th LOS			B									

Movement	EBL	EBT	EBR	WBL	WBT	WBR	NBL	NBT	NBR	SBL	SBT	SBR
Lane Configurations												
Traffic Volume (veh/h)	0	0	0	359	2	517	234	1318	0	0	1193	538
Future Volume (veh/h)	0	0	0	359	2	517	234	1318	0	0	1193	538
Initial Q (Qb), veh				0	0	0	0	0	0	0	0	0
Ped-Bike Adj(A_pbT)				1.00		1.00	1.00		1.00	1.00		1.00
Parking Bus, Adj				1.00	1.00	1.00	1.00	1.00	1.00	1.00	1.00	1.00
Work Zone On Approach					No			No			No	
Adj Sat Flow, veh/h/ln				1575	1772	1772	1575	1772	0	0	1772	1772
Adj Flow Rate, veh/h				243	0	652	236	1331	0	0	1205	543
Peak Hour Factor				0.99	0.99	0.99	0.99	0.99	0.99	0.99	0.99	0.99
Percent Heavy Veh, %				2	2	2	2	2	0	0	2	2
Cap, veh/h				419	0	838	319	2174	0	0	1915	594
Arrive On Green				0.28	0.00	0.28	0.43	1.00	0.00	0.00	0.40	0.40
Sat Flow, veh/h				1500	0	3003	1500	3455	0	0	4997	1502
Grp Volume(v), veh/h				243	0	652	236	1331	0	0	1205	543
Grp Sat Flow(s),veh/h/ln				1500	0	1502	1500	1683	0	0	1612	1502
Q Serve(g_s), s				16.7	0.0	24.0	15.8	0.0	0.0	0.0	24.1	41.1
Cycle Q Clear(g_c), s				16.7	0.0	24.0	15.8	0.0	0.0	0.0	24.1	41.1
Prop In Lane				1.00		1.00	1.00		0.00	0.00		1.00
Lane Grp Cap(c), veh/h				419	0	838	319	2174	0	0	1915	594
V/C Ratio(X)				0.58	0.00	0.78	0.74	0.61	0.00	0.00	0.63	0.91
Avail Cap(c_a), veh/h				419	0	838	319	2174	0	0	1915	594
HCM Platoon Ratio				1.00	1.00	1.00	2.00	2.00	1.00	1.00	1.00	1.00
Upstream Filter(I)				1.00	0.00	1.00	1.00	1.00	0.00	0.00	1.00	1.00
Uniform Delay (d), s/veh				37.2	0.0	39.8	31.7	0.0	0.0	0.0	29.2	34.3
Incr Delay (d2), s/veh				5.8	0.0	7.0	14.3	1.3	0.0	0.0	1.6	20.8
Initial Q Delay(d3),s/veh				0.0	0.0	0.0	0.0	0.0	0.0	0.0	0.0	0.0
%ile BackOfQ(50%),veh/ln				6.8	0.0	9.6	5.9	0.4	0.0	0.0	9.5	18.1
Unsig. Movement Delay, s/veh												
LnGrp Delay(d),s/veh				43.0	0.0	46.8	46.1	1.3	0.0	0.0	30.7	55.1
LnGrp LOS				D	A	D	D	A	A	A	C	E
Approach Vol, veh/h					895			1567			1748	
Approach Delay, s/veh					45.8			8.0			38.3	
Approach LOS					D			A			D	

Timer - Assigned Phs	2		5	6		8
Phs Duration (G+Y+Rc), s	82.0		30.0	52.0		38.0
Change Period (Y+Rc), s	4.5		4.5	4.5		4.5
Max Green Setting (Gmax), s	77.5		25.5	47.5		33.5
Max Q Clear Time (g_c+I1), s	2.0		17.8	43.1		26.0
Green Ext Time (p_c), s	15.7		0.4	3.5		2.3

Intersection Summary	
HCM 6th Ctrl Delay	28.6
HCM 6th LOS	C

Notes

User approved volume balancing among the lanes for turning movement.

Movement	EBL	EBT	EBR	WBL	WBT	WBR	NBL	NBT	NBR	SBL	SBT	SBR
Lane Configurations												
Traffic Volume (veh/h)	634	8	197	0	0	0	0	886	388	403	1153	0
Future Volume (veh/h)	634	8	197	0	0	0	0	886	388	403	1153	0
Initial Q (Qb), veh	0	0	0				0	0	0	0	0	0
Ped-Bike Adj(A_pbT)	1.00		1.00				1.00		1.00	1.00		1.00
Parking Bus, Adj	1.00	1.00	1.00				1.00	1.00	1.00	1.00	1.00	1.00
Work Zone On Approach		No						No			No	
Adj Sat Flow, veh/h/ln	1575	1772	1772				0	1772	1772	1575	1772	0
Adj Flow Rate, veh/h	428	315	201				0	904	396	411	1177	0
Peak Hour Factor	0.98	0.98	0.98				0.98	0.98	0.98	0.98	0.98	0.98
Percent Heavy Veh, %	2	2	2				0	2	2	2	2	0
Cap, veh/h	431	291	185				0	1754	544	356	2146	0
Arrive On Green	0.29	0.29	0.29				0.00	0.36	0.36	0.47	1.00	0.00
Sat Flow, veh/h	1500	1011	645				0	4997	1502	1500	3455	0
Grp Volume(v), veh/h	428	0	516				0	904	396	411	1177	0
Grp Sat Flow(s),veh/h/ln	1500	0	1656				0	1612	1502	1500	1683	0
Q Serve(g_s), s	34.1	0.0	34.5				0.0	17.6	27.4	28.5	0.0	0.0
Cycle Q Clear(g_c), s	34.1	0.0	34.5				0.0	17.6	27.4	28.5	0.0	0.0
Prop In Lane	1.00		0.39				0.00		1.00	1.00		0.00
Lane Grp Cap(c), veh/h	431	0	476				0	1754	544	356	2146	0
V/C Ratio(X)	0.99	0.00	1.08				0.00	0.52	0.73	1.15	0.55	0.00
Avail Cap(c_a), veh/h	431	0	476				0	1754	544	356	2146	0
HCM Platoon Ratio	1.00	1.00	1.00				1.00	1.00	1.00	2.00	2.00	1.00
Upstream Filter(I)	1.00	0.00	1.00				0.00	1.00	1.00	1.00	1.00	0.00
Uniform Delay (d), s/veh	42.6	0.0	42.8				0.0	30.0	33.1	31.5	0.0	0.0
Incr Delay (d2), s/veh	41.5	0.0	65.8				0.0	1.1	8.3	96.4	1.0	0.0
Initial Q Delay(d3),s/veh	0.0	0.0	0.0				0.0	0.0	0.0	0.0	0.0	0.0
%ile BackOfQ(50%),veh/ln	17.5	0.0	22.6				0.0	7.0	11.1	17.5	0.3	0.0
Unsig. Movement Delay, s/veh												
LnGrp Delay(d),s/veh	84.1	0.0	108.5				0.0	31.1	41.4	127.9	1.0	0.0
LnGrp LOS	F	A	F				A	C	D	F	A	A
Approach Vol, veh/h		944						1300			1588	
Approach Delay, s/veh		97.5						34.2			33.8	
Approach LOS		F						C			C	

Timer - Assigned Phs	1	2		4		6			
Phs Duration (G+Y+Rc), s	33.0	48.0		39.0		81.0			
Change Period (Y+Rc), s	4.5	4.5		4.5		4.5			
Max Green Setting (Gmax), s	28.5	43.5		34.5		76.5			
Max Q Clear Time (g_c+I1), s	30.5	29.4		36.5		2.0			
Green Ext Time (p_c), s	0.0	6.7		0.0		12.5			

Intersection Summary	
HCM 6th Ctrl Delay	49.6
HCM 6th LOS	D

Notes

User approved volume balancing among the lanes for turning movement.

Movement	EBL	EBT	EBR	WBL	WBT	WBR	NBL	NBT	NBR	SBL	SBT	SBR
Lane Configurations												
Traffic Volume (veh/h)	271	16	65	36	3	205	24	860	10	57	1074	263
Future Volume (veh/h)	271	16	65	36	3	205	24	860	10	57	1074	263
Initial Q (Qb), veh	0	0	0	0	0	0	0	0	0	0	0	0
Ped-Bike Adj(A_pbT)	1.00		1.00	1.00		1.00	1.00		1.00	1.00		1.00
Parking Bus, Adj	1.00	1.00	1.00	1.00	1.00	1.00	1.00	1.00	1.00	1.00	1.00	1.00
Work Zone On Approach		No			No			No			No	
Adj Sat Flow, veh/h/ln	1575	1772	1772	1575	1772	1772	1575	1772	1772	1575	1772	1772
Adj Flow Rate, veh/h	291	17	70	39	3	220	26	925	11	61	1155	283
Peak Hour Factor	0.93	0.93	0.93	0.93	0.93	0.93	0.93	0.93	0.93	0.93	0.93	0.93
Percent Heavy Veh, %	2	2	2	2	2	2	2	2	2	2	2	2
Cap, veh/h	240	89	368	356	498	444	270	1576	19	476	1242	301
Arrive On Green	0.30	0.30	0.30	0.30	0.30	0.30	0.26	0.93	0.93	0.13	0.46	0.46
Sat Flow, veh/h	1029	302	1245	1165	1683	1502	1500	3407	41	1500	2686	652
Grp Volume(v), veh/h	291	0	87	39	3	220	26	457	479	61	720	718
Grp Sat Flow(s),veh/h/ln	1029	0	1548	1165	1683	1502	1500	1683	1765	1500	1683	1655
Q Serve(g_s), s	21.0	0.0	5.0	3.1	0.2	14.5	0.7	5.3	5.3	2.1	48.2	49.5
Cycle Q Clear(g_c), s	35.5	0.0	5.0	8.1	0.2	14.5	0.7	5.3	5.3	2.1	48.2	49.5
Prop In Lane	1.00		0.80	1.00		1.00	1.00		0.02	1.00		0.39
Lane Grp Cap(c), veh/h	240	0	458	356	498	444	270	779	816	476	779	765
V/C Ratio(X)	1.21	0.00	0.19	0.11	0.01	0.50	0.10	0.59	0.59	0.13	0.92	0.94
Avail Cap(c_a), veh/h	240	0	458	356	498	444	270	779	816	476	779	765
HCM Platoon Ratio	1.00	1.00	1.00	1.00	1.00	1.00	2.00	2.00	2.00	1.00	1.00	1.00
Upstream Filter(I)	1.00	0.00	1.00	1.00	1.00	1.00	1.00	1.00	1.00	1.00	1.00	1.00
Uniform Delay (d), s/veh	52.1	0.0	31.5	34.6	29.8	34.9	18.0	2.6	2.6	10.6	30.3	30.6
Incr Delay (d2), s/veh	127.5	0.0	0.9	0.6	0.0	3.9	0.7	3.2	3.1	0.6	18.4	20.6
Initial Q Delay(d3),s/veh	0.0	0.0	0.0	0.0	0.0	0.0	0.0	0.0	0.0	0.0	0.0	0.0
%ile BackOfQ(50%),veh/ln	15.8	0.0	2.0	0.9	0.1	5.8	0.3	1.7	1.7	0.8	22.9	23.5
Unsig. Movement Delay, s/veh												
LnGrp Delay(d),s/veh	179.7	0.0	32.4	35.2	29.8	38.8	18.7	5.8	5.7	11.1	48.6	51.2
LnGrp LOS	F	A	C	D	C	D	B	A	A	B	D	D
Approach Vol, veh/h		378			262			962			1499	
Approach Delay, s/veh		145.8			38.1			6.1			48.4	
Approach LOS		F			D			A			D	

Timer - Assigned Phs	1	2		4	5	6		8
Phs Duration (G+Y+Rc), s	20.0	60.0		40.0	20.0	60.0		40.0
Change Period (Y+Rc), s	4.5	4.5		4.5	4.5	4.5		4.5
Max Green Setting (Gmax), s	15.5	55.5		35.5	15.5	55.5		35.5
Max Q Clear Time (g_c+I1), s	14.1	7.3		37.5	2.7	51.5		16.5
Green Ext Time (p_c), s	0.1	7.5		0.0	0.0	3.0		1.5

Intersection Summary	
HCM 6th Ctrl Delay	46.3
HCM 6th LOS	D

Intersection	
Intersection Delay, s/veh	46.2
Intersection LOS	E

Movement	EBL	EBT	EBR	WBL	WBT	WBR	NBL	NBT	NBR	SBL	SBT	SBR
Lane Configurations												
Traffic Vol, veh/h	149	762	48	27	451	10	45	93	50	8	62	142
Future Vol, veh/h	149	762	48	27	451	10	45	93	50	8	62	142
Peak Hour Factor	0.94	0.94	0.94	0.94	0.94	0.94	0.94	0.94	0.94	0.94	0.94	0.94
Heavy Vehicles, %	2	2	2	2	2	2	2	2	2	2	2	2
Mvmt Flow	159	811	51	29	480	11	48	99	53	9	66	151
Number of Lanes	1	2	0	1	2	0	0	1	0	0	1	0

Approach	EB	WB	NB	SB
Opposing Approach	WB	EB	SB	NB
Opposing Lanes	3	3	1	1
Conflicting Approach Left	SB	NB	EB	WB
Conflicting Lanes Left	1	1	3	3
Conflicting Approach Right	NB	SB	WB	EB
Conflicting Lanes Right	1	1	3	3
HCM Control Delay	68.6	23.6	20.1	20.3
HCM LOS	F	C	C	C

Lane	NBLn1	EBLn1	EBLn2	EBLn3	WBLn1	WBLn2	WBLn3	SBLn1
Vol Left, %	24%	100%	0%	0%	100%	0%	0%	4%
Vol Thru, %	49%	0%	100%	84%	0%	100%	94%	29%
Vol Right, %	27%	0%	0%	16%	0%	0%	6%	67%
Sign Control	Stop	Stop	Stop	Stop	Stop	Stop	Stop	Stop
Traffic Vol by Lane	188	149	508	302	27	301	160	212
LT Vol	45	149	0	0	27	0	0	8
Through Vol	93	0	508	254	0	301	150	62
RT Vol	50	0	0	48	0	0	10	142
Lane Flow Rate	200	159	540	321	29	320	171	226
Geometry Grp	7	7	7	7	7	7	7	7
Degree of Util (X)	0.487	0.356	1.137	0.666	0.068	0.71	0.377	0.522
Departure Headway (Hd)	9.07	8.095	7.577	7.461	8.806	8.286	8.24	8.613
Convergence, Y/N	Yes	Yes	Yes	Yes	Yes	Yes	Yes	Yes
Cap	400	444	481	485	409	438	440	422
Service Time	6.77	5.851	5.332	5.216	6.506	5.986	5.94	6.313
HCM Lane V/C Ratio	0.5	0.358	1.123	0.662	0.071	0.731	0.389	0.536
HCM Control Delay	20.1	15.3	110.8	23.9	12.1	28.8	15.8	20.3
HCM Lane LOS	C	C	F	C	B	D	C	C
HCM 95th-tile Q	2.6	1.6	18.8	4.8	0.2	5.5	1.7	2.9

Movement	EBL	EBT	EBR	WBL	WBT	WBR	NBL	NBT	NBR	SBL	SBT	SBR
Lane Configurations												
Traffic Volume (veh/h)	194	503	118	15	252	98	118	636	43	137	934	110
Future Volume (veh/h)	194	503	118	15	252	98	118	636	43	137	934	110
Initial Q (Qb), veh	0	0	0	0	0	0	0	0	0	0	0	0
Ped-Bike Adj(A_pbT)	1.00		1.00	1.00		1.00	1.00		1.00	1.00		1.00
Parking Bus, Adj	1.00	1.00	1.00	1.00	1.00	1.00	1.00	1.00	1.00	1.00	1.00	1.00
Work Zone On Approach		No			No			No			No	
Adj Sat Flow, veh/h/ln	1575	1772	1772	1575	1772	1772	1575	1772	1772	1575	1772	1772
Adj Flow Rate, veh/h	196	508	119	15	255	99	119	642	43	138	943	111
Peak Hour Factor	0.99	0.99	0.99	0.99	0.99	0.99	0.99	0.99	0.99	0.99	0.99	0.99
Percent Heavy Veh, %	2	2	2	2	2	2	2	2	2	2	2	2
Cap, veh/h	156	802	187	169	727	275	344	1001	67	194	645	76
Arrive On Green	0.10	0.30	0.30	0.11	0.30	0.30	0.23	0.31	0.31	0.09	0.14	0.14
Sat Flow, veh/h	1500	2710	632	1500	2389	903	1500	3202	214	1500	3034	357
Grp Volume(v), veh/h	196	315	312	15	178	176	119	337	348	138	523	531
Grp Sat Flow(s),veh/h/ln	1500	1683	1658	1500	1683	1609	1500	1683	1733	1500	1683	1708
Q Serve(g_s), s	12.5	19.4	19.6	1.1	9.9	10.3	8.0	20.7	20.7	10.7	25.5	25.5
Cycle Q Clear(g_c), s	12.5	19.4	19.6	1.1	9.9	10.3	8.0	20.7	20.7	10.7	25.5	25.5
Prop In Lane	1.00		0.38	1.00		0.56	1.00		0.12	1.00		0.21
Lane Grp Cap(c), veh/h	156	498	491	169	512	490	344	526	542	194	358	363
V/C Ratio(X)	1.25	0.63	0.64	0.09	0.35	0.36	0.35	0.64	0.64	0.71	1.46	1.46
Avail Cap(c_a), veh/h	156	498	491	169	512	490	344	526	542	194	358	363
HCM Platoon Ratio	1.00	1.00	1.00	1.00	1.00	1.00	1.00	1.00	1.00	0.67	0.67	0.67
Upstream Filter(I)	1.00	1.00	1.00	1.00	1.00	1.00	1.00	1.00	1.00	1.00	1.00	1.00
Uniform Delay (d), s/veh	53.8	36.6	36.7	47.7	32.5	32.6	38.7	35.5	35.5	52.6	51.5	51.5
Incr Delay (d2), s/veh	156.1	6.0	6.2	1.0	1.9	2.1	2.7	5.9	5.8	19.9	223.0	222.9
Initial Q Delay(d3),s/veh	0.0	0.0	0.0	0.0	0.0	0.0	0.0	0.0	0.0	0.0	0.0	0.0
%ile BackOfQ(50%),veh/ln	11.5	8.8	8.8	0.5	4.3	4.3	3.2	9.3	9.6	5.3	33.3	33.7
Unsig. Movement Delay, s/veh												
LnGrp Delay(d),s/veh	209.9	42.6	42.9	48.8	34.3	34.7	41.5	41.4	41.2	72.6	274.4	274.4
LnGrp LOS	F	D	D	D	C	C	D	D	D	E	F	F
Approach Vol, veh/h		823			369			804			1192	
Approach Delay, s/veh		82.5			35.1			41.3			251.1	
Approach LOS		F			D			D			F	

Timer - Assigned Phs	1	2	3	4	5	6	7	8
Phs Duration (G+Y+Rc), s	30.0	42.0	18.0	40.0	32.0	30.0	17.0	41.0
Change Period (Y+Rc), s	4.5	4.5	4.5	4.5	4.5	4.5	4.5	4.5
Max Green Setting (Gmax), s	25.5	37.5	13.5	35.5	27.5	25.5	12.5	36.5
Max Q Clear Time (g_c+I1), s	12.7	22.7	3.1	21.6	10.0	27.5	14.5	12.3
Green Ext Time (p_c), s	0.1	3.7	0.0	3.3	0.3	0.0	0.0	2.1

Intersection Summary	
HCM 6th Ctrl Delay	129.7
HCM 6th LOS	F

Movement	EBL	EBT	EBR	WBL	WBT	WBR	NBL	NBT	NBR	SBL	SBT	SBR
Lane Configurations												
Traffic Volume (veh/h)	22	568	68	38	284	60	44	81	68	18	40	18
Future Volume (veh/h)	22	568	68	38	284	60	44	81	68	18	40	18
Initial Q (Qb), veh	0	0	0	0	0	0	0	0	0	0	0	0
Ped-Bike Adj(A_pbT)	1.00		1.00	1.00		1.00	1.00		1.00	1.00		1.00
Parking Bus, Adj	1.00	1.00	1.00	1.00	1.00	1.00	1.00	1.00	1.00	1.00	1.00	1.00
Work Zone On Approach		No			No			No			No	
Adj Sat Flow, veh/h/ln	1575	1772	1772	1575	1772	1772	1772	1772	1772	1772	1772	1772
Adj Flow Rate, veh/h	25	645	77	43	323	68	50	92	77	20	45	20
Peak Hour Factor	0.88	0.88	0.88	0.88	0.88	0.88	0.88	0.88	0.88	0.88	0.88	0.88
Percent Heavy Veh, %	2	2	2	2	2	2	2	2	2	2	2	2
Cap, veh/h	599	835	708	355	1308	272	205	175	124	196	233	85
Arrive On Green	0.47	0.47	0.47	0.47	0.47	0.47	0.22	0.22	0.22	0.22	0.22	0.22
Sat Flow, veh/h	883	1772	1502	650	2775	577	246	785	559	203	1046	384
Grp Volume(v), veh/h	25	645	77	43	194	197	219	0	0	85	0	0
Grp Sat Flow(s),veh/h/ln	883	1772	1502	650	1683	1668	1591	0	0	1633	0	0
Q Serve(g_s), s	0.5	8.9	0.8	1.7	2.0	2.1	1.6	0.0	0.0	0.0	0.0	0.0
Cycle Q Clear(g_c), s	2.6	8.9	0.8	10.6	2.0	2.1	3.6	0.0	0.0	1.2	0.0	0.0
Prop In Lane	1.00		1.00	1.00		0.35	0.23		0.35	0.24		0.24
Lane Grp Cap(c), veh/h	599	835	708	355	794	787	504	0	0	514	0	0
V/C Ratio(X)	0.04	0.77	0.11	0.12	0.24	0.25	0.43	0.00	0.00	0.17	0.00	0.00
Avail Cap(c_a), veh/h	723	1085	919	446	1030	1021	1111	0	0	1115	0	0
HCM Platoon Ratio	1.00	1.00	1.00	1.00	1.00	1.00	1.00	1.00	1.00	1.00	1.00	1.00
Upstream Filter(I)	1.00	1.00	1.00	1.00	1.00	1.00	1.00	0.00	0.00	1.00	0.00	0.00
Uniform Delay (d), s/veh	5.4	6.5	4.3	10.9	4.6	4.7	10.3	0.0	0.0	9.4	0.0	0.0
Incr Delay (d2), s/veh	0.0	2.6	0.1	0.2	0.2	0.2	0.6	0.0	0.0	0.1	0.0	0.0
Initial Q Delay(d3),s/veh	0.0	0.0	0.0	0.0	0.0	0.0	0.0	0.0	0.0	0.0	0.0	0.0
%ile BackOfQ(50%),veh/ln	0.1	2.1	0.1	0.2	0.3	0.4	1.0	0.0	0.0	0.3	0.0	0.0
Unsig. Movement Delay, s/veh												
LnGrp Delay(d),s/veh	5.5	9.1	4.4	11.0	4.8	4.8	10.8	0.0	0.0	9.5	0.0	0.0
LnGrp LOS	A	A	A	B	A	A	B	A	A	A	A	A
Approach Vol, veh/h		747			434			219			85	
Approach Delay, s/veh		8.5			5.4			10.8			9.5	
Approach LOS		A			A			B			A	

Timer - Assigned Phs	2	4	6	8
Phs Duration (G+Y+Rc), s	11.0	18.4	11.0	18.4
Change Period (Y+Rc), s	4.5	4.5	4.5	4.5
Max Green Setting (Gmax), s	18.0	18.0	18.0	18.0
Max Q Clear Time (g_c+I1), s	5.6	10.9	3.2	12.6
Green Ext Time (p_c), s	1.0	2.7	0.3	1.2

Intersection Summary	
HCM 6th Ctrl Delay	8.0
HCM 6th LOS	A

Intersection	
Intersection Delay, s/veh	14.8
Intersection LOS	B

Movement	EBL	EBT	EBR	WBL	WBT	WBR	NBL	NBT	NBR	SBL	SBT	SBR
Lane Configurations												
Traffic Vol, veh/h	24	133	54	23	85	22	46	266	35	31	266	18
Future Vol, veh/h	24	133	54	23	85	22	46	266	35	31	266	18
Peak Hour Factor	0.94	0.94	0.94	0.94	0.94	0.94	0.94	0.94	0.94	0.94	0.94	0.94
Heavy Vehicles, %	2	2	2	2	2	2	2	2	2	2	2	2
Mvmt Flow	26	141	57	24	90	23	49	283	37	33	283	19
Number of Lanes	0	1	0	0	1	1	0	1	0	0	1	0

Approach	EB	WB	NB	SB
Opposing Approach	WB	EB	SB	NB
Opposing Lanes	2	1	1	1
Conflicting Approach Left	SB	NB	EB	WB
Conflicting Lanes Left	1	1	1	2
Conflicting Approach Right	NB	SB	WB	EB
Conflicting Lanes Right	1	1	2	1
HCM Control Delay	13.3	11.5	16.4	15.3
HCM LOS	B	B	C	C

Lane	NBLn1	EBLn1	WBLn1	WBLn2	SBLn1
Vol Left, %	13%	11%	21%	0%	10%
Vol Thru, %	77%	63%	79%	0%	84%
Vol Right, %	10%	26%	0%	100%	6%
Sign Control	Stop	Stop	Stop	Stop	Stop
Traffic Vol by Lane	347	211	108	22	315
LT Vol	46	24	23	0	31
Through Vol	266	133	85	0	266
RT Vol	35	54	0	22	18
Lane Flow Rate	369	224	115	23	335
Geometry Grp	2	5	7	7	2
Degree of Util (X)	0.579	0.393	0.229	0.041	0.533
Departure Headway (Hd)	5.753	6.303	7.165	6.339	5.829
Convergence, Y/N	Yes	Yes	Yes	Yes	Yes
Cap	631	575	503	567	623
Service Time	3.753	4.303	4.875	4.049	3.829
HCM Lane V/C Ratio	0.585	0.39	0.229	0.041	0.538
HCM Control Delay	16.4	13.3	12	9.3	15.3
HCM Lane LOS	C	B	B	A	C
HCM 95th-tile Q	3.7	1.9	0.9	0.1	3.1

Movement	EBL	EBT	EBR	WBL	WBT	WBR	NBL	NBT	NBR	SBL	SBT	SBR
Lane Configurations												
Traffic Volume (veh/h)	65	135	93	27	119	71	101	725	72	87	913	48
Future Volume (veh/h)	65	135	93	27	119	71	101	725	72	87	913	48
Initial Q (Qb), veh	0	0	0	0	0	0	0	0	0	0	0	0
Ped-Bike Adj(A_pbT)	1.00		1.00	1.00		1.00	1.00		1.00	1.00		1.00
Parking Bus, Adj	1.00	1.00	1.00	1.00	1.00	1.00	1.00	1.00	1.00	1.00	1.00	1.00
Work Zone On Approach		No			No			No			No	
Adj Sat Flow, veh/h/ln	1772	1772	1772	1772	1772	1772	1575	1772	1772	1575	1772	1772
Adj Flow Rate, veh/h	71	147	101	29	129	77	110	788	78	95	992	52
Peak Hour Factor	0.92	0.92	0.92	0.92	0.92	0.92	0.92	0.92	0.92	0.92	0.92	0.92
Percent Heavy Veh, %	2	2	2	2	2	2	2	2	2	2	2	2
Cap, veh/h	40	61	444	36	128	444	319	1431	142	194	1234	65
Arrive On Green	0.30	0.30	0.30	0.30	0.30	0.30	0.14	0.31	0.31	0.04	0.13	0.13
Sat Flow, veh/h	0	206	1502	0	432	1502	1500	3094	306	1500	3254	171
Grp Volume(v), veh/h	218	0	101	158	0	77	110	429	437	95	513	531
Grp Sat Flow(s),veh/h/ln	206	0	1502	432	0	1502	1500	1683	1717	1500	1683	1741
Q Serve(g_s), s	0.0	0.0	6.1	0.0	0.0	4.6	7.9	25.4	25.4	7.4	35.6	35.6
Cycle Q Clear(g_c), s	35.5	0.0	6.1	35.5	0.0	4.6	7.9	25.4	25.4	7.4	35.6	35.6
Prop In Lane	0.33		1.00	0.18		1.00	1.00		0.18	1.00		0.10
Lane Grp Cap(c), veh/h	101	0	444	163	0	444	319	779	794	194	638	660
V/C Ratio(X)	2.16	0.00	0.23	0.97	0.00	0.17	0.35	0.55	0.55	0.49	0.80	0.80
Avail Cap(c_a), veh/h	101	0	444	163	0	444	319	779	794	194	638	660
HCM Platoon Ratio	1.00	1.00	1.00	1.00	1.00	1.00	0.67	0.67	0.67	0.33	0.33	0.33
Upstream Filter(I)	1.00	0.00	1.00	1.00	0.00	1.00	1.00	1.00	1.00	1.00	1.00	1.00
Uniform Delay (d), s/veh	39.8	0.0	31.9	35.7	0.0	31.4	43.9	31.0	31.0	53.6	48.2	48.2
Incr Delay (d2), s/veh	554.0	0.0	1.2	62.4	0.0	0.8	2.9	2.8	2.7	8.6	10.4	10.0
Initial Q Delay(d3),s/veh	0.0	0.0	0.0	0.0	0.0	0.0	0.0	0.0	0.0	0.0	0.0	0.0
%ile BackOfQ(50%),veh/ln	18.6	0.0	2.4	6.4	0.0	1.8	3.3	11.5	11.7	3.4	17.9	18.5
Unsig. Movement Delay, s/veh												
LnGrp Delay(d),s/veh	593.7	0.0	33.1	98.1	0.0	32.2	46.9	33.8	33.8	62.2	58.5	58.2
LnGrp LOS	F	A	C	F	A	C	D	C	C	E	E	E
Approach Vol, veh/h		319			235			976			1139	
Approach Delay, s/veh		416.2			76.5			35.3			58.7	
Approach LOS		F			E			D			E	

Timer - Assigned Phs	1	2		4	5	6		8
Phs Duration (G+Y+Rc), s	30.0	60.0		40.0	30.0	50.0		40.0
Change Period (Y+Rc), s	4.5	4.5		4.5	4.5	4.5		4.5
Max Green Setting (Gmax), s	25.5	55.5		35.5	25.5	45.5		35.5
Max Q Clear Time (g_c+I1), s	9.4	27.4		37.5	9.9	37.6		37.5
Green Ext Time (p_c), s	0.1	6.2		0.0	0.2	4.1		0.0

Intersection Summary	
HCM 6th Ctrl Delay	94.4
HCM 6th LOS	F

Intersection	
Intersection Delay, s/veh	11.3
Intersection LOS	B

Movement	EBL	EBT	EBR	WBL	WBT	WBR	NBL	NBT	NBR	SBL	SBT	SBR
Lane Configurations												
Traffic Vol, veh/h	63	228	26	6	190	29	17	105	7	23	65	31
Future Vol, veh/h	63	228	26	6	190	29	17	105	7	23	65	31
Peak Hour Factor	0.96	0.96	0.96	0.96	0.96	0.96	0.96	0.96	0.96	0.96	0.96	0.96
Heavy Vehicles, %	2	2	2	2	2	2	2	2	2	2	2	2
Mvmt Flow	66	238	27	6	198	30	18	109	7	24	68	32
Number of Lanes	0	1	0	0	1	1	0	1	0	0	1	0

Approach	EB	WB	NB	SB
Opposing Approach	WB	EB	SB	NB
Opposing Lanes	2	1	1	1
Conflicting Approach Left	SB	NB	EB	WB
Conflicting Lanes Left	1	1	1	2
Conflicting Approach Right	NB	SB	WB	EB
Conflicting Lanes Right	1	1	2	1
HCM Control Delay	12.7	10.7	10.2	9.9
HCM LOS	B	B	B	A

Lane	NBLn1	EBLn1	WBLn1	WBLn2	SBLn1
Vol Left, %	13%	20%	3%	0%	19%
Vol Thru, %	81%	72%	97%	0%	55%
Vol Right, %	5%	8%	0%	100%	26%
Sign Control	Stop	Stop	Stop	Stop	Stop
Traffic Vol by Lane	129	317	196	29	119
LT Vol	17	63	6	0	23
Through Vol	105	228	190	0	65
RT Vol	7	26	0	29	31
Lane Flow Rate	134	330	204	30	124
Geometry Grp	2	5	7	7	2
Degree of Util (X)	0.21	0.471	0.322	0.042	0.191
Departure Headway (Hd)	5.636	5.13	5.682	4.959	5.549
Convergence, Y/N	Yes	Yes	Yes	Yes	Yes
Cap	637	703	633	723	647
Service Time	3.672	3.153	3.408	2.684	3.585
HCM Lane V/C Ratio	0.21	0.469	0.322	0.041	0.192
HCM Control Delay	10.2	12.7	11.1	7.9	9.9
HCM Lane LOS	B	B	B	A	A
HCM 95th-tile Q	0.8	2.5	1.4	0.1	0.7

Intersection	
Int Delay, s/veh	0

Movement	WBL	WBR	NBT	NBR	SBL	SBT
Lane Configurations						
Traffic Vol, veh/h	0	0	0	0	0	0
Future Vol, veh/h	0	0	0	0	0	0
Conflicting Peds, #/hr	0	0	0	0	0	0
Sign Control	Stop	Stop	Free	Free	Free	Free
RT Channelized	-	None	-	None	-	None
Storage Length	-	0	-	-	-	-
Veh in Median Storage, #	0	-	0	-	-	0
Grade, %	0	-	0	-	-	0
Peak Hour Factor	92	92	92	92	92	92
Heavy Vehicles, %	2	2	2	2	2	2
Mvmt Flow	0	0	0	0	0	0

Major/Minor	Minor1		Major1		Major2	
Conflicting Flow All	-	0	0	0	-	-
Stage 1	-	-	-	-	-	-
Stage 2	-	-	-	-	-	-
Critical Hdwy	-	6.94	-	-	-	-
Critical Hdwy Stg 1	-	-	-	-	-	-
Critical Hdwy Stg 2	-	-	-	-	-	-
Follow-up Hdwy	-	3.32	-	-	-	-
Pot Cap-1 Maneuver	0	-	-	-	0	-
Stage 1	0	-	-	-	0	-
Stage 2	0	-	-	-	0	-
Platoon blocked, %			-	-		-
Mov Cap-1 Maneuver	-	-	-	-	-	-
Mov Cap-2 Maneuver	-	-	-	-	-	-
Stage 1	-	-	-	-	-	-
Stage 2	-	-	-	-	-	-

Approach	WB	NB	SB
HCM Control Delay, s	0	0	0
HCM LOS	A		

Minor Lane/Major Mvmt	NBT	NBR	WBLn1	SBT
Capacity (veh/h)	-	-	-	-
HCM Lane V/C Ratio	-	-	-	-
HCM Control Delay (s)	-	-	0	-
HCM Lane LOS	-	-	A	-
HCM 95th %tile Q(veh)	-	-	-	-

Intersection	
Int Delay, s/veh	0

Movement	EBT	EBR	WBL	WBT	NBL	NBR
Lane Configurations						
Traffic Vol, veh/h	0	0	0	0	0	0
Future Vol, veh/h	0	0	0	0	0	0
Conflicting Peds, #/hr	0	0	0	0	0	0
Sign Control	Free	Free	Free	Free	Stop	Stop
RT Channelized	-	None	-	None	-	None
Storage Length	-	-	-	-	0	-
Veh in Median Storage, #	0	-	-	0	0	-
Grade, %	0	-	-	0	0	-
Peak Hour Factor	92	92	92	92	92	92
Heavy Vehicles, %	2	2	2	2	2	2
Mvmt Flow	0	0	0	0	0	0

Major/Minor	Major1		Major2		Minor1	
Conflicting Flow All	0	0	-	-	2	-
Stage 1	-	-	-	-	1	-
Stage 2	-	-	-	-	1	-
Critical Hdwy	-	-	-	-	6.63	-
Critical Hdwy Stg 1	-	-	-	-	5.43	-
Critical Hdwy Stg 2	-	-	-	-	5.83	-
Follow-up Hdwy	-	-	-	-	3.519	-
Pot Cap-1 Maneuver	-	-	0	-	1020	0
Stage 1	-	-	0	-	1022	0
Stage 2	-	-	0	-	1022	0
Platoon blocked, %	-	-		-		
Mov Cap-1 Maneuver	-	-	-	-	1020	-
Mov Cap-2 Maneuver	-	-	-	-	1020	-
Stage 1	-	-	-	-	1022	-
Stage 2	-	-	-	-	1022	-

Approach	EB	WB	NB
HCM Control Delay, s	0	0	0
HCM LOS			A

Minor Lane/Major Mvmt	NBLn1	EBT	EBR	WBT
Capacity (veh/h)	-	-	-	-
HCM Lane V/C Ratio	-	-	-	-
HCM Control Delay (s)	0	-	-	-
HCM Lane LOS	A	-	-	-
HCM 95th %tile Q(veh)	-	-	-	-

Movement	EBT	EBR	WBL	WBT	NBL	NBR
Lane Configurations						
Traffic Volume (veh/h)	0	0	0	0	0	0
Future Volume (veh/h)	0	0	0	0	0	0
Initial Q (Qb), veh	0	0	0	0		
Ped-Bike Adj(A_pbT)		1.00	1.00			
Parking Bus, Adj	1.00	1.00	1.00	1.00		
Work Zone On Approach	No			No		
Adj Sat Flow, veh/h/ln	1772	0	0	1772		
Adj Flow Rate, veh/h	0	0	0	0		
Peak Hour Factor	0.92	0.92	0.92	0.92		
Percent Heavy Veh, %	2	0	0	2		
Cap, veh/h	1418	0	0	2693		
Arrive On Green	0.00	0.00	0.00	0.00		
Sat Flow, veh/h	1772	0	0	3544		
Grp Volume(v), veh/h	0	0	0	0		
Grp Sat Flow(s),veh/h/ln	1772	0	0	1683		
Q Serve(g_s), s	0.0	0.0	0.0	0.0		
Cycle Q Clear(g_c), s	0.0	0.0	0.0	0.0		
Prop In Lane		0.00	0.00			
Lane Grp Cap(c), veh/h	1418	0	0	2693		
V/C Ratio(X)	0.00	0.00	0.00	0.00		
Avail Cap(c_a), veh/h	1418	0	0	2693		
HCM Platoon Ratio	1.00	1.00	1.00	1.00		
Upstream Filter(I)	0.00	0.00	0.00	0.00		
Uniform Delay (d), s/veh	0.0	0.0	0.0	0.0		
Incr Delay (d2), s/veh	0.0	0.0	0.0	0.0		
Initial Q Delay(d3),s/veh	0.0	0.0	0.0	0.0		
%ile BackOfQ(50%),veh/ln	0.0	0.0	0.0	0.0		
Unsig. Movement Delay, s/veh						
LnGrp Delay(d),s/veh	0.0	0.0	0.0	0.0		
LnGrp LOS	A	A	A	A		
Approach Vol, veh/h	0			0		
Approach Delay, s/veh	0.0			0.0		
Approach LOS						

Timer - Assigned Phs	4	8
Phs Duration (G+Y+Rc), s	22.5	22.5
Change Period (Y+Rc), s	4.5	4.5
Max Green Setting (Gmax), s	18.0	18.0
Max Q Clear Time (g_c+I1), s	0.0	0.0
Green Ext Time (p_c), s	0.0	0.0

Intersection Summary	
HCM 6th Ctrl Delay	0.0
HCM 6th LOS	A

Intersection	
Intersection Delay, s/veh	11.9
Intersection LOS	B

Movement	EBL	EBT	EBR	WBL	WBT	WBR	NBL	NBT	NBR	SBL	SBT	SBR
Lane Configurations												
Traffic Vol, veh/h	54	293	28	12	149	63	10	63	6	46	55	10
Future Vol, veh/h	54	293	28	12	149	63	10	63	6	46	55	10
Peak Hour Factor	0.95	0.95	0.95	0.95	0.95	0.95	0.95	0.95	0.95	0.95	0.95	0.95
Heavy Vehicles, %	2	2	2	2	2	2	2	2	2	2	2	2
Mvmt Flow	57	308	29	13	157	66	11	66	6	48	58	11
Number of Lanes	0	1	1	0	2	0	0	1	0	0	1	0

Approach	EB	WB	NB	SB
Opposing Approach	WB	EB	SB	NB
Opposing Lanes	2	2	1	1
Conflicting Approach Left	SB	NB	EB	WB
Conflicting Lanes Left	1	1	2	2
Conflicting Approach Right	NB	SB	WB	EB
Conflicting Lanes Right	1	1	2	2
HCM Control Delay	14.4	9.4	9.7	10.1
HCM LOS	B	A	A	B

Lane	NBLn1	EBLn1	EBLn2	WBLn1	WBLn2	SBLn1
Vol Left, %	13%	16%	0%	14%	0%	41%
Vol Thru, %	80%	84%	0%	86%	54%	50%
Vol Right, %	8%	0%	100%	0%	46%	9%
Sign Control	Stop	Stop	Stop	Stop	Stop	Stop
Traffic Vol by Lane	79	347	28	87	138	111
LT Vol	10	54	0	12	0	46
Through Vol	63	293	0	75	75	55
RT Vol	6	0	28	0	63	10
Lane Flow Rate	83	365	29	91	145	117
Geometry Grp	2	7	7	7	7	2
Degree of Util (X)	0.133	0.558	0.039	0.144	0.212	0.186
Departure Headway (Hd)	5.752	5.501	4.716	5.674	5.279	5.728
Convergence, Y/N	Yes	Yes	Yes	Yes	Yes	Yes
Cap	624	661	763	635	683	626
Service Time	3.786	3.206	2.421	3.382	2.988	3.76
HCM Lane V/C Ratio	0.133	0.552	0.038	0.143	0.212	0.187
HCM Control Delay	9.7	14.9	7.6	9.3	9.4	10.1
HCM Lane LOS	A	B	A	A	A	B
HCM 95th-tile Q	0.5	3.5	0.1	0.5	0.8	0.7

Movement	EBL	EBT	EBR	WBL	WBT	WBR	NBL	NBT	NBR	SBL	SBT	SBR
Lane Configurations												
Traffic Volume (veh/h)	48	321	39	61	182	62	61	854	74	119	1037	35
Future Volume (veh/h)	48	321	39	61	182	62	61	854	74	119	1037	35
Initial Q (Qb), veh	0	0	0	0	0	0	0	0	0	0	0	0
Ped-Bike Adj(A_pbT)	1.00		1.00	1.00		1.00	1.00		1.00	1.00		1.00
Parking Bus, Adj	1.00	1.00	1.00	1.00	1.00	1.00	1.00	1.00	1.00	1.00	1.00	1.00
Work Zone On Approach		No			No			No			No	
Adj Sat Flow, veh/h/ln	1772	1772	1772	1772	1772	1772	1575	1772	1772	1575	1772	1772
Adj Flow Rate, veh/h	49	331	40	63	188	64	63	880	76	123	1069	36
Peak Hour Factor	0.97	0.97	0.97	0.97	0.97	0.97	0.97	0.97	0.97	0.97	0.97	0.97
Percent Heavy Veh, %	2	2	2	2	2	2	2	2	2	2	2	2
Cap, veh/h	112	722	89	150	460	172	194	1320	114	256	1537	52
Arrive On Green	0.30	0.30	0.30	0.30	0.30	0.30	0.13	0.42	0.42	0.06	0.15	0.15
Sat Flow, veh/h	254	2439	302	362	1556	581	1500	3136	271	1500	3323	112
Grp Volume(v), veh/h	213	0	207	149	0	166	63	472	484	123	541	564
Grp Sat Flow(s),veh/h/ln	1437	0	1558	991	0	1508	1500	1683	1723	1500	1683	1752
Q Serve(g_s), s	6.3	0.0	12.9	8.1	0.0	10.5	4.6	27.1	27.1	9.5	36.6	36.6
Cycle Q Clear(g_c), s	16.7	0.0	12.9	21.0	0.0	10.5	4.6	27.1	27.1	9.5	36.6	36.6
Prop In Lane	0.23		0.19	0.42		0.39	1.00		0.16	1.00		0.06
Lane Grp Cap(c), veh/h	462	0	461	336	0	446	194	708	725	256	779	810
V/C Ratio(X)	0.46	0.00	0.45	0.44	0.00	0.37	0.33	0.67	0.67	0.48	0.70	0.70
Avail Cap(c_a), veh/h	462	0	461	336	0	446	194	708	725	256	779	810
HCM Platoon Ratio	1.00	1.00	1.00	1.00	1.00	1.00	1.00	1.00	1.00	0.33	0.33	0.33
Upstream Filter(I)	1.00	0.00	1.00	1.00	0.00	1.00	1.00	1.00	1.00	1.00	1.00	1.00
Uniform Delay (d), s/veh	35.3	0.0	34.3	38.6	0.0	33.4	47.5	28.0	28.0	51.4	42.8	42.8
Incr Delay (d2), s/veh	3.3	0.0	3.1	4.2	0.0	2.4	4.4	4.9	4.8	6.3	5.1	4.9
Initial Q Delay(d3),s/veh	0.0	0.0	0.0	0.0	0.0	0.0	0.0	0.0	0.0	0.0	0.0	0.0
%ile BackOfQ(50%),veh/ln	5.7	0.0	5.3	4.3	0.0	4.1	2.0	11.7	12.0	4.3	17.6	18.3
Unsig. Movement Delay, s/veh												
LnGrp Delay(d),s/veh	38.6	0.0	37.4	42.8	0.0	35.8	51.9	32.9	32.8	57.8	47.9	47.7
LnGrp LOS	D	A	D	D	A	D	D	C	C	E	D	D
Approach Vol, veh/h		420			315			1019			1228	
Approach Delay, s/veh		38.0			39.1			34.0			48.8	
Approach LOS		D			D			C			D	

Timer - Assigned Phs	1	2		4	5	6		8				
Phs Duration (G+Y+Rc), s	25.0	55.0		40.0	20.0	60.0		40.0				
Change Period (Y+Rc), s	4.5	4.5		4.5	4.5	4.5		4.5				
Max Green Setting (Gmax), s	20.5	50.5		35.5	15.5	55.5		35.5				
Max Q Clear Time (g_c+I1), s	11.5	29.1		18.7	6.6	38.6		23.0				
Green Ext Time (p_c), s	0.2	6.5		2.3	0.1	7.0		1.5				

Intersection Summary	
HCM 6th Ctrl Delay	41.2
HCM 6th LOS	D

Intersection	
Int Delay, s/veh	2.6

Movement	EBL	EBT	WBT	WBR	SBL	SBR
Lane Configurations						
Traffic Vol, veh/h	104	356	206	23	21	46
Future Vol, veh/h	104	356	206	23	21	46
Conflicting Peds, #/hr	0	0	0	0	0	0
Sign Control	Free	Free	Free	Free	Stop	Stop
RT Channelized	-	None	-	None	-	None
Storage Length	-	-	-	-	0	-
Veh in Median Storage, #	-	0	0	-	0	-
Grade, %	-	0	0	-	0	-
Peak Hour Factor	73	73	73	73	73	73
Heavy Vehicles, %	2	2	2	2	2	2
Mvmt Flow	142	488	282	32	29	63

Major/Minor	Major1		Major2		Minor2	
Conflicting Flow All	314	0	-	0	1070	298
Stage 1	-	-	-	-	298	-
Stage 2	-	-	-	-	772	-
Critical Hdwy	4.12	-	-	-	6.42	6.22
Critical Hdwy Stg 1	-	-	-	-	5.42	-
Critical Hdwy Stg 2	-	-	-	-	5.42	-
Follow-up Hdwy	2.218	-	-	-	3.518	3.318
Pot Cap-1 Maneuver	1246	-	-	-	245	741
Stage 1	-	-	-	-	753	-
Stage 2	-	-	-	-	456	-
Platoon blocked, %		-	-	-		
Mov Cap-1 Maneuver	1246	-	-	-	207	741
Mov Cap-2 Maneuver	-	-	-	-	207	-
Stage 1	-	-	-	-	636	-
Stage 2	-	-	-	-	456	-

Approach	EB	WB	SB
HCM Control Delay, s	1.9	0	16.3
HCM LOS			C

Minor Lane/Major Mvmt	EBL	EBT	WBT	WBR	SBLn1
Capacity (veh/h)	1246	-	-	-	410
HCM Lane V/C Ratio	0.114	-	-	-	0.224
HCM Control Delay (s)	8.3	0	-	-	16.3
HCM Lane LOS	A	A	-	-	C
HCM 95th %tile Q(veh)	0.4	-	-	-	0.8

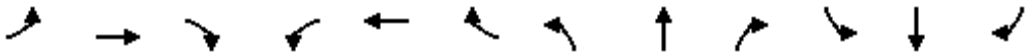

Movement	EBL	EBT	EBR	WBL	WBT	WBR	NBL	NBT	NBR	SBL	SBT	SBR
Lane Configurations												
Traffic Volume (veh/h)	13	2	4	113	3	67	6	681	97	212	953	18
Future Volume (veh/h)	13	2	4	113	3	67	6	681	97	212	953	18
Initial Q (Qb), veh	0	0	0	0	0	0	0	0	0	0	0	0
Ped-Bike Adj(A_pbT)	1.00		1.00	1.00		1.00	1.00		1.00	1.00		1.00
Parking Bus, Adj	1.00	1.00	1.00	1.00	1.00	1.00	1.00	1.00	1.00	1.00	1.00	1.00
Work Zone On Approach		No			No			No			No	
Adj Sat Flow, veh/h/ln	1772	1772	1772	1772	1772	1772	1575	1772	1772	1575	1772	1772
Adj Flow Rate, veh/h	14	2	4	119	3	71	6	717	102	223	1003	19
Peak Hour Factor	0.95	0.95	0.95	0.95	0.95	0.95	0.95	0.95	0.95	0.95	0.95	0.95
Percent Heavy Veh, %	2	2	2	2	2	2	2	2	2	2	2	2
Cap, veh/h	481	75	105	722	16	601	232	1184	168	283	1352	26
Arrive On Green	0.40	0.40	0.40	0.40	0.40	0.40	0.40	0.40	0.40	0.40	0.40	0.40
Sat Flow, veh/h	862	188	262	1409	40	1502	490	2959	421	594	3380	64
Grp Volume(v), veh/h	20	0	0	122	0	71	6	408	411	223	500	522
Grp Sat Flow(s),veh/h/ln	1312	0	0	1449	0	1502	490	1683	1696	594	1683	1760
Q Serve(g_s), s	0.0	0.0	0.0	0.0	0.0	1.3	0.5	8.6	8.6	9.4	11.4	11.4
Cycle Q Clear(g_c), s	2.1	0.0	0.0	2.1	0.0	1.3	11.9	8.6	8.6	18.0	11.4	11.4
Prop In Lane	0.70		0.20	0.98		1.00	1.00		0.25	1.00		0.04
Lane Grp Cap(c), veh/h	661	0	0	738	0	601	232	673	678	283	673	704
V/C Ratio(X)	0.03	0.00	0.00	0.17	0.00	0.12	0.03	0.61	0.61	0.79	0.74	0.74
Avail Cap(c_a), veh/h	661	0	0	738	0	601	232	673	678	283	673	704
HCM Platoon Ratio	1.00	1.00	1.00	1.00	1.00	1.00	1.00	1.00	1.00	1.00	1.00	1.00
Upstream Filter(I)	1.00	0.00	0.00	1.00	0.00	1.00	1.00	1.00	1.00	1.00	1.00	1.00
Uniform Delay (d), s/veh	8.2	0.0	0.0	8.7	0.0	8.5	16.6	10.7	10.7	19.9	11.5	11.5
Incr Delay (d2), s/veh	0.1	0.0	0.0	0.5	0.0	0.4	0.2	4.0	4.0	19.5	7.2	6.9
Initial Q Delay(d3),s/veh	0.0	0.0	0.0	0.0	0.0	0.0	0.0	0.0	0.0	0.0	0.0	0.0
%ile BackOfQ(50%),veh/ln	0.1	0.0	0.0	0.7	0.0	0.4	0.1	3.2	3.3	3.7	4.6	4.8
Unsig. Movement Delay, s/veh												
LnGrp Delay(d),s/veh	8.3	0.0	0.0	9.2	0.0	8.9	16.8	14.7	14.7	39.4	18.8	18.5
LnGrp LOS	A	A	A	A	A	A	B	B	B	D	B	B
Approach Vol, veh/h		20			193			825			1245	
Approach Delay, s/veh		8.3			9.1			14.7			22.3	
Approach LOS		A			A			B			C	

Timer - Assigned Phs		2		4		6		8				
Phs Duration (G+Y+Rc), s		22.5		22.5		22.5		22.5				
Change Period (Y+Rc), s		4.5		4.5		4.5		4.5				
Max Green Setting (Gmax), s		18.0		18.0		18.0		18.0				
Max Q Clear Time (g_c+I1), s		13.9		4.1		20.0		4.1				
Green Ext Time (p_c), s		2.0		0.0		0.0		0.7				

Intersection Summary												
HCM 6th Ctrl Delay			18.3									
HCM 6th LOS			B									

HCM 6th Signalized Intersection Summary
1: Cedar & Valley

06/16/2020

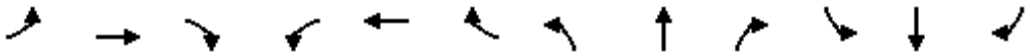

Movement	EBL	EBT	EBR	WBL	WBT	WBR	NBL	NBT	NBR	SBL	SBT	SBR
Lane Configurations												
Traffic Volume (veh/h)	48	175	541	338	261	40	359	1092	238	45	1304	23
Future Volume (veh/h)	48	175	541	338	261	40	359	1092	238	45	1304	23
Initial Q (Qb), veh	0	0	0	0	0	0	0	0	0	0	0	0
Ped-Bike Adj(A_pbT)	1.00		1.00	1.00		1.00	1.00		1.00	1.00		1.00
Parking Bus, Adj	1.00	1.00	1.00	1.00	1.00	1.00	1.00	1.00	1.00	1.00	1.00	1.00
Work Zone On Approach		No			No			No			No	
Adj Sat Flow, veh/h/ln	1575	1772	1772	1575	1772	1772	1575	1772	1772	1575	1772	1772
Adj Flow Rate, veh/h	50	182	564	352	272	42	374	1138	248	47	1358	24
Peak Hour Factor	0.96	0.96	0.96	0.96	0.96	0.96	0.96	0.96	0.96	0.96	0.96	0.96
Percent Heavy Veh, %	2	2	2	2	2	2	2	2	2	2	2	2
Cap, veh/h	941	709	1057	728	1171	179	435	1347	601	383	1958	35
Arrive On Green	0.40	0.40	0.40	0.40	0.40	0.40	0.40	0.40	0.40	0.40	0.40	0.40
Sat Flow, veh/h	1837	1772	2643	1233	2928	447	676	3367	1502	673	4895	87
Grp Volume(v), veh/h	50	182	564	352	155	159	374	1138	248	47	895	487
Grp Sat Flow(s),veh/h/ln	919	1772	1321	616	1683	1692	338	1683	1502	337	1612	1756
Q Serve(g_s), s	0.8	3.1	7.3	12.0	2.7	2.8	7.6	13.8	5.3	3.1	10.4	10.4
Cycle Q Clear(g_c), s	3.6	3.1	7.3	15.1	2.7	2.8	18.0	13.8	5.3	16.8	10.4	10.4
Prop In Lane	1.00		1.00	1.00		0.26	1.00		1.00	1.00		0.05
Lane Grp Cap(c), veh/h	941	709	1057	728	673	677	435	1347	601	383	1290	703
V/C Ratio(X)	0.05	0.26	0.53	0.48	0.23	0.24	0.86	0.85	0.41	0.12	0.69	0.69
Avail Cap(c_a), veh/h	941	709	1057	728	673	677	435	1347	601	383	1290	703
HCM Platoon Ratio	1.00	1.00	1.00	1.00	1.00	1.00	1.00	1.00	1.00	1.00	1.00	1.00
Upstream Filter(I)	1.00	1.00	1.00	1.00	1.00	1.00	1.00	1.00	1.00	1.00	1.00	1.00
Uniform Delay (d), s/veh	10.1	9.0	10.3	14.1	8.9	8.9	21.3	12.2	9.7	19.9	11.2	11.2
Incr Delay (d2), s/veh	0.1	0.9	1.9	2.3	0.8	0.8	19.5	6.7	2.1	0.7	3.1	5.6
Initial Q Delay(d3),s/veh	0.0	0.0	0.0	0.0	0.0	0.0	0.0	0.0	0.0	0.0	0.0	0.0
%ile BackOfQ(50%),veh/ln	0.2	1.1	1.9	1.6	0.9	1.0	3.0	5.2	1.7	0.2	3.4	4.2
Unsig. Movement Delay, s/veh												
LnGrp Delay(d),s/veh	10.3	9.9	12.2	16.4	9.7	9.8	40.8	18.9	11.8	20.5	14.3	16.8
LnGrp LOS	B	A	B	B	A	A	D	B	B	C	B	B
Approach Vol, veh/h		796			666			1760			1429	
Approach Delay, s/veh		11.6			13.2			22.6			15.4	
Approach LOS		B			B			C			B	

Timer - Assigned Phs		2		4		6		8				
Phs Duration (G+Y+Rc), s		22.5		22.5		22.5		22.5				
Change Period (Y+Rc), s		4.5		4.5		4.5		4.5				
Max Green Setting (Gmax), s		18.0		18.0		18.0		18.0				
Max Q Clear Time (g_c+I1), s		20.0		9.3		18.8		17.1				
Green Ext Time (p_c), s		0.0		2.6		0.0		0.5				

Intersection Summary												
HCM 6th Ctrl Delay			17.1									
HCM 6th LOS			B									

Movement	EBL	EBT	EBR	WBL	WBT	WBR	NBL	NBT	NBR	SBL	SBT	SBR
Lane Configurations												
Traffic Volume (veh/h)	0	0	0	464	1	406	341	1297	0	0	1368	842
Future Volume (veh/h)	0	0	0	464	1	406	341	1297	0	0	1368	842
Initial Q (Qb), veh				0	0	0	0	0	0	0	0	0
Ped-Bike Adj(A_pbT)				1.00		1.00	1.00		1.00	1.00		1.00
Parking Bus, Adj				1.00	1.00	1.00	1.00	1.00	1.00	1.00	1.00	1.00
Work Zone On Approach					No			No			No	
Adj Sat Flow, veh/h/ln				1575	1772	1772	1575	1772	0	0	1772	1772
Adj Flow Rate, veh/h				609	0	280	352	1337	0	0	1410	868
Peak Hour Factor				0.97	0.97	0.97	0.97	0.97	0.97	0.97	0.97	0.97
Percent Heavy Veh, %				2	2	2	2	2	0	0	2	2
Cap, veh/h				968	0	485	348	2005	0	0	1561	485
Arrive On Green				0.32	0.00	0.32	0.46	1.00	0.00	0.00	0.32	0.32
Sat Flow, veh/h				3000	0	1502	1500	3455	0	0	4997	1502
Grp Volume(v), veh/h				609	0	280	352	1337	0	0	1410	868
Grp Sat Flow(s),veh/h/ln				1500	0	1502	1500	1683	0	0	1612	1502
Q Serve(g_s), s				19.0	0.0	17.1	25.5	0.0	0.0	0.0	30.6	35.5
Cycle Q Clear(g_c), s				19.0	0.0	17.1	25.5	0.0	0.0	0.0	30.6	35.5
Prop In Lane				1.00		1.00	1.00		0.00	0.00		1.00
Lane Grp Cap(c), veh/h				968	0	485	348	2005	0	0	1561	485
V/C Ratio(X)				0.63	0.00	0.58	1.01	0.67	0.00	0.00	0.90	1.79
Avail Cap(c_a), veh/h				968	0	485	348	2005	0	0	1561	485
HCM Platoon Ratio				1.00	1.00	1.00	2.00	2.00	1.00	1.00	1.00	1.00
Upstream Filter(I)				1.00	0.00	1.00	1.00	1.00	0.00	0.00	1.00	1.00
Uniform Delay (d), s/veh				31.7	0.0	31.0	29.5	0.0	0.0	0.0	35.6	37.3
Incr Delay (d2), s/veh				3.1	0.0	5.0	51.4	1.8	0.0	0.0	8.9	364.2
Initial Q Delay(d3),s/veh				0.0	0.0	0.0	0.0	0.0	0.0	0.0	0.0	0.0
%ile BackOfQ(50%),veh/ln				7.2	0.0	6.8	11.8	0.5	0.0	0.0	13.1	61.8
Unsig. Movement Delay, s/veh												
LnGrp Delay(d),s/veh				34.7	0.0	36.0	80.9	1.8	0.0	0.0	44.5	401.5
LnGrp LOS				C	A	D	F	A	A	A	D	F
Approach Vol, veh/h					889			1689			2278	
Approach Delay, s/veh					35.1			18.3			180.5	
Approach LOS					D			B			F	

Timer - Assigned Phs	2		5	6		8
Phs Duration (G+Y+Rc), s	70.0		30.0	40.0		40.0
Change Period (Y+Rc), s	4.5		4.5	4.5		4.5
Max Green Setting (Gmax), s	65.5		25.5	35.5		35.5
Max Q Clear Time (g_c+I1), s	2.0		27.5	37.5		21.0
Green Ext Time (p_c), s	15.5		0.0	0.0		3.0

Intersection Summary	
HCM 6th Ctrl Delay	97.5
HCM 6th LOS	F

Notes

User approved volume balancing among the lanes for turning movement.

Movement	EBL	EBT	EBR	WBL	WBT	WBR	NBL	NBT	NBR	SBL	SBT	SBR
Lane Configurations												
Traffic Volume (veh/h)	468	0	429	0	0	0	0	1150	460	397	1393	0
Future Volume (veh/h)	468	0	429	0	0	0	0	1150	460	397	1393	0
Initial Q (Qb), veh	0	0	0				0	0	0	0	0	0
Ped-Bike Adj(A_pbT)	1.00		1.00				1.00		1.00	1.00		1.00
Parking Bus, Adj	1.00	1.00	1.00				1.00	1.00	1.00	1.00	1.00	1.00
Work Zone On Approach		No						No			No	
Adj Sat Flow, veh/h/ln	1575	1772	1772				0	1772	1772	1575	1772	0
Adj Flow Rate, veh/h	458	28	438				0	1173	469	405	1421	0
Peak Hour Factor	0.98	0.98	0.98				0.98	0.98	0.98	0.98	0.98	0.98
Percent Heavy Veh, %	2	2	2				0	2	2	2	2	0
Cap, veh/h	498	30	473				0	1165	362	457	1974	0
Arrive On Green	0.33	0.33	0.33				0.00	0.24	0.24	0.61	1.00	0.00
Sat Flow, veh/h	1500	91	1424				0	4997	1502	1500	3455	0
Grp Volume(v), veh/h	458	0	466				0	1173	469	405	1421	0
Grp Sat Flow(s),veh/h/ln	1500	0	1516				0	1612	1502	1500	1683	0
Q Serve(g_s), s	32.3	0.0	32.6				0.0	26.5	26.5	25.2	0.0	0.0
Cycle Q Clear(g_c), s	32.3	0.0	32.6				0.0	26.5	26.5	25.2	0.0	0.0
Prop In Lane	1.00		0.94				0.00		1.00	1.00		0.00
Lane Grp Cap(c), veh/h	498	0	503				0	1165	362	457	1974	0
V/C Ratio(X)	0.92	0.00	0.93				0.00	1.01	1.30	0.89	0.72	0.00
Avail Cap(c_a), veh/h	498	0	503				0	1165	362	457	1974	0
HCM Platoon Ratio	1.00	1.00	1.00				1.00	1.00	1.00	2.00	2.00	1.00
Upstream Filter(I)	1.00	0.00	1.00				0.00	1.00	1.00	1.00	1.00	0.00
Uniform Delay (d), s/veh	35.3	0.0	35.5				0.0	41.8	41.8	19.9	0.0	0.0
Incr Delay (d2), s/veh	24.7	0.0	25.5				0.0	28.0	152.4	21.6	2.3	0.0
Initial Q Delay(d3),s/veh	0.0	0.0	0.0				0.0	0.0	0.0	0.0	0.0	0.0
%ile BackOfQ(50%),veh/ln	15.0	0.0	15.4				0.0	13.4	25.0	8.2	0.6	0.0
Unsig. Movement Delay, s/veh												
LnGrp Delay(d),s/veh	60.0	0.0	61.0				0.0	69.7	194.2	41.5	2.3	0.0
LnGrp LOS	E	A	E				A	F	F	D	A	A
Approach Vol, veh/h		924						1642			1826	
Approach Delay, s/veh		60.5						105.3			11.0	
Approach LOS		E						F			B	

Timer - Assigned Phs	1	2	4	6
Phs Duration (G+Y+Rc), s	38.0	31.0	41.0	69.0
Change Period (Y+Rc), s	4.5	4.5	4.5	4.5
Max Green Setting (Gmax), s	33.5	26.5	36.5	64.5
Max Q Clear Time (g_c+I1), s	27.2	28.5	34.6	2.0
Green Ext Time (p_c), s	0.7	0.0	0.9	17.3

Intersection Summary	
HCM 6th Ctrl Delay	56.7
HCM 6th LOS	E

Notes

User approved volume balancing among the lanes for turning movement.

Movement	EBL	EBT	EBR	WBL	WBT	WBR	NBL	NBT	NBR	SBL	SBT	SBR
Lane Configurations												
Traffic Volume (veh/h)	263	6	33	10	0	121	58	1221	41	136	1209	504
Future Volume (veh/h)	263	6	33	10	0	121	58	1221	41	136	1209	504
Initial Q (Qb), veh	0	0	0	0	0	0	0	0	0	0	0	0
Ped-Bike Adj(A_pbT)	1.00		1.00	1.00		1.00	1.00		1.00	1.00		1.00
Parking Bus, Adj	1.00	1.00	1.00	1.00	1.00	1.00	1.00	1.00	1.00	1.00	1.00	1.00
Work Zone On Approach		No			No			No			No	
Adj Sat Flow, veh/h/ln	1575	1772	1772	1575	1772	1772	1575	1772	1772	1575	1772	1772
Adj Flow Rate, veh/h	274	6	34	10	0	126	60	1272	43	142	1259	525
Peak Hour Factor	0.96	0.96	0.96	0.96	0.96	0.96	0.96	0.96	0.96	0.96	0.96	0.96
Percent Heavy Veh, %	2	2	2	2	2	2	2	2	2	2	2	2
Cap, veh/h	359	74	422	436	543	485	211	1374	46	211	973	387
Arrive On Green	0.32	0.32	0.32	0.32	0.00	0.32	0.28	0.83	0.83	0.14	0.41	0.41
Sat Flow, veh/h	1124	231	1306	1215	1683	1502	1500	3323	112	1500	2352	935
Grp Volume(v), veh/h	274	0	40	10	0	126	60	644	671	142	883	901
Grp Sat Flow(s),veh/h/ln	1124	0	1537	1215	1683	1502	1500	1683	1752	1500	1683	1604
Q Serve(g_s), s	26.2	0.0	2.0	0.6	0.0	6.8	3.4	30.9	31.1	9.9	45.5	45.5
Cycle Q Clear(g_c), s	33.0	0.0	2.0	2.6	0.0	6.8	3.4	30.9	31.1	9.9	45.5	45.5
Prop In Lane	1.00		0.85	1.00		1.00	1.00		0.06	1.00		0.58
Lane Grp Cap(c), veh/h	359	0	496	436	543	485	211	696	725	211	696	663
V/C Ratio(X)	0.76	0.00	0.08	0.02	0.00	0.26	0.28	0.92	0.93	0.67	1.27	1.36
Avail Cap(c_a), veh/h	359	0	496	436	543	485	211	696	725	211	696	663
HCM Platoon Ratio	1.00	1.00	1.00	1.00	1.00	1.00	2.00	2.00	2.00	1.00	1.00	1.00
Upstream Filter(I)	1.00	0.00	1.00	1.00	0.00	1.00	1.00	1.00	1.00	1.00	1.00	1.00
Uniform Delay (d), s/veh	39.7	0.0	25.9	26.8	0.0	27.5	35.2	8.2	8.3	44.8	32.3	32.3
Incr Delay (d2), s/veh	14.3	0.0	0.3	0.1	0.0	1.3	3.3	20.0	19.6	15.8	132.0	170.8
Initial Q Delay(d3),s/veh	0.0	0.0	0.0	0.0	0.0	0.0	0.0	0.0	0.0	0.0	0.0	0.0
%ile BackOfQ(50%),veh/ln	8.6	0.0	0.8	0.2	0.0	2.6	1.4	7.1	7.3	4.6	43.4	48.5
Unsig. Movement Delay, s/veh												
LnGrp Delay(d),s/veh	54.1	0.0	26.2	26.9	0.0	28.8	38.5	28.2	27.9	60.6	164.2	203.1
LnGrp LOS	D	A	C	C	A	C	D	C	C	E	F	F
Approach Vol, veh/h		314			136			1375			1926	
Approach Delay, s/veh		50.5			28.7			28.5			174.7	
Approach LOS		D			C			C			F	

Timer - Assigned Phs	1	2		4	5	6		8				
Phs Duration (G+Y+Rc), s	30.0	50.0		40.0	20.0	50.0		40.0				
Change Period (Y+Rc), s	4.5	4.5		4.5	4.5	4.5		4.5				
Max Green Setting (Gmax), s	25.5	45.5		35.5	15.5	45.5		35.5				
Max Q Clear Time (g_c+I1), s	11.9	33.1		35.0	5.4	47.5		8.8				
Green Ext Time (p_c), s	0.1	7.0		0.1	0.1	0.0		0.8				

Intersection Summary		
HCM 6th Ctrl Delay	105.4	
HCM 6th LOS	F	

Intersection	
Intersection Delay, s/veh	107.3
Intersection LOS	F

Movement	EBL	EBT	EBR	WBL	WBT	WBR	NBL	NBT	NBR	SBL	SBT	SBR
Lane Configurations												
Traffic Vol, veh/h	174	528	54	20	595	8	76	58	37	3	54	340
Future Vol, veh/h	174	528	54	20	595	8	76	58	37	3	54	340
Peak Hour Factor	0.78	0.78	0.78	0.78	0.78	0.78	0.78	0.78	0.78	0.78	0.78	0.78
Heavy Vehicles, %	2	2	2	2	2	2	2	2	2	2	2	2
Mvmt Flow	223	677	69	26	763	10	97	74	47	4	69	436
Number of Lanes	1	2	0	1	2	0	0	1	0	0	1	0

Approach	EB	WB	NB	SB
Opposing Approach	WB	EB	SB	NB
Opposing Lanes	3	3	1	1
Conflicting Approach Left	SB	NB	EB	WB
Conflicting Lanes Left	1	1	3	3
Conflicting Approach Right	NB	SB	WB	EB
Conflicting Lanes Right	1	1	3	3
HCM Control Delay	71.8	128.2	32.7	174.4
HCM LOS	F	F	D	F

Lane	NBLn1	EBLn1	EBLn2	EBLn3	WBLn1	WBLn2	WBLn3	SBLn1
Vol Left, %	44%	100%	0%	0%	100%	0%	0%	1%
Vol Thru, %	34%	0%	100%	77%	0%	100%	96%	14%
Vol Right, %	22%	0%	0%	23%	0%	0%	4%	86%
Sign Control	Stop	Stop	Stop	Stop	Stop	Stop	Stop	Stop
Traffic Vol by Lane	171	174	352	230	20	397	206	397
LT Vol	76	174	0	0	20	0	0	3
Through Vol	58	0	352	176	0	397	198	54
RT Vol	37	0	0	54	0	0	8	340
Lane Flow Rate	219	223	451	295	26	509	265	509
Geometry Grp	7	7	7	7	7	7	7	7
Degree of Util (X)	0.633	0.587	1.125	0.722	0.069	1.303	0.676	1.283
Departure Headway (Hd)	11.761	10.675	10.138	9.961	10.752	10.216	10.187	9.728
Convergence, Y/N	Yes	Yes	Yes	Yes	Yes	Yes	Yes	Yes
Cap	309	341	361	366	335	361	357	377
Service Time	9.461	8.375	7.838	7.661	8.452	7.916	7.887	7.428
HCM Lane V/C Ratio	0.709	0.654	1.249	0.806	0.078	1.41	0.742	1.35
HCM Control Delay	32.7	27.5	117.9	34.7	14.2	184.2	31.7	174.4
HCM Lane LOS	D	D	F	D	B	F	D	F
HCM 95th-tile Q	4	3.5	15.3	5.4	0.2	21.4	4.7	21.4

Movement	EBL	EBT	EBR	WBL	WBT	WBR	NBL	NBT	NBR	SBL	SBT	SBR
Lane Configurations												
Traffic Volume (veh/h)	248	240	100	34	243	124	143	970	18	114	1006	187
Future Volume (veh/h)	248	240	100	34	243	124	143	970	18	114	1006	187
Initial Q (Qb), veh	0	0	0	0	0	0	0	0	0	0	0	0
Ped-Bike Adj(A_pbT)	1.00		1.00	1.00		1.00	1.00		1.00	1.00		1.00
Parking Bus, Adj	1.00	1.00	1.00	1.00	1.00	1.00	1.00	1.00	1.00	1.00	1.00	1.00
Work Zone On Approach		No			No			No			No	
Adj Sat Flow, veh/h/ln	1575	1772	1772	1575	1772	1772	1575	1772	1772	1575	1772	1772
Adj Flow Rate, veh/h	264	255	106	36	259	132	152	1032	19	121	1070	199
Peak Hour Factor	0.94	0.94	0.94	0.94	0.94	0.94	0.94	0.94	0.94	0.94	0.94	0.94
Percent Heavy Veh, %	2	2	2	2	2	2	2	2	2	2	2	2
Cap, veh/h	184	797	322	211	784	387	252	876	16	143	528	98
Arrive On Green	0.12	0.34	0.34	0.14	0.36	0.36	0.06	0.09	0.09	0.06	0.12	0.12
Sat Flow, veh/h	1500	2339	946	1500	2182	1079	1500	3382	62	1500	2835	526
Grp Volume(v), veh/h	264	181	180	36	198	193	152	514	537	121	634	635
Grp Sat Flow(s),veh/h/ln	1500	1683	1602	1500	1683	1578	1500	1683	1761	1500	1683	1677
Q Serve(g_s), s	13.5	8.8	9.2	2.3	9.4	9.8	10.9	28.5	28.5	8.8	20.5	20.5
Cycle Q Clear(g_c), s	13.5	8.8	9.2	2.3	9.4	9.8	10.9	28.5	28.5	8.8	20.5	20.5
Prop In Lane	1.00		0.59	1.00		0.68	1.00		0.04	1.00		0.31
Lane Grp Cap(c), veh/h	184	574	546	211	604	567	252	436	456	143	314	313
V/C Ratio(X)	1.43	0.32	0.33	0.17	0.33	0.34	0.60	1.18	1.18	0.85	2.02	2.03
Avail Cap(c_a), veh/h	184	574	546	211	604	567	252	436	456	143	314	313
HCM Platoon Ratio	1.00	1.00	1.00	1.00	1.00	1.00	0.33	0.33	0.33	0.67	0.67	0.67
Upstream Filter(I)	1.00	1.00	1.00	1.00	1.00	1.00	1.00	1.00	1.00	1.00	1.00	1.00
Uniform Delay (d), s/veh	48.3	26.8	26.9	41.6	25.6	25.7	48.4	50.3	50.3	50.7	48.1	48.1
Incr Delay (d2), s/veh	223.5	1.4	1.6	1.7	1.4	1.6	10.2	101.6	100.8	42.6	470.6	475.1
Initial Q Delay(d3),s/veh	0.0	0.0	0.0	0.0	0.0	0.0	0.0	0.0	0.0	0.0	0.0	0.0
%ile BackOfQ(50%),veh/ln	16.4	3.7	3.7	1.0	4.0	3.9	5.1	25.2	26.2	5.1	49.9	50.1
Unsig. Movement Delay, s/veh												
LnGrp Delay(d),s/veh	271.8	28.2	28.5	43.3	27.0	27.4	58.6	151.9	151.1	93.2	518.8	523.3
LnGrp LOS	F	C	C	D	C	C	E	F	F	F	F	F
Approach Vol, veh/h		625			427			1203			1390	
Approach Delay, s/veh		131.2			28.6			139.7			483.8	
Approach LOS		F			C			F			F	

Timer - Assigned Phs	1	2	3	4	5	6	7	8
Phs Duration (G+Y+Rc), s	15.0	33.0	20.0	42.0	23.0	25.0	18.0	44.0
Change Period (Y+Rc), s	4.5	4.5	4.5	4.5	4.5	4.5	4.5	4.5
Max Green Setting (Gmax), s	10.5	28.5	15.5	37.5	18.5	20.5	13.5	39.5
Max Q Clear Time (g_c+I1), s	11.8	30.5	4.3	11.2	12.9	22.5	15.5	11.8
Green Ext Time (p_c), s	0.0	0.0	0.0	2.2	0.2	0.0	0.0	2.5

Intersection Summary		
HCM 6th Ctrl Delay		256.4
HCM 6th LOS		F

Movement	EBL	EBT	EBR	WBL	WBT	WBR	NBL	NBT	NBR	SBL	SBT	SBR
Lane Configurations												
Traffic Volume (veh/h)	3	286	69	36	313	23	57	73	25	34	41	0
Future Volume (veh/h)	3	286	69	36	313	23	57	73	25	34	41	0
Initial Q (Qb), veh	0	0	0	0	0	0	0	0	0	0	0	0
Ped-Bike Adj(A_pbT)	1.00		1.00	1.00		1.00	1.00		1.00	1.00		1.00
Parking Bus, Adj	1.00	1.00	1.00	1.00	1.00	1.00	1.00	1.00	1.00	1.00	1.00	1.00
Work Zone On Approach		No			No			No			No	
Adj Sat Flow, veh/h/ln	1575	1772	1772	1575	1772	1772	1772	1772	1772	1772	1772	1772
Adj Flow Rate, veh/h	3	325	78	41	356	26	65	83	28	39	47	0
Peak Hour Factor	0.88	0.88	0.88	0.88	0.88	0.88	0.88	0.88	0.88	0.88	0.88	0.88
Percent Heavy Veh, %	2	2	2	2	2	2	2	2	2	2	2	2
Cap, veh/h	577	638	540	518	1145	83	328	203	58	350	258	0
Arrive On Green	0.36	0.36	0.36	0.36	0.36	0.36	0.23	0.23	0.23	0.23	0.23	0.00
Sat Flow, veh/h	890	1772	1502	873	3182	231	448	889	253	485	1127	0
Grp Volume(v), veh/h	3	325	78	41	188	194	176	0	0	86	0	0
Grp Sat Flow(s),veh/h/ln	890	1772	1502	873	1683	1730	1590	0	0	1612	0	0
Q Serve(g_s), s	0.1	3.1	0.8	0.8	1.8	1.8	0.9	0.0	0.0	0.0	0.0	0.0
Cycle Q Clear(g_c), s	1.8	3.1	0.8	4.0	1.8	1.8	2.0	0.0	0.0	0.9	0.0	0.0
Prop In Lane	1.00		1.00	1.00		0.13	0.37		0.16	0.45		0.00
Lane Grp Cap(c), veh/h	577	638	540	518	606	623	589	0	0	608	0	0
V/C Ratio(X)	0.01	0.51	0.14	0.08	0.31	0.31	0.30	0.00	0.00	0.14	0.00	0.00
Avail Cap(c_a), veh/h	990	1459	1236	922	1386	1424	1512	0	0	1506	0	0
HCM Platoon Ratio	1.00	1.00	1.00	1.00	1.00	1.00	1.00	1.00	1.00	1.00	1.00	1.00
Upstream Filter(I)	1.00	1.00	1.00	1.00	1.00	1.00	1.00	0.00	0.00	1.00	0.00	0.00
Uniform Delay (d), s/veh	5.7	5.5	4.7	7.1	5.0	5.0	7.3	0.0	0.0	6.8	0.0	0.0
Incr Delay (d2), s/veh	0.0	0.6	0.1	0.1	0.3	0.3	0.3	0.0	0.0	0.1	0.0	0.0
Initial Q Delay(d3),s/veh	0.0	0.0	0.0	0.0	0.0	0.0	0.0	0.0	0.0	0.0	0.0	0.0
%ile BackOfQ(50%),veh/ln	0.0	0.5	0.1	0.1	0.3	0.3	0.4	0.0	0.0	0.2	0.0	0.0
Unsig. Movement Delay, s/veh												
LnGrp Delay(d),s/veh	5.7	6.1	4.8	7.1	5.3	5.3	7.5	0.0	0.0	6.9	0.0	0.0
LnGrp LOS	A	A	A	A	A	A	A	A	A	A	A	A
Approach Vol, veh/h		406			423			176			86	
Approach Delay, s/veh		5.9			5.5			7.5			6.9	
Approach LOS		A			A			A			A	

Timer - Assigned Phs	2	4	6	8
Phs Duration (G+Y+Rc), s	9.5	12.4	9.5	12.4
Change Period (Y+Rc), s	4.5	4.5	4.5	4.5
Max Green Setting (Gmax), s	18.0	18.0	18.0	18.0
Max Q Clear Time (g_c+I1), s	4.0	5.1	2.9	6.0
Green Ext Time (p_c), s	0.8	1.8	0.3	1.9

Intersection Summary	
HCM 6th Ctrl Delay	6.1
HCM 6th LOS	A

Intersection	
Intersection Delay, s/veh	15.9
Intersection LOS	C

Movement	EBL	EBT	EBR	WBL	WBT	WBR	NBL	NBT	NBR	SBL	SBT	SBR
Lane Configurations												
Traffic Vol, veh/h	28	135	114	32	157	36	81	156	15	22	170	36
Future Vol, veh/h	28	135	114	32	157	36	81	156	15	22	170	36
Peak Hour Factor	0.86	0.86	0.86	0.86	0.86	0.86	0.86	0.86	0.86	0.86	0.86	0.86
Heavy Vehicles, %	2	2	2	2	2	2	2	2	2	2	2	2
Mvmt Flow	33	157	133	37	183	42	94	181	17	26	198	42
Number of Lanes	0	1	0	0	1	1	0	1	0	0	1	0

Approach	EB	WB	NB	SB
Opposing Approach	WB	EB	SB	NB
Opposing Lanes	2	1	1	1
Conflicting Approach Left	SB	NB	EB	WB
Conflicting Lanes Left	1	1	1	2
Conflicting Approach Right	NB	SB	WB	EB
Conflicting Lanes Right	1	1	2	1
HCM Control Delay	17.1	14.3	16.6	15.3
HCM LOS	C	B	C	C

Lane	NBLn1	EBLn1	WBLn1	WBLn2	SBLn1
Vol Left, %	32%	10%	17%	0%	10%
Vol Thru, %	62%	49%	83%	0%	75%
Vol Right, %	6%	41%	0%	100%	16%
Sign Control	Stop	Stop	Stop	Stop	Stop
Traffic Vol by Lane	252	277	189	36	228
LT Vol	81	28	32	0	22
Through Vol	156	135	157	0	170
RT Vol	15	114	0	36	36
Lane Flow Rate	293	322	220	42	265
Geometry Grp	2	5	7	7	2
Degree of Util (X)	0.527	0.56	0.433	0.073	0.475
Departure Headway (Hd)	6.47	6.261	7.095	6.291	6.444
Convergence, Y/N	Yes	Yes	Yes	Yes	Yes
Cap	557	573	505	567	557
Service Time	4.533	4.324	4.861	4.057	4.507
HCM Lane V/C Ratio	0.526	0.562	0.436	0.074	0.476
HCM Control Delay	16.6	17.1	15.2	9.6	15.3
HCM Lane LOS	C	C	C	A	C
HCM 95th-tile Q	3.1	3.4	2.2	0.2	2.5

Movement	EBL	EBT	EBR	WBL	WBT	WBR	NBL	NBT	NBR	SBL	SBT	SBR
Lane Configurations												
Traffic Volume (veh/h)	67	106	77	60	116	81	110	963	83	183	943	63
Future Volume (veh/h)	67	106	77	60	116	81	110	963	83	183	943	63
Initial Q (Qb), veh	0	0	0	0	0	0	0	0	0	0	0	0
Ped-Bike Adj(A_pbT)	1.00		1.00	1.00		1.00	1.00		1.00	1.00		1.00
Parking Bus, Adj	1.00	1.00	1.00	1.00	1.00	1.00	1.00	1.00	1.00	1.00	1.00	1.00
Work Zone On Approach		No			No			No			No	
Adj Sat Flow, veh/h/ln	1772	1772	1772	1772	1772	1772	1575	1772	1772	1575	1772	1772
Adj Flow Rate, veh/h	73	115	84	65	126	88	120	1047	90	199	1025	68
Peak Hour Factor	0.92	0.92	0.92	0.92	0.92	0.92	0.92	0.92	0.92	0.92	0.92	0.92
Percent Heavy Veh, %	2	2	2	2	2	2	2	2	2	2	2	2
Cap, veh/h	45	51	403	44	62	403	320	1469	126	211	1267	84
Arrive On Green	0.27	0.27	0.27	0.27	0.27	0.27	0.07	0.15	0.15	0.05	0.13	0.13
Sat Flow, veh/h	0	189	1502	0	232	1502	1500	3137	270	1500	3204	213
Grp Volume(v), veh/h	188	0	84	191	0	88	120	562	575	199	538	555
Grp Sat Flow(s),veh/h/ln	189	0	1502	232	0	1502	1500	1683	1723	1500	1683	1734
Q Serve(g_s), s	0.0	0.0	4.8	0.0	0.0	5.0	8.4	34.9	34.9	14.6	34.2	34.2
Cycle Q Clear(g_c), s	29.5	0.0	4.8	29.5	0.0	5.0	8.4	34.9	34.9	14.6	34.2	34.2
Prop In Lane	0.39		1.00	0.34		1.00	1.00		0.16	1.00		0.12
Lane Grp Cap(c), veh/h	96	0	403	106	0	403	320	788	807	211	666	686
V/C Ratio(X)	1.96	0.00	0.21	1.80	0.00	0.22	0.37	0.71	0.71	0.94	0.81	0.81
Avail Cap(c_a), veh/h	96	0	403	106	0	403	320	788	807	211	666	686
HCM Platoon Ratio	1.00	1.00	1.00	1.00	1.00	1.00	0.33	0.33	0.33	0.33	0.33	0.33
Upstream Filter(I)	1.00	0.00	1.00	1.00	0.00	1.00	1.00	1.00	1.00	1.00	1.00	1.00
Uniform Delay (d), s/veh	40.3	0.0	31.2	38.8	0.0	31.3	44.1	39.5	39.5	52.0	43.8	43.8
Incr Delay (d2), s/veh	465.3	0.0	1.2	394.3	0.0	1.2	3.3	5.4	5.3	48.3	10.2	10.0
Initial Q Delay(d3),s/veh	0.0	0.0	0.0	0.0	0.0	0.0	0.0	0.0	0.0	0.0	0.0	0.0
%ile BackOfQ(50%),veh/ln	15.1	0.0	1.9	14.6	0.0	2.0	3.6	16.9	17.3	8.7	17.3	17.8
Unsig. Movement Delay, s/veh												
LnGrp Delay(d),s/veh	505.5	0.0	32.4	433.1	0.0	32.5	47.4	44.9	44.8	100.3	54.0	53.7
LnGrp LOS	F	A	C	F	A	C	D	D	D	F	D	D
Approach Vol, veh/h		272			279			1257			1292	
Approach Delay, s/veh		359.4			306.8			45.1			61.0	
Approach LOS		F			F			D			E	

Timer - Assigned Phs	1	2		4	5	6		8
Phs Duration (G+Y+Rc), s	30.0	56.0		34.0	28.0	48.0		34.0
Change Period (Y+Rc), s	4.5	4.5		4.5	4.5	4.5		4.5
Max Green Setting (Gmax), s	15.5	51.5		29.5	23.5	43.5		29.5
Max Q Clear Time (g_c+I1), s	16.6	36.9		31.5	10.4	36.2		31.5
Green Ext Time (p_c), s	0.0	6.7		0.0	0.2	4.0		0.0

Intersection Summary		
HCM 6th Ctrl Delay	102.9	
HCM 6th LOS	F	

Intersection	
Intersection Delay, s/veh	13.2
Intersection LOS	B

Movement	EBL	EBT	EBR	WBL	WBT	WBR	NBL	NBT	NBR	SBL	SBT	SBR
Lane Configurations												
Traffic Vol, veh/h	22	178	69	49	136	23	23	83	14	52	128	19
Future Vol, veh/h	22	178	69	49	136	23	23	83	14	52	128	19
Peak Hour Factor	0.81	0.81	0.81	0.81	0.81	0.81	0.81	0.81	0.81	0.81	0.81	0.81
Heavy Vehicles, %	2	2	2	2	2	2	2	2	2	2	2	2
Mvmt Flow	27	220	85	60	168	28	28	102	17	64	158	23
Number of Lanes	0	1	0	0	1	1	0	1	0	0	1	0

Approach	EB	WB	NB	SB
Opposing Approach	WB	EB	SB	NB
Opposing Lanes	2	1	1	1
Conflicting Approach Left	SB	NB	EB	WB
Conflicting Lanes Left	1	1	1	2
Conflicting Approach Right	NB	SB	WB	EB
Conflicting Lanes Right	1	1	2	1
HCM Control Delay	14.4	12.9	11.2	13
HCM LOS	B	B	B	B

Lane	NBLn1	EBLn1	WBLn1	WBLn2	SBLn1
Vol Left, %	19%	8%	26%	0%	26%
Vol Thru, %	69%	66%	74%	0%	64%
Vol Right, %	12%	26%	0%	100%	10%
Sign Control	Stop	Stop	Stop	Stop	Stop
Traffic Vol by Lane	120	269	185	23	199
LT Vol	23	22	49	0	52
Through Vol	83	178	136	0	128
RT Vol	14	69	0	23	19
Lane Flow Rate	148	332	228	28	246
Geometry Grp	2	5	7	7	2
Degree of Util (X)	0.251	0.514	0.403	0.043	0.403
Departure Headway (Hd)	6.091	5.569	6.35	5.503	5.905
Convergence, Y/N	Yes	Yes	Yes	Yes	Yes
Cap	585	644	564	646	604
Service Time	4.177	3.636	4.121	3.274	3.981
HCM Lane V/C Ratio	0.253	0.516	0.404	0.043	0.407
HCM Control Delay	11.2	14.4	13.4	8.5	13
HCM Lane LOS	B	B	B	A	B
HCM 95th-tile Q	1	2.9	1.9	0.1	1.9

Intersection	
Int Delay, s/veh	0.6

Movement	WBL	WBR	NBT	NBR	SBL	SBT
Lane Configurations						
Traffic Vol, veh/h	0	93	1156	94	0	1160
Future Vol, veh/h	0	93	1156	94	0	1160
Conflicting Peds, #/hr	0	0	0	0	0	0
Sign Control	Stop	Stop	Free	Free	Free	Free
RT Channelized	-	None	-	None	-	None
Storage Length	-	0	-	-	-	-
Veh in Median Storage, #	0	-	0	-	-	0
Grade, %	0	-	0	-	-	0
Peak Hour Factor	92	92	92	92	92	92
Heavy Vehicles, %	2	2	2	2	2	2
Mvmt Flow	0	101	1257	102	0	1261

Major/Minor	Minor1		Major1		Major2	
Conflicting Flow All	-	680	0	0	-	-
Stage 1	-	-	-	-	-	-
Stage 2	-	-	-	-	-	-
Critical Hdwy	-	6.94	-	-	-	-
Critical Hdwy Stg 1	-	-	-	-	-	-
Critical Hdwy Stg 2	-	-	-	-	-	-
Follow-up Hdwy	-	3.32	-	-	-	-
Pot Cap-1 Maneuver	0	393	-	-	0	-
Stage 1	0	-	-	-	0	-
Stage 2	0	-	-	-	0	-
Platoon blocked, %			-	-		-
Mov Cap-1 Maneuver	-	393	-	-	-	-
Mov Cap-2 Maneuver	-	-	-	-	-	-
Stage 1	-	-	-	-	-	-
Stage 2	-	-	-	-	-	-

Approach	WB	NB	SB
HCM Control Delay, s	17.3	0	0
HCM LOS	C		

Minor Lane/Major Mvmt	NBT	NBR	WBLn1	SBT
Capacity (veh/h)	-	-	393	-
HCM Lane V/C Ratio	-	-	0.257	-
HCM Control Delay (s)	-	-	17.3	-
HCM Lane LOS	-	-	C	-
HCM 95th %tile Q(veh)	-	-	1	-

Intersection	
Int Delay, s/veh	1

Movement	EBT	EBR	WBL	WBT	NBL	NBR
Lane Configurations						
Traffic Vol, veh/h	269	47	0	201	46	0
Future Vol, veh/h	269	47	0	201	46	0
Conflicting Peds, #/hr	0	0	0	0	0	0
Sign Control	Free	Free	Free	Free	Stop	Stop
RT Channelized	-	None	-	None	-	None
Storage Length	-	-	-	-	0	-
Veh in Median Storage, #	0	-	-	0	0	-
Grade, %	0	-	-	0	0	-
Peak Hour Factor	92	92	92	92	92	92
Heavy Vehicles, %	2	2	2	2	2	2
Mvmt Flow	292	51	0	218	50	0

Major/Minor	Major1		Major2		Minor1	
Conflicting Flow All	0	0	-	-	427	-
Stage 1	-	-	-	-	318	-
Stage 2	-	-	-	-	109	-
Critical Hdwy	-	-	-	-	6.63	-
Critical Hdwy Stg 1	-	-	-	-	5.43	-
Critical Hdwy Stg 2	-	-	-	-	5.83	-
Follow-up Hdwy	-	-	-	-	3.519	-
Pot Cap-1 Maneuver	-	-	0	-	570	0
Stage 1	-	-	0	-	737	0
Stage 2	-	-	0	-	904	0
Platoon blocked, %	-	-		-		
Mov Cap-1 Maneuver	-	-	-	-	570	-
Mov Cap-2 Maneuver	-	-	-	-	570	-
Stage 1	-	-	-	-	737	-
Stage 2	-	-	-	-	904	-

Approach	EB	WB	NB
HCM Control Delay, s	0	0	11.9
HCM LOS			B

Minor Lane/Major Mvmt	NBLn1	EBT	EBR	WBT
Capacity (veh/h)	570	-	-	-
HCM Lane V/C Ratio	0.088	-	-	-
HCM Control Delay (s)	11.9	-	-	-
HCM Lane LOS	B	-	-	-
HCM 95th %tile Q(veh)	0.3	-	-	-

Intersection	
Int Delay, s/veh	1

Movement	EBT	EBR	WBL	WBT	NBL	NBR
Lane Configurations						
Traffic Vol, veh/h	222	47	0	201	46	0
Future Vol, veh/h	222	47	0	201	46	0
Conflicting Peds, #/hr	0	0	0	0	0	0
Sign Control	Free	Free	Free	Free	Stop	Stop
RT Channelized	-	None	-	None	-	None
Storage Length	-	-	-	-	0	-
Veh in Median Storage, #	0	-	-	0	0	-
Grade, %	0	-	-	0	0	-
Peak Hour Factor	92	92	92	92	92	92
Heavy Vehicles, %	2	2	2	2	2	2
Mvmt Flow	241	51	0	218	50	0

Major/Minor	Major1		Major2		Minor1	
Conflicting Flow All	0	0	-	-	376	-
Stage 1	-	-	-	-	267	-
Stage 2	-	-	-	-	109	-
Critical Hdwy	-	-	-	-	6.63	-
Critical Hdwy Stg 1	-	-	-	-	5.43	-
Critical Hdwy Stg 2	-	-	-	-	5.83	-
Follow-up Hdwy	-	-	-	-	3.519	-
Pot Cap-1 Maneuver	-	-	0	-	612	0
Stage 1	-	-	0	-	777	0
Stage 2	-	-	0	-	904	0
Platoon blocked, %	-	-		-		
Mov Cap-1 Maneuver	-	-	-	-	612	-
Mov Cap-2 Maneuver	-	-	-	-	612	-
Stage 1	-	-	-	-	777	-
Stage 2	-	-	-	-	904	-

Approach	EB	WB	NB
HCM Control Delay, s	0	0	11.4
HCM LOS			B

Minor Lane/Major Mvmt	NBLn1	EBT	EBR	WBT
Capacity (veh/h)	612	-	-	-
HCM Lane V/C Ratio	0.082	-	-	-
HCM Control Delay (s)	11.4	-	-	-
HCM Lane LOS	B	-	-	-
HCM 95th %tile Q(veh)	0.3	-	-	-

Intersection	
Intersection Delay, s/veh	14.1
Intersection LOS	B

Movement	EBL	EBT	EBR	WBL	WBT	WBR	NBL	NBT	NBR	SBL	SBT	SBR
Lane Configurations												
Traffic Vol, veh/h	17	203	19	3	125	74	11	181	6	43	141	50
Future Vol, veh/h	17	203	19	3	125	74	11	181	6	43	141	50
Peak Hour Factor	0.81	0.81	0.81	0.81	0.81	0.81	0.81	0.81	0.81	0.81	0.81	0.81
Heavy Vehicles, %	2	2	2	2	2	2	2	2	2	2	2	2
Mvmt Flow	21	251	23	4	154	91	14	223	7	53	174	62
Number of Lanes	0	1	1	0	2	0	0	1	0	0	1	0

Approach	EB	WB	NB	SB
Opposing Approach	WB	EB	SB	NB
Opposing Lanes	2	2	1	1
Conflicting Approach Left	SB	NB	EB	WB
Conflicting Lanes Left	1	1	2	2
Conflicting Approach Right	NB	SB	WB	EB
Conflicting Lanes Right	1	1	2	2
HCM Control Delay	15.7	11.5	13.9	14.8
HCM LOS	C	B	B	B

Lane	NBLn1	EBLn1	EBLn2	WBLn1	WBLn2	SBLn1
Vol Left, %	6%	8%	0%	5%	0%	18%
Vol Thru, %	91%	92%	0%	95%	46%	60%
Vol Right, %	3%	0%	100%	0%	54%	21%
Sign Control	Stop	Stop	Stop	Stop	Stop	Stop
Traffic Vol by Lane	198	220	19	66	137	234
LT Vol	11	17	0	3	0	43
Through Vol	181	203	0	63	63	141
RT Vol	6	0	19	0	74	50
Lane Flow Rate	244	272	23	81	169	289
Geometry Grp	2	7	7	7	7	2
Degree of Util (X)	0.425	0.508	0.039	0.154	0.301	0.488
Departure Headway (Hd)	6.26	6.734	5.979	6.85	6.438	6.084
Convergence, Y/N	Yes	Yes	Yes	Yes	Yes	Yes
Cap	574	535	599	523	558	592
Service Time	4.302	4.472	3.717	4.592	4.18	4.123
HCM Lane V/C Ratio	0.425	0.508	0.038	0.155	0.303	0.488
HCM Control Delay	13.9	16.3	9	10.8	11.9	14.8
HCM Lane LOS	B	C	A	B	B	B
HCM 95th-tile Q	2.1	2.8	0.1	0.5	1.3	2.7

Movement	EBL	EBT	EBR	WBL	WBT	WBR	NBL	NBT	NBR	SBL	SBT	SBR
Lane Configurations												
Traffic Volume (veh/h)	51	189	37	51	174	182	41	890	56	95	1043	22
Future Volume (veh/h)	51	189	37	51	174	182	41	890	56	95	1043	22
Initial Q (Qb), veh	0	0	0	0	0	0	0	0	0	0	0	0
Ped-Bike Adj(A_pbT)	1.00		1.00	1.00		1.00	1.00		1.00	1.00		1.00
Parking Bus, Adj	1.00	1.00	1.00	1.00	1.00	1.00	1.00	1.00	1.00	1.00	1.00	1.00
Work Zone On Approach		No			No			No			No	
Adj Sat Flow, veh/h/ln	1772	1772	1772	1772	1772	1772	1575	1772	1772	1575	1772	1772
Adj Flow Rate, veh/h	59	220	43	59	202	212	48	1035	65	110	1213	26
Peak Hour Factor	0.86	0.86	0.86	0.86	0.86	0.86	0.86	0.86	0.86	0.86	0.86	0.86
Percent Heavy Veh, %	2	2	2	2	2	2	2	2	2	2	2	2
Cap, veh/h	120	481	105	108	333	364	211	1477	93	211	1547	33
Arrive On Green	0.28	0.28	0.28	0.28	0.28	0.28	0.14	0.46	0.46	0.05	0.15	0.15
Sat Flow, veh/h	266	1735	379	244	1202	1313	1500	3217	202	1500	3370	72
Grp Volume(v), veh/h	147	0	175	251	0	222	48	542	558	110	606	633
Grp Sat Flow(s),veh/h/ln	836	0	1544	1383	0	1376	1500	1683	1736	1500	1683	1759
Q Serve(g_s), s	7.3	0.0	10.2	9.2	0.0	15.3	3.1	28.2	28.2	7.9	38.1	38.1
Cycle Q Clear(g_c), s	22.6	0.0	10.2	19.3	0.0	15.3	3.1	28.2	28.2	7.9	38.1	38.1
Prop In Lane	0.40		0.25	0.24		0.95	1.00		0.12	1.00		0.04
Lane Grp Cap(c), veh/h	278	0	428	424	0	382	211	773	797	211	773	808
V/C Ratio(X)	0.53	0.00	0.41	0.59	0.00	0.58	0.23	0.70	0.70	0.52	0.78	0.78
Avail Cap(c_a), veh/h	278	0	428	424	0	382	211	773	797	211	773	808
HCM Platoon Ratio	1.00	1.00	1.00	1.00	1.00	1.00	1.00	1.00	1.00	0.33	0.33	0.33
Upstream Filter(I)	1.00	0.00	1.00	1.00	0.00	1.00	1.00	1.00	1.00	1.00	1.00	1.00
Uniform Delay (d), s/veh	38.3	0.0	32.4	35.8	0.0	34.3	41.9	23.7	23.7	48.8	41.4	41.4
Incr Delay (d2), s/veh	7.0	0.0	2.9	6.0	0.0	6.4	2.5	5.2	5.1	8.9	7.8	7.5
Initial Q Delay(d3),s/veh	0.0	0.0	0.0	0.0	0.0	0.0	0.0	0.0	0.0	0.0	0.0	0.0
%ile BackOfQ(50%),veh/ln	4.2	0.0	4.1	6.7	0.0	5.8	1.3	12.0	12.3	3.6	18.8	19.6
Unsig. Movement Delay, s/veh												
LnGrp Delay(d),s/veh	45.3	0.0	35.3	41.7	0.0	40.6	44.4	29.0	28.8	57.7	49.2	48.9
LnGrp LOS	D	A	D	D	A	D	D	C	C	E	D	D
Approach Vol, veh/h		322			473			1148			1349	
Approach Delay, s/veh		39.9			41.2			29.5			49.8	
Approach LOS		D			D			C			D	

Timer - Assigned Phs	1	2		4	5	6		8
Phs Duration (G+Y+Rc), s	20.0	55.0		35.0	20.0	55.0		35.0
Change Period (Y+Rc), s	4.5	4.5		4.5	4.5	4.5		4.5
Max Green Setting (Gmax), s	15.5	50.5		30.5	15.5	50.5		30.5
Max Q Clear Time (g_c+I1), s	19.3	30.2		24.6	5.1	40.1		21.3
Green Ext Time (p_c), s	0.1	7.6		1.0	0.0	5.8		2.0

Intersection Summary		
HCM 6th Ctrl Delay	40.5	
HCM 6th LOS	D	

Intersection	
Int Delay, s/veh	3.3

Movement	EBL	EBT	WBT	WBR	SBL	SBR
Lane Configurations						
Traffic Vol, veh/h	115	278	294	79	23	71
Future Vol, veh/h	115	278	294	79	23	71
Conflicting Peds, #/hr	0	0	0	0	0	0
Sign Control	Free	Free	Free	Free	Stop	Stop
RT Channelized	-	None	-	None	-	None
Storage Length	-	-	-	-	0	-
Veh in Median Storage, #	-	0	0	-	0	-
Grade, %	-	0	0	-	0	-
Peak Hour Factor	73	73	73	73	73	73
Heavy Vehicles, %	2	2	2	2	2	2
Mvmt Flow	158	381	403	108	32	97

Major/Minor	Major1		Major2		Minor2	
Conflicting Flow All	511	0	-	0	1154	457
Stage 1	-	-	-	-	457	-
Stage 2	-	-	-	-	697	-
Critical Hdwy	4.12	-	-	-	6.42	6.22
Critical Hdwy Stg 1	-	-	-	-	5.42	-
Critical Hdwy Stg 2	-	-	-	-	5.42	-
Follow-up Hdwy	2.218	-	-	-	3.518	3.318
Pot Cap-1 Maneuver	1054	-	-	-	218	604
Stage 1	-	-	-	-	638	-
Stage 2	-	-	-	-	494	-
Platoon blocked, %		-	-	-		
Mov Cap-1 Maneuver	1054	-	-	-	177	604
Mov Cap-2 Maneuver	-	-	-	-	177	-
Stage 1	-	-	-	-	517	-
Stage 2	-	-	-	-	494	-

Approach	EB	WB	SB
HCM Control Delay, s	2.6	0	19.3
HCM LOS			C

Minor Lane/Major Mvmt	EBL	EBT	WBT	WBR	SBLn1
Capacity (veh/h)	1054	-	-	-	380
HCM Lane V/C Ratio	0.149	-	-	-	0.339
HCM Control Delay (s)	9	0	-	-	19.3
HCM Lane LOS	A	A	-	-	C
HCM 95th %tile Q(veh)	0.5	-	-	-	1.5

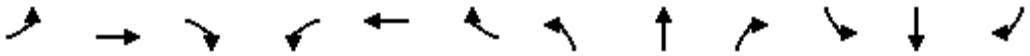

Movement	EBL	EBT	EBR	WBL	WBT	WBR	NBL	NBT	NBR	SBL	SBT	SBR
Lane Configurations												
Traffic Volume (veh/h)	19	1	17	63	0	56	8	530	62	64	1007	7
Future Volume (veh/h)	19	1	17	63	0	56	8	530	62	64	1007	7
Initial Q (Qb), veh	0	0	0	0	0	0	0	0	0	0	0	0
Ped-Bike Adj(A_pbT)	1.00		1.00	1.00		1.00	1.00		1.00	1.00		1.00
Parking Bus, Adj	1.00	1.00	1.00	1.00	1.00	1.00	1.00	1.00	1.00	1.00	1.00	1.00
Work Zone On Approach		No			No			No			No	
Adj Sat Flow, veh/h/ln	1772	1772	1772	1772	1772	1772	1575	1772	1772	1575	1772	1772
Adj Flow Rate, veh/h	21	1	19	71	0	63	9	596	70	72	1131	8
Peak Hour Factor	0.89	0.89	0.89	0.89	0.89	0.89	0.89	0.89	0.89	0.89	0.89	0.89
Percent Heavy Veh, %	2	2	2	2	2	2	2	2	2	2	2	2
Cap, veh/h	381	49	267	721	0	601	206	1214	142	333	1371	10
Arrive On Green	0.40	0.40	0.40	0.40	0.00	0.40	0.40	0.40	0.40	0.40	0.40	0.40
Sat Flow, veh/h	650	124	668	1404	0	1502	439	3035	356	685	3427	24
Grp Volume(v), veh/h	41	0	0	71	0	63	9	330	336	72	556	583
Grp Sat Flow(s),veh/h/ln	1442	0	0	1404	0	1502	439	1683	1708	685	1683	1768
Q Serve(g_s), s	0.0	0.0	0.0	0.6	0.0	1.2	0.8	6.6	6.6	4.0	13.3	13.3
Cycle Q Clear(g_c), s	0.7	0.0	0.0	1.3	0.0	1.2	14.1	6.6	6.6	10.6	13.3	13.3
Prop In Lane	0.51		0.46	1.00		1.00	1.00		0.21	1.00		0.01
Lane Grp Cap(c), veh/h	698	0	0	721	0	601	206	673	683	333	673	707
V/C Ratio(X)	0.06	0.00	0.00	0.10	0.00	0.10	0.04	0.49	0.49	0.22	0.83	0.83
Avail Cap(c_a), veh/h	698	0	0	721	0	601	206	673	683	333	673	707
HCM Platoon Ratio	1.00	1.00	1.00	1.00	1.00	1.00	1.00	1.00	1.00	1.00	1.00	1.00
Upstream Filter(I)	1.00	0.00	0.00	1.00	0.00	1.00	1.00	1.00	1.00	1.00	1.00	1.00
Uniform Delay (d), s/veh	8.3	0.0	0.0	8.5	0.0	8.5	18.4	10.1	10.1	14.0	12.1	12.1
Incr Delay (d2), s/veh	0.2	0.0	0.0	0.3	0.0	0.4	0.4	2.5	2.5	1.5	11.1	10.6
Initial Q Delay(d3),s/veh	0.0	0.0	0.0	0.0	0.0	0.0	0.0	0.0	0.0	0.0	0.0	0.0
%ile BackOfQ(50%),veh/ln	0.2	0.0	0.0	0.4	0.0	0.4	0.1	2.4	2.4	0.7	5.9	6.1
Unsig. Movement Delay, s/veh												
LnGrp Delay(d),s/veh	8.5	0.0	0.0	8.7	0.0	8.8	18.8	12.6	12.6	15.5	23.1	22.7
LnGrp LOS	A	A	A	A	A	A	B	B	B	B	C	C
Approach Vol, veh/h		41			134			675			1211	
Approach Delay, s/veh		8.5			8.8			12.7			22.5	
Approach LOS		A			A			B			C	

Timer - Assigned Phs		2		4		6		8				
Phs Duration (G+Y+Rc), s		22.5		22.5		22.5		22.5				
Change Period (Y+Rc), s		4.5		4.5		4.5		4.5				
Max Green Setting (Gmax), s		18.0		18.0		18.0		18.0				
Max Q Clear Time (g_c+I1), s		16.1		2.7		15.3		3.3				
Green Ext Time (p_c), s		0.8		0.1		1.9		0.4				

Intersection Summary												
HCM 6th Ctrl Delay			18.1									
HCM 6th LOS			B									

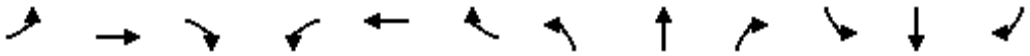

Movement	EBL	EBT	EBR	WBL	WBT	WBR	NBL	NBT	NBR	SBL	SBT	SBR
Lane Configurations												
Traffic Volume (veh/h)	253	427	493	236	243	60	379	1235	217	81	962	66
Future Volume (veh/h)	253	427	493	236	243	60	379	1235	217	81	962	66
Initial Q (Qb), veh	0	0	0	0	0	0	0	0	0	0	0	0
Ped-Bike Adj(A_pbT)	1.00		1.00	1.00		1.00	1.00		1.00	1.00		1.00
Parking Bus, Adj	1.00	1.00	1.00	1.00	1.00	1.00	1.00	1.00	1.00	1.00	1.00	1.00
Work Zone On Approach		No			No			No			No	
Adj Sat Flow, veh/h/ln	1575	1772	1772	1575	1772	1772	1575	1772	1772	1575	1772	1772
Adj Flow Rate, veh/h	256	431	498	238	245	61	383	1247	219	82	972	67
Peak Hour Factor	0.99	0.99	0.99	0.99	0.99	0.99	0.99	0.99	0.99	0.99	0.99	0.99
Percent Heavy Veh, %	2	2	2	2	2	2	2	2	2	2	2	2
Cap, veh/h	946	709	1057	535	1073	262	545	1347	601	349	1849	127
Arrive On Green	0.40	0.40	0.40	0.40	0.40	0.40	0.40	0.40	0.40	0.40	0.40	0.40
Sat Flow, veh/h	1851	1772	2643	1039	2683	655	936	3367	1502	623	4622	318
Grp Volume(v), veh/h	256	431	498	238	152	154	383	1247	219	82	678	361
Grp Sat Flow(s),veh/h/ln	925	1772	1321	519	1683	1654	468	1683	1502	312	1612	1715
Q Serve(g_s), s	4.8	8.7	6.3	9.3	2.7	2.8	10.8	15.9	4.6	2.1	7.2	7.2
Cycle Q Clear(g_c), s	7.6	8.7	6.3	18.0	2.7	2.8	18.0	15.9	4.6	18.0	7.2	7.2
Prop In Lane	1.00		1.00	1.00		0.40	1.00		1.00	1.00		0.19
Lane Grp Cap(c), veh/h	946	709	1057	535	673	662	545	1347	601	349	1290	686
V/C Ratio(X)	0.27	0.61	0.47	0.44	0.23	0.23	0.70	0.93	0.36	0.23	0.53	0.53
Avail Cap(c_a), veh/h	946	709	1057	535	673	662	545	1347	601	349	1290	686
HCM Platoon Ratio	1.00	1.00	1.00	1.00	1.00	1.00	1.00	1.00	1.00	1.00	1.00	1.00
Upstream Filter(I)	1.00	1.00	1.00	1.00	1.00	1.00	1.00	1.00	1.00	1.00	1.00	1.00
Uniform Delay (d), s/veh	11.4	10.7	10.0	18.3	8.9	8.9	19.3	12.9	9.5	22.1	10.3	10.3
Incr Delay (d2), s/veh	0.7	3.9	1.5	2.7	0.8	0.8	7.4	12.2	1.7	1.6	1.5	2.9
Initial Q Delay(d3),s/veh	0.0	0.0	0.0	0.0	0.0	0.0	0.0	0.0	0.0	0.0	0.0	0.0
%ile BackOfQ(50%),veh/ln	0.9	3.4	1.6	1.3	0.9	0.9	2.4	6.8	1.5	0.5	2.3	2.7
Unsig. Movement Delay, s/veh												
LnGrp Delay(d),s/veh	12.1	14.6	11.5	21.0	9.7	9.8	26.8	25.1	11.2	23.7	11.8	13.1
LnGrp LOS	B	B	B	C	A	A	C	C	B	C	B	B
Approach Vol, veh/h		1185			544			1849			1121	
Approach Delay, s/veh		12.7			14.6			23.8			13.1	
Approach LOS		B			B			C			B	

Timer - Assigned Phs		2		4		6		8				
Phs Duration (G+Y+Rc), s		22.5		22.5		22.5		22.5				
Change Period (Y+Rc), s		4.5		4.5		4.5		4.5				
Max Green Setting (Gmax), s		18.0		18.0		18.0		18.0				
Max Q Clear Time (g_c+I1), s		20.0		10.7		20.0		20.0				
Green Ext Time (p_c), s		0.0		3.7		0.0		0.0				

Intersection Summary												
HCM 6th Ctrl Delay			17.4									
HCM 6th LOS			B									

Movement	EBL	EBT	EBR	WBL	WBT	WBR	NBL	NBT	NBR	SBL	SBT	SBR
Lane Configurations												
Traffic Volume (veh/h)	0	0	0	375	2	517	258	1326	0	0	1193	538
Future Volume (veh/h)	0	0	0	375	2	517	258	1326	0	0	1193	538
Initial Q (Qb), veh				0	0	0	0	0	0	0	0	0
Ped-Bike Adj(A_pbT)				1.00		1.00	1.00		1.00	1.00		1.00
Parking Bus, Adj				1.00	1.00	1.00	1.00	1.00	1.00	1.00	1.00	1.00
Work Zone On Approach					No			No			No	
Adj Sat Flow, veh/h/ln				1575	1772	1772	1575	1772	0	0	1772	1772
Adj Flow Rate, veh/h				564	0	325	261	1339	0	0	1205	543
Peak Hour Factor				0.99	0.99	0.99	0.99	0.99	0.99	0.99	0.99	0.99
Percent Heavy Veh, %				2	2	2	2	2	0	0	2	2
Cap, veh/h				838	0	419	319	2174	0	0	1915	594
Arrive On Green				0.28	0.00	0.28	0.43	1.00	0.00	0.00	0.40	0.40
Sat Flow, veh/h				3000	0	1502	1500	3455	0	0	4997	1502
Grp Volume(v), veh/h				564	0	325	261	1339	0	0	1205	543
Grp Sat Flow(s),veh/h/ln				1500	0	1502	1500	1683	0	0	1612	1502
Q Serve(g_s), s				20.0	0.0	23.9	18.4	0.0	0.0	0.0	24.1	41.1
Cycle Q Clear(g_c), s				20.0	0.0	23.9	18.4	0.0	0.0	0.0	24.1	41.1
Prop In Lane				1.00		1.00	1.00		0.00	0.00		1.00
Lane Grp Cap(c), veh/h				838	0	419	319	2174	0	0	1915	594
V/C Ratio(X)				0.67	0.00	0.78	0.82	0.62	0.00	0.00	0.63	0.91
Avail Cap(c_a), veh/h				838	0	419	319	2174	0	0	1915	594
HCM Platoon Ratio				1.00	1.00	1.00	2.00	2.00	1.00	1.00	1.00	1.00
Upstream Filter(I)				1.00	0.00	1.00	1.00	1.00	0.00	0.00	1.00	1.00
Uniform Delay (d), s/veh				38.4	0.0	39.8	32.5	0.0	0.0	0.0	29.2	34.3
Incr Delay (d2), s/veh				4.3	0.0	13.1	20.4	1.3	0.0	0.0	1.6	20.8
Initial Q Delay(d3),s/veh				0.0	0.0	0.0	0.0	0.0	0.0	0.0	0.0	0.0
%ile BackOfQ(50%),veh/ln				7.8	0.0	10.3	7.2	0.4	0.0	0.0	9.5	18.1
Unsig. Movement Delay, s/veh												
LnGrp Delay(d),s/veh				42.7	0.0	52.9	52.9	1.3	0.0	0.0	30.7	55.1
LnGrp LOS				D	A	D	D	A	A	A	C	E
Approach Vol, veh/h					889			1600			1748	
Approach Delay, s/veh					46.4			9.7			38.3	
Approach LOS					D			A			D	

Timer - Assigned Phs	2		5	6		8
Phs Duration (G+Y+Rc), s	82.0		30.0	52.0		38.0
Change Period (Y+Rc), s	4.5		4.5	4.5		4.5
Max Green Setting (Gmax), s	77.5		25.5	47.5		33.5
Max Q Clear Time (g_c+I1), s	2.0		20.4	43.1		25.9
Green Ext Time (p_c), s	15.8		0.4	3.5		2.2

Intersection Summary	
HCM 6th Ctrl Delay	29.2
HCM 6th LOS	C

Notes

User approved volume balancing among the lanes for turning movement.

Movement	EBL	EBT	EBR	WBL	WBT	WBR	NBL	NBT	NBR	SBL	SBT	SBR
Lane Configurations												
Traffic Volume (veh/h)	634	8	213	0	0	0	0	918	404	403	1169	0
Future Volume (veh/h)	634	8	213	0	0	0	0	918	404	403	1169	0
Initial Q (Qb), veh	0	0	0				0	0	0	0	0	0
Ped-Bike Adj(A_pbT)	1.00		1.00				1.00		1.00	1.00		1.00
Parking Bus, Adj	1.00	1.00	1.00				1.00	1.00	1.00	1.00	1.00	1.00
Work Zone On Approach		No						No			No	
Adj Sat Flow, veh/h/ln	1575	1772	1772				0	1772	1772	1575	1772	0
Adj Flow Rate, veh/h	436	303	217				0	937	412	411	1193	0
Peak Hour Factor	0.98	0.98	0.98				0.98	0.98	0.98	0.98	0.98	0.98
Percent Heavy Veh, %	2	2	2				0	2	2	2	2	0
Cap, veh/h	431	276	198				0	1754	544	356	2146	0
Arrive On Green	0.29	0.29	0.29				0.00	0.36	0.36	0.47	1.00	0.00
Sat Flow, veh/h	1500	960	688				0	4997	1502	1500	3455	0
Grp Volume(v), veh/h	436	0	520				0	937	412	411	1193	0
Grp Sat Flow(s),veh/h/ln	1500	0	1648				0	1612	1502	1500	1683	0
Q Serve(g_s), s	34.5	0.0	34.5				0.0	18.4	28.9	28.5	0.0	0.0
Cycle Q Clear(g_c), s	34.5	0.0	34.5				0.0	18.4	28.9	28.5	0.0	0.0
Prop In Lane	1.00		0.42				0.00		1.00	1.00		0.00
Lane Grp Cap(c), veh/h	431	0	474				0	1754	544	356	2146	0
V/C Ratio(X)	1.01	0.00	1.10				0.00	0.53	0.76	1.15	0.56	0.00
Avail Cap(c_a), veh/h	431	0	474				0	1754	544	356	2146	0
HCM Platoon Ratio	1.00	1.00	1.00				1.00	1.00	1.00	2.00	2.00	1.00
Upstream Filter(I)	1.00	0.00	1.00				0.00	1.00	1.00	1.00	1.00	0.00
Uniform Delay (d), s/veh	42.8	0.0	42.8				0.0	30.2	33.6	31.5	0.0	0.0
Incr Delay (d2), s/veh	46.1	0.0	70.5				0.0	1.2	9.5	96.4	1.0	0.0
Initial Q Delay(d3),s/veh	0.0	0.0	0.0				0.0	0.0	0.0	0.0	0.0	0.0
%ile BackOfQ(50%),veh/ln	18.2	0.0	23.1				0.0	7.3	11.8	17.5	0.3	0.0
Unsig. Movement Delay, s/veh												
LnGrp Delay(d),s/veh	88.9	0.0	113.2				0.0	31.4	43.1	127.9	1.0	0.0
LnGrp LOS	F	A	F				A	C	D	F	A	A
Approach Vol, veh/h		956						1349			1604	
Approach Delay, s/veh		102.1						35.0			33.5	
Approach LOS		F						C			C	

Timer - Assigned Phs	1	2		4		6			
Phs Duration (G+Y+Rc), s	33.0	48.0		39.0		81.0			
Change Period (Y+Rc), s	4.5	4.5		4.5		4.5			
Max Green Setting (Gmax), s	28.5	43.5		34.5		76.5			
Max Q Clear Time (g_c+I1), s	30.5	30.9		36.5		2.0			
Green Ext Time (p_c), s	0.0	6.5		0.0		12.8			

Intersection Summary	
HCM 6th Ctrl Delay	50.8
HCM 6th LOS	D

Notes

User approved volume balancing among the lanes for turning movement.

Movement	EBL	EBT	EBR	WBL	WBT	WBR	NBL	NBT	NBR	SBL	SBT	SBR
Lane Configurations												
Traffic Volume (veh/h)	271	16	65	36	3	205	32	908	18	57	1106	263
Future Volume (veh/h)	271	16	65	36	3	205	32	908	18	57	1106	263
Initial Q (Qb), veh	0	0	0	0	0	0	0	0	0	0	0	0
Ped-Bike Adj(A_pbT)	1.00		1.00	1.00		1.00	1.00		1.00	1.00		1.00
Parking Bus, Adj	1.00	1.00	1.00	1.00	1.00	1.00	1.00	1.00	1.00	1.00	1.00	1.00
Work Zone On Approach		No			No			No			No	
Adj Sat Flow, veh/h/ln	1575	1772	1772	1575	1772	1772	1575	1772	1772	1575	1772	1772
Adj Flow Rate, veh/h	291	17	70	39	3	220	34	976	19	61	1189	283
Peak Hour Factor	0.93	0.93	0.93	0.93	0.93	0.93	0.93	0.93	0.93	0.93	0.93	0.93
Percent Heavy Veh, %	2	2	2	2	2	2	2	2	2	2	2	2
Cap, veh/h	240	89	368	356	498	444	264	1562	30	461	1251	294
Arrive On Green	0.30	0.30	0.30	0.30	0.30	0.30	0.26	0.93	0.93	0.13	0.46	0.46
Sat Flow, veh/h	1029	302	1245	1165	1683	1502	1500	3378	66	1500	2704	637
Grp Volume(v), veh/h	291	0	87	39	3	220	34	486	509	61	735	737
Grp Sat Flow(s),veh/h/ln	1029	0	1548	1165	1683	1502	1500	1683	1760	1500	1683	1657
Q Serve(g_s), s	21.0	0.0	5.0	3.1	0.2	14.5	1.0	6.2	6.2	2.1	50.0	51.6
Cycle Q Clear(g_c), s	35.5	0.0	5.0	8.1	0.2	14.5	1.0	6.2	6.2	2.1	50.0	51.6
Prop In Lane	1.00		0.80	1.00		1.00	1.00		0.04	1.00		0.38
Lane Grp Cap(c), veh/h	240	0	458	356	498	444	264	779	814	461	779	767
V/C Ratio(X)	1.21	0.00	0.19	0.11	0.01	0.50	0.13	0.62	0.62	0.13	0.94	0.96
Avail Cap(c_a), veh/h	240	0	458	356	498	444	264	779	814	461	779	767
HCM Platoon Ratio	1.00	1.00	1.00	1.00	1.00	1.00	2.00	2.00	2.00	1.00	1.00	1.00
Upstream Filter(I)	1.00	0.00	1.00	1.00	1.00	1.00	1.00	1.00	1.00	1.00	1.00	1.00
Uniform Delay (d), s/veh	52.1	0.0	31.5	34.6	29.8	34.9	19.0	2.6	2.6	10.6	30.8	31.2
Incr Delay (d2), s/veh	127.5	0.0	0.9	0.6	0.0	3.9	1.0	3.8	3.6	0.6	21.3	24.3
Initial Q Delay(d3),s/veh	0.0	0.0	0.0	0.0	0.0	0.0	0.0	0.0	0.0	0.0	0.0	0.0
%ile BackOfQ(50%),veh/ln	15.8	0.0	2.0	0.9	0.1	5.8	0.4	1.9	1.9	0.8	24.2	25.1
Unsig. Movement Delay, s/veh												
LnGrp Delay(d),s/veh	179.7	0.0	32.4	35.2	29.8	38.8	20.0	6.4	6.3	11.2	52.1	55.5
LnGrp LOS	F	A	C	D	C	D	C	A	A	B	D	E
Approach Vol, veh/h		378			262			1029			1533	
Approach Delay, s/veh		145.8			38.1			6.8			52.1	
Approach LOS		F			D			A			D	

Timer - Assigned Phs	1	2		4	5	6		8
Phs Duration (G+Y+Rc), s	20.0	60.0		40.0	20.0	60.0		40.0
Change Period (Y+Rc), s	4.5	4.5		4.5	4.5	4.5		4.5
Max Green Setting (Gmax), s	15.5	55.5		35.5	15.5	55.5		35.5
Max Q Clear Time (g_c+I1), s	14.1	8.2		37.5	3.0	53.6		16.5
Green Ext Time (p_c), s	0.1	8.2		0.0	0.0	1.5		1.5

Intersection Summary	
HCM 6th Ctrl Delay	47.4
HCM 6th LOS	D

Intersection	
Intersection Delay, s/veh	50.9
Intersection LOS	F

Movement	EBL	EBT	EBR	WBL	WBT	WBR	NBL	NBT	NBR	SBL	SBT	SBR
Lane Configurations												
Traffic Vol, veh/h	149	778	48	27	459	10	53	93	50	8	62	142
Future Vol, veh/h	149	778	48	27	459	10	53	93	50	8	62	142
Peak Hour Factor	0.94	0.94	0.94	0.94	0.94	0.94	0.94	0.94	0.94	0.94	0.94	0.94
Heavy Vehicles, %	2	2	2	2	2	2	2	2	2	2	2	2
Mvmt Flow	159	828	51	29	488	11	56	99	53	9	66	151
Number of Lanes	1	2	0	1	2	0	0	1	0	0	1	0

Approach	EB	WB	NB	SB
Opposing Approach	WB	EB	SB	NB
Opposing Lanes	3	3	1	1
Conflicting Approach Left	SB	NB	EB	WB
Conflicting Lanes Left	1	1	3	3
Conflicting Approach Right	NB	SB	WB	EB
Conflicting Lanes Right	1	1	3	3
HCM Control Delay	76.8	24.8	21.1	20.7
HCM LOS	F	C	C	C

Lane	NBLn1	EBLn1	EBLn2	EBLn3	WBLn1	WBLn2	WBLn3	SBLn1
Vol Left, %	27%	100%	0%	0%	100%	0%	0%	4%
Vol Thru, %	47%	0%	100%	84%	0%	100%	94%	29%
Vol Right, %	26%	0%	0%	16%	0%	0%	6%	67%
Sign Control	Stop	Stop	Stop	Stop	Stop	Stop	Stop	Stop
Traffic Vol by Lane	196	149	519	307	27	306	163	212
LT Vol	53	149	0	0	27	0	0	8
Through Vol	93	0	519	259	0	306	153	62
RT Vol	50	0	0	48	0	0	10	142
Lane Flow Rate	209	159	552	327	29	326	173	226
Geometry Grp	7	7	7	7	7	7	7	7
Degree of Util (X)	0.512	0.36	1.175	0.686	0.068	0.729	0.386	0.527
Departure Headway (Hd)	9.17	8.183	7.664	7.55	8.904	8.383	8.338	8.724
Convergence, Y/N	Yes	Yes	Yes	Yes	Yes	Yes	Yes	Yes
Cap	396	439	475	477	405	433	434	415
Service Time	6.87	5.942	5.422	5.308	6.604	6.083	6.038	6.424
HCM Lane V/C Ratio	0.528	0.362	1.162	0.686	0.072	0.753	0.399	0.545
HCM Control Delay	21.1	15.5	124.9	25.3	12.3	30.5	16.2	20.7
HCM Lane LOS	C	C	F	D	B	D	C	C
HCM 95th-tile Q	2.8	1.6	20.3	5.1	0.2	5.8	1.8	3

Movement	EBL	EBT	EBR	WBL	WBT	WBR	NBL	NBT	NBR	SBL	SBT	SBR
Lane Configurations												
Traffic Volume (veh/h)	194	503	134	31	252	98	126	700	51	137	966	110
Future Volume (veh/h)	194	503	134	31	252	98	126	700	51	137	966	110
Initial Q (Qb), veh	0	0	0	0	0	0	0	0	0	0	0	0
Ped-Bike Adj(A_pbT)	1.00		1.00	1.00		1.00	1.00		1.00	1.00		1.00
Parking Bus, Adj	1.00	1.00	1.00	1.00	1.00	1.00	1.00	1.00	1.00	1.00	1.00	1.00
Work Zone On Approach		No			No			No			No	
Adj Sat Flow, veh/h/ln	1575	1772	1772	1575	1772	1772	1575	1772	1772	1575	1772	1772
Adj Flow Rate, veh/h	196	508	135	31	255	99	127	707	52	138	976	111
Peak Hour Factor	0.99	0.99	0.99	0.99	0.99	0.99	0.99	0.99	0.99	0.99	0.99	0.99
Percent Heavy Veh, %	2	2	2	2	2	2	2	2	2	2	2	2
Cap, veh/h	156	779	206	169	727	275	344	994	73	194	647	74
Arrive On Green	0.10	0.30	0.30	0.11	0.30	0.30	0.23	0.31	0.31	0.09	0.14	0.14
Sat Flow, veh/h	1500	2634	696	1500	2389	903	1500	3179	234	1500	3047	346
Grp Volume(v), veh/h	196	324	319	31	178	176	127	374	385	138	539	548
Grp Sat Flow(s),veh/h/ln	1500	1683	1647	1500	1683	1609	1500	1683	1730	1500	1683	1710
Q Serve(g_s), s	12.5	20.1	20.3	2.2	9.9	10.3	8.6	23.6	23.6	10.7	25.5	25.5
Cycle Q Clear(g_c), s	12.5	20.1	20.3	2.2	9.9	10.3	8.6	23.6	23.6	10.7	25.5	25.5
Prop In Lane	1.00		0.42	1.00		0.56	1.00		0.14	1.00		0.20
Lane Grp Cap(c), veh/h	156	498	487	169	512	490	344	526	541	194	358	363
V/C Ratio(X)	1.25	0.65	0.66	0.18	0.35	0.36	0.37	0.71	0.71	0.71	1.51	1.51
Avail Cap(c_a), veh/h	156	498	487	169	512	490	344	526	541	194	358	363
HCM Platoon Ratio	1.00	1.00	1.00	1.00	1.00	1.00	1.00	1.00	1.00	0.67	0.67	0.67
Upstream Filter(I)	1.00	1.00	1.00	1.00	1.00	1.00	1.00	1.00	1.00	1.00	1.00	1.00
Uniform Delay (d), s/veh	53.8	36.8	36.9	48.3	32.5	32.6	38.9	36.5	36.5	52.6	51.5	51.5
Incr Delay (d2), s/veh	156.1	6.5	6.7	2.4	1.9	2.1	3.0	7.9	7.8	19.9	242.4	242.5
Initial Q Delay(d3),s/veh	0.0	0.0	0.0	0.0	0.0	0.0	0.0	0.0	0.0	0.0	0.0	0.0
%ile BackOfQ(50%),veh/ln	11.5	9.1	9.1	1.0	4.3	4.3	3.5	10.8	11.1	5.3	35.2	35.8
Unsig. Movement Delay, s/veh												
LnGrp Delay(d),s/veh	209.9	43.3	43.6	50.6	34.3	34.7	42.0	44.4	44.2	72.6	293.8	293.9
LnGrp LOS	F	D	D	D	C	C	D	D	D	E	F	F
Approach Vol, veh/h		839			385			886			1225	
Approach Delay, s/veh		82.3			35.8			44.0			268.9	
Approach LOS		F			D			D			F	

Timer - Assigned Phs	1	2	3	4	5	6	7	8
Phs Duration (G+Y+Rc), s	30.0	42.0	18.0	40.0	32.0	30.0	17.0	41.0
Change Period (Y+Rc), s	4.5	4.5	4.5	4.5	4.5	4.5	4.5	4.5
Max Green Setting (Gmax), s	25.5	37.5	13.5	35.5	27.5	25.5	12.5	36.5
Max Q Clear Time (g_c+I1), s	12.7	25.6	4.2	22.3	10.6	27.5	14.5	12.3
Green Ext Time (p_c), s	0.1	3.8	0.0	3.4	0.3	0.0	0.0	2.1

Intersection Summary	
HCM 6th Ctrl Delay	135.3
HCM 6th LOS	F

Movement	EBL	EBT	EBR	WBL	WBT	WBR	NBL	NBT	NBR	SBL	SBT	SBR
Lane Configurations												
Traffic Volume (veh/h)	22	576	68	38	300	60	44	81	76	18	40	18
Future Volume (veh/h)	22	576	68	38	300	60	44	81	76	18	40	18
Initial Q (Qb), veh	0	0	0	0	0	0	0	0	0	0	0	0
Ped-Bike Adj(A_pbT)	1.00		1.00	1.00		1.00	1.00		1.00	1.00		1.00
Parking Bus, Adj	1.00	1.00	1.00	1.00	1.00	1.00	1.00	1.00	1.00	1.00	1.00	1.00
Work Zone On Approach		No			No			No			No	
Adj Sat Flow, veh/h/ln	1575	1772	1772	1575	1772	1772	1772	1772	1772	1772	1772	1772
Adj Flow Rate, veh/h	25	655	77	43	341	68	50	92	86	20	45	20
Peak Hour Factor	0.88	0.88	0.88	0.88	0.88	0.88	0.88	0.88	0.88	0.88	0.88	0.88
Percent Heavy Veh, %	2	2	2	2	2	2	2	2	2	2	2	2
Cap, veh/h	434	709	601	191	1121	221	186	308	240	196	389	150
Arrive On Green	0.40	0.40	0.40	0.40	0.40	0.40	0.40	0.40	0.40	0.40	0.40	0.40
Sat Flow, veh/h	868	1772	1502	644	2803	553	221	771	600	243	974	374
Grp Volume(v), veh/h	25	655	77	43	203	206	228	0	0	85	0	0
Grp Sat Flow(s),veh/h/ln	868	1772	1502	644	1683	1672	1592	0	0	1591	0	0
Q Serve(g_s), s	0.9	15.8	1.5	2.2	3.7	3.8	0.0	0.0	0.0	0.0	0.0	0.0
Cycle Q Clear(g_c), s	4.7	15.8	1.5	18.0	3.7	3.8	4.3	0.0	0.0	1.4	0.0	0.0
Prop In Lane	1.00		1.00	1.00		0.33	0.22		0.38	0.24		0.24
Lane Grp Cap(c), veh/h	434	709	601	191	673	669	734	0	0	735	0	0
V/C Ratio(X)	0.06	0.92	0.13	0.23	0.30	0.31	0.31	0.00	0.00	0.12	0.00	0.00
Avail Cap(c_a), veh/h	434	709	601	191	673	669	734	0	0	735	0	0
HCM Platoon Ratio	1.00	1.00	1.00	1.00	1.00	1.00	1.00	1.00	1.00	1.00	1.00	1.00
Upstream Filter(I)	1.00	1.00	1.00	1.00	1.00	1.00	1.00	0.00	0.00	1.00	0.00	0.00
Uniform Delay (d), s/veh	10.8	12.9	8.5	21.7	9.2	9.2	9.4	0.0	0.0	8.5	0.0	0.0
Incr Delay (d2), s/veh	0.1	17.9	0.1	0.6	0.2	0.3	1.1	0.0	0.0	0.3	0.0	0.0
Initial Q Delay(d3),s/veh	0.0	0.0	0.0	0.0	0.0	0.0	0.0	0.0	0.0	0.0	0.0	0.0
%ile BackOfQ(50%),veh/ln	0.2	8.3	0.4	0.4	1.1	1.1	1.4	0.0	0.0	0.5	0.0	0.0
Unsig. Movement Delay, s/veh												
LnGrp Delay(d),s/veh	10.9	30.7	8.6	22.3	9.5	9.5	10.5	0.0	0.0	8.8	0.0	0.0
LnGrp LOS	B	C	A	C	A	A	B	A	A	A	A	A
Approach Vol, veh/h		757			452			228			85	
Approach Delay, s/veh		27.8			10.7			10.5			8.8	
Approach LOS		C			B			B			A	

Timer - Assigned Phs	2	4	6	8
Phs Duration (G+Y+Rc), s	22.5	22.5	22.5	22.5
Change Period (Y+Rc), s	4.5	4.5	4.5	4.5
Max Green Setting (Gmax), s	18.0	18.0	18.0	18.0
Max Q Clear Time (g_c+I1), s	6.3	17.8	3.4	20.0
Green Ext Time (p_c), s	1.0	0.1	0.3	0.0

Intersection Summary	
HCM 6th Ctrl Delay	19.1
HCM 6th LOS	B

Intersection	
Intersection Delay, s/veh	16.3
Intersection LOS	C

Movement	EBL	EBT	EBR	WBL	WBT	WBR	NBL	NBT	NBR	SBL	SBT	SBR
Lane Configurations												
Traffic Vol, veh/h	24	149	54	31	109	30	46	266	35	31	266	18
Future Vol, veh/h	24	149	54	31	109	30	46	266	35	31	266	18
Peak Hour Factor	0.94	0.94	0.94	0.94	0.94	0.94	0.94	0.94	0.94	0.94	0.94	0.94
Heavy Vehicles, %	2	2	2	2	2	2	2	2	2	2	2	2
Mvmt Flow	26	159	57	33	116	32	49	283	37	33	283	19
Number of Lanes	0	1	0	0	1	1	0	1	0	0	1	0

Approach	EB	WB	NB	SB
Opposing Approach	WB	EB	SB	NB
Opposing Lanes	2	1	1	1
Conflicting Approach Left	SB	NB	EB	WB
Conflicting Lanes Left	1	1	1	2
Conflicting Approach Right	NB	SB	WB	EB
Conflicting Lanes Right	1	1	2	1
HCM Control Delay	14.6	12.7	18.4	17
HCM LOS	B	B	C	C

Lane	NBLn1	EBLn1	WBLn1	WBLn2	SBLn1
Vol Left, %	13%	11%	22%	0%	10%
Vol Thru, %	77%	66%	78%	0%	84%
Vol Right, %	10%	24%	0%	100%	6%
Sign Control	Stop	Stop	Stop	Stop	Stop
Traffic Vol by Lane	347	227	140	30	315
LT Vol	46	24	31	0	31
Through Vol	266	149	109	0	266
RT Vol	35	54	0	30	18
Lane Flow Rate	369	241	149	32	335
Geometry Grp	2	5	7	7	2
Degree of Util (X)	0.618	0.438	0.303	0.058	0.569
Departure Headway (Hd)	6.024	6.533	7.33	6.498	6.109
Convergence, Y/N	Yes	Yes	Yes	Yes	Yes
Cap	598	551	490	550	590
Service Time	4.073	4.59	5.088	4.256	4.158
HCM Lane V/C Ratio	0.617	0.437	0.304	0.058	0.568
HCM Control Delay	18.4	14.6	13.3	9.7	17
HCM Lane LOS	C	B	B	A	C
HCM 95th-tile Q	4.2	2.2	1.3	0.2	3.6

Movement	EBL	EBT	EBR	WBL	WBT	WBR	NBL	NBT	NBR	SBL	SBT	SBR
Lane Configurations												
Traffic Volume (veh/h)	65	151	93	51	143	103	126	774	121	151	913	48
Future Volume (veh/h)	65	151	93	51	143	103	126	774	121	151	913	48
Initial Q (Qb), veh	0	0	0	0	0	0	0	0	0	0	0	0
Ped-Bike Adj(A_pbT)	1.00		1.00	1.00		1.00	1.00		1.00	1.00		1.00
Parking Bus, Adj	1.00	1.00	1.00	1.00	1.00	1.00	1.00	1.00	1.00	1.00	1.00	1.00
Work Zone On Approach		No			No			No			No	
Adj Sat Flow, veh/h/ln	1772	1772	1772	1772	1772	1772	1575	1772	1772	1575	1772	1772
Adj Flow Rate, veh/h	71	164	101	55	155	112	137	841	132	164	992	52
Peak Hour Factor	0.92	0.92	0.92	0.92	0.92	0.92	0.92	0.92	0.92	0.92	0.92	0.92
Percent Heavy Veh, %	2	2	2	2	2	2	2	2	2	2	2	2
Cap, veh/h	39	68	444	38	83	444	319	1348	212	194	1234	65
Arrive On Green	0.30	0.30	0.30	0.30	0.30	0.30	0.14	0.31	0.31	0.04	0.13	0.13
Sat Flow, veh/h	0	230	1502	0	280	1502	1500	2915	458	1500	3254	171
Grp Volume(v), veh/h	235	0	101	210	0	112	137	486	487	164	513	531
Grp Sat Flow(s),veh/h/ln	230	0	1502	280	0	1502	1500	1683	1690	1500	1683	1741
Q Serve(g_s), s	0.0	0.0	6.1	0.0	0.0	6.8	10.0	29.6	29.6	13.0	35.6	35.6
Cycle Q Clear(g_c), s	35.5	0.0	6.1	35.5	0.0	6.8	10.0	29.6	29.6	13.0	35.6	35.6
Prop In Lane	0.30		1.00	0.26		1.00	1.00		0.27	1.00		0.10
Lane Grp Cap(c), veh/h	107	0	444	121	0	444	319	779	781	194	638	660
V/C Ratio(X)	2.19	0.00	0.23	1.74	0.00	0.25	0.43	0.62	0.62	0.85	0.80	0.80
Avail Cap(c_a), veh/h	107	0	444	121	0	444	319	779	781	194	638	660
HCM Platoon Ratio	1.00	1.00	1.00	1.00	1.00	1.00	0.67	0.67	0.67	0.33	0.33	0.33
Upstream Filter(I)	1.00	0.00	1.00	1.00	0.00	1.00	1.00	1.00	1.00	1.00	1.00	1.00
Uniform Delay (d), s/veh	38.9	0.0	31.9	37.6	0.0	32.1	44.8	32.5	32.5	56.3	48.2	48.2
Incr Delay (d2), s/veh	566.1	0.0	1.2	364.9	0.0	1.4	4.2	3.7	3.7	34.2	10.4	10.0
Initial Q Delay(d3),s/veh	0.0	0.0	0.0	0.0	0.0	0.0	0.0	0.0	0.0	0.0	0.0	0.0
%ile BackOfQ(50%),veh/ln	20.1	0.0	2.4	14.9	0.0	2.7	4.2	13.5	13.5	7.1	17.9	18.5
Unsig. Movement Delay, s/veh												
LnGrp Delay(d),s/veh	605.0	0.0	33.1	402.5	0.0	33.5	49.0	36.2	36.2	90.5	58.5	58.2
LnGrp LOS	F	A	C	F	A	C	D	D	D	F	E	E
Approach Vol, veh/h		336			322			1110			1208	
Approach Delay, s/veh		433.1			274.1			37.8			62.7	
Approach LOS		F			F			D			E	

Timer - Assigned Phs	1	2		4	5	6		8				
Phs Duration (G+Y+Rc), s	30.0	60.0		40.0	30.0	50.0		40.0				
Change Period (Y+Rc), s	4.5	4.5		4.5	4.5	4.5		4.5				
Max Green Setting (Gmax), s	25.5	55.5		35.5	25.5	45.5		35.5				
Max Q Clear Time (g_c+I1), s	15.0	31.6		37.5	12.0	37.6		37.5				
Green Ext Time (p_c), s	0.0	7.0		0.0	0.3	4.1		0.0				

Intersection Summary		
HCM 6th Ctrl Delay	118.1	
HCM 6th LOS	F	

Intersection	
Intersection Delay, s/veh	12
Intersection LOS	B

Movement	EBL	EBT	EBR	WBL	WBT	WBR	NBL	NBT	NBR	SBL	SBT	SBR
Lane Configurations												
Traffic Vol, veh/h	71	244	34	22	190	29	17	105	7	23	65	31
Future Vol, veh/h	71	244	34	22	190	29	17	105	7	23	65	31
Peak Hour Factor	0.96	0.96	0.96	0.96	0.96	0.96	0.96	0.96	0.96	0.96	0.96	0.96
Heavy Vehicles, %	2	2	2	2	2	2	2	2	2	2	2	2
Mvmt Flow	74	254	35	23	198	30	18	109	7	24	68	32
Number of Lanes	0	1	0	0	1	1	0	1	0	0	1	0

Approach	EB	WB	NB	SB
Opposing Approach	WB	EB	SB	NB
Opposing Lanes	2	1	1	1
Conflicting Approach Left	SB	NB	EB	WB
Conflicting Lanes Left	1	1	1	2
Conflicting Approach Right	NB	SB	WB	EB
Conflicting Lanes Right	1	1	2	1
HCM Control Delay	13.7	11.3	10.4	10.1
HCM LOS	B	B	B	B

Lane	NBLn1	EBLn1	WBLn1	WBLn2	SBLn1
Vol Left, %	13%	20%	10%	0%	19%
Vol Thru, %	81%	70%	90%	0%	55%
Vol Right, %	5%	10%	0%	100%	26%
Sign Control	Stop	Stop	Stop	Stop	Stop
Traffic Vol by Lane	129	349	212	29	119
LT Vol	17	71	22	0	23
Through Vol	105	244	190	0	65
RT Vol	7	34	0	29	31
Lane Flow Rate	134	364	221	30	124
Geometry Grp	2	5	7	7	2
Degree of Util (X)	0.216	0.522	0.355	0.042	0.196
Departure Headway (Hd)	5.788	5.171	5.781	5.02	5.703
Convergence, Y/N	Yes	Yes	Yes	Yes	Yes
Cap	619	698	623	713	628
Service Time	3.83	3.201	3.513	2.751	3.746
HCM Lane V/C Ratio	0.216	0.521	0.355	0.042	0.197
HCM Control Delay	10.4	13.7	11.7	8	10.1
HCM Lane LOS	B	B	B	A	B
HCM 95th-tile Q	0.8	3.1	1.6	0.1	0.7

Intersection	
Int Delay, s/veh	0.5

Movement	WBL	WBR	NBT	NBR	SBL	SBT
Lane Configurations						
Traffic Vol, veh/h	0	80	940	81	0	1199
Future Vol, veh/h	0	80	940	81	0	1199
Conflicting Peds, #/hr	0	0	0	0	0	0
Sign Control	Stop	Stop	Free	Free	Free	Free
RT Channelized	-	None	-	None	-	None
Storage Length	-	0	-	-	-	-
Veh in Median Storage, #	0	-	0	-	-	0
Grade, %	0	-	0	-	-	0
Peak Hour Factor	92	92	92	92	92	92
Heavy Vehicles, %	2	2	2	2	2	2
Mvmt Flow	0	87	1022	88	0	1303

Major/Minor	Minor1		Major1		Major2	
Conflicting Flow All	-	555	0	0	-	-
Stage 1	-	-	-	-	-	-
Stage 2	-	-	-	-	-	-
Critical Hdwy	-	6.94	-	-	-	-
Critical Hdwy Stg 1	-	-	-	-	-	-
Critical Hdwy Stg 2	-	-	-	-	-	-
Follow-up Hdwy	-	3.32	-	-	-	-
Pot Cap-1 Maneuver	0	475	-	-	0	-
Stage 1	0	-	-	-	0	-
Stage 2	0	-	-	-	0	-
Platoon blocked, %			-	-		-
Mov Cap-1 Maneuver	-	475	-	-	-	-
Mov Cap-2 Maneuver	-	-	-	-	-	-
Stage 1	-	-	-	-	-	-
Stage 2	-	-	-	-	-	-

Approach	WB	NB	SB
HCM Control Delay, s	14.3	0	0
HCM LOS	B		

Minor Lane/Major Mvmt	NBT	NBR	WBLn1	SBT
Capacity (veh/h)	-	-	475	-
HCM Lane V/C Ratio	-	-	0.183	-
HCM Control Delay (s)	-	-	14.3	-
HCM Lane LOS	-	-	B	-
HCM 95th %tile Q(veh)	-	-	0.7	-

Intersection	
Int Delay, s/veh	0.7

Movement	EBT	EBR	WBL	WBT	NBL	NBR
Lane Configurations						
Traffic Vol, veh/h	389	40	0	297	40	0
Future Vol, veh/h	389	40	0	297	40	0
Conflicting Peds, #/hr	0	0	0	0	0	0
Sign Control	Free	Free	Free	Free	Stop	Stop
RT Channelized	-	None	-	None	-	None
Storage Length	-	-	-	-	0	-
Veh in Median Storage, #	0	-	-	0	0	-
Grade, %	0	-	-	0	0	-
Peak Hour Factor	92	92	92	92	92	92
Heavy Vehicles, %	2	2	2	2	2	2
Mvmt Flow	423	43	0	323	43	0

Major/Minor	Major1		Major2		Minor1	
Conflicting Flow All	0	0	-	-	607	-
Stage 1	-	-	-	-	445	-
Stage 2	-	-	-	-	162	-
Critical Hdwy	-	-	-	-	6.63	-
Critical Hdwy Stg 1	-	-	-	-	5.43	-
Critical Hdwy Stg 2	-	-	-	-	5.83	-
Follow-up Hdwy	-	-	-	-	3.519	-
Pot Cap-1 Maneuver	-	-	0	-	443	0
Stage 1	-	-	0	-	645	0
Stage 2	-	-	0	-	851	0
Platoon blocked, %	-	-		-		
Mov Cap-1 Maneuver	-	-	-	-	443	-
Mov Cap-2 Maneuver	-	-	-	-	443	-
Stage 1	-	-	-	-	645	-
Stage 2	-	-	-	-	851	-

Approach	EB	WB	NB
HCM Control Delay, s	0	0	14
HCM LOS			B

Minor Lane/Major Mvmt	NBLn1	EBT	EBR	WBT
Capacity (veh/h)	443	-	-	-
HCM Lane V/C Ratio	0.098	-	-	-
HCM Control Delay (s)	14	-	-	-
HCM Lane LOS	B	-	-	-
HCM 95th %tile Q(veh)	0.3	-	-	-

Intersection	
Int Delay, s/veh	0.7

Movement	EBT	EBR	WBL	WBT	NBL	NBR
Lane Configurations						
Traffic Vol, veh/h	349	40	0	297	40	0
Future Vol, veh/h	349	40	0	297	40	0
Conflicting Peds, #/hr	0	0	0	0	0	0
Sign Control	Free	Free	Free	Free	Stop	Stop
RT Channelized	-	None	-	None	-	None
Storage Length	-	-	-	-	0	-
Veh in Median Storage, #	0	-	-	0	0	-
Grade, %	0	-	-	0	0	-
Peak Hour Factor	92	92	92	92	92	92
Heavy Vehicles, %	2	2	2	2	2	2
Mvmt Flow	379	43	0	323	43	0

Major/Minor	Major1		Major2		Minor1	
Conflicting Flow All	0	0	-	-	563	-
Stage 1	-	-	-	-	401	-
Stage 2	-	-	-	-	162	-
Critical Hdwy	-	-	-	-	6.63	-
Critical Hdwy Stg 1	-	-	-	-	5.43	-
Critical Hdwy Stg 2	-	-	-	-	5.83	-
Follow-up Hdwy	-	-	-	-	3.519	-
Pot Cap-1 Maneuver	-	-	0	-	472	0
Stage 1	-	-	0	-	675	0
Stage 2	-	-	0	-	851	0
Platoon blocked, %	-	-		-		
Mov Cap-1 Maneuver	-	-	-	-	472	-
Mov Cap-2 Maneuver	-	-	-	-	472	-
Stage 1	-	-	-	-	675	-
Stage 2	-	-	-	-	851	-

Approach	EB	WB	NB
HCM Control Delay, s	0	0	13.4
HCM LOS			B

Minor Lane/Major Mvmt	NBLn1	EBT	EBR	WBT
Capacity (veh/h)	472	-	-	-
HCM Lane V/C Ratio	0.092	-	-	-
HCM Control Delay (s)	13.4	-	-	-
HCM Lane LOS	B	-	-	-
HCM 95th %tile Q(veh)	0.3	-	-	-

Intersection	
Intersection Delay, s/veh	12.4
Intersection LOS	B

Movement	EBL	EBT	EBR	WBL	WBT	WBR	NBL	NBT	NBR	SBL	SBT	SBR
Lane Configurations												
Traffic Vol, veh/h	54	309	28	12	149	63	10	63	6	46	55	18
Future Vol, veh/h	54	309	28	12	149	63	10	63	6	46	55	18
Peak Hour Factor	0.95	0.95	0.95	0.95	0.95	0.95	0.95	0.95	0.95	0.95	0.95	0.95
Heavy Vehicles, %	2	2	2	2	2	2	2	2	2	2	2	2
Mvmt Flow	57	325	29	13	157	66	11	66	6	48	58	19
Number of Lanes	0	1	1	0	2	0	0	1	0	0	1	0

Approach	EB	WB	NB	SB
Opposing Approach	WB	EB	SB	NB
Opposing Lanes	2	2	1	1
Conflicting Approach Left	SB	NB	EB	WB
Conflicting Lanes Left	1	1	2	2
Conflicting Approach Right	NB	SB	WB	EB
Conflicting Lanes Right	1	1	2	2
HCM Control Delay	15.2	9.5	9.8	10.2
HCM LOS	C	A	A	B

Lane	NBLn1	EBLn1	EBLn2	WBLn1	WBLn2	SBLn1
Vol Left, %	13%	15%	0%	14%	0%	39%
Vol Thru, %	80%	85%	0%	86%	54%	46%
Vol Right, %	8%	0%	100%	0%	46%	15%
Sign Control	Stop	Stop	Stop	Stop	Stop	Stop
Traffic Vol by Lane	79	363	28	87	138	119
LT Vol	10	54	0	12	0	46
Through Vol	63	309	0	75	75	55
RT Vol	6	0	28	0	63	18
Lane Flow Rate	83	382	29	91	145	125
Geometry Grp	2	7	7	7	7	2
Degree of Util (X)	0.135	0.588	0.039	0.145	0.214	0.2
Departure Headway (Hd)	5.826	5.539	4.757	5.716	5.322	5.741
Convergence, Y/N	Yes	Yes	Yes	Yes	Yes	Yes
Cap	615	657	757	628	676	625
Service Time	3.864	3.239	2.457	3.443	3.048	3.777
HCM Lane V/C Ratio	0.135	0.581	0.038	0.145	0.214	0.2
HCM Control Delay	9.8	15.8	7.6	9.4	9.5	10.2
HCM Lane LOS	A	C	A	A	A	B
HCM 95th-tile Q	0.5	3.8	0.1	0.5	0.8	0.7

Movement	EBL	EBT	EBR	WBL	WBT	WBR	NBL	NBT	NBR	SBL	SBT	SBR
Lane Configurations												
Traffic Volume (veh/h)	72	321	39	61	182	86	61	886	74	119	1045	35
Future Volume (veh/h)	72	321	39	61	182	86	61	886	74	119	1045	35
Initial Q (Qb), veh	0	0	0	0	0	0	0	0	0	0	0	0
Ped-Bike Adj(A_pbT)	1.00		0.94	0.99		1.00	1.00		1.00	1.00		1.00
Parking Bus, Adj	1.00	1.00	1.00	1.00	1.00	1.00	1.00	1.00	1.00	1.00	1.00	1.00
Work Zone On Approach		No			No			No			No	
Adj Sat Flow, veh/h/ln	1772	1772	1772	1772	1772	1772	1575	1772	1772	1575	1772	1772
Adj Flow Rate, veh/h	74	331	40	63	188	89	63	913	76	123	1077	36
Peak Hour Factor	0.97	0.97	0.97	0.97	0.97	0.97	0.97	0.97	0.97	0.97	0.97	0.97
Percent Heavy Veh, %	2	2	2	2	2	2	2	2	2	2	2	2
Cap, veh/h	139	627	81	135	411	218	194	1324	110	256	1537	51
Arrive On Green	0.30	0.30	0.30	0.30	0.30	0.30	0.13	0.42	0.42	0.06	0.15	0.15
Sat Flow, veh/h	334	2121	273	315	1391	737	1500	3146	262	1500	3324	111
Grp Volume(v), veh/h	219	0	226	161	0	179	63	488	501	123	545	568
Grp Sat Flow(s),veh/h/ln	1186	0	1542	964	0	1480	1500	1683	1725	1500	1683	1752
Q Serve(g_s), s	11.3	0.0	14.5	8.7	0.0	11.6	4.6	28.4	28.4	9.5	36.9	36.9
Cycle Q Clear(g_c), s	22.9	0.0	14.5	23.2	0.0	11.6	4.6	28.4	28.4	9.5	36.9	36.9
Prop In Lane	0.34		0.18	0.39		0.50	1.00		0.15	1.00		0.06
Lane Grp Cap(c), veh/h	391	0	456	327	0	438	194	708	726	256	779	810
V/C Ratio(X)	0.56	0.00	0.49	0.49	0.00	0.41	0.33	0.69	0.69	0.48	0.70	0.70
Avail Cap(c_a), veh/h	391	0	456	327	0	438	194	708	726	256	779	810
HCM Platoon Ratio	1.00	1.00	1.00	1.00	1.00	1.00	1.00	1.00	1.00	0.33	0.33	0.33
Upstream Filter(I)	1.00	0.00	1.00	1.00	0.00	1.00	1.00	1.00	1.00	1.00	1.00	1.00
Uniform Delay (d), s/veh	39.0	0.0	34.8	39.5	0.0	33.8	47.5	28.4	28.4	51.4	43.0	43.0
Incr Delay (d2), s/veh	5.7	0.0	3.8	5.2	0.0	2.8	4.4	5.4	5.3	6.3	5.2	5.0
Initial Q Delay(d3),s/veh	0.0	0.0	0.0	0.0	0.0	0.0	0.0	0.0	0.0	0.0	0.0	0.0
%ile BackOfQ(50%),veh/ln	6.4	0.0	5.9	4.8	0.0	4.5	2.0	12.4	12.6	4.3	17.8	18.5
Unsig. Movement Delay, s/veh												
LnGrp Delay(d),s/veh	44.7	0.0	38.6	44.7	0.0	36.6	51.9	33.8	33.7	57.8	48.2	48.0
LnGrp LOS	D	A	D	D	A	D	D	C	C	E	D	D
Approach Vol, veh/h		445			340			1052			1236	
Approach Delay, s/veh		41.6			40.5			34.8			49.0	
Approach LOS		D			D			C			D	

Timer - Assigned Phs	1	2		4	5	6		8
Phs Duration (G+Y+Rc), s	15.0	55.0		40.0	20.0	60.0		40.0
Change Period (Y+Rc), s	4.5	4.5		4.5	4.5	4.5		4.5
Max Green Setting (Gmax), s	10.5	50.5		35.5	15.5	55.5		35.5
Max Q Clear Time (g_c+I1), s	11.5	30.4		24.9	6.6	38.9		25.2
Green Ext Time (p_c), s	0.2	6.6		2.0	0.1	6.9		1.5

Intersection Summary	
HCM 6th Ctrl Delay	42.1
HCM 6th LOS	D

Intersection	
Int Delay, s/veh	3.1

Movement	EBL	EBT	WBT	WBR	SBL	SBR
Lane Configurations						
Traffic Vol, veh/h	104	356	222	23	29	54
Future Vol, veh/h	104	356	222	23	29	54
Conflicting Peds, #/hr	0	0	0	0	0	0
Sign Control	Free	Free	Free	Free	Stop	Stop
RT Channelized	-	None	-	None	-	None
Storage Length	-	-	-	-	0	-
Veh in Median Storage, #	-	0	0	-	0	-
Grade, %	-	0	0	-	0	-
Peak Hour Factor	73	73	73	73	73	73
Heavy Vehicles, %	2	2	2	2	2	2
Mvmt Flow	142	488	304	32	40	74

Major/Minor	Major1		Major2		Minor2	
Conflicting Flow All	336	0	-	0	1092	320
Stage 1	-	-	-	-	320	-
Stage 2	-	-	-	-	772	-
Critical Hdwy	4.12	-	-	-	6.42	6.22
Critical Hdwy Stg 1	-	-	-	-	5.42	-
Critical Hdwy Stg 2	-	-	-	-	5.42	-
Follow-up Hdwy	2.218	-	-	-	3.518	3.318
Pot Cap-1 Maneuver	1223	-	-	-	237	721
Stage 1	-	-	-	-	736	-
Stage 2	-	-	-	-	456	-
Platoon blocked, %		-	-	-		
Mov Cap-1 Maneuver	1223	-	-	-	199	721
Mov Cap-2 Maneuver	-	-	-	-	199	-
Stage 1	-	-	-	-	619	-
Stage 2	-	-	-	-	456	-

Approach	EB	WB	SB
HCM Control Delay, s	1.9	0	18.7
HCM LOS			C

Minor Lane/Major Mvmt	EBL	EBT	WBT	WBR	SBLn1
Capacity (veh/h)	1223	-	-	-	376
HCM Lane V/C Ratio	0.116	-	-	-	0.302
HCM Control Delay (s)	8.3	0	-	-	18.7
HCM Lane LOS	A	A	-	-	C
HCM 95th %tile Q(veh)	0.4	-	-	-	1.3

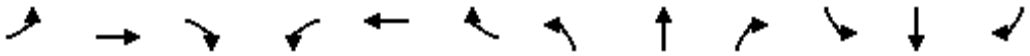

Movement	EBL	EBT	EBR	WBL	WBT	WBR	NBL	NBT	NBR	SBL	SBT	SBR
Lane Configurations												
Traffic Volume (veh/h)	21	2	4	113	3	75	6	697	97	212	961	18
Future Volume (veh/h)	21	2	4	113	3	75	6	697	97	212	961	18
Initial Q (Qb), veh	0	0	0	0	0	0	0	0	0	0	0	0
Ped-Bike Adj(A_pbT)	1.00		1.00	1.00		1.00	1.00		1.00	1.00		1.00
Parking Bus, Adj	1.00	1.00	1.00	1.00	1.00	1.00	1.00	1.00	1.00	1.00	1.00	1.00
Work Zone On Approach		No			No			No			No	
Adj Sat Flow, veh/h/ln	1772	1772	1772	1772	1772	1772	1575	1772	1772	1575	1772	1772
Adj Flow Rate, veh/h	22	2	4	119	3	79	6	734	102	223	1012	19
Peak Hour Factor	0.95	0.95	0.95	0.95	0.95	0.95	0.95	0.95	0.95	0.95	0.95	0.95
Percent Heavy Veh, %	2	2	2	2	2	2	2	2	2	2	2	2
Cap, veh/h	522	52	72	722	16	601	230	1187	165	278	1352	25
Arrive On Green	0.40	0.40	0.40	0.40	0.40	0.40	0.40	0.40	0.40	0.40	0.40	0.40
Sat Flow, veh/h	948	131	180	1409	40	1502	486	2969	412	584	3380	63
Grp Volume(v), veh/h	28	0	0	122	0	79	6	416	420	223	504	527
Grp Sat Flow(s),veh/h/ln	1259	0	0	1449	0	1502	486	1683	1698	584	1683	1760
Q Serve(g_s), s	0.0	0.0	0.0	0.0	0.0	1.5	0.5	8.9	8.9	9.1	11.5	11.5
Cycle Q Clear(g_c), s	2.1	0.0	0.0	2.1	0.0	1.5	12.0	8.9	8.9	18.0	11.5	11.5
Prop In Lane	0.79		0.14	0.98		1.00	1.00		0.24	1.00		0.04
Lane Grp Cap(c), veh/h	646	0	0	738	0	601	230	673	679	278	673	704
V/C Ratio(X)	0.04	0.00	0.00	0.17	0.00	0.13	0.03	0.62	0.62	0.80	0.75	0.75
Avail Cap(c_a), veh/h	646	0	0	738	0	601	230	673	679	278	673	704
HCM Platoon Ratio	1.00	1.00	1.00	1.00	1.00	1.00	1.00	1.00	1.00	1.00	1.00	1.00
Upstream Filter(I)	1.00	0.00	0.00	1.00	0.00	1.00	1.00	1.00	1.00	1.00	1.00	1.00
Uniform Delay (d), s/veh	8.3	0.0	0.0	8.7	0.0	8.5	16.7	10.8	10.8	20.1	11.6	11.6
Incr Delay (d2), s/veh	0.1	0.0	0.0	0.5	0.0	0.5	0.2	4.2	4.2	21.0	7.5	7.2
Initial Q Delay(d3),s/veh	0.0	0.0	0.0	0.0	0.0	0.0	0.0	0.0	0.0	0.0	0.0	0.0
%ile BackOfQ(50%),veh/ln	0.2	0.0	0.0	0.7	0.0	0.5	0.1	3.3	3.4	3.8	4.7	4.9
Unsig. Movement Delay, s/veh												
LnGrp Delay(d),s/veh	8.4	0.0	0.0	9.2	0.0	9.0	16.9	15.0	15.0	41.1	19.0	18.7
LnGrp LOS	A	A	A	A	A	A	B	B	B	D	B	B
Approach Vol, veh/h		28			201			842			1254	
Approach Delay, s/veh		8.4			9.1			15.0			22.8	
Approach LOS		A			A			B			C	

Timer - Assigned Phs		2		4		6		8				
Phs Duration (G+Y+Rc), s		22.5		22.5		22.5		22.5				
Change Period (Y+Rc), s		4.5		4.5		4.5		4.5				
Max Green Setting (Gmax), s		18.0		18.0		18.0		18.0				
Max Q Clear Time (g_c+I1), s		14.0		4.1		20.0		4.1				
Green Ext Time (p_c), s		1.9		0.1		0.0		0.7				

Intersection Summary												
HCM 6th Ctrl Delay			18.6									
HCM 6th LOS			B									

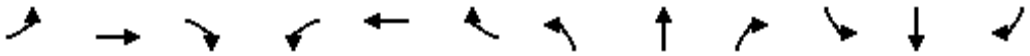

Movement	EBL	EBT	EBR	WBL	WBT	WBR	NBL	NBT	NBR	SBL	SBT	SBR
Lane Configurations												
Traffic Volume (veh/h)	63	232	714	446	345	53	474	1430	314	59	1723	31
Future Volume (veh/h)	63	232	714	446	345	53	474	1430	314	59	1723	31
Initial Q (Qb), veh	0	0	0	0	0	0	0	0	0	0	0	0
Ped-Bike Adj(A_pbT)	1.00		1.00	1.00		1.00	1.00		1.00	1.00		1.00
Parking Bus, Adj	1.00	1.00	1.00	1.00	1.00	1.00	1.00	1.00	1.00	1.00	1.00	1.00
Work Zone On Approach		No			No			No			No	
Adj Sat Flow, veh/h/ln	1673	1870	1772	1673	1870	1772	1673	1870	1870	1673	1870	1870
Adj Flow Rate, veh/h	66	242	744	465	359	55	494	1490	327	61	1795	32
Peak Hour Factor	0.96	0.96	0.96	0.96	0.96	0.96	0.96	0.96	0.96	0.96	0.96	0.96
Percent Heavy Veh, %	2	2	2	2	2	2	2	2	2	2	2	2
Cap, veh/h	861	748	1057	628	1237	188	356	2042	634	388	2066	37
Arrive On Green	0.40	0.40	0.40	0.40	0.40	0.40	0.40	0.40	0.40	0.40	0.40	0.40
Sat Flow, veh/h	1687	1870	2643	991	3093	470	443	5106	1585	447	5166	92
Grp Volume(v), veh/h	66	242	744	465	205	209	494	1490	327	61	1183	644
Grp Sat Flow(s),veh/h/ln	844	1870	1321	495	1777	1786	221	1702	1585	223	1702	1854
Q Serve(g_s), s	1.2	4.0	10.6	14.0	3.5	3.6	3.6	11.1	7.0	6.0	14.4	14.4
Cycle Q Clear(g_c), s	4.8	4.0	10.6	18.0	3.5	3.6	18.0	11.1	7.0	17.2	14.4	14.4
Prop In Lane	1.00		1.00	1.00		0.26	1.00		1.00	1.00		0.05
Lane Grp Cap(c), veh/h	861	748	1057	628	711	714	356	2042	634	388	1362	742
V/C Ratio(X)	0.08	0.32	0.70	0.74	0.29	0.29	1.39	0.73	0.52	0.16	0.87	0.87
Avail Cap(c_a), veh/h	861	748	1057	628	711	714	356	2042	634	388	1362	742
HCM Platoon Ratio	1.00	1.00	1.00	1.00	1.00	1.00	1.00	1.00	1.00	1.00	1.00	1.00
Upstream Filter(I)	1.00	1.00	1.00	1.00	1.00	1.00	1.00	1.00	1.00	1.00	1.00	1.00
Uniform Delay (d), s/veh	10.8	9.3	11.3	17.9	9.2	9.2	22.3	11.4	10.2	18.7	12.4	12.4
Incr Delay (d2), s/veh	0.2	1.1	3.9	7.7	1.0	1.0	191.8	2.3	3.0	0.9	7.7	13.2
Initial Q Delay(d3),s/veh	0.0	0.0	0.0	0.0	0.0	0.0	0.0	0.0	0.0	0.0	0.0	0.0
%ile BackOfQ(50%),veh/ln	0.2	1.5	3.0	2.9	1.3	1.3	11.2	3.7	2.4	0.3	5.6	7.3
Unsig. Movement Delay, s/veh												
LnGrp Delay(d),s/veh	11.0	10.4	15.2	25.5	10.2	10.2	214.1	13.8	13.2	19.6	20.1	25.6
LnGrp LOS	B	B	B	C	B	B	F	B	B	B	C	C
Approach Vol, veh/h		1052			879			2311			1888	
Approach Delay, s/veh		13.8			18.3			56.5			22.0	
Approach LOS		B			B			E			C	

Timer - Assigned Phs		2		4		6		8				
Phs Duration (G+Y+Rc), s		22.5		22.5		22.5		22.5				
Change Period (Y+Rc), s		4.5		4.5		4.5		4.5				
Max Green Setting (Gmax), s		18.0		18.0		18.0		18.0				
Max Q Clear Time (g_c+I1), s		20.0		12.6		19.2		20.0				
Green Ext Time (p_c), s		0.0		2.5		0.0		0.0				

Intersection Summary												
HCM 6th Ctrl Delay			33.1									
HCM 6th LOS			C									

Movement	EBL	EBT	EBR	WBL	WBT	WBR	NBL	NBT	NBR	SBL	SBT	SBR
Lane Configurations												
Traffic Volume (veh/h)	0	0	0	529	1	536	396	1670	0	0	1806	1111
Future Volume (veh/h)	0	0	0	529	1	536	396	1670	0	0	1806	1111
Initial Q (Qb), veh				0	0	0	0	0	0	0	0	0
Ped-Bike Adj(A_pbT)				1.00		1.00	1.00		1.00	1.00		1.00
Parking Bus, Adj				1.00	1.00	1.00	1.00	1.00	1.00	1.00	1.00	1.00
Work Zone On Approach					No			No			No	
Adj Sat Flow, veh/h/ln				1772	1870	1870	1772	1870	0	0	1870	1870
Adj Flow Rate, veh/h				546	0	553	408	1722	0	0	1862	1145
Peak Hour Factor				0.97	0.97	0.97	0.97	0.97	0.97	0.97	0.97	0.97
Percent Heavy Veh, %				2	2	2	2	2	0	0	2	2
Cap, veh/h				1089	0	1535	759	3040	0	0	1648	512
Arrive On Green				0.32	0.00	0.32	0.46	1.00	0.00	0.00	0.32	0.32
Sat Flow, veh/h				3375	0	4755	3274	5274	0	0	5274	1585
Grp Volume(v), veh/h				546	0	553	408	1722	0	0	1862	1145
Grp Sat Flow(s),veh/h/ln				1688	0	1585	1637	1702	0	0	1702	1585
Q Serve(g_s), s				14.4	0.0	9.8	9.8	0.0	0.0	0.0	35.5	35.5
Cycle Q Clear(g_c), s				14.4	0.0	9.8	9.8	0.0	0.0	0.0	35.5	35.5
Prop In Lane				1.00		1.00	1.00		0.00	0.00		1.00
Lane Grp Cap(c), veh/h				1089	0	1535	759	3040	0	0	1648	512
V/C Ratio(X)				0.50	0.00	0.36	0.54	0.57	0.00	0.00	1.13	2.24
Avail Cap(c_a), veh/h				1089	0	1535	759	3040	0	0	1648	512
HCM Platoon Ratio				1.00	1.00	1.00	2.00	2.00	1.00	1.00	1.00	1.00
Upstream Filter(I)				1.00	0.00	1.00	1.00	1.00	0.00	0.00	1.00	1.00
Uniform Delay (d), s/veh				30.1	0.0	28.5	25.3	0.0	0.0	0.0	37.3	37.3
Incr Delay (d2), s/veh				1.6	0.0	0.7	2.7	0.8	0.0	0.0	66.8	563.5
Initial Q Delay(d3),s/veh				0.0	0.0	0.0	0.0	0.0	0.0	0.0	0.0	0.0
%ile BackOfQ(50%),veh/ln				6.0	0.0	3.8	3.5	0.2	0.0	0.0	24.6	93.5
Unsig. Movement Delay, s/veh												
LnGrp Delay(d),s/veh				31.7	0.0	29.2	28.0	0.8	0.0	0.0	104.0	600.8
LnGrp LOS				C	A	C	C	A	A	A	F	F
Approach Vol, veh/h					1099			2130			3007	
Approach Delay, s/veh					30.5			6.0			293.2	
Approach LOS					C			A			F	

Timer - Assigned Phs	2		5	6		8
Phs Duration (G+Y+Rc), s	70.0		30.0	40.0		40.0
Change Period (Y+Rc), s	4.5		4.5	4.5		4.5
Max Green Setting (Gmax), s	65.5		25.5	35.5		35.5
Max Q Clear Time (g_c+I1), s	2.0		11.8	37.5		16.4
Green Ext Time (p_c), s	22.8		1.3	0.0		4.5

Intersection Summary	
HCM 6th Ctrl Delay	148.8
HCM 6th LOS	F

Notes

User approved volume balancing among the lanes for turning movement.

Movement	EBL	EBT	EBR	WBL	WBT	WBR	NBL	NBT	NBR	SBL	SBT	SBR
Lane Configurations												
Traffic Volume (veh/h)	618	0	486	0	0	0	0	1469	560	524	1814	0
Future Volume (veh/h)	618	0	486	0	0	0	0	1469	560	524	1814	0
Initial Q (Qb), veh	0	0	0				0	0	0	0	0	0
Ped-Bike Adj(A_pbT)	1.00		1.00				1.00		1.00	1.00		1.00
Parking Bus, Adj	1.00	1.00	1.00				1.00	1.00	1.00	1.00	1.00	1.00
Work Zone On Approach		No						No			No	
Adj Sat Flow, veh/h/ln	1772	1870	1870				0	1870	1870	1772	1870	0
Adj Flow Rate, veh/h	631	0	496				0	1499	571	535	1851	0
Peak Hour Factor	0.98	0.98	0.98				0.98	0.98	0.98	0.98	0.98	0.98
Percent Heavy Veh, %	2	2	2				0	2	2	2	2	0
Cap, veh/h	1120	0	526				0	1230	382	997	2994	0
Arrive On Green	0.33	0.00	0.33				0.00	0.24	0.24	0.61	1.00	0.00
Sat Flow, veh/h	3375	0	1585				0	5274	1585	3274	5274	0
Grp Volume(v), veh/h	631	0	496				0	1499	571	535	1851	0
Grp Sat Flow(s),veh/h/ln	1688	0	1585				0	1702	1585	1637	1702	0
Q Serve(g_s), s	16.9	0.0	33.5				0.0	26.5	26.5	10.4	0.0	0.0
Cycle Q Clear(g_c), s	16.9	0.0	33.5				0.0	26.5	26.5	10.4	0.0	0.0
Prop In Lane	1.00		1.00				0.00		1.00	1.00		0.00
Lane Grp Cap(c), veh/h	1120	0	526				0	1230	382	997	2994	0
V/C Ratio(X)	0.56	0.00	0.94				0.00	1.22	1.50	0.54	0.62	0.00
Avail Cap(c_a), veh/h	1120	0	526				0	1230	382	997	2994	0
HCM Platoon Ratio	1.00	1.00	1.00				1.00	1.00	1.00	2.00	2.00	1.00
Upstream Filter(I)	1.00	0.00	1.00				0.00	1.00	1.00	1.00	1.00	0.00
Uniform Delay (d), s/veh	30.2	0.0	35.7				0.0	41.8	41.8	17.0	0.0	0.0
Incr Delay (d2), s/veh	2.1	0.0	27.4				0.0	105.9	236.3	2.1	1.0	0.0
Initial Q Delay(d3),s/veh	0.0	0.0	0.0				0.0	0.0	0.0	0.0	0.0	0.0
%ile BackOfQ(50%),veh/ln	7.1	0.0	16.7				0.0	23.0	35.3	3.3	0.3	0.0
Unsig. Movement Delay, s/veh												
LnGrp Delay(d),s/veh	32.3	0.0	63.1				0.0	147.7	278.1	19.1	1.0	0.0
LnGrp LOS	C	A	E				A	F	F	B	A	A
Approach Vol, veh/h		1127						2070			2386	
Approach Delay, s/veh		45.8						183.7			5.0	
Approach LOS		D						F			A	

Timer - Assigned Phs	1	2	4	6
Phs Duration (G+Y+Rc), s	38.0	31.0	41.0	69.0
Change Period (Y+Rc), s	4.5	4.5	4.5	4.5
Max Green Setting (Gmax), s	33.5	26.5	36.5	64.5
Max Q Clear Time (g_c+I1), s	12.4	28.5	35.5	2.0
Green Ext Time (p_c), s	1.9	0.0	0.5	26.0

Intersection Summary	
HCM 6th Ctrl Delay	79.5
HCM 6th LOS	E

Notes

User approved volume balancing among the lanes for turning movement.

Movement	EBL	EBT	EBR	WBL	WBT	WBR	NBL	NBT	NBR	SBL	SBT	SBR
Lane Configurations												
Traffic Volume (veh/h)	353	8	24	10	0	151	49	1506	32	148	1502	601
Future Volume (veh/h)	353	8	24	10	0	151	49	1506	32	148	1502	601
Initial Q (Qb), veh	0	0	0	0	0	0	0	0	0	0	0	0
Ped-Bike Adj(A_pbT)	1.00		1.00	1.00		1.00	1.00		1.00	1.00		1.00
Parking Bus, Adj	1.00	1.00	1.00	1.00	1.00	1.00	1.00	1.00	1.00	1.00	1.00	1.00
Work Zone On Approach		No			No			No			No	
Adj Sat Flow, veh/h/ln	1772	1870	1870	1772	1870	1870	1772	1870	1870	1772	1870	1870
Adj Flow Rate, veh/h	368	8	25	10	0	157	51	1569	33	154	1565	626
Peak Hour Factor	0.96	0.96	0.96	0.96	0.96	0.96	0.96	0.96	0.96	0.96	0.96	0.96
Percent Heavy Veh, %	2	2	2	2	2	2	2	2	2	2	2	2
Cap, veh/h	355	129	402	468	573	512	238	1472	31	238	1497	580
Arrive On Green	0.32	0.32	0.32	0.32	0.00	0.32	0.28	0.83	0.83	0.14	0.41	0.41
Sat Flow, veh/h	1165	399	1247	1303	1777	1585	1688	3559	75	1688	3620	1402
Grp Volume(v), veh/h	368	0	33	10	0	157	51	782	820	154	1469	722
Grp Sat Flow(s),veh/h/ln	1165	0	1646	1303	1777	1585	1688	1777	1857	1688	1702	1618
Q Serve(g_s), s	27.3	0.0	1.5	0.6	0.0	8.2	2.5	45.5	45.5	9.5	45.5	45.5
Cycle Q Clear(g_c), s	35.5	0.0	1.5	2.1	0.0	8.2	2.5	45.5	45.5	9.5	45.5	45.5
Prop In Lane	1.00		0.76	1.00		1.00	1.00		0.04	1.00		0.87
Lane Grp Cap(c), veh/h	355	0	531	468	573	512	238	735	768	238	1408	669
V/C Ratio(X)	1.04	0.00	0.06	0.02	0.00	0.31	0.21	1.06	1.07	0.65	1.04	1.08
Avail Cap(c_a), veh/h	355	0	531	468	573	512	238	735	768	238	1408	669
HCM Platoon Ratio	1.00	1.00	1.00	1.00	1.00	1.00	2.00	2.00	2.00	1.00	1.00	1.00
Upstream Filter(I)	1.00	0.00	1.00	1.00	0.00	1.00	1.00	1.00	1.00	1.00	1.00	1.00
Uniform Delay (d), s/veh	43.9	0.0	25.7	26.5	0.0	28.0	34.8	9.5	9.5	44.7	32.3	32.3
Incr Delay (d2), s/veh	57.9	0.0	0.2	0.1	0.0	1.6	2.1	51.6	52.0	12.9	36.0	58.2
Initial Q Delay(d3),s/veh	0.0	0.0	0.0	0.0	0.0	0.0	0.0	0.0	0.0	0.0	0.0	0.0
%ile BackOfQ(50%),veh/ln	15.5	0.0	0.6	0.2	0.0	3.3	1.2	14.2	15.0	4.8	25.1	28.0
Unsig. Movement Delay, s/veh												
LnGrp Delay(d),s/veh	101.7	0.0	26.0	26.6	0.0	29.6	36.9	61.1	61.5	57.5	68.2	90.5
LnGrp LOS	F	A	C	C	A	C	D	F	F	E	F	F
Approach Vol, veh/h		401			167			1653			2345	
Approach Delay, s/veh		95.5			29.4			60.5			74.4	
Approach LOS		F			C			E			E	

Timer - Assigned Phs	1	2		4	5	6		8
Phs Duration (G+Y+Rc), s	30.0	50.0		40.0	20.0	50.0		40.0
Change Period (Y+Rc), s	4.5	4.5		4.5	4.5	4.5		4.5
Max Green Setting (Gmax), s	25.5	45.5		35.5	15.5	45.5		35.5
Max Q Clear Time (g_c+I1), s	11.5	47.5		37.5	4.5	47.5		10.2
Green Ext Time (p_c), s	0.1	0.0		0.0	0.1	0.0		1.0

Intersection Summary	
HCM 6th Ctrl Delay	69.6
HCM 6th LOS	E

Intersection	
Intersection Delay, s/veh	118.7
Intersection LOS	F

Movement	EBL	EBT	EBR	WBL	WBT	WBR	NBL	NBT	NBR	SBL	SBT	SBR
Lane Configurations												
Traffic Vol, veh/h	230	638	71	27	712	11	89	77	48	4	71	449
Future Vol, veh/h	230	638	71	27	712	11	89	77	48	4	71	449
Peak Hour Factor	0.95	0.95	0.95	0.95	0.95	0.95	0.95	0.95	0.95	0.95	0.95	0.95
Heavy Vehicles, %	2	2	2	2	2	2	2	2	2	2	2	2
Mvmt Flow	242	672	75	28	749	12	94	81	51	4	75	473
Number of Lanes	1	2	0	1	2	0	0	1	0	0	1	0

Approach	EB	WB	NB	SB
Opposing Approach	WB	EB	SB	NB
Opposing Lanes	3	3	1	1
Conflicting Approach Left	SB	NB	EB	WB
Conflicting Lanes Left	1	1	3	3
Conflicting Approach Right	NB	SB	WB	EB
Conflicting Lanes Right	1	1	3	3
HCM Control Delay	72.5	125.8	35	225.3
HCM LOS	F	F	D	F

Lane	NBLn1	EBLn1	EBLn2	EBLn3	WBLn1	WBLn2	WBLn3	SBLn1
Vol Left, %	42%	100%	0%	0%	100%	0%	0%	1%
Vol Thru, %	36%	0%	100%	75%	0%	100%	96%	14%
Vol Right, %	22%	0%	0%	25%	0%	0%	4%	86%
Sign Control	Stop	Stop	Stop	Stop	Stop	Stop	Stop	Stop
Traffic Vol by Lane	214	230	425	284	27	475	248	524
LT Vol	89	230	0	0	27	0	0	4
Through Vol	77	0	425	213	0	475	237	71
RT Vol	48	0	0	71	0	0	11	449
Lane Flow Rate	225	242	448	299	28	500	261	552
Geometry Grp	7	7	7	7	7	7	7	7
Degree of Util (X)	0.655	0.641	1.123	0.735	0.077	1.292	0.673	1.408
Departure Headway (Hd)	12.065	10.982	10.443	10.254	11.046	10.508	10.475	9.813
Convergence, Y/N	Yes	Yes	Yes	Yes	Yes	Yes	Yes	Yes
Cap	302	332	349	355	326	350	348	375
Service Time	9.765	8.682	8.143	7.954	8.746	8.208	8.175	7.513
HCM Lane V/C Ratio	0.745	0.729	1.284	0.842	0.086	1.429	0.75	1.472
HCM Control Delay	35	31.4	118.6	36.7	14.7	181	32.3	225.3
HCM Lane LOS	D	D	F	E	B	F	D	F
HCM 95th-tile Q	4.3	4.2	15	5.6	0.2	20.6	4.6	26.1

Movement	EBL	EBT	EBR	WBL	WBT	WBR	NBL	NBT	NBR	SBL	SBT	SBR
Lane Configurations												
Traffic Volume (veh/h)	323	258	106	20	263	164	160	1029	12	151	1191	230
Future Volume (veh/h)	323	258	106	20	263	164	160	1029	12	151	1191	230
Initial Q (Qb), veh	0	0	0	0	0	0	0	0	0	0	0	0
Ped-Bike Adj(A_pbT)	1.00		1.00	1.00		1.00	1.00		1.00	1.00		1.00
Parking Bus, Adj	1.00	1.00	1.00	1.00	1.00	1.00	1.00	1.00	1.00	1.00	1.00	1.00
Work Zone On Approach		No			No			No			No	
Adj Sat Flow, veh/h/ln	1772	1870	1870	1772	1870	1870	1772	1870	1870	1772	1870	1870
Adj Flow Rate, veh/h	340	272	112	21	277	173	168	1083	13	159	1254	242
Peak Hour Factor	0.95	0.95	0.95	0.95	0.95	0.95	0.95	0.95	0.95	0.95	0.95	0.95
Percent Heavy Veh, %	2	2	2	2	2	2	2	2	2	2	2	2
Cap, veh/h	207	844	339	238	764	463	284	932	11	161	555	106
Arrive On Green	0.12	0.34	0.34	0.14	0.36	0.36	0.06	0.09	0.09	0.03	0.06	0.06
Sat Flow, veh/h	1688	2475	993	1688	2127	1289	1688	3596	43	1688	2976	569
Grp Volume(v), veh/h	340	193	191	21	230	220	168	535	561	159	744	752
Grp Sat Flow(s),veh/h/ln	1688	1777	1692	1688	1777	1638	1688	1777	1863	1688	1777	1768
Q Serve(g_s), s	13.5	8.8	9.2	1.2	10.5	10.9	10.7	28.5	28.5	10.4	20.5	20.5
Cycle Q Clear(g_c), s	13.5	8.8	9.2	1.2	10.5	10.9	10.7	28.5	28.5	10.4	20.5	20.5
Prop In Lane	1.00		0.59	1.00		0.79	1.00		0.02	1.00		0.32
Lane Grp Cap(c), veh/h	207	606	577	238	638	588	284	460	483	161	331	329
V/C Ratio(X)	1.64	0.32	0.33	0.09	0.36	0.37	0.59	1.16	1.16	0.99	2.25	2.28
Avail Cap(c_a), veh/h	207	606	577	238	638	588	284	460	483	161	331	329
HCM Platoon Ratio	1.00	1.00	1.00	1.00	1.00	1.00	0.33	0.33	0.33	0.33	0.33	0.33
Upstream Filter(I)	1.00	1.00	1.00	1.00	1.00	1.00	1.00	1.00	1.00	1.00	1.00	1.00
Uniform Delay (d), s/veh	48.3	26.8	26.9	41.1	26.0	26.1	48.3	50.3	50.3	53.2	51.6	51.6
Incr Delay (d2), s/veh	309.5	1.4	1.5	0.7	1.6	1.8	8.8	94.6	93.8	67.6	570.6	586.7
Initial Q Delay(d3),s/veh	0.0	0.0	0.0	0.0	0.0	0.0	0.0	0.0	0.0	0.0	0.0	0.0
%ile BackOfQ(50%),veh/ln	28.4	4.0	3.9	0.5	4.7	4.5	5.5	25.7	26.8	7.7	62.3	63.4
Unsig. Movement Delay, s/veh												
LnGrp Delay(d),s/veh	357.7	28.2	28.5	41.8	27.5	27.9	57.0	144.9	144.1	120.8	622.2	638.4
LnGrp LOS	F	C	C	D	C	C	E	F	F	F	F	F
Approach Vol, veh/h		724			471			1264			1655	
Approach Delay, s/veh		183.0			28.3			132.9			581.4	
Approach LOS		F			C			F			F	

Timer - Assigned Phs	1	2	3	4	5	6	7	8
Phs Duration (G+Y+Rc), s	15.0	33.0	20.0	42.0	23.0	25.0	18.0	44.0
Change Period (Y+Rc), s	4.5	4.5	4.5	4.5	4.5	4.5	4.5	4.5
Max Green Setting (Gmax), s	10.5	28.5	15.5	37.5	18.5	20.5	13.5	39.5
Max Q Clear Time (g_c+I1), s	12.4	30.5	3.2	11.2	12.7	22.5	15.5	12.9
Green Ext Time (p_c), s	0.0	0.0	0.0	2.4	0.2	0.0	0.0	2.9

Intersection Summary		
HCM 6th Ctrl Delay		310.2
HCM 6th LOS		F

Movement	EBL	EBT	EBR	WBL	WBT	WBR	NBL	NBT	NBR	SBL	SBT	SBR
Lane Configurations												
Traffic Volume (veh/h)	4	337	92	47	358	31	75	97	22	44	54	0
Future Volume (veh/h)	4	337	92	47	358	31	75	97	22	44	54	0
Initial Q (Qb), veh	0	0	0	0	0	0	0	0	0	0	0	0
Ped-Bike Adj(A_pbT)	1.00		1.00	1.00		1.00	1.00		1.00	1.00		1.00
Parking Bus, Adj	1.00	1.00	1.00	1.00	1.00	1.00	1.00	1.00	1.00	1.00	1.00	1.00
Work Zone On Approach		No			No			No			No	
Adj Sat Flow, veh/h/ln	1772	1870	1870	1772	1870	1870	1870	1870	1870	1870	1870	1870
Adj Flow Rate, veh/h	4	355	97	49	377	33	79	102	23	46	57	0
Peak Hour Factor	0.95	0.95	0.95	0.95	0.95	0.95	0.95	0.95	0.95	0.95	0.95	0.95
Percent Heavy Veh, %	2	2	2	2	2	2	2	2	2	2	2	2
Cap, veh/h	385	572	485	312	1012	88	365	436	85	409	460	0
Arrive On Green	0.31	0.31	0.31	0.31	0.31	0.31	0.46	0.46	0.46	0.46	0.46	0.00
Sat Flow, veh/h	924	1870	1585	889	3307	288	511	942	185	595	994	0
Grp Volume(v), veh/h	4	355	97	49	202	208	204	0	0	103	0	0
Grp Sat Flow(s),veh/h/ln	924	1870	1585	889	1777	1819	1638	0	0	1589	0	0
Q Serve(g_s), s	0.1	6.3	1.8	1.9	3.5	3.5	0.0	0.0	0.0	0.0	0.0	0.0
Cycle Q Clear(g_c), s	3.6	6.3	1.8	8.3	3.5	3.5	2.6	0.0	0.0	1.2	0.0	0.0
Prop In Lane	1.00		1.00	1.00		0.16	0.39		0.11	0.45		0.00
Lane Grp Cap(c), veh/h	385	572	485	312	543	556	887	0	0	869	0	0
V/C Ratio(X)	0.01	0.62	0.20	0.16	0.37	0.37	0.23	0.00	0.00	0.12	0.00	0.00
Avail Cap(c_a), veh/h	530	866	734	452	822	842	887	0	0	869	0	0
HCM Platoon Ratio	1.00	1.00	1.00	1.00	1.00	1.00	1.00	1.00	1.00	1.00	1.00	1.00
Upstream Filter(I)	1.00	1.00	1.00	1.00	1.00	1.00	1.00	0.00	0.00	1.00	0.00	0.00
Uniform Delay (d), s/veh	12.0	11.6	10.0	15.1	10.6	10.6	6.3	0.0	0.0	5.9	0.0	0.0
Incr Delay (d2), s/veh	0.0	1.1	0.2	0.2	0.4	0.4	0.6	0.0	0.0	0.3	0.0	0.0
Initial Q Delay(d3),s/veh	0.0	0.0	0.0	0.0	0.0	0.0	0.0	0.0	0.0	0.0	0.0	0.0
%ile BackOfQ(50%),veh/ln	0.0	2.2	0.5	0.4	1.1	1.2	0.8	0.0	0.0	0.4	0.0	0.0
Unsig. Movement Delay, s/veh												
LnGrp Delay(d),s/veh	12.0	12.7	10.2	15.3	11.0	11.0	6.9	0.0	0.0	6.2	0.0	0.0
LnGrp LOS	B	B	B	B	B	B	A	A	A	A	A	A
Approach Vol, veh/h		456			459			204			103	
Approach Delay, s/veh		12.1			11.5			6.9			6.2	
Approach LOS		B			B			A			A	

Timer - Assigned Phs	2	4	6	8
Phs Duration (G+Y+Rc), s	22.5	16.4	22.5	16.4
Change Period (Y+Rc), s	4.5	4.5	4.5	4.5
Max Green Setting (Gmax), s	18.0	18.0	18.0	18.0
Max Q Clear Time (g_c+I1), s	4.6	8.3	3.2	10.3
Green Ext Time (p_c), s	0.9	1.8	0.4	1.6

Intersection Summary	
HCM 6th Ctrl Delay	10.5
HCM 6th LOS	B

Intersection	
Intersection Delay, s/veh	20.2
Intersection LOS	C

Movement	EBL	EBT	EBR	WBL	WBT	WBR	NBL	NBT	NBR	SBL	SBT	SBR
Lane Configurations												
Traffic Vol, veh/h	36	132	151	31	164	35	106	206	20	30	225	47
Future Vol, veh/h	36	132	151	31	164	35	106	206	20	30	225	47
Peak Hour Factor	0.95	0.95	0.95	0.95	0.95	0.95	0.95	0.95	0.95	0.95	0.95	0.95
Heavy Vehicles, %	2	2	2	2	2	2	2	2	2	2	2	2
Mvmt Flow	38	139	159	33	173	37	112	217	21	32	237	49
Number of Lanes	0	1	0	0	1	1	0	1	0	0	1	0

Approach	EB	WB	NB	SB
Opposing Approach	WB	EB	SB	NB
Opposing Lanes	2	1	1	1
Conflicting Approach Left	SB	NB	EB	WB
Conflicting Lanes Left	1	1	1	2
Conflicting Approach Right	NB	SB	WB	EB
Conflicting Lanes Right	1	1	2	1
HCM Control Delay	21	15.6	22.7	20
HCM LOS	C	C	C	C

Lane	NBLn1	EBLn1	WBLn1	WBLn2	SBLn1
Vol Left, %	32%	11%	16%	0%	10%
Vol Thru, %	62%	41%	84%	0%	75%
Vol Right, %	6%	47%	0%	100%	16%
Sign Control	Stop	Stop	Stop	Stop	Stop
Traffic Vol by Lane	332	319	195	35	302
LT Vol	106	36	31	0	30
Through Vol	206	132	164	0	225
RT Vol	20	151	0	35	47
Lane Flow Rate	349	336	205	37	318
Geometry Grp	2	5	7	7	2
Degree of Util (X)	0.667	0.635	0.443	0.071	0.606
Departure Headway (Hd)	6.869	6.808	7.771	6.969	6.862
Convergence, Y/N	Yes	Yes	Yes	Yes	Yes
Cap	524	531	464	513	525
Service Time	4.916	4.857	5.524	4.721	4.912
HCM Lane V/C Ratio	0.666	0.633	0.442	0.072	0.606
HCM Control Delay	22.7	21	16.6	10.3	20
HCM Lane LOS	C	C	C	B	C
HCM 95th-tile Q	4.9	4.4	2.2	0.2	4

Movement	EBL	EBT	EBR	WBL	WBT	WBR	NBL	NBT	NBR	SBL	SBT	SBR
Lane Configurations												
Traffic Volume (veh/h)	89	116	101	42	116	47	108	1037	36	105	1150	84
Future Volume (veh/h)	89	116	101	42	116	47	108	1037	36	105	1150	84
Initial Q (Qb), veh	0	0	0	0	0	0	0	0	0	0	0	0
Ped-Bike Adj(A_pbT)	1.00		1.00	1.00		1.00	1.00		1.00	1.00		1.00
Parking Bus, Adj	1.00	1.00	1.00	1.00	1.00	1.00	1.00	1.00	1.00	1.00	1.00	1.00
Work Zone On Approach		No			No			No			No	
Adj Sat Flow, veh/h/ln	1870	1870	1870	1870	1870	1870	1772	1870	1870	1772	1870	1870
Adj Flow Rate, veh/h	94	122	106	44	122	49	114	1092	38	111	1211	88
Peak Hour Factor	0.95	0.95	0.95	0.95	0.95	0.95	0.95	0.95	0.95	0.95	0.95	0.95
Percent Heavy Veh, %	2	2	2	2	2	2	2	2	2	2	2	2
Cap, veh/h	47	43	425	41	93	425	361	1640	57	238	1329	96
Arrive On Green	0.27	0.27	0.27	0.27	0.27	0.27	0.07	0.15	0.15	0.09	0.26	0.26
Sat Flow, veh/h	0	159	1585	0	348	1585	1688	3503	122	1688	3360	244
Grp Volume(v), veh/h	216	0	106	166	0	49	114	554	576	111	640	659
Grp Sat Flow(s),veh/h/ln	159	0	1585	348	0	1585	1688	1777	1848	1688	1777	1826
Q Serve(g_s), s	0.0	0.0	5.8	0.0	0.0	2.6	7.1	32.3	32.3	6.9	38.4	38.5
Cycle Q Clear(g_c), s	29.5	0.0	5.8	29.5	0.0	2.6	7.1	32.3	32.3	6.9	38.4	38.5
Prop In Lane	0.44		1.00	0.27		1.00	1.00		0.07	1.00		0.13
Lane Grp Cap(c), veh/h	90	0	425	135	0	425	361	832	865	238	703	722
V/C Ratio(X)	2.41	0.00	0.25	1.23	0.00	0.12	0.32	0.67	0.67	0.47	0.91	0.91
Avail Cap(c_a), veh/h	90	0	425	135	0	425	361	832	865	238	703	722
HCM Platoon Ratio	1.00	1.00	1.00	1.00	1.00	1.00	0.33	0.33	0.33	0.67	0.67	0.67
Upstream Filter(I)	1.00	0.00	1.00	1.00	0.00	1.00	1.00	1.00	1.00	1.00	1.00	1.00
Uniform Delay (d), s/veh	41.6	0.0	31.6	36.5	0.0	30.4	43.5	38.4	38.4	45.9	38.5	38.6
Incr Delay (d2), s/veh	668.1	0.0	1.4	153.0	0.0	0.6	2.3	4.2	4.0	6.5	18.0	17.9
Initial Q Delay(d3),s/veh	0.0	0.0	0.0	0.0	0.0	0.0	0.0	0.0	0.0	0.0	0.0	0.0
%ile BackOfQ(50%),veh/ln	19.1	0.0	2.4	8.6	0.0	1.0	3.3	16.3	17.0	3.4	20.8	21.4
Unsig. Movement Delay, s/veh												
LnGrp Delay(d),s/veh	709.6	0.0	33.0	189.5	0.0	30.9	45.8	42.6	42.4	52.3	56.5	56.5
LnGrp LOS	F	A	C	F	A	C	D	D	D	D	E	E
Approach Vol, veh/h		322			215			1244			1410	
Approach Delay, s/veh		486.9			153.4			42.8			56.2	
Approach LOS		F			F			D			E	

Timer - Assigned Phs	1	2		4	5	6		8
Phs Duration (G+Y+Rc), s	30.0	56.0		34.0	28.0	48.0		34.0
Change Period (Y+Rc), s	4.5	4.5		4.5	4.5	4.5		4.5
Max Green Setting (Gmax), s	25.5	51.5		29.5	23.5	43.5		29.5
Max Q Clear Time (g_c+I1), s	29.5	34.3		31.5	9.1	40.5		31.5
Green Ext Time (p_c), s	0.1	7.2		0.0	0.2	2.2		0.0

Intersection Summary	
HCM 6th Ctrl Delay	101.0
HCM 6th LOS	F

Intersection	
Intersection Delay, s/veh	12.5
Intersection LOS	B

Movement	EBL	EBT	EBR	WBL	WBT	WBR	NBL	NBT	NBR	SBL	SBT	SBR
Lane Configurations												
Traffic Vol, veh/h	18	162	79	39	154	31	31	109	19	69	168	26
Future Vol, veh/h	18	162	79	39	154	31	31	109	19	69	168	26
Peak Hour Factor	0.95	0.95	0.95	0.95	0.95	0.95	0.95	0.95	0.95	0.95	0.95	0.95
Heavy Vehicles, %	2	2	2	2	2	2	2	2	2	2	2	2
Mvmt Flow	19	171	83	41	162	33	33	115	20	73	177	27
Number of Lanes	0	1	0	0	1	1	0	1	0	0	1	0

Approach	EB	WB	NB	SB
Opposing Approach	WB	EB	SB	NB
Opposing Lanes	2	1	1	1
Conflicting Approach Left	SB	NB	EB	WB
Conflicting Lanes Left	1	1	1	2
Conflicting Approach Right	NB	SB	WB	EB
Conflicting Lanes Right	1	1	2	1
HCM Control Delay	12.8	12.1	11.2	13.2
HCM LOS	B	B	B	B

Lane	NBLn1	EBLn1	WBLn1	WBLn2	SBLn1
Vol Left, %	19%	7%	20%	0%	26%
Vol Thru, %	69%	63%	80%	0%	64%
Vol Right, %	12%	31%	0%	100%	10%
Sign Control	Stop	Stop	Stop	Stop	Stop
Traffic Vol by Lane	159	259	193	31	263
LT Vol	31	18	39	0	69
Through Vol	109	162	154	0	168
RT Vol	19	79	0	31	26
Lane Flow Rate	167	273	203	33	277
Geometry Grp	2	5	7	7	2
Degree of Util (X)	0.274	0.425	0.358	0.05	0.439
Departure Headway (Hd)	5.894	5.612	6.352	5.537	5.707
Convergence, Y/N	Yes	Yes	Yes	Yes	Yes
Cap	606	638	565	643	628
Service Time	3.969	3.677	4.12	3.305	3.771
HCM Lane V/C Ratio	0.276	0.428	0.359	0.051	0.441
HCM Control Delay	11.2	12.8	12.7	8.6	13.2
HCM Lane LOS	B	B	B	A	B
HCM 95th-tile Q	1.1	2.1	1.6	0.2	2.2

Intersection	
Int Delay, s/veh	0

Movement	WBL	WBR	NBT	NBR	SBL	SBT
Lane Configurations						
Traffic Vol, veh/h	0	0	1058	0	0	1051
Future Vol, veh/h	0	0	1058	0	0	1051
Conflicting Peds, #/hr	0	0	0	0	0	0
Sign Control	Stop	Stop	Free	Free	Free	Free
RT Channelized	-	None	-	None	-	None
Storage Length	-	0	-	-	-	-
Veh in Median Storage, #	0	-	0	-	-	0
Grade, %	0	-	0	-	-	0
Peak Hour Factor	95	95	95	95	95	95
Heavy Vehicles, %	2	2	2	2	2	2
Mvmt Flow	0	0	1114	0	0	1106

Major/Minor	Minor1		Major1		Major2	
Conflicting Flow All	-	557	0	0	-	-
Stage 1	-	-	-	-	-	-
Stage 2	-	-	-	-	-	-
Critical Hdwy	-	6.94	-	-	-	-
Critical Hdwy Stg 1	-	-	-	-	-	-
Critical Hdwy Stg 2	-	-	-	-	-	-
Follow-up Hdwy	-	3.32	-	-	-	-
Pot Cap-1 Maneuver	0	474	-	-	0	-
Stage 1	0	-	-	-	0	-
Stage 2	0	-	-	-	0	-
Platoon blocked, %			-	-		-
Mov Cap-1 Maneuver	-	474	-	-	-	-
Mov Cap-2 Maneuver	-	-	-	-	-	-
Stage 1	-	-	-	-	-	-
Stage 2	-	-	-	-	-	-

Approach	WB	NB	SB
HCM Control Delay, s	0	0	0
HCM LOS	A		

Minor Lane/Major Mvmt	NBT	NBR	WBLn1	SBT
Capacity (veh/h)	-	-	-	-
HCM Lane V/C Ratio	-	-	-	-
HCM Control Delay (s)	-	-	0	-
HCM Lane LOS	-	-	A	-
HCM 95th %tile Q(veh)	-	-	-	-

Intersection	
Int Delay, s/veh	0

Movement	EBT	EBR	WBL	WBT	NBL	NBR
Lane Configurations						
Traffic Vol, veh/h	255	0	0	210	0	0
Future Vol, veh/h	255	0	0	210	0	0
Conflicting Peds, #/hr	0	0	0	0	0	0
Sign Control	Free	Free	Free	Free	Stop	Stop
RT Channelized	-	None	-	None	-	None
Storage Length	-	-	-	-	0	-
Veh in Median Storage, #	0	-	-	0	0	-
Grade, %	0	-	-	0	0	-
Peak Hour Factor	95	95	95	95	95	95
Heavy Vehicles, %	2	2	2	2	2	2
Mvmt Flow	268	0	0	221	0	0

Major/Minor	Major1		Major2		Minor1	
Conflicting Flow All	0	0	-	-	379	-
Stage 1	-	-	-	-	268	-
Stage 2	-	-	-	-	111	-
Critical Hdwy	-	-	-	-	6.63	-
Critical Hdwy Stg 1	-	-	-	-	5.43	-
Critical Hdwy Stg 2	-	-	-	-	5.83	-
Follow-up Hdwy	-	-	-	-	3.519	-
Pot Cap-1 Maneuver	-	-	0	-	609	0
Stage 1	-	-	0	-	776	0
Stage 2	-	-	0	-	902	0
Platoon blocked, %	-	-		-		
Mov Cap-1 Maneuver	-	-	-	-	609	-
Mov Cap-2 Maneuver	-	-	-	-	609	-
Stage 1	-	-	-	-	776	-
Stage 2	-	-	-	-	902	-

Approach	EB	WB	NB
HCM Control Delay, s	0	0	0
HCM LOS			A

Minor Lane/Major Mvmt	NBLn1	EBT	EBR	WBT
Capacity (veh/h)	-	-	-	-
HCM Lane V/C Ratio	-	-	-	-
HCM Control Delay (s)	0	-	-	-
HCM Lane LOS	A	-	-	-
HCM 95th %tile Q(veh)	-	-	-	-

Movement	EBT	EBR	WBL	WBT	NBL	NBR
Lane Configurations						
Traffic Volume (veh/h)	255	0	0	210	0	0
Future Volume (veh/h)	255	0	0	210	0	0
Initial Q (Qb), veh	0	0	0	0		
Ped-Bike Adj(A_pbT)		1.00	1.00			
Parking Bus, Adj	1.00	1.00	1.00	1.00		
Work Zone On Approach	No			No		
Adj Sat Flow, veh/h/ln	1870	0	0	1870		
Adj Flow Rate, veh/h	277	0	0	228		
Peak Hour Factor	0.92	0.92	0.92	0.92		
Percent Heavy Veh, %	2	0	0	2		
Cap, veh/h	1496	0	0	2843		
Arrive On Green	0.80	0.00	0.00	0.80		
Sat Flow, veh/h	1870	0	0	3741		
Grp Volume(v), veh/h	277	0	0	228		
Grp Sat Flow(s),veh/h/ln	1870	0	0	1777		
Q Serve(g_s), s	0.8	0.0	0.0	0.3		
Cycle Q Clear(g_c), s	0.8	0.0	0.0	0.3		
Prop In Lane		0.00	0.00			
Lane Grp Cap(c), veh/h	1496	0	0	2843		
V/C Ratio(X)	0.19	0.00	0.00	0.08		
Avail Cap(c_a), veh/h	1496	0	0	2843		
HCM Platoon Ratio	1.00	1.00	1.00	1.00		
Upstream Filter(I)	1.00	0.00	0.00	1.00		
Uniform Delay (d), s/veh	0.5	0.0	0.0	0.5		
Incr Delay (d2), s/veh	0.3	0.0	0.0	0.1		
Initial Q Delay(d3),s/veh	0.0	0.0	0.0	0.0		
%ile BackOfQ(50%),veh/ln	0.1	0.0	0.0	0.0		
Unsig. Movement Delay, s/veh						
LnGrp Delay(d),s/veh	0.8	0.0	0.0	0.5		
LnGrp LOS	A	A	A	A		
Approach Vol, veh/h	277			228		
Approach Delay, s/veh	0.8			0.5		
Approach LOS	A			A		

Timer - Assigned Phs	4	8
Phs Duration (G+Y+Rc), s	22.5	22.5
Change Period (Y+Rc), s	4.5	4.5
Max Green Setting (Gmax), s	18.0	18.0
Max Q Clear Time (g_c+I1), s	2.8	2.3
Green Ext Time (p_c), s	1.4	1.2

Intersection Summary	
HCM 6th Ctrl Delay	0.7
HCM 6th LOS	A

Intersection	
Intersection Delay, s/veh	14
Intersection LOS	B

Movement	EBL	EBT	EBR	WBL	WBT	WBR	NBL	NBT	NBR	SBL	SBT	SBR
Lane Configurations												
Traffic Vol, veh/h	23	184	26	4	126	98	15	238	8	57	186	54
Future Vol, veh/h	23	184	26	4	126	98	15	238	8	57	186	54
Peak Hour Factor	0.95	0.95	0.95	0.95	0.95	0.95	0.95	0.95	0.95	0.95	0.95	0.95
Heavy Vehicles, %	2	2	2	2	2	2	2	2	2	2	2	2
Mvmt Flow	24	194	27	4	133	103	16	251	8	60	196	57
Number of Lanes	0	1	1	0	2	0	0	1	0	0	1	0

Approach	EB	WB	NB	SB
Opposing Approach	WB	EB	SB	NB
Opposing Lanes	2	2	1	1
Conflicting Approach Left	SB	NB	EB	WB
Conflicting Lanes Left	1	1	2	2
Conflicting Approach Right	NB	SB	WB	EB
Conflicting Lanes Right	1	1	2	2
HCM Control Delay	13.9	11.6	14.4	15.4
HCM LOS	B	B	B	C

Lane	NBLn1	EBLn1	EBLn2	WBLn1	WBLn2	SBLn1
Vol Left, %	6%	11%	0%	6%	0%	19%
Vol Thru, %	91%	89%	0%	94%	39%	63%
Vol Right, %	3%	0%	100%	0%	61%	18%
Sign Control	Stop	Stop	Stop	Stop	Stop	Stop
Traffic Vol by Lane	261	207	26	67	161	297
LT Vol	15	23	0	4	0	57
Through Vol	238	184	0	63	63	186
RT Vol	8	0	26	0	98	54
Lane Flow Rate	275	218	27	71	169	313
Geometry Grp	2	7	7	7	7	2
Degree of Util (X)	0.466	0.416	0.046	0.135	0.303	0.522
Departure Headway (Hd)	6.11	6.873	6.099	6.897	6.43	6.008
Convergence, Y/N	Yes	Yes	Yes	Yes	Yes	Yes
Cap	591	523	586	520	558	603
Service Time	4.15	4.62	3.845	4.644	4.177	4.008
HCM Lane V/C Ratio	0.465	0.417	0.046	0.137	0.303	0.519
HCM Control Delay	14.4	14.5	9.1	10.7	12	15.4
HCM Lane LOS	B	B	A	B	B	C
HCM 95th-tile Q	2.5	2	0.1	0.5	1.3	3

Movement	EBL	EBT	EBR	WBL	WBT	WBR	NBL	NBT	NBR	SBL	SBT	SBR
Lane Configurations												
Traffic Volume (veh/h)	67	189	48	57	174	193	54	859	63	114	1137	30
Future Volume (veh/h)	67	189	48	57	174	193	54	859	63	114	1137	30
Initial Q (Qb), veh	0	0	0	0	0	0	0	0	0	0	0	0
Ped-Bike Adj(A_pbT)	1.00		1.00	1.00		1.00	1.00		1.00	1.00		1.00
Parking Bus, Adj	1.00	1.00	1.00	1.00	1.00	1.00	1.00	1.00	1.00	1.00	1.00	1.00
Work Zone On Approach		No			No			No			No	
Adj Sat Flow, veh/h/ln	1870	1870	1870	1870	1870	1870	1772	1870	1870	1772	1870	1870
Adj Flow Rate, veh/h	71	199	51	60	183	203	57	904	66	120	1197	32
Peak Hour Factor	0.95	0.95	0.95	0.95	0.95	0.95	0.95	0.95	0.95	0.95	0.95	0.95
Percent Heavy Veh, %	2	2	2	2	2	2	2	2	2	2	2	2
Cap, veh/h	147	457	130	119	339	387	238	1542	113	238	1623	43
Arrive On Green	0.28	0.28	0.28	0.28	0.28	0.28	0.14	0.46	0.46	0.05	0.15	0.15
Sat Flow, veh/h	356	1649	470	279	1224	1394	1688	3358	245	1688	3536	94
Grp Volume(v), veh/h	145	0	176	235	0	211	57	478	492	120	601	628
Grp Sat Flow(s),veh/h/ln	857	0	1617	1446	0	1451	1688	1777	1826	1688	1777	1853
Q Serve(g_s), s	8.2	0.0	9.7	7.4	0.0	13.6	3.3	21.9	21.9	7.6	35.6	35.6
Cycle Q Clear(g_c), s	21.8	0.0	9.7	17.1	0.0	13.6	3.3	21.9	21.9	7.6	35.6	35.6
Prop In Lane	0.49		0.29	0.26		0.96	1.00		0.13	1.00		0.05
Lane Grp Cap(c), veh/h	286	0	448	442	0	402	238	816	838	238	816	851
V/C Ratio(X)	0.51	0.00	0.39	0.53	0.00	0.53	0.24	0.59	0.59	0.50	0.74	0.74
Avail Cap(c_a), veh/h	286	0	448	442	0	402	238	816	838	238	816	851
HCM Platoon Ratio	1.00	1.00	1.00	1.00	1.00	1.00	1.00	1.00	1.00	0.33	0.33	0.33
Upstream Filter(I)	1.00	0.00	1.00	1.00	0.00	1.00	1.00	1.00	1.00	1.00	1.00	1.00
Uniform Delay (d), s/veh	38.8	0.0	32.2	34.8	0.0	33.6	42.0	22.0	22.0	48.7	40.3	40.3
Incr Delay (d2), s/veh	6.3	0.0	2.6	4.5	0.0	4.8	2.4	3.1	3.0	7.5	5.9	5.7
Initial Q Delay(d3),s/veh	0.0	0.0	0.0	0.0	0.0	0.0	0.0	0.0	0.0	0.0	0.0	0.0
%ile BackOfQ(50%),veh/ln	4.1	0.0	4.1	6.0	0.0	5.3	1.5	9.6	9.9	3.9	18.2	19.0
Unsig. Movement Delay, s/veh												
LnGrp Delay(d),s/veh	45.1	0.0	34.8	39.3	0.0	38.5	44.4	25.1	25.0	56.2	46.2	46.0
LnGrp LOS	D	A	C	D	A	D	D	C	C	E	D	D
Approach Vol, veh/h		321			446			1027			1349	
Approach Delay, s/veh		39.4			38.9			26.1			47.0	
Approach LOS		D			D			C			D	

Timer - Assigned Phs	1	2		4	5	6		8
Phs Duration (G+Y+Rc), s	20.0	55.0		35.0	20.0	55.0		35.0
Change Period (Y+Rc), s	4.5	4.5		4.5	4.5	4.5		4.5
Max Green Setting (Gmax), s	15.5	50.5		30.5	15.5	50.5		30.5
Max Q Clear Time (g_c+I1), s	19.6	23.9		23.8	5.3	37.6		19.1
Green Ext Time (p_c), s	0.1	7.1		1.1	0.1	6.7		2.2

Intersection Summary		
HCM 6th Ctrl Delay		38.3
HCM 6th LOS		D

Intersection	
Int Delay, s/veh	2.9

Movement	EBL	EBT	WBT	WBR	SBL	SBR
Lane Configurations						
Traffic Vol, veh/h	152	304	275	104	19	82
Future Vol, veh/h	152	304	275	104	19	82
Conflicting Peds, #/hr	0	0	0	0	0	0
Sign Control	Free	Free	Free	Free	Stop	Stop
RT Channelized	-	None	-	None	-	None
Storage Length	-	-	-	-	0	-
Veh in Median Storage, #	-	0	0	-	0	-
Grade, %	-	0	0	-	0	-
Peak Hour Factor	95	95	95	95	95	95
Heavy Vehicles, %	2	2	2	2	2	2
Mvmt Flow	160	320	289	109	20	86

Major/Minor	Major1		Major2		Minor2	
Conflicting Flow All	398	0	-	0	984	344
Stage 1	-	-	-	-	344	-
Stage 2	-	-	-	-	640	-
Critical Hdwy	4.12	-	-	-	6.42	6.22
Critical Hdwy Stg 1	-	-	-	-	5.42	-
Critical Hdwy Stg 2	-	-	-	-	5.42	-
Follow-up Hdwy	2.218	-	-	-	3.518	3.318
Pot Cap-1 Maneuver	1161	-	-	-	275	699
Stage 1	-	-	-	-	718	-
Stage 2	-	-	-	-	525	-
Platoon blocked, %		-	-	-		
Mov Cap-1 Maneuver	1161	-	-	-	229	699
Mov Cap-2 Maneuver	-	-	-	-	229	-
Stage 1	-	-	-	-	597	-
Stage 2	-	-	-	-	525	-

Approach	EB	WB	SB
HCM Control Delay, s	2.9	0	14
HCM LOS			B

Minor Lane/Major Mvmt	EBL	EBT	WBT	WBR	SBLn1
Capacity (veh/h)	1161	-	-	-	504
HCM Lane V/C Ratio	0.138	-	-	-	0.211
HCM Control Delay (s)	8.6	0	-	-	14
HCM Lane LOS	A	A	-	-	B
HCM 95th %tile Q(veh)	0.5	-	-	-	0.8

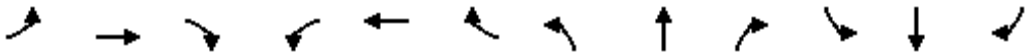

Movement	EBL	EBT	EBR	WBL	WBT	WBR	NBL	NBT	NBR	SBL	SBT	SBR
Lane Configurations												
Traffic Volume (veh/h)	13	1	23	84	0	62	11	675	82	85	1317	9
Future Volume (veh/h)	13	1	23	84	0	62	11	675	82	85	1317	9
Initial Q (Qb), veh	0	0	0	0	0	0	0	0	0	0	0	0
Ped-Bike Adj(A_pbT)	1.00		1.00	1.00		1.00	1.00		1.00	1.00		1.00
Parking Bus, Adj	1.00	1.00	1.00	1.00	1.00	1.00	1.00	1.00	1.00	1.00	1.00	1.00
Work Zone On Approach		No			No			No			No	
Adj Sat Flow, veh/h/ln	1870	1870	1870	1870	1870	1870	1772	1870	1870	1772	1870	1870
Adj Flow Rate, veh/h	14	1	24	88	0	65	12	711	86	89	1386	9
Peak Hour Factor	0.95	0.95	0.95	0.95	0.95	0.95	0.95	0.95	0.95	0.95	0.95	0.95
Percent Heavy Veh, %	2	2	2	2	2	2	2	2	2	2	2	2
Cap, veh/h	281	63	376	720	0	634	170	1277	154	307	1448	9
Arrive On Green	0.40	0.40	0.40	0.40	0.00	0.40	0.40	0.40	0.40	0.40	0.40	0.40
Sat Flow, veh/h	431	157	941	1400	0	1585	367	3192	386	646	3619	23
Grp Volume(v), veh/h	39	0	0	88	0	65	12	396	401	89	680	715
Grp Sat Flow(s),veh/h/ln	1529	0	0	1400	0	1585	367	1777	1801	646	1777	1866
Q Serve(g_s), s	0.0	0.0	0.0	1.0	0.0	1.2	1.2	7.7	7.7	5.6	16.7	16.8
Cycle Q Clear(g_c), s	0.6	0.0	0.0	1.6	0.0	1.2	18.0	7.7	7.7	13.3	16.7	16.8
Prop In Lane	0.36		0.62	1.00		1.00	1.00		0.21	1.00		0.01
Lane Grp Cap(c), veh/h	720	0	0	720	0	634	170	711	720	307	711	746
V/C Ratio(X)	0.05	0.00	0.00	0.12	0.00	0.10	0.07	0.56	0.56	0.29	0.96	0.96
Avail Cap(c_a), veh/h	720	0	0	720	0	634	170	711	720	307	711	746
HCM Platoon Ratio	1.00	1.00	1.00	1.00	1.00	1.00	1.00	1.00	1.00	1.00	1.00	1.00
Upstream Filter(I)	1.00	0.00	0.00	1.00	0.00	1.00	1.00	1.00	1.00	1.00	1.00	1.00
Uniform Delay (d), s/veh	8.3	0.0	0.0	8.6	0.0	8.4	22.0	10.4	10.4	15.6	13.1	13.1
Incr Delay (d2), s/veh	0.1	0.0	0.0	0.3	0.0	0.3	0.8	3.1	3.1	2.4	24.8	24.1
Initial Q Delay(d3),s/veh	0.0	0.0	0.0	0.0	0.0	0.0	0.0	0.0	0.0	0.0	0.0	0.0
%ile BackOfQ(50%),veh/ln	0.2	0.0	0.0	0.5	0.0	0.4	0.2	3.0	3.0	0.9	10.0	10.3
Unsig. Movement Delay, s/veh												
LnGrp Delay(d),s/veh	8.4	0.0	0.0	8.9	0.0	8.8	22.8	13.5	13.5	17.9	37.9	37.2
LnGrp LOS	A	A	A	A	A	A	C	B	B	B	D	D
Approach Vol, veh/h		39			153			809			1484	
Approach Delay, s/veh		8.4			8.8			13.7			36.4	
Approach LOS		A			A			B			D	

Timer - Assigned Phs		2		4		6		8				
Phs Duration (G+Y+Rc), s		22.5		22.5		22.5		22.5				
Change Period (Y+Rc), s		4.5		4.5		4.5		4.5				
Max Green Setting (Gmax), s		18.0		18.0		18.0		18.0				
Max Q Clear Time (g_c+I1), s		20.0		2.6		18.8		3.6				
Green Ext Time (p_c), s		0.0		0.1		0.0		0.5				

Intersection Summary												
HCM 6th Ctrl Delay			26.8									
HCM 6th LOS			C									

HCM 6th Signalized Intersection Summary
1: Cedar & Valley

06/16/2020

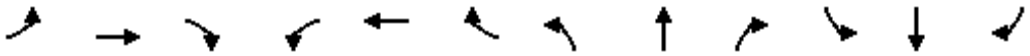

Movement	EBL	EBT	EBR	WBL	WBT	WBR	NBL	NBT	NBR	SBL	SBT	SBR
Lane Configurations												
Traffic Volume (veh/h)	63	232	714	446	345	53	474	1439	314	59	1723	31
Future Volume (veh/h)	63	232	714	446	345	53	474	1439	314	59	1723	31
Initial Q (Qb), veh	0	0	0	0	0	0	0	0	0	0	0	0
Ped-Bike Adj(A_pbT)	1.00		1.00	1.00		1.00	1.00		1.00	1.00		1.00
Parking Bus, Adj	1.00	1.00	1.00	1.00	1.00	1.00	1.00	1.00	1.00	1.00	1.00	1.00
Work Zone On Approach		No			No			No			No	
Adj Sat Flow, veh/h/ln	1673	1870	1772	1673	1870	1772	1673	1870	1870	1673	1870	1870
Adj Flow Rate, veh/h	66	242	744	465	359	55	494	1499	327	61	1795	32
Peak Hour Factor	0.96	0.96	0.96	0.96	0.96	0.96	0.96	0.96	0.96	0.96	0.96	0.96
Percent Heavy Veh, %	2	2	2	2	2	2	2	2	2	2	2	2
Cap, veh/h	861	748	1057	628	1237	188	356	2042	634	387	2066	37
Arrive On Green	0.40	0.40	0.40	0.40	0.40	0.40	0.40	0.40	0.40	0.40	0.40	0.40
Sat Flow, veh/h	1687	1870	2643	991	3093	470	443	5106	1585	443	5166	92
Grp Volume(v), veh/h	66	242	744	465	205	209	494	1499	327	61	1183	644
Grp Sat Flow(s),veh/h/ln	844	1870	1321	495	1777	1786	221	1702	1585	221	1702	1854
Q Serve(g_s), s	1.2	4.0	10.6	14.0	3.5	3.6	3.6	11.2	7.0	6.1	14.4	14.4
Cycle Q Clear(g_c), s	4.8	4.0	10.6	18.0	3.5	3.6	18.0	11.2	7.0	17.3	14.4	14.4
Prop In Lane	1.00		1.00	1.00		0.26	1.00		1.00	1.00		0.05
Lane Grp Cap(c), veh/h	861	748	1057	628	711	714	356	2042	634	387	1362	742
V/C Ratio(X)	0.08	0.32	0.70	0.74	0.29	0.29	1.39	0.73	0.52	0.16	0.87	0.87
Avail Cap(c_a), veh/h	861	748	1057	628	711	714	356	2042	634	387	1362	742
HCM Platoon Ratio	1.00	1.00	1.00	1.00	1.00	1.00	1.00	1.00	1.00	1.00	1.00	1.00
Upstream Filter(I)	1.00	1.00	1.00	1.00	1.00	1.00	1.00	1.00	1.00	1.00	1.00	1.00
Uniform Delay (d), s/veh	10.8	9.3	11.3	17.9	9.2	9.2	22.3	11.5	10.2	18.8	12.4	12.4
Incr Delay (d2), s/veh	0.2	1.1	3.9	7.7	1.0	1.0	191.8	2.4	3.0	0.9	7.7	13.2
Initial Q Delay(d3),s/veh	0.0	0.0	0.0	0.0	0.0	0.0	0.0	0.0	0.0	0.0	0.0	0.0
%ile BackOfQ(50%),veh/ln	0.2	1.5	3.0	2.9	1.3	1.3	11.2	3.7	2.4	0.3	5.6	7.3
Unsig. Movement Delay, s/veh												
LnGrp Delay(d),s/veh	11.0	10.4	15.2	25.5	10.2	10.2	214.1	13.8	13.2	19.7	20.1	25.6
LnGrp LOS	B	B	B	C	B	B	F	B	B	B	C	C
Approach Vol, veh/h		1052			879			2320			1888	
Approach Delay, s/veh		13.8			18.3			56.4			22.0	
Approach LOS		B			B			E			C	

Timer - Assigned Phs		2		4		6		8				
Phs Duration (G+Y+Rc), s		22.5		22.5		22.5		22.5				
Change Period (Y+Rc), s		4.5		4.5		4.5		4.5				
Max Green Setting (Gmax), s		18.0		18.0		18.0		18.0				
Max Q Clear Time (g_c+I1), s		20.0		12.6		19.3		20.0				
Green Ext Time (p_c), s		0.0		2.5		0.0		0.0				

Intersection Summary												
HCM 6th Ctrl Delay			33.1									
HCM 6th LOS			C									

Movement	EBL	EBT	EBR	WBL	WBT	WBR	NBL	NBT	NBR	SBL	SBT	SBR
Lane Configurations												
Traffic Volume (veh/h)	0	0	0	548	1	536	424	1679	0	0	1806	1111
Future Volume (veh/h)	0	0	0	548	1	536	424	1679	0	0	1806	1111
Initial Q (Qb), veh				0	0	0	0	0	0	0	0	0
Ped-Bike Adj(A_pbT)				1.00		1.00	1.00		1.00	1.00		1.00
Parking Bus, Adj				1.00	1.00	1.00	1.00	1.00	1.00	1.00	1.00	1.00
Work Zone On Approach					No			No			No	
Adj Sat Flow, veh/h/ln				1772	1870	1870	1772	1870	0	0	1870	1870
Adj Flow Rate, veh/h				565	0	554	437	1731	0	0	1862	1145
Peak Hour Factor				0.97	0.97	0.97	0.97	0.97	0.97	0.97	0.97	0.97
Percent Heavy Veh, %				2	2	2	2	2	0	0	2	2
Cap, veh/h				1089	0	1535	759	3040	0	0	1648	512
Arrive On Green				0.32	0.00	0.32	0.46	1.00	0.00	0.00	0.32	0.32
Sat Flow, veh/h				3375	0	4755	3274	5274	0	0	5274	1585
Grp Volume(v), veh/h				565	0	554	437	1731	0	0	1862	1145
Grp Sat Flow(s),veh/h/ln				1688	0	1585	1637	1702	0	0	1702	1585
Q Serve(g_s), s				15.0	0.0	9.8	10.7	0.0	0.0	0.0	35.5	35.5
Cycle Q Clear(g_c), s				15.0	0.0	9.8	10.7	0.0	0.0	0.0	35.5	35.5
Prop In Lane				1.00		1.00	1.00		0.00	0.00		1.00
Lane Grp Cap(c), veh/h				1089	0	1535	759	3040	0	0	1648	512
V/C Ratio(X)				0.52	0.00	0.36	0.58	0.57	0.00	0.00	1.13	2.24
Avail Cap(c_a), veh/h				1089	0	1535	759	3040	0	0	1648	512
HCM Platoon Ratio				1.00	1.00	1.00	2.00	2.00	1.00	1.00	1.00	1.00
Upstream Filter(I)				1.00	0.00	1.00	1.00	1.00	0.00	0.00	1.00	1.00
Uniform Delay (d), s/veh				30.3	0.0	28.6	25.5	0.0	0.0	0.0	37.3	37.3
Incr Delay (d2), s/veh				1.8	0.0	0.7	3.2	0.8	0.0	0.0	66.8	563.5
Initial Q Delay(d3),s/veh				0.0	0.0	0.0	0.0	0.0	0.0	0.0	0.0	0.0
%ile BackOfQ(50%),veh/ln				6.3	0.0	3.8	3.8	0.2	0.0	0.0	24.6	93.5
Unsig. Movement Delay, s/veh												
LnGrp Delay(d),s/veh				32.1	0.0	29.2	28.7	0.8	0.0	0.0	104.0	600.8
LnGrp LOS				C	A	C	C	A	A	A	F	F
Approach Vol, veh/h					1119			2168			3007	
Approach Delay, s/veh					30.7			6.4			293.2	
Approach LOS					C			A			F	

Timer - Assigned Phs	2		5	6		8
Phs Duration (G+Y+Rc), s	70.0		30.0	40.0		40.0
Change Period (Y+Rc), s	4.5		4.5	4.5		4.5
Max Green Setting (Gmax), s	65.5		25.5	35.5		35.5
Max Q Clear Time (g_c+I1), s	2.0		12.7	37.5		17.0
Green Ext Time (p_c), s	23.1		1.3	0.0		4.6

Intersection Summary	
HCM 6th Ctrl Delay	147.7
HCM 6th LOS	F

Notes

User approved volume balancing among the lanes for turning movement.

Movement	EBL	EBT	EBR	WBL	WBT	WBR	NBL	NBT	NBR	SBL	SBT	SBR
Lane Configurations												
Traffic Volume (veh/h)	637	0	486	0	0	0	0	1506	579	524	1833	0
Future Volume (veh/h)	637	0	486	0	0	0	0	1506	579	524	1833	0
Initial Q (Qb), veh	0	0	0				0	0	0	0	0	0
Ped-Bike Adj(A_pbT)	1.00		1.00				1.00		1.00	1.00		1.00
Parking Bus, Adj	1.00	1.00	1.00				1.00	1.00	1.00	1.00	1.00	1.00
Work Zone On Approach		No						No			No	
Adj Sat Flow, veh/h/ln	1772	1870	1870				0	1870	1870	1772	1870	0
Adj Flow Rate, veh/h	650	0	496				0	1537	591	535	1870	0
Peak Hour Factor	0.98	0.98	0.98				0.98	0.98	0.98	0.98	0.98	0.98
Percent Heavy Veh, %	2	2	2				0	2	2	2	2	0
Cap, veh/h	1120	0	526				0	1230	382	997	2994	0
Arrive On Green	0.33	0.00	0.33				0.00	0.24	0.24	0.61	1.00	0.00
Sat Flow, veh/h	3375	0	1585				0	5274	1585	3274	5274	0
Grp Volume(v), veh/h	650	0	496				0	1537	591	535	1870	0
Grp Sat Flow(s),veh/h/ln	1688	0	1585				0	1702	1585	1637	1702	0
Q Serve(g_s), s	17.5	0.0	33.5				0.0	26.5	26.5	10.4	0.0	0.0
Cycle Q Clear(g_c), s	17.5	0.0	33.5				0.0	26.5	26.5	10.4	0.0	0.0
Prop In Lane	1.00		1.00				0.00		1.00	1.00		0.00
Lane Grp Cap(c), veh/h	1120	0	526				0	1230	382	997	2994	0
V/C Ratio(X)	0.58	0.00	0.94				0.00	1.25	1.55	0.54	0.62	0.00
Avail Cap(c_a), veh/h	1120	0	526				0	1230	382	997	2994	0
HCM Platoon Ratio	1.00	1.00	1.00				1.00	1.00	1.00	2.00	2.00	1.00
Upstream Filter(I)	1.00	0.00	1.00				0.00	1.00	1.00	1.00	1.00	0.00
Uniform Delay (d), s/veh	30.4	0.0	35.7				0.0	41.8	41.8	17.0	0.0	0.0
Incr Delay (d2), s/veh	2.2	0.0	27.4				0.0	119.2	259.1	2.1	1.0	0.0
Initial Q Delay(d3),s/veh	0.0	0.0	0.0				0.0	0.0	0.0	0.0	0.0	0.0
%ile BackOfQ(50%),veh/ln	7.4	0.0	16.7				0.0	24.5	37.7	3.3	0.3	0.0
Unsig. Movement Delay, s/veh												
LnGrp Delay(d),s/veh	32.6	0.0	63.1				0.0	160.9	300.9	19.1	1.0	0.0
LnGrp LOS	C	A	E				A	F	F	B	A	A
Approach Vol, veh/h		1146						2128			2405	
Approach Delay, s/veh		45.8						199.8			5.0	
Approach LOS		D						F			A	

Timer - Assigned Phs	1	2	4	6
Phs Duration (G+Y+Rc), s	38.0	31.0	41.0	69.0
Change Period (Y+Rc), s	4.5	4.5	4.5	4.5
Max Green Setting (Gmax), s	33.5	26.5	36.5	64.5
Max Q Clear Time (g_c+I1), s	12.4	28.5	35.5	2.0
Green Ext Time (p_c), s	1.9	0.0	0.6	26.5

Intersection Summary	
HCM 6th Ctrl Delay	86.2
HCM 6th LOS	F

Notes

User approved volume balancing among the lanes for turning movement.

Movement	EBL	EBT	EBR	WBL	WBT	WBR	NBL	NBT	NBR	SBL	SBT	SBR
Lane Configurations												
Traffic Volume (veh/h)	353	8	24	10	0	151	58	1562	41	148	1539	601
Future Volume (veh/h)	353	8	24	10	0	151	58	1562	41	148	1539	601
Initial Q (Qb), veh	0	0	0	0	0	0	0	0	0	0	0	0
Ped-Bike Adj(A_pbT)	1.00		1.00	1.00		1.00	1.00		1.00	1.00		1.00
Parking Bus, Adj	1.00	1.00	1.00	1.00	1.00	1.00	1.00	1.00	1.00	1.00	1.00	1.00
Work Zone On Approach		No			No			No			No	
Adj Sat Flow, veh/h/ln	1772	1870	1870	1772	1870	1870	1772	1870	1870	1772	1870	1870
Adj Flow Rate, veh/h	368	8	25	10	0	157	60	1627	43	154	1603	626
Peak Hour Factor	0.96	0.96	0.96	0.96	0.96	0.96	0.96	0.96	0.96	0.96	0.96	0.96
Percent Heavy Veh, %	2	2	2	2	2	2	2	2	2	2	2	2
Cap, veh/h	355	129	402	468	573	512	238	1463	39	238	1510	569
Arrive On Green	0.32	0.32	0.32	0.32	0.00	0.32	0.19	0.55	0.55	0.14	0.41	0.41
Sat Flow, veh/h	1165	399	1247	1303	1777	1585	1688	3537	93	1688	3650	1376
Grp Volume(v), veh/h	368	0	33	10	0	157	60	815	855	154	1491	738
Grp Sat Flow(s),veh/h/ln	1165	0	1646	1303	1777	1585	1688	1777	1854	1688	1702	1623
Q Serve(g_s), s	27.3	0.0	1.5	0.6	0.0	8.2	3.3	45.5	45.5	9.5	45.5	45.5
Cycle Q Clear(g_c), s	35.5	0.0	1.5	2.1	0.0	8.2	3.3	45.5	45.5	9.5	45.5	45.5
Prop In Lane	1.00		0.76	1.00		1.00	1.00		0.05	1.00		0.85
Lane Grp Cap(c), veh/h	355	0	531	468	573	512	238	735	767	238	1408	671
V/C Ratio(X)	1.04	0.00	0.06	0.02	0.00	0.31	0.25	1.11	1.11	0.65	1.06	1.10
Avail Cap(c_a), veh/h	355	0	531	468	573	512	238	735	767	238	1408	671
HCM Platoon Ratio	1.00	1.00	1.00	1.00	1.00	1.00	1.33	1.33	1.33	1.00	1.00	1.00
Upstream Filter(I)	1.00	0.00	1.00	1.00	0.00	1.00	1.00	1.00	1.00	1.00	1.00	1.00
Uniform Delay (d), s/veh	43.9	0.0	25.7	26.5	0.0	28.0	39.8	24.7	24.7	44.7	32.3	32.3
Incr Delay (d2), s/veh	57.9	0.0	0.2	0.1	0.0	1.6	2.5	67.4	68.7	12.9	41.3	65.1
Initial Q Delay(d3),s/veh	0.0	0.0	0.0	0.0	0.0	0.0	0.0	0.0	0.0	0.0	0.0	0.0
%ile BackOfQ(50%),veh/ln	15.5	0.0	0.6	0.2	0.0	3.3	1.5	29.9	31.5	4.8	26.1	29.3
Unsig. Movement Delay, s/veh												
LnGrp Delay(d),s/veh	101.7	0.0	26.0	26.6	0.0	29.6	42.3	92.1	93.5	57.5	73.5	97.4
LnGrp LOS	F	A	C	C	A	C	D	F	F	E	F	F
Approach Vol, veh/h		401			167			1730			2383	
Approach Delay, s/veh		95.5			29.4			91.1			79.9	
Approach LOS		F			C			F			E	

Timer - Assigned Phs	1	2		4	5	6		8
Phs Duration (G+Y+Rc), s	30.0	50.0		40.0	20.0	50.0		40.0
Change Period (Y+Rc), s	4.5	4.5		4.5	4.5	4.5		4.5
Max Green Setting (Gmax), s	25.5	45.5		35.5	15.5	45.5		35.5
Max Q Clear Time (g_c+I1), s	11.5	47.5		37.5	5.3	47.5		10.2
Green Ext Time (p_c), s	0.1	0.0		0.0	0.1	0.0		1.0

Intersection Summary	
HCM 6th Ctrl Delay	83.6
HCM 6th LOS	F

Intersection	
Intersection Delay, s/veh	124.7
Intersection LOS	F

Movement	EBL	EBT	EBR	WBL	WBT	WBR	NBL	NBT	NBR	SBL	SBT	SBR
Lane Configurations												
Traffic Vol, veh/h	230	657	71	27	721	11	98	77	48	4	71	449
Future Vol, veh/h	230	657	71	27	721	11	98	77	48	4	71	449
Peak Hour Factor	0.95	0.95	0.95	0.95	0.95	0.95	0.95	0.95	0.95	0.95	0.95	0.95
Heavy Vehicles, %	2	2	2	2	2	2	2	2	2	2	2	2
Mvmt Flow	242	692	75	28	759	12	103	81	51	4	75	473
Number of Lanes	1	2	0	1	2	0	0	1	0	0	1	0

Approach	EB	WB	NB	SB
Opposing Approach	WB	EB	SB	NB
Opposing Lanes	3	3	1	1
Conflicting Approach Left	SB	NB	EB	WB
Conflicting Lanes Left	1	1	3	3
Conflicting Approach Right	NB	SB	WB	EB
Conflicting Lanes Right	1	1	3	3
HCM Control Delay	80.5	132.4	37.9	231.3
HCM LOS	F	F	E	F

Lane	NBLn1	EBLn1	EBLn2	EBLn3	WBLn1	WBLn2	WBLn3	SBLn1
Vol Left, %	44%	100%	0%	0%	100%	0%	0%	1%
Vol Thru, %	35%	0%	100%	76%	0%	100%	96%	14%
Vol Right, %	22%	0%	0%	24%	0%	0%	4%	86%
Sign Control	Stop	Stop	Stop	Stop	Stop	Stop	Stop	Stop
Traffic Vol by Lane	223	230	438	290	27	481	251	524
LT Vol	98	230	0	0	27	0	0	4
Through Vol	77	0	438	219	0	481	240	71
RT Vol	48	0	0	71	0	0	11	449
Lane Flow Rate	235	242	461	305	28	506	265	552
Geometry Grp	7	7	7	7	7	7	7	7
Degree of Util (X)	0.686	0.645	1.165	0.757	0.078	1.316	0.686	1.421
Departure Headway (Hd)	12.228	11.08	10.54	10.355	11.131	10.592	10.559	9.962
Convergence, Y/N	Yes	Yes	Yes	Yes	Yes	Yes	Yes	Yes
Cap	298	329	350	351	324	349	344	370
Service Time	9.928	8.78	8.24	8.055	8.831	8.292	8.259	7.662
HCM Lane V/C Ratio	0.789	0.736	1.317	0.869	0.086	1.45	0.77	1.492
HCM Control Delay	37.9	31.9	133.5	39.1	14.8	190.8	33.4	231.3
HCM Lane LOS	E	D	F	E	B	F	D	F
HCM 95th-tile Q	4.7	4.2	16.2	6	0.3	21.3	4.8	26.3

Movement	EBL	EBT	EBR	WBL	WBT	WBR	NBL	NBT	NBR	SBL	SBT	SBR
Lane Configurations												
Traffic Volume (veh/h)	323	258	125	39	263	164	169	1103	21	151	1228	230
Future Volume (veh/h)	323	258	125	39	263	164	169	1103	21	151	1228	230
Initial Q (Qb), veh	0	0	0	0	0	0	0	0	0	0	0	0
Ped-Bike Adj(A_pbT)	1.00		0.97	1.00		1.00	1.00		1.00	1.00		1.00
Parking Bus, Adj	1.00	1.00	1.00	1.00	1.00	1.00	1.00	1.00	1.00	1.00	1.00	1.00
Work Zone On Approach		No			No			No			No	
Adj Sat Flow, veh/h/ln	1772	1870	1870	1772	1870	1870	1772	1870	1870	1772	1870	1870
Adj Flow Rate, veh/h	340	272	132	41	277	173	178	1161	22	159	1293	242
Peak Hour Factor	0.95	0.95	0.95	0.95	0.95	0.95	0.95	0.95	0.95	0.95	0.95	0.95
Percent Heavy Veh, %	2	2	2	2	2	2	2	2	2	2	2	2
Cap, veh/h	207	790	371	238	764	463	284	924	18	161	558	103
Arrive On Green	0.12	0.34	0.34	0.14	0.36	0.36	0.06	0.09	0.09	0.10	0.19	0.19
Sat Flow, veh/h	1688	2319	1087	1688	2127	1289	1688	3567	68	1688	2993	554
Grp Volume(v), veh/h	340	206	198	41	230	220	178	578	605	159	762	773
Grp Sat Flow(s),veh/h/ln	1688	1777	1629	1688	1777	1638	1688	1777	1858	1688	1777	1771
Q Serve(g_s), s	13.5	9.5	10.0	2.4	10.5	10.9	11.4	28.5	28.5	10.4	20.5	20.5
Cycle Q Clear(g_c), s	13.5	9.5	10.0	2.4	10.5	10.9	11.4	28.5	28.5	10.4	20.5	20.5
Prop In Lane	1.00		0.67	1.00		0.79	1.00		0.04	1.00		0.31
Lane Grp Cap(c), veh/h	207	606	555	238	638	588	284	460	481	161	331	330
V/C Ratio(X)	1.64	0.34	0.36	0.17	0.36	0.37	0.63	1.26	1.26	0.99	2.30	2.34
Avail Cap(c_a), veh/h	207	606	555	238	638	588	284	460	481	161	331	330
HCM Platoon Ratio	1.00	1.00	1.00	1.00	1.00	1.00	0.33	0.33	0.33	1.00	1.00	1.00
Upstream Filter(I)	1.00	1.00	1.00	1.00	1.00	1.00	1.00	1.00	1.00	1.00	1.00	1.00
Uniform Delay (d), s/veh	48.3	27.0	27.2	41.6	26.0	26.1	48.6	50.3	50.3	49.7	44.8	44.8
Incr Delay (d2), s/veh	309.5	1.5	1.8	1.6	1.6	1.8	10.1	131.9	131.4	67.6	594.9	613.6
Initial Q Delay(d3),s/veh	0.0	0.0	0.0	0.0	0.0	0.0	0.0	0.0	0.0	0.0	0.0	0.0
%ile BackOfQ(50%),veh/ln	28.4	4.3	4.2	1.1	4.7	4.5	5.9	30.5	31.8	7.4	63.7	65.2
Unsig. Movement Delay, s/veh												
LnGrp Delay(d),s/veh	357.7	28.6	29.0	43.2	27.5	27.9	58.6	182.2	181.7	117.3	639.7	658.3
LnGrp LOS	F	C	C	D	C	C	E	F	F	F	F	F
Approach Vol, veh/h		744			491			1361			1694	
Approach Delay, s/veh		179.1			29.0			165.8			599.2	
Approach LOS		F			C			F			F	

Timer - Assigned Phs	1	2	3	4	5	6	7	8
Phs Duration (G+Y+Rc), s	15.0	33.0	20.0	42.0	23.0	25.0	18.0	44.0
Change Period (Y+Rc), s	4.5	4.5	4.5	4.5	4.5	4.5	4.5	4.5
Max Green Setting (Gmax), s	10.5	28.5	15.5	37.5	18.5	20.5	13.5	39.5
Max Q Clear Time (g_c+I1), s	12.4	30.5	4.4	12.0	13.4	22.5	15.5	12.9
Green Ext Time (p_c), s	0.0	0.0	0.0	2.6	0.2	0.0	0.0	2.9

Intersection Summary		
HCM 6th Ctrl Delay		323.6
HCM 6th LOS		F

Movement	EBL	EBT	EBR	WBL	WBT	WBR	NBL	NBT	NBR	SBL	SBT	SBR
Lane Configurations												
Traffic Volume (veh/h)	4	346	92	47	377	31	75	97	31	44	54	0
Future Volume (veh/h)	4	346	92	47	377	31	75	97	31	44	54	0
Initial Q (Qb), veh	0	0	0	0	0	0	0	0	0	0	0	0
Ped-Bike Adj(A_pbT)	1.00		0.94	0.98		1.00	1.00		1.00	1.00		1.00
Parking Bus, Adj	1.00	1.00	1.00	1.00	1.00	1.00	1.00	1.00	1.00	1.00	1.00	1.00
Work Zone On Approach		No			No			No			No	
Adj Sat Flow, veh/h/ln	1772	1870	1870	1772	1870	1870	1870	1870	1870	1870	1870	1870
Adj Flow Rate, veh/h	4	364	97	49	397	33	79	102	33	46	57	0
Peak Hour Factor	0.95	0.95	0.95	0.95	0.95	0.95	0.95	0.95	0.95	0.95	0.95	0.95
Percent Heavy Veh, %	2	2	2	2	2	2	2	2	2	2	2	2
Cap, veh/h	587	766	612	518	1361	113	305	212	58	323	274	0
Arrive On Green	0.41	0.41	0.41	0.41	0.41	0.41	0.23	0.23	0.23	0.23	0.23	0.00
Sat Flow, veh/h	908	1870	1494	860	3323	275	468	921	253	497	1193	0
Grp Volume(v), veh/h	4	364	97	49	211	219	214	0	0	103	0	0
Grp Sat Flow(s),veh/h/ln	908	1870	1494	860	1777	1821	1643	0	0	1690	0	0
Q Serve(g_s), s	0.1	3.6	1.0	1.1	2.0	2.0	1.6	0.0	0.0	0.0	0.0	0.0
Cycle Q Clear(g_c), s	2.1	3.6	1.0	4.7	2.0	2.0	2.8	0.0	0.0	1.1	0.0	0.0
Prop In Lane	1.00		1.00	1.00		0.15	0.37		0.15	0.45		0.00
Lane Grp Cap(c), veh/h	587	766	612	518	728	746	575	0	0	597	0	0
V/C Ratio(X)	0.01	0.48	0.16	0.09	0.29	0.29	0.37	0.00	0.00	0.17	0.00	0.00
Avail Cap(c_a), veh/h	870	1349	1078	786	1282	1313	1360	0	0	1351	0	0
HCM Platoon Ratio	1.00	1.00	1.00	1.00	1.00	1.00	1.00	1.00	1.00	1.00	1.00	1.00
Upstream Filter(I)	1.00	1.00	1.00	1.00	1.00	1.00	1.00	0.00	0.00	1.00	0.00	0.00
Uniform Delay (d), s/veh	5.6	5.4	4.7	7.1	4.9	4.9	8.4	0.0	0.0	7.8	0.0	0.0
Incr Delay (d2), s/veh	0.0	0.5	0.1	0.1	0.2	0.2	0.4	0.0	0.0	0.1	0.0	0.0
Initial Q Delay(d3),s/veh	0.0	0.0	0.0	0.0	0.0	0.0	0.0	0.0	0.0	0.0	0.0	0.0
%ile BackOfQ(50%),veh/ln	0.0	0.6	0.1	0.1	0.3	0.3	0.7	0.0	0.0	0.3	0.0	0.0
Unsig. Movement Delay, s/veh												
LnGrp Delay(d),s/veh	5.6	5.9	4.8	7.2	5.2	5.2	8.8	0.0	0.0	8.0	0.0	0.0
LnGrp LOS	A	A	A	A	A	A	A	A	A	A	A	A
Approach Vol, veh/h		465			479			214			103	
Approach Delay, s/veh		5.6			5.4			8.8			8.0	
Approach LOS		A			A			A			A	

Timer - Assigned Phs	2	4	6	8
Phs Duration (G+Y+Rc), s	10.2	14.7	10.2	14.7
Change Period (Y+Rc), s	4.5	4.5	4.5	4.5
Max Green Setting (Gmax), s	18.0	18.0	18.0	18.0
Max Q Clear Time (g_c+I1), s	4.8	5.6	3.1	6.7
Green Ext Time (p_c), s	0.9	2.1	0.4	2.2

Intersection Summary	
HCM 6th Ctrl Delay	6.3
HCM 6th LOS	A

Intersection	
Intersection Delay, s/veh	23.6
Intersection LOS	C

Movement	EBL	EBT	EBR	WBL	WBT	WBR	NBL	NBT	NBR	SBL	SBT	SBR
Lane Configurations												
Traffic Vol, veh/h	36	151	151	40	192	44	106	206	20	30	225	47
Future Vol, veh/h	36	151	151	40	192	44	106	206	20	30	225	47
Peak Hour Factor	0.95	0.95	0.95	0.95	0.95	0.95	0.95	0.95	0.95	0.95	0.95	0.95
Heavy Vehicles, %	2	2	2	2	2	2	2	2	2	2	2	2
Mvmt Flow	38	159	159	42	202	46	112	217	21	32	237	49
Number of Lanes	0	1	0	0	1	1	0	1	0	0	1	0

Approach	EB	WB	NB	SB
Opposing Approach	WB	EB	SB	NB
Opposing Lanes	2	1	1	1
Conflicting Approach Left	SB	NB	EB	WB
Conflicting Lanes Left	1	1	1	2
Conflicting Approach Right	NB	SB	WB	EB
Conflicting Lanes Right	1	1	2	1
HCM Control Delay	25.8	18.6	26.3	22.8
HCM LOS	D	C	D	C

Lane	NBLn1	EBLn1	WBLn1	WBLn2	SBLn1
Vol Left, %	32%	11%	17%	0%	10%
Vol Thru, %	62%	45%	83%	0%	75%
Vol Right, %	6%	45%	0%	100%	16%
Sign Control	Stop	Stop	Stop	Stop	Stop
Traffic Vol by Lane	332	338	232	44	302
LT Vol	106	36	40	0	30
Through Vol	206	151	192	0	225
RT Vol	20	151	0	44	47
Lane Flow Rate	349	356	244	46	318
Geometry Grp	2	5	7	7	2
Degree of Util (X)	0.708	0.707	0.545	0.093	0.645
Departure Headway (Hd)	7.292	7.152	8.03	7.219	7.3
Convergence, Y/N	Yes	Yes	Yes	Yes	Yes
Cap	493	502	447	494	493
Service Time	5.37	5.231	5.811	4.999	5.379
HCM Lane V/C Ratio	0.708	0.709	0.546	0.093	0.645
HCM Control Delay	26.3	25.8	20.1	10.7	22.8
HCM Lane LOS	D	D	C	B	C
HCM 95th-tile Q	5.5	5.5	3.2	0.3	4.5

Movement	EBL	EBT	EBR	WBL	WBT	WBR	NBL	NBT	NBR	SBL	SBT	SBR
Lane Configurations												
Traffic Volume (veh/h)	89	135	101	70	144	84	136	1092	91	180	1150	84
Future Volume (veh/h)	89	135	101	70	144	84	136	1092	91	180	1150	84
Initial Q (Qb), veh	0	0	0	0	0	0	0	0	0	0	0	0
Ped-Bike Adj(A_pbT)	1.00		1.00	1.00		1.00	1.00		1.00	1.00		1.00
Parking Bus, Adj	1.00	1.00	1.00	1.00	1.00	1.00	1.00	1.00	1.00	1.00	1.00	1.00
Work Zone On Approach		No			No			No			No	
Adj Sat Flow, veh/h/ln	1870	1870	1870	1870	1870	1870	1772	1870	1870	1772	1870	1870
Adj Flow Rate, veh/h	94	142	106	74	152	88	143	1149	96	189	1211	88
Peak Hour Factor	0.95	0.95	0.95	0.95	0.95	0.95	0.95	0.95	0.95	0.95	0.95	0.95
Percent Heavy Veh, %	2	2	2	2	2	2	2	2	2	2	2	2
Cap, veh/h	46	43	425	43	69	425	361	1554	130	238	1329	96
Arrive On Green	0.27	0.27	0.27	0.27	0.27	0.27	0.07	0.15	0.15	0.05	0.13	0.13
Sat Flow, veh/h	0	159	1585	0	257	1585	1688	3320	277	1688	3360	244
Grp Volume(v), veh/h	236	0	106	226	0	88	143	614	631	189	640	659
Grp Sat Flow(s),veh/h/ln	159	0	1585	257	0	1585	1688	1777	1820	1688	1777	1826
Q Serve(g_s), s	0.0	0.0	5.8	0.0	0.0	4.7	8.9	36.3	36.4	12.2	39.1	39.2
Cycle Q Clear(g_c), s	29.5	0.0	5.8	29.5	0.0	4.7	8.9	36.3	36.4	12.2	39.1	39.2
Prop In Lane	0.40		1.00	0.33		1.00	1.00		0.15	1.00		0.13
Lane Grp Cap(c), veh/h	88	0	425	112	0	425	361	832	852	238	703	722
V/C Ratio(X)	2.67	0.00	0.25	2.01	0.00	0.21	0.40	0.74	0.74	0.79	0.91	0.91
Avail Cap(c_a), veh/h	88	0	425	112	0	425	361	832	852	238	703	722
HCM Platoon Ratio	1.00	1.00	1.00	1.00	1.00	1.00	0.33	0.33	0.33	0.33	0.33	0.33
Upstream Filter(I)	1.00	0.00	1.00	1.00	0.00	1.00	1.00	1.00	1.00	1.00	1.00	1.00
Uniform Delay (d), s/veh	41.4	0.0	31.6	38.1	0.0	31.2	44.3	40.1	40.1	50.9	45.9	46.0
Incr Delay (d2), s/veh	783.4	0.0	1.4	484.5	0.0	1.1	3.2	5.8	5.7	23.4	18.0	17.9
Initial Q Delay(d3),s/veh	0.0	0.0	0.0	0.0	0.0	0.0	0.0	0.0	0.0	0.0	0.0	0.0
%ile BackOfQ(50%),veh/ln	21.7	0.0	2.4	18.2	0.0	1.9	4.3	18.6	19.1	7.1	22.1	22.8
Unsig. Movement Delay, s/veh												
LnGrp Delay(d),s/veh	824.8	0.0	33.0	522.6	0.0	32.3	47.6	45.9	45.8	74.3	63.9	63.9
LnGrp LOS	F	A	C	F	A	C	D	D	D	E	E	E
Approach Vol, veh/h		342			314			1388			1488	
Approach Delay, s/veh		579.4			385.2			46.0			65.2	
Approach LOS		F			F			D			E	

Timer - Assigned Phs	1	2		4	5	6		8
Phs Duration (G+Y+Rc), s	30.0	56.0		34.0	28.0	48.0		34.0
Change Period (Y+Rc), s	4.5	4.5		4.5	4.5	4.5		4.5
Max Green Setting (Gmax), s	25.5	51.5		29.5	23.5	43.5		29.5
Max Q Clear Time (g_c+I1), s	14.2	38.4		31.5	10.9	41.2		31.5
Green Ext Time (p_c), s	0.1	6.9		0.0	0.3	1.7		0.0

Intersection Summary		
HCM 6th Ctrl Delay		135.9
HCM 6th LOS		F

Intersection	
Intersection Delay, s/veh	13.5
Intersection LOS	B

Movement	EBL	EBT	EBR	WBL	WBT	WBR	NBL	NBT	NBR	SBL	SBT	SBR
Lane Configurations												
Traffic Vol, veh/h	27	181	88	58	154	31	31	109	19	69	168	26
Future Vol, veh/h	27	181	88	58	154	31	31	109	19	69	168	26
Peak Hour Factor	0.95	0.95	0.95	0.95	0.95	0.95	0.95	0.95	0.95	0.95	0.95	0.95
Heavy Vehicles, %	2	2	2	2	2	2	2	2	2	2	2	2
Mvmt Flow	28	191	93	61	162	33	33	115	20	73	177	27
Number of Lanes	0	1	0	0	1	1	0	1	0	0	1	0

Approach	EB	WB	NB	SB
Opposing Approach	WB	EB	SB	NB
Opposing Lanes	2	1	1	1
Conflicting Approach Left	SB	NB	EB	WB
Conflicting Lanes Left	1	1	1	2
Conflicting Approach Right	NB	SB	WB	EB
Conflicting Lanes Right	1	1	2	1
HCM Control Delay	14.3	13.1	11.7	13.9
HCM LOS	B	B	B	B

Lane	NBLn1	EBLn1	WBLn1	WBLn2	SBLn1
Vol Left, %	19%	9%	27%	0%	26%
Vol Thru, %	69%	61%	73%	0%	64%
Vol Right, %	12%	30%	0%	100%	10%
Sign Control	Stop	Stop	Stop	Stop	Stop
Traffic Vol by Lane	159	296	212	31	263
LT Vol	31	27	58	0	69
Through Vol	109	181	154	0	168
RT Vol	19	88	0	31	26
Lane Flow Rate	167	312	223	33	277
Geometry Grp	2	5	7	7	2
Degree of Util (X)	0.285	0.495	0.403	0.051	0.455
Departure Headway (Hd)	6.126	5.717	6.506	5.654	5.917
Convergence, Y/N	Yes	Yes	Yes	Yes	Yes
Cap	581	626	549	628	604
Service Time	4.223	3.797	4.289	3.437	4.002
HCM Lane V/C Ratio	0.287	0.498	0.406	0.053	0.459
HCM Control Delay	11.7	14.3	13.7	8.7	13.9
HCM Lane LOS	B	B	B	A	B
HCM 95th-tile Q	1.2	2.7	1.9	0.2	2.4

Intersection	
Int Delay, s/veh	0.6

Movement	WBL	WBR	NBT	NBR	SBL	SBT
Lane Configurations						
Traffic Vol, veh/h	0	93	1226	94	0	1290
Future Vol, veh/h	0	93	1226	94	0	1290
Conflicting Peds, #/hr	0	0	0	0	0	0
Sign Control	Stop	Stop	Free	Free	Free	Free
RT Channelized	-	None	-	None	-	None
Storage Length	-	0	-	-	-	-
Veh in Median Storage, #	0	-	0	-	-	0
Grade, %	0	-	0	-	-	0
Peak Hour Factor	95	95	95	95	95	95
Heavy Vehicles, %	2	2	2	2	2	2
Mvmt Flow	0	98	1291	99	0	1358

Major/Minor	Minor1		Major1		Major2	
Conflicting Flow All	-	695	0	0	-	-
Stage 1	-	-	-	-	-	-
Stage 2	-	-	-	-	-	-
Critical Hdwy	-	6.94	-	-	-	-
Critical Hdwy Stg 1	-	-	-	-	-	-
Critical Hdwy Stg 2	-	-	-	-	-	-
Follow-up Hdwy	-	3.32	-	-	-	-
Pot Cap-1 Maneuver	0	385	-	-	0	-
Stage 1	0	-	-	-	0	-
Stage 2	0	-	-	-	0	-
Platoon blocked, %			-	-		-
Mov Cap-1 Maneuver	-	385	-	-	-	-
Mov Cap-2 Maneuver	-	-	-	-	-	-
Stage 1	-	-	-	-	-	-
Stage 2	-	-	-	-	-	-

Approach	WB	NB	SB
HCM Control Delay, s	17.5	0	0
HCM LOS	C		

Minor Lane/Major Mvmt	NBT	NBR	WBLn1	SBT
Capacity (veh/h)	-	-	385	-
HCM Lane V/C Ratio	-	-	0.254	-
HCM Control Delay (s)	-	-	17.5	-
HCM Lane LOS	-	-	C	-
HCM 95th %tile Q(veh)	-	-	1	-

Intersection	
Int Delay, s/veh	0.9

Movement	EBT	EBR	WBL	WBT	NBL	NBR
Lane Configurations						
Traffic Vol, veh/h	343	47	0	210	46	0
Future Vol, veh/h	343	47	0	210	46	0
Conflicting Peds, #/hr	0	0	0	0	0	0
Sign Control	Free	Free	Free	Free	Stop	Stop
RT Channelized	-	None	-	None	-	None
Storage Length	-	-	-	-	0	-
Veh in Median Storage, #	0	-	-	0	0	-
Grade, %	0	-	-	0	0	-
Peak Hour Factor	92	92	92	92	92	92
Heavy Vehicles, %	2	2	2	2	2	2
Mvmt Flow	373	51	0	228	50	0

Major/Minor	Major1		Major2		Minor1	
Conflicting Flow All	0	0	-	-	513	-
Stage 1	-	-	-	-	399	-
Stage 2	-	-	-	-	114	-
Critical Hdwy	-	-	-	-	6.63	-
Critical Hdwy Stg 1	-	-	-	-	5.43	-
Critical Hdwy Stg 2	-	-	-	-	5.83	-
Follow-up Hdwy	-	-	-	-	3.519	-
Pot Cap-1 Maneuver	-	-	0	-	506	0
Stage 1	-	-	0	-	677	0
Stage 2	-	-	0	-	899	0
Platoon blocked, %	-	-		-		
Mov Cap-1 Maneuver	-	-	-	-	506	-
Mov Cap-2 Maneuver	-	-	-	-	506	-
Stage 1	-	-	-	-	677	-
Stage 2	-	-	-	-	899	-

Approach	EB	WB	NB
HCM Control Delay, s	0	0	12.9
HCM LOS			B

Minor Lane/Major Mvmt	NBLn1	EBT	EBR	WBT
Capacity (veh/h)	506	-	-	-
HCM Lane V/C Ratio	0.099	-	-	-
HCM Control Delay (s)	12.9	-	-	-
HCM Lane LOS	B	-	-	-
HCM 95th %tile Q(veh)	0.3	-	-	-

Intersection	
Int Delay, s/veh	0.9

Movement	EBT	EBR	WBL	WBT	NBL	NBR
Lane Configurations						
Traffic Vol, veh/h	296	47	0	210	46	0
Future Vol, veh/h	296	47	0	210	46	0
Conflicting Peds, #/hr	0	0	0	0	0	0
Sign Control	Free	Free	Free	Free	Stop	Stop
RT Channelized	-	None	-	None	-	None
Storage Length	-	-	-	-	0	-
Veh in Median Storage, #	0	-	-	0	0	-
Grade, %	0	-	-	0	0	-
Peak Hour Factor	95	95	95	95	95	95
Heavy Vehicles, %	2	2	2	2	2	2
Mvmt Flow	312	49	0	221	48	0

Major/Minor	Major1		Major2		Minor1	
Conflicting Flow All	0	0	-	-	448	-
Stage 1	-	-	-	-	337	-
Stage 2	-	-	-	-	111	-
Critical Hdwy	-	-	-	-	6.63	-
Critical Hdwy Stg 1	-	-	-	-	5.43	-
Critical Hdwy Stg 2	-	-	-	-	5.83	-
Follow-up Hdwy	-	-	-	-	3.519	-
Pot Cap-1 Maneuver	-	-	0	-	554	0
Stage 1	-	-	0	-	722	0
Stage 2	-	-	0	-	902	0
Platoon blocked, %	-	-		-		
Mov Cap-1 Maneuver	-	-	-	-	554	-
Mov Cap-2 Maneuver	-	-	-	-	554	-
Stage 1	-	-	-	-	722	-
Stage 2	-	-	-	-	902	-

Approach	EB	WB	NB
HCM Control Delay, s	0	0	12.1
HCM LOS			B

Minor Lane/Major Mvmt	NBLn1	EBT	EBR	WBT
Capacity (veh/h)	554	-	-	-
HCM Lane V/C Ratio	0.087	-	-	-
HCM Control Delay (s)	12.1	-	-	-
HCM Lane LOS	B	-	-	-
HCM 95th %tile Q(veh)	0.3	-	-	-

Intersection	
Intersection Delay, s/veh	14.5
Intersection LOS	B

Movement	EBL	EBT	EBR	WBL	WBT	WBR	NBL	NBT	NBR	SBL	SBT	SBR
Lane Configurations												
Traffic Vol, veh/h	23	203	26	4	126	98	15	238	8	57	186	63
Future Vol, veh/h	23	203	26	4	126	98	15	238	8	57	186	63
Peak Hour Factor	0.95	0.95	0.95	0.95	0.95	0.95	0.95	0.95	0.95	0.95	0.95	0.95
Heavy Vehicles, %	2	2	2	2	2	2	2	2	2	2	2	2
Mvmt Flow	24	214	27	4	133	103	16	251	8	60	196	66
Number of Lanes	0	1	1	0	2	0	0	1	0	0	1	0

Approach	EB	WB	NB	SB
Opposing Approach	WB	EB	SB	NB
Opposing Lanes	2	2	1	1
Conflicting Approach Left	SB	NB	EB	WB
Conflicting Lanes Left	1	1	2	2
Conflicting Approach Right	NB	SB	WB	EB
Conflicting Lanes Right	1	1	2	2
HCM Control Delay	14.8	11.8	14.8	16.1
HCM LOS	B	B	B	C

Lane	NBLn1	EBLn1	EBLn2	WBLn1	WBLn2	SBLn1
Vol Left, %	6%	10%	0%	6%	0%	19%
Vol Thru, %	91%	90%	0%	94%	39%	61%
Vol Right, %	3%	0%	100%	0%	61%	21%
Sign Control	Stop	Stop	Stop	Stop	Stop	Stop
Traffic Vol by Lane	261	226	26	67	161	306
LT Vol	15	23	0	4	0	57
Through Vol	238	203	0	63	63	186
RT Vol	8	0	26	0	98	63
Lane Flow Rate	275	238	27	71	169	322
Geometry Grp	2	7	7	7	7	2
Degree of Util (X)	0.476	0.458	0.047	0.137	0.308	0.542
Departure Headway (Hd)	6.233	6.935	6.166	7.011	6.543	6.06
Convergence, Y/N	Yes	Yes	Yes	Yes	Yes	Yes
Cap	577	519	580	511	549	596
Service Time	4.276	4.681	3.911	4.76	4.292	4.101
HCM Lane V/C Ratio	0.477	0.459	0.047	0.139	0.308	0.54
HCM Control Delay	14.8	15.4	9.2	10.9	12.2	16.1
HCM Lane LOS	B	C	A	B	B	C
HCM 95th-tile Q	2.6	2.4	0.1	0.5	1.3	3.2

Movement	EBL	EBT	EBR	WBL	WBT	WBR	NBL	NBT	NBR	SBL	SBT	SBR
Lane Configurations												
Traffic Volume (veh/h)	95	189	48	57	174	221	54	896	63	114	1146	30
Future Volume (veh/h)	95	189	48	57	174	221	54	896	63	114	1146	30
Initial Q (Qb), veh	0	0	0	0	0	0	0	0	0	0	0	0
Ped-Bike Adj(A_pbT)	1.00		1.00	1.00		1.00	1.00		1.00	1.00		1.00
Parking Bus, Adj	1.00	1.00	1.00	1.00	1.00	1.00	1.00	1.00	1.00	1.00	1.00	1.00
Work Zone On Approach		No			No			No			No	
Adj Sat Flow, veh/h/ln	1870	1870	1870	1870	1870	1870	1772	1870	1870	1772	1870	1870
Adj Flow Rate, veh/h	100	199	51	60	183	233	57	943	66	120	1206	32
Peak Hour Factor	0.95	0.95	0.95	0.95	0.95	0.95	0.95	0.95	0.95	0.95	0.95	0.95
Percent Heavy Veh, %	2	2	2	2	2	2	2	2	2	2	2	2
Cap, veh/h	160	407	116	111	313	400	238	1547	108	238	1624	43
Arrive On Green	0.28	0.28	0.28	0.28	0.28	0.28	0.14	0.46	0.46	0.05	0.15	0.15
Sat Flow, veh/h	382	1467	417	253	1128	1442	1688	3369	236	1688	3537	94
Grp Volume(v), veh/h	151	0	199	243	0	233	57	497	512	120	606	632
Grp Sat Flow(s),veh/h/ln	639	0	1627	1381	0	1442	1688	1777	1828	1688	1777	1853
Q Serve(g_s), s	12.3	0.0	11.1	8.2	0.0	15.3	3.3	23.1	23.1	7.6	35.9	35.9
Cycle Q Clear(g_c), s	27.6	0.0	11.1	19.2	0.0	15.3	3.3	23.1	23.1	7.6	35.9	35.9
Prop In Lane	0.66		0.26	0.25		1.00	1.00		0.13	1.00		0.05
Lane Grp Cap(c), veh/h	232	0	451	424	0	400	238	816	839	238	816	851
V/C Ratio(X)	0.65	0.00	0.44	0.57	0.00	0.58	0.24	0.61	0.61	0.50	0.74	0.74
Avail Cap(c_a), veh/h	232	0	451	424	0	400	238	816	839	238	816	851
HCM Platoon Ratio	1.00	1.00	1.00	1.00	1.00	1.00	1.00	1.00	1.00	0.33	0.33	0.33
Upstream Filter(I)	1.00	0.00	1.00	1.00	0.00	1.00	1.00	1.00	1.00	1.00	1.00	1.00
Uniform Delay (d), s/veh	43.8	0.0	32.7	35.7	0.0	34.3	42.0	22.3	22.3	48.7	40.5	40.5
Incr Delay (d2), s/veh	13.4	0.0	3.1	5.6	0.0	6.1	2.4	3.4	3.3	7.5	6.0	5.8
Initial Q Delay(d3),s/veh	0.0	0.0	0.0	0.0	0.0	0.0	0.0	0.0	0.0	0.0	0.0	0.0
%ile BackOfQ(50%),veh/ln	4.8	0.0	4.7	6.5	0.0	6.0	1.5	10.2	10.4	3.9	18.4	19.2
Unsig. Movement Delay, s/veh												
LnGrp Delay(d),s/veh	57.1	0.0	35.8	41.2	0.0	40.3	44.4	25.7	25.6	56.2	46.5	46.3
LnGrp LOS	E	A	D	D	A	D	D	C	C	E	D	D
Approach Vol, veh/h		350			476			1066			1358	
Approach Delay, s/veh		45.0			40.8			26.7			47.3	
Approach LOS		D			D			C			D	

Timer - Assigned Phs	1	2		4	5	6		8
Phs Duration (G+Y+Rc), s	20.0	55.0		35.0	20.0	55.0		35.0
Change Period (Y+Rc), s	4.5	4.5		4.5	4.5	4.5		4.5
Max Green Setting (Gmax), s	15.5	50.5		30.5	15.5	50.5		30.5
Max Q Clear Time (g_c+I1), s	19.6	25.1		29.6	5.3	37.9		21.2
Green Ext Time (p_c), s	0.1	7.4		0.2	0.1	6.7		2.1

Intersection Summary	
HCM 6th Ctrl Delay	39.3
HCM 6th LOS	D

Intersection	
Int Delay, s/veh	3.3

Movement	EBL	EBT	WBT	WBR	SBL	SBR
Lane Configurations						
Traffic Vol, veh/h	152	304	294	104	28	91
Future Vol, veh/h	152	304	294	104	28	91
Conflicting Peds, #/hr	0	0	0	0	0	0
Sign Control	Free	Free	Free	Free	Stop	Stop
RT Channelized	-	None	-	None	-	None
Storage Length	-	-	-	-	0	-
Veh in Median Storage, #	-	0	0	-	0	-
Grade, %	-	0	0	-	0	-
Peak Hour Factor	95	95	95	95	95	95
Heavy Vehicles, %	2	2	2	2	2	2
Mvmt Flow	160	320	309	109	29	96

Major/Minor	Major1		Major2		Minor2	
Conflicting Flow All	418	0	-	0	1004	364
Stage 1	-	-	-	-	364	-
Stage 2	-	-	-	-	640	-
Critical Hdwy	4.12	-	-	-	6.42	6.22
Critical Hdwy Stg 1	-	-	-	-	5.42	-
Critical Hdwy Stg 2	-	-	-	-	5.42	-
Follow-up Hdwy	2.218	-	-	-	3.518	3.318
Pot Cap-1 Maneuver	1141	-	-	-	268	681
Stage 1	-	-	-	-	703	-
Stage 2	-	-	-	-	525	-
Platoon blocked, %		-	-	-		
Mov Cap-1 Maneuver	1141	-	-	-	222	681
Mov Cap-2 Maneuver	-	-	-	-	222	-
Stage 1	-	-	-	-	583	-
Stage 2	-	-	-	-	525	-

Approach	EB	WB	SB
HCM Control Delay, s	2.9	0	15.8
HCM LOS			C

Minor Lane/Major Mvmt	EBL	EBT	WBT	WBR	SBLn1
Capacity (veh/h)	1141	-	-	-	458
HCM Lane V/C Ratio	0.14	-	-	-	0.274
HCM Control Delay (s)	8.7	0	-	-	15.8
HCM Lane LOS	A	A	-	-	C
HCM 95th %tile Q(veh)	0.5	-	-	-	1.1

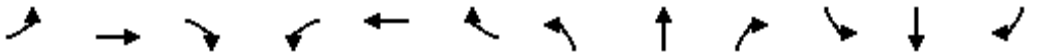

Movement	EBL	EBT	EBR	WBL	WBT	WBR	NBL	NBT	NBR	SBL	SBT	SBR
Lane Configurations												
Traffic Volume (veh/h)	22	1	23	84	0	71	11	694	82	85	1326	9
Future Volume (veh/h)	22	1	23	84	0	71	11	694	82	85	1326	9
Initial Q (Qb), veh	0	0	0	0	0	0	0	0	0	0	0	0
Ped-Bike Adj(A_pbT)	1.00		1.00	1.00		1.00	1.00		1.00	1.00		1.00
Parking Bus, Adj	1.00	1.00	1.00	1.00	1.00	1.00	1.00	1.00	1.00	1.00	1.00	1.00
Work Zone On Approach		No			No			No			No	
Adj Sat Flow, veh/h/ln	1870	1870	1870	1870	1870	1870	1772	1870	1870	1772	1870	1870
Adj Flow Rate, veh/h	23	1	24	88	0	75	12	731	86	89	1396	9
Peak Hour Factor	0.95	0.95	0.95	0.95	0.95	0.95	0.95	0.95	0.95	0.95	0.95	0.95
Percent Heavy Veh, %	2	2	2	2	2	2	2	2	2	2	2	2
Cap, veh/h	363	52	297	721	0	634	168	1281	151	301	1448	9
Arrive On Green	0.40	0.40	0.40	0.40	0.00	0.40	0.40	0.40	0.40	0.40	0.40	0.40
Sat Flow, veh/h	612	130	742	1403	0	1585	363	3203	377	634	3620	23
Grp Volume(v), veh/h	48	0	0	88	0	75	12	405	412	89	685	720
Grp Sat Flow(s),veh/h/ln	1484	0	0	1403	0	1585	363	1777	1803	634	1777	1866
Q Serve(g_s), s	0.0	0.0	0.0	0.8	0.0	1.3	1.0	8.0	8.0	5.7	16.9	17.0
Cycle Q Clear(g_c), s	0.8	0.0	0.0	1.6	0.0	1.3	18.0	8.0	8.0	13.7	16.9	17.0
Prop In Lane	0.48		0.50	1.00		1.00	1.00		0.21	1.00		0.01
Lane Grp Cap(c), veh/h	712	0	0	721	0	634	168	711	721	301	711	746
V/C Ratio(X)	0.07	0.00	0.00	0.12	0.00	0.12	0.07	0.57	0.57	0.30	0.96	0.96
Avail Cap(c_a), veh/h	712	0	0	721	0	634	168	711	721	301	711	746
HCM Platoon Ratio	1.00	1.00	1.00	1.00	1.00	1.00	1.00	1.00	1.00	1.00	1.00	1.00
Upstream Filter(I)	1.00	0.00	0.00	1.00	0.00	1.00	1.00	1.00	1.00	1.00	1.00	1.00
Uniform Delay (d), s/veh	8.3	0.0	0.0	8.5	0.0	8.5	22.1	10.5	10.5	15.8	13.2	13.2
Incr Delay (d2), s/veh	0.2	0.0	0.0	0.3	0.0	0.4	0.8	3.3	3.3	2.5	26.0	25.3
Initial Q Delay(d3),s/veh	0.0	0.0	0.0	0.0	0.0	0.0	0.0	0.0	0.0	0.0	0.0	0.0
%ile BackOfQ(50%),veh/ln	0.3	0.0	0.0	0.5	0.0	0.4	0.2	3.1	3.1	0.9	10.3	10.6
Unsig. Movement Delay, s/veh												
LnGrp Delay(d),s/veh	8.5	0.0	0.0	8.9	0.0	8.9	23.0	13.8	13.8	18.3	39.2	38.5
LnGrp LOS	A	A	A	A	A	A	C	B	B	B	D	D
Approach Vol, veh/h		48			163			829			1494	
Approach Delay, s/veh		8.5			8.9			13.9			37.6	
Approach LOS		A			A			B			D	

Timer - Assigned Phs		2		4		6		8				
Phs Duration (G+Y+Rc), s		22.5		22.5		22.5		22.5				
Change Period (Y+Rc), s		4.5		4.5		4.5		4.5				
Max Green Setting (Gmax), s		18.0		18.0		18.0		18.0				
Max Q Clear Time (g_c+I1), s		20.0		2.8		19.0		3.6				
Green Ext Time (p_c), s		0.0		0.1		0.0		0.5				

Intersection Summary												
HCM 6th Ctrl Delay			27.5									
HCM 6th LOS			C									

HCM 6th Signalized Intersection Summary
1: Cedar & Valley

06/16/2020

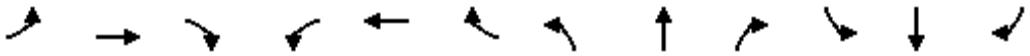

Movement	EBL	EBT	EBR	WBL	WBT	WBR	NBL	NBT	NBR	SBL	SBT	SBR
Lane Configurations												
Traffic Volume (veh/h)	341	575	664	317	327	81	511	1666	293	109	1295	89
Future Volume (veh/h)	341	575	664	317	327	81	511	1666	293	109	1295	89
Initial Q (Qb), veh	0	0	0	0	0	0	0	0	0	0	0	0
Ped-Bike Adj(A_pbT)	1.00		1.00	1.00		1.00	1.00		1.00	1.00		1.00
Parking Bus, Adj	1.00	1.00	1.00	1.00	1.00	1.00	1.00	1.00	1.00	1.00	1.00	1.00
Work Zone On Approach		No			No			No			No	
Adj Sat Flow, veh/h/ln	1575	1772	1772	1575	1772	1772	1575	1772	1772	1575	1772	1772
Adj Flow Rate, veh/h	344	581	671	320	330	82	516	1683	296	110	1308	90
Peak Hour Factor	0.99	0.99	0.99	0.99	0.99	0.99	0.99	0.99	0.99	0.99	0.99	0.99
Percent Heavy Veh, %	2	2	2	2	2	2	2	2	2	2	2	2
Cap, veh/h	848	709	1057	402	1072	263	429	1935	601	350	1849	127
Arrive On Green	0.40	0.40	0.40	0.40	0.40	0.40	0.40	0.40	0.40	0.40	0.40	0.40
Sat Flow, veh/h	1679	1772	2643	765	2680	657	665	4837	1502	379	4622	318
Grp Volume(v), veh/h	344	581	671	320	206	206	516	1683	296	110	913	485
Grp Sat Flow(s),veh/h/ln	840	1772	1321	383	1683	1654	333	1612	1502	189	1612	1715
Q Serve(g_s), s	7.9	13.2	9.2	4.8	3.8	3.9	7.3	14.4	6.6	3.6	10.7	10.7
Cycle Q Clear(g_c), s	11.8	13.2	9.2	18.0	3.8	3.9	18.0	14.4	6.6	18.0	10.7	10.7
Prop In Lane	1.00		1.00	1.00		0.40	1.00		1.00	1.00		0.19
Lane Grp Cap(c), veh/h	848	709	1057	402	673	661	429	1935	601	350	1290	686
V/C Ratio(X)	0.41	0.82	0.63	0.80	0.31	0.31	1.20	0.87	0.49	0.31	0.71	0.71
Avail Cap(c_a), veh/h	848	709	1057	402	673	661	429	1935	601	350	1290	686
HCM Platoon Ratio	1.00	1.00	1.00	1.00	1.00	1.00	1.00	1.00	1.00	1.00	1.00	1.00
Upstream Filter(I)	1.00	1.00	1.00	1.00	1.00	1.00	1.00	1.00	1.00	1.00	1.00	1.00
Uniform Delay (d), s/veh	13.3	12.1	10.9	21.9	9.2	9.3	21.6	12.4	10.1	22.0	11.3	11.3
Incr Delay (d2), s/veh	1.4	10.3	2.9	15.0	1.2	1.2	112.1	5.7	2.9	2.3	3.3	6.1
Initial Q Delay(d3),s/veh	0.0	0.0	0.0	0.0	0.0	0.0	0.0	0.0	0.0	0.0	0.0	0.0
%ile BackOfQ(50%),veh/ln	1.4	6.0	2.5	2.4	1.3	1.3	8.7	5.0	2.2	0.6	3.5	4.3
Unsig. Movement Delay, s/veh												
LnGrp Delay(d),s/veh	14.7	22.3	13.8	36.9	10.4	10.5	133.7	18.1	13.0	24.3	14.6	17.4
LnGrp LOS	B	C	B	D	B	B	F	B	B	C	B	B
Approach Vol, veh/h		1596			732			2495			1508	
Approach Delay, s/veh		17.1			22.0			41.4			16.2	
Approach LOS		B			C			D			B	

Timer - Assigned Phs		2		4		6		8				
Phs Duration (G+Y+Rc), s		22.5		22.5		22.5		22.5				
Change Period (Y+Rc), s		4.5		4.5		4.5		4.5				
Max Green Setting (Gmax), s		18.0		18.0		18.0		18.0				
Max Q Clear Time (g_c+I1), s		20.0		15.2		20.0		20.0				
Green Ext Time (p_c), s		0.0		2.1		0.0		0.0				

Intersection Summary												
HCM 6th Ctrl Delay			27.0									
HCM 6th LOS			C									

Movement	EBL	EBT	EBR	WBL	WBT	WBR	NBL	NBT	NBR	SBL	SBT	SBR
Lane Configurations												
Traffic Volume (veh/h)	0	0	0	510	3	697	535	1788	0	0	1607	724
Future Volume (veh/h)	0	0	0	510	3	697	535	1788	0	0	1607	724
Initial Q (Qb), veh				0	0	0	0	0	0	0	0	0
Ped-Bike Adj(A_pbT)				1.00		1.00	1.00		1.00	1.00		1.00
Parking Bus, Adj				1.00	1.00	1.00	1.00	1.00	1.00	1.00	1.00	1.00
Work Zone On Approach					No			No			No	
Adj Sat Flow, veh/h/ln				1575	1772	1772	1575	1772	0	0	1772	1772
Adj Flow Rate, veh/h				539	0	704	540	1806	0	0	1623	731
Peak Hour Factor				0.99	0.99	0.99	0.99	0.99	0.99	0.99	0.99	0.99
Percent Heavy Veh, %				2	2	2	2	2	0	0	2	2
Cap, veh/h				838	0	1258	618	3124	0	0	1915	594
Arrive On Green				0.28	0.00	0.28	0.43	1.00	0.00	0.00	0.40	0.40
Sat Flow, veh/h				3000	0	4505	2910	4997	0	0	4997	1502
Grp Volume(v), veh/h				539	0	704	540	1806	0	0	1623	731
Grp Sat Flow(s),veh/h/ln				1500	0	1502	1455	1612	0	0	1612	1502
Q Serve(g_s), s				18.9	0.0	16.0	20.4	0.0	0.0	0.0	36.6	47.5
Cycle Q Clear(g_c), s				18.9	0.0	16.0	20.4	0.0	0.0	0.0	36.6	47.5
Prop In Lane				1.00		1.00	1.00		0.00	0.00		1.00
Lane Grp Cap(c), veh/h				838	0	1258	618	3124	0	0	1915	594
V/C Ratio(X)				0.64	0.00	0.56	0.87	0.58	0.00	0.00	0.85	1.23
Avail Cap(c_a), veh/h				838	0	1258	618	3124	0	0	1915	594
HCM Platoon Ratio				1.00	1.00	1.00	2.00	2.00	1.00	1.00	1.00	1.00
Upstream Filter(I)				1.00	0.00	1.00	1.00	1.00	0.00	0.00	1.00	1.00
Uniform Delay (d), s/veh				38.0	0.0	37.0	33.0	0.0	0.0	0.0	33.0	36.3
Incr Delay (d2), s/veh				3.8	0.0	1.8	15.7	0.8	0.0	0.0	4.9	117.7
Initial Q Delay(d3),s/veh				0.0	0.0	0.0	0.0	0.0	0.0	0.0	0.0	0.0
%ile BackOfQ(50%),veh/ln				7.4	0.0	6.1	7.1	0.2	0.0	0.0	14.9	36.4
Unsig. Movement Delay, s/veh												
LnGrp Delay(d),s/veh				41.8	0.0	38.8	48.7	0.8	0.0	0.0	37.8	153.9
LnGrp LOS				D	A	D	D	A	A	A	D	F
Approach Vol, veh/h					1243			2346			2354	
Approach Delay, s/veh					40.1			11.8			73.9	
Approach LOS					D			B			E	

Timer - Assigned Phs	2		5	6		8
Phs Duration (G+Y+Rc), s	82.0		30.0	52.0		38.0
Change Period (Y+Rc), s	4.5		4.5	4.5		4.5
Max Green Setting (Gmax), s	77.5		25.5	47.5		33.5
Max Q Clear Time (g_c+I1), s	2.0		22.4	49.5		20.9
Green Ext Time (p_c), s	26.2		0.7	0.0		4.5

Intersection Summary	
HCM 6th Ctrl Delay	42.3
HCM 6th LOS	D

Notes

User approved volume balancing among the lanes for turning movement.

Movement	EBL	EBT	EBR	WBL	WBT	WBR	NBL	NBT	NBR	SBL	SBT	SBR
Lane Configurations												
Traffic Volume (veh/h)	854	11	292	0	0	0	0	1243	547	543	1579	0
Future Volume (veh/h)	854	11	292	0	0	0	0	1243	547	543	1579	0
Initial Q (Qb), veh	0	0	0				0	0	0	0	0	0
Ped-Bike Adj(A_pbT)	1.00		1.00				1.00		1.00	1.00		1.00
Parking Bus, Adj	1.00	1.00	1.00				1.00	1.00	1.00	1.00	1.00	1.00
Work Zone On Approach		No						No			No	
Adj Sat Flow, veh/h/ln	1575	1772	1772				0	1772	1772	1575	1772	0
Adj Flow Rate, veh/h	879	0	298				0	1268	558	554	1611	0
Peak Hour Factor	0.98	0.98	0.98				0.98	0.98	0.98	0.98	0.98	0.98
Percent Heavy Veh, %	2	2	2				0	2	2	2	2	0
Cap, veh/h	863	0	432				0	1754	544	691	3084	0
Arrive On Green	0.29	0.00	0.29				0.00	0.36	0.36	0.47	1.00	0.00
Sat Flow, veh/h	3000	0	1502				0	4997	1502	2910	4997	0
Grp Volume(v), veh/h	879	0	298				0	1268	558	554	1611	0
Grp Sat Flow(s),veh/h/ln	1500	0	1502				0	1612	1502	1455	1612	0
Q Serve(g_s), s	34.5	0.0	21.2				0.0	27.2	43.5	19.4	0.0	0.0
Cycle Q Clear(g_c), s	34.5	0.0	21.2				0.0	27.2	43.5	19.4	0.0	0.0
Prop In Lane	1.00		1.00				0.00		1.00	1.00		0.00
Lane Grp Cap(c), veh/h	863	0	432				0	1754	544	691	3084	0
V/C Ratio(X)	1.02	0.00	0.69				0.00	0.72	1.03	0.80	0.52	0.00
Avail Cap(c_a), veh/h	863	0	432				0	1754	544	691	3084	0
HCM Platoon Ratio	1.00	1.00	1.00				1.00	1.00	1.00	2.00	2.00	1.00
Upstream Filter(I)	1.00	0.00	1.00				0.00	1.00	1.00	1.00	1.00	0.00
Uniform Delay (d), s/veh	42.8	0.0	38.0				0.0	33.0	38.3	29.1	0.0	0.0
Incr Delay (d2), s/veh	35.5	0.0	8.7				0.0	2.6	45.1	9.5	0.6	0.0
Initial Q Delay(d3),s/veh	0.0	0.0	0.0				0.0	0.0	0.0	0.0	0.0	0.0
%ile BackOfQ(50%),veh/ln	16.9	0.0	8.8				0.0	10.9	22.5	6.1	0.2	0.0
Unsig. Movement Delay, s/veh												
LnGrp Delay(d),s/veh	78.3	0.0	46.7				0.0	35.7	83.4	38.6	0.6	0.0
LnGrp LOS	F	A	D				A	D	F	D	A	A
Approach Vol, veh/h		1177						1826			2165	
Approach Delay, s/veh		70.3						50.2			10.4	
Approach LOS		E						D			B	

Timer - Assigned Phs	1	2	4	6
Phs Duration (G+Y+Rc), s	33.0	48.0	39.0	81.0
Change Period (Y+Rc), s	4.5	4.5	4.5	4.5
Max Green Setting (Gmax), s	28.5	43.5	34.5	76.5
Max Q Clear Time (g_c+I1), s	21.4	45.5	36.5	2.0
Green Ext Time (p_c), s	1.3	0.0	0.0	20.8

Intersection Summary	
HCM 6th Ctrl Delay	38.1
HCM 6th LOS	D

Notes

User approved volume balancing among the lanes for turning movement.

Movement	EBL	EBT	EBR	WBL	WBT	WBR	NBL	NBT	NBR	SBL	SBT	SBR
Lane Configurations												
Traffic Volume (veh/h)	365	22	88	49	4	275	45	1232	26	77	1500	354
Future Volume (veh/h)	365	22	88	49	4	275	45	1232	26	77	1500	354
Initial Q (Qb), veh	0	0	0	0	0	0	0	0	0	0	0	0
Ped-Bike Adj(A_pbT)	1.00		1.00	1.00		1.00	1.00		1.00	1.00		1.00
Parking Bus, Adj	1.00	1.00	1.00	1.00	1.00	1.00	1.00	1.00	1.00	1.00	1.00	1.00
Work Zone On Approach		No			No			No			No	
Adj Sat Flow, veh/h/ln	1575	1772	1772	1575	1772	1772	1575	1772	1772	1575	1772	1772
Adj Flow Rate, veh/h	392	24	95	53	4	296	48	1325	28	83	1613	381
Peak Hour Factor	0.93	0.93	0.93	0.93	0.93	0.93	0.93	0.93	0.93	0.93	0.93	0.93
Percent Heavy Veh, %	2	2	2	2	2	2	2	2	2	2	2	2
Cap, veh/h	178	92	366	328	498	444	269	1559	33	370	1811	423
Arrive On Green	0.30	0.30	0.30	0.30	0.30	0.30	0.26	0.93	0.93	0.13	0.46	0.46
Sat Flow, veh/h	959	312	1237	1131	1683	1502	1500	3371	71	1500	3916	916
Grp Volume(v), veh/h	392	0	119	53	4	296	48	661	692	83	1325	669
Grp Sat Flow(s),veh/h/ln	959	0	1549	1131	1683	1502	1500	1683	1759	1500	1612	1607
Q Serve(g_s), s	14.8	0.0	7.0	4.5	0.2	20.7	1.4	16.5	16.6	2.9	45.0	46.0
Cycle Q Clear(g_c), s	35.5	0.0	7.0	11.5	0.2	20.7	1.4	16.5	16.6	2.9	45.0	46.0
Prop In Lane	1.00		0.80	1.00		1.00	1.00		0.04	1.00		0.57
Lane Grp Cap(c), veh/h	178	0	458	328	498	444	269	779	814	370	1492	743
V/C Ratio(X)	2.20	0.00	0.26	0.16	0.01	0.67	0.18	0.85	0.85	0.22	0.89	0.90
Avail Cap(c_a), veh/h	178	0	458	328	498	444	269	779	814	370	1492	743
HCM Platoon Ratio	1.00	1.00	1.00	1.00	1.00	1.00	2.00	2.00	2.00	1.00	1.00	1.00
Upstream Filter(I)	1.00	0.00	1.00	1.00	1.00	1.00	1.00	1.00	1.00	1.00	1.00	1.00
Uniform Delay (d), s/veh	55.1	0.0	32.2	36.6	29.8	37.1	18.2	3.0	3.0	12.1	29.4	29.7
Incr Delay (d2), s/veh	559.2	0.0	1.4	1.1	0.0	7.7	1.4	11.2	10.8	1.4	8.3	16.0
Initial Q Delay(d3),s/veh	0.0	0.0	0.0	0.0	0.0	0.0	0.0	0.0	0.0	0.0	0.0	0.0
%ile BackOfQ(50%),veh/ln	38.1	0.0	2.8	1.3	0.1	8.5	0.6	3.9	4.0	1.1	18.6	20.5
Unsig. Movement Delay, s/veh												
LnGrp Delay(d),s/veh	614.3	0.0	33.6	37.7	29.9	44.8	19.6	14.2	13.9	13.5	37.7	45.7
LnGrp LOS	F	A	C	D	C	D	B	B	B	B	D	D
Approach Vol, veh/h		511			353			1401			2077	
Approach Delay, s/veh		479.1			43.5			14.2			39.3	
Approach LOS		F			D			B			D	

Timer - Assigned Phs	1	2		4	5	6		8
Phs Duration (G+Y+Rc), s	80.0	60.0		40.0	20.0	60.0		40.0
Change Period (Y+Rc), s	4.5	4.5		4.5	4.5	4.5		4.5
Max Green Setting (Gmax), s	75.5	55.5		35.5	15.5	55.5		35.5
Max Q Clear Time (g_c+I1), s	14.9	18.6		37.5	3.4	48.0		22.7
Green Ext Time (p_c), s	0.1	12.7		0.0	0.1	6.4		1.7

Intersection Summary	
HCM 6th Ctrl Delay	83.3
HCM 6th LOS	F

Intersection	
Intersection Delay, s/veh	64.3
Intersection LOS	F

Movement	EBL	EBT	EBR	WBL	WBT	WBR	NBL	NBT	NBR	SBL	SBT	SBR
Lane Configurations												
Traffic Vol, veh/h	201	1053	65	36	621	14	60	125	67	11	84	191
Future Vol, veh/h	201	1053	65	36	621	14	60	125	67	11	84	191
Peak Hour Factor	0.94	0.94	0.94	0.94	0.94	0.94	0.94	0.94	0.94	0.94	0.94	0.94
Heavy Vehicles, %	2	2	2	2	2	2	2	2	2	2	2	2
Mvmt Flow	214	1120	69	38	661	15	64	133	71	12	89	203
Number of Lanes	1	2	0	1	2	0	0	1	0	0	1	0

Approach	EB	WB	NB	SB
Opposing Approach	WB	EB	SB	NB
Opposing Lanes	3	3	1	1
Conflicting Approach Left	SB	NB	EB	WB
Conflicting Lanes Left	1	1	3	3
Conflicting Approach Right	NB	SB	WB	EB
Conflicting Lanes Right	1	1	3	3
HCM Control Delay	255.1	82.3	40.9	46.3
HCM LOS	F	F	E	E

Lane	NBLn1	EBLn1	EBLn2	EBLn3	WBLn1	WBLn2	WBLn3	SBLn1
Vol Left, %	24%	100%	0%	0%	100%	0%	0%	4%
Vol Thru, %	50%	0%	100%	84%	0%	100%	94%	29%
Vol Right, %	27%	0%	0%	16%	0%	0%	6%	67%
Sign Control	Stop	Stop	Stop	Stop	Stop	Stop	Stop	Stop
Traffic Vol by Lane	252	201	702	416	36	414	221	286
LT Vol	60	201	0	0	36	0	0	11
Through Vol	125	0	702	351	0	414	207	84
RT Vol	67	0	0	65	0	0	14	191
Lane Flow Rate	268	214	747	443	38	440	235	304
Geometry Grp	7	7	7	7	7	7	7	7
Degree of Util (X)	0.752	0.56	1.849	1.082	0.104	1.129	0.6	0.813
Departure Headway (Hd)	11.108	9.835	9.305	9.189	10.401	9.872	9.825	10.581
Convergence, Y/N	Yes	Yes	Yes	Yes	Yes	Yes	Yes	Yes
Cap	327	370	396	398	347	370	369	344
Service Time	8.808	7.535	7.005	6.889	8.101	7.572	7.525	8.281
HCM Lane V/C Ratio	0.82	0.578	1.886	1.113	0.11	1.189	0.637	0.884
HCM Control Delay	40.9	24.3	413.3	99.7	14.3	118.1	26.2	46.3
HCM Lane LOS	E	C	F	F	B	F	D	E
HCM 95th-tile Q	5.8	3.3	46.8	14.8	0.3	15.7	3.7	7

Movement	EBL	EBT	EBR	WBL	WBT	WBR	NBL	NBT	NBR	SBL	SBT	SBR
Lane Configurations												
Traffic Volume (veh/h)	261	678	186	48	340	132	172	954	71	184	1312	149
Future Volume (veh/h)	261	678	186	48	340	132	172	954	71	184	1312	149
Initial Q (Qb), veh	0	0	0	0	0	0	0	0	0	0	0	0
Ped-Bike Adj(A_pbT)	1.00		1.00	1.00		1.00	1.00		1.00	1.00		1.00
Parking Bus, Adj	1.00	1.00	1.00	1.00	1.00	1.00	1.00	1.00	1.00	1.00	1.00	1.00
Work Zone On Approach		No			No			No			No	
Adj Sat Flow, veh/h/ln	1575	1772	1772	1575	1772	1772	1575	1772	1772	1575	1772	1772
Adj Flow Rate, veh/h	264	685	188	48	343	133	174	964	72	186	1325	151
Peak Hour Factor	0.99	0.99	0.99	0.99	0.99	0.99	0.99	0.99	0.99	0.99	0.99	0.99
Percent Heavy Veh, %	2	2	2	2	2	2	2	2	2	2	2	2
Cap, veh/h	156	772	212	169	725	276	344	992	74	194	648	73
Arrive On Green	0.10	0.30	0.30	0.11	0.30	0.30	0.23	0.31	0.31	0.09	0.14	0.14
Sat Flow, veh/h	1500	2610	716	1500	2383	908	1500	3175	237	1500	3048	346
Grp Volume(v), veh/h	264	442	431	48	241	235	174	511	525	186	729	747
Grp Sat Flow(s),veh/h/ln	1500	1683	1643	1500	1683	1608	1500	1683	1729	1500	1683	1710
Q Serve(g_s), s	12.5	30.1	30.1	3.5	13.9	14.3	12.1	36.0	36.0	14.8	25.5	25.5
Cycle Q Clear(g_c), s	12.5	30.1	30.1	3.5	13.9	14.3	12.1	36.0	36.0	14.8	25.5	25.5
Prop In Lane	1.00		0.44	1.00		0.56	1.00		0.14	1.00		0.20
Lane Grp Cap(c), veh/h	156	498	486	169	512	489	344	526	540	194	358	363
V/C Ratio(X)	1.69	0.89	0.89	0.28	0.47	0.48	0.51	0.97	0.97	0.96	2.04	2.06
Avail Cap(c_a), veh/h	156	498	486	169	512	489	344	526	540	194	358	363
HCM Platoon Ratio	1.00	1.00	1.00	1.00	1.00	1.00	1.00	1.00	1.00	0.67	0.67	0.67
Upstream Filter(I)	1.00	1.00	1.00	1.00	1.00	1.00	1.00	1.00	1.00	1.00	1.00	1.00
Uniform Delay (d), s/veh	53.8	40.3	40.3	48.8	33.9	34.0	40.3	40.7	40.7	54.5	51.5	51.5
Incr Delay (d2), s/veh	336.3	20.3	20.7	4.2	3.1	3.4	5.2	32.8	32.3	55.0	476.5	485.0
Initial Q Delay(d3),s/veh	0.0	0.0	0.0	0.0	0.0	0.0	0.0	0.0	0.0	0.0	0.0	0.0
%ile BackOfQ(50%),veh/ln	19.3	15.1	14.8	1.5	6.1	6.1	5.0	19.5	19.9	8.7	58.5	60.2
Unsig. Movement Delay, s/veh												
LnGrp Delay(d),s/veh	390.1	60.6	61.1	53.0	37.0	37.4	45.6	73.5	73.0	109.5	528.0	536.4
LnGrp LOS	F	E	E	D	D	D	D	E	E	F	F	F
Approach Vol, veh/h		1137			524			1210			1662	
Approach Delay, s/veh		137.3			38.6			69.3			484.9	
Approach LOS		F			D			E			F	

Timer - Assigned Phs	1	2	3	4	5	6	7	8
Phs Duration (G+Y+Rc), s	30.0	42.0	18.0	40.0	32.0	30.0	17.0	41.0
Change Period (Y+Rc), s	4.5	4.5	4.5	4.5	4.5	4.5	4.5	4.5
Max Green Setting (Gmax), s	25.5	37.5	13.5	35.5	27.5	25.5	12.5	36.5
Max Q Clear Time (g_c+I1), s	16.8	38.0	5.5	32.1	14.1	27.5	14.5	16.3
Green Ext Time (p_c), s	0.0	0.0	0.0	1.8	0.4	0.0	0.0	2.8

Intersection Summary	
HCM 6th Ctrl Delay	235.2
HCM 6th LOS	F

Movement	EBL	EBT	EBR	WBL	WBT	WBR	NBL	NBT	NBR	SBL	SBT	SBR
Lane Configurations												
Traffic Volume (veh/h)	30	778	92	51	410	81	59	109	92	25	54	25
Future Volume (veh/h)	30	778	92	51	410	81	59	109	92	25	54	25
Initial Q (Qb), veh	0	0	0	0	0	0	0	0	0	0	0	0
Ped-Bike Adj(A_pbT)	1.00		1.00	1.00		1.00	1.00		1.00	1.00		1.00
Parking Bus, Adj	1.00	1.00	1.00	1.00	1.00	1.00	1.00	1.00	1.00	1.00	1.00	1.00
Work Zone On Approach		No			No			No			No	
Adj Sat Flow, veh/h/ln	1575	1772	1772	1575	1772	1772	1772	1772	1772	1772	1772	1772
Adj Flow Rate, veh/h	34	884	105	58	466	92	67	124	105	28	61	28
Peak Hour Factor	0.88	0.88	0.88	0.88	0.88	0.88	0.88	0.88	0.88	0.88	0.88	0.88
Percent Heavy Veh, %	2	2	2	2	2	2	2	2	2	2	2	2
Cap, veh/h	496	877	743	198	1389	273	185	200	145	175	269	101
Arrive On Green	0.50	0.50	0.50	0.50	0.50	0.50	0.26	0.26	0.26	0.26	0.26	0.26
Sat Flow, veh/h	757	1772	1502	506	2806	551	247	775	562	205	1046	393
Grp Volume(v), veh/h	34	884	105	58	278	280	296	0	0	117	0	0
Grp Sat Flow(s),veh/h/ln	757	1772	1502	506	1683	1673	1583	0	0	1644	0	0
Q Serve(g_s), s	1.0	18.0	1.4	0.0	3.6	3.7	3.3	0.0	0.0	0.0	0.0	0.0
Cycle Q Clear(g_c), s	4.7	18.0	1.4	18.0	3.6	3.7	6.1	0.0	0.0	2.0	0.0	0.0
Prop In Lane	1.00		1.00	1.00		0.33	0.23		0.35	0.24		0.24
Lane Grp Cap(c), veh/h	496	877	743	198	833	828	529	0	0	546	0	0
V/C Ratio(X)	0.07	1.01	0.14	0.29	0.33	0.34	0.56	0.00	0.00	0.21	0.00	0.00
Avail Cap(c_a), veh/h	496	877	743	198	833	828	897	0	0	905	0	0
HCM Platoon Ratio	1.00	1.00	1.00	1.00	1.00	1.00	1.00	1.00	1.00	1.00	1.00	1.00
Upstream Filter(I)	1.00	1.00	1.00	1.00	1.00	1.00	1.00	0.00	0.00	1.00	0.00	0.00
Uniform Delay (d), s/veh	7.0	9.2	5.0	18.2	5.6	5.6	12.2	0.0	0.0	10.8	0.0	0.0
Incr Delay (d2), s/veh	0.1	32.3	0.1	0.8	0.2	0.2	0.9	0.0	0.0	0.2	0.0	0.0
Initial Q Delay(d3),s/veh	0.0	0.0	0.0	0.0	0.0	0.0	0.0	0.0	0.0	0.0	0.0	0.0
%ile BackOfQ(50%),veh/ln	0.1	11.7	0.3	0.5	0.8	0.8	1.8	0.0	0.0	0.6	0.0	0.0
Unsig. Movement Delay, s/veh												
LnGrp Delay(d),s/veh	7.1	41.5	5.1	19.0	5.8	5.8	13.2	0.0	0.0	11.0	0.0	0.0
LnGrp LOS	A	F	A	B	A	A	B	A	A	B	A	A
Approach Vol, veh/h		1023			616			296			117	
Approach Delay, s/veh		36.6			7.0			13.2			11.0	
Approach LOS		D			A			B			B	

Timer - Assigned Phs	2	4	6	8
Phs Duration (G+Y+Rc), s	13.9	22.5	13.9	22.5
Change Period (Y+Rc), s	4.5	4.5	4.5	4.5
Max Green Setting (Gmax), s	18.0	18.0	18.0	18.0
Max Q Clear Time (g_c+I1), s	8.1	20.0	4.0	20.0
Green Ext Time (p_c), s	1.2	0.0	0.5	0.0

Intersection Summary	
HCM 6th Ctrl Delay	22.9
HCM 6th LOS	C

Intersection	
Intersection Delay, s/veh	68.2
Intersection LOS	F

Movement	EBL	EBT	EBR	WBL	WBT	WBR	NBL	NBT	NBR	SBL	SBT	SBR
Lane Configurations												
Traffic Vol, veh/h	33	206	73	45	152	43	62	359	47	41	359	25
Future Vol, veh/h	33	206	73	45	152	43	62	359	47	41	359	25
Peak Hour Factor	0.94	0.94	0.94	0.94	0.94	0.94	0.94	0.94	0.94	0.94	0.94	0.94
Heavy Vehicles, %	2	2	2	2	2	2	2	2	2	2	2	2
Mvmt Flow	35	219	78	48	162	46	66	382	50	44	382	27
Number of Lanes	0	1	0	0	1	1	0	1	0	0	1	0

Approach	EB	WB	NB	SB
Opposing Approach	WB	EB	SB	NB
Opposing Lanes	2	1	1	1
Conflicting Approach Left	SB	NB	EB	WB
Conflicting Lanes Left	1	1	1	2
Conflicting Approach Right	NB	SB	WB	EB
Conflicting Lanes Right	1	1	2	1
HCM Control Delay	37.9	21.7	107.1	73.7
HCM LOS	E	C	F	F

Lane	NBLn1	EBLn1	WBLn1	WBLn2	SBLn1
Vol Left, %	13%	11%	23%	0%	10%
Vol Thru, %	77%	66%	77%	0%	84%
Vol Right, %	10%	23%	0%	100%	6%
Sign Control	Stop	Stop	Stop	Stop	Stop
Traffic Vol by Lane	468	312	197	43	425
LT Vol	62	33	45	0	41
Through Vol	359	206	152	0	359
RT Vol	47	73	0	43	25
Lane Flow Rate	498	332	210	46	452
Geometry Grp	2	5	7	7	2
Degree of Util (X)	1.118	0.785	0.544	0.108	1.003
Departure Headway (Hd)	8.087	9.008	9.846	8.995	8.407
Convergence, Y/N	Yes	Yes	Yes	Yes	Yes
Cap	448	405	369	401	434
Service Time	6.17	7.008	7.546	6.695	6.407
HCM Lane V/C Ratio	1.112	0.82	0.569	0.115	1.041
HCM Control Delay	107.1	37.9	23.7	12.8	73.7
HCM Lane LOS	F	E	C	B	F
HCM 95th-tile Q	17.2	6.7	3.1	0.4	12.8

Movement	EBL	EBT	EBR	WBL	WBT	WBR	NBL	NBT	NBR	SBL	SBT	SBR
Lane Configurations												
Traffic Volume (veh/h)	88	208	125	73	198	144	161	1025	147	225	1229	65
Future Volume (veh/h)	88	208	125	73	198	144	161	1025	147	225	1229	65
Initial Q (Qb), veh	0	0	0	0	0	0	0	0	0	0	0	0
Ped-Bike Adj(A_pbT)	1.00		1.00	1.00		1.00	1.00		1.00	1.00		1.00
Parking Bus, Adj	1.00	1.00	1.00	1.00	1.00	1.00	1.00	1.00	1.00	1.00	1.00	1.00
Work Zone On Approach		No			No			No			No	
Adj Sat Flow, veh/h/ln	1772	1772	1772	1772	1772	1772	1575	1772	1772	1575	1772	1772
Adj Flow Rate, veh/h	96	226	136	79	215	157	175	1114	160	245	1336	71
Peak Hour Factor	0.92	0.92	0.92	0.92	0.92	0.92	0.92	0.92	0.92	0.92	0.92	0.92
Percent Heavy Veh, %	2	2	2	2	2	2	2	2	2	2	2	2
Cap, veh/h	39	39	444	38	60	444	319	1367	196	194	1233	65
Arrive On Green	0.30	0.30	0.30	0.30	0.30	0.30	0.07	0.15	0.15	0.04	0.13	0.13
Sat Flow, veh/h	0	133	1502	0	203	1502	1500	2956	423	1500	3252	172
Grp Volume(v), veh/h	322	0	136	294	0	157	175	633	641	245	690	717
Grp Sat Flow(s),veh/h/ln	133	0	1502	203	0	1502	1500	1683	1696	1500	1683	1741
Q Serve(g_s), s	0.0	0.0	8.4	0.0	0.0	9.9	13.5	43.7	43.9	15.5	45.5	45.5
Cycle Q Clear(g_c), s	35.5	0.0	8.4	35.5	0.0	9.9	13.5	43.7	43.9	15.5	45.5	45.5
Prop In Lane	0.30		1.00	0.27		1.00	1.00		0.25	1.00		0.10
Lane Grp Cap(c), veh/h	78	0	444	98	0	444	319	779	784	194	638	660
V/C Ratio(X)	4.12	0.00	0.31	2.99	0.00	0.35	0.55	0.81	0.82	1.26	1.08	1.09
Avail Cap(c_a), veh/h	78	0	444	98	0	444	319	779	784	194	638	660
HCM Platoon Ratio	1.00	1.00	1.00	1.00	1.00	1.00	0.33	0.33	0.33	0.33	0.33	0.33
Upstream Filter(I)	1.00	0.00	1.00	1.00	0.00	1.00	1.00	1.00	1.00	1.00	1.00	1.00
Uniform Delay (d), s/veh	42.8	0.0	32.7	39.5	0.0	33.2	50.2	45.8	45.9	57.4	52.5	52.5
Incr Delay (d2), s/veh	1432.6	0.0	1.8	924.2	0.0	2.2	6.7	9.1	9.2	153.5	59.8	60.5
Initial Q Delay(d3),s/veh	0.0	0.0	0.0	0.0	0.0	0.0	0.0	0.0	0.0	0.0	0.0	0.0
%ile BackOfQ(50%),veh/ln	38.5	0.0	3.3	28.2	0.0	3.9	6.1	21.7	22.0	14.5	31.2	32.4
Unsig. Movement Delay, s/veh												
LnGrp Delay(d),s/veh	1475.5	0.0	34.5	963.7	0.0	35.4	56.9	54.9	55.1	210.9	112.3	113.0
LnGrp LOS	F	A	C	F	A	D	E	D	E	F	F	F
Approach Vol, veh/h		458			451			1449			1652	
Approach Delay, s/veh		1047.6			640.6			55.3			127.2	
Approach LOS		F			F			E			F	

Timer - Assigned Phs	1	2		4	5	6		8				
Phs Duration (G+Y+Rc), s	30.0	60.0		40.0	30.0	50.0		40.0				
Change Period (Y+Rc), s	4.5	4.5		4.5	4.5	4.5		4.5				
Max Green Setting (Gmax), s	25.5	55.5		35.5	25.5	45.5		35.5				
Max Q Clear Time (g_c+I1), s	17.5	45.9		37.5	15.5	47.5		37.5				
Green Ext Time (p_c), s	0.0	5.7		0.0	0.3	0.0		0.0				

Intersection Summary		
HCM 6th Ctrl Delay	264.1	
HCM 6th LOS	F	

Intersection	
Intersection Delay, s/veh	21.4
Intersection LOS	C

Movement	EBL	EBT	EBR	WBL	WBT	WBR	NBL	NBT	NBR	SBL	SBT	SBR
Lane Configurations												
Traffic Vol, veh/h	98	332	47	35	256	38	23	142	10	32	88	41
Future Vol, veh/h	98	332	47	35	256	38	23	142	10	32	88	41
Peak Hour Factor	0.96	0.96	0.96	0.96	0.96	0.96	0.96	0.96	0.96	0.96	0.96	0.96
Heavy Vehicles, %	2	2	2	2	2	2	2	2	2	2	2	2
Mvmt Flow	102	346	49	36	267	40	24	148	10	33	92	43
Number of Lanes	0	1	0	0	1	1	0	1	0	0	1	0

Approach	EB	WB	NB	SB
Opposing Approach	WB	EB	SB	NB
Opposing Lanes	2	1	1	1
Conflicting Approach Left	SB	NB	EB	WB
Conflicting Lanes Left	1	1	1	2
Conflicting Approach Right	NB	SB	WB	EB
Conflicting Lanes Right	1	1	2	1
HCM Control Delay	30.4	16.6	13.6	13.1
HCM LOS	D	C	B	B

Lane	NBLn1	EBLn1	WBLn1	WBLn2	SBLn1
Vol Left, %	13%	21%	12%	0%	20%
Vol Thru, %	81%	70%	88%	0%	55%
Vol Right, %	6%	10%	0%	100%	25%
Sign Control	Stop	Stop	Stop	Stop	Stop
Traffic Vol by Lane	175	477	291	38	161
LT Vol	23	98	35	0	32
Through Vol	142	332	256	0	88
RT Vol	10	47	0	38	41
Lane Flow Rate	182	497	303	40	168
Geometry Grp	2	5	7	7	2
Degree of Util (X)	0.349	0.819	0.56	0.065	0.319
Departure Headway (Hd)	6.895	5.937	6.647	5.871	6.844
Convergence, Y/N	Yes	Yes	Yes	Yes	Yes
Cap	520	611	543	609	523
Service Time	4.955	3.981	4.395	3.618	4.905
HCM Lane V/C Ratio	0.35	0.813	0.558	0.066	0.321
HCM Control Delay	13.6	30.4	17.6	9	13.1
HCM Lane LOS	B	D	C	A	B
HCM 95th-tile Q	1.6	8.4	3.4	0.2	1.4

Intersection	
Int Delay, s/veh	0

Movement	WBL	WBR	NBT	NBR	SBL	SBT
Lane Configurations						
Traffic Vol, veh/h	0	0	0	0	0	0
Future Vol, veh/h	0	0	0	0	0	0
Conflicting Peds, #/hr	0	0	0	0	0	0
Sign Control	Stop	Stop	Free	Free	Free	Free
RT Channelized	-	None	-	None	-	None
Storage Length	-	0	-	-	-	-
Veh in Median Storage, #	0	-	0	-	-	0
Grade, %	0	-	0	-	-	0
Peak Hour Factor	92	92	92	92	92	92
Heavy Vehicles, %	2	2	2	2	2	2
Mvmt Flow	0	0	0	0	0	0

Major/Minor	Minor1		Major1		Major2	
Conflicting Flow All	-	0	0	0	-	-
Stage 1	-	-	-	-	-	-
Stage 2	-	-	-	-	-	-
Critical Hdwy	-	6.94	-	-	-	-
Critical Hdwy Stg 1	-	-	-	-	-	-
Critical Hdwy Stg 2	-	-	-	-	-	-
Follow-up Hdwy	-	3.32	-	-	-	-
Pot Cap-1 Maneuver	0	-	-	-	0	-
Stage 1	0	-	-	-	0	-
Stage 2	0	-	-	-	0	-
Platoon blocked, %			-	-		-
Mov Cap-1 Maneuver	-	-	-	-	-	-
Mov Cap-2 Maneuver	-	-	-	-	-	-
Stage 1	-	-	-	-	-	-
Stage 2	-	-	-	-	-	-

Approach	WB	NB	SB
HCM Control Delay, s	0	0	0
HCM LOS	A		

Minor Lane/Major Mvmt	NBT	NBR	WBLn1	SBT
Capacity (veh/h)	-	-	-	-
HCM Lane V/C Ratio	-	-	-	-
HCM Control Delay (s)	-	-	0	-
HCM Lane LOS	-	-	A	-
HCM 95th %tile Q(veh)	-	-	-	-

Intersection	
Int Delay, s/veh	0

Movement	EBT	EBR	WBL	WBT	NBL	NBR
Lane Configurations						
Traffic Vol, veh/h	0	0	0	0	0	0
Future Vol, veh/h	0	0	0	0	0	0
Conflicting Peds, #/hr	0	0	0	0	0	0
Sign Control	Free	Free	Free	Free	Stop	Stop
RT Channelized	-	None	-	None	-	None
Storage Length	-	-	-	-	0	-
Veh in Median Storage, #	0	-	-	0	0	-
Grade, %	0	-	-	0	0	-
Peak Hour Factor	92	92	92	92	92	92
Heavy Vehicles, %	2	2	2	2	2	2
Mvmt Flow	0	0	0	0	0	0

Major/Minor	Major1		Major2		Minor1	
Conflicting Flow All	0	0	-	-	2	-
Stage 1	-	-	-	-	1	-
Stage 2	-	-	-	-	1	-
Critical Hdwy	-	-	-	-	6.63	-
Critical Hdwy Stg 1	-	-	-	-	5.43	-
Critical Hdwy Stg 2	-	-	-	-	5.83	-
Follow-up Hdwy	-	-	-	-	3.519	-
Pot Cap-1 Maneuver	-	-	0	-	1020	0
Stage 1	-	-	0	-	1022	0
Stage 2	-	-	0	-	1022	0
Platoon blocked, %	-	-		-		
Mov Cap-1 Maneuver	-	-	-	-	1020	-
Mov Cap-2 Maneuver	-	-	-	-	1020	-
Stage 1	-	-	-	-	1022	-
Stage 2	-	-	-	-	1022	-

Approach	EB	WB	NB
HCM Control Delay, s	0	0	0
HCM LOS			A

Minor Lane/Major Mvmt	NBLn1	EBT	EBR	WBT
Capacity (veh/h)	-	-	-	-
HCM Lane V/C Ratio	-	-	-	-
HCM Control Delay (s)	0	-	-	-
HCM Lane LOS	A	-	-	-
HCM 95th %tile Q(veh)	-	-	-	-

Movement	EBT	EBR	WBL	WBT	NBL	NBR
Lane Configurations						
Traffic Volume (veh/h)	0	0	0	0	0	0
Future Volume (veh/h)	0	0	0	0	0	0
Initial Q (Qb), veh	0	0	0	0		
Ped-Bike Adj(A_pbT)		1.00	1.00			
Parking Bus, Adj	1.00	1.00	1.00	1.00		
Work Zone On Approach	No			No		
Adj Sat Flow, veh/h/ln	1772	0	0	1772		
Adj Flow Rate, veh/h	0	0	0	0		
Peak Hour Factor	0.92	0.92	0.92	0.92		
Percent Heavy Veh, %	2	0	0	2		
Cap, veh/h	1418	0	0	2693		
Arrive On Green	0.00	0.00	0.00	0.00		
Sat Flow, veh/h	1772	0	0	3544		
Grp Volume(v), veh/h	0	0	0	0		
Grp Sat Flow(s),veh/h/ln	1772	0	0	1683		
Q Serve(g_s), s	0.0	0.0	0.0	0.0		
Cycle Q Clear(g_c), s	0.0	0.0	0.0	0.0		
Prop In Lane		0.00	0.00			
Lane Grp Cap(c), veh/h	1418	0	0	2693		
V/C Ratio(X)	0.00	0.00	0.00	0.00		
Avail Cap(c_a), veh/h	1418	0	0	2693		
HCM Platoon Ratio	1.00	1.00	1.00	1.00		
Upstream Filter(I)	0.00	0.00	0.00	0.00		
Uniform Delay (d), s/veh	0.0	0.0	0.0	0.0		
Incr Delay (d2), s/veh	0.0	0.0	0.0	0.0		
Initial Q Delay(d3),s/veh	0.0	0.0	0.0	0.0		
%ile BackOfQ(50%),veh/ln	0.0	0.0	0.0	0.0		
Unsig. Movement Delay, s/veh						
LnGrp Delay(d),s/veh	0.0	0.0	0.0	0.0		
LnGrp LOS	A	A	A	A		
Approach Vol, veh/h	0			0		
Approach Delay, s/veh	0.0			0.0		
Approach LOS						

Timer - Assigned Phs	4	8
Phs Duration (G+Y+Rc), s	22.5	22.5
Change Period (Y+Rc), s	4.5	4.5
Max Green Setting (Gmax), s	18.0	18.0
Max Q Clear Time (g_c+I1), s	0.0	0.0
Green Ext Time (p_c), s	0.0	0.0

Intersection Summary	
HCM 6th Ctrl Delay	0.0
HCM 6th LOS	A

Intersection	
Intersection Delay, s/veh	23.5
Intersection LOS	C

Movement	EBL	EBT	EBR	WBL	WBT	WBR	NBL	NBT	NBR	SBL	SBT	SBR
Lane Configurations												
Traffic Vol, veh/h	73	422	37	16	201	85	14	85	22	62	74	27
Future Vol, veh/h	73	422	37	16	201	85	14	85	22	62	74	27
Peak Hour Factor	0.95	0.95	0.95	0.95	0.95	0.95	0.95	0.95	0.95	0.95	0.95	0.95
Heavy Vehicles, %	2	2	2	2	2	2	2	2	2	2	2	2
Mvmt Flow	77	444	39	17	212	89	15	89	23	65	78	28
Number of Lanes	0	1	1	0	2	0	0	1	0	0	1	0

Approach	EB	WB	NB	SB
Opposing Approach	WB	EB	SB	NB
Opposing Lanes	2	2	1	1
Conflicting Approach Left	SB	NB	EB	WB
Conflicting Lanes Left	1	1	2	2
Conflicting Approach Right	NB	SB	WB	EB
Conflicting Lanes Right	1	1	2	2
HCM Control Delay	36.1	11.6	11.9	12.8
HCM LOS	E	B	B	B

Lane	NBLn1	EBLn1	EBLn2	WBLn1	WBLn2	SBLn1
Vol Left, %	12%	15%	0%	14%	0%	38%
Vol Thru, %	70%	85%	0%	86%	54%	45%
Vol Right, %	18%	0%	100%	0%	46%	17%
Sign Control	Stop	Stop	Stop	Stop	Stop	Stop
Traffic Vol by Lane	121	495	37	117	186	163
LT Vol	14	73	0	16	0	62
Through Vol	85	422	0	101	101	74
RT Vol	22	0	37	0	85	27
Lane Flow Rate	127	521	39	123	195	172
Geometry Grp	2	7	7	7	7	2
Degree of Util (X)	0.24	0.88	0.057	0.223	0.334	0.319
Departure Headway (Hd)	6.775	6.181	5.295	6.547	6.149	6.694
Convergence, Y/N	Yes	Yes	Yes	Yes	Yes	Yes
Cap	531	589	668	552	588	539
Service Time	4.799	3.881	3.094	4.247	3.849	4.716
HCM Lane V/C Ratio	0.239	0.885	0.058	0.223	0.332	0.319
HCM Control Delay	11.9	38.2	8.4	11.1	11.9	12.8
HCM Lane LOS	B	E	A	B	B	B
HCM 95th-tile Q	0.9	10.2	0.2	0.8	1.5	1.4

Movement	EBL	EBT	EBR	WBL	WBT	WBR	NBL	NBT	NBR	SBL	SBT	SBR
Lane Configurations												
Traffic Volume (veh/h)	106	433	52	82	245	124	83	1204	100	161	1410	47
Future Volume (veh/h)	106	433	52	82	245	124	83	1204	100	161	1410	47
Initial Q (Qb), veh	0	0	0	0	0	0	0	0	0	0	0	0
Ped-Bike Adj(A_pbT)	1.00		1.00	1.00		1.00	1.00		1.00	1.00		1.00
Parking Bus, Adj	1.00	1.00	1.00	1.00	1.00	1.00	1.00	1.00	1.00	1.00	1.00	1.00
Work Zone On Approach		No			No			No			No	
Adj Sat Flow, veh/h/ln	1772	1772	1772	1772	1772	1772	1575	1772	1772	1575	1772	1772
Adj Flow Rate, veh/h	109	446	54	85	253	128	86	1241	103	166	1454	48
Peak Hour Factor	0.97	0.97	0.97	0.97	0.97	0.97	0.97	0.97	0.97	0.97	0.97	0.97
Percent Heavy Veh, %	2	2	2	2	2	2	2	2	2	2	2	2
Cap, veh/h	120	540	78	100	348	221	194	1325	110	256	1538	51
Arrive On Green	0.30	0.30	0.30	0.30	0.30	0.30	0.13	0.42	0.42	0.06	0.15	0.15
Sat Flow, veh/h	265	1827	262	195	1175	747	1500	3148	261	1500	3326	110
Grp Volume(v), veh/h	287	0	322	213	0	253	86	662	682	166	735	767
Grp Sat Flow(s),veh/h/ln	789	0	1565	639	0	1478	1500	1683	1725	1500	1683	1752
Q Serve(g_s), s	18.0	0.0	21.9	13.6	0.0	17.5	6.4	45.1	45.4	13.0	51.8	52.0
Cycle Q Clear(g_c), s	35.5	0.0	21.9	35.5	0.0	17.5	6.4	45.1	45.4	13.0	51.8	52.0
Prop In Lane	0.38		0.17	0.40		0.51	1.00		0.15	1.00		0.06
Lane Grp Cap(c), veh/h	275	0	463	231	0	437	194	708	726	256	779	810
V/C Ratio(X)	1.04	0.00	0.70	0.92	0.00	0.58	0.44	0.94	0.94	0.65	0.94	0.95
Avail Cap(c_a), veh/h	275	0	463	231	0	437	194	708	726	256	779	810
HCM Platoon Ratio	1.00	1.00	1.00	1.00	1.00	1.00	1.00	1.00	1.00	0.33	0.33	0.33
Upstream Filter(I)	1.00	0.00	1.00	1.00	0.00	1.00	1.00	1.00	1.00	1.00	1.00	1.00
Uniform Delay (d), s/veh	49.8	0.0	37.5	48.3	0.0	35.9	48.3	33.2	33.3	53.1	49.3	49.4
Incr Delay (d2), s/veh	66.5	0.0	8.4	41.7	0.0	5.5	7.2	21.2	21.4	12.0	21.1	21.0
Initial Q Delay(d3),s/veh	0.0	0.0	0.0	0.0	0.0	0.0	0.0	0.0	0.0	0.0	0.0	0.0
%ile BackOfQ(50%),veh/ln	18.4	0.0	9.4	9.2	0.0	7.0	2.8	22.1	22.8	6.1	28.0	29.2
Unsig. Movement Delay, s/veh												
LnGrp Delay(d),s/veh	116.3	0.0	45.8	90.0	0.0	41.4	55.5	54.4	54.7	65.1	70.4	70.4
LnGrp LOS	F	A	D	F	A	D	E	D	D	E	E	E
Approach Vol, veh/h		609			466			1430			1668	
Approach Delay, s/veh		79.0			63.6			54.6			69.9	
Approach LOS		E			E			D			E	

Timer - Assigned Phs	1	2		4	5	6		8				
Phs Duration (G+Y+Rc), s	35.0	55.0		40.0	20.0	60.0		40.0				
Change Period (Y+Rc), s	4.5	4.5		4.5	4.5	4.5		4.5				
Max Green Setting (Gmax), s	30.5	50.5		35.5	15.5	55.5		35.5				
Max Q Clear Time (g_c+I1), s	15.0	47.4		37.5	8.4	54.0		37.5				
Green Ext Time (p_c), s	0.2	2.3		0.0	0.1	1.2		0.0				

Intersection Summary	
HCM 6th Ctrl Delay	65.3
HCM 6th LOS	E

Intersection	
Int Delay, s/veh	7.1

Movement	EBL	EBT	WBT	WBR	SBL	SBR
Lane Configurations						
Traffic Vol, veh/h	140	479	292	32	42	76
Future Vol, veh/h	140	479	292	32	42	76
Conflicting Peds, #/hr	0	0	0	0	0	0
Sign Control	Free	Free	Free	Free	Stop	Stop
RT Channelized	-	None	-	None	-	None
Storage Length	-	-	-	-	0	-
Veh in Median Storage, #	-	0	0	-	0	-
Grade, %	-	0	0	-	0	-
Peak Hour Factor	73	73	73	73	73	73
Heavy Vehicles, %	2	2	2	2	2	2
Mvmt Flow	192	656	400	44	58	104

Major/Minor	Major1		Major2		Minor2	
Conflicting Flow All	444	0	-	0	1462	422
Stage 1	-	-	-	-	422	-
Stage 2	-	-	-	-	1040	-
Critical Hdwy	4.12	-	-	-	6.42	6.22
Critical Hdwy Stg 1	-	-	-	-	5.42	-
Critical Hdwy Stg 2	-	-	-	-	5.42	-
Follow-up Hdwy	2.218	-	-	-	3.518	3.318
Pot Cap-1 Maneuver	1116	-	-	-	142	632
Stage 1	-	-	-	-	662	-
Stage 2	-	-	-	-	341	-
Platoon blocked, %		-	-	-		
Mov Cap-1 Maneuver	1116	-	-	-	104	632
Mov Cap-2 Maneuver	-	-	-	-	104	-
Stage 1	-	-	-	-	483	-
Stage 2	-	-	-	-	341	-

Approach	EB	WB	SB
HCM Control Delay, s	2	0	53.5
HCM LOS			F

Minor Lane/Major Mvmt	EBL	EBT	WBT	WBR	SBLn1
Capacity (veh/h)	1116	-	-	-	225
HCM Lane V/C Ratio	0.172	-	-	-	0.718
HCM Control Delay (s)	8.9	0	-	-	53.5
HCM Lane LOS	A	A	-	-	F
HCM 95th %tile Q(veh)	0.6	-	-	-	4.8

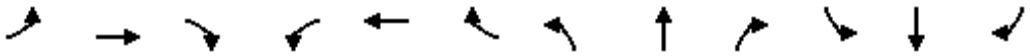

Movement	EBL	EBT	EBR	WBL	WBT	WBR	NBL	NBT	NBR	SBL	SBT	SBR
Lane Configurations												
Traffic Volume (veh/h)	32	3	5	152	4	105	8	945	131	286	1296	25
Future Volume (veh/h)	32	3	5	152	4	105	8	945	131	286	1296	25
Initial Q (Qb), veh	0	0	0	0	0	0	0	0	0	0	0	0
Ped-Bike Adj(A_pbT)	1.00		1.00	1.00		1.00	1.00		1.00	1.00		1.00
Parking Bus, Adj	1.00	1.00	1.00	1.00	1.00	1.00	1.00	1.00	1.00	1.00	1.00	1.00
Work Zone On Approach		No			No			No			No	
Adj Sat Flow, veh/h/ln	1772	1772	1772	1772	1772	1772	1575	1772	1772	1575	1772	1772
Adj Flow Rate, veh/h	34	3	5	160	4	111	8	995	138	301	1364	26
Peak Hour Factor	0.95	0.95	0.95	0.95	0.95	0.95	0.95	0.95	0.95	0.95	0.95	0.95
Percent Heavy Veh, %	2	2	2	2	2	2	2	2	2	2	2	2
Cap, veh/h	505	48	55	728	16	601	160	1188	165	203	1352	26
Arrive On Green	0.40	0.40	0.40	0.40	0.40	0.40	0.40	0.40	0.40	0.40	0.40	0.40
Sat Flow, veh/h	901	119	138	1424	41	1502	346	2970	412	442	3379	64
Grp Volume(v), veh/h	42	0	0	164	0	111	8	564	569	301	679	711
Grp Sat Flow(s),veh/h/ln	1159	0	0	1464	0	1502	346	1683	1698	442	1683	1760
Q Serve(g_s), s	0.3	0.0	0.0	0.0	0.0	2.2	0.0	13.6	13.6	4.4	18.0	18.0
Cycle Q Clear(g_c), s	3.2	0.0	0.0	2.9	0.0	2.2	18.0	13.6	13.6	18.0	18.0	18.0
Prop In Lane	0.81		0.12	0.98		1.00	1.00		0.24	1.00		0.04
Lane Grp Cap(c), veh/h	608	0	0	744	0	601	160	673	679	203	673	704
V/C Ratio(X)	0.07	0.00	0.00	0.22	0.00	0.18	0.05	0.84	0.84	1.48	1.01	1.01
Avail Cap(c_a), veh/h	608	0	0	744	0	601	160	673	679	203	673	704
HCM Platoon Ratio	1.00	1.00	1.00	1.00	1.00	1.00	1.00	1.00	1.00	1.00	1.00	1.00
Upstream Filter(I)	1.00	0.00	0.00	1.00	0.00	1.00	1.00	1.00	1.00	1.00	1.00	1.00
Uniform Delay (d), s/veh	8.8	0.0	0.0	9.0	0.0	8.7	22.5	12.2	12.2	22.0	13.5	13.5
Incr Delay (d2), s/veh	0.2	0.0	0.0	0.7	0.0	0.7	0.6	11.8	11.8	241.7	36.8	36.3
Initial Q Delay(d3),s/veh	0.0	0.0	0.0	0.0	0.0	0.0	0.0	0.0	0.0	0.0	0.0	0.0
%ile BackOfQ(50%),veh/ln	0.3	0.0	0.0	1.0	0.0	0.7	0.1	6.1	6.2	15.6	12.0	12.5
Unsig. Movement Delay, s/veh												
LnGrp Delay(d),s/veh	9.0	0.0	0.0	9.7	0.0	9.4	23.1	24.0	24.0	263.8	50.3	49.8
LnGrp LOS	A	A	A	A	A	A	C	C	C	F	F	F
Approach Vol, veh/h		42			275			1141			1691	
Approach Delay, s/veh		9.0			9.6			24.0			88.1	
Approach LOS		A			A			C			F	

Timer - Assigned Phs		2		4		6		8				
Phs Duration (G+Y+Rc), s		22.5		22.5		22.5		22.5				
Change Period (Y+Rc), s		4.5		4.5		4.5		4.5				
Max Green Setting (Gmax), s		18.0		18.0		18.0		18.0				
Max Q Clear Time (g_c+I1), s		20.0		5.2		20.0		4.9				
Green Ext Time (p_c), s		0.0		0.1		0.0		1.0				

Intersection Summary												
HCM 6th Ctrl Delay			57.0									
HCM 6th LOS			E									

HCM 6th Signalized Intersection Summary
1: Cedar & Valley

06/16/2020

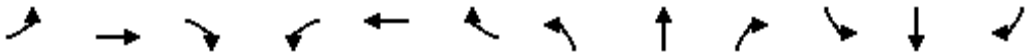

Movement	EBL	EBT	EBR	WBL	WBT	WBR	NBL	NBT	NBR	SBL	SBT	SBR
Lane Configurations												
Traffic Volume (veh/h)	341	575	664	317	327	81	511	1674	293	109	1295	89
Future Volume (veh/h)	341	575	664	317	327	81	511	1674	293	109	1295	89
Initial Q (Qb), veh	0	0	0	0	0	0	0	0	0	0	0	0
Ped-Bike Adj(A_pbT)	1.00		1.00	1.00		1.00	1.00		1.00	1.00		1.00
Parking Bus, Adj	1.00	1.00	1.00	1.00	1.00	1.00	1.00	1.00	1.00	1.00	1.00	1.00
Work Zone On Approach		No			No			No			No	
Adj Sat Flow, veh/h/ln	1575	1772	1772	1575	1772	1772	1575	1772	1772	1575	1772	1772
Adj Flow Rate, veh/h	344	581	671	320	330	82	516	1691	296	110	1308	90
Peak Hour Factor	0.99	0.99	0.99	0.99	0.99	0.99	0.99	0.99	0.99	0.99	0.99	0.99
Percent Heavy Veh, %	2	2	2	2	2	2	2	2	2	2	2	2
Cap, veh/h	848	709	1057	402	1072	263	429	1935	601	349	1849	127
Arrive On Green	0.40	0.40	0.40	0.40	0.40	0.40	0.40	0.40	0.40	0.40	0.40	0.40
Sat Flow, veh/h	1679	1772	2643	765	2680	657	665	4837	1502	376	4622	318
Grp Volume(v), veh/h	344	581	671	320	206	206	516	1691	296	110	913	485
Grp Sat Flow(s),veh/h/ln	840	1772	1321	383	1683	1654	333	1612	1502	188	1612	1715
Q Serve(g_s), s	7.9	13.2	9.2	4.8	3.8	3.9	7.3	14.5	6.6	3.5	10.7	10.7
Cycle Q Clear(g_c), s	11.8	13.2	9.2	18.0	3.8	3.9	18.0	14.5	6.6	18.0	10.7	10.7
Prop In Lane	1.00		1.00	1.00		0.40	1.00		1.00	1.00		0.19
Lane Grp Cap(c), veh/h	848	709	1057	402	673	661	429	1935	601	349	1290	686
V/C Ratio(X)	0.41	0.82	0.63	0.80	0.31	0.31	1.20	0.87	0.49	0.32	0.71	0.71
Avail Cap(c_a), veh/h	848	709	1057	402	673	661	429	1935	601	349	1290	686
HCM Platoon Ratio	1.00	1.00	1.00	1.00	1.00	1.00	1.00	1.00	1.00	1.00	1.00	1.00
Upstream Filter(I)	1.00	1.00	1.00	1.00	1.00	1.00	1.00	1.00	1.00	1.00	1.00	1.00
Uniform Delay (d), s/veh	13.3	12.1	10.9	21.9	9.2	9.3	21.6	12.5	10.1	22.0	11.3	11.3
Incr Delay (d2), s/veh	1.4	10.3	2.9	15.0	1.2	1.2	112.1	5.8	2.9	2.4	3.3	6.1
Initial Q Delay(d3),s/veh	0.0	0.0	0.0	0.0	0.0	0.0	0.0	0.0	0.0	0.0	0.0	0.0
%ile BackOfQ(50%),veh/ln	1.4	6.0	2.5	2.4	1.3	1.3	8.7	5.0	2.2	0.6	3.5	4.3
Unsig. Movement Delay, s/veh												
LnGrp Delay(d),s/veh	14.7	22.3	13.8	36.9	10.4	10.5	133.7	18.3	13.0	24.4	14.6	17.4
LnGrp LOS	B	C	B	D	B	B	F	B	B	C	B	B
Approach Vol, veh/h		1596			732			2503			1508	
Approach Delay, s/veh		17.1			22.0			41.5			16.2	
Approach LOS		B			C			D			B	

Timer - Assigned Phs		2		4		6		8				
Phs Duration (G+Y+Rc), s		22.5		22.5		22.5		22.5				
Change Period (Y+Rc), s		4.5		4.5		4.5		4.5				
Max Green Setting (Gmax), s		18.0		18.0		18.0		18.0				
Max Q Clear Time (g_c+I1), s		20.0		15.2		20.0		20.0				
Green Ext Time (p_c), s		0.0		2.1		0.0		0.0				

Intersection Summary												
HCM 6th Ctrl Delay			27.1									
HCM 6th LOS			C									

Movement	EBL	EBT	EBR	WBL	WBT	WBR	NBL	NBT	NBR	SBL	SBT	SBR
Lane Configurations												
Traffic Volume (veh/h)	0	0	0	526	3	697	377	1796	0	0	1607	724
Future Volume (veh/h)	0	0	0	526	3	697	377	1796	0	0	1607	724
Initial Q (Qb), veh				0	0	0	0	0	0	0	0	0
Ped-Bike Adj(A_pbT)				1.00		1.00	1.00		1.00	1.00		1.00
Parking Bus, Adj				1.00	1.00	1.00	1.00	1.00	1.00	1.00	1.00	1.00
Work Zone On Approach					No			No			No	
Adj Sat Flow, veh/h/ln				1575	1772	1772	1575	1772	0	0	1772	1772
Adj Flow Rate, veh/h				553	0	704	381	1814	0	0	1623	731
Peak Hour Factor				0.99	0.99	0.99	0.99	0.99	0.99	0.99	0.99	0.99
Percent Heavy Veh, %				2	2	2	2	2	0	0	2	2
Cap, veh/h				838	0	1258	618	3124	0	0	1915	594
Arrive On Green				0.28	0.00	0.28	0.43	1.00	0.00	0.00	0.40	0.40
Sat Flow, veh/h				3000	0	4505	2910	4997	0	0	4997	1502
Grp Volume(v), veh/h				553	0	704	381	1814	0	0	1623	731
Grp Sat Flow(s),veh/h/ln				1500	0	1502	1455	1612	0	0	1612	1502
Q Serve(g_s), s				19.5	0.0	16.0	12.2	0.0	0.0	0.0	36.6	47.5
Cycle Q Clear(g_c), s				19.5	0.0	16.0	12.2	0.0	0.0	0.0	36.6	47.5
Prop In Lane				1.00		1.00	1.00		0.00	0.00		1.00
Lane Grp Cap(c), veh/h				838	0	1258	618	3124	0	0	1915	594
V/C Ratio(X)				0.66	0.00	0.56	0.62	0.58	0.00	0.00	0.85	1.23
Avail Cap(c_a), veh/h				838	0	1258	618	3124	0	0	1915	594
HCM Platoon Ratio				1.00	1.00	1.00	2.00	2.00	1.00	1.00	1.00	1.00
Upstream Filter(I)				1.00	0.00	1.00	1.00	1.00	0.00	0.00	1.00	1.00
Uniform Delay (d), s/veh				38.2	0.0	37.0	30.7	0.0	0.0	0.0	33.0	36.3
Incr Delay (d2), s/veh				4.1	0.0	1.8	4.6	0.8	0.0	0.0	4.9	117.7
Initial Q Delay(d3),s/veh				0.0	0.0	0.0	0.0	0.0	0.0	0.0	0.0	0.0
%ile BackOfQ(50%),veh/ln				7.6	0.0	6.1	4.0	0.2	0.0	0.0	14.9	36.4
Unsig. Movement Delay, s/veh												
LnGrp Delay(d),s/veh				42.3	0.0	38.8	35.2	0.8	0.0	0.0	37.8	153.9
LnGrp LOS				D	A	D	D	A	A	A	D	F
Approach Vol, veh/h					1257			2195			2354	
Approach Delay, s/veh					40.3			6.8			73.9	
Approach LOS					D			A			E	

Timer - Assigned Phs	2		5	6		8
Phs Duration (G+Y+Rc), s	82.0		30.0	52.0		38.0
Change Period (Y+Rc), s	4.5		4.5	4.5		4.5
Max Green Setting (Gmax), s	77.5		25.5	47.5		33.5
Max Q Clear Time (g_c+I1), s	2.0		14.2	49.5		21.5
Green Ext Time (p_c), s	26.4		1.1	0.0		4.4

Intersection Summary	
HCM 6th Ctrl Delay	41.2
HCM 6th LOS	D

Notes

User approved volume balancing among the lanes for turning movement.

Movement	EBL	EBT	EBR	WBL	WBT	WBR	NBL	NBT	NBR	SBL	SBT	SBR
Lane Configurations												
Traffic Volume (veh/h)	854	11	308	0	0	0	0	1275	563	543	1595	0
Future Volume (veh/h)	854	11	308	0	0	0	0	1275	563	543	1595	0
Initial Q (Qb), veh	0	0	0				0	0	0	0	0	0
Ped-Bike Adj(A_pbT)	1.00		1.00				1.00		1.00	1.00		1.00
Parking Bus, Adj	1.00	1.00	1.00				1.00	1.00	1.00	1.00	1.00	1.00
Work Zone On Approach		No						No			No	
Adj Sat Flow, veh/h/ln	1575	1772	1772				0	1772	1772	1575	1772	0
Adj Flow Rate, veh/h	879	0	314				0	1301	574	554	1628	0
Peak Hour Factor	0.98	0.98	0.98				0.98	0.98	0.98	0.98	0.98	0.98
Percent Heavy Veh, %	2	2	2				0	2	2	2	2	0
Cap, veh/h	863	0	432				0	1754	544	691	3084	0
Arrive On Green	0.29	0.00	0.29				0.00	0.36	0.36	0.47	1.00	0.00
Sat Flow, veh/h	3000	0	1502				0	4997	1502	2910	4997	0
Grp Volume(v), veh/h	879	0	314				0	1301	574	554	1628	0
Grp Sat Flow(s),veh/h/ln	1500	0	1502				0	1612	1502	1455	1612	0
Q Serve(g_s), s	34.5	0.0	22.6				0.0	28.1	43.5	19.4	0.0	0.0
Cycle Q Clear(g_c), s	34.5	0.0	22.6				0.0	28.1	43.5	19.4	0.0	0.0
Prop In Lane	1.00		1.00				0.00		1.00	1.00		0.00
Lane Grp Cap(c), veh/h	863	0	432				0	1754	544	691	3084	0
V/C Ratio(X)	1.02	0.00	0.73				0.00	0.74	1.05	0.80	0.53	0.00
Avail Cap(c_a), veh/h	863	0	432				0	1754	544	691	3084	0
HCM Platoon Ratio	1.00	1.00	1.00				1.00	1.00	1.00	2.00	2.00	1.00
Upstream Filter(I)	1.00	0.00	1.00				0.00	1.00	1.00	1.00	1.00	0.00
Uniform Delay (d), s/veh	42.8	0.0	38.5				0.0	33.4	38.3	29.1	0.0	0.0
Incr Delay (d2), s/veh	35.5	0.0	10.3				0.0	2.9	53.7	9.5	0.7	0.0
Initial Q Delay(d3),s/veh	0.0	0.0	0.0				0.0	0.0	0.0	0.0	0.0	0.0
%ile BackOfQ(50%),veh/ln	16.9	0.0	9.5				0.0	11.4	23.8	6.1	0.2	0.0
Unsig. Movement Delay, s/veh												
LnGrp Delay(d),s/veh	78.3	0.0	48.8				0.0	36.2	92.0	38.6	0.7	0.0
LnGrp LOS	F	A	D				A	D	F	D	A	A
Approach Vol, veh/h		1193						1875			2182	
Approach Delay, s/veh		70.5						53.3			10.3	
Approach LOS		E						D			B	

Timer - Assigned Phs	1	2		4		6			
Phs Duration (G+Y+Rc), s	33.0	48.0		39.0		81.0			
Change Period (Y+Rc), s	4.5	4.5		4.5		4.5			
Max Green Setting (Gmax), s	28.5	43.5		34.5		76.5			
Max Q Clear Time (g_c+I1), s	21.4	45.5		36.5		2.0			
Green Ext Time (p_c), s	1.3	0.0		0.0		21.3			

Intersection Summary	
HCM 6th Ctrl Delay	39.3
HCM 6th LOS	D

Notes

User approved volume balancing among the lanes for turning movement.

Movement	EBL	EBT	EBR	WBL	WBT	WBR	NBL	NBT	NBR	SBL	SBT	SBR
Lane Configurations												
Traffic Volume (veh/h)	365	22	88	49	4	275	53	1280	34	77	1532	354
Future Volume (veh/h)	365	22	88	49	4	275	53	1280	34	77	1532	354
Initial Q (Qb), veh	0	0	0	0	0	0	0	0	0	0	0	0
Ped-Bike Adj(A_pbT)	1.00		1.00	1.00		1.00	1.00		1.00	1.00		1.00
Parking Bus, Adj	1.00	1.00	1.00	1.00	1.00	1.00	1.00	1.00	1.00	1.00	1.00	1.00
Work Zone On Approach		No			No			No			No	
Adj Sat Flow, veh/h/ln	1575	1772	1772	1575	1772	1772	1575	1772	1772	1575	1772	1772
Adj Flow Rate, veh/h	392	24	95	53	4	296	57	1376	37	83	1647	381
Peak Hour Factor	0.93	0.93	0.93	0.93	0.93	0.93	0.93	0.93	0.93	0.93	0.93	0.93
Percent Heavy Veh, %	2	2	2	2	2	2	2	2	2	2	2	2
Cap, veh/h	178	92	366	328	498	444	266	1549	42	351	1820	416
Arrive On Green	0.30	0.30	0.30	0.30	0.30	0.30	0.26	0.93	0.93	0.13	0.46	0.46
Sat Flow, veh/h	959	312	1237	1131	1683	1502	1500	3349	90	1500	3935	900
Grp Volume(v), veh/h	392	0	119	53	4	296	57	691	722	83	1346	682
Grp Sat Flow(s),veh/h/ln	959	0	1549	1131	1683	1502	1500	1683	1756	1500	1612	1610
Q Serve(g_s), s	14.8	0.0	7.0	4.5	0.2	20.7	1.7	20.6	20.9	2.9	46.2	47.4
Cycle Q Clear(g_c), s	35.5	0.0	7.0	11.5	0.2	20.7	1.7	20.6	20.9	2.9	46.2	47.4
Prop In Lane	1.00		0.80	1.00		1.00	1.00		0.05	1.00		0.56
Lane Grp Cap(c), veh/h	178	0	458	328	498	444	266	779	812	351	1492	745
V/C Ratio(X)	2.20	0.00	0.26	0.16	0.01	0.67	0.21	0.89	0.89	0.24	0.90	0.92
Avail Cap(c_a), veh/h	178	0	458	328	498	444	266	779	812	351	1492	745
HCM Platoon Ratio	1.00	1.00	1.00	1.00	1.00	1.00	2.00	2.00	2.00	1.00	1.00	1.00
Upstream Filter(I)	1.00	0.00	1.00	1.00	1.00	1.00	1.00	1.00	1.00	1.00	1.00	1.00
Uniform Delay (d), s/veh	55.1	0.0	32.2	36.6	29.8	37.1	18.8	3.2	3.2	13.0	29.8	30.1
Incr Delay (d2), s/veh	559.2	0.0	1.4	1.1	0.0	7.7	1.8	14.2	13.9	1.6	9.2	17.8
Initial Q Delay(d3),s/veh	0.0	0.0	0.0	0.0	0.0	0.0	0.0	0.0	0.0	0.0	0.0	0.0
%ile BackOfQ(50%),veh/ln	38.1	0.0	2.8	1.3	0.1	8.5	0.7	4.6	4.7	1.1	19.3	21.4
Unsig. Movement Delay, s/veh												
LnGrp Delay(d),s/veh	614.3	0.0	33.6	37.7	29.9	44.8	20.7	17.4	17.1	14.6	39.0	47.9
LnGrp LOS	F	A	C	D	C	D	C	B	B	B	D	D
Approach Vol, veh/h		511			353			1470			2111	
Approach Delay, s/veh		479.1			43.5			17.4			40.9	
Approach LOS		F			D			B			D	

Timer - Assigned Phs	1	2		4	5	6		8
Phs Duration (G+Y+Rc), s	20.0	60.0		40.0	20.0	60.0		40.0
Change Period (Y+Rc), s	4.5	4.5		4.5	4.5	4.5		4.5
Max Green Setting (Gmax), s	15.5	55.5		35.5	15.5	55.5		35.5
Max Q Clear Time (g_c+I1), s	14.9	22.9		37.5	3.7	49.4		22.7
Green Ext Time (p_c), s	0.1	13.0		0.0	0.1	5.3		1.7

Intersection Summary	
HCM 6th Ctrl Delay	83.7
HCM 6th LOS	F

Intersection	
Intersection Delay, s/veh	172.9
Intersection LOS	F

Movement	EBL	EBT	EBR	WBL	WBT	WBR	NBL	NBT	NBR	SBL	SBT	SBR
Lane Configurations												
Traffic Vol, veh/h	201	1069	65	36	629	14	68	125	67	11	84	191
Future Vol, veh/h	201	1069	65	36	629	14	68	125	67	11	84	191
Peak Hour Factor	0.94	0.94	0.94	0.94	0.94	0.94	0.94	0.94	0.94	0.94	0.94	0.94
Heavy Vehicles, %	2	2	2	2	2	2	2	2	2	2	2	2
Mvmt Flow	214	1137	69	38	669	15	72	133	71	12	89	203
Number of Lanes	1	2	0	1	2	0	0	1	0	0	1	0

Approach	EB	WB	NB	SB
Opposing Approach	WB	EB	SB	NB
Opposing Lanes	3	3	1	1
Conflicting Approach Left	SB	NB	EB	WB
Conflicting Lanes Left	1	1	3	3
Conflicting Approach Right	NB	SB	WB	EB
Conflicting Lanes Right	1	1	3	3
HCM Control Delay	268.5	87.2	44.2	47.5
HCM LOS	F	F	E	E

Lane	NBLn1	EBLn1	EBLn2	EBLn3	WBLn1	WBLn2	WBLn3	SBLn1
Vol Left, %	26%	100%	0%	0%	100%	0%	0%	4%
Vol Thru, %	48%	0%	100%	85%	0%	100%	94%	29%
Vol Right, %	26%	0%	0%	15%	0%	0%	6%	67%
Sign Control	Stop	Stop	Stop	Stop	Stop	Stop	Stop	Stop
Traffic Vol by Lane	260	201	713	421	36	419	224	286
LT Vol	68	201	0	0	36	0	0	11
Through Vol	125	0	713	356	0	419	210	84
RT Vol	67	0	0	65	0	0	14	191
Lane Flow Rate	277	214	758	448	38	446	238	304
Geometry Grp	7	7	7	7	7	7	7	7
Degree of Util (X)	0.779	0.564	1.892	1.105	0.104	1.15	0.611	0.818
Departure Headway (Hd)	11.222	9.918	9.388	9.273	10.46	9.93	9.884	10.721
Convergence, Y/N	Yes	Yes	Yes	Yes	Yes	Yes	Yes	Yes
Cap	324	366	394	394	345	370	369	341
Service Time	8.922	7.618	7.088	6.973	8.16	7.63	7.584	8.421
HCM Lane V/C Ratio	0.855	0.585	1.924	1.137	0.11	1.205	0.645	0.891
HCM Control Delay	44.2	24.7	432.5	107.5	14.4	125.6	26.9	47.5
HCM Lane LOS	E	C	F	F	B	F	D	E
HCM 95th-tile Q	6.2	3.3	48.4	15.5	0.3	16.4	3.9	7

Movement	EBL	EBT	EBR	WBL	WBT	WBR	NBL	NBT	NBR	SBL	SBT	SBR
Lane Configurations												
Traffic Volume (veh/h)	261	678	202	64	340	132	180	1018	79	184	1344	149
Future Volume (veh/h)	261	678	202	64	340	132	180	1018	79	184	1344	149
Initial Q (Qb), veh	0	0	0	0	0	0	0	0	0	0	0	0
Ped-Bike Adj(A_pbT)	1.00		1.00	1.00		1.00	1.00		1.00	1.00		1.00
Parking Bus, Adj	1.00	1.00	1.00	1.00	1.00	1.00	1.00	1.00	1.00	1.00	1.00	1.00
Work Zone On Approach		No			No			No			No	
Adj Sat Flow, veh/h/ln	1575	1772	1772	1575	1772	1772	1575	1772	1772	1575	1772	1772
Adj Flow Rate, veh/h	264	685	204	65	343	133	182	1028	80	186	1358	151
Peak Hour Factor	0.99	0.99	0.99	0.99	0.99	0.99	0.99	0.99	0.99	0.99	0.99	0.99
Percent Heavy Veh, %	2	2	2	2	2	2	2	2	2	2	2	2
Cap, veh/h	156	756	225	169	725	276	344	989	77	194	650	72
Arrive On Green	0.10	0.30	0.30	0.11	0.30	0.30	0.23	0.31	0.31	0.09	0.14	0.14
Sat Flow, veh/h	1500	2557	761	1500	2383	908	1500	3165	246	1500	3057	338
Grp Volume(v), veh/h	264	451	438	65	241	235	182	547	561	186	744	765
Grp Sat Flow(s),veh/h/ln	1500	1683	1635	1500	1683	1608	1500	1683	1728	1500	1683	1711
Q Serve(g_s), s	12.5	30.9	30.9	4.8	13.9	14.3	12.8	37.5	37.5	14.8	25.5	25.5
Cycle Q Clear(g_c), s	12.5	30.9	30.9	4.8	13.9	14.3	12.8	37.5	37.5	14.8	25.5	25.5
Prop In Lane	1.00		0.47	1.00		0.56	1.00		0.14	1.00		0.20
Lane Grp Cap(c), veh/h	156	498	484	169	512	489	344	526	540	194	358	364
V/C Ratio(X)	1.69	0.91	0.91	0.39	0.47	0.48	0.53	1.04	1.04	0.96	2.08	2.10
Avail Cap(c_a), veh/h	156	498	484	169	512	489	344	526	540	194	358	364
HCM Platoon Ratio	1.00	1.00	1.00	1.00	1.00	1.00	1.00	1.00	1.00	0.67	0.67	0.67
Upstream Filter(I)	1.00	1.00	1.00	1.00	1.00	1.00	1.00	1.00	1.00	1.00	1.00	1.00
Uniform Delay (d), s/veh	53.8	40.6	40.6	49.4	33.9	34.0	40.6	41.2	41.3	54.5	51.5	51.5
Incr Delay (d2), s/veh	336.3	22.6	23.2	6.5	3.1	3.4	5.7	49.8	49.4	55.0	495.9	505.6
Initial Q Delay(d3),s/veh	0.0	0.0	0.0	0.0	0.0	0.0	0.0	0.0	0.0	0.0	0.0	0.0
%ile BackOfQ(50%),veh/ln	19.3	15.8	15.4	2.1	6.1	6.1	5.3	22.6	23.1	8.7	60.4	62.4
Unsig. Movement Delay, s/veh												
LnGrp Delay(d),s/veh	390.1	63.2	63.8	55.9	37.0	37.4	46.3	91.0	90.7	109.5	547.4	557.0
LnGrp LOS	F	E	E	E	D	D	D	F	F	F	F	F
Approach Vol, veh/h		1153			541			1290			1695	
Approach Delay, s/veh		138.3			39.4			84.6			503.7	
Approach LOS		F			D			F			F	

Timer - Assigned Phs	1	2	3	4	5	6	7	8
Phs Duration (G+Y+Rc), s	30.0	42.0	18.0	40.0	32.0	30.0	17.0	41.0
Change Period (Y+Rc), s	4.5	4.5	4.5	4.5	4.5	4.5	4.5	4.5
Max Green Setting (Gmax), s	25.5	37.5	13.5	35.5	27.5	25.5	12.5	36.5
Max Q Clear Time (g_c+I1), s	16.8	39.5	6.8	32.9	14.8	27.5	14.5	16.3
Green Ext Time (p_c), s	0.0	0.0	0.1	1.4	0.4	0.0	0.0	2.8

Intersection Summary	
HCM 6th Ctrl Delay	244.4
HCM 6th LOS	F

Movement	EBL	EBT	EBR	WBL	WBT	WBR	NBL	NBT	NBR	SBL	SBT	SBR
Lane Configurations												
Traffic Volume (veh/h)	30	786	92	51	426	81	59	109	100	25	54	25
Future Volume (veh/h)	30	786	92	51	426	81	59	109	100	25	54	25
Initial Q (Qb), veh	0	0	0	0	0	0	0	0	0	0	0	0
Ped-Bike Adj(A_pbT)	1.00		1.00	1.00		1.00	1.00		1.00	1.00		1.00
Parking Bus, Adj	1.00	1.00	1.00	1.00	1.00	1.00	1.00	1.00	1.00	1.00	1.00	1.00
Work Zone On Approach		No			No			No			No	
Adj Sat Flow, veh/h/ln	1575	1772	1772	1575	1772	1772	1772	1772	1772	1772	1772	1772
Adj Flow Rate, veh/h	34	893	105	58	484	92	67	124	114	28	61	28
Peak Hour Factor	0.88	0.88	0.88	0.88	0.88	0.88	0.88	0.88	0.88	0.88	0.88	0.88
Percent Heavy Veh, %	2	2	2	2	2	2	2	2	2	2	2	2
Cap, veh/h	483	871	738	197	1388	262	182	198	155	175	276	103
Arrive On Green	0.49	0.49	0.49	0.49	0.49	0.49	0.26	0.26	0.26	0.26	0.26	0.26
Sat Flow, veh/h	744	1772	1502	502	2825	534	238	753	591	203	1048	393
Grp Volume(v), veh/h	34	893	105	58	287	289	305	0	0	117	0	0
Grp Sat Flow(s),veh/h/ln	744	1772	1502	502	1683	1676	1581	0	0	1644	0	0
Q Serve(g_s), s	1.1	18.0	1.4	0.0	3.8	3.9	3.5	0.0	0.0	0.0	0.0	0.0
Cycle Q Clear(g_c), s	5.0	18.0	1.4	18.0	3.8	3.9	6.4	0.0	0.0	2.0	0.0	0.0
Prop In Lane	1.00		1.00	1.00		0.32	0.22		0.37	0.24		0.24
Lane Grp Cap(c), veh/h	483	871	738	197	827	823	536	0	0	554	0	0
V/C Ratio(X)	0.07	1.03	0.14	0.30	0.35	0.35	0.57	0.00	0.00	0.21	0.00	0.00
Avail Cap(c_a), veh/h	483	871	738	197	827	823	889	0	0	898	0	0
HCM Platoon Ratio	1.00	1.00	1.00	1.00	1.00	1.00	1.00	1.00	1.00	1.00	1.00	1.00
Upstream Filter(I)	1.00	1.00	1.00	1.00	1.00	1.00	1.00	0.00	0.00	1.00	0.00	0.00
Uniform Delay (d), s/veh	7.2	9.3	5.1	18.3	5.7	5.7	12.2	0.0	0.0	10.7	0.0	0.0
Incr Delay (d2), s/veh	0.1	37.2	0.1	0.8	0.3	0.3	1.0	0.0	0.0	0.2	0.0	0.0
Initial Q Delay(d3),s/veh	0.0	0.0	0.0	0.0	0.0	0.0	0.0	0.0	0.0	0.0	0.0	0.0
%ile BackOfQ(50%),veh/ln	0.1	12.9	0.3	0.5	0.9	0.9	1.9	0.0	0.0	0.6	0.0	0.0
Unsig. Movement Delay, s/veh												
LnGrp Delay(d),s/veh	7.3	46.5	5.2	19.1	6.0	6.0	13.2	0.0	0.0	10.9	0.0	0.0
LnGrp LOS	A	F	A	B	A	A	B	A	A	B	A	A
Approach Vol, veh/h		1032			634			305			117	
Approach Delay, s/veh		41.0			7.2			13.2			10.9	
Approach LOS		D			A			B			B	

Timer - Assigned Phs	2	4	6	8
Phs Duration (G+Y+Rc), s	14.1	22.5	14.1	22.5
Change Period (Y+Rc), s	4.5	4.5	4.5	4.5
Max Green Setting (Gmax), s	18.0	18.0	18.0	18.0
Max Q Clear Time (g_c+I1), s	8.4	20.0	4.0	20.0
Green Ext Time (p_c), s	1.3	0.0	0.5	0.0

Intersection Summary	
HCM 6th Ctrl Delay	25.0
HCM 6th LOS	C

Intersection	
Intersection Delay, s/veh	80.1
Intersection LOS	F

Movement	EBL	EBT	EBR	WBL	WBT	WBR	NBL	NBT	NBR	SBL	SBT	SBR
Lane Configurations												
Traffic Vol, veh/h	33	222	73	53	176	51	62	359	47	41	359	25
Future Vol, veh/h	33	222	73	53	176	51	62	359	47	41	359	25
Peak Hour Factor	0.94	0.94	0.94	0.94	0.94	0.94	0.94	0.94	0.94	0.94	0.94	0.94
Heavy Vehicles, %	2	2	2	2	2	2	2	2	2	2	2	2
Mvmt Flow	35	236	78	56	187	54	66	382	50	44	382	27
Number of Lanes	0	1	0	0	1	1	0	1	0	0	1	0

Approach	EB	WB	NB	SB
Opposing Approach	WB	EB	SB	NB
Opposing Lanes	2	1	1	1
Conflicting Approach Left	SB	NB	EB	WB
Conflicting Lanes Left	1	1	1	2
Conflicting Approach Right	NB	SB	WB	EB
Conflicting Lanes Right	1	1	2	1
HCM Control Delay	47.3	26.4	125.1	91.4
HCM LOS	E	D	F	F

Lane	NBLn1	EBLn1	WBLn1	WBLn2	SBLn1
Vol Left, %	13%	10%	23%	0%	10%
Vol Thru, %	77%	68%	77%	0%	84%
Vol Right, %	10%	22%	0%	100%	6%
Sign Control	Stop	Stop	Stop	Stop	Stop
Traffic Vol by Lane	468	328	229	51	425
LT Vol	62	33	53	0	41
Through Vol	359	222	176	0	359
RT Vol	47	73	0	51	25
Lane Flow Rate	498	349	244	54	452
Geometry Grp	2	5	7	7	2
Degree of Util (X)	1.163	0.846	0.639	0.13	1.058
Departure Headway (Hd)	8.685	9.502	10.185	9.33	8.922
Convergence, Y/N	Yes	Yes	Yes	Yes	Yes
Cap	423	384	358	387	411
Service Time	6.685	7.502	7.885	7.03	6.922
HCM Lane V/C Ratio	1.177	0.909	0.682	0.14	1.1
HCM Control Delay	125.1	47.3	29.3	13.4	91.4
HCM Lane LOS	F	E	D	B	F
HCM 95th-tile Q	18.3	7.9	4.2	0.4	14.2

Movement	EBL	EBT	EBR	WBL	WBT	WBR	NBL	NBT	NBR	SBL	SBT	SBR
Lane Configurations												
Traffic Volume (veh/h)	88	224	125	97	222	176	186	1074	196	289	1229	65
Future Volume (veh/h)	88	224	125	97	222	176	186	1074	196	289	1229	65
Initial Q (Qb), veh	0	0	0	0	0	0	0	0	0	0	0	0
Ped-Bike Adj(A_pbT)	1.00		1.00	1.00		1.00	1.00		1.00	1.00		1.00
Parking Bus, Adj	1.00	1.00	1.00	1.00	1.00	1.00	1.00	1.00	1.00	1.00	1.00	1.00
Work Zone On Approach		No			No			No			No	
Adj Sat Flow, veh/h/ln	1772	1772	1772	1772	1772	1772	1575	1772	1772	1575	1772	1772
Adj Flow Rate, veh/h	96	243	136	105	241	191	202	1167	213	314	1336	71
Peak Hour Factor	0.92	0.92	0.92	0.92	0.92	0.92	0.92	0.92	0.92	0.92	0.92	0.92
Percent Heavy Veh, %	2	2	2	2	2	2	2	2	2	2	2	2
Cap, veh/h	38	39	444	39	31	444	319	1316	239	194	1233	65
Arrive On Green	0.30	0.30	0.30	0.30	0.30	0.30	0.14	0.31	0.31	0.04	0.13	0.13
Sat Flow, veh/h	0	133	1502	0	103	1502	1500	2846	517	1500	3252	172
Grp Volume(v), veh/h	339	0	136	346	0	191	202	688	692	314	690	717
Grp Sat Flow(s),veh/h/ln	133	0	1502	103	0	1502	1500	1683	1679	1500	1683	1741
Q Serve(g_s), s	0.0	0.0	8.4	0.0	0.0	12.3	15.2	46.6	47.2	15.5	45.5	45.5
Cycle Q Clear(g_c), s	35.5	0.0	8.4	35.5	0.0	12.3	15.2	46.6	47.2	15.5	45.5	45.5
Prop In Lane	0.28		1.00	0.30		1.00	1.00		0.31	1.00		0.10
Lane Grp Cap(c), veh/h	78	0	444	70	0	444	319	779	777	194	638	660
V/C Ratio(X)	4.36	0.00	0.31	4.96	0.00	0.43	0.63	0.88	0.89	1.62	1.08	1.09
Avail Cap(c_a), veh/h	78	0	444	70	0	444	319	779	777	194	638	660
HCM Platoon Ratio	1.00	1.00	1.00	1.00	1.00	1.00	0.67	0.67	0.67	0.33	0.33	0.33
Upstream Filter(I)	1.00	0.00	1.00	1.00	0.00	1.00	1.00	1.00	1.00	1.00	1.00	1.00
Uniform Delay (d), s/veh	42.7	0.0	32.7	44.9	0.0	34.1	47.1	38.3	38.5	57.4	52.5	52.5
Incr Delay (d2), s/veh	1541.4	0.0	1.8	1815.9	0.0	3.0	9.3	13.9	14.7	301.7	59.8	60.5
Initial Q Delay(d3),s/veh	0.0	0.0	0.0	0.0	0.0	0.0	0.0	0.0	0.0	0.0	0.0	0.0
%ile BackOfQ(50%),veh/ln	35.7	0.0	3.3	37.3	0.0	4.9	6.7	22.9	23.3	22.5	31.2	32.4
Unsig. Movement Delay, s/veh												
LnGrp Delay(d),s/veh	1584.1	0.0	34.5	1860.8	0.0	37.1	56.3	52.2	53.2	359.2	112.3	113.0
LnGrp LOS	F	A	C	F	A	D	E	D	D	F	F	F
Approach Vol, veh/h		475			537			1582			1721	
Approach Delay, s/veh		1140.4			1212.1			53.2			157.6	
Approach LOS		F			F			D			F	

Timer - Assigned Phs	1	2		4	5	6		8				
Phs Duration (G+Y+Rc), s	30.0	60.0		40.0	30.0	50.0		40.0				
Change Period (Y+Rc), s	4.5	4.5		4.5	4.5	4.5		4.5				
Max Green Setting (Gmax), s	25.5	55.5		35.5	25.5	45.5		35.5				
Max Q Clear Time (g_c+I1), s	17.5	49.2		37.5	17.2	47.5		37.5				
Green Ext Time (p_c), s	0.0	4.4		0.0	0.3	0.0		0.0				

Intersection Summary		
HCM 6th Ctrl Delay	358.7	
HCM 6th LOS	F	

Intersection	
Intersection Delay, s/veh	25.8
Intersection LOS	D

Movement	EBL	EBT	EBR	WBL	WBT	WBR	NBL	NBT	NBR	SBL	SBT	SBR
Lane Configurations												
Traffic Vol, veh/h	106	348	55	51	256	38	23	142	10	32	88	41
Future Vol, veh/h	106	348	55	51	256	38	23	142	10	32	88	41
Peak Hour Factor	0.96	0.96	0.96	0.96	0.96	0.96	0.96	0.96	0.96	0.96	0.96	0.96
Heavy Vehicles, %	2	2	2	2	2	2	2	2	2	2	2	2
Mvmt Flow	110	363	57	53	267	40	24	148	10	33	92	43
Number of Lanes	0	1	0	0	1	1	0	1	0	0	1	0

Approach	EB	WB	NB	SB
Opposing Approach	WB	EB	SB	NB
Opposing Lanes	2	1	1	1
Conflicting Approach Left	SB	NB	EB	WB
Conflicting Lanes Left	1	1	1	2
Conflicting Approach Right	NB	SB	WB	EB
Conflicting Lanes Right	1	1	2	1
HCM Control Delay	38.9	18.2	14.1	13.6
HCM LOS	E	C	B	B

Lane	NBLn1	EBLn1	WBLn1	WBLn2	SBLn1
Vol Left, %	13%	21%	17%	0%	20%
Vol Thru, %	81%	68%	83%	0%	55%
Vol Right, %	6%	11%	0%	100%	25%
Sign Control	Stop	Stop	Stop	Stop	Stop
Traffic Vol by Lane	175	509	307	38	161
LT Vol	23	106	51	0	32
Through Vol	142	348	256	0	88
RT Vol	10	55	0	38	41
Lane Flow Rate	182	530	320	40	168
Geometry Grp	2	5	7	7	2
Degree of Util (X)	0.36	0.886	0.602	0.066	0.329
Departure Headway (Hd)	7.102	6.019	6.78	5.98	7.054
Convergence, Y/N	Yes	Yes	Yes	Yes	Yes
Cap	505	599	531	597	508
Service Time	5.171	4.072	4.54	3.739	5.126
HCM Lane V/C Ratio	0.36	0.885	0.603	0.067	0.331
HCM Control Delay	14.1	38.9	19.3	9.2	13.6
HCM Lane LOS	B	E	C	A	B
HCM 95th-tile Q	1.6	10.4	3.9	0.2	1.4

Intersection	
Int Delay, s/veh	0.5

Movement	WBL	WBR	NBT	NBR	SBL	SBT
Lane Configurations						
Traffic Vol, veh/h	0	80	1376	81	0	1626
Future Vol, veh/h	0	80	1376	81	0	1626
Conflicting Peds, #/hr	0	0	0	0	0	0
Sign Control	Stop	Stop	Free	Free	Free	Free
RT Channelized	-	None	-	None	-	None
Storage Length	-	0	-	-	-	-
Veh in Median Storage, #	0	-	0	-	-	0
Grade, %	0	-	0	-	-	0
Peak Hour Factor	92	92	92	92	92	92
Heavy Vehicles, %	2	2	2	2	2	2
Mvmt Flow	0	87	1496	88	0	1767

Major/Minor	Minor1		Major1		Major2	
Conflicting Flow All	-	792	0	0	-	-
Stage 1	-	-	-	-	-	-
Stage 2	-	-	-	-	-	-
Critical Hdwy	-	6.94	-	-	-	-
Critical Hdwy Stg 1	-	-	-	-	-	-
Critical Hdwy Stg 2	-	-	-	-	-	-
Follow-up Hdwy	-	3.32	-	-	-	-
Pot Cap-1 Maneuver	0	332	-	-	0	-
Stage 1	0	-	-	-	0	-
Stage 2	0	-	-	-	0	-
Platoon blocked, %			-	-		-
Mov Cap-1 Maneuver	-	332	-	-	-	-
Mov Cap-2 Maneuver	-	-	-	-	-	-
Stage 1	-	-	-	-	-	-
Stage 2	-	-	-	-	-	-

Approach	WB	NB	SB
HCM Control Delay, s	19.6	0	0
HCM LOS	C		

Minor Lane/Major Mvmt	NBT	NBR	WBLn1	SBT
Capacity (veh/h)	-	-	332	-
HCM Lane V/C Ratio	-	-	0.262	-
HCM Control Delay (s)	-	-	19.6	-
HCM Lane LOS	-	-	C	-
HCM 95th %tile Q(veh)	-	-	1	-

Intersection	
Int Delay, s/veh	0.7

Movement	EBT	EBR	WBL	WBT	NBL	NBR
Lane Configurations						
Traffic Vol, veh/h	509	40	0	495	40	0
Future Vol, veh/h	509	40	0	495	40	0
Conflicting Peds, #/hr	0	0	0	0	0	0
Sign Control	Free	Free	Free	Free	Stop	Stop
RT Channelized	-	None	-	None	-	None
Storage Length	-	-	-	-	0	-
Veh in Median Storage, #	0	-	-	0	0	-
Grade, %	0	-	-	0	0	-
Peak Hour Factor	92	92	92	92	92	92
Heavy Vehicles, %	2	2	2	2	2	2
Mvmt Flow	553	43	0	538	43	0

Major/Minor	Major1		Major2		Minor1	
Conflicting Flow All	0	0	-	-	844	-
Stage 1	-	-	-	-	575	-
Stage 2	-	-	-	-	269	-
Critical Hdwy	-	-	-	-	6.63	-
Critical Hdwy Stg 1	-	-	-	-	5.43	-
Critical Hdwy Stg 2	-	-	-	-	5.83	-
Follow-up Hdwy	-	-	-	-	3.519	-
Pot Cap-1 Maneuver	-	-	0	-	317	0
Stage 1	-	-	0	-	562	0
Stage 2	-	-	0	-	753	0
Platoon blocked, %	-	-		-		
Mov Cap-1 Maneuver	-	-	-	-	317	-
Mov Cap-2 Maneuver	-	-	-	-	317	-
Stage 1	-	-	-	-	562	-
Stage 2	-	-	-	-	753	-

Approach	EB	WB	NB
HCM Control Delay, s	0	0	18.2
HCM LOS			C

Minor Lane/Major Mvmt	NBLn1	EBT	EBR	WBT
Capacity (veh/h)	317	-	-	-
HCM Lane V/C Ratio	0.137	-	-	-
HCM Control Delay (s)	18.2	-	-	-
HCM Lane LOS	C	-	-	-
HCM 95th %tile Q(veh)	0.5	-	-	-

Intersection	
Int Delay, s/veh	0.7

Movement	EBT	EBR	WBL	WBT	NBL	NBR
Lane Configurations						
Traffic Vol, veh/h	469	40	0	495	40	0
Future Vol, veh/h	469	40	0	495	40	0
Conflicting Peds, #/hr	0	0	0	0	0	0
Sign Control	Free	Free	Free	Free	Stop	Stop
RT Channelized	-	None	-	None	-	None
Storage Length	-	-	-	-	0	-
Veh in Median Storage, #	0	-	-	0	0	-
Grade, %	0	-	-	0	0	-
Peak Hour Factor	92	92	92	92	92	92
Heavy Vehicles, %	2	2	2	2	2	2
Mvmt Flow	510	43	0	538	43	0

Major/Minor	Major1		Major2		Minor1	
Conflicting Flow All	0	0	-	-	801	-
Stage 1	-	-	-	-	532	-
Stage 2	-	-	-	-	269	-
Critical Hdwy	-	-	-	-	6.63	-
Critical Hdwy Stg 1	-	-	-	-	5.43	-
Critical Hdwy Stg 2	-	-	-	-	5.83	-
Follow-up Hdwy	-	-	-	-	3.519	-
Pot Cap-1 Maneuver	-	-	0	-	337	0
Stage 1	-	-	0	-	588	0
Stage 2	-	-	0	-	753	0
Platoon blocked, %	-	-		-		
Mov Cap-1 Maneuver	-	-	-	-	337	-
Mov Cap-2 Maneuver	-	-	-	-	337	-
Stage 1	-	-	-	-	588	-
Stage 2	-	-	-	-	753	-

Approach	EB	WB	NB
HCM Control Delay, s	0	0	17.3
HCM LOS			C

Minor Lane/Major Mvmt	NBLn1	EBT	EBR	WBT
Capacity (veh/h)	337	-	-	-
HCM Lane V/C Ratio	0.129	-	-	-
HCM Control Delay (s)	17.3	-	-	-
HCM Lane LOS	C	-	-	-
HCM 95th %tile Q(veh)	0.4	-	-	-

Intersection	
Intersection Delay, s/veh	26.3
Intersection LOS	D

Movement	EBL	EBT	EBR	WBL	WBT	WBR	NBL	NBT	NBR	SBL	SBT	SBR
Lane Configurations												
Traffic Vol, veh/h	73	438	37	16	201	85	14	85	22	62	74	35
Future Vol, veh/h	73	438	37	16	201	85	14	85	22	62	74	35
Peak Hour Factor	0.95	0.95	0.95	0.95	0.95	0.95	0.95	0.95	0.95	0.95	0.95	0.95
Heavy Vehicles, %	2	2	2	2	2	2	2	2	2	2	2	2
Mvmt Flow	77	461	39	17	212	89	15	89	23	65	78	37
Number of Lanes	0	1	1	0	2	0	0	1	0	0	1	0

Approach	EB	WB	NB	SB
Opposing Approach	WB	EB	SB	NB
Opposing Lanes	2	2	1	1
Conflicting Approach Left	SB	NB	EB	WB
Conflicting Lanes Left	1	1	2	2
Conflicting Approach Right	NB	SB	WB	EB
Conflicting Lanes Right	1	1	2	2
HCM Control Delay	41.6	11.8	12.1	13.2
HCM LOS	E	B	B	B

Lane	NBLn1	EBLn1	EBLn2	WBLn1	WBLn2	SBLn1
Vol Left, %	12%	14%	0%	14%	0%	36%
Vol Thru, %	70%	86%	0%	86%	54%	43%
Vol Right, %	18%	0%	100%	0%	46%	20%
Sign Control	Stop	Stop	Stop	Stop	Stop	Stop
Traffic Vol by Lane	121	511	37	117	186	171
LT Vol	14	73	0	16	0	62
Through Vol	85	438	0	101	101	74
RT Vol	22	0	37	0	85	35
Lane Flow Rate	127	538	39	123	195	180
Geometry Grp	2	7	7	7	7	2
Degree of Util (X)	0.244	0.915	0.058	0.226	0.338	0.337
Departure Headway (Hd)	6.883	6.232	5.447	6.635	6.237	6.743
Convergence, Y/N	Yes	Yes	Yes	Yes	Yes	Yes
Cap	523	586	661	544	580	535
Service Time	4.906	3.932	3.147	4.335	3.937	4.765
HCM Lane V/C Ratio	0.243	0.918	0.059	0.226	0.336	0.336
HCM Control Delay	12.1	44	8.5	11.3	12.1	13.2
HCM Lane LOS	B	E	A	B	B	B
HCM 95th-tile Q	0.9	11.3	0.2	0.9	1.5	1.5

Movement	EBL	EBT	EBR	WBL	WBT	WBR	NBL	NBT	NBR	SBL	SBT	SBR
Lane Configurations												
Traffic Volume (veh/h)	130	433	52	82	245	148	83	1236	100	161	1418	47
Future Volume (veh/h)	130	433	52	82	245	148	83	1236	100	161	1418	47
Initial Q (Qb), veh	0	0	0	0	0	0	0	0	0	0	0	0
Ped-Bike Adj(A_pbT)	1.00		1.00	1.00		1.00	1.00		1.00	1.00		1.00
Parking Bus, Adj	1.00	1.00	1.00	1.00	1.00	1.00	1.00	1.00	1.00	1.00	1.00	1.00
Work Zone On Approach		No			No			No			No	
Adj Sat Flow, veh/h/ln	1772	1772	1772	1772	1772	1772	1575	1772	1772	1575	1772	1772
Adj Flow Rate, veh/h	134	446	54	85	253	153	86	1274	103	166	1462	48
Peak Hour Factor	0.97	0.97	0.97	0.97	0.97	0.97	0.97	0.97	0.97	0.97	0.97	0.97
Percent Heavy Veh, %	2	2	2	2	2	2	2	2	2	2	2	2
Cap, veh/h	127	499	73	89	311	250	194	1328	107	256	1539	50
Arrive On Green	0.30	0.30	0.30	0.30	0.30	0.30	0.13	0.42	0.42	0.06	0.15	0.15
Sat Flow, veh/h	282	1685	246	162	1051	845	1500	3155	254	1500	3327	109
Grp Volume(v), veh/h	290	0	344	227	0	264	86	678	699	166	739	771
Grp Sat Flow(s),veh/h/ln	646	0	1568	597	0	1460	1500	1683	1726	1500	1683	1752
Q Serve(g_s), s	16.8	0.0	23.7	11.8	0.0	18.7	6.4	46.9	47.3	13.0	52.2	52.4
Cycle Q Clear(g_c), s	35.5	0.0	23.7	35.5	0.0	18.7	6.4	46.9	47.3	13.0	52.2	52.4
Prop In Lane	0.46		0.16	0.38		0.58	1.00		0.15	1.00		0.06
Lane Grp Cap(c), veh/h	235	0	464	218	0	432	194	708	726	256	779	810
V/C Ratio(X)	1.24	0.00	0.74	1.04	0.00	0.61	0.44	0.96	0.96	0.65	0.95	0.95
Avail Cap(c_a), veh/h	235	0	464	218	0	432	194	708	726	256	779	810
HCM Platoon Ratio	1.00	1.00	1.00	1.00	1.00	1.00	1.00	1.00	1.00	0.33	0.33	0.33
Upstream Filter(I)	1.00	0.00	1.00	1.00	0.00	1.00	1.00	1.00	1.00	1.00	1.00	1.00
Uniform Delay (d), s/veh	52.0	0.0	38.1	48.9	0.0	36.3	48.3	33.7	33.8	53.1	49.4	49.5
Incr Delay (d2), s/veh	137.2	0.0	10.2	71.9	0.0	6.3	7.2	24.9	25.3	12.0	21.9	21.9
Initial Q Delay(d3),s/veh	0.0	0.0	0.0	0.0	0.0	0.0	0.0	0.0	0.0	0.0	0.0	0.0
%ile BackOfQ(50%),veh/ln	16.1	0.0	10.4	11.0	0.0	7.4	2.8	23.5	24.4	6.1	28.3	29.6
Unsig. Movement Delay, s/veh												
LnGrp Delay(d),s/veh	189.2	0.0	48.3	120.8	0.0	42.7	55.5	58.6	59.1	65.1	71.4	71.4
LnGrp LOS	F	A	D	F	A	D	E	E	E	E	E	E
Approach Vol, veh/h		634			491			1463			1676	
Approach Delay, s/veh		112.8			78.7			58.6			70.7	
Approach LOS		F			E			E			E	

Timer - Assigned Phs	1	2		4	5	6		8
Phs Duration (G+Y+Rc), s	35.0	55.0		40.0	20.0	60.0		40.0
Change Period (Y+Rc), s	4.5	4.5		4.5	4.5	4.5		4.5
Max Green Setting (Gmax), s	30.5	50.5		35.5	15.5	55.5		35.5
Max Q Clear Time (g_c+I1), s	15.0	49.3		37.5	8.4	54.4		37.5
Green Ext Time (p_c), s	0.2	1.0		0.0	0.1	0.9		0.0

Intersection Summary	
HCM 6th Ctrl Delay	73.8
HCM 6th LOS	E

Intersection	
Int Delay, s/veh	11.2

Movement	EBL	EBT	WBT	WBR	SBL	SBR
Lane Configurations						
Traffic Vol, veh/h	140	479	308	32	50	84
Future Vol, veh/h	140	479	308	32	50	84
Conflicting Peds, #/hr	0	0	0	0	0	0
Sign Control	Free	Free	Free	Free	Stop	Stop
RT Channelized	-	None	-	None	-	None
Storage Length	-	-	-	-	0	-
Veh in Median Storage, #	-	0	0	-	0	-
Grade, %	-	0	0	-	0	-
Peak Hour Factor	73	73	73	73	73	73
Heavy Vehicles, %	2	2	2	2	2	2
Mvmt Flow	192	656	422	44	68	115

Major/Minor	Major1		Major2		Minor2	
Conflicting Flow All	466	0	-	0	1484	444
Stage 1	-	-	-	-	444	-
Stage 2	-	-	-	-	1040	-
Critical Hdwy	4.12	-	-	-	6.42	6.22
Critical Hdwy Stg 1	-	-	-	-	5.42	-
Critical Hdwy Stg 2	-	-	-	-	5.42	-
Follow-up Hdwy	2.218	-	-	-	3.518	3.318
Pot Cap-1 Maneuver	1095	-	-	-	137	614
Stage 1	-	-	-	-	646	-
Stage 2	-	-	-	-	341	-
Platoon blocked, %		-	-	-		
Mov Cap-1 Maneuver	1095	-	-	-	99	614
Mov Cap-2 Maneuver	-	-	-	-	99	-
Stage 1	-	-	-	-	468	-
Stage 2	-	-	-	-	341	-

Approach	EB	WB	SB
HCM Control Delay, s	2	0	81.8
HCM LOS			F

Minor Lane/Major Mvmt	EBL	EBT	WBT	WBR	SBLn1
Capacity (veh/h)	1095	-	-	-	209
HCM Lane V/C Ratio	0.175	-	-	-	0.878
HCM Control Delay (s)	9	0	-	-	81.8
HCM Lane LOS	A	A	-	-	F
HCM 95th %tile Q(veh)	0.6	-	-	-	6.9

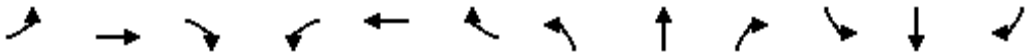

Movement	EBL	EBT	EBR	WBL	WBT	WBR	NBL	NBT	NBR	SBL	SBT	SBR
Lane Configurations												
Traffic Volume (veh/h)	40	3	5	152	4	113	8	961	131	286	1304	25
Future Volume (veh/h)	40	3	5	152	4	113	8	961	131	286	1304	25
Initial Q (Qb), veh	0	0	0	0	0	0	0	0	0	0	0	0
Ped-Bike Adj(A_pbT)	1.00		1.00	1.00		1.00	1.00		1.00	1.00		1.00
Parking Bus, Adj	1.00	1.00	1.00	1.00	1.00	1.00	1.00	1.00	1.00	1.00	1.00	1.00
Work Zone On Approach		No			No			No			No	
Adj Sat Flow, veh/h/ln	1772	1772	1772	1772	1772	1772	1575	1772	1772	1575	1772	1772
Adj Flow Rate, veh/h	42	3	5	160	4	119	8	1012	138	301	1373	26
Peak Hour Factor	0.95	0.95	0.95	0.95	0.95	0.95	0.95	0.95	0.95	0.95	0.95	0.95
Percent Heavy Veh, %	2	2	2	2	2	2	2	2	2	2	2	2
Cap, veh/h	517	40	45	729	16	601	160	1191	162	199	1352	26
Arrive On Green	0.40	0.40	0.40	0.40	0.40	0.40	0.40	0.40	0.40	0.40	0.40	0.40
Sat Flow, veh/h	924	99	114	1428	41	1502	343	2977	406	435	3380	64
Grp Volume(v), veh/h	50	0	0	164	0	119	8	572	578	301	683	716
Grp Sat Flow(s),veh/h/ln	1137	0	0	1469	0	1502	343	1683	1699	435	1683	1760
Q Serve(g_s), s	0.7	0.0	0.0	0.0	0.0	2.3	0.0	13.9	13.9	4.1	18.0	18.0
Cycle Q Clear(g_c), s	3.6	0.0	0.0	2.9	0.0	2.3	18.0	13.9	13.9	18.0	18.0	18.0
Prop In Lane	0.84		0.10	0.98		1.00	1.00		0.24	1.00		0.04
Lane Grp Cap(c), veh/h	602	0	0	746	0	601	160	673	680	199	673	704
V/C Ratio(X)	0.08	0.00	0.00	0.22	0.00	0.20	0.05	0.85	0.85	1.51	1.01	1.02
Avail Cap(c_a), veh/h	602	0	0	746	0	601	160	673	680	199	673	704
HCM Platoon Ratio	1.00	1.00	1.00	1.00	1.00	1.00	1.00	1.00	1.00	1.00	1.00	1.00
Upstream Filter(I)	1.00	0.00	0.00	1.00	0.00	1.00	1.00	1.00	1.00	1.00	1.00	1.00
Uniform Delay (d), s/veh	9.3	0.0	0.0	9.0	0.0	8.8	22.5	12.3	12.3	22.1	13.5	13.5
Incr Delay (d2), s/veh	0.3	0.0	0.0	0.7	0.0	0.7	0.6	12.7	12.7	253.6	38.5	38.0
Initial Q Delay(d3),s/veh	0.0	0.0	0.0	0.0	0.0	0.0	0.0	0.0	0.0	0.0	0.0	0.0
%ile BackOfQ(50%),veh/ln	0.3	0.0	0.0	1.0	0.0	0.7	0.1	6.4	6.4	16.0	12.4	12.8
Unsig. Movement Delay, s/veh												
LnGrp Delay(d),s/veh	9.5	0.0	0.0	9.6	0.0	9.5	23.1	25.0	25.0	275.7	52.0	51.5
LnGrp LOS	A	A	A	A	A	A	C	C	C	F	F	F
Approach Vol, veh/h		50			283			1158			1700	
Approach Delay, s/veh		9.5			9.6			25.0			91.4	
Approach LOS		A			A			C			F	

Timer - Assigned Phs		2		4		6		8				
Phs Duration (G+Y+Rc), s		22.5		22.5		22.5		22.5				
Change Period (Y+Rc), s		4.5		4.5		4.5		4.5				
Max Green Setting (Gmax), s		18.0		18.0		18.0		18.0				
Max Q Clear Time (g_c+I1), s		20.0		5.6		20.0		4.9				
Green Ext Time (p_c), s		0.0		0.1		0.0		1.0				

Intersection Summary												
HCM 6th Ctrl Delay			58.8									
HCM 6th LOS			E									

HCM 6th Signalized Intersection Summary
1: Cedar & Valley

06/17/2020

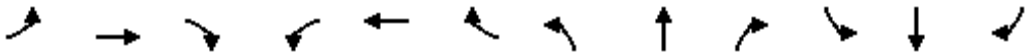

Movement	EBL	EBT	EBR	WBL	WBT	WBR	NBL	NBT	NBR	SBL	SBT	SBR
Lane Configurations												
Traffic Volume (veh/h)	63	232	714	446	345	53	474	1439	314	59	1723	31
Future Volume (veh/h)	63	232	714	446	345	53	474	1439	314	59	1723	31
Initial Q (Qb), veh	0	0	0	0	0	0	0	0	0	0	0	0
Ped-Bike Adj(A_pbT)	1.00		1.00	1.00		1.00	1.00		1.00	1.00		1.00
Parking Bus, Adj	1.00	1.00	1.00	1.00	1.00	1.00	1.00	1.00	1.00	1.00	1.00	1.00
Work Zone On Approach		No			No			No			No	
Adj Sat Flow, veh/h/ln	1673	1870	1772	1673	1870	1772	1673	1870	1870	1673	1870	1870
Adj Flow Rate, veh/h	66	242	744	465	359	55	494	1499	327	61	1795	32
Peak Hour Factor	0.96	0.96	0.96	0.96	0.96	0.96	0.96	0.96	0.96	0.96	0.96	0.96
Percent Heavy Veh, %	2	2	2	2	2	2	2	2	2	2	2	2
Cap, veh/h	861	748	1057	628	1237	188	356	2042	634	387	2066	37
Arrive On Green	0.40	0.40	0.40	0.40	0.40	0.40	0.40	0.40	0.40	0.40	0.40	0.40
Sat Flow, veh/h	1687	1870	2643	991	3093	470	443	5106	1585	443	5166	92
Grp Volume(v), veh/h	66	242	744	465	205	209	494	1499	327	61	1183	644
Grp Sat Flow(s),veh/h/ln	844	1870	1321	495	1777	1786	221	1702	1585	221	1702	1854
Q Serve(g_s), s	1.2	4.0	10.6	14.0	3.5	3.6	3.6	11.2	7.0	6.1	14.4	14.4
Cycle Q Clear(g_c), s	4.8	4.0	10.6	18.0	3.5	3.6	18.0	11.2	7.0	17.3	14.4	14.4
Prop In Lane	1.00		1.00	1.00		0.26	1.00		1.00	1.00		0.05
Lane Grp Cap(c), veh/h	861	748	1057	628	711	714	356	2042	634	387	1362	742
V/C Ratio(X)	0.08	0.32	0.70	0.74	0.29	0.29	1.39	0.73	0.52	0.16	0.87	0.87
Avail Cap(c_a), veh/h	861	748	1057	628	711	714	356	2042	634	387	1362	742
HCM Platoon Ratio	1.00	1.00	1.00	1.00	1.00	1.00	1.00	1.00	1.00	1.00	1.00	1.00
Upstream Filter(I)	1.00	1.00	1.00	1.00	1.00	1.00	1.00	1.00	1.00	1.00	1.00	1.00
Uniform Delay (d), s/veh	10.8	9.3	11.3	17.9	9.2	9.2	22.3	11.5	10.2	18.8	12.4	12.4
Incr Delay (d2), s/veh	0.2	1.1	3.9	7.7	1.0	1.0	191.8	2.4	3.0	0.9	7.7	13.2
Initial Q Delay(d3),s/veh	0.0	0.0	0.0	0.0	0.0	0.0	0.0	0.0	0.0	0.0	0.0	0.0
%ile BackOfQ(50%),veh/ln	0.2	1.5	3.0	2.9	1.3	1.3	11.2	3.7	2.4	0.3	5.6	7.3
Unsig. Movement Delay, s/veh												
LnGrp Delay(d),s/veh	11.0	10.4	15.2	25.5	10.2	10.2	214.1	13.8	13.2	19.7	20.1	25.6
LnGrp LOS	B	B	B	C	B	B	F	B	B	B	C	C
Approach Vol, veh/h		1052			879			2320			1888	
Approach Delay, s/veh		13.8			18.3			56.4			22.0	
Approach LOS		B			B			E			C	

Timer - Assigned Phs		2		4		6		8				
Phs Duration (G+Y+Rc), s		22.5		22.5		22.5		22.5				
Change Period (Y+Rc), s		4.5		4.5		4.5		4.5				
Max Green Setting (Gmax), s		18.0		18.0		18.0		18.0				
Max Q Clear Time (g_c+I1), s		20.0		12.6		19.3		20.0				
Green Ext Time (p_c), s		0.0		2.5		0.0		0.0				

Intersection Summary												
HCM 6th Ctrl Delay			33.1									
HCM 6th LOS			C									

Movement	EBL	EBT	EBR	WBL	WBT	WBR	NBL	NBT	NBR	SBL	SBT	SBR
Lane Configurations												
Traffic Volume (veh/h)	0	0	0	548	1	536	424	1679	0	0	1806	1111
Future Volume (veh/h)	0	0	0	548	1	536	424	1679	0	0	1806	1111
Initial Q (Qb), veh				0	0	0	0	0	0	0	0	0
Ped-Bike Adj(A_pbT)				1.00		1.00	1.00		1.00	1.00		1.00
Parking Bus, Adj				1.00	1.00	1.00	1.00	1.00	1.00	1.00	1.00	1.00
Work Zone On Approach					No			No			No	
Adj Sat Flow, veh/h/ln				1772	1870	1870	1772	1870	0	0	1870	1870
Adj Flow Rate, veh/h				565	0	554	437	1731	0	0	1862	1145
Peak Hour Factor				0.97	0.97	0.97	0.97	0.97	0.97	0.97	0.97	0.97
Percent Heavy Veh, %				2	2	2	2	2	0	0	2	2
Cap, veh/h				1089	0	1535	759	3040	0	0	1648	512
Arrive On Green				0.32	0.00	0.32	0.23	0.60	0.00	0.00	0.32	0.32
Sat Flow, veh/h				3375	0	4755	3274	5274	0	0	5274	1585
Grp Volume(v), veh/h				565	0	554	437	1731	0	0	1862	1145
Grp Sat Flow(s),veh/h/ln				1688	0	1585	1637	1702	0	0	1702	1585
Q Serve(g_s), s				15.0	0.0	9.8	13.0	22.8	0.0	0.0	35.5	35.5
Cycle Q Clear(g_c), s				15.0	0.0	9.8	13.0	22.8	0.0	0.0	35.5	35.5
Prop In Lane				1.00		1.00	1.00		0.00	0.00		1.00
Lane Grp Cap(c), veh/h				1089	0	1535	759	3040	0	0	1648	512
V/C Ratio(X)				0.52	0.00	0.36	0.58	0.57	0.00	0.00	1.13	2.24
Avail Cap(c_a), veh/h				1089	0	1535	759	3040	0	0	1648	512
HCM Platoon Ratio				1.00	1.00	1.00	1.00	1.00	1.00	1.00	1.00	1.00
Upstream Filter(I)				1.00	0.00	1.00	1.00	1.00	0.00	0.00	1.00	1.00
Uniform Delay (d), s/veh				30.3	0.0	28.6	37.5	13.6	0.0	0.0	37.3	37.3
Incr Delay (d2), s/veh				1.8	0.0	0.7	3.2	0.8	0.0	0.0	66.8	563.5
Initial Q Delay(d3),s/veh				0.0	0.0	0.0	0.0	0.0	0.0	0.0	0.0	0.0
%ile BackOfQ(50%),veh/ln				6.3	0.0	3.8	5.5	8.5	0.0	0.0	24.6	93.5
Unsig. Movement Delay, s/veh												
LnGrp Delay(d),s/veh				32.1	0.0	29.2	40.6	14.4	0.0	0.0	104.0	600.8
LnGrp LOS				C	A	C	D	B	A	A	F	F
Approach Vol, veh/h					1119			2168			3007	
Approach Delay, s/veh					30.7			19.7			293.2	
Approach LOS					C			B			F	

Timer - Assigned Phs	2		5	6		8
Phs Duration (G+Y+Rc), s	70.0		30.0	40.0		40.0
Change Period (Y+Rc), s	4.5		4.5	4.5		4.5
Max Green Setting (Gmax), s	65.5		25.5	35.5		35.5
Max Q Clear Time (g_c+I1), s	24.8		15.0	37.5		17.0
Green Ext Time (p_c), s	19.6		1.2	0.0		4.6

Intersection Summary	
HCM 6th Ctrl Delay	152.3
HCM 6th LOS	F

Notes

User approved volume balancing among the lanes for turning movement.

Movement	EBL	EBT	EBR	WBL	WBT	WBR	NBL	NBT	NBR	SBL	SBT	SBR
Lane Configurations												
Traffic Volume (veh/h)	637	0	486	0	0	0	0	1506	579	524	1833	0
Future Volume (veh/h)	637	0	486	0	0	0	0	1506	579	524	1833	0
Initial Q (Qb), veh	0	0	0				0	0	0	0	0	0
Ped-Bike Adj(A_pbT)	1.00		1.00				1.00		1.00	1.00		1.00
Parking Bus, Adj	1.00	1.00	1.00				1.00	1.00	1.00	1.00	1.00	1.00
Work Zone On Approach		No						No			No	
Adj Sat Flow, veh/h/ln	1772	1870	1870				0	1870	1870	1772	1870	0
Adj Flow Rate, veh/h	650	0	496				0	1537	591	535	1870	0
Peak Hour Factor	0.98	0.98	0.98				0.98	0.98	0.98	0.98	0.98	0.98
Percent Heavy Veh, %	2	2	2				0	2	2	2	2	0
Cap, veh/h	1120	0	526				0	1787	555	640	2994	0
Arrive On Green	0.33	0.00	0.33				0.00	0.35	0.35	0.06	0.19	0.00
Sat Flow, veh/h	3375	0	1585				0	5274	1585	3274	5274	0
Grp Volume(v), veh/h	650	0	496				0	1537	591	535	1870	0
Grp Sat Flow(s),veh/h/ln	1688	0	1585				0	1702	1585	1637	1702	0
Q Serve(g_s), s	17.5	0.0	33.5				0.0	30.8	38.5	17.8	37.0	0.0
Cycle Q Clear(g_c), s	17.5	0.0	33.5				0.0	30.8	38.5	17.8	37.0	0.0
Prop In Lane	1.00		1.00				0.00		1.00	1.00		0.00
Lane Grp Cap(c), veh/h	1120	0	526				0	1787	555	640	2994	0
V/C Ratio(X)	0.58	0.00	0.94				0.00	0.86	1.07	0.84	0.62	0.00
Avail Cap(c_a), veh/h	1120	0	526				0	1787	555	640	2994	0
HCM Platoon Ratio	1.00	1.00	1.00				1.00	1.00	1.00	0.33	0.33	1.00
Upstream Filter(I)	1.00	0.00	1.00				0.00	1.00	1.00	1.00	1.00	0.00
Uniform Delay (d), s/veh	30.4	0.0	35.7				0.0	33.2	35.8	49.7	33.3	0.0
Incr Delay (d2), s/veh	2.2	0.0	27.4				0.0	5.7	56.8	12.3	1.0	0.0
Initial Q Delay(d3),s/veh	0.0	0.0	0.0				0.0	0.0	0.0	0.0	0.0	0.0
%ile BackOfQ(50%),veh/ln	7.4	0.0	16.7				0.0	13.4	23.2	8.9	17.1	0.0
Unsig. Movement Delay, s/veh												
LnGrp Delay(d),s/veh	32.6	0.0	63.1				0.0	38.9	92.5	62.0	34.2	0.0
LnGrp LOS	C	A	E				A	D	F	E	C	A
Approach Vol, veh/h		1146						2128			2405	
Approach Delay, s/veh		45.8						53.8			40.4	
Approach LOS		D						D			D	

Timer - Assigned Phs	1	2		4		6
Phs Duration (G+Y+Rc), s	26.0	43.0		41.0		69.0
Change Period (Y+Rc), s	4.5	4.5		4.5		4.5
Max Green Setting (Gmax), s	21.5	38.5		36.5		64.5
Max Q Clear Time (g_c+I1), s	19.8	40.5		35.5		39.0
Green Ext Time (p_c), s	0.4	0.0		0.6		16.6

Intersection Summary	
HCM 6th Ctrl Delay	46.5
HCM 6th LOS	D

Notes

User approved volume balancing among the lanes for turning movement.

Movement	EBL	EBT	EBR	WBL	WBT	WBR	NBL	NBT	NBR	SBL	SBT	SBR
Lane Configurations												
Traffic Volume (veh/h)	353	8	24	10	0	151	58	1562	41	148	1539	601
Future Volume (veh/h)	353	8	24	10	0	151	58	1562	41	148	1539	601
Initial Q (Qb), veh	0	0	0	0	0	0	0	0	0	0	0	0
Ped-Bike Adj(A_pbT)	1.00		1.00	1.00		1.00	1.00		1.00	1.00		1.00
Parking Bus, Adj	1.00	1.00	1.00	1.00	1.00	1.00	1.00	1.00	1.00	1.00	1.00	1.00
Work Zone On Approach		No			No			No			No	
Adj Sat Flow, veh/h/ln	1772	1870	1870	1772	1870	1870	1772	1870	1870	1772	1870	1870
Adj Flow Rate, veh/h	368	8	25	10	0	157	60	1627	43	154	1603	626
Peak Hour Factor	0.96	0.96	0.96	0.96	0.96	0.96	0.96	0.96	0.96	0.96	0.96	0.96
Percent Heavy Veh, %	2	2	2	2	2	2	2	2	2	2	2	2
Cap, veh/h	355	129	402	468	573	512	238	1463	39	238	1510	569
Arrive On Green	0.32	0.32	0.32	0.32	0.00	0.32	0.05	0.14	0.14	0.14	0.41	0.41
Sat Flow, veh/h	1165	399	1247	1303	1777	1585	1688	3537	93	1688	3650	1376
Grp Volume(v), veh/h	368	0	33	10	0	157	60	815	855	154	1491	738
Grp Sat Flow(s),veh/h/ln	1165	0	1646	1303	1777	1585	1688	1777	1854	1688	1702	1623
Q Serve(g_s), s	27.3	0.0	1.5	0.6	0.0	8.2	3.8	45.5	45.5	9.5	45.5	45.5
Cycle Q Clear(g_c), s	35.5	0.0	1.5	2.1	0.0	8.2	3.8	45.5	45.5	9.5	45.5	45.5
Prop In Lane	1.00		0.76	1.00		1.00	1.00		0.05	1.00		0.85
Lane Grp Cap(c), veh/h	355	0	531	468	573	512	238	735	767	238	1408	671
V/C Ratio(X)	1.04	0.00	0.06	0.02	0.00	0.31	0.25	1.11	1.11	0.65	1.06	1.10
Avail Cap(c_a), veh/h	355	0	531	468	573	512	238	735	767	238	1408	671
HCM Platoon Ratio	1.00	1.00	1.00	1.00	1.00	1.00	0.33	0.33	0.33	1.00	1.00	1.00
Upstream Filter(I)	1.00	0.00	1.00	1.00	0.00	1.00	1.00	1.00	1.00	1.00	1.00	1.00
Uniform Delay (d), s/veh	43.9	0.0	25.7	26.5	0.0	28.0	46.9	47.5	47.5	44.7	32.3	32.3
Incr Delay (d2), s/veh	57.9	0.0	0.2	0.1	0.0	1.6	2.5	67.4	68.7	12.9	41.3	65.1
Initial Q Delay(d3),s/veh	0.0	0.0	0.0	0.0	0.0	0.0	0.0	0.0	0.0	0.0	0.0	0.0
%ile BackOfQ(50%),veh/ln	15.5	0.0	0.6	0.2	0.0	3.3	1.8	35.4	37.2	4.8	26.1	29.3
Unsig. Movement Delay, s/veh												
LnGrp Delay(d),s/veh	101.7	0.0	26.0	26.6	0.0	29.6	49.4	114.9	116.2	57.5	73.5	97.4
LnGrp LOS	F	A	C	C	A	C	D	F	F	E	F	F
Approach Vol, veh/h		401			167			1730			2383	
Approach Delay, s/veh		95.5			29.4			113.3			79.9	
Approach LOS		F			C			F			E	

Timer - Assigned Phs	1	2		4	5	6		8
Phs Duration (G+Y+Rc), s	30.0	50.0		40.0	20.0	50.0		40.0
Change Period (Y+Rc), s	4.5	4.5		4.5	4.5	4.5		4.5
Max Green Setting (Gmax), s	25.5	45.5		35.5	15.5	45.5		35.5
Max Q Clear Time (g_c+I1), s	11.5	47.5		37.5	5.8	47.5		10.2
Green Ext Time (p_c), s	0.1	0.0		0.0	0.1	0.0		1.0

Intersection Summary	
HCM 6th Ctrl Delay	91.8
HCM 6th LOS	F

Movement	EBL	EBT	EBR	WBL	WBT	WBR	NBL	NBT	NBR	SBL	SBT	SBR
Lane Configurations												
Traffic Volume (veh/h)	230	657	71	27	721	11	98	77	48	4	71	449
Future Volume (veh/h)	230	657	71	27	721	11	98	77	48	4	71	449
Initial Q (Qb), veh	0	0	0	0	0	0	0	0	0	0	0	0
Ped-Bike Adj(A_pbT)	1.00		1.00	1.00		1.00	1.00		1.00	1.00		1.00
Parking Bus, Adj	1.00	1.00	1.00	1.00	1.00	1.00	1.00	1.00	1.00	1.00	1.00	1.00
Work Zone On Approach		No			No			No			No	
Adj Sat Flow, veh/h/ln	1772	1870	1870	1772	1870	1870	1870	1870	1870	1870	1870	1870
Adj Flow Rate, veh/h	242	692	75	28	759	12	103	81	51	4	75	473
Peak Hour Factor	0.95	0.95	0.95	0.95	0.95	0.95	0.95	0.95	0.95	0.95	0.95	0.95
Percent Heavy Veh, %	2	2	2	2	2	2	2	2	2	2	2	2
Cap, veh/h	332	1331	144	331	1473	23	262	195	94	84	88	531
Arrive On Green	0.41	0.41	0.41	0.41	0.41	0.41	0.38	0.38	0.38	0.38	0.38	0.38
Sat Flow, veh/h	662	3234	350	664	3580	57	376	510	245	3	229	1388
Grp Volume(v), veh/h	242	380	387	28	377	394	235	0	0	552	0	0
Grp Sat Flow(s),veh/h/ln	662	1777	1807	664	1777	1860	1131	0	0	1619	0	0
Q Serve(g_s), s	11.1	7.0	7.0	1.4	6.9	6.9	0.0	0.0	0.0	1.2	0.0	0.0
Cycle Q Clear(g_c), s	18.0	7.0	7.0	8.5	6.9	6.9	5.8	0.0	0.0	14.0	0.0	0.0
Prop In Lane	1.00		0.19	1.00		0.03	0.44		0.22	0.01		0.86
Lane Grp Cap(c), veh/h	332	731	744	331	731	765	551	0	0	703	0	0
V/C Ratio(X)	0.73	0.52	0.52	0.08	0.52	0.52	0.43	0.00	0.00	0.79	0.00	0.00
Avail Cap(c_a), veh/h	332	731	744	331	731	765	586	0	0	749	0	0
HCM Platoon Ratio	1.00	1.00	1.00	1.00	1.00	1.00	1.00	1.00	1.00	1.00	1.00	1.00
Upstream Filter(I)	1.00	1.00	1.00	1.00	1.00	1.00	1.00	0.00	0.00	1.00	0.00	0.00
Uniform Delay (d), s/veh	18.0	9.6	9.6	12.8	9.6	9.6	9.8	0.0	0.0	12.6	0.0	0.0
Incr Delay (d2), s/veh	7.9	0.7	0.6	0.1	0.6	0.6	0.5	0.0	0.0	5.2	0.0	0.0
Initial Q Delay(d3),s/veh	0.0	0.0	0.0	0.0	0.0	0.0	0.0	0.0	0.0	0.0	0.0	0.0
%ile BackOfQ(50%),veh/ln	8.0	2.2	2.2	0.2	2.2	2.3	1.3	0.0	0.0	4.9	0.0	0.0
Unsig. Movement Delay, s/veh												
LnGrp Delay(d),s/veh	25.9	10.3	10.3	12.9	10.2	10.2	10.3	0.0	0.0	17.9	0.0	0.0
LnGrp LOS	C	B	B	B	B	B	B	A	A	B	A	A
Approach Vol, veh/h		1009			799			235			552	
Approach Delay, s/veh		14.0			10.3			10.3			17.9	
Approach LOS		B			B			B			B	

Timer - Assigned Phs	2	4	6	8
Phs Duration (G+Y+Rc), s	21.2	22.5	21.2	22.5
Change Period (Y+Rc), s	4.5	4.5	4.5	4.5
Max Green Setting (Gmax), s	18.0	18.0	18.0	18.0
Max Q Clear Time (g_c+I1), s	7.8	20.0	16.0	10.5
Green Ext Time (p_c), s	1.1	0.0	0.8	3.0

Intersection Summary	
HCM 6th Ctrl Delay	13.4
HCM 6th LOS	B

Movement	EBL	EBT	EBR	WBL	WBT	WBR	NBL	NBT	NBR	SBL	SBT	SBR
Lane Configurations												
Traffic Volume (veh/h)	323	258	125	39	263	164	169	1103	21	151	1228	230
Future Volume (veh/h)	323	258	125	39	263	164	169	1103	21	151	1228	230
Initial Q (Qb), veh	0	0	0	0	0	0	0	0	0	0	0	0
Ped-Bike Adj(A_pbT)	1.00		0.96	1.00		1.00	1.00		1.00	1.00		1.00
Parking Bus, Adj	1.00	1.00	1.00	1.00	1.00	1.00	1.00	1.00	1.00	1.00	1.00	1.00
Work Zone On Approach		No			No			No			No	
Adj Sat Flow, veh/h/ln	1772	1870	1870	1772	1870	1870	1772	1870	1870	1772	1870	1870
Adj Flow Rate, veh/h	340	272	132	41	277	173	178	1161	22	159	1293	242
Peak Hour Factor	0.95	0.95	0.95	0.95	0.95	0.95	0.95	0.95	0.95	0.95	0.95	0.95
Percent Heavy Veh, %	2	2	2	2	2	2	2	2	2	2	2	2
Cap, veh/h	299	639	299	109	348	211	161	1395	26	176	1197	222
Arrive On Green	0.18	0.28	0.28	0.06	0.16	0.16	0.03	0.13	0.13	0.03	0.13	0.13
Sat Flow, veh/h	1688	2313	1083	1688	2127	1289	1688	3567	68	1688	2993	554
Grp Volume(v), veh/h	340	207	197	41	230	220	178	578	605	159	762	773
Grp Sat Flow(s),veh/h/ln	1688	1777	1619	1688	1777	1638	1688	1777	1858	1688	1777	1771
Q Serve(g_s), s	19.5	10.5	11.1	2.6	13.7	14.3	10.5	34.9	34.9	10.3	44.0	44.0
Cycle Q Clear(g_c), s	19.5	10.5	11.1	2.6	13.7	14.3	10.5	34.9	34.9	10.3	44.0	44.0
Prop In Lane	1.00		0.67	1.00		0.79	1.00		0.04	1.00		0.31
Lane Grp Cap(c), veh/h	299	491	447	109	291	268	161	695	726	176	711	708
V/C Ratio(X)	1.14	0.42	0.44	0.38	0.79	0.82	1.11	0.83	0.83	0.90	1.07	1.09
Avail Cap(c_a), veh/h	299	491	447	109	291	268	161	695	726	176	711	708
HCM Platoon Ratio	1.00	1.00	1.00	1.00	1.00	1.00	0.33	0.33	0.33	0.33	0.33	0.33
Upstream Filter(I)	1.00	1.00	1.00	1.00	1.00	1.00	1.00	1.00	1.00	1.00	1.00	1.00
Uniform Delay (d), s/veh	45.2	32.6	32.8	49.3	44.2	44.4	53.3	44.4	44.4	52.5	47.7	47.7
Incr Delay (d2), s/veh	94.1	2.6	3.1	9.6	19.4	23.7	101.8	11.2	10.8	45.8	54.7	61.5
Initial Q Delay(d3),s/veh	0.0	0.0	0.0	0.0	0.0	0.0	0.0	0.0	0.0	0.0	0.0	0.0
%ile BackOfQ(50%),veh/ln	15.9	4.9	4.7	1.4	7.6	7.5	9.3	18.8	19.6	6.9	31.7	33.0
Unsig. Movement Delay, s/veh												
LnGrp Delay(d),s/veh	139.4	35.2	35.9	59.0	63.6	68.2	155.1	55.6	55.2	98.4	102.5	109.2
LnGrp LOS	F	D	D	E	E	E	F	E	E	F	F	F
Approach Vol, veh/h		744			491			1361			1694	
Approach Delay, s/veh		83.0			65.3			68.4			105.2	
Approach LOS		F			E			E			F	

Timer - Assigned Phs	1	2	3	4	5	6	7	8
Phs Duration (G+Y+Rc), s	16.0	47.5	11.6	34.9	15.0	48.5	24.0	22.5
Change Period (Y+Rc), s	4.5	4.5	4.5	4.5	4.5	4.5	4.5	4.5
Max Green Setting (Gmax), s	11.5	43.0	7.1	30.4	10.5	44.0	19.5	18.0
Max Q Clear Time (g_c+I1), s	12.3	36.9	4.6	13.1	12.5	46.0	21.5	16.3
Green Ext Time (p_c), s	0.0	3.7	0.0	2.3	0.0	0.0	0.0	0.5

Intersection Summary	
HCM 6th Ctrl Delay	85.1
HCM 6th LOS	F

Movement	EBL	EBT	EBR	WBL	WBT	WBR	NBL	NBT	NBR	SBL	SBT	SBR
Lane Configurations												
Traffic Volume (veh/h)	4	346	92	47	377	31	75	97	31	44	54	0
Future Volume (veh/h)	4	346	92	47	377	31	75	97	31	44	54	0
Initial Q (Qb), veh	0	0	0	0	0	0	0	0	0	0	0	0
Ped-Bike Adj(A_pbT)	1.00		0.94	0.98		1.00	1.00		1.00	1.00		1.00
Parking Bus, Adj	1.00	1.00	1.00	1.00	1.00	1.00	1.00	1.00	1.00	1.00	1.00	1.00
Work Zone On Approach		No			No			No			No	
Adj Sat Flow, veh/h/ln	1772	1870	1870	1772	1870	1870	1870	1870	1870	1870	1870	1870
Adj Flow Rate, veh/h	4	364	97	49	397	33	79	102	33	46	57	0
Peak Hour Factor	0.95	0.95	0.95	0.95	0.95	0.95	0.95	0.95	0.95	0.95	0.95	0.95
Percent Heavy Veh, %	2	2	2	2	2	2	2	2	2	2	2	2
Cap, veh/h	587	766	612	518	1361	113	305	212	58	323	274	0
Arrive On Green	0.41	0.41	0.41	0.41	0.41	0.41	0.23	0.23	0.23	0.23	0.23	0.00
Sat Flow, veh/h	908	1870	1494	860	3323	275	468	921	253	497	1193	0
Grp Volume(v), veh/h	4	364	97	49	211	219	214	0	0	103	0	0
Grp Sat Flow(s),veh/h/ln	908	1870	1494	860	1777	1821	1643	0	0	1690	0	0
Q Serve(g_s), s	0.1	3.6	1.0	1.1	2.0	2.0	1.6	0.0	0.0	0.0	0.0	0.0
Cycle Q Clear(g_c), s	2.1	3.6	1.0	4.7	2.0	2.0	2.8	0.0	0.0	1.1	0.0	0.0
Prop In Lane	1.00		1.00	1.00		0.15	0.37		0.15	0.45		0.00
Lane Grp Cap(c), veh/h	587	766	612	518	728	746	575	0	0	597	0	0
V/C Ratio(X)	0.01	0.48	0.16	0.09	0.29	0.29	0.37	0.00	0.00	0.17	0.00	0.00
Avail Cap(c_a), veh/h	870	1349	1078	786	1282	1313	1360	0	0	1351	0	0
HCM Platoon Ratio	1.00	1.00	1.00	1.00	1.00	1.00	1.00	1.00	1.00	1.00	1.00	1.00
Upstream Filter(I)	1.00	1.00	1.00	1.00	1.00	1.00	1.00	0.00	0.00	1.00	0.00	0.00
Uniform Delay (d), s/veh	5.6	5.4	4.7	7.1	4.9	4.9	8.4	0.0	0.0	7.8	0.0	0.0
Incr Delay (d2), s/veh	0.0	0.5	0.1	0.1	0.2	0.2	0.4	0.0	0.0	0.1	0.0	0.0
Initial Q Delay(d3),s/veh	0.0	0.0	0.0	0.0	0.0	0.0	0.0	0.0	0.0	0.0	0.0	0.0
%ile BackOfQ(50%),veh/ln	0.0	0.6	0.1	0.1	0.3	0.3	0.7	0.0	0.0	0.3	0.0	0.0
Unsig. Movement Delay, s/veh												
LnGrp Delay(d),s/veh	5.6	5.9	4.8	7.2	5.2	5.2	8.8	0.0	0.0	8.0	0.0	0.0
LnGrp LOS	A	A	A	A	A	A	A	A	A	A	A	A
Approach Vol, veh/h		465			479			214			103	
Approach Delay, s/veh		5.6			5.4			8.8			8.0	
Approach LOS		A			A			A			A	

Timer - Assigned Phs	2	4	6	8
Phs Duration (G+Y+Rc), s	10.2	14.7	10.2	14.7
Change Period (Y+Rc), s	4.5	4.5	4.5	4.5
Max Green Setting (Gmax), s	18.0	18.0	18.0	18.0
Max Q Clear Time (g_c+I1), s	4.8	5.6	3.1	6.7
Green Ext Time (p_c), s	0.9	2.1	0.4	2.2

Intersection Summary	
HCM 6th Ctrl Delay	6.3
HCM 6th LOS	A

Intersection	
Intersection Delay, s/veh	23.6
Intersection LOS	C

Movement	EBL	EBT	EBR	WBL	WBT	WBR	NBL	NBT	NBR	SBL	SBT	SBR
Lane Configurations												
Traffic Vol, veh/h	36	151	151	40	192	44	106	206	20	30	225	47
Future Vol, veh/h	36	151	151	40	192	44	106	206	20	30	225	47
Peak Hour Factor	0.95	0.95	0.95	0.95	0.95	0.95	0.95	0.95	0.95	0.95	0.95	0.95
Heavy Vehicles, %	2	2	2	2	2	2	2	2	2	2	2	2
Mvmt Flow	38	159	159	42	202	46	112	217	21	32	237	49
Number of Lanes	0	1	0	0	1	1	0	1	0	0	1	0

Approach	EB	WB	NB	SB
Opposing Approach	WB	EB	SB	NB
Opposing Lanes	2	1	1	1
Conflicting Approach Left	SB	NB	EB	WB
Conflicting Lanes Left	1	1	1	2
Conflicting Approach Right	NB	SB	WB	EB
Conflicting Lanes Right	1	1	2	1
HCM Control Delay	25.8	18.6	26.3	22.8
HCM LOS	D	C	D	C

Lane	NBLn1	EBLn1	WBLn1	WBLn2	SBLn1
Vol Left, %	32%	11%	17%	0%	10%
Vol Thru, %	62%	45%	83%	0%	75%
Vol Right, %	6%	45%	0%	100%	16%
Sign Control	Stop	Stop	Stop	Stop	Stop
Traffic Vol by Lane	332	338	232	44	302
LT Vol	106	36	40	0	30
Through Vol	206	151	192	0	225
RT Vol	20	151	0	44	47
Lane Flow Rate	349	356	244	46	318
Geometry Grp	2	5	7	7	2
Degree of Util (X)	0.708	0.707	0.545	0.093	0.645
Departure Headway (Hd)	7.292	7.152	8.03	7.219	7.3
Convergence, Y/N	Yes	Yes	Yes	Yes	Yes
Cap	493	502	447	494	493
Service Time	5.37	5.231	5.811	4.999	5.379
HCM Lane V/C Ratio	0.708	0.709	0.546	0.093	0.645
HCM Control Delay	26.3	25.8	20.1	10.7	22.8
HCM Lane LOS	D	D	C	B	C
HCM 95th-tile Q	5.5	5.5	3.2	0.3	4.5

Movement	EBL	EBT	EBR	WBL	WBT	WBR	NBL	NBT	NBR	SBL	SBT	SBR
Lane Configurations												
Traffic Volume (veh/h)	89	135	101	70	144	84	136	1092	91	180	1150	84
Future Volume (veh/h)	89	135	101	70	144	84	136	1092	91	180	1150	84
Initial Q (Qb), veh	0	0	0	0	0	0	0	0	0	0	0	0
Ped-Bike Adj(A_pbT)	1.00		1.00	1.00		1.00	1.00		1.00	1.00		1.00
Parking Bus, Adj	1.00	1.00	1.00	1.00	1.00	1.00	1.00	1.00	1.00	1.00	1.00	1.00
Work Zone On Approach		No			No			No			No	
Adj Sat Flow, veh/h/ln	1870	1870	1870	1870	1870	1870	1772	1870	1870	1772	1870	1870
Adj Flow Rate, veh/h	94	142	106	74	152	88	143	1149	96	189	1211	88
Peak Hour Factor	0.95	0.95	0.95	0.95	0.95	0.95	0.95	0.95	0.95	0.95	0.95	0.95
Percent Heavy Veh, %	2	2	2	2	2	2	2	2	2	2	2	2
Cap, veh/h	239	267	199	231	298	173	361	1554	130	238	1329	96
Arrive On Green	0.27	0.27	0.27	0.27	0.27	0.27	0.43	0.94	0.94	0.14	0.40	0.40
Sat Flow, veh/h	1140	994	742	1132	1111	643	1688	3320	277	1688	3360	244
Grp Volume(v), veh/h	94	0	248	74	0	240	143	614	631	189	640	659
Grp Sat Flow(s),veh/h/ln	1140	0	1737	1132	0	1755	1688	1777	1820	1688	1777	1826
Q Serve(g_s), s	8.4	0.0	13.4	6.6	0.0	12.8	6.4	7.8	7.9	11.9	37.4	37.6
Cycle Q Clear(g_c), s	21.1	0.0	13.4	20.0	0.0	12.8	6.4	7.8	7.9	11.9	37.4	37.6
Prop In Lane	1.00		0.43	1.00		0.37	1.00		0.15	1.00		0.13
Lane Grp Cap(c), veh/h	239	0	466	231	0	471	361	832	852	238	703	722
V/C Ratio(X)	0.39	0.00	0.53	0.32	0.00	0.51	0.40	0.74	0.74	0.79	0.91	0.91
Avail Cap(c_a), veh/h	239	0	466	231	0	471	361	832	852	238	703	722
HCM Platoon Ratio	1.00	1.00	1.00	1.00	1.00	1.00	2.00	2.00	2.00	1.00	1.00	1.00
Upstream Filter(I)	1.00	0.00	1.00	1.00	0.00	1.00	1.00	1.00	1.00	1.00	1.00	1.00
Uniform Delay (d), s/veh	43.1	0.0	34.4	42.9	0.0	34.1	26.6	2.1	2.1	45.7	31.4	31.5
Incr Delay (d2), s/veh	4.8	0.0	4.3	3.6	0.0	3.9	3.2	5.8	5.7	23.4	18.0	17.9
Initial Q Delay(d3),s/veh	0.0	0.0	0.0	0.0	0.0	0.0	0.0	0.0	0.0	0.0	0.0	0.0
%ile BackOfQ(50%),veh/ln	2.7	0.0	6.2	2.1	0.0	5.9	2.7	2.4	2.4	6.5	19.1	19.7
Unsig. Movement Delay, s/veh												
LnGrp Delay(d),s/veh	47.9	0.0	38.7	46.5	0.0	38.0	29.9	7.9	7.8	69.1	49.4	49.4
LnGrp LOS	D	A	D	D	A	D	C	A	A	E	D	D
Approach Vol, veh/h		342			314			1388			1488	
Approach Delay, s/veh		41.2			40.0			10.1			51.9	
Approach LOS		D			D			B			D	

Timer - Assigned Phs	1	2		4	5	6		8
Phs Duration (G+Y+Rc), s	30.0	56.0		34.0	28.0	48.0		34.0
Change Period (Y+Rc), s	4.5	4.5		4.5	4.5	4.5		4.5
Max Green Setting (Gmax), s	25.5	51.5		29.5	23.5	43.5		29.5
Max Q Clear Time (g_c+I1), s	13.9	9.9		23.1	8.4	39.6		22.0
Green Ext Time (p_c), s	0.1	11.5		1.0	0.3	2.8		1.0

Intersection Summary	
HCM 6th Ctrl Delay	33.4
HCM 6th LOS	C

Intersection	
Intersection Delay, s/veh	13.5
Intersection LOS	B

Movement	EBL	EBT	EBR	WBL	WBT	WBR	NBL	NBT	NBR	SBL	SBT	SBR
Lane Configurations												
Traffic Vol, veh/h	27	181	88	58	154	31	31	109	19	69	168	26
Future Vol, veh/h	27	181	88	58	154	31	31	109	19	69	168	26
Peak Hour Factor	0.95	0.95	0.95	0.95	0.95	0.95	0.95	0.95	0.95	0.95	0.95	0.95
Heavy Vehicles, %	2	2	2	2	2	2	2	2	2	2	2	2
Mvmt Flow	28	191	93	61	162	33	33	115	20	73	177	27
Number of Lanes	0	1	0	0	1	1	0	1	0	0	1	0

Approach	EB	WB	NB	SB
Opposing Approach	WB	EB	SB	NB
Opposing Lanes	2	1	1	1
Conflicting Approach Left	SB	NB	EB	WB
Conflicting Lanes Left	1	1	1	2
Conflicting Approach Right	NB	SB	WB	EB
Conflicting Lanes Right	1	1	2	1
HCM Control Delay	14.3	13.1	11.7	13.9
HCM LOS	B	B	B	B

Lane	NBLn1	EBLn1	WBLn1	WBLn2	SBLn1
Vol Left, %	19%	9%	27%	0%	26%
Vol Thru, %	69%	61%	73%	0%	64%
Vol Right, %	12%	30%	0%	100%	10%
Sign Control	Stop	Stop	Stop	Stop	Stop
Traffic Vol by Lane	159	296	212	31	263
LT Vol	31	27	58	0	69
Through Vol	109	181	154	0	168
RT Vol	19	88	0	31	26
Lane Flow Rate	167	312	223	33	277
Geometry Grp	2	5	7	7	2
Degree of Util (X)	0.285	0.495	0.403	0.051	0.455
Departure Headway (Hd)	6.126	5.717	6.506	5.654	5.917
Convergence, Y/N	Yes	Yes	Yes	Yes	Yes
Cap	581	626	549	628	604
Service Time	4.223	3.797	4.289	3.437	4.002
HCM Lane V/C Ratio	0.287	0.498	0.406	0.053	0.459
HCM Control Delay	11.7	14.3	13.7	8.7	13.9
HCM Lane LOS	B	B	B	A	B
HCM 95th-tile Q	1.2	2.7	1.9	0.2	2.4

Intersection	
Int Delay, s/veh	0.6

Movement	WBL	WBR	NBT	NBR	SBL	SBT
Lane Configurations						
Traffic Vol, veh/h	0	93	1226	94	0	1290
Future Vol, veh/h	0	93	1226	94	0	1290
Conflicting Peds, #/hr	0	0	0	0	0	0
Sign Control	Stop	Stop	Free	Free	Free	Free
RT Channelized	-	None	-	None	-	None
Storage Length	-	0	-	-	-	-
Veh in Median Storage, #	0	-	0	-	-	0
Grade, %	0	-	0	-	-	0
Peak Hour Factor	95	95	95	95	95	95
Heavy Vehicles, %	2	2	2	2	2	2
Mvmt Flow	0	98	1291	99	0	1358

Major/Minor	Minor1		Major1		Major2	
Conflicting Flow All	-	695	0	0	-	-
Stage 1	-	-	-	-	-	-
Stage 2	-	-	-	-	-	-
Critical Hdwy	-	6.94	-	-	-	-
Critical Hdwy Stg 1	-	-	-	-	-	-
Critical Hdwy Stg 2	-	-	-	-	-	-
Follow-up Hdwy	-	3.32	-	-	-	-
Pot Cap-1 Maneuver	0	385	-	-	0	-
Stage 1	0	-	-	-	0	-
Stage 2	0	-	-	-	0	-
Platoon blocked, %			-	-		-
Mov Cap-1 Maneuver	-	385	-	-	-	-
Mov Cap-2 Maneuver	-	-	-	-	-	-
Stage 1	-	-	-	-	-	-
Stage 2	-	-	-	-	-	-

Approach	WB	NB	SB
HCM Control Delay, s	17.5	0	0
HCM LOS	C		

Minor Lane/Major Mvmt	NBT	NBR	WBLn1	SBT
Capacity (veh/h)	-	-	385	-
HCM Lane V/C Ratio	-	-	0.254	-
HCM Control Delay (s)	-	-	17.5	-
HCM Lane LOS	-	-	C	-
HCM 95th %tile Q(veh)	-	-	1	-

Intersection	
Int Delay, s/veh	0.9

Movement	EBT	EBR	WBL	WBT	NBL	NBR
Lane Configurations						
Traffic Vol, veh/h	343	47	0	210	46	0
Future Vol, veh/h	343	47	0	210	46	0
Conflicting Peds, #/hr	0	0	0	0	0	0
Sign Control	Free	Free	Free	Free	Stop	Stop
RT Channelized	-	None	-	None	-	None
Storage Length	-	-	-	-	0	-
Veh in Median Storage, #	0	-	-	0	0	-
Grade, %	0	-	-	0	0	-
Peak Hour Factor	92	92	92	92	92	92
Heavy Vehicles, %	2	2	2	2	2	2
Mvmt Flow	373	51	0	228	50	0

Major/Minor	Major1		Major2		Minor1	
Conflicting Flow All	0	0	-	-	513	-
Stage 1	-	-	-	-	399	-
Stage 2	-	-	-	-	114	-
Critical Hdwy	-	-	-	-	6.63	-
Critical Hdwy Stg 1	-	-	-	-	5.43	-
Critical Hdwy Stg 2	-	-	-	-	5.83	-
Follow-up Hdwy	-	-	-	-	3.519	-
Pot Cap-1 Maneuver	-	-	0	-	506	0
Stage 1	-	-	0	-	677	0
Stage 2	-	-	0	-	899	0
Platoon blocked, %	-	-		-		
Mov Cap-1 Maneuver	-	-	-	-	506	-
Mov Cap-2 Maneuver	-	-	-	-	506	-
Stage 1	-	-	-	-	677	-
Stage 2	-	-	-	-	899	-

Approach	EB	WB	NB
HCM Control Delay, s	0	0	12.9
HCM LOS			B

Minor Lane/Major Mvmt	NBLn1	EBT	EBR	WBT
Capacity (veh/h)	506	-	-	-
HCM Lane V/C Ratio	0.099	-	-	-
HCM Control Delay (s)	12.9	-	-	-
HCM Lane LOS	B	-	-	-
HCM 95th %tile Q(veh)	0.3	-	-	-

Intersection	
Int Delay, s/veh	0.9

Movement	EBT	EBR	WBL	WBT	NBL	NBR
Lane Configurations						
Traffic Vol, veh/h	296	47	0	210	46	0
Future Vol, veh/h	296	47	0	210	46	0
Conflicting Peds, #/hr	0	0	0	0	0	0
Sign Control	Free	Free	Free	Free	Stop	Stop
RT Channelized	-	None	-	None	-	None
Storage Length	-	-	-	-	0	-
Veh in Median Storage, #	0	-	-	0	0	-
Grade, %	0	-	-	0	0	-
Peak Hour Factor	95	95	95	95	95	95
Heavy Vehicles, %	2	2	2	2	2	2
Mvmt Flow	312	49	0	221	48	0

Major/Minor	Major1		Major2		Minor1	
Conflicting Flow All	0	0	-	-	448	-
Stage 1	-	-	-	-	337	-
Stage 2	-	-	-	-	111	-
Critical Hdwy	-	-	-	-	6.63	-
Critical Hdwy Stg 1	-	-	-	-	5.43	-
Critical Hdwy Stg 2	-	-	-	-	5.83	-
Follow-up Hdwy	-	-	-	-	3.519	-
Pot Cap-1 Maneuver	-	-	0	-	554	0
Stage 1	-	-	0	-	722	0
Stage 2	-	-	0	-	902	0
Platoon blocked, %	-	-		-		
Mov Cap-1 Maneuver	-	-	-	-	554	-
Mov Cap-2 Maneuver	-	-	-	-	554	-
Stage 1	-	-	-	-	722	-
Stage 2	-	-	-	-	902	-

Approach	EB	WB	NB
HCM Control Delay, s	0	0	12.1
HCM LOS			B

Minor Lane/Major Mvmt	NBLn1	EBT	EBR	WBT
Capacity (veh/h)	554	-	-	-
HCM Lane V/C Ratio	0.087	-	-	-
HCM Control Delay (s)	12.1	-	-	-
HCM Lane LOS	B	-	-	-
HCM 95th %tile Q(veh)	0.3	-	-	-

Intersection	
Intersection Delay, s/veh	14.5
Intersection LOS	B

Movement	EBL	EBT	EBR	WBL	WBT	WBR	NBL	NBT	NBR	SBL	SBT	SBR
Lane Configurations												
Traffic Vol, veh/h	23	203	26	4	126	98	15	238	8	57	186	63
Future Vol, veh/h	23	203	26	4	126	98	15	238	8	57	186	63
Peak Hour Factor	0.95	0.95	0.95	0.95	0.95	0.95	0.95	0.95	0.95	0.95	0.95	0.95
Heavy Vehicles, %	2	2	2	2	2	2	2	2	2	2	2	2
Mvmt Flow	24	214	27	4	133	103	16	251	8	60	196	66
Number of Lanes	0	1	1	0	2	0	0	1	0	0	1	0

Approach	EB	WB	NB	SB
Opposing Approach	WB	EB	SB	NB
Opposing Lanes	2	2	1	1
Conflicting Approach Left	SB	NB	EB	WB
Conflicting Lanes Left	1	1	2	2
Conflicting Approach Right	NB	SB	WB	EB
Conflicting Lanes Right	1	1	2	2
HCM Control Delay	14.8	11.8	14.8	16.1
HCM LOS	B	B	B	C

Lane	NBLn1	EBLn1	EBLn2	WBLn1	WBLn2	SBLn1
Vol Left, %	6%	10%	0%	6%	0%	19%
Vol Thru, %	91%	90%	0%	94%	39%	61%
Vol Right, %	3%	0%	100%	0%	61%	21%
Sign Control	Stop	Stop	Stop	Stop	Stop	Stop
Traffic Vol by Lane	261	226	26	67	161	306
LT Vol	15	23	0	4	0	57
Through Vol	238	203	0	63	63	186
RT Vol	8	0	26	0	98	63
Lane Flow Rate	275	238	27	71	169	322
Geometry Grp	2	7	7	7	7	2
Degree of Util (X)	0.476	0.458	0.047	0.137	0.308	0.542
Departure Headway (Hd)	6.233	6.935	6.166	7.011	6.543	6.06
Convergence, Y/N	Yes	Yes	Yes	Yes	Yes	Yes
Cap	577	519	580	511	549	596
Service Time	4.276	4.681	3.911	4.76	4.292	4.101
HCM Lane V/C Ratio	0.477	0.459	0.047	0.139	0.308	0.54
HCM Control Delay	14.8	15.4	9.2	10.9	12.2	16.1
HCM Lane LOS	B	C	A	B	B	C
HCM 95th-tile Q	2.6	2.4	0.1	0.5	1.3	3.2

Movement	EBL	EBT	EBR	WBL	WBT	WBR	NBL	NBT	NBR	SBL	SBT	SBR
Lane Configurations												
Traffic Volume (veh/h)	95	189	48	57	174	221	54	896	63	114	1146	30
Future Volume (veh/h)	95	189	48	57	174	221	54	896	63	114	1146	30
Initial Q (Qb), veh	0	0	0	0	0	0	0	0	0	0	0	0
Ped-Bike Adj(A_pbT)	1.00		1.00	1.00		1.00	1.00		1.00	1.00		1.00
Parking Bus, Adj	1.00	1.00	1.00	1.00	1.00	1.00	1.00	1.00	1.00	1.00	1.00	1.00
Work Zone On Approach		No			No			No			No	
Adj Sat Flow, veh/h/ln	1870	1870	1870	1870	1870	1870	1772	1870	1870	1772	1870	1870
Adj Flow Rate, veh/h	100	199	51	60	183	233	57	943	66	120	1206	32
Peak Hour Factor	0.95	0.95	0.95	0.95	0.95	0.95	0.95	0.95	0.95	0.95	0.95	0.95
Percent Heavy Veh, %	2	2	2	2	2	2	2	2	2	2	2	2
Cap, veh/h	152	391	111	107	295	387	161	1516	106	268	1816	48
Arrive On Green	0.27	0.27	0.27	0.27	0.27	0.27	0.10	0.45	0.45	0.21	0.68	0.68
Sat Flow, veh/h	365	1459	416	246	1102	1442	1688	3369	236	1688	3537	94
Grp Volume(v), veh/h	150	0	200	243	0	233	57	497	512	120	606	632
Grp Sat Flow(s),veh/h/ln	612	0	1627	1347	0	1442	1688	1777	1828	1688	1777	1853
Q Serve(g_s), s	12.5	0.0	11.3	8.7	0.0	15.5	3.5	23.5	23.5	6.8	21.7	21.8
Cycle Q Clear(g_c), s	28.0	0.0	11.3	20.0	0.0	15.5	3.5	23.5	23.5	6.8	21.7	21.8
Prop In Lane	0.67		0.26	0.25		1.00	1.00		0.13	1.00		0.05
Lane Grp Cap(c), veh/h	219	0	436	402	0	387	161	800	823	268	913	952
V/C Ratio(X)	0.69	0.00	0.46	0.60	0.00	0.60	0.35	0.62	0.62	0.45	0.66	0.66
Avail Cap(c_a), veh/h	219	0	436	402	0	387	161	800	823	268	913	952
HCM Platoon Ratio	1.00	1.00	1.00	1.00	1.00	1.00	1.00	1.00	1.00	1.33	1.33	1.33
Upstream Filter(I)	1.00	0.00	1.00	1.00	0.00	1.00	1.00	1.00	1.00	1.00	1.00	1.00
Uniform Delay (d), s/veh	44.9	0.0	33.6	36.9	0.0	35.1	46.6	23.1	23.1	39.1	11.9	11.9
Incr Delay (d2), s/veh	16.2	0.0	3.4	6.6	0.0	6.8	6.0	3.6	3.5	5.3	3.8	3.7
Initial Q Delay(d3),s/veh	0.0	0.0	0.0	0.0	0.0	0.0	0.0	0.0	0.0	0.0	0.0	0.0
%ile BackOfQ(50%),veh/ln	5.0	0.0	4.8	6.7	0.0	6.1	1.7	10.4	10.7	3.1	7.4	7.7
Unsig. Movement Delay, s/veh												
LnGrp Delay(d),s/veh	61.1	0.0	37.0	43.5	0.0	41.9	52.6	26.7	26.6	44.5	15.7	15.6
LnGrp LOS	E	A	D	D	A	D	D	C	C	D	B	B
Approach Vol, veh/h		350			476			1066			1358	
Approach Delay, s/veh		47.4			42.7			28.1			18.2	
Approach LOS		D			D			C			B	

Timer - Assigned Phs	1	2		4	5	6		8
Phs Duration (G+Y+Rc), s	12.0	54.0		34.0	15.0	61.0		34.0
Change Period (Y+Rc), s	4.5	4.5		4.5	4.5	4.5		4.5
Max Green Setting (Gmax), s	7.5	49.5		29.5	10.5	56.5		29.5
Max Q Clear Time (g_c+I1), s	9.8	25.5		30.0	5.5	23.8		22.0
Green Ext Time (p_c), s	0.2	7.2		0.0	0.0	10.6		1.8

Intersection Summary	
HCM 6th Ctrl Delay	28.2
HCM 6th LOS	C

Intersection	
Int Delay, s/veh	3.1

Movement	EBL	EBT	WBT	WBR	SBL	SBR
Lane Configurations						
Traffic Vol, veh/h	152	304	294	104	28	91
Future Vol, veh/h	152	304	294	104	28	91
Conflicting Peds, #/hr	0	0	0	0	0	0
Sign Control	Free	Free	Free	Free	Stop	Stop
RT Channelized	-	None	-	None	-	None
Storage Length	-	-	-	-	0	0
Veh in Median Storage, #	-	0	0	-	0	-
Grade, %	-	0	0	-	0	-
Peak Hour Factor	95	95	95	95	95	95
Heavy Vehicles, %	2	2	2	2	2	2
Mvmt Flow	160	320	309	109	29	96

Major/Minor	Major1		Major2		Minor2	
Conflicting Flow All	418	0	-	0	1004	364
Stage 1	-	-	-	-	364	-
Stage 2	-	-	-	-	640	-
Critical Hdwy	4.12	-	-	-	6.42	6.22
Critical Hdwy Stg 1	-	-	-	-	5.42	-
Critical Hdwy Stg 2	-	-	-	-	5.42	-
Follow-up Hdwy	2.218	-	-	-	3.518	3.318
Pot Cap-1 Maneuver	1141	-	-	-	268	681
Stage 1	-	-	-	-	703	-
Stage 2	-	-	-	-	525	-
Platoon blocked, %		-	-	-		
Mov Cap-1 Maneuver	1141	-	-	-	222	681
Mov Cap-2 Maneuver	-	-	-	-	222	-
Stage 1	-	-	-	-	583	-
Stage 2	-	-	-	-	525	-

Approach	EB	WB	SB
HCM Control Delay, s	2.9	0	14.1
HCM LOS			B

Minor Lane/Major Mvmt	EBL	EBT	WBT	WBR	SBLn1	SBLn2
Capacity (veh/h)	1141	-	-	-	222	681
HCM Lane V/C Ratio	0.14	-	-	-	0.133	0.141
HCM Control Delay (s)	8.7	0	-	-	23.7	11.2
HCM Lane LOS	A	A	-	-	C	B
HCM 95th %tile Q(veh)	0.5	-	-	-	0.5	0.5

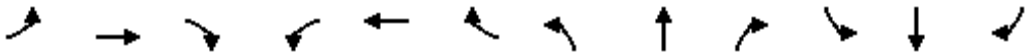

Movement	EBL	EBT	EBR	WBL	WBT	WBR	NBL	NBT	NBR	SBL	SBT	SBR
Lane Configurations												
Traffic Volume (veh/h)	22	1	23	84	0	71	11	694	82	85	1326	9
Future Volume (veh/h)	22	1	23	84	0	71	11	694	82	85	1326	9
Initial Q (Qb), veh	0	0	0	0	0	0	0	0	0	0	0	0
Ped-Bike Adj(A_pbT)	1.00		1.00	1.00		1.00	1.00		1.00	1.00		1.00
Parking Bus, Adj	1.00	1.00	1.00	1.00	1.00	1.00	1.00	1.00	1.00	1.00	1.00	1.00
Work Zone On Approach		No			No			No			No	
Adj Sat Flow, veh/h/ln	1870	1870	1870	1870	1870	1870	1772	1870	1870	1772	1870	1870
Adj Flow Rate, veh/h	23	1	24	88	0	75	12	731	86	89	1396	9
Peak Hour Factor	0.95	0.95	0.95	0.95	0.95	0.95	0.95	0.95	0.95	0.95	0.95	0.95
Percent Heavy Veh, %	2	2	2	2	2	2	2	2	2	2	2	2
Cap, veh/h	363	52	297	721	0	634	168	1281	151	301	1448	9
Arrive On Green	0.40	0.40	0.40	0.40	0.00	0.40	0.40	0.40	0.40	0.40	0.40	0.40
Sat Flow, veh/h	612	130	742	1403	0	1585	363	3203	377	634	3620	23
Grp Volume(v), veh/h	48	0	0	88	0	75	12	405	412	89	685	720
Grp Sat Flow(s),veh/h/ln	1484	0	0	1403	0	1585	363	1777	1803	634	1777	1866
Q Serve(g_s), s	0.0	0.0	0.0	0.8	0.0	1.3	1.0	8.0	8.0	5.7	16.9	17.0
Cycle Q Clear(g_c), s	0.8	0.0	0.0	1.6	0.0	1.3	18.0	8.0	8.0	13.7	16.9	17.0
Prop In Lane	0.48		0.50	1.00		1.00	1.00		0.21	1.00		0.01
Lane Grp Cap(c), veh/h	712	0	0	721	0	634	168	711	721	301	711	746
V/C Ratio(X)	0.07	0.00	0.00	0.12	0.00	0.12	0.07	0.57	0.57	0.30	0.96	0.96
Avail Cap(c_a), veh/h	712	0	0	721	0	634	168	711	721	301	711	746
HCM Platoon Ratio	1.00	1.00	1.00	1.00	1.00	1.00	1.00	1.00	1.00	1.00	1.00	1.00
Upstream Filter(I)	1.00	0.00	0.00	1.00	0.00	1.00	1.00	1.00	1.00	1.00	1.00	1.00
Uniform Delay (d), s/veh	8.3	0.0	0.0	8.5	0.0	8.5	22.1	10.5	10.5	15.8	13.2	13.2
Incr Delay (d2), s/veh	0.2	0.0	0.0	0.3	0.0	0.4	0.8	3.3	3.3	2.5	26.0	25.3
Initial Q Delay(d3),s/veh	0.0	0.0	0.0	0.0	0.0	0.0	0.0	0.0	0.0	0.0	0.0	0.0
%ile BackOfQ(50%),veh/ln	0.3	0.0	0.0	0.5	0.0	0.4	0.2	3.1	3.1	0.9	10.3	10.6
Unsig. Movement Delay, s/veh												
LnGrp Delay(d),s/veh	8.5	0.0	0.0	8.9	0.0	8.9	23.0	13.8	13.8	18.3	39.2	38.5
LnGrp LOS	A	A	A	A	A	A	C	B	B	B	D	D
Approach Vol, veh/h		48			163			829			1494	
Approach Delay, s/veh		8.5			8.9			13.9			37.6	
Approach LOS		A			A			B			D	

Timer - Assigned Phs		2		4		6		8				
Phs Duration (G+Y+Rc), s		22.5		22.5		22.5		22.5				
Change Period (Y+Rc), s		4.5		4.5		4.5		4.5				
Max Green Setting (Gmax), s		18.0		18.0		18.0		18.0				
Max Q Clear Time (g_c+I1), s		20.0		2.8		19.0		3.6				
Green Ext Time (p_c), s		0.0		0.1		0.0		0.5				

Intersection Summary												
HCM 6th Ctrl Delay			27.5									
HCM 6th LOS			C									

HCM 6th Signalized Intersection Summary
1: Cedar & Valley

06/17/2020

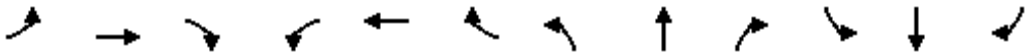

Movement	EBL	EBT	EBR	WBL	WBT	WBR	NBL	NBT	NBR	SBL	SBT	SBR
Lane Configurations												
Traffic Volume (veh/h)	341	575	664	317	327	81	511	1674	293	109	1295	89
Future Volume (veh/h)	341	575	664	317	327	81	511	1674	293	109	1295	89
Initial Q (Qb), veh	0	0	0	0	0	0	0	0	0	0	0	0
Ped-Bike Adj(A_pbT)	1.00		1.00	1.00		1.00	1.00		1.00	1.00		1.00
Parking Bus, Adj	1.00	1.00	1.00	1.00	1.00	1.00	1.00	1.00	1.00	1.00	1.00	1.00
Work Zone On Approach		No			No			No			No	
Adj Sat Flow, veh/h/ln	1575	1772	1772	1575	1772	1772	1575	1772	1772	1575	1772	1772
Adj Flow Rate, veh/h	344	581	671	320	330	82	516	1691	296	110	1308	90
Peak Hour Factor	0.99	0.99	0.99	0.99	0.99	0.99	0.99	0.99	0.99	0.99	0.99	0.99
Percent Heavy Veh, %	2	2	2	2	2	2	2	2	2	2	2	2
Cap, veh/h	848	709	1057	402	1072	263	429	1935	601	349	1849	127
Arrive On Green	0.40	0.40	0.40	0.40	0.40	0.40	0.40	0.40	0.40	0.40	0.40	0.40
Sat Flow, veh/h	1679	1772	2643	765	2680	657	665	4837	1502	376	4622	318
Grp Volume(v), veh/h	344	581	671	320	206	206	516	1691	296	110	913	485
Grp Sat Flow(s),veh/h/ln	840	1772	1321	383	1683	1654	333	1612	1502	188	1612	1715
Q Serve(g_s), s	7.9	13.2	9.2	4.8	3.8	3.9	7.3	14.5	6.6	3.5	10.7	10.7
Cycle Q Clear(g_c), s	11.8	13.2	9.2	18.0	3.8	3.9	18.0	14.5	6.6	18.0	10.7	10.7
Prop In Lane	1.00		1.00	1.00		0.40	1.00		1.00	1.00		0.19
Lane Grp Cap(c), veh/h	848	709	1057	402	673	661	429	1935	601	349	1290	686
V/C Ratio(X)	0.41	0.82	0.63	0.80	0.31	0.31	1.20	0.87	0.49	0.32	0.71	0.71
Avail Cap(c_a), veh/h	848	709	1057	402	673	661	429	1935	601	349	1290	686
HCM Platoon Ratio	1.00	1.00	1.00	1.00	1.00	1.00	1.00	1.00	1.00	1.00	1.00	1.00
Upstream Filter(I)	1.00	1.00	1.00	1.00	1.00	1.00	1.00	1.00	1.00	1.00	1.00	1.00
Uniform Delay (d), s/veh	13.3	12.1	10.9	21.9	9.2	9.3	21.6	12.5	10.1	22.0	11.3	11.3
Incr Delay (d2), s/veh	1.4	10.3	2.9	15.0	1.2	1.2	112.1	5.8	2.9	2.4	3.3	6.1
Initial Q Delay(d3),s/veh	0.0	0.0	0.0	0.0	0.0	0.0	0.0	0.0	0.0	0.0	0.0	0.0
%ile BackOfQ(50%),veh/ln	1.4	6.0	2.5	2.4	1.3	1.3	8.7	5.0	2.2	0.6	3.5	4.3
Unsig. Movement Delay, s/veh												
LnGrp Delay(d),s/veh	14.7	22.3	13.8	36.9	10.4	10.5	133.7	18.3	13.0	24.4	14.6	17.4
LnGrp LOS	B	C	B	D	B	B	F	B	B	C	B	B
Approach Vol, veh/h		1596			732			2503			1508	
Approach Delay, s/veh		17.1			22.0			41.5			16.2	
Approach LOS		B			C			D			B	

Timer - Assigned Phs		2		4		6		8				
Phs Duration (G+Y+Rc), s		22.5		22.5		22.5		22.5				
Change Period (Y+Rc), s		4.5		4.5		4.5		4.5				
Max Green Setting (Gmax), s		18.0		18.0		18.0		18.0				
Max Q Clear Time (g_c+I1), s		20.0		15.2		20.0		20.0				
Green Ext Time (p_c), s		0.0		2.1		0.0		0.0				

Intersection Summary												
HCM 6th Ctrl Delay			27.1									
HCM 6th LOS			C									

Movement	EBL	EBT	EBR	WBL	WBT	WBR	NBL	NBT	NBR	SBL	SBT	SBR
Lane Configurations												
Traffic Volume (veh/h)	0	0	0	526	3	697	377	1796	0	0	1607	724
Future Volume (veh/h)	0	0	0	526	3	697	377	1796	0	0	1607	724
Initial Q (Qb), veh				0	0	0	0	0	0	0	0	0
Ped-Bike Adj(A_pbT)				1.00		1.00	1.00		1.00	1.00		1.00
Parking Bus, Adj				1.00	1.00	1.00	1.00	1.00	1.00	1.00	1.00	1.00
Work Zone On Approach					No			No			No	
Adj Sat Flow, veh/h/ln				1575	1772	1772	1575	1772	0	0	1772	1772
Adj Flow Rate, veh/h				553	0	704	381	1814	0	0	1623	731
Peak Hour Factor				0.99	0.99	0.99	0.99	0.99	0.99	0.99	0.99	0.99
Percent Heavy Veh, %				2	2	2	2	2	0	0	2	2
Cap, veh/h				838	0	1258	618	3124	0	0	1915	594
Arrive On Green				0.28	0.00	0.28	0.28	0.86	0.00	0.00	0.40	0.40
Sat Flow, veh/h				3000	0	4505	2910	4997	0	0	4997	1502
Grp Volume(v), veh/h				553	0	704	381	1814	0	0	1623	731
Grp Sat Flow(s),veh/h/ln				1500	0	1502	1455	1612	0	0	1612	1502
Q Serve(g_s), s				19.5	0.0	16.0	13.6	12.7	0.0	0.0	36.6	47.5
Cycle Q Clear(g_c), s				19.5	0.0	16.0	13.6	12.7	0.0	0.0	36.6	47.5
Prop In Lane				1.00		1.00	1.00		0.00	0.00		1.00
Lane Grp Cap(c), veh/h				838	0	1258	618	3124	0	0	1915	594
V/C Ratio(X)				0.66	0.00	0.56	0.62	0.58	0.00	0.00	0.85	1.23
Avail Cap(c_a), veh/h				838	0	1258	618	3124	0	0	1915	594
HCM Platoon Ratio				1.00	1.00	1.00	1.33	1.33	1.00	1.00	1.00	1.00
Upstream Filter(I)				1.00	0.00	1.00	1.00	1.00	0.00	0.00	1.00	1.00
Uniform Delay (d), s/veh				38.2	0.0	37.0	38.8	3.9	0.0	0.0	33.0	36.3
Incr Delay (d2), s/veh				4.1	0.0	1.8	4.6	0.8	0.0	0.0	4.9	117.7
Initial Q Delay(d3),s/veh				0.0	0.0	0.0	0.0	0.0	0.0	0.0	0.0	0.0
%ile BackOfQ(50%),veh/ln				7.6	0.0	6.1	5.0	2.8	0.0	0.0	14.9	36.4
Unsig. Movement Delay, s/veh												
LnGrp Delay(d),s/veh				42.3	0.0	38.8	43.3	4.7	0.0	0.0	37.8	153.9
LnGrp LOS				D	A	D	D	A	A	A	D	F
Approach Vol, veh/h					1257			2195			2354	
Approach Delay, s/veh					40.3			11.4			73.9	
Approach LOS					D			B			E	

Timer - Assigned Phs	2		5	6		8
Phs Duration (G+Y+Rc), s	82.0		30.0	52.0		38.0
Change Period (Y+Rc), s	4.5		4.5	4.5		4.5
Max Green Setting (Gmax), s	77.5		25.5	47.5		33.5
Max Q Clear Time (g_c+I1), s	14.7		15.6	49.5		21.5
Green Ext Time (p_c), s	25.1		1.0	0.0		4.4

Intersection Summary	
HCM 6th Ctrl Delay	43.0
HCM 6th LOS	D

Notes

User approved volume balancing among the lanes for turning movement.

Movement	EBL	EBT	EBR	WBL	WBT	WBR	NBL	NBT	NBR	SBL	SBT	SBR
Lane Configurations												
Traffic Volume (veh/h)	854	11	308	0	0	0	0	1275	563	543	1595	0
Future Volume (veh/h)	854	11	308	0	0	0	0	1275	563	543	1595	0
Initial Q (Qb), veh	0	0	0				0	0	0	0	0	0
Ped-Bike Adj(A_pbT)	1.00		1.00				1.00		1.00	1.00		1.00
Parking Bus, Adj	1.00	1.00	1.00				1.00	1.00	1.00	1.00	1.00	1.00
Work Zone On Approach		No						No			No	
Adj Sat Flow, veh/h/ln	1575	1772	1772				0	1772	1772	1575	1772	0
Adj Flow Rate, veh/h	879	0	314				0	1301	574	554	1628	0
Peak Hour Factor	0.98	0.98	0.98				0.98	0.98	0.98	0.98	0.98	0.98
Percent Heavy Veh, %	2	2	2				0	2	2	2	2	0
Cap, veh/h	863	0	432				0	1754	544	691	3084	0
Arrive On Green	0.29	0.00	0.29				0.00	0.36	0.36	0.08	0.21	0.00
Sat Flow, veh/h	3000	0	1502				0	4997	1502	2910	4997	0
Grp Volume(v), veh/h	879	0	314				0	1301	574	554	1628	0
Grp Sat Flow(s),veh/h/ln	1500	0	1502				0	1612	1502	1455	1612	0
Q Serve(g_s), s	34.5	0.0	22.6				0.0	28.1	43.5	22.5	35.9	0.0
Cycle Q Clear(g_c), s	34.5	0.0	22.6				0.0	28.1	43.5	22.5	35.9	0.0
Prop In Lane	1.00		1.00				0.00		1.00	1.00		0.00
Lane Grp Cap(c), veh/h	863	0	432				0	1754	544	691	3084	0
V/C Ratio(X)	1.02	0.00	0.73				0.00	0.74	1.05	0.80	0.53	0.00
Avail Cap(c_a), veh/h	863	0	432				0	1754	544	691	3084	0
HCM Platoon Ratio	1.00	1.00	1.00				1.00	1.00	1.00	0.33	0.33	1.00
Upstream Filter(I)	1.00	0.00	1.00				0.00	1.00	1.00	1.00	1.00	0.00
Uniform Delay (d), s/veh	42.8	0.0	38.5				0.0	33.4	38.3	52.5	31.3	0.0
Incr Delay (d2), s/veh	35.5	0.0	10.3				0.0	2.9	53.7	9.5	0.7	0.0
Initial Q Delay(d3),s/veh	0.0	0.0	0.0				0.0	0.0	0.0	0.0	0.0	0.0
%ile BackOfQ(50%),veh/ln	16.9	0.0	9.5				0.0	11.4	23.8	9.7	15.7	0.0
Unsig. Movement Delay, s/veh												
LnGrp Delay(d),s/veh	78.3	0.0	48.8				0.0	36.2	92.0	62.0	32.0	0.0
LnGrp LOS	F	A	D				A	D	F	E	C	A
Approach Vol, veh/h		1193						1875			2182	
Approach Delay, s/veh		70.5						53.3			39.6	
Approach LOS		E						D			D	

Timer - Assigned Phs	1	2		4		6
Phs Duration (G+Y+Rc), s	33.0	48.0		39.0		81.0
Change Period (Y+Rc), s	4.5	4.5		4.5		4.5
Max Green Setting (Gmax), s	28.5	43.5		34.5		76.5
Max Q Clear Time (g_c+I1), s	24.5	45.5		36.5		37.9
Green Ext Time (p_c), s	0.9	0.0		0.0		17.5

Intersection Summary	
HCM 6th Ctrl Delay	51.5
HCM 6th LOS	D

Notes

User approved volume balancing among the lanes for turning movement.

Movement	EBL	EBT	EBR	WBL	WBT	WBR	NBL	NBT	NBR	SBL	SBT	SBR
Lane Configurations												
Traffic Volume (veh/h)	365	22	88	49	4	275	53	1280	34	77	1532	354
Future Volume (veh/h)	365	22	88	49	4	275	53	1280	34	77	1532	354
Initial Q (Qb), veh	0	0	0	0	0	0	0	0	0	0	0	0
Ped-Bike Adj(A_pbT)	1.00		1.00	1.00		1.00	1.00		1.00	1.00		1.00
Parking Bus, Adj	1.00	1.00	1.00	1.00	1.00	1.00	1.00	1.00	1.00	1.00	1.00	1.00
Work Zone On Approach		No			No			No			No	
Adj Sat Flow, veh/h/ln	1575	1772	1772	1575	1772	1772	1575	1772	1772	1575	1772	1772
Adj Flow Rate, veh/h	392	24	95	53	4	296	57	1376	37	83	1647	381
Peak Hour Factor	0.93	0.93	0.93	0.93	0.93	0.93	0.93	0.93	0.93	0.93	0.93	0.93
Percent Heavy Veh, %	2	2	2	2	2	2	2	2	2	2	2	2
Cap, veh/h	178	92	366	328	498	444	266	1549	42	351	1820	416
Arrive On Green	0.30	0.30	0.30	0.30	0.30	0.30	0.26	0.93	0.93	0.13	0.46	0.46
Sat Flow, veh/h	959	312	1237	1131	1683	1502	1500	3349	90	1500	3935	900
Grp Volume(v), veh/h	392	0	119	53	4	296	57	691	722	83	1346	682
Grp Sat Flow(s),veh/h/ln	959	0	1549	1131	1683	1502	1500	1683	1756	1500	1612	1610
Q Serve(g_s), s	14.8	0.0	7.0	4.5	0.2	20.7	1.7	20.6	20.9	2.9	46.2	47.4
Cycle Q Clear(g_c), s	35.5	0.0	7.0	11.5	0.2	20.7	1.7	20.6	20.9	2.9	46.2	47.4
Prop In Lane	1.00		0.80	1.00		1.00	1.00		0.05	1.00		0.56
Lane Grp Cap(c), veh/h	178	0	458	328	498	444	266	779	812	351	1492	745
V/C Ratio(X)	2.20	0.00	0.26	0.16	0.01	0.67	0.21	0.89	0.89	0.24	0.90	0.92
Avail Cap(c_a), veh/h	178	0	458	328	498	444	266	779	812	351	1492	745
HCM Platoon Ratio	1.00	1.00	1.00	1.00	1.00	1.00	2.00	2.00	2.00	1.00	1.00	1.00
Upstream Filter(I)	1.00	0.00	1.00	1.00	1.00	1.00	1.00	1.00	1.00	1.00	1.00	1.00
Uniform Delay (d), s/veh	55.1	0.0	32.2	36.6	29.8	37.1	18.8	3.2	3.2	13.0	29.8	30.1
Incr Delay (d2), s/veh	559.2	0.0	1.4	1.1	0.0	7.7	1.8	14.2	13.9	1.6	9.2	17.8
Initial Q Delay(d3),s/veh	0.0	0.0	0.0	0.0	0.0	0.0	0.0	0.0	0.0	0.0	0.0	0.0
%ile BackOfQ(50%),veh/ln	38.1	0.0	2.8	1.3	0.1	8.5	0.7	4.6	4.7	1.1	19.3	21.4
Unsig. Movement Delay, s/veh												
LnGrp Delay(d),s/veh	614.3	0.0	33.6	37.7	29.9	44.8	20.7	17.4	17.1	14.6	39.0	47.9
LnGrp LOS	F	A	C	D	C	D	C	B	B	B	D	D
Approach Vol, veh/h		511			353			1470			2111	
Approach Delay, s/veh		479.1			43.5			17.4			40.9	
Approach LOS		F			D			B			D	

Timer - Assigned Phs	1	2		4	5	6		8
Phs Duration (G+Y+Rc), s	20.0	60.0		40.0	20.0	60.0		40.0
Change Period (Y+Rc), s	4.5	4.5		4.5	4.5	4.5		4.5
Max Green Setting (Gmax), s	15.5	55.5		35.5	15.5	55.5		35.5
Max Q Clear Time (g_c+I1), s	14.9	22.9		37.5	3.7	49.4		22.7
Green Ext Time (p_c), s	0.1	13.0		0.0	0.1	5.3		1.7

Intersection Summary	
HCM 6th Ctrl Delay	83.7
HCM 6th LOS	F

Movement	EBL	EBT	EBR	WBL	WBT	WBR	NBL	NBT	NBR	SBL	SBT	SBR
Lane Configurations												
Traffic Volume (veh/h)	201	1069	65	36	629	14	68	125	67	11	84	191
Future Volume (veh/h)	201	1069	65	36	629	14	68	125	67	11	84	191
Initial Q (Qb), veh	0	0	0	0	0	0	0	0	0	0	0	0
Ped-Bike Adj(A_pbT)	1.00		1.00	1.00		1.00	1.00		1.00	1.00		1.00
Parking Bus, Adj	1.00	1.00	1.00	1.00	1.00	1.00	1.00	1.00	1.00	1.00	1.00	1.00
Work Zone On Approach		No			No			No			No	
Adj Sat Flow, veh/h/ln	1575	1772	1772	1575	1772	1772	1772	1772	1772	1772	1772	1772
Adj Flow Rate, veh/h	214	1137	69	38	669	15	72	133	71	12	89	203
Peak Hour Factor	0.94	0.94	0.94	0.94	0.94	0.94	0.94	0.94	0.94	0.94	0.94	0.94
Percent Heavy Veh, %	2	2	2	2	2	2	2	2	2	2	2	2
Cap, veh/h	440	1577	96	283	1646	37	203	243	112	109	132	278
Arrive On Green	0.49	0.49	0.49	0.49	0.49	0.49	0.27	0.27	0.27	0.27	0.27	0.27
Sat Flow, veh/h	673	3224	196	412	3366	75	300	915	421	25	497	1049
Grp Volume(v), veh/h	214	593	613	38	334	350	276	0	0	304	0	0
Grp Sat Flow(s),veh/h/ln	673	1683	1737	412	1683	1758	1636	0	0	1570	0	0
Q Serve(g_s), s	10.9	10.2	10.2	2.9	4.6	4.6	0.0	0.0	0.0	0.7	0.0	0.0
Cycle Q Clear(g_c), s	15.5	10.2	10.2	13.1	4.6	4.6	5.1	0.0	0.0	6.4	0.0	0.0
Prop In Lane	1.00		0.11	1.00		0.04	0.26		0.26	0.04		0.67
Lane Grp Cap(c), veh/h	440	823	849	283	823	860	558	0	0	519	0	0
V/C Ratio(X)	0.49	0.72	0.72	0.13	0.41	0.41	0.49	0.00	0.00	0.59	0.00	0.00
Avail Cap(c_a), veh/h	442	827	854	284	827	864	889	0	0	870	0	0
HCM Platoon Ratio	1.00	1.00	1.00	1.00	1.00	1.00	1.00	1.00	1.00	1.00	1.00	1.00
Upstream Filter(I)	1.00	1.00	1.00	1.00	1.00	1.00	1.00	0.00	0.00	1.00	0.00	0.00
Uniform Delay (d), s/veh	10.9	7.4	7.4	12.6	6.0	6.0	11.8	0.0	0.0	12.2	0.0	0.0
Incr Delay (d2), s/veh	0.8	3.1	3.0	0.2	0.3	0.3	0.7	0.0	0.0	1.1	0.0	0.0
Initial Q Delay(d3),s/veh	0.0	0.0	0.0	0.0	0.0	0.0	0.0	0.0	0.0	0.0	0.0	0.0
%ile BackOfQ(50%),veh/ln	1.2	2.8	2.9	0.2	1.0	1.1	1.6	0.0	0.0	1.9	0.0	0.0
Unsig. Movement Delay, s/veh												
LnGrp Delay(d),s/veh	11.7	10.4	10.4	12.8	6.3	6.3	12.5	0.0	0.0	13.3	0.0	0.0
LnGrp LOS	B	B	B	B	A	A	B	A	A	B	A	A
Approach Vol, veh/h		1420			722			276			304	
Approach Delay, s/veh		10.6			6.6			12.5			13.3	
Approach LOS		B			A			B			B	

Timer - Assigned Phs	2	4	6	8
Phs Duration (G+Y+Rc), s	14.2	22.4	14.2	22.4
Change Period (Y+Rc), s	4.5	4.5	4.5	4.5
Max Green Setting (Gmax), s	18.0	18.0	18.0	18.0
Max Q Clear Time (g_c+I1), s	7.1	17.5	8.4	15.1
Green Ext Time (p_c), s	1.2	0.4	1.3	1.3

Intersection Summary	
HCM 6th Ctrl Delay	10.0
HCM 6th LOS	B

Movement	EBL	EBT	EBR	WBL	WBT	WBR	NBL	NBT	NBR	SBL	SBT	SBR
Lane Configurations												
Traffic Volume (veh/h)	261	678	202	64	340	132	180	1018	79	184	1344	149
Future Volume (veh/h)	261	678	202	64	340	132	180	1018	79	184	1344	149
Initial Q (Qb), veh	0	0	0	0	0	0	0	0	0	0	0	0
Ped-Bike Adj(A_pbT)	1.00		1.00	1.00		1.00	1.00		1.00	1.00		1.00
Parking Bus, Adj	1.00	1.00	1.00	1.00	1.00	1.00	1.00	1.00	1.00	1.00	1.00	1.00
Work Zone On Approach		No			No			No			No	
Adj Sat Flow, veh/h/ln	1575	1772	1772	1575	1772	1772	1575	1772	1772	1575	1772	1772
Adj Flow Rate, veh/h	264	685	204	65	343	133	182	1028	80	186	1358	151
Peak Hour Factor	0.99	0.99	0.99	0.99	0.99	0.99	0.99	0.99	0.99	0.99	0.99	0.99
Percent Heavy Veh, %	2	2	2	2	2	2	2	2	2	2	2	2
Cap, veh/h	244	667	199	78	357	136	169	1266	98	206	1299	144
Arrive On Green	0.16	0.26	0.26	0.05	0.15	0.15	0.15	0.53	0.53	0.18	0.57	0.57
Sat Flow, veh/h	1500	2557	761	1500	2383	908	1500	3165	246	1500	3057	338
Grp Volume(v), veh/h	264	451	438	65	241	235	182	547	561	186	744	765
Grp Sat Flow(s),veh/h/ln	1500	1683	1635	1500	1683	1608	1500	1683	1728	1500	1683	1711
Q Serve(g_s), s	19.5	31.3	31.3	5.2	17.0	17.5	13.5	32.1	32.1	14.6	51.0	51.0
Cycle Q Clear(g_c), s	19.5	31.3	31.3	5.2	17.0	17.5	13.5	32.1	32.1	14.6	51.0	51.0
Prop In Lane	1.00		0.47	1.00		0.56	1.00		0.14	1.00		0.20
Lane Grp Cap(c), veh/h	244	439	426	78	252	241	169	673	691	206	715	727
V/C Ratio(X)	1.08	1.03	1.03	0.84	0.95	0.98	1.08	0.81	0.81	0.90	1.04	1.05
Avail Cap(c_a), veh/h	244	439	426	78	252	241	169	673	691	206	715	727
HCM Platoon Ratio	1.00	1.00	1.00	1.00	1.00	1.00	1.33	1.33	1.33	1.33	1.33	1.33
Upstream Filter(I)	1.00	1.00	1.00	1.00	1.00	1.00	1.00	1.00	1.00	1.00	1.00	1.00
Uniform Delay (d), s/veh	50.2	44.3	44.4	56.4	50.6	50.8	51.0	24.4	24.4	48.2	26.1	26.1
Incr Delay (d2), s/veh	81.5	50.0	50.8	64.1	45.6	52.1	91.7	10.3	10.1	41.4	44.6	47.7
Initial Q Delay(d3),s/veh	0.0	0.0	0.0	0.0	0.0	0.0	0.0	0.0	0.0	0.0	0.0	0.0
%ile BackOfQ(50%),veh/ln	12.8	19.0	18.6	3.3	10.3	10.5	9.2	13.2	13.6	7.6	26.4	27.4
Unsig. Movement Delay, s/veh												
LnGrp Delay(d),s/veh	131.8	94.3	95.1	120.5	96.2	102.9	142.8	34.6	34.4	89.6	70.7	73.8
LnGrp LOS	F	F	F	F	F	F	F	C	C	F	F	F
Approach Vol, veh/h		1153			541			1290			1695	
Approach Delay, s/veh		103.2			102.0			49.8			74.2	
Approach LOS		F			F			D			E	

Timer - Assigned Phs	1	2	3	4	5	6	7	8
Phs Duration (G+Y+Rc), s	21.0	52.5	10.7	35.8	18.0	55.5	24.0	22.5
Change Period (Y+Rc), s	4.5	4.5	4.5	4.5	4.5	4.5	4.5	4.5
Max Green Setting (Gmax), s	16.5	48.0	6.2	31.3	13.5	51.0	19.5	18.0
Max Q Clear Time (g_c+I1), s	19.5	34.1	7.2	33.3	15.5	53.0	21.5	19.5
Green Ext Time (p_c), s	0.0	6.3	0.0	0.0	0.0	0.0	0.0	0.0

Intersection Summary	
HCM 6th Ctrl Delay	77.8
HCM 6th LOS	E

Movement	EBL	EBT	EBR	WBL	WBT	WBR	NBL	NBT	NBR	SBL	SBT	SBR
Lane Configurations												
Traffic Volume (veh/h)	30	786	92	51	426	81	59	109	100	25	54	25
Future Volume (veh/h)	30	786	92	51	426	81	59	109	100	25	54	25
Initial Q (Qb), veh	0	0	0	0	0	0	0	0	0	0	0	0
Ped-Bike Adj(A_pbT)	1.00		1.00	1.00		1.00	1.00		1.00	1.00		1.00
Parking Bus, Adj	1.00	1.00	1.00	1.00	1.00	1.00	1.00	1.00	1.00	1.00	1.00	1.00
Work Zone On Approach		No			No			No			No	
Adj Sat Flow, veh/h/ln	1575	1772	1772	1575	1772	1772	1772	1772	1772	1772	1772	1772
Adj Flow Rate, veh/h	34	893	105	58	484	92	67	124	114	28	61	28
Peak Hour Factor	0.88	0.88	0.88	0.88	0.88	0.88	0.88	0.88	0.88	0.88	0.88	0.88
Percent Heavy Veh, %	2	2	2	2	2	2	2	2	2	2	2	2
Cap, veh/h	483	871	738	197	1388	262	182	198	155	175	276	103
Arrive On Green	0.49	0.49	0.49	0.49	0.49	0.49	0.26	0.26	0.26	0.26	0.26	0.26
Sat Flow, veh/h	744	1772	1502	502	2825	534	238	753	591	203	1048	393
Grp Volume(v), veh/h	34	893	105	58	287	289	305	0	0	117	0	0
Grp Sat Flow(s),veh/h/ln	744	1772	1502	502	1683	1676	1581	0	0	1644	0	0
Q Serve(g_s), s	1.1	18.0	1.4	0.0	3.8	3.9	3.5	0.0	0.0	0.0	0.0	0.0
Cycle Q Clear(g_c), s	5.0	18.0	1.4	18.0	3.8	3.9	6.4	0.0	0.0	2.0	0.0	0.0
Prop In Lane	1.00		1.00	1.00		0.32	0.22		0.37	0.24		0.24
Lane Grp Cap(c), veh/h	483	871	738	197	827	823	536	0	0	554	0	0
V/C Ratio(X)	0.07	1.03	0.14	0.30	0.35	0.35	0.57	0.00	0.00	0.21	0.00	0.00
Avail Cap(c_a), veh/h	483	871	738	197	827	823	889	0	0	898	0	0
HCM Platoon Ratio	1.00	1.00	1.00	1.00	1.00	1.00	1.00	1.00	1.00	1.00	1.00	1.00
Upstream Filter(I)	1.00	1.00	1.00	1.00	1.00	1.00	1.00	0.00	0.00	1.00	0.00	0.00
Uniform Delay (d), s/veh	7.2	9.3	5.1	18.3	5.7	5.7	12.2	0.0	0.0	10.7	0.0	0.0
Incr Delay (d2), s/veh	0.1	37.2	0.1	0.8	0.3	0.3	1.0	0.0	0.0	0.2	0.0	0.0
Initial Q Delay(d3),s/veh	0.0	0.0	0.0	0.0	0.0	0.0	0.0	0.0	0.0	0.0	0.0	0.0
%ile BackOfQ(50%),veh/ln	0.1	12.9	0.3	0.5	0.9	0.9	1.9	0.0	0.0	0.6	0.0	0.0
Unsig. Movement Delay, s/veh												
LnGrp Delay(d),s/veh	7.3	46.5	5.2	19.1	6.0	6.0	13.2	0.0	0.0	10.9	0.0	0.0
LnGrp LOS	A	F	A	B	A	A	B	A	A	B	A	A
Approach Vol, veh/h		1032			634			305			117	
Approach Delay, s/veh		41.0			7.2			13.2			10.9	
Approach LOS		D			A			B			B	

Timer - Assigned Phs	2	4	6	8
Phs Duration (G+Y+Rc), s	14.1	22.5	14.1	22.5
Change Period (Y+Rc), s	4.5	4.5	4.5	4.5
Max Green Setting (Gmax), s	18.0	18.0	18.0	18.0
Max Q Clear Time (g_c+I1), s	8.4	20.0	4.0	20.0
Green Ext Time (p_c), s	1.3	0.0	0.5	0.0

Intersection Summary		
HCM 6th Ctrl Delay	25.0	
HCM 6th LOS	C	

Intersection	
Intersection Delay, s/veh	80.1
Intersection LOS	F

Movement	EBL	EBT	EBR	WBL	WBT	WBR	NBL	NBT	NBR	SBL	SBT	SBR
Lane Configurations												
Traffic Vol, veh/h	33	222	73	53	176	51	62	359	47	41	359	25
Future Vol, veh/h	33	222	73	53	176	51	62	359	47	41	359	25
Peak Hour Factor	0.94	0.94	0.94	0.94	0.94	0.94	0.94	0.94	0.94	0.94	0.94	0.94
Heavy Vehicles, %	2	2	2	2	2	2	2	2	2	2	2	2
Mvmt Flow	35	236	78	56	187	54	66	382	50	44	382	27
Number of Lanes	0	1	0	0	1	1	0	1	0	0	1	0

Approach	EB	WB	NB	SB
Opposing Approach	WB	EB	SB	NB
Opposing Lanes	2	1	1	1
Conflicting Approach Left	SB	NB	EB	WB
Conflicting Lanes Left	1	1	1	2
Conflicting Approach Right	NB	SB	WB	EB
Conflicting Lanes Right	1	1	2	1
HCM Control Delay	47.3	26.4	125.1	91.4
HCM LOS	E	D	F	F

Lane	NBLn1	EBLn1	WBLn1	WBLn2	SBLn1
Vol Left, %	13%	10%	23%	0%	10%
Vol Thru, %	77%	68%	77%	0%	84%
Vol Right, %	10%	22%	0%	100%	6%
Sign Control	Stop	Stop	Stop	Stop	Stop
Traffic Vol by Lane	468	328	229	51	425
LT Vol	62	33	53	0	41
Through Vol	359	222	176	0	359
RT Vol	47	73	0	51	25
Lane Flow Rate	498	349	244	54	452
Geometry Grp	2	5	7	7	2
Degree of Util (X)	1.163	0.846	0.639	0.13	1.058
Departure Headway (Hd)	8.685	9.502	10.185	9.33	8.922
Convergence, Y/N	Yes	Yes	Yes	Yes	Yes
Cap	423	384	358	387	411
Service Time	6.685	7.502	7.885	7.03	6.922
HCM Lane V/C Ratio	1.177	0.909	0.682	0.14	1.1
HCM Control Delay	125.1	47.3	29.3	13.4	91.4
HCM Lane LOS	F	E	D	B	F
HCM 95th-tile Q	18.3	7.9	4.2	0.4	14.2

Movement	EBL	EBT	EBR	WBL	WBT	WBR	NBL	NBT	NBR	SBL	SBT	SBR
Lane Configurations												
Traffic Volume (veh/h)	88	224	125	97	222	176	186	1074	196	289	1229	65
Future Volume (veh/h)	88	224	125	97	222	176	186	1074	196	289	1229	65
Initial Q (Qb), veh	0	0	0	0	0	0	0	0	0	0	0	0
Ped-Bike Adj(A_pbT)	1.00		1.00	1.00		1.00	1.00		1.00	1.00		1.00
Parking Bus, Adj	1.00	1.00	1.00	1.00	1.00	1.00	1.00	1.00	1.00	1.00	1.00	1.00
Work Zone On Approach		No			No			No			No	
Adj Sat Flow, veh/h/ln	1772	1772	1772	1772	1772	1772	1575	1772	1772	1575	1772	1772
Adj Flow Rate, veh/h	96	243	136	105	241	191	202	1167	213	314	1336	71
Peak Hour Factor	0.92	0.92	0.92	0.92	0.92	0.92	0.92	0.92	0.92	0.92	0.92	0.92
Percent Heavy Veh, %	2	2	2	2	2	2	2	2	2	2	2	2
Cap, veh/h	102	316	177	149	271	215	319	1316	239	194	1233	65
Arrive On Green	0.30	0.30	0.30	0.30	0.30	0.30	0.43	0.93	0.93	0.04	0.13	0.13
Sat Flow, veh/h	956	1067	597	1004	916	726	1500	2846	517	1500	3252	172
Grp Volume(v), veh/h	96	0	379	105	0	432	202	688	692	314	690	717
Grp Sat Flow(s),veh/h/ln	956	0	1664	1004	0	1641	1500	1683	1679	1500	1683	1741
Q Serve(g_s), s	5.3	0.0	24.9	10.6	0.0	30.2	12.7	20.1	21.2	15.5	45.5	45.5
Cycle Q Clear(g_c), s	35.5	0.0	24.9	35.5	0.0	30.2	12.7	20.1	21.2	15.5	45.5	45.5
Prop In Lane	1.00		0.36	1.00		0.44	1.00		0.31	1.00		0.10
Lane Grp Cap(c), veh/h	102	0	492	149	0	486	319	779	777	194	638	660
V/C Ratio(X)	0.94	0.00	0.77	0.71	0.00	0.89	0.63	0.88	0.89	1.62	1.08	1.09
Avail Cap(c_a), veh/h	102	0	492	149	0	486	319	779	777	194	638	660
HCM Platoon Ratio	1.00	1.00	1.00	1.00	1.00	1.00	2.00	2.00	2.00	0.33	0.33	0.33
Upstream Filter(I)	1.00	0.00	1.00	1.00	0.00	1.00	1.00	1.00	1.00	1.00	1.00	1.00
Uniform Delay (d), s/veh	58.8	0.0	38.5	55.5	0.0	40.4	30.8	3.2	3.2	57.4	52.5	52.5
Incr Delay (d2), s/veh	73.3	0.0	11.0	24.6	0.0	21.0	9.3	13.9	14.7	301.7	59.8	60.5
Initial Q Delay(d3),s/veh	0.0	0.0	0.0	0.0	0.0	0.0	0.0	0.0	0.0	0.0	0.0	0.0
%ile BackOfQ(50%),veh/ln	5.0	0.0	11.6	4.2	0.0	14.9	4.6	4.5	4.7	22.5	31.2	32.4
Unsig. Movement Delay, s/veh												
LnGrp Delay(d),s/veh	132.2	0.0	49.6	80.2	0.0	61.4	40.1	17.0	17.9	359.2	112.3	113.0
LnGrp LOS	F	A	D	F	A	E	D	B	B	F	F	F
Approach Vol, veh/h		475			537			1582			1721	
Approach Delay, s/veh		66.3			65.1			20.3			157.6	
Approach LOS		E			E			C			F	

Timer - Assigned Phs	1	2		4	5	6		8
Phs Duration (G+Y+Rc), s	30.0	60.0		40.0	30.0	50.0		40.0
Change Period (Y+Rc), s	4.5	4.5		4.5	4.5	4.5		4.5
Max Green Setting (Gmax), s	25.5	55.5		35.5	25.5	45.5		35.5
Max Q Clear Time (g_c+I1), s	17.5	23.2		37.5	14.7	47.5		37.5
Green Ext Time (p_c), s	0.0	12.7		0.0	0.4	0.0		0.0

Intersection Summary	
HCM 6th Ctrl Delay	85.7
HCM 6th LOS	F

Intersection	
Intersection Delay, s/veh	25.8
Intersection LOS	D

Movement	EBL	EBT	EBR	WBL	WBT	WBR	NBL	NBT	NBR	SBL	SBT	SBR
Lane Configurations												
Traffic Vol, veh/h	106	348	55	51	256	38	23	142	10	32	88	41
Future Vol, veh/h	106	348	55	51	256	38	23	142	10	32	88	41
Peak Hour Factor	0.96	0.96	0.96	0.96	0.96	0.96	0.96	0.96	0.96	0.96	0.96	0.96
Heavy Vehicles, %	2	2	2	2	2	2	2	2	2	2	2	2
Mvmt Flow	110	363	57	53	267	40	24	148	10	33	92	43
Number of Lanes	0	1	0	0	1	1	0	1	0	0	1	0

Approach	EB	WB	NB	SB
Opposing Approach	WB	EB	SB	NB
Opposing Lanes	2	1	1	1
Conflicting Approach Left	SB	NB	EB	WB
Conflicting Lanes Left	1	1	1	2
Conflicting Approach Right	NB	SB	WB	EB
Conflicting Lanes Right	1	1	2	1
HCM Control Delay	38.9	18.2	14.1	13.6
HCM LOS	E	C	B	B

Lane	NBLn1	EBLn1	WBLn1	WBLn2	SBLn1
Vol Left, %	13%	21%	17%	0%	20%
Vol Thru, %	81%	68%	83%	0%	55%
Vol Right, %	6%	11%	0%	100%	25%
Sign Control	Stop	Stop	Stop	Stop	Stop
Traffic Vol by Lane	175	509	307	38	161
LT Vol	23	106	51	0	32
Through Vol	142	348	256	0	88
RT Vol	10	55	0	38	41
Lane Flow Rate	182	530	320	40	168
Geometry Grp	2	5	7	7	2
Degree of Util (X)	0.36	0.886	0.602	0.066	0.329
Departure Headway (Hd)	7.102	6.019	6.78	5.98	7.054
Convergence, Y/N	Yes	Yes	Yes	Yes	Yes
Cap	505	599	531	597	508
Service Time	5.171	4.072	4.54	3.739	5.126
HCM Lane V/C Ratio	0.36	0.885	0.603	0.067	0.331
HCM Control Delay	14.1	38.9	19.3	9.2	13.6
HCM Lane LOS	B	E	C	A	B
HCM 95th-tile Q	1.6	10.4	3.9	0.2	1.4

Intersection	
Int Delay, s/veh	0.5

Movement	WBL	WBR	NBT	NBR	SBL	SBT
Lane Configurations						
Traffic Vol, veh/h	0	80	1376	81	0	1626
Future Vol, veh/h	0	80	1376	81	0	1626
Conflicting Peds, #/hr	0	0	0	0	0	0
Sign Control	Stop	Stop	Free	Free	Free	Free
RT Channelized	-	None	-	None	-	None
Storage Length	-	0	-	-	-	-
Veh in Median Storage, #	0	-	0	-	-	0
Grade, %	0	-	0	-	-	0
Peak Hour Factor	92	92	92	92	92	92
Heavy Vehicles, %	2	2	2	2	2	2
Mvmt Flow	0	87	1496	88	0	1767

Major/Minor	Minor1		Major1		Major2	
Conflicting Flow All	-	792	0	0	-	-
Stage 1	-	-	-	-	-	-
Stage 2	-	-	-	-	-	-
Critical Hdwy	-	6.94	-	-	-	-
Critical Hdwy Stg 1	-	-	-	-	-	-
Critical Hdwy Stg 2	-	-	-	-	-	-
Follow-up Hdwy	-	3.32	-	-	-	-
Pot Cap-1 Maneuver	0	332	-	-	0	-
Stage 1	0	-	-	-	0	-
Stage 2	0	-	-	-	0	-
Platoon blocked, %			-	-		-
Mov Cap-1 Maneuver	-	332	-	-	-	-
Mov Cap-2 Maneuver	-	-	-	-	-	-
Stage 1	-	-	-	-	-	-
Stage 2	-	-	-	-	-	-

Approach	WB	NB	SB
HCM Control Delay, s	19.6	0	0
HCM LOS	C		

Minor Lane/Major Mvmt	NBT	NBR	WBLn1	SBT
Capacity (veh/h)	-	-	332	-
HCM Lane V/C Ratio	-	-	0.262	-
HCM Control Delay (s)	-	-	19.6	-
HCM Lane LOS	-	-	C	-
HCM 95th %tile Q(veh)	-	-	1	-

Intersection	
Int Delay, s/veh	0.7

Movement	EBT	EBR	WBL	WBT	NBL	NBR
Lane Configurations						
Traffic Vol, veh/h	509	40	0	495	40	0
Future Vol, veh/h	509	40	0	495	40	0
Conflicting Peds, #/hr	0	0	0	0	0	0
Sign Control	Free	Free	Free	Free	Stop	Stop
RT Channelized	-	None	-	None	-	None
Storage Length	-	-	-	-	0	-
Veh in Median Storage, #	0	-	-	0	0	-
Grade, %	0	-	-	0	0	-
Peak Hour Factor	92	92	92	92	92	92
Heavy Vehicles, %	2	2	2	2	2	2
Mvmt Flow	553	43	0	538	43	0

Major/Minor	Major1		Major2		Minor1	
Conflicting Flow All	0	0	-	-	844	-
Stage 1	-	-	-	-	575	-
Stage 2	-	-	-	-	269	-
Critical Hdwy	-	-	-	-	6.63	-
Critical Hdwy Stg 1	-	-	-	-	5.43	-
Critical Hdwy Stg 2	-	-	-	-	5.83	-
Follow-up Hdwy	-	-	-	-	3.519	-
Pot Cap-1 Maneuver	-	-	0	-	317	0
Stage 1	-	-	0	-	562	0
Stage 2	-	-	0	-	753	0
Platoon blocked, %	-	-		-		
Mov Cap-1 Maneuver	-	-	-	-	317	-
Mov Cap-2 Maneuver	-	-	-	-	317	-
Stage 1	-	-	-	-	562	-
Stage 2	-	-	-	-	753	-

Approach	EB	WB	NB
HCM Control Delay, s	0	0	18.2
HCM LOS			C

Minor Lane/Major Mvmt	NBLn1	EBT	EBR	WBT
Capacity (veh/h)	317	-	-	-
HCM Lane V/C Ratio	0.137	-	-	-
HCM Control Delay (s)	18.2	-	-	-
HCM Lane LOS	C	-	-	-
HCM 95th %tile Q(veh)	0.5	-	-	-

Intersection	
Int Delay, s/veh	0.7

Movement	EBT	EBR	WBL	WBT	NBL	NBR
Lane Configurations						
Traffic Vol, veh/h	469	40	0	495	40	0
Future Vol, veh/h	469	40	0	495	40	0
Conflicting Peds, #/hr	0	0	0	0	0	0
Sign Control	Free	Free	Free	Free	Stop	Stop
RT Channelized	-	None	-	None	-	None
Storage Length	-	-	-	-	0	-
Veh in Median Storage, #	0	-	-	0	0	-
Grade, %	0	-	-	0	0	-
Peak Hour Factor	92	92	92	92	92	92
Heavy Vehicles, %	2	2	2	2	2	2
Mvmt Flow	510	43	0	538	43	0

Major/Minor	Major1		Major2		Minor1	
Conflicting Flow All	0	0	-	-	801	-
Stage 1	-	-	-	-	532	-
Stage 2	-	-	-	-	269	-
Critical Hdwy	-	-	-	-	6.63	-
Critical Hdwy Stg 1	-	-	-	-	5.43	-
Critical Hdwy Stg 2	-	-	-	-	5.83	-
Follow-up Hdwy	-	-	-	-	3.519	-
Pot Cap-1 Maneuver	-	-	0	-	337	0
Stage 1	-	-	0	-	588	0
Stage 2	-	-	0	-	753	0
Platoon blocked, %	-	-		-		
Mov Cap-1 Maneuver	-	-	-	-	337	-
Mov Cap-2 Maneuver	-	-	-	-	337	-
Stage 1	-	-	-	-	588	-
Stage 2	-	-	-	-	753	-

Approach	EB	WB	NB
HCM Control Delay, s	0	0	17.3
HCM LOS			C

Minor Lane/Major Mvmt	NBLn1	EBT	EBR	WBT
Capacity (veh/h)	337	-	-	-
HCM Lane V/C Ratio	0.129	-	-	-
HCM Control Delay (s)	17.3	-	-	-
HCM Lane LOS	C	-	-	-
HCM 95th %tile Q(veh)	0.4	-	-	-

Intersection	
Intersection Delay, s/veh	26.3
Intersection LOS	D

Movement	EBL	EBT	EBR	WBL	WBT	WBR	NBL	NBT	NBR	SBL	SBT	SBR
Lane Configurations												
Traffic Vol, veh/h	73	438	37	16	201	85	14	85	22	62	74	35
Future Vol, veh/h	73	438	37	16	201	85	14	85	22	62	74	35
Peak Hour Factor	0.95	0.95	0.95	0.95	0.95	0.95	0.95	0.95	0.95	0.95	0.95	0.95
Heavy Vehicles, %	2	2	2	2	2	2	2	2	2	2	2	2
Mvmt Flow	77	461	39	17	212	89	15	89	23	65	78	37
Number of Lanes	0	1	1	0	2	0	0	1	0	0	1	0

Approach	EB	WB	NB	SB
Opposing Approach	WB	EB	SB	NB
Opposing Lanes	2	2	1	1
Conflicting Approach Left	SB	NB	EB	WB
Conflicting Lanes Left	1	1	2	2
Conflicting Approach Right	NB	SB	WB	EB
Conflicting Lanes Right	1	1	2	2
HCM Control Delay	41.6	11.8	12.1	13.2
HCM LOS	E	B	B	B

Lane	NBLn1	EBLn1	EBLn2	WBLn1	WBLn2	SBLn1
Vol Left, %	12%	14%	0%	14%	0%	36%
Vol Thru, %	70%	86%	0%	86%	54%	43%
Vol Right, %	18%	0%	100%	0%	46%	20%
Sign Control	Stop	Stop	Stop	Stop	Stop	Stop
Traffic Vol by Lane	121	511	37	117	186	171
LT Vol	14	73	0	16	0	62
Through Vol	85	438	0	101	101	74
RT Vol	22	0	37	0	85	35
Lane Flow Rate	127	538	39	123	195	180
Geometry Grp	2	7	7	7	7	2
Degree of Util (X)	0.244	0.915	0.058	0.226	0.338	0.337
Departure Headway (Hd)	6.883	6.232	5.447	6.635	6.237	6.743
Convergence, Y/N	Yes	Yes	Yes	Yes	Yes	Yes
Cap	523	586	661	544	580	535
Service Time	4.906	3.932	3.147	4.335	3.937	4.765
HCM Lane V/C Ratio	0.243	0.918	0.059	0.226	0.336	0.336
HCM Control Delay	12.1	44	8.5	11.3	12.1	13.2
HCM Lane LOS	B	E	A	B	B	B
HCM 95th-tile Q	0.9	11.3	0.2	0.9	1.5	1.5

Movement	EBL	EBT	EBR	WBL	WBT	WBR	NBL	NBT	NBR	SBL	SBT	SBR
Lane Configurations												
Traffic Volume (veh/h)	130	433	52	82	245	148	83	1236	100	161	1418	47
Future Volume (veh/h)	130	433	52	82	245	148	83	1236	100	161	1418	47
Initial Q (Qb), veh	0	0	0	0	0	0	0	0	0	0	0	0
Ped-Bike Adj(A_pbT)	1.00		1.00	1.00		1.00	1.00		1.00	1.00		1.00
Parking Bus, Adj	1.00	1.00	1.00	1.00	1.00	1.00	1.00	1.00	1.00	1.00	1.00	1.00
Work Zone On Approach		No			No			No			No	
Adj Sat Flow, veh/h/ln	1772	1772	1772	1772	1772	1772	1575	1772	1772	1575	1772	1772
Adj Flow Rate, veh/h	134	446	54	85	253	153	86	1274	103	166	1462	48
Peak Hour Factor	0.97	0.97	0.97	0.97	0.97	0.97	0.97	0.97	0.97	0.97	0.97	0.97
Percent Heavy Veh, %	2	2	2	2	2	2	2	2	2	2	2	2
Cap, veh/h	134	518	75	94	325	258	109	1433	116	194	1699	56
Arrive On Green	0.30	0.30	0.30	0.30	0.30	0.30	0.07	0.45	0.45	0.13	0.51	0.51
Sat Flow, veh/h	295	1703	247	174	1067	847	1500	3155	254	1500	3327	109
Grp Volume(v), veh/h	291	0	343	227	0	264	86	678	699	166	739	771
Grp Sat Flow(s),veh/h/ln	677	0	1568	628	0	1460	1500	1683	1726	1500	1683	1752
Q Serve(g_s), s	18.1	0.0	23.4	13.1	0.0	18.4	6.8	44.2	44.5	13.0	45.9	46.2
Cycle Q Clear(g_c), s	36.5	0.0	23.4	36.5	0.0	18.4	6.8	44.2	44.5	13.0	45.9	46.2
Prop In Lane	0.46		0.16	0.37		0.58	1.00		0.15	1.00		0.06
Lane Grp Cap(c), veh/h	250	0	477	232	0	444	109	765	784	194	860	895
V/C Ratio(X)	1.16	0.00	0.72	0.98	0.00	0.59	0.79	0.89	0.89	0.86	0.86	0.86
Avail Cap(c_a), veh/h	250	0	477	232	0	444	109	765	784	194	860	895
HCM Platoon Ratio	1.00	1.00	1.00	1.00	1.00	1.00	1.00	1.00	1.00	1.00	1.00	1.00
Upstream Filter(I)	1.00	0.00	1.00	1.00	0.00	1.00	1.00	1.00	1.00	1.00	1.00	1.00
Uniform Delay (d), s/veh	51.3	0.0	37.2	48.3	0.0	35.5	54.8	29.9	30.0	51.2	25.6	25.6
Incr Delay (d2), s/veh	108.5	0.0	9.0	53.7	0.0	5.7	43.0	14.4	14.5	35.7	10.9	10.7
Initial Q Delay(d3),s/veh	0.0	0.0	0.0	0.0	0.0	0.0	0.0	0.0	0.0	0.0	0.0	0.0
%ile BackOfQ(50%),veh/ln	15.1	0.0	10.1	10.4	0.0	7.2	3.9	20.4	21.1	6.8	20.2	21.1
Unsig. Movement Delay, s/veh												
LnGrp Delay(d),s/veh	159.8	0.0	46.2	102.0	0.0	41.2	97.7	44.4	44.5	86.9	36.5	36.3
LnGrp LOS	F	A	D	F	A	D	F	D	D	F	D	D
Approach Vol, veh/h		634			491			1463			1676	
Approach Delay, s/veh		98.3			69.4			47.6			41.4	
Approach LOS		F			E			D			D	

Timer - Assigned Phs	1	2		4	5	6		8
Phs Duration (G+Y+Rc), s	20.0	59.0		41.0	13.2	65.8		41.0
Change Period (Y+Rc), s	4.5	4.5		4.5	4.5	4.5		4.5
Max Green Setting (Gmax), s	15.5	54.5		36.5	8.7	61.3		36.5
Max Q Clear Time (g_c+I1), s	15.0	46.5		38.5	8.8	48.2		38.5
Green Ext Time (p_c), s	0.0	5.3		0.0	0.0	8.4		0.0

Intersection Summary	
HCM 6th Ctrl Delay	55.2
HCM 6th LOS	E

Intersection	
Int Delay, s/veh	6.6

Movement	EBL	EBT	WBT	WBR	SBL	SBR
Lane Configurations						
Traffic Vol, veh/h	140	479	308	32	50	84
Future Vol, veh/h	140	479	308	32	50	84
Conflicting Peds, #/hr	0	0	0	0	0	0
Sign Control	Free	Free	Free	Free	Stop	Stop
RT Channelized	-	None	-	None	-	None
Storage Length	-	-	-	-	0	0
Veh in Median Storage, #	-	0	0	-	0	-
Grade, %	-	0	0	-	0	-
Peak Hour Factor	73	73	73	73	73	73
Heavy Vehicles, %	2	2	2	2	2	2
Mvmt Flow	192	656	422	44	68	115

Major/Minor	Major1		Major2		Minor2	
Conflicting Flow All	466	0	-	0	1484	444
Stage 1	-	-	-	-	444	-
Stage 2	-	-	-	-	1040	-
Critical Hdwy	4.12	-	-	-	6.42	6.22
Critical Hdwy Stg 1	-	-	-	-	5.42	-
Critical Hdwy Stg 2	-	-	-	-	5.42	-
Follow-up Hdwy	2.218	-	-	-	3.518	3.318
Pot Cap-1 Maneuver	1095	-	-	-	137	614
Stage 1	-	-	-	-	646	-
Stage 2	-	-	-	-	341	-
Platoon blocked, %		-	-	-		
Mov Cap-1 Maneuver	1095	-	-	-	99	614
Mov Cap-2 Maneuver	-	-	-	-	99	-
Stage 1	-	-	-	-	468	-
Stage 2	-	-	-	-	341	-

Approach	EB	WB	SB
HCM Control Delay, s	2	0	44.6
HCM LOS			E

Minor Lane/Major Mvmt	EBL	EBT	WBT	WBR	SBLn1	SBLn2
Capacity (veh/h)	1095	-	-	-	99	614
HCM Lane V/C Ratio	0.175	-	-	-	0.692	0.187
HCM Control Delay (s)	9	0	-	-	99	12.2
HCM Lane LOS	A	A	-	-	F	B
HCM 95th %tile Q(veh)	0.6	-	-	-	3.5	0.7

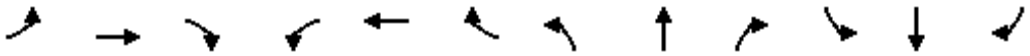

Movement	EBL	EBT	EBR	WBL	WBT	WBR	NBL	NBT	NBR	SBL	SBT	SBR
Lane Configurations												
Traffic Volume (veh/h)	40	3	5	152	4	113	8	961	131	286	1304	25
Future Volume (veh/h)	40	3	5	152	4	113	8	961	131	286	1304	25
Initial Q (Qb), veh	0	0	0	0	0	0	0	0	0	0	0	0
Ped-Bike Adj(A_pbT)	1.00		1.00	1.00		1.00	1.00		1.00	1.00		1.00
Parking Bus, Adj	1.00	1.00	1.00	1.00	1.00	1.00	1.00	1.00	1.00	1.00	1.00	1.00
Work Zone On Approach		No			No			No			No	
Adj Sat Flow, veh/h/ln	1772	1772	1772	1772	1772	1772	1575	1772	1772	1575	1772	1772
Adj Flow Rate, veh/h	42	3	5	160	4	119	8	1012	138	301	1373	26
Peak Hour Factor	0.95	0.95	0.95	0.95	0.95	0.95	0.95	0.95	0.95	0.95	0.95	0.95
Percent Heavy Veh, %	2	2	2	2	2	2	2	2	2	2	2	2
Cap, veh/h	517	40	45	729	16	601	160	1191	162	199	1352	26
Arrive On Green	0.40	0.40	0.40	0.40	0.40	0.40	0.40	0.40	0.40	0.40	0.40	0.40
Sat Flow, veh/h	924	99	114	1428	41	1502	343	2977	406	435	3380	64
Grp Volume(v), veh/h	50	0	0	164	0	119	8	572	578	301	683	716
Grp Sat Flow(s),veh/h/ln	1137	0	0	1469	0	1502	343	1683	1699	435	1683	1760
Q Serve(g_s), s	0.7	0.0	0.0	0.0	0.0	2.3	0.0	13.9	13.9	4.1	18.0	18.0
Cycle Q Clear(g_c), s	3.6	0.0	0.0	2.9	0.0	2.3	18.0	13.9	13.9	18.0	18.0	18.0
Prop In Lane	0.84		0.10	0.98		1.00	1.00		0.24	1.00		0.04
Lane Grp Cap(c), veh/h	602	0	0	746	0	601	160	673	680	199	673	704
V/C Ratio(X)	0.08	0.00	0.00	0.22	0.00	0.20	0.05	0.85	0.85	1.51	1.01	1.02
Avail Cap(c_a), veh/h	602	0	0	746	0	601	160	673	680	199	673	704
HCM Platoon Ratio	1.00	1.00	1.00	1.00	1.00	1.00	1.00	1.00	1.00	1.00	1.00	1.00
Upstream Filter(I)	1.00	0.00	0.00	1.00	0.00	1.00	1.00	1.00	1.00	1.00	1.00	1.00
Uniform Delay (d), s/veh	9.3	0.0	0.0	9.0	0.0	8.8	22.5	12.3	12.3	22.1	13.5	13.5
Incr Delay (d2), s/veh	0.3	0.0	0.0	0.7	0.0	0.7	0.6	12.7	12.7	253.6	38.5	38.0
Initial Q Delay(d3),s/veh	0.0	0.0	0.0	0.0	0.0	0.0	0.0	0.0	0.0	0.0	0.0	0.0
%ile BackOfQ(50%),veh/ln	0.3	0.0	0.0	1.0	0.0	0.7	0.1	6.4	6.4	16.0	12.4	12.8
Unsig. Movement Delay, s/veh												
LnGrp Delay(d),s/veh	9.5	0.0	0.0	9.6	0.0	9.5	23.1	25.0	25.0	275.7	52.0	51.5
LnGrp LOS	A	A	A	A	A	A	C	C	C	F	F	F
Approach Vol, veh/h		50			283			1158			1700	
Approach Delay, s/veh		9.5			9.6			25.0			91.4	
Approach LOS		A			A			C			F	

Timer - Assigned Phs		2		4		6		8				
Phs Duration (G+Y+Rc), s		22.5		22.5		22.5		22.5				
Change Period (Y+Rc), s		4.5		4.5		4.5		4.5				
Max Green Setting (Gmax), s		18.0		18.0		18.0		18.0				
Max Q Clear Time (g_c+I1), s		20.0		5.6		20.0		4.9				
Green Ext Time (p_c), s		0.0		0.1		0.0		1.0				

Intersection Summary												
HCM 6th Ctrl Delay			58.8									
HCM 6th LOS			E									

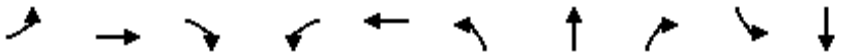

Lane Group	EBL	EBT	EBR	WBL	WBT	NBL	NBT	NBR	SBL	SBT
Lane Group Flow (vph)	49	179	552	34	308	367	1106	243	46	1356
v/c Ratio	0.07	0.25	0.51	0.04	0.23	1.36	0.82	0.33	0.17	0.70
Control Delay	8.7	10.2	11.5	8.5	8.7	204.9	19.4	3.1	10.8	13.7
Queue Delay	0.0	0.0	0.0	0.0	0.0	0.0	0.0	0.0	0.0	0.0
Total Delay	8.7	10.2	11.5	8.5	8.7	204.9	19.4	3.1	10.8	13.7
Queue Length 50th (ft)	3	29	53	2	23	~68	126	0	3	100
Queue Length 95th (ft)	11	61	90	8	43	#131	#229	30	12	141
Internal Link Dist (ft)		1364			960		482			909
Turn Bay Length (ft)										
Base Capacity (vph)	686	706	1077	784	1330	270	1341	745	270	1925
Starvation Cap Reductn	0	0	0	0	0	0	0	0	0	0
Spillback Cap Reductn	0	0	0	0	0	0	0	0	0	0
Storage Cap Reductn	0	0	0	0	0	0	0	0	0	0
Reduced v/c Ratio	0.07	0.25	0.51	0.04	0.23	1.36	0.82	0.33	0.17	0.70

Intersection Summary

~ Volume exceeds capacity, queue is theoretically infinite.
Queue shown is maximum after two cycles.

95th percentile volume exceeds capacity, queue may be longer.
Queue shown is maximum after two cycles.

Lane Group	WBL	WBT	WBR	NBL	NBT	SBT	SBR
Lane Group Flow (vph)	283	275	258	303	1301	1382	851
v/c Ratio	0.62	0.55	0.52	0.88	0.65	0.89	0.88
Control Delay	38.6	28.5	27.2	28.9	19.4	43.8	17.9
Queue Delay	2.2	1.1	0.0	0.0	50.6	0.7	0.0
Total Delay	40.9	29.5	27.2	28.9	70.0	44.5	17.9
Queue Length 50th (ft)	176	136	117	81	521	337	81
Queue Length 95th (ft)	276	231	204	m117	m555	#403	#410
Internal Link Dist (ft)		1705			334	482	
Turn Bay Length (ft)							
Base Capacity (vph)	456	504	500	345	1996	1554	968
Starvation Cap Reductn	0	0	0	0	1137	0	0
Spillback Cap Reductn	79	82	0	0	0	38	0
Storage Cap Reductn	0	0	0	0	0	0	0
Reduced v/c Ratio	0.75	0.65	0.52	0.88	1.51	0.91	0.88

Intersection Summary

95th percentile volume exceeds capacity, queue may be longer.
Queue shown is maximum after two cycles.
m Volume for 95th percentile queue is metered by upstream signal.

Lane Group	EBL	EBT	NBT	NBR	SBL	SBT
Lane Group Flow (vph)	421	415	1113	424	397	1374
v/c Ratio	0.90	0.80	0.96	0.62	0.88	0.70
Control Delay	58.7	41.6	59.3	9.1	52.2	28.2
Queue Delay	0.0	0.2	44.3	0.0	0.9	12.5
Total Delay	58.7	41.7	103.6	9.1	53.1	40.7
Queue Length 50th (ft)	295	242	279	40	176	341
Queue Length 95th (ft)	#493	#412	#369	70	m#231	m412
Internal Link Dist (ft)		1625	463			334
Turn Bay Length (ft)						
Base Capacity (vph)	469	519	1160	683	453	1966
Starvation Cap Reductn	0	0	0	0	7	591
Spillback Cap Reductn	0	4	429	0	0	0
Storage Cap Reductn	0	0	0	0	0	0
Reduced v/c Ratio	0.90	0.81	1.52	0.62	0.89	1.00

Intersection Summary

95th percentile volume exceeds capacity, queue may be longer.
Queue shown is maximum after two cycles.
m Volume for 95th percentile queue is metered by upstream signal.

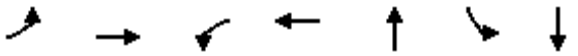

Lane Group	EBL	EBT	WBL	WBT	NBT	SBL	SBT
Lane Group Flow (vph)	253	12	3	111	1009	115	1382
v/c Ratio	0.73	0.02	0.01	0.10	0.73	0.55	1.01
Control Delay	47.4	18.7	25.7	0.2	25.0	50.3	62.1
Queue Delay	0.0	0.0	0.0	0.0	0.0	0.0	0.0
Total Delay	47.4	18.7	25.7	0.2	25.0	50.3	62.1
Queue Length 50th (ft)	158	3	1	0	189	76	~275
Queue Length 95th (ft)	#280	17	8	0	m200	m108	#620
Internal Link Dist (ft)		586		1264	592		237
Turn Bay Length (ft)							
Base Capacity (vph)	345	530	379	1128	1386	209	1369
Starvation Cap Reductn	0	0	0	0	0	0	0
Spillback Cap Reductn	0	0	0	0	0	0	0
Storage Cap Reductn	0	0	0	0	0	0	0
Reduced v/c Ratio	0.73	0.02	0.01	0.10	0.73	0.55	1.01

Intersection Summary

~ Volume exceeds capacity, queue is theoretically infinite.
Queue shown is maximum after two cycles.

95th percentile volume exceeds capacity, queue may be longer.
Queue shown is maximum after two cycles.

m Volume for 95th percentile queue is metered by upstream signal.

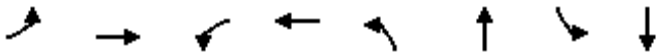

Lane Group	EBL	EBT	WBL	WBT	NBL	NBT	SBL	SBT
Lane Group Flow (vph)	255	288	16	337	127	823	119	1123
v/c Ratio	1.40	0.25	0.08	0.28	0.51	0.95	0.84	1.80
Control Delay	247.2	21.1	42.2	15.7	58.4	68.8	93.6	399.4
Queue Delay	0.0	0.0	0.0	0.0	0.0	0.0	0.0	0.0
Total Delay	247.2	21.1	42.2	15.7	58.4	68.8	93.6	399.4
Queue Length 50th (ft)	~241	59	10	52	95	328	89	~641
Queue Length 95th (ft)	#403	93	31	87	159	#441	m103	m#668
Internal Link Dist (ft)		1246		1246		2598		592
Turn Bay Length (ft)								
Base Capacity (vph)	182	1132	209	1217	250	867	142	624
Starvation Cap Reductn	0	0	0	0	0	0	0	0
Spillback Cap Reductn	0	0	0	0	0	0	0	0
Storage Cap Reductn	0	0	0	0	0	0	0	0
Reduced v/c Ratio	1.40	0.25	0.08	0.28	0.51	0.95	0.84	1.80

Intersection Summary

~ Volume exceeds capacity, queue is theoretically infinite.
Queue shown is maximum after two cycles.

95th percentile volume exceeds capacity, queue may be longer.
Queue shown is maximum after two cycles.

m Volume for 95th percentile queue is metered by upstream signal.

Lane Group	EBL	EBT	EBR	WBL	WBT	NBT	SBT
Lane Group Flow (vph)	3	284	77	40	328	164	83
v/c Ratio	0.01	0.41	0.12	0.11	0.25	0.24	0.13
Control Delay	6.0	8.8	2.7	7.1	6.3	8.9	8.8
Queue Delay	0.0	0.0	0.0	0.0	0.0	0.0	0.0
Total Delay	6.0	8.8	2.7	7.1	6.3	8.9	8.8
Queue Length 50th (ft)	0	26	0	3	13	14	8
Queue Length 95th (ft)	3	72	13	15	35	51	31
Internal Link Dist (ft)		1246			1030	2590	573
Turn Bay Length (ft)							
Base Capacity (vph)	609	1238	1075	644	2331	1052	1023
Starvation Cap Reductn	0	0	0	0	0	0	0
Spillback Cap Reductn	0	0	0	0	0	0	0
Storage Cap Reductn	0	0	0	0	0	0	0
Reduced v/c Ratio	0.00	0.23	0.07	0.06	0.14	0.16	0.08

Intersection Summary

Lane Group	EBT	EBR	WBT	WBR	NBL	NBT	SBL	SBT
Lane Group Flow (vph)	165	82	127	38	87	866	86	995
v/c Ratio	0.43	0.17	0.30	0.08	0.27	0.55	0.41	0.76
Control Delay	37.4	4.4	34.5	0.3	38.9	22.6	33.0	37.7
Queue Delay	0.0	0.0	0.0	0.0	0.0	0.0	0.0	0.0
Total Delay	37.4	4.4	34.5	0.3	38.9	22.6	33.0	37.7
Queue Length 50th (ft)	96	0	72	0	52	223	64	374
Queue Length 95th (ft)	162	25	125	0	99	284	m47	m230
Internal Link Dist (ft)	1249		128			193		2598
Turn Bay Length (ft)								
Base Capacity (vph)	387	478	422	478	318	1563	209	1317
Starvation Cap Reductn	0	0	0	0	0	0	0	0
Spillback Cap Reductn	0	0	0	0	0	0	0	0
Storage Cap Reductn	0	0	0	0	0	0	0	0
Reduced v/c Ratio	0.43	0.17	0.30	0.08	0.27	0.55	0.41	0.76

Intersection Summary

m Volume for 95th percentile queue is metered by upstream signal.

Lane Group
Lane Group Flow (vph)
v/c Ratio
Control Delay
Queue Delay
Total Delay
Queue Length 50th (ft)
Queue Length 95th (ft)
Internal Link Dist (ft)
Turn Bay Length (ft)
Base Capacity (vph)
Starvation Cap Reductn
Spillback Cap Reductn
Storage Cap Reductn
Reduced v/c Ratio

Intersection Summary

Lane Group	EBT	WBT	NBL	NBT	SBL	SBT
Lane Group Flow (vph)	212	303	47	797	99	1007
v/c Ratio	0.29	0.35	0.22	0.52	0.47	0.66
Control Delay	28.4	15.2	45.1	22.4	51.8	25.5
Queue Delay	0.0	0.0	0.0	0.0	0.0	0.0
Total Delay	28.4	15.2	45.1	22.4	51.8	25.5
Queue Length 50th (ft)	53	38	30	202	65	281
Queue Length 95th (ft)	82	70	63	244	115	330
Internal Link Dist (ft)	1242	1247		3087		2026
Turn Bay Length (ft)						
Base Capacity (vph)	730	858	209	1528	209	1534
Starvation Cap Reductn	0	0	0	0	0	0
Spillback Cap Reductn	0	0	0	0	0	0
Storage Cap Reductn	0	0	0	0	0	0
Reduced v/c Ratio	0.29	0.35	0.22	0.52	0.47	0.66

Intersection Summary

Lane Group	EBT	WBT	WBR	NBL	NBT	SBL	SBT
Lane Group Flow (vph)	31	70	52	9	632	71	1107
v/c Ratio	0.05	0.13	0.08	0.06	0.47	0.30	0.83
Control Delay	5.8	9.5	3.7	9.9	10.8	13.6	19.4
Queue Delay	0.0	0.0	0.0	0.0	0.0	0.0	0.0
Total Delay	5.8	9.5	3.7	9.9	10.8	13.6	19.4
Queue Length 50th (ft)	2	11	0	1	55	12	126
Queue Length 95th (ft)	13	29	14	8	89	36	#226
Internal Link Dist (ft)	368	326			1046		1176
Turn Bay Length (ft)							
Base Capacity (vph)	614	520	631	139	1340	235	1341
Starvation Cap Reductn	0	0	0	0	0	0	0
Spillback Cap Reductn	0	0	0	0	0	0	0
Storage Cap Reductn	0	0	0	0	0	0	0
Reduced v/c Ratio	0.05	0.13	0.08	0.06	0.47	0.30	0.83

Intersection Summary

95th percentile volume exceeds capacity, queue may be longer.
Queue shown is maximum after two cycles.

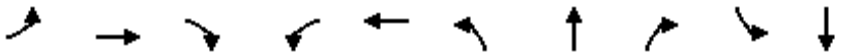

Lane Group	EBL	EBT	EBR	WBL	WBT	NBL	NBT	NBR	SBL	SBT
Lane Group Flow (vph)	251	422	488	233	300	376	1215	215	80	1019
v/c Ratio	0.36	0.60	0.44	0.47	0.23	1.34	0.91	0.29	0.30	0.53
Control Delay	11.4	15.0	9.7	13.9	9.0	195.3	25.4	3.0	12.9	11.2
Queue Delay	0.0	0.0	0.0	0.0	0.0	0.0	0.0	0.0	0.0	0.0
Total Delay	11.4	15.0	9.7	13.9	9.0	195.3	25.4	3.0	12.9	11.2
Queue Length 50th (ft)	22	81	40	21	23	~69	146	0	6	67
Queue Length 95th (ft)	43	151	72	46	43	#133	#265	29	20	97
Internal Link Dist (ft)		1364			960		482			909
Turn Bay Length (ft)										
Base Capacity (vph)	692	706	1102	496	1311	281	1341	729	270	1925
Starvation Cap Reductn	0	0	0	0	0	0	0	0	0	0
Spillback Cap Reductn	0	0	0	0	0	0	0	0	0	0
Storage Cap Reductn	0	0	0	0	0	0	0	0	0	0
Reduced v/c Ratio	0.36	0.60	0.44	0.47	0.23	1.34	0.91	0.29	0.30	0.53

Intersection Summary

~ Volume exceeds capacity, queue is theoretically infinite.
Queue shown is maximum after two cycles.

95th percentile volume exceeds capacity, queue may be longer.
Queue shown is maximum after two cycles.

Lane Group	WBL	WBT	WBR	NBL	NBT	SBT	SBR
Lane Group Flow (vph)	297	279	276	186	1305	1182	532
v/c Ratio	0.75	0.63	0.61	0.59	0.60	0.62	0.58
Control Delay	52.9	34.8	33.8	27.6	20.2	30.8	4.9
Queue Delay	0.0	0.0	0.0	0.0	4.3	0.0	0.0
Total Delay	52.9	34.8	33.8	27.6	24.5	30.8	4.9
Queue Length 50th (ft)	221	153	143	84	561	265	0
Queue Length 95th (ft)	#354	260	244	m119	m608	315	72
Internal Link Dist (ft)		1705			334	482	
Turn Bay Length (ft)							
Base Capacity (vph)	395	441	451	316	2165	1907	915
Starvation Cap Reductn	0	0	0	0	767	0	15
Spillback Cap Reductn	0	0	0	0	0	0	0
Storage Cap Reductn	0	0	0	0	0	0	0
Reduced v/c Ratio	0.75	0.63	0.61	0.59	0.93	0.62	0.59

Intersection Summary

95th percentile volume exceeds capacity, queue may be longer.
Queue shown is maximum after two cycles.
m Volume for 95th percentile queue is metered by upstream signal.

Lane Group	EBL	EBT	NBT	NBR	SBL	SBT
Lane Group Flow (vph)	425	399	887	331	403	1153
v/c Ratio	1.04	0.86	0.51	0.44	1.14	0.54
Control Delay	98.7	56.6	21.4	3.6	117.2	9.3
Queue Delay	0.0	0.2	0.5	0.0	0.0	0.3
Total Delay	98.7	56.8	21.8	3.6	117.2	9.7
Queue Length 50th (ft)	~375	285	136	31	~368	154
Queue Length 95th (ft)	#587	#471	171	m61	#570	178
Internal Link Dist (ft)		1625	463			334
Turn Bay Length (ft)						
Base Capacity (vph)	407	462	1746	754	353	2137
Starvation Cap Reductn	0	0	0	0	0	400
Spillback Cap Reductn	0	2	411	0	0	0
Storage Cap Reductn	0	0	0	0	0	0
Reduced v/c Ratio	1.04	0.87	0.66	0.44	1.14	0.66

Intersection Summary

~ Volume exceeds capacity, queue is theoretically infinite.
Queue shown is maximum after two cycles.

95th percentile volume exceeds capacity, queue may be longer.
Queue shown is maximum after two cycles.

m Volume for 95th percentile queue is metered by upstream signal.

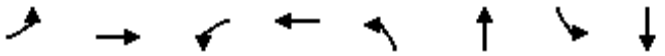

Lane Group	EBL	EBT	WBL	WBT	NBL	NBT	SBL	SBT
Lane Group Flow (vph)	231	31	11	191	5	869	51	1356
v/c Ratio	0.80	0.06	0.03	0.18	0.02	0.56	0.14	0.89
Control Delay	60.6	20.3	30.6	0.4	7.6	16.8	9.6	39.2
Queue Delay	0.0	0.0	0.0	0.0	0.0	0.0	0.0	0.0
Total Delay	60.6	20.3	30.6	0.4	7.6	16.8	9.6	39.2
Queue Length 50th (ft)	165	9	6	0	1	130	12	548
Queue Length 95th (ft)	#301	33	21	0	m3	m146	m23	638
Internal Link Dist (ft)		586		1264		592		237
Turn Bay Length (ft)								
Base Capacity (vph)	289	496	341	1062	244	1550	354	1523
Starvation Cap Reductn	0	0	0	0	0	0	0	0
Spillback Cap Reductn	0	0	0	0	0	0	0	0
Storage Cap Reductn	0	0	0	0	0	0	0	0
Reduced v/c Ratio	0.80	0.06	0.03	0.18	0.02	0.56	0.14	0.89

Intersection Summary

95th percentile volume exceeds capacity, queue may be longer.
Queue shown is maximum after two cycles.
m Volume for 95th percentile queue is metered by upstream signal.

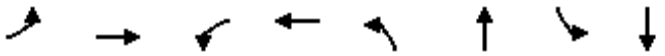

Lane Group	EBL	EBT	WBL	WBT	NBL	NBT	SBL	SBT
Lane Group Flow (vph)	180	564	15	297	112	593	135	894
v/c Ratio	1.16	0.58	0.09	0.29	0.33	0.57	0.70	1.26
Control Delay	169.4	36.7	49.3	24.8	61.7	56.6	82.9	183.7
Queue Delay	0.0	0.0	0.0	0.0	0.0	0.0	0.0	0.0
Total Delay	169.4	36.7	49.3	24.8	61.7	56.6	82.9	183.7
Queue Length 50th (ft)	~165	185	11	68	91	252	112	~470
Queue Length 95th (ft)	#312	245	32	107	153	313	m127	m#567
Internal Link Dist (ft)		1246		1246		2598		592
Turn Bay Length (ft)								
Base Capacity (vph)	155	980	167	1019	341	1041	192	708
Starvation Cap Reductn	0	0	0	0	0	0	0	0
Spillback Cap Reductn	0	0	0	0	0	0	0	0
Storage Cap Reductn	0	0	0	0	0	0	0	0
Reduced v/c Ratio	1.16	0.58	0.09	0.29	0.33	0.57	0.70	1.26

Intersection Summary

~ Volume exceeds capacity, queue is theoretically infinite.
Queue shown is maximum after two cycles.

95th percentile volume exceeds capacity, queue may be longer.
Queue shown is maximum after two cycles.

m Volume for 95th percentile queue is metered by upstream signal.

Lane Group	EBL	EBT	EBR	WBL	WBT	NBT	SBT
Lane Group Flow (vph)	25	605	76	42	355	215	84
v/c Ratio	0.06	0.72	0.10	0.18	0.22	0.49	0.21
Control Delay	6.3	15.3	2.5	8.4	5.0	11.7	9.7
Queue Delay	0.0	0.0	0.0	0.0	0.0	0.0	0.0
Total Delay	6.3	15.3	2.5	8.4	5.0	11.7	9.7
Queue Length 50th (ft)	2	74	0	4	13	23	10
Queue Length 95th (ft)	12	#239	13	19	35	58	30
Internal Link Dist (ft)		1246			1030	2590	573
Turn Bay Length (ft)							
Base Capacity (vph)	455	952	844	267	1789	853	825
Starvation Cap Reductn	0	0	0	0	0	0	0
Spillback Cap Reductn	0	0	0	0	0	0	0
Storage Cap Reductn	0	0	0	0	0	0	0
Reduced v/c Ratio	0.05	0.64	0.09	0.16	0.20	0.25	0.10

Intersection Summary

95th percentile volume exceeds capacity, queue may be longer.
Queue shown is maximum after two cycles.

Lane Group	EBT	EBR	WBT	WBR	NBL	NBT	SBL	SBT
Lane Group Flow (vph)	213	99	155	45	108	738	82	886
v/c Ratio	0.48	0.19	0.32	0.09	0.34	0.48	0.43	0.70
Control Delay	39.1	7.0	35.2	0.3	43.7	23.1	46.6	46.8
Queue Delay	0.0	0.0	0.0	0.0	0.0	0.0	0.0	0.0
Total Delay	39.1	7.0	35.2	0.3	43.7	23.1	46.6	46.8
Queue Length 50th (ft)	135	0	94	0	72	198	66	348
Queue Length 95th (ft)	213	41	154	0	128	254	m64	m306
Internal Link Dist (ft)	1249		128			193		2598
Turn Bay Length (ft)								
Base Capacity (vph)	442	513	480	510	316	1533	192	1263
Starvation Cap Reductn	0	0	0	0	0	0	0	0
Spillback Cap Reductn	0	0	0	0	0	0	0	0
Storage Cap Reductn	0	0	0	0	0	0	0	0
Reduced v/c Ratio	0.48	0.19	0.32	0.09	0.34	0.48	0.43	0.70

Intersection Summary

m Volume for 95th percentile queue is metered by upstream signal.

Lane Group
Lane Group Flow (vph)
v/c Ratio
Control Delay
Queue Delay
Total Delay
Queue Length 50th (ft)
Queue Length 95th (ft)
Internal Link Dist (ft)
Turn Bay Length (ft)
Base Capacity (vph)
Starvation Cap Reductn
Spillback Cap Reductn
Storage Cap Reductn
Reduced v/c Ratio

Intersection Summary

Lane Group	EBT	WBT	NBL	NBT	SBL	SBT
Lane Group Flow (vph)	300	181	62	729	112	824
v/c Ratio	0.35	0.23	0.32	0.52	0.44	0.53
Control Delay	33.0	22.8	52.7	27.0	50.8	24.4
Queue Delay	0.0	0.0	0.0	0.0	0.0	0.0
Total Delay	33.0	22.8	52.7	27.0	50.8	24.4
Queue Length 50th (ft)	91	37	44	213	79	232
Queue Length 95th (ft)	132	68	89	272	138	293
Internal Link Dist (ft)	1242	1247		3087		2026
Turn Bay Length (ft)						
Base Capacity (vph)	857	779	192	1397	254	1544
Starvation Cap Reductn	0	0	0	0	0	0
Spillback Cap Reductn	0	0	0	0	0	0
Storage Cap Reductn	0	0	0	0	0	0
Reduced v/c Ratio	0.35	0.23	0.32	0.52	0.44	0.53

Intersection Summary

Lane Group	EBT	WBT	WBR	NBL	NBT	SBL	SBT
Lane Group Flow (vph)	20	120	69	6	803	219	1002
v/c Ratio	0.03	0.23	0.11	0.04	0.60	1.27	0.75
Control Delay	7.7	10.4	3.4	9.3	12.4	183.4	16.0
Queue Delay	0.0	0.0	0.0	0.0	0.0	0.0	0.0
Total Delay	7.7	10.4	3.4	9.3	12.4	183.4	16.0
Queue Length 50th (ft)	2	19	0	1	76	~76	109
Queue Length 95th (ft)	11	46	16	6	120	#175	166
Internal Link Dist (ft)	368	326			1046		1176
Turn Bay Length (ft)							
Base Capacity (vph)	592	523	641	139	1340	172	1340
Starvation Cap Reductn	0	0	0	0	0	0	0
Spillback Cap Reductn	0	0	0	0	0	0	0
Storage Cap Reductn	0	0	0	0	0	0	0
Reduced v/c Ratio	0.03	0.23	0.11	0.04	0.60	1.27	0.75

Intersection Summary

~ Volume exceeds capacity, queue is theoretically infinite.
Queue shown is maximum after two cycles.

95th percentile volume exceeds capacity, queue may be longer.
Queue shown is maximum after two cycles.

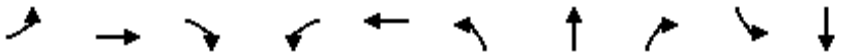

Lane Group	EBL	EBT	EBR	WBL	WBT	NBL	NBT	NBR	SBL	SBT
Lane Group Flow (vph)	50	182	564	352	314	374	1128	248	47	1382
v/c Ratio	0.07	0.26	0.52	0.45	0.24	1.39	0.84	0.33	0.17	0.72
Control Delay	8.8	10.3	11.7	12.2	8.8	215.7	20.3	3.1	10.8	13.9
Queue Delay	0.0	0.0	0.0	0.0	0.0	0.0	0.0	0.0	0.0	0.0
Total Delay	8.8	10.3	11.7	12.2	8.8	215.7	20.3	3.1	10.8	13.9
Queue Length 50th (ft)	4	30	54	32	24	~70	130	0	3	102
Queue Length 95th (ft)	11	62	93	59	44	#134	#236	31	12	144
Internal Link Dist (ft)		1364			960		482			909
Turn Bay Length (ft)										
Base Capacity (vph)	682	706	1077	782	1328	270	1341	748	270	1925
Starvation Cap Reductn	0	0	0	0	0	0	0	0	0	0
Spillback Cap Reductn	0	0	0	0	0	0	0	0	0	0
Storage Cap Reductn	0	0	0	0	0	0	0	0	0	0
Reduced v/c Ratio	0.07	0.26	0.52	0.45	0.24	1.39	0.84	0.33	0.17	0.72

Intersection Summary

~ Volume exceeds capacity, queue is theoretically infinite.
Queue shown is maximum after two cycles.

95th percentile volume exceeds capacity, queue may be longer.
Queue shown is maximum after two cycles.

Lane Group	WBL	WBT	WBR	NBL	NBT	SBT	SBR
Lane Group Flow (vph)	303	295	281	323	1327	1410	868
v/c Ratio	0.66	0.59	0.56	0.94	0.66	0.91	0.90
Control Delay	40.5	32.3	29.0	35.6	19.7	45.4	20.9
Queue Delay	10.5	4.1	0.0	0.0	50.5	1.2	0.0
Total Delay	51.0	36.4	29.0	35.6	70.2	46.5	20.9
Queue Length 50th (ft)	192	163	134	108	530	347	114
Queue Length 95th (ft)	298	265	228	m131	m555	#436	#447
Internal Link Dist (ft)		1705			334	482	
Turn Bay Length (ft)							
Base Capacity (vph)	456	498	500	345	1996	1554	962
Starvation Cap Reductn	0	0	0	0	1134	0	0
Spillback Cap Reductn	124	131	0	0	0	42	0
Storage Cap Reductn	0	0	0	0	0	0	0
Reduced v/c Ratio	0.91	0.80	0.56	0.94	1.54	0.93	0.90

Intersection Summary

95th percentile volume exceeds capacity, queue may be longer.
Queue shown is maximum after two cycles.
m Volume for 95th percentile queue is metered by upstream signal.

Lane Group	EBL	EBT	NBT	NBR	SBL	SBT
Lane Group Flow (vph)	430	466	1136	450	405	1402
v/c Ratio	0.92	0.90	0.98	0.64	0.89	0.71
Control Delay	61.8	52.7	56.0	7.1	54.1	28.0
Queue Delay	0.0	0.5	41.7	0.0	1.2	17.9
Total Delay	61.8	53.2	97.7	7.1	55.2	45.9
Queue Length 50th (ft)	305	292	285	48	185	352
Queue Length 95th (ft)	#508	#501	m#363	m54	m#265	m414
Internal Link Dist (ft)		1625	463			334
Turn Bay Length (ft)						
Base Capacity (vph)	469	518	1160	702	453	1966
Starvation Cap Reductn	0	0	0	0	7	591
Spillback Cap Reductn	0	4	435	0	0	0
Storage Cap Reductn	0	0	0	0	0	0
Reduced v/c Ratio	0.92	0.91	1.57	0.64	0.91	1.02

Intersection Summary

95th percentile volume exceeds capacity, queue may be longer.
Queue shown is maximum after two cycles.
m Volume for 95th percentile queue is metered by upstream signal.

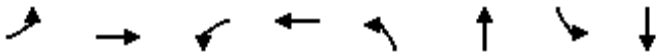

Lane Group	EBL	EBT	WBL	WBT	NBL	NBT	SBL	SBT
Lane Group Flow (vph)	274	40	10	126	51	1247	142	1746
v/c Ratio	0.81	0.08	0.03	0.11	0.24	0.90	0.68	1.28
Control Delay	53.8	10.7	25.9	0.2	46.1	30.9	56.1	162.6
Queue Delay	0.0	0.0	0.0	0.0	0.0	0.0	0.0	0.0
Total Delay	53.8	10.7	25.9	0.2	46.1	30.9	56.1	162.6
Queue Length 50th (ft)	176	3	5	0	38	247	94	~831
Queue Length 95th (ft)	#320	28	18	0	m37	m213	m131	#962
Internal Link Dist (ft)		586		1264		592		237
Turn Bay Length (ft)								
Base Capacity (vph)	340	519	370	1117	209	1383	209	1367
Starvation Cap Reductn	0	0	0	0	0	0	0	0
Spillback Cap Reductn	0	0	0	0	0	0	0	0
Storage Cap Reductn	0	0	0	0	0	0	0	0
Reduced v/c Ratio	0.81	0.08	0.03	0.11	0.24	0.90	0.68	1.28

Intersection Summary

~ Volume exceeds capacity, queue is theoretically infinite.
Queue shown is maximum after two cycles.

95th percentile volume exceeds capacity, queue may be longer.
Queue shown is maximum after two cycles.

m Volume for 95th percentile queue is metered by upstream signal.

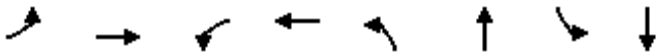

Lane Group	EBL	EBT	WBL	WBT	NBL	NBT	SBL	SBT
Lane Group Flow (vph)	264	341	16	391	143	963	121	1230
v/c Ratio	1.45	0.30	0.08	0.33	0.57	1.11	0.85	1.97
Control Delay	266.6	23.7	42.2	20.2	59.2	108.9	73.0	470.8
Queue Delay	0.0	0.0	0.0	0.0	0.0	0.0	0.0	0.0
Total Delay	266.6	23.7	42.2	20.2	59.2	108.9	73.0	470.8
Queue Length 50th (ft)	~254	78	10	78	108	~424	92	~730
Queue Length 95th (ft)	#418	117	31	117	m168	#558	m79	m#550
Internal Link Dist (ft)		1246		1246		2598		592
Turn Bay Length (ft)								
Base Capacity (vph)	182	1130	209	1200	250	867	142	624
Starvation Cap Reductn	0	0	0	0	0	0	0	0
Spillback Cap Reductn	0	0	0	0	0	0	0	0
Storage Cap Reductn	0	0	0	0	0	0	0	0
Reduced v/c Ratio	1.45	0.30	0.08	0.33	0.57	1.11	0.85	1.97

Intersection Summary

~ Volume exceeds capacity, queue is theoretically infinite.
Queue shown is maximum after two cycles.

95th percentile volume exceeds capacity, queue may be longer.
Queue shown is maximum after two cycles.

m Volume for 95th percentile queue is metered by upstream signal.

Lane Group	EBL	EBT	EBR	WBL	WBT	NBT	SBT
Lane Group Flow (vph)	3	315	78	41	360	166	86
v/c Ratio	0.01	0.43	0.12	0.11	0.26	0.25	0.13
Control Delay	6.0	8.8	2.6	7.0	6.3	9.4	9.2
Queue Delay	0.0	0.0	0.0	0.0	0.0	0.0	0.0
Total Delay	6.0	8.8	2.6	7.0	6.3	9.4	9.2
Queue Length 50th (ft)	0	30	0	3	15	15	8
Queue Length 95th (ft)	3	81	13	16	38	56	34
Internal Link Dist (ft)		1246			1030	2590	573
Turn Bay Length (ft)							
Base Capacity (vph)	579	1215	1057	614	2289	1028	1002
Starvation Cap Reductn	0	0	0	0	0	0	0
Spillback Cap Reductn	0	0	0	0	0	0	0
Storage Cap Reductn	0	0	0	0	0	0	0
Reduced v/c Ratio	0.01	0.26	0.07	0.07	0.16	0.16	0.09

Intersection Summary

Lane Group	EBT	EBR	WBT	WBR	NBL	NBT	SBL	SBT
Lane Group Flow (vph)	168	84	131	48	89	1017	117	1093
v/c Ratio	0.44	0.18	0.31	0.10	0.28	0.65	0.56	0.83
Control Delay	37.6	4.8	34.6	0.4	39.0	24.7	34.8	39.3
Queue Delay	0.0	0.0	0.0	0.0	0.0	0.0	0.0	0.0
Total Delay	37.6	4.8	34.6	0.4	39.0	24.7	34.8	39.3
Queue Length 50th (ft)	98	0	74	0	53	279	87	412
Queue Length 95th (ft)	165	26	129	0	100	351	m61	m242
Internal Link Dist (ft)	1249		128			193		2598
Turn Bay Length (ft)								
Base Capacity (vph)	386	478	421	478	318	1565	209	1318
Starvation Cap Reductn	0	0	0	0	0	0	0	0
Spillback Cap Reductn	0	0	0	0	0	0	0	0
Storage Cap Reductn	0	0	0	0	0	0	0	0
Reduced v/c Ratio	0.44	0.18	0.31	0.10	0.28	0.65	0.56	0.83

Intersection Summary

m Volume for 95th percentile queue is metered by upstream signal.

Lane Group
Lane Group Flow (vph)
v/c Ratio
Control Delay
Queue Delay
Total Delay
Queue Length 50th (ft)
Queue Length 95th (ft)
Internal Link Dist (ft)
Turn Bay Length (ft)
Base Capacity (vph)
Starvation Cap Reductn
Spillback Cap Reductn
Storage Cap Reductn
Reduced v/c Ratio

Intersection Summary

Lane Group	EBT	WBT	NBL	NBT	SBL	SBT
Lane Group Flow (vph)	322	440	48	1057	110	1228
v/c Ratio	0.46	0.52	0.23	0.69	0.53	0.80
Control Delay	34.0	23.8	45.2	26.3	53.8	30.3
Queue Delay	0.0	0.0	0.0	0.0	0.0	0.0
Total Delay	34.0	23.8	45.2	26.3	53.8	30.3
Queue Length 50th (ft)	94	88	31	300	73	378
Queue Length 95th (ft)	131	129	64	351	126	436
Internal Link Dist (ft)	1242	1247		3087		2026
Turn Bay Length (ft)						
Base Capacity (vph)	694	849	209	1529	209	1536
Starvation Cap Reductn	0	0	0	0	0	0
Spillback Cap Reductn	0	0	0	0	0	0
Storage Cap Reductn	0	0	0	0	0	0
Reduced v/c Ratio	0.46	0.52	0.23	0.69	0.53	0.80

Intersection Summary

Lane Group	EBT	WBT	WBR	NBL	NBT	SBL	SBT
Lane Group Flow (vph)	31	71	53	9	644	72	1129
v/c Ratio	0.05	0.14	0.08	0.06	0.48	0.31	0.84
Control Delay	5.8	9.5	3.6	9.9	10.9	13.9	20.3
Queue Delay	0.0	0.0	0.0	0.0	0.0	0.0	0.0
Total Delay	5.8	9.5	3.6	9.9	10.9	13.9	20.3
Queue Length 50th (ft)	2	11	0	1	57	12	131
Queue Length 95th (ft)	13	29	14	8	91	37	#233
Internal Link Dist (ft)	368	326			1046		1176
Turn Bay Length (ft)							
Base Capacity (vph)	614	520	631	139	1340	230	1341
Starvation Cap Reductn	0	0	0	0	0	0	0
Spillback Cap Reductn	0	0	0	0	0	0	0
Storage Cap Reductn	0	0	0	0	0	0	0
Reduced v/c Ratio	0.05	0.14	0.08	0.06	0.48	0.31	0.84

Intersection Summary

95th percentile volume exceeds capacity, queue may be longer.
Queue shown is maximum after two cycles.

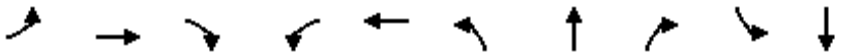

Lane Group	EBL	EBT	EBR	WBL	WBT	NBL	NBT	NBR	SBL	SBT
Lane Group Flow (vph)	256	431	498	238	306	383	1239	219	82	1039
v/c Ratio	0.37	0.61	0.45	0.49	0.23	1.41	0.92	0.30	0.30	0.54
Control Delay	11.5	15.3	10.0	14.4	9.0	227.4	27.5	3.0	13.1	11.3
Queue Delay	0.0	0.0	0.0	0.0	0.0	0.0	0.0	0.0	0.0	0.0
Total Delay	11.5	15.3	10.0	14.4	9.0	227.4	27.5	3.0	13.1	11.3
Queue Length 50th (ft)	22	83	42	22	24	~72	151	0	7	68
Queue Length 95th (ft)	44	155	75	48	44	#137	#273	29	20	99
Internal Link Dist (ft)		1364			960		482			909
Turn Bay Length (ft)										
Base Capacity (vph)	687	706	1099	484	1310	271	1341	731	270	1924
Starvation Cap Reductn	0	0	0	0	0	0	0	0	0	0
Spillback Cap Reductn	0	0	0	0	0	0	0	0	0	0
Storage Cap Reductn	0	0	0	0	0	0	0	0	0	0
Reduced v/c Ratio	0.37	0.61	0.45	0.49	0.23	1.41	0.92	0.30	0.30	0.54

Intersection Summary

~ Volume exceeds capacity, queue is theoretically infinite.
Queue shown is maximum after two cycles.

95th percentile volume exceeds capacity, queue may be longer.
Queue shown is maximum after two cycles.

Lane Group	WBL	WBT	WBR	NBL	NBT	SBT	SBR
Lane Group Flow (vph)	309	291	287	236	1331	1205	543
v/c Ratio	0.78	0.66	0.64	0.75	0.61	0.63	0.59
Control Delay	55.2	36.9	35.8	35.8	20.1	31.0	4.9
Queue Delay	0.0	0.0	0.0	0.0	5.4	0.0	0.0
Total Delay	55.2	36.9	35.8	35.8	25.5	31.0	5.0
Queue Length 50th (ft)	232	168	155	111	571	271	0
Queue Length 95th (ft)	#376	280	262	m165	m608	322	73
Internal Link Dist (ft)		1705			334	482	
Turn Bay Length (ft)							
Base Capacity (vph)	395	441	448	316	2165	1907	921
Starvation Cap Reductn	0	0	0	0	764	0	14
Spillback Cap Reductn	0	0	0	0	0	0	0
Storage Cap Reductn	0	0	0	0	0	0	0
Reduced v/c Ratio	0.78	0.66	0.64	0.75	0.95	0.63	0.60

Intersection Summary

95th percentile volume exceeds capacity, queue may be longer.
Queue shown is maximum after two cycles.
m Volume for 95th percentile queue is metered by upstream signal.

Lane Group	EBL	EBT	NBT	NBR	SBL	SBT
Lane Group Flow (vph)	440	416	904	396	411	1177
v/c Ratio	1.08	0.90	0.52	0.50	1.16	0.55
Control Delay	109.1	60.5	22.3	3.5	125.0	9.6
Queue Delay	0.0	0.5	0.5	0.0	0.0	0.3
Total Delay	109.1	61.0	22.8	3.5	125.0	9.9
Queue Length 50th (ft)	~401	300	139	32	~381	161
Queue Length 95th (ft)	#614	#500	m162	m52	m#577	185
Internal Link Dist (ft)		1625	463			334
Turn Bay Length (ft)						
Base Capacity (vph)	407	464	1746	796	353	2137
Starvation Cap Reductn	0	0	0	0	0	402
Spillback Cap Reductn	0	3	419	0	0	0
Storage Cap Reductn	0	0	0	0	0	0
Reduced v/c Ratio	1.08	0.90	0.68	0.50	1.16	0.68

Intersection Summary

~ Volume exceeds capacity, queue is theoretically infinite.
Queue shown is maximum after two cycles.

95th percentile volume exceeds capacity, queue may be longer.
Queue shown is maximum after two cycles.

m Volume for 95th percentile queue is metered by upstream signal.

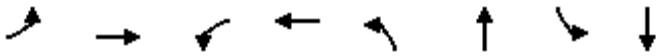

Lane Group	EBL	EBT	WBL	WBT	NBL	NBT	SBL	SBT
Lane Group Flow (vph)	291	87	39	223	26	936	61	1438
v/c Ratio	1.07	0.17	0.12	0.21	0.11	0.60	0.18	0.95
Control Delay	115.4	10.9	32.2	1.3	13.4	16.1	10.1	44.9
Queue Delay	0.0	0.0	0.0	0.0	0.0	0.0	0.0	0.0
Total Delay	115.4	10.9	32.2	1.3	13.4	16.1	10.1	44.9
Queue Length 50th (ft)	~249	9	22	0	6	132	15	587
Queue Length 95th (ft)	#427	48	51	7	m9	m147	m27	#718
Internal Link Dist (ft)		586		1264		592		237
Turn Bay Length (ft)								
Base Capacity (vph)	272	508	325	1054	244	1548	334	1521
Starvation Cap Reductn	0	0	0	0	0	0	0	0
Spillback Cap Reductn	0	0	0	0	0	0	0	0
Storage Cap Reductn	0	0	0	0	0	0	0	0
Reduced v/c Ratio	1.07	0.17	0.12	0.21	0.11	0.60	0.18	0.95

Intersection Summary

~ Volume exceeds capacity, queue is theoretically infinite.
Queue shown is maximum after two cycles.

95th percentile volume exceeds capacity, queue may be longer.
Queue shown is maximum after two cycles.

m Volume for 95th percentile queue is metered by upstream signal.

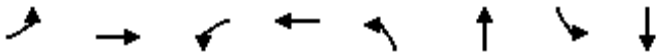

Lane Group	EBL	EBT	WBL	WBT	NBL	NBT	SBL	SBT
Lane Group Flow (vph)	196	627	15	354	119	685	138	1054
v/c Ratio	1.26	0.64	0.09	0.35	0.35	0.66	0.72	1.49
Control Delay	203.9	38.7	49.3	28.9	61.0	58.0	80.6	271.3
Queue Delay	0.0	0.0	0.0	0.0	0.0	0.0	0.0	0.0
Total Delay	203.9	38.7	49.3	28.9	61.0	58.0	80.6	271.3
Queue Length 50th (ft)	~191	213	11	95	96	292	114	~610
Queue Length 95th (ft)	#342	278	32	138	160	358	m126	m#670
Internal Link Dist (ft)		1246		1246		2598		592
Turn Bay Length (ft)								
Base Capacity (vph)	155	981	167	1011	341	1042	192	708
Starvation Cap Reductn	0	0	0	0	0	0	0	0
Spillback Cap Reductn	0	0	0	0	0	0	0	0
Storage Cap Reductn	0	0	0	0	0	0	0	0
Reduced v/c Ratio	1.26	0.64	0.09	0.35	0.35	0.66	0.72	1.49

Intersection Summary

~ Volume exceeds capacity, queue is theoretically infinite.
Queue shown is maximum after two cycles.

95th percentile volume exceeds capacity, queue may be longer.
Queue shown is maximum after two cycles.

m Volume for 95th percentile queue is metered by upstream signal.

Lane Group	EBL	EBT	EBR	WBL	WBT	NBT	SBT
Lane Group Flow (vph)	25	645	77	43	391	219	85
v/c Ratio	0.06	0.75	0.10	0.20	0.24	0.50	0.21
Control Delay	6.4	16.7	2.5	9.0	5.3	12.1	9.8
Queue Delay	0.0	0.0	0.0	0.0	0.0	0.0	0.0
Total Delay	6.4	16.7	2.5	9.0	5.3	12.1	9.8
Queue Length 50th (ft)	2	83	0	4	15	24	10
Queue Length 95th (ft)	12	#265	14	21	40	60	30
Internal Link Dist (ft)		1246			1030	2590	573
Turn Bay Length (ft)							
Base Capacity (vph)	425	919	818	232	1732	826	798
Starvation Cap Reductn	0	0	0	0	0	0	0
Spillback Cap Reductn	0	0	0	0	0	0	0
Storage Cap Reductn	0	0	0	0	0	0	0
Reduced v/c Ratio	0.06	0.70	0.09	0.19	0.23	0.27	0.11

Intersection Summary

95th percentile volume exceeds capacity, queue may be longer.
Queue shown is maximum after two cycles.

Lane Group	EBT	EBR	WBT	WBR	NBL	NBT	SBL	SBT
Lane Group Flow (vph)	218	101	158	77	110	866	95	1044
v/c Ratio	0.49	0.20	0.33	0.15	0.35	0.56	0.49	0.83
Control Delay	39.4	7.0	35.4	4.7	43.9	24.9	46.8	50.6
Queue Delay	0.0	0.0	0.0	0.0	0.0	0.0	0.0	0.0
Total Delay	39.4	7.0	35.4	4.7	43.9	24.9	46.8	50.6
Queue Length 50th (ft)	139	0	96	0	73	246	77	421
Queue Length 95th (ft)	218	41	157	25	129	310	m65	m321
Internal Link Dist (ft)	1249		128			193		2598
Turn Bay Length (ft)								
Base Capacity (vph)	442	514	479	510	316	1535	192	1265
Starvation Cap Reductn	0	0	0	0	0	0	0	0
Spillback Cap Reductn	0	0	0	0	0	0	0	0
Storage Cap Reductn	0	0	0	0	0	0	0	0
Reduced v/c Ratio	0.49	0.20	0.33	0.15	0.35	0.56	0.49	0.83

Intersection Summary

m Volume for 95th percentile queue is metered by upstream signal.

Lane Group
Lane Group Flow (vph)
v/c Ratio
Control Delay
Queue Delay
Total Delay
Queue Length 50th (ft)
Queue Length 95th (ft)
Internal Link Dist (ft)
Turn Bay Length (ft)
Base Capacity (vph)
Starvation Cap Reductn
Spillback Cap Reductn
Storage Cap Reductn
Reduced v/c Ratio

Intersection Summary

Lane Group	EBT	WBT	NBL	NBT	SBL	SBT
Lane Group Flow (vph)	420	315	63	956	123	1105
v/c Ratio	0.49	0.43	0.33	0.68	0.48	0.72
Control Delay	36.4	33.1	52.8	31.1	52.2	29.0
Queue Delay	0.0	0.0	0.0	0.0	0.0	0.0
Total Delay	36.4	33.1	52.8	31.1	52.2	29.0
Queue Length 50th (ft)	137	94	45	308	87	352
Queue Length 95th (ft)	190	138	91	385	151	433
Internal Link Dist (ft)	1242	1247		3087		2026
Turn Bay Length (ft)						
Base Capacity (vph)	854	735	192	1399	254	1545
Starvation Cap Reductn	0	0	0	0	0	0
Spillback Cap Reductn	0	0	0	0	0	0
Storage Cap Reductn	0	0	0	0	0	0
Reduced v/c Ratio	0.49	0.43	0.33	0.68	0.48	0.72

Intersection Summary

Lane Group	EBT	WBT	WBR	NBL	NBT	SBL	SBT
Lane Group Flow (vph)	20	122	71	6	819	223	1022
v/c Ratio	0.03	0.23	0.11	0.04	0.61	1.34	0.76
Control Delay	7.7	10.5	3.4	9.3	12.5	208.4	16.5
Queue Delay	0.0	0.0	0.0	0.0	0.0	0.0	0.0
Total Delay	7.7	10.5	3.4	9.3	12.5	208.4	16.5
Queue Length 50th (ft)	2	20	0	1	78	~79	112
Queue Length 95th (ft)	11	47	17	6	123	#180	#172
Internal Link Dist (ft)	368	326			1046		1176
Turn Bay Length (ft)							
Base Capacity (vph)	591	522	642	139	1340	167	1340
Starvation Cap Reductn	0	0	0	0	0	0	0
Spillback Cap Reductn	0	0	0	0	0	0	0
Storage Cap Reductn	0	0	0	0	0	0	0
Reduced v/c Ratio	0.03	0.23	0.11	0.04	0.61	1.34	0.76

Intersection Summary

~ Volume exceeds capacity, queue is theoretically infinite.
Queue shown is maximum after two cycles.

95th percentile volume exceeds capacity, queue may be longer.
Queue shown is maximum after two cycles.

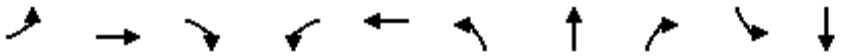

Lane Group	EBL	EBT	EBR	WBL	WBT	NBL	NBT	NBR	SBL	SBT
Lane Group Flow (vph)	50	182	564	352	314	374	1138	248	47	1382
v/c Ratio	0.07	0.26	0.52	0.45	0.24	1.39	0.85	0.33	0.17	0.72
Control Delay	8.8	10.3	11.7	12.2	8.9	215.7	20.8	3.1	10.8	13.9
Queue Delay	0.0	0.0	0.0	0.0	0.0	0.0	0.0	0.0	0.0	0.0
Total Delay	8.8	10.3	11.7	12.2	8.9	215.7	20.8	3.1	10.8	13.9
Queue Length 50th (ft)	4	30	54	32	24	~70	132	0	3	102
Queue Length 95th (ft)	11	62	93	59	44	#134	#240	31	12	144
Internal Link Dist (ft)		1364			960		482			909
Turn Bay Length (ft)										
Base Capacity (vph)	682	706	1077	782	1328	270	1341	748	270	1925
Starvation Cap Reductn	0	0	0	0	0	0	0	0	0	0
Spillback Cap Reductn	0	0	0	0	0	0	0	0	0	0
Storage Cap Reductn	0	0	0	0	0	0	0	0	0	0
Reduced v/c Ratio	0.07	0.26	0.52	0.45	0.24	1.39	0.85	0.33	0.17	0.72

Intersection Summary

~ Volume exceeds capacity, queue is theoretically infinite.
Queue shown is maximum after two cycles.

95th percentile volume exceeds capacity, queue may be longer.
Queue shown is maximum after two cycles.

Lane Group	WBL	WBT	WBR	NBL	NBT	SBT	SBR
Lane Group Flow (vph)	311	302	285	352	1337	1410	868
v/c Ratio	0.68	0.61	0.57	1.02	0.67	0.91	0.91
Control Delay	41.3	33.3	29.3	52.1	19.4	45.4	22.3
Queue Delay	35.9	10.8	0.0	0.0	50.5	1.2	0.0
Total Delay	77.2	44.1	29.3	52.1	69.9	46.5	22.3
Queue Length 50th (ft)	200	171	137	~161	534	347	129
Queue Length 95th (ft)	308	276	233	m#203	m546	#436	#459
Internal Link Dist (ft)		1705			334	482	
Turn Bay Length (ft)							
Base Capacity (vph)	456	496	500	345	1996	1554	954
Starvation Cap Reductn	0	0	0	0	1134	0	0
Spillback Cap Reductn	156	164	0	0	0	42	0
Storage Cap Reductn	0	0	0	0	0	0	0
Reduced v/c Ratio	1.04	0.91	0.57	1.02	1.55	0.93	0.91

Intersection Summary

~ Volume exceeds capacity, queue is theoretically infinite.
Queue shown is maximum after two cycles.

95th percentile volume exceeds capacity, queue may be longer.
Queue shown is maximum after two cycles.

m Volume for 95th percentile queue is metered by upstream signal.

Lane Group	EBL	EBT	NBT	NBR	SBL	SBT
Lane Group Flow (vph)	430	486	1173	469	405	1421
v/c Ratio	0.92	0.94	1.01	0.65	0.89	0.72
Control Delay	61.8	59.2	61.0	6.6	54.1	28.3
Queue Delay	0.0	0.9	34.8	0.0	1.3	22.3
Total Delay	61.8	60.1	95.8	6.6	55.5	50.6
Queue Length 50th (ft)	305	313	~293	46	186	360
Queue Length 95th (ft)	#508	#535	m#356	m53	m#265	m422
Internal Link Dist (ft)		1625	463			334
Turn Bay Length (ft)						
Base Capacity (vph)	469	518	1160	717	453	1966
Starvation Cap Reductn	0	0	0	0	8	591
Spillback Cap Reductn	0	4	433	0	0	0
Storage Cap Reductn	0	0	0	0	0	0
Reduced v/c Ratio	0.92	0.95	1.61	0.65	0.91	1.03

Intersection Summary

~ Volume exceeds capacity, queue is theoretically infinite.
Queue shown is maximum after two cycles.

95th percentile volume exceeds capacity, queue may be longer.
Queue shown is maximum after two cycles.

m Volume for 95th percentile queue is metered by upstream signal.

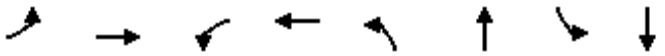

Lane Group	EBL	EBT	WBL	WBT	NBL	NBT	SBL	SBT
Lane Group Flow (vph)	274	40	10	126	60	1315	142	1784
v/c Ratio	0.81	0.08	0.03	0.11	0.29	0.95	0.68	1.31
Control Delay	53.8	10.7	25.9	0.2	47.1	34.2	55.6	174.1
Queue Delay	0.0	0.0	0.0	0.0	0.0	0.0	0.0	0.0
Total Delay	53.8	10.7	25.9	0.2	47.1	34.2	55.6	174.1
Queue Length 50th (ft)	176	3	5	0	45	275	95	~860
Queue Length 95th (ft)	#320	28	18	0	m42	m205	m128	m#983
Internal Link Dist (ft)		586		1264		592		237
Turn Bay Length (ft)								
Base Capacity (vph)	340	519	370	1115	209	1382	209	1367
Starvation Cap Reductn	0	0	0	0	0	0	0	0
Spillback Cap Reductn	0	0	0	0	0	0	0	0
Storage Cap Reductn	0	0	0	0	0	0	0	0
Reduced v/c Ratio	0.81	0.08	0.03	0.11	0.29	0.95	0.68	1.31

Intersection Summary

~ Volume exceeds capacity, queue is theoretically infinite.
Queue shown is maximum after two cycles.

95th percentile volume exceeds capacity, queue may be longer.
Queue shown is maximum after two cycles.

m Volume for 95th percentile queue is metered by upstream signal.

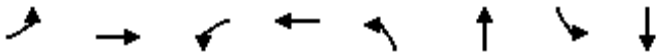

Lane Group	EBL	EBT	WBL	WBT	NBL	NBT	SBL	SBT
Lane Group Flow (vph)	264	361	36	391	152	1051	121	1269
v/c Ratio	1.45	0.32	0.17	0.33	0.61	1.21	0.85	2.04
Control Delay	266.6	22.8	44.0	20.2	56.9	144.1	73.0	499.2
Queue Delay	0.0	0.0	0.0	0.0	0.0	0.0	0.0	0.0
Total Delay	266.6	22.8	44.0	20.2	56.9	144.1	73.0	499.2
Queue Length 50th (ft)	~254	80	23	78	114	~494	92	~763
Queue Length 95th (ft)	#418	119	54	117	m161	#629	m78	m#560
Internal Link Dist (ft)		1246		1246		2598		592
Turn Bay Length (ft)								
Base Capacity (vph)	182	1134	209	1200	250	867	142	623
Starvation Cap Reductn	0	0	0	0	0	0	0	0
Spillback Cap Reductn	0	0	0	0	0	0	0	0
Storage Cap Reductn	0	0	0	0	0	0	0	0
Reduced v/c Ratio	1.45	0.32	0.17	0.33	0.61	1.21	0.85	2.04

Intersection Summary

~ Volume exceeds capacity, queue is theoretically infinite.
Queue shown is maximum after two cycles.

95th percentile volume exceeds capacity, queue may be longer.
Queue shown is maximum after two cycles.

m Volume for 95th percentile queue is metered by upstream signal.

Lane Group	EBL	EBT	EBR	WBL	WBT	NBT	SBT
Lane Group Flow (vph)	3	325	78	41	382	176	86
v/c Ratio	0.01	0.49	0.13	0.12	0.30	0.39	0.21
Control Delay	6.0	9.8	2.7	7.2	6.7	10.8	10.1
Queue Delay	0.0	0.0	0.0	0.0	0.0	0.0	0.0
Total Delay	6.0	9.8	2.7	7.2	6.7	10.8	10.1
Queue Length 50th (ft)	0	31	0	3	16	15	8
Queue Length 95th (ft)	3	85	13	16	41	58	35
Internal Link Dist (ft)		1246			1030	2590	573
Turn Bay Length (ft)							
Base Capacity (vph)	538	1154	1007	578	2177	966	924
Starvation Cap Reductn	0	0	0	0	0	0	0
Spillback Cap Reductn	0	0	0	0	0	0	0
Storage Cap Reductn	0	0	0	0	0	0	0
Reduced v/c Ratio	0.01	0.28	0.08	0.07	0.18	0.18	0.09

Intersection Summary

Lane Group	EBT	EBR	WBT	WBR	NBL	NBT	SBL	SBT
Lane Group Flow (vph)	188	84	191	88	120	1137	199	1093
v/c Ratio	0.54	0.18	0.51	0.18	0.38	0.73	0.95	0.83
Control Delay	41.0	4.8	39.8	5.3	48.9	34.7	49.2	38.7
Queue Delay	0.0	0.0	0.0	0.0	0.0	0.0	0.0	0.0
Total Delay	41.0	4.8	39.8	5.3	48.9	34.7	49.2	38.7
Queue Length 50th (ft)	114	0	115	0	68	327	147	410
Queue Length 95th (ft)	189	26	189	29	m108	409	m99	m237
Internal Link Dist (ft)	1249		128			193		2598
Turn Bay Length (ft)								
Base Capacity (vph)	351	478	374	478	318	1556	209	1318
Starvation Cap Reductn	0	0	0	0	0	0	0	0
Spillback Cap Reductn	0	0	0	0	0	0	0	0
Storage Cap Reductn	0	0	0	0	0	0	0	0
Reduced v/c Ratio	0.54	0.18	0.51	0.18	0.38	0.73	0.95	0.83

Intersection Summary

m Volume for 95th percentile queue is metered by upstream signal.

Lane Group	EBT	WBT	NBL	NBT	SBL	SBT
Lane Group Flow (vph)	322	473	48	1100	110	1239
v/c Ratio	0.48	0.54	0.23	0.72	0.53	0.81
Control Delay	34.3	22.6	45.2	27.2	63.7	41.8
Queue Delay	0.0	0.0	0.0	0.0	0.0	0.0
Total Delay	34.3	22.6	45.2	27.2	63.7	41.8
Queue Length 50th (ft)	94	88	31	319	64	366
Queue Length 95th (ft)	132	131	64	371	m89	426
Internal Link Dist (ft)	1242	1247		3087		2026
Turn Bay Length (ft)						
Base Capacity (vph)	677	871	209	1529	209	1536
Starvation Cap Reductn	0	0	0	0	0	0
Spillback Cap Reductn	0	0	0	0	0	0
Storage Cap Reductn	0	0	0	0	0	0
Reduced v/c Ratio	0.48	0.54	0.23	0.72	0.53	0.81

Intersection Summary

m Volume for 95th percentile queue is metered by upstream signal.

Lane Group	EBT	WBT	WBR	NBL	NBT	SBL	SBT
Lane Group Flow (vph)	41	71	63	9	666	72	1139
v/c Ratio	0.07	0.14	0.10	0.06	0.50	0.32	0.85
Control Delay	6.3	9.5	3.5	9.9	11.2	14.4	20.8
Queue Delay	0.0	0.0	0.0	0.0	0.0	0.0	0.0
Total Delay	6.3	9.5	3.5	9.9	11.2	14.4	20.8
Queue Length 50th (ft)	3	11	0	1	60	12	132
Queue Length 95th (ft)	16	29	15	8	95	37	#237
Internal Link Dist (ft)	368	326			1046		1176
Turn Bay Length (ft)							
Base Capacity (vph)	599	515	637	139	1339	222	1341
Starvation Cap Reductn	0	0	0	0	0	0	0
Spillback Cap Reductn	0	0	0	0	0	0	0
Storage Cap Reductn	0	0	0	0	0	0	0
Reduced v/c Ratio	0.07	0.14	0.10	0.06	0.50	0.32	0.85

Intersection Summary

95th percentile volume exceeds capacity, queue may be longer.
Queue shown is maximum after two cycles.

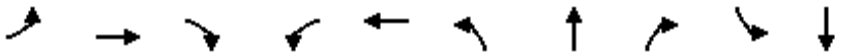

Lane Group	EBL	EBT	EBR	WBL	WBT	NBL	NBT	NBR	SBL	SBT
Lane Group Flow (vph)	256	431	498	238	306	383	1247	219	82	1039
v/c Ratio	0.37	0.61	0.45	0.49	0.23	1.41	0.93	0.30	0.30	0.54
Control Delay	11.5	15.3	10.0	14.4	9.1	227.4	28.3	3.0	13.1	11.3
Queue Delay	0.0	0.0	0.0	0.0	0.0	0.0	0.0	0.0	0.0	0.0
Total Delay	11.5	15.3	10.0	14.4	9.1	227.4	28.3	3.0	13.1	11.3
Queue Length 50th (ft)	22	83	42	22	24	~72	152	0	7	68
Queue Length 95th (ft)	44	155	75	48	44	#137	#275	29	20	99
Internal Link Dist (ft)		1364			960		482			909
Turn Bay Length (ft)										
Base Capacity (vph)	687	706	1099	484	1309	271	1341	731	270	1924
Starvation Cap Reductn	0	0	0	0	0	0	0	0	0	0
Spillback Cap Reductn	0	0	0	0	0	0	0	0	0	0
Storage Cap Reductn	0	0	0	0	0	0	0	0	0	0
Reduced v/c Ratio	0.37	0.61	0.45	0.49	0.23	1.41	0.93	0.30	0.30	0.54

Intersection Summary

~ Volume exceeds capacity, queue is theoretically infinite.
Queue shown is maximum after two cycles.

95th percentile volume exceeds capacity, queue may be longer.
Queue shown is maximum after two cycles.

Lane Group	WBL	WBT	WBR	NBL	NBT	SBT	SBR
Lane Group Flow (vph)	315	296	292	261	1339	1205	543
v/c Ratio	0.80	0.67	0.65	0.83	0.62	0.63	0.59
Control Delay	56.5	37.7	36.7	43.0	19.5	31.0	4.9
Queue Delay	0.0	0.0	0.0	0.0	5.9	0.0	0.0
Total Delay	56.5	37.7	36.7	43.0	25.4	31.0	5.0
Queue Length 50th (ft)	238	172	161	125	575	271	0
Queue Length 95th (ft)	#390	286	267	m#207	m607	322	73
Internal Link Dist (ft)		1705			334	482	
Turn Bay Length (ft)							
Base Capacity (vph)	395	441	447	316	2165	1907	921
Starvation Cap Reductn	0	0	0	0	764	0	14
Spillback Cap Reductn	0	0	0	0	0	0	0
Storage Cap Reductn	0	0	0	0	0	0	0
Reduced v/c Ratio	0.80	0.67	0.65	0.83	0.96	0.63	0.60

Intersection Summary

95th percentile volume exceeds capacity, queue may be longer.
Queue shown is maximum after two cycles.
m Volume for 95th percentile queue is metered by upstream signal.

Lane Group	EBL	EBT	NBT	NBR	SBL	SBT
Lane Group Flow (vph)	446	426	937	412	411	1193
v/c Ratio	1.10	0.91	0.54	0.51	1.16	0.56
Control Delay	113.6	62.7	21.8	3.4	125.2	9.8
Queue Delay	0.0	0.6	0.6	0.0	0.0	0.4
Total Delay	113.6	63.3	22.4	3.4	125.2	10.2
Queue Length 50th (ft)	~411	306	140	30	~382	167
Queue Length 95th (ft)	#625	#514	m180	m64	m#574	191
Internal Link Dist (ft)		1625	463			334
Turn Bay Length (ft)						
Base Capacity (vph)	407	466	1746	806	353	2137
Starvation Cap Reductn	0	0	0	0	0	401
Spillback Cap Reductn	0	3	409	0	0	0
Storage Cap Reductn	0	0	0	0	0	0
Reduced v/c Ratio	1.10	0.92	0.70	0.51	1.16	0.69

Intersection Summary

~ Volume exceeds capacity, queue is theoretically infinite.
Queue shown is maximum after two cycles.

95th percentile volume exceeds capacity, queue may be longer.
Queue shown is maximum after two cycles.

m Volume for 95th percentile queue is metered by upstream signal.

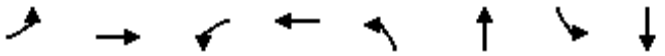

Lane Group	EBL	EBT	WBL	WBT	NBL	NBT	SBL	SBT
Lane Group Flow (vph)	291	87	39	223	34	995	61	1472
v/c Ratio	1.07	0.17	0.12	0.21	0.14	0.64	0.19	0.97
Control Delay	115.4	10.9	32.2	1.5	17.4	16.5	10.4	48.2
Queue Delay	0.0	0.0	0.0	0.0	0.0	0.0	0.0	0.0
Total Delay	115.4	10.9	32.2	1.5	17.4	16.5	10.4	48.2
Queue Length 50th (ft)	~249	9	22	0	8	132	15	604
Queue Length 95th (ft)	#427	48	51	9	m13	m175	m27	m#744
Internal Link Dist (ft)		586		1264		592		237
Turn Bay Length (ft)								
Base Capacity (vph)	272	508	325	1048	244	1547	318	1523
Starvation Cap Reductn	0	0	0	0	0	0	0	0
Spillback Cap Reductn	0	0	0	0	0	0	0	0
Storage Cap Reductn	0	0	0	0	0	0	0	0
Reduced v/c Ratio	1.07	0.17	0.12	0.21	0.14	0.64	0.19	0.97

Intersection Summary

~ Volume exceeds capacity, queue is theoretically infinite.
Queue shown is maximum after two cycles.

95th percentile volume exceeds capacity, queue may be longer.
Queue shown is maximum after two cycles.

m Volume for 95th percentile queue is metered by upstream signal.

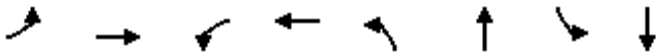

Lane Group	EBL	EBT	WBL	WBT	NBL	NBT	SBL	SBT
Lane Group Flow (vph)	196	643	31	354	127	759	138	1087
v/c Ratio	1.26	0.66	0.19	0.35	0.37	0.73	0.72	1.54
Control Delay	203.9	39.0	51.4	28.9	55.3	53.7	79.6	290.1
Queue Delay	0.0	0.0	0.0	0.0	0.0	0.0	0.0	0.0
Total Delay	203.9	39.0	51.4	28.9	55.3	53.7	79.6	290.1
Queue Length 50th (ft)	~191	218	22	95	103	323	115	~639
Queue Length 95th (ft)	#342	285	54	138	m164	392	m125	m#680
Internal Link Dist (ft)		1246		1246		2598		592
Turn Bay Length (ft)								
Base Capacity (vph)	155	980	167	1011	341	1042	192	708
Starvation Cap Reductn	0	0	0	0	0	0	0	0
Spillback Cap Reductn	0	0	0	0	0	0	0	0
Storage Cap Reductn	0	0	0	0	0	0	0	0
Reduced v/c Ratio	1.26	0.66	0.19	0.35	0.37	0.73	0.72	1.54

Intersection Summary

~ Volume exceeds capacity, queue is theoretically infinite.
Queue shown is maximum after two cycles.

95th percentile volume exceeds capacity, queue may be longer.
Queue shown is maximum after two cycles.

m Volume for 95th percentile queue is metered by upstream signal.

Lane Group	EBL	EBT	EBR	WBL	WBT	NBT	SBT
Lane Group Flow (vph)	25	655	77	43	409	228	85
v/c Ratio	0.08	0.93	0.12	0.31	0.31	0.34	0.13
Control Delay	9.2	38.2	3.4	16.4	8.5	7.8	7.7
Queue Delay	0.0	0.0	0.0	0.0	0.0	0.0	0.0
Total Delay	9.2	38.2	3.4	16.4	8.5	7.8	7.7
Queue Length 50th (ft)	4	152	0	7	30	24	10
Queue Length 95th (ft)	14	#316	16	27	52	58	29
Internal Link Dist (ft)		1246			1030	2590	573
Turn Bay Length (ft)							
Base Capacity (vph)	322	708	648	141	1349	672	640
Starvation Cap Reductn	0	0	0	0	0	0	0
Spillback Cap Reductn	0	0	0	0	0	0	0
Storage Cap Reductn	0	0	0	0	0	0	0
Reduced v/c Ratio	0.08	0.93	0.12	0.30	0.30	0.34	0.13

Intersection Summary

95th percentile volume exceeds capacity, queue may be longer.
Queue shown is maximum after two cycles.

Lane Group	EBT	EBR	WBT	WBR	NBL	NBT	SBL	SBT
Lane Group Flow (vph)	235	101	210	112	137	973	164	1044
v/c Ratio	0.59	0.20	0.50	0.21	0.43	0.64	0.85	0.83
Control Delay	43.0	7.0	40.0	6.7	42.2	25.3	53.5	49.9
Queue Delay	0.0	0.0	0.0	0.0	0.0	0.0	0.0	0.0
Total Delay	43.0	7.0	40.0	6.7	42.2	25.3	53.5	49.9
Queue Length 50th (ft)	155	0	135	0	63	213	133	420
Queue Length 95th (ft)	243	41	214	42	m105	292	m109	m317
Internal Link Dist (ft)	1249		128			473		2598
Turn Bay Length (ft)								
Base Capacity (vph)	401	514	417	522	316	1529	192	1265
Starvation Cap Reductn	0	0	0	0	0	0	0	0
Spillback Cap Reductn	0	0	0	0	0	0	0	0
Storage Cap Reductn	0	0	0	0	0	0	0	0
Reduced v/c Ratio	0.59	0.20	0.50	0.21	0.43	0.64	0.85	0.83

Intersection Summary

m Volume for 95th percentile queue is metered by upstream signal.

Lane Group	EBT	WBT	NBL	NBT	SBL	SBT
Lane Group Flow (vph)	445	340	63	989	123	1113
v/c Ratio	0.58	0.46	0.33	0.71	0.48	0.72
Control Delay	38.8	32.4	52.8	31.8	65.1	43.4
Queue Delay	0.0	0.0	0.0	0.0	0.0	0.0
Total Delay	38.8	32.4	52.8	31.8	65.1	43.4
Queue Length 50th (ft)	151	98	45	324	79	359
Queue Length 95th (ft)	207	145	91	403	m109	441
Internal Link Dist (ft)	1242	1247		3087		2026
Turn Bay Length (ft)						
Base Capacity (vph)	766	733	192	1399	254	1545
Starvation Cap Reductn	0	0	0	0	0	0
Spillback Cap Reductn	0	0	0	0	0	0
Storage Cap Reductn	0	0	0	0	0	0
Reduced v/c Ratio	0.58	0.46	0.33	0.71	0.48	0.72

Intersection Summary

m Volume for 95th percentile queue is metered by upstream signal.

Lane Group	EBT	WBT	WBR	NBL	NBT	SBL	SBT
Lane Group Flow (vph)	28	122	79	6	836	223	1031
v/c Ratio	0.05	0.24	0.12	0.04	0.62	1.38	0.77
Control Delay	7.9	10.5	3.3	9.3	12.8	225.8	16.8
Queue Delay	0.0	0.0	0.0	0.0	0.0	0.0	0.0
Total Delay	7.9	10.5	3.3	9.3	12.8	225.8	16.8
Queue Length 50th (ft)	4	20	0	1	81	~81	113
Queue Length 95th (ft)	14	47	17	6	127	#181	#177
Internal Link Dist (ft)	368	326			1046		1176
Turn Bay Length (ft)							
Base Capacity (vph)	573	518	647	139	1341	162	1340
Starvation Cap Reductn	0	0	0	0	0	0	0
Spillback Cap Reductn	0	0	0	0	0	0	0
Storage Cap Reductn	0	0	0	0	0	0	0
Reduced v/c Ratio	0.05	0.24	0.12	0.04	0.62	1.38	0.77

Intersection Summary

~ Volume exceeds capacity, queue is theoretically infinite.
Queue shown is maximum after two cycles.

95th percentile volume exceeds capacity, queue may be longer.
Queue shown is maximum after two cycles.

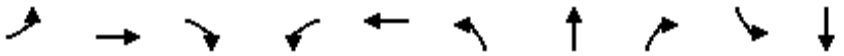

Lane Group	EBL	EBT	EBR	WBL	WBT	NBL	NBT	NBR	SBL	SBT
Lane Group Flow (vph)	66	242	744	465	414	494	1490	327	61	1827
v/c Ratio	0.10	0.32	0.69	0.59	0.30	1.72	0.73	0.39	0.21	0.90
Control Delay	9.0	10.9	14.7	14.4	9.8	358.5	14.1	3.1	11.3	20.9
Queue Delay	0.0	0.0	0.0	0.0	0.0	0.0	0.0	0.0	0.0	0.0
Total Delay	9.0	10.9	14.7	14.4	9.8	358.5	14.1	3.1	11.3	20.9
Queue Length 50th (ft)	5	41	80	45	35	~103	112	0	5	152
Queue Length 95th (ft)	13	80	134	82	60	#145	155	35	15	#250
Internal Link Dist (ft)		1364			960		482			909
Turn Bay Length (ft)										
Base Capacity (vph)	658	745	1077	786	1390	287	2034	829	287	2032
Starvation Cap Reductn	0	0	0	0	0	0	0	0	0	0
Spillback Cap Reductn	0	0	0	0	0	0	0	0	0	0
Storage Cap Reductn	0	0	0	0	0	0	0	0	0	0
Reduced v/c Ratio	0.10	0.32	0.69	0.59	0.30	1.72	0.73	0.39	0.21	0.90

Intersection Summary

~ Volume exceeds capacity, queue is theoretically infinite.
Queue shown is maximum after two cycles.

95th percentile volume exceeds capacity, queue may be longer.
Queue shown is maximum after two cycles.

Lane Group	WBL	WBT	WBR	NBL	NBT	SBT	SBR
Lane Group Flow (vph)	283	540	276	408	1722	1862	1145
v/c Ratio	0.58	0.57	0.55	0.54	0.57	1.13	1.18
Control Delay	36.6	32.5	28.4	14.9	16.8	104.0	108.4
Queue Delay	0.4	0.2	0.0	0.0	49.0	0.0	0.0
Total Delay	37.0	32.7	28.4	14.9	65.8	104.0	108.4
Queue Length 50th (ft)	181	176	136	58	482	~561	~627
Queue Length 95th (ft)	280	239	231	m56	m410	#658	#885
Internal Link Dist (ft)		1705			334	482	
Turn Bay Length (ft)							
Base Capacity (vph)	492	945	505	753	3027	1641	969
Starvation Cap Reductn	0	0	0	0	1741	0	0
Spillback Cap Reductn	36	58	0	0	0	0	0
Storage Cap Reductn	0	0	0	0	0	0	0
Reduced v/c Ratio	0.62	0.61	0.55	0.54	1.34	1.13	1.18

Intersection Summary

~ Volume exceeds capacity, queue is theoretically infinite.
Queue shown is maximum after two cycles.

95th percentile volume exceeds capacity, queue may be longer.
Queue shown is maximum after two cycles.

m Volume for 95th percentile queue is metered by upstream signal.

Lane Group	EBL	EBT	EBR	NBT	NBR	SBL	SBT
Lane Group Flow (vph)	315	316	496	1499	571	535	1851
v/c Ratio	0.60	0.57	0.88	1.22	0.76	0.54	0.62
Control Delay	36.2	35.1	48.7	135.8	6.4	40.0	25.0
Queue Delay	0.0	0.0	0.0	1.3	0.0	0.0	7.5
Total Delay	36.2	35.1	48.7	137.1	6.4	40.0	32.6
Queue Length 50th (ft)	193	191	294	~468	61	131	323
Queue Length 95th (ft)	294	289	#490	m#422	m54	m127	m301
Internal Link Dist (ft)		1625		463			334
Turn Bay Length (ft)							
Base Capacity (vph)	528	557	565	1225	755	990	2981
Starvation Cap Reductn	0	0	0	0	0	0	1095
Spillback Cap Reductn	0	0	0	301	0	0	0
Storage Cap Reductn	0	0	0	0	0	0	0
Reduced v/c Ratio	0.60	0.57	0.88	1.62	0.76	0.54	0.98

Intersection Summary

~ Volume exceeds capacity, queue is theoretically infinite.
Queue shown is maximum after two cycles.

95th percentile volume exceeds capacity, queue may be longer.
Queue shown is maximum after two cycles.

m Volume for 95th percentile queue is metered by upstream signal.

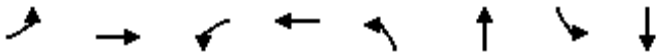

Lane Group	EBL	EBT	WBL	WBT	NBL	NBT	SBL	SBT
Lane Group Flow (vph)	368	33	10	157	51	1602	154	2191
v/c Ratio	0.99	0.06	0.02	0.14	0.22	1.10	0.65	1.05
Control Delay	83.2	12.5	25.8	0.2	45.3	76.4	55.2	73.1
Queue Delay	0.0	0.0	0.0	0.0	0.0	0.0	0.0	0.0
Total Delay	83.2	12.5	25.8	0.2	45.3	76.4	55.2	73.1
Queue Length 50th (ft)	257	4	5	0	38	~641	102	~332
Queue Length 95th (ft)	#454	26	18	0	m37	m271	m152	#623
Internal Link Dist (ft)		586		1264		592		237
Turn Bay Length (ft)								
Base Capacity (vph)	371	549	419	1161	236	1460	236	2078
Starvation Cap Reductn	0	0	0	0	0	0	0	0
Spillback Cap Reductn	0	0	0	0	0	0	0	0
Storage Cap Reductn	0	0	0	0	0	0	0	0
Reduced v/c Ratio	0.99	0.06	0.02	0.14	0.22	1.10	0.65	1.05

Intersection Summary

~ Volume exceeds capacity, queue is theoretically infinite.
Queue shown is maximum after two cycles.

95th percentile volume exceeds capacity, queue may be longer.
Queue shown is maximum after two cycles.

m Volume for 95th percentile queue is metered by upstream signal.

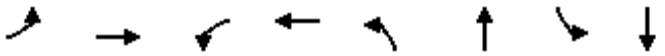

Lane Group	EBL	EBT	WBL	WBT	NBL	NBT	SBL	SBT
Lane Group Flow (vph)	340	384	21	450	168	1096	159	1496
v/c Ratio	1.66	0.32	0.09	0.35	0.60	1.20	1.00	2.27
Control Delay	348.9	23.1	42.3	18.3	55.7	138.1	101.8	603.0
Queue Delay	0.0	0.0	0.0	0.0	0.0	0.9	0.0	0.0
Total Delay	348.9	23.1	42.3	18.3	55.7	139.0	101.8	603.0
Queue Length 50th (ft)	~349	86	13	81	127	~511	121	~931
Queue Length 95th (ft)	#531	126	37	124	m187	#648	m119	m#880
Internal Link Dist (ft)		1246		1246		2598		592
Turn Bay Length (ft)								
Base Capacity (vph)	205	1194	236	1285	281	915	159	658
Starvation Cap Reductn	0	0	0	0	0	0	0	0
Spillback Cap Reductn	0	0	0	3	0	142	0	0
Storage Cap Reductn	0	0	0	0	0	0	0	0
Reduced v/c Ratio	1.66	0.32	0.09	0.35	0.60	1.42	1.00	2.27

Intersection Summary

~ Volume exceeds capacity, queue is theoretically infinite.
Queue shown is maximum after two cycles.

95th percentile volume exceeds capacity, queue may be longer.
Queue shown is maximum after two cycles.

m Volume for 95th percentile queue is metered by upstream signal.

Lane Group	EBL	EBT	EBR	WBL	WBT	NBT	SBT
Lane Group Flow (vph)	4	355	97	49	410	204	103
v/c Ratio	0.01	0.60	0.17	0.19	0.36	0.28	0.14
Control Delay	8.5	15.9	3.5	11.3	10.5	8.6	8.4
Queue Delay	0.0	0.0	0.0	0.0	0.0	0.0	0.0
Total Delay	8.5	15.9	3.5	11.3	10.5	8.6	8.4
Queue Length 50th (ft)	1	64	0	8	33	23	12
Queue Length 95th (ft)	5	120	19	24	56	67	39
Internal Link Dist (ft)		1246			1030	2590	573
Turn Bay Length (ft)							
Base Capacity (vph)	410	848	773	364	1605	731	711
Starvation Cap Reductn	0	0	0	0	0	0	0
Spillback Cap Reductn	0	0	0	0	0	0	0
Storage Cap Reductn	0	0	0	0	0	0	0
Reduced v/c Ratio	0.01	0.42	0.13	0.13	0.26	0.28	0.14

Intersection Summary

Lane Group	EBT	EBR	WBT	WBR	NBL	NBT	SBL	SBT
Lane Group Flow (vph)	216	106	166	49	114	1130	111	1299
v/c Ratio	0.60	0.21	0.39	0.10	0.32	0.68	0.47	0.93
Control Delay	43.3	7.2	36.1	0.4	44.9	30.9	33.2	42.7
Queue Delay	0.0	0.0	0.0	0.0	0.0	0.0	0.0	0.0
Total Delay	43.3	7.2	36.1	0.4	44.9	30.9	33.2	42.7
Queue Length 50th (ft)	133	0	96	0	61	305	83	492
Queue Length 95th (ft)	217	42	159	0	m111	387	m49	m247
Internal Link Dist (ft)	1249		128			193		2598
Turn Bay Length (ft)								
Base Capacity (vph)	359	502	428	500	358	1651	236	1390
Starvation Cap Reductn	0	0	0	0	0	0	0	0
Spillback Cap Reductn	0	0	0	0	0	0	0	0
Storage Cap Reductn	0	0	0	0	0	0	0	0
Reduced v/c Ratio	0.60	0.21	0.39	0.10	0.32	0.68	0.47	0.93

Intersection Summary

m Volume for 95th percentile queue is metered by upstream signal.

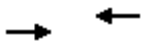

Lane Group	EBT	WBT
Lane Group Flow (vph)	277	228
v/c Ratio	0.15	0.06
Control Delay	0.2	0.0
Queue Delay	0.0	0.0
Total Delay	0.2	0.0
Queue Length 50th (ft)	0	0
Queue Length 95th (ft)	0	0
Internal Link Dist (ft)	179	555
Turn Bay Length (ft)		
Base Capacity (vph)	1863	3539
Starvation Cap Reductn	0	0
Spillback Cap Reductn	0	0
Storage Cap Reductn	0	0
Reduced v/c Ratio	0.15	0.06

Intersection Summary

Lane Group	EBT	WBT	NBL	NBT	SBL	SBT
Lane Group Flow (vph)	321	446	57	970	120	1229
v/c Ratio	0.47	0.49	0.24	0.60	0.51	0.76
Control Delay	33.5	20.4	45.1	23.9	62.4	40.5
Queue Delay	0.0	0.0	0.0	0.0	0.0	0.0
Total Delay	33.5	20.4	45.1	23.9	62.4	40.5
Queue Length 50th (ft)	92	76	36	259	73	373
Queue Length 95th (ft)	137	126	76	326	m92	m419
Internal Link Dist (ft)	1242	1247		3087		2026
Turn Bay Length (ft)						
Base Capacity (vph)	686	909	236	1613	236	1619
Starvation Cap Reductn	0	0	0	0	0	0
Spillback Cap Reductn	0	0	0	0	0	0
Storage Cap Reductn	0	0	0	0	0	0
Reduced v/c Ratio	0.47	0.49	0.24	0.60	0.51	0.76

Intersection Summary

m Volume for 95th percentile queue is metered by upstream signal.

Lane Group	EBT	WBT	WBR	NBL	NBT	SBL	SBT
Lane Group Flow (vph)	39	88	65	12	797	89	1395
v/c Ratio	0.06	0.16	0.10	0.08	0.56	0.45	0.99
Control Delay	7.4	9.7	3.4	10.0	11.9	19.2	37.4
Queue Delay	0.0	0.0	0.0	0.0	0.0	0.0	0.0
Total Delay	7.4	9.7	3.4	10.0	11.9	19.2	37.4
Queue Length 50th (ft)	5	14	0	2	75	16	176
Queue Length 95th (ft)	17	35	16	10	117	#55	#317
Internal Link Dist (ft)	368	326			1046		1176
Turn Bay Length (ft)							
Base Capacity (vph)	636	545	672	156	1413	196	1415
Starvation Cap Reductn	0	0	0	0	0	0	0
Spillback Cap Reductn	0	0	0	0	0	0	0
Storage Cap Reductn	0	0	0	0	0	0	0
Reduced v/c Ratio	0.06	0.16	0.10	0.08	0.56	0.45	0.99

Intersection Summary

95th percentile volume exceeds capacity, queue may be longer.
Queue shown is maximum after two cycles.

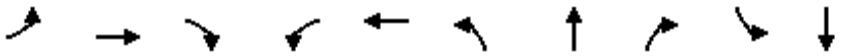

Lane Group	EBL	EBT	EBR	WBL	WBT	NBL	NBT	NBR	SBL	SBT
Lane Group Flow (vph)	344	581	671	320	412	516	1683	296	110	1398
v/c Ratio	0.55	0.82	0.62	1.11	0.32	1.91	0.87	0.42	0.41	0.73
Control Delay	14.6	25.3	13.3	106.6	10.0	442.3	19.6	6.8	15.4	13.9
Queue Delay	0.0	0.0	0.0	0.0	0.0	0.0	0.0	0.0	0.0	0.0
Total Delay	14.6	25.3	13.3	106.6	10.0	442.3	19.6	6.8	15.4	13.9
Queue Length 50th (ft)	32	126	69	~51	35	~111	138	22	9	102
Queue Length 95th (ft)	64	#279	116	#111	61	#158	#228	62	27	145
Internal Link Dist (ft)		1364			960		482			909
Turn Bay Length (ft)										
Base Capacity (vph)	620	706	1077	289	1302	270	1927	697	270	1924
Starvation Cap Reductn	0	0	0	0	0	0	0	0	0	0
Spillback Cap Reductn	0	0	0	0	0	0	0	0	0	0
Storage Cap Reductn	0	0	0	0	0	0	0	0	0	0
Reduced v/c Ratio	0.55	0.82	0.62	1.11	0.32	1.91	0.87	0.42	0.41	0.73

Intersection Summary

~ Volume exceeds capacity, queue is theoretically infinite.
Queue shown is maximum after two cycles.

95th percentile volume exceeds capacity, queue may be longer.
Queue shown is maximum after two cycles.

Lane Group	WBL	WBT	WBR	NBL	NBT	SBT	SBR
Lane Group Flow (vph)	304	566	352	540	1806	1623	731
v/c Ratio	0.80	0.88dr	0.84	0.88	0.58	0.85	0.75
Control Delay	57.7	43.9	52.9	46.0	15.8	38.4	10.3
Queue Delay	0.0	0.0	0.0	0.0	5.5	1.3	0.1
Total Delay	57.7	43.9	52.9	46.0	21.3	39.7	10.4
Queue Length 50th (ft)	240	221	242	170	484	414	52
Queue Length 95th (ft)	#400	296	#423	m#234	m444	480	218
Internal Link Dist (ft)		1705			334	482	
Turn Bay Length (ft)							
Base Capacity (vph)	378	772	420	614	3111	1907	971
Starvation Cap Reductn	0	0	0	0	1238	126	11
Spillback Cap Reductn	0	0	0	0	0	0	0
Storage Cap Reductn	0	0	0	0	0	0	0
Reduced v/c Ratio	0.80	0.73	0.84	0.88	0.96	0.91	0.76

Intersection Summary

95th percentile volume exceeds capacity, queue may be longer.
Queue shown is maximum after two cycles.

m Volume for 95th percentile queue is metered by upstream signal.

dr Defacto Right Lane. Recode with 1 though lane as a right lane.

Lane Group	EBL	EBT	EBR	NBT	NBR	SBL	SBT
Lane Group Flow (vph)	444	438	298	1268	558	554	1611
v/c Ratio	1.09	0.95	0.63	0.73	0.62	0.81	0.52
Control Delay	112.1	74.7	37.1	24.8	3.1	37.9	11.5
Queue Delay	0.0	0.0	0.0	1.1	0.0	0.0	0.5
Total Delay	112.1	74.7	37.1	25.9	3.1	37.9	11.9
Queue Length 50th (ft)	~408	350	165	263	51	148	176
Queue Length 95th (ft)	#623	#567	266	m286	m37	m227	245
Internal Link Dist (ft)		1625		463			334
Turn Bay Length (ft)							
Base Capacity (vph)	407	459	470	1746	899	686	3071
Starvation Cap Reductn	0	0	0	0	0	0	873
Spillback Cap Reductn	0	0	0	250	0	0	0
Storage Cap Reductn	0	0	0	0	0	0	0
Reduced v/c Ratio	1.09	0.95	0.63	0.85	0.62	0.81	0.73

Intersection Summary

~ Volume exceeds capacity, queue is theoretically infinite.
Queue shown is maximum after two cycles.

95th percentile volume exceeds capacity, queue may be longer.
Queue shown is maximum after two cycles.

m Volume for 95th percentile queue is metered by upstream signal.

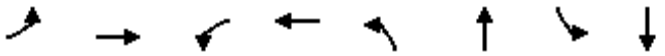

Lane Group	EBL	EBT	WBL	WBT	NBL	NBT	SBL	SBT
Lane Group Flow (vph)	392	119	53	300	48	1353	83	1994
v/c Ratio	1.65	0.23	0.18	0.29	0.20	0.87	0.34	0.91
Control Delay	342.2	10.5	33.4	7.1	21.3	22.8	22.2	38.9
Queue Delay	0.0	0.0	0.0	0.0	0.0	0.2	0.0	0.0
Total Delay	342.2	10.5	33.4	7.1	21.3	23.0	22.2	38.9
Queue Length 50th (ft)	~441	13	30	12	15	249	22	581
Queue Length 95th (ft)	#636	58	65	46	m15	m237	m66	617
Internal Link Dist (ft)		586		1264		592		237
Turn Bay Length (ft)								
Base Capacity (vph)	237	526	302	1025	244	1547	244	2196
Starvation Cap Reductn	0	0	0	0	0	17	0	0
Spillback Cap Reductn	0	0	0	0	0	0	0	0
Storage Cap Reductn	0	0	0	0	0	0	0	0
Reduced v/c Ratio	1.65	0.23	0.18	0.29	0.20	0.88	0.34	0.91

Intersection Summary

~ Volume exceeds capacity, queue is theoretically infinite.
Queue shown is maximum after two cycles.

95th percentile volume exceeds capacity, queue may be longer.
Queue shown is maximum after two cycles.

m Volume for 95th percentile queue is metered by upstream signal.

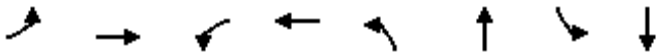

Lane Group	EBL	EBT	WBL	WBT	NBL	NBT	SBL	SBT
Lane Group Flow (vph)	264	873	48	476	174	1036	186	1476
v/c Ratio	1.70	0.89	0.29	0.47	0.51	0.99	0.97	2.08
Control Delay	375.5	51.3	53.9	32.0	58.6	75.6	109.3	523.3
Queue Delay	0.0	0.0	0.0	0.0	0.0	2.3	0.0	0.0
Total Delay	375.5	51.3	53.9	32.0	58.6	77.9	109.3	523.3
Queue Length 50th (ft)	~300	330	35	141	139	449	154	~980
Queue Length 95th (ft)	#470	#444	74	193	m171	m#572	m#191	m#1112
Internal Link Dist (ft)		1246		1246		2598		592
Turn Bay Length (ft)								
Base Capacity (vph)	155	981	167	1011	341	1042	192	708
Starvation Cap Reductn	0	0	0	0	0	0	0	0
Spillback Cap Reductn	0	0	0	0	0	10	0	0
Storage Cap Reductn	0	0	0	0	0	0	0	0
Reduced v/c Ratio	1.70	0.89	0.29	0.47	0.51	1.00	0.97	2.08

Intersection Summary

~ Volume exceeds capacity, queue is theoretically infinite.
Queue shown is maximum after two cycles.

95th percentile volume exceeds capacity, queue may be longer.
Queue shown is maximum after two cycles.

m Volume for 95th percentile queue is metered by upstream signal.

Lane Group	EBL	EBT	EBR	WBL	WBT	NBT	SBT
Lane Group Flow (vph)	34	884	105	58	558	296	117
v/c Ratio	0.10	1.06	0.14	0.36	0.35	0.61	0.25
Control Delay	8.5	67.6	2.9	17.3	7.4	15.0	9.2
Queue Delay	0.0	0.0	0.0	0.0	0.0	0.0	0.0
Total Delay	8.5	67.6	2.9	17.3	7.4	15.0	9.2
Queue Length 50th (ft)	4	~223	0	7	30	41	14
Queue Length 95th (ft)	18	#461	19	#46	73	88	37
Internal Link Dist (ft)		1246			1030	2590	573
Turn Bay Length (ft)							
Base Capacity (vph)	327	831	762	162	1572	741	735
Starvation Cap Reductn	0	0	0	0	0	0	0
Spillback Cap Reductn	0	0	0	0	0	0	0
Storage Cap Reductn	0	0	0	0	0	0	0
Reduced v/c Ratio	0.10	1.06	0.14	0.36	0.35	0.40	0.16

Intersection Summary

~ Volume exceeds capacity, queue is theoretically infinite.
Queue shown is maximum after two cycles.

95th percentile volume exceeds capacity, queue may be longer.
Queue shown is maximum after two cycles.

Lane Group	EBT	EBR	WBT	WBR	NBL	NBT	SBL	SBT
Lane Group Flow (vph)	322	136	294	157	175	1274	245	1407
v/c Ratio	1.09	0.25	1.00	0.28	0.55	0.83	1.28	1.11
Control Delay	119.6	6.5	94.6	6.2	49.8	33.8	168.5	101.0
Queue Delay	0.0	0.0	0.0	0.0	0.0	0.0	0.0	0.0
Total Delay	119.6	6.5	94.6	6.2	49.8	33.8	168.5	101.0
Queue Length 50th (ft)	~281	0	227	0	122	437	~243	~669
Queue Length 95th (ft)	#465	47	#411	50	198	537	m126	m350
Internal Link Dist (ft)	1249		128			193		2598
Turn Bay Length (ft)								
Base Capacity (vph)	295	539	295	554	316	1530	192	1264
Starvation Cap Reductn	0	0	0	0	0	0	0	0
Spillback Cap Reductn	0	0	0	0	0	0	0	0
Storage Cap Reductn	0	0	0	0	0	0	0	0
Reduced v/c Ratio	1.09	0.25	1.00	0.28	0.55	0.83	1.28	1.11

Intersection Summary

~ Volume exceeds capacity, queue is theoretically infinite.
Queue shown is maximum after two cycles.

95th percentile volume exceeds capacity, queue may be longer.
Queue shown is maximum after two cycles.

m Volume for 95th percentile queue is metered by upstream signal.

Lane Group
Lane Group Flow (vph)
v/c Ratio
Control Delay
Queue Delay
Total Delay
Queue Length 50th (ft)
Queue Length 95th (ft)
Internal Link Dist (ft)
Turn Bay Length (ft)
Base Capacity (vph)
Starvation Cap Reductn
Spillback Cap Reductn
Storage Cap Reductn
Reduced v/c Ratio

Intersection Summary

Lane Group	EBT	WBT	NBL	NBT	SBL	SBT
Lane Group Flow (vph)	609	466	86	1344	166	1502
v/c Ratio	0.92	0.75	0.45	0.96	0.65	0.97
Control Delay	60.7	43.1	56.5	50.2	59.7	49.0
Queue Delay	0.0	0.0	0.0	0.0	0.0	0.0
Total Delay	60.7	43.1	56.5	50.2	59.7	49.0
Queue Length 50th (ft)	236	155	62	521	121	582
Queue Length 95th (ft)	#351	223	117	#683	199	#758
Internal Link Dist (ft)	1242	1247		3087		2026
Turn Bay Length (ft)						
Base Capacity (vph)	663	619	192	1400	254	1545
Starvation Cap Reductn	0	0	0	0	0	0
Spillback Cap Reductn	0	0	0	0	0	0
Storage Cap Reductn	0	0	0	0	0	0
Reduced v/c Ratio	0.92	0.75	0.45	0.96	0.65	0.97

Intersection Summary

95th percentile volume exceeds capacity, queue may be longer.
Queue shown is maximum after two cycles.

Lane Group	EBT	WBT	WBR	NBL	NBT	SBL	SBT
Lane Group Flow (vph)	42	164	111	8	1133	301	1390
v/c Ratio	0.08	0.33	0.18	0.06	0.84	2.17	1.04
Control Delay	8.2	11.7	7.2	9.6	20.1	565.8	52.2
Queue Delay	0.0	0.0	0.0	0.0	0.0	0.0	0.0
Total Delay	8.2	11.7	7.2	9.6	20.1	565.8	52.2
Queue Length 50th (ft)	6	28	11	1	126	~132	~196
Queue Length 95th (ft)	19	62	34	8	#236	#221	#327
Internal Link Dist (ft)	368	326			1046		1176
Turn Bay Length (ft)							
Base Capacity (vph)	545	497	622	139	1341	139	1340
Starvation Cap Reductn	0	0	0	0	0	0	0
Spillback Cap Reductn	0	0	0	0	0	0	0
Storage Cap Reductn	0	0	0	0	0	0	0
Reduced v/c Ratio	0.08	0.33	0.18	0.06	0.84	2.17	1.04

Intersection Summary

~ Volume exceeds capacity, queue is theoretically infinite.
Queue shown is maximum after two cycles.

95th percentile volume exceeds capacity, queue may be longer.
Queue shown is maximum after two cycles.

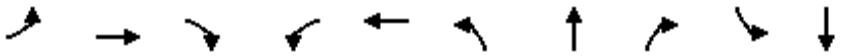

Lane Group	EBL	EBT	EBR	WBL	WBT	NBL	NBT	NBR	SBL	SBT
Lane Group Flow (vph)	66	242	744	465	414	494	1499	327	61	1827
v/c Ratio	0.10	0.32	0.69	0.59	0.30	1.72	0.74	0.39	0.21	0.90
Control Delay	9.0	10.9	14.7	14.4	9.8	358.5	14.2	3.1	11.3	20.9
Queue Delay	0.0	0.0	0.0	0.0	0.0	0.0	0.0	0.0	0.0	0.0
Total Delay	9.0	10.9	14.7	14.4	9.8	358.5	14.2	3.1	11.3	20.9
Queue Length 50th (ft)	5	41	80	45	35	~103	113	0	5	152
Queue Length 95th (ft)	13	80	134	82	60	#145	157	35	15	#250
Internal Link Dist (ft)		1364			960		482			909
Turn Bay Length (ft)										
Base Capacity (vph)	658	745	1077	786	1390	287	2034	829	287	2032
Starvation Cap Reductn	0	0	0	0	0	0	0	0	0	0
Spillback Cap Reductn	0	0	0	0	0	0	0	0	0	0
Storage Cap Reductn	0	0	0	0	0	0	0	0	0	0
Reduced v/c Ratio	0.10	0.32	0.69	0.59	0.30	1.72	0.74	0.39	0.21	0.90

Intersection Summary

~ Volume exceeds capacity, queue is theoretically infinite.
Queue shown is maximum after two cycles.

95th percentile volume exceeds capacity, queue may be longer.
Queue shown is maximum after two cycles.

Lane Group	WBL	WBT	WBR	NBL	NBT	SBT	SBR
Lane Group Flow (vph)	294	549	276	437	1731	1862	1145
v/c Ratio	0.60	0.58	0.55	0.58	0.57	1.13	1.19
Control Delay	37.3	32.7	28.4	15.0	16.8	104.0	111.1
Queue Delay	0.5	0.2	0.0	0.0	49.0	0.0	0.0
Total Delay	37.8	32.9	28.4	15.0	65.8	104.0	111.1
Queue Length 50th (ft)	190	179	136	62	484	~561	~634
Queue Length 95th (ft)	293	243	231	m58	m370	#658	#892
Internal Link Dist (ft)		1705			334	482	
Turn Bay Length (ft)							
Base Capacity (vph)	492	946	505	753	3027	1641	964
Starvation Cap Reductn	0	0	0	0	1742	0	0
Spillback Cap Reductn	38	60	0	0	0	0	0
Storage Cap Reductn	0	0	0	0	0	0	0
Reduced v/c Ratio	0.65	0.62	0.55	0.58	1.35	1.13	1.19

Intersection Summary

~ Volume exceeds capacity, queue is theoretically infinite.
Queue shown is maximum after two cycles.

95th percentile volume exceeds capacity, queue may be longer.
Queue shown is maximum after two cycles.

m Volume for 95th percentile queue is metered by upstream signal.

Lane Group	EBL	EBT	EBR	NBT	NBR	SBL	SBT
Lane Group Flow (vph)	325	325	496	1537	591	535	1870
v/c Ratio	0.62	0.58	0.88	1.25	0.78	0.54	0.63
Control Delay	36.9	35.6	48.7	148.8	6.8	40.1	25.1
Queue Delay	0.0	0.0	0.0	1.3	0.0	0.0	9.1
Total Delay	36.9	35.6	48.7	150.2	6.8	40.1	34.3
Queue Length 50th (ft)	202	198	294	~488	67	132	328
Queue Length 95th (ft)	305	300	#490	m#417	m54	m128	m306
Internal Link Dist (ft)		1625		463			334
Turn Bay Length (ft)							
Base Capacity (vph)	528	557	565	1225	759	990	2981
Starvation Cap Reductn	0	0	0	0	0	0	1094
Spillback Cap Reductn	0	0	0	304	0	0	0
Storage Cap Reductn	0	0	0	0	0	0	0
Reduced v/c Ratio	0.62	0.58	0.88	1.67	0.78	0.54	0.99

Intersection Summary

~ Volume exceeds capacity, queue is theoretically infinite.
Queue shown is maximum after two cycles.

95th percentile volume exceeds capacity, queue may be longer.
Queue shown is maximum after two cycles.

m Volume for 95th percentile queue is metered by upstream signal.

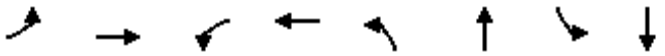

Lane Group	EBL	EBT	WBL	WBT	NBL	NBT	SBL	SBT
Lane Group Flow (vph)	368	33	10	157	60	1670	154	2229
v/c Ratio	0.99	0.06	0.02	0.14	0.25	1.14	0.65	1.07
Control Delay	83.2	12.5	25.8	0.2	53.0	88.8	55.0	79.4
Queue Delay	0.0	0.0	0.0	0.0	0.0	0.0	0.0	0.0
Total Delay	83.2	12.5	25.8	0.2	53.0	88.8	55.0	79.4
Queue Length 50th (ft)	257	4	5	0	45	~695	102	~389
Queue Length 95th (ft)	#454	26	18	0	m40	m163	m153	#732
Internal Link Dist (ft)		586		1264		592		237
Turn Bay Length (ft)								
Base Capacity (vph)	371	549	419	1161	236	1459	236	2079
Starvation Cap Reductn	0	0	0	0	0	0	0	0
Spillback Cap Reductn	0	0	0	0	0	0	0	0
Storage Cap Reductn	0	0	0	0	0	0	0	0
Reduced v/c Ratio	0.99	0.06	0.02	0.14	0.25	1.14	0.65	1.07

Intersection Summary

~ Volume exceeds capacity, queue is theoretically infinite.
Queue shown is maximum after two cycles.

95th percentile volume exceeds capacity, queue may be longer.
Queue shown is maximum after two cycles.

m Volume for 95th percentile queue is metered by upstream signal.

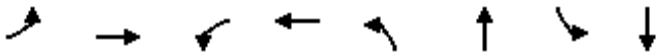

Lane Group	EBL	EBT	WBL	WBT	NBL	NBT	SBL	SBT
Lane Group Flow (vph)	340	404	41	450	178	1183	159	1535
v/c Ratio	1.66	0.34	0.17	0.35	0.63	1.29	1.00	2.34
Control Delay	348.9	22.2	43.8	18.3	34.0	171.6	83.0	626.3
Queue Delay	0.0	0.0	0.0	0.0	0.0	0.4	0.0	0.0
Total Delay	348.9	22.2	43.8	18.3	34.0	172.1	83.0	626.3
Queue Length 50th (ft)	~349	87	26	81	106	~578	121	~914
Queue Length 95th (ft)	#531	128	59	124	m157	#716	m117	m#846
Internal Link Dist (ft)		1246		1246		2598		592
Turn Bay Length (ft)								
Base Capacity (vph)	205	1200	236	1285	281	915	159	657
Starvation Cap Reductn	0	0	0	0	0	0	0	0
Spillback Cap Reductn	0	0	0	2	0	70	0	0
Storage Cap Reductn	0	0	0	0	0	0	0	0
Reduced v/c Ratio	1.66	0.34	0.17	0.35	0.63	1.40	1.00	2.34

Intersection Summary

~ Volume exceeds capacity, queue is theoretically infinite.
Queue shown is maximum after two cycles.

95th percentile volume exceeds capacity, queue may be longer.
Queue shown is maximum after two cycles.

m Volume for 95th percentile queue is metered by upstream signal.

Lane Group	EBL	EBT	EBR	WBL	WBT	NBT	SBT
Lane Group Flow (vph)	4	364	97	49	430	214	103
v/c Ratio	0.01	0.52	0.15	0.14	0.32	0.44	0.23
Control Delay	6.5	10.5	2.7	7.6	7.1	11.3	10.1
Queue Delay	0.0	0.0	0.0	0.0	0.0	0.0	0.0
Total Delay	6.5	10.5	2.7	7.6	7.1	11.3	10.1
Queue Length 50th (ft)	0	37	0	4	20	21	10
Queue Length 95th (ft)	4	104	17	20	50	72	40
Internal Link Dist (ft)		1246			1030	2590	573
Turn Bay Length (ft)							
Base Capacity (vph)	547	1174	1033	599	2213	974	927
Starvation Cap Reductn	0	0	0	0	0	0	0
Spillback Cap Reductn	0	0	0	0	0	0	0
Storage Cap Reductn	0	0	0	0	0	0	0
Reduced v/c Ratio	0.01	0.31	0.09	0.08	0.19	0.22	0.11

Intersection Summary

Lane Group	EBT	EBR	WBT	WBR	NBL	NBT	SBL	SBT
Lane Group Flow (vph)	236	106	226	88	143	1245	189	1299
v/c Ratio	0.76	0.21	0.67	0.18	0.40	0.76	0.80	0.93
Control Delay	54.4	7.2	47.0	5.2	45.8	32.2	26.8	29.7
Queue Delay	0.0	0.0	0.0	0.0	0.0	0.0	0.0	0.0
Total Delay	54.4	7.2	47.0	5.2	45.8	32.2	26.8	29.7
Queue Length 50th (ft)	153	0	142	0	79	347	141	515
Queue Length 95th (ft)	#276	42	231	29	m138	434	m79	m249
Internal Link Dist (ft)	1249		128			473		2598
Turn Bay Length (ft)								
Base Capacity (vph)	310	502	338	500	358	1643	236	1390
Starvation Cap Reductn	0	0	0	0	0	0	0	0
Spillback Cap Reductn	0	0	0	0	0	0	0	0
Storage Cap Reductn	0	0	0	0	0	0	0	0
Reduced v/c Ratio	0.76	0.21	0.67	0.18	0.40	0.76	0.80	0.93

Intersection Summary

95th percentile volume exceeds capacity, queue may be longer.
Queue shown is maximum after two cycles.
m Volume for 95th percentile queue is metered by upstream signal.

Lane Group	EBT	WBT	NBL	NBT	SBL	SBT
Lane Group Flow (vph)	350	476	57	1009	120	1238
v/c Ratio	0.58	0.52	0.24	0.63	0.51	0.76
Control Delay	36.9	19.7	45.1	24.5	62.4	41.9
Queue Delay	0.0	0.0	0.0	0.0	0.0	0.0
Total Delay	36.9	19.7	45.1	24.5	62.4	41.9
Queue Length 50th (ft)	106	77	36	274	71	377
Queue Length 95th (ft)	156	130	76	343	m83	m413
Internal Link Dist (ft)	1242	1247		3087		2026
Turn Bay Length (ft)						
Base Capacity (vph)	608	915	236	1613	236	1619
Starvation Cap Reductn	0	0	0	0	0	0
Spillback Cap Reductn	0	0	0	0	0	0
Storage Cap Reductn	0	0	0	0	0	0
Reduced v/c Ratio	0.58	0.52	0.24	0.63	0.51	0.76

Intersection Summary

m Volume for 95th percentile queue is metered by upstream signal.

Lane Group	EBT	WBT	WBR	NBL	NBT	SBL	SBT
Lane Group Flow (vph)	48	88	75	12	817	89	1405
v/c Ratio	0.08	0.16	0.11	0.08	0.58	0.47	0.99
Control Delay	7.7	9.7	3.3	10.0	12.1	20.7	39.1
Queue Delay	0.0	0.0	0.0	0.0	0.0	0.0	0.0
Total Delay	7.7	9.7	3.3	10.0	12.1	20.7	39.1
Queue Length 50th (ft)	6	14	0	2	77	16	178
Queue Length 95th (ft)	20	35	17	10	121	#63	#321
Internal Link Dist (ft)	368	326			1046		1176
Turn Bay Length (ft)							
Base Capacity (vph)	621	540	678	156	1413	189	1415
Starvation Cap Reductn	0	0	0	0	0	0	0
Spillback Cap Reductn	0	0	0	0	0	0	0
Storage Cap Reductn	0	0	0	0	0	0	0
Reduced v/c Ratio	0.08	0.16	0.11	0.08	0.58	0.47	0.99

Intersection Summary

95th percentile volume exceeds capacity, queue may be longer.
Queue shown is maximum after two cycles.

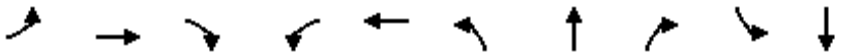

Lane Group	EBL	EBT	EBR	WBL	WBT	NBL	NBT	NBR	SBL	SBT
Lane Group Flow (vph)	344	581	671	320	412	516	1691	296	110	1398
v/c Ratio	0.55	0.82	0.62	1.11	0.32	1.91	0.88	0.42	0.41	0.73
Control Delay	14.6	25.3	13.3	106.6	10.0	442.3	19.9	6.8	15.4	13.9
Queue Delay	0.0	0.0	0.0	0.0	0.0	0.0	0.0	0.0	0.0	0.0
Total Delay	14.6	25.3	13.3	106.6	10.0	442.3	19.9	6.8	15.4	13.9
Queue Length 50th (ft)	32	126	69	~51	35	~111	139	22	9	102
Queue Length 95th (ft)	64	#279	116	#111	61	#158	#230	62	27	145
Internal Link Dist (ft)		1364			960		482			909
Turn Bay Length (ft)										
Base Capacity (vph)	620	706	1077	289	1302	270	1927	697	270	1924
Starvation Cap Reductn	0	0	0	0	0	0	0	0	0	0
Spillback Cap Reductn	0	0	0	0	0	0	0	0	0	0
Storage Cap Reductn	0	0	0	0	0	0	0	0	0	0
Reduced v/c Ratio	0.55	0.82	0.62	1.11	0.32	1.91	0.88	0.42	0.41	0.73

Intersection Summary

~ Volume exceeds capacity, queue is theoretically infinite.
Queue shown is maximum after two cycles.

95th percentile volume exceeds capacity, queue may be longer.
Queue shown is maximum after two cycles.

Lane Group	WBL	WBT	WBR	NBL	NBT	SBT	SBR
Lane Group Flow (vph)	308	578	352	381	1814	1623	731
v/c Ratio	0.81	0.88dr	0.84	0.62	0.58	0.85	0.74
Control Delay	58.7	44.7	52.9	34.9	15.9	38.4	8.9
Queue Delay	0.0	0.0	0.0	0.0	6.8	1.3	0.1
Total Delay	58.7	44.7	52.9	34.9	22.6	39.7	9.0
Queue Length 50th (ft)	245	228	242	106	504	414	37
Queue Length 95th (ft)	#406	305	#423	m140	m452	480	183
Internal Link Dist (ft)		1705			334	482	
Turn Bay Length (ft)							
Base Capacity (vph)	378	773	420	614	3111	1907	989
Starvation Cap Reductn	0	0	0	0	1251	126	11
Spillback Cap Reductn	0	0	0	0	0	0	0
Storage Cap Reductn	0	0	0	0	0	0	0
Reduced v/c Ratio	0.81	0.75	0.84	0.62	0.98	0.91	0.75

Intersection Summary

95th percentile volume exceeds capacity, queue may be longer.
Queue shown is maximum after two cycles.
m Volume for 95th percentile queue is metered by upstream signal.
dr Defacto Right Lane. Recode with 1 though lane as a right lane.

Lane Group	EBL	EBT	EBR	NBT	NBR	SBL	SBT
Lane Group Flow (vph)	444	438	314	1301	574	554	1628
v/c Ratio	1.09	0.95	0.67	0.75	0.63	0.81	0.53
Control Delay	112.1	74.7	38.8	24.7	3.0	38.1	11.6
Queue Delay	0.0	0.0	0.0	1.5	0.0	0.0	0.5
Total Delay	112.1	74.7	38.8	26.1	3.0	38.1	12.1
Queue Length 50th (ft)	~408	350	178	272	48	150	180
Queue Length 95th (ft)	#623	#567	284	m289	m36	m226	250
Internal Link Dist (ft)		1625		463			334
Turn Bay Length (ft)							
Base Capacity (vph)	407	459	470	1746	909	686	3071
Starvation Cap Reductn	0	0	0	0	0	0	871
Spillback Cap Reductn	0	0	0	254	0	0	0
Storage Cap Reductn	0	0	0	0	0	0	0
Reduced v/c Ratio	1.09	0.95	0.67	0.87	0.63	0.81	0.74

Intersection Summary

~ Volume exceeds capacity, queue is theoretically infinite.
Queue shown is maximum after two cycles.

95th percentile volume exceeds capacity, queue may be longer.
Queue shown is maximum after two cycles.

m Volume for 95th percentile queue is metered by upstream signal.

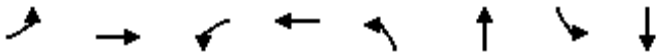

Lane Group	EBL	EBT	WBL	WBT	NBL	NBT	SBL	SBT
Lane Group Flow (vph)	392	119	53	300	57	1413	83	2028
v/c Ratio	1.65	0.23	0.18	0.29	0.23	0.91	0.34	0.92
Control Delay	342.2	10.5	33.4	7.3	24.4	24.5	22.0	40.2
Queue Delay	0.0	0.0	0.0	0.0	0.0	0.4	0.0	0.0
Total Delay	342.2	10.5	33.4	7.3	24.4	24.9	22.0	40.2
Queue Length 50th (ft)	~441	13	30	13	22	257	22	590
Queue Length 95th (ft)	#636	58	65	47	m20	m230	m65	631
Internal Link Dist (ft)		586		1264		592		237
Turn Bay Length (ft)								
Base Capacity (vph)	237	526	302	1023	244	1546	244	2197
Starvation Cap Reductn	0	0	0	0	0	16	0	0
Spillback Cap Reductn	0	0	0	0	0	0	0	0
Storage Cap Reductn	0	0	0	0	0	0	0	0
Reduced v/c Ratio	1.65	0.23	0.18	0.29	0.23	0.92	0.34	0.92

Intersection Summary

~ Volume exceeds capacity, queue is theoretically infinite.
Queue shown is maximum after two cycles.

95th percentile volume exceeds capacity, queue may be longer.
Queue shown is maximum after two cycles.

m Volume for 95th percentile queue is metered by upstream signal.

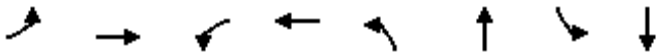

Lane Group	EBL	EBT	WBL	WBT	NBL	NBT	SBL	SBT
Lane Group Flow (vph)	264	889	65	476	182	1108	186	1509
v/c Ratio	1.70	0.91	0.39	0.47	0.53	1.06	0.97	2.13
Control Delay	375.5	53.0	56.9	32.0	56.7	90.0	108.1	543.2
Queue Delay	0.0	0.0	0.0	0.0	0.0	8.3	0.0	0.0
Total Delay	375.5	53.0	56.9	32.0	56.7	98.4	108.1	543.2
Queue Length 50th (ft)	~300	337	47	141	146	~511	155	~1008
Queue Length 95th (ft)	#470	#458	94	193	m167	m#596	m#186	m#1122
Internal Link Dist (ft)		1246		1246		2598		592
Turn Bay Length (ft)								
Base Capacity (vph)	155	981	167	1011	341	1041	192	708
Starvation Cap Reductn	0	0	0	0	0	0	0	0
Spillback Cap Reductn	0	0	0	0	0	20	0	0
Storage Cap Reductn	0	0	0	0	0	0	0	0
Reduced v/c Ratio	1.70	0.91	0.39	0.47	0.53	1.09	0.97	2.13

Intersection Summary

~ Volume exceeds capacity, queue is theoretically infinite.
Queue shown is maximum after two cycles.

95th percentile volume exceeds capacity, queue may be longer.
Queue shown is maximum after two cycles.

m Volume for 95th percentile queue is metered by upstream signal.

Lane Group	EBL	EBT	EBR	WBL	WBT	NBT	SBT
Lane Group Flow (vph)	34	893	105	58	576	305	117
v/c Ratio	0.11	1.08	0.14	0.36	0.37	0.62	0.25
Control Delay	8.7	73.7	2.9	17.5	7.6	15.3	9.1
Queue Delay	0.0	0.0	0.0	0.0	0.0	0.0	0.0
Total Delay	8.7	73.7	2.9	17.5	7.6	15.3	9.1
Queue Length 50th (ft)	4	~231	0	7	32	44	14
Queue Length 95th (ft)	18	#468	19	#46	76	92	37
Internal Link Dist (ft)		1246			1030	2590	573
Turn Bay Length (ft)							
Base Capacity (vph)	319	826	758	161	1562	738	729
Starvation Cap Reductn	0	0	0	0	0	0	0
Spillback Cap Reductn	0	0	0	0	0	0	0
Storage Cap Reductn	0	0	0	0	0	0	0
Reduced v/c Ratio	0.11	1.08	0.14	0.36	0.37	0.41	0.16

Intersection Summary

~ Volume exceeds capacity, queue is theoretically infinite.
Queue shown is maximum after two cycles.

95th percentile volume exceeds capacity, queue may be longer.
Queue shown is maximum after two cycles.

Lane Group	EBT	EBR	WBT	WBR	NBL	NBT	SBL	SBT
Lane Group Flow (vph)	339	136	346	191	202	1380	314	1407
v/c Ratio	1.36	0.25	1.42	0.33	0.64	0.90	1.64	1.11
Control Delay	218.7	6.5	244.0	6.1	50.6	36.7	320.7	100.5
Queue Delay	0.0	0.0	0.0	0.0	0.0	0.0	0.0	0.0
Total Delay	218.7	6.5	244.0	6.1	50.6	36.7	320.7	100.5
Queue Length 50th (ft)	~345	0	~360	0	114	396	~356	~668
Queue Length 95th (ft)	#531	47	#549	54	m125	m414	m#165	m348
Internal Link Dist (ft)	1249		128			473		2598
Turn Bay Length (ft)								
Base Capacity (vph)	250	539	244	578	316	1527	192	1264
Starvation Cap Reductn	0	0	0	0	0	0	0	0
Spillback Cap Reductn	0	0	0	0	0	0	0	0
Storage Cap Reductn	0	0	0	0	0	0	0	0
Reduced v/c Ratio	1.36	0.25	1.42	0.33	0.64	0.90	1.64	1.11

Intersection Summary

~ Volume exceeds capacity, queue is theoretically infinite.
Queue shown is maximum after two cycles.

95th percentile volume exceeds capacity, queue may be longer.
Queue shown is maximum after two cycles.

m Volume for 95th percentile queue is metered by upstream signal.

Lane Group	EBT	WBT	NBL	NBT	SBL	SBT
Lane Group Flow (vph)	634	491	86	1377	166	1510
v/c Ratio	1.00	0.79	0.45	0.98	0.65	0.98
Control Delay	77.4	44.6	56.5	54.9	66.1	54.6
Queue Delay	0.0	0.0	0.0	0.0	0.0	0.0
Total Delay	77.4	44.6	56.5	54.9	66.1	54.6
Queue Length 50th (ft)	255	163	62	543	112	528
Queue Length 95th (ft)	#387	#236	117	#712	m113	m484
Internal Link Dist (ft)	1242	1247		3087		2026
Turn Bay Length (ft)						
Base Capacity (vph)	635	618	192	1400	254	1545
Starvation Cap Reductn	0	0	0	0	0	0
Spillback Cap Reductn	0	0	0	0	0	0
Storage Cap Reductn	0	0	0	0	0	0
Reduced v/c Ratio	1.00	0.79	0.45	0.98	0.65	0.98

Intersection Summary

95th percentile volume exceeds capacity, queue may be longer.
Queue shown is maximum after two cycles.
m Volume for 95th percentile queue is metered by upstream signal.

Lane Group	EBT	WBT	WBR	NBL	NBT	SBL	SBT
Lane Group Flow (vph)	50	164	119	8	1150	301	1399
v/c Ratio	0.09	0.33	0.19	0.06	0.86	2.17	1.04
Control Delay	8.4	11.8	7.6	9.6	20.9	565.8	54.4
Queue Delay	0.0	0.0	0.0	0.0	0.0	0.0	0.0
Total Delay	8.4	11.8	7.6	9.6	20.9	565.8	54.4
Queue Length 50th (ft)	7	28	13	1	129	~132	~201
Queue Length 95th (ft)	22	62	37	8	#242	#221	#330
Internal Link Dist (ft)	368	326			1046		1176
Turn Bay Length (ft)							
Base Capacity (vph)	532	493	621	139	1340	139	1340
Starvation Cap Reductn	0	0	0	0	0	0	0
Spillback Cap Reductn	0	0	0	0	0	0	0
Storage Cap Reductn	0	0	0	0	0	0	0
Reduced v/c Ratio	0.09	0.33	0.19	0.06	0.86	2.17	1.04

Intersection Summary

~ Volume exceeds capacity, queue is theoretically infinite.
Queue shown is maximum after two cycles.

95th percentile volume exceeds capacity, queue may be longer.
Queue shown is maximum after two cycles.

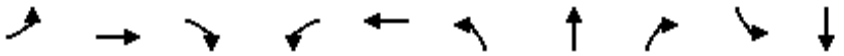

Lane Group	EBL	EBT	EBR	WBL	WBT	NBL	NBT	NBR	SBL	SBT
Lane Group Flow (vph)	66	242	744	465	414	494	1499	327	61	1827
v/c Ratio	0.10	0.32	0.69	0.59	0.30	1.72	0.74	0.39	0.21	0.90
Control Delay	9.0	10.9	14.7	14.4	9.8	358.5	14.2	3.1	11.3	20.9
Queue Delay	0.0	0.0	0.0	0.0	0.0	0.0	0.0	0.0	0.0	0.0
Total Delay	9.0	10.9	14.7	14.4	9.8	358.5	14.2	3.1	11.3	20.9
Queue Length 50th (ft)	5	41	80	45	35	~103	113	0	5	152
Queue Length 95th (ft)	13	80	134	82	60	#145	157	35	15	#250
Internal Link Dist (ft)		1364			960		482			909
Turn Bay Length (ft)										
Base Capacity (vph)	658	745	1077	786	1390	287	2034	829	287	2032
Starvation Cap Reductn	0	0	0	0	0	0	0	0	0	0
Spillback Cap Reductn	0	0	0	0	0	0	0	0	0	0
Storage Cap Reductn	0	0	0	0	0	0	0	0	0	0
Reduced v/c Ratio	0.10	0.32	0.69	0.59	0.30	1.72	0.74	0.39	0.21	0.90

Intersection Summary

~ Volume exceeds capacity, queue is theoretically infinite.
Queue shown is maximum after two cycles.

95th percentile volume exceeds capacity, queue may be longer.
Queue shown is maximum after two cycles.

Lane Group	WBL	WBT	WBR	NBL	NBT	SBT	SBR
Lane Group Flow (vph)	294	549	276	437	1731	1862	1145
v/c Ratio	0.60	0.58	0.55	0.58	0.57	1.13	1.19
Control Delay	37.3	32.7	28.4	47.3	7.6	104.0	111.1
Queue Delay	0.0	0.0	0.0	0.0	0.4	0.0	0.0
Total Delay	37.3	32.7	28.4	47.3	7.9	104.0	111.1
Queue Length 50th (ft)	190	179	136	143	89	~561	~634
Queue Length 95th (ft)	293	243	231	m174	163	#658	#892
Internal Link Dist (ft)		1705			334	482	
Turn Bay Length (ft)							
Base Capacity (vph)	492	946	505	753	3027	1641	964
Starvation Cap Reductn	0	0	0	0	638	0	0
Spillback Cap Reductn	0	0	0	0	0	0	0
Storage Cap Reductn	0	0	0	0	0	0	0
Reduced v/c Ratio	0.60	0.58	0.55	0.58	0.72	1.13	1.19

Intersection Summary

~ Volume exceeds capacity, queue is theoretically infinite.
Queue shown is maximum after two cycles.

95th percentile volume exceeds capacity, queue may be longer.
Queue shown is maximum after two cycles.

m Volume for 95th percentile queue is metered by upstream signal.

Lane Group	EBL	EBT	EBR	NBT	NBR	SBL	SBT
Lane Group Flow (vph)	325	325	496	1537	591	535	1870
v/c Ratio	0.62	0.58	0.88	0.86	0.63	0.84	0.63
Control Delay	36.9	35.6	48.7	31.1	12.1	27.6	3.0
Queue Delay	0.0	0.0	0.0	0.0	0.0	0.0	1.1
Total Delay	36.9	35.6	48.7	31.1	12.1	27.6	4.1
Queue Length 50th (ft)	202	198	294	397	197	183	33
Queue Length 95th (ft)	305	300	#490	m357	m163	m185	m53
Internal Link Dist (ft)		1625		463			334
Turn Bay Length (ft)							
Base Capacity (vph)	528	557	565	1779	931	635	2981
Starvation Cap Reductn	0	0	0	0	0	0	791
Spillback Cap Reductn	0	0	0	0	0	0	0
Storage Cap Reductn	0	0	0	0	0	0	0
Reduced v/c Ratio	0.62	0.58	0.88	0.86	0.63	0.84	0.85

Intersection Summary

95th percentile volume exceeds capacity, queue may be longer.
Queue shown is maximum after two cycles.
m Volume for 95th percentile queue is metered by upstream signal.

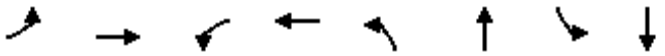

Lane Group	EBL	EBT	WBL	WBT	NBL	NBT	SBL	SBT
Lane Group Flow (vph)	368	33	10	157	60	1670	154	2229
v/c Ratio	0.99	0.06	0.02	0.14	0.25	1.14	0.65	1.07
Control Delay	83.2	12.5	25.8	0.2	42.8	96.9	65.4	64.3
Queue Delay	0.0	0.0	0.0	0.0	0.0	0.0	0.0	0.0
Total Delay	83.2	12.5	25.8	0.2	42.8	96.9	65.4	64.3
Queue Length 50th (ft)	257	4	5	0	29	~738	102	~639
Queue Length 95th (ft)	#454	26	18	0	m37	m#824	m153	#574
Internal Link Dist (ft)		586		1264		592		237
Turn Bay Length (ft)								
Base Capacity (vph)	371	549	419	1161	236	1459	236	2079
Starvation Cap Reductn	0	0	0	0	0	0	0	0
Spillback Cap Reductn	0	0	0	0	0	0	0	0
Storage Cap Reductn	0	0	0	0	0	0	0	0
Reduced v/c Ratio	0.99	0.06	0.02	0.14	0.25	1.14	0.65	1.07

Intersection Summary

~ Volume exceeds capacity, queue is theoretically infinite.
Queue shown is maximum after two cycles.

95th percentile volume exceeds capacity, queue may be longer.
Queue shown is maximum after two cycles.

m Volume for 95th percentile queue is metered by upstream signal.

Lane Group	EBL	EBT	WBL	WBT	NBT	SBT
Lane Group Flow (vph)	242	767	28	771	235	552
v/c Ratio	1.07	0.52	0.12	0.52	0.56	0.84
Control Delay	103.5	10.9	10.3	11.3	14.7	24.3
Queue Delay	0.0	0.0	0.0	0.0	0.0	0.0
Total Delay	103.5	10.9	10.3	11.3	14.7	24.3
Queue Length 50th (ft)	~77	71	4	75	35	97
Queue Length 95th (ft)	#180	112	17	116	87	#245
Internal Link Dist (ft)		1334		1246	2602	246
Turn Bay Length (ft)						
Base Capacity (vph)	226	1485	229	1489	476	742
Starvation Cap Reductn	0	0	0	0	0	0
Spillback Cap Reductn	0	0	0	0	0	0
Storage Cap Reductn	0	0	0	0	0	0
Reduced v/c Ratio	1.07	0.52	0.12	0.52	0.49	0.74

Intersection Summary

~ Volume exceeds capacity, queue is theoretically infinite.
Queue shown is maximum after two cycles.

95th percentile volume exceeds capacity, queue may be longer.
Queue shown is maximum after two cycles.

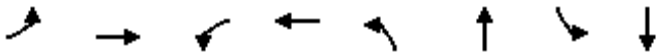

Lane Group	EBL	EBT	WBL	WBT	NBL	NBT	SBL	SBT
Lane Group Flow (vph)	340	404	41	450	178	1183	159	1535
v/c Ratio	1.14	0.41	0.38	0.71	1.12	0.86	0.91	1.10
Control Delay	138.8	27.7	59.9	39.9	160.2	19.6	33.1	89.4
Queue Delay	6.5	0.0	0.0	2.7	0.0	0.0	0.0	0.0
Total Delay	145.3	27.7	59.9	42.6	160.2	19.6	33.1	89.4
Queue Length 50th (ft)	~282	98	28	122	~149	313	99	~666
Queue Length 95th (ft)	#463	145	65	180	m#245	313	m95	m#594
Internal Link Dist (ft)		1246		1246		2598		592
Turn Bay Length (ft)								
Base Capacity (vph)	297	983	108	634	159	1380	175	1395
Starvation Cap Reductn	0	0	0	0	0	0	0	0
Spillback Cap Reductn	110	0	0	94	0	2	0	0
Storage Cap Reductn	0	0	0	0	0	0	0	0
Reduced v/c Ratio	1.82	0.41	0.38	0.83	1.12	0.86	0.91	1.10

Intersection Summary

~ Volume exceeds capacity, queue is theoretically infinite.
Queue shown is maximum after two cycles.

95th percentile volume exceeds capacity, queue may be longer.
Queue shown is maximum after two cycles.

m Volume for 95th percentile queue is metered by upstream signal.

Lane Group	EBL	EBT	EBR	WBL	WBT	NBT	SBT
Lane Group Flow (vph)	4	364	97	49	430	214	103
v/c Ratio	0.01	0.52	0.15	0.14	0.32	0.44	0.23
Control Delay	6.5	10.5	2.7	7.6	7.1	11.3	10.1
Queue Delay	0.0	0.0	0.0	0.0	0.0	0.0	0.0
Total Delay	6.5	10.5	2.7	7.6	7.1	11.3	10.1
Queue Length 50th (ft)	0	37	0	4	20	21	10
Queue Length 95th (ft)	4	104	17	20	50	72	40
Internal Link Dist (ft)		1246			1030	2590	573
Turn Bay Length (ft)							
Base Capacity (vph)	547	1174	1033	599	2213	974	927
Starvation Cap Reductn	0	0	0	0	0	0	0
Spillback Cap Reductn	0	0	0	0	0	0	0
Storage Cap Reductn	0	0	0	0	0	0	0
Reduced v/c Ratio	0.01	0.31	0.09	0.08	0.19	0.22	0.11

Intersection Summary

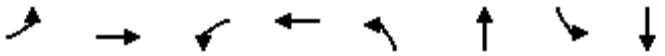

Lane Group	EBL	EBT	WBL	WBT	NBL	NBT	SBL	SBT
Lane Group Flow (vph)	94	248	74	240	143	1245	189	1299
v/c Ratio	0.42	0.51	0.34	0.49	0.40	0.76	0.80	0.93
Control Delay	40.2	33.5	37.9	34.0	29.6	16.1	58.2	50.9
Queue Delay	0.0	0.0	0.0	0.0	0.0	0.0	0.0	0.0
Total Delay	40.2	33.5	37.9	34.0	29.6	16.1	58.2	50.9
Queue Length 50th (ft)	55	128	42	127	92	401	143	430
Queue Length 95th (ft)	108	208	88	206	m153	458	m141	m403
Internal Link Dist (ft)		1249		128		473		2598
Turn Bay Length (ft)								
Base Capacity (vph)	223	491	216	491	358	1643	236	1390
Starvation Cap Reductn	0	0	0	0	0	0	0	0
Spillback Cap Reductn	0	0	0	0	0	0	0	0
Storage Cap Reductn	0	0	0	0	0	0	0	0
Reduced v/c Ratio	0.42	0.51	0.34	0.49	0.40	0.76	0.80	0.93

Intersection Summary

m Volume for 95th percentile queue is metered by upstream signal.

Lane Group	EBT	WBT	NBL	NBT	SBL	SBT
Lane Group Flow (vph)	350	476	57	1009	120	1238
v/c Ratio	0.60	0.54	0.36	0.64	0.45	0.68
Control Delay	38.3	20.6	53.5	25.4	50.6	25.2
Queue Delay	0.0	0.0	0.0	0.0	0.0	0.0
Total Delay	38.3	20.6	53.5	25.4	50.6	25.2
Queue Length 50th (ft)	107	80	38	280	87	471
Queue Length 95th (ft)	158	133	80	350	m102	m519
Internal Link Dist (ft)	1242	1247		3087		2026
Turn Bay Length (ft)						
Base Capacity (vph)	585	884	159	1581	266	1812
Starvation Cap Reductn	0	0	0	0	0	0
Spillback Cap Reductn	0	0	0	0	0	0
Storage Cap Reductn	0	0	0	0	0	0
Reduced v/c Ratio	0.60	0.54	0.36	0.64	0.45	0.68

Intersection Summary

m Volume for 95th percentile queue is metered by upstream signal.

Lane Group	EBT	WBT	WBR	NBL	NBT	SBL	SBT
Lane Group Flow (vph)	48	88	75	12	817	89	1405
v/c Ratio	0.08	0.16	0.11	0.08	0.58	0.47	0.99
Control Delay	7.7	9.7	3.3	10.0	12.1	20.7	39.1
Queue Delay	0.0	0.0	0.0	0.0	0.0	0.0	0.0
Total Delay	7.7	9.7	3.3	10.0	12.1	20.7	39.1
Queue Length 50th (ft)	6	14	0	2	77	16	178
Queue Length 95th (ft)	20	35	17	10	121	#63	#321
Internal Link Dist (ft)	368	326			1046		1176
Turn Bay Length (ft)							
Base Capacity (vph)	621	540	678	156	1413	189	1415
Starvation Cap Reductn	0	0	0	0	0	0	0
Spillback Cap Reductn	0	0	0	0	0	0	0
Storage Cap Reductn	0	0	0	0	0	0	0
Reduced v/c Ratio	0.08	0.16	0.11	0.08	0.58	0.47	0.99

Intersection Summary

95th percentile volume exceeds capacity, queue may be longer.
Queue shown is maximum after two cycles.

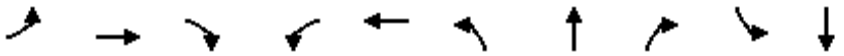

Lane Group	EBL	EBT	EBR	WBL	WBT	NBL	NBT	NBR	SBL	SBT
Lane Group Flow (vph)	344	581	671	320	412	516	1691	296	110	1398
v/c Ratio	0.55	0.82	0.62	1.11	0.32	1.91	0.88	0.42	0.41	0.73
Control Delay	14.6	25.3	13.3	106.6	10.0	442.3	19.9	6.8	15.4	13.9
Queue Delay	0.0	0.0	0.0	0.0	0.0	0.0	0.0	0.0	0.0	0.0
Total Delay	14.6	25.3	13.3	106.6	10.0	442.3	19.9	6.8	15.4	13.9
Queue Length 50th (ft)	32	126	69	~51	35	~111	139	22	9	102
Queue Length 95th (ft)	64	#279	116	#111	61	#158	#230	62	27	145
Internal Link Dist (ft)		1364			960		482			909
Turn Bay Length (ft)										
Base Capacity (vph)	620	706	1077	289	1302	270	1927	697	270	1924
Starvation Cap Reductn	0	0	0	0	0	0	0	0	0	0
Spillback Cap Reductn	0	0	0	0	0	0	0	0	0	0
Storage Cap Reductn	0	0	0	0	0	0	0	0	0	0
Reduced v/c Ratio	0.55	0.82	0.62	1.11	0.32	1.91	0.88	0.42	0.41	0.73

Intersection Summary

~ Volume exceeds capacity, queue is theoretically infinite.
Queue shown is maximum after two cycles.

95th percentile volume exceeds capacity, queue may be longer.
Queue shown is maximum after two cycles.

Lane Group	WBL	WBT	WBR	NBL	NBT	SBT	SBR
Lane Group Flow (vph)	308	578	352	381	1814	1623	731
v/c Ratio	0.81	0.88dr	0.84	0.62	0.58	0.85	0.74
Control Delay	58.7	44.7	52.9	53.6	1.3	38.4	8.9
Queue Delay	0.0	0.0	0.0	0.0	0.3	1.3	0.1
Total Delay	58.7	44.7	52.9	53.6	1.6	39.7	9.0
Queue Length 50th (ft)	245	228	242	126	13	414	37
Queue Length 95th (ft)	#406	305	#423	m157	m14	480	183
Internal Link Dist (ft)		1705			334	482	
Turn Bay Length (ft)							
Base Capacity (vph)	378	773	420	614	3111	1907	989
Starvation Cap Reductn	0	0	0	0	568	126	11
Spillback Cap Reductn	0	0	0	0	0	0	0
Storage Cap Reductn	0	0	0	0	0	0	0
Reduced v/c Ratio	0.81	0.75	0.84	0.62	0.71	0.91	0.75

Intersection Summary

95th percentile volume exceeds capacity, queue may be longer.
Queue shown is maximum after two cycles.
m Volume for 95th percentile queue is metered by upstream signal.
dr Defacto Right Lane. Recode with 1 though lane as a right lane.

Lane Group	EBL	EBT	EBR	NBT	NBR	SBL	SBT
Lane Group Flow (vph)	444	438	314	1301	574	554	1628
v/c Ratio	1.09	0.95	0.67	0.75	0.63	0.81	0.53
Control Delay	112.1	74.7	38.8	30.5	10.3	37.0	4.2
Queue Delay	0.0	0.0	0.0	0.0	0.0	0.0	0.5
Total Delay	112.1	74.7	38.8	30.5	10.3	37.0	4.7
Queue Length 50th (ft)	~408	350	178	341	142	205	53
Queue Length 95th (ft)	#623	#567	284	m343	m141	m263	74
Internal Link Dist (ft)		1625		463			334
Turn Bay Length (ft)							
Base Capacity (vph)	407	459	470	1746	909	686	3071
Starvation Cap Reductn	0	0	0	0	0	0	844
Spillback Cap Reductn	0	0	0	0	0	0	0
Storage Cap Reductn	0	0	0	0	0	0	0
Reduced v/c Ratio	1.09	0.95	0.67	0.75	0.63	0.81	0.73

Intersection Summary

~ Volume exceeds capacity, queue is theoretically infinite.
Queue shown is maximum after two cycles.

95th percentile volume exceeds capacity, queue may be longer.
Queue shown is maximum after two cycles.

m Volume for 95th percentile queue is metered by upstream signal.

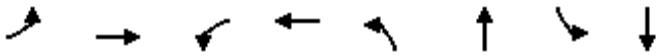

Lane Group	EBL	EBT	WBL	WBT	NBL	NBT	SBL	SBT
Lane Group Flow (vph)	392	119	53	300	57	1413	83	2028
v/c Ratio	1.65	0.23	0.18	0.29	0.23	0.91	0.34	0.92
Control Delay	342.2	10.5	33.4	7.3	19.8	28.4	22.3	30.0
Queue Delay	0.0	0.0	0.0	0.0	0.0	0.4	0.0	8.4
Total Delay	342.2	10.5	33.4	7.3	19.8	28.8	22.3	38.4
Queue Length 50th (ft)	~441	13	30	13	18	278	11	532
Queue Length 95th (ft)	#636	58	65	47	m25	m362	m53	619
Internal Link Dist (ft)		586		1264		592		237
Turn Bay Length (ft)								
Base Capacity (vph)	237	526	302	1023	244	1546	244	2197
Starvation Cap Reductn	0	0	0	0	0	16	0	0
Spillback Cap Reductn	0	2	0	0	0	0	0	171
Storage Cap Reductn	0	0	0	0	0	0	0	0
Reduced v/c Ratio	1.65	0.23	0.18	0.29	0.23	0.92	0.34	1.00

Intersection Summary

~ Volume exceeds capacity, queue is theoretically infinite.
Queue shown is maximum after two cycles.

95th percentile volume exceeds capacity, queue may be longer.
Queue shown is maximum after two cycles.

m Volume for 95th percentile queue is metered by upstream signal.

Lane Group	EBL	EBT	WBL	WBT	NBT	SBT
Lane Group Flow (vph)	214	1206	38	684	276	304
v/c Ratio	0.78	0.78	0.24	0.44	0.60	0.54
Control Delay	38.1	15.5	13.0	9.0	16.4	10.5
Queue Delay	0.0	0.0	0.0	0.0	0.0	0.0
Total Delay	38.1	15.5	13.0	9.0	16.4	10.5
Queue Length 50th (ft)	35	100	4	46	45	31
Queue Length 95th (ft)	#153	#264	26	103	94	76
Internal Link Dist (ft)		1334		1246	2602	246
Turn Bay Length (ft)						
Base Capacity (vph)	274	1552	160	1556	688	796
Starvation Cap Reductn	0	0	0	0	0	0
Spillback Cap Reductn	0	0	0	0	0	0
Storage Cap Reductn	0	0	0	0	0	0
Reduced v/c Ratio	0.78	0.78	0.24	0.44	0.40	0.38

Intersection Summary

95th percentile volume exceeds capacity, queue may be longer.
Queue shown is maximum after two cycles.

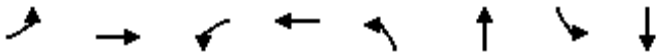

Lane Group	EBL	EBT	WBL	WBT	NBL	NBT	SBL	SBT
Lane Group Flow (vph)	264	889	65	476	182	1108	186	1509
v/c Ratio	1.09	1.03	0.86	0.92	1.09	0.83	0.91	1.07
Control Delay	131.3	79.5	125.4	71.1	136.6	56.0	96.0	74.3
Queue Delay	0.0	0.0	0.0	0.0	0.0	0.4	0.0	0.0
Total Delay	131.3	79.5	125.4	71.1	136.6	56.5	96.0	74.3
Queue Length 50th (ft)	~230	~376	51	178	~164	482	155	~655
Queue Length 95th (ft)	#400	#508	#138	#281	m#197	m535	m#175	m#769
Internal Link Dist (ft)		1246		1246		2598		592
Turn Bay Length (ft)								
Base Capacity (vph)	242	867	76	515	167	1331	204	1410
Starvation Cap Reductn	0	0	0	0	0	0	0	0
Spillback Cap Reductn	0	0	0	0	0	36	0	0
Storage Cap Reductn	0	0	0	0	0	0	0	0
Reduced v/c Ratio	1.09	1.03	0.86	0.92	1.09	0.86	0.91	1.07

Intersection Summary

~ Volume exceeds capacity, queue is theoretically infinite.
Queue shown is maximum after two cycles.

95th percentile volume exceeds capacity, queue may be longer.
Queue shown is maximum after two cycles.

m Volume for 95th percentile queue is metered by upstream signal.

Lane Group	EBL	EBT	EBR	WBL	WBT	NBT	SBT
Lane Group Flow (vph)	34	893	105	58	576	305	117
v/c Ratio	0.11	1.08	0.14	0.36	0.37	0.62	0.25
Control Delay	8.7	73.7	2.9	17.5	7.6	15.3	9.1
Queue Delay	0.0	0.0	0.0	0.0	0.0	0.0	0.0
Total Delay	8.7	73.7	2.9	17.5	7.6	15.3	9.1
Queue Length 50th (ft)	4	~231	0	7	32	44	14
Queue Length 95th (ft)	18	#468	19	#46	76	92	37
Internal Link Dist (ft)		1246			1030	2590	573
Turn Bay Length (ft)							
Base Capacity (vph)	319	826	758	161	1562	738	729
Starvation Cap Reductn	0	0	0	0	0	0	0
Spillback Cap Reductn	0	0	0	0	0	0	0
Storage Cap Reductn	0	0	0	0	0	0	0
Reduced v/c Ratio	0.11	1.08	0.14	0.36	0.37	0.41	0.16

Intersection Summary

~ Volume exceeds capacity, queue is theoretically infinite.
Queue shown is maximum after two cycles.

95th percentile volume exceeds capacity, queue may be longer.
Queue shown is maximum after two cycles.

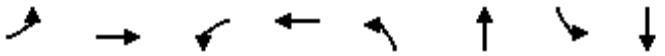

Lane Group	EBL	EBT	WBL	WBT	NBL	NBT	SBL	SBT
Lane Group Flow (vph)	96	379	105	432	202	1380	314	1407
v/c Ratio	0.96	0.74	0.77	0.85	0.64	0.90	1.64	1.11
Control Delay	123.7	45.8	73.9	53.0	28.9	15.3	321.4	95.5
Queue Delay	0.0	0.0	0.0	0.0	0.0	0.0	0.0	0.0
Total Delay	123.7	45.8	73.9	53.0	28.9	15.3	321.4	95.5
Queue Length 50th (ft)	73	249	74	292	127	233	~362	~669
Queue Length 95th (ft)	#187	368	#174	#467	m141	m334	m#348	m#615
Internal Link Dist (ft)		1249		128		473		2598
Turn Bay Length (ft)								
Base Capacity (vph)	100	510	137	511	316	1527	192	1264
Starvation Cap Reductn	0	0	0	0	0	0	0	0
Spillback Cap Reductn	0	0	0	0	0	0	0	0
Storage Cap Reductn	0	0	0	0	0	0	0	0
Reduced v/c Ratio	0.96	0.74	0.77	0.85	0.64	0.90	1.64	1.11

Intersection Summary

~ Volume exceeds capacity, queue is theoretically infinite.
Queue shown is maximum after two cycles.

95th percentile volume exceeds capacity, queue may be longer.
Queue shown is maximum after two cycles.

m Volume for 95th percentile queue is metered by upstream signal.

Lane Group	EBT	WBT	NBL	NBT	SBL	SBT
Lane Group Flow (vph)	634	491	86	1377	166	1510
v/c Ratio	0.97	0.77	0.80	0.91	0.86	0.89
Control Delay	69.3	41.9	99.5	40.7	75.9	37.7
Queue Delay	0.0	0.0	0.0	0.0	0.0	0.0
Total Delay	69.3	41.9	99.5	40.7	75.9	37.7
Queue Length 50th (ft)	252	160	67	508	131	597
Queue Length 95th (ft)	#378	230	#160	#663	m137	m579
Internal Link Dist (ft)	1242	1247		3087		2026
Turn Bay Length (ft)						
Base Capacity (vph)	655	641	108	1510	192	1706
Starvation Cap Reductn	0	0	0	0	0	0
Spillback Cap Reductn	0	0	0	0	0	0
Storage Cap Reductn	0	0	0	0	0	0
Reduced v/c Ratio	0.97	0.77	0.80	0.91	0.86	0.89

Intersection Summary

95th percentile volume exceeds capacity, queue may be longer.
Queue shown is maximum after two cycles.
m Volume for 95th percentile queue is metered by upstream signal.

Lane Group	EBT	WBT	WBR	NBL	NBT	SBL	SBT
Lane Group Flow (vph)	50	164	119	8	1150	301	1399
v/c Ratio	0.09	0.33	0.19	0.06	0.86	2.17	1.04
Control Delay	8.4	11.8	7.6	9.6	20.9	565.8	54.4
Queue Delay	0.0	0.0	0.0	0.0	0.0	0.0	0.0
Total Delay	8.4	11.8	7.6	9.6	20.9	565.8	54.4
Queue Length 50th (ft)	7	28	13	1	129	~132	~201
Queue Length 95th (ft)	22	62	37	8	#242	#221	#330
Internal Link Dist (ft)	368	326			1046		1176
Turn Bay Length (ft)							
Base Capacity (vph)	532	493	621	139	1340	139	1340
Starvation Cap Reductn	0	0	0	0	0	0	0
Spillback Cap Reductn	0	0	0	0	0	0	0
Storage Cap Reductn	0	0	0	0	0	0	0
Reduced v/c Ratio	0.09	0.33	0.19	0.06	0.86	2.17	1.04

Intersection Summary

~ Volume exceeds capacity, queue is theoretically infinite.
Queue shown is maximum after two cycles.

95th percentile volume exceeds capacity, queue may be longer.
Queue shown is maximum after two cycles.

Appendix D: Trip Generation

Cumulative Trip Generation

	Quantity	Unit[1]	AM Peak Hour In	AM Peak Hour Out	AM Peak Hour Total	PM Peak Hour In	PM Peak Hour Out	PM Peak Hour Total	Daily
P201900293/CUP - LOGISTICS WAREHOUSE									
ITE Usage Code - 150 - Warehouse									
Rates	174.8	GFA	0.13	0.04	0.17	0.05	0.14	0.19	1.74
Trips			23	7	30	9	24	33	304
Internal Capture	0	%	0	0	0	0	0	0	0
External Trips			23	7	30	9	24	33	304
Pass-By		%	0	0	0	0	0	0	0
Net External Trips			23	7	30	9	24	33	304
Net External Trips (PCE CONVERSION)			46	14	60	18	48	66	606
P201500091/CUP - High Cube Warehouse									
ITE Usage Code - 150 - Warehouse									
Rates	371.442	GFA	0.13	0.04	0.17	0.05	0.14	0.19	1.74
Trips			49	15	64	19	52	71	646
Internal Capture	0	%	0	0	0	0	0	0	0
External Trips			49	15	64	19	52	71	646
Pass-By		%	0	0	0	0	0	0	0
Net External Trips			49	15	64	19	52	71	646
Net External Trips (PCE CONVERSION)			98	30	128	38	104	142	1,287
P201600435/CUP - Warehouse									
ITE Usage Code - 150 - Warehouse									
Rates	184.77	GFA	0.13	0.04	0.17	0.05	0.14	0.19	1.74
Trips			24	7	31	9	26	35	321
Internal Capture	0	%	0	0	0	0	0	0	0
External Trips			24	7	31	9	26	35	321
Pass-By		%	0	0	0	0	0	0	0
Net External Trips			24	7	31	9	26	35	321
Net External Trips (PCE CONVERSION)			48	14	62	18	52	70	639
P201600435/CUP - Warehouse									
ITE Usage Code - 150 - Warehouse									
Rates	11.9	GFA	0.13	0.04	0.17	0.05	0.14	0.19	1.74
Trips			2	0	2	1	2	3	21
Internal Capture	0	%	0	0	0	0	0	0	0
External Trips			2	0	2	1	2	3	21
Pass-By		%	0	0	0	0	0	0	0
Net External Trips			2	0	2	1	2	3	21
Net External Trips (PCE CONVERSION)			4	0	4	2	4	6	42
P201500122/CF - Gas Station w/ Convenience Store									
ITE Usage Code - 945 - Gas Station with Convenience Store									
Rates	5.812	GFA	38.75	37.24	75.99	45.06	43.29	88.35	1440.02
Trips			225	216	441	262	252	514	8,369
Internal Capture	0	%	0	0	0	0	0	0	0
External Trips			225	216	441	262	252	514	8,369
Pass-By	60	%	-135	-130	-265	-157	-151	-308	-5,021
Net External Trips			90	86	176	105	101	206	3,348
P201500122/CF - Warehouse									

Cumulative Trip Generation

	Quantity	Unit[1]	AM Peak Hour In	AM Peak Hour Out	AM Peak Hour Total	PM Peak Hour In	PM Peak Hour Out	PM Peak Hour Total	Daily
ITE Usage Code - 150 - Warehouse									
Rates	697.277	GFA	0.13	0.04	0.17	0.05	0.14	0.19	1.74
Trips			91	27	118	36	97	133	1,213
Internal Capture	0	%	0	0	0	0	0	0	0
External Trips			91	27	118	36	97	133	1,213
Pass-By		%	0	0	0	0	0	0	0
Net External Trips			91	27	118	36	97	133	1,213
Net External Trips (PCE CONVERSION)			181	54	235	72	193	265	2,416
P201900307/CF - Gas Station w/ Convenience Store									
ITE Usage Code - 945 - Gas Station with Convenience Store									
Rates	5	GFA	38.75	37.24	75.99	45.06	43.29	88.35	1440.02
Trips			194	186	380	225	216	441	7,200
Internal Capture	0	%	0	0	0	0	0	0	0
External Trips			194	186	380	225	216	441	7,200
Pass-By	60	%	-116	-112	-228	-135	-130	-265	-4,320
Net External Trips			78	74	152	90	86	176	2,880
P201500122/CF - Warehouse									
ITE Usage Code - 150 - Warehouse									
Rates	505.906	GFA	0.13	0.04	0.17	0.05	0.14	0.19	1.74
Trips			66	20	86	26	70	96	880
Internal Capture	0	%	0	0	0	0	0	0	0
External Trips			66	20	86	26	70	96	880
Pass-By		%	0	0	0	0	0	0	0
Net External Trips			66	20	86	26	70	96	880
Net External Trips (PCE CONVERSION)			131	40	171	52	139	191	1,753
City of Rialto									
ITE Usage Code - 150 - Warehouse									
Rates	525.11	GFA	0.13	0.04	0.17	0.05	0.14	0.19	1.74
Trips			69	21	90	27	73	100	914
Internal Capture	0	%	0	0	0	0	0	0	0
External Trips			69	21	90	27	73	100	914
Pass-By		%	0	0	0	0	0	0	0
Net External Trips			69	21	90	27	73	100	914
Net External Trips (PCE CONVERSION)			137	42	179	54	145	199	1,821
P201800159/CF - Truck Terminal									
ITE Usage Code - 030 - Intermodal Truck Terminal									
Rates	30	GFA	0.93	1.04	1.97	0.97	0.90	1.87	N/A
Trips			28	31	59	29	27	56	
Internal Capture	0	%	0	0	0	0	0	0	
External Trips			28	31	59	29	27	56	
Pass-By		%	0	0	0	0	0	0	
Net External Trips			28	31	59	29	27	56	
Net External Trips (PCE CONVERSION)			52	57	109	54	50	104	

[1]GFA = thousand square feet gross floor area;

Source: Institute of Transportation Engineers *Trip Generation* , 10th Edition

Appendix E: Volume Worksheets

AM Cumulative Trip Distribution

Intersection 1: Cedar / Valley

SBL	
SBT	
SBR	
WBL	
WBT	
WBR	
NBL	
NBT	
NBR	
EBL	
EBT	
EBR	

Intersection 2: Cedar / I-10 WB

SBL	
SBT	
SBR	
WBL	44
WBT	
WBR	
NBL	13.1
NBT	
NBR	
EBL	
EBT	
EBR	

Intersection 3: Cedar / I-10 EB

SBL	
SBT	
SBR	
WBL	
WBT	
WBR	
NBL	
NBT	
NBR	16.4
EBL	
EBT	
EBR	41.5

Intersection 4: Cedar / Orange

SBL	24
SBT	35
SBR	49
WBL	7
WBT	
WBR	7
NBL	49
NBT	25
NBR	24
EBL	15
EBT	
EBR	15

Intersection 5: Linden / Slover

SBL	
SBT	
SBR	
WBL	
WBT	46.5
WBR	
NBL	
NBT	
NBR	
EBL	
EBT	26
EBR	

Intersection 6: Cedar / Slover

SBL	
SBT	66
SBR	12.5
WBL	
WBT	44
WBR	
NBL	12.5
NBT	117
NBR	
EBL	3.5
EBT	44
EBR	

Intersection 7: Larch / Slover

SBL	
SBT	
SBR	
WBL	
WBT	22.5

Intersection 8: Linden / Santa Ana

SBL	
SBT	
SBR	
WBL	
WBT	4.8

AM Cumulative Trip Distribution

WBR	
NBL	
NBT	
NBR	
EBL	
EBT	21.5
EBR	

WBR	
NBL	
NBT	
NBR	
EBL	
EBT	15.9
EBR	

Intersection 9: Cedar / Santa Ana

SBL	27.4
SBT	72.05
SBR	
WBL	
WBT	
WBR	8.4
NBL	
NBT	122.1
NBR	
EBL	
EBT	
EBR	

Intersection 10: Larch / Santa Ana

SBL	
SBT	
SBR	
WBL	
WBT	19.55
WBR	
NBL	
NBT	
NBR	
EBL	
EBT	36.95
EBR	

Intersection 11: Site DWY 1 / Santa Ana

SBL	
SBT	
SBR	
WBL	
WBT	19.55
WBR	
NBL	
NBT	
NBR	
EBL	
EBT	27.4
EBR	

Intersection 12: Site DWY 2 / Santa Ana

SBL	
SBT	
SBR	
WBL	
WBT	19.55
WBR	
NBL	
NBT	
NBR	
EBL	
EBT	27.4
EBR	

Intersection 13: Cedar / Site DWY 3

SBL	
SBT	72.05
SBR	
WBL	
WBT	
WBR	
NBL	
NBT	210.8
NBR	
EBL	
EBT	

Intersection 14: Cedar / Site DWY 4

SBL	
SBT	72.05
SBR	
WBL	
WBT	
WBR	
NBL	
NBT	210.8
NBR	
EBL	
EBT	

AM Cumulative Trip Distribution

EBR	

EBR	

Intersection 15: Linden / Jurupa

SBL	
SBT	
SBR	
WBL	
WBT	32
WBR	
NBL	
NBT	
NBR	
EBL	
EBT	64.75
EBR	

Intersection 16: Cedar / Jurupa

SBL	7.8
SBT	173
SBR	
WBL	8.55
WBT	96.75
WBR	8.55
NBL	
NBT	202.25
NBR	7.8
EBL	
EBT	96.75
EBR	

Intersection 17: Larch / Jurupa

SBL	
SBT	
SBR	
WBL	
WBT	81.85
WBR	
NBL	
NBT	
NBR	
EBL	
EBT	47.6
EBR	

Intersection 18: Cedar / El Rivino

SBL	
SBT	
SBR	
WBL	
WBT	
WBR	
NBL	
NBT	
NBR	
EBL	
EBT	
EBR	

PM Cumulative Trip Distribution

Intersection 1: Cedar / Valley

SBL	
SBT	
SBR	
WBL	
WBT	
WBR	
NBL	
NBT	
NBR	
EBL	
EBT	
EBR	

Intersection 2: Cedar / I-10 WB

SBL	
SBT	
SBR	
WBL	17
WBT	
WBR	
NBL	46.8
NBT	
NBR	
EBL	
EBT	
EBR	

Intersection 3: Cedar / I-10 EB

SBL	
SBT	
SBR	
WBL	
WBT	
WBR	
NBL	
NBT	
NBR	57.2
EBL	
EBT	
EBR	16

Intersection 4: Cedar / Orange

SBL	9
SBT	31.25
SBR	19
WBL	26
WBT	
WBR	26
NBL	19
NBT	37.25
NBR	9
EBL	52
EBT	
EBR	52

Intersection 5: Linden / Slover

SBL	
SBT	
SBR	
WBL	
WBT	35.25
WBR	
NBL	
NBT	
NBR	
EBL	
EBT	37.25
EBR	

Intersection 6: Cedar / Slover

SBL	
SBT	129.5
SBR	12.5
WBL	
WBT	51.5
WBR	
NBL	5
NBT	79.5
NBR	
EBL	12
EBT	51.5
EBR	

Intersection 7: Larch / Slover

SBL	
SBT	
SBR	
WBL	
WBT	26.25

Intersection 8: Linden / Santa Ana

SBL	
SBT	
SBR	
WBL	
WBT	11.75

WBR	
NBL	
NBT	
NBR	
EBL	
EBT	25.25
EBR	

WBR	
NBL	
NBT	
NBR	
EBL	
EBT	6.3
EBR	

Intersection 9: Cedar / Santa Ana

SBL	10.8
SBT	129.35
SBR	
WBL	
WBT	
WBR	29
NBL	
NBT	104.7
NBR	
EBL	
EBT	
EBR	

Intersection 10: Larch / Santa Ana

SBL	
SBT	
SBR	
WBL	
WBT	39.85
WBR	
NBL	
NBT	
NBR	
EBL	
EBT	23.15
EBR	

Intersection 11: Site DWY 1 / Santa Ana

SBL	
SBT	
SBR	
WBL	
WBT	39.85
WBR	
NBL	
NBT	
NBR	
EBL	
EBT	10.8
EBR	

Intersection 12: Site DWY 2 / Santa Ana

SBL	
SBT	
SBR	
WBL	
WBT	39.85
WBR	
NBL	
NBT	
NBR	
EBL	
EBT	10.8
EBR	

Intersection 13: Cedar / Site DWY 3

SBL	
SBT	129.35
SBR	
WBL	
WBT	
WBR	
NBL	
NBT	206.75
NBR	
EBL	
EBT	

Intersection 14: Cedar / Site DWY 4

SBL	
SBT	129.35
SBR	
WBL	
WBT	
WBR	
NBL	
NBT	206.75
NBR	
EBL	
EBT	

PM Cumulative Trip Distribution

EBR	

EBR	

Intersection 15: Linden / Jurupa

SBL	
SBT	
SBR	
WBL	
WBT	69.75
WBR	
NBL	
NBT	
NBR	
EBL	
EBT	40.5
EBR	

Intersection 16: Cedar / Jurupa

SBL	8.1
SBT	256.75
SBR	
WBL	7.5
WBT	110.25
WBR	7.5
NBL	
NBT	199.25
NBR	8.1
EBL	
EBT	110.25
EBR	

Intersection 17: Larch / Jurupa

SBL	
SBT	
SBR	
WBL	
WBT	55.5
WBR	
NBL	
NBT	
NBR	
EBL	
EBT	47.6
EBR	

Intersection 18: Cedar / El Rivino

SBL	
SBT	
SBR	
WBL	
WBT	
WBR	
NBL	
NBT	
NBR	
EBL	
EBT	
EBR	

AM Future Year Ambiant Growth (1.5%)

Intersection 1:	Cedar / Valley
SBL	59.26162029
SBT	1722.627553
SBR	30.97766515
WBL	445.8090072
WBT	344.7948817
WBR	52.52734526
NBL	474.0929623
NBT	1430.360017
NBR	313.8172165
EBL	63.30218531
EBT	231.6590611
EBR	713.8331535

Intersection 2:	Cedar / I-10 WB
SBL	0
SBT	1806.132564
SBR	1111.15538
WBL	529.3140176
WBT	1.346855007
WBR	536.0482926
NBL	395.9753719
NBT	1699.731018
NBR	0
EBL	0
EBT	0
EBR	0

Intersection 3:	Cedar / I-10 EB
SBL	523.9265975
SBT	1814.213694
SBR	0
WBL	0
WBT	0
WBR	0
NBL	0
NBT	1469.418812
NBR	560.2916827
EBL	618.206448
EBT	0
EBR	486.2146574

Intersection 4:	Cedar / Orange
SBL	148.1540507
SBT	1501.743332
SBR	600.6973329
WBL	10.06
WBT	0
WBR	150.8477607
NBL	49
NBT	1505.783897
NBR	32.16
EBL	352.8760117
EBT	8.081130039
EBR	33.36

Intersection 5:	Linden / Slover
SBL	4.04056502
SBT	71.38331535
SBR	448.5027172
WBL	26.93710013
WBT	712.4862985
WBR	10.77484005
NBL	88.89243043
NBT	76.77073537
NBR	48.48678024
EBL	230.3122061
EBT	638.4092731
EBR	71.38331535

Intersection 6:	Cedar / Slover
SBL	150.8477607
SBT	1191.966681
SBR	230.3122061
WBL	20.2028251
WBT	262.6367263
WBR	164.3163108
NBL	160.2757458
NBT	1028.997225
NBR	12.12169506
EBL	323.2452016
EBT	258.5961613
EBR	106.4015455

Intersection 7:	Larch / Slover
SBL	44.44621522
SBT	53.87420026
SBR	0
WBL	47.13992523
WBT	358.2634317

Intersection 8:	Linden / Santa Ana
SBL	29.63081014
SBT	224.9247861
SBR	47.13992523
WBL	30.97766515
WBT	164.3163108

WBR	30.97766515
NBL	75.42388037
NBT	96.97356047
NBR	21.5496801
EBL	4.04056502
EBT	336.7137516
EBR	91.58614045

WBR	35.01823017
NBL	106.4015455
NBT	206.068816
NBR	20.2028251
EBL	36.36508518
EBT	131.9917906
EBR	150.8477607

Intersection 9: Cedar / Santa Ana

SBL	104.92
SBT	1150.214176
SBR	83.50501041
WBL	41.7525052
WBT	115.8295306
WBR	47.13992523
NBL	107.7484005
NBT	1037.078355
NBR	36.36508518
EBL	88.89243043
EBT	115.8295306
EBR	101.0141255

Intersection 10: Larch / Santa Ana

SBL	68.68960533
SBT	168.3568758
SBR	25.59024512
WBL	39.05879519
WBT	153.5414707
WBR	30.97766515
NBL	30.97766515
NBT	109.0952555
NBR	18.85597009
EBL	17.50911509
EBT	161.6226008
EBR	79.46444539

Intersection 11: Site DWY 1 / Santa Ana

SBL	0
SBT	0
SBR	0
WBL	0
WBT	210.109381
WBR	0
NBL	0
NBT	0
NBR	0
EBL	0
EBT	254.5555962
EBR	0

Intersection 12: Site DWY 2 / Santa Ana

SBL	0
SBT	0
SBR	0
WBL	0
WBT	210.109381
WBR	0
NBL	0
NBT	0
NBR	0
EBL	0
EBT	254.5555962
EBR	0

Intersection 13: Cedar / Site DWY 3

SBL	0
SBT	1292.980806
SBR	0
WBL	0
WBT	0
WBR	0
NBL	0
NBT	1119.23651
NBR	0
EBL	0
EBT	0

Intersection 14: Cedar / Site DWY 4

SBL	0
SBT	1292.980806
SBR	0
WBL	0
WBT	0
WBR	0
NBL	0
NBT	1119.23651
NBR	0
EBL	0
EBT	0

AM Future Year Ambiant Growth (1.5%)

EBR	0

EBR	0

Intersection 15: Linden / Jurupa

SBL	56.56791028
SBT	185.8659909
SBR	53.87420026
WBL	4.04056502
WBT	125.84
WBR	98.32041548
NBL	14.81540507
NBT	238.3933362
NBR	8.081130039
EBL	22.89653511
EBT	184.09
EBR	25.59024512

Intersection 16: Cedar / Jurupa

SBL	114.4826756
SBT	1136.745626
SBR	29.63081014
WBL	56.56791028
WBT	174.27
WBR	192.6002659
NBL	53.87420026
NBT	859.2934942
NBR	63.30218531
EBL	67.34275033
EBT	188.55
EBR	48.48678024

Intersection 17: Larch / Jurupa

SBL	18.85597009
SBT	0
SBR	82.1581554
WBL	0
WBT	274.63
WBR	103.7078355
NBL	0
NBT	0
NBR	0
EBL	152.1946157
EBT	304.3892315
EBR	0

Intersection 18: Cedar / El Rivino

SBL	84.85186541
SBT	1317.224196
SBR	9.427985046
WBL	83.50501041
WBT	0
WBR	61.9553303
NBL	10.77484005
NBT	674.7743583
NBR	82.1581554
EBL	13.46855007
EBT	1.346855007
EBR	22.89653511

PM Future Year Ambiant Growth (1.5%)

Intersection 1:	Cedar / Valley
SBL	108.5295764
SBT	1295.485957
SBR	89.29648693
WBL	317.3459766
WBT	326.9625214
WBR	81.05373429
NBL	511.0506637
NBT	1652.671904
NBR	292.6177187
EBL	340.7004425
EBT	574.2451006
EBR	663.5415875

Intersection 2:	Cedar / I-10 WB
SBL	0
SBT	1607.336765
SBR	723.9884402
WBL	483.1168908
WBT	2.747584213
WBR	696.5125981
NBL	315.8105619
NBT	1774.939402
NBR	0
EBL	0
EBT	0
EBR	0

Intersection 3:	Cedar / I-10 EB
SBL	542.6478821
SBT	1552.385081
SBR	0
WBL	0
WBT	0
WBR	0
NBL	0
NBT	1193.825341
NBR	522.1487489
EBL	854.4986904
EBT	10.99033685
EBR	264.710883

Intersection 4:	Cedar / Orange
SBL	76.68992407
SBT	1446.104752
SBR	353.9265586
WBL	48.75615124
WBT	4.12137632
WBR	275.4318488
NBL	32.45920566
NBT	1158.820579
NBR	13.49548717
EBL	365.4017633
EBT	21.98067371
EBR	87.89575773

Intersection 5:	Linden / Slover
SBL	10.99033685
SBT	83.80131851
SBR	190.9571028
WBL	35.71859477
WBT	607.9838185
WBR	13.73792107
NBL	60.44685269
NBT	125.0150817
NBR	67.31581323
EBL	200.5736476
EBT	1026.936537
EBR	64.56822901

Intersection 6:	Cedar / Slover
SBL	184.0881423
SBT	1258.339696
SBR	148.7197298
WBL	20.6068816
WBT	340.0000779
WBR	131.8840422
NBL	159.2251989
NBT	857.1654633
NBR	57.69926848
EBL	260.6972551
EBT	677.9529361
EBR	159.3598844

Intersection 7:	Larch / Slover
SBL	24.72825792
SBT	53.57789216
SBR	24.72825792
WBL	50.83030795
WBT	382.9243469

Intersection 8:	Linden / Santa Ana
SBL	41.2137632
SBT	358.5597398
SBR	24.72825792
WBL	31.59721845
WBT	114.738578

PM Future Year Ambiant Growth (1.5%)

WBR	81.05373429
NBL	59.07306059
NBT	108.5295764
NBR	92.04407115
EBL	30.22342635
EBT	764.8654897
EBR	92.04407115

WBR	30.22342635
NBL	61.8206448
NBT	358.5597398
NBR	46.70893163
EBL	32.97101056
EBT	178.8354078
EBR	72.81098165

Intersection 9: Cedar / Santa Ana

SBL	117.5804421
SBT	1229.288033
SBR	64.56822901
WBL	35.71859477
WBT	160.7336765
WBR	95.38427156
NBL	136.0054186
NBT	976.28132
NBR	97.53923957
EBL	87.92269483
EBT	181.3405581
EBR	125.0150817

Intersection 10: Larch / Santa Ana

SBL	31.59721845
SBT	87.92269483
SBR	41.2137632
WBL	8.24275264
WBT	255.6196117
WBR	38.46617899
NBL	23.35446581
NBT	141.500587
NBR	9.616544747
EBL	85.17511061
EBT	307.3119068
EBR	34.34480267

Intersection 11: Site DWY 1 / Santa Ana

SBL	0
SBT	0
SBR	0
WBL	0
WBT	320.1878407
WBR	0
NBL	0
NBT	0
NBR	0
EBL	0
EBT	396.4602397
EBR	0

Intersection 12: Site DWY 2 / Santa Ana

SBL	0
SBT	0
SBR	0
WBL	0
WBT	320.1878407
WBR	0
NBL	0
NBT	0
NBR	0
EBL	0
EBT	396.4602397
EBR	0

Intersection 13: Cedar / Site DWY 3

SBL	0
SBT	1390.02171
SBR	0
WBL	0
WBT	0
WBR	0
NBL	0
NBT	1297.816016
NBR	0
EBL	0
EBT	0

Intersection 14: Cedar / Site DWY 4

SBL	0
SBT	1390.02171
SBR	0
WBL	0
WBT	0
WBR	0
NBL	0
NBT	1297.816016
NBR	0
EBL	0
EBT	0

EBR	0

EBR	0

Intersection 15: Linden / Jurupa

SBL	61.8206448
SBT	74.18477376
SBR	13.73792107
WBL	16.48550528
WBT	201.098921
WBR	85.17511061
NBL	13.73792107
NBT	85.17511061
NBR	8.24275264
EBL	72.81098165
EBT	395.2480702
EBR	37.09238688

Intersection 16: Cedar / Jurupa

SBL	160.6528652
SBT	1396.755985
SBR	46.70893163
WBL	81.5386021
WBT	244.6562119
WBR	82.9123942
NBL	82.4275264
NBT	1150.335393
NBR	100.2060125
EBL	64.56822901
EBT	432.8657306
EBR	52.20410005

Intersection 17: Larch / Jurupa

SBL	28.84963424
SBT	0
SBR	61.8206448
WBL	0
WBT	278.0716847
WBR	31.59721845
NBL	0
NBT	0
NBR	0
EBL	140.1267949
EBT	478.9955145
EBR	0

Intersection 18: Cedar / El Rivino

SBL	285.7487582
SBT	1283.121828
SBR	24.72825792
WBL	152.4909238
WBT	4.12137632
WBR	90.67027904
NBL	8.24275264
NBT	917.6931273
NBR	130.5102501
EBL	17.85929739
EBT	2.747584213
EBR	5.495168427

Appendix F: Fair Share Calculation

Appendix F: Fair Share Calculations

	Existing Intersection Volume	Future Intersection Volume w/ Project	Total Growth [Future Volume w/ Project - Existing Volume]	Project Trips	Fair Share
Cedar / Slover	2593	4074	1481	167	11.27616475
Linden / Slover	1764	1248	2464	37	1.501623377
Cedar / Santa Ana	2057	3356	1299	325	25.01924557
Cedar / Jurupa	2007	3087	1080	102	9.444444444
Larch / Jurupa	662	973	311	37	11.89710611
Cedar / El Rivino	1590	2408	818	46	5.623471883

	Existing Intersection Volume	Future Intersection Volume w/ Project	Total Growth [Future Volume w/ Project - Existing Volume]	Project Trips	Fair Share
Cedar / Slover	2459	4631	2172	144	6.629834254
Linden / Slover	1556	2560	1004	32	3.187250996
Cedar / Santa Ana	2009	3971	1962	283	14.42405708
Cedar / Jurupa	2005	4135	2130	88	4.131455399
Larch / Jurupa	612	1093	481	32	6.652806653
Cedar / El Rivino	1911	3032	1121	40	3.56824264

Appendix G: SBTAM Plots

SBTAM 2012
Bloomington Study
AM Flow

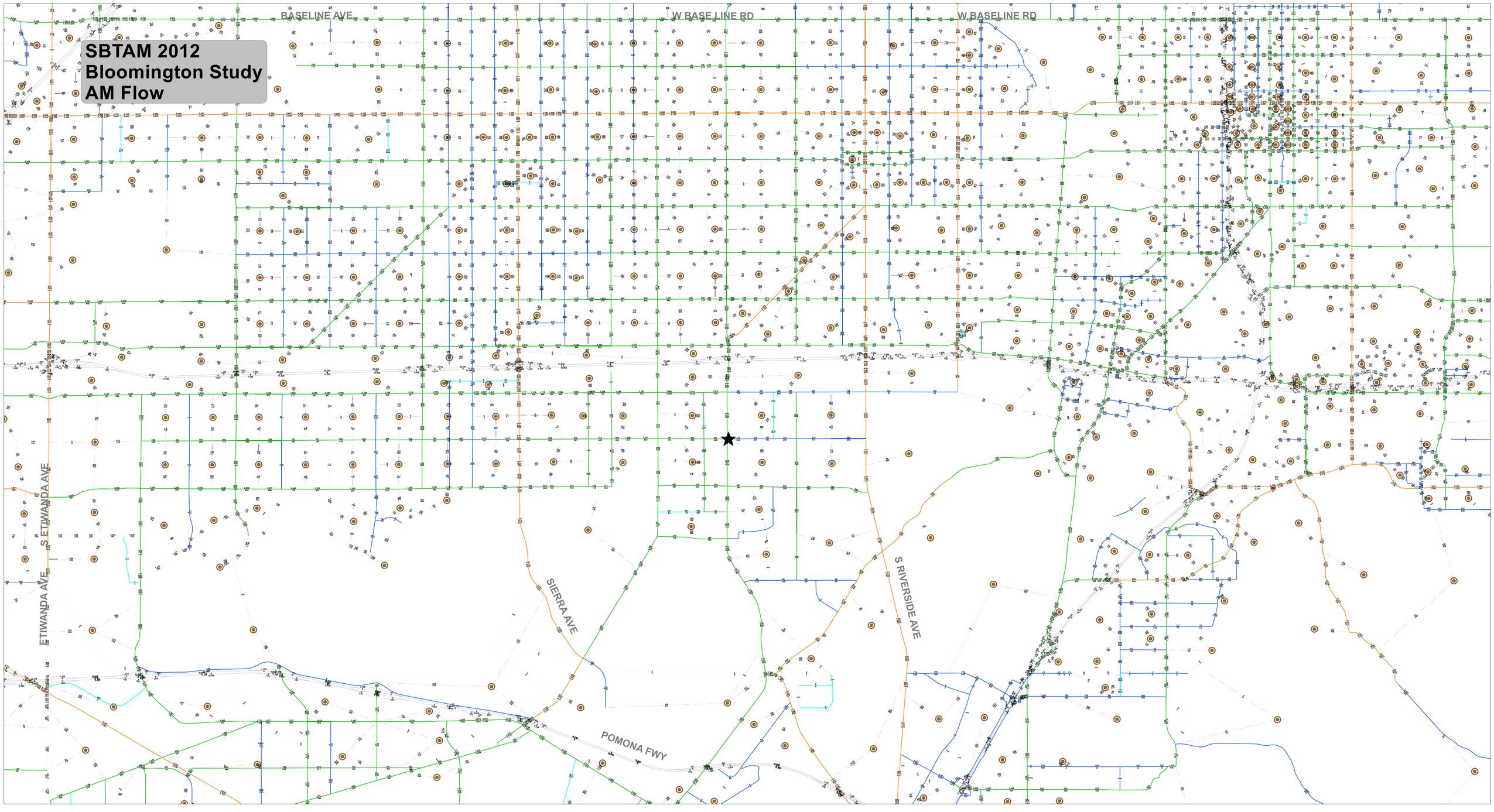

SBTAM 2012
Bloomington Study
PM Flow

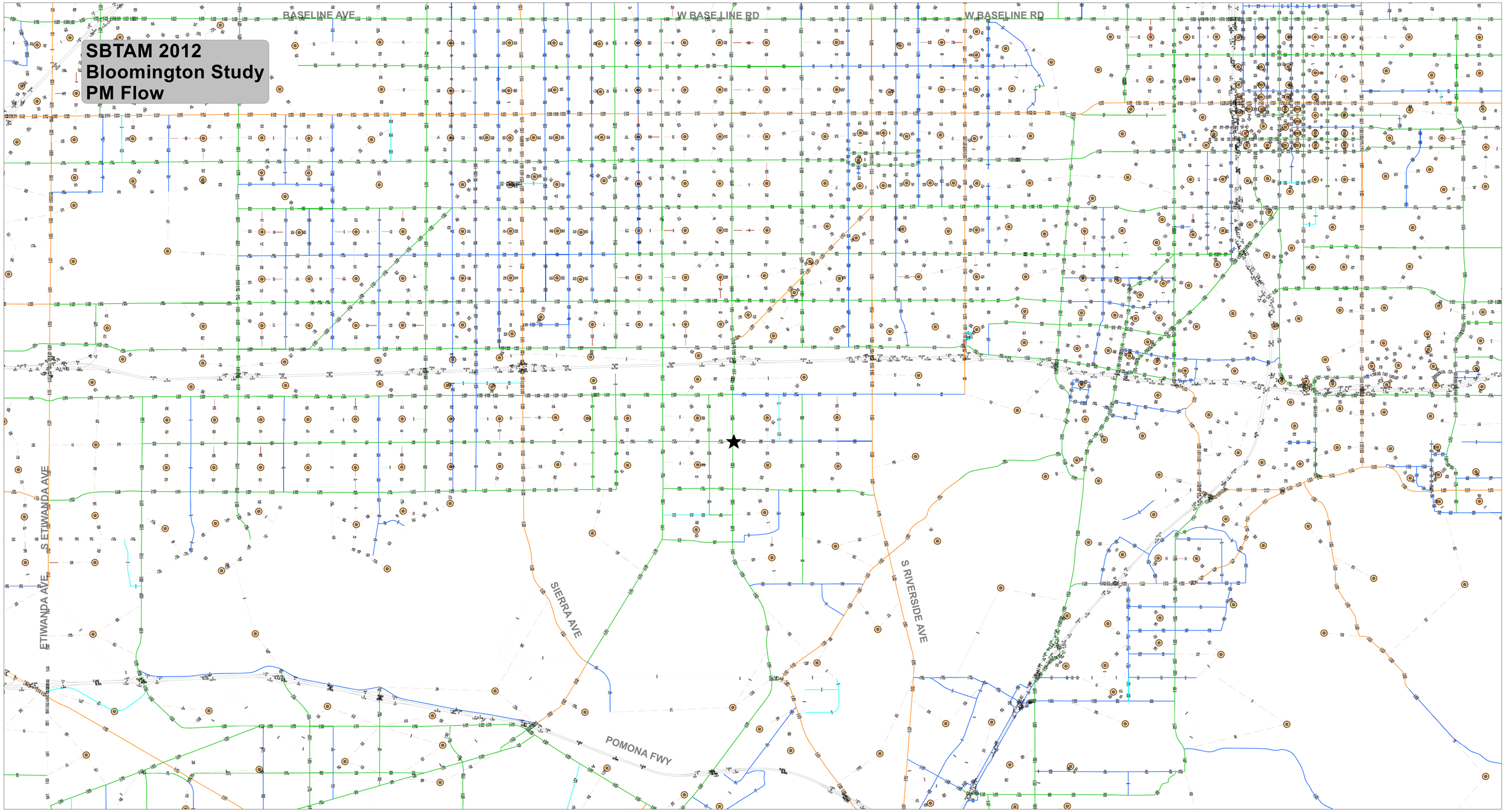

SBTAM 2012
Bloomington Study
Average Daily Flow

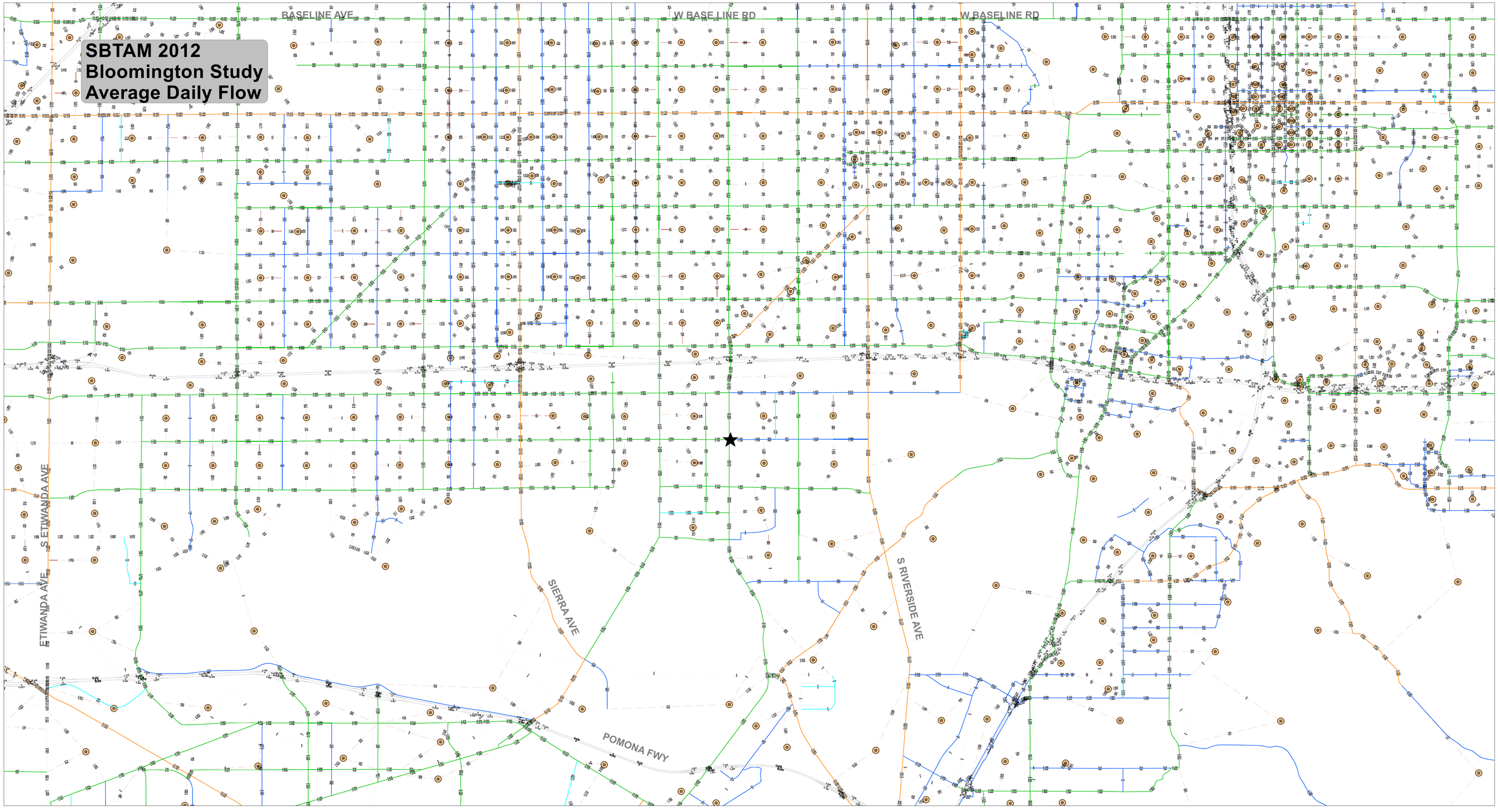

SBTAM 2040
Bloomington Study
AM Flow

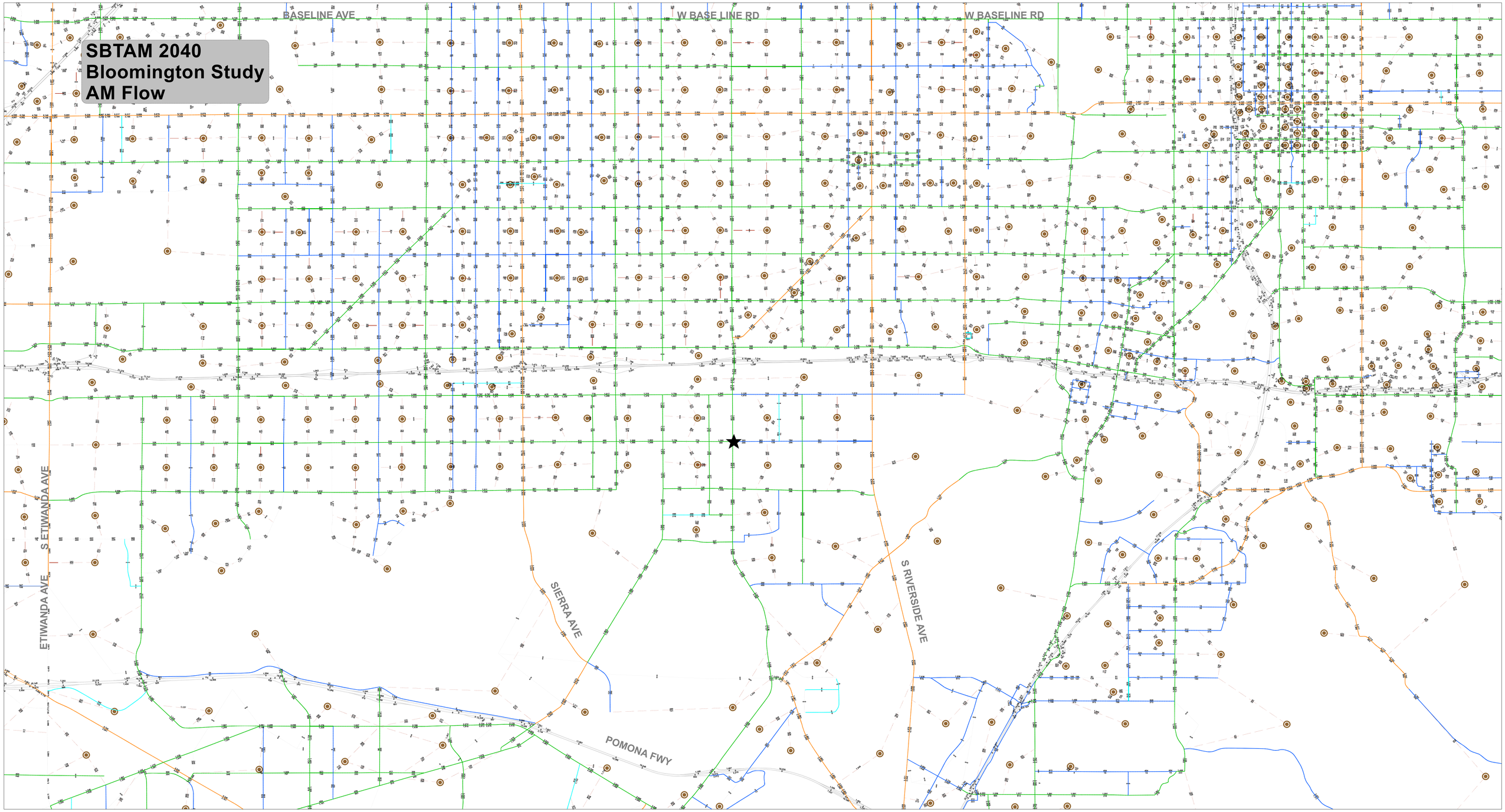

SBTAM 2040
Bloomington Study
PM Flow

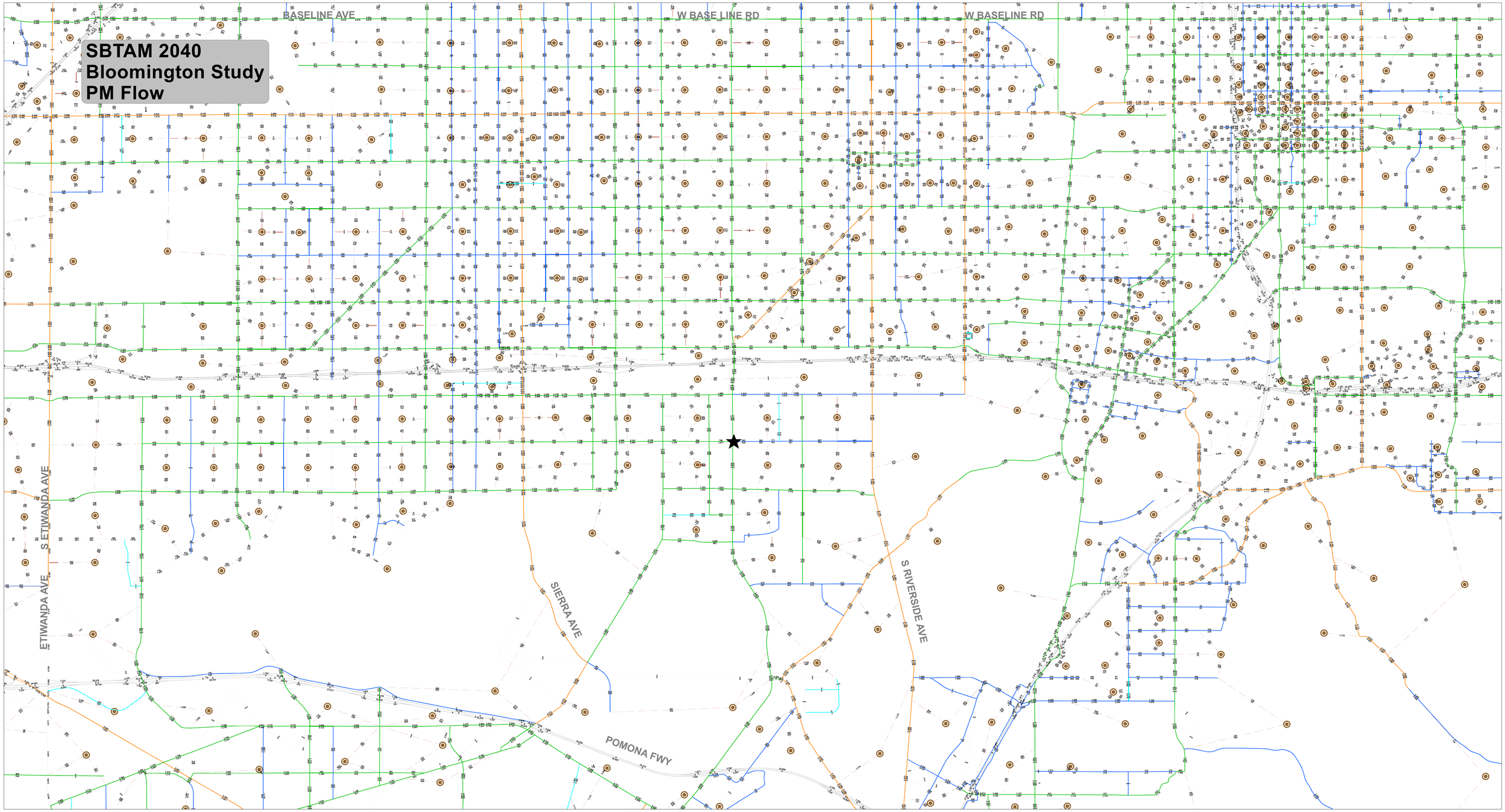

SBTAM 2040
Bloomington Study
Average Daily Flow

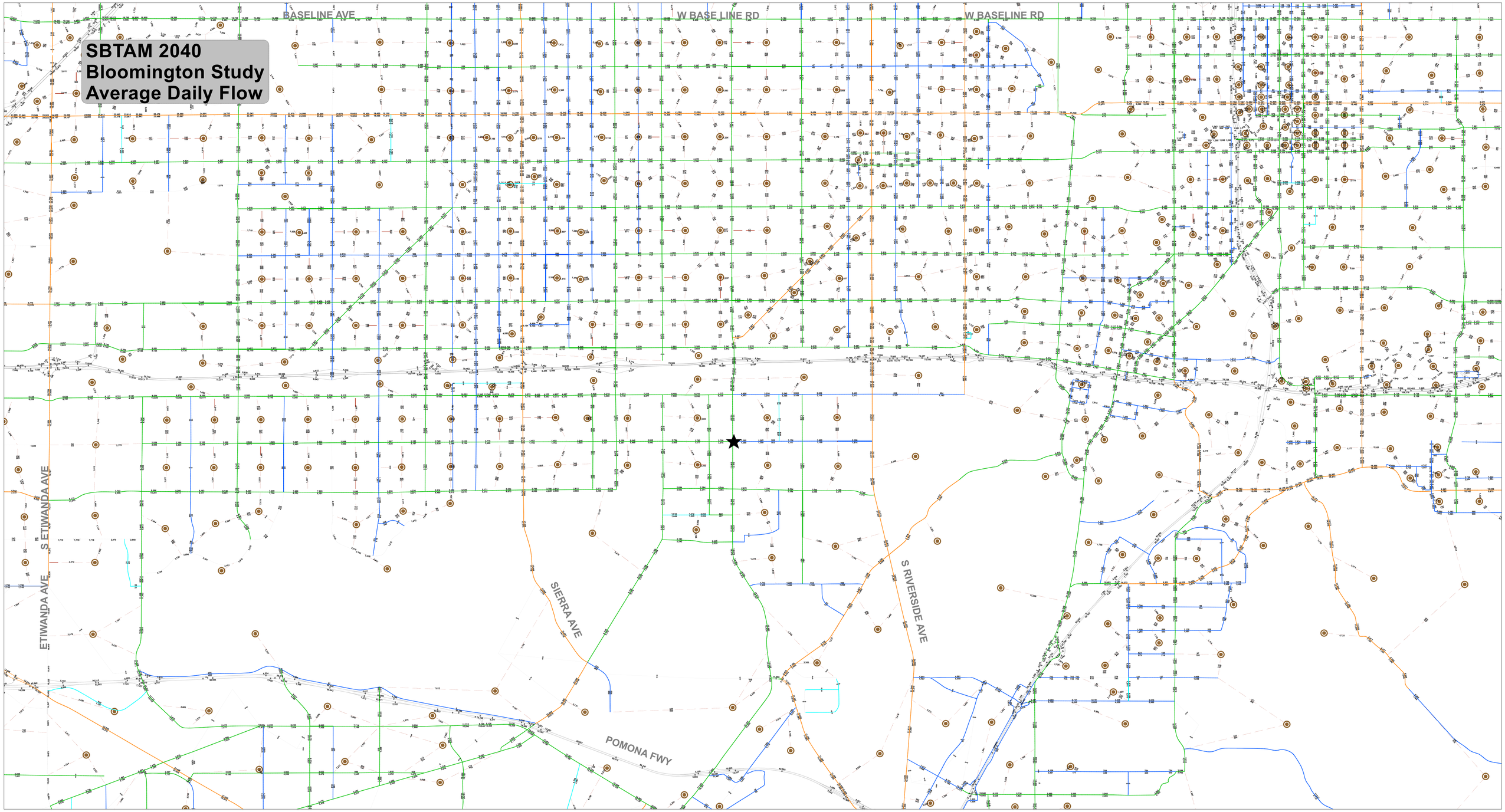

Appendix H: Warrant Assessments

Traffic Signal Installation Warrant Assessment

Location: Linden Avenue at Slover Avenue | **Agency:** San Bernardino County, CA

Analysis Condition: Opening Year 2021

DIST: **8**
CO: **San Bernardino** Calculated by: **JT** Date: **6/17/2020**
RTE/PM: **N/A** Checked by: **FM** Date: **6/17/2020**

Intersection: **Slover Avenue (EB/WB) at Linden Avenue (NB/SB)**
Major Street: **Slover Avenue** Posted/Critical Approach Speed: **50 MPH**
Minor Street: **Linden Avenue** Posted/Critical Approach Speed: **25 MPH**

Approach lanes (Slover Avenue): **3** Approach Lanes (Linden Avenue): **1**

Type (Rural/Urban)*: **Urban**
Critical speed of major street traffic > 64 Km/Hr (40 MPH): **No**
In built up area of isolated community of < 10,000 population: **No**

** Rural: either one satisfied*
Urban: neither two satisfied

Warrant 1 Eight-Hour Vehicular Volume

Condition A: Minimum Vehicle Volume

100% Satisfied: No (2/8)
80% Satisfied: No (2/8)

Requirement:
- Each of any eight 60-minute periods of an average day satisfying the requirement

Basic Min. Hourly Volume Requirement (80% shown in brackets)			1st Hr.	2nd Hr.	3rd Hr.	4th Hr.	5th Hr.	6th Hr.	7th Hr.	8th Hr.
Type	**Urban**	**Urban**	7:00 - 8:00am	8:00 - 9:00am	4:00 - 5:00pm	5:00 - 6:00pm				
Approach Lanes	**1**	**≥ 2**								
Both Approaches Major Street	500	**600**	**1,068**	556	324	**729**				
	(400)	**(480)**	**(854)**	(445)	(259)	**(583)**				
Highest Approach Minor Street	**150**	200	**375**	**212**	**200**	**191**				
	(120)	(160)	**(300)**	**(170)**	**(160)**	**(153)**				

Condition B: Interruption of Continuous Traffic

100% Satisfied: No (1/8)
80% Satisfied: No (1/8)

Requirement:
- Each of any eight 60-minute periods of an average day satisfying the requirement

Min. Requirement (80% in brackets)			1st Hr.	2nd Hr.	3rd Hr.	4th Hr.	5th Hr.	6th Hr.	7th Hr.	8th Hr.
Type	**Urban**	**Urban**	7:00 - 8:00am	8:00 - 9:00am	4:00 - 5:00pm	5:00 - 6:00pm				
Approach Lanes	**1**	**≥ 2**								
Both Approaches Major Street	750	**900**	**1,068**	556	324	729	0	0	0	0
	(600)	**(720)**	**(854)**	(445)	(259)	(583)	0	0	0	0
Highest Approach Minor Street	**75**	100	**375**	**212**	**200**	**191**	0	0	0	0
	(60)	(80)	**(300)**	**(170)**	**(160)**	**(153)**	0	0	0	0

Combination of Conditions A & B

Satisfied: No

Requirements:
- Conditions A and B satisfied to 80% or better: — No (3/16)

AND:
- An adequate trial of other alternatives that could cause less delay and inconvenience to traffic has failed to solve the traffic problems. — No N/A

The satisfaction of a traffic signal warrant or warrants shall not in itself require the installation of a traffic control signal, nor does it necessarily justify the installation of a signal. Delay, congestion, confusion or other evidence of the need for right-of-way assignment must be shown.

Traffic Signal Installation Warrant Assessment

Location: Linden Avenue at Slover Avenue

Agency: San Bernardino County, CA

Analysis Condition: Opening Year 2021

Warrant 2 Four-Hour Vehicular Volume

Satisfied: No

Requirements:

- All plotted points of traffic for each of any four 60-minute periods fall above the curve on Figure 4C-1 (U) or 4C-2 (R)

	1st Hr.	2nd Hr.	3rd Hr.	4th Hr.
Any four (4) 60-minutes periods	7:00 - 8:00am	8:00 - 9:00am	4:00 - 5:00pm	5:00 - 6:00pm
Both Approaches Major Street	1,068	556	324	729
Highest Approach Minor Street	375	212	200	191

Warrant 3 Peak Hour

Satisfied: Yes

Part A: Delay

Requirements:

For the same consecutive four 15-minute (1 hour) period on an average day, 7:00-8:00 AM

- Total delay on one stop-controlled minor street approach ≥ 4 vehicle-hours for a one-lane approach, or ≥ 5 vehicle-hours for a two-lane approach, AND — Yes — 19
- Volume on the same minor street approach **≥ 100 VPH for one moving lane of traffic** or ≥ 150 VPH for two moving lanes; AND — Yes — 397
- Total entering volume serviced during the hour **≥ 800 VPH for 4+ approach intersections, or** ≥ 650 VPH for intersections with three (3) approaches — Yes — 1,910

Part B: Volume

Requirement:

OR, for any four (4) consecutive 15-minute periods (1 hour) on an average day, Yes

- The plotted point of traffic for any one 60-min. period fall above the curve on Figure 4C-3 (U) or 4C-4 (R)

	Critical Hour
Any one (1) 60-minute period	7:00-8:00 AM
Both Approaches Major Street	1,068
Highest Approach Minor Street	375

The satisfaction of a traffic signal warrant or warrants shall not in itself require the installation of a traffic control signal, nor does it necessarily justify the installation of a signal. Delay, congestion, confusion or other evidence of the need for right-of-way assignment must be shown.

Traffic Signal Installation Warrant Assessment

Location: Linden Avenue at Slover Avenue

Agency: San Bernardino County, CA

Analysis Condition: Opening Year 2021

Warrant 4 Pedestrian Volume

100% Satisfied: No N/A

70% Satisfied: No N/A

Requirements:

On an average day, for the pedestrian volume crossing the major street at an intersection or midblock location,

- PART A - All of the plotted points fall above Figure 4C-5 for each of any 4 hours (Use Figure 4C-6 for 70% criteria), or — No N/A
- PART B - All of the plotted points fall above Figure 4C-7 for any hour (Use Figure 4C-8 for 70% criteria) — No N/A

85th percentile or posted speed: 50 (or) Rural Population? No → 70% criteria applicable? No

(> 35 MPH?) No

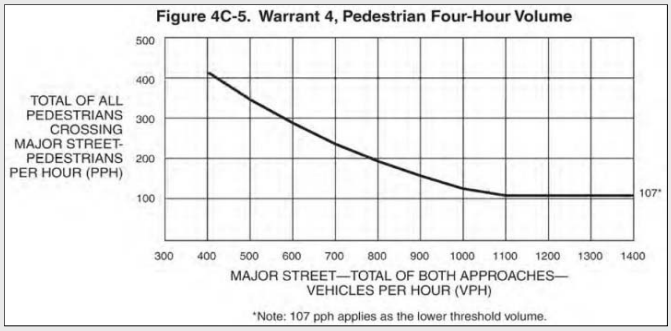

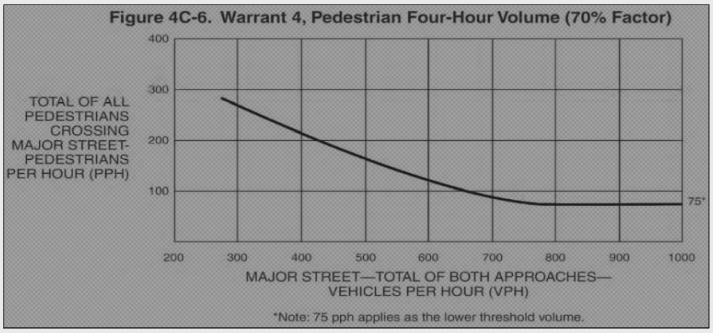

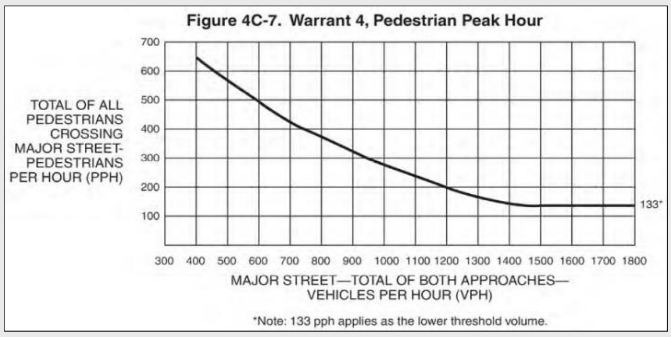

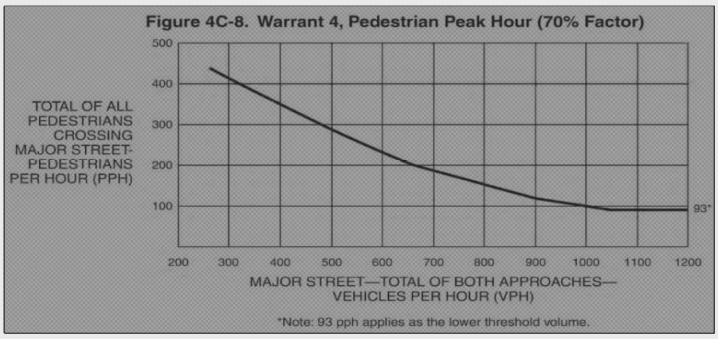

- The nearest traffic signal along the major street is greater than 295 feet (90m); AND — Yes (1,300')
- New signal will not restrict the progressive movement of traffic — No N/A

The satisfaction of a traffic signal warrant or warrants shall not in itself require the installation of a traffic control signal, nor does it necessarily justify the installation of a signal. Delay, congestion, confusion or other evidence of the need for right-of-way assignment must be shown.

Traffic Signal Installation Warrant Assessment

Location: Linden Avenue at Slover Avenue | **Agency:** San Bernardino County, CA

Analysis Condition: Opening Year 2021

Warrant 5 School Crossing — N/A

Applicable? No
Satisfied: No

Requirements (PART A):

- Less than 60 Gaps/Hour available during the period when children use the school crossing; AND — No — N/A
- Number of children crossing in the highest hour > 20 per hour — No — N/A

Size of Adequate Gap, G	Crossing Distance, *W*				*ft*
	Pedestrian Crossing Speed, *S*				*ft/sec*
	Predominant # of Rows (Group Size), *N*				*rows*
	Time Headway between Rows, *H*				*secs*
	Pedestrian Startup Time, *R*				*secs*
	Min. Safe Gap Size in Traffic Req'd, *G*				*secs*
Number of Gaps of Adequate Length, N_g	Time Period:	-	-	-	
	Measurement Period, *t*				*sec(s)*
	Major Street Vehicle Volume, *Q*				*veh/hr*
	School Peds Crossing Volume				*school peds/hr*
	Average Vehicle Length, *L*				*ft*
	Mean Vehicle Speed, *v*				*mph*
	Gap Size, *g* (for min. headway prob				*secs*
	Number of Gaps of Adequate Size, N_g	#DIV/0!	#DIV/0!	#DIV/0!	available gaps per
	< 0 gaps?	n/a	n/a	n/a	0 minutes; AND

Requirements (PART B):

- The nearest traffic signal along the major street is greater than 300 feet (90m) away; or — Yes — (1300')
- The proposed signal will not restrict the progressive movement of traffic — No — N/A

Flashing Yellow Beacon at School Crossings — N/A — Satisfied: No

Requirements:

- The uncontrolled school crossing is on the "Suggested Route to School"; AND — No
- Each of any 2 hours satisfying the vehicle and school ped volume requirements below; AND — No

	Minimum Requirements		1st Hr.	2nd Hr.
	Period	Urban	-	-
Vehicle Volume	Each of any 2 hrs	200	-	-
School Age Pedestrians Crossing Street	Each of any 2 hrs	40	-	-

- ≥ 40 school peds use the crossing during each of any two non-overlapping hours of a normal school day. — No — N/A

- Critical Approach Speed exceeds 35 MPH (55 km/hr), or — No — N/A
  The approach visibility is less than the stopping sight distance, AND — No — N/A — Either Met? No
- The crossing is ≥600 feet (180m) from the nearest alternate controlled/protected crossing — No — (1,315')

Bicycle Signal Warrant — N/A (B < 50) — Satisfied: No

Requirements (Volume):

- B * V ≥ 50,000 and B ≥ 50; AND — 0 and 0 → No

B		V		B * V	0

Where B = *number of bicycles at the peak hour entering the intersection,* and
V = *number of vehicles at the same peak hour entering the intersection*

Requirements (Collision and Geometric):

- Two or more bicycle/vehicle collisions susceptible to correction by a bicycle signal have occurred over a 12-month period and responsible public works official determines that a bicycle signal will reduce the number of collisions; OR — No — N/A
- (a) Where a separate bicycle/multi-use path intersects a roadway, or
  (b) At other locations to facilitate a bicycle movement that is not permitted for a motor vehicle. — No — N/A

The satisfaction of a traffic signal warrant or warrants shall not in itself require the installation of a traffic control signal, nor does it necessarily justify the installation of a signal. Delay, congestion, confusion or other evidence of the need for right-of-way assignment must be shown.

Traffic Signal Installation Warrant Assessment

Location: Linden Avenue at Slover Avenue

Agency: San Bernardino County, CA

Analysis Condition: Opening Year 2021

Warrant 6 Coordinated Signal System

Satisfied: No N/A

Requirements:

One or both of the following criteria to be met by the findings of an engineering study:

- On a one-way street or a street that has traffic predominantly in one direction, the adjacent traffic control signals are so far apart that they do not provide the necessary degree of vehicular platooning. — No N/A
- OR, on a two-way street, adjacent traffic control signals do not provide the necessary degree of platooning and the proposed and adjacent traffic control signals will collectively provide a progressive operation. — No N/A

Warrant 7 Crash Experience

Satisfied: No N/A

Requirements:

- One or more of the following four (4) conditions are at least 80% satisfied; — No
  - Warrant 1, Eight-Hour Volumes - *Condition A* (Minimum Vehicular Volume); or — *No*
  - Warrant 1, Eight-Hour Volumes - *Condition B* (Interruption of Continuous Traffic); or — *No*
  - Warrant 4, *Part A* , 80% of ped traffic crossing major street for each of any 4 hours; or — *No*
  - Warrant 4, *Part B* , 80% of ped traffic crossing major street for each of any 4 hours; AND — *No*
- Signal will not seriously disrupt progressive traffic flow; AND — Yes
- Adequate trial of less restrictive remedies has failed to reduce accident frequency; AND — No N/A
- ≥ 5 reported relevant crashes susceptible to correction by traffic signal within a 12-month period — No N/A

Warrant 8 Roadway Network

Satisfied: No N/A

Requirements:

One or both of the following criteria to be met by the findings of an engineering study for the common intersection of two or more major routes:

- At least 1,000 VPH entering the intersection during the peak hour and typical weekday, under existing or immediately projected conditions, and has 5-year projected traffic volumes meeting Warrants 1,2, and 3 during the average weekday; OR — No N/A
- At least 1,000 VPH entering the intersection during the peak hour and typical weekday, under existing or immediately projected conditions, for each of any 5 hours on a Saturday or Sunday — No N/A

Min. Volume Requirements	Entering Volumes, all approaches		Met?	
1,000 Veh/Hr	Peak vehicles per hour during typical weekday:		-	
	Intersection has 5-year projected traffic volumes that meet one or more of Warrants 1, 2, and 3 during an average weekday		No	N/A
	OR, Vehicles per hour during any 5 hours of a Saturday or Sunday:	-	No	N/A

The satisfaction of a traffic signal warrant or warrants shall not in itself require the installation of a traffic control signal, nor does it necessarily justify the installation of a signal. Delay, congestion, confusion or other evidence of the need for right-of-way assignment must be shown.

Traffic Signal Installation Warrant Assessment

Location: Linden Avenue at Slover Avenue

Agency: San Bernardino County, CA

Analysis Condition: Opening Year 2021

Warrant 9 Intersection Near a Grade Crossing

Satisfied: No N/A

Requirements:

Where none of the conditions described in the other eight traffic signal warrants are met, and both of the following criteria are met:

- A grade crossing exists on an approach controlled by a STOP or YIELD sign and the center of the track nearest to the intersection is ≤ 140 feet of the stop line or yield line on the approach; AND — No N/A
- The plotted point of traffic for the highest traffic volume hour in which rail traffic uses the crossing falls above the applicable curve in Figure 4C-9 (1 approach lane) or 4C-10 (2 approach lanes). — No N/A

D (ft.) - Adj1 - Adj2 - Adj3 -

Where: D = *Clear Storage Distance on minor-street approach crossing the track*

Adj1 = *Adjustment factor for Daily Frequency of Rail Traffic (Table 4C-2)*

Adj2 = *Adjustment factor for Percentage of High-Occupancy (20+ passenger) Buses (Table 4C-3)*

Adj3 = *Adjustment factor for Percentage of Tractor-Trailer Trucks (Table 4C-4)*

Summary:

Total Number of Warrants Satisfied: 1

	Warrant 1 - Eight-Hour Vehicular Volume
	Warrant 2 - Four-Hour Vehicular Volume
✓	**Warrant 3** - Peak Hour
	Warrant 4 - Pedestrian Volume
	Warrant 5 - School Crossing
	Warrant 6 - Coordinated Signal System
	Warrant 7 - Crash Experience
	Warrant 8 - Roadway Network
	Flashing Yellow Beacon at School Xing
	Bicycle Signal Warrant
	Warrant 9 - Intersection Near a Grade Xing

The satisfaction of a traffic signal warrant or warrants shall not in itself require the installation of a traffic control signal, nor does it necessarily justify the installation of a signal. Delay, congestion, confusion or other evidence of the need for right-of-way assignment must be shown.

Traffic Signal Installation Warrant Assessment

Location: Linden Avenue at Slover Avenue

Agency: San Bernardino County, CA

Analysis Condition: Opening Year 2021

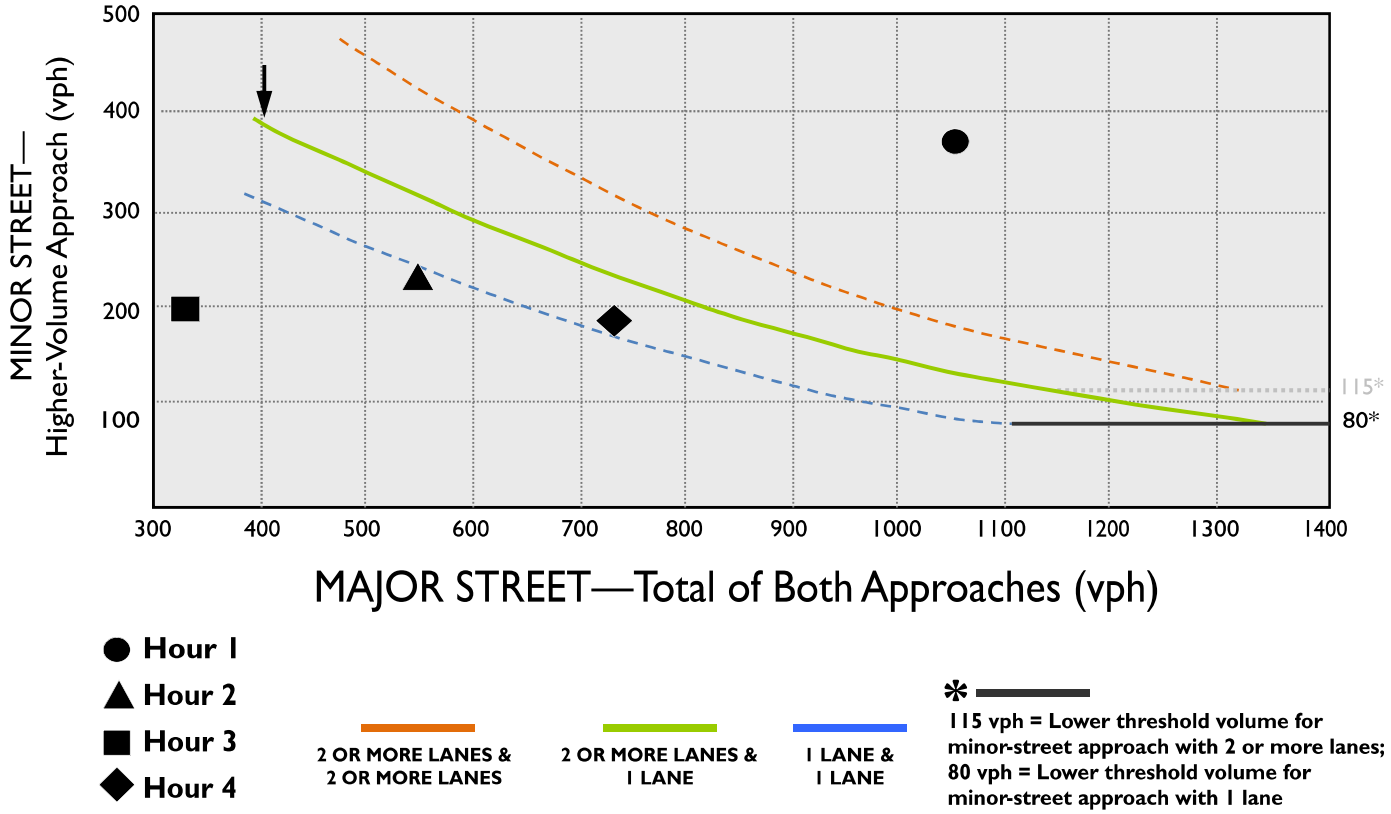

Any four (4) 60-minute periods	● Hour 1 7-8A	▲ Hour 2 8-9A	■ Hour 3 4-5P	◆ Hour 4 5-6P
Both Approaches Major Street	1,068	556	324	729
Highest Approach Minor Street	375	212	200	191
Satisfied?	Yes	No	No	No

Traffic Signal Installation Warrant Assessment

Location: Linden Avenue at Slover Avenue

Agency: San Bernardino County, CA

Analysis Condition: Opening Year 2021

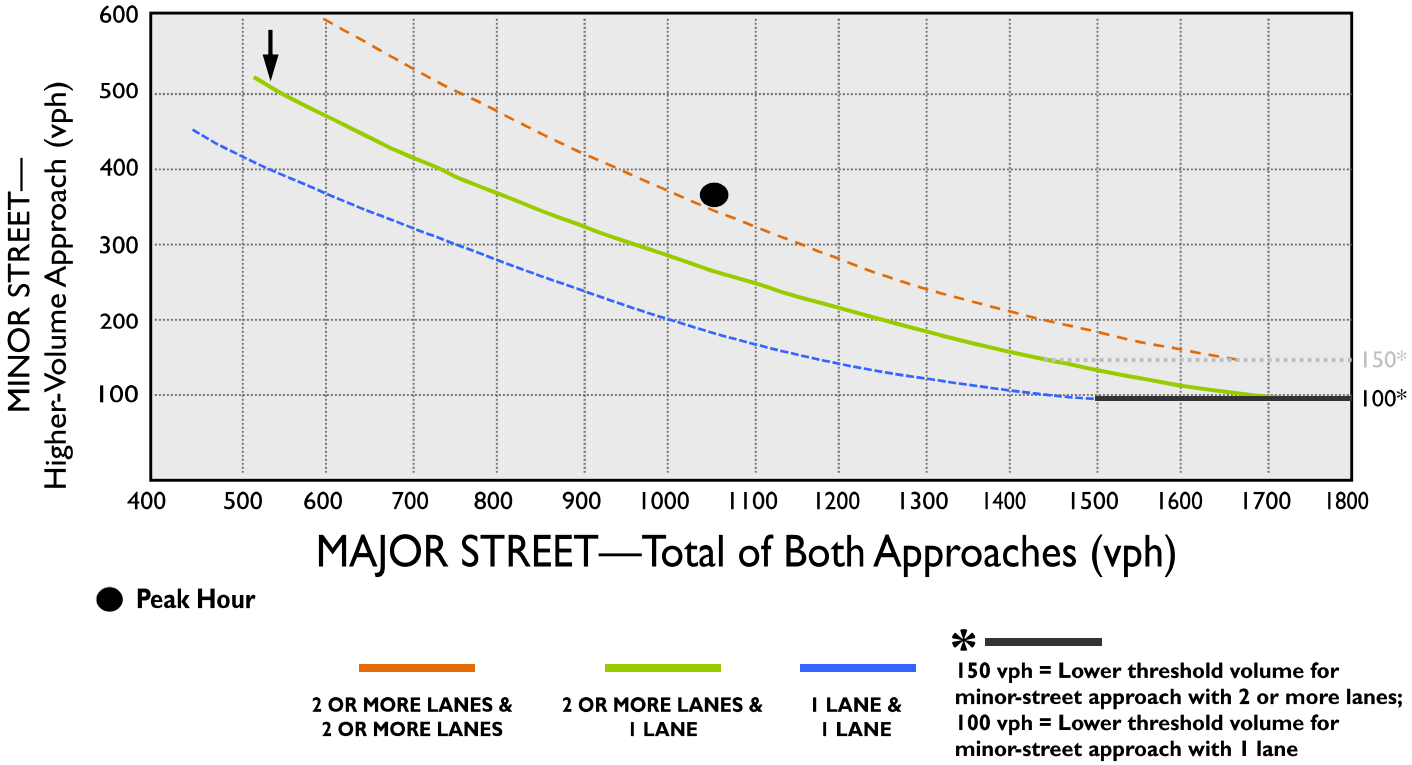

Any one (1) 60-minute period	Selected Peak Hour
	7:00 - 8:00 AM
Both Approaches Major Street	1,068
Highest Approach Minor Street	375
Satisfied?	Yes

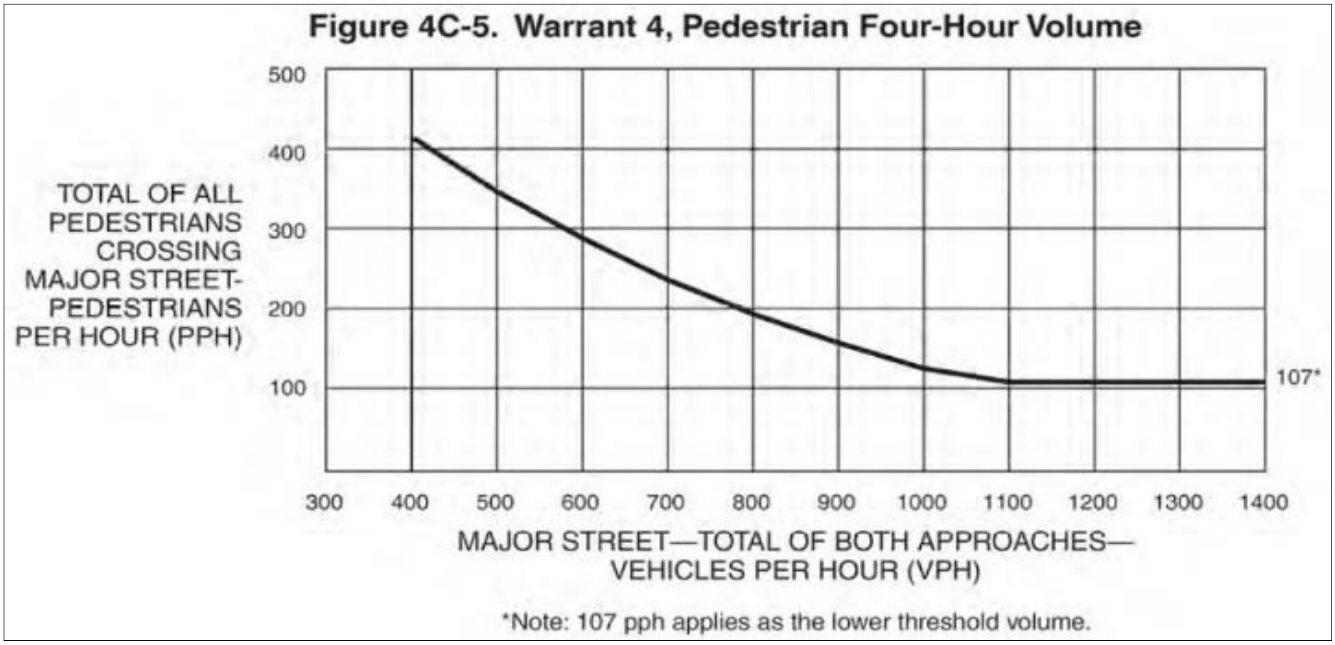

● **Hour 1**
▲ **Hour 2**
■ **Hour 3**
◆ **Hour 4**

	●	▲	■	◆
Any four (4) 60-minute periods	Hour 1 9-10A	Hour 2 12-1P	Hour 3 4-5P	Hour 4 5-6P
Both Approaches Major Street				
Pedestrians Crossing on Major Street				
Satisfied?				

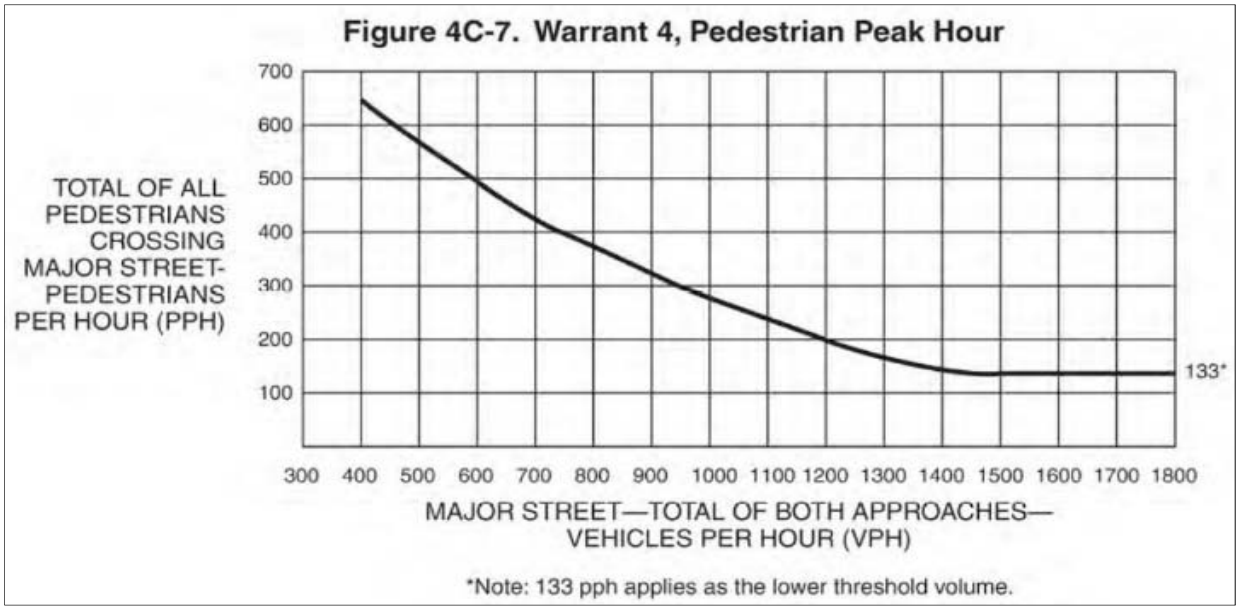

● **Peak Hour**

Any one (1) 60-minute period	● **Selected Peak Hour**
Both Approaches Major Street	
Pedestrians Crossing Major Street	
Satisfied?	

Traffic Signal Installation Warrant Assessment

Location: Linden Avenue at Slover Avenue | **Agency:** San Bernardino County, CA

Analysis Condition: Opening Year + Project 2021

DIST: **8**
CO: **San Bernardino** Calculated by: **JT** Date: **6/17/2020**
RTE/PM: **N/A** Checked by: **FM** Date: **6/17/2020**

Intersection: **Slover Avenue (EB/WB) at Linden Avenue (NB/SB)**
Major Street: **Slover Avenue** Posted/Critical Approach Speed: **50 MPH**
Minor Street: **Linden Avenue** Posted/Critical Approach Speed: **25 MPH**

Approach lanes (Slover Avenue): **3** Approach Lanes (Linden Avenue): **1**

Type (Rural/Urban)*: **Urban**
Critical speed of major street traffic > 64 Km/Hr (40 MPH): **No**
In built up area of isolated community of < 10,000 population: **No**

** Rural: either one satisfied*
Urban: neither two satisfied

Warrant 1 Eight-Hour Vehicular Volume

Condition A: Minimum Vehicle Volume

100% Satisfied: No (2/8)
80% Satisfied: No (2/8)

Requirement:
- Each of any eight 60-minute periods of an average day satisfying the requirement

Basic Min. Hourly Volume Requirement (80% shown in brackets)			1st Hr.	2nd Hr.	3rd Hr.	4th Hr.	5th Hr.	6th Hr.	7th Hr.	8th Hr.
Type	**Urban**	**Urban**	7:00 - 8:00am	8:00 - 9:00am	4:00 - 5:00pm	5:00 - 6:00pm				
Approach Lanes	**1**	**≥ 2**								
Both Approaches Major Street	500	**600**	**1,096**	584	348	**753**				
	(400)	**(480)**	**(877)**	(467)	(278)	**(602)**				
Highest Approach Minor Street	**150**	200	**384**	**221**	**208**	**199**				
	(120)	(160)	**(307)**	**(177)**	**(166)**	**(159)**				

Condition B: Interruption of Continuous Traffic

100% Satisfied: No (1/8)
80% Satisfied: No (1/8)

Requirement:
- Each of any eight 60-minute periods of an average day satisfying the requirement

Min. Requirement (80% in brackets)			1st Hr.	2nd Hr.	3rd Hr.	4th Hr.	5th Hr.	6th Hr.	7th Hr.	8th Hr.
Type	**Urban**	**Urban**	7:00 - 8:00am	8:00 - 9:00am	4:00 - 5:00pm	5:00 - 6:00pm				
Approach Lanes	**1**	**≥ 2**								
Both Approaches Major Street	750	**900**	**1,096**	584	348	753	0	0	0	0
	(600)	**(720)**	**(877)**	(467)	(278)	(602)	0	0	0	0
Highest Approach Minor Street	**75**	100	**384**	**221**	**208**	**199**	0	0	0	0
	(60)	(80)	**(307)**	**(177)**	**(166)**	**(159)**	0	0	0	0

Combination of Conditions A & B

Satisfied: No

Requirements:
- Conditions A and B satisfied to 80% or better: No (3/16)

AND:
- An adequate trial of other alternatives that could cause less delay and inconvenience to traffic has failed to solve the traffic problems. No N/A

The satisfaction of a traffic signal warrant or warrants shall not in itself require the installation of a traffic control signal, nor does it necessarily justify the installation of a signal. Delay, congestion, confusion or other evidence of the need for right-of-way assignment must be shown.

Traffic Signal Installation Warrant Assessment

Location: Linden Avenue at Slover Avenue

Agency: San Bernardino County, CA

Analysis Condition: Opening Year + Project 2021

Warrant 2 Four-Hour Vehicular Volume

Satisfied: No

Requirements:

- All plotted points of traffic for each of any four 60-minute periods fall above the curve on Figure 4C-1 (U) or 4C-2 (R)

	1st Hr.	2nd Hr.	3rd Hr.	4th Hr.
Any four (4) 60-minutes periods	7:00 - 8:00am	8:00 - 9:00am	4:00 - 5:00pm	5:00 - 6:00pm
Both Approaches Major Street	1,096	584	348	753
Highest Approach Minor Street	384	221	208	199

Warrant 3 Peak Hour

Satisfied: Yes

Part A: Delay

Requirements:

For the same consecutive four 15-minute (1 hour) period on an average day, 7:00-8:00 AM

- Total delay on one stop-controlled minor street approach ≥ 4 vehicle-hours for a one-lane approach, or ≥ 5 vehicle-hours for a two-lane approach, AND — Yes — 19
- Volume on the same minor street approach **≥ 100 VPH for one moving lane of traffic** or ≥ 150 VPH for two moving lanes; AND — Yes — 397
- Total entering volume serviced during the hour **≥ 800 VPH for 4+ approach intersections, or** ≥ 650 VPH for intersections with three (3) approaches — Yes — 1,947

Part B: Volume

Requirement:

OR, for any four (4) consecutive 15-minute periods (1 hour) on an average day, Yes

- The plotted point of traffic for any one 60-min. period fall above the curve on Figure 4C-3 (U) or 4C-4 (R)

	Critical Hour
Any one (1) 60-minute period	7:00-8:00 AM
Both Approaches Major Street	1,096
Highest Approach Minor Street	384

The satisfaction of a traffic signal warrant or warrants shall not in itself require the installation of a traffic control signal, nor does it necessarily justify the installation of a signal. Delay, congestion, confusion or other evidence of the need for right-of-way assignment must be shown.

Traffic Signal Installation Warrant Assessment

Location: Linden Avenue at Slover Avenue

Agency: San Bernardino County, CA

Analysis Condition: Opening Year + Project 2021

Warrant 4 Pedestrian Volume

100% Satisfied: No N/A

70% Satisfied: No N/A

Requirements:

On an average day, for the pedestrian volume crossing the major street at an intersection or midblock location,

- PART A - All of the plotted points fall above Figure 4C-5 for each of any 4 hours (Use Figure 4C-6 for 70% criteria), or — No N/A
- PART B - All of the plotted points fall above Figure 4C-7 for any hour (Use Figure 4C-8 for 70% criteria) — No N/A

85th percentile or posted speed: 35 (or) Rural Population? No → 70% criteria applicable? No

(> 35 MPH?) No

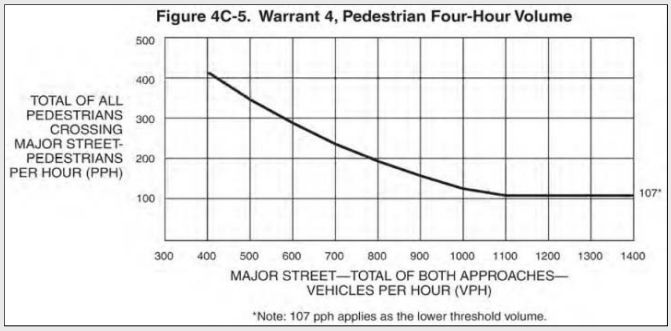

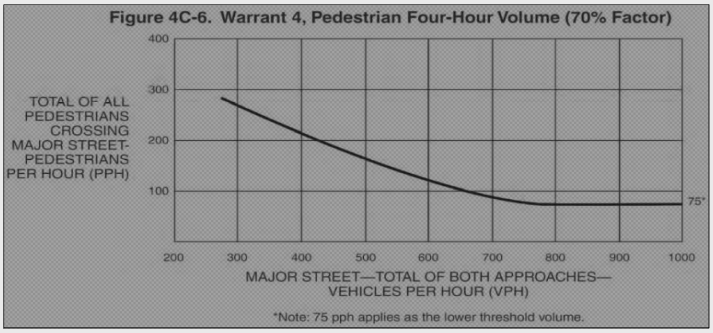

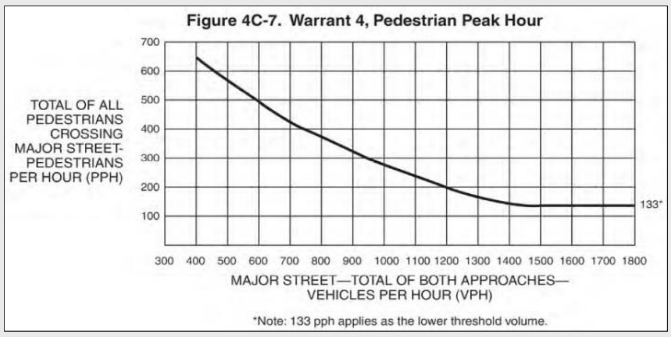

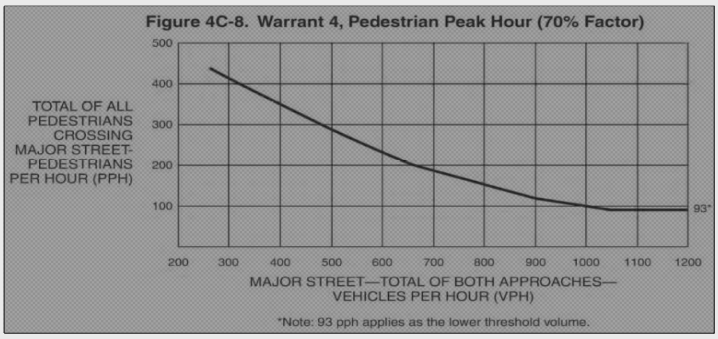

- The nearest traffic signal along the major street is greater than 295 feet (90m); AND — Yes (1,300')
- New signal will not restrict the progressive movement of traffic — No N/A

The satisfaction of a traffic signal warrant or warrants shall not in itself require the installation of a traffic control signal, nor does it necessarily justify the installation of a signal. Delay, congestion, confusion or other evidence of the need for right-of-way assignment must be shown.

Traffic Signal Installation Warrant Assessment

Location: Linden Avenue at Slover Avenue **Agency:** San Bernardino County, CA

Analysis Condition: Opening Year + Project 2021

Warrant 5 School Crossing — N/A — Applicable? No — Satisfied: No

Requirements (PART A):

- Less than 60 Gaps/Hour available during the period when children use the school crossing; AND — No — N/A
- Number of children crossing in the highest hour > 20 per hour — No — N/A

Size of Adequate Gap, G	Crossing Distance, *W*				*ft*
	Pedestrian Crossing Speed, *S*				*ft/sec*
	Predominant # of Rows (Group Size), *N*				*rows*
	Time Headway between Rows, *H*				*secs*
	Pedestrian Startup Time, *R*				*secs*
	Min. Safe Gap Size in Traffic Req'd, *G*				*secs*
Number of Gaps of Adequate Length, N_g	Time Period:	-	-	-	
	Measurement Period, *t*				*sec(s)*
	Major Street Vehicle Volume, *Q*				*veh/hr*
	School Peds Crossing Volume				*school peds/hr*
	Average Vehicle Length, *L*				*ft*
	Mean Vehicle Speed, *v*				*mph*
	Gap Size, *g* (for min. headway prob				*secs*
	Number of Gaps of Adequate Size, N_g	#DIV/0!	#DIV/0!	#DIV/0!	available gaps per
	< 0 gaps?	n/a	n/a	n/a	0 minutes; AND

Requirements (PART B):

- The nearest traffic signal along the major street is greater than 300 feet (90m) away; or — Yes — (1300')
- The proposed signal will not restrict the progressive movement of traffic — No — N/A

Flashing Yellow Beacon at School Crossings — N/A — Satisfied: No

Requirements:

- The uncontrolled school crossing is on the "Suggested Route to School"; AND — No
- Each of any 2 hours satisfying the vehicle and school ped volume requirements below; AND — No

	Minimum Requirements		1st Hr.	2nd Hr.
	Period	Urban	-	-
Vehicle Volume	Each of any 2 hrs	200	-	-
School Age Pedestrians Crossing Street	Each of any 2 hrs	40	-	-

- ≥ 40 school peds use the crossing during each of any two non-overlapping hours of a normal school day. — No — N/A

- Critical Approach Speed exceeds 35 MPH (55 km/hr), or — No — N/A
  The approach visibility is less than the stopping sight distance, AND — No — N/A — Either Met? No
- The crossing is ≥600 feet (180m) from the nearest alternate controlled/protected crossing — No — (1,315')

Bicycle Signal Warrant — N/A (B < 50) — Satisfied: No

Requirements (Volume):

- B * V ≥ 50,000 and B ≥ 50; AND — 0 and 0 → No

B		V		B * V	0

Where B = *number of bicycles at the peak hour entering the intersection,* and
V = *number of vehicles at the same peak hour entering the intersection*

Requirements (Collision and Geometric):

- Two or more bicycle/vehicle collisions susceptible to correction by a bicycle signal have occurred over a 12-month period and responsible public works official determines that a bicycle signal will reduce the number of collisions; OR — No — N/A
- (a) Where a separate bicycle/multi-use path intersects a roadway, or
  (b) At other locations to facilitate a bicycle movement that is not permitted for a motor vehicle. — No — N/A

The satisfaction of a traffic signal warrant or warrants shall not in itself require the installation of a traffic control signal, nor does it necessarily justify the installation of a signal. Delay, congestion, confusion or other evidence of the need for right-of-way assignment must be shown.

Traffic Signal Installation Warrant Assessment

Location: Linden Avenue at Slover Avenue

Agency: San Bernardino County, CA

Analysis Condition: Opening Year + Project 2021

Warrant 6 Coordinated Signal System

Satisfied: No N/A

Requirements:

One or both of the following criteria to be met by the findings of an engineering study:

- On a one-way street or a street that has traffic predominantly in one direction, the adjacent traffic control signals are so far apart that they do not provide the necessary degree of vehicular platooning. — No N/A
- OR, on a two-way street, adjacent traffic control signals do not provide the necessary degree of platooning and the proposed and adjacent traffic control signals will collectively provide a progressive operation. — No N/A

Warrant 7 Crash Experience

Satisfied: No N/A

Requirements:

- One or more of the following four (4) conditions are at least 80% satisfied; — No
  - Warrant 1, Eight-Hour Volumes - *Condition A* (Minimum Vehicular Volume); or — *No*
  - Warrant 1, Eight-Hour Volumes - *Condition B* (Interruption of Continuous Traffic); or — *No*
  - Warrant 4, *Part A* , 80% of ped traffic crossing major street for each of any 4 hours; or — *No*
  - Warrant 4, *Part B* , 80% of ped traffic crossing major street for each of any 4 hours; AND — *No*
- Signal will not seriously disrupt progressive traffic flow; AND — Yes
- Adequate trial of less restrictive remedies has failed to reduce accident frequency; AND — No N/A
- ≥ 5 reported relevant crashes susceptible to correction by traffic signal within a 12-month period — No N/A

Warrant 8 Roadway Network

Satisfied: No N/A

Requirements:

One or both of the following criteria to be met by the findings of an engineering study for the common intersection of two or more major routes:

- At least 1,000 VPH entering the intersection during the peak hour and typical weekday, under existing or immediately projected conditions, and has 5-year projected traffic volumes meeting Warrants 1,2, and 3 during the average weekday; OR — No N/A
- At least 1,000 VPH entering the intersection during the peak hour and typical weekday, under existing or immediately projected conditions, for each of any 5 hours on a Saturday or Sunday — No N/A

Min. Volume Requirements	Entering Volumes, all approaches		Met?	
1,000 Veh/Hr	Peak vehicles per hour during typical weekday:		-	
	Intersection has 5-year projected traffic volumes that meet one or more of Warrants 1, 2, and 3 during an average weekday		No	N/A
	OR, Vehicles per hour during any 5 hours of a Saturday or Sunday:	-	No	N/A

The satisfaction of a traffic signal warrant or warrants shall not in itself require the installation of a traffic control signal, nor does it necessarily justify the installation of a signal. Delay, congestion, confusion or other evidence of the need for right-of-way assignment must be shown.

Traffic Signal Installation Warrant Assessment

Location: Linden Avenue at Slover Avenue

Agency: San Bernardino County, CA

Analysis Condition: Opening Year + Project 2021

Warrant 9 Intersection Near a Grade Crossing

Satisfied: No N/A

Requirements:

Where none of the conditions described in the other eight traffic signal warrants are met, and both of the following criteria are met:

- A grade crossing exists on an approach controlled by a STOP or YIELD sign and the center of the track nearest to the intersection is ≤ 140 feet of the stop line or yield line on the approach; AND — No N/A
- The plotted point of traffic for the highest traffic volume hour in which rail traffic uses the crossing falls above the applicable curve in Figure 4C-9 (1 approach lane) or 4C-10 (2 approach lanes). — No N/A

D (ft.) - Adj1 - Adj2 - Adj3 -

Where: D = *Clear Storage Distance on minor-street approach crossing the track*

Adj1 = *Adjustment factor for Daily Frequency of Rail Traffic (Table 4C-2)*

Adj2 = *Adjustment factor for Percentage of High-Occupancy (20+ passenger) Buses (Table 4C-3)*

Adj3 = *Adjustment factor for Percentage of Tractor-Trailer Trucks (Table 4C-4)*

Summary:

Total Number of Warrants Satisfied: 1

	Warrant 1 - Eight-Hour Vehicular Volume
	Warrant 2 - Four-Hour Vehicular Volume
✓	**Warrant 3** - Peak Hour
	Warrant 4 - Pedestrian Volume
	Warrant 5 - School Crossing
	Warrant 6 - Coordinated Signal System
	Warrant 7 - Crash Experience
	Warrant 8 - Roadway Network
	Flashing Yellow Beacon at School Xing
	Bicycle Signal Warrant
	Warrant 9 - Intersection Near a Grade Xing

The satisfaction of a traffic signal warrant or warrants shall not in itself require the installation of a traffic control signal, nor does it necessarily justify the installation of a signal. Delay, congestion, confusion or other evidence of the need for right-of-way assignment must be shown.

Traffic Signal Installation Warrant Assessment

Location: Linden Avenue at Slover Avenue

Agency: San Bernardino County, CA

Analysis Condition: Opening Year + Project 2021

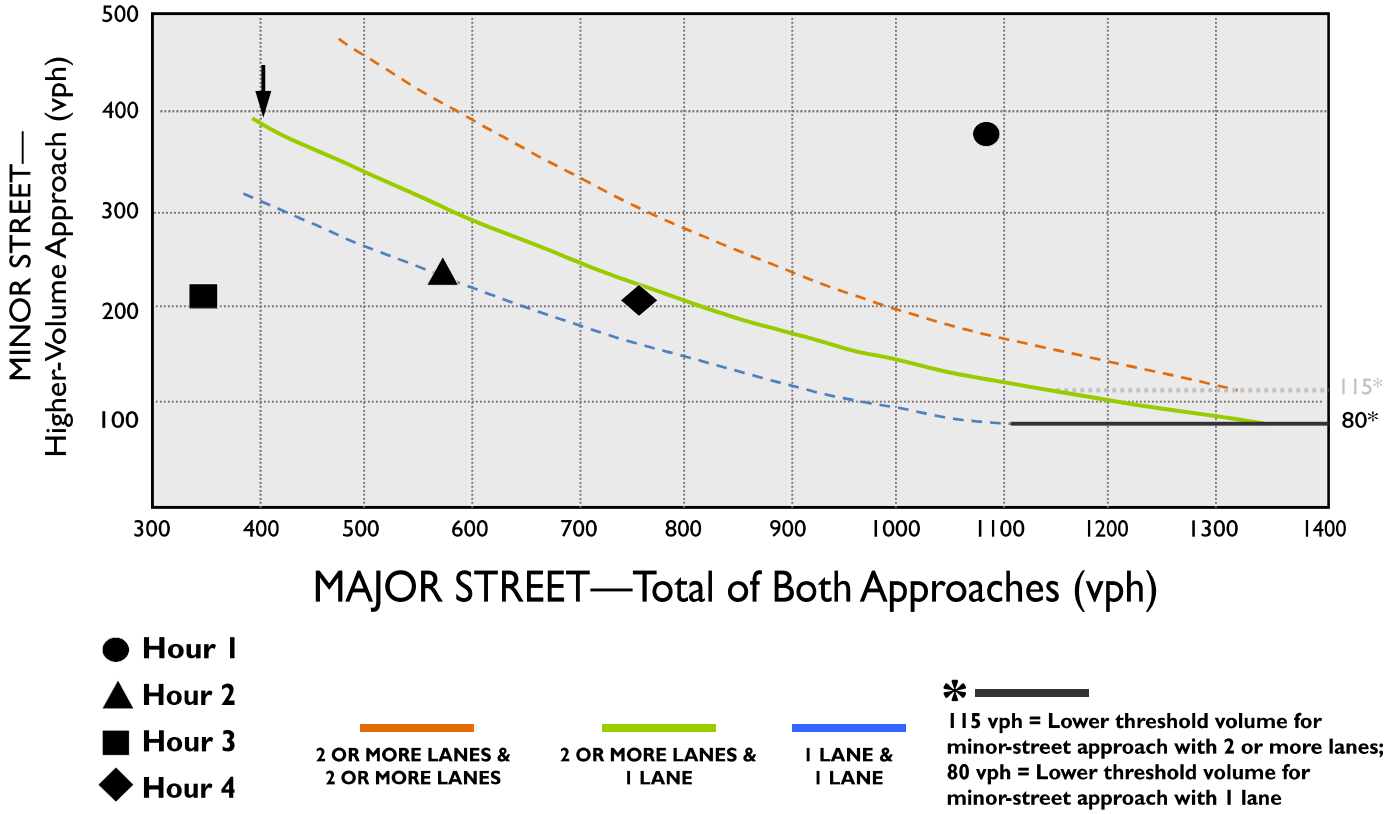

Any four (4) 60-minute periods	● Hour 1	▲ Hour 2	■ Hour 3	◆ Hour 4
	7-8A	8-9A	4-5P	5-6P
Both Approaches Major Street	1,096	584	348	753
Highest Approach Minor Street	384	221	208	199
Satisfied?	Yes	No	No	Yes

Traffic Signal Installation Warrant Assessment

Location: Linden Avenue at Slover Avenue

Agency: San Bernardino County, CA

Analysis Condition: Opening Year + Project 2021

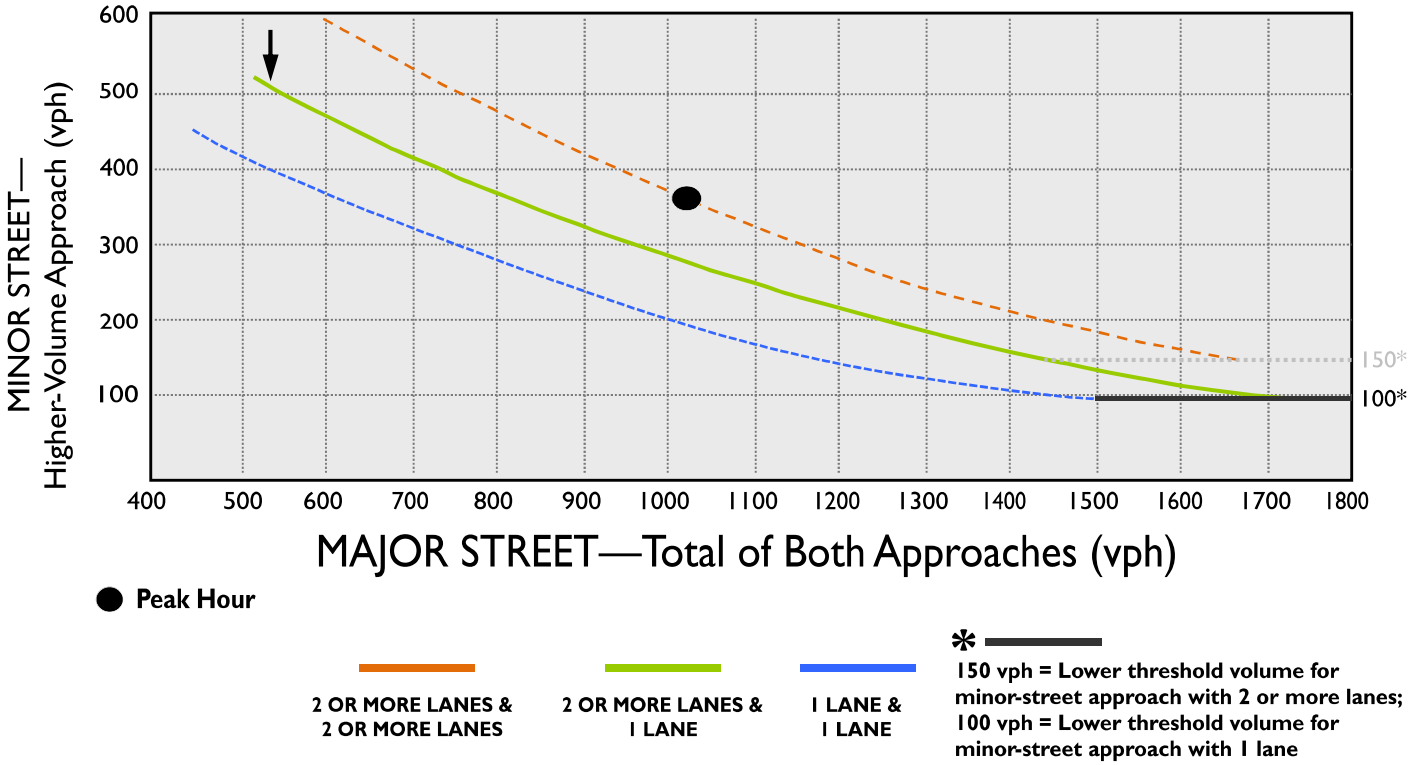

Any one (1) 60-minute period	Selected Peak Hour
	7:00 - 8:00 AM
Both Approaches Major Street	1,096
Highest Approach Minor Street	384
Satisfied?	Yes

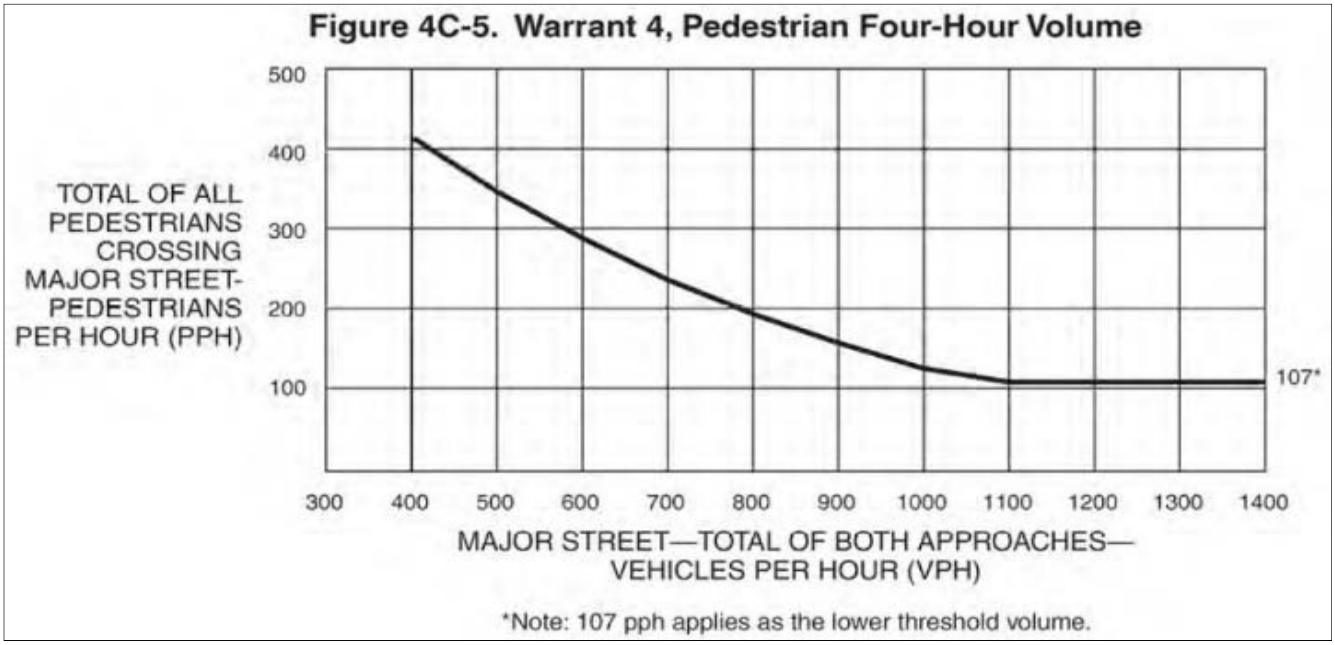

● **Hour 1**
▲ **Hour 2**
■ **Hour 3**
◆ **Hour 4**

	●	▲	■	◆
Any four (4) 60-minute periods	Hour 1 9-10A	Hour 2 12-1P	Hour 3 4-5P	Hour 4 5-6P
Both Approaches Major Street				
Pedestrians Crossing on Major Street				
Satisfied?				

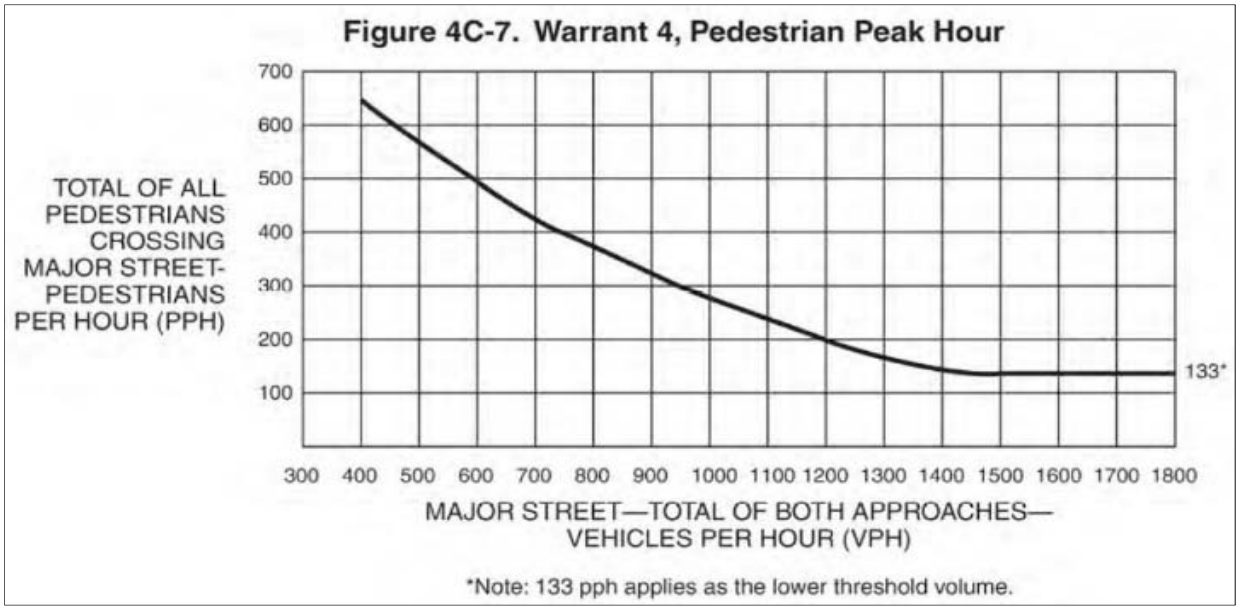

● **Peak Hour**

Any one (1) 60-minute period	● **Selected Peak Hour**
Both Approaches Major Street	
Pedestrians Crossing Major Street	
Satisfied?	

Traffic Signal Installation Warrant Assessment

Location: Linden Avenue at Santa Ana Avenue | **Agency:** San Bernardino County, CA

Analysis Condition: Horizon Year + Project 2040

DIST: **8**
CO: **San Bernardino** Calculated by: **JT** Date: **6/17/2020**
RTE/PM: **N/A** Checked by: **FM** Date: **6/17/2020**

Intersection: **Slover Avenue (EB/WB) at Linden Avenue (NB/SB)**
Major Street: **Santa Ana Avenue** Posted/Critical Approach Speed: **40 MPH**
Minor Street: **Linden Avenue** Posted/Critical Approach Speed: **25 MPH**

Approach lanes (Santa Ana Avenue): **1** Approach Lanes (Linden Avenue): **1**

Type (Rural/Urban)*: **Urban**
Critical speed of major street traffic > 64 Km/Hr (40 MPH): **No**
In built up area of isolated community of < 10,000 population: **No**

** Rural: either one satisfied*
Urban: neither two satisfied

Warrant 1 Eight-Hour Vehicular Volume

Condition A: Minimum Vehicle Volume

100% Satisfied: No (1/8)
80% Satisfied: No (1/8)

Requirement:
- Each of any eight 60-minute periods of an average day satisfying the requirement

Basic Min. Hourly Volume Requirement (80% shown in brackets)			1st Hr.	2nd Hr.	3rd Hr.	4th Hr.	5th Hr.	6th Hr.	7th Hr.	8th Hr.
Type	**Urban**	**Urban**	7:00 - 8:00am	8:00 - 9:00am	4:00 - 5:00pm	5:00 - 6:00pm				
Approach Lanes	**1**	**≥ 2**								
Both Approaches Major Street	**500**	600	**537**	147	389	407				
	(400)	(480)	**(430)**	(118)	(311)	(326)				
Highest Approach Minor Street	**150**	200	**307**	**187**	**399**	**397**				
	(120)	(160)	**(246)**	**(150)**	**(319)**	**(318)**				

Condition B: Interruption of Continuous Traffic

100% Satisfied: No (0/8)
80% Satisfied: No (0/8)

Requirement:
- Each of any eight 60-minute periods of an average day satisfying the requirement

Min. Requirement (80% in brackets)			1st Hr.	2nd Hr.	3rd Hr.	4th Hr.	5th Hr.	6th Hr.	7th Hr.	8th Hr.
Type	**Urban**	**Urban**	7:00 - 8:00am	8:00 - 9:00am	4:00 - 5:00pm	5:00 - 6:00pm				
Approach Lanes	**1**	**≥ 2**								
Both Approaches Major Street	**750**	900	537	147	389	407	0	0	0	0
	(600)	(720)	(430)	(118)	(311)	(326)	0	0	0	0
Highest Approach Minor Street	**75**	100	**307**	**187**	**399**	**397**	0	0	0	0
	(60)	(80)	**(246)**	**(150)**	**(319)**	**(318)**	0	0	0	0

Combination of Conditions A & B

Satisfied: No

Requirements:
- Conditions A and B satisfied to 80% or better: No (1/16)

AND:
- An adequate trial of other alternatives that could cause less delay and inconvenience to traffic has failed to solve the traffic problems. No N/A

The satisfaction of a traffic signal warrant or warrants shall not in itself require the installation of a traffic control signal, nor does it necessarily justify the installation of a signal. Delay, congestion, confusion or other evidence of the need for right-of-way assignment must be shown.

Traffic Signal Installation Warrant Assessment

Location: Linden Avenue at Santa Ana Avenue

Agency: San Bernardino County, CA

Analysis Condition: Horizon Year + Project 2040

Warrant 2 Four-Hour Vehicular Volume

Satisfied: No

Requirements:

- All plotted points of traffic for each of any four 60-minute periods fall above the curve on Figure 4C-1 (U) or 4C-2 (R)

	1st Hr.	2nd Hr.	3rd Hr.	4th Hr.
Any four (4) 60-minutes periods	7:00 - 8:00am	8:00 - 9:00am	4:00 - 5:00pm	5:00 - 6:00pm
Both Approaches Major Street	537	147	389	407
Highest Approach Minor Street	307	187	399	397

Warrant 3 Peak Hour

Satisfied: NO

Part A: Delay

Requirements:

For the same consecutive four 15-minute (1 hour) period on an average day, 4:45 - 5:45 PM

- Total delay on one stop-controlled minor street approach ≥ 4 vehicle-hours for a one-lane approach, or ≥ 5 vehicle-hours for a two-lane approach, AND — No — 2.2
- Volume on the same minor street approach **≥ 100 VPH for one moving lane of traffic** or ≥ 150 VPH for two moving lanes; AND — Yes — 432
- Total entering volume serviced during the hour **≥ 800 VPH for 4+ approach intersections, or** ≥ 650 VPH for intersections with three (3) approaches — Yes — 1,192

Part B: Volume

Requirement:

OR, for any four (4) consecutive 15-minute periods (1 hour) on an average day, Yes

- The plotted point of traffic for any one 60-min. period fall above the curve on Figure 4C-3 (U) or 4C-4 (R)

	Critical Hour
Any one (1) 60-minute period	7:00-8:00 AM
Both Approaches Major Street	411
Highest Approach Minor Street	432

The satisfaction of a traffic signal warrant or warrants shall not in itself require the installation of a traffic control signal, nor does it necessarily justify the installation of a signal. Delay, congestion, confusion or other evidence of the need for right-of-way assignment must be shown.

Traffic Signal Installation Warrant Assessment

Location: Linden Avenue at Santa Ana Avenue

Agency: San Bernardino County, CA

Analysis Condition: Horizon Year + Project 2040

Warrant 4 Pedestrian Volume

100% Satisfied: No N/A

70% Satisfied: No N/A

Requirements:

On an average day, for the pedestrian volume crossing the major street at an intersection or midblock location,

- PART A - All of the plotted points fall above Figure 4C-5 for each of any 4 hours (Use Figure 4C-6 for 70% criteria), or — No N/A
- PART B - All of the plotted points fall above Figure 4C-7 for any hour (Use Figure 4C-8 for 70% criteria) — No N/A

85th percentile or posted speed: 35 (> 35 MPH?) No (or) Rural Population? No → 70% criteria applicable? No

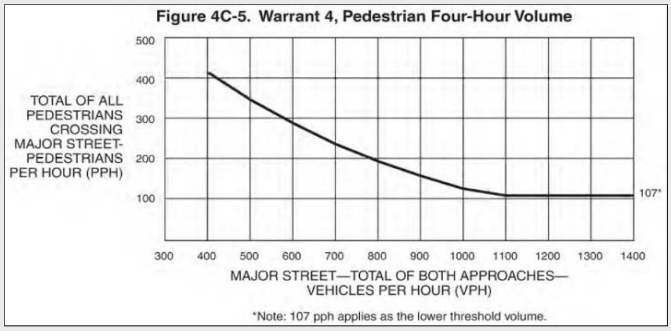

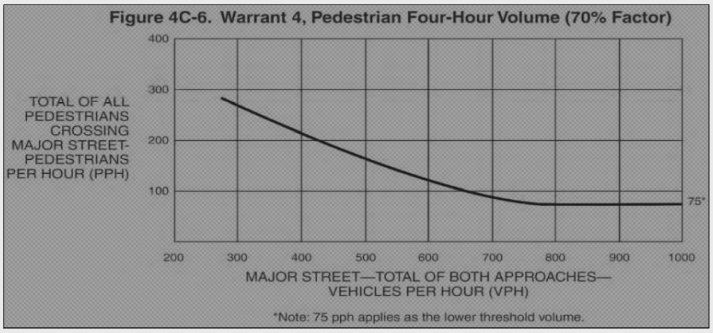

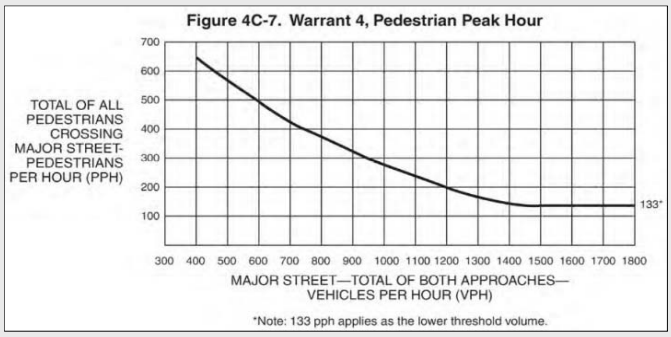

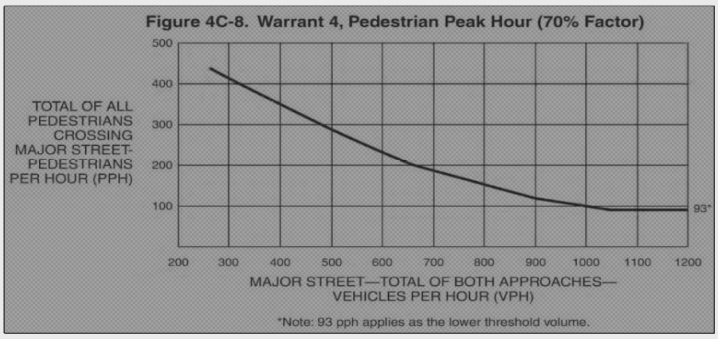

- The nearest traffic signal along the major street is greater than 295 feet (90m); AND — Yes (1,300')
- New signal will not restrict the progressive movement of traffic — No N/A

The satisfaction of a traffic signal warrant or warrants shall not in itself require the installation of a traffic control signal, nor does it necessarily justify the installation of a signal. Delay, congestion, confusion or other evidence of the need for right-of-way assignment must be shown.

Traffic Signal Installation Warrant Assessment

Location: Linden Avenue at Santa Ana Avenue **Agency:** San Bernardino County, CA

Analysis Condition: Horizon Year + Project 2040

Warrant 5 School Crossing — N/A — Applicable? No — Satisfied: No

Requirements (PART A):

- Less than 60 Gaps/Hour available during the period when children use the school crossing; AND — No — N/A
- Number of children crossing in the highest hour > 20 per hour — No — N/A

Size of Adequate Gap, G	Crossing Distance, *W*				*ft*
	Pedestrian Crossing Speed, *S*				*ft/sec*
	Predominant # of Rows (Group Size), *N*				*rows*
	Time Headway between Rows, *H*				*secs*
	Pedestrian Startup Time, *R*				*secs*
	Min. Safe Gap Size in Traffic Req'd, *G*				*secs*
Number of Gaps of Adequate Length, N_g	Time Period:	-	-	-	
	Measurement Period, *t*				*sec(s)*
	Major Street Vehicle Volume, *Q*				*veh/hr*
	School Peds Crossing Volume				*school peds/hr*
	Average Vehicle Length, *L*				*ft*
	Mean Vehicle Speed, *v*				*mph*
	Gap Size, *g* (for min. headway prob				*secs*
	Number of Gaps of Adequate Size, N_g	#DIV/0!	#DIV/0!	#DIV/0!	available gaps per
	< 0 gaps?	n/a	n/a	n/a	0 minutes; AND

Requirements (PART B):

- The nearest traffic signal along the major street is greater than 300 feet (90m) away; or — Yes — (1300')
- The proposed signal will not restrict the progressive movement of traffic — No — N/A

Flashing Yellow Beacon at School Crossings — N/A — Satisfied: No

Requirements:

- The uncontrolled school crossing is on the "Suggested Route to School"; AND — No
- Each of any 2 hours satisfying the vehicle and school ped volume requirements below; AND — No

	Minimum Requirements		1st Hr.	2nd Hr.
	Period	Urban	-	-
Vehicle Volume	Each of any 2 hrs	200	-	-
School Age Pedestrians Crossing Street	Each of any 2 hrs	40	-	-

- ≥ 40 school peds use the crossing during each of any two non-overlapping hours of a normal school day. — No — N/A

- Critical Approach Speed exceeds 35 MPH (55 km/hr), or — No — N/A
  The approach visibility is less than the stopping sight distance, AND — No — N/A — Either Met? No
- The crossing is ≥600 feet (180m) from the nearest alternate controlled/protected crossing — No — (1,315')

Bicycle Signal Warrant — N/A (B < 50) — Satisfied: No

Requirements (Volume):

- B * V ≥ 50,000 and B ≥ 50; AND — 0 and 0 → No

B		V		B * V	0

Where B = *number of bicycles at the peak hour entering the intersection,* and
V = *number of vehicles at the same peak hour entering the intersection*

Requirements (Collision and Geometric):

- Two or more bicycle/vehicle collisions susceptible to correction by a bicycle signal have occurred over a 12-month period and responsible public works official determines that a bicycle signal will reduce the number of collisions; OR — No — N/A
- (a) Where a separate bicycle/multi-use path intersects a roadway, or
  (b) At other locations to facilitate a bicycle movement that is not permitted for a motor vehicle. — No — N/A

The satisfaction of a traffic signal warrant or warrants shall not in itself require the installation of a traffic control signal, nor does it necessarily justify the installation of a signal. Delay, congestion, confusion or other evidence of the need for right-of-way assignment must be shown.

Traffic Signal Installation Warrant Assessment

Location: Linden Avenue at Santa Ana Avenue

Agency: San Bernardino County, CA

Analysis Condition: Horizon Year + Project 2040

Warrant 6 Coordinated Signal System

Satisfied: No N/A

Requirements:

One or both of the following criteria to be met by the findings of an engineering study:

- On a one-way street or a street that has traffic predominantly in one direction, the adjacent traffic control signals are so far apart that they do not provide the necessary degree of vehicular platooning. — No N/A
- OR, on a two-way street, adjacent traffic control signals do not provide the necessary degree of platooning and the proposed and adjacent traffic control signals will collectively provide a progressive operation. — No N/A

Warrant 7 Crash Experience

Satisfied: No N/A

Requirements:

- One or more of the following four (4) conditions are at least 80% satisfied; — No
  - Warrant 1, Eight-Hour Volumes - *Condition A* (Minimum Vehicular Volume); or — *No*
  - Warrant 1, Eight-Hour Volumes - *Condition B* (Interruption of Continuous Traffic); or — *No*
  - Warrant 4, *Part A* , 80% of ped traffic crossing major street for each of any 4 hours; or — *No*
  - Warrant 4, *Part B* , 80% of ped traffic crossing major street for each of any 4 hours; AND — *No*
- Signal will not seriously disrupt progressive traffic flow; AND — Yes
- Adequate trial of less restrictive remedies has failed to reduce accident frequency; AND — No N/A
- ≥ 5 reported relevant crashes susceptible to correction by traffic signal within a 12-month period — No N/A

Warrant 8 Roadway Network

Satisfied: No N/A

Requirements:

One or both of the following criteria to be met by the findings of an engineering study for the common intersection of two or more major routes:

- At least 1,000 VPH entering the intersection during the peak hour and typical weekday, under existing or immediately projected conditions, and has 5-year projected traffic volumes meeting Warrants 1,2, and 3 during the average weekday; OR — No N/A
- At least 1,000 VPH entering the intersection during the peak hour and typical weekday, under existing or immediately projected conditions, for each of any 5 hours on a Saturday or Sunday — No N/A

Min. Volume Requirements	Entering Volumes, all approaches		Met?	
1,000 Veh/Hr	Peak vehicles per hour during typical weekday:		-	
	Intersection has 5-year projected traffic volumes that meet one or more of Warrants 1, 2, and 3 during an average weekday		No	N/A
	OR, Vehicles per hour during any 5 hours of a Saturday or Sunday:	-	No	N/A

The satisfaction of a traffic signal warrant or warrants shall not in itself require the installation of a traffic control signal, nor does it necessarily justify the installation of a signal. Delay, congestion, confusion or other evidence of the need for right-of-way assignment must be shown.

Traffic Signal Installation Warrant Assessment

Location: Linden Avenue at Santa Ana Avenue

Agency: San Bernardino County, CA

Analysis Condition: Horizon Year + Project 2040

Warrant 9 Intersection Near a Grade Crossing

Satisfied: No N/A

Requirements:

Where none of the conditions described in the other eight traffic signal warrants are met, and both of the following criteria are met:

- A grade crossing exists on an approach controlled by a STOP or YIELD sign and the center of the track nearest to the intersection is ≤ 140 feet of the stop line or yield line on the approach; AND — No N/A
- The plotted point of traffic for the highest traffic volume hour in which rail traffic uses the crossing falls above the applicable curve in Figure 4C-9 (1 approach lane) or 4C-10 (2 approach lanes). — No N/A

D (ft.) - Adj1 - Adj2 - Adj3 -

Where: D = *Clear Storage Distance on minor-street approach crossing the track*

Adj1 = *Adjustment factor for Daily Frequency of Rail Traffic (Table 4C-2)*

Adj2 = *Adjustment factor for Percentage of High-Occupancy (20+ passenger) Buses (Table 4C-3)*

Adj3 = *Adjustment factor for Percentage of Tractor-Trailer Trucks (Table 4C-4)*

Summary:

Total Number of Warrants Satisfied: **0**

	Warrant 1 - Eight-Hour Vehicular Volume
	Warrant 2 - Four-Hour Vehicular Volume
	Warrant 3 - Peak Hour
	Warrant 4 - Pedestrian Volume
	Warrant 5 - School Crossing
	Warrant 6 - Coordinated Signal System
	Warrant 7 - Crash Experience
	Warrant 8 - Roadway Network
	Flashing Yellow Beacon at School Xing
	Bicycle Signal Warrant
	Warrant 9 - Intersection Near a Grade Xing

The satisfaction of a traffic signal warrant or warrants shall not in itself require the installation of a traffic control signal, nor does it necessarily justify the installation of a signal. Delay, congestion, confusion or other evidence of the need for right-of-way assignment must be shown.

Traffic Signal Installation Warrant Assessment

Location: Linden Avenue at Santa Ana Avenue

Agency: San Bernardino County, CA

Analysis Condition: Horizon Year + Project 2040

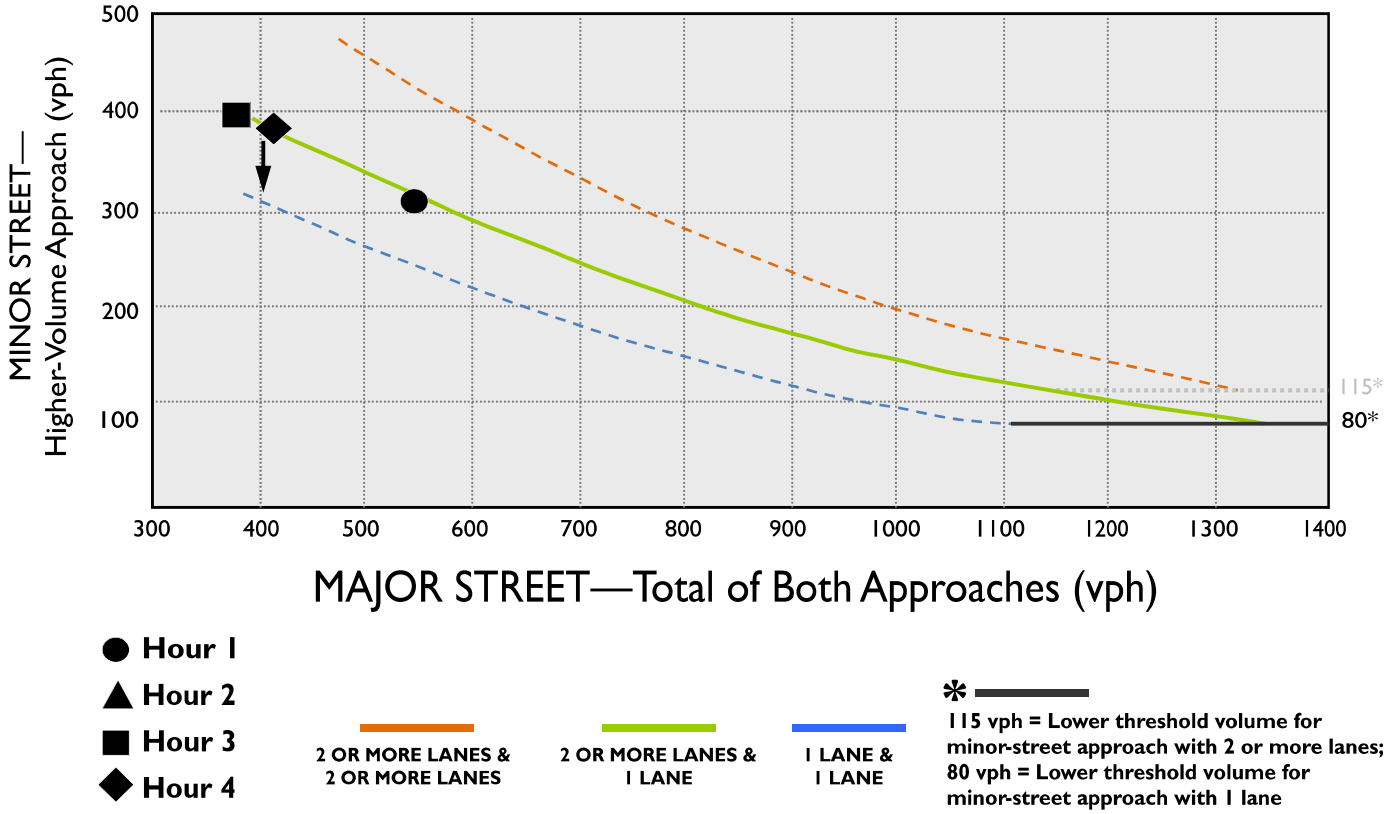

Any four (4) 60-minute periods	● Hour 1	▲ Hour 2	■ Hour 3	◆ Hour 4
	7-8A	8-9A	4-5P	5-6P
Both Approaches Major Street	537	147	389	407
Highest Approach Minor Street	307	187	399	397
Satisfied?	Yes	No	Yes	Yes

Traffic Signal Installation Warrant Assessment

Location: Linden Avenue at Santa Ana Avenue

Agency: San Bernardino County, CA

Analysis Condition: Horizon Year + Project 2040

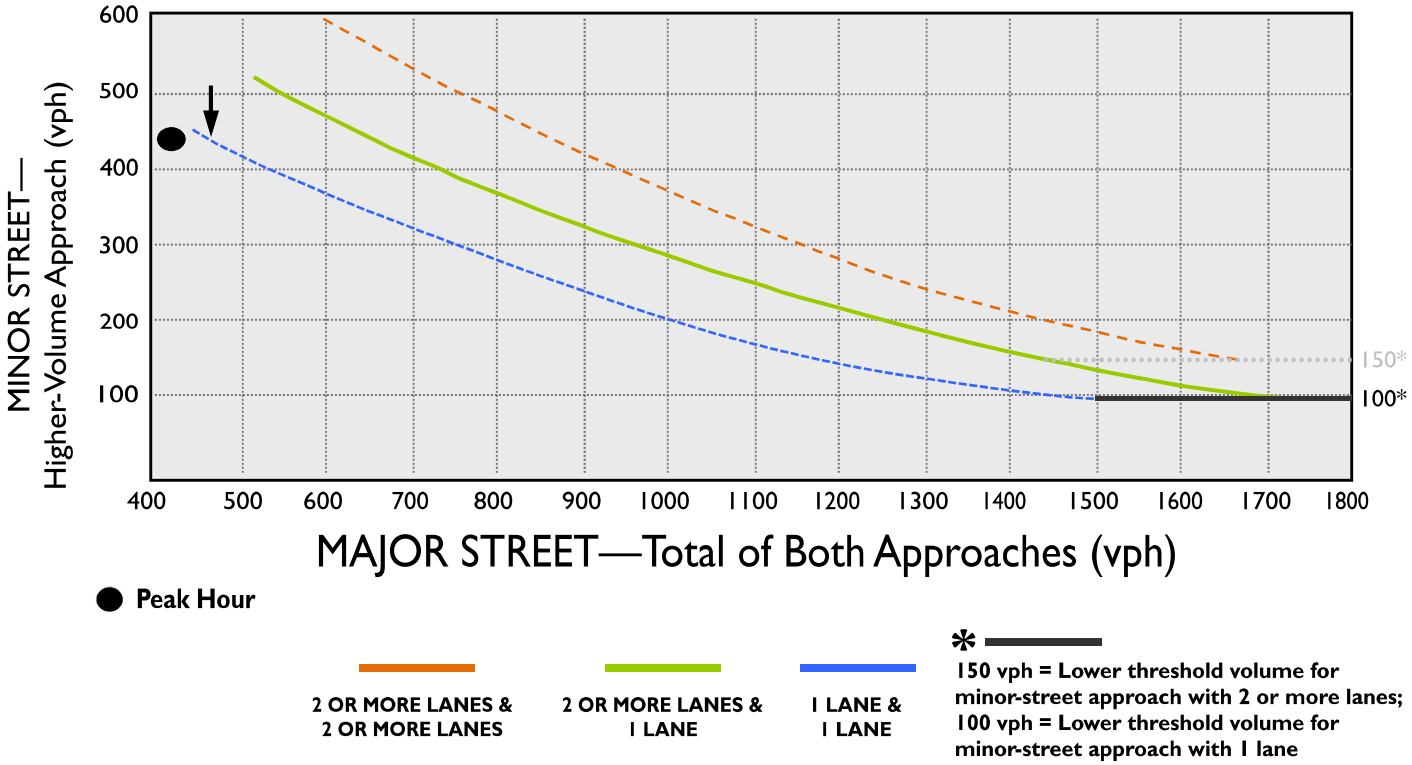

Any one (1) 60-minute period	Selected Peak Hour
	4:45 - 5:45 PM
Both Approaches Major Street	411
Highest Approach Minor Street	432
Satisfied?	No

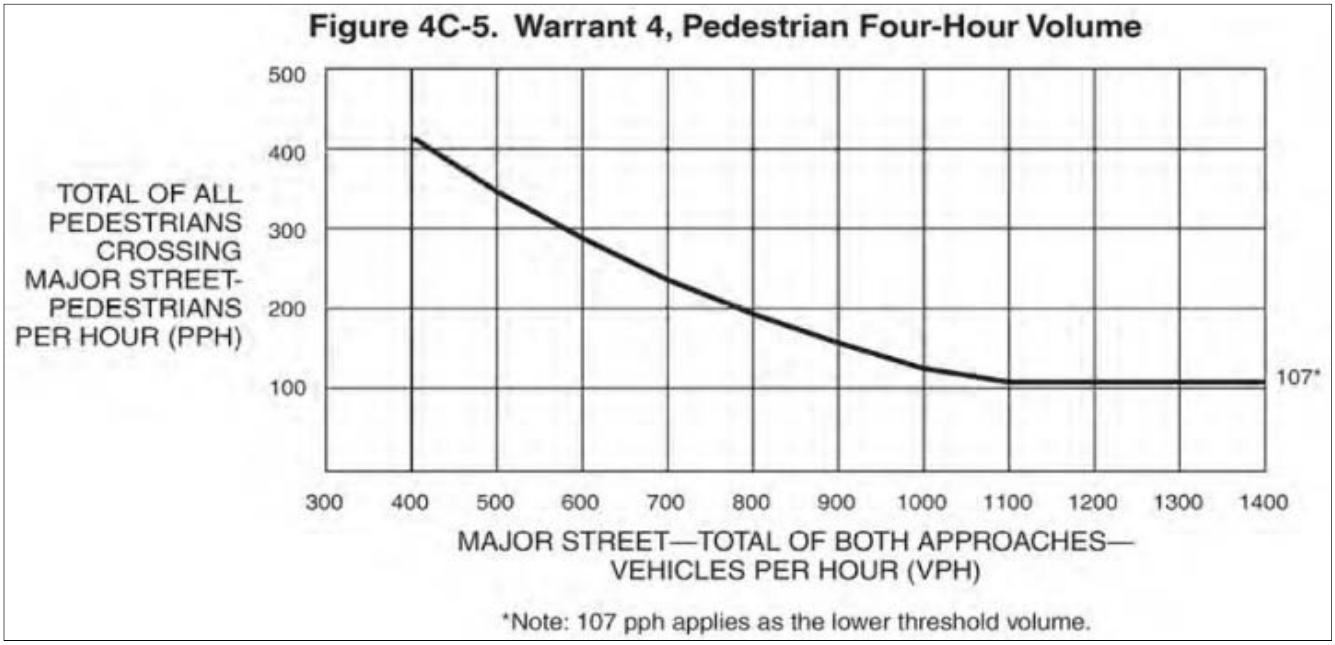

● **Hour 1**
▲ **Hour 2**
■ **Hour 3**
◆ **Hour 4**

	●	▲	■	◆
Any four (4) 60-minute periods	Hour 1 9-10A	Hour 2 12-1P	Hour 3 4-5P	Hour 4 5-6P
Both Approaches Major Street				
Pedestrians Crossing on Major Street				
Satisfied?				

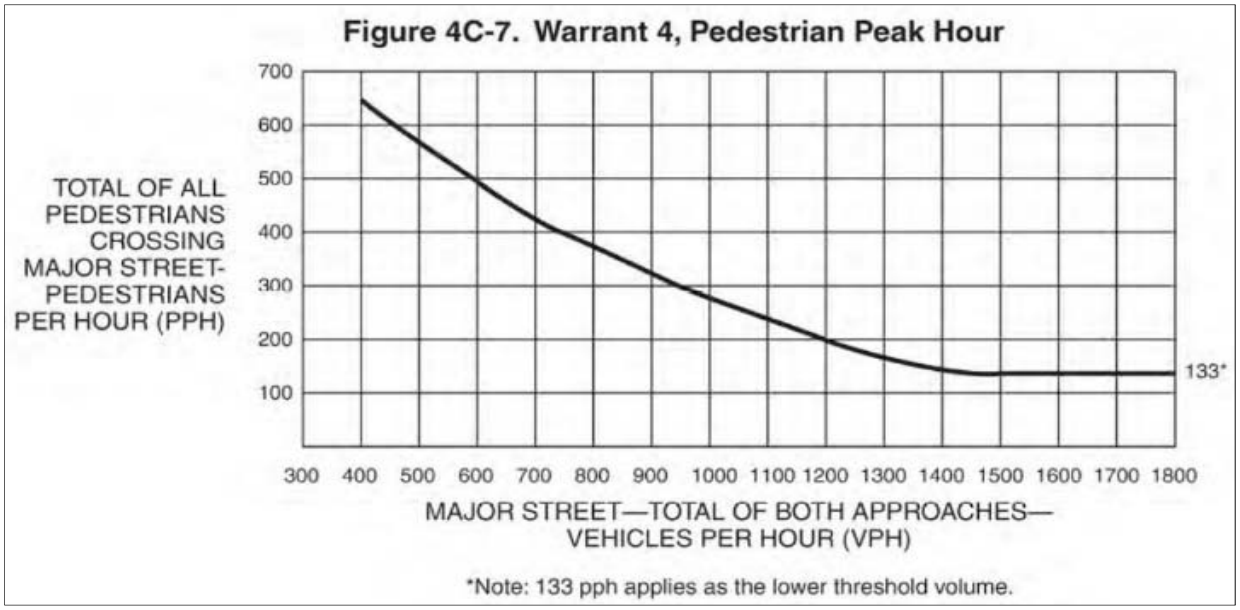

● **Peak Hour**

Any one (1) 60-minute period	● **Selected Peak Hour**
Both Approaches Major Street	
Pedestrians Crossing Major Street	
Satisfied?	

Appendix I: HCS Worksheets

HCS7 Basic Freeway Report

Project Information

Analyst	Jenny Tran	Date	5/11/2020
Agency	Minagar & Associates, Inc.	Analysis Year	Existing 2020
Jurisdiction	Caltrans	Time Period Analyzed	AM Peak Hour
Project Description	I-10/Cedar - E/B East of Cedar		

Geometric Data

Number of Lanes, ln	4	Terrain Type	Level
Segment Length (L), ft	-	Percent Grade, %	-
Measured or Base Free-Flow Speed	Base	Grade Length, mi	-
Base Free-Flow Speed (BFFS), mi/h	70.0	Total Ramp Density (TRD), ramps/mi	5.00
Lane Width, ft	12	Free-Flow Speed (FFS), mi/h	57.6
Right-Side Lateral Clearance, ft	10		

Adjustment Factors

Driver Population	All Familiar	Final Speed Adjustment Factor (SAF)	1.000
Weather Type	Non-Severe Weather	Final Capacity Adjustment Factor (CAF)	1.000
Incident Type	No Incident	Demand Adjustment Factor (DAF)	1.000

Demand and Capacity

Demand Volume veh/h	4752	Heavy Vehicle Adjustment Factor (f_{HV})	1.000
Peak Hour Factor	0.94	Flow Rate (V_p), pc/h/ln	1264
Total Trucks, %	0.00	Capacity (c), pc/h/ln	2276
Single-Unit Trucks (SUT), %	-	Adjusted Cpacity (c_{adj}), pc/h/ln	2276
Tractor-Trailers (TT), %	-	Volume-to-Capacity Ratio (v/c)	0.56
Passenger Car Equivalent (E_T)	2.000		

Speed and Density

Lane Width Adjustment (f_{LW})	0.0	Average Speed (S), mi/h	57.6
Right-Side Lateral Clearance Adj. (f_{RLC})	0.0	Density (D), pc/mi/ln	21.9
Total Ramp Density Adjustment	12.4	Level of Service (LOS)	C
Adjusted Free-Flow Speed (FFS_{adj}), mi/h	57.6		

Copyright © 2020 University of Florida. All Rights Reserved.

HCS7 Basic Freeway Report

Project Information

Analyst	Jenny Tran	Date	5/11/2020
Agency	Minagar & Associates, Inc.	Analysis Year	Existing 2020
Jurisdiction	Caltrans	Time Period Analyzed	PM Peak Hour
Project Description	I-10/Cedar - E/B East of Cedar		

Geometric Data

Number of Lanes, ln	4	Terrain Type	Level
Segment Length (L), ft	-	Percent Grade, %	-
Measured or Base Free-Flow Speed	Base	Grade Length, mi	-
Base Free-Flow Speed (BFFS), mi/h	70.0	Total Ramp Density (TRD), ramps/mi	5.00
Lane Width, ft	12	Free-Flow Speed (FFS), mi/h	57.6
Right-Side Lateral Clearance, ft	10		

Adjustment Factors

Driver Population	All Familiar	Final Speed Adjustment Factor (SAF)	1.000
Weather Type	Non-Severe Weather	Final Capacity Adjustment Factor (CAF)	1.000
Incident Type	No Incident	Demand Adjustment Factor (DAF)	1.000

Demand and Capacity

Demand Volume veh/h	9400	Heavy Vehicle Adjustment Factor (f_{HV})	1.000
Peak Hour Factor	0.94	Flow Rate (V_p), pc/h/ln	2500
Total Trucks, %	0.00	Capacity (c), pc/h/ln	2276
Single-Unit Trucks (SUT), %	-	Adjusted Cpacity (c_{adj}), pc/h/ln	2276
Tractor-Trailers (TT), %	-	Volume-to-Capacity Ratio (v/c)	1.10
Passenger Car Equivalent (E_T)	2.000		

Speed and Density

Lane Width Adjustment (f_{LW})	0.0	Average Speed (S), mi/h	-
Right-Side Lateral Clearance Adj. (f_{RLC})	0.0	Density (D), pc/mi/ln	-
Total Ramp Density Adjustment	12.4	Level of Service (LOS)	F
Adjusted Free-Flow Speed (FFS_{adj}), mi/h	57.6		

Copyright © 2020 University of Florida. All Rights Reserved.

HCS7 Basic Freeway Report

Project Information

Analyst	Jenny Tran	Date	5/11/2020
Agency	Minagar & Associates, Inc.	Analysis Year	Existing 2020
Jurisdiction	Caltrans	Time Period Analyzed	AM Peak Hour
Project Description	I-10/Cedar - W/B East of Cedar Ave		

Geometric Data

Number of Lanes, ln	4	Terrain Type	Level
Segment Length (L), ft	-	Percent Grade, %	-
Measured or Base Free-Flow Speed	Base	Grade Length, mi	-
Base Free-Flow Speed (BFFS), mi/h	70.0	Total Ramp Density (TRD), ramps/mi	5.00
Lane Width, ft	12	Free-Flow Speed (FFS), mi/h	57.6
Right-Side Lateral Clearance, ft	10		

Adjustment Factors

Driver Population	All Familiar	Final Speed Adjustment Factor (SAF)	1.000
Weather Type	Non-Severe Weather	Final Capacity Adjustment Factor (CAF)	1.000
Incident Type	No Incident	Demand Adjustment Factor (DAF)	1.000

Demand and Capacity

Demand Volume veh/h	10516	Heavy Vehicle Adjustment Factor (f_{HV})	1.000
Peak Hour Factor	0.94	Flow Rate (V_p), pc/h/ln	2797
Total Trucks, %	0.00	Capacity (c), pc/h/ln	2276
Single-Unit Trucks (SUT), %	-	Adjusted Cpacity (c_{adj}), pc/h/ln	2276
Tractor-Trailers (TT), %	-	Volume-to-Capacity Ratio (v/c)	1.23
Passenger Car Equivalent (E_T)	2.000		

Speed and Density

Lane Width Adjustment (f_{LW})	0.0	Average Speed (S), mi/h	-
Right-Side Lateral Clearance Adj. (f_{RLC})	0.0	Density (D), pc/mi/ln	-
Total Ramp Density Adjustment	12.4	Level of Service (LOS)	F
Adjusted Free-Flow Speed (FFS_{adj}), mi/h	57.6		

Copyright © 2020 University of Florida. All Rights Reserved.

HCS7 Basic Freeway Report

Project Information

Analyst	Jenny Tran	Date	5/11/2020
Agency	Minagar & Associates, Inc.	Analysis Year	Existing 2020
Jurisdiction	Caltrans	Time Period Analyzed	PM Peak Hour
Project Description	I-10/Cedar - W/B East of Cedar		

Geometric Data

Number of Lanes, ln	4	Terrain Type	Level
Segment Length (L), ft	-	Percent Grade, %	-
Measured or Base Free-Flow Speed	Base	Grade Length, mi	-
Base Free-Flow Speed (BFFS), mi/h	70.0	Total Ramp Density (TRD), ramps/mi	5.00
Lane Width, ft	12	Free-Flow Speed (FFS), mi/h	57.6
Right-Side Lateral Clearance, ft	10		

Adjustment Factors

Driver Population	All Familiar	Final Speed Adjustment Factor (SAF)	1.000
Weather Type	Non-Severe Weather	Final Capacity Adjustment Factor (CAF)	1.000
Incident Type	No Incident	Demand Adjustment Factor (DAF)	1.000

Demand and Capacity

Demand Volume veh/h	6222	Heavy Vehicle Adjustment Factor (f_{HV})	1.000
Peak Hour Factor	0.94	Flow Rate (V_p), pc/h/ln	1655
Total Trucks, %	0.00	Capacity (c), pc/h/ln	2276
Single-Unit Trucks (SUT), %	-	Adjusted Cpacity (c_{adj}), pc/h/ln	2276
Tractor-Trailers (TT), %	-	Volume-to-Capacity Ratio (v/c)	0.73
Passenger Car Equivalent (E_T)	2.000		

Speed and Density

Lane Width Adjustment (f_{LW})	0.0	Average Speed (S), mi/h	57.6
Right-Side Lateral Clearance Adj. (f_{RLC})	0.0	Density (D), pc/mi/ln	28.7
Total Ramp Density Adjustment	12.4	Level of Service (LOS)	D
Adjusted Free-Flow Speed (FFS_{adj}), mi/h	57.6		

Copyright © 2020 University of Florida. All Rights Reserved.

HCS7 Basic Freeway Report

Project Information

Analyst	Jenny Tran	Date	5/11/2020
Agency	Minagar & Associates, Inc.	Analysis Year	Existing 2020
Jurisdiction	Caltrans	Time Period Analyzed	AM Peak Hour
Project Description	I-10/Cedar - E/B West of Cedar Ave		

Geometric Data

Number of Lanes, ln	4	Terrain Type	Level
Segment Length (L), ft	-	Percent Grade, %	-
Measured or Base Free-Flow Speed	Base	Grade Length, mi	-
Base Free-Flow Speed (BFFS), mi/h	70.0	Total Ramp Density (TRD), ramps/mi	5.00
Lane Width, ft	12	Free-Flow Speed (FFS), mi/h	57.6
Right-Side Lateral Clearance, ft	10		

Adjustment Factors

Driver Population	All Familiar	Final Speed Adjustment Factor (SAF)	1.000
Weather Type	Non-Severe Weather	Final Capacity Adjustment Factor (CAF)	1.000
Incident Type	No Incident	Demand Adjustment Factor (DAF)	1.000

Demand and Capacity

Demand Volume veh/h	5159	Heavy Vehicle Adjustment Factor (f_{HV})	1.000
Peak Hour Factor	0.94	Flow Rate (V_p), pc/h/ln	1372
Total Trucks, %	0.00	Capacity (c), pc/h/ln	2276
Single-Unit Trucks (SUT), %	-	Adjusted Cpacity (c_{adj}), pc/h/ln	2276
Tractor-Trailers (TT), %	-	Volume-to-Capacity Ratio (v/c)	0.60
Passenger Car Equivalent (E_T)	2.000		

Speed and Density

Lane Width Adjustment (f_{LW})	0.0	Average Speed (S), mi/h	57.6
Right-Side Lateral Clearance Adj. (f_{RLC})	0.0	Density (D), pc/mi/ln	23.8
Total Ramp Density Adjustment	12.4	Level of Service (LOS)	C
Adjusted Free-Flow Speed (FFS_{adj}), mi/h	57.6		

Copyright © 2020 University of Florida. All Rights Reserved.

HCS7 Basic Freeway Report

Project Information

Analyst	Jenny Tran	Date	5/11/2020
Agency	Minagar & Associates, Inc.	Analysis Year	Existing 2020
Jurisdiction	Caltrans	Time Period Analyzed	PM Peak Hour
Project Description	I-10/Cedar - E/B West of Cedar		

Geometric Data

Number of Lanes, ln	4	Terrain Type	Level
Segment Length (L), ft	-	Percent Grade, %	-
Measured or Base Free-Flow Speed	Base	Grade Length, mi	-
Base Free-Flow Speed (BFFS), mi/h	70.0	Total Ramp Density (TRD), ramps/mi	5.00
Lane Width, ft	12	Free-Flow Speed (FFS), mi/h	57.6
Right-Side Lateral Clearance, ft	10		

Adjustment Factors

Driver Population	All Familiar	Final Speed Adjustment Factor (SAF)	1.000
Weather Type	Non-Severe Weather	Final Capacity Adjustment Factor (CAF)	1.000
Incident Type	No Incident	Demand Adjustment Factor (DAF)	1.000

Demand and Capacity

Demand Volume veh/h	9807	Heavy Vehicle Adjustment Factor (f_{HV})	1.000
Peak Hour Factor	0.94	Flow Rate (V_p), pc/h/ln	2608
Total Trucks, %	0.00	Capacity (c), pc/h/ln	2276
Single-Unit Trucks (SUT), %	-	Adjusted Cpacity (c_{adj}), pc/h/ln	2276
Tractor-Trailers (TT), %	-	Volume-to-Capacity Ratio (v/c)	1.15
Passenger Car Equivalent (E_T)	2.000		

Speed and Density

Lane Width Adjustment (f_{LW})	0.0	Average Speed (S), mi/h	-
Right-Side Lateral Clearance Adj. (f_{RLC})	0.0	Density (D), pc/mi/ln	-
Total Ramp Density Adjustment	12.4	Level of Service (LOS)	F
Adjusted Free-Flow Speed (FFS_{adj}), mi/h	57.6		

Copyright © 2020 University of Florida. All Rights Reserved.

HCS7 Basic Freeway Report

Project Information

Analyst	Jenny Tran	Date	5/11/2020
Agency	Minagar & Associates, Inc.	Analysis Year	Existing 2020
Jurisdiction	Caltrans	Time Period Analyzed	AM Peak Hour
Project Description	I-10/Cedar - W/B West of Cedar Ave		

Geometric Data

Number of Lanes, ln	4	Terrain Type	Level
Segment Length (L), ft	-	Percent Grade, %	-
Measured or Base Free-Flow Speed	Base	Grade Length, mi	-
Base Free-Flow Speed (BFFS), mi/h	70.0	Total Ramp Density (TRD), ramps/mi	5.00
Lane Width, ft	12	Free-Flow Speed (FFS), mi/h	57.6
Right-Side Lateral Clearance, ft	10		

Adjustment Factors

Driver Population	All Familiar	Final Speed Adjustment Factor (SAF)	1.000
Weather Type	Non-Severe Weather	Final Capacity Adjustment Factor (CAF)	1.000
Incident Type	No Incident	Demand Adjustment Factor (DAF)	1.000

Demand and Capacity

Demand Volume veh/h	10780	Heavy Vehicle Adjustment Factor (f_{HV})	1.000
Peak Hour Factor	0.94	Flow Rate (V_p), pc/h/ln	2867
Total Trucks, %	0.00	Capacity (c), pc/h/ln	2276
Single-Unit Trucks (SUT), %	-	Adjusted Cpacity (c_{adj}), pc/h/ln	2276
Tractor-Trailers (TT), %	-	Volume-to-Capacity Ratio (v/c)	1.26
Passenger Car Equivalent (E_T)	2.000		

Speed and Density

Lane Width Adjustment (f_{LW})	0.0	Average Speed (S), mi/h	-
Right-Side Lateral Clearance Adj. (f_{RLC})	0.0	Density (D), pc/mi/ln	-
Total Ramp Density Adjustment	12.4	Level of Service (LOS)	F
Adjusted Free-Flow Speed (FFS_{adj}), mi/h	57.6		

Copyright © 2020 University of Florida. All Rights Reserved.

HCS7 Basic Freeway Report

Project Information

Analyst	Jenny Tran	Date	5/11/2020
Agency	Minagar & Associates, Inc.	Analysis Year	Existing 2020
Jurisdiction	Caltrans	Time Period Analyzed	PM Peak Hour
Project Description	I-10/Cedar - W/B West of Cedar		

Geometric Data

Number of Lanes, ln	4	Terrain Type	Level
Segment Length (L), ft	-	Percent Grade, %	-
Measured or Base Free-Flow Speed	Base	Grade Length, mi	-
Base Free-Flow Speed (BFFS), mi/h	70.0	Total Ramp Density (TRD), ramps/mi	5.00
Lane Width, ft	12	Free-Flow Speed (FFS), mi/h	57.6
Right-Side Lateral Clearance, ft	10		

Adjustment Factors

Driver Population	All Familiar	Final Speed Adjustment Factor (SAF)	1.000
Weather Type	Non-Severe Weather	Final Capacity Adjustment Factor (CAF)	1.000
Incident Type	No Incident	Demand Adjustment Factor (DAF)	1.000

Demand and Capacity

Demand Volume veh/h	6485	Heavy Vehicle Adjustment Factor (f_{HV})	1.000
Peak Hour Factor	0.94	Flow Rate (V_p), pc/h/ln	1725
Total Trucks, %	0.00	Capacity (c), pc/h/ln	2276
Single-Unit Trucks (SUT), %	-	Adjusted Cpacity (c_{adj}), pc/h/ln	2276
Tractor-Trailers (TT), %	-	Volume-to-Capacity Ratio (v/c)	0.76
Passenger Car Equivalent (E_T)	2.000		

Speed and Density

Lane Width Adjustment (f_{LW})	0.0	Average Speed (S), mi/h	57.6
Right-Side Lateral Clearance Adj. (f_{RLC})	0.0	Density (D), pc/mi/ln	29.9
Total Ramp Density Adjustment	12.4	Level of Service (LOS)	D
Adjusted Free-Flow Speed (FFS_{adj}), mi/h	57.6		

Copyright © 2020 University of Florida. All Rights Reserved.

HCS7 Basic Freeway Report

Project Information

Analyst	Jenny Tran	Date	5/11/2020
Agency	Minagar & Associates, Inc.	Analysis Year	Opening Year
Jurisdiction	Caltrans	Time Period Analyzed	AM Peak Hour
Project Description	I-10/Cedar - E/B East of Cedar		

Geometric Data

Number of Lanes, ln	4	Terrain Type	Level
Segment Length (L), ft	-	Percent Grade, %	-
Measured or Base Free-Flow Speed	Base	Grade Length, mi	-
Base Free-Flow Speed (BFFS), mi/h	70.0	Total Ramp Density (TRD), ramps/mi	5.00
Lane Width, ft	12	Free-Flow Speed (FFS), mi/h	57.6
Right-Side Lateral Clearance, ft	10		

Adjustment Factors

Driver Population	All Familiar	Final Speed Adjustment Factor (SAF)	1.000
Weather Type	Non-Severe Weather	Final Capacity Adjustment Factor (CAF)	1.000
Incident Type	No Incident	Demand Adjustment Factor (DAF)	1.000

Demand and Capacity

Demand Volume veh/h	4847	Heavy Vehicle Adjustment Factor (f_{HV})	1.000
Peak Hour Factor	0.94	Flow Rate (V_p), pc/h/ln	1289
Total Trucks, %	0.00	Capacity (c), pc/h/ln	2276
Single-Unit Trucks (SUT), %	-	Adjusted Cpacity (c_{adj}), pc/h/ln	2276
Tractor-Trailers (TT), %	-	Volume-to-Capacity Ratio (v/c)	0.57
Passenger Car Equivalent (E_T)	2.000		

Speed and Density

Lane Width Adjustment (f_{LW})	0.0	Average Speed (S), mi/h	57.6
Right-Side Lateral Clearance Adj. (f_{RLC})	0.0	Density (D), pc/mi/ln	22.4
Total Ramp Density Adjustment	12.4	Level of Service (LOS)	C
Adjusted Free-Flow Speed (FFS_{adj}), mi/h	57.6		

Copyright © 2020 University of Florida. All Rights Reserved.

HCS7 Basic Freeway Report

Project Information

Analyst	Jenny Tran	Date	5/11/2020
Agency	Minagar & Associates, Inc.	Analysis Year	Opening Year
Jurisdiction	Caltrans	Time Period Analyzed	PM Peak Hour
Project Description	I-10/Cedar - E/B East of Cedar		

Geometric Data

Number of Lanes, ln	4	Terrain Type	Level
Segment Length (L), ft	-	Percent Grade, %	-
Measured or Base Free-Flow Speed	Base	Grade Length, mi	-
Base Free-Flow Speed (BFFS), mi/h	70.0	Total Ramp Density (TRD), ramps/mi	5.00
Lane Width, ft	12	Free-Flow Speed (FFS), mi/h	57.6
Right-Side Lateral Clearance, ft	10		

Adjustment Factors

Driver Population	All Familiar	Final Speed Adjustment Factor (SAF)	1.000
Weather Type	Non-Severe Weather	Final Capacity Adjustment Factor (CAF)	1.000
Incident Type	No Incident	Demand Adjustment Factor (DAF)	1.000

Demand and Capacity

Demand Volume veh/h	9588	Heavy Vehicle Adjustment Factor (f_{HV})	1.000
Peak Hour Factor	0.94	Flow Rate (V_p), pc/h/ln	2550
Total Trucks, %	0.00	Capacity (c), pc/h/ln	2276
Single-Unit Trucks (SUT), %	-	Adjusted Cpacity (c_{adj}), pc/h/ln	2276
Tractor-Trailers (TT), %	-	Volume-to-Capacity Ratio (v/c)	1.12
Passenger Car Equivalent (E_T)	2.000		

Speed and Density

Lane Width Adjustment (f_{LW})	0.0	Average Speed (S), mi/h	-
Right-Side Lateral Clearance Adj. (f_{RLC})	0.0	Density (D), pc/mi/ln	-
Total Ramp Density Adjustment	12.4	Level of Service (LOS)	F
Adjusted Free-Flow Speed (FFS_{adj}), mi/h	57.6		

Copyright © 2020 University of Florida. All Rights Reserved.

HCS7 Basic Freeway Report

Project Information

Analyst	Jenny Tran	Date	5/11/2020
Agency	Minagar & Associates, Inc.	Analysis Year	Opening Year
Jurisdiction	Caltrans	Time Period Analyzed	AM Peak Hour
Project Description	I-10/Cedar - W/B East of Cedar		

Geometric Data

Number of Lanes, ln	4	Terrain Type	Level
Segment Length (L), ft	-	Percent Grade, %	-
Measured or Base Free-Flow Speed	Base	Grade Length, mi	-
Base Free-Flow Speed (BFFS), mi/h	70.0	Total Ramp Density (TRD), ramps/mi	5.00
Lane Width, ft	12	Free-Flow Speed (FFS), mi/h	57.6
Right-Side Lateral Clearance, ft	10		

Adjustment Factors

Driver Population	All Familiar	Final Speed Adjustment Factor (SAF)	1.000
Weather Type	Non-Severe Weather	Final Capacity Adjustment Factor (CAF)	1.000
Incident Type	No Incident	Demand Adjustment Factor (DAF)	1.000

Demand and Capacity

Demand Volume veh/h	10727	Heavy Vehicle Adjustment Factor (f_{HV})	1.000
Peak Hour Factor	0.94	Flow Rate (V_p), pc/h/ln	2853
Total Trucks, %	0.00	Capacity (c), pc/h/ln	2276
Single-Unit Trucks (SUT), %	-	Adjusted Cpacity (c_{adj}), pc/h/ln	2276
Tractor-Trailers (TT), %	-	Volume-to-Capacity Ratio (v/c)	1.25
Passenger Car Equivalent (E_T)	2.000		

Speed and Density

Lane Width Adjustment (f_{LW})	0.0	Average Speed (S), mi/h	-
Right-Side Lateral Clearance Adj. (f_{RLC})	0.0	Density (D), pc/mi/ln	-
Total Ramp Density Adjustment	12.4	Level of Service (LOS)	F
Adjusted Free-Flow Speed (FFS_{adj}), mi/h	57.6		

Copyright © 2020 University of Florida. All Rights Reserved.

HCS7 Basic Freeway Report

Project Information

Analyst	Jenny Tran	Date	5/11/2020
Agency	Minagar & Associates, Inc.	Analysis Year	Opening Year
Jurisdiction	Caltrans	Time Period Analyzed	PM Peak Hour
Project Description	I-10/Cedar - W/B East of Cedar		

Geometric Data

Number of Lanes, ln	4	Terrain Type	Level
Segment Length (L), ft	-	Percent Grade, %	-
Measured or Base Free-Flow Speed	Base	Grade Length, mi	-
Base Free-Flow Speed (BFFS), mi/h	70.0	Total Ramp Density (TRD), ramps/mi	5.00
Lane Width, ft	12	Free-Flow Speed (FFS), mi/h	57.6
Right-Side Lateral Clearance, ft	10		

Adjustment Factors

Driver Population	All Familiar	Final Speed Adjustment Factor (SAF)	1.000
Weather Type	Non-Severe Weather	Final Capacity Adjustment Factor (CAF)	1.000
Incident Type	No Incident	Demand Adjustment Factor (DAF)	1.000

Demand and Capacity

Demand Volume veh/h	6346	Heavy Vehicle Adjustment Factor (f_{HV})	1.000
Peak Hour Factor	0.94	Flow Rate (V_p), pc/h/ln	1688
Total Trucks, %	0.00	Capacity (c), pc/h/ln	2276
Single-Unit Trucks (SUT), %	-	Adjusted Cpacity (c_{adj}), pc/h/ln	2276
Tractor-Trailers (TT), %	-	Volume-to-Capacity Ratio (v/c)	0.74
Passenger Car Equivalent (E_T)	2.000		

Speed and Density

Lane Width Adjustment (f_{LW})	0.0	Average Speed (S), mi/h	57.6
Right-Side Lateral Clearance Adj. (f_{RLC})	0.0	Density (D), pc/mi/ln	29.3
Total Ramp Density Adjustment	12.4	Level of Service (LOS)	D
Adjusted Free-Flow Speed (FFS_{adj}), mi/h	57.6		

Copyright © 2020 University of Florida. All Rights Reserved.

HCS7 Basic Freeway Report

Project Information

Analyst	Jenny Tran	Date	5/11/2020
Agency	Minagar & Associates, Inc.	Analysis Year	Opening Year
Jurisdiction	Caltrans	Time Period Analyzed	AM Peak Hour
Project Description	I-10/Cedar - E/B West of Cedar		

Geometric Data

Number of Lanes, ln	4	Terrain Type	Level
Segment Length (L), ft	-	Percent Grade, %	-
Measured or Base Free-Flow Speed	Base	Grade Length, mi	-
Base Free-Flow Speed (BFFS), mi/h	70.0	Total Ramp Density (TRD), ramps/mi	5.00
Lane Width, ft	12	Free-Flow Speed (FFS), mi/h	57.6
Right-Side Lateral Clearance, ft	10		

Adjustment Factors

Driver Population	All Familiar	Final Speed Adjustment Factor (SAF)	1.000
Weather Type	Non-Severe Weather	Final Capacity Adjustment Factor (CAF)	1.000
Incident Type	No Incident	Demand Adjustment Factor (DAF)	1.000

Demand and Capacity

Demand Volume veh/h	5263	Heavy Vehicle Adjustment Factor (f_{HV})	1.000
Peak Hour Factor	0.94	Flow Rate (V_p), pc/h/ln	1400
Total Trucks, %	0.00	Capacity (c), pc/h/ln	2276
Single-Unit Trucks (SUT), %	-	Adjusted Cpacity (c_{adj}), pc/h/ln	2276
Tractor-Trailers (TT), %	-	Volume-to-Capacity Ratio (v/c)	0.62
Passenger Car Equivalent (E_T)	2.000		

Speed and Density

Lane Width Adjustment (f_{LW})	0.0	Average Speed (S), mi/h	57.6
Right-Side Lateral Clearance Adj. (f_{RLC})	0.0	Density (D), pc/mi/ln	24.3
Total Ramp Density Adjustment	12.4	Level of Service (LOS)	C
Adjusted Free-Flow Speed (FFS_{adj}), mi/h	57.6		

Copyright © 2020 University of Florida. All Rights Reserved.

HCS7 Basic Freeway Report

Project Information

Analyst	Jenny Tran	Date	5/11/2020
Agency	Minagar & Associates, Inc.	Analysis Year	Opening Year
Jurisdiction	Caltrans	Time Period Analyzed	PM Peak Hour
Project Description	I-10/Cedar - E/B West of Cedar		

Geometric Data

Number of Lanes, ln	4	Terrain Type	Level
Segment Length (L), ft	-	Percent Grade, %	-
Measured or Base Free-Flow Speed	Base	Grade Length, mi	-
Base Free-Flow Speed (BFFS), mi/h	70.0	Total Ramp Density (TRD), ramps/mi	5.00
Lane Width, ft	12	Free-Flow Speed (FFS), mi/h	57.6
Right-Side Lateral Clearance, ft	10		

Adjustment Factors

Driver Population	All Familiar	Final Speed Adjustment Factor (SAF)	1.000
Weather Type	Non-Severe Weather	Final Capacity Adjustment Factor (CAF)	1.000
Incident Type	No Incident	Demand Adjustment Factor (DAF)	1.000

Demand and Capacity

Demand Volume veh/h	10003	Heavy Vehicle Adjustment Factor (f_{HV})	1.000
Peak Hour Factor	0.94	Flow Rate (V_p), pc/h/ln	2660
Total Trucks, %	0.00	Capacity (c), pc/h/ln	2276
Single-Unit Trucks (SUT), %	-	Adjusted Cpacity (c_{adj}), pc/h/ln	2276
Tractor-Trailers (TT), %	-	Volume-to-Capacity Ratio (v/c)	1.17
Passenger Car Equivalent (E_T)	2.000		

Speed and Density

Lane Width Adjustment (f_{LW})	0.0	Average Speed (S), mi/h	-
Right-Side Lateral Clearance Adj. (f_{RLC})	0.0	Density (D), pc/mi/ln	-
Total Ramp Density Adjustment	12.4	Level of Service (LOS)	F
Adjusted Free-Flow Speed (FFS_{adj}), mi/h	57.6		

Copyright © 2020 University of Florida. All Rights Reserved.

HCS7 Basic Freeway Report

Project Information

Analyst	Jenny Tran	Date	5/11/2020
Agency	Minagar & Associates, Inc.	Analysis Year	Opening Year
Jurisdiction	Caltrans	Time Period Analyzed	AM Peak Hour
Project Description	I-10/Cedar - W/B West of Cedar		

Geometric Data

Number of Lanes, ln	4	Terrain Type	Level
Segment Length (L), ft	-	Percent Grade, %	-
Measured or Base Free-Flow Speed	Base	Grade Length, mi	-
Base Free-Flow Speed (BFFS), mi/h	70.0	Total Ramp Density (TRD), ramps/mi	5.00
Lane Width, ft	12	Free-Flow Speed (FFS), mi/h	57.6
Right-Side Lateral Clearance, ft	10		

Adjustment Factors

Driver Population	All Familiar	Final Speed Adjustment Factor (SAF)	1.000
Weather Type	Non-Severe Weather	Final Capacity Adjustment Factor (CAF)	1.000
Incident Type	No Incident	Demand Adjustment Factor (DAF)	1.000

Demand and Capacity

Demand Volume veh/h	10995	Heavy Vehicle Adjustment Factor (f_{HV})	1.000
Peak Hour Factor	0.94	Flow Rate (V_p), pc/h/ln	2924
Total Trucks, %	0.00	Capacity (c), pc/h/ln	2276
Single-Unit Trucks (SUT), %	-	Adjusted Cpacity (c_{adj}), pc/h/ln	2276
Tractor-Trailers (TT), %	-	Volume-to-Capacity Ratio (v/c)	1.28
Passenger Car Equivalent (E_T)	2.000		

Speed and Density

Lane Width Adjustment (f_{LW})	0.0	Average Speed (S), mi/h	-
Right-Side Lateral Clearance Adj. (f_{RLC})	0.0	Density (D), pc/mi/ln	-
Total Ramp Density Adjustment	12.4	Level of Service (LOS)	F
Adjusted Free-Flow Speed (FFS_{adj}), mi/h	57.6		

Copyright © 2020 University of Florida. All Rights Reserved.

HCS7 Basic Freeway Report

Project Information

Analyst	Jenny Tran	Date	5/11/2020
Agency	Minagar & Associates, Inc.	Analysis Year	Opening Year
Jurisdiction	Caltrans	Time Period Analyzed	PM Peak Hour
Project Description	I-10/Cedar - W/B West of Cedar		

Geometric Data

Number of Lanes, ln	4	Terrain Type	Level
Segment Length (L), ft	-	Percent Grade, %	-
Measured or Base Free-Flow Speed	Base	Grade Length, mi	-
Base Free-Flow Speed (BFFS), mi/h	70.0	Total Ramp Density (TRD), ramps/mi	5.00
Lane Width, ft	12	Free-Flow Speed (FFS), mi/h	57.6
Right-Side Lateral Clearance, ft	10		

Adjustment Factors

Driver Population	All Familiar	Final Speed Adjustment Factor (SAF)	1.000
Weather Type	Non-Severe Weather	Final Capacity Adjustment Factor (CAF)	1.000
Incident Type	No Incident	Demand Adjustment Factor (DAF)	1.000

Demand and Capacity

Demand Volume veh/h	6615	Heavy Vehicle Adjustment Factor (f_{HV})	1.000
Peak Hour Factor	0.94	Flow Rate (V_p), pc/h/ln	1759
Total Trucks, %	0.00	Capacity (c), pc/h/ln	2276
Single-Unit Trucks (SUT), %	-	Adjusted Cpacity (c_{adj}), pc/h/ln	2276
Tractor-Trailers (TT), %	-	Volume-to-Capacity Ratio (v/c)	0.77
Passenger Car Equivalent (E_T)	2.000		

Speed and Density

Lane Width Adjustment (f_{LW})	0.0	Average Speed (S), mi/h	57.5
Right-Side Lateral Clearance Adj. (f_{RLC})	0.0	Density (D), pc/mi/ln	30.6
Total Ramp Density Adjustment	12.4	Level of Service (LOS)	D
Adjusted Free-Flow Speed (FFS_{adj}), mi/h	57.6		

Copyright © 2020 University of Florida. All Rights Reserved.

HCS7 Basic Freeway Report

Project Information

Analyst	Jenny Tran	Date	6/18/2020
Agency	Minagar & Associates, Inc.	Analysis Year	Opening Year (2021) with Project
Jurisdiction	Caltrans	Time Period Analyzed	AM Peak Hour
Project Description	I-10/Cedar Ave - E/B East of Cedar		

Geometric Data

Number of Lanes, ln	4	Terrain Type	Level
Segment Length (L), ft	-	Percent Grade, %	-
Measured or Base Free-Flow Speed	Base	Grade Length, mi	-
Base Free-Flow Speed (BFFS), mi/h	70.0	Total Ramp Density (TRD), ramps/mi	5.00
Lane Width, ft	12	Free-Flow Speed (FFS), mi/h	57.6
Right-Side Lateral Clearance, ft	10		

Adjustment Factors

Driver Population	All Familiar	Final Speed Adjustment Factor (SAF)	1.000
Weather Type	Non-Severe Weather	Final Capacity Adjustment Factor (CAF)	1.000
Incident Type	No Incident	Demand Adjustment Factor (DAF)	1.000

Demand and Capacity

Demand Volume veh/h	4847	Heavy Vehicle Adjustment Factor (f_{HV})	1.000
Peak Hour Factor	0.94	Flow Rate (V_p), pc/h/ln	1289
Total Trucks, %	0.00	Capacity (c), pc/h/ln	2276
Single-Unit Trucks (SUT), %	-	Adjusted Cpacity (c_{adj}), pc/h/ln	2276
Tractor-Trailers (TT), %	-	Volume-to-Capacity Ratio (v/c)	0.57
Passenger Car Equivalent (E_T)	2.000		

Speed and Density

Lane Width Adjustment (f_{LW})	0.0	Average Speed (S), mi/h	57.6
Right-Side Lateral Clearance Adj. (f_{RLC})	0.0	Density (D), pc/mi/ln	22.4
Total Ramp Density Adjustment	12.4	Level of Service (LOS)	C
Adjusted Free-Flow Speed (FFS_{adj}), mi/h	57.6		

Copyright © 2020 University of Florida. All Rights Reserved.

HCS7 Basic Freeway Report

Project Information

Analyst	Jenny Tran	Date	6/18/2020
Agency	Minagar & Associates, Inc.	Analysis Year	Opening Year (2021) With Project
Jurisdiction	Caltrans	Time Period Analyzed	PM Peak Hour
Project Description	I-10/Cedar - E/B East of Cedar Ave		

Geometric Data

Number of Lanes, ln	4	Terrain Type	Level
Segment Length (L), ft	-	Percent Grade, %	-
Measured or Base Free-Flow Speed	Base	Grade Length, mi	-
Base Free-Flow Speed (BFFS), mi/h	70.0	Total Ramp Density (TRD), ramps/mi	0.00
Lane Width, ft	12	Free-Flow Speed (FFS), mi/h	70.0
Right-Side Lateral Clearance, ft	10		

Adjustment Factors

Driver Population	All Familiar	Final Speed Adjustment Factor (SAF)	1.000
Weather Type	Non-Severe Weather	Final Capacity Adjustment Factor (CAF)	1.000
Incident Type	No Incident	Demand Adjustment Factor (DAF)	1.000

Demand and Capacity

Demand Volume veh/h	9587	Heavy Vehicle Adjustment Factor (f_{HV})	1.000
Peak Hour Factor	0.94	Flow Rate (V_p), pc/h/ln	2550
Total Trucks, %	0.00	Capacity (c), pc/h/ln	2400
Single-Unit Trucks (SUT), %	-	Adjusted Cpacity (c_{adj}), pc/h/ln	2400
Tractor-Trailers (TT), %	-	Volume-to-Capacity Ratio (v/c)	1.06
Passenger Car Equivalent (E_T)	2.000		

Speed and Density

Lane Width Adjustment (f_{LW})	0.0	Average Speed (S), mi/h	-
Right-Side Lateral Clearance Adj. (f_{RLC})	0.0	Density (D), pc/mi/ln	-
Total Ramp Density Adjustment	0.0	Level of Service (LOS)	F
Adjusted Free-Flow Speed (FFS_{adj}), mi/h	70.0		

Copyright © 2020 University of Florida. All Rights Reserved.

HCS7 Basic Freeway Report

Project Information

Analyst	Jenny Tran	Date	5/11/2020
Agency	Minagar & Associates, Inc.	Analysis Year	Opening Year + Project
Jurisdiction	Caltrans	Time Period Analyzed	AM Peak Hour
Project Description	I-10/Cedar - W/B East of Cedar		

Geometric Data

Number of Lanes, ln	4	Terrain Type	Level
Segment Length (L), ft	-	Percent Grade, %	-
Measured or Base Free-Flow Speed	Base	Grade Length, mi	-
Base Free-Flow Speed (BFFS), mi/h	70.0	Total Ramp Density (TRD), ramps/mi	5.00
Lane Width, ft	12	Free-Flow Speed (FFS), mi/h	57.6
Right-Side Lateral Clearance, ft	10		

Adjustment Factors

Driver Population	All Familiar	Final Speed Adjustment Factor (SAF)	1.000
Weather Type	Non-Severe Weather	Final Capacity Adjustment Factor (CAF)	1.000
Incident Type	No Incident	Demand Adjustment Factor (DAF)	1.000

Demand and Capacity

Demand Volume veh/h	10727	Heavy Vehicle Adjustment Factor (f_{HV})	1.000
Peak Hour Factor	0.94	Flow Rate (V_p), pc/h/ln	2853
Total Trucks, %	0.00	Capacity (c), pc/h/ln	2276
Single-Unit Trucks (SUT), %	-	Adjusted Cpacity (c_{adj}), pc/h/ln	2276
Tractor-Trailers (TT), %	-	Volume-to-Capacity Ratio (v/c)	1.25
Passenger Car Equivalent (E_T)	2.000		

Speed and Density

Lane Width Adjustment (f_{LW})	0.0	Average Speed (S), mi/h	-
Right-Side Lateral Clearance Adj. (f_{RLC})	0.0	Density (D), pc/mi/ln	-
Total Ramp Density Adjustment	12.4	Level of Service (LOS)	F
Adjusted Free-Flow Speed (FFS_{adj}), mi/h	57.6		

Copyright © 2020 University of Florida. All Rights Reserved.

HCS7 Basic Freeway Report

Project Information

Analyst	Jenny Tran	Date	5/11/2020
Agency	Minagar & Associates, Inc.	Analysis Year	Opening Year + Project
Jurisdiction	Caltrans	Time Period Analyzed	PM Peak Hour
Project Description	I-10/Cedar - W/B East of Cedar		

Geometric Data

Number of Lanes, ln	4	Terrain Type	Level
Segment Length (L), ft	-	Percent Grade, %	-
Measured or Base Free-Flow Speed	Base	Grade Length, mi	-
Base Free-Flow Speed (BFFS), mi/h	70.0	Total Ramp Density (TRD), ramps/mi	5.00
Lane Width, ft	12	Free-Flow Speed (FFS), mi/h	57.6
Right-Side Lateral Clearance, ft	10		

Adjustment Factors

Driver Population	All Familiar	Final Speed Adjustment Factor (SAF)	1.000
Weather Type	Non-Severe Weather	Final Capacity Adjustment Factor (CAF)	1.000
Incident Type	No Incident	Demand Adjustment Factor (DAF)	1.000

Demand and Capacity

Demand Volume veh/h	6346	Heavy Vehicle Adjustment Factor (f_{HV})	1.000
Peak Hour Factor	0.94	Flow Rate (V_p), pc/h/ln	1688
Total Trucks, %	0.00	Capacity (c), pc/h/ln	2276
Single-Unit Trucks (SUT), %	-	Adjusted Cpacity (c_{adj}), pc/h/ln	2276
Tractor-Trailers (TT), %	-	Volume-to-Capacity Ratio (v/c)	0.74
Passenger Car Equivalent (E_T)	2.000		

Speed and Density

Lane Width Adjustment (f_{LW})	0.0	Average Speed (S), mi/h	57.6
Right-Side Lateral Clearance Adj. (f_{RLC})	0.0	Density (D), pc/mi/ln	29.3
Total Ramp Density Adjustment	12.4	Level of Service (LOS)	D
Adjusted Free-Flow Speed (FFS_{adj}), mi/h	57.6		

Copyright © 2020 University of Florida. All Rights Reserved.

HCS7 Basic Freeway Report

Project Information

Analyst	Jenny Tran	Date	5/11/2020
Agency	Minagar & Associates, Inc.	Analysis Year	Opening Year + Project
Jurisdiction	Caltrans	Time Period Analyzed	AM Peak Hour
Project Description	I-10/Cedar - E/B West of Cedar		

Geometric Data

Number of Lanes, ln	4	Terrain Type	Level
Segment Length (L), ft	-	Percent Grade, %	-
Measured or Base Free-Flow Speed	Base	Grade Length, mi	-
Base Free-Flow Speed (BFFS), mi/h	70.0	Total Ramp Density (TRD), ramps/mi	5.00
Lane Width, ft	12	Free-Flow Speed (FFS), mi/h	57.6
Right-Side Lateral Clearance, ft	10		

Adjustment Factors

Driver Population	All Familiar	Final Speed Adjustment Factor (SAF)	1.000
Weather Type	Non-Severe Weather	Final Capacity Adjustment Factor (CAF)	1.000
Incident Type	No Incident	Demand Adjustment Factor (DAF)	1.000

Demand and Capacity

Demand Volume veh/h	5263	Heavy Vehicle Adjustment Factor (f_{HV})	1.000
Peak Hour Factor	0.94	Flow Rate (V_p), pc/h/ln	1400
Total Trucks, %	0.00	Capacity (c), pc/h/ln	2276
Single-Unit Trucks (SUT), %	-	Adjusted Cpacity (c_{adj}), pc/h/ln	2276
Tractor-Trailers (TT), %	-	Volume-to-Capacity Ratio (v/c)	0.62
Passenger Car Equivalent (E_T)	2.000		

Speed and Density

Lane Width Adjustment (f_{LW})	0.0	Average Speed (S), mi/h	57.6
Right-Side Lateral Clearance Adj. (f_{RLC})	0.0	Density (D), pc/mi/ln	24.3
Total Ramp Density Adjustment	12.4	Level of Service (LOS)	C
Adjusted Free-Flow Speed (FFS_{adj}), mi/h	57.6		

Copyright © 2020 University of Florida. All Rights Reserved.

HCS7 Basic Freeway Report

Project Information

Analyst	Jenny Tran	Date	5/11/2020
Agency	Minagar & Associates, Inc.	Analysis Year	Opening Year + Project
Jurisdiction	Caltrans	Time Period Analyzed	PM Peak Hour
Project Description	I-10/Cedar - E/B West of Cedar		

Geometric Data

Number of Lanes, ln	4	Terrain Type	Level
Segment Length (L), ft	-	Percent Grade, %	-
Measured or Base Free-Flow Speed	Base	Grade Length, mi	-
Base Free-Flow Speed (BFFS), mi/h	70.0	Total Ramp Density (TRD), ramps/mi	5.00
Lane Width, ft	12	Free-Flow Speed (FFS), mi/h	57.6
Right-Side Lateral Clearance, ft	10		

Adjustment Factors

Driver Population	All Familiar	Final Speed Adjustment Factor (SAF)	1.000
Weather Type	Non-Severe Weather	Final Capacity Adjustment Factor (CAF)	1.000
Incident Type	No Incident	Demand Adjustment Factor (DAF)	1.000

Demand and Capacity

Demand Volume veh/h	10003	Heavy Vehicle Adjustment Factor (f_{HV})	1.000
Peak Hour Factor	0.94	Flow Rate (V_p), pc/h/ln	2660
Total Trucks, %	0.00	Capacity (c), pc/h/ln	2276
Single-Unit Trucks (SUT), %	-	Adjusted Cpacity (c_{adj}), pc/h/ln	2276
Tractor-Trailers (TT), %	-	Volume-to-Capacity Ratio (v/c)	1.17
Passenger Car Equivalent (E_T)	2.000		

Speed and Density

Lane Width Adjustment (f_{LW})	0.0	Average Speed (S), mi/h	-
Right-Side Lateral Clearance Adj. (f_{RLC})	0.0	Density (D), pc/mi/ln	-
Total Ramp Density Adjustment	12.4	Level of Service (LOS)	F
Adjusted Free-Flow Speed (FFS_{adj}), mi/h	57.6		

Copyright © 2020 University of Florida. All Rights Reserved.

HCS7 Basic Freeway Report

Project Information

Analyst	Jenny Tran	Date	6/18/2020
Agency	Minagar & Associates, Inc.	Analysis Year	Opening Year (2021) With Project
Jurisdiction	Caltrans	Time Period Analyzed	AM Peak Hour
Project Description	I-10/Cedar - W/B West of Cedar Ave		

Geometric Data

Number of Lanes, ln	4	Terrain Type	Level
Segment Length (L), ft	-	Percent Grade, %	-
Measured or Base Free-Flow Speed	Base	Grade Length, mi	-
Base Free-Flow Speed (BFFS), mi/h	70.0	Total Ramp Density (TRD), ramps/mi	0.00
Lane Width, ft	12	Free-Flow Speed (FFS), mi/h	70.0
Right-Side Lateral Clearance, ft	10		

Adjustment Factors

Driver Population	All Familiar	Final Speed Adjustment Factor (SAF)	1.000
Weather Type	Non-Severe Weather	Final Capacity Adjustment Factor (CAF)	1.000
Incident Type	No Incident	Demand Adjustment Factor (DAF)	1.000

Demand and Capacity

Demand Volume veh/h	11003	Heavy Vehicle Adjustment Factor (f_{HV})	1.000
Peak Hour Factor	0.94	Flow Rate (V_p), pc/h/ln	2926
Total Trucks, %	0.00	Capacity (c), pc/h/ln	2400
Single-Unit Trucks (SUT), %	-	Adjusted Cpacity (c_{adj}), pc/h/ln	2400
Tractor-Trailers (TT), %	-	Volume-to-Capacity Ratio (v/c)	1.22
Passenger Car Equivalent (E_T)	2.000		

Speed and Density

Lane Width Adjustment (f_{LW})	0.0	Average Speed (S), mi/h	-
Right-Side Lateral Clearance Adj. (f_{RLC})	0.0	Density (D), pc/mi/ln	-
Total Ramp Density Adjustment	0.0	Level of Service (LOS)	F
Adjusted Free-Flow Speed (FFS_{adj}), mi/h	70.0		

Copyright © 2020 University of Florida. All Rights Reserved.

HCS7 Basic Freeway Report

Project Information

Analyst	Jenny Tran	Date	6/18/2020
Agency	Minagar & Associates, Inc.	Analysis Year	Opening Year (2021) With Project
Jurisdiction	Caltrans	Time Period Analyzed	PM Peak Hour
Project Description	I-10/Cedar - W/B West of Cedar Ave		

Geometric Data

Number of Lanes, ln	4	Terrain Type	Level
Segment Length (L), ft	-	Percent Grade, %	-
Measured or Base Free-Flow Speed	Base	Grade Length, mi	-
Base Free-Flow Speed (BFFS), mi/h	70.0	Total Ramp Density (TRD), ramps/mi	0.00
Lane Width, ft	12	Free-Flow Speed (FFS), mi/h	70.0
Right-Side Lateral Clearance, ft	10		

Adjustment Factors

Driver Population	All Familiar	Final Speed Adjustment Factor (SAF)	1.000
Weather Type	Non-Severe Weather	Final Capacity Adjustment Factor (CAF)	1.000
Incident Type	No Incident	Demand Adjustment Factor (DAF)	1.000

Demand and Capacity

Demand Volume veh/h	6622	Heavy Vehicle Adjustment Factor (f_{HV})	1.000
Peak Hour Factor	0.94	Flow Rate (V_p), pc/h/ln	1761
Total Trucks, %	0.00	Capacity (c), pc/h/ln	2400
Single-Unit Trucks (SUT), %	-	Adjusted Cpacity (c_{adj}), pc/h/ln	2400
Tractor-Trailers (TT), %	-	Volume-to-Capacity Ratio (v/c)	0.73
Passenger Car Equivalent (E_T)	2.000		

Speed and Density

Lane Width Adjustment (f_{LW})	0.0	Average Speed (S), mi/h	66.4
Right-Side Lateral Clearance Adj. (f_{RLC})	0.0	Density (D), pc/mi/ln	26.5
Total Ramp Density Adjustment	0.0	Level of Service (LOS)	D
Adjusted Free-Flow Speed (FFS_{adj}), mi/h	70.0		

Copyright © 2020 University of Florida. All Rights Reserved.

HCS7 Basic Freeway Report

Project Information

Analyst	Jenny Tran	Date	5/11/2020
Agency	Minagar & Associates, Inc.	Analysis Year	Horizon Year (2040)
Jurisdiction	Caltrans	Time Period Analyzed	AM Peak Hour
Project Description	I-10/Cedar - E/B East of Cedar		

Geometric Data

Number of Lanes, ln	4	Terrain Type	Level
Segment Length (L), ft	-	Percent Grade, %	-
Measured or Base Free-Flow Speed	Base	Grade Length, mi	-
Base Free-Flow Speed (BFFS), mi/h	70.0	Total Ramp Density (TRD), ramps/mi	5.00
Lane Width, ft	12	Free-Flow Speed (FFS), mi/h	57.6
Right-Side Lateral Clearance, ft	10		

Adjustment Factors

Driver Population	All Familiar	Final Speed Adjustment Factor (SAF)	1.000
Weather Type	Non-Severe Weather	Final Capacity Adjustment Factor (CAF)	1.000
Incident Type	No Incident	Demand Adjustment Factor (DAF)	1.000

Demand and Capacity

Demand Volume veh/h	12859	Heavy Vehicle Adjustment Factor (f_{HV})	1.000
Peak Hour Factor	0.94	Flow Rate (V_p), pc/h/ln	3420
Total Trucks, %	0.00	Capacity (c), pc/h/ln	2276
Single-Unit Trucks (SUT), %	-	Adjusted Cpacity (c_{adj}), pc/h/ln	2276
Tractor-Trailers (TT), %	-	Volume-to-Capacity Ratio (v/c)	1.50
Passenger Car Equivalent (E_T)	2.000		

Speed and Density

Lane Width Adjustment (f_{LW})	0.0	Average Speed (S), mi/h	-
Right-Side Lateral Clearance Adj. (f_{RLC})	0.0	Density (D), pc/mi/ln	-
Total Ramp Density Adjustment	12.4	Level of Service (LOS)	F
Adjusted Free-Flow Speed (FFS_{adj}), mi/h	57.6		

Copyright © 2020 University of Florida. All Rights Reserved.

HCS7 Basic Freeway Report

Project Information

Analyst	Jenny Tran	Date	5/11/2020
Agency	Minagar & Associates, Inc.	Analysis Year	Horizon Year (2040)
Jurisdiction	Caltrans	Time Period Analyzed	PM Peak Hour
Project Description	I-10/Cedar - E/B East of Cedar		

Geometric Data

Number of Lanes, ln	4	Terrain Type	Level
Segment Length (L), ft	-	Percent Grade, %	-
Measured or Base Free-Flow Speed	Base	Grade Length, mi	-
Base Free-Flow Speed (BFFS), mi/h	70.0	Total Ramp Density (TRD), ramps/mi	5.00
Lane Width, ft	12	Free-Flow Speed (FFS), mi/h	57.6
Right-Side Lateral Clearance, ft	10		

Adjustment Factors

Driver Population	All Familiar	Final Speed Adjustment Factor (SAF)	1.000
Weather Type	Non-Severe Weather	Final Capacity Adjustment Factor (CAF)	1.000
Incident Type	No Incident	Demand Adjustment Factor (DAF)	1.000

Demand and Capacity

Demand Volume veh/h	28445	Heavy Vehicle Adjustment Factor (f_{HV})	1.000
Peak Hour Factor	0.94	Flow Rate (V_p), pc/h/ln	7565
Total Trucks, %	0.00	Capacity (c), pc/h/ln	2276
Single-Unit Trucks (SUT), %	-	Adjusted Cpacity (c_{adj}), pc/h/ln	2276
Tractor-Trailers (TT), %	-	Volume-to-Capacity Ratio (v/c)	3.32
Passenger Car Equivalent (E_T)	2.000		

Speed and Density

Lane Width Adjustment (f_{LW})	0.0	Average Speed (S), mi/h	-
Right-Side Lateral Clearance Adj. (f_{RLC})	0.0	Density (D), pc/mi/ln	-
Total Ramp Density Adjustment	12.4	Level of Service (LOS)	F
Adjusted Free-Flow Speed (FFS_{adj}), mi/h	57.6		

Copyright © 2020 University of Florida. All Rights Reserved.

HCS7 Basic Freeway Report

Project Information

Analyst	Jenny Tran	Date	5/11/2020
Agency	Minagar & Associates, Inc.	Analysis Year	Horizon Year (2040)
Jurisdiction	Caltrans	Time Period Analyzed	AM Peak Hour
Project Description	I-10/Cedar - W/B East of Cedar		

Geometric Data

Number of Lanes, ln	4	Terrain Type	Level
Segment Length (L), ft	-	Percent Grade, %	-
Measured or Base Free-Flow Speed	Base	Grade Length, mi	-
Base Free-Flow Speed (BFFS), mi/h	70.0	Total Ramp Density (TRD), ramps/mi	5.00
Lane Width, ft	12	Free-Flow Speed (FFS), mi/h	57.6
Right-Side Lateral Clearance, ft	10		

Adjustment Factors

Driver Population	All Familiar	Final Speed Adjustment Factor (SAF)	1.000
Weather Type	Non-Severe Weather	Final Capacity Adjustment Factor (CAF)	1.000
Incident Type	No Incident	Demand Adjustment Factor (DAF)	1.000

Demand and Capacity

Demand Volume veh/h	19903	Heavy Vehicle Adjustment Factor (f_{HV})	1.000
Peak Hour Factor	0.94	Flow Rate (V_p), pc/h/ln	5293
Total Trucks, %	0.00	Capacity (c), pc/h/ln	2276
Single-Unit Trucks (SUT), %	-	Adjusted Cpacity (c_{adj}), pc/h/ln	2276
Tractor-Trailers (TT), %	-	Volume-to-Capacity Ratio (v/c)	2.33
Passenger Car Equivalent (E_T)	2.000		

Speed and Density

Lane Width Adjustment (f_{LW})	0.0	Average Speed (S), mi/h	-
Right-Side Lateral Clearance Adj. (f_{RLC})	0.0	Density (D), pc/mi/ln	-
Total Ramp Density Adjustment	12.4	Level of Service (LOS)	F
Adjusted Free-Flow Speed (FFS_{adj}), mi/h	57.6		

Copyright © 2020 University of Florida. All Rights Reserved.

HCS7 Basic Freeway Report

Project Information

Analyst	Jenny Tran	Date	5/11/2020
Agency	Minagar & Associates, Inc.	Analysis Year	Horizon Year (2040)
Jurisdiction	Caltrans	Time Period Analyzed	PM Peak Hour
Project Description	I-10/Cedar - W/B East of Cedar		

Geometric Data

Number of Lanes, ln	4	Terrain Type	Level
Segment Length (L), ft	-	Percent Grade, %	-
Measured or Base Free-Flow Speed	Base	Grade Length, mi	-
Base Free-Flow Speed (BFFS), mi/h	70.0	Total Ramp Density (TRD), ramps/mi	5.00
Lane Width, ft	12	Free-Flow Speed (FFS), mi/h	57.6
Right-Side Lateral Clearance, ft	10		

Adjustment Factors

Driver Population	All Familiar	Final Speed Adjustment Factor (SAF)	1.000
Weather Type	Non-Severe Weather	Final Capacity Adjustment Factor (CAF)	1.000
Incident Type	No Incident	Demand Adjustment Factor (DAF)	1.000

Demand and Capacity

Demand Volume veh/h	22002	Heavy Vehicle Adjustment Factor (f_{HV})	1.000
Peak Hour Factor	0.94	Flow Rate (V_p), pc/h/ln	5852
Total Trucks, %	0.00	Capacity (c), pc/h/ln	2276
Single-Unit Trucks (SUT), %	-	Adjusted Cpacity (c_{adj}), pc/h/ln	2276
Tractor-Trailers (TT), %	-	Volume-to-Capacity Ratio (v/c)	2.57
Passenger Car Equivalent (E_T)	2.000		

Speed and Density

Lane Width Adjustment (f_{LW})	0.0	Average Speed (S), mi/h	-
Right-Side Lateral Clearance Adj. (f_{RLC})	0.0	Density (D), pc/mi/ln	-
Total Ramp Density Adjustment	12.4	Level of Service (LOS)	F
Adjusted Free-Flow Speed (FFS_{adj}), mi/h	57.6		

Copyright © 2020 University of Florida. All Rights Reserved.

HCS7 Basic Freeway Report

Project Information

Analyst	Jenny Tran	Date	5/11/2020
Agency	Minagar & Associates, Inc.	Analysis Year	Horizon Year (2040)
Jurisdiction	Caltrans	Time Period Analyzed	AM Peak Hour
Project Description	I-10/Cedar - E/B West of Cedar		

Geometric Data

Number of Lanes, ln	4	Terrain Type	Level
Segment Length (L), ft	-	Percent Grade, %	-
Measured or Base Free-Flow Speed	Base	Grade Length, mi	-
Base Free-Flow Speed (BFFS), mi/h	70.0	Total Ramp Density (TRD), ramps/mi	5.00
Lane Width, ft	12	Free-Flow Speed (FFS), mi/h	57.6
Right-Side Lateral Clearance, ft	10		

Adjustment Factors

Driver Population	All Familiar	Final Speed Adjustment Factor (SAF)	1.000
Weather Type	Non-Severe Weather	Final Capacity Adjustment Factor (CAF)	1.000
Incident Type	No Incident	Demand Adjustment Factor (DAF)	1.000

Demand and Capacity

Demand Volume veh/h	13410	Heavy Vehicle Adjustment Factor (f_{HV})	1.000
Peak Hour Factor	0.94	Flow Rate (V_p), pc/h/ln	3566
Total Trucks, %	0.00	Capacity (c), pc/h/ln	2276
Single-Unit Trucks (SUT), %	-	Adjusted Cpacity (c_{adj}), pc/h/ln	2276
Tractor-Trailers (TT), %	-	Volume-to-Capacity Ratio (v/c)	1.57
Passenger Car Equivalent (E_T)	2.000		

Speed and Density

Lane Width Adjustment (f_{LW})	0.0	Average Speed (S), mi/h	-
Right-Side Lateral Clearance Adj. (f_{RLC})	0.0	Density (D), pc/mi/ln	-
Total Ramp Density Adjustment	12.4	Level of Service (LOS)	F
Adjusted Free-Flow Speed (FFS_{adj}), mi/h	57.6		

Copyright © 2020 University of Florida. All Rights Reserved.

HCS7 Basic Freeway Report

Project Information

Analyst	Jenny Tran	Date	5/11/2020
Agency	Minagar & Associates, Inc.	Analysis Year	Horizon Year (2040)
Jurisdiction	Caltrans	Time Period Analyzed	PM Peak Hour
Project Description	I-10/Cedar - E/B West of Cedar		

Geometric Data

Number of Lanes, ln	4	Terrain Type	Level
Segment Length (L), ft	-	Percent Grade, %	-
Measured or Base Free-Flow Speed	Base	Grade Length, mi	-
Base Free-Flow Speed (BFFS), mi/h	70.0	Total Ramp Density (TRD), ramps/mi	5.00
Lane Width, ft	12	Free-Flow Speed (FFS), mi/h	57.6
Right-Side Lateral Clearance, ft	10		

Adjustment Factors

Driver Population	All Familiar	Final Speed Adjustment Factor (SAF)	1.000
Weather Type	Non-Severe Weather	Final Capacity Adjustment Factor (CAF)	1.000
Incident Type	No Incident	Demand Adjustment Factor (DAF)	1.000

Demand and Capacity

Demand Volume veh/h	29352	Heavy Vehicle Adjustment Factor (f_{HV})	1.000
Peak Hour Factor	0.94	Flow Rate (V_p), pc/h/ln	7806
Total Trucks, %	0.00	Capacity (c), pc/h/ln	2276
Single-Unit Trucks (SUT), %	-	Adjusted Cpacity (c_{adj}), pc/h/ln	2276
Tractor-Trailers (TT), %	-	Volume-to-Capacity Ratio (v/c)	3.43
Passenger Car Equivalent (E_T)	2.000		

Speed and Density

Lane Width Adjustment (f_{LW})	0.0	Average Speed (S), mi/h	-
Right-Side Lateral Clearance Adj. (f_{RLC})	0.0	Density (D), pc/mi/ln	-
Total Ramp Density Adjustment	12.4	Level of Service (LOS)	F
Adjusted Free-Flow Speed (FFS_{adj}), mi/h	57.6		

Copyright © 2020 University of Florida. All Rights Reserved.

HCS7 Basic Freeway Report

Project Information

Analyst	Jenny Tran	Date	5/11/2020
Agency	Minagar & Associates, Inc.	Analysis Year	Horizon Year (2040)
Jurisdiction	Caltrans	Time Period Analyzed	AM Peak Hour
Project Description	I-10/Cedar - W/B West of Cedar		

Geometric Data

Number of Lanes, ln	4	Terrain Type	Level
Segment Length (L), ft	-	Percent Grade, %	-
Measured or Base Free-Flow Speed	Base	Grade Length, mi	-
Base Free-Flow Speed (BFFS), mi/h	70.0	Total Ramp Density (TRD), ramps/mi	5.00
Lane Width, ft	12	Free-Flow Speed (FFS), mi/h	57.6
Right-Side Lateral Clearance, ft	10		

Adjustment Factors

Driver Population	All Familiar	Final Speed Adjustment Factor (SAF)	1.000
Weather Type	Non-Severe Weather	Final Capacity Adjustment Factor (CAF)	1.000
Incident Type	No Incident	Demand Adjustment Factor (DAF)	1.000

Demand and Capacity

Demand Volume veh/h	20073	Heavy Vehicle Adjustment Factor (f_{HV})	1.000
Peak Hour Factor	0.94	Flow Rate (V_p), pc/h/ln	5338
Total Trucks, %	0.00	Capacity (c), pc/h/ln	2276
Single-Unit Trucks (SUT), %	-	Adjusted Cpacity (c_{adj}), pc/h/ln	2276
Tractor-Trailers (TT), %	-	Volume-to-Capacity Ratio (v/c)	2.35
Passenger Car Equivalent (E_T)	2.000		

Speed and Density

Lane Width Adjustment (f_{LW})	0.0	Average Speed (S), mi/h	-
Right-Side Lateral Clearance Adj. (f_{RLC})	0.0	Density (D), pc/mi/ln	-
Total Ramp Density Adjustment	12.4	Level of Service (LOS)	F
Adjusted Free-Flow Speed (FFS_{adj}), mi/h	57.6		

Copyright © 2020 University of Florida. All Rights Reserved.

HCS7 Basic Freeway Report

Project Information

Analyst	Jenny Tran	Date	5/11/2020
Agency	Minagar & Associates, Inc.	Analysis Year	Horizon Year (2040)
Jurisdiction	Caltrans	Time Period Analyzed	PM Peak Hour
Project Description	I-10/Cedar - W/B West of Cedar		

Geometric Data

Number of Lanes, ln	4	Terrain Type	Level
Segment Length (L), ft	-	Percent Grade, %	-
Measured or Base Free-Flow Speed	Base	Grade Length, mi	-
Base Free-Flow Speed (BFFS), mi/h	70.0	Total Ramp Density (TRD), ramps/mi	5.00
Lane Width, ft	12	Free-Flow Speed (FFS), mi/h	57.6
Right-Side Lateral Clearance, ft	10		

Adjustment Factors

Driver Population	All Familiar	Final Speed Adjustment Factor (SAF)	1.000
Weather Type	Non-Severe Weather	Final Capacity Adjustment Factor (CAF)	1.000
Incident Type	No Incident	Demand Adjustment Factor (DAF)	1.000

Demand and Capacity

Demand Volume veh/h	22434	Heavy Vehicle Adjustment Factor (f_{HV})	1.000
Peak Hour Factor	0.94	Flow Rate (V_p), pc/h/ln	5966
Total Trucks, %	0.00	Capacity (c), pc/h/ln	2276
Single-Unit Trucks (SUT), %	-	Adjusted Cpacity (c_{adj}), pc/h/ln	2276
Tractor-Trailers (TT), %	-	Volume-to-Capacity Ratio (v/c)	2.62
Passenger Car Equivalent (E_T)	2.000		

Speed and Density

Lane Width Adjustment (f_{LW})	0.0	Average Speed (S), mi/h	-
Right-Side Lateral Clearance Adj. (f_{RLC})	0.0	Density (D), pc/mi/ln	-
Total Ramp Density Adjustment	12.4	Level of Service (LOS)	F
Adjusted Free-Flow Speed (FFS_{adj}), mi/h	57.6		

Copyright © 2020 University of Florida. All Rights Reserved.

HCS7 Basic Freeway Report

Project Information

Analyst	Jenny Tran	Date	6/18/2020
Agency	Minagar & Associates, Inc.	Analysis Year	Horizon Year (2040) With Project
Jurisdiction	Caltrans	Time Period Analyzed	AM Peak Hour
Project Description	I-10/Cedar - E/B East of Cedar Ave		

Geometric Data

Number of Lanes, ln	4	Terrain Type	Level
Segment Length (L), ft	-	Percent Grade, %	-
Measured or Base Free-Flow Speed	Base	Grade Length, mi	-
Base Free-Flow Speed (BFFS), mi/h	70.0	Total Ramp Density (TRD), ramps/mi	0.00
Lane Width, ft	12	Free-Flow Speed (FFS), mi/h	70.0
Right-Side Lateral Clearance, ft	10		

Adjustment Factors

Driver Population	All Familiar	Final Speed Adjustment Factor (SAF)	1.000
Weather Type	Non-Severe Weather	Final Capacity Adjustment Factor (CAF)	1.000
Incident Type	No Incident	Demand Adjustment Factor (DAF)	1.000

Demand and Capacity

Demand Volume veh/h	12893	Heavy Vehicle Adjustment Factor (f_{HV})	1.000
Peak Hour Factor	0.94	Flow Rate (V_p), pc/h/ln	3429
Total Trucks, %	0.00	Capacity (c), pc/h/ln	2400
Single-Unit Trucks (SUT), %	-	Adjusted Cpacity (c_{adj}), pc/h/ln	2400
Tractor-Trailers (TT), %	-	Volume-to-Capacity Ratio (v/c)	1.43
Passenger Car Equivalent (E_T)	2.000		

Speed and Density

Lane Width Adjustment (f_{LW})	0.0	Average Speed (S), mi/h	-
Right-Side Lateral Clearance Adj. (f_{RLC})	0.0	Density (D), pc/mi/ln	-
Total Ramp Density Adjustment	0.0	Level of Service (LOS)	F
Adjusted Free-Flow Speed (FFS_{adj}), mi/h	70.0		

Copyright © 2020 University of Florida. All Rights Reserved.

HCS7 Basic Freeway Report

Project Information

Analyst	Jenny Tran	Date	6/18/2020
Agency	Minagar & Associates, Inc.	Analysis Year	Horizon Year (2040) With Project
Jurisdiction	Caltrans	Time Period Analyzed	PM Peak Hour
Project Description	I-10/Cedar - E/B East of Cedar Ave		

Geometric Data

Number of Lanes, ln	4	Terrain Type	Level
Segment Length (L), ft	-	Percent Grade, %	-
Measured or Base Free-Flow Speed	Base	Grade Length, mi	-
Base Free-Flow Speed (BFFS), mi/h	70.0	Total Ramp Density (TRD), ramps/mi	0.00
Lane Width, ft	12	Free-Flow Speed (FFS), mi/h	70.0
Right-Side Lateral Clearance, ft	10		

Adjustment Factors

Driver Population	All Familiar	Final Speed Adjustment Factor (SAF)	1.000
Weather Type	Non-Severe Weather	Final Capacity Adjustment Factor (CAF)	1.000
Incident Type	No Incident	Demand Adjustment Factor (DAF)	1.000

Demand and Capacity

Demand Volume veh/h	27978	Heavy Vehicle Adjustment Factor (f_{HV})	1.000
Peak Hour Factor	0.94	Flow Rate (V_p), pc/h/ln	7441
Total Trucks, %	0.00	Capacity (c), pc/h/ln	2400
Single-Unit Trucks (SUT), %	-	Adjusted Cpacity (c_{adj}), pc/h/ln	2400
Tractor-Trailers (TT), %	-	Volume-to-Capacity Ratio (v/c)	3.10
Passenger Car Equivalent (E_T)	2.000		

Speed and Density

Lane Width Adjustment (f_{LW})	0.0	Average Speed (S), mi/h	-
Right-Side Lateral Clearance Adj. (f_{RLC})	0.0	Density (D), pc/mi/ln	-
Total Ramp Density Adjustment	0.0	Level of Service (LOS)	F
Adjusted Free-Flow Speed (FFS_{adj}), mi/h	70.0		

Copyright © 2020 University of Florida. All Rights Reserved.

HCS7 Basic Freeway Report

Project Information

Analyst	Jenny Tran	Date	5/11/2020
Agency	Minagar & Associates, Inc.	Analysis Year	Horizon Year (2040) + Project
Jurisdiction	Caltrans	Time Period Analyzed	AM Peak Hour
Project Description	I-10/Cedar - W/B East of Cedar		

Geometric Data

Number of Lanes, ln	4	Terrain Type	Level
Segment Length (L), ft	-	Percent Grade, %	-
Measured or Base Free-Flow Speed	Base	Grade Length, mi	-
Base Free-Flow Speed (BFFS), mi/h	70.0	Total Ramp Density (TRD), ramps/mi	5.00
Lane Width, ft	12	Free-Flow Speed (FFS), mi/h	57.6
Right-Side Lateral Clearance, ft	10		

Adjustment Factors

Driver Population	All Familiar	Final Speed Adjustment Factor (SAF)	1.000
Weather Type	Non-Severe Weather	Final Capacity Adjustment Factor (CAF)	1.000
Incident Type	No Incident	Demand Adjustment Factor (DAF)	1.000

Demand and Capacity

Demand Volume veh/h	19903	Heavy Vehicle Adjustment Factor (f_{HV})	1.000
Peak Hour Factor	0.94	Flow Rate (V_p), pc/h/ln	5293
Total Trucks, %	0.00	Capacity (c), pc/h/ln	2276
Single-Unit Trucks (SUT), %	-	Adjusted Cpacity (c_{adj}), pc/h/ln	2276
Tractor-Trailers (TT), %	-	Volume-to-Capacity Ratio (v/c)	2.33
Passenger Car Equivalent (E_T)	2.000		

Speed and Density

Lane Width Adjustment (f_{LW})	0.0	Average Speed (S), mi/h	-
Right-Side Lateral Clearance Adj. (f_{RLC})	0.0	Density (D), pc/mi/ln	-
Total Ramp Density Adjustment	12.4	Level of Service (LOS)	F
Adjusted Free-Flow Speed (FFS_{adj}), mi/h	57.6		

Copyright © 2020 University of Florida. All Rights Reserved.

HCS7 Basic Freeway Report

Project Information

Analyst	Jenny Tran	Date	5/11/2020
Agency	Minagar & Associates, Inc.	Analysis Year	Horizon Year (2040) + Project
Jurisdiction	Caltrans	Time Period Analyzed	PM Peak Hour
Project Description	I-10/Cedar - W/B East of Cedar		

Geometric Data

Number of Lanes, ln	4	Terrain Type	Level
Segment Length (L), ft	-	Percent Grade, %	-
Measured or Base Free-Flow Speed	Base	Grade Length, mi	-
Base Free-Flow Speed (BFFS), mi/h	70.0	Total Ramp Density (TRD), ramps/mi	5.00
Lane Width, ft	12	Free-Flow Speed (FFS), mi/h	57.6
Right-Side Lateral Clearance, ft	10		

Adjustment Factors

Driver Population	All Familiar	Final Speed Adjustment Factor (SAF)	1.000
Weather Type	Non-Severe Weather	Final Capacity Adjustment Factor (CAF)	1.000
Incident Type	No Incident	Demand Adjustment Factor (DAF)	1.000

Demand and Capacity

Demand Volume veh/h	22002	Heavy Vehicle Adjustment Factor (f_{HV})	1.000
Peak Hour Factor	0.94	Flow Rate (V_p), pc/h/ln	5852
Total Trucks, %	0.00	Capacity (c), pc/h/ln	2276
Single-Unit Trucks (SUT), %	-	Adjusted Cpacity (c_{adj}), pc/h/ln	2276
Tractor-Trailers (TT), %	-	Volume-to-Capacity Ratio (v/c)	2.57
Passenger Car Equivalent (E_T)	2.000		

Speed and Density

Lane Width Adjustment (f_{LW})	0.0	Average Speed (S), mi/h	-
Right-Side Lateral Clearance Adj. (f_{RLC})	0.0	Density (D), pc/mi/ln	-
Total Ramp Density Adjustment	12.4	Level of Service (LOS)	F
Adjusted Free-Flow Speed (FFS_{adj}), mi/h	57.6		

Copyright © 2020 University of Florida. All Rights Reserved.

HCS7 Basic Freeway Report

Project Information

Analyst	Jenny Tran	Date	5/11/2020
Agency	Minagar & Associates, Inc.	Analysis Year	Horizon Year (2040) + Project
Jurisdiction	Caltrans	Time Period Analyzed	AM Peak Hour
Project Description	I-10/Cedar - E/B West of Cedar		

Geometric Data

Number of Lanes, ln	4	Terrain Type	Level
Segment Length (L), ft	-	Percent Grade, %	-
Measured or Base Free-Flow Speed	Base	Grade Length, mi	-
Base Free-Flow Speed (BFFS), mi/h	70.0	Total Ramp Density (TRD), ramps/mi	5.00
Lane Width, ft	12	Free-Flow Speed (FFS), mi/h	57.6
Right-Side Lateral Clearance, ft	10		

Adjustment Factors

Driver Population	All Familiar	Final Speed Adjustment Factor (SAF)	1.000
Weather Type	Non-Severe Weather	Final Capacity Adjustment Factor (CAF)	1.000
Incident Type	No Incident	Demand Adjustment Factor (DAF)	1.000

Demand and Capacity

Demand Volume veh/h	13410	Heavy Vehicle Adjustment Factor (f_{HV})	1.000
Peak Hour Factor	0.94	Flow Rate (V_p), pc/h/ln	3566
Total Trucks, %	0.00	Capacity (c), pc/h/ln	2276
Single-Unit Trucks (SUT), %	-	Adjusted Cpacity (c_{adj}), pc/h/ln	2276
Tractor-Trailers (TT), %	-	Volume-to-Capacity Ratio (v/c)	1.57
Passenger Car Equivalent (E_T)	2.000		

Speed and Density

Lane Width Adjustment (f_{LW})	0.0	Average Speed (S), mi/h	-
Right-Side Lateral Clearance Adj. (f_{RLC})	0.0	Density (D), pc/mi/ln	-
Total Ramp Density Adjustment	12.4	Level of Service (LOS)	F
Adjusted Free-Flow Speed (FFS_{adj}), mi/h	57.6		

Copyright © 2020 University of Florida. All Rights Reserved.

HCS7 Basic Freeway Report

Project Information

Analyst	Jenny Tran	Date	5/11/2020
Agency	Minagar & Associates, Inc.	Analysis Year	Horizon Year (2040) + Project
Jurisdiction	Caltrans	Time Period Analyzed	PM Peak Hour
Project Description	I-10/Cedar - E/B West of Cedar		

Geometric Data

Number of Lanes, ln	4	Terrain Type	Level
Segment Length (L), ft	-	Percent Grade, %	-
Measured or Base Free-Flow Speed	Base	Grade Length, mi	-
Base Free-Flow Speed (BFFS), mi/h	70.0	Total Ramp Density (TRD), ramps/mi	5.00
Lane Width, ft	12	Free-Flow Speed (FFS), mi/h	57.6
Right-Side Lateral Clearance, ft	10		

Adjustment Factors

Driver Population	All Familiar	Final Speed Adjustment Factor (SAF)	1.000
Weather Type	Non-Severe Weather	Final Capacity Adjustment Factor (CAF)	1.000
Incident Type	No Incident	Demand Adjustment Factor (DAF)	1.000

Demand and Capacity

Demand Volume veh/h	29352	Heavy Vehicle Adjustment Factor (f_{HV})	1.000
Peak Hour Factor	0.94	Flow Rate (V_p), pc/h/ln	7806
Total Trucks, %	0.00	Capacity (c), pc/h/ln	2276
Single-Unit Trucks (SUT), %	-	Adjusted Cpacity (c_{adj}), pc/h/ln	2276
Tractor-Trailers (TT), %	-	Volume-to-Capacity Ratio (v/c)	3.43
Passenger Car Equivalent (E_T)	2.000		

Speed and Density

Lane Width Adjustment (f_{LW})	0.0	Average Speed (S), mi/h	-
Right-Side Lateral Clearance Adj. (f_{RLC})	0.0	Density (D), pc/mi/ln	-
Total Ramp Density Adjustment	12.4	Level of Service (LOS)	F
Adjusted Free-Flow Speed (FFS_{adj}), mi/h	57.6		

Copyright © 2020 University of Florida. All Rights Reserved.

HCS7 Basic Freeway Report

Project Information

Analyst	Jenny Tran	Date	6/18/2020
Agency	Minagar & Associates, Inc.	Analysis Year	Horizon Year (2040) With Project
Jurisdiction	Caltrans	Time Period Analyzed	AM Peak Hour
Project Description	I-10/Cedar - W/B West of Cedar Ave		

Geometric Data

Number of Lanes, ln	4	Terrain Type	Level
Segment Length (L), ft	-	Percent Grade, %	-
Measured or Base Free-Flow Speed	Base	Grade Length, mi	-
Base Free-Flow Speed (BFFS), mi/h	70.0	Total Ramp Density (TRD), ramps/mi	0.00
Lane Width, ft	12	Free-Flow Speed (FFS), mi/h	70.0
Right-Side Lateral Clearance, ft	10		

Adjustment Factors

Driver Population	All Familiar	Final Speed Adjustment Factor (SAF)	1.000
Weather Type	Non-Severe Weather	Final Capacity Adjustment Factor (CAF)	1.000
Incident Type	No Incident	Demand Adjustment Factor (DAF)	1.000

Demand and Capacity

Demand Volume veh/h	20346	Heavy Vehicle Adjustment Factor (f_{HV})	1.000
Peak Hour Factor	0.94	Flow Rate (V_p), pc/h/ln	5411
Total Trucks, %	0.00	Capacity (c), pc/h/ln	2400
Single-Unit Trucks (SUT), %	-	Adjusted Cpacity (c_{adj}), pc/h/ln	2400
Tractor-Trailers (TT), %	-	Volume-to-Capacity Ratio (v/c)	2.25
Passenger Car Equivalent (E_T)	2.000		

Speed and Density

Lane Width Adjustment (f_{LW})	0.0	Average Speed (S), mi/h	-
Right-Side Lateral Clearance Adj. (f_{RLC})	0.0	Density (D), pc/mi/ln	-
Total Ramp Density Adjustment	0.0	Level of Service (LOS)	F
Adjusted Free-Flow Speed (FFS_{adj}), mi/h	70.0		

Copyright © 2020 University of Florida. All Rights Reserved.

HCS7 Basic Freeway Report

Project Information

Analyst	Jenny Tran	Date	6/18/2020
Agency	Minagar & Associates, Inc.	Analysis Year	Horizon Year (2040) With Project
Jurisdiction	Caltrans	Time Period Analyzed	PM Peak Hour
Project Description	I-10/Cedar - W/B West of Cedar Ave		

Geometric Data

Number of Lanes, ln	4	Terrain Type	Level
Segment Length (L), ft	-	Percent Grade, %	-
Measured or Base Free-Flow Speed	Base	Grade Length, mi	-
Base Free-Flow Speed (BFFS), mi/h	70.0	Total Ramp Density (TRD), ramps/mi	0.00
Lane Width, ft	12	Free-Flow Speed (FFS), mi/h	70.0
Right-Side Lateral Clearance, ft	10		

Adjustment Factors

Driver Population	All Familiar	Final Speed Adjustment Factor (SAF)	1.000
Weather Type	Non-Severe Weather	Final Capacity Adjustment Factor (CAF)	1.000
Incident Type	No Incident	Demand Adjustment Factor (DAF)	1.000

Demand and Capacity

Demand Volume veh/h	21924	Heavy Vehicle Adjustment Factor (f_{HV})	1.000
Peak Hour Factor	0.94	Flow Rate (V_p), pc/h/ln	5831
Total Trucks, %	0.00	Capacity (c), pc/h/ln	2400
Single-Unit Trucks (SUT), %	-	Adjusted Cpacity (c_{adj}), pc/h/ln	2400
Tractor-Trailers (TT), %	-	Volume-to-Capacity Ratio (v/c)	2.43
Passenger Car Equivalent (E_T)	2.000		

Speed and Density

Lane Width Adjustment (f_{LW})	0.0	Average Speed (S), mi/h	-
Right-Side Lateral Clearance Adj. (f_{RLC})	0.0	Density (D), pc/mi/ln	-
Total Ramp Density Adjustment	0.0	Level of Service (LOS)	F
Adjusted Free-Flow Speed (FFS_{adj}), mi/h	70.0		

Copyright © 2020 University of Florida. All Rights Reserved.

HCS7 Freeway Diverge Report

Project Information

Analyst	Jenny Tran	Date	6/18/2020
Agency	Minagar & Associates, Inc.	Analysis Year	Existing Year (2020)
Jurisdiction	Caltrans	Time Period Analyzed	AM Peak Hour
Project Description	I-10/Cedar - E/B Off-Ramp		

Geometric Data

	Freeway	Ramp
Number of Lanes (N)	4	1
Free-Flow Speed (FFS), mi/h	70.0	35.0
Segment Length (L) / Deceleration Length (L_D), ft	1500	400
Terrain Type	Level	Level
Percent Grade, %	-	-
Segment Type / Ramp Side	Freeway	Right

Adjustment Factors

Driver Population	All Familiar	All Familiar
Weather Type	Non-Severe Weather	Non-Severe Weather
Incident Type	No Incident	-
Final Speed Adjustment Factor (SAF)	1.000	1.000
Final Capacity Adjustment Factor (CAF)	1.000	1.000
Demand Adjustment Factor (DAF)	1.000	1.000

Demand and Capacity

Demand Volume (V_i), veh/h	3713	1447
Peak Hour Factor (PHF)	0.94	0.94
Total Trucks, %	0.00	0.00
Single-Unit Trucks (SUT), %	-	-
Tractor-Trailers (TT), %	-	-
Heavy Vehicle Adjustment Factor (f_{HV})	1.000	1.000
Flow Rate (v_i), pc/h	3950	1539
Capacity (c), pc/h	9600	2000
Volume-to-Capacity Ratio (v/c)	0.41	0.77

Speed and Density

Upstream Equilibrium Distance (L_{EQ}), ft	-	Density in Ramp Influence Area (D_R), pc/mi/ln	22.9
Distance to Upstream Ramp (L_{UP}), ft	-	Speed Index (D_S)	0.567
Downstream Equilibrium Distance (L_{EQ}), ft	-	Flow Outer Lanes (v_{OA}), pc/h/ln	680
Distance to Downstream Ramp (L_{DOWN}), ft	-	Off-Ramp Influence Area Speed (S_R), mi/h	54.1
Prop. Freeway Vehicles in Lane 1 and 2 (P_{FD})	0.436	Outer Lanes Freeway Speed (S_O), mi/h	76.8
Flow in Lanes 1 and 2 (v_{12}), pc/h	2590	Ramp Junction Speed (S), mi/h	60.2
Flow Entering Ramp-Infl. Area (v_{R12}), pc/h	-	Average Density (D), pc/mi/ln	16.4
Level of Service (LOS)	C		

Copyright © 2020 University of Florida. All Rights Reserved.

HCS7 Freeway Diverge Report

Project Information

Analyst	Jenny Tran	Date	6/18/2020
Agency	Minagar & Associates, Inc.	Analysis Year	Existing Year (2020)
Jurisdiction	Caltrans	Time Period Analyzed	PM Peak Hour
Project Description	I-10/Cedar - E/B Off-Ramp		

Geometric Data

	Freeway	Ramp
Number of Lanes (N)	4	1
Free-Flow Speed (FFS), mi/h	70.0	35.0
Segment Length (L) / Deceleration Length (L_D), ft	1500	400
Terrain Type	Level	Level
Percent Grade, %	-	-
Segment Type / Ramp Side	Freeway	Right

Adjustment Factors

Driver Population	All Familiar	All Familiar
Weather Type	Non-Severe Weather	Non-Severe Weather
Incident Type	No Incident	-
Final Speed Adjustment Factor (SAF)	1.000	1.000
Final Capacity Adjustment Factor (CAF)	1.000	1.000
Demand Adjustment Factor (DAF)	1.000	1.000

Demand and Capacity

Demand Volume (V_i), veh/h	8360	1447
Peak Hour Factor (PHF)	0.94	0.94
Total Trucks, %	0.00	0.00
Single-Unit Trucks (SUT), %	-	-
Tractor-Trailers (TT), %	-	-
Heavy Vehicle Adjustment Factor (f_{HV})	1.000	1.000
Flow Rate (v_i), pc/h	8894	1539
Capacity (c), pc/h	9600	2000
Volume-to-Capacity Ratio (v/c)	0.93	0.77

Speed and Density

Upstream Equilibrium Distance (L_{EQ}), ft	-	Density in Ramp Influence Area (D_R), pc/mi/ln	41.5
Distance to Upstream Ramp (L_{UP}), ft	-	Speed Index (D_S)	0.567
Downstream Equilibrium Distance (L_{EQ}), ft	-	Flow Outer Lanes (v_{OA}), pc/h/ln	2074
Distance to Downstream Ramp (L_{DOWN}), ft	-	Off-Ramp Influence Area Speed (S_R), mi/h	54.1
Prop. Freeway Vehicles in Lane 1 and 2 (P_{FD})	0.436	Outer Lanes Freeway Speed (S_O), mi/h	72.6
Flow in Lanes 1 and 2 (v_{12}), pc/h	4746	Ramp Junction Speed (S), mi/h	61.4
Flow Entering Ramp-Infl. Area (v_{R12}), pc/h	-	Average Density (D), pc/mi/ln	36.2
Level of Service (LOS)	E		

Copyright © 2020 University of Florida. All Rights Reserved.

HCS7 Freeway Diverge Report

Project Information

Analyst	Jenny Tran	Date	6/18/2020
Agency	Minagar & Associates, Inc.	Analysis Year	Existing Year (2020)
Jurisdiction	Caltrans	Time Period Analyzed	AM Peak Hour
Project Description	I-10/Cedar - W/B Off-Ramp		

Geometric Data

	Freeway	Ramp
Number of Lanes (N)	4	1
Free-Flow Speed (FFS), mi/h	70.0	35.0
Segment Length (L) / Deceleration Length (L_D), ft	1500	400
Terrain Type	Level	Level
Percent Grade, %	-	-
Segment Type / Ramp Side	Freeway	Right

Adjustment Factors

Driver Population	All Familiar	All Familiar
Weather Type	Non-Severe Weather	Non-Severe Weather
Incident Type	No Incident	-
Final Speed Adjustment Factor (SAF)	1.000	1.000
Final Capacity Adjustment Factor (CAF)	1.000	1.000
Demand Adjustment Factor (DAF)	1.000	1.000

Demand and Capacity

Demand Volume (V_i), veh/h	9324	1192
Peak Hour Factor (PHF)	0.94	0.94
Total Trucks, %	0.00	0.00
Single-Unit Trucks (SUT), %	-	-
Tractor-Trailers (TT), %	-	-
Heavy Vehicle Adjustment Factor (f_{HV})	1.000	1.000
Flow Rate (v_i), pc/h	9919	1268
Capacity (c), pc/h	9600	2000
Volume-to-Capacity Ratio (v/c)	1.03	0.63

Speed and Density

Upstream Equilibrium Distance (L_{EQ}), ft	-	Density in Ramp Influence Area (D_R), pc/mi/ln	44.0
Distance to Upstream Ramp (L_{UP}), ft	-	Speed Index (D_S)	-
Downstream Equilibrium Distance (L_{EQ}), ft	-	Flow Outer Lanes (v_{OA}), pc/h/ln	2440
Distance to Downstream Ramp (L_{DOWN}), ft	-	Off-Ramp Influence Area Speed (S_R), mi/h	54.8
Prop. Freeway Vehicles in Lane 1 and 2 (P_{FD})	0.436	Outer Lanes Freeway Speed (S_O), mi/h	71.2
Flow in Lanes 1 and 2 (v_{12}), pc/h	5040	Ramp Junction Speed (S), mi/h	-
Flow Entering Ramp-Infl. Area (v_{R12}), pc/h	-	Average Density (D), pc/mi/ln	-
Level of Service (LOS)	F		

Copyright © 2020 University of Florida. All Rights Reserved.

HCS7 Freeway Diverge Report

Project Information

Analyst	Jenny Tran	Date	6/18/2020
Agency	Minagar & Associates, Inc.	Analysis Year	Existing Year (2020)
Jurisdiction	Caltrans	Time Period Analyzed	PM Peak Hour
Project Description	I-10/Cedar - W/B Off-Ramp		

Geometric Data

	Freeway	Ramp
Number of Lanes (N)	4	1
Free-Flow Speed (FFS), mi/h	70.0	35.0
Segment Length (L) / Deceleration Length (L_D), ft	1500	400
Terrain Type	Level	Level
Percent Grade, %	-	-
Segment Type / Ramp Side	Freeway	Right

Adjustment Factors

Driver Population	All Familiar	All Familiar
Weather Type	Non-Severe Weather	Non-Severe Weather
Incident Type	No Incident	-
Final Speed Adjustment Factor (SAF)	1.000	1.000
Final Capacity Adjustment Factor (CAF)	1.000	1.000
Demand Adjustment Factor (DAF)	1.000	1.000

Demand and Capacity

Demand Volume (V_i), veh/h	5030	1192
Peak Hour Factor (PHF)	0.94	0.94
Total Trucks, %	0.00	0.00
Single-Unit Trucks (SUT), %	-	-
Tractor-Trailers (TT), %	-	-
Heavy Vehicle Adjustment Factor (f_{HV})	1.000	1.000
Flow Rate (v_i), pc/h	5351	1268
Capacity (c), pc/h	9600	2000
Volume-to-Capacity Ratio (v/c)	0.56	0.63

Speed and Density

Upstream Equilibrium Distance (L_{EQ}), ft	-	Density in Ramp Influence Area (D_R), pc/mi/ln	26.9
Distance to Upstream Ramp (L_{UP}), ft	-	Speed Index (D_S)	0.542
Downstream Equilibrium Distance (L_{EQ}), ft	-	Flow Outer Lanes (v_{OA}), pc/h/ln	1152
Distance to Downstream Ramp (L_{DOWN}), ft	-	Off-Ramp Influence Area Speed (S_R), mi/h	54.8
Prop. Freeway Vehicles in Lane 1 and 2 (P_{FD})	0.436	Outer Lanes Freeway Speed (S_O), mi/h	76.2
Flow in Lanes 1 and 2 (v_{12}), pc/h	3048	Ramp Junction Speed (S), mi/h	62.3
Flow Entering Ramp-Infl. Area (v_{R12}), pc/h	-	Average Density (D), pc/mi/ln	21.5
Level of Service (LOS)	C		

Copyright © 2020 University of Florida. All Rights Reserved.

HCS7 Freeway Diverge Report

Project Information

Analyst	Jenny Tran	Date	5/11/2020
Agency	Minagar & Associates, Inc.	Analysis Year	Opening Year
Jurisdiction	Caltrans	Time Period Analyzed	AM Peak Hour
Project Description	I-10/Cedar - E/B Off Ramp		

Geometric Data

	Freeway	Ramp
Number of Lanes (N)	4	1
Free-Flow Speed (FFS), mi/h	70.0	35.0
Segment Length (L) / Deceleration Length (L_D), ft	1500	400
Terrain Type	Level	Level
Percent Grade, %	-	-
Segment Type / Ramp Side	Freeway	Right

Adjustment Factors

Driver Population	All Familiar	All Familiar
Weather Type	Non-Severe Weather	Non-Severe Weather
Incident Type	No Incident	-
Final Speed Adjustment Factor (SAF)	1.000	1.000
Final Capacity Adjustment Factor (CAF)	1.000	1.000
Demand Adjustment Factor (DAF)	1.000	1.000

Demand and Capacity

Demand Volume (V_i), veh/h	3787	1476
Peak Hour Factor (PHF)	0.94	0.94
Total Trucks, %	0.00	0.00
Single-Unit Trucks (SUT), %	-	-
Tractor-Trailers (TT), %	-	-
Heavy Vehicle Adjustment Factor (f_{HV})	1.000	1.000
Flow Rate (v_i), pc/h	4029	1570
Capacity (c), pc/h	9600	2000
Volume-to-Capacity Ratio (v/c)	0.42	0.79

Speed and Density

Upstream Equilibrium Distance (L_{EQ}), ft	-	Density in Ramp Influence Area (D_R), pc/mi/ln	23.4
Distance to Upstream Ramp (L_{UP}), ft	-	Speed Index (D_S)	0.569
Downstream Equilibrium Distance (L_{EQ}), ft	-	Flow Outer Lanes (v_{OA}), pc/h/ln	694
Distance to Downstream Ramp (L_{DOWN}), ft	-	Off-Ramp Influence Area Speed (S_R), mi/h	54.1
Prop. Freeway Vehicles in Lane 1 and 2 (P_{FD})	0.436	Outer Lanes Freeway Speed (S_O), mi/h	76.8
Flow in Lanes 1 and 2 (v_{12}), pc/h	2642	Ramp Junction Speed (S), mi/h	60.2
Flow Entering Ramp-Infl. Area (v_{R12}), pc/h	-	Average Density (D), pc/mi/ln	16.7
Level of Service (LOS)	C		

Copyright © 2020 University of Florida. All Rights Reserved.

HCS7 Freeway Diverge Report

Project Information

Analyst	Jenny Tran	Date	5/11/2020
Agency	Minagar & Associates, Inc.	Analysis Year	Opening Year
Jurisdiction	Caltrans	Time Period Analyzed	PM Peak Hour
Project Description	I-10/Cedar - E/B Off Ramp		

Geometric Data

	Freeway	Ramp
Number of Lanes (N)	4	1
Free-Flow Speed (FFS), mi/h	70.0	35.0
Segment Length (L) / Deceleration Length (L_D), ft	1500	400
Terrain Type	Level	Level
Percent Grade, %	-	-
Segment Type / Ramp Side	Freeway	Right

Adjustment Factors

Driver Population	All Familiar	All Familiar
Weather Type	Non-Severe Weather	Non-Severe Weather
Incident Type	No Incident	-
Final Speed Adjustment Factor (SAF)	1.000	1.000
Final Capacity Adjustment Factor (CAF)	1.000	1.000
Demand Adjustment Factor (DAF)	1.000	1.000

Demand and Capacity

Demand Volume (V_i), veh/h	8527	1476
Peak Hour Factor (PHF)	0.94	0.94
Total Trucks, %	0.00	0.00
Single-Unit Trucks (SUT), %	-	-
Tractor-Trailers (TT), %	-	-
Heavy Vehicle Adjustment Factor (f_{HV})	1.000	1.000
Flow Rate (v_i), pc/h	9071	1570
Capacity (c), pc/h	9600	2000
Volume-to-Capacity Ratio (v/c)	0.94	0.79

Speed and Density

Upstream Equilibrium Distance (L_{EQ}), ft	-	Density in Ramp Influence Area (D_R), pc/mi/ln	42.3
Distance to Upstream Ramp (L_{UP}), ft	-	Speed Index (D_S)	0.569
Downstream Equilibrium Distance (L_{EQ}), ft	-	Flow Outer Lanes (v_{OA}), pc/h/ln	2116
Distance to Downstream Ramp (L_{DOWN}), ft	-	Off-Ramp Influence Area Speed (S_R), mi/h	54.1
Prop. Freeway Vehicles in Lane 1 and 2 (P_{FD})	0.436	Outer Lanes Freeway Speed (S_O), mi/h	72.4
Flow in Lanes 1 and 2 (v_{12}), pc/h	4840	Ramp Junction Speed (S), mi/h	61.3
Flow Entering Ramp-Infl. Area (v_{R12}), pc/h	-	Average Density (D), pc/mi/ln	37.0
Level of Service (LOS)	E		

Copyright © 2020 University of Florida. All Rights Reserved.

HCS7 Freeway Diverge Report

Project Information

Analyst	Jenny Tran	Date	5/11/2020
Agency	Minagar & Associates, Inc.	Analysis Year	Opening Year
Jurisdiction	Caltrans	Time Period Analyzed	AM Peak Hour
Project Description	I-10/Cedar - W/B Off Ramp		

Geometric Data

	Freeway	Ramp
Number of Lanes (N)	4	1
Free-Flow Speed (FFS), mi/h	70.0	35.0
Segment Length (L) / Deceleration Length (L_D), ft	1500	400
Terrain Type	Level	Level
Percent Grade, %	-	-
Segment Type / Ramp Side	Freeway	Right

Adjustment Factors

Driver Population	All Familiar	All Familiar
Weather Type	Non-Severe Weather	Non-Severe Weather
Incident Type	No Incident	-
Final Speed Adjustment Factor (SAF)	1.000	1.000
Final Capacity Adjustment Factor (CAF)	1.000	1.000
Demand Adjustment Factor (DAF)	1.000	1.000

Demand and Capacity

Demand Volume (V_i), veh/h	9511	1216
Peak Hour Factor (PHF)	0.94	0.94
Total Trucks, %	0.00	0.00
Single-Unit Trucks (SUT), %	-	-
Tractor-Trailers (TT), %	-	-
Heavy Vehicle Adjustment Factor (f_{HV})	1.000	1.000
Flow Rate (v_i), pc/h	10118	1294
Capacity (c), pc/h	9600	2000
Volume-to-Capacity Ratio (v/c)	1.05	0.65

Speed and Density

Upstream Equilibrium Distance (L_{EQ}), ft	-	Density in Ramp Influence Area (D_R), pc/mi/ln	44.9
Distance to Upstream Ramp (L_{UP}), ft	-	Speed Index (D_S)	-
Downstream Equilibrium Distance (L_{EQ}), ft	-	Flow Outer Lanes (v_{OA}), pc/h/ln	2489
Distance to Downstream Ramp (L_{DOWN}), ft	-	Off-Ramp Influence Area Speed (S_R), mi/h	54.8
Prop. Freeway Vehicles in Lane 1 and 2 (P_{FD})	0.436	Outer Lanes Freeway Speed (S_O), mi/h	71.0
Flow in Lanes 1 and 2 (v_{12}), pc/h	5141	Ramp Junction Speed (S), mi/h	-
Flow Entering Ramp-Infl. Area (v_{R12}), pc/h	-	Average Density (D), pc/mi/ln	-
Level of Service (LOS)	F		

Copyright © 2020 University of Florida. All Rights Reserved.

HCS7 Freeway Diverge Report

Project Information

Analyst	Jenny Tran	Date	5/11/2020
Agency	Minagar & Associates, Inc.	Analysis Year	Opening Year
Jurisdiction	Caltrans	Time Period Analyzed	PM Peak Hour
Project Description	I-10/Cedar - W/B Off Ramp		

Geometric Data

	Freeway	Ramp
Number of Lanes (N)	4	1
Free-Flow Speed (FFS), mi/h	70.0	35.0
Segment Length (L) / Deceleration Length (L_D), ft	1500	400
Terrain Type	Level	Level
Percent Grade, %	-	-
Segment Type / Ramp Side	Freeway	Right

Adjustment Factors

Driver Population	All Familiar	All Familiar
Weather Type	Non-Severe Weather	Non-Severe Weather
Incident Type	No Incident	-
Final Speed Adjustment Factor (SAF)	1.000	1.000
Final Capacity Adjustment Factor (CAF)	1.000	1.000
Demand Adjustment Factor (DAF)	1.000	1.000

Demand and Capacity

Demand Volume (V_i), veh/h	5130	1216
Peak Hour Factor (PHF)	0.94	0.94
Total Trucks, %	0.00	0.00
Single-Unit Trucks (SUT), %	-	-
Tractor-Trailers (TT), %	-	-
Heavy Vehicle Adjustment Factor (f_{HV})	1.000	1.000
Flow Rate (v_i), pc/h	5457	1294
Capacity (c), pc/h	9600	2000
Volume-to-Capacity Ratio (v/c)	0.57	0.65

Speed and Density

Upstream Equilibrium Distance (L_{EQ}), ft	-	Density in Ramp Influence Area (D_R), pc/mi/ln	27.4
Distance to Upstream Ramp (L_{UP}), ft	-	Speed Index (D_S)	0.544
Downstream Equilibrium Distance (L_{EQ}), ft	-	Flow Outer Lanes (v_{OA}), pc/h/ln	1174
Distance to Downstream Ramp (L_{DOWN}), ft	-	Off-Ramp Influence Area Speed (S_R), mi/h	54.8
Prop. Freeway Vehicles in Lane 1 and 2 (P_{FD})	0.436	Outer Lanes Freeway Speed (S_O), mi/h	76.1
Flow in Lanes 1 and 2 (v_{12}), pc/h	3109	Ramp Junction Speed (S), mi/h	62.3
Flow Entering Ramp-Infl. Area (v_{R12}), pc/h	-	Average Density (D), pc/mi/ln	21.9
Level of Service (LOS)	C		

Copyright © 2020 University of Florida. All Rights Reserved.

HCS7 Freeway Diverge Report

Project Information

Analyst	Jenny Tran	Date	6/18/2020
Agency	Minagar & Associates, Inc.	Analysis Year	Opening Year (2021) with Project
Jurisdiction	Caltrans	Time Period Analyzed	AM Peak Hour
Project Description	I-10/Cedar - E/B Off-Ramp		

Geometric Data

	Freeway	Ramp
Number of Lanes (N)	4	1
Free-Flow Speed (FFS), mi/h	70.0	35.0
Segment Length (L) / Deceleration Length (L_D), ft	1500	400
Terrain Type	Level	Level
Percent Grade, %	-	-
Segment Type / Ramp Side	Freeway	Right

Adjustment Factors

Driver Population	All Familiar	All Familiar
Weather Type	Non-Severe Weather	Non-Severe Weather
Incident Type	No Incident	-
Final Speed Adjustment Factor (SAF)	1.000	1.000
Final Capacity Adjustment Factor (CAF)	1.000	1.000
Demand Adjustment Factor (DAF)	1.000	1.000

Demand and Capacity

Demand Volume (V_i), veh/h	3766	1495
Peak Hour Factor (PHF)	0.94	0.94
Total Trucks, %	0.00	0.00
Single-Unit Trucks (SUT), %	-	-
Tractor-Trailers (TT), %	-	-
Heavy Vehicle Adjustment Factor (f_{HV})	1.000	1.000
Flow Rate (v_i), pc/h	4006	1590
Capacity (c), pc/h	9600	2000
Volume-to-Capacity Ratio (v/c)	0.42	0.80

Speed and Density

Upstream Equilibrium Distance (L_{EQ}), ft	-	Density in Ramp Influence Area (D_R), pc/mi/ln	23.4
Distance to Upstream Ramp (L_{UP}), ft	-	Speed Index (D_S)	0.571
Downstream Equilibrium Distance (L_{EQ}), ft	-	Flow Outer Lanes (v_{OA}), pc/h/ln	682
Distance to Downstream Ramp (L_{DOWN}), ft	-	Off-Ramp Influence Area Speed (S_R), mi/h	54.0
Prop. Freeway Vehicles in Lane 1 and 2 (P_{FD})	0.436	Outer Lanes Freeway Speed (S_O), mi/h	76.8
Flow in Lanes 1 and 2 (v_{12}), pc/h	2643	Ramp Junction Speed (S), mi/h	60.1
Flow Entering Ramp-Infl. Area (v_{R12}), pc/h	-	Average Density (D), pc/mi/ln	16.7
Level of Service (LOS)	C		

Copyright © 2020 University of Florida. All Rights Reserved.

HCS7 Freeway Diverge Report

Project Information

Analyst	Jenny Tran	Date	6/18/2020
Agency	Minagar & Associates, Inc.	Analysis Year	Opening Year (2021) with Project
Jurisdiction	Caltrans	Time Period Analyzed	PM Peak Hour
Project Description	I-10/Cedar - E/B Off-Ramp		

Geometric Data

	Freeway	Ramp
Number of Lanes (N)	4	1
Free-Flow Speed (FFS), mi/h	70.0	35.0
Segment Length (L) / Deceleration Length (L_D), ft	1500	400
Terrain Type	Level	Level
Percent Grade, %	-	-
Segment Type / Ramp Side	Freeway	Right

Adjustment Factors

Driver Population	All Familiar	All Familiar
Weather Type	Non-Severe Weather	Non-Severe Weather
Incident Type	No Incident	-
Final Speed Adjustment Factor (SAF)	1.000	1.000
Final Capacity Adjustment Factor (CAF)	1.000	1.000
Demand Adjustment Factor (DAF)	1.000	1.000

Demand and Capacity

Demand Volume (V_i), veh/h	8511	1492
Peak Hour Factor (PHF)	0.94	0.94
Total Trucks, %	0.00	0.00
Single-Unit Trucks (SUT), %	-	-
Tractor-Trailers (TT), %	-	-
Heavy Vehicle Adjustment Factor (f_{HV})	1.000	1.000
Flow Rate (v_i), pc/h	9054	1587
Capacity (c), pc/h	9600	2000
Volume-to-Capacity Ratio (v/c)	0.94	0.79

Speed and Density

Upstream Equilibrium Distance (L_{EQ}), ft	-	Density in Ramp Influence Area (D_R), pc/mi/ln	42.3
Distance to Upstream Ramp (L_{UP}), ft	-	Speed Index (D_S)	0.571
Downstream Equilibrium Distance (L_{EQ}), ft	-	Flow Outer Lanes (v_{OA}), pc/h/ln	2106
Distance to Downstream Ramp (L_{DOWN}), ft	-	Off-Ramp Influence Area Speed (S_R), mi/h	54.0
Prop. Freeway Vehicles in Lane 1 and 2 (P_{FD})	0.436	Outer Lanes Freeway Speed (S_O), mi/h	72.5
Flow in Lanes 1 and 2 (v_{12}), pc/h	4843	Ramp Junction Speed (S), mi/h	61.3
Flow Entering Ramp-Infl. Area (v_{R12}), pc/h	-	Average Density (D), pc/mi/ln	36.9
Level of Service (LOS)	E		

Copyright © 2020 University of Florida. All Rights Reserved.

HCS7 Freeway Diverge Report

Project Information

Analyst	Jenny Tran	Date	6/18/2020
Agency	Minagar & Associates, Inc.	Analysis Year	Opening Year (2021) with Project
Jurisdiction	Caltrans	Time Period Analyzed	AM Peak Hour
Project Description	I-10/Cedar - W/B Off-Ramp		

Geometric Data

	Freeway	Ramp
Number of Lanes (N)	4	1
Free-Flow Speed (FFS), mi/h	70.0	35.0
Segment Length (L) / Deceleration Length (L_D), ft	1500	400
Terrain Type	Level	Level
Percent Grade, %	-	-
Segment Type / Ramp Side	Freeway	Right

Adjustment Factors

Driver Population	All Familiar	All Familiar
Weather Type	Non-Severe Weather	Non-Severe Weather
Incident Type	No Incident	-
Final Speed Adjustment Factor (SAF)	1.000	1.000
Final Capacity Adjustment Factor (CAF)	1.000	1.000
Demand Adjustment Factor (DAF)	1.000	1.000

Demand and Capacity

Demand Volume (V_i), veh/h	9491	1235
Peak Hour Factor (PHF)	0.94	0.94
Total Trucks, %	0.00	0.00
Single-Unit Trucks (SUT), %	-	-
Tractor-Trailers (TT), %	-	-
Heavy Vehicle Adjustment Factor (f_{HV})	1.000	1.000
Flow Rate (v_i), pc/h	10097	1314
Capacity (c), pc/h	9600	2000
Volume-to-Capacity Ratio (v/c)	1.05	0.66

Speed and Density

Upstream Equilibrium Distance (L_{EQ}), ft	-	Density in Ramp Influence Area (D_R), pc/mi/ln	44.9
Distance to Upstream Ramp (L_{UP}), ft	-	Speed Index (D_S)	-
Downstream Equilibrium Distance (L_{EQ}), ft	-	Flow Outer Lanes (v_{OA}), pc/h/ln	2477
Distance to Downstream Ramp (L_{DOWN}), ft	-	Off-Ramp Influence Area Speed (S_R), mi/h	54.7
Prop. Freeway Vehicles in Lane 1 and 2 (P_{FD})	0.436	Outer Lanes Freeway Speed (S_O), mi/h	71.0
Flow in Lanes 1 and 2 (v_{12}), pc/h	5143	Ramp Junction Speed (S), mi/h	-
Flow Entering Ramp-Infl. Area (v_{R12}), pc/h	-	Average Density (D), pc/mi/ln	-
Level of Service (LOS)	F		

Copyright © 2020 University of Florida. All Rights Reserved.

HCS7 Freeway Diverge Report

Project Information

Analyst	Jenny Tran	Date	6/18/2020
Agency	Minagar & Associates, Inc.	Analysis Year	Opening Year (2021) with Project
Jurisdiction	Caltrans	Time Period Analyzed	PM Peak Hour
Project Description	I-10/Cedar - W/B Off-Ramp		

Geometric Data

	Freeway	Ramp
Number of Lanes (N)	4	1
Free-Flow Speed (FFS), mi/h	70.0	35.0
Segment Length (L) / Deceleration Length (L_D), ft	1500	400
Terrain Type	Level	Level
Percent Grade, %	-	-
Segment Type / Ramp Side	Freeway	Right

Adjustment Factors

Driver Population	All Familiar	All Familiar
Weather Type	Non-Severe Weather	Non-Severe Weather
Incident Type	No Incident	-
Final Speed Adjustment Factor (SAF)	1.000	1.000
Final Capacity Adjustment Factor (CAF)	1.000	1.000
Demand Adjustment Factor (DAF)	1.000	1.000

Demand and Capacity

Demand Volume (V_i), veh/h	5114	1232
Peak Hour Factor (PHF)	0.94	0.94
Total Trucks, %	0.00	0.00
Single-Unit Trucks (SUT), %	-	-
Tractor-Trailers (TT), %	-	-
Heavy Vehicle Adjustment Factor (f_{HV})	1.000	1.000
Flow Rate (v_i), pc/h	5440	1311
Capacity (c), pc/h	9600	2000
Volume-to-Capacity Ratio (v/c)	0.57	0.66

Speed and Density

Upstream Equilibrium Distance (L_{EQ}), ft	-	Density in Ramp Influence Area (D_R), pc/mi/ln	27.4
Distance to Upstream Ramp (L_{UP}), ft	-	Speed Index (D_S)	0.546
Downstream Equilibrium Distance (L_{EQ}), ft	-	Flow Outer Lanes (v_{OA}), pc/h/ln	1165
Distance to Downstream Ramp (L_{DOWN}), ft	-	Off-Ramp Influence Area Speed (S_R), mi/h	54.7
Prop. Freeway Vehicles in Lane 1 and 2 (P_{FD})	0.436	Outer Lanes Freeway Speed (S_O), mi/h	76.1
Flow in Lanes 1 and 2 (v_{12}), pc/h	3111	Ramp Junction Speed (S), mi/h	62.2
Flow Entering Ramp-Infl. Area (v_{R12}), pc/h	-	Average Density (D), pc/mi/ln	21.9
Level of Service (LOS)	C		

Copyright © 2020 University of Florida. All Rights Reserved.

HCS7 Freeway Diverge Report

Project Information

Analyst	Jenny Tran	Date	5/11/2020
Agency	Minagar & Associates, Inc.	Analysis Year	Horizon Year (2040)
Jurisdiction	Caltrans	Time Period Analyzed	AM Peak Hour
Project Description	I-10/Cedar - E/B Off Ramp		

Geometric Data

	Freeway	Ramp
Number of Lanes (N)	4	1
Free-Flow Speed (FFS), mi/h	70.0	35.0
Segment Length (L) / Deceleration Length (L_D), ft	1500	400
Terrain Type	Level	Level
Percent Grade, %	-	-
Segment Type / Ramp Side	Freeway	Right

Adjustment Factors

Driver Population	All Familiar	All Familiar
Weather Type	Non-Severe Weather	Non-Severe Weather
Incident Type	No Incident	-
Final Speed Adjustment Factor (SAF)	1.000	1.000
Final Capacity Adjustment Factor (CAF)	1.000	1.000
Demand Adjustment Factor (DAF)	1.000	1.000

Demand and Capacity

Demand Volume (V_i), veh/h	11603	1807
Peak Hour Factor (PHF)	0.94	0.94
Total Trucks, %	0.00	0.00
Single-Unit Trucks (SUT), %	-	-
Tractor-Trailers (TT), %	-	-
Heavy Vehicle Adjustment Factor (f_{HV})	1.000	1.000
Flow Rate (v_i), pc/h	12344	1922
Capacity (c), pc/h	9600	2000
Volume-to-Capacity Ratio (v/c)	1.29	0.96

Speed and Density

Upstream Equilibrium Distance (L_{EQ}), ft	-	Density in Ramp Influence Area (D_R), pc/mi/ln	60.4
Distance to Upstream Ramp (L_{UP}), ft	-	Speed Index (D_S)	-
Downstream Equilibrium Distance (L_{EQ}), ft	-	Flow Outer Lanes (v_{OA}), pc/h/ln	2700
Distance to Downstream Ramp (L_{DOWN}), ft	-	Off-Ramp Influence Area Speed (S_R), mi/h	53.2
Prop. Freeway Vehicles in Lane 1 and 2 (P_{FD})	0.436	Outer Lanes Freeway Speed (S_O), mi/h	70.2
Flow in Lanes 1 and 2 (v_{12}), pc/h	6944	Ramp Junction Speed (S), mi/h	-
Flow Entering Ramp-Infl. Area (v_{R12}), pc/h	-	Average Density (D), pc/mi/ln	-
Level of Service (LOS)	F		

Copyright © 2020 University of Florida. All Rights Reserved.

HCS7 Freeway Diverge Report

Project Information

Analyst	Jenny Tran	Date	5/11/2020
Agency	Minagar & Associates, Inc.	Analysis Year	Horizon Year (2040)
Jurisdiction	Caltrans	Time Period Analyzed	PM Peak Hour
Project Description	I-10/Cedar - E/B Off Ramp		

Geometric Data

	Freeway	Ramp
Number of Lanes (N)	4	1
Free-Flow Speed (FFS), mi/h	70.0	35.0
Segment Length (L) / Deceleration Length (L_D), ft	1500	400
Terrain Type	Level	Level
Percent Grade, %	-	-
Segment Type / Ramp Side	Freeway	Right

Adjustment Factors

Driver Population	All Familiar	All Familiar
Weather Type	Non-Severe Weather	Non-Severe Weather
Incident Type	No Incident	-
Final Speed Adjustment Factor (SAF)	1.000	1.000
Final Capacity Adjustment Factor (CAF)	1.000	1.000
Demand Adjustment Factor (DAF)	1.000	1.000

Demand and Capacity

Demand Volume (V_i), veh/h	26390	2962
Peak Hour Factor (PHF)	0.94	0.94
Total Trucks, %	0.00	0.00
Single-Unit Trucks (SUT), %	-	-
Tractor-Trailers (TT), %	-	-
Heavy Vehicle Adjustment Factor (f_{HV})	1.000	1.000
Flow Rate (v_i), pc/h	28074	3151
Capacity (c), pc/h	9600	2000
Volume-to-Capacity Ratio (v/c)	2.92	1.58

Speed and Density

Upstream Equilibrium Distance (L_{EQ}), ft	-	Density in Ramp Influence Area (D_R), pc/mi/ln	195.6
Distance to Upstream Ramp (L_{UP}), ft	-	Speed Index (D_S)	-
Downstream Equilibrium Distance (L_{EQ}), ft	-	Flow Outer Lanes (v_{OA}), pc/h/ln	2700
Distance to Downstream Ramp (L_{DOWN}), ft	-	Off-Ramp Influence Area Speed (S_R), mi/h	50.1
Prop. Freeway Vehicles in Lane 1 and 2 (P_{FD})	0.436	Outer Lanes Freeway Speed (S_O), mi/h	70.2
Flow in Lanes 1 and 2 (v_{12}), pc/h	22674	Ramp Junction Speed (S), mi/h	-
Flow Entering Ramp-Infl. Area (v_{R12}), pc/h	-	Average Density (D), pc/mi/ln	-
Level of Service (LOS)	F		

Copyright © 2020 University of Florida. All Rights Reserved.

HCS7 Freeway Diverge Report

Project Information

Analyst	Jenny Tran	Date	5/11/2020
Agency	Minagar & Associates, Inc.	Analysis Year	Horizon Year (2040)
Jurisdiction	Caltrans	Time Period Analyzed	AM Peak Hour
Project Description	I-10/Cedar - W/B Off Ramp		

Geometric Data

	Freeway	Ramp
Number of Lanes (N)	4	1
Free-Flow Speed (FFS), mi/h	70.0	35.0
Segment Length (L) / Deceleration Length (L_D), ft	1500	400
Terrain Type	Level	Level
Percent Grade, %	-	-
Segment Type / Ramp Side	Freeway	Right

Adjustment Factors

Driver Population	All Familiar	All Familiar
Weather Type	Non-Severe Weather	Non-Severe Weather
Incident Type	No Incident	-
Final Speed Adjustment Factor (SAF)	1.000	1.000
Final Capacity Adjustment Factor (CAF)	1.000	1.000
Demand Adjustment Factor (DAF)	1.000	1.000

Demand and Capacity

Demand Volume (V_i), veh/h	18688	1216
Peak Hour Factor (PHF)	0.94	0.94
Total Trucks, %	0.00	0.00
Single-Unit Trucks (SUT), %	-	-
Tractor-Trailers (TT), %	-	-
Heavy Vehicle Adjustment Factor (f_{HV})	1.000	1.000
Flow Rate (v_i), pc/h	19881	1294
Capacity (c), pc/h	9600	2000
Volume-to-Capacity Ratio (v/c)	2.07	0.65

Speed and Density

Upstream Equilibrium Distance (L_{EQ}), ft	-	Density in Ramp Influence Area (D_R), pc/mi/ln	125.2
Distance to Upstream Ramp (L_{UP}), ft	-	Speed Index (D_S)	-
Downstream Equilibrium Distance (L_{EQ}), ft	-	Flow Outer Lanes (v_{OA}), pc/h/ln	2700
Distance to Downstream Ramp (L_{DOWN}), ft	-	Off-Ramp Influence Area Speed (S_R), mi/h	54.8
Prop. Freeway Vehicles in Lane 1 and 2 (P_{FD})	0.436	Outer Lanes Freeway Speed (S_O), mi/h	70.2
Flow in Lanes 1 and 2 (v_{12}), pc/h	14481	Ramp Junction Speed (S), mi/h	-
Flow Entering Ramp-Infl. Area (v_{R12}), pc/h	-	Average Density (D), pc/mi/ln	-
Level of Service (LOS)	F		

Copyright © 2020 University of Florida. All Rights Reserved.

HCS7 Freeway Diverge Report

Project Information

Analyst	Jenny Tran	Date	5/11/2020
Agency	Minagar & Associates, Inc.	Analysis Year	Horizon Year (2040)
Jurisdiction	Caltrans	Time Period Analyzed	PM Peak Hour
Project Description	I-10/Cedar - W/B Off Ramp		

Geometric Data

	Freeway	Ramp
Number of Lanes (N)	4	1
Free-Flow Speed (FFS), mi/h	70.0	35.0
Segment Length (L) / Deceleration Length (L_D), ft	1500	400
Terrain Type	Level	Level
Percent Grade, %	-	-
Segment Type / Ramp Side	Freeway	Right

Adjustment Factors

Driver Population	All Familiar	All Familiar
Weather Type	Non-Severe Weather	Non-Severe Weather
Incident Type	No Incident	-
Final Speed Adjustment Factor (SAF)	1.000	1.000
Final Capacity Adjustment Factor (CAF)	1.000	1.000
Demand Adjustment Factor (DAF)	1.000	1.000

Demand and Capacity

Demand Volume (V_i), veh/h	19592	2410
Peak Hour Factor (PHF)	0.94	0.94
Total Trucks, %	0.00	0.00
Single-Unit Trucks (SUT), %	-	-
Tractor-Trailers (TT), %	-	-
Heavy Vehicle Adjustment Factor (f_{HV})	1.000	1.000
Flow Rate (v_i), pc/h	20843	2564
Capacity (c), pc/h	9600	2000
Volume-to-Capacity Ratio (v/c)	2.17	1.28

Speed and Density

Upstream Equilibrium Distance (L_{EQ}), ft	-	Density in Ramp Influence Area (D_R), pc/mi/ln	133.5
Distance to Upstream Ramp (L_{UP}), ft	-	Speed Index (D_S)	-
Downstream Equilibrium Distance (L_{EQ}), ft	-	Flow Outer Lanes (v_{OA}), pc/h/ln	2700
Distance to Downstream Ramp (L_{DOWN}), ft	-	Off-Ramp Influence Area Speed (S_R), mi/h	51.5
Prop. Freeway Vehicles in Lane 1 and 2 (P_{FD})	0.436	Outer Lanes Freeway Speed (S_O), mi/h	70.2
Flow in Lanes 1 and 2 (v_{12}), pc/h	15443	Ramp Junction Speed (S), mi/h	-
Flow Entering Ramp-Infl. Area (v_{R12}), pc/h	-	Average Density (D), pc/mi/ln	-
Level of Service (LOS)	F		

Copyright © 2020 University of Florida. All Rights Reserved.

HCS7 Freeway Diverge Report

Project Information

Analyst	Jenny Tran	Date	6/18/2020
Agency	Minagar & Associates, Inc.	Analysis Year	Horizon Year (2040) with Project
Jurisdiction	Caltrans	Time Period Analyzed	AM Peak Hour
Project Description	I-10/Cedar - E/B Off-Ramp		

Geometric Data

	Freeway	Ramp
Number of Lanes (N)	4	1
Free-Flow Speed (FFS), mi/h	70.0	35.0
Segment Length (L) / Deceleration Length (L_D), ft	1500	400
Terrain Type	Level	Level
Percent Grade, %	-	-
Segment Type / Ramp Side	Freeway	Right

Adjustment Factors

Driver Population	All Familiar	All Familiar
Weather Type	Non-Severe Weather	Non-Severe Weather
Incident Type	No Incident	-
Final Speed Adjustment Factor (SAF)	1.000	1.000
Final Capacity Adjustment Factor (CAF)	1.000	1.000
Demand Adjustment Factor (DAF)	1.000	1.000

Demand and Capacity

Demand Volume (V_i), veh/h	11575	1835
Peak Hour Factor (PHF)	0.94	0.94
Total Trucks, %	0.00	0.00
Single-Unit Trucks (SUT), %	-	-
Tractor-Trailers (TT), %	-	-
Heavy Vehicle Adjustment Factor (f_{HV})	1.000	1.000
Flow Rate (v_i), pc/h	12314	1952
Capacity (c), pc/h	9600	2000
Volume-to-Capacity Ratio (v/c)	1.28	0.98

Speed and Density

Upstream Equilibrium Distance (L_{EQ}), ft	-	Density in Ramp Influence Area (D_R), pc/mi/ln	60.1
Distance to Upstream Ramp (L_{UP}), ft	-	Speed Index (D_S)	-
Downstream Equilibrium Distance (L_{EQ}), ft	-	Flow Outer Lanes (v_{OA}), pc/h/ln	2700
Distance to Downstream Ramp (L_{DOWN}), ft	-	Off-Ramp Influence Area Speed (S_R), mi/h	53.1
Prop. Freeway Vehicles in Lane 1 and 2 (P_{FD})	0.436	Outer Lanes Freeway Speed (S_O), mi/h	70.2
Flow in Lanes 1 and 2 (v_{12}), pc/h	6914	Ramp Junction Speed (S), mi/h	-
Flow Entering Ramp-Infl. Area (v_{R12}), pc/h	-	Average Density (D), pc/mi/ln	-
Level of Service (LOS)	F		

Copyright © 2020 University of Florida. All Rights Reserved.

HCS7 Freeway Diverge Report

Project Information

Analyst	Jenny Tran	Date	6/18/2020
Agency	Minagar & Associates, Inc.	Analysis Year	Horizon Year (2040) with Project
Jurisdiction	Caltrans	Time Period Analyzed	PM Peak Hour
Project Description	I-10/Cedar - E/B Off-Ramp		

Geometric Data

	Freeway	Ramp
Number of Lanes (N)	4	1
Free-Flow Speed (FFS), mi/h	70.0	35.0
Segment Length (L) / Deceleration Length (L_D), ft	1500	400
Terrain Type	Level	Level
Percent Grade, %	-	-
Segment Type / Ramp Side	Freeway	Right

Adjustment Factors

Driver Population	All Familiar	All Familiar
Weather Type	Non-Severe Weather	Non-Severe Weather
Incident Type	No Incident	-
Final Speed Adjustment Factor (SAF)	1.000	1.000
Final Capacity Adjustment Factor (CAF)	1.000	1.000
Demand Adjustment Factor (DAF)	1.000	1.000

Demand and Capacity

Demand Volume (V_i), veh/h	26363	2989
Peak Hour Factor (PHF)	0.94	0.94
Total Trucks, %	0.00	0.00
Single-Unit Trucks (SUT), %	-	-
Tractor-Trailers (TT), %	-	-
Heavy Vehicle Adjustment Factor (f_{HV})	1.000	1.000
Flow Rate (v_i), pc/h	28046	3180
Capacity (c), pc/h	9600	2000
Volume-to-Capacity Ratio (v/c)	2.92	1.59

Speed and Density

Upstream Equilibrium Distance (L_{EQ}), ft	-	Density in Ramp Influence Area (D_R), pc/mi/ln	195.4
Distance to Upstream Ramp (L_{UP}), ft	-	Speed Index (D_S)	-
Downstream Equilibrium Distance (L_{EQ}), ft	-	Flow Outer Lanes (v_{OA}), pc/h/ln	2700
Distance to Downstream Ramp (L_{DOWN}), ft	-	Off-Ramp Influence Area Speed (S_R), mi/h	50.0
Prop. Freeway Vehicles in Lane 1 and 2 (P_{FD})	0.436	Outer Lanes Freeway Speed (S_O), mi/h	70.2
Flow in Lanes 1 and 2 (v_{12}), pc/h	22646	Ramp Junction Speed (S), mi/h	-
Flow Entering Ramp-Infl. Area (v_{R12}), pc/h	-	Average Density (D), pc/mi/ln	-
Level of Service (LOS)	F		

Copyright © 2020 University of Florida. All Rights Reserved.

HCS7 Freeway Diverge Report

Project Information

Analyst	Jenny Tran	Date	6/18/2020
Agency	Minagar & Associates, Inc.	Analysis Year	Horizon Year (2040) with Project
Jurisdiction	Caltrans	Time Period Analyzed	PM Peak Hour
Project Description	I-10/Cedar - E/B Off-Ramp		

Geometric Data

	Freeway	Ramp
Number of Lanes (N)	4	1
Free-Flow Speed (FFS), mi/h	70.0	35.0
Segment Length (L) / Deceleration Length (L_D), ft	1500	400
Terrain Type	Level	Level
Percent Grade, %	-	-
Segment Type / Ramp Side	Freeway	Right

Adjustment Factors

Driver Population	All Familiar	All Familiar
Weather Type	Non-Severe Weather	Non-Severe Weather
Incident Type	No Incident	-
Final Speed Adjustment Factor (SAF)	1.000	1.000
Final Capacity Adjustment Factor (CAF)	1.000	1.000
Demand Adjustment Factor (DAF)	1.000	1.000

Demand and Capacity

Demand Volume (V_i), veh/h	18659	1244
Peak Hour Factor (PHF)	0.94	0.94
Total Trucks, %	0.00	0.00
Single-Unit Trucks (SUT), %	-	-
Tractor-Trailers (TT), %	-	-
Heavy Vehicle Adjustment Factor (f_{HV})	1.000	1.000
Flow Rate (v_i), pc/h	19850	1323
Capacity (c), pc/h	9600	2000
Volume-to-Capacity Ratio (v/c)	2.07	0.66

Speed and Density

Upstream Equilibrium Distance (L_{EQ}), ft	-	Density in Ramp Influence Area (D_R), pc/mi/ln	124.9
Distance to Upstream Ramp (L_{UP}), ft	-	Speed Index (D_S)	-
Downstream Equilibrium Distance (L_{EQ}), ft	-	Flow Outer Lanes (v_{OA}), pc/h/ln	2700
Distance to Downstream Ramp (L_{DOWN}), ft	-	Off-Ramp Influence Area Speed (S_R), mi/h	54.7
Prop. Freeway Vehicles in Lane 1 and 2 (P_{FD})	0.436	Outer Lanes Freeway Speed (S_O), mi/h	70.2
Flow in Lanes 1 and 2 (v_{12}), pc/h	14450	Ramp Junction Speed (S), mi/h	-
Flow Entering Ramp-Infl. Area (v_{R12}), pc/h	-	Average Density (D), pc/mi/ln	-
Level of Service (LOS)	F		

Copyright © 2020 University of Florida. All Rights Reserved.

HCS7 Freeway Diverge Report

Project Information

Analyst	Jenny Tran	Date	6/18/2020
Agency	Minagar & Associates, Inc.	Analysis Year	Horizon Year (2040) with Project
Jurisdiction	Caltrans	Time Period Analyzed	PM Peak Hour
Project Description	I-10/Cedar - E/B Off-Ramp		

Geometric Data

	Freeway	Ramp
Number of Lanes (N)	4	1
Free-Flow Speed (FFS), mi/h	70.0	35.0
Segment Length (L) / Deceleration Length (L_D), ft	1500	400
Terrain Type	Level	Level
Percent Grade, %	-	-
Segment Type / Ramp Side	Freeway	Right

Adjustment Factors

Driver Population	All Familiar	All Familiar
Weather Type	Non-Severe Weather	Non-Severe Weather
Incident Type	No Incident	-
Final Speed Adjustment Factor (SAF)	1.000	1.000
Final Capacity Adjustment Factor (CAF)	1.000	1.000
Demand Adjustment Factor (DAF)	1.000	1.000

Demand and Capacity

Demand Volume (V_i), veh/h	19565	2437
Peak Hour Factor (PHF)	0.94	0.94
Total Trucks, %	0.00	0.00
Single-Unit Trucks (SUT), %	-	-
Tractor-Trailers (TT), %	-	-
Heavy Vehicle Adjustment Factor (f_{HV})	1.000	1.000
Flow Rate (v_i), pc/h	20814	2593
Capacity (c), pc/h	9600	2000
Volume-to-Capacity Ratio (v/c)	2.17	1.30

Speed and Density

Upstream Equilibrium Distance (L_{EQ}), ft	-	Density in Ramp Influence Area (D_R), pc/mi/ln	133.2
Distance to Upstream Ramp (L_{UP}), ft	-	Speed Index (D_S)	-
Downstream Equilibrium Distance (L_{EQ}), ft	-	Flow Outer Lanes (v_{OA}), pc/h/ln	2700
Distance to Downstream Ramp (L_{DOWN}), ft	-	Off-Ramp Influence Area Speed (S_R), mi/h	51.5
Prop. Freeway Vehicles in Lane 1 and 2 (P_{FD})	0.436	Outer Lanes Freeway Speed (S_O), mi/h	70.2
Flow in Lanes 1 and 2 (v_{12}), pc/h	15414	Ramp Junction Speed (S), mi/h	-
Flow Entering Ramp-Infl. Area (v_{R12}), pc/h	-	Average Density (D), pc/mi/ln	-
Level of Service (LOS)	F		

Copyright © 2020 University of Florida. All Rights Reserved.

HCS7 Freeway Merge Report

Project Information

Analyst	Jenny Tran	Date	5/11/2020
Agency	Minagar & Associates, Inc.	Analysis Year	Existing 2020
Jurisdiction	Caltrans	Time Period Analyzed	AM Peak Hour
Project Description	I-10/Cedar - E/B On Ramp		

Geometric Data

	Freeway	Ramp
Number of Lanes (N)	4	1
Free-Flow Speed (FFS), mi/h	70.0	35.0
Segment Length (L) / Acceleration Length (L_A), ft	1500	800
Terrain Type	Level	Level
Percent Grade, %	-	-
Segment Type / Ramp Side	Freeway	Right

Adjustment Factors

Driver Population	All Familiar	All Familiar
Weather Type	Non-Severe Weather	Non-Severe Weather
Incident Type	No Incident	-
Final Speed Adjustment Factor (SAF)	1.000	1.000
Final Capacity Adjustment Factor (CAF)	1.000	1.000
Demand Adjustment Factor (DAF)	1.000	1.000

Demand and Capacity

Demand Volume (V_i), veh/h	3713	1040
Peak Hour Factor (PHF)	0.94	0.94
Total Trucks, %	0.00	0.00
Single-Unit Trucks (SUT), %	-	-
Tractor-Trailers (TT), %	-	-
Heavy Vehicle Adjustment Factor (f_{HV})	1.000	1.000
Flow Rate (v_i), pc/h	3950	1106
Capacity (c), pc/h	9600	2000
Volume-to-Capacity Ratio (v/c)	0.53	0.55

Speed and Density

Upstream Equilibrium Distance (L_{EQ}), ft	-	Density in Ramp Influence Area (D_R), pc/mi/ln	21.0
Distance to Upstream Ramp (L_{UP}), ft	-	Speed Index (M_S)	0.322
Downstream Equilibrium Distance (L_{EQ}), ft	-	Flow Outer Lanes (v_{OA}), pc/h/ln	1185
Distance to Downstream Ramp (L_{DOWN}), ft	-	On-Ramp Influence Area Speed (S_R), mi/h	61.0
Prop. Freeway Vehicles in Lane 1 and 2 (P_{FM})	0.080	Outer Lanes Freeway Speed (S_O), mi/h	67.5
Flow in Lanes 1 and 2 (v_{12}), pc/h	1580	Ramp Junction Speed (S), mi/h	63.9
Flow Entering Ramp-Infl. Area (v_{R12}), pc/h	2686	Average Density (D), pc/mi/ln	19.8
Level of Service (LOS)	C		

Copyright © 2020 University of Florida. All Rights Reserved.

HCS7 Freeway Merge Report

Project Information

Analyst	Jenny Tran	Date	5/11/2020
Agency	Minagar & Associates, Inc.	Analysis Year	Existing 2020
Jurisdiction	Caltrans	Time Period Analyzed	PM Peak Hour
Project Description	I-10/Cedar - E/B On Ramp		

Geometric Data

	Freeway	Ramp
Number of Lanes (N)	4	1
Free-Flow Speed (FFS), mi/h	70.0	35.0
Segment Length (L) / Acceleration Length (L_A), ft	1500	800
Terrain Type	Level	Level
Percent Grade, %	-	-
Segment Type / Ramp Side	Freeway	Right

Adjustment Factors

Driver Population	All Familiar	All Familiar
Weather Type	Non-Severe Weather	Non-Severe Weather
Incident Type	No Incident	-
Final Speed Adjustment Factor (SAF)	1.000	1.000
Final Capacity Adjustment Factor (CAF)	1.000	1.000
Demand Adjustment Factor (DAF)	1.000	1.000

Demand and Capacity

Demand Volume (V_i), veh/h	8360	1040
Peak Hour Factor (PHF)	0.94	0.94
Total Trucks, %	0.00	0.00
Single-Unit Trucks (SUT), %	-	-
Tractor-Trailers (TT), %	-	-
Heavy Vehicle Adjustment Factor (f_{HV})	1.000	1.000
Flow Rate (v_i), pc/h	8894	1106
Capacity (c), pc/h	9600	2000
Volume-to-Capacity Ratio (v/c)	1.04	0.55

Speed and Density

Upstream Equilibrium Distance (L_{EQ}), ft	-	Density in Ramp Influence Area (D_R), pc/mi/ln	36.4
Distance to Upstream Ramp (L_{UP}), ft	-	Speed Index (M_S)	-
Downstream Equilibrium Distance (L_{EQ}), ft	-	Flow Outer Lanes (v_{OA}), pc/h/ln	2668
Distance to Downstream Ramp (L_{DOWN}), ft	-	On-Ramp Influence Area Speed (S_R), mi/h	51.0
Prop. Freeway Vehicles in Lane 1 and 2 (P_{FM})	0.080	Outer Lanes Freeway Speed (S_O), mi/h	61.3
Flow in Lanes 1 and 2 (v_{12}), pc/h	3558	Ramp Junction Speed (S), mi/h	-
Flow Entering Ramp-Infl. Area (v_{R12}), pc/h	4664	Average Density (D), pc/mi/ln	-
Level of Service (LOS)	F		

Copyright © 2020 University of Florida. All Rights Reserved.

HCS7 Freeway Merge Report

Project Information

Analyst	Jenny Tran	Date	5/11/2020
Agency	Minagar & Associates, Inc.	Analysis Year	Existing 2020
Jurisdiction	Caltrans	Time Period Analyzed	AM Peak Hour
Project Description	I-10/Cedar - W/B On Ramp		

Geometric Data

	Freeway	Ramp
Number of Lanes (N)	4	1
Free-Flow Speed (FFS), mi/h	70.0	35.0
Segment Length (L) / Acceleration Length (L_A), ft	1500	800
Terrain Type	Level	Level
Percent Grade, %	-	-
Segment Type / Ramp Side	Freeway	Right

Adjustment Factors

Driver Population	All Familiar	All Familiar
Weather Type	Non-Severe Weather	Non-Severe Weather
Incident Type	No Incident	-
Final Speed Adjustment Factor (SAF)	1.000	1.000
Final Capacity Adjustment Factor (CAF)	1.000	1.000
Demand Adjustment Factor (DAF)	1.000	1.000

Demand and Capacity

Demand Volume (V_i), veh/h	9324	1455
Peak Hour Factor (PHF)	0.94	0.94
Total Trucks, %	0.00	0.00
Single-Unit Trucks (SUT), %	-	-
Tractor-Trailers (TT), %	-	-
Heavy Vehicle Adjustment Factor (f_{HV})	1.000	1.000
Flow Rate (v_i), pc/h	9919	1548
Capacity (c), pc/h	9600	2000
Volume-to-Capacity Ratio (v/c)	1.19	0.77

Speed and Density

Upstream Equilibrium Distance (L_{EQ}), ft	-	Density in Ramp Influence Area (D_R), pc/mi/ln	47.1
Distance to Upstream Ramp (L_{UP}), ft	-	Speed Index (M_S)	-
Downstream Equilibrium Distance (L_{EQ}), ft	-	Flow Outer Lanes (v_{OA}), pc/h/ln	2700
Distance to Downstream Ramp (L_{DOWN}), ft	-	On-Ramp Influence Area Speed (S_R), mi/h	15.5
Prop. Freeway Vehicles in Lane 1 and 2 (P_{FM})	0.024	Outer Lanes Freeway Speed (S_O), mi/h	61.1
Flow in Lanes 1 and 2 (v_{12}), pc/h	4519	Ramp Junction Speed (S), mi/h	-
Flow Entering Ramp-Infl. Area (v_{R12}), pc/h	6067	Average Density (D), pc/mi/ln	-
Level of Service (LOS)	F		

Copyright © 2020 University of Florida. All Rights Reserved.

HCS7 Freeway Merge Report

Project Information

Analyst	Jenny Tran	Date	5/11/2020
Agency	Minagar & Associates, Inc.	Analysis Year	Existing 2020
Jurisdiction	Caltrans	Time Period Analyzed	PM Peak Hour
Project Description	I-10/Cedar - W/B On Ramp		

Geometric Data

	Freeway	Ramp
Number of Lanes (N)	4	1
Free-Flow Speed (FFS), mi/h	70.0	35.0
Segment Length (L) / Acceleration Length (L_A), ft	1500	800
Terrain Type	Level	Level
Percent Grade, %	-	-
Segment Type / Ramp Side	Freeway	Right

Adjustment Factors

Driver Population	All Familiar	All Familiar
Weather Type	Non-Severe Weather	Non-Severe Weather
Incident Type	No Incident	-
Final Speed Adjustment Factor (SAF)	1.000	1.000
Final Capacity Adjustment Factor (CAF)	1.000	1.000
Demand Adjustment Factor (DAF)	1.000	1.000

Demand and Capacity

Demand Volume (V_i), veh/h	5030	1455
Peak Hour Factor (PHF)	0.94	0.94
Total Trucks, %	0.00	0.00
Single-Unit Trucks (SUT), %	-	-
Tractor-Trailers (TT), %	-	-
Heavy Vehicle Adjustment Factor (f_{HV})	1.000	1.000
Flow Rate (v_i), pc/h	5351	1548
Capacity (c), pc/h	9600	2000
Volume-to-Capacity Ratio (v/c)	0.72	0.77

Speed and Density

Upstream Equilibrium Distance (L_{EQ}), ft	-	Density in Ramp Influence Area (D_R), pc/mi/ln	28.6
Distance to Upstream Ramp (L_{UP}), ft	-	Speed Index (M_S)	0.421
Downstream Equilibrium Distance (L_{EQ}), ft	-	Flow Outer Lanes (v_{OA}), pc/h/ln	1606
Distance to Downstream Ramp (L_{DOWN}), ft	-	On-Ramp Influence Area Speed (S_R), mi/h	58.2
Prop. Freeway Vehicles in Lane 1 and 2 (P_{FM})	0.024	Outer Lanes Freeway Speed (S_O), mi/h	66.0
Flow in Lanes 1 and 2 (v_{12}), pc/h	2140	Ramp Junction Speed (S), mi/h	61.6
Flow Entering Ramp-Infl. Area (v_{R12}), pc/h	3688	Average Density (D), pc/mi/ln	28.0
Level of Service (LOS)	D		

Copyright © 2020 University of Florida. All Rights Reserved.

HCS7 Freeway Merge Report

Project Information

Analyst	Jenny Tran	Date	5/11/2020
Agency	Minagar & Associates, Inc.	Analysis Year	Opening Year
Jurisdiction	Caltrans	Time Period Analyzed	AM Peak Hour
Project Description	I-10/Cedar - E/B On Ramp		

Geometric Data

	Freeway	Ramp
Number of Lanes (N)	4	1
Free-Flow Speed (FFS), mi/h	70.0	35.0
Segment Length (L) / Acceleration Length (L_A), ft	1500	800
Terrain Type	Level	Level
Percent Grade, %	-	-
Segment Type / Ramp Side	Freeway	Right

Adjustment Factors

Driver Population	All Familiar	All Familiar
Weather Type	Non-Severe Weather	Non-Severe Weather
Incident Type	No Incident	-
Final Speed Adjustment Factor (SAF)	1.000	1.000
Final Capacity Adjustment Factor (CAF)	1.000	1.000
Demand Adjustment Factor (DAF)	1.000	1.000

Demand and Capacity

Demand Volume (V_i), veh/h	3787	1060
Peak Hour Factor (PHF)	0.94	0.94
Total Trucks, %	0.00	0.00
Single-Unit Trucks (SUT), %	-	-
Tractor-Trailers (TT), %	-	-
Heavy Vehicle Adjustment Factor (f_{HV})	1.000	1.000
Flow Rate (v_i), pc/h	4029	1128
Capacity (c), pc/h	9600	2000
Volume-to-Capacity Ratio (v/c)	0.54	0.56

Speed and Density

Upstream Equilibrium Distance (L_{EQ}), ft	-	Density in Ramp Influence Area (D_R), pc/mi/ln	21.4
Distance to Upstream Ramp (L_{UP}), ft	-	Speed Index (M_S)	0.325
Downstream Equilibrium Distance (L_{EQ}), ft	-	Flow Outer Lanes (v_{OA}), pc/h/ln	1209
Distance to Downstream Ramp (L_{DOWN}), ft	-	On-Ramp Influence Area Speed (S_R), mi/h	60.9
Prop. Freeway Vehicles in Lane 1 and 2 (P_{FM})	0.077	Outer Lanes Freeway Speed (S_O), mi/h	67.4
Flow in Lanes 1 and 2 (v_{12}), pc/h	1612	Ramp Junction Speed (S), mi/h	63.8
Flow Entering Ramp-Infl. Area (v_{R12}), pc/h	2740	Average Density (D), pc/mi/ln	20.2
Level of Service (LOS)	C		

Copyright © 2020 University of Florida. All Rights Reserved.

HCS7 Freeway Merge Report

Project Information

Analyst	Jenny Tran	Date	5/11/2020
Agency	Minagar & Associates, Inc.	Analysis Year	Opening Year
Jurisdiction	Caltrans	Time Period Analyzed	PM Peak Hour
Project Description	I-10/Cedar - E/B On Ramp		

Geometric Data

	Freeway	Ramp
Number of Lanes (N)	4	1
Free-Flow Speed (FFS), mi/h	70.0	35.0
Segment Length (L) / Acceleration Length (L_A), ft	1500	800
Terrain Type	Level	Level
Percent Grade, %	-	-
Segment Type / Ramp Side	Freeway	Right

Adjustment Factors

Driver Population	All Familiar	All Familiar
Weather Type	Non-Severe Weather	Non-Severe Weather
Incident Type	No Incident	-
Final Speed Adjustment Factor (SAF)	1.000	1.000
Final Capacity Adjustment Factor (CAF)	1.000	1.000
Demand Adjustment Factor (DAF)	1.000	1.000

Demand and Capacity

Demand Volume (V_i), veh/h	8527	1060
Peak Hour Factor (PHF)	0.94	0.94
Total Trucks, %	0.00	0.00
Single-Unit Trucks (SUT), %	-	-
Tractor-Trailers (TT), %	-	-
Heavy Vehicle Adjustment Factor (f_{HV})	1.000	1.000
Flow Rate (v_i), pc/h	9071	1128
Capacity (c), pc/h	9600	2000
Volume-to-Capacity Ratio (v/c)	1.06	0.56

Speed and Density

Upstream Equilibrium Distance (L_{EQ}), ft	-	Density in Ramp Influence Area (D_R), pc/mi/ln	37.4
Distance to Upstream Ramp (L_{UP}), ft	-	Speed Index (M_S)	-
Downstream Equilibrium Distance (L_{EQ}), ft	-	Flow Outer Lanes (v_{OA}), pc/h/ln	2700
Distance to Downstream Ramp (L_{DOWN}), ft	-	On-Ramp Influence Area Speed (S_R), mi/h	49.3
Prop. Freeway Vehicles in Lane 1 and 2 (P_{FM})	0.077	Outer Lanes Freeway Speed (S_O), mi/h	61.1
Flow in Lanes 1 and 2 (v_{12}), pc/h	3671	Ramp Junction Speed (S), mi/h	-
Flow Entering Ramp-Infl. Area (v_{R12}), pc/h	4799	Average Density (D), pc/mi/ln	-
Level of Service (LOS)	F		

Copyright © 2020 University of Florida. All Rights Reserved.

HCS7 Freeway Merge Report

Project Information

Analyst	Jenny Tran	Date	5/11/2020
Agency	Minagar & Associates, Inc.	Analysis Year	Opening Year
Jurisdiction	Caltrans	Time Period Analyzed	AM Peak Hour
Project Description	I-10/Cedar - W/B On Ramp		

Geometric Data

	Freeway	Ramp
Number of Lanes (N)	4	1
Free-Flow Speed (FFS), mi/h	70.0	35.0
Segment Length (L) / Acceleration Length (L_A), ft	1500	800
Terrain Type	Level	Level
Percent Grade, %	-	-
Segment Type / Ramp Side	Freeway	Right

Adjustment Factors

Driver Population	All Familiar	All Familiar
Weather Type	Non-Severe Weather	Non-Severe Weather
Incident Type	No Incident	-
Final Speed Adjustment Factor (SAF)	1.000	1.000
Final Capacity Adjustment Factor (CAF)	1.000	1.000
Demand Adjustment Factor (DAF)	1.000	1.000

Demand and Capacity

Demand Volume (V_i), veh/h	9511	1484
Peak Hour Factor (PHF)	0.94	0.94
Total Trucks, %	0.00	0.00
Single-Unit Trucks (SUT), %	-	-
Tractor-Trailers (TT), %	-	-
Heavy Vehicle Adjustment Factor (f_{HV})	1.000	1.000
Flow Rate (v_i), pc/h	10118	1579
Capacity (c), pc/h	9600	2000
Volume-to-Capacity Ratio (v/c)	1.22	0.79

Speed and Density

Upstream Equilibrium Distance (L_{EQ}), ft	-	Density in Ramp Influence Area (D_R), pc/mi/ln	48.9
Distance to Upstream Ramp (L_{UP}), ft	-	Speed Index (M_S)	-
Downstream Equilibrium Distance (L_{EQ}), ft	-	Flow Outer Lanes (v_{OA}), pc/h/ln	2700
Distance to Downstream Ramp (L_{DOWN}), ft	-	On-Ramp Influence Area Speed (S_R), mi/h	3.3
Prop. Freeway Vehicles in Lane 1 and 2 (P_{FM})	0.020	Outer Lanes Freeway Speed (S_O), mi/h	61.1
Flow in Lanes 1 and 2 (v_{12}), pc/h	4718	Ramp Junction Speed (S), mi/h	-
Flow Entering Ramp-Infl. Area (v_{R12}), pc/h	6297	Average Density (D), pc/mi/ln	-
Level of Service (LOS)	F		

Copyright © 2020 University of Florida. All Rights Reserved.

HCS7 Freeway Merge Report

Project Information

Analyst	Jenny Tran	Date	5/11/2020
Agency	Minagar & Associates, Inc.	Analysis Year	Opening Year
Jurisdiction	Caltrans	Time Period Analyzed	PM Peak Hour
Project Description	I-10/Cedar - W/B On Ramp		

Geometric Data

	Freeway	Ramp
Number of Lanes (N)	4	1
Free-Flow Speed (FFS), mi/h	70.0	35.0
Segment Length (L) / Acceleration Length (L_A), ft	1500	800
Terrain Type	Level	Level
Percent Grade, %	-	-
Segment Type / Ramp Side	Freeway	Right

Adjustment Factors

Driver Population	All Familiar	All Familiar
Weather Type	Non-Severe Weather	Non-Severe Weather
Incident Type	No Incident	-
Final Speed Adjustment Factor (SAF)	1.000	1.000
Final Capacity Adjustment Factor (CAF)	1.000	1.000
Demand Adjustment Factor (DAF)	1.000	1.000

Demand and Capacity

Demand Volume (V_i), veh/h	5130	1484
Peak Hour Factor (PHF)	0.94	0.94
Total Trucks, %	0.00	0.00
Single-Unit Trucks (SUT), %	-	-
Tractor-Trailers (TT), %	-	-
Heavy Vehicle Adjustment Factor (f_{HV})	1.000	1.000
Flow Rate (v_i), pc/h	5457	1579
Capacity (c), pc/h	9600	2000
Volume-to-Capacity Ratio (v/c)	0.73	0.79

Speed and Density

Upstream Equilibrium Distance (L_{EQ}), ft	-	Density in Ramp Influence Area (D_R), pc/mi/ln	29.1
Distance to Upstream Ramp (L_{UP}), ft	-	Speed Index (M_S)	0.433
Downstream Equilibrium Distance (L_{EQ}), ft	-	Flow Outer Lanes (v_{OA}), pc/h/ln	1637
Distance to Downstream Ramp (L_{DOWN}), ft	-	On-Ramp Influence Area Speed (S_R), mi/h	57.9
Prop. Freeway Vehicles in Lane 1 and 2 (P_{FM})	0.020	Outer Lanes Freeway Speed (S_O), mi/h	65.9
Flow in Lanes 1 and 2 (v_{12}), pc/h	2183	Ramp Junction Speed (S), mi/h	61.4
Flow Entering Ramp-Infl. Area (v_{R12}), pc/h	3762	Average Density (D), pc/mi/ln	28.6
Level of Service (LOS)	D		

Copyright © 2020 University of Florida. All Rights Reserved.

HCS7 Freeway Merge Report

Project Information

Analyst	Jenny Tran	Date	6/17/2020
Agency	Minagar & Associates, Inc.	Analysis Year	Opening Year (2021) + Project
Jurisdiction	Caltrans	Time Period Analyzed	AM Peak Hour
Project Description	I-10/Cedar - EB On-Ramp		

Geometric Data

	Freeway	Ramp
Number of Lanes (N)	4	1
Free-Flow Speed (FFS), mi/h	70.0	35.0
Segment Length (L) / Acceleration Length (L_A), ft	1500	800
Terrain Type	Level	Level
Percent Grade, %	-	-
Segment Type / Ramp Side	Freeway	Right

Adjustment Factors

Driver Population	All Familiar	All Familiar
Weather Type	Non-Severe Weather	Non-Severe Weather
Incident Type	No Incident	-
Final Speed Adjustment Factor (SAF)	1.000	1.000
Final Capacity Adjustment Factor (CAF)	1.000	1.000
Demand Adjustment Factor (DAF)	1.000	1.000

Demand and Capacity

Demand Volume (V_i), veh/h	3766	1079
Peak Hour Factor (PHF)	0.94	0.94
Total Trucks, %	0.00	0.00
Single-Unit Trucks (SUT), %	-	-
Tractor-Trailers (TT), %	-	-
Heavy Vehicle Adjustment Factor (f_{HV})	1.000	1.000
Flow Rate (v_i), pc/h	4006	1148
Capacity (c), pc/h	9600	2000
Volume-to-Capacity Ratio (v/c)	0.54	0.57

Speed and Density

Upstream Equilibrium Distance (L_{EQ}), ft	-	Density in Ramp Influence Area (D_R), pc/mi/ln	21.5
Distance to Upstream Ramp (L_{UP}), ft	-	Speed Index (M_S)	0.326
Downstream Equilibrium Distance (L_{EQ}), ft	-	Flow Outer Lanes (v_{OA}), pc/h/ln	1202
Distance to Downstream Ramp (L_{DOWN}), ft	-	On-Ramp Influence Area Speed (S_R), mi/h	60.9
Prop. Freeway Vehicles in Lane 1 and 2 (P_{FM})	0.074	Outer Lanes Freeway Speed (S_O), mi/h	67.5
Flow in Lanes 1 and 2 (v_{12}), pc/h	1602	Ramp Junction Speed (S), mi/h	63.8
Flow Entering Ramp-Infl. Area (v_{R12}), pc/h	2750	Average Density (D), pc/mi/ln	20.2
Level of Service (LOS)	C		

Copyright © 2020 University of Florida. All Rights Reserved.

HCS7 Freeway Merge Report

Project Information

Analyst	Jenny Tran	Date	6/17/2020
Agency	Minagar & Associates, Inc.	Analysis Year	Opening Year (2021) + Project
Jurisdiction	Caltrans	Time Period Analyzed	PM Peak Hour
Project Description	I-10/Cedar - EB On-Ramp		

Geometric Data

	Freeway	Ramp
Number of Lanes (N)	4	1
Free-Flow Speed (FFS), mi/h	70.0	35.0
Segment Length (L) / Acceleration Length (L_A), ft	1500	800
Terrain Type	Level	Level
Percent Grade, %	-	-
Segment Type / Ramp Side	Freeway	Right

Adjustment Factors

Driver Population	All Familiar	All Familiar
Weather Type	Non-Severe Weather	Non-Severe Weather
Incident Type	No Incident	-
Final Speed Adjustment Factor (SAF)	1.000	1.000
Final Capacity Adjustment Factor (CAF)	1.000	1.000
Demand Adjustment Factor (DAF)	1.000	1.000

Demand and Capacity

Demand Volume (V_i), veh/h	8511	1076
Peak Hour Factor (PHF)	0.94	0.94
Total Trucks, %	0.00	0.00
Single-Unit Trucks (SUT), %	-	-
Tractor-Trailers (TT), %	-	-
Heavy Vehicle Adjustment Factor (f_{HV})	1.000	1.000
Flow Rate (v_i), pc/h	9054	1145
Capacity (c), pc/h	9600	2000
Volume-to-Capacity Ratio (v/c)	1.06	0.57

Speed and Density

Upstream Equilibrium Distance (L_{EQ}), ft	-	Density in Ramp Influence Area (D_R), pc/mi/ln	37.4
Distance to Upstream Ramp (L_{UP}), ft	-	Speed Index (M_S)	-
Downstream Equilibrium Distance (L_{EQ}), ft	-	Flow Outer Lanes (v_{OA}), pc/h/ln	2700
Distance to Downstream Ramp (L_{DOWN}), ft	-	On-Ramp Influence Area Speed (S_R), mi/h	49.3
Prop. Freeway Vehicles in Lane 1 and 2 (P_{FM})	0.075	Outer Lanes Freeway Speed (S_O), mi/h	61.1
Flow in Lanes 1 and 2 (v_{12}), pc/h	3654	Ramp Junction Speed (S), mi/h	-
Flow Entering Ramp-Infl. Area (v_{R12}), pc/h	4799	Average Density (D), pc/mi/ln	-
Level of Service (LOS)	F		

Copyright © 2020 University of Florida. All Rights Reserved.

HCS7 Freeway Merge Report

Project Information

Analyst	Jenny Tran	Date	6/17/2020
Agency	Minagar & Associates, Inc.	Analysis Year	Opening Year (2021) + Project
Jurisdiction	Caltrans	Time Period Analyzed	AM Peak Hour
Project Description	I-10/Cedar - WB On-Ramp		

Geometric Data

	Freeway	Ramp
Number of Lanes (N)	4	1
Free-Flow Speed (FFS), mi/h	70.0	35.0
Segment Length (L) / Acceleration Length (L_A), ft	1500	800
Terrain Type	Level	Level
Percent Grade, %	-	-
Segment Type / Ramp Side	Freeway	Right

Adjustment Factors

Driver Population	All Familiar	All Familiar
Weather Type	Non-Severe Weather	Non-Severe Weather
Incident Type	No Incident	-
Final Speed Adjustment Factor (SAF)	1.000	1.000
Final Capacity Adjustment Factor (CAF)	1.000	1.000
Demand Adjustment Factor (DAF)	1.000	1.000

Demand and Capacity

Demand Volume (V_i), veh/h	9491	1512
Peak Hour Factor (PHF)	0.94	0.94
Total Trucks, %	0.00	0.00
Single-Unit Trucks (SUT), %	-	-
Tractor-Trailers (TT), %	-	-
Heavy Vehicle Adjustment Factor (f_{HV})	1.000	1.000
Flow Rate (v_i), pc/h	10097	1609
Capacity (c), pc/h	9600	2000
Volume-to-Capacity Ratio (v/c)	1.22	0.80

Speed and Density

Upstream Equilibrium Distance (L_{EQ}), ft	-	Density in Ramp Influence Area (D_R), pc/mi/ln	49.0
Distance to Upstream Ramp (L_{UP}), ft	-	Speed Index (M_S)	-
Downstream Equilibrium Distance (L_{EQ}), ft	-	Flow Outer Lanes (v_{OA}), pc/h/ln	2700
Distance to Downstream Ramp (L_{DOWN}), ft	-	On-Ramp Influence Area Speed (S_R), mi/h	2.7
Prop. Freeway Vehicles in Lane 1 and 2 (P_{FM})	0.017	Outer Lanes Freeway Speed (S_O), mi/h	61.1
Flow in Lanes 1 and 2 (v_{12}), pc/h	4697	Ramp Junction Speed (S), mi/h	-
Flow Entering Ramp-Infl. Area (v_{R12}), pc/h	6306	Average Density (D), pc/mi/ln	-
Level of Service (LOS)	F		

Copyright © 2020 University of Florida. All Rights Reserved.

HCS7 Freeway Merge Report

Project Information

Analyst	Jenny Tran	Date	6/17/2020
Agency	Minagar & Associates, Inc.	Analysis Year	Opening Year (2021) + Project
Jurisdiction	Caltrans	Time Period Analyzed	PM Peak Hour
Project Description	I-10/Cedar - WB On-Ramp		

Geometric Data

	Freeway	Ramp
Number of Lanes (N)	4	1
Free-Flow Speed (FFS), mi/h	70.0	35.0
Segment Length (L) / Acceleration Length (L_A), ft	1500	800
Terrain Type	Level	Level
Percent Grade, %	-	-
Segment Type / Ramp Side	Freeway	Right

Adjustment Factors

Driver Population	All Familiar	All Familiar
Weather Type	Non-Severe Weather	Non-Severe Weather
Incident Type	No Incident	-
Final Speed Adjustment Factor (SAF)	1.000	1.000
Final Capacity Adjustment Factor (CAF)	1.000	1.000
Demand Adjustment Factor (DAF)	1.000	1.000

Demand and Capacity

Demand Volume (V_i), veh/h	5114	1508
Peak Hour Factor (PHF)	0.94	0.94
Total Trucks, %	0.00	0.00
Single-Unit Trucks (SUT), %	-	-
Tractor-Trailers (TT), %	-	-
Heavy Vehicle Adjustment Factor (f_{HV})	1.000	1.000
Flow Rate (v_i), pc/h	5440	1604
Capacity (c), pc/h	9600	2000
Volume-to-Capacity Ratio (v/c)	0.73	0.80

Speed and Density

Upstream Equilibrium Distance (L_{EQ}), ft	-	Density in Ramp Influence Area (D_R), pc/mi/ln	29.3
Distance to Upstream Ramp (L_{UP}), ft	-	Speed Index (M_S)	0.436
Downstream Equilibrium Distance (L_{EQ}), ft	-	Flow Outer Lanes (v_{OA}), pc/h/ln	1632
Distance to Downstream Ramp (L_{DOWN}), ft	-	On-Ramp Influence Area Speed (S_R), mi/h	57.8
Prop. Freeway Vehicles in Lane 1 and 2 (P_{FM})	0.017	Outer Lanes Freeway Speed (S_O), mi/h	65.9
Flow in Lanes 1 and 2 (v_{12}), pc/h	2176	Ramp Junction Speed (S), mi/h	61.3
Flow Entering Ramp-Infl. Area (v_{R12}), pc/h	3780	Average Density (D), pc/mi/ln	28.7
Level of Service (LOS)	D		

Copyright © 2020 University of Florida. All Rights Reserved.

HCS7 Freeway Merge Report

Project Information

Analyst	Jenny Tran	Date	5/11/2020
Agency	Minagar & Associates, Inc.	Analysis Year	Horizon Year (2040)
Jurisdiction	Caltrans	Time Period Analyzed	AM Peak Hour
Project Description	I-10/Cedar - E/B On Ramp		

Geometric Data

	Freeway	Ramp
Number of Lanes (N)	4	1
Free-Flow Speed (FFS), mi/h	70.0	35.0
Segment Length (L) / Acceleration Length (L_A), ft	1500	800
Terrain Type	Level	Level
Percent Grade, %	-	-
Segment Type / Ramp Side	Freeway	Right

Adjustment Factors

Driver Population	All Familiar	All Familiar
Weather Type	Non-Severe Weather	Non-Severe Weather
Incident Type	No Incident	-
Final Speed Adjustment Factor (SAF)	1.000	1.000
Final Capacity Adjustment Factor (CAF)	1.000	1.000
Demand Adjustment Factor (DAF)	1.000	1.000

Demand and Capacity

Demand Volume (V_i), veh/h	11603	1290
Peak Hour Factor (PHF)	0.94	0.94
Total Trucks, %	0.00	0.00
Single-Unit Trucks (SUT), %	-	-
Tractor-Trailers (TT), %	-	-
Heavy Vehicle Adjustment Factor (f_{HV})	1.000	1.000
Flow Rate (v_i), pc/h	12344	1372
Capacity (c), pc/h	9600	2000
Volume-to-Capacity Ratio (v/c)	1.43	0.69

Speed and Density

Upstream Equilibrium Distance (L_{EQ}), ft	-	Density in Ramp Influence Area (D_R), pc/mi/ln	64.8
Distance to Upstream Ramp (L_{UP}), ft	-	Speed Index (M_S)	-
Downstream Equilibrium Distance (L_{EQ}), ft	-	Flow Outer Lanes (v_{OA}), pc/h/ln	2700
Distance to Downstream Ramp (L_{DOWN}), ft	-	On-Ramp Influence Area Speed (S_R), mi/h	0.0
Prop. Freeway Vehicles in Lane 1 and 2 (P_{FM})	0.046	Outer Lanes Freeway Speed (S_O), mi/h	61.1
Flow in Lanes 1 and 2 (v_{12}), pc/h	6944	Ramp Junction Speed (S), mi/h	-
Flow Entering Ramp-Infl. Area (v_{R12}), pc/h	8316	Average Density (D), pc/mi/ln	-
Level of Service (LOS)	F		

Copyright © 2020 University of Florida. All Rights Reserved.

HCS7 Freeway Merge Report

Project Information

Analyst	Jenny Tran	Date	5/11/2020
Agency	Minagar & Associates, Inc.	Analysis Year	Horizon Year (2040)
Jurisdiction	Caltrans	Time Period Analyzed	PM Peak Hour
Project Description	I-10/Cedar - E/B On Ramp		

Geometric Data

	Freeway	Ramp
Number of Lanes (N)	4	1
Free-Flow Speed (FFS), mi/h	70.0	35.0
Segment Length (L) / Acceleration Length (L_A), ft	1500	800
Terrain Type	Level	Level
Percent Grade, %	-	-
Segment Type / Ramp Side	Freeway	Right

Adjustment Factors

Driver Population	All Familiar	All Familiar
Weather Type	Non-Severe Weather	Non-Severe Weather
Incident Type	No Incident	-
Final Speed Adjustment Factor (SAF)	1.000	1.000
Final Capacity Adjustment Factor (CAF)	1.000	1.000
Demand Adjustment Factor (DAF)	1.000	1.000

Demand and Capacity

Demand Volume (V_i), veh/h	26390	1590
Peak Hour Factor (PHF)	0.94	0.94
Total Trucks, %	0.00	0.00
Single-Unit Trucks (SUT), %	-	-
Tractor-Trailers (TT), %	-	-
Heavy Vehicle Adjustment Factor (f_{HV})	1.000	1.000
Flow Rate (v_i), pc/h	28074	1691
Capacity (c), pc/h	9600	2000
Volume-to-Capacity Ratio (v/c)	3.10	0.85

Speed and Density

Upstream Equilibrium Distance (L_{EQ}), ft	-	Density in Ramp Influence Area (D_R), pc/mi/ln	189.8
Distance to Upstream Ramp (L_{UP}), ft	-	Speed Index (M_S)	-
Downstream Equilibrium Distance (L_{EQ}), ft	-	Flow Outer Lanes (v_{OA}), pc/h/ln	2700
Distance to Downstream Ramp (L_{DOWN}), ft	-	On-Ramp Influence Area Speed (S_R), mi/h	0.0
Prop. Freeway Vehicles in Lane 1 and 2 (P_{FM})	0.006	Outer Lanes Freeway Speed (S_O), mi/h	61.1
Flow in Lanes 1 and 2 (v_{12}), pc/h	22674	Ramp Junction Speed (S), mi/h	-
Flow Entering Ramp-Infl. Area (v_{R12}), pc/h	24365	Average Density (D), pc/mi/ln	-
Level of Service (LOS)	F		

Copyright © 2020 University of Florida. All Rights Reserved.

HCS7 Freeway Merge Report

Project Information

Analyst	Jenny Tran	Date	5/11/2020
Agency	Minagar & Associates, Inc.	Analysis Year	Horizon Year (2040)
Jurisdiction	Caltrans	Time Period Analyzed	AM Peak Hour
Project Description	I-10/Cedar - W/B On Ramp		

Geometric Data

	Freeway	Ramp
Number of Lanes (N)	4	1
Free-Flow Speed (FFS), mi/h	70.0	35.0
Segment Length (L) / Acceleration Length (L_A), ft	1500	800
Terrain Type	Level	Level
Percent Grade, %	-	-
Segment Type / Ramp Side	Freeway	Right

Adjustment Factors

Driver Population	All Familiar	All Familiar
Weather Type	Non-Severe Weather	Non-Severe Weather
Incident Type	No Incident	-
Final Speed Adjustment Factor (SAF)	1.000	1.000
Final Capacity Adjustment Factor (CAF)	1.000	1.000
Demand Adjustment Factor (DAF)	1.000	1.000

Demand and Capacity

Demand Volume (V_i), veh/h	18688	1646
Peak Hour Factor (PHF)	0.94	0.94
Total Trucks, %	0.00	0.00
Single-Unit Trucks (SUT), %	-	-
Tractor-Trailers (TT), %	-	-
Heavy Vehicle Adjustment Factor (f_{HV})	1.000	1.000
Flow Rate (v_i), pc/h	19881	1751
Capacity (c), pc/h	9600	2000
Volume-to-Capacity Ratio (v/c)	2.25	0.88

Speed and Density

Upstream Equilibrium Distance (L_{EQ}), ft	-	Density in Ramp Influence Area (D_R), pc/mi/ln	126.3
Distance to Upstream Ramp (L_{UP}), ft	-	Speed Index (M_S)	-
Downstream Equilibrium Distance (L_{EQ}), ft	-	Flow Outer Lanes (v_{OA}), pc/h/ln	2700
Distance to Downstream Ramp (L_{DOWN}), ft	-	On-Ramp Influence Area Speed (S_R), mi/h	0.0
Prop. Freeway Vehicles in Lane 1 and 2 (P_{FM})	0.000	Outer Lanes Freeway Speed (S_O), mi/h	61.1
Flow in Lanes 1 and 2 (v_{12}), pc/h	14481	Ramp Junction Speed (S), mi/h	-
Flow Entering Ramp-Infl. Area (v_{R12}), pc/h	16232	Average Density (D), pc/mi/ln	-
Level of Service (LOS)	F		

Copyright © 2020 University of Florida. All Rights Reserved.

HCS7 Freeway Merge Report

Project Information

Analyst	Jenny Tran	Date	5/11/2020
Agency	Minagar & Associates, Inc.	Analysis Year	Horizon Year (2040)
Jurisdiction	Caltrans	Time Period Analyzed	PM Peak Hour
Project Description	I-10/Cedar - W/B On Ramp		

Geometric Data

	Freeway	Ramp
Number of Lanes (N)	4	1
Free-Flow Speed (FFS), mi/h	70.0	35.0
Segment Length (L) / Acceleration Length (L_A), ft	1500	800
Terrain Type	Level	Level
Percent Grade, %	-	-
Segment Type / Ramp Side	Freeway	Right

Adjustment Factors

Driver Population	All Familiar	All Familiar
Weather Type	Non-Severe Weather	Non-Severe Weather
Incident Type	No Incident	-
Final Speed Adjustment Factor (SAF)	1.000	1.000
Final Capacity Adjustment Factor (CAF)	1.000	1.000
Demand Adjustment Factor (DAF)	1.000	1.000

Demand and Capacity

Demand Volume (V_i), veh/h	19592	2322
Peak Hour Factor (PHF)	0.94	0.94
Total Trucks, %	0.00	0.00
Single-Unit Trucks (SUT), %	-	-
Tractor-Trailers (TT), %	-	-
Heavy Vehicle Adjustment Factor (f_{HV})	1.000	1.000
Flow Rate (v_i), pc/h	20843	2470
Capacity (c), pc/h	9600	2000
Volume-to-Capacity Ratio (v/c)	2.43	1.24

Speed and Density

Upstream Equilibrium Distance (L_{EQ}), ft	-	Density in Ramp Influence Area (D_R), pc/mi/ln	139.1
Distance to Upstream Ramp (L_{UP}), ft	-	Speed Index (M_S)	-
Downstream Equilibrium Distance (L_{EQ}), ft	-	Flow Outer Lanes (v_{OA}), pc/h/ln	2700
Distance to Downstream Ramp (L_{DOWN}), ft	-	On-Ramp Influence Area Speed (S_R), mi/h	0.0
Prop. Freeway Vehicles in Lane 1 and 2 (P_{FM})	0.000	Outer Lanes Freeway Speed (S_O), mi/h	61.1
Flow in Lanes 1 and 2 (v_{12}), pc/h	15443	Ramp Junction Speed (S), mi/h	-
Flow Entering Ramp-Infl. Area (v_{R12}), pc/h	17913	Average Density (D), pc/mi/ln	-
Level of Service (LOS)	F		

Copyright © 2020 University of Florida. All Rights Reserved.

HCS7 Freeway Merge Report

Project Information

Analyst	Jenny Tran	Date	6/17/2020
Agency	Minagar & Associates, Inc.	Analysis Year	Horizon Year (2040) + Project
Jurisdiction	Caltrans	Time Period Analyzed	AM Peak Hour
Project Description	I-10/Cedar - EB On-Ramp		

Geometric Data

	Freeway	Ramp
Number of Lanes (N)	4	1
Free-Flow Speed (FFS), mi/h	70.0	35.0
Segment Length (L) / Acceleration Length (L_A), ft	1500	800
Terrain Type	Level	Level
Percent Grade, %	-	-
Segment Type / Ramp Side	Freeway	Right

Adjustment Factors

Driver Population	All Familiar	All Familiar
Weather Type	Non-Severe Weather	Non-Severe Weather
Incident Type	No Incident	-
Final Speed Adjustment Factor (SAF)	1.000	1.000
Final Capacity Adjustment Factor (CAF)	1.000	1.000
Demand Adjustment Factor (DAF)	1.000	1.000

Demand and Capacity

Demand Volume (V_i), veh/h	11575	1318
Peak Hour Factor (PHF)	0.94	0.94
Total Trucks, %	0.00	0.00
Single-Unit Trucks (SUT), %	-	-
Tractor-Trailers (TT), %	-	-
Heavy Vehicle Adjustment Factor (f_{HV})	1.000	1.000
Flow Rate (v_i), pc/h	12314	1402
Capacity (c), pc/h	9600	2000
Volume-to-Capacity Ratio (v/c)	1.43	0.70

Speed and Density

Upstream Equilibrium Distance (L_{EQ}), ft	-	Density in Ramp Influence Area (D_R), pc/mi/ln	64.8
Distance to Upstream Ramp (L_{UP}), ft	-	Speed Index (M_S)	-
Downstream Equilibrium Distance (L_{EQ}), ft	-	Flow Outer Lanes (v_{OA}), pc/h/ln	2700
Distance to Downstream Ramp (L_{DOWN}), ft	-	On-Ramp Influence Area Speed (S_R), mi/h	0.0
Prop. Freeway Vehicles in Lane 1 and 2 (P_{FM})	0.043	Outer Lanes Freeway Speed (S_O), mi/h	61.1
Flow in Lanes 1 and 2 (v_{12}), pc/h	6914	Ramp Junction Speed (S), mi/h	-
Flow Entering Ramp-Infl. Area (v_{R12}), pc/h	8316	Average Density (D), pc/mi/ln	-
Level of Service (LOS)	F		

Copyright © 2020 University of Florida. All Rights Reserved.

HCS7 Freeway Merge Report

Project Information

Analyst	Jenny Tran	Date	6/17/2020
Agency	Minagar & Associates, Inc.	Analysis Year	Horizon Year (2040) + Project
Jurisdiction	Caltrans	Time Period Analyzed	PM Peak Hour
Project Description	I-10/Cedar - EB On-Ramp		

Geometric Data

	Freeway	Ramp
Number of Lanes (N)	4	1
Free-Flow Speed (FFS), mi/h	70.0	35.0
Segment Length (L) / Acceleration Length (L_A), ft	1500	800
Terrain Type	Level	Level
Percent Grade, %	-	-
Segment Type / Ramp Side	Freeway	Right

Adjustment Factors

Driver Population	All Familiar	All Familiar
Weather Type	Non-Severe Weather	Non-Severe Weather
Incident Type	No Incident	-
Final Speed Adjustment Factor (SAF)	1.000	1.000
Final Capacity Adjustment Factor (CAF)	1.000	1.000
Demand Adjustment Factor (DAF)	1.000	1.000

Demand and Capacity

Demand Volume (V_i), veh/h	26363	1615
Peak Hour Factor (PHF)	0.94	0.94
Total Trucks, %	0.00	0.00
Single-Unit Trucks (SUT), %	-	-
Tractor-Trailers (TT), %	-	-
Heavy Vehicle Adjustment Factor (f_{HV})	1.000	1.000
Flow Rate (v_i), pc/h	28046	1718
Capacity (c), pc/h	9600	2000
Volume-to-Capacity Ratio (v/c)	3.10	0.86

Speed and Density

Upstream Equilibrium Distance (L_{EQ}), ft	-	Density in Ramp Influence Area (D_R), pc/mi/ln	189.8
Distance to Upstream Ramp (L_{UP}), ft	-	Speed Index (M_S)	-
Downstream Equilibrium Distance (L_{EQ}), ft	-	Flow Outer Lanes (v_{OA}), pc/h/ln	2700
Distance to Downstream Ramp (L_{DOWN}), ft	-	On-Ramp Influence Area Speed (S_R), mi/h	0.0
Prop. Freeway Vehicles in Lane 1 and 2 (P_{FM})	0.003	Outer Lanes Freeway Speed (S_O), mi/h	61.1
Flow in Lanes 1 and 2 (v_{12}), pc/h	22646	Ramp Junction Speed (S), mi/h	-
Flow Entering Ramp-Infl. Area (v_{R12}), pc/h	24364	Average Density (D), pc/mi/ln	-
Level of Service (LOS)	F		

Copyright © 2020 University of Florida. All Rights Reserved.

HCS7 Freeway Merge Report

Project Information

Analyst	Jenny Tran	Date	6/17/2020
Agency	Minagar & Associates, Inc.	Analysis Year	Horizon Year (2040) + Project
Jurisdiction	Caltrans	Time Period Analyzed	AM Peak Hour
Project Description	I-10/Cedar - WB On-Ramp		

Geometric Data

	Freeway	Ramp
Number of Lanes (N)	4	1
Free-Flow Speed (FFS), mi/h	70.0	35.0
Segment Length (L) / Acceleration Length (L_A), ft	1500	800
Terrain Type	Level	Level
Percent Grade, %	-	-
Segment Type / Ramp Side	Freeway	Right

Adjustment Factors

Driver Population	All Familiar	All Familiar
Weather Type	Non-Severe Weather	Non-Severe Weather
Incident Type	No Incident	-
Final Speed Adjustment Factor (SAF)	1.000	1.000
Final Capacity Adjustment Factor (CAF)	1.000	1.000
Demand Adjustment Factor (DAF)	1.000	1.000

Demand and Capacity

Demand Volume (V_i), veh/h	18659	1687
Peak Hour Factor (PHF)	0.94	0.94
Total Trucks, %	0.00	0.00
Single-Unit Trucks (SUT), %	-	-
Tractor-Trailers (TT), %	-	-
Heavy Vehicle Adjustment Factor (f_{HV})	1.000	1.000
Flow Rate (v_i), pc/h	19850	1795
Capacity (c), pc/h	9600	2000
Volume-to-Capacity Ratio (v/c)	2.25	0.90

Speed and Density

Upstream Equilibrium Distance (L_{EQ}), ft	-	Density in Ramp Influence Area (D_R), pc/mi/ln	126.4
Distance to Upstream Ramp (L_{UP}), ft	-	Speed Index (M_S)	-
Downstream Equilibrium Distance (L_{EQ}), ft	-	Flow Outer Lanes (v_{OA}), pc/h/ln	2700
Distance to Downstream Ramp (L_{DOWN}), ft	-	On-Ramp Influence Area Speed (S_R), mi/h	0.0
Prop. Freeway Vehicles in Lane 1 and 2 (P_{FM})	0.000	Outer Lanes Freeway Speed (S_O), mi/h	61.1
Flow in Lanes 1 and 2 (v_{12}), pc/h	14450	Ramp Junction Speed (S), mi/h	-
Flow Entering Ramp-Infl. Area (v_{R12}), pc/h	16245	Average Density (D), pc/mi/ln	-
Level of Service (LOS)	F		

Copyright © 2020 University of Florida. All Rights Reserved.

HCS7 Freeway Merge Report

Project Information

Analyst	Jenny Tran	Date	6/17/2020
Agency	Minagar & Associates, Inc.	Analysis Year	Horizon Year (2040) + Project
Jurisdiction	Caltrans	Time Period Analyzed	PM Peak Hour
Project Description	I-10/Cedar - WB On-Ramp		

Geometric Data

	Freeway	Ramp
Number of Lanes (N)	4	1
Free-Flow Speed (FFS), mi/h	70.0	35.0
Segment Length (L) / Acceleration Length (L_A), ft	1500	800
Terrain Type	Level	Level
Percent Grade, %	-	-
Segment Type / Ramp Side	Freeway	Right

Adjustment Factors

Driver Population	All Familiar	All Familiar
Weather Type	Non-Severe Weather	Non-Severe Weather
Incident Type	No Incident	-
Final Speed Adjustment Factor (SAF)	1.000	1.000
Final Capacity Adjustment Factor (CAF)	1.000	1.000
Demand Adjustment Factor (DAF)	1.000	1.000

Demand and Capacity

Demand Volume (V_i), veh/h	19565	2359
Peak Hour Factor (PHF)	0.94	0.94
Total Trucks, %	0.00	0.00
Single-Unit Trucks (SUT), %	-	-
Tractor-Trailers (TT), %	-	-
Heavy Vehicle Adjustment Factor (f_{HV})	1.000	1.000
Flow Rate (v_i), pc/h	20814	2510
Capacity (c), pc/h	9600	2000
Volume-to-Capacity Ratio (v/c)	2.43	1.26

Speed and Density

Upstream Equilibrium Distance (L_{EQ}), ft	-	Density in Ramp Influence Area (D_R), pc/mi/ln	139.2
Distance to Upstream Ramp (L_{UP}), ft	-	Speed Index (M_S)	-
Downstream Equilibrium Distance (L_{EQ}), ft	-	Flow Outer Lanes (v_{OA}), pc/h/ln	2700
Distance to Downstream Ramp (L_{DOWN}), ft	-	On-Ramp Influence Area Speed (S_R), mi/h	0.0
Prop. Freeway Vehicles in Lane 1 and 2 (P_{FM})	0.000	Outer Lanes Freeway Speed (S_O), mi/h	61.1
Flow in Lanes 1 and 2 (v_{12}), pc/h	15414	Ramp Junction Speed (S), mi/h	-
Flow Entering Ramp-Infl. Area (v_{R12}), pc/h	17924	Average Density (D), pc/mi/ln	-
Level of Service (LOS)	F		

Copyright © 2020 University of Florida. All Rights Reserved.

HCS7 Freeway Weaving Report

Project Information

Analyst	Jenny Tran	Date	6/17/2020
Agency	Minagar & Associates, Inc.	Analysis Year	Existing Year (2020)
Jurisdiction	Caltrans	Time Period Analyzed	AM Peak Hour
Project Description	I-10 E/B Btwn Cedar Ave & Riverside Ave		

Geometric Data

Number of Lanes (N), ln	4	Segment Type	Freeway
Short Length (L_S), ft	4850	Number of Maneuver Lanes (N_{WL}), ln	2
Weaving Configuration	One-Sided	Ramp-to-Freeway Lane Changes (LC_{RF}), lc	1
Terrain Type	Level	Freeway-to-Ramp Lane Changes (LC_{FR}), lc	1
Percent Grade, %	-	Ramp-to-Ramp Lane Changes (LC_{RR}), lc	0
Interchange Density (ID), int/mi	0.33	Cross Weaving Managed Lane	No

Adjustment Factors

Driver Population	All Familiar	Final Speed Adjustment Factor (SAF)	1.000
Weather Type	Non-Severe Weather	Final Capacity Adjustment Factor (CAF)	1.000
Incident Type	No Incident	Demand Adjustment Factor (DAF)	1.000

Demand and Capacity

	FF	RF	RR	FR
Demand Volume (V_i), veh/h	3713	1040	0	1445
Peak Hour Factor (PHF)	0.94	0.94	0.94	0.94
Total Trucks, %	0.00	0.00	0.00	0.00
Heavy Vehicle Adjustment Factor (f_{HV})	1.000	1.000	1.000	1.000
Flow Rate (v_i), pc/h	3950	1106	0	1537

Weaving Flow Rate (v_w), pc/h	2643	Freeway Max Capacity (c_{IFL}), pc/h/ln	2400
Non-Weaving Flow Rate (v_{NW}), pc/h	3950	Density-Based Capacity (c_{IWL}), pc/h/ln	2259
Total Flow Rate (v), pc/h	6593	Demand Flow-Based Capacity (c_{IW}), pc/h	5985
Volume Ratio (VR)	0.401	Weaving Segment Capacity (c_W), veh/h	5985
Minimum Lane Change Rate (LC_{MIN}), lc/h	0	Adjusted Weaving Area Capacity, pc/h	5984
Maximum Weaving Length (L_{MAX}), ft	6692	Volume-to-Capacity Ratio (v/c)	1.10

Speed and Density

Non-Weaving Vehicle Index (I_{NW})	-	Average Weaving Speed (S_W), mi/h	-
Non-Weaving Lane Change Rate (LC_{NW}), lc/h	-	Average Non-Weaving Speed (S_{NW}), mi/h	-
Weaving Lane Change Rate (LC_W), lc/h	-	Average Speed (S), mi/h	-
Total Lane Change Rate (LC_{All}), lc/h	-	Density (D), pc/mi/ln	-
Weaving Intensity Factor (W)	-	Level of Service (LOS)	F

Copyright © 2020 University of Florida. All Rights Reserved.

HCS7 Freeway Weaving Report

Project Information

Analyst	Jenny Tran	Date	6/17/2020
Agency	Minagar & Associates, Inc.	Analysis Year	Existing Year (2020)
Jurisdiction	Caltrans	Time Period Analyzed	PM Peak Hour
Project Description	I-10 W/B Btwn Cedar Ave & Riverside Ave		

Geometric Data

Number of Lanes (N), ln	4	Segment Type	Freeway
Short Length (L_S), ft	4850	Number of Maneuver Lanes (N_{WL}), ln	2
Weaving Configuration	One-Sided	Ramp-to-Freeway Lane Changes (LC_{RF}), lc	1
Terrain Type	Level	Freeway-to-Ramp Lane Changes (LC_{FR}), lc	1
Percent Grade, %	-	Ramp-to-Ramp Lane Changes (LC_{RR}), lc	0
Interchange Density (ID), int/mi	0.33	Cross Weaving Managed Lane	No

Adjustment Factors

Driver Population	All Familiar	Final Speed Adjustment Factor (SAF)	1.000
Weather Type	Non-Severe Weather	Final Capacity Adjustment Factor (CAF)	1.000
Incident Type	No Incident	Demand Adjustment Factor (DAF)	1.000

Demand and Capacity

	FF	RF	RR	FR
Demand Volume (V_i), veh/h	7344	1143	0	1192
Peak Hour Factor (PHF)	0.94	0.94	0.94	0.94
Total Trucks, %	0.00	0.00	0.00	0.00
Heavy Vehicle Adjustment Factor (f_{HV})	1.000	1.000	1.000	1.000
Flow Rate (v_i), pc/h	7813	1216	0	1268

Weaving Flow Rate (v_w), pc/h	2484	Freeway Max Capacity (c_{IFL}), pc/h/ln	2400
Non-Weaving Flow Rate (v_{NW}), pc/h	7813	Density-Based Capacity (c_{IWL}), pc/h/ln	2392
Total Flow Rate (v), pc/h	10297	Demand Flow-Based Capacity (c_{IW}), pc/h	9959
Volume Ratio (VR)	0.241	Weaving Segment Capacity (c_W), veh/h	9568
Minimum Lane Change Rate (LC_{MIN}), lc/h	0	Adjusted Weaving Area Capacity, pc/h	9568
Maximum Weaving Length (L_{MAX}), ft	4960	Volume-to-Capacity Ratio (v/c)	1.08

Speed and Density

Non-Weaving Vehicle Index (I_{NW})	-	Average Weaving Speed (S_W), mi/h	-
Non-Weaving Lane Change Rate (LC_{NW}), lc/h	-	Average Non-Weaving Speed (S_{NW}), mi/h	-
Weaving Lane Change Rate (LC_W), lc/h	-	Average Speed (S), mi/h	-
Total Lane Change Rate (LC_{All}), lc/h	-	Density (D), pc/mi/ln	-
Weaving Intensity Factor (W)	-	Level of Service (LOS)	F

Copyright © 2020 University of Florida. All Rights Reserved.

HCS7 Freeway Weaving Report

Project Information

Analyst	Jenny Tran	Date	6/17/2020
Agency	Minagar & Associates, Inc.	Analysis Year	Opening Year (2021) + Project
Jurisdiction	Caltrans	Time Period Analyzed	AM Peak Hour
Project Description	I-10 E/B Btwn Cedar Ave & Riverside Ave		

Geometric Data

Number of Lanes (N), ln	4	Segment Type	Freeway
Short Length (L_S), ft	4850	Number of Maneuver Lanes (N_{WL}), ln	2
Weaving Configuration	One-Sided	Ramp-to-Freeway Lane Changes (LC_{RF}), lc	1
Terrain Type	Level	Freeway-to-Ramp Lane Changes (LC_{FR}), lc	1
Percent Grade, %	-	Ramp-to-Ramp Lane Changes (LC_{RR}), lc	0
Interchange Density (ID), int/mi	0.33	Cross Weaving Managed Lane	No

Adjustment Factors

Driver Population	All Familiar	Final Speed Adjustment Factor (SAF)	1.000
Weather Type	Non-Severe Weather	Final Capacity Adjustment Factor (CAF)	1.000
Incident Type	No Incident	Demand Adjustment Factor (DAF)	1.000

Demand and Capacity

	FF	RF	RR	FR
Demand Volume (V_i), veh/h	3766	1079	0	1473
Peak Hour Factor (PHF)	0.94	0.94	0.94	0.94
Total Trucks, %	0.00	0.00	0.00	0.00
Heavy Vehicle Adjustment Factor (f_{HV})	1.000	1.000	1.000	1.000
Flow Rate (v_i), pc/h	4006	1148	0	1567

Weaving Flow Rate (v_w), pc/h	2715	Freeway Max Capacity (c_{IFL}), pc/h/ln	2400
Non-Weaving Flow Rate (v_{NW}), pc/h	4006	Density-Based Capacity (c_{IWL}), pc/h/ln	2256
Total Flow Rate (v), pc/h	6721	Demand Flow-Based Capacity (c_{IW}), pc/h	5941
Volume Ratio (VR)	0.404	Weaving Segment Capacity (c_W), veh/h	5941
Minimum Lane Change Rate (LC_{MIN}), lc/h	0	Adjusted Weaving Area Capacity, pc/h	5941
Maximum Weaving Length (L_{MAX}), ft	6726	Volume-to-Capacity Ratio (v/c)	1.13

Speed and Density

Non-Weaving Vehicle Index (I_{NW})	-	Average Weaving Speed (S_W), mi/h	-
Non-Weaving Lane Change Rate (LC_{NW}), lc/h	-	Average Non-Weaving Speed (S_{NW}), mi/h	-
Weaving Lane Change Rate (LC_W), lc/h	-	Average Speed (S), mi/h	-
Total Lane Change Rate (LC_{All}), lc/h	-	Density (D), pc/mi/ln	-
Weaving Intensity Factor (W)	-	Level of Service (LOS)	F

Copyright © 2020 University of Florida. All Rights Reserved.

HCS7 Freeway Weaving Report

Project Information

Analyst	Jenny Tran	Date	6/17/2020
Agency	Minagar & Associates, Inc.	Analysis Year	Opening Year (2021) + Project
Jurisdiction	Caltrans	Time Period Analyzed	PM Peak Hour
Project Description	I-10 W/B Btwn Cedar Ave & Riverside Ave		

Geometric Data

Number of Lanes (N), ln	4	Segment Type	Freeway
Short Length (L_S), ft	4850	Number of Maneuver Lanes (N_{WL}), ln	2
Weaving Configuration	One-Sided	Ramp-to-Freeway Lane Changes (LC_{RF}), lc	1
Terrain Type	Level	Freeway-to-Ramp Lane Changes (LC_{FR}), lc	1
Percent Grade, %	-	Ramp-to-Ramp Lane Changes (LC_{RR}), lc	0
Interchange Density (ID), int/mi	0.33	Cross Weaving Managed Lane	No

Adjustment Factors

Driver Population	All Familiar	Final Speed Adjustment Factor (SAF)	1.000
Weather Type	Non-Severe Weather	Final Capacity Adjustment Factor (CAF)	1.000
Incident Type	No Incident	Demand Adjustment Factor (DAF)	1.000

Demand and Capacity

	FF	RF	RR	FR
Demand Volume (V_i), veh/h	7491	1166	0	1232
Peak Hour Factor (PHF)	0.94	0.94	0.94	0.94
Total Trucks, %	0.00	0.00	0.00	0.00
Heavy Vehicle Adjustment Factor (f_{HV})	1.000	1.000	1.000	1.000
Flow Rate (v_i), pc/h	7969	1240	0	1311

Weaving Flow Rate (v_w), pc/h	2551	Freeway Max Capacity (c_{IFL}), pc/h/ln	2400
Non-Weaving Flow Rate (v_{NW}), pc/h	7969	Density-Based Capacity (c_{IWL}), pc/h/ln	2391
Total Flow Rate (v), pc/h	10520	Demand Flow-Based Capacity (c_{IW}), pc/h	9917
Volume Ratio (VR)	0.242	Weaving Segment Capacity (c_W), veh/h	9564
Minimum Lane Change Rate (LC_{MIN}), lc/h	0	Adjusted Weaving Area Capacity, pc/h	9564
Maximum Weaving Length (L_{MAX}), ft	4970	Volume-to-Capacity Ratio (v/c)	1.10

Speed and Density

Non-Weaving Vehicle Index (I_{NW})	-	Average Weaving Speed (S_W), mi/h	-
Non-Weaving Lane Change Rate (LC_{NW}), lc/h	-	Average Non-Weaving Speed (S_{NW}), mi/h	-
Weaving Lane Change Rate (LC_W), lc/h	-	Average Speed (S), mi/h	-
Total Lane Change Rate (LC_{All}), lc/h	-	Density (D), pc/mi/ln	-
Weaving Intensity Factor (W)	-	Level of Service (LOS)	F

Copyright © 2020 University of Florida. All Rights Reserved.

HCS7 Freeway Weaving Report

Project Information

Analyst	Jenny Tran	Date	6/17/2020
Agency	Minagar & Associates, Inc.	Analysis Year	Opening Year (2021)
Jurisdiction	Caltrans	Time Period Analyzed	AM Peak Hour
Project Description	I-10 E/B Btwn Cedar Ave & Riverside Ave		

Geometric Data

Number of Lanes (N), ln	4	Segment Type	Freeway
Short Length (L_S), ft	4850	Number of Maneuver Lanes (N_{WL}), ln	2
Weaving Configuration	One-Sided	Ramp-to-Freeway Lane Changes (LC_{RF}), lc	1
Terrain Type	Level	Freeway-to-Ramp Lane Changes (LC_{FR}), lc	1
Percent Grade, %	-	Ramp-to-Ramp Lane Changes (LC_{RR}), lc	0
Interchange Density (ID), int/mi	0.33	Cross Weaving Managed Lane	No

Adjustment Factors

Driver Population	All Familiar	Final Speed Adjustment Factor (SAF)	1.000
Weather Type	Non-Severe Weather	Final Capacity Adjustment Factor (CAF)	1.000
Incident Type	No Incident	Demand Adjustment Factor (DAF)	1.000

Demand and Capacity

	FF	RF	RR	FR
Demand Volume (V_i), veh/h	3787	1060	0	1473
Peak Hour Factor (PHF)	0.94	0.94	0.94	0.94
Total Trucks, %	0.00	0.00	0.00	0.00
Heavy Vehicle Adjustment Factor (f_{HV})	1.000	1.000	1.000	1.000
Flow Rate (v_i), pc/h	4029	1128	0	1567

Weaving Flow Rate (v_w), pc/h	2695	Freeway Max Capacity (c_{IFL}), pc/h/ln	2400
Non-Weaving Flow Rate (v_{NW}), pc/h	4029	Density-Based Capacity (c_{IWL}), pc/h/ln	2259
Total Flow Rate (v), pc/h	6724	Demand Flow-Based Capacity (c_{IW}), pc/h	5985
Volume Ratio (VR)	0.401	Weaving Segment Capacity (c_W), veh/h	5985
Minimum Lane Change Rate (LC_{MIN}), lc/h	0	Adjusted Weaving Area Capacity, pc/h	5986
Maximum Weaving Length (L_{MAX}), ft	6692	Volume-to-Capacity Ratio (v/c)	1.12

Speed and Density

Non-Weaving Vehicle Index (I_{NW})	-	Average Weaving Speed (S_W), mi/h	-
Non-Weaving Lane Change Rate (LC_{NW}), lc/h	-	Average Non-Weaving Speed (S_{NW}), mi/h	-
Weaving Lane Change Rate (LC_W), lc/h	-	Average Speed (S), mi/h	-
Total Lane Change Rate (LC_{All}), lc/h	-	Density (D), pc/mi/ln	-
Weaving Intensity Factor (W)	-	Level of Service (LOS)	F

Copyright © 2020 University of Florida. All Rights Reserved.

HCS7 Freeway Weaving Report

Project Information

Analyst	Jenny Tran	Date	6/17/2020
Agency	Minagar & Associates, Inc.	Analysis Year	Opening Year (2021)
Jurisdiction	Caltrans	Time Period Analyzed	PM Peak Hour
Project Description	I-10 W/B Btwn Cedar Ave & Riverside Ave		

Geometric Data

Number of Lanes (N), ln	4	Segment Type	Freeway
Short Length (L_S), ft	4850	Number of Maneuver Lanes (N_{WL}), ln	2
Weaving Configuration	One-Sided	Ramp-to-Freeway Lane Changes (LC_{RF}), lc	1
Terrain Type	Level	Freeway-to-Ramp Lane Changes (LC_{FR}), lc	1
Percent Grade, %	-	Ramp-to-Ramp Lane Changes (LC_{RR}), lc	0
Interchange Density (ID), int/mi	0.33	Cross Weaving Managed Lane	No

Adjustment Factors

Driver Population	All Familiar	Final Speed Adjustment Factor (SAF)	1.000
Weather Type	Non-Severe Weather	Final Capacity Adjustment Factor (CAF)	1.000
Incident Type	No Incident	Demand Adjustment Factor (DAF)	1.000

Demand and Capacity

	FF	RF	RR	FR
Demand Volume (V_i), veh/h	7491	1166	0	1216
Peak Hour Factor (PHF)	0.94	0.94	0.94	0.94
Total Trucks, %	0.00	0.00	0.00	0.00
Heavy Vehicle Adjustment Factor (f_{HV})	1.000	1.000	1.000	1.000
Flow Rate (v_i), pc/h	7969	1240	0	1294

Weaving Flow Rate (v_w), pc/h	2534	Freeway Max Capacity (c_{IFL}), pc/h/ln	2400
Non-Weaving Flow Rate (v_{NW}), pc/h	7969	Density-Based Capacity (c_{IWL}), pc/h/ln	2392
Total Flow Rate (v), pc/h	10503	Demand Flow-Based Capacity (c_{IW}), pc/h	9959
Volume Ratio (VR)	0.241	Weaving Segment Capacity (c_W), veh/h	9568
Minimum Lane Change Rate (LC_{MIN}), lc/h	0	Adjusted Weaving Area Capacity, pc/h	9568
Maximum Weaving Length (L_{MAX}), ft	4960	Volume-to-Capacity Ratio (v/c)	1.10

Speed and Density

Non-Weaving Vehicle Index (I_{NW})	-	Average Weaving Speed (S_W), mi/h	-
Non-Weaving Lane Change Rate (LC_{NW}), lc/h	-	Average Non-Weaving Speed (S_{NW}), mi/h	-
Weaving Lane Change Rate (LC_W), lc/h	-	Average Speed (S), mi/h	-
Total Lane Change Rate (LC_{All}), lc/h	-	Density (D), pc/mi/ln	-
Weaving Intensity Factor (W)	-	Level of Service (LOS)	F

Copyright © 2020 University of Florida. All Rights Reserved.

Appendix J: Site Plan

CONDITIONAL USE PERMIT–PLOT PLAN

IN THE UNINCORPORATED COMMUNITY OF BLOOMINGTON, IN THE COUNTY OF SAN BERNARDINO, STATE OF CALIFORNIA

BEING A SUBDIVISION OF THE WEST ½ OF LOT 380, ACCORDING TO MAP SHOWING SUBDIVISION OF LANDS BELONGING TO THE SEMI-TROPIC LAND AND WATER COMPANY, IN THE COUNTY OF SAN BERNARDINO, STATE OF CALIFORNIA, AS PER PLAT RECORDED IN BOOK 11,PAGE 12 OF MAPS, RECORDS OF SAID COUNTY.

LEGEND:

- CENTERLINE
- RIGHT–OF–WAY LINE
- PROPERTY LINE
- PROP. SIDEWALK
- PROP. CURB AND GUTTER
- PROP. SEWER
- PROP. WATER
- PROP. FIRE–WATER
- EXIST. CURB AND GUTTER
- EXIST. EDGE OF PAVEMENT
- EXIST. SWALE FLOWLINE
- EXIST. FENCE
- EXIST. VEGETATION LINE
- EXIST. SEWER
- EXIST. WATER
- EXIST. FIRE–WATER
- EXIST. UNDERGROUND ELECTRIC
- EXIST. OVERHEAD ELECTRIC
- EXIST. GAS
- 310 INDEX CONTOUR
- INTEGER CONTOUR
- 309.4 SPOT ELEVATION
- UTILITY POLE
- LIGHT POLE
- METER UTILITY
- P POST/BOLLARD
- SIGNS/FLAGS
- VALVE
- FIRE HYDRANT
- LANDSCAPE AREAS
- PATH OF TRAVEL
- PARKING LOT LIGHTS 20 FOOT TALL W/CONCRETE BASE

ABBREVIATIONS:

EP	EDGE OF PAVEMENT
TP	TOP OF PAVMENT
TC	TOP OF CURB
FS	FINISHED SURFACE
BW	BACK OF WALKWAY
PVMT.	PAVEMENT
FL	FLOWLINE
HP	HIGH POINT
FH	FIRE HYDRANT
PVC	POLY–VINYL CHLORIDE
CO	CLEAN–OUT
FF	FINISHED FLOOR
PE	PAD ELEVATION
AC	ASPHALTIC CONCRETE
AB	AGGREGATE BASE
C&G	CURB AND GUTTER
BCR	BEGIN CURB RETURN
ECR	END CURB RETURN
C/L	CENTER LINE
PROP.	PROPOSED
R/W	RIGHT OF WAY
S/W	SIDEWALK
PL	PROPERTY LINE
PP	POWER POLE
EX.	EXISTING
( )	EXISTING

UTILITIES:

CABLE TV AND INTERNET
SPECTRUM
10768 FOOTHILL BV., 170
855–558–6793

ELECTRICITY
SOUTHERN CALIFORNIA EDISON
7951 REDWOOD AVE.,
FONTANA, CA 92336
909–357–6103

NATURAL GAS
SOUTHERN CALIFORNIA GAS
9781 SIERRA AVE.
FONTANA, CA 92235
800–427–2200

WASTE DISPOSAL
BURRTEC WASTE AND RECYCLING SVCS.
1850 AGUA MANSA RD.
RIVERSIDE, CA 92509
951–786–0639

DOMESTIC WATER
WEST VALLEY WATER DISTRICT
855 W. BASELINE ROAD
RIALTO, CA 92376
909–875–1804

SANITARY SEWER
RIALTO WATER SERVICES
437 N. RIVERSIDE AVE.
RIALTO, CA 92376
909–820–2525

(IRRIGATION AND FARM TILE DRAIN LINES)
WEST VALLEY WATER DISTRICT
855 W. BASELINE ROAD
RIALTO, CA 92376
909–875–1804

Underground Service Alert
DIAL: 811
TWO WORKING DAYS BEFORE YOU DIG

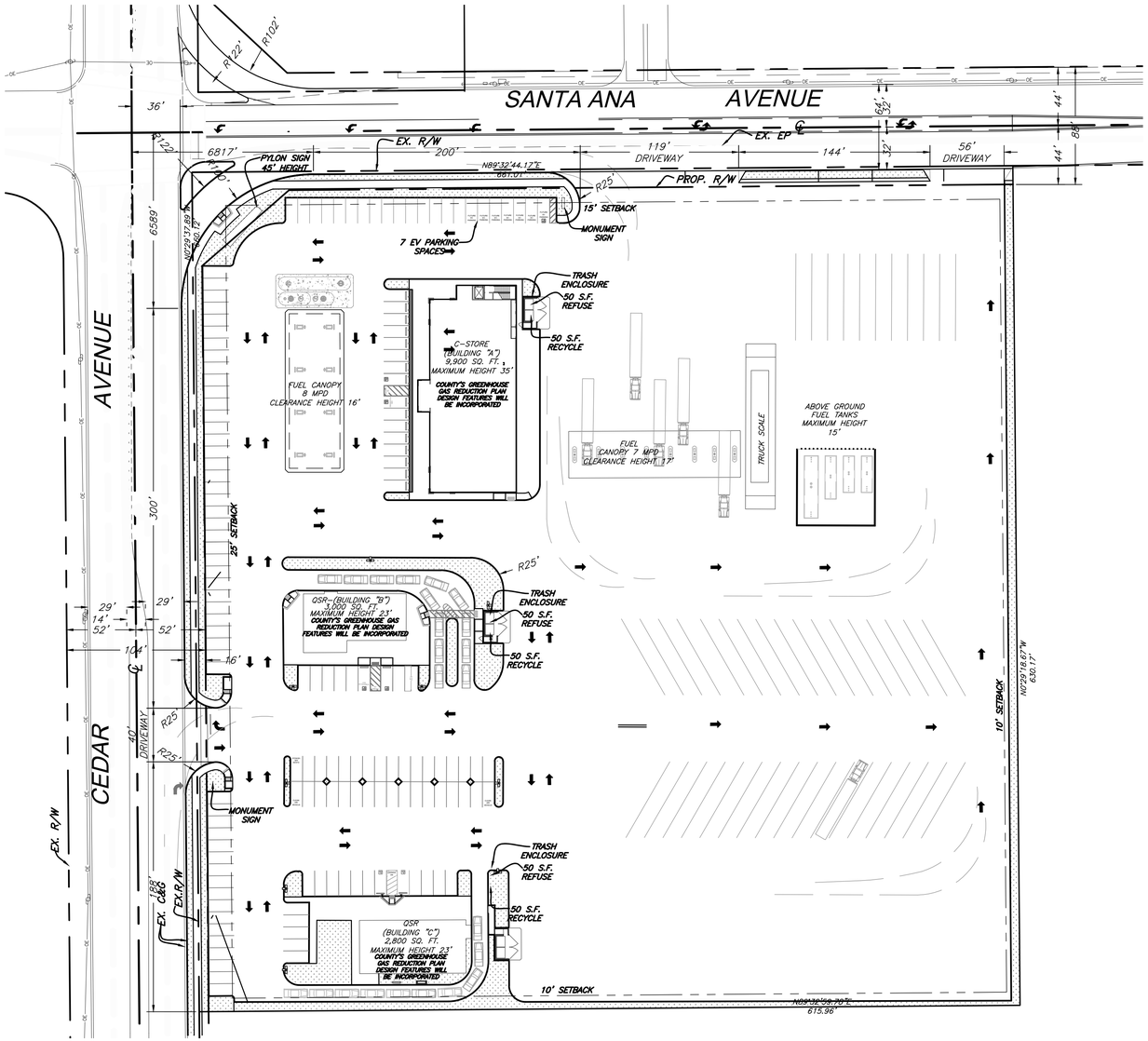

SCALE: 1"= 50'
0 25 50 100 150

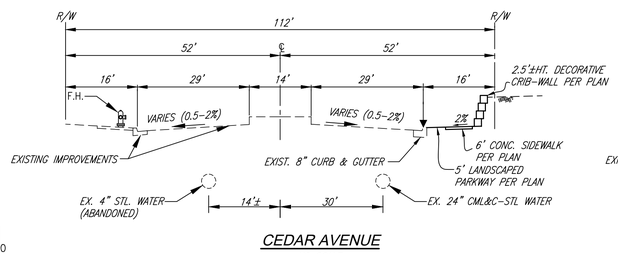

CEDAR AVENUE
NO SCALE

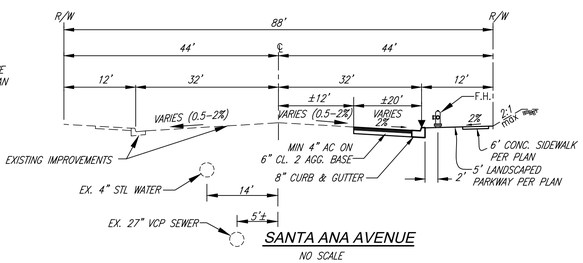

SANTA ANA AVENUE
NO SCALE

PARCEL:

LAND USE: COMMERCIAL
LOT SIZE: 8.9 ACRES

LOT COVERAGE:

LOT = 388,157.8597 SQ. FT. (8.9 ACRES)
15,700 / 388,157.8597 = 0.04

PROPOSED BUILDINGS:

BUILDING A: 9,900 SQ. FT. CONVENIENCE STORE W/ 8 MPD FUEL STATION & 7 DIESEL BAYS
BUILDING B: 3,000 SQ. FT. FAST FOOD RESTAURANT W/ DRIVE THRU
BUILDING C: 2,800 SQ. FT. FAST FOOD RESTAURANT W/ DRIVE THRU

PARKING ANALYSIS:

BUILDING TYPE	RATIO	AREA	SPACE REQ'D
GENERAL RETAIL	1 / 250 SQ. FT.	9,900 SQ. FT.	40
RESTAURANT	1 / 200 SQ. FT.	3,000 SQ. FT.	15
RESTAURANT	1 / 200 SQ. FT.	2,800 SQ. FT.	14
GAS STATION	1 PER PUMP ISLAND	8 PUMP ISLANDS	8
TRUCK STATION	1 PER PUMP ISLAND	7 PUMP ISLANDS	7

TOTAL PARKING REQUIRED = 84
TOTAL PARKING PROVIDED = 149

TOTAL ADA PARKING REQUIRED = 4
TOTAL ADA PARKING PROVIDED = 6

TOTAL TRUCK PARKING PROVIDED = 40

REGULATED NATIVE TREES OR PLANTS

IN COMPLIANCE WITH COUNTY CODE TITLE 8, DIVISION 8, THE SITE HAS BEEN SURVEYED FOR THE PRESENCE OF REGULATED NATIVE PLANTS AND TREES. AS OF THE TIME OF THIS SUBMITTAL, NO REGULATED NATIVE TREES OR PLANTS ARE FOUND WITHIN 100 FEET OF ANY AREA THAT WILL BE DISTURBED BY A PROPOSED ROADWAY, BUILDING SITE, OR OTHER LAND DISTURBING ACTIVITY ASSOCIATED WITH THIS PROJECT.

BASIS OF BEARINGS

CCS 83, ZONE 5 CALIFORNIA COORDINATE SYSTEM OF 1983

OFFICIAL USE ONLY

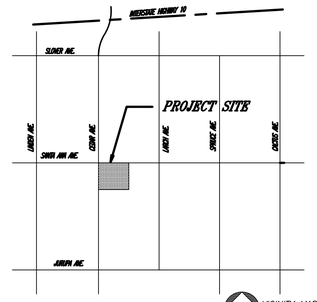

VICINITY MAP
N.T.S.

SITE ADDRESS:

10951 CEDAR AVENUE
BLOOMINGTON, CALIFORNIA 92316

EXISTING ZONING:

RS–1–AA SINGLE RESIDENTIAL / ADDITIONAL AGGRICULTURAL

EXISTING LAND USE:

VACANT LOT

PROPOSED LAND USE:

COMMERCIAL/RETAIL

LEGAL DESCRIPTION

THE WEST ½ OF LOT 380, ACCORDING TO MAP SHOWING SUBDIVISION OF LANDS BELONGING TO THE SEMI–TROPIC LAND AND WATER COMPANY, IN THE COUNTY OF SAN BERNARDINO, STATE OF CALIFORNIA, AS PER PLAT RECORDED IN BOOK 11, PAGE 12 OF MAPS, RECORDS OF SAID COUNTY.
EXCEPTING THEREFROM:
THE WEST 45 FEET AS DEEDED TO THE COUNTY OF SAN BERNARDINO, BY DOCUMENT RECORDED MARCH 22, 1957 IN BOOK 4186, PAGE 231 OF OFFICIAL RECORDS.
GROSS AND NET ACREAGE (8.9 ACRES)

ASSESSOR'S PARCEL NO:

0257–101–01

APPLICANT

BLACK GOLD BUILDERS GROUP, INC.
42270 SPECTRUM STREET INDIO,
CALIFORNIA 92203
(760) 396–9260

PROPERTY OWNER(S)

- HSIAO CHEN CHIU & SHUEH HUI WU CHIU 1/3 INTEREST
- HSIAO YEN CHIU & HUANG YU–CHIH CHIU TRUSTEES OF THE CHIU FAMILY TRUST, DATED 11–19–1998 1/3 INTEREST AS TENNANTS IN COMMON
- JEN WEI CHOW 1/3 INTEREST
  612 NORTH CLAREMONT STREET
  SAN MATEO, CA 94401
  (626) 377–6722

NO.	REVISION	APPROVED	DATE

BENCH MARK: CITY OF COLTON B.M. NO. 502 — ELEV.: ORTHO HT: (1070.912') NGVD29

LOCATION: 2" BRASS DISC SET IN CONC. S/W AT S/E. CORNER VALLEY BV. AND ACACIA AVE., 2.0' NW OF POWER POLE #1371579E AND 1.0' SOUTHEAST OF CURB

PREPARED UNDER THE DIRECT SUPERVISION OF: MARK CHAPPELL, PE R.C.E. NO: C-68972

Black Gold Engineering INC.
ENGINEERING • LAND SURVEY • DESIGN
42270 SPECTRUM STREET, INDIO, CALIFORNIA, 92203

DESIGN BY: MC	CITY CHECK	RIGHT-OF-WAY	INITIAL	DATE	
DRAWN BY: MC		TRAFFIC ENG'G			
REVIEWED BY: MC	DATE	FIELD ENG'G			

PREPARED BY: MARK CHAPPELL, PE
R.C.E. NO: C-68972 — DATE

APPROVED BY: CITY ENGINEER
R.C.E. NO. — DATE

COUNTY OF SAN BERNARDINO, CALIFORNIA
BLOOMINGTON COMMERCIAL CENTER

FILE NO.
DWG. NO.
CADD FILE NAME: TENTATIVE MAP.DWG
SHEET 1 OF 1 SHTS.

Appendix K: Future Caltrans Plans for Cedar Ave I-10 Interchange Improvements

INDEX OF PLANS

Dist	COUNTY	ROUTE	POST MILES TOTAL PROJECT	SHEET No.	TOTAL SHEETS
08	SBd	10	17.8/19.3		

STATE OF CALIFORNIA
DEPARTMENT OF TRANSPORTATION

PROJECT PLANS FOR CONSTRUCTION ON
STATE HIGHWAY

IN SAN BERNARDINO COUNTY
IN BLOOMINGTON
FROM 0.7 MILES WEST
TO 0.5 MILES EAST OF CEDAR AVENUE

TO BE SUPPLEMENTED BY STANDARD PLANS DATED MAY 2018

LOCATION MAP

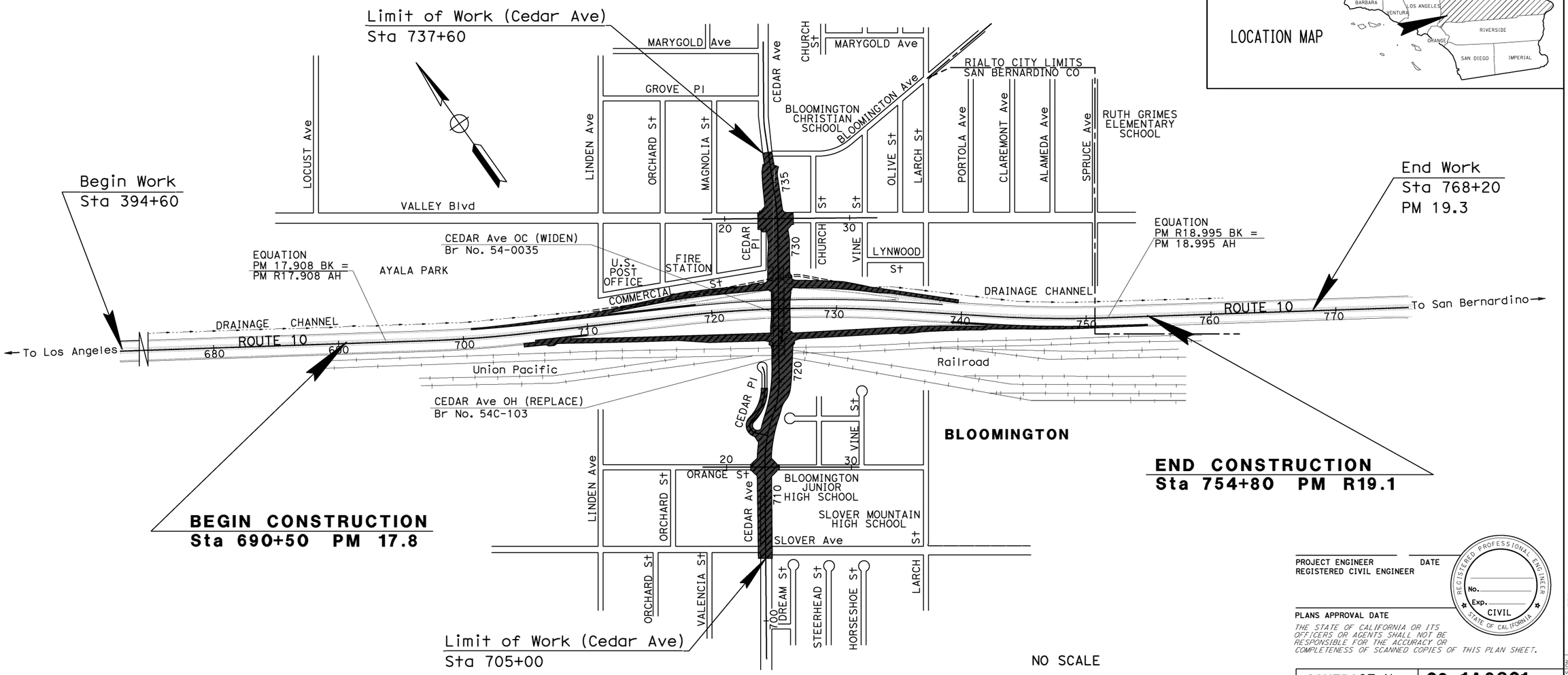

NO SCALE

65% PS&E SUBMITTAL

PROJECT MANAGER: MEARDEY TIM
DESIGN ENGINEER: JUAN CARLOS ALVAREZ

THE CONTRACTOR SHALL POSSESS THE CLASS (OR CLASSES) OF LICENSE AS SPECIFIED IN THE "NOTICE TO BIDDERS."

PROJECT ENGINEER _____ DATE
REGISTERED CIVIL ENGINEER

REGISTERED PROFESSIONAL ENGINEER
No. _____
Exp. _____
CIVIL
STATE OF CALIFORNIA

PLANS APPROVAL DATE

THE STATE OF CALIFORNIA OR ITS OFFICERS OR AGENTS SHALL NOT BE RESPONSIBLE FOR THE ACCURACY OR COMPLETENESS OF SCANNED COPIES OF THIS PLAN SHEET.

DATE PLOTTED => 21-NOV-2019
TIME PLOTTED => 10:54

CONTRACT No.	08-1A8301
PROJECT ID	0800000579

AST REVISION 00-00-00

Dist	COUNTY	ROUTE	POST MILES TOTAL PROJECT	SHEET No.	TOTAL SHEETS
08	SBd	10	17.8/19.3		

REGISTERED CIVIL ENGINEER DATE

PLANS APPROVAL DATE

REGISTERED PROFESSIONAL ENGINEER
No.
Exp.
CIVIL
STATE OF CALIFORNIA

THE STATE OF CALIFORNIA OR ITS OFFICERS OR AGENTS SHALL NOT BE RESPONSIBLE FOR THE ACCURACY OR COMPLETENESS OF SCANNED COPIES OF THIS PLAN SHEET.

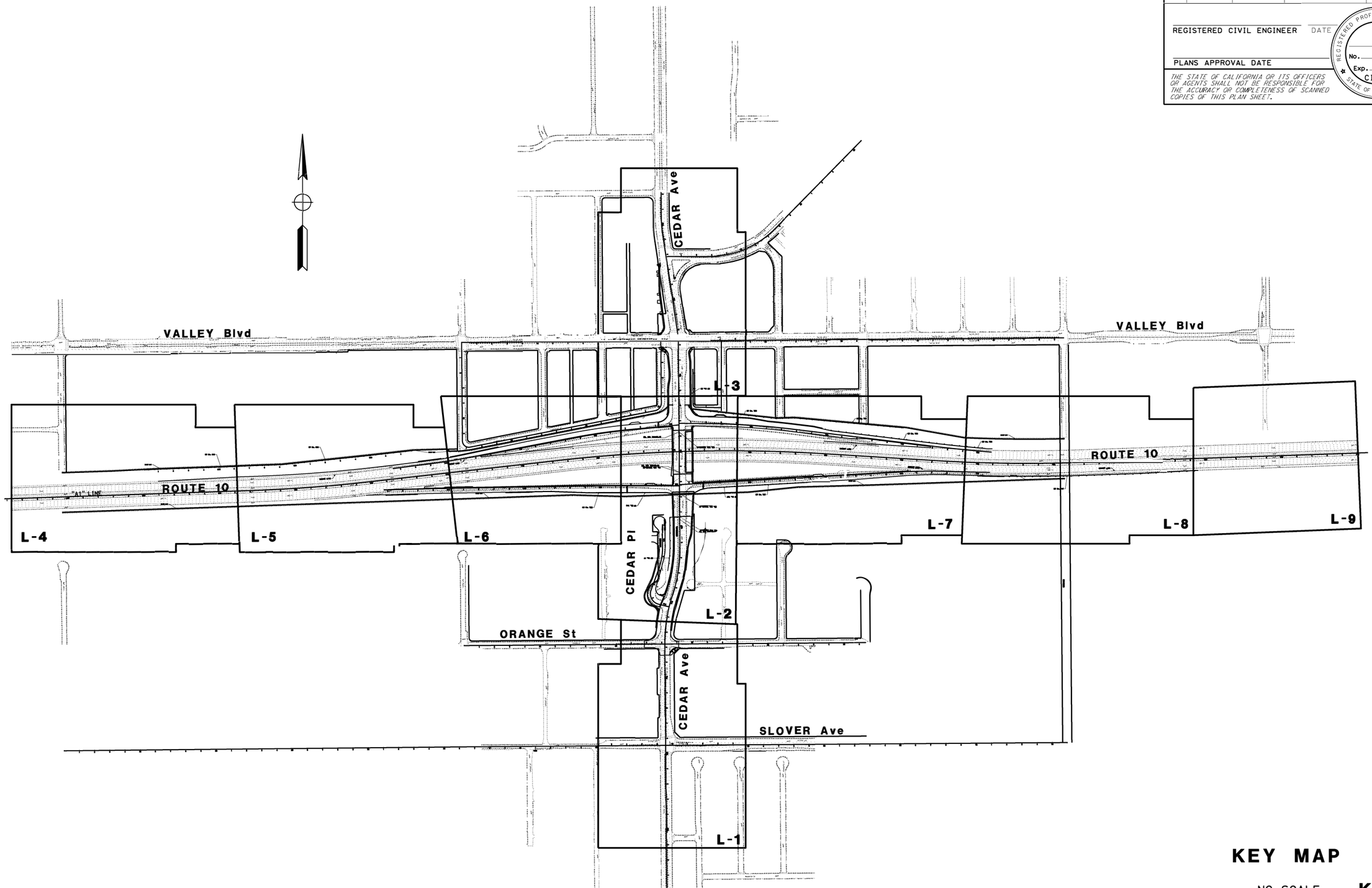

65% PS&E SUBMITTAL

KEY MAP

NO SCALE **K-1**

REVISED BY	
DATE REVISED	
CALCULATED- DESIGNED BY	J.C. ALVAREZ
CHECKED BY	
FUNCTIONAL SUPERVISOR	BEN AMIRI
STATE OF CALIFORNIA - DEPARTMENT OF TRANSPORTATION	DESIGN
Caltrans®	

LAST REVISION 00-00-00
DATE PLOTTED => 21-NOV-2019
TIME PLOTTED => 10:18

BORDER LAST REVISED 7/2/2010

USERNAME => **s147816**
DGN FILE => 0800000579da001.dgn

RELATIVE BORDER SCALE IS IN INCHES 0 1 2 3

UNIT 2242

PROJECT NUMBER & PHASE 08000005791

Dist	COUNTY	ROUTE	POST MILES TOTAL PROJECT	SHEET No.	TOTAL SHEETS
08	Sbd	10	17.8/19.3		

REGISTERED CIVIL ENGINEER DATE

PLANS APPROVAL DATE

REGISTERED PROFESSIONAL ENGINEER — No. Exp. CIVIL — STATE OF CALIFORNIA

THE STATE OF CALIFORNIA OR ITS OFFICERS OR AGENTS SHALL NOT BE RESPONSIBLE FOR THE ACCURACY OR COMPLETENESS OF SCANNED COPIES OF THIS PLAN SHEET.

LEGEND

◇# CURB RAMP No.

(#) DRIVEWAY No.

ABBREVIATIONS

AITS	ALTERNATIVE IN-LINE TERMINAL SYSTEM
MGS	MIDWEST GUARDRAIL SYSTEM
SFT	END ANCHOR ASSEMBLY (TYPE SFT)
TR (WB-31)	TRANSITION RAILING (TYPE WB-31)
VGC	VEGETATION CONTROL

CURVE DATA

No. ⊕	R	Δ	T	L
4	1000′	18°38′52"	164.19′	325.47′

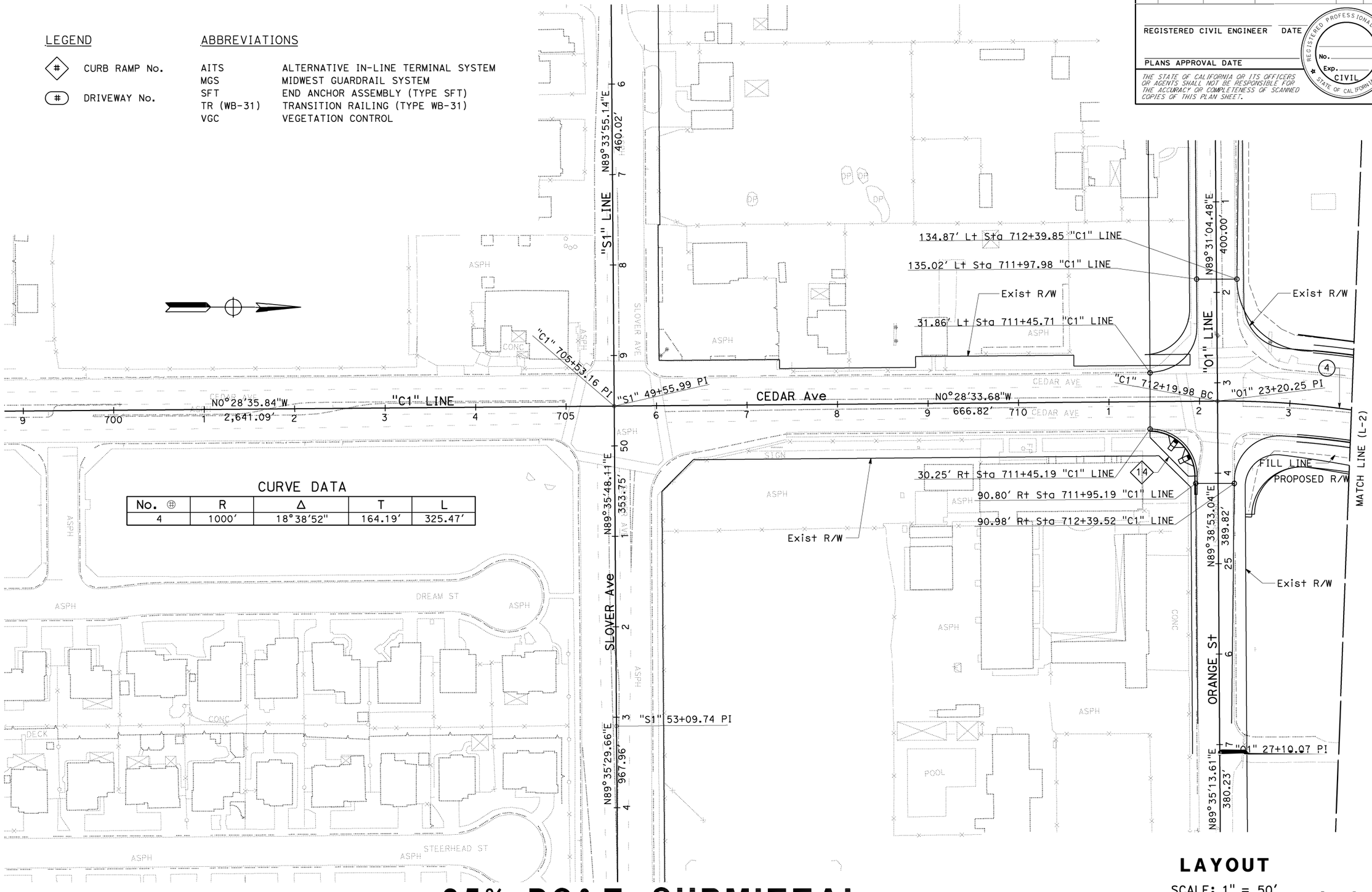

65% PS&E SUBMITTAL

LAYOUT

SCALE: 1" = 50′ L-1

STATE OF CALIFORNIA - DEPARTMENT OF TRANSPORTATION
DESIGN
FUNCTIONAL SUPERVISOR: BEN AMIRI
CALCULATED-DESIGNED BY: J.C. ALVAREZ
CHECKED BY
REVISED BY
DATE REVISED

LAST REVISION DATE PLOTTED => 21-NOV-2019
TIME PLOTTED => 10:21
06-06-18

BORDER LAST REVISED 7/2/2010 | USERNAME => s147816 | DGN FILE => 0800000579ea001.dgn | RELATIVE BORDER SCALE IS IN INCHES 0 1 2 3 | UNIT 2242 | PROJECT NUMBER & PHASE 08000005791

Dist	COUNTY	ROUTE	POST MILES TOTAL PROJECT	SHEET No.	TOTAL SHEETS
08	Sbd	10	17.8/19.3		

REGISTERED CIVIL ENGINEER DATE

PLANS APPROVAL DATE

REGISTERED PROFESSIONAL ENGINEER — No. Exp. CIVIL — STATE OF CALIFORNIA

THE STATE OF CALIFORNIA OR ITS OFFICERS OR AGENTS SHALL NOT BE RESPONSIBLE FOR THE ACCURACY OR COMPLETENESS OF SCANNED COPIES OF THIS PLAN SHEET.

CURVE DATA

No. ⊕	R	Δ	T	L
4	1000′	18°38′52"	164.19′	325.47′
5	1000′	18°38′52"	164.19′	325.47′
7	70′	99°26′06"	82.37′	121.15′
8	372′	18°05′37"	59.16′	117.34′
18	5000′	06°18′11"	275.30′	550.05′
19	4000′	05°26′24"	190.03′	379.78′
20	52′	79°23′08"	43.16′	72.05′
31	10005′	09°58′11"	872.68′	1740.96′
32	25000′	01°06′25"	241.52′	483.02′
36	20′	88°19′08"	19.42′	30.83′

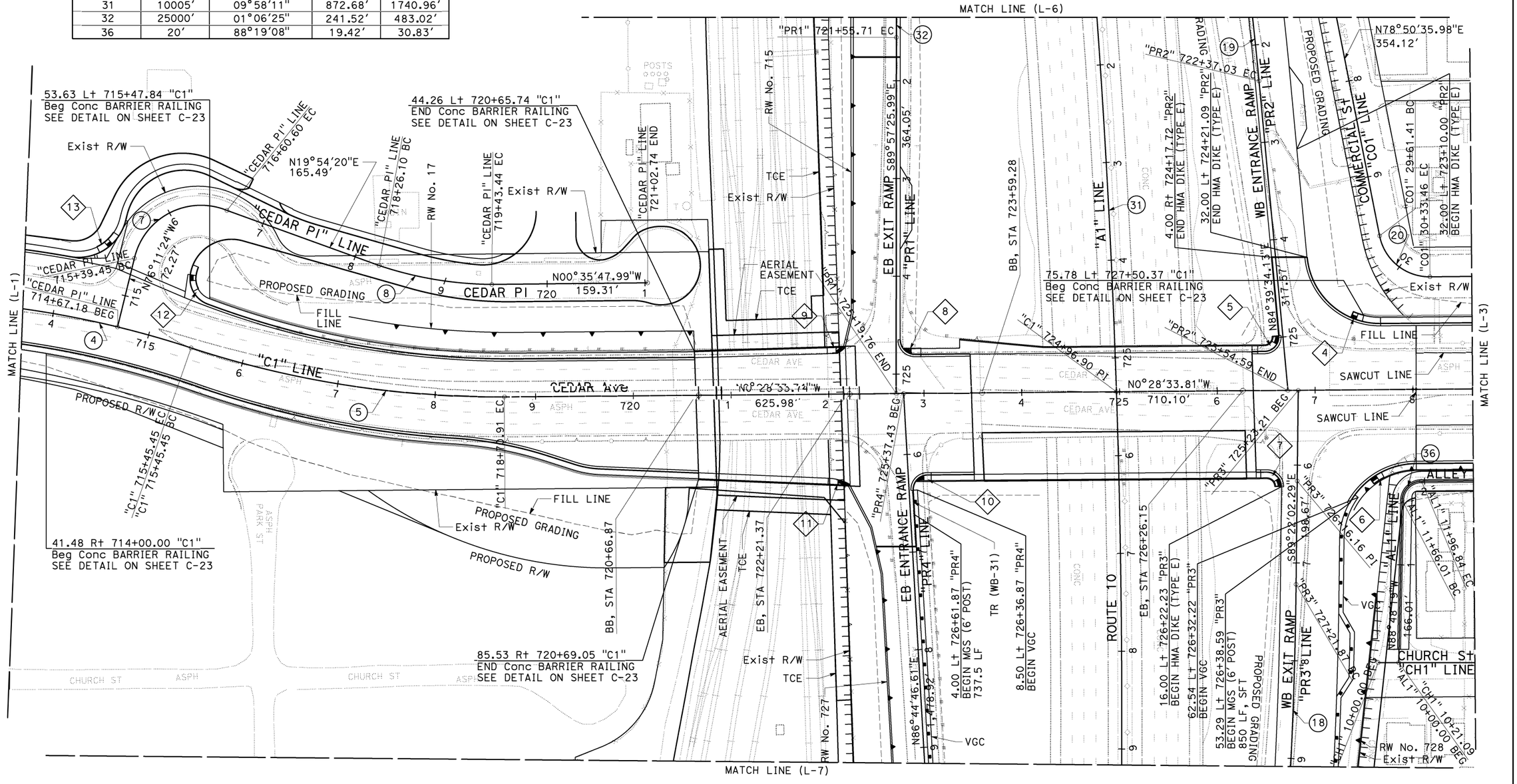

65% PS&E SUBMITTAL

LAYOUT

SCALE: 1" = 50′

L-2

LAST REVISION	DATE PLOTTED => 21-NOV-2019
06-06-18	TIME PLOTTED => 10:21

STATE OF CALIFORNIA - DEPARTMENT OF TRANSPORTATION

Caltrans® DESIGN

FUNCTIONAL SUPERVISOR: BEN AMIRI

CALCULATED-DESIGNED BY: J.C. ALVAREZ

CHECKED BY

DATE REVISED	REVISED BY

BORDER LAST REVISED 7/2/2010

USERNAME => s147816
DGN FILE => 0800000579ea002.dgn

RELATIVE BORDER SCALE IS IN INCHES 0 1 2 3

UNIT 2242

PROJECT NUMBER & PHASE 08000005791

Dist	COUNTY	ROUTE	POST MILES TOTAL PROJECT	SHEET No.	TOTAL SHEETS
08	Sbd	10	17.8/19.3		

REGISTERED CIVIL ENGINEER DATE

PLANS APPROVAL DATE

REGISTERED PROFESSIONAL ENGINEER — No. Exp. CIVIL — STATE OF CALIFORNIA

THE STATE OF CALIFORNIA OR ITS OFFICERS OR AGENTS SHALL NOT BE RESPONSIBLE FOR THE ACCURACY OR COMPLETENESS OF SCANNED COPIES OF THIS PLAN SHEET.

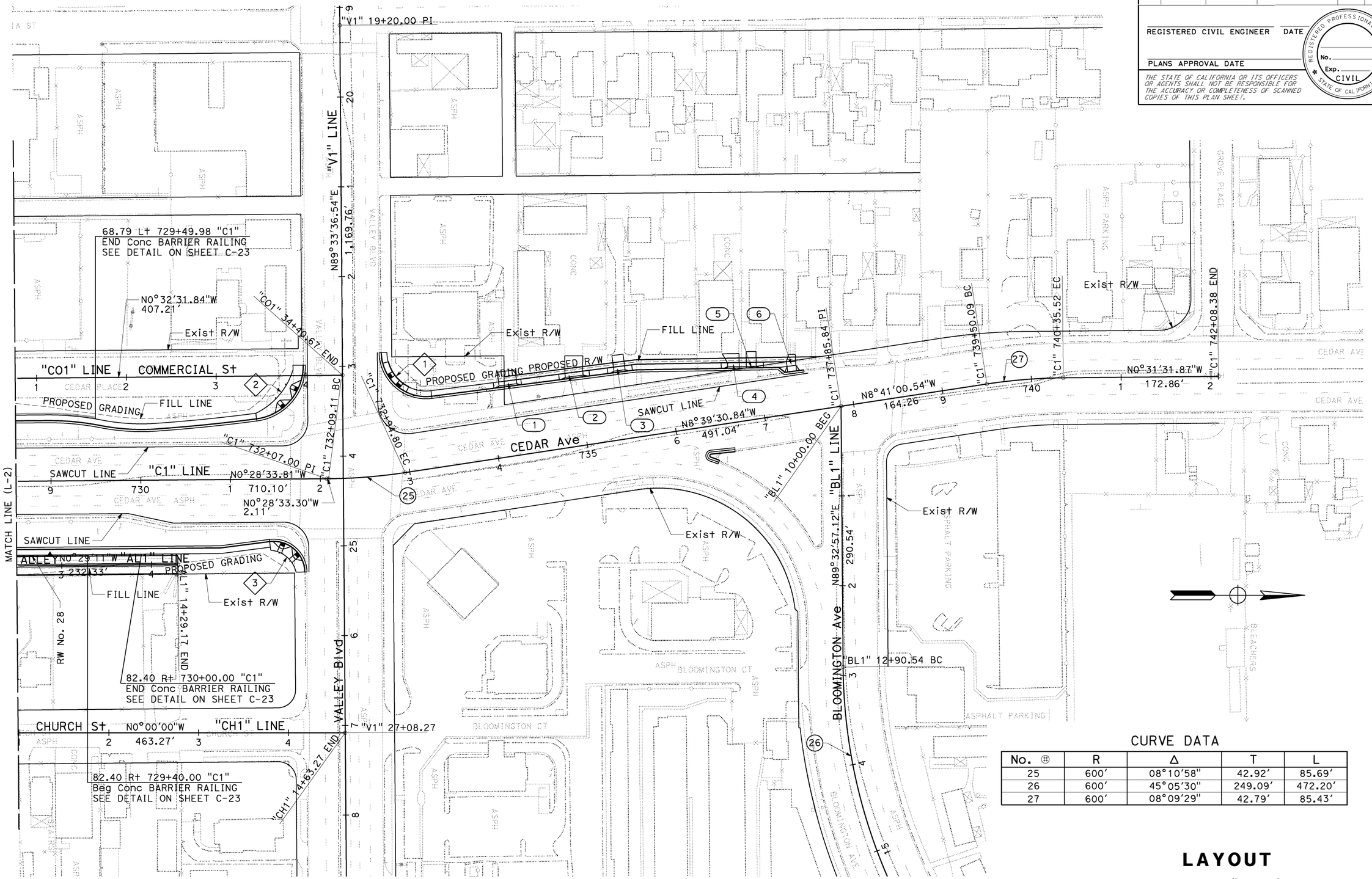

CURVE DATA

No. ⊕	R	Δ	T	L
25	600′	08°10′58"	42.92′	85.69′
26	600′	45°05′30"	249.09′	472.20′
27	600′	08°09′29"	42.79′	85.43′

LAYOUT

SCALE: 1" = 50′ L-3

65% PS&E SUBMITTAL

STATE OF CALIFORNIA - DEPARTMENT OF TRANSPORTATION — DESIGN

FUNCTIONAL SUPERVISOR: BEN AMIRI

CALCULATED-DESIGNED BY | CHECKED BY

REVISED BY | DATE REVISED

J.C. ALVAREZ

LAST REVISION: DATE PLOTTED => 21-NOV-2019 TIME PLOTTED => 10:21

06-06-18

BORDER LAST REVISED 7/2/2010 | USERNAME => s147816 DGN FILE => 0800000579ea003.dgn | RELATIVE BORDER SCALE IS IN INCHES 0 1 2 3 | UNIT 2242 | PROJECT NUMBER & PHASE 08000005791

Dist	COUNTY	ROUTE	POST MILES TOTAL PROJECT	SHEET No.	TOTAL SHEETS
08	Sbd	10	17.8/19.3		

REGISTERED CIVIL ENGINEER DATE

PLANS APPROVAL DATE

REGISTERED PROFESSIONAL ENGINEER — No. Exp. CIVIL — STATE OF CALIFORNIA

THE STATE OF CALIFORNIA OR ITS OFFICERS OR AGENTS SHALL NOT BE RESPONSIBLE FOR THE ACCURACY OR COMPLETENESS OF SCANNED COPIES OF THIS PLAN SHEET.

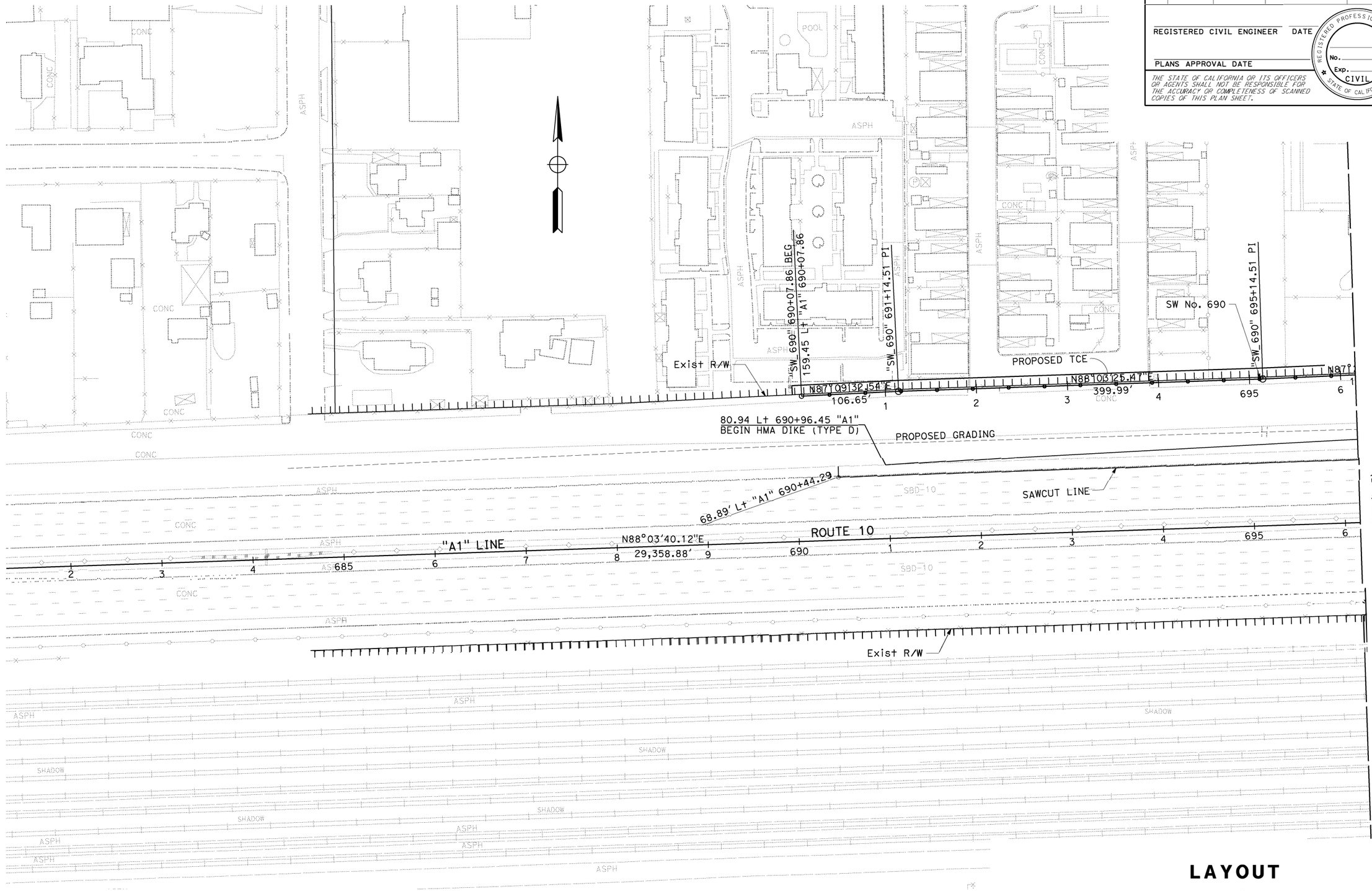

LAYOUT

SCALE: 1" = 50'

L- 4

65% PS&E SUBMITTAL

STATE OF CALIFORNIA - DEPARTMENT OF TRANSPORTATION
DESIGN
FUNCTIONAL SUPERVISOR: BEN AMIRI
CALCULATED-DESIGNED BY
CHECKED BY
J.C. ALVAREZ
REVISED BY
DATE REVISED

LAST REVISION: DATE PLOTTED => 21-NOV-2019 TIME PLOTTED => 10:21
06-06-18

BORDER LAST REVISED 7/2/2010

USERNAME => s147816
DGN FILE => 0800000579ea004.dgn

RELATIVE BORDER SCALE IS IN INCHES 0 1 2 3

UNIT 2242

PROJECT NUMBER & PHASE 08000005791

Dist	COUNTY	ROUTE	POST MILES TOTAL PROJECT	SHEET No.	TOTAL SHEETS
08	Sbd	10	17.8/19.3		

REGISTERED CIVIL ENGINEER DATE

PLANS APPROVAL DATE

THE STATE OF CALIFORNIA OR ITS OFFICERS OR AGENTS SHALL NOT BE RESPONSIBLE FOR THE ACCURACY OR COMPLETENESS OF SCANNED COPIES OF THIS PLAN SHEET.

REGISTERED PROFESSIONAL ENGINEER No. Exp. CIVIL STATE OF CALIFORNIA

CURVE DATA

No. ⊕	R	Δ	T	L
28	9999′	04°30′00"	392.89′	785.38′
29	3000′	03°11′44"	83.68′	167.32′

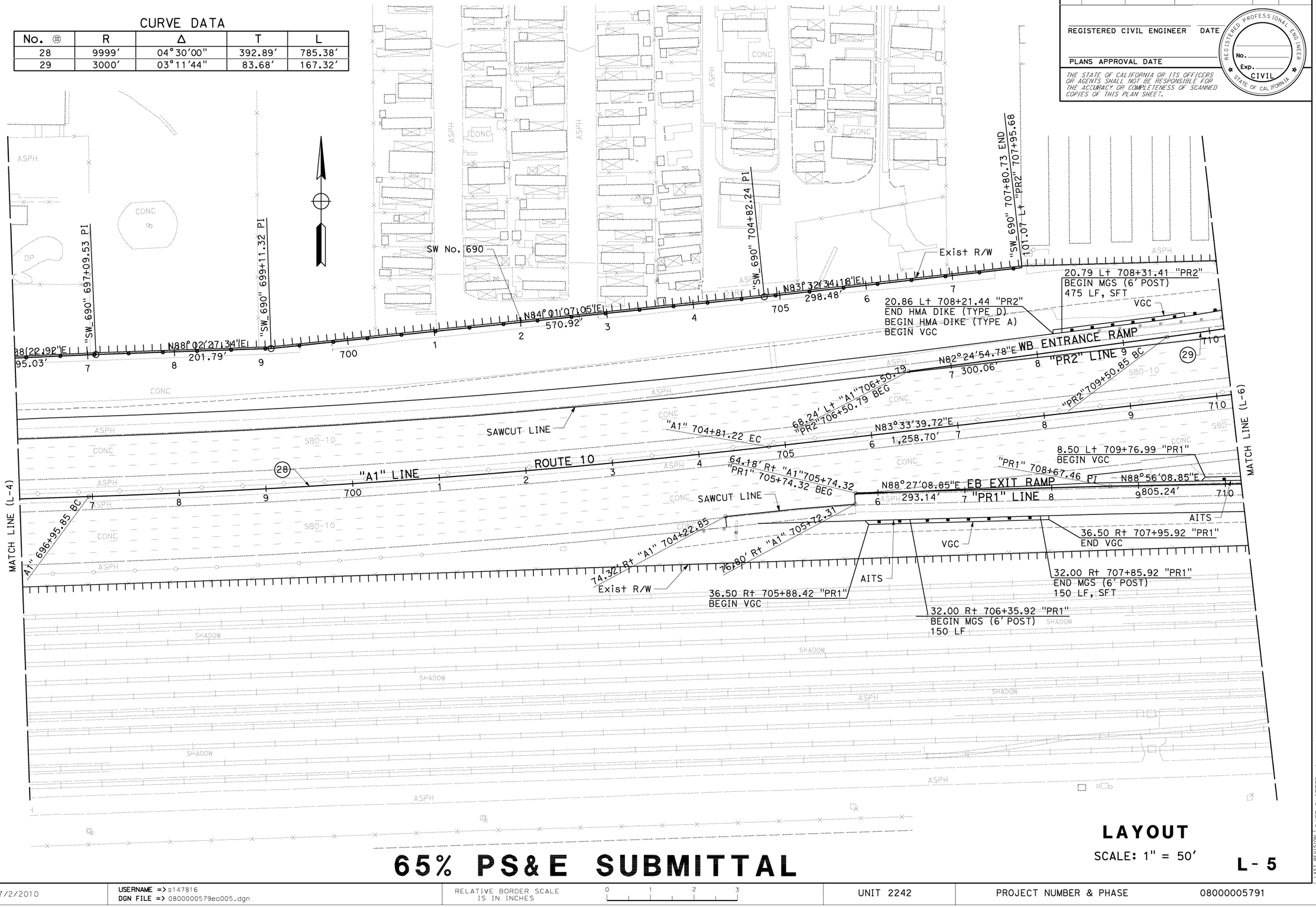

65% PS&E SUBMITTAL

LAYOUT

SCALE: 1" = 50′

L-5

STATE OF CALIFORNIA - DEPARTMENT OF TRANSPORTATION

Caltrans

DESIGN

FUNCTIONAL SUPERVISOR: BEN AMIRI

CALCULATED-DESIGNED BY: J.C. ALVAREZ

CHECKED BY

REVISED BY

DATE REVISED

LAST REVISION 06-06-18

DATE PLOTTED => 21-NOV-2019

TIME PLOTTED => 10:21

Dist	COUNTY	ROUTE	POST MILES TOTAL PROJECT	SHEET No.	TOTAL SHEETS
08	Sbd	10	17.8/19.3		

REGISTERED CIVIL ENGINEER DATE

PLANS APPROVAL DATE

REGISTERED PROFESSIONAL ENGINEER — No. Exp. CIVIL — STATE OF CALIFORNIA

THE STATE OF CALIFORNIA OR ITS OFFICERS OR AGENTS SHALL NOT BE RESPONSIBLE FOR THE ACCURACY OR COMPLETENESS OF SCANNED COPIES OF THIS PLAN SHEET.

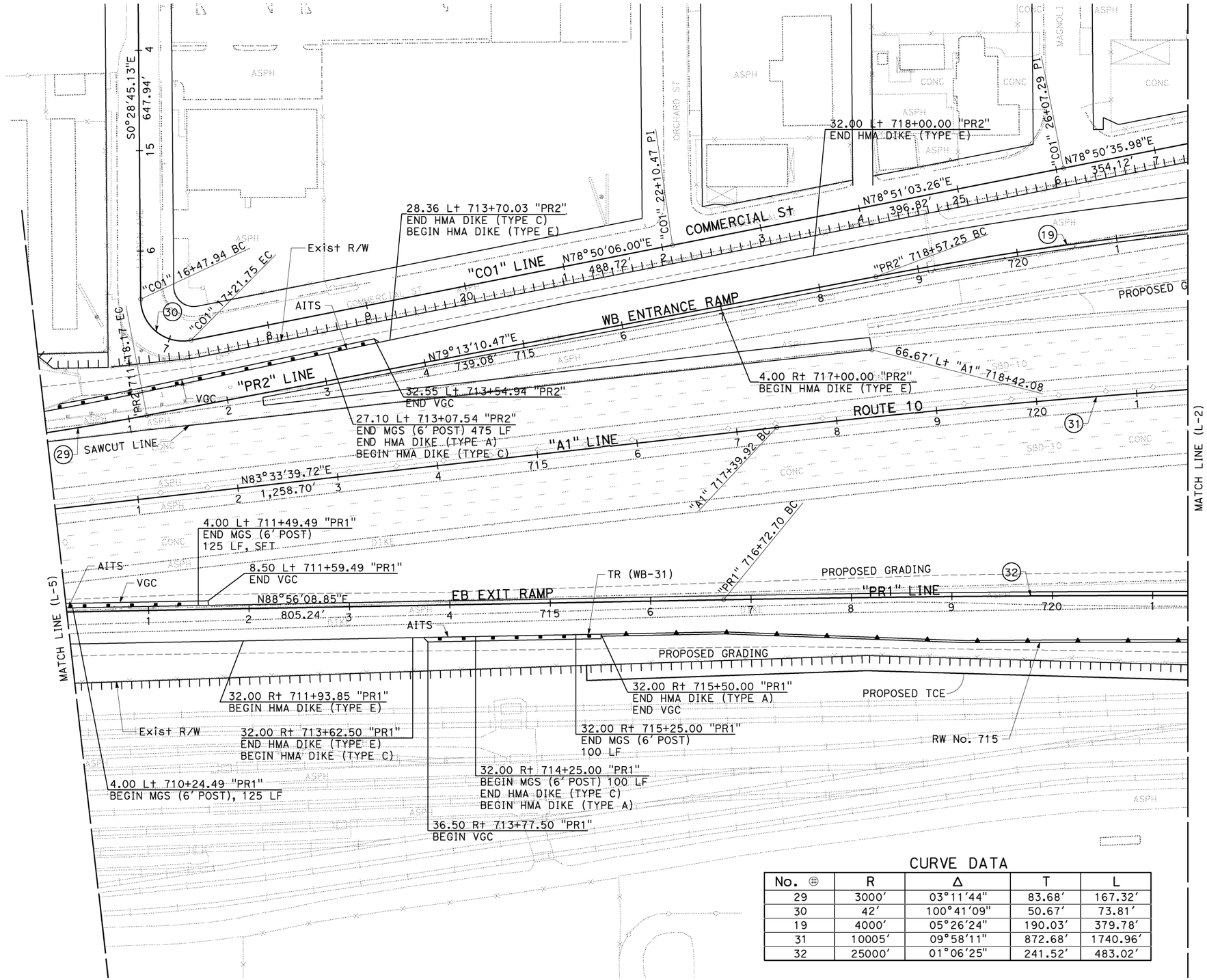

CURVE DATA

No. ⊕	R	Δ	T	L
29	3000′	03°11′44"	83.68′	167.32′
30	42′	100°41′09"	50.67′	73.81′
19	4000′	05°26′24"	190.03′	379.78′
31	10005′	09°58′11"	872.68′	1740.96′
32	25000′	01°06′25"	241.52′	483.02′

65% PS&E SUBMITTAL

LAYOUT

SCALE: 1" = 50′

L-6

STATE OF CALIFORNIA - DEPARTMENT OF TRANSPORTATION
DESIGN
FUNCTIONAL SUPERVISOR: BEN AMIRI
CALCULATED-DESIGNED BY
CHECKED BY
J.C. ALVAREZ
REVISED BY
DATE REVISED

LAST REVISION: DATE PLOTTED => 21-NOV-2019 TIME PLOTTED => 10:21
06-06-18

BORDER LAST REVISED 7/2/2010 | USERNAME => s147816 DGN FILE => 0800000579ea006.dgn | RELATIVE BORDER SCALE IS IN INCHES 0 1 2 3 | UNIT 2242 | PROJECT NUMBER & PHASE 08000005791

Dist	COUNTY	ROUTE	POST MILES TOTAL PROJECT	SHEET No.	TOTAL SHEETS
08	Sbd	10	17.8/19.3		

REGISTERED CIVIL ENGINEER DATE

PLANS APPROVAL DATE

REGISTERED PROFESSIONAL ENGINEER — No. Exp. CIVIL — STATE OF CALIFORNIA

THE STATE OF CALIFORNIA OR ITS OFFICERS OR AGENTS SHALL NOT BE RESPONSIBLE FOR THE ACCURACY OR COMPLETENESS OF SCANNED COPIES OF THIS PLAN SHEET.

RW No. 728
32.00 L+ 733+00.00 "PR3"
BEGIN HMA DIKE (TYPE A)
22.65 L+ 734+99.90 "PR3"
END MGS (6' POST)
850 LF
PROPOSED TCE
SW No. 732
VGC
"PR3" 734+71.93 EC
22.65 L+ 734+99.90 "PR3"
END HMA DIKE (TYPE A)
END VGC
Exist R/W
"PR3" LINE
PROPOSED GRADING
4.00 R+ 738+11.88 "PR3"
END HMA DIKE (TYPE E)
WB EXIT RAMP
RW No. 736
TR (WB-31)
S83°03'50.99"E
914.11'
SAWCUT LINE
"A1" LINE
10.00' L+ "A1" 734+80.88
ROUTE 10
S86°28'08.80"E
726.15'
"PR3" 741+86.04 BC
"A1" 742+07.03 BC
81.72' L+ "A1" 734+86.88
MATCH LINE (L-2)
MATCH LINE (L-8)
8.50 L+ 734+09.37 "PR4"
END VGC
VGC
"A1" 734+80.88 EC
PROPOSED GRADING
EB ENTRANCE RAMP
"PR4" LINE
N86°44'46.61"E
1,478.92'
"PR4" 740+16.35 BC
"PR4" 742+80.28 PRC
4.00 L+ 733+99.37 "PR4"
END MGS (6' POST)
737.5 LF, SFT
32.00 R+ 733+80.00 "PR4"
BEGIN HMA DIKE (TYPE D)
RW No. 727
Exist R/W
ASPH
CONC
SBD-10

CURVE DATA

No.	R	Δ	T	L
18	5000.00'	06°18'11.30"	275.30'	550.05'
31	10005.11'	09°58'11.48"	872.68'	1740.96'
33	9999.52'	05°28'30.10"	478.13'	955.53'
34	3000.00'	05°02'26.71"	132.05'	263.93'
35	15068.00'	01°08'28.48"	150.07'	300.13'
40	9930.00'	02°19'27.20"	201.43'	402.81'

LAYOUT

SCALE: 1" = 50'

L-7

65% PS&E SUBMITTAL

REVISED BY	DATE REVISED
J.C. ALVAREZ	

CALCULATED-DESIGNED BY
CHECKED BY
FUNCTIONAL SUPERVISOR: BEN AMIRI

STATE OF CALIFORNIA - DEPARTMENT OF TRANSPORTATION
Caltrans®
DESIGN

LAST REVISION: DATE PLOTTED => 21-NOV-2019 TIME PLOTTED => 10:21
06-06-18

BORDER LAST REVISED 7/2/2010

USERNAME => s147816
DGN FILE => 0800000579ea007.dgn

RELATIVE BORDER SCALE IS IN INCHES 0 1 2 3

UNIT 2242

PROJECT NUMBER & PHASE 08000005791

Dist	COUNTY	ROUTE	POST MILES TOTAL PROJECT	SHEET No.	TOTAL SHEETS
08	Sbd	10	17.8/19.3		

REGISTERED CIVIL ENGINEER DATE

PLANS APPROVAL DATE

REGISTERED PROFESSIONAL ENGINEER — No. Exp. CIVIL — STATE OF CALIFORNIA

THE STATE OF CALIFORNIA OR ITS OFFICERS OR AGENTS SHALL NOT BE RESPONSIBLE FOR THE ACCURACY OR COMPLETENESS OF SCANNED COPIES OF THIS PLAN SHEET.

CURVE DATA

No. ⊕	R	Δ	T	L
33	9999.52′	05°28′30.10"	478.13′	955.53′
35	15068.00′	01°08′28.48"	150.07′	300.13′
40	9930.00′	02°19′27.20"	201.43′	402.81′

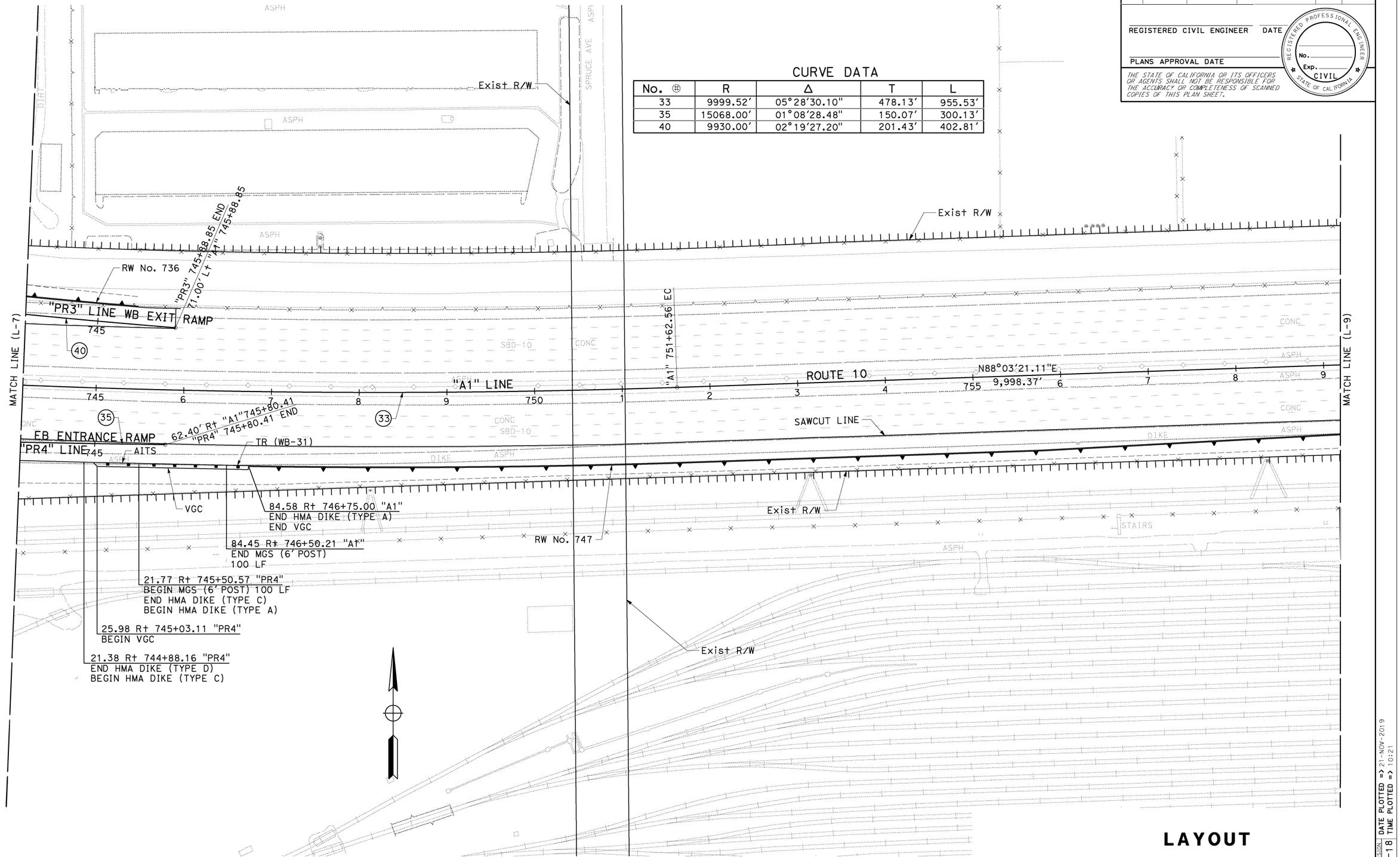

LAYOUT

SCALE: 1" = 50′ L-8

65% PS&E SUBMITTAL

CALCULATED-DESIGNED BY	CHECKED BY	REVISED BY	DATE REVISED
J.C. ALVAREZ			

FUNCTIONAL SUPERVISOR: BEN AMIRI

STATE OF CALIFORNIA - DEPARTMENT OF TRANSPORTATION — DESIGN

LAST REVISION: DATE PLOTTED => 21-NOV-2019 TIME PLOTTED => 10:21

BORDER LAST REVISED 7/2/2010 | USERNAME => s147816 DGN FILE => 0800000579ea008.dgn | RELATIVE BORDER SCALE IS IN INCHES 0 1 2 3 | UNIT 2242 | PROJECT NUMBER & PHASE 08000005791

Dist	COUNTY	ROUTE	POST MILES TOTAL PROJECT	SHEET No.	TOTAL SHEETS
08	Sbd	10	17.8/19.3		

REGISTERED CIVIL ENGINEER DATE

PLANS APPROVAL DATE

REGISTERED PROFESSIONAL ENGINEER
No.
Exp.
CIVIL
STATE OF CALIFORNIA

THE STATE OF CALIFORNIA OR ITS OFFICERS OR AGENTS SHALL NOT BE RESPONSIBLE FOR THE ACCURACY OR COMPLETENESS OF SCANNED COPIES OF THIS PLAN SHEET.

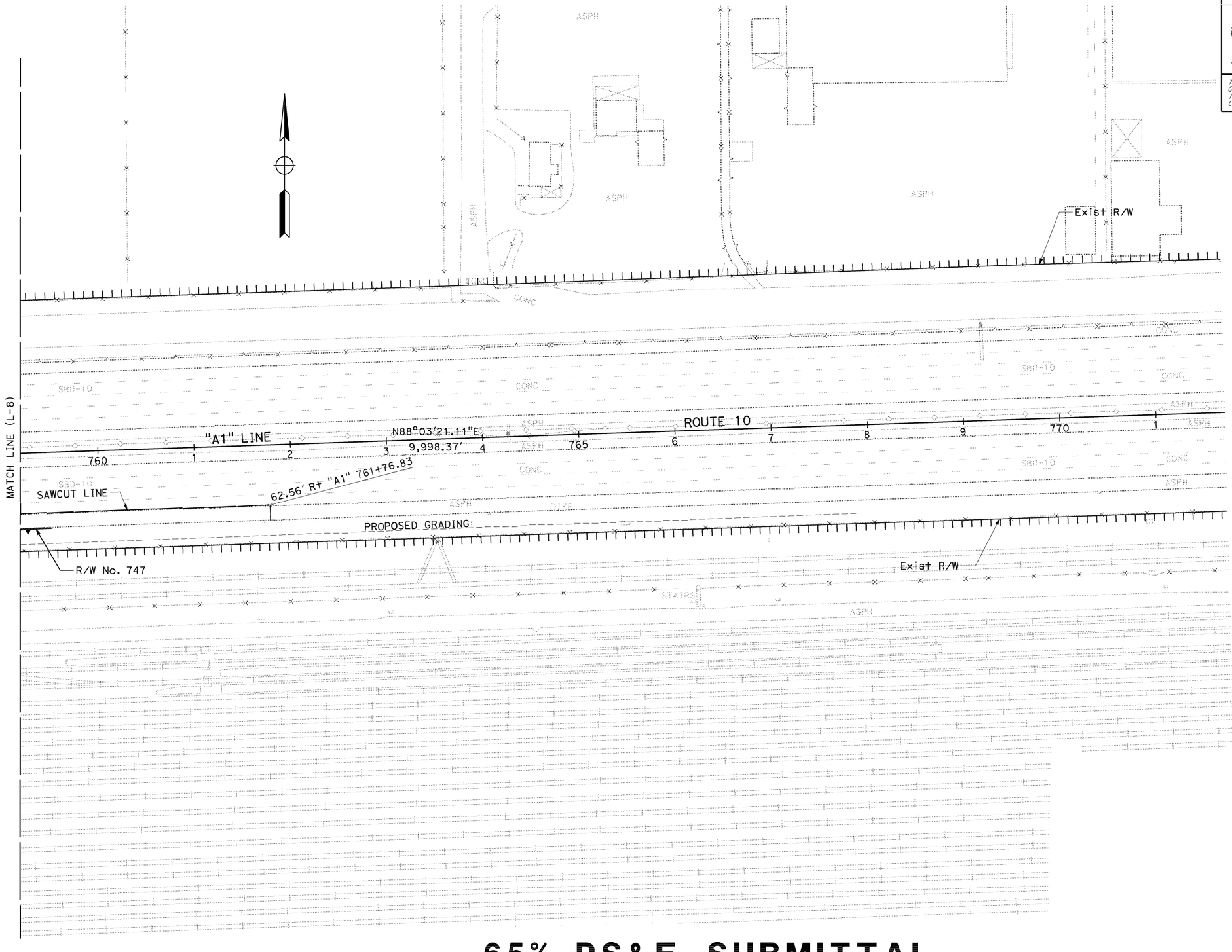

65% PS&E SUBMITTAL

LAYOUT

SCALE: 1" = 50'

L-9

LAST REVISION
DATE PLOTTED => 21-NOV-2019
TIME PLOTTED => 10:21
06-06-18

REVISED BY	DATE REVISED

CALCULATED-DESIGNED BY: J.C. ALVAREZ
CHECKED BY:

FUNCTIONAL SUPERVISOR: BEN AMIRI

STATE OF CALIFORNIA - DEPARTMENT OF TRANSPORTATION
Caltrans®
DESIGN

BORDER LAST REVISED 7/2/2010

USERNAME => s147816
DGN FILE => 0800000579ea009.dgn

RELATIVE BORDER SCALE IS IN INCHES 0 1 2 3

UNIT 2242

PROJECT NUMBER & PHASE 08000005791

MINAGAR & ASSOCIATES, INC.

ITS - Traffic/Civil/Electrical Engineering - Transportation Planning - Homeland Security - CEM

2019	Winner of the Orange County Engineering Council's Outstanding Service Award
2016	Winner of the ASCE's Outstanding Civil Engineer in the Private Sector Award in the State of California
2016	Winner of the ASCE Los Angeles Section's Outstanding Civil Engineer in the Private Sector Award
2016	Winner of the ASCE Orange County Chapter's Outstanding Civil Engineer in the Private Sector Award
2016	Certificate of Recognition for Dedication to Support the ELTP Program by Los Angeles County MTA/Metro
2016	Winner of the Orange County Engineering Council's Outstanding Engineering Service Award
2015	Orange County Business Journal's 2015 Excellence in Entrepreneurship Award Nominee
2014	Orange County Business Journal's 2014 Excellence in Entrepreneurship Award Nominee
2012	Winner of Cal-EPA/California Air Resources Board's Cool California Climate Leader
2011	Award of Excellence in Service by Los Angeles County MTA/Metro in the County of Los Angeles
2011	Award of Excellence in Service by Los Angeles County MTA/Metro in the County of Los Angeles
2010	Award of Excellence in Service by Los Angeles County MTA/Metro in the County of Los Angeles
2009	Winner of the ASCE's Outstanding Private Sector Civil Engineering Project in Metropolitan Los Angeles
2009	Winner of the Caltrans' 2009 Excellence in Transportation Award in the State of California
2007	Winner of the ASCE's Outstanding Public/Private Sector Civil Engineering Project in Metropolitan Los Angeles
2005	Winner of the APWA's Best Traffic Congestion Mitigation Project of the Year in Southern California
2004	Top Nominee of Transportation Foundation's Highway Management Program in the State of California
2003	Winner of the PTI's Best Transportation Technology Solutions Award in the United States
2002	Winner of the ITS-CA's Best Return on Investment Project Award in the State of California
2000	Award of Excellence in Service by Los Angeles County MTA/Metro in the County of Los Angeles

Celebrating 27 Years of Planning & Engineering Excellence

- **Traffic Engineering**
- **Transportation Planning**
- **ITS (Intelligent Transportation Systems)**
- **Civil/Electrical Engineering**
- **Homeland Security**
- **Construction Engineering Management**

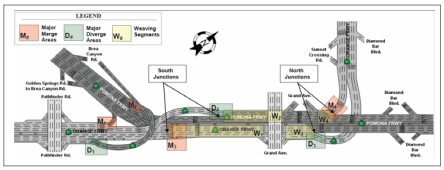

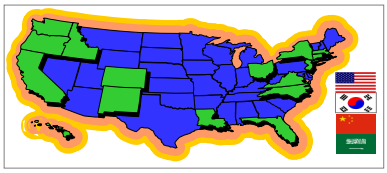

MINAGAR & ASSOCIATES, INC.
23282 Mill Creek Drive, Suite 120
Laguna Hills, CA 92653

Tel: (949)707-1199
Web: **www.minagarinc.com**

27 Years of Engineering & Planning Excellence