APPENDIX L

TIA AND VMT ASSESSMENT

This page intentionally left blank

s

Katella Avenue Amazon Facility

TRAFFIC IMPACT ANALYSIS

CITY OF CYPRESS

PREPARED BY:

Aric Evatt, PTP
aevatt@urbanxroads.com
(949) 660-1994 x204

Charlene So, P.E.
cso@urbanxroads.com
(949) 660-1994 x222

JUNE 30, 2020

TABLE OF CONTENTS

APPENDICES

This page intentionally left blank

LIST OF EXHIBITS

This page intentionally left blank

LIST OF TABLES

This page intentionally left blank

LIST OF ABBREVIATED TERMS

[1]	Reference
CA MUTCD	California Manual on Uniform Traffic Control Devices
CEQA	California Environmental Quality Act
CMP	Congestion Management Program
E+P	Existing Plus Project
HCM	Highway Capacity Manual
ICU	Intersection Capacity Utilization
ITE	Institute of Transportation Engineers
LOS	Level of Service
OCTA	Orange County Transportation Authority
OPR	Office of Planning and Research
PCE	Passenger Car Equivalents
PHF	Peak Hour Factor
Project	Katella Avenue Amazon Facility
SBCTA	San Bernardino County Transportation Authority
SCAG	Southern California Association of Governments
SCAQMD	South Coast Air Quality Management District
sf	Square Feet
TIA	Traffic Impact Analysis
tsf	Thousand Square Feet
V/C	Volume to Capacity
VMT	Vehicle Miles Traveled

This page intentionally left blank

1 INTRODUCTION

This report presents the results of the traffic impact analysis (TIA) for the proposed Katella Avenue Amazon Facility ("Project"), which is located at 6400 Katella Avenue in the City of Cypress as shown on Exhibit 1-1.

The purpose of this TIA is to evaluate the potential deficiencies to traffic and circulation associated with the development of the proposed Project, and to recommend improvements to improve deficiencies based on a comparison to established City threshold criteria. The study follows the traffic study guidelines outlined in the County of Orange Congestion Management Program (CMP). [1]

1.1 SUMMARY OF FINDINGS

The Project is proposing to construct the following improvements as design features in conjunction with development of the site:

- Both Katella Avenue and Holder Street are currently constructed to their ultimate cross-sections. However, the Project will modify curb and gutter, sidewalk, and landscaping improvements to accommodate the proposed driveways.
- The median for the westbound left turn pocket on Katella Avenue at Holder Street should be modified to accommodate a minimum of 330-feet of storage.
- The proposed driveway (Driveway 1) on Katella Avenue will be restricted to right-in/right-out (controlled via the existing raised median) with a stop control for exiting traffic.
- The driveways along Holder Street (Driveways 2 through 4) will accommodate full access (no turn restrictions) and will be controlled with a stop control for exiting traffic. These driveways are to align with the existing driveways on the east side of Holder Street.

Additional details and intersection lane geometrics are provided in Section 1.7 *Recommendations* of this report. The Project is not anticipated to result in any off-site deficiencies to the study area intersections. Therefore, no physical or operational improvements have been recommended. However, the Project Applicant will still be required to pay requisite Citywide and Regional Traffic Improvement fees consistent with the City's requirements.

Recommendation 1.1 – Prior to the issuance of building permits, the Project Applicant shall pay applicable Citywide and Regional Traffic Improvement fees, or as agreed to by the City and Project Applicant.

Although the existing 180,000 square foot (sf) corporate office building that fronts Katella Avenue will not be demolished and will be maintained in place, the building will not be occupied as part of this Project or at any point in the time in the future. The Project Applicant will agree to any necessary Condition of Approval to ensure that the building cannot be legally occupied as part of the Project Conditional Use Permit. With the office use not included or even allowed as part of the Project, trips associated with this potential use are not part of the proposed Project trip generation rate and other California Environment Quality Act (CEQA) related impacts.

EXHIBIT 1-1: PRELIMINARY SITE PLAN

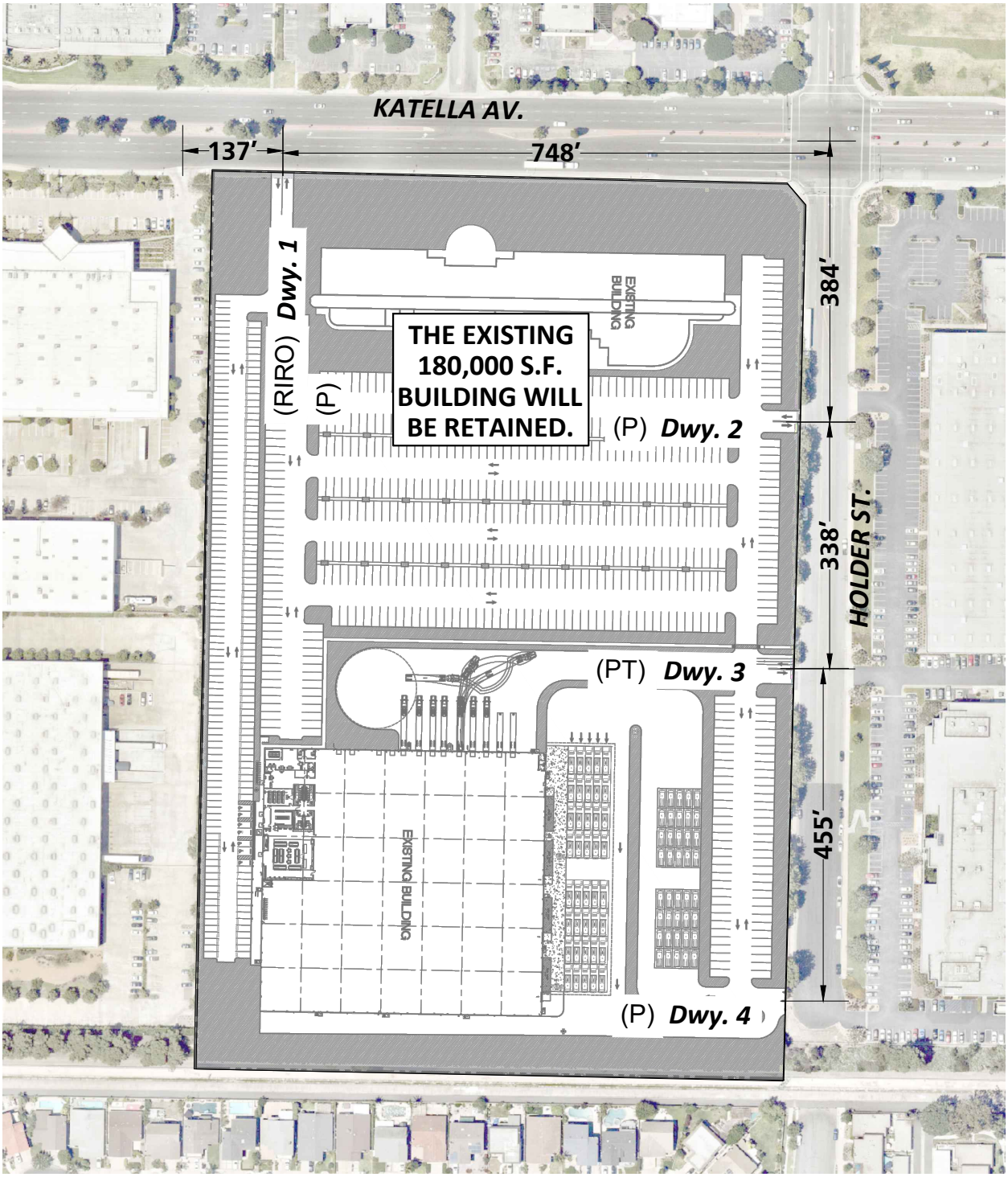

LEGEND:

RIRO = RIGHT-IN/RIGHT-OUT ONLY ACCESS
P = PASSENGER CARS ONLY
PT = PASSENGER CARS AND TRUCKS

N

13106 - siteplan-a.dwg

URBAN CROSSROADS

The site is currently occupied by the former Mitsubishi Motors Corporation, which includes 150,000 sf of warehousing use and 250,000 sf corporate headquarters office building. The proposed Project will consist of the demolition of existing buildings except the southerly warehouse building (145,004 sf) and the northern office building (180,000 sf) (demolition of approximately 70,000 square feet of the existing research and development buildings). The existing warehouse space includes 145,004 sf of warehousing space plus additional mezzanine space totaling 150,000 sf. However, the Project will not be utilizing the mezzanine space within the existing building. The remaining portion of the site will provide parking for sprinter cargo vans/flex vehicles and employees of the facility as well as access to the truck docks on the north side of the building. It should be noted that the existing northern office building (180,000 sf) that fronts Katella Avenue will not be occupied, and therefore would not generate any traffic.

1.2 PROJECT OVERVIEW

It is our understanding that the Project will occupy the existing 145,004 sf warehouse building located on the southern end of the site. The Project is anticipated to be constructed in one phase by the year 2021. As shown on Exhibit 1-1, vehicular access will be provided via the following driveways:

- Driveway 1 on Katella Avenue: Passenger cars only (right-in/right-out only) (proposed new driveway)
- Driveway 2 on Holder Street: Passenger cars only (full access)
- Driveway 3 on Holder Street: Passenger cars and trucks (full access)
- Driveway 4 on Holder Street: Passenger cars only (full access)

Trips calculated to be generated by the Project have been estimated based on operational data provided by the Project Applicant. Pursuant to discussions with City staff, the 85 percent of the peak seasonal data has been utilized for the purposes of this traffic study. It should be noted that the peak seasonal operations occur only 6 weeks out of the year (see Appendix 1.1 for additional discussion of peak seasonal operations). The Project is calculated to generate a total of 2,490 trip-ends per day with 227 AM peak hour trips and 347 PM peak hour trips. The assumptions and methods used to estimate the Project's trip generation characteristics are discussed in detail in Section 4.1 *Project Trip Generation* of this report.

1.3 ANALYSIS SCENARIOS

For the purposes of this traffic study, potential deficiencies to traffic and circulation have been assessed for each of the following scenarios:

- Existing (2020)
- Existing plus Project
- Opening Year Cumulative (2021), Without and With Project

The proposed Project's land use and zoning are consistent with the City of Cypress' General Plan, as such, long-range traffic conditions have not been evaluated.

1.3.1 EXISTING (2020) CONDITIONS

Information for Existing conditions is disclosed to represent the baseline traffic conditions as they existed at the time this report was prepared. Traffic counts were conducted in March 2020 based on vehicle classification and were converted to passenger car equivalents (PCE) due to the presence of heavy trucks within the study area. Additional modifications that were made to intersection counts due to reductions in traffic associated with on-going pandemic are discussed in further detail in Section 3.6 *Existing Traffic Counts* of this report. The Existing traffic volumes also includes 50 percent of the traffic generated by the existing on-site uses.

1.3.2 EXISTING PLUS PROJECT CONDITIONS

The Existing Plus Project (E+P) analysis determines whether or not traffic deficiencies would occur on the existing roadway system with the addition of Project traffic. The E+P analysis is intended to identify the project-specific traffic deficiencies associated solely with the development of the proposed Project (change in trips) based on a comparison of the E+P traffic conditions to Existing (2020) traffic conditions. The change in trips reflects the net difference between the proposed Project and 50 percent of the existing uses.

1.3.3 OPENING YEAR CUMULATIVE (2021) CONDITIONS

The Opening Year Cumulative conditions analysis determines the Project's contribution to near-term traffic deficiencies based on a comparison of the "With Project" traffic scenario to the "Without Project" traffic scenario. To account for background traffic growth, traffic associated with other known cumulative development projects in conjunction with an ambient growth from Existing (2020) conditions of 2.0% (annual growth rate at 2% per year, over one year) is included for Opening Year Cumulative. The background ambient growth accounts for increased traffic volumes due to generalized/unknown future development in the region that are not captured by the identified cumulative development projects.

1.4 STUDY AREA

The study area was defined in conformance with the requirements of the City of Cypress traffic study guidelines. Based on these guidelines, the area to be studied shall include any intersections at which the proposed project will add 50 or more peak hour trips. A traffic study scoping agreement summarizing the study area, trip generation, trip distribution and analysis methodology was provided to the City of Cypress for review. The agreement approved by the City of Cypress is included in Appendix 1.1.

8 study area intersection locations shown on Exhibit 1-2 and listed in Table 1-1 were selected for this TIA based on the City of Cypress's traffic study requirements that require analysis of intersection locations in which a proposed Project is anticipated to contribute 50 or more peak-hour trips and based on Project access.

EXHIBIT 1-2: LOCATION MAP

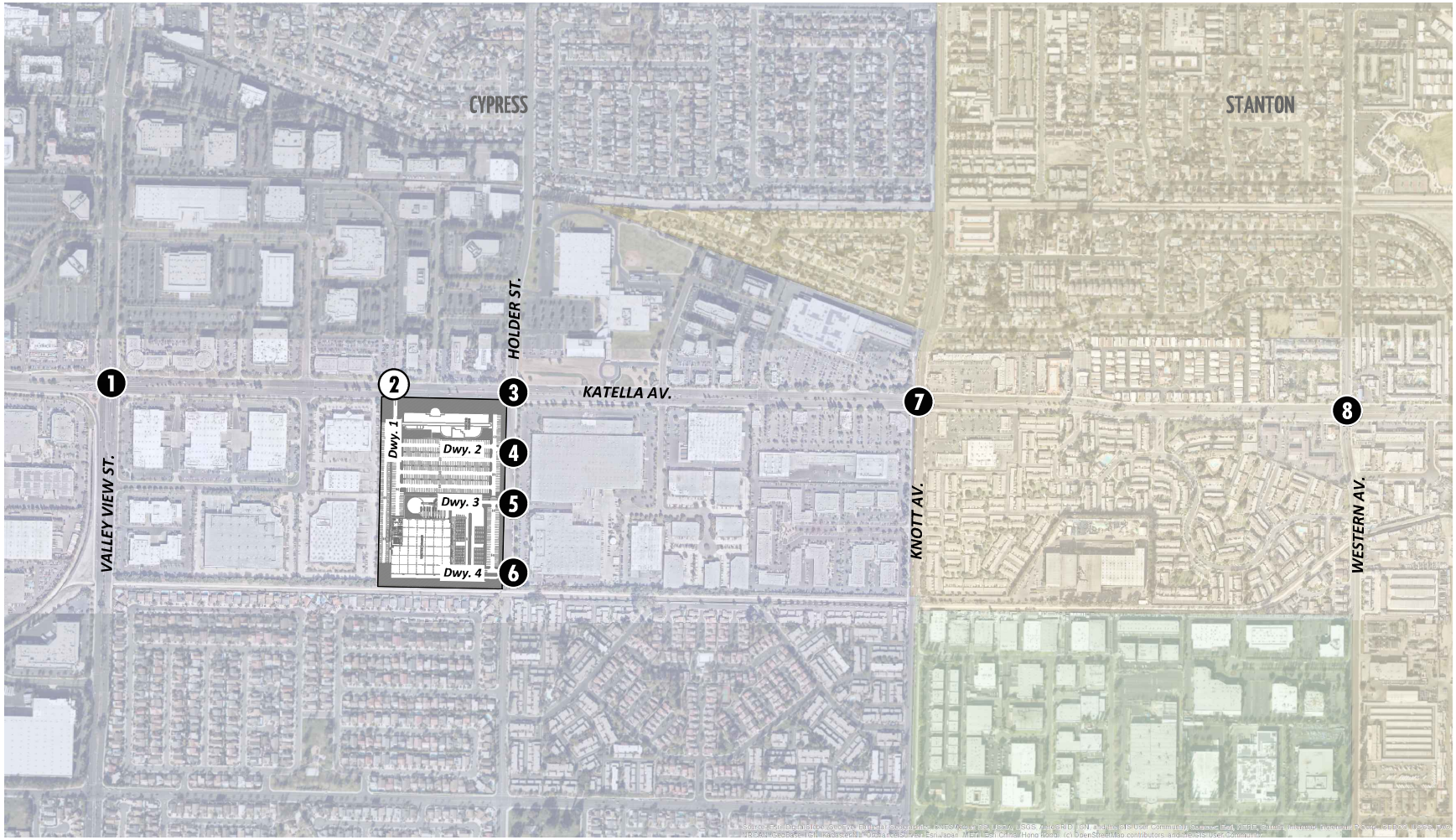

LEGEND:

- ❶ = EXISTING INTERSECTION ANALYSIS LOCATION
- ⓪ = FUTURE INTERSECTION ANALYSIS LOCATION

N

TABLE 1-1: INTERSECTION ANALYSIS LOCATIONS

ID	Intersection Location	Jurisdiction	CMP Intersection?
1	Valley View Street & Katella Avenue	City of Cypress	Yes
2	Driveway 1 & Katella Avenue – Future Intersection	City of Cypress	No
3	Holder Street & Katella Avenue	City of Cypress	No
4	Holder Street & Driveway 2	City of Cypress	No
5	Holder Street & Driveway 3	City of Cypress	No
6	Holder Street & Driveway 4	City of Cypress	No
7	Knott Avenue & Katella Avenue	City of Cypress, City of Stanton	No
8	Western Avenue & Katella Avenue	City of Stanton	No

The intent of a Congestion Management Program (CMP) is to more directly link land use, transportation, and air quality, thereby prompting reasonable growth management programs that will effectively utilize new transportation funds, alleviate traffic congestion and related impacts, and improve air quality. Counties within California have developed CMPs with varying methods and strategies to meet the intent of the CMP legislation. The intersection of Valley View Street and Katella Avenue is identified as a CMP intersection in the County of Orange CMP. [1]

1.5 SENATE BILL 743 – VEHICLE MILES TRAVELED (VMT)

Senate Bill 743 (SB 743), approved in 2013, endeavors to change the way transportation impacts will be determined according to the California Environmental Quality Act (CEQA). The Office of Planning and Research (OPR) has recommended the use of vehicle miles traveled (VMT) as the replacement for automobile delay-based LOS. In December 2018, the Natural Resources Agency finalized updates to CEQA Guidelines to incorporate SB 743 (i.e., VMT). While a lead agency has the option to immediately apply the new VMT based analysis methodology and thresholds for the purposes of evaluating transportation impacts, statewide application of the new guidelines is required July 1, 2020. VMT analysis for the Project has been prepared under separate cover. [2] As such, the LOS analysis provided in this TIA is for information and to confirm General Plan conformity and is not intended to support environmental review findings.

1.6 ANALYSIS FINDINGS

This section provides a summary of the analysis results for Existing, E+P, and Opening Year Cumulative traffic conditions. For signalized intersections, analysis results are provided using the Intersection Capacity Utilization (ICU). Unsignalized study area intersections have been evaluated using the Highway Capacity Manual (HCM) methodology.

Existing (2020) Conditions

A summary of level of service (LOS) results for Existing traffic conditions are presented in Exhibit 1-3. As shown, all of the study area intersections are currently operating at an acceptable LOS.

Existing Plus Project (E+P) Conditions

As shown on Exhibit 1-3 and consistent with Existing (2020) traffic conditions, the study area intersections are anticipated to continue to operate at an acceptable LOS with the addition of Project traffic (net change in trips).

Opening Year Cumulative (2021) Conditions

As shown on Exhibit 1-3, the study area intersections are anticipated to continue to operate at an acceptable LOS for Opening Year Cumulative (2021) Without and With Project traffic conditions. The intersection of Western Avenue and Katella Avenue is anticipated to operate at LOS E under Opening Year Cumulative (2021) Without Project traffic conditions (which is considered acceptable as Katella Avenue is classified as a Smart Street in the City of Stanton's General Plan). Based on the summary of analysis results above of the peak hour operations at the study area intersections, the Project is not anticipated to result in either direct or cumulative traffic deficiencies.

EXHIBIT 1-3: SUMMARY OF DEFICIENT INTERSECTIONS BY ANALYSIS SCENARIO

#	Intersection	Existing (2020)	E+P	Opening Year Cumulative (2021) Without Project	Opening Year Cumulative (2021) With Project
1	Valley View St. & Katella Av.	◐	◐	◐	◐
2	Dwy. 1 & Katella Av.	NA	◐	NA	◐
3	Holder St. & Katella Av.	◐	◐	◐	◐
4	Holder St. & Dwy. 2	◐	◐	◐	◐
5	Holder St. & Dwy. 3	◐	◐	◐	◐
6	Holder St. & Dwy. 4	◐	◐	◐	◐
7	Knott Av. & Katella Av.	◐	◐	◐	◐
8	Western Av. & Katella Av.	◐	◐	◐	◐

LEGEND:

- ◔ ▪ AM PEAK HOUR
- ◑ ▪ PM PEAK HOUR
- ◐ ▪ LOS A-E
- ◐ ▪ LOS E
- ◐ ▪ LOS F
- NA ▪ NOT AN ANALYSIS LOCATION FOR THIS SCENARIO

1.7 RECOMMENDATIONS

Roadway improvements necessary to provide site access and on-site circulation are assumed to be constructed in conjunction with site development and are described below. These improvements would be in place prior to Project building occupancy.

1.7.1 SITE ACCESS IMPROVEMENT RECOMMENDATIONS

The recommended site access driveway improvements for the Project are described below. Exhibit 1-4 illustrates the recommended site access and site adjacent roadway improvements. Construction of on-site and site adjacent improvements shall occur in conjunction with adjacent Project development activity or as needed for Project access purposes.

- Both Katella Avenue and Holder Street are currently constructed to their ultimate cross-sections. However, the Project will modify curb and gutter, sidewalk, and landscaping improvements to accommodate the proposed driveways.
- The median for the westbound left turn pocket on Katella Avenue at Holder Street should be modified to accommodate a minimum of 360-feet of storage. Similarly, the median should be modified to accommodate 265-feet of storage for the eastbound left turn pocket on Katella Avenue at Holder Street.
- Driveway 1 on Katella Avenue is proposed to be controlled by a stop sign on the northbound approach and a single egress and ingress lane on the driveway. The driveway would be restricted to right-in/right-out access only to be controlled by the existing raised median. This driveway will serve passenger cars only.
- Driveway 2 on Holder Street is proposed to be controlled by a stop sign on the eastbound approach and a single egress and ingress lane on the driveway. The existing painted median (two-way-left-turn-lane) will be utilized for accommodating left turns into and out of Driveway 2. This driveway will serve passenger cars only. It should be noted that this driveway will align with the existing driveway to the east.
- Driveway 3 on Holder Street is proposed to be controlled by a stop sign on the eastbound approach and a single egress and ingress lane on the driveway. The existing painted median (two-way-left-turn-lane) will be utilized for accommodating left turns into and out of Driveway 3. This driveway will serve passenger cars and all heavy trucks. It should be noted that this driveway will align with the existing driveway to the east.
- Driveway 4 on Holder Street is proposed to be controlled by a stop sign on the eastbound approach and a single egress and ingress lane on the driveway. This driveway will serve passenger cars only. It should be noted that this driveway will align with the existing driveway to the east.

On-site traffic signing and striping should be implemented in conjunction with detailed construction plans for the Project site.

Sight distance at each project access point should be reviewed with respect to City of Cypress and American Association of State Highway Transportation Officials' (AASHTO) A Policy on Geometric Design of Highways and Streets (Green Book) sight distance standards at the time of preparation of final grading, landscape and street improvement plans. [3]

EXHIBIT 1-4: SITE ADJACENT ROADWAY AND SITE ACCESS RECOMMENDATIONS

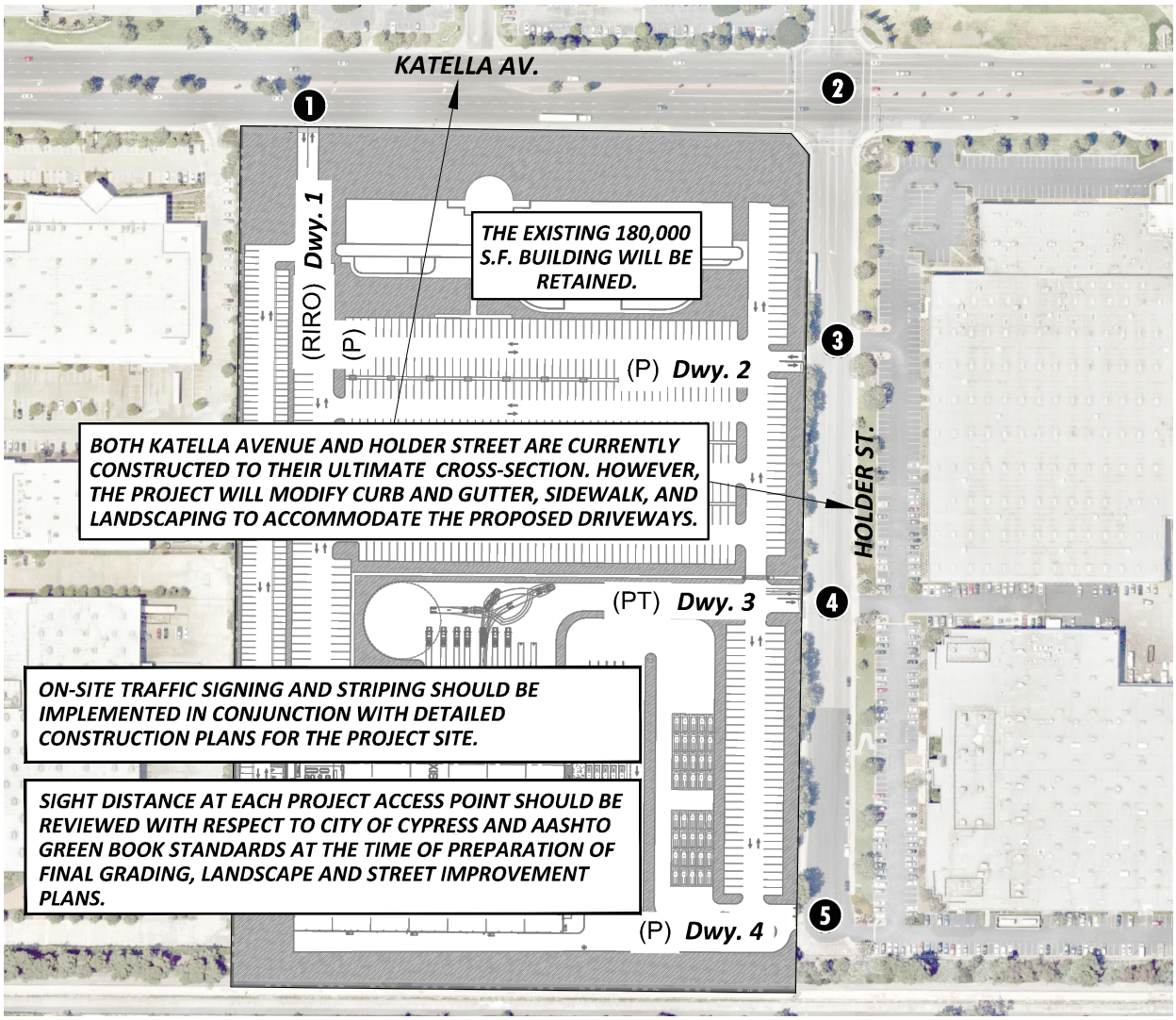

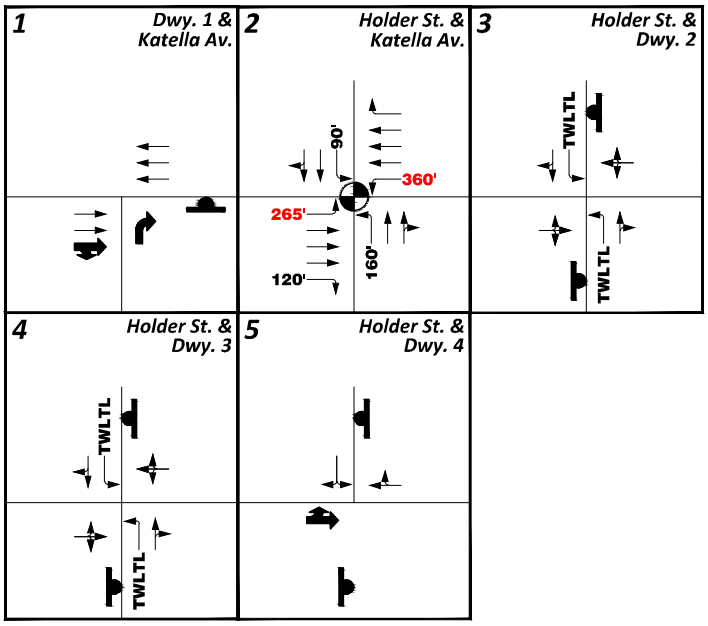

LEGEND:

- = TRAFFIC SIGNAL
- = STOP SIGN
- = EXISTING LANE
- = LANE IMPROVEMENT
- 150' = EXISTING TURN POCKET LENGTH
- 150' = TURN POCKET LENGTH IMPROVEMENT
- TWLTL = TWO WAY LEFT TURN LANE

N

13106 - recs.dwg

1.7.2 QUEUING ANALYSIS AT THE PROJECT DRIVEWAYS AND SITE ADJACENT INTERSECTIONS

A queuing analysis was conducted at the Project driveways along Katella Avenue and Holder Street for Opening Year Cumulative (2021) With Project traffic conditions to identify the 95th percentile peak hour queues. The analysis was conducted for both the weekday AM and weekday PM peak hours. The 95th percentile queues for the applicable study area intersections can be found in Appendix 1.2.

The traffic modeling and signal timing optimization software package SimTraffic has been utilized to assess queues at the Project driveways and site adjacent intersections. SimTraffic is designed to model networks of signalized and unsignalized intersections, with the primary purpose of checking and fine-tuning signal operations. SimTraffic uses the input parameters from Synchro (Version 10) to generate random simulations. The 95th percentile queue is not necessarily ever observed; it is simply based on statistical calculations (or Average Queue plus 1.65 standard deviations).

The random simulations generated by SimTraffic have been utilized to determine the 95th percentile queue lengths observed for each turn lane. A SimTraffic simulation has been recorded 5 times, during the weekday AM and weekday PM peak hours, and has been seeded for 30-minute periods with 60-minute recording intervals. As shown in the worksheets, a queue is anticipated in the westbound left turn lane at the intersection of Holder Street and Katella Avenue. As such, the recommendations shown on Exhibit 1-4 reflect the minimum storage length necessary to accommodate the anticipated 95th percentile queues.

Queuing analysis results are summarized on Table 1.2-1 in Appendix 1.2. As shown on Table 1.2-1, the following turning movements at the intersection of Holder Street and Katella Avenue are anticipated to have 95th percentile peak hour queues that exceed the available storage:

- Southbound left turn lane
- Eastbound left turn lane
- Eastbound right turn lane
- Westbound left turn lane
- Westbound right turn lane

The Project does not contribute any traffic to the southbound left and westbound right turn movements. As such, no improvements have been recommended to address these queuing issues. Upon review of field conditions, the eastbound right turn lane appears to accommodate up to 180-feet of storage including the right turn transition area. Although the eastbound right turn pocket storage could be increased by modifying the existing curb, the additional 36-feet of necessary storage could be accommodated within the transition without affecting through traffic along Katella Avenue. It should also be noted that the outer through lane is wide enough to accommodate stacking for the eastbound right turn lane without adversely affecting eastbound through traffic on Katella Avenue.

As shown on Exhibit 1-4, recommendations have been made to modify the storage for the eastbound left turn lane and westbound left turn lanes in order to accommodate the 95th percentile queues.

1.8 TRUCK ACCESS AND CIRCULATION

Due to the typical wide turning radius of large trucks, a truck turning template has been overlaid on the site plan at the Project driveway in order to determine appropriate curb radii and to verify that trucks will have sufficient space to execute turning maneuvers (see Exhibit 1-5). As shown on Exhibit 1-5, Driveway 3 on Holder Street must be widened by 5 feet and accommodate a 35-foot curb radius on the northwest corner in order to accommodate the wide turning radius of heavy trucks (WB-67, which has a 53-foot trailer).

EXHIBIT 1-5: TRUCK ACCESS

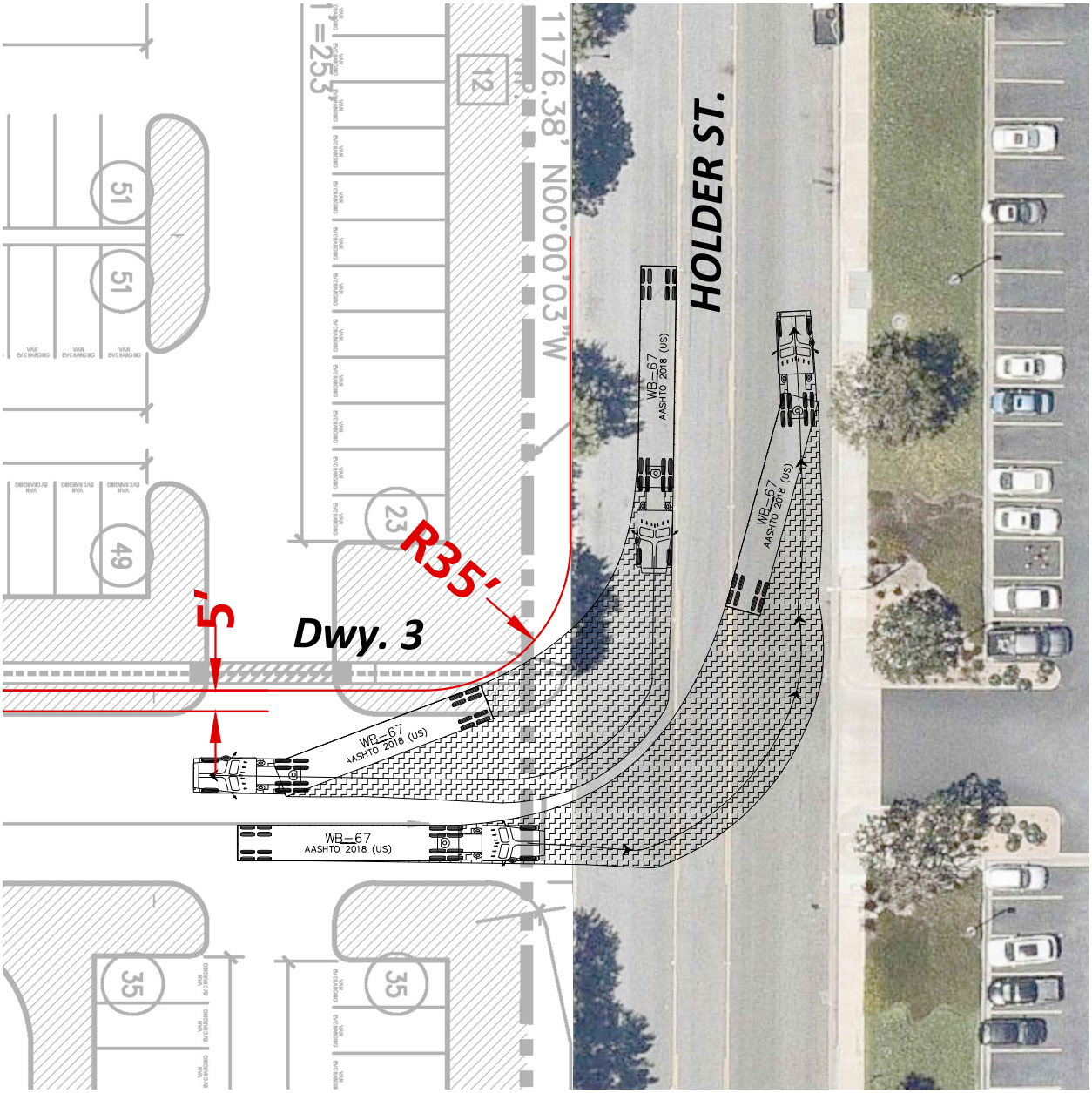

LEGEND:

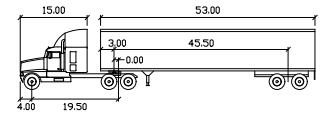

WB-67

	feet		
Tractor Width	: 8.00	Lock to Lock Time	: 6.0
Trailer Width	: 8.50	Steering Angle	: 28.4
Tractor Track	: 8.00	Articulating Angle	: 75.0
Trailer Track	: 8.50		

GRAPHIC SCALE
0 20 40
1"=40'

N

This Page Intentionally Left Blank

2 METHODOLOGIES

This section of the report presents the methodologies used to perform the traffic analyses summarized in this report. The methodologies described are generally consistent with the 2019 Orange County CMP, City of Cypress, and City of Stanton traffic study requirements. [1] [3] [4]

2.1 LEVEL OF SERVICE

Traffic operations of roadway facilities are described using the term "Level of Service" (LOS). LOS is a qualitative description of traffic flow based on several factors such as speed, travel time, delay, and freedom to maneuver. Six levels are typically defined ranging from LOS A, representing completely free-flow conditions, to LOS F, representing breakdown in flow resulting in stop-and-go conditions. LOS E represents operations at or near capacity, an unstable level where vehicles are operating with the minimum spacing for maintaining uniform flow.

2.2 INTERSECTION CAPACITY ANALYSIS

The definitions of LOS for interrupted traffic flow (flow restrained by the existence of traffic signals and other traffic control devices) differ slightly depending on the type of traffic control. The LOS is typically dependent on the quality of traffic flow at the intersections along a roadway. LOS analysis was conducted to determine peak hour operations using the Intersection Capacity Utilization (ICU) methodology for signalized study intersections. [6] The Highway Capacity Manual (HCM) (6th Edition) methodology was used to determine LOS's for unsignalized intersections. The HCM (6th Edition) methodology expresses the LOS at an intersection in terms of average control delay time for the various intersection approaches. [6] The HCM uses different procedures depending on the type of intersection control.

2.2.1 SIGNALIZED INTERSECTIONS

The City of Cypress and City of Stanton require signalized intersections to be evaluated through ICU analysis which compares the peak hour traffic volumes to intersection capacity. Lane capacities of 1,600 vehicles per hour of green time have been assumed for the ICU calculations. 0.10 of volume to capacity (V/C) has been assumed representing 10 seconds of delay for the yellow and all-red signal indication and inherent vehicle delay between cycles with an assumed signal cycle of 100 seconds. The ICU LOS definitions based on V/C ratio are presented in Table 2-1. The Traffix software package has been utilized to evaluate the signalized intersections using the ICU methodology with the analysis parameters discussed above.

TABLE 2-1 INTERSECTION CAPACITY UTILIZATION (ICU) LOS DEFINITIONS

Level of Service	Critical Volume to Capacity Ratio
A	0.00 - 0.60
B	0.61 - 0.70
C	0.71 - 0.80
D	0.81 - 0.90
E	0.91 - 1.00
F	>1.00

Source: 2019 Orange County CMP

The peak hour traffic volumes have been adjusted using a peak hour factor (PHF) to reflect peak 15-minute volumes. Common practice for LOS analysis is to use a peak 15-mintue rate of flow. However, flow rates are typically expressed in vehicles per hour. The PHF is the relationship between the peak 15-minute flow rate and the full hourly volume (e.g. PHF = [Hourly Volume] / [4 x Peak 15-minute Flow Rate]). The use of a 15-minute PHF produces a more detailed analysis as compared to analyzing vehicles per hour. Existing PHFs have been used for all analysis scenarios for HCM intersections. ICU intersections have assumed a PHF of 1.00 per the ICU methodology. Per the HCM, PHF values over 0.95 often are indicative of high traffic volumes with capacity constraints on peak hour flows while lower PHF values are indicative of greater variability of flow during the peak hour. [6] As such, new intersections have been conservatively evaluated with a PHF of 0.92.

2.2.2 UNSIGNALIZED INTERSECTIONS

The City of Cypress requires the operations of unsignalized intersections be evaluated using the methodology described in the HCM (6th Edition). [6] The LOS rating is based on the weighted average control delay expressed in seconds per vehicle (see Table 2-2).

TABLE 2-2: UNSIGNALIZED INTERSECTION HCM LOS THRESHOLDS

Description	Average Control Delay Per Vehicle (Seconds)	Level of Service, V/C ≤ 1.0	Level of Service, V/C > 1.0
Little or no delays.	0 to 10.00	A	F
Short traffic delays.	10.01 to 15.00	B	F
Average traffic delays.	15.01 to 25.00	C	F
Long traffic delays.	25.01 to 35.00	D	F
Very long traffic delays.	35.01 to 50.00	E	F
Extreme traffic delays with intersection capacity exceeded.	> 50.00	F	F

Source: HCM (6th Edition)

At two-way or side-street stop-controlled intersections, The LOS criteria apply to each lane on a given approach and to each approach on the minor street. LOS is not reported for major-street approaches or for the intersection as a whole, but rather the worst movement on the minor

street approaches are reported instead. For all-way stop controlled intersections, LOS is based solely on control delay for assessment of LOS at the approach and intersection levels.

The traffic modeling software package Synchro (Version 10) has been utilized to analyze unsignalized intersections within the study area. Synchro is a macroscopic traffic software program that utilizes the unsignalized intersection capacity analysis as specified in the HCM (6th Edition). [6] Macroscopic level models represent traffic in terms of aggregate measures for each movement at the study intersections. Equations are used to determine measures of effectiveness such as delay and queue length.

2.3 TRAFFIC SIGNAL WARRANT ANALYSIS METHODOLOGY

The term "signal warrants" refers to the list of established criteria used by Caltrans and other public agencies to quantitatively justify or ascertain the potential need for installation of a traffic signal at an otherwise unsignalized intersection. This TIA uses the signal warrant criteria presented in the Caltrans 2014 California Manual on Uniform Traffic Control Devices (CA MUTCD) for all study area intersections. [7]

The signal warrant criteria for Existing conditions are based upon several factors, including volume of vehicular and pedestrian traffic, frequency of accidents, and location of school areas. The 2014 CAMUTCD indicates that the installation of a traffic signal should be considered if one or more of the signal warrants are met. [7] Specifically, this TIA utilizes the Peak Hour Volume-based Warrant 3 as the appropriate representative traffic signal warrant analysis for Existing traffic conditions. Warrant 3 is appropriate to use for this TIA because it provides specialized warrant criteria for intersections with rural characteristics (e.g. located in communities with populations of less than 10,000 persons or with adjacent major streets operating above 40 miles per hour). For the purposes of this study, the speed limit was the basis for determining whether Urban or Rural warrants were used for a given intersection. It should be noted that Holder Street has a posted speed limit of 35 miles per hour. As such, urban (as opposed to rural) warrants have been utilized.

Traffic signal warrant analyses were performed for the following unsignalized study area intersections (see Table 2-3):

TABLE 2-3: TRAFFIC SIGNAL WARRANT ANALYSIS LOCATIONS

ID	Intersection Location	Jurisdiction
3	Holder Street & Driveway 2	City of Cypress
4	Holder Street & Driveway 3	City of Cypress

Traffic signal warrant analysis will not be performed for Driveway 1 on Katella Avenue as it is an access-controlled driveway and not a suitable location for the installation of a traffic signal. Similarly, traffic signal warrant analysis will also not be performed at Driveway 4 as the conflict volume is low at the terminus of Holder Street and would not be a suitable location for the installation of a traffic signal.

It is important to note that a signal warrant defines the minimum condition under which the installation of a traffic signal might be warranted. Meeting this threshold condition does not require that a traffic control signal be installed at a particular location, but rather, that other traffic factors and conditions be evaluated in order to determine whether the signal is truly justified. It should also be noted that signal warrants do not necessarily correlate with LOS. An intersection may satisfy a signal warrant condition and operate at or above acceptable LOS or operate below acceptable LOS and not meet a signal warrant.

2.4 LOS CRITERIA

Table 2-4 summarizes the minimum LOS for each study area intersection based on the LOS criteria outlined below for each applicable jurisdiction.

2.4.1 CITY OF CYPRESS

The definition of an intersection deficiency has been obtained from the City's General Plan. The City of Cypress has adopted LOS D or better as the desired citywide operating standard for most City streets. However, given the influence of regional traffic on Valley View Street, Lincoln Avenue, and Katella Avenue, which are beyond the control of the City of Cypress, LOS E or better has been adopted as the minimum operating LOS for street segments and intersections on these arterials due to the high volume of traffic carried on these roadways.

2.4.2 CITY OF STANTON

Pursuant to Goal ICS-1.1, Action ICS-1.1.2(d), the City of Stanton requires that LOS D or better be maintained on City streets and LOS E or better for CMP or Smart Street roadways. Katella Avenue is identified as a Smart Street in the City of Stanton.

2.4.3 ORANGE COUNTY CMP

The CMP definition of deficiency is based on maintaining a level of service standard of LOS E or better unless the levels of service from the baseline CMP dataset were lower. [1] The intersection of Valley View Street and Katella Avenue is a CMP intersection and has a minimum LOS of E.

TABLE 2-4: MINIMUM LOS

#	Intersection	Jurisdiction	Minimum Level of Service
1	Valley View St. & Katella Av.	City of Cypress (CMP Intersection)	E
2	Driveway 1 & Katella Av.	City of Cypress	D
3	Holder St. & Katella Av.	City of Cypress	E
4	Holder St. & Driveway 2	City of Cypress	D
5	Holder St. & Driveway 3	City of Cypress	D
6	Holder St. & Driveway 4	City of Cypress	D
7	Knott Av. & Katella Av.	City of Cypress, City of Stanton	E
8	Western Av. & Katella Av.	City of Stanton	E

2.5 THRESHOLD CRITERIA

2.5.1 CITY OF CYPRESS

For the study area intersections that lie within the City of Cypress, to determine whether the addition of project traffic (as defined through the comparison of Existing to E+P traffic conditions) at a study intersection would result in a direct project-specific traffic deficiency, the following conditions must occur:

- Peak hour project traffic plus existing traffic causes an intersection to operate at LOS E or F (non-CMP intersections) or LOS F (CMP intersections)

2.5.2 CITY OF STANTON

For the study area intersections that lie within the City of Stanton, to determine whether the addition of project traffic (as defined through the comparison of Existing to E+P traffic conditions) at a study intersection would result in a direct project-specific traffic deficiency, the following conditions must occur:

- Peak hour project traffic plus existing traffic causes an intersection to operate at LOS E or F or
- If the addition of project traffic is forecast to increase the v/c ratio at an intersection by 3% (v/c ≥ 0.030) of the LOS E capacity.

2.5.3 ORANGE COUNTY CMP

Projects with the potential to create an impact of more than 3% of LOS E capacity on CMP Highway system links should require a TIA. All projects generating 2,400 or more daily trips should require a TIA for CMP evaluation. If a project will have direct access to a CMP link this threshold should be reduced to 1,600 or more daily trips. A TIA should not be required again if one has already been performed for the project as part of an earlier development approval which takes the impact on the CMP Highway System into account.

This Page Intentionally Left Blank

3 AREA CONDITIONS

This section provides a summary of the existing circulation network, the City of Cypress and City of Stanton General Plan Circulation Networks and a review of existing peak hour intersection operations and traffic signal warrant analyses.

3.1 EXISTING CIRCULATION NETWORK

The study area includes a total of 8 existing and future intersections as shown previously on Exhibit 1-2. Exhibit 3-1 illustrates the study area intersections located near the proposed Project and identifies the number of through traffic lanes for existing roadways and intersection traffic controls.

3.2 CITY OF CYPRESS GENERAL PLAN CIRCULATION NETWORK

As previously noted, the Project site is located within the City of Cypress. Exhibit 3-2 shows the City of Cypress General Plan street classification network and Exhibit 3-3 shows the standard street sections for these roadways. [3] The roadway classifications and planned (ultimate) roadway cross-sections of the major roadways within the study area, as identified on the City of Cypress General Plan Circulation Network, are described subsequently.

Valley View Street and **Katella Avenue**: Valley View Street and Katella Avenue are classified as a Major street. A major street serves as the primary route for the movement of traffic within the City as well as a connector to neighboring cities. A major street includes a 16-foot raised median within a 120-foot right-of-way. Valley View Street is 6-lane, divided roadway within the study area. Katella Avenue is a 6-lane, divided roadway within the study area.

Holder Street and **Knott Avenue**: Holder Street and Knott Avenue are classified as a Secondary street. A secondary street consists of an 84-foot right-of-way. The existing street includes a painted median (two-way-left-turn lane). Holder Street is a 4-lane, undivided roadway north of Katella Avenue and 2-lanes separated by a painted median south of Katella Avenue. Knott Avenue is a 4-lane, divided roadway within the study area.

3.3 CITY OF STANTON GENERAL PLAN CIRCULATION NETWORK

The study area also includes intersections that shares a border with or are exclusively located within the City of Stanton. Exhibit 3-4 shows the City of Stanton General Plan roadway classifications. [4] The roadway classifications and planned roadway cross-sections of the major roadways within the study area, as identified on the City of Stanton's General Plan circulation Network, are described subsequently.

EXHIBIT 3-1: EXISTING NUMBER OF THROUGH LANES AND INTERSECTION CONTROLS

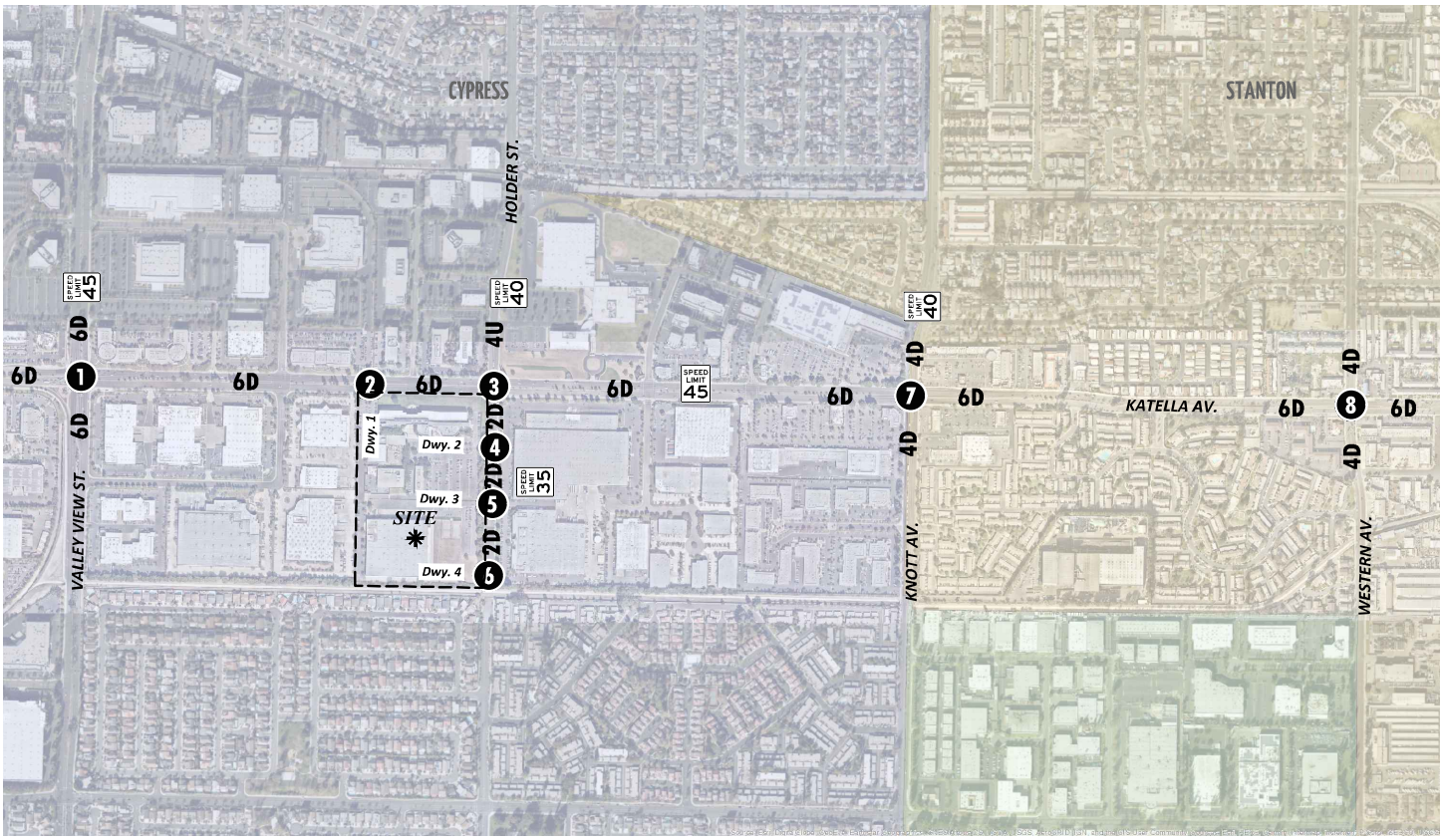

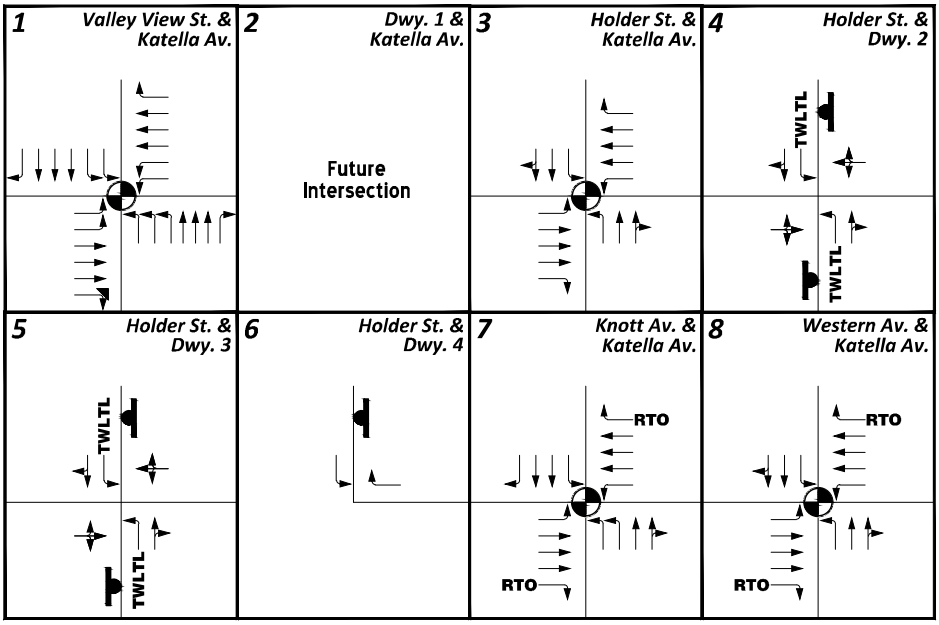

LEGEND:

- = TRAFFIC SIGNAL
- = STOP SIGN
- 4 = NUMBER OF LANES
- D = DIVIDED
- U = UNDIVIDED
- = FREE RIGHT TURN
- RTO = RIGHT TURN OVERLAP
- TWLTL = TWO WAY LEFT TURN LANE
- SPEED LIMIT 25 = SPEED LIMIT (MPH)

N

EXHIBIT 3-2: CITY OF CYPRESS GENERAL PLAN ARTERIAL SYSTEM

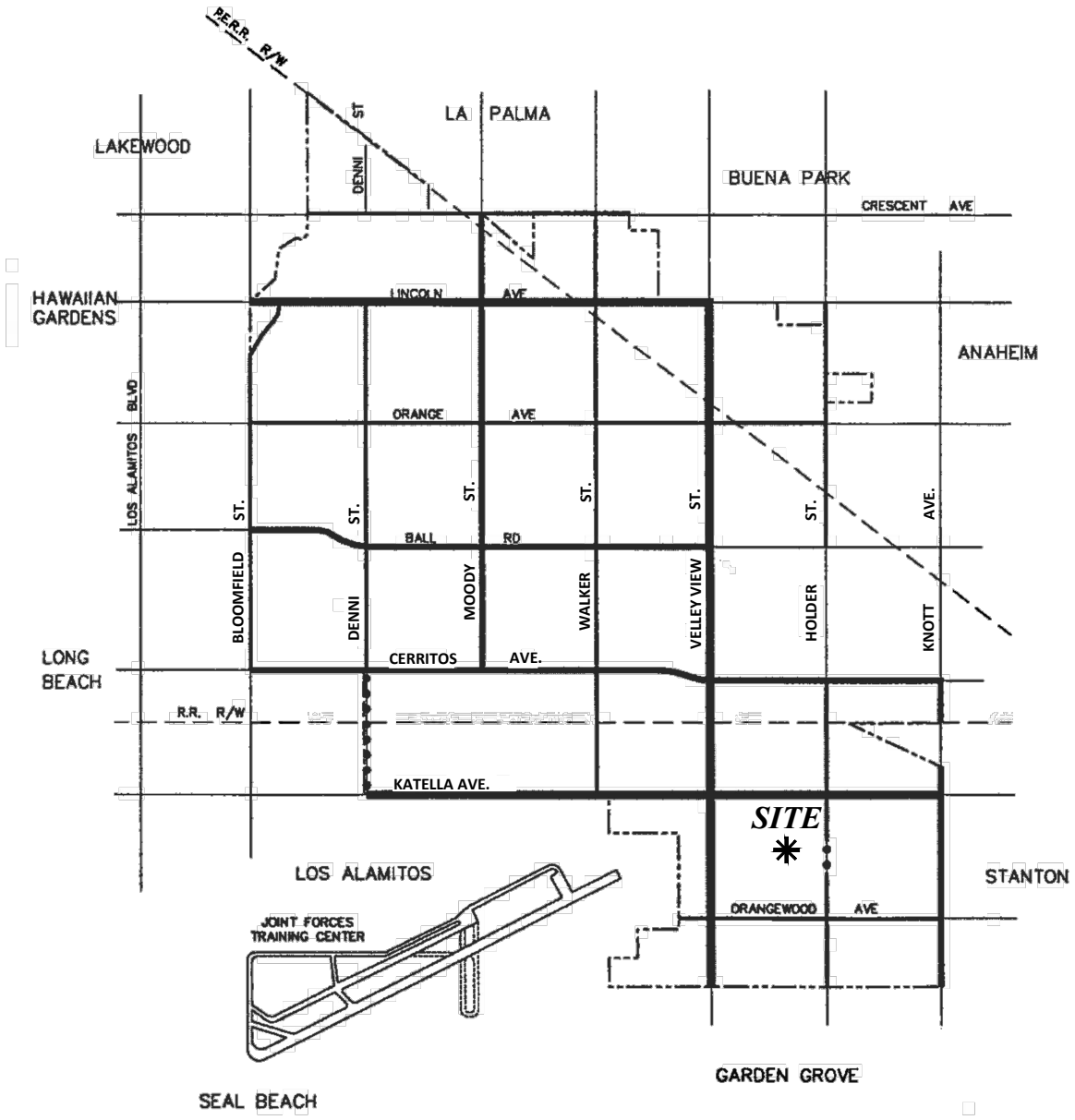

LEGEND

- MAJOR
- PRIMARY
- SECONDARY
- INCOMPLETE SECONDARY LINKS

Source: City of Cypress General Plan

N

EXHIBIT 3-3: CITY OF CYPRESS ROADWAY CROSS-SECTIONS

MAJOR STREET

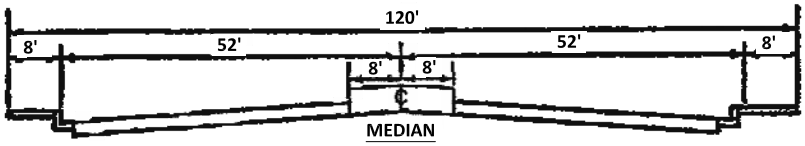

PRIMARY STREET

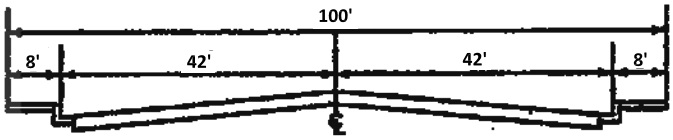

SECONDARY STREET

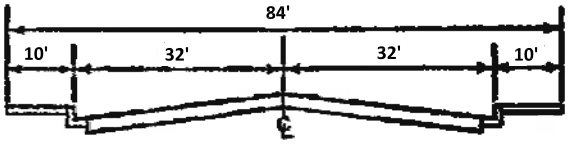

LINCOLN AVENUE TYPICAL STREET SECTION

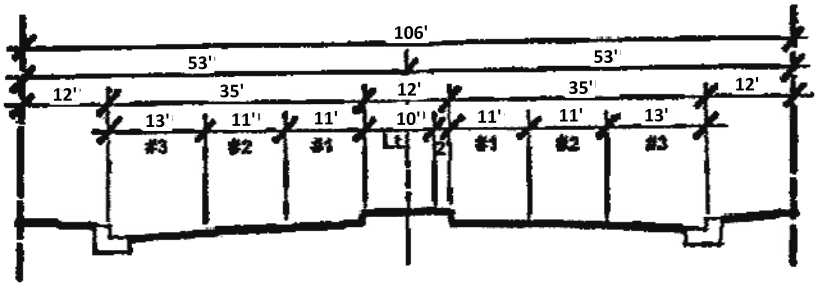

Source: City of Cypress General Plan

EXHIBIT 3-4: CITY OF STANTON GENERAL PLAN ROADWAY CLASSIFICATIONS

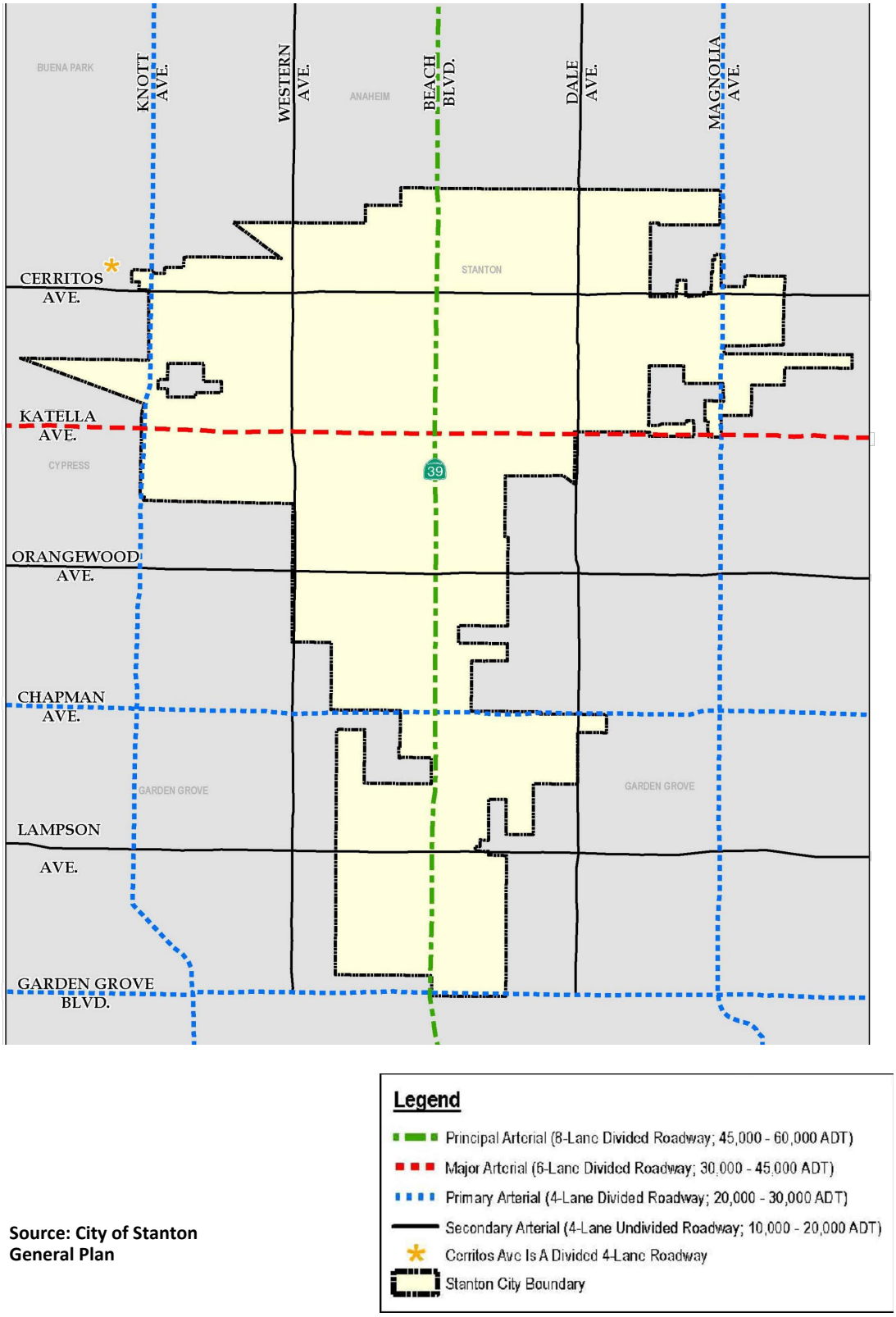

Source: City of Stanton General Plan

Katella Avenue: Katella Avenue is classified as a Major Arterial. Major arterials are six-lane divided roadways that carry between 30,000 to 45,000 vehicles per day. Katella Avenue is also identified as a Smart Street within the City of Stanton (the other Smart Street being Beach Boulevard). The Smart Street concept is to improve roadway capacity and traffic flow through the implementation of traffic signal synchronization, bus turnouts, intersection improvements, and addition of travel lanes. Katella Avenue is a 6-lane, divided roadway within the study area.

Knott Avenue: Knott Avenue is classified as a Primary Arterial. Primary arterials are four-lane divided roadways that carry 20,000 to 30,000 vehicles per day. Knott Avenue is a 4-lane, divided roadway within the study area.

Western Avenue: Western Avenue is classified as a Secondary Arterial. Secondary arterials are four-lane undivided roadways that carry 10,000 to 20,000 vehicles per day. Western Avenue is a 4-lane, divided roadway within the study area.

3.4 TRUCK ROUTES

The City of Cypress designated truck route map is shown on Exhibit 3-5. Katella Avenue is a truck route and leads to other City truck routes along Valley View Street to the west and Knott Avenue to the east. Both Valley View Street and Knott Avenue are also designated as truck routes. The designated truck route map has been utilized to route truck traffic from both the proposed Project and applicable future cumulative development projects in the study area.

3.5 BICYCLE & PEDESTRIAN FACILITIES

The City of Cypress' bike path plan is shown on Exhibit 3-6 and the City of Stanton's bicycle facilities are shown on Exhibit 3-7. Class I bikeways are off-road bike/pedestrian trails/facilities and Class II bikeways are on-road, striped bike routes. Holder Street is proposed as a future local bikeway. There is an existing Class I off-road bike path on the south side of the Project along the Stanton Storm Channel. Knott Avenue is proposed to include Class II striped bike lanes, while Western avenue currently is striped with Class II bike lanes. Field observations conducted in March 2020 indicate nominal pedestrian and bicycle activity within the study area. Existing pedestrian facilities (sidewalk and crosswalk) and bus stop locations within the study area are shown on Exhibit 3-8. As shown on Exhibit 3-8, there are existing sidewalks in place along both sides of the street along Holder Street, Katella Avenue, Valley View Street, Knott Avenue, and Western Avenue. The intersections of Valley View Street, Holder Street, Knott Avenue, and Western Avenue along Katella Avenue accommodate crosswalks on all approaches.

3.6 TRANSIT SERVICE

The study area is currently served by Orange County Transportation Authority (OCTA) bus Routes 123 and 50 along Katella Avenue. OCTA Route 123 also provides service along Valley View Street and OCTA Route 25 provides service along Knott Avenue. Exhibit 3-9 shows the existing transit routes. As shown on Exhibit 3-9, there are existing bus stops at Holder Street and Katella Avenue that could serve the proposed Project.

EXHIBIT 3-5: CITY OF CYPRESS TRUCK ROUTES

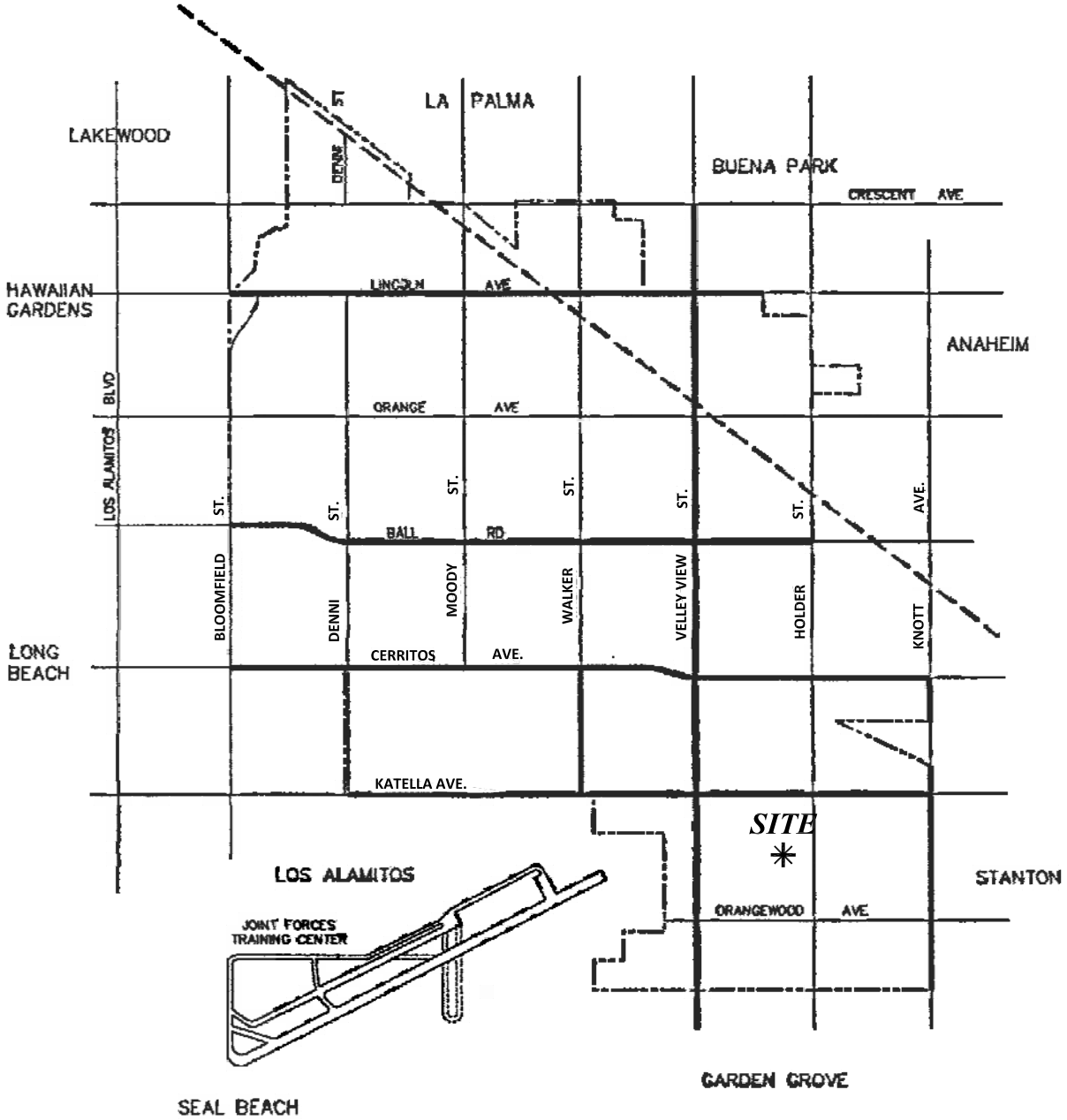

LEGEND

EXISTING TRUCK ROUTES
EXISTING RAIL LINES

Source: City of Cypress General Plan

EXHIBIT 3-6: CITY OF CYPRESS BIKE PATH PLAN

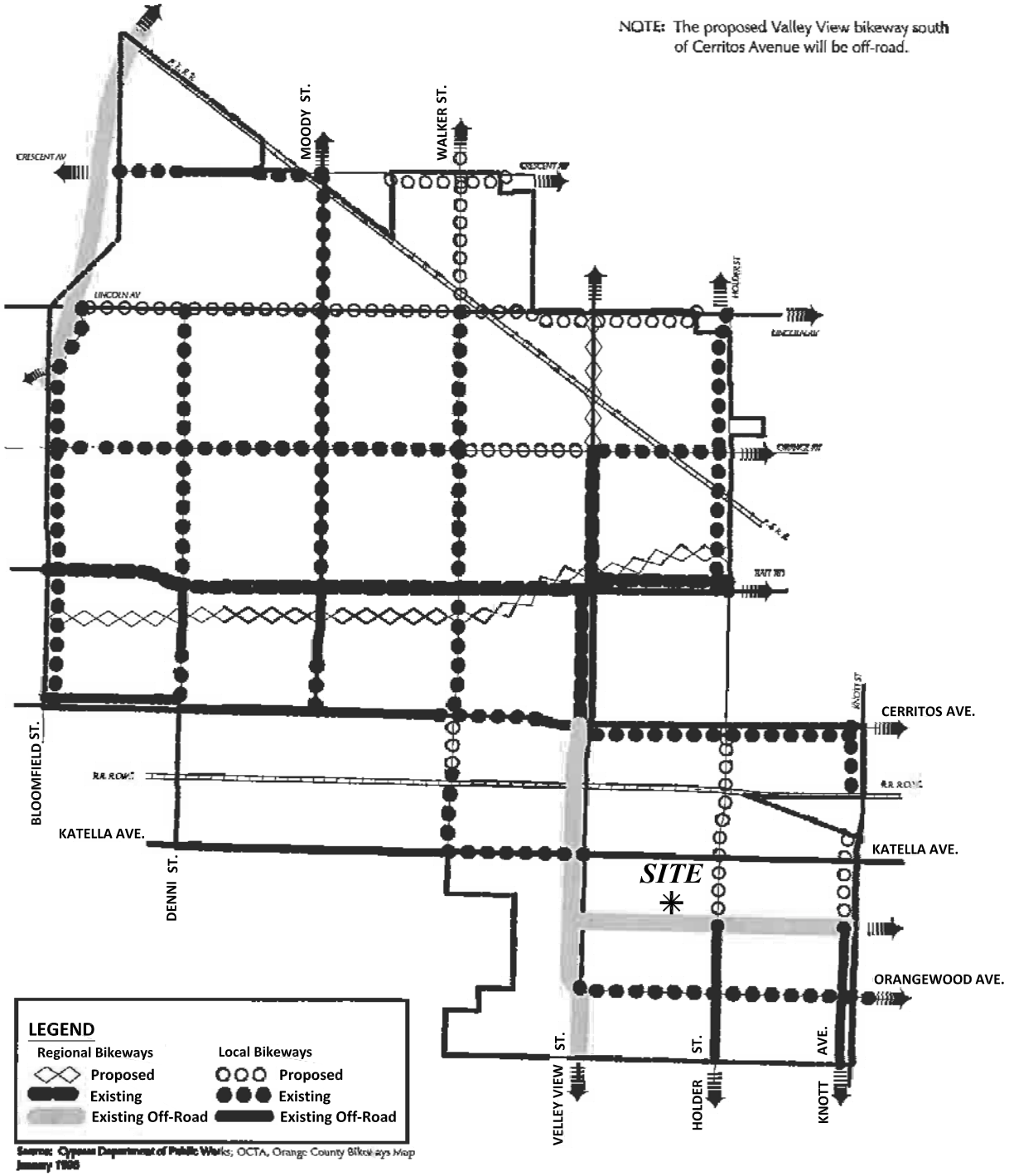

Source: City of Cypress General Plan

EXHIBIT 3-7: CITY OF STANTON BICYCLE FACILITIES

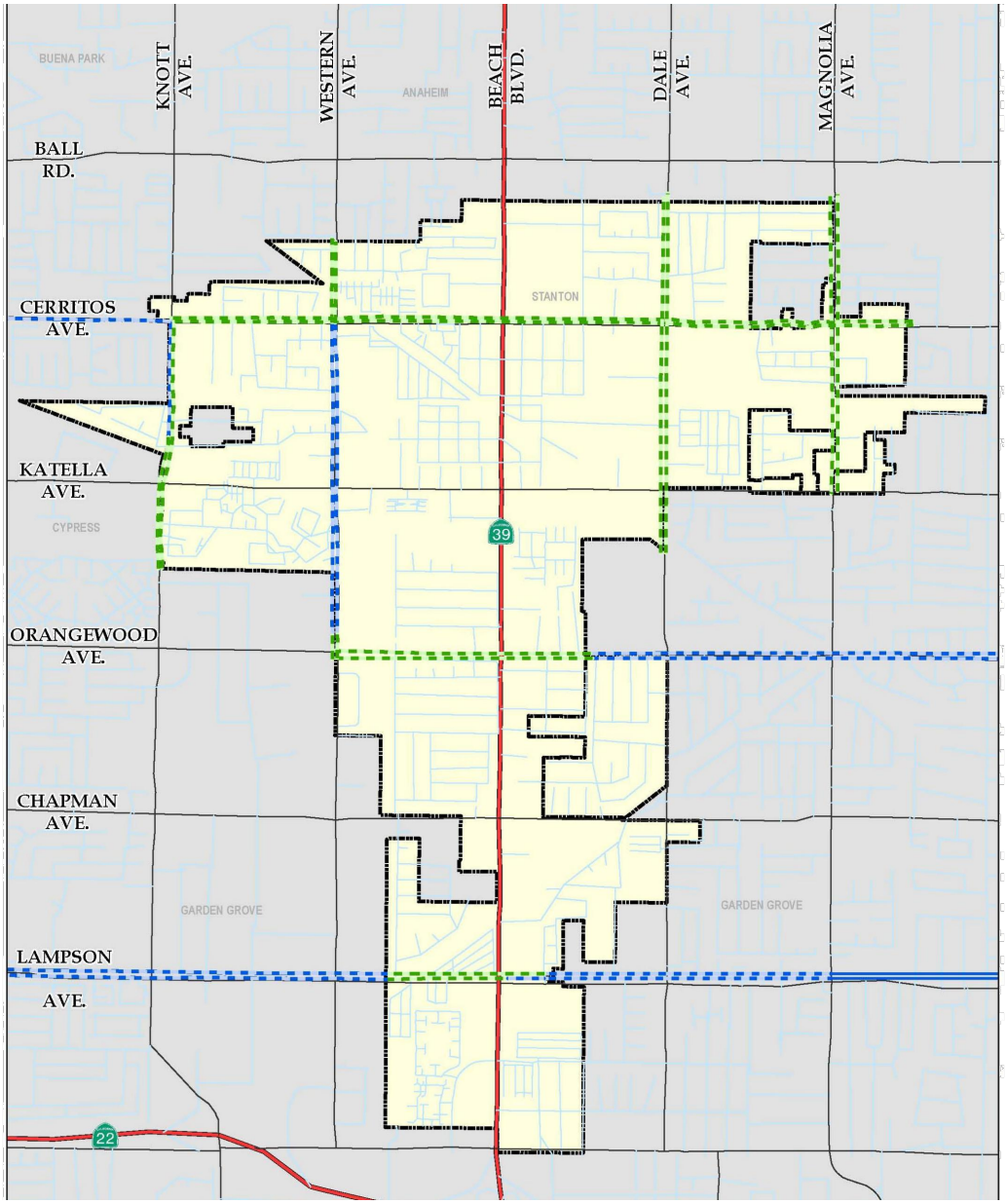

Legend

Bikeways

- Class II, Striped on Street
- Class III, Signed Only
- Proposed Class II, Striped on Street
- <all other values>
- Stanton City Boundary

Source: City of Stanton General Plan

N

EXHIBIT 3-8: EXISTING PEDESTRIAN FACILITIES

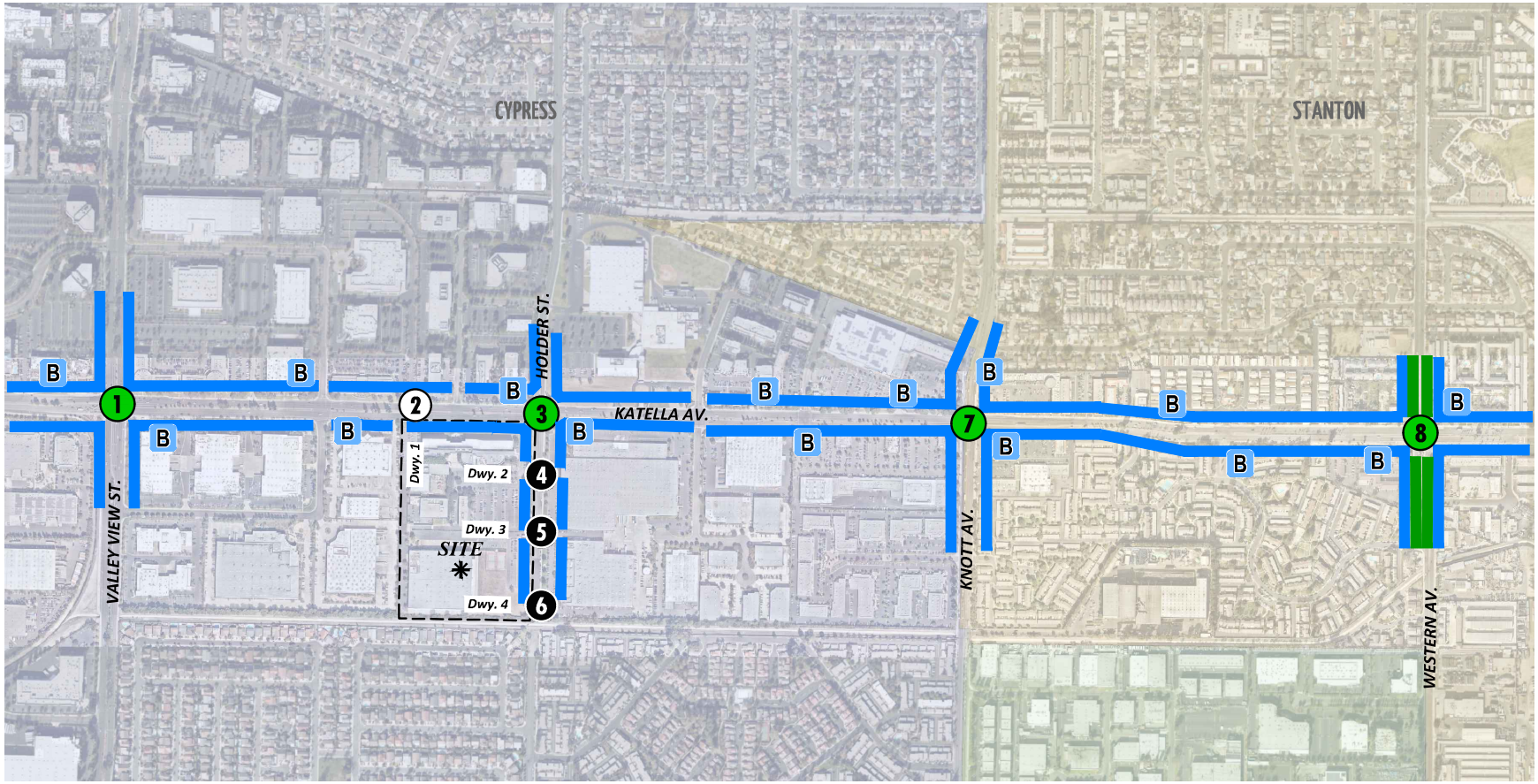

LEGEND:

- = SIDEWALK
- = BIKE LANE
- B = BUS STOP
- 0 = NO CROSSWALK
- 0 = FUTURE INTERSECTION
- 0 = CROSSWALK ON ALL APPROACHES

N

EXHIBIT 3-9: EXISTING TRANSIT ROUTES

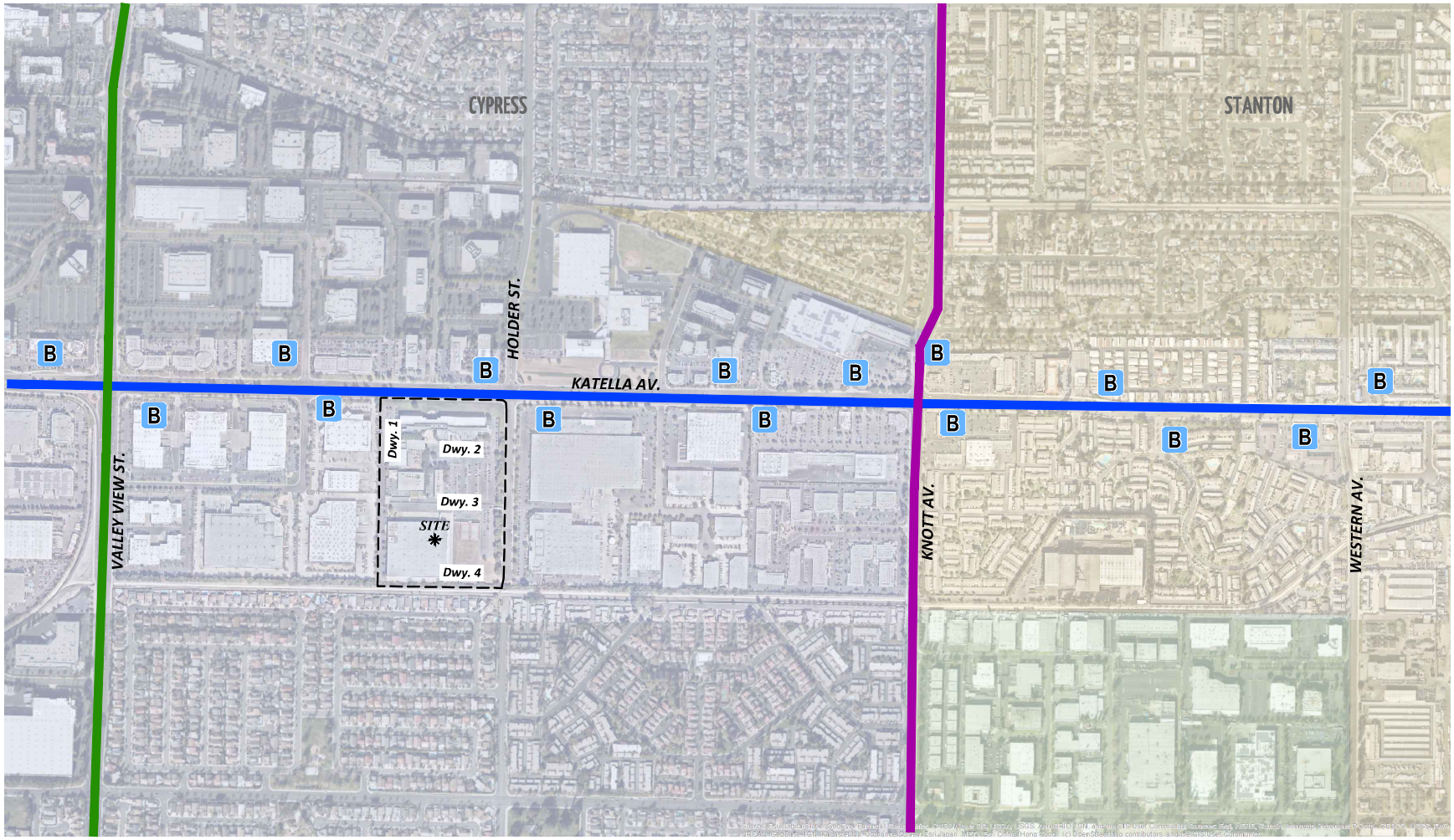

LEGEND:

- = OCTA ROUTE 50
- = OCTA ROUTE 25
- = OCTA ROUTE 21
- B = BUS STOP

N

3.7 EXISTING TRAFFIC COUNTS

Manual weekday AM and PM peak hour turning movement counts were conducted in March 2020, around the time when uses began to close due to the currently on-going Coronavirus (COVID-19) pandemic. The raw manual peak hour turning movement traffic count data sheets are included in Appendix 3.1. The 2020 traffic counts have been adjusted in order to take into account the effects to local traffic associated with the on-going pandemic. Historic traffic counts were obtained from 2018 for the intersections of Valley View Street, Holder Street, and Knott Avenue along Katella Avenue. The historic counts were then compared to the current March 2020 traffic counts that had recently been collected. The adjusted 2020 traffic volumes utilized for the purposes of this TIA were developed by utilizing the higher volume between the March 2020 traffic count or the 2018 historic count plus two years of growth (at 2 percent per year, compounded over 2 years):

Adjusted 2020 = Maximum (March 2020 or [2018 x 1.0404])

In other words, on a movement by movement basis, the 2018 count plus growth was compared to the 2020 traffic counts to utilize the higher of the two numbers (see Appendix 3.1). Through volumes along Holder Street were then flow conserved and distributed proportionally to the driveways for the user on the east.

The existing Mitsubishi buildings were not currently in use at the time of the counts, therefore, trips generated by the existing buildings are not captured in the baseline traffic counts conducted in 2020. However, in order to account for the potential occupancy of the buildings, as by right the site could be occupied with a warehouse use at any time (without additional environmental review). As such, conservatively, 50 percent of trips associated with warehousing use (consistent with the existing trip credit applied to the Project trip generation) was added to the baseline volumes in order to represent traffic that could potentially be generated by the site if occupied. The trips associated with the warehousing use have been allocated to study area intersections using trip distribution patterns that are similar to the proposed Project (see Section 4.0 *Projected Future Traffic*). The traffic counts collected include the vehicle classifications as shown below:

The traffic counts collected include the vehicle classifications as shown below:

- Passenger Cars
- 2-Axle Trucks
- 3-Axle Trucks
- 4 or More Axle Trucks

To represent the effects of large trucks, buses and recreational vehicles have on traffic flow; all trucks were converted into passenger car equivalent (PCE). By their size alone, these vehicles occupy the same space as two or more passenger cars. In addition, the time it takes for them to accelerate and slow-down is also much longer than for passenger cars and varies depending on the type of vehicle and number of axles. For the purpose of this analysis, a PCE factor of 1.5 has been applied to 2-axle trucks, 2.0 for 3-axle trucks and 3.0 for 4+-axle trucks to estimate each turning movement. It should be noted that Orange County and the Southern California Association of Governments (SCAG) do not have readily available PCE factor recommendations.

As such, the PCE factors used are based on recommendations from San Bernardino County Transportation Authority (SBCTA) which is consistent with standard engineering practice throughout the southern California region. Further use of the SBCTA PCE factors was reviewed by the City of Cypress staff during the traffic study scoping process and is appropriate based on Urban Crossroads' professional engineering judgment.

Existing AM and PM peak hour intersection volumes are shown on Exhibit 3-10. All of the intersection turning movement volumes illustrated on the exhibits and used in the peak hour operations analyses are shown in terms of PCE.

3.8 EXISTING CONDITIONS INTERSECTION OPERATIONS ANALYSIS

Existing peak hour traffic operations have been evaluated for the study area intersections based on the analysis methodologies presented in Section 2.2 *Intersection Capacity Analysis* of this report. The intersection operations analysis results are summarized in Table 3-1 which indicates that all of the study area intersections are currently operating at an acceptable LOS during the peak hours. Consistent with Table 3-1, a summary of the peak hour intersection LOS for Existing conditions is shown on Exhibit 3-11. The intersection operations analysis worksheets are included in Appendix 3.2 of this TIA.

3.9 EXISTING CONDITIONS TRAFFIC SIGNAL WARRANTS ANALYSIS

Traffic signal warrants for Existing traffic conditions are based on existing peak hour intersection turning volumes. For Existing traffic conditions, there are no study area intersections that currently warrant a traffic signal based on the peak hour traffic volumes (See Appendix 3.3).

EXHIBIT 3-10: EXISTING (2020) TRAFFIC VOLUMES (IN PCE)

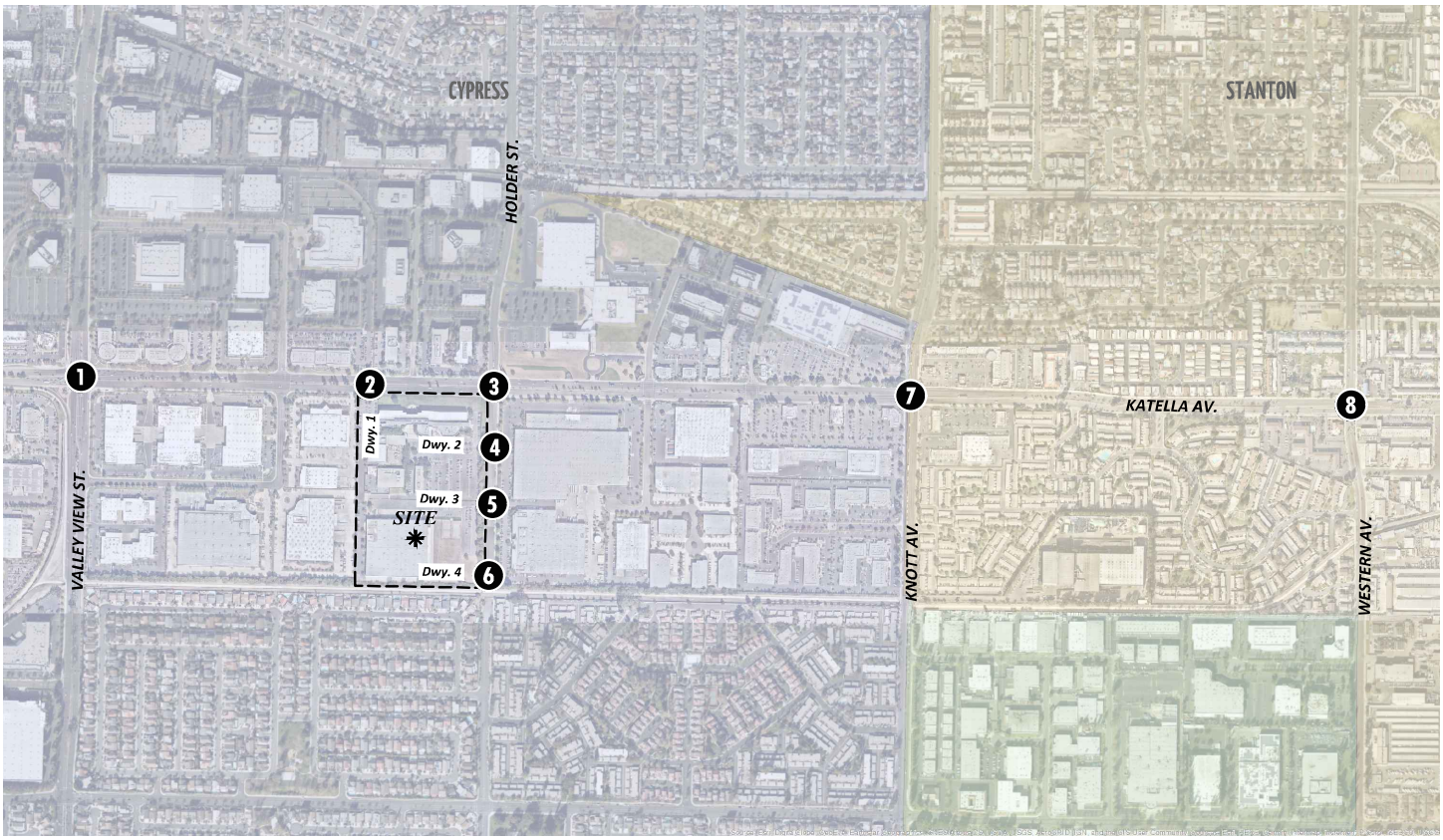

1 Valley View St. & Katella Av.

228(240) 1102(1364) 241(228) → 154(238) 1213(1026) 206(362) ←

236(261) 985(1078) 702(1010) → 828(656) 1531(1486) 294(177) ←

2 Dwy. 1 & Katella Av.

Future Intersection

3 Holder St. & Katella Av.

183(114) 42(2) 200(211) → 146(209) 1607(1051) 109(15) ←

35(135) 1085(1581) 149(10) → 9(105) 2(45) 13(108) ←

4 Holder St. & Dwy. 2

66(4) 225(21) 9(2) → 0(29) 0(0) 0(0) ←

5(57) 0(0) 0(0) → 0(0) 19(173) 0(0) ←

5 Holder St. & Dwy. 3

32(5) 68(3) 125(13) → 12(90) 0(0) 0(0) ←

4(30) 0(0) 0(0) → 0(0) 4(53) 0(0) ←

6 Holder St. & Dwy. 4

68(3) → 4(53) ←

7 Knott Av. & Katella Av.

177(84) 924(713) 111(170) → 106(184) 1360(856) 191(213) ←

74(321) 874(1308) 279(433) → 377(265) 577(898) 121(136) ←

8 Western Av. & Katella Av.

162(112) 884(579) 124(118) → 98(150) 1386(883) 201(105) ←

120(138) 1008(1178) 156(175) → 153(170) 289(873) 101(129) ←

LEGEND:

10(10) = *AM(PM) PEAK HOUR INTERSECTION VOLUMES*

N

EXHIBIT 3-11: EXISTING (2020) SUMMARY OF LOS

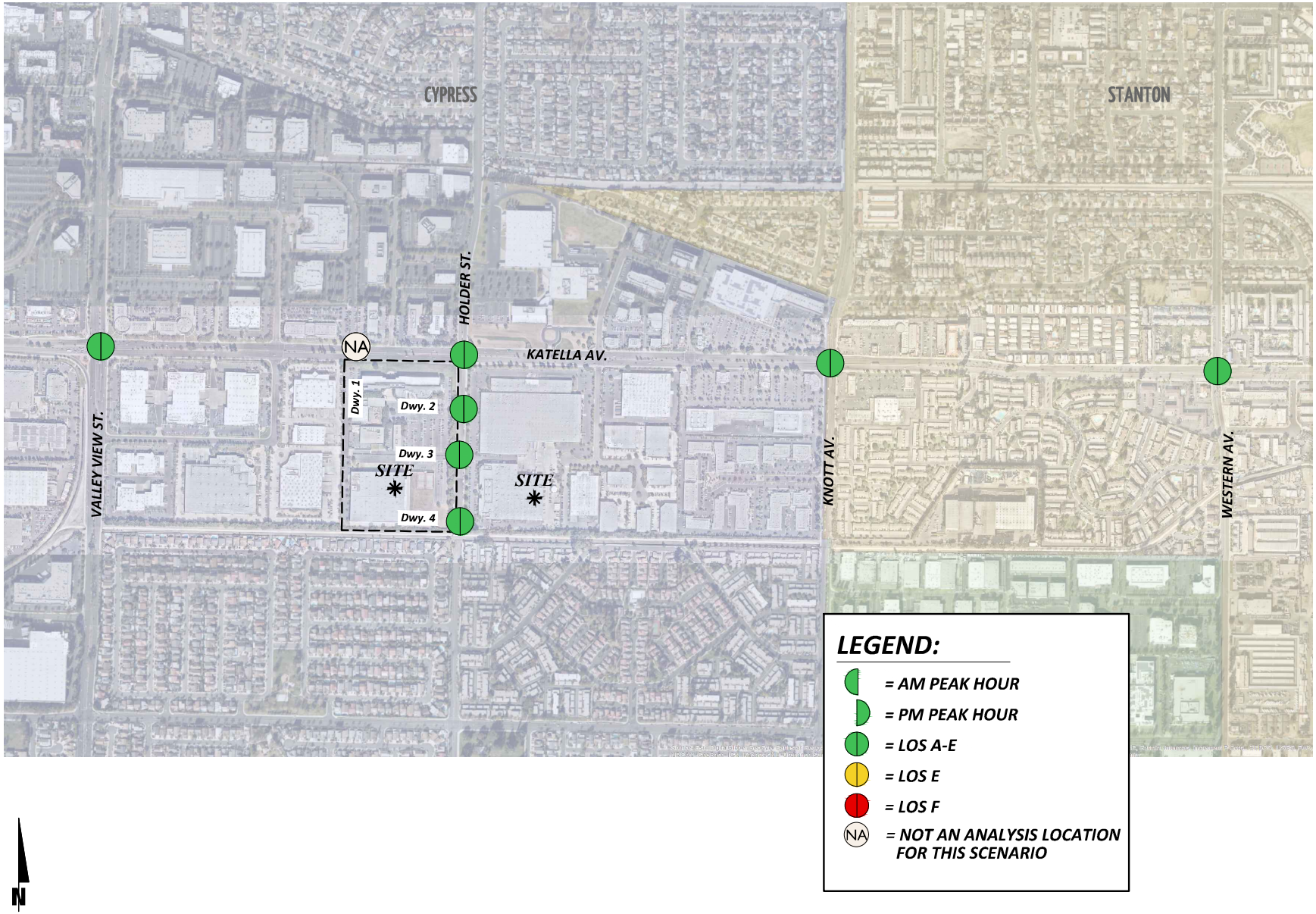

Table 3-1

Intersection Analysis for Existing (2020) Conditions

#	Intersection	Traffic Control[4]	Intersection Approach Lanes[1]												HCM Delay[2] (secs.)		Level of Service		ICU[3] (v/c)		Level of Service	
			Northbound			Southbound			Eastbound			Westbound										
			L	T	R	L	T	R	L	T	R	L	T	R	AM	PM	AM	PM	AM	PM	AM	PM
1	Valley View St. & Katella Av.	TS	3	3	1	2	3	1	2	3	1>>	2	3	1	Not Applicable[5]				0.829	0.859	D	D
2	Driveway 1 & Katella Av.		Future Intersection												Future Intersection				Not Applicable[6]			
3	Holder St. & Katella Av.	TS	1	2	0	1	2	0	1	3	1	1	3	1	Not Applicable[5]				0.589	0.634	A	B
4	Holder St. & Driveway 2	CSS	1	1	0	1	1	0	0	1	0	0	1	0	12.1	11.9	B	B	Not Applicable[6]			
5	Holder St. & Driveway 3	CSS	1	1	0	1	1	0	0	1	0	0	1	0	13.3	10.9	B	B	Not Applicable[6]			
6	Holder St. & Driveway 4	CSS	0	0	0	1	0	0	0	0	0	0	0	1	0.0	0.0	A	A	Not Applicable[6]			
7	Knott Av. & Katella Av.	TS	2	2	0	1	2	1	1	3	1>	1	3	1>	Not Applicable[5]				0.836	0.935	D	E
8	Western Av. & Katella Av.	TS	1	2	0	1	2	0	1	3	1>	1	3	1>	Not Applicable[5]				0.886	0.798	D	C

* **BOLD** = LOS does not meet the applicable jurisdictional requirements (i.e., unacceptable LOS).

[1] When a right turn is designated, the lane can either be striped or unstriped. To function as a right turn lane there must be sufficient width for right turning vehicles to travel outside the through lanes.

L = Left; T = Through; R = Right; > = Right-Turn Overlap Phasing; >> = Free-Right Turn Lane

[2] Per the Highway Capacity Manual (6th Edition), overall average intersection delay and level of service are shown for intersections with a traffic signal or all way stop control. For intersections with cross street stop control, the delay and level of service for the worst individual movement (or movements sharing a single lane) are shown.

[3] Intersection capacity utilization (ICU) methodology results are presented as a volume-to-capacity ratio.

[4] CSS = Cross-street Stop; TS = Traffic Signal

[5] HCM not reported for signalized intersections.

[6] ICU not reported for unsignalized intersections.

4 PROJECTED FUTURE TRAFFIC

This section presents the traffic volumes estimated to be generated by the Project, as well as the Project's trip assignment onto the study area roadway network. For purposes of this TIA, the Project is proposing to occupy the existing 145,004 sf warehouse building on the southern end of the site. The Project is anticipated to be constructed in one phase by the year 2021. As shown on Exhibit 1-1, vehicular access will be provided via the following driveways:

- Driveway 1 on Katella Avenue: Passenger cars only (right-in/right-out access only) (new proposed driveway)
- Driveway 2 on Holder Street: Passenger cars only (full access)
- Driveway 3 on Holder Street: Passenger cars and trucks (full access)
- Driveway 4 on Holder Street: Passenger cars only (full access)

The site is currently occupied by the former Mitsubishi Motors Corporation, which includes 145,004 sf of warehousing use, 180,000 sf corporate headquarters office building, and 70,000 sf of research and development buildings. The proposed Project will consist of the demolition of existing buildings except the southerly warehouse building 145,004 sf) and the northern office building (180,000 sf) (demolition of approximately 70,000 square feet of the existing research and development buildings). The remaining portion of the site will provide parking for sprinter cargo vans/flex vehicles and employees of the facility as well as access to the truck docks on the north side of the building. It should be noted that the existing northern office building (180,000 sf) that fronts Katella Avenue will not be occupied, and therefore would not generate any traffic.

4.1 PROJECT TRIP GENERATION

Trip generation represents the amount of traffic which is both attracted to and produced by a development. Determining traffic generation for a specific project is therefore based upon forecasting the amount of traffic that is expected to be both attracted to and produced by the specific land uses being proposed for a given development.

The Institute of Transportation Engineers (ITE) Trip Generation Manual is a nationally recognized source for estimating site-specific trip generation. The trip generation rates used for the Project are based upon data collected by ITE in their Trip Generation Manual, 10th Edition, 2017. [8] A brief description of the warehousing land use (existing use) is provided below:

- ITE land use code 150 (Warehousing) has been used to derive site specific trip generation estimates for the existing warehousing use. The vehicle mix has been obtained from the ITE's Trip Generation Manual Supplement (dated February 2020). [9] This study provides the following vehicle mix: AM Peak Hour: 87.0% passenger cars and 13.0% trucks; PM Peak Hour: 85.0% passenger cars and 15.0% trucks; Weekday Daily: 73.0% passenger cars and 27.0% trucks. The truck percentages were further broken down by axle type per the following South Coast Air Quality Management District's (SCAQMD) Warehouse Truck Trip Study Data Results and Usage (2014) recommended truck mix: 2-Axle = 16.7%; 3-Axle = 20.7%; 4+-Axle = 62.6%. [10]

Table 4-1

Project Trip Generation Rates

Land Use[1]	ITE LU Code	Units[2]	AM Peak Hour In	AM Peak Hour Out	AM Peak Hour Total	PM Peak Hour In	PM Peak Hour Out	PM Peak Hour Total	Daily
Actual Vehicles									
Warehousing[3]	150	TSF	0.131	0.039	0.170	0.051	0.139	0.190	1.740
Passenger Cars (AM-87.0%; PM-85.0%; Daily-73.0%)			0.114	0.034	0.148	0.044	0.118	0.162	1.270
2-Axle Trucks (AM-2.17%; PM-2.51%; Daily-4.51%)			0.003	0.001	0.004	0.001	0.003	0.005	0.078
3-Axle Trucks (AM-2.69%; PM-3.11%; Daily-5.59%)			0.004	0.001	0.005	0.002	0.004	0.006	0.097
4-Axle+ Trucks (AM-8.14%; PM-9.39%; Daily-16.90%)			0.011	0.003	0.014	0.005	0.013	0.018	0.294
Corporate Headquarters	714	TSF	0.684	0.036	0.720	0.018	0.582	0.600	7.950
Passenger Car Equivalent (PCE)[4]									
Warehousing[3]	150	TSF	0.131	0.039	0.170	0.051	0.139	0.190	1.740
Passenger Cars			0.114	0.034	0.148	0.044	0.118	0.162	1.270
2-Axle Trucks (PCE = 1.5)			0.004	0.001	0.006	0.002	0.005	0.007	0.118
3-Axle Trucks (PCE = 2.0)			0.007	0.002	0.009	0.003	0.009	0.012	0.194
4-Axle+ Trucks (PCE = 3.0)			0.032	0.010	0.042	0.014	0.039	0.054	0.882

[1] Trip Generation Source: Institute of Transportation Engineers (ITE), Trip Generation Manual, Tenth Edition (2017).

[2] TSF = thousand square feet

[3] Vehicle Mix Source: ITE Trip Generation Handbook Supplement (2020), Appendix C.

Truck Mix: South Coast Air Quality Management District's (SCAQMD) recommended truck mix, by axle type.

Normalized % - Without Cold Storage: 16.7% 2-Axle trucks, 20.7% 3-Axle trucks, 62.6% 4-Axle trucks.

[4] PCE factors: 2-axle = 1.5; 3-axle = 2.0; 4+-axle = 3.0.

The trip generation rate for Warehousing, as described above, has been applied to the existing warehousing use. The ITE trip generation rate for Corporate Headquarters (ITE land use code 714) has been utilized for calculating the trip generation associated with the existing corporate headquarters office building. Trip generation rates used to estimate traffic generated by the existing use in terms of actual vehicles and PCE are shown in Table 4-1. PCE factors have been applied to the trip generation rates for heavy trucks (large 2-axles, 3-axles, 4+-axles) consistent with the discussion included in Section 3.7 *Existing Traffic Counts*.

Since there are existing buildings (Mitsubishi Motors Corporation) that were previously occupied, credit has been taken for the previous uses. However, field observations indicate the existing uses were not fully occupied. As such, pursuant to discussions with City staff, the trip generation has applied a 50 percent credit to account for existing uses on the site that would be replaced by the proposed Project (50 percent was also manually added to the existing baseline) for the purposes of this analysis. Table 4-2 summarizes the trip generation for the existing uses and shows the resulting 50 percent reduction. As shown in Table 4-2, 50 percent of the existing uses currently generate a total of 1,128 trip ends per day with 105 AM peak hour trips and 92 PM peak hour trips.

The trip generation for the proposed Project is based upon operational data provided by the Project Applicant for this particular facility during both the peak and off-peak seasons. Pursuant to discussions with Amazon, the peak season typically occurs between Thanksgiving and Christmas (approximately 6 weeks) and a few days around Amazon Prime Day (July). Note that Amazon Prime Day and peak seasonal activity coincide with times when local schools may be out on break (i.e., less baseline traffic). Based on discussions with the City, 85 percent of the peak seasonal data is proposed to be utilized for the purposes of this TIA in an effort to conduct a conservative analysis.

Table 4-3 summarizes the proposed Project trip generation in both actual vehicles and PCE. As shown on Table 4-3, the proposed Project (85% of the peak season) is anticipated to generate a total of 2,490 trip-ends per day with 227 AM peak hour trips and 347 PM peak hour trips. The change in trip generation from the proposed Project in comparison to 50 percent of the existing uses is also shown. As a result, the net change in trips is anticipated to be a net total of 1,362 more vehicle trip-ends per day with 122 more AM peak hour trips and 255 more PM peak hour trips.

Table 4-2

Existing Trip Generation Summary

Existing Use	Quantity	Units[1]	AM Peak Hour In	AM Peak Hour Out	AM Peak Hour Total	PM Peak Hour In	PM Peak Hour Out	PM Peak Hour Total	Daily
Actual Vehicles									
Warehouse	150.000	TSF							
Passenger Cars:			17	5	22	7	18	25	192
Truck Trips:									
2-axle:			1	1	2	1	1	2	12
3-axle:			1	1	2	1	1	2	16
4+-axle:			2	1	3	1	2	3	46
- Truck Trips (Actual Vehicles)			*4*	*3*	*7*	*3*	*4*	*7*	*74*
Corporate Headquarters	250.000	TSF	171	9	180	5	146	151	1,988
Existing Trips (Actual Vehicles)[2]			***192***	***17***	***209***	***15***	***168***	***183***	***2,254***
50% of Existing Trips (Actual Vehicles)			***96***	***9***	***105***	***8***	***84***	***92***	***1,128***
Passenger Car Equivalent (PCE)									
Warehouse	150.000	TSF							
Passenger Cars:			17	5	22	7	18	25	192
Truck Trips:									
2-axle:			1	1	2	1	1	2	18
3-axle:			2	1	3	1	2	3	30
4+-axle:			5	2	7	3	6	9	134
- Truck Trips (PCE)			*8*	*4*	*12*	*5*	*9*	*14*	*182*
Corporate Headquarters	250.000	TSF	171	9	180	5	146	151	1,988
Existing Trips (PCE)[2]			***196***	***18***	***214***	***17***	***173***	***190***	***2,362***
50% of Existing Trips (PCE)			***98***	***9***	***107***	***9***	***87***	***95***	***1,182***

[2] TSF = thousand square feet

[6] Total Trips = Passenger Cars + Truck Trips.

Table 4-3

Project Trip Generation Summary

Project	Quantity	Units[1]	AM Peak Hour In	AM Peak Hour Out	AM Peak Hour Total	PM Peak Hour In	PM Peak Hour Out	PM Peak Hour Total	Daily
Actual Vehicles									
Amazon Building (85% of Peak)[2]	145.004	TSF							
Passenger Cars:									
Warehouse Employees:			0	0	0	129	0	129	666
Flex/DSP Drivers:			99	102	201	88	122	211	1,766
Passenger Car (Subtotal):			***99***	***102***	***201***	***218***	***122***	***340***	***2,432***
Truck (Line Haul) Trips:									
4+-axle (Actual Vehicles):			***9***	***17***	***26***	***3***	***3***	***7***	***58***
Project Trips (Actual Vehicles)[3]			**108**	**119**	**227**	**221**	**126**	**347**	**2,490**
50% of Existing Trips (Actual Vehicles) (From Table 4-2)			***96***	***9***	***105***	***8***	***84***	***92***	***1,128***
Change in Trips			***12***	***111***	***122***	***214***	***42***	***255***	***1,362***
Passenger Car Equivalent (PCE)									
Amazon Building (85% of Peak)[2]	145.004	TSF							
Passenger Cars:									
Warehouse Employees:			0	0	0	129	0	129	666
Flex/DSP Drivers:			99	102	201	88	122	211	1,766
Passenger Car (Subtotal):			***99***	***102***	***201***	***218***	***122***	***340***	***2,432***
Truck (Line Haul) Trips:									
4+-axle (PCE):			***26***	***51***	***77***	***10***	***10***	***20***	***174***
Project Passenger Cars:			*99*	*102*	*201*	*218*	*122*	*340*	*2,432*
Project Trucks (PCE):			*26*	*51*	*77*	*10*	*10*	*20*	*174*
Project Trips (PCE)[3]			***125***	***153***	***278***	***228***	***133***	***360***	***2,606***
50% of Existing Passenger Cars:			*94*	*7*	*101*	*6*	*82*	*88*	*1,090*
50% of Existing Trucks (PCE):			*4*	*2*	*6*	*3*	*5*	*7*	*92*
50% of Existing Trips (PCE) (From Table 4-2)			***98***	***9***	***107***	***9***	***87***	***95***	***1,182***
Change in Passenger Cars:			*5*	*95*	*100*	*212*	*40*	*252*	*1,342*
Change in Trucks (PCE):			*22*	*49*	*71*	*8*	*6*	*13*	*82*
Change in Trips			***27***	***144***	***171***	***219***	***46***	***265***	***1,424***

[1] TSF = thousand square feet

[2] Operational data provided by Amazon. Data shown reflect 85% of the peak operations.

[3] Total Trips = Passenger Cars + Truck Trips.

4.2 PROJECT TRIP DISTRIBUTION

Trip distribution is the process of identifying the probable destinations, directions or traffic routes that will be utilized by Project traffic. The potential interaction between the planned land use and surrounding regional access routes are considered, to identify the route where the Project traffic would distribute. The Project trip distribution was developed based on anticipated travel patterns to and from the Project site. The existing roadway network and location of regional destinations have been reviewed to develop the Project trip distribution pattern. Exhibit 4-1 illustrates the passenger car trip distribution patterns for the Project and Exhibit 4-2 illustrates the truck trip distribution patterns for the Project. Similar trip distribution patterns were utilized for the existing uses.

The majority of Project passenger car traffic will utilize one of the driveways on Holder Street (Driveway 2 = 30%, Driveway 3 = 35%, and Driveway 4 = 15%), while approximately 20% is anticipated to utilize Driveway 1 on Katella Avenue. All truck traffic is proposed to take access from Driveway 3 on Holder Street. Passenger car traffic and truck traffic are anticipated to distribution regionally as follows:

- West on Katella Avenue: 18% passenger cars; 30% trucks
- North on Valley View Street: 10% passenger cars; 10% trucks
- South of Valley View Street: 17% passenger cars; 10% trucks
- North on Holder Street: 5% passenger cars only
- North on Knott Avenue: 10% passenger cars; 10% trucks
- South on Knott Avenue: 17% passenger cars; 10% trucks
- North of Western Avenue: 5% passenger cars only
- East on Katella Avenue: 18% passenger cars; 30% trucks

4.3 MODAL SPLIT

The traffic reducing potential of public transit, walking or bicycling have not been considered in this TIA, in an effort to conduct a conservative analysis.

4.4 PROJECT TRIP ASSIGNMENT

The assignment of traffic from the Project area to the adjoining roadway system is based upon the Project trip generation, trip distribution, and the arterial highway and local street system improvements that would be in place by the time of initial occupancy of the Project. Based on the identified Project traffic generation and trip distribution patterns, Project AM and PM peak hour traffic volumes are shown on Exhibit 4-5. Exhibits 4-3 and 4-4 show the Project passenger car only and Project truck (in PCE) traffic volumes at the study area intersections. The Project volumes shown on Exhibit 4-5 represent the trips associated with the proposed Project as presented in Table 4-3 without reductions for the existing uses. Existing warehouse volumes (50 percent) are shown on Exhibit 4-6.

EXHIBIT 4-1: PROJECT (PASSENGER CAR) TRIP DISTRIBUTION

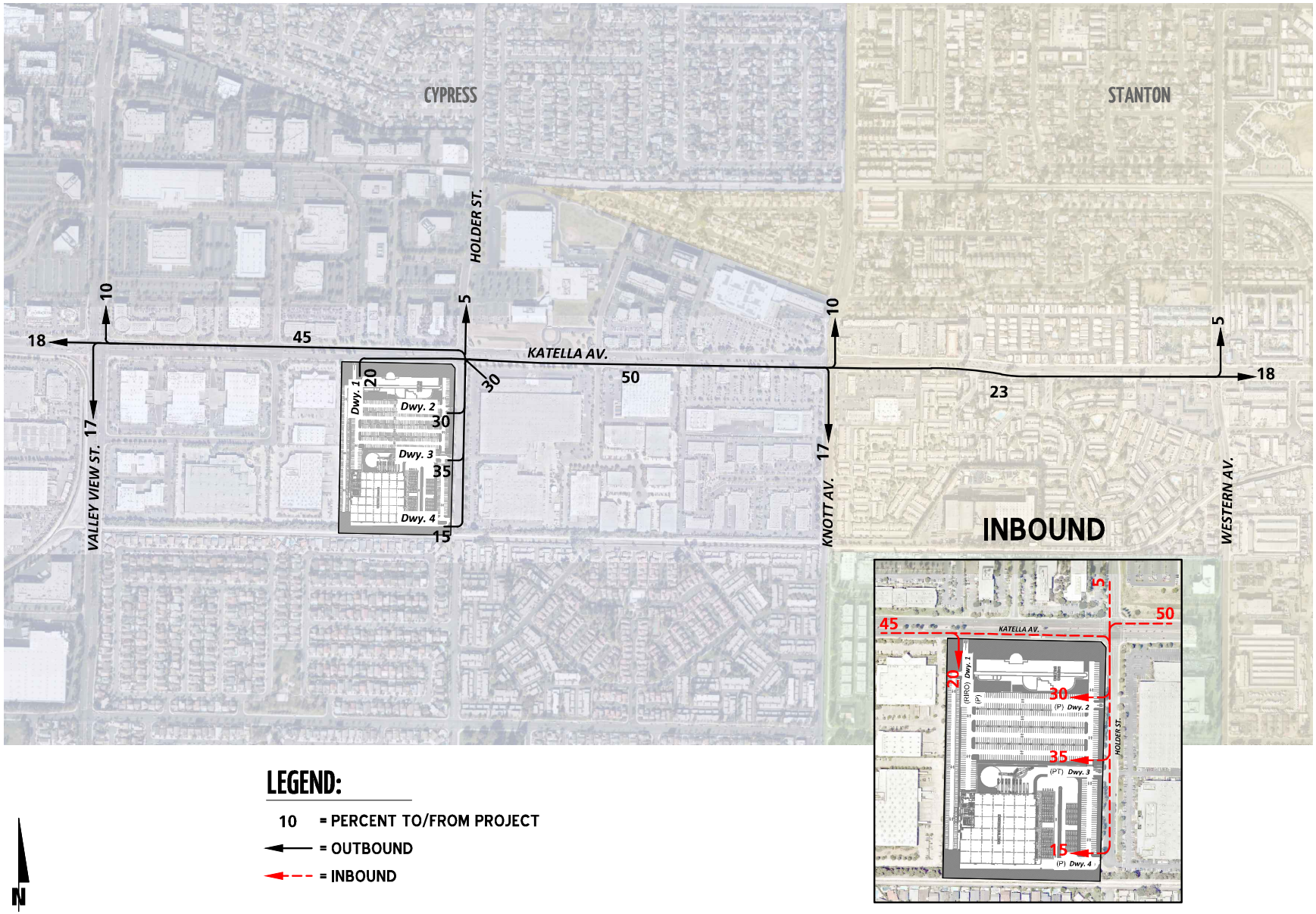

EXHIBIT 4-2: PROJECT (TRUCK) TRIP DISTRIBUTION

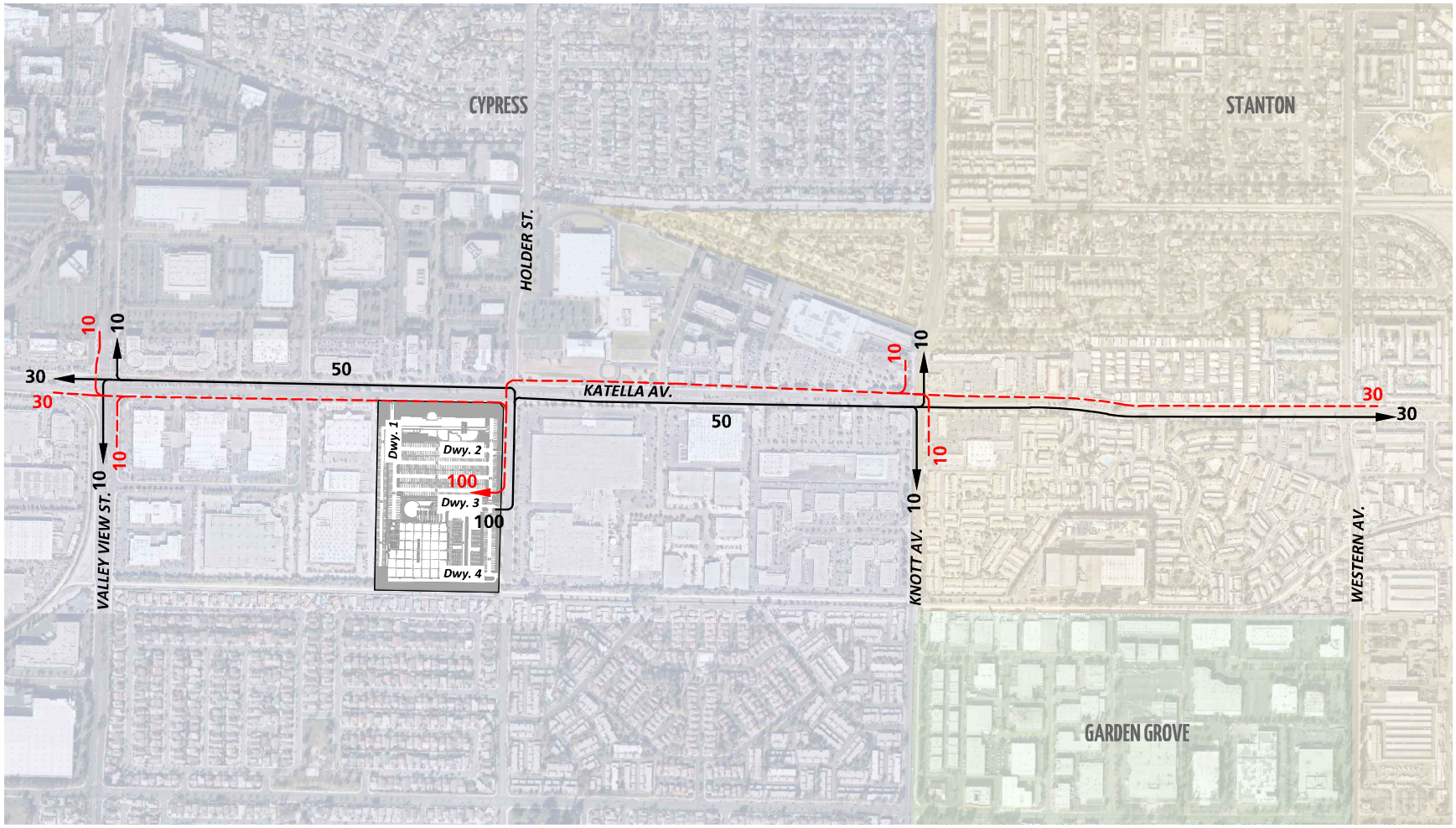

LEGEND:

10 = PERCENT TO/FROM PROJECT

= OUTBOUND

= INBOUND

N

EXHIBIT 4-3: PROJECT ONLY PASSENGER CAR TRAFFIC VOLUMES

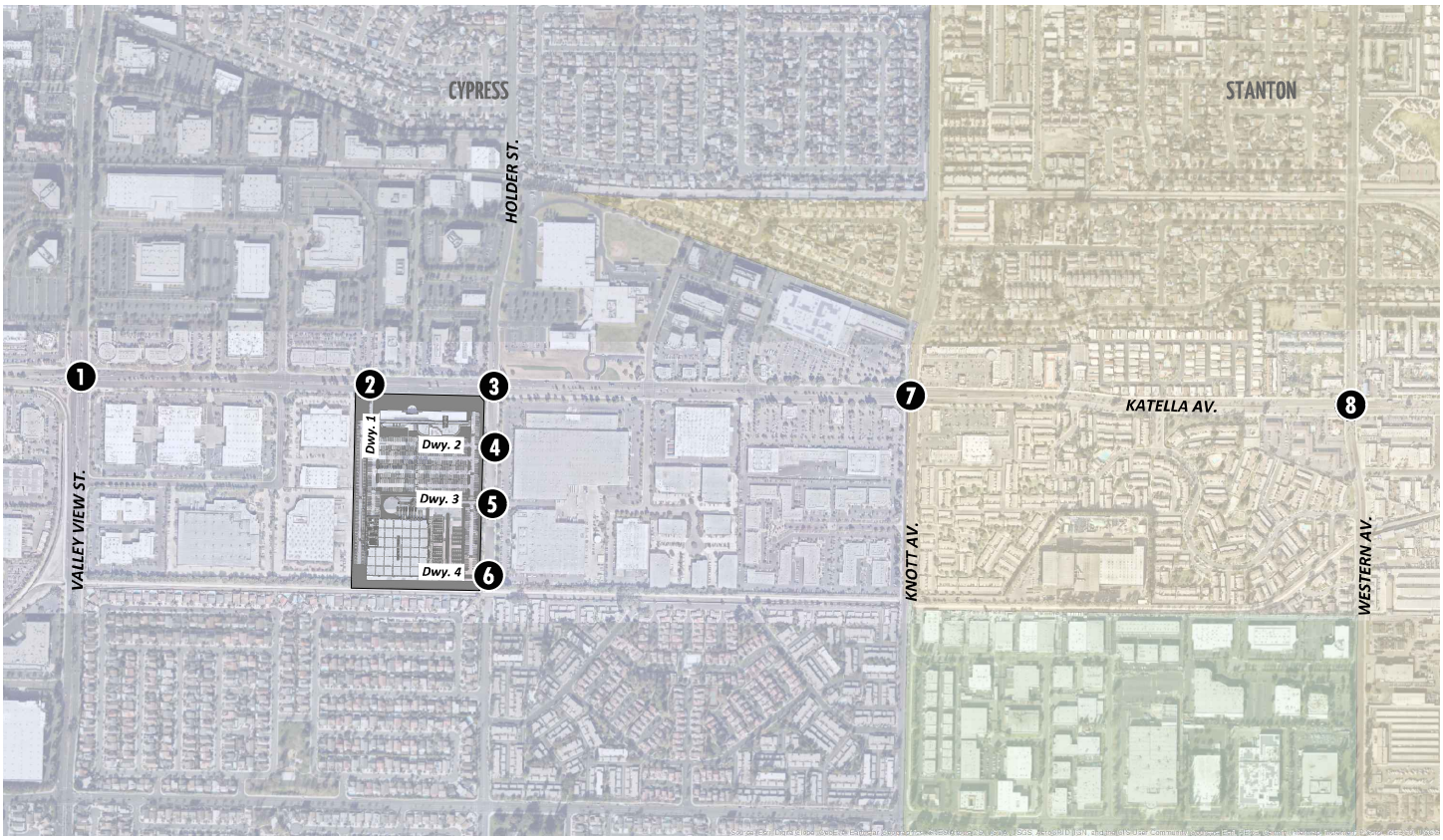

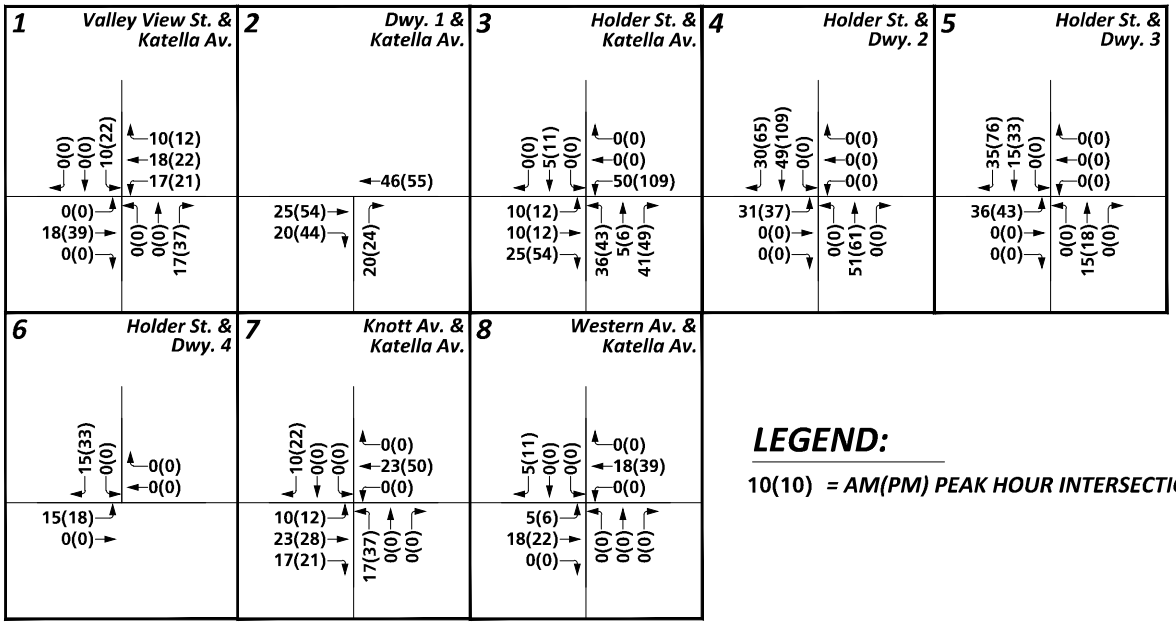

EXHIBIT 4-4: PROJECT ONLY TRUCK TRAFFIC VOLUMES (IN PCE)

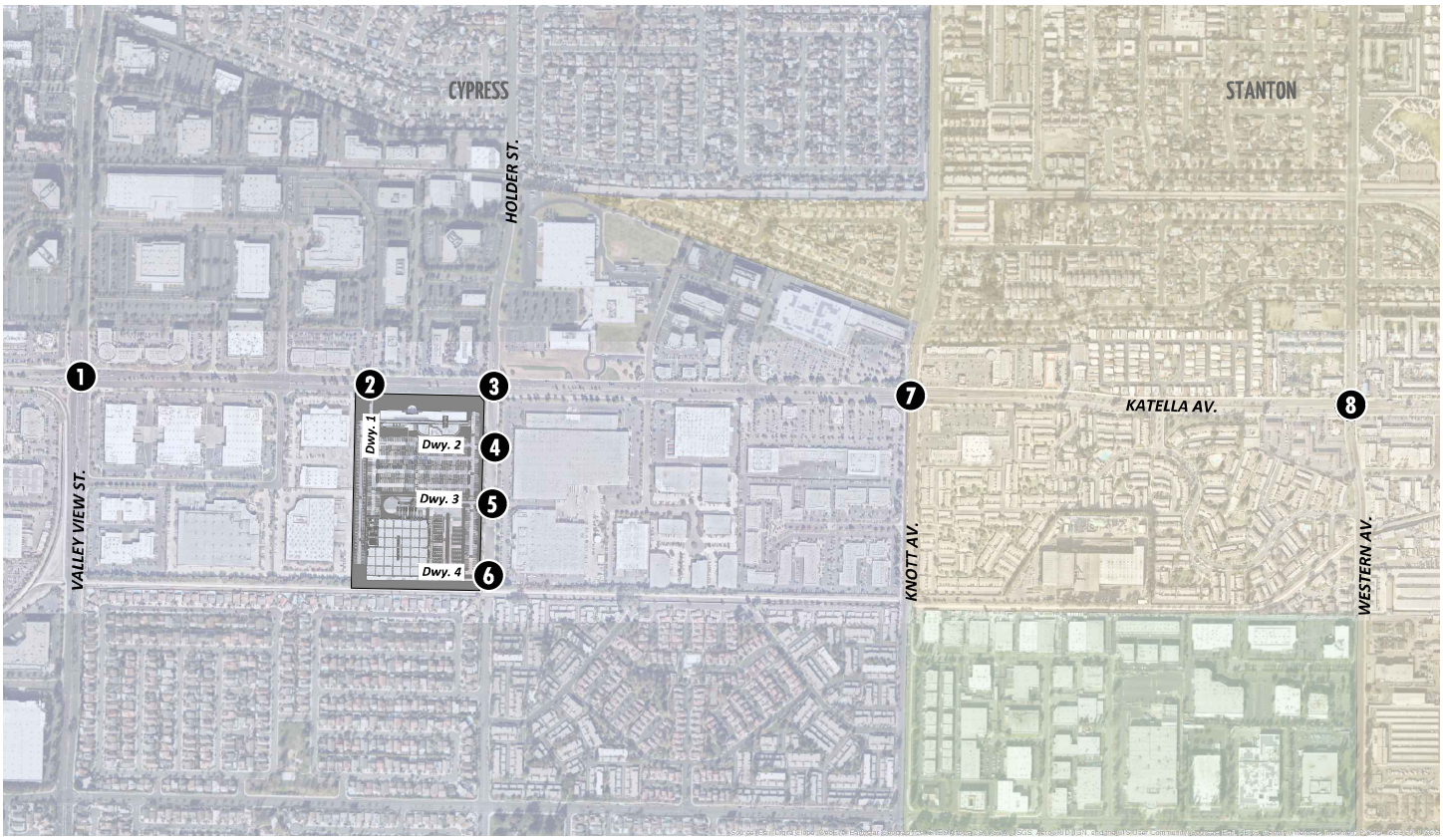

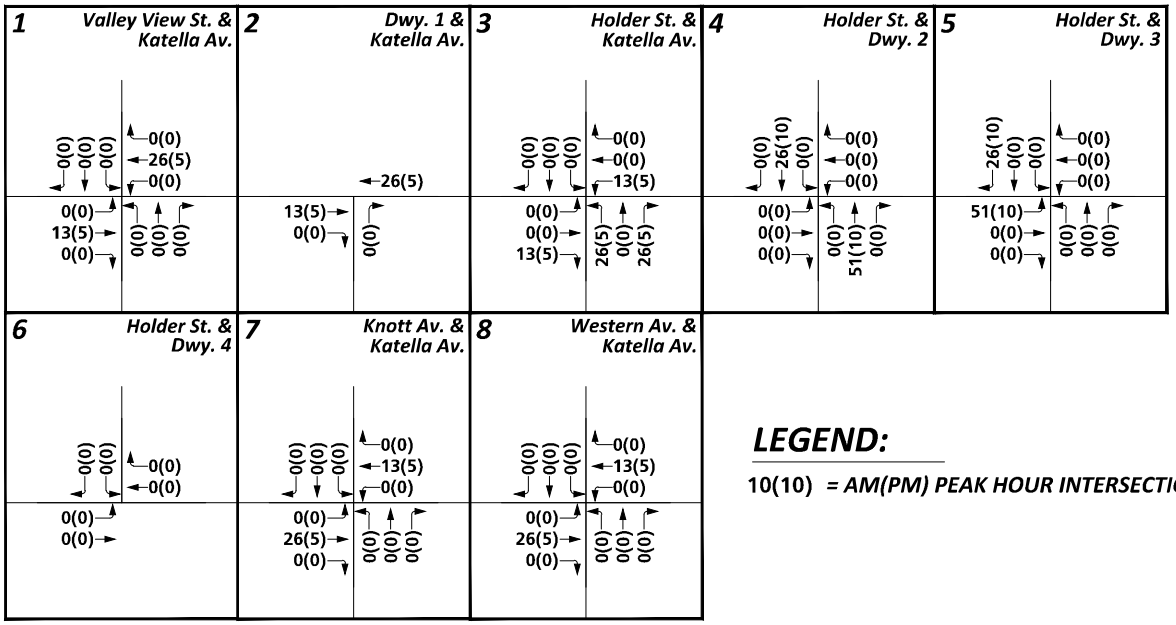

EXHIBIT 4-5: TOTAL PROJECT ONLY TRAFFIC VOLUMES (IN PCE)

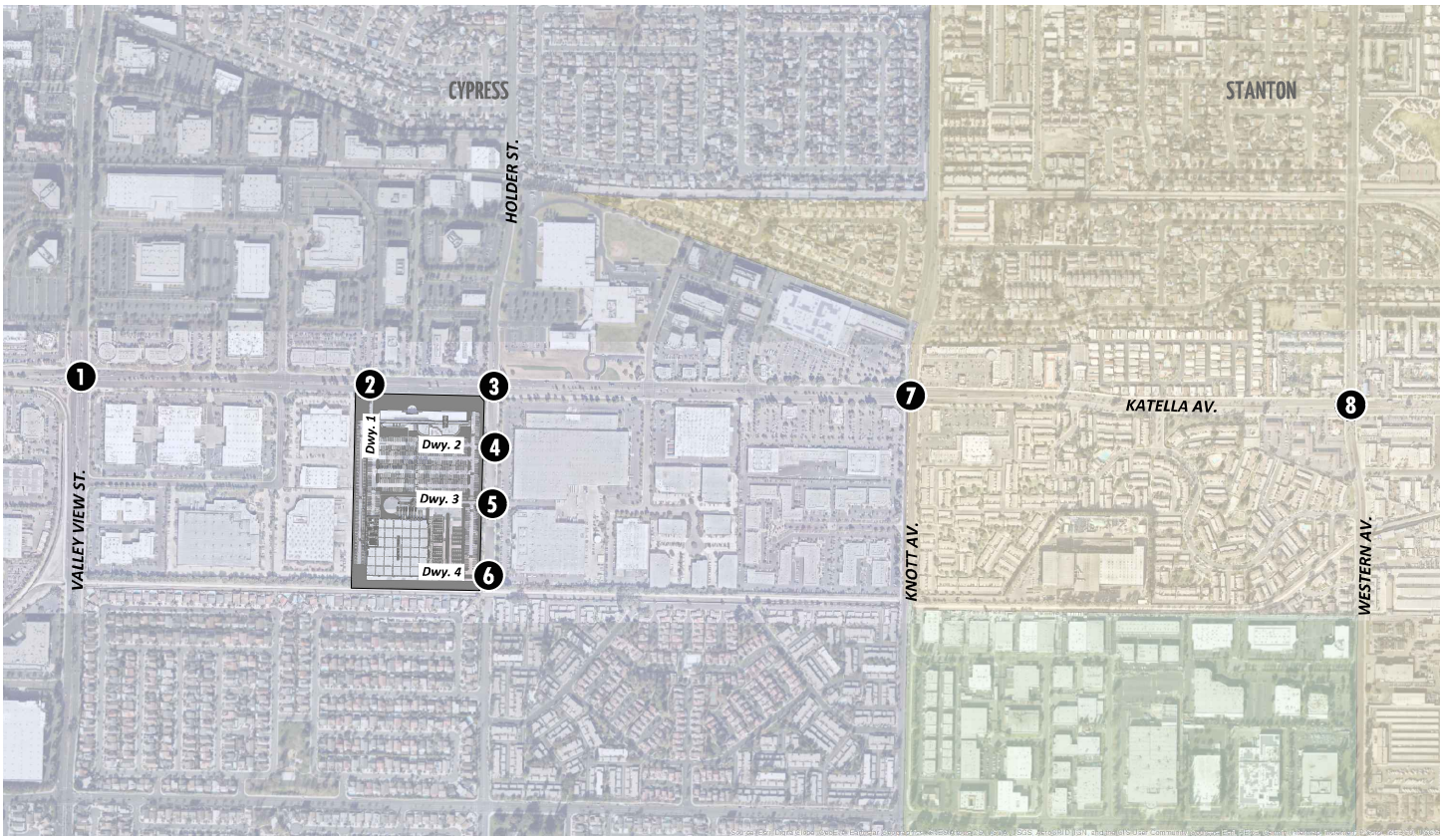

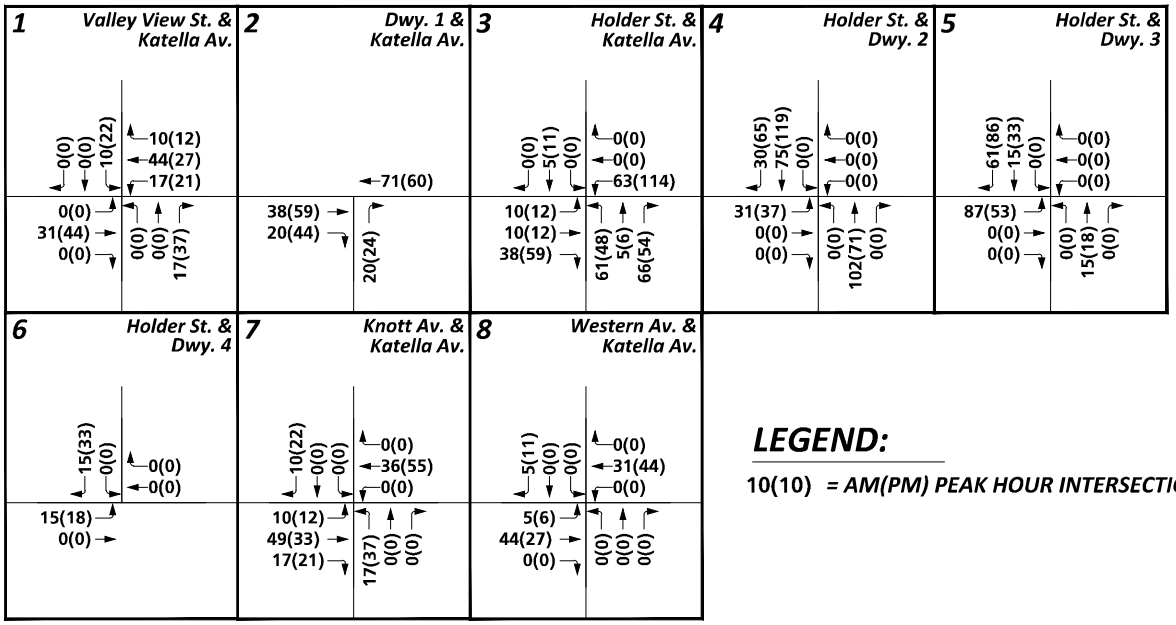

EXHIBIT 4-6: EXISTING WARAHOUSE TRAFFIC VOLUMES (IN PCE)

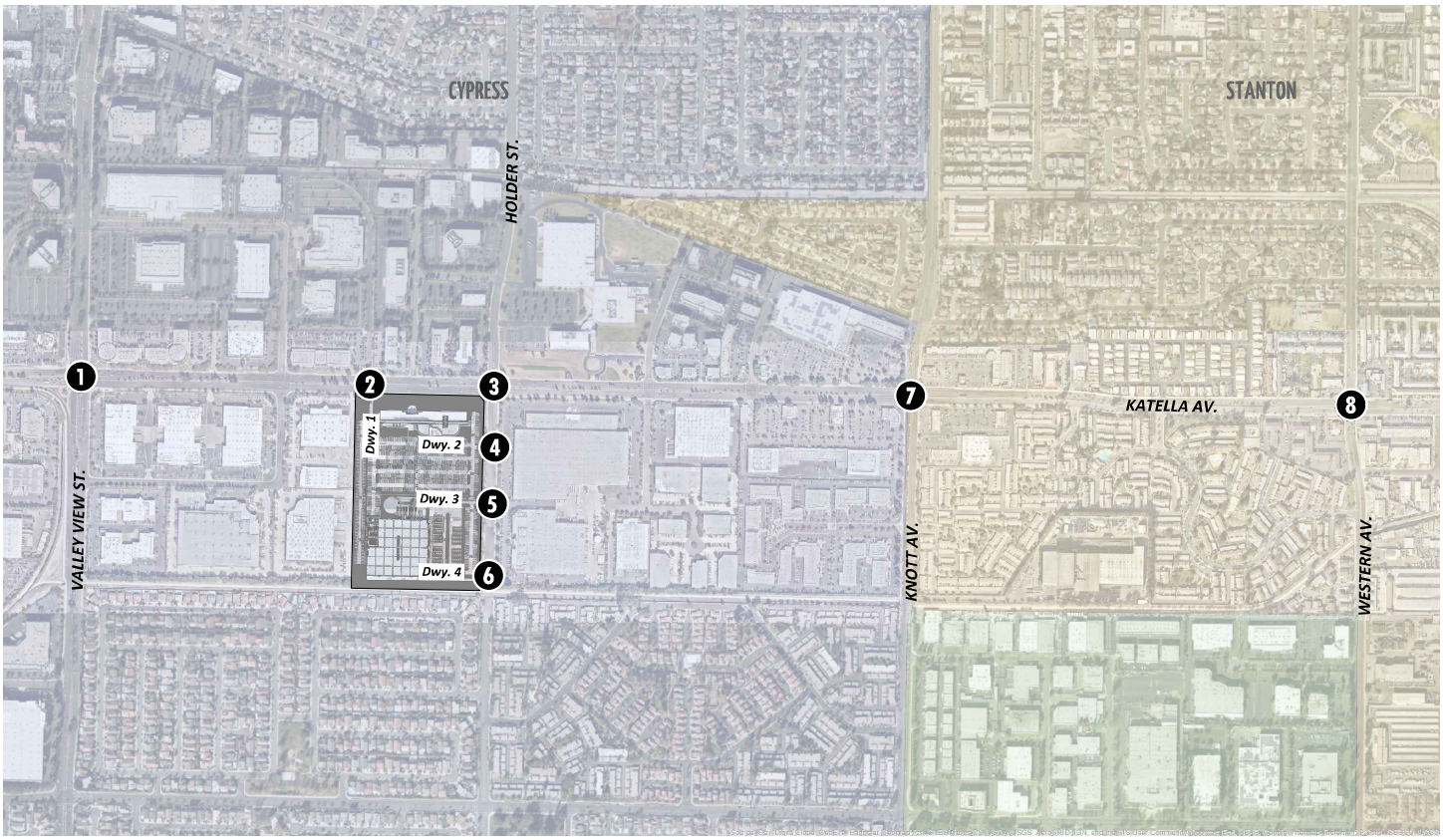

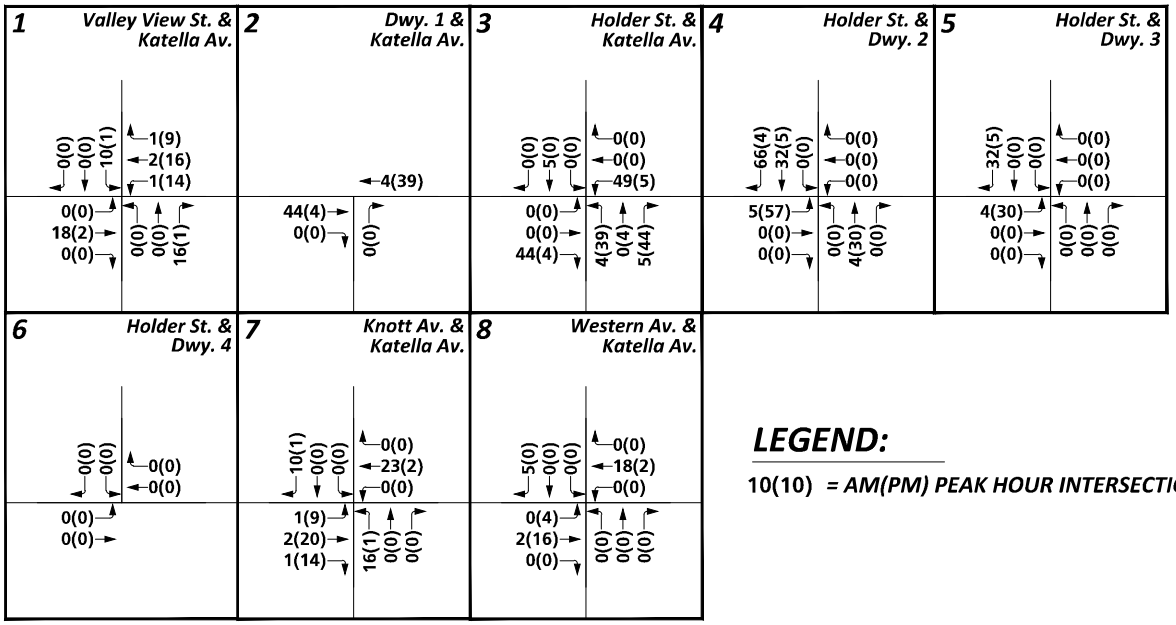

LEGEND:

10(10) = AM(PM) PEAK HOUR INTERSECTION VOLUMES

N

4.5 BACKGROUND TRAFFIC

The Opening Year Cumulative conditions analysis determines the Project's contribution to near-term traffic deficiencies based on a comparison of the "With Project" traffic scenario to the "Without Project" traffic scenario. To account for background traffic growth, traffic associated with other known cumulative development projects in conjunction with an ambient growth from Existing (2020) conditions of 2.0% (annual growth rate at 2% per year, over one year) is included for Opening Year Cumulative. The background ambient growth accounts for increased traffic volumes due to generalized/unknown future development in the region that are not captured by the identified cumulative development projects.

4.6 CUMULATIVE DEVELOPMENT TRAFFIC

Exhibit 4-7 illustrates the cumulative development location map. A summary of cumulative development projects and their proposed land uses are shown in Table 4-4. If applicable (i.e. if the cumulative projects would contribute trips to study area intersections), the traffic generated by individual cumulative projects was manually added to the Opening Year Cumulative and Horizon Year forecasts to ensure that traffic generated by the listed cumulative development projects in Table 4-4 are reflected as part of the background traffic. Traffic from other cumulative developments farther away from the study area are not anticipated to add significant traffic and are accounted for by the ambient growth rate applied to forecast the background traffic. Cumulative AM and PM peak hour traffic volumes are shown on Exhibit 4-8.

EXHIBIT 4-7: CUMULATIVE DEVELOPMENT PROJECTS LOCATION MAP

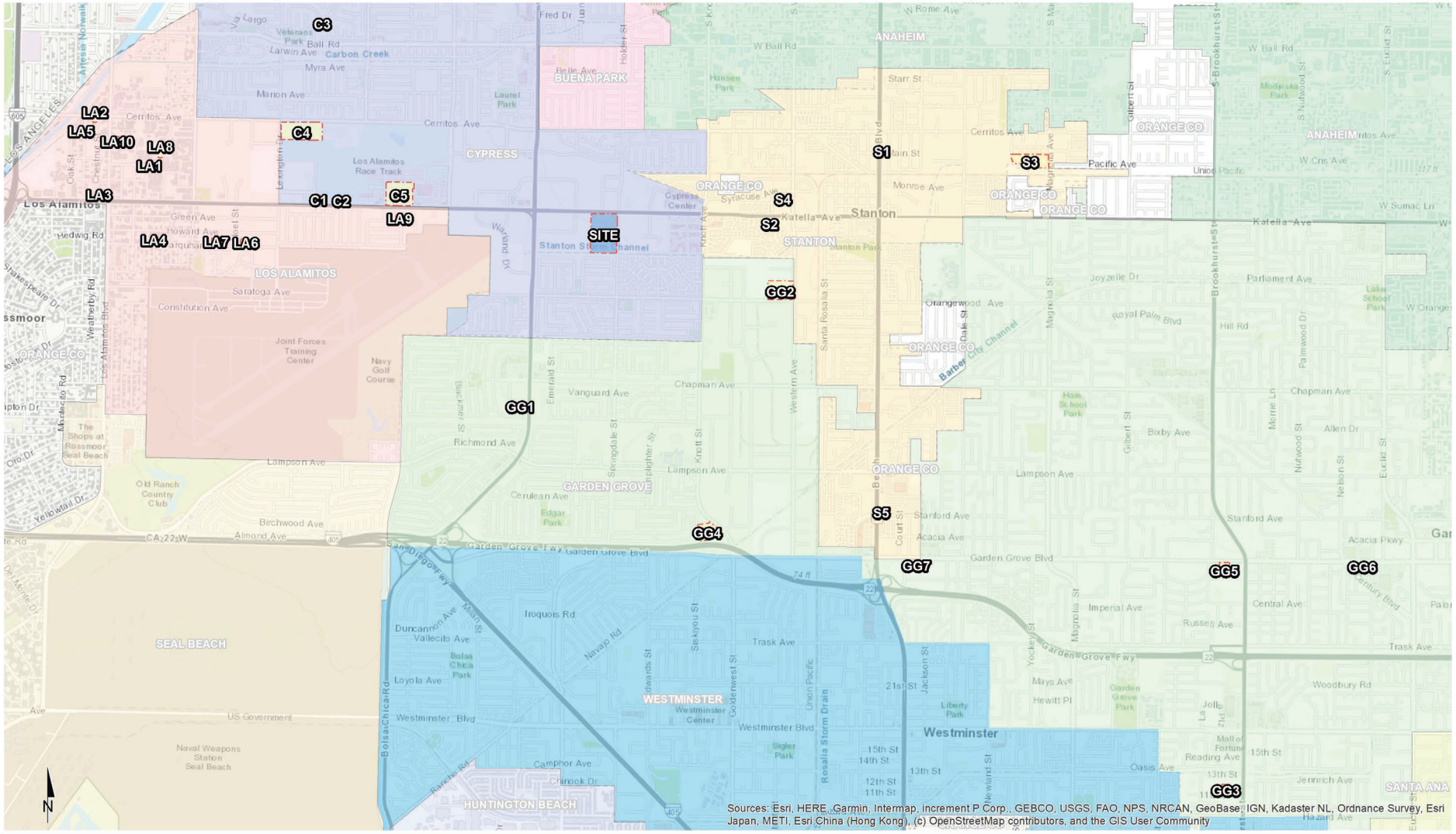

13106- cd.mxd

URBAN CROSSROADS

EXHIBIT 4-8: CUMULATIVE ONLY TRAFFIC VOLUMES (IN PCE)

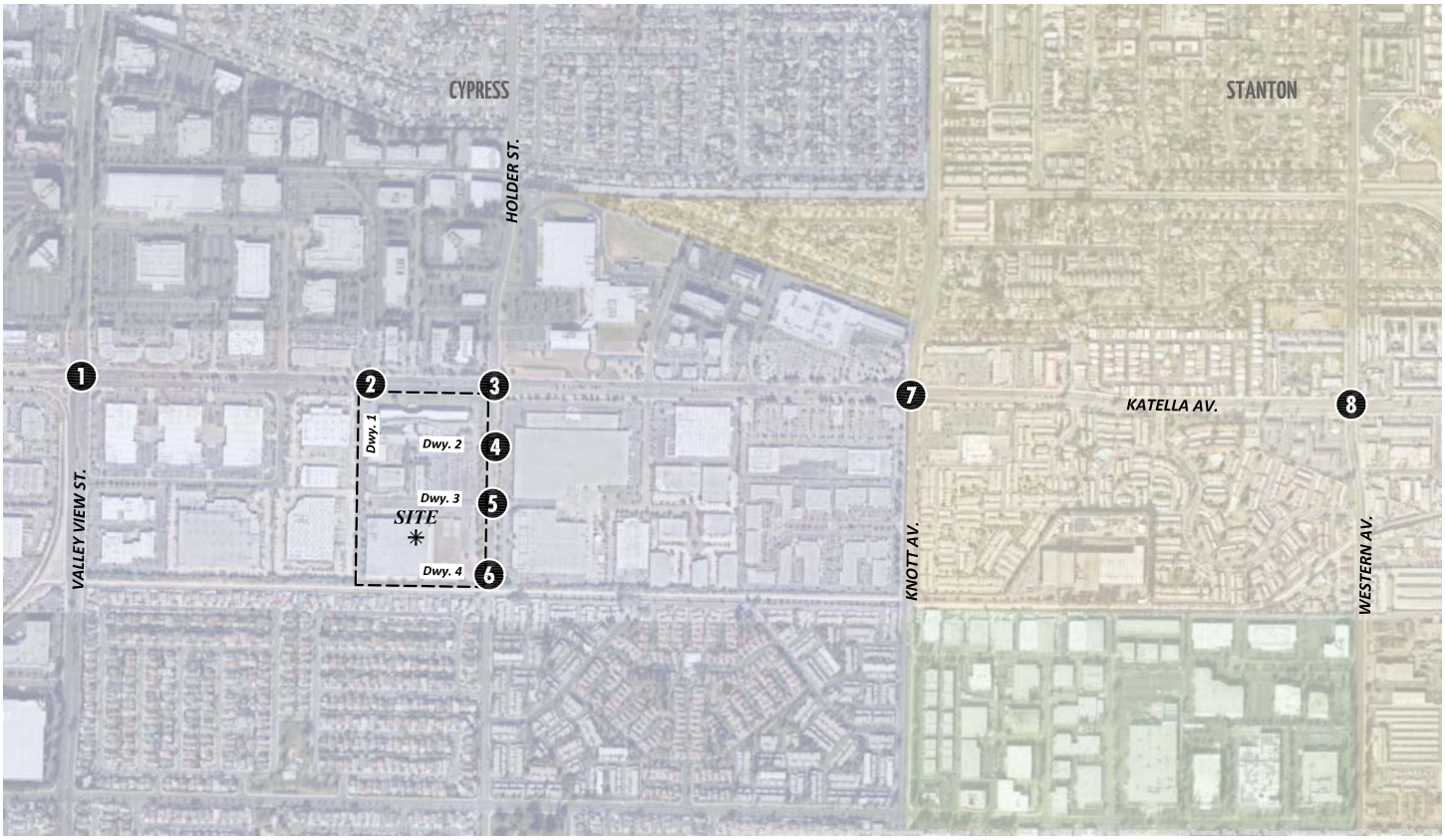

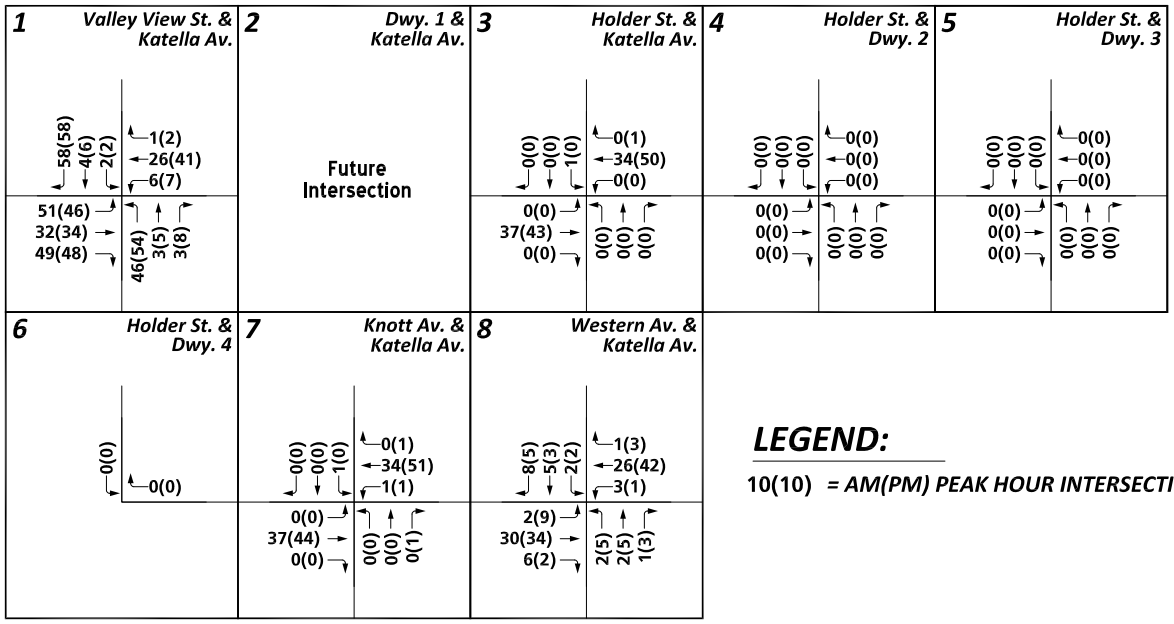

LEGEND:

10(10) = *AM(PM) PEAK HOUR INTERSECTION VOLUMES*

N

Table 4-4

Cumulative Development Land Use Summary

#	Project/Location	Land Use	Quantity	Units[1]
City of Cypress				
C1	Barton Place Mixed Use (Ovation): NEC of Katella & Enterprise	Senior Housing	244	DU
		Shopping Center	35.600	TSF
		Restaurant	11.376	TSF
C2	SRM Cypress (Westmont): NEC Katella & Enterprise	Assisted Living	129	Beds
		Shopping Center	13.700	TSF
C3	Bonanni Development: 4620 Lincoln Av.	Multifamily Housing (Mid-Rise)	67	DU
C4	Sports Park: SEC Lexington & Cerritos	Soccer Fields	6	Fields
C5	Cypress City Center: NWC of Winner's Cir. & Katella	Multifamily Housing (Mid-Rise)	251	DU
		Shopping Center	20.800	TSF
		Hotel	120	Rooms
		Multiplex Movie Theater	10	Screens
City of Los Alamitos				
LA1	Residential Development: 10745 Cherry St.	Duplex - Multifamily (Low-Rise)	2	DU
LA2	Los Alamitos Luxury Apartments[2]: 3342 Cerritos Av.	Multifamily Housing (Mid-Rise)	107	DU
LA3	Residential Development: 10922 Walnut St.	Multifamily Housing (Low-Rise)	4	DU
LA4	Residential Development: 3751 Farquhar Av.	Multifamily Housing (Low-Rise)	4	DU
LA5	Cottonwood Church Site[3]: 3311 Sausalito St.	Multifamily Housing (Low-Rise)	50	DU
LA6	Residential Development: 4071 Farquhar Av.	Multifamily Housing (Low-Rise)	5	DU
LA7	Residential Development: 4061 Farquhar Av.	Multifamily Housing (Low-Rise)	5	DU
LA8	Residential Development: 10700 Regan St.	Duplex - Multifamily (Low-Rise)	2	DU
LA9	Commercial Development: 5250 Katella Av.	Coffee Shop	2.400	TSF
		Restaurant	2.800	TSF
LA10	Hotel Development: 10650 Los Alamitos Bl.	Hotel	107	Rooms
City of Garden Grove				
GG1	Mixed Use Development: 12101-12111 Valley View St.	Automatic Car Wash	4.241	TSF
		Fast-Food w/ Drive-Thru Restaurant	1.870	TSF
		Restaurant	2.700	TSF
		Movie Theater	2.846	TSF
GG2	LLA-015-2018: 7351 & 7421 Orangewood Av.	Food Manufacturing	36.763	TSF
GG3	Melia Homes (TT-18169-2019): 9861 11th St.	Multifamily Housing (Low-Rise)	31	DU
GG4	PUD 104-70: 12821 Knott St.	Warehouse	45.335	TSF
GG5	SP-048-2018MM1: 9860 Larson Av./10080 Garden Grove Bl.	Senior Affordable Housing	394	DU
		Shopping Center	12.938	TSF
GG6	SP-061-2019: 10862 Garden Grove Bl.	Medical Office	9.229	TSF
GG7	SP-062-2019: 8218 Garden Grove Bl.	Multifamily Housing (Mid-Rise)[4]	46	DU
City of Stanton				
S1	Commercial Development: 10580-10600 Beach Bl.	Shopping Center	4.100	TSF
		Warehouse	0.850	TSF
S2	Residential Development: 7320 Katella Av.	Multifamily Housing (Low-Rise)	6	DU
S3	Tina-Pacific: NWC Magnolia & Pacific	Affordable Multifamily Housing (Mid-Rise)	161	DU
S4	Lighthouse Church: 10871 Western Av.	Single Family Detached Residential	40	DU
S5	The Mint: 12736 Beach Bl.	Multifamily Housing (Mid-Rise)	300	DU
		Shopping Center	6.250	TSF

[1] TSF = Thousand Square Feet; DU = Dwelling Units

[2] Source: Los Alamitos Luxury Apartments Initial Study (2018).

[3] Source: Cottonwood Church Site Residential Development Traffic Impact Study (2017).

[4] 21.7 percent of the development will include affordable units.

5 E+P TRAFFIC CONDITIONS

This section discusses the traffic forecasts for E+P conditions and the resulting intersection operations and traffic signal warrant analyses.

5.1 ROADWAY IMPROVEMENTS

The lane configurations and traffic controls assumed to be in place for E+P conditions are consistent with those shown previously on Exhibit 3-1, with the exception of the Project driveways and those facilities assumed to be constructed by the Project to provide site access, which are also assumed to be in place for E+P conditions. In other words, no other off-site improvements are assumed beyond those that currently exist with the exception of the intersections and roadways that would be improved by the Project for access.

5.2 E+P TRAFFIC VOLUME FORECASTS

This scenario includes Existing traffic volumes plus Project traffic (with existing use credit), where Existing traffic includes 50 percent of the existing on-site uses and Project traffic consists of the net change between the proposed use and existing uses. See Section 3.7 *Existing Traffic Counts* for additional discussion of the existing on-site uses. Existing traffic volumes from the intersection of Holder Street and Katella Avenue have been used to calculate the eastbound and westbound through volumes at Driveway 1 on Katella Avenue. Project traffic was then added to Driveway 1. Exhibit 5-1 shows the AM and PM peak hour traffic volumes which can be expected for E+P traffic conditions.

5.3 INTERSECTION OPERATIONS ANALYSIS

E+P peak hour traffic operations have been evaluated for the study area intersections based on the analysis methodologies presented in Section 2 *Methodologies* of this TIA. The intersection analysis results are summarized in Table 5-1, which indicates the study area intersections would continue to operate at an acceptable LOS during the peak hours with the addition of Project traffic, consistent with Existing traffic conditions. Consistent with Table 5-1, a summary of the peak hour intersection LOS for E+P conditions are shown on Exhibit 5-2. The intersection operations analysis worksheets for E+P traffic conditions are included in Appendix 5.1 of this TIA.

5.4 TRAFFIC SIGNAL WARRANTS ANALYSIS

For E+P conditions, there are no study area intersections anticipated to meet peak hour volume-based traffic signal warrants (see Appendix 5.2).

5.5 E+P RECOMMENDATIONS

Based on the applicable jurisdiction's threshold criteria as discussed in Section 2.6 *Threshold Criteria*, there are no deficiencies anticipated at the study area intersections for E+P traffic conditions. As such, no improvements have been recommended.

EXHIBIT 5-1: E+P TRAFFIC VOLUMES (IN PCE)

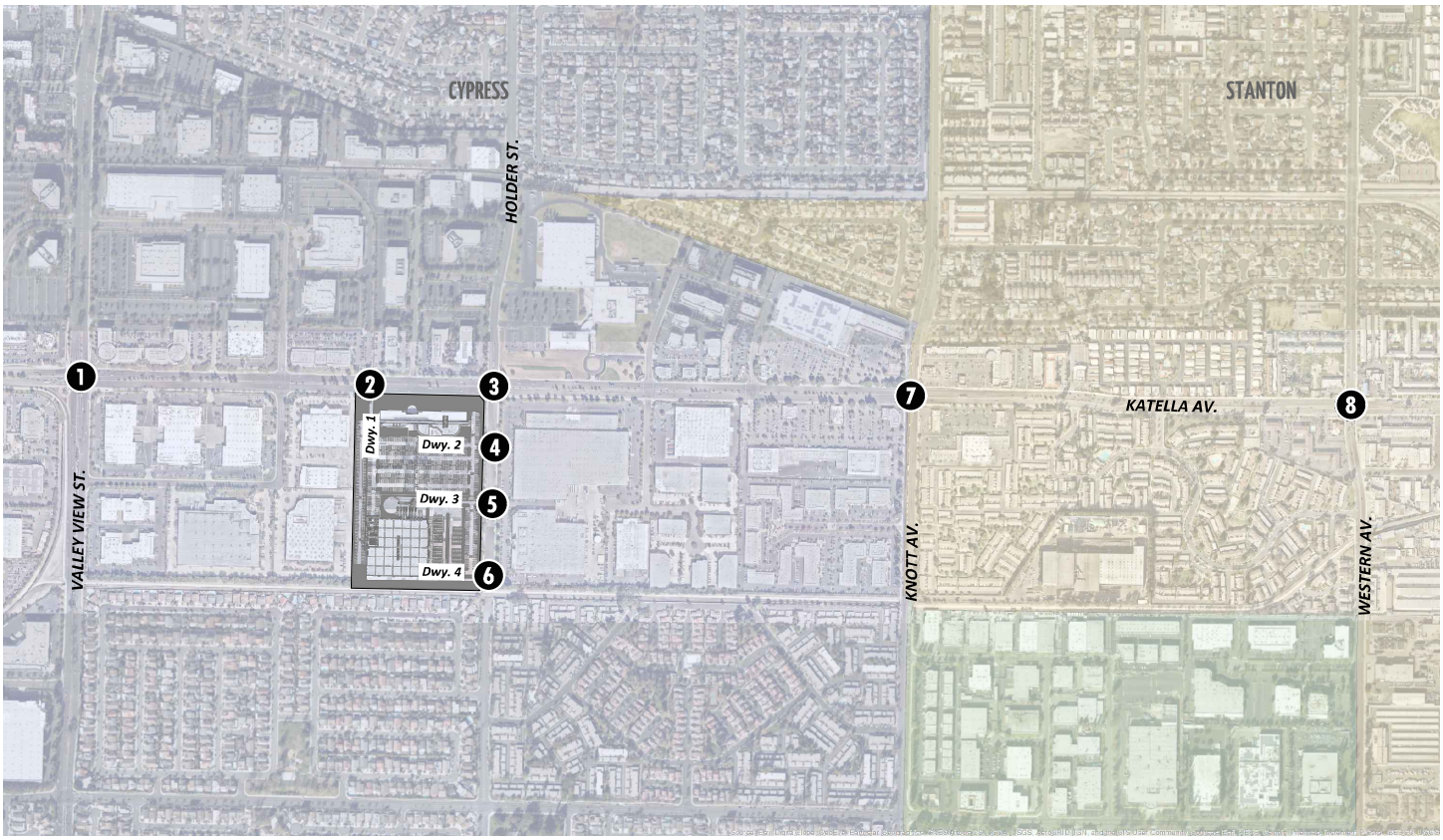

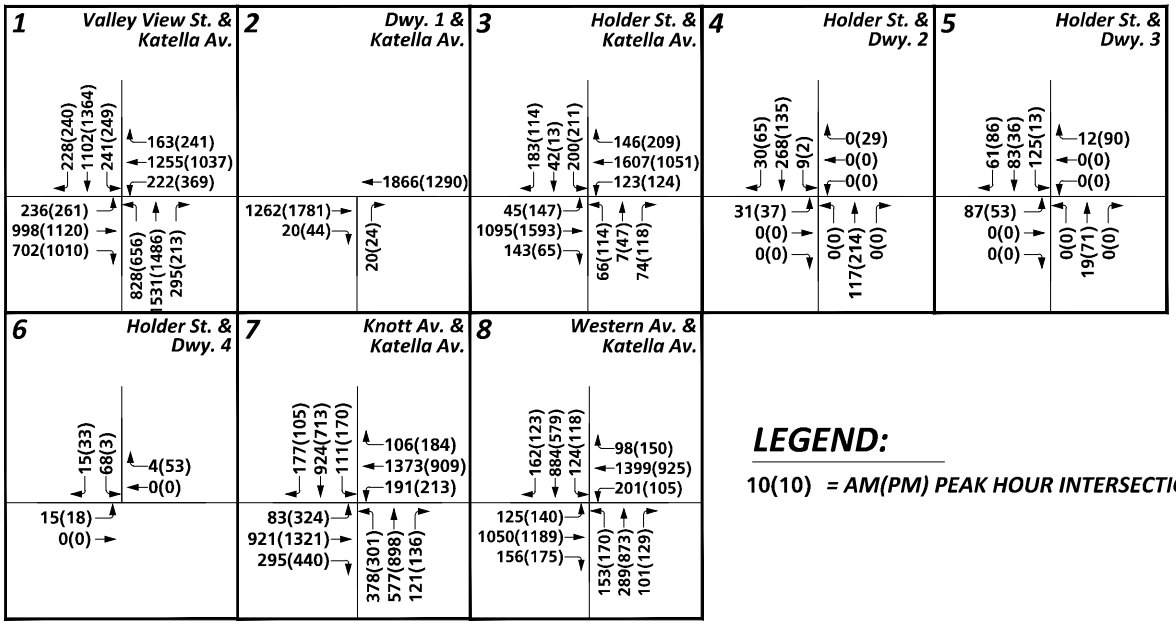

LEGEND:

10(10) = AM(PM) PEAK HOUR INTERSECTION VOLUMES

N

13106 - vols.dwg

URBAN CROSSROADS

EXHIBIT 5-2: E+P SUMMARY OF LOS

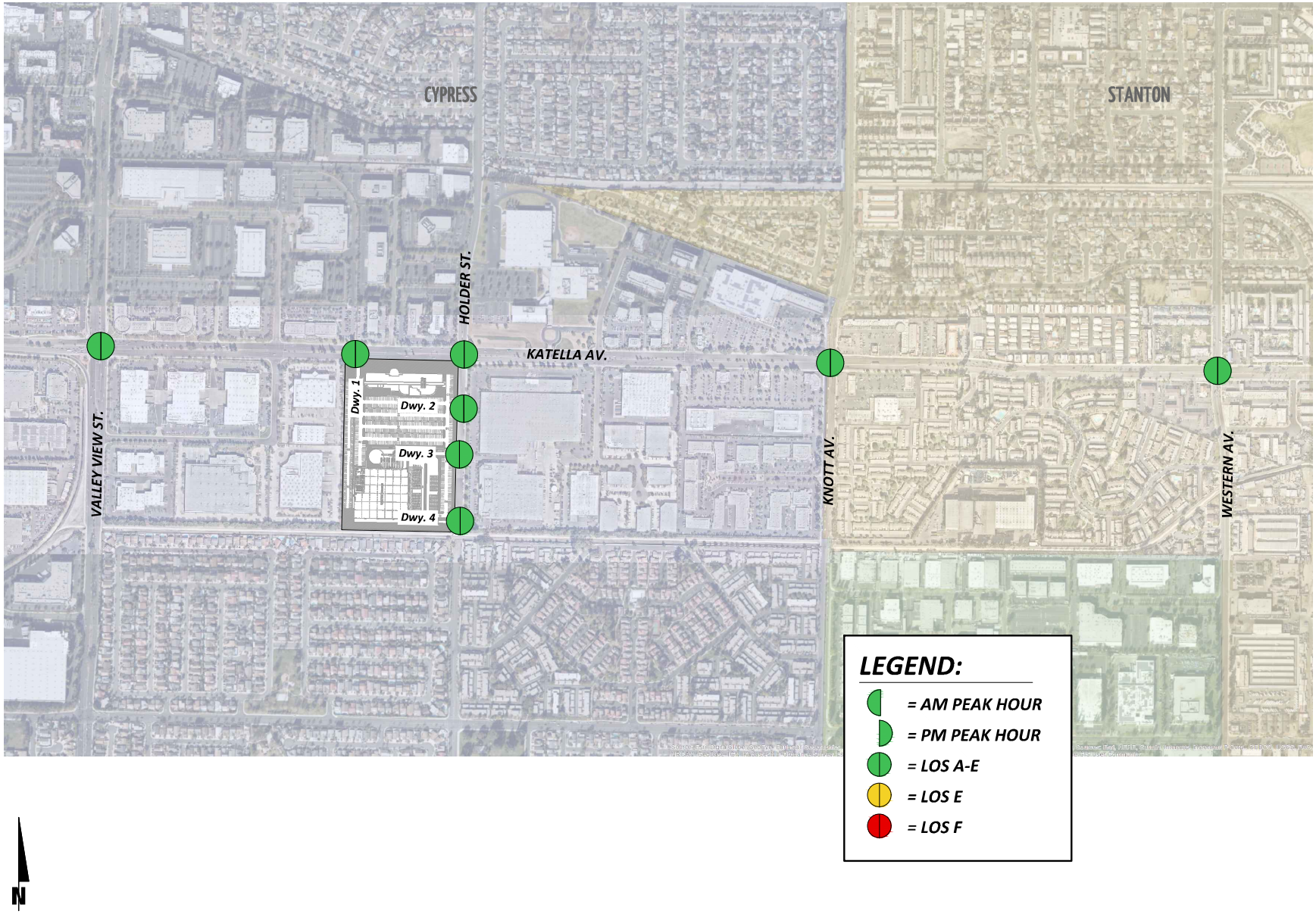

Table 5-1

Intersection Analysis for E+P Conditions

#	Intersection	Traffic Control[3]	Existing (2020) HCM Delay[1] (secs.) AM	Existing (2020) HCM Delay[1] (secs.) PM	Existing (2020) Level of Service AM	Existing (2020) Level of Service PM	Existing (2020) ICU[2] (v/c) AM	Existing (2020) ICU[2] (v/c) PM	Existing (2020) Level of Service AM	Existing (2020) Level of Service PM	E+P HCM Delay[1] (secs.) AM	E+P HCM Delay[1] (secs.) PM	E+P Level of Service AM	E+P Level of Service PM	E+P ICU[2] (v/c) AM	E+P ICU[2] (v/c) PM	E+P Level of Service AM	E+P Level of Service PM
1	Valley View St. & Katella Av.	TS	Not Applicable[4]				0.829	0.859	D	D	Not Applicable[4]				0.844	0.874	D	D
1	Driveway 1 & Katella Av.	**CSS**	Future Intersection				Not Applicable[5]				16.6	24.2	C	C	Not Applicable[5]			
2	Holder St. & Katella Av.	TS	Not Applicable[4]				0.589	0.634	A	B	Not Applicable[4]				0.637	0.746	B	C
3	Holder St. & Driveway 2	CSS	12.1	11.9	B	B	Not Applicable[5]				15.6	15.5	C	C	Not Applicable[5]			
4	Holder St. & Driveway 3	CSS	13.3	10.9	B	B	Not Applicable[5]				18.3	13.1	C	B	Not Applicable[5]			
5	Holder St. & Driveway 4	CSS	0.0	0.0	A	A	Not Applicable[5]				9.6	8.6	A	A	Not Applicable[5]			
7	Knott Av. & Katella Av.	TS	Not Applicable[4]				0.836	0.935	D	E	Not Applicable[4]				0.855	0.942	D	E
8	Western Av. & Katella Av.	TS	Not Applicable[4]				0.886	0.798	D	C	Not Applicable[4]				0.897	0.804	D	D

1 Per the Highway Capacity Manual (6th Edition), overall average intersection delay and level of service are shown for intersections with a traffic signal or all way stop control. For intersections with cross street stop control, the delay and level of service for the worst individual movement (or movements sharing a single lane) are shown.

2 Intersection capacity utilization (ICU) methodology results are presented as a volume-to-capacity ratio.

3 CSS = Cross-street Stop; TS = Traffic Signal; **CSS** = Improvement

4 HCM not reported for signalized intersections.

5 ICU not reported for unsignalized intersections.

6 OPENING YEAR CUMULATIVE (2021) TRAFFIC CONDITIONS

This section discusses the methods used to develop Opening Year Cumulative Without and With Project traffic forecasts, and the resulting intersection operations and traffic signal warrant analyses.

6.1 ROADWAY IMPROVEMENTS

The lane configurations and traffic controls assumed to be in place for Opening Year Cumulative conditions are consistent with those shown previously on Exhibit 3-1, with the exception of the Project driveways and those facilities assumed to be constructed by the Project to provide site access, which would be in place for Opening Year Cumulative traffic conditions.

6.2 OPENING YEAR CUMULATIVE WITHOUT PROJECT TRAFFIC VOLUME FORECASTS

Opening Year Cumulative Without Project traffic forecasts include traffic associated with other known cumulative development projects in conjunction with an ambient growth from Existing (2020) conditions of 2.0% (annual growth rate at 2% per year, over one year) to account for background traffic growth that is not captured by the traffic associated with the cumulative development projects. The weekday AM and PM peak hour volumes which can be expected for Opening Year Cumulative (2021) Without Project traffic conditions are shown on Exhibit 6-1.

6.3 OPENING YEAR CUMULATIVE WITH PROJECT TRAFFIC VOLUME FORECASTS

Opening Year Cumulative With Project traffic forecasts include the addition of Project traffic (with existing use credit) to the Opening Year Cumulative Without Project forecasts described above. The weekday AM and PM peak hour volumes which can be expected for Opening Year Cumulative (2021) With Project traffic conditions are shown on Exhibit 6-2.

6.4 INTERSECTION OPERATIONS ANALYSIS

LOS calculations were conducted for the study intersections to evaluate their operations under Opening Year Cumulative Without Project conditions, with roadway and intersection geometrics consistent with Section 6.1 *Roadway Improvements*. As shown in Table 6-1, the study area intersections are anticipated to continue to operate at an acceptable LOS during the peak hours for both Opening Year Cumulative Without and With Project traffic conditions. The intersection of Western Avenue and Katella Avenue is anticipated to operate at LOS E under Opening Year Cumulative (2021) Without and With Project traffic conditions, however, Katella Avenue is identified as a Smart Street in the City of Stanton's General Plan which allows for LOS E peak hour operations. A summary of the peak hour intersection LOS for Opening Year Cumulative Without and With Project conditions are shown on Exhibits 6-3 and 6-4, respectively. The intersection operations analysis worksheets for Opening Year Cumulative Without and With Project traffic conditions are included in Appendix 6.1 and Appendix 6.2 of this TIA, respectively.

EXHIBIT 6-1: OPENING YEAR CUMULATIVE (2021) WITHOUT PROJECT TRAFFIC VOLUMES (IN PCE)

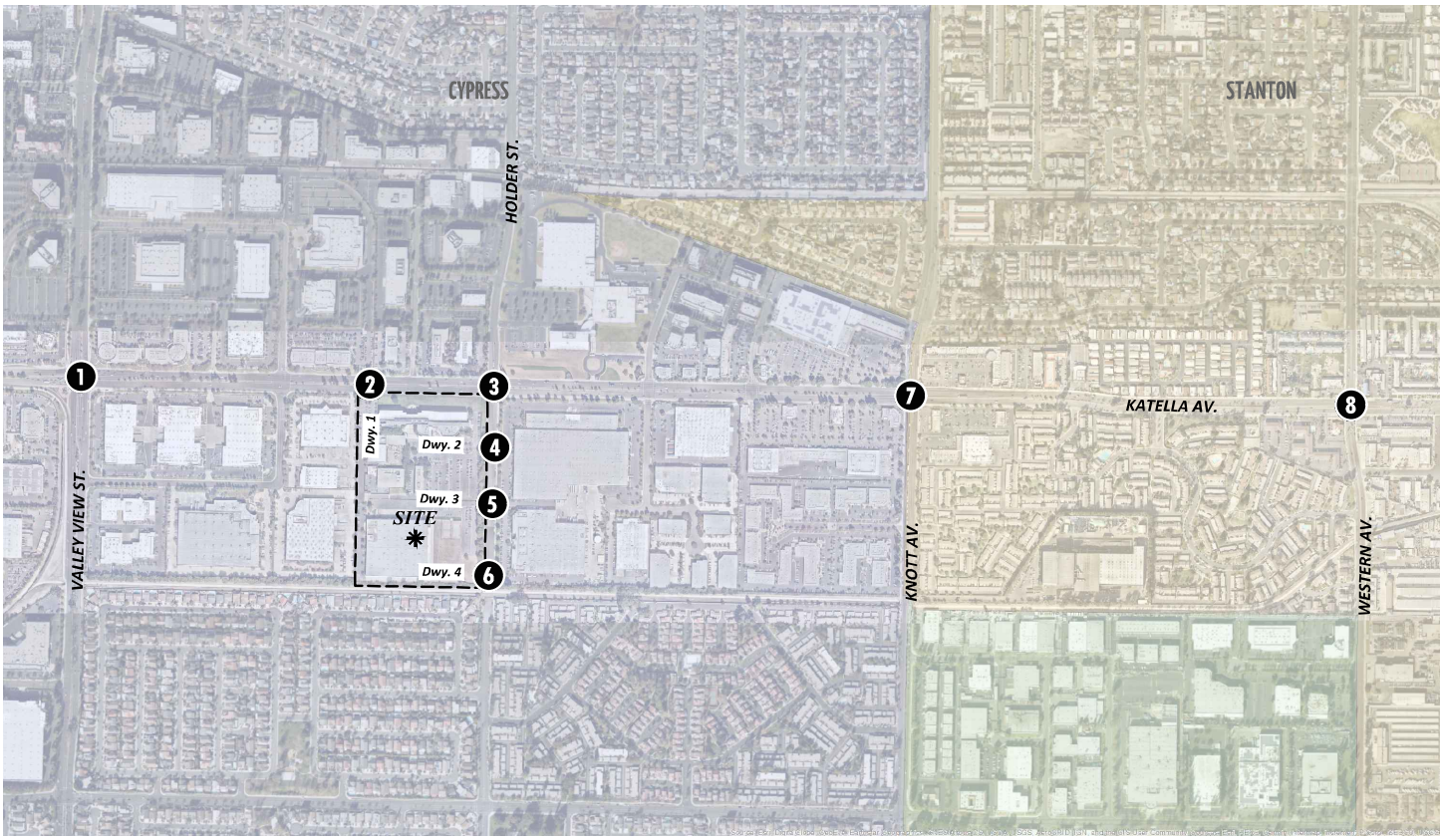

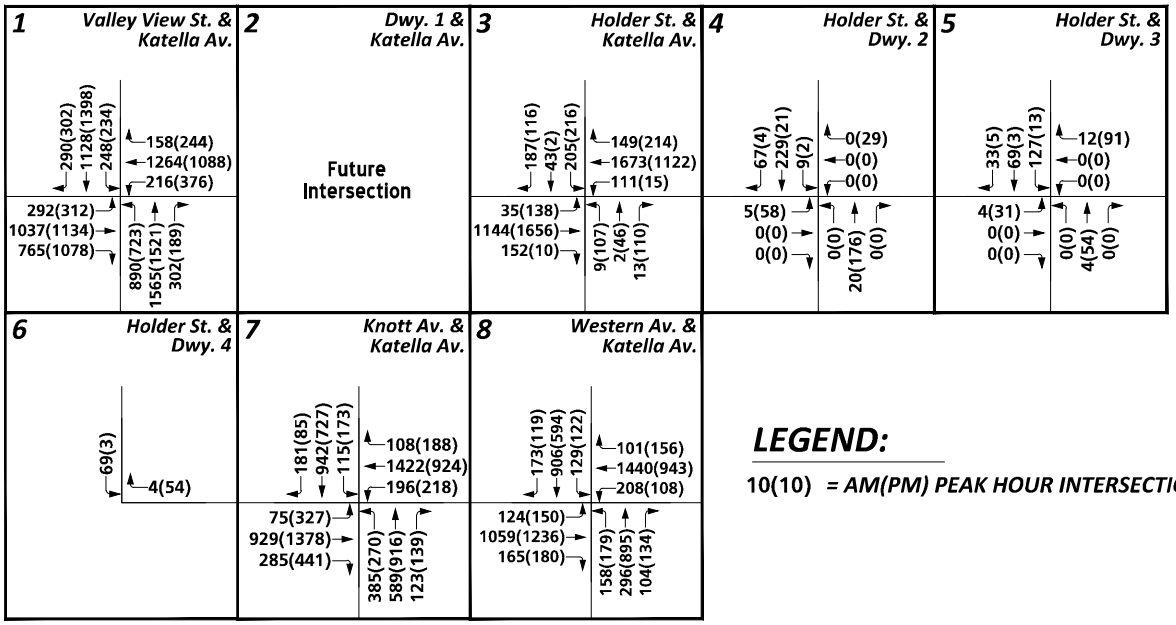

EXHIBIT 6-2: OPENING YEAR CUMULATIVE (2021) WITH PROJECT TRAFFIC VOLUMES (IN PCE)

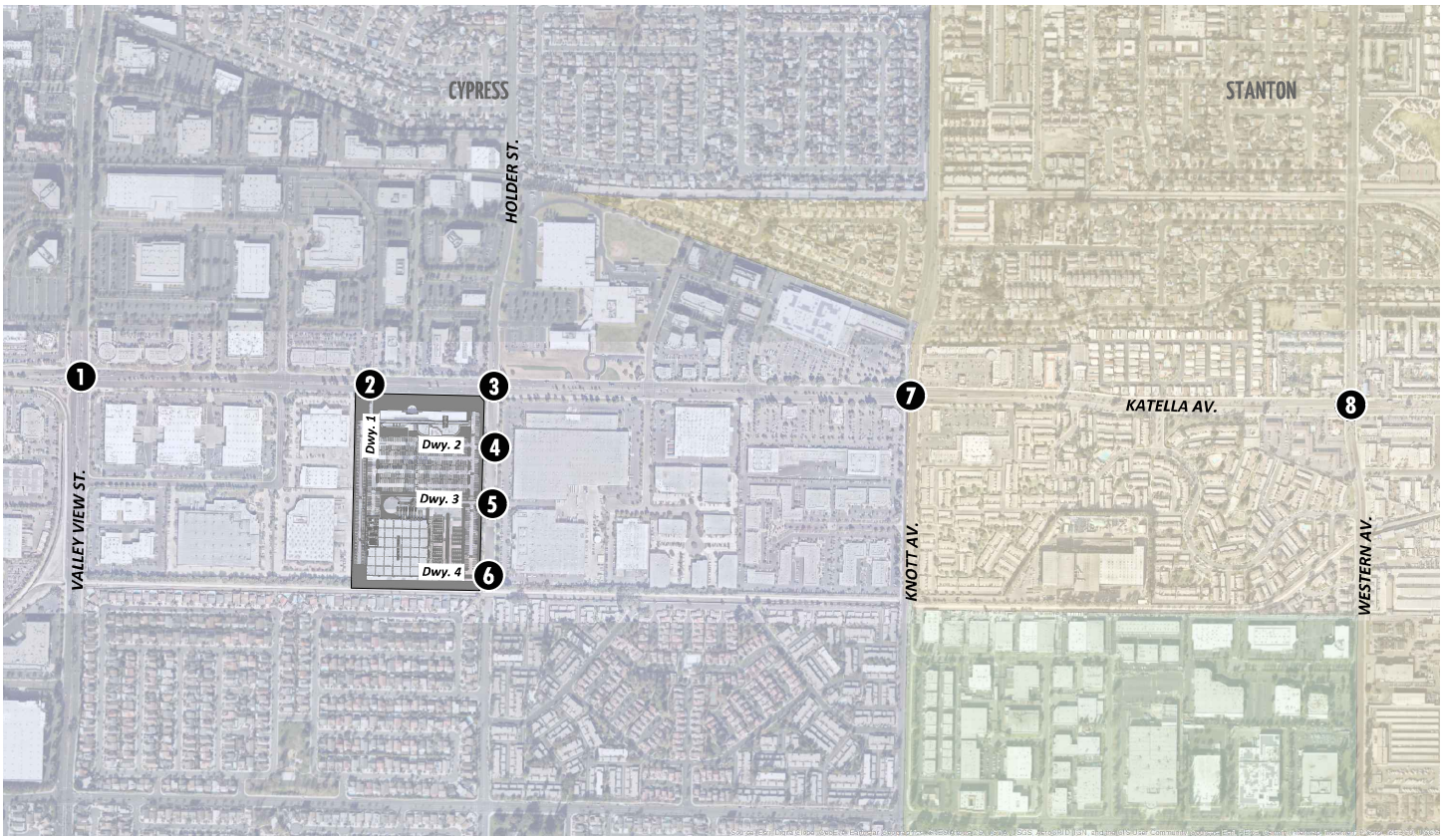

1 Valley View St. & Katella Av.

290(302) 1128(1398) 248(255) — 167(247) 1306(1098) 232(382)

292(312) 1049(1176) 765(1078) — 890(723) 1565(1521) 303(225)

2 Dwy. 1 & Katella Av.

1935(1365)

1324(1858) 20(44) — 20(24)

3 Holder St. & Katella Av.

187(116) 43(13) 205(216) — 149(214) 1673(1122) 124(124)

45(150) 1154(1668) 145(65) — 66(116) 7(48) 74(119)

4 Holder St. & Dwy. 2

30(65) 272(135) 9(2) — 0(29) 0(0) 0(0)

31(37) 0(0) 0(0) — 0(0) 118(217) 0(0)

5 Holder St. & Dwy. 3

61(86) 84(36) 127(13) — 12(91) 0(0) 0(0)

87(53) 0(0) 0(0) — 0(0) 19(72) 0(0)

6 Holder St. & Dwy. 4

15(33) 69(3) — 4(54) 0(0)

15(18) 0(0)

7 Knott Av. & Katella Av.

181(106) 942(727) 115(173) — 108(188) 1434(977) 196(218)

84(330) 976(1391) 301(448) — 385(306) 589(916) 123(139)

8 Western Av. & Katella Av.

173(130) 906(594) 129(122) — 101(156) 1453(985) 208(108)

129(152) 1101(1246) 165(180) — 158(179) 296(895) 104(134)

LEGEND:

10(10) = *AM(PM) PEAK HOUR INTERSECTION VOLUMES*

N

EXHIBIT 6-3: OPENING YEAR CUMULATIVE (2021) WITHOUT PROJECT SUMMARY OF LOS

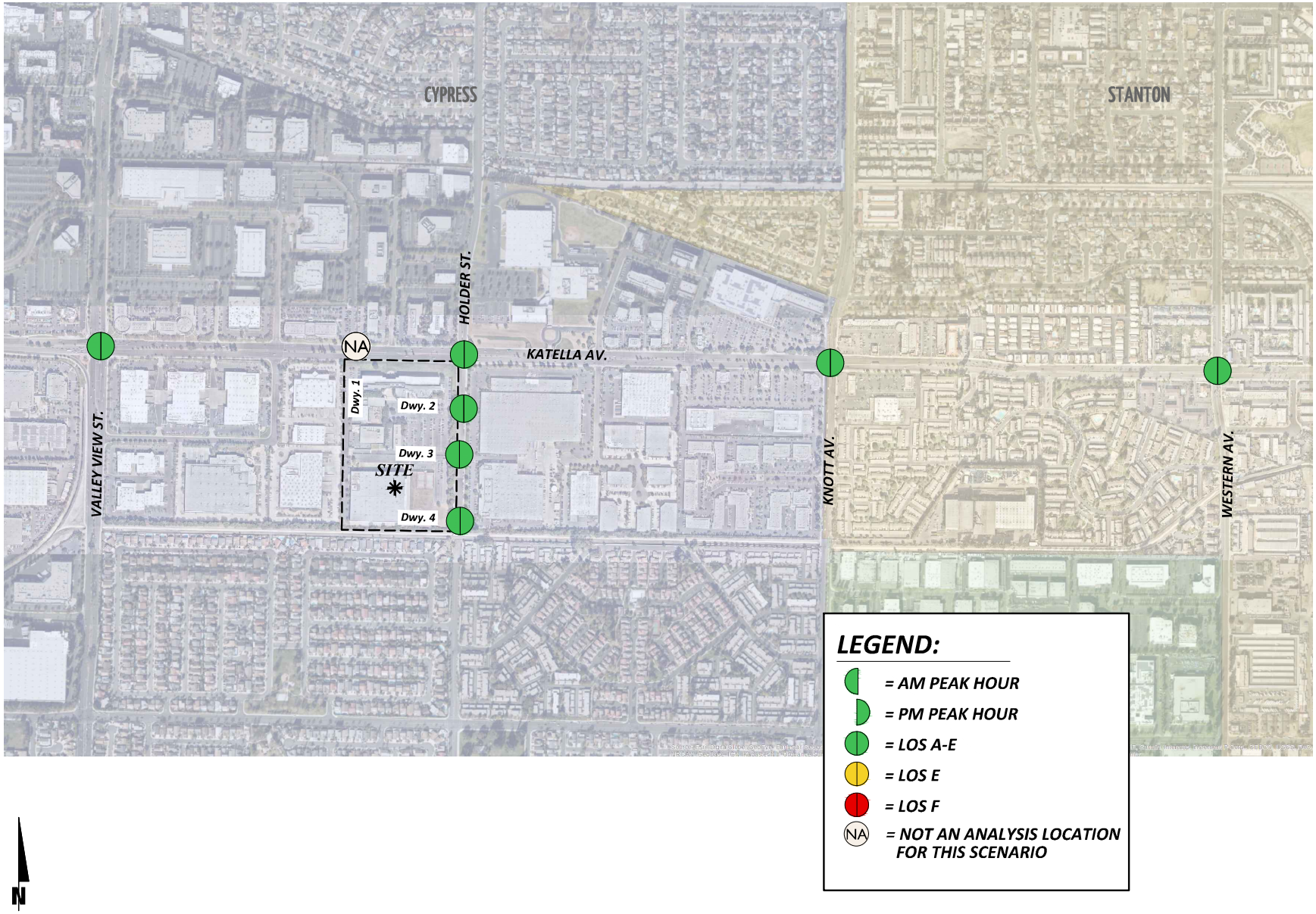

EXHIBIT 6-4: OPENING YEAR CUMULATIVE (2021) WITH PROJECT SUMMARY OF LOS

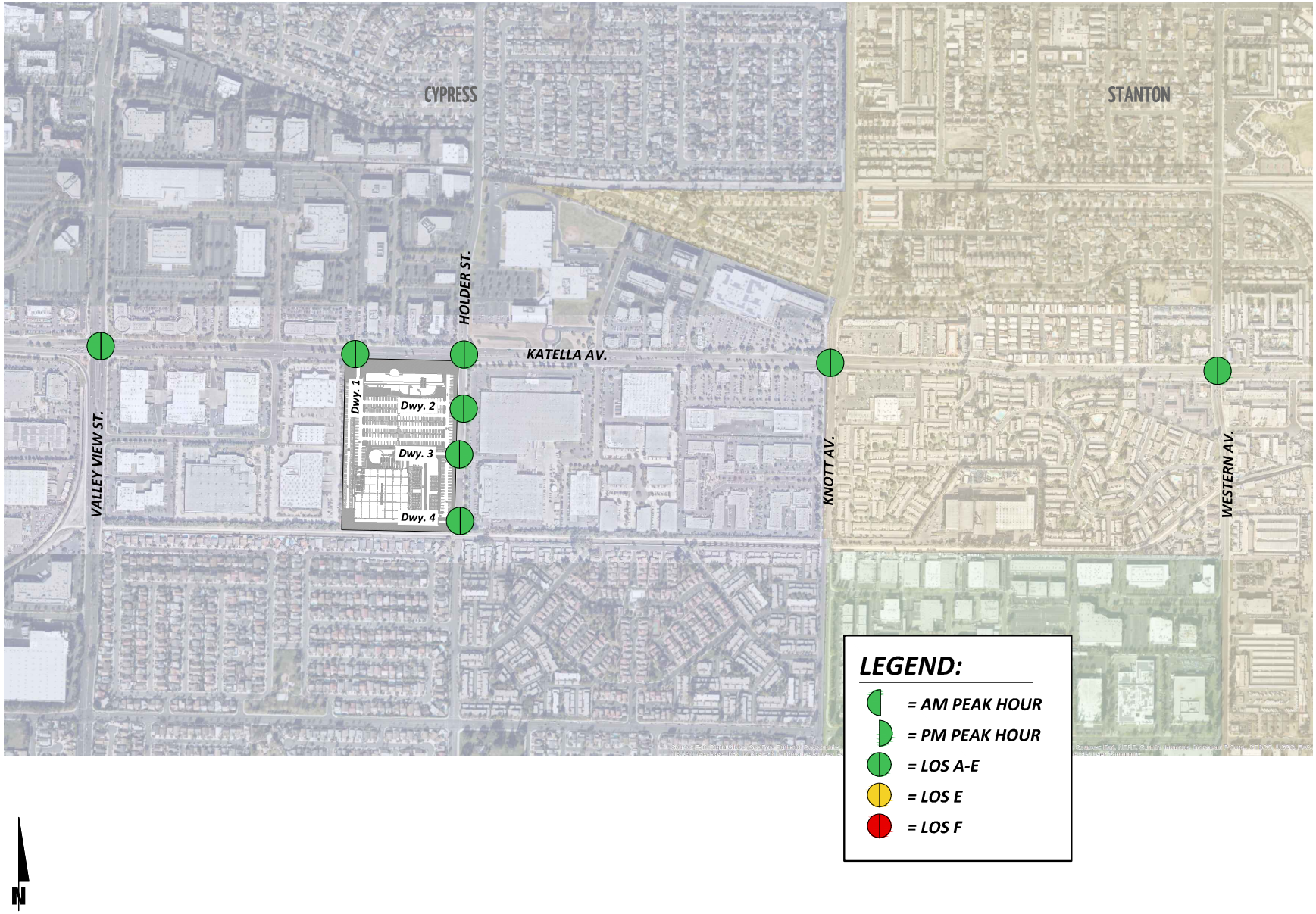

Table 6-1

Intersection Analysis for Opening Year Cumulative (2021) Conditions

#	Intersection	Traffic Control[3]	2021 Without Project								2021 With Project							
			HCM Delay[1] (secs.)		Level of Service		ICU[2] (v/c)		Level of Service		HCM Delay[1] (secs.)		Level of Service		ICU[2] (v/c)		Level of Service	
			AM	PM	AM	PM	AM	PM	AM	PM	AM	PM	AM	PM	AM	PM	AM	PM
1	Valley View St. & Katella Av.	TS	Not Applicable[4]				0.875	0.896	D	D	Not Applicable[4]				0.884	0.911	D	E
2	Driveway 1 & Katella Av.	**CSS**	Future Intersection				Not Applicable[5]				17.2	25.7	C	D	Not Applicable[5]			
3	Holder St. & Katella Av.	TS	Not Applicable[4]				0.607	0.658	B	B	Not Applicable[4]				0.654	0.765	B	C
4	Holder St. & Driveway 2	CSS	12.2	12.0	B	B	Not Applicable[5]				15.8	15.6	C	C	Not Applicable[5]			
5	Holder St. & Driveway 3	CSS	13.5	11.0	B	B	Not Applicable[5]				18.6	13.1	C	B	Not Applicable[5]			
6	Holder St. & Driveway 4	CSS	0.0	0.0	A	A	Not Applicable[5]				9.6	8.6	A	A	Not Applicable[5]			
7	Knott Av. & Katella Av.	TS	Not Applicable[4]				0.858	0.961	D	E	Not Applicable[4]				0.876	0.968	D	E
8	Western Av. & Katella Av.	TS	Not Applicable[4]				0.913	0.823	E	D	Not Applicable[4]				0.925	0.828	E	D

[1] Per the Highway Capacity Manual (6th Edition), overall average intersection delay and level of service are shown for intersections with a traffic signal or all way stop control. For intersections with cross street stop control, the delay and level of service for the worst individual movement (or movements sharing a single lane) are shown.

[2] Intersection capacity utilization (ICU) methodology results are presented as a volume-to-capacity ratio.

[3] CSS = Cross-street Stop; TS = Traffic Signal; **CSS** = Improvement

[4] HCM not reported for signalized intersections.

[5] ICU not reported for unsignalized intersections.

6.5 TRAFFIC SIGNAL WARRANTS ANALYSIS

There are no study area intersections that are anticipated to meet peak hour volume-based traffic signal warrants for Opening Year Cumulative (2021) Without and With Project traffic conditions (see Appendix 6.3 and Appendix 6.4).

6.6 OPENING YEAR CUMULATIVE (2021) RECOMMENDATIONS

Based on the applicable jurisdiction's threshold criteria as discussed in Section 2.6 *Threshold Criteria*, there are no deficiencies anticipated at the study area intersections for Opening Year Cumulative (2021) traffic conditions. As such, no improvements have been recommended.

This Page Intentionally Left Blank

7 REFERENCES

[1] Orange County Transportation Authority (OCTA), "2019 Congestion Management Program (CMP)," November 2019.

[2] Urban Crossroads, Inc., "Katella Avenue Amazon Facility Vehicles Miles Travelled Assessment," Cypress, June 2020 (Revised).

[3] American Association of State Highway Transportation Officials, A Policy on Geometric Design of Highways and Streets (Green Book), American Association of State Highway Transportation Officials, 2018.

[4] RBF Consulting for City of Cypress, "City of Cypress General Plan Update," Cypress, 2000.

[5] RBF Consulting for City of Stanton, "City of Stanton General Plan," Stanton, September 23, 2008.

[6] Husch, David and Albeck, John, Intersection Capacity Utilization: Evaluation Procedures for Intersections and Interchanges, Albany, California: Trafficware, 2003 Edition.

[7] Transportation Research Board, Highway Capacity Manual (HCM), 6th Edition ed., Washington, D.C.: National Academy of Sciences, 2016.

[8] California Department of Transportation, "California Manual on Uniform Traffic Control Devices (CAMUTCD)," in *California Manual on Uniform Traffic Control Devices (CAMUTCD)*, 2014, Updated March 9, 2018.

[9] Institute of Transportation Engineers, Trip Generation Manual, 10th Edition ed., 2017.

[10] Institute of Transportation Engineers, "Trip Generation Manual Supplement," February 2020.

[11] South Coast Air Quality Management District, "Warehouse Truck Trip Study Data Results and Usage," 2014.

This Page Intentionally Left Blank

APPENDIX 1.1:

APPROVED SCOPING AGREEMENT

This Page Intentionally Left Blank

260 E. Baker St. | Suite 200 | Costa Mesa, CA 92626 | (949) 660-1994
urbanxroads.com

March 27, 2020

Mr. John P. Ramirez
City of Cypress
5275 Orange Avenue
Cypress, CA 90630

SUBJECT: SCOPING ASSUMPTIONS FOR THE KATELLA AVENUE AMAZON FACILITY TRANSPORTATION IMPACT STUDIES (LOS & VMT)

Dear Mr. John P. Ramirez:

The firm of Urban Crossroads, Inc. is pleased to submit this letter documenting the suggested scope of study for the Katella Avenue Amazon Facility ("Project"), which is located at 6400 Katella Avenue, in the City of Cypress. The proposed Project will consist of the demolition of existing buildings except the southerly warehouse building (145,004 SF) and the northern office building (180,000 SF). Although 180,000 square feet of office space would remain, approximately 70,000 square feet of the existing research and development buildings will be demolished. The remaining portion of the site will provide parking for sprinter cargo vans/flex vehicles and employees of the facility as well as access to the truck docks on the north side of the building. It should be noted that the existing northern office building (180,000 SF) that fronts Katella Avenue will not be occupied, and therefore would not generate any traffic.

Our goal is to obtain comments from City of Cypress staff, to ensure that the traffic study fully addresses the potential impacts of the proposed Project. The remainder of this letter describes the draft proposed analysis methodology, project trip generation, trip distribution, and project traffic assignment/project trips on the surrounding roadway network, which have been used to establish the draft proposed project study area and analysis locations.

Exhibit 1 depicts the location of the proposed Project in relation to the existing roadway network. For purposes of the traffic analysis it is anticipated that the Project will be evaluated in a single phase with a projected Opening Year of 2021. As indicated on Exhibit 1, access to the Project site is proposed to be provided to Katella Avenue via Driveway 1, and Holder Street via Driveways 2, 3, and 4. All driveways are proposed to provide full access, except for Driveway 1 which is proposed to have right-in/right-out only access (restricted by the existing raised median).

ANALYSIS SCENARIOS

Consistent with traffic study guidelines adopted by multiple local jurisdictions throughout the County of Orange, peak hour operations at each of the study area intersections and site access driveways will be assessed for the following analysis scenarios:

1. Existing (2020) Conditions (Baseline)
2. Existing plus Project (E+P) Conditions

3. Opening Year Cumulative (2021) Without Project Conditions
4. Opening Year Cumulative (2021) With Project Conditions

Analysis Scenario #1 establishes the baseline.

Analysis Scenario #2 identifies significant traffic impacts associated with the proposed Project.

Analysis Scenarios #3 and #4 would identify cumulative impacts for Opening Year Cumulative (near-term) traffic conditions. It is assumed that intersection improvements required to address Opening Year Cumulative traffic impacts will be addressed through either an existing fee program, or through a fair-share contribution. The Opening Year Cumulative (2021) traffic volume forecasts will be derived from Existing (2020) baseline conditions plus ambient growth. Individual cumulative projects will be added, as necessary.

Information for Existing (2020) conditions will be disclosed to represent the baseline traffic conditions as they existed at the time the report is prepared. Weekday AM peak hour (7 AM to 9 AM) and PM peak hour (4 PM to 6 PM) turning movement counts were collected on March 12, 2020 at the study area intersections shown on Exhibit 2. The traffic counts include the following vehicle classifications: Passenger Cars, 2-Axle Trucks, 3-Axle Trucks, and 4 or More Axle Trucks. The study area was determined utilizing the radius of impact/Project influence approach from the Orange County CMP (i.e., the Project contributes to CMP roadways by 3 percent or more of their LOS E capacity). Urban Crossroads is in the process of obtaining historical data for any overlapping intersections that could be used to validate the traffic counts that have been collected.

The operations analysis proposing to evaluate the morning and evening peak hours only as these are the peak periods of the adjacent street traffic. Trip generation data for the Project has been provided for the mid-day for informational purposes only, however, the trips during the PM peak hour exceed the mid-day peak hour. As such, deficiencies and resulting improvement needs identified at off-site intersections during the PM peak hour are likely to include any deficiencies/improvement needs that would have been identified during the mid-day peak period and further evaluation of the mid-day peak period is not warranted.

TRIP GENERATION

Trip generation represents the amount of traffic that is attracted and produced by a development and is based upon the specific land uses planned for a given project. Actual vehicle trip generation rates for the Project and the actual vehicle trip generation summary illustrating daily, and peak hour trip generation estimates for the proposed Project are shown on Table 1.

The trip generation rates used for this analysis are based upon information collected by the Institute of Transportation Engineers (ITE) as provided in their Trip Generation Manual, 10th Edition (2017), and operational data provided by the Project Applicant. ITE land use codes 150 (Warehousing) and 714 (Corporate Headquarters) have been used to derive site specific trip generation estimates for the existing uses. As noted on Table 1, refinements to the raw trip generation estimates have been made to provide

a more detailed breakdown of trips by vehicle mix. Trip generation for the proposed Amazon building is based on anticipated operational data supplied by Amazon for this particular facility during both the peak and off-peak seasons.

Although the existing 180,000 square foot corporate office building that fronts Katella Avenue will not be demolished and will be maintained in place, the building will not be occupied as part of this Project or at any point in the time in the future. The Project applicant will agree to any necessary Condition of Approval to ensure that the building cannot be legally occupied as part of the Project Conditional Use Permit. With the office use not included or even allowed as part of the Project, trips associated with this potential use are not part of the proposed Project trip generation rate and other CEQA related impacts.

Since there are existing buildings on the Project site (Mitsubishi Motors Corporation) that were previously occupied, credit has been taken for the previous uses. The existing land use was observed to not be fully occupied. As such, the trip generation will use a 50% credit for the purposes of this analysis. As shown on Table 1, the existing land use (at 50%) is anticipated to generate a net total of 1,122 trip-ends per day with 105 AM/mid-day peak hour trips and 91 PM peak hour trips.

Pursuant to discussions with Amazon, the peak season typically occurs between Thanksgiving and Christmas (approximately 6 weeks) and a few days around Amazon Prime Day (July). Note that Amazon Prime Day and peak seasonal activity coincide with times when local schools may be out on break (i.e., less baseline traffic). Based on discussions with the City, 85 percent of the peak seasonal data is proposed to be utilized for the purposes of the traffic study in an effort to conduct a conservative analysis. The use of 85 percent of the peak seasonal data was derived by taking the following into consideration:

- The SCAQMD's High-Cube Warehouse Truck Trip Study Whitepaper Summary of Business Survey Results (June 2014), where respondents of the survey indicated that there was 15 percent or more of a difference between their current (2015) trucking activity and their best historic year.
- Based on information provided by Amazon, the facility would experience peak seasonal operations only 6 weeks out of the year, which equates to approximately 12 percent (assuming 50 working weeks in the year).
- Similarly, the City had requested using the 30th highest day, which would be approximately 12 percent (assuming 250 working days per year).

As shown on Table 1, the proposed Project is anticipated to generate a total of 2,490 trip-ends per day with 227 AM peak hour trips, 241 mid-day PM peak hour trips, and 347 PM peak hour trips. As a result, the net change in trips is anticipated to be a net total of 1,368 more vehicle trip-ends per day with 122 more AM peak hour trips, 136 mid-day PM peak hour trips, and 256 more PM peak hour trips.

The off-peak season (the remainder of the calendar year that does not fall within the peak season for Amazon as described above) trip generation summary illustrating daily and peak hour trip generation estimates for the proposed Project are shown on Table 2. As shown on Table 2, the proposed Project is anticipated to generate a total of 1,522 trip-ends per day with 1 AM peak hour trip, 14 mid-day peak

hour trips, and 138 PM peak hour trips. As a result, the net change in trips is anticipated to be a net total of 400 more vehicle trip-ends per day with 104 fewer AM peak hour trips, 9 mid-day peak hour trips, and 47 more PM peak hour trips.

For the purposes of this analysis, it is proposed that the actual vehicles be utilized in order to most accurately reflect the effects of heavy trucks in the analysis. Trucks will be accounted for in the analysis as a percentage of total traffic, which will be input into the analysis software.

TRIP DISTRIBUTION

The Project trip distribution and assignment process represents the directional orientation of traffic to and from the Project site. The trip distribution pattern of passenger cars is heavily influenced by the geographical location of the site, the location of surrounding uses, and the proximity to the regional freeway system. Given these differences, separate trip distributions were generated for both passenger cars and truck trips. Exhibit 3 illustrates the passenger car trip distribution patterns for the proposed Project. Exhibit 4 illustrates the truck trip distribution patterns.

INTERSECTION ANALYSIS METHODOLOGY

For the purposes of this analysis, signalized intersection operations analysis will be based on the Intersection Capacity Utilization (ICU) methodology. Intersection levels of service (LOS) operations are based on an intersection's average control delay. The City of Cypress requires signalized intersections to be evaluated through ICU analysis which compares the peak hour traffic volumes to intersection capacity. Lane capacities of 1,600 vehicles per hour of green time have been assumed for the ICU calculations. 0.10 of volume-to-capacity (v/c) assumed representing 10 seconds of delay for the yellow and all-red signal indication and inherent vehicle delay between cycles with an assumed signal cycle of 100 seconds.

Unsignalized intersections will be evaluated using the methodology described in the HCM 6th Edition. At two-way or side-street stop-controlled intersections, LOS for the intersection will be the worst LOS of all the individual movements. For approaches composed of a single lane, the delay is computed as the average of all movements in that lane. For all-way stop controlled intersections, LOS is computed for the intersection as a whole.

To represent the impact large trucks, buses and recreational vehicles have on traffic flow, truck traffic will be accounted for in the analysis as a percentage of total traffic at the study area intersections. In other words, the traffic volumes utilized for intersections and roadway segment analyses will utilize the actual vehicle traffic flow and trucks will be reflected in the analysis as a percentage of the total traffic flow.

TRAFFIC SIGNAL WARRANTS

Traffic signal warrant analysis will be conducted for unsignalized intersections. Peak Hour Volume based Warrant 3 based on 2014 California Manual on Uniform Traffic Control Devices (MUTCD) will be utilized to determine whether a signal would be warranted.

LEVEL OF SERVICE (LOS) CRITERIA

The City of Cypress has adopted LOS D or better as the desired citywide operating standard for most City streets. However, given the influence of regional traffic on Valley View Street, Lincoln Avenue, and Katella Avenue, which are beyond the control of the City of Cypress, LOS E or better has been adopted as the minimum operating Level of Service for street segments and intersections on these arterials. In an effort to be conservative, LOS D will be assumed to be the minimum operating LOS.

LOS ANALYSIS – INTERSECTIONS

For the study area intersections that lie within the City of Cypress, to determine whether the addition of project traffic (as defined through the comparison of Existing to E+P traffic conditions) at a study intersection would result in a direct project-specific traffic impact, the following conditions must occur:

- Peak hour project traffic plus existing traffic causes an intersection to operate at LOS E or F

CEQA COMPLIANCE AND DOCUMENTATION

LOS analysis described above will be performed and thresholds of significance applied to determine if operational improvements are needed at the study intersections to support the proposed project. An environmental clearance would require the conduct of a Vehicle Miles Traveled (VMT) analysis.

Vehicle Miles Traveled Analysis will be performed based on guidance provided in the Technical Advisory On Evaluating Transportation Impacts In CEQA (December 2018, prepared by Governor's Office of Planning and Research (OPR)) and discussion with the City of Cypress staff on the applicable VMT thresholds.

SPECIAL ISSUES

The following special issues will be addressed in the traffic study:

- Truck turning templates will be used to address how Project truck traffic (e.g., large trucks such as a WB-67) would enter and exit the Project site.
- Provide a queuing analysis to determine the 95th percentile queues and the minimum requirement of storage lengths for right and left-turn movements at the Project driveways and site adjacent signalized intersections based on forecasted traffic volumes of Opening Year Cumulative (2021) With Project traffic conditions.

CUMULATIVE DEVELOPMENT PROJECTS

A list of cumulative development projects has been obtained from the City of Cypress, City of Garden Grove, and City of Stanton to include projects in the traffic study.

CONCLUSION

Urban Crossroads, Inc. is pleased to submit this letter documenting the Project trip generation, trip distribution, and the recommended intersection analysis locations for the Katella Avenue Amazon Facility Traffic Impact Study. We will continue to move forward towards completing the traffic study after receiving jurisdiction approval or comments finalizing the study area.

If you have any questions, please contact me directly at (949) 336-5982.

Respectfully submitted,

URBAN CROSSROADS, INC.

Charlene So, PE
Associate Principal

EXHIBIT 1: PRELIMINARY SITE PLAN

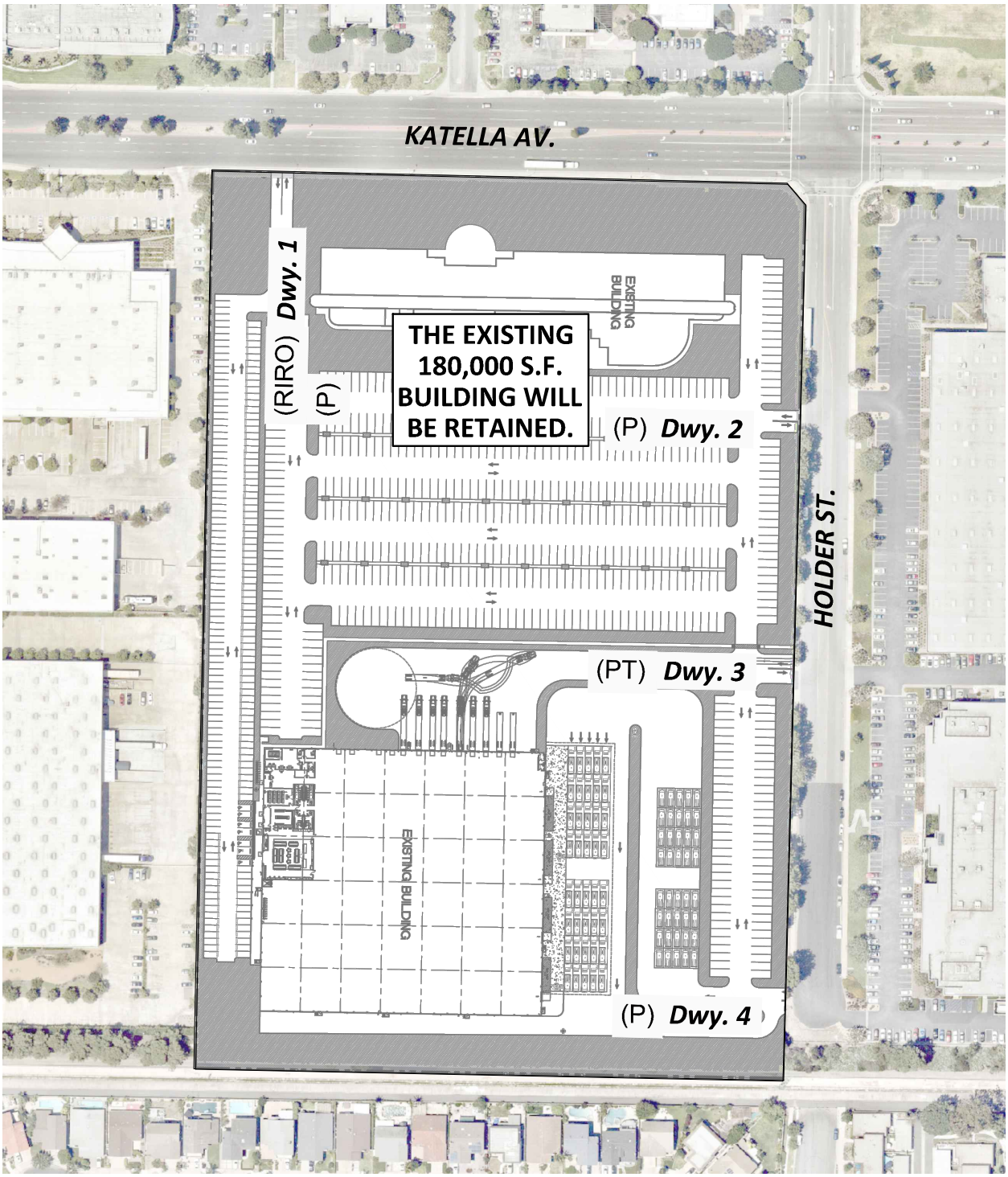

LEGEND:

RIRO = RIGHT-IN/RIGHT-OUT ONLY ACCESS
P = PASSENGER CARS ONLY
PT = PASSENGER CARS AND TRUCKS

N

13106 - siteplan-a.dwg

URBAN CROSSROADS

EXHIBIT 2: LOCATION MAP

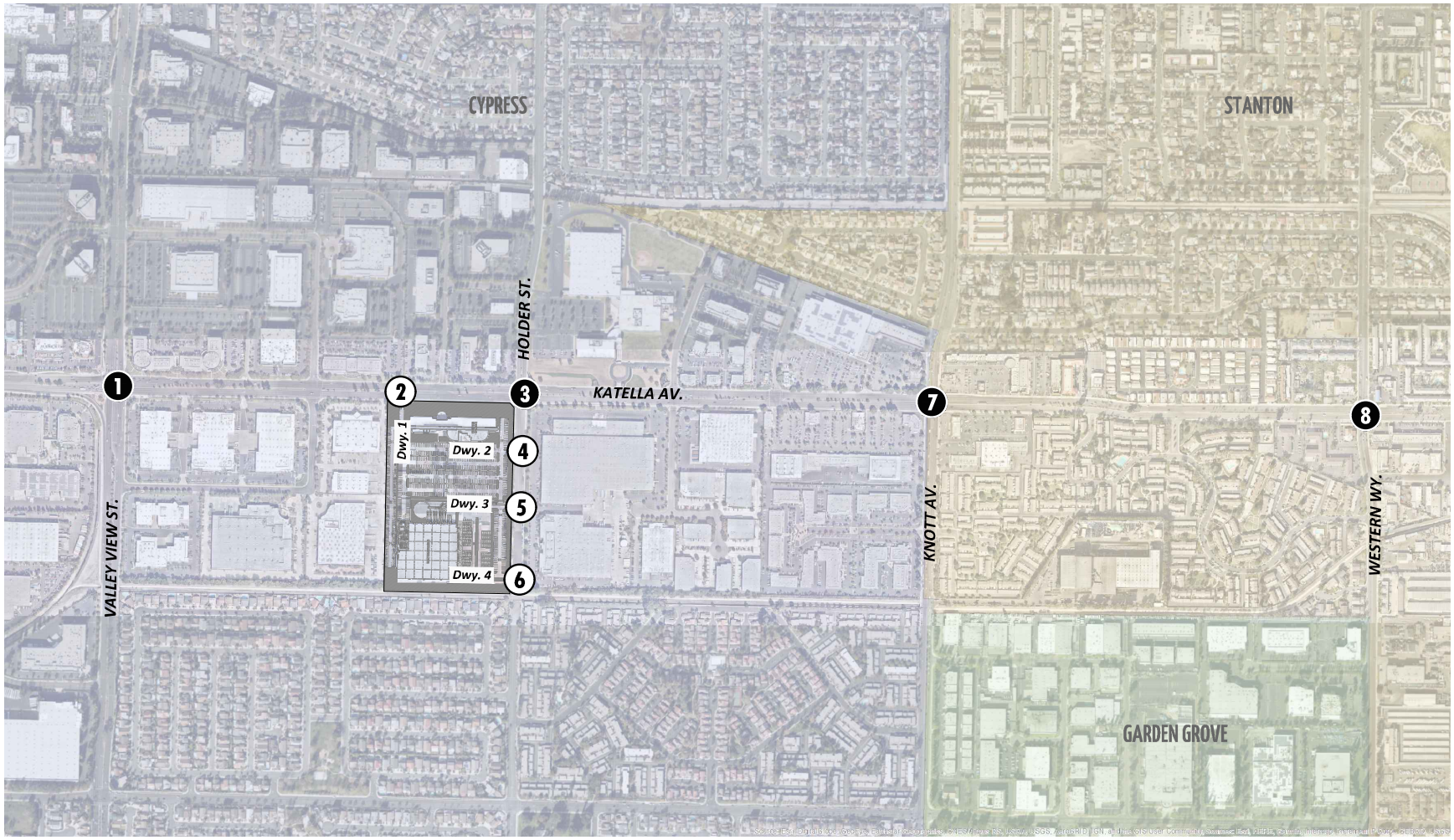

LEGEND:

- ❶ = EXISTING INTERSECTION ANALYSIS LOCATION
- ⓪ = FUTURE INTERSECTION ANALYSIS LOCATION

N

13106 - locmap-a.dwg

URBAN CROSSROADS

EXHIBIT 3: PROJECT (PASSENGER CAR) TRIP DISTRIBUTION

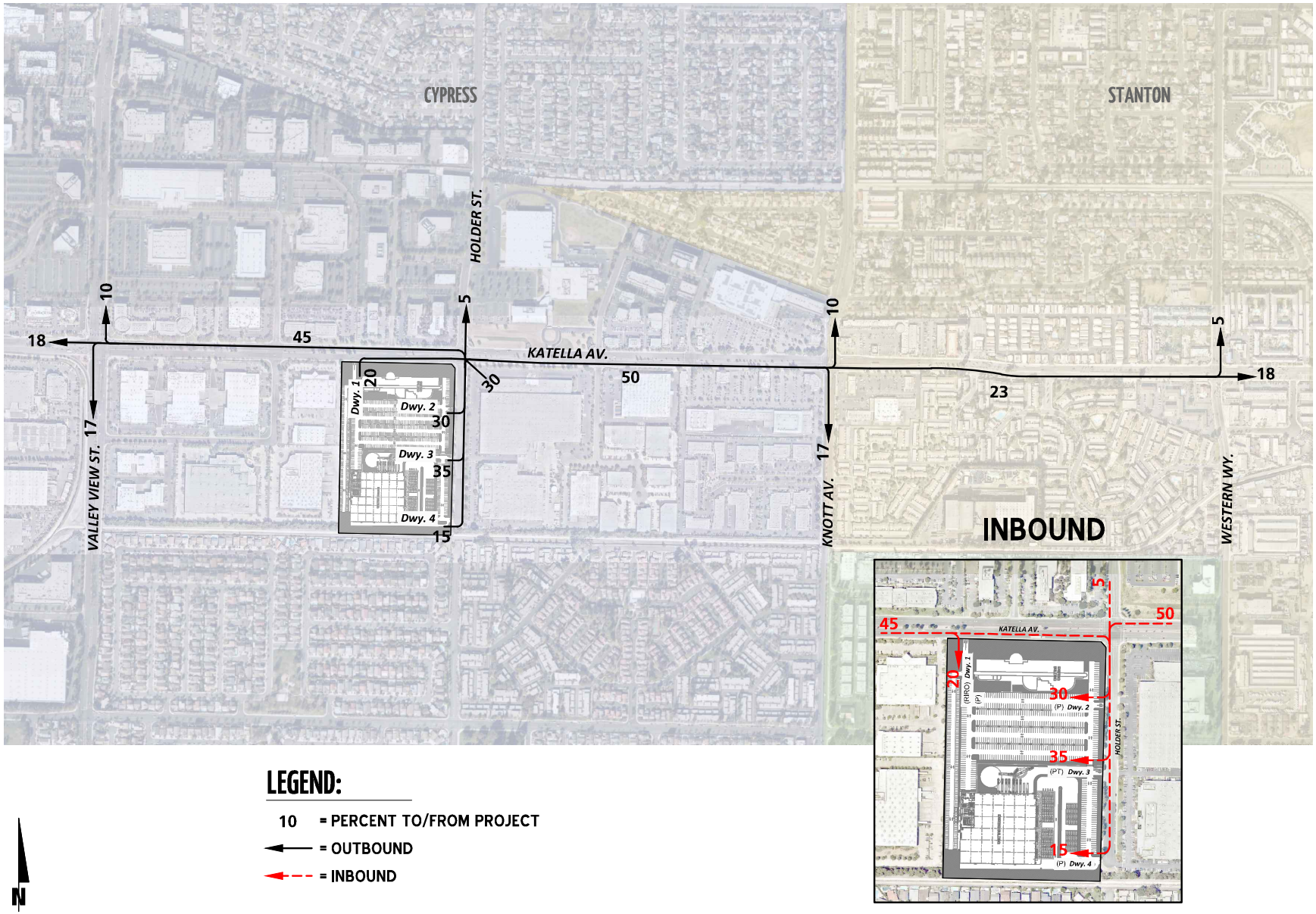

EXHIBIT 4: PROJECT (TRUCK) TRIP DISTRIBUTION

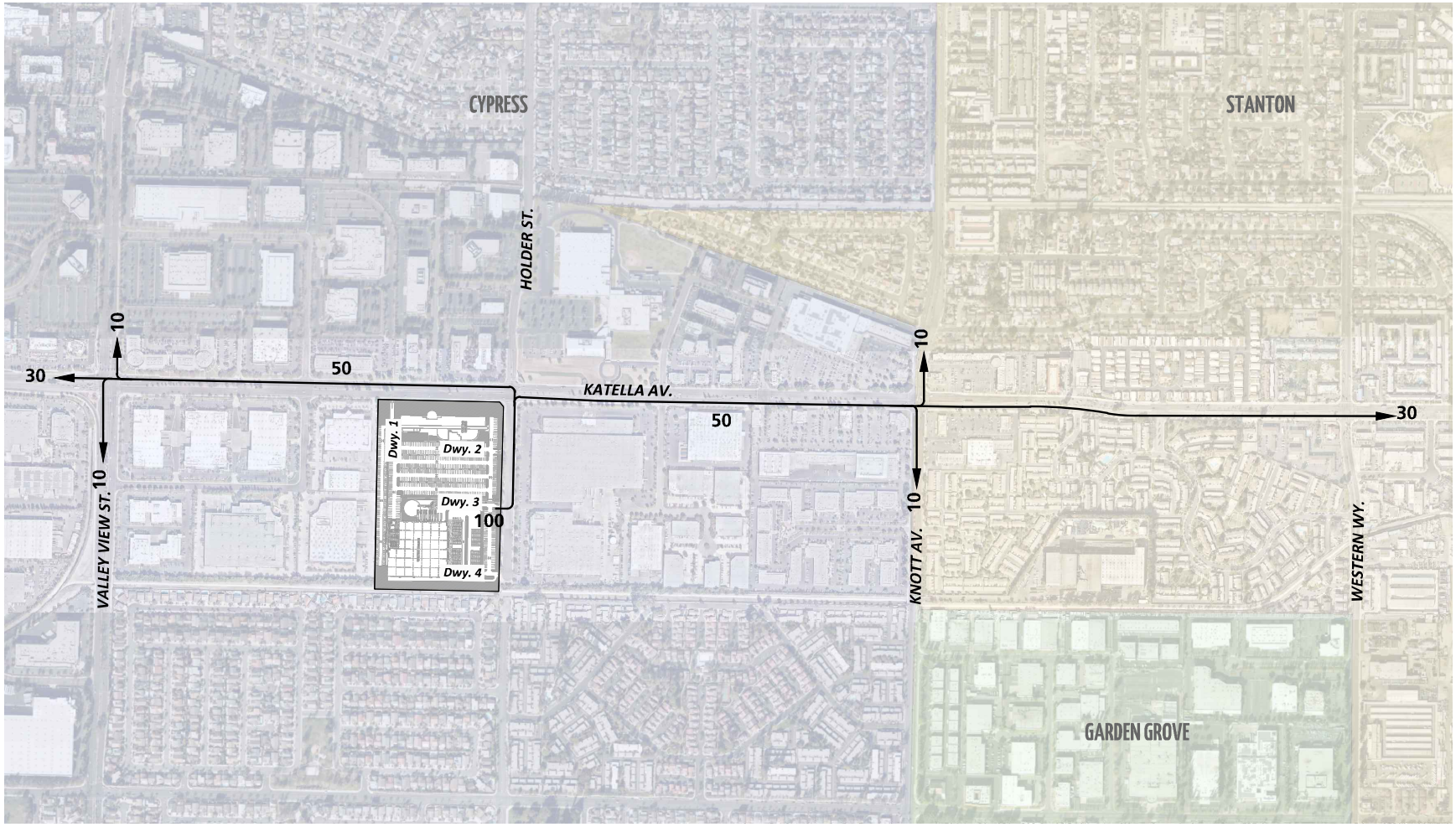

LEGEND:

10 = PERCENT TO/FROM PROJECT

N

13106 - trip-a.dwg

URBAN CROSSROADS

Table 1

Project (85% of Peak) Trip Generation Summary (Actual Vehicles)

Project Trip Generation Rates												
	ITE LU		AM Peak Hour			Mid-day PM Peak Hour			PM Peak Hour			Daily
Land Use[1]	Code	Units[2]	In	Out	Total	In	Out	Total	In	Out	Total	
Warehousing[3]	150	TSF	0.131	0.039	0.170	Not Available			0.051	0.139	0.190	1.740
Passenger Cars (80.0%)			0.105	0.031	0.136				0.041	0.111	0.152	1.392
2-Axle Trucks (3.34%)			0.004	0.001	0.006				0.002	0.005	0.006	0.058
3-Axle Trucks (4.14%)			0.005	0.002	0.007				0.002	0.006	0.008	0.072
4-Axle+ Trucks (12.52%)			0.016	0.005	0.021				0.006	0.017	0.024	0.218
Corporate Headquarters	714	TSF	0.684	0.036	0.720	Not Available			0.018	0.582	0.600	7.950

Project Trip Generation												
			AM Peak Hour			Mid-day PM Peak Hour			PM Peak Hour			
Project	Quantity	Units[2]	In	Out	Total	In	Out	Total	In	Out	Total	Daily
Proposed Project												
Amazon Building (85% of Peak)[4]												
Passenger Cars:												
Warehouse Employees:			0	0	0	4	132	136	129	0	129	666
Flex/DSP Drivers:			99	102	201	34	68	102	88	122	211	1,766
Passenger Car (Subtotal):			***99***	***102***	***201***	***38***	***200***	***238***	***218***	***122***	***340***	***2,432***
Truck (Line Haul) Trips:												
4+-axle:			***9***	***17***	***26***	***0***	***3***	***3***	***3***	***3***	***7***	***58***
Amazon Subtotal (Actual Vehicles)[5]			**108**	**119**	**227**	**38**	**203**	**241**	**221**	**126**	**347**	**2,490**
Existing Use												
Warehouse[6]	145.004	TSF										
Passenger Cars:			15	5	20	15	5	20	6	16	22	202
Truck Trips:												
2-axle:			1	1	2	1	1	2	1	1	2	10
3-axle:			1	1	2	1	1	2	1	1	2	12
4+-axle:			3	1	4	3	1	4	1	3	4	32
- Truck Trips (Actual Vehicles)			*5*	*3*	*8*	*5*	*3*	*8*	*3*	*5*	*8*	*54*
Corporate Headquarters	250.000	TSF	171	9	180	171	9	180	5	146	151	1,988
Existing Trips (Actual Vehicles)[5]			***191***	***17***	***208***	***191***	***17***	***208***	***14***	***167***	***181***	***2,244***
50% Existing Trips (Actual Vehicles)			***96***	***9***	***105***	***96***	***9***	***105***	***7***	***84***	***91***	***1,122***
Change in Trips			***12***	***110***	***122***	***-58***	***194***	***136***	***214***	***42***	***256***	***1,368***

[1] Trip Generation Source: Institute of Transportation Engineers (ITE), Trip Generation Manual, Tenth Edition (2017).

[2] TSF = thousand square feet

[3] Vehicle Mix Source: Institute of Transportation Engineers (ITE), Trip Generation Handbook, Third Edition (September 2017).

[4] Operational data provided by Amazon.

[5] TOTAL NET TRIPS (Actual Vehicles) = Passenger Cars + Net Truck Trips (Actual Trucks).

[6] Mid-day trip generation not available per ITE, as such, AM peak hour trips have been used.

Table 2

Project (Off-Peak Season) Trip Generation Summary (Actual Vehicles)

Project Trip Generation Rates												
	ITE LU		AM Peak Hour			Mid-day PM Peak Hour			PM Peak Hour			Daily
Land Use[1]	Code	Units[2]	In	Out	Total	In	Out	Total	In	Out	Total	
Warehousing[3]	150	TSF	0.131	0.039	0.170	Not Available			0.051	0.139	0.190	1.740
Passenger Cars (80.0%)			0.105	0.031	0.136				0.041	0.111	0.152	1.392
2-Axle Trucks (3.34%)			0.004	0.001	0.006				0.002	0.005	0.006	0.058
3-Axle Trucks (4.14%)			0.005	0.002	0.007				0.002	0.006	0.008	0.072
4-Axle+ Trucks (12.52%)			0.016	0.005	0.021				0.006	0.017	0.024	0.218
Corporate Headquarters	714	TSF	0.684	0.036	0.720	Not Available			0.018	0.582	0.600	7.950

Project Trip Generation												
			AM Peak Hour			Mid-day PM Peak Hour			PM Peak Hour			
Project	Quantity	Units[2]	In	Out	Total	In	Out	Total	In	Out	Total	Daily
Proposed Project												
Amazon Building (Off-Peak Season)[4]												
Passenger Cars:												
Warehouse Employees:			0	0	0	29	85	114	0	0	0	338
Flex/DSP Drivers:			0	0	0	0	0	0	58	80	138	1,148
Passenger Car (Subtotal):			***0***	***0***	***0***	***29***	***85***	***114***	***58***	***80***	***138***	***1,486***
Truck (Line Haul) Trips:												
4+-axle:			***0***	***1***	***1***	***0***	***0***	***0***	***0***	***0***	***0***	***36***
Amazon Subtotal (Actual Vehicles)[5]			**0**	**1**	**1**	**29**	**85**	**114**	**58**	**80**	**138**	**1,522**
Existing Use												
Warehouse[6]	145.004	TSF										
Passenger Cars:			15	5	20	15	5	20	6	16	22	202
Truck Trips:												
2-axle:			1	1	2	1	1	2	1	1	2	10
3-axle:			1	1	2	1	1	2	1	1	2	12
4+-axle:			3	1	4	3	1	4	1	3	4	32
- Truck Trips (Actual Vehicles)			*5*	*3*	*8*	*5*	*3*	*8*	*3*	*5*	*8*	*54*
Corporate Headquarters	250.000	TSF	171	9	180	171	9	180	5	146	151	1,988
Existing Trips (Actual Vehicles)[5]			***191***	***17***	***208***	***191***	***17***	***208***	***14***	***167***	***181***	***2,244***
50% Existing Trips (Actual Vehicles)			***96***	***9***	***105***	***96***	***9***	***105***	***7***	***84***	***91***	***1,122***
Change in Trips			***-96***	***-8***	***-104***	***-67***	***76***	***9***	***51***	***-4***	***47***	***400***

[1] Trip Generation Source: Institute of Transportation Engineers (ITE), Trip Generation Manual, Tenth Edition (2017).

[2] TSF = thousand square feet

[3] Vehicle Mix Source: Institute of Transportation Engineers (ITE), Trip Generation Handbook, Third Edition (September 2017).

[4] Operational data provided by Amazon.

[5] TOTAL NET TRIPS (Actual Vehicles) = Passenger Cars + Net Truck Trips (Actual Trucks).

[6] Mid-day trip generation not available per ITE, as such, AM peak hour trips have been used.

APPENDIX 1.2:

SITE ADJACENT QUEUES

This Page Intentionally Left Blank

Table 1.2-1

Peak Hour Queuing Summary

Intersection	Movement	Available Stacking Distance (Feet) [1]	95th Percentile Queue (Feet)		Acceptable? [2]	
			AM Peak Hour	PM Peak Hour	AM	PM
Driveway 1 & Katella Av.	NBR	50	41	41	Yes	Yes
Holder St. & Katella Av.	NBL	160	72	102	Yes	Yes
	NBT/R	260	40	46	Yes	Yes
	SBL	90	**156**	**151**	**No**	**No**
	SBT/R	300	113	74	Yes	Yes
	EBL	180	102	**263**	Yes	**No**
	EBT	410	295	393	Yes	Yes
	EBR	120	113	**156**	Yes	**No**
	WBL	200	**270**	**359**	**No**	**No**
	WBT	880	397	505	Yes	Yes
	WBR	120	**158**	106	**No**	Yes
Holder St. & Driveway 2	SBL/T/R	260	15	7	Yes	Yes
	EBL/T/R	50	47	48	Yes	Yes
	WBL/T/R	50	0	43	Yes	Yes
Holder St. & Driveway 3	SBL	50*	19	9	Yes	Yes
	EBL/T/R	50	51	50	Yes	Yes
	WBL/T/R	80	33	52	Yes	Yes
Holder St. & Driveway 4	SBL/R	425	48	42	Yes	Yes
	EBL/T	50	0	12	Yes	Yes
	WBT/R	50	3	0	Yes	Yes

* NOTE: Two-way left turn lane identified with 50 feet of storage.

[1] Stacking distance is measured from the stop bar to the end of the striping for the turn pocket (before transition).

[2] Stacking Distance is acceptable if the required stacking distance is less than or equal to the stacking distance provided.

Project does not contribute any traffic to these movements.

The eastbound right turn lane appears to accommodate up to 180-feet of storage with the striped turn pocket and storage within the right turn transition. Although the eastbound right turn pocket storage could be increased by modifying the existing curb, the additional 36-feet of necessary storage could be accommodated within the transition without affecting through traffic along Katella Avenue. It should also be noted that the outer through lane is wide enough to accommodate stacking for the eastbound right turn lane without adversely affecting eastbound through traffic on Katella Avenue.

Intersection: 2: Driveway 1 & Katella Av.

Movement	NB
Directions Served	R
Maximum Queue (ft)	40
Average Queue (ft)	15
95th Queue (ft)	41
Link Distance (ft)	459
Upstream Blk Time (%)	
Queuing Penalty (veh)	
Storage Bay Dist (ft)	
Storage Blk Time (%)	
Queuing Penalty (veh)	

Intersection: 3: Holder St. & Katella Av.

Movement	EB	EB	EB	EB	EB	WB	WB	WB	WB	WB	NB	NB
Directions Served	L	T	T	T	R	L	T	T	T	R	L	T
Maximum Queue (ft)	134	323	290	249	182	329	448	420	356	180	93	23
Average Queue (ft)	45	225	197	142	38	128	301	269	214	60	34	2
95th Queue (ft)	102	295	271	221	113	270	397	361	312	158	72	14
Link Distance (ft)		673	673	673			1004	1004	1004			232
Upstream Blk Time (%)												
Queuing Penalty (veh)												
Storage Bay Dist (ft)	180				120	200				120	160	
Storage Blk Time (%)	0	17		7	0	1	27		16			
Queuing Penalty (veh)	0	8		10	0	4	33		24			

Intersection: 3: Holder St. & Katella Av.

Movement	NB	SB	SB	SB
Directions Served	TR	L	T	TR
Maximum Queue (ft)	57	169	183	147
Average Queue (ft)	17	89	36	57
95th Queue (ft)	40	156	109	113
Link Distance (ft)	232		700	700
Upstream Blk Time (%)				
Queuing Penalty (veh)				
Storage Bay Dist (ft)		90		
Storage Blk Time (%)		12	0	
Queuing Penalty (veh)		3	0	

Intersection: 4: Holder St. & Driveway 2

Movement	EB	SB
Directions Served	LTR	LTR
Maximum Queue (ft)	52	37
Average Queue (ft)	20	2
95th Queue (ft)	47	15
Link Distance (ft)	294	232
Upstream Blk Time (%)		
Queuing Penalty (veh)		
Storage Bay Dist (ft)		
Storage Blk Time (%)		0
Queuing Penalty (veh)		0

Intersection: 5: Holder St. & Driveway 3

Movement	EB	WB	SB
Directions Served	LTR	LTR	L
Maximum Queue (ft)	56	31	34
Average Queue (ft)	34	10	3
95th Queue (ft)	51	33	19
Link Distance (ft)	325	304	
Upstream Blk Time (%)			
Queuing Penalty (veh)			
Storage Bay Dist (ft)			50
Storage Blk Time (%)			0
Queuing Penalty (veh)			0

Intersection: 6: Driveway 4 & Holder St.

Movement	WB	SB
Directions Served	TR	LR
Maximum Queue (ft)	4	56
Average Queue (ft)	0	29
95th Queue (ft)	3	48
Link Distance (ft)	226	455
Upstream Blk Time (%)		
Queuing Penalty (veh)		
Storage Bay Dist (ft)		
Storage Blk Time (%)		
Queuing Penalty (veh)		

Network Summary

Network wide Queuing Penalty: 82

Intersection: 2: Driveway 1 & Katella Av.

Movement	NB
Directions Served	R
Maximum Queue (ft)	39
Average Queue (ft)	16
95th Queue (ft)	41
Link Distance (ft)	459
Upstream Blk Time (%)	
Queuing Penalty (veh)	
Storage Bay Dist (ft)	
Storage Blk Time (%)	
Queuing Penalty (veh)	

Intersection: 3: Holder St. & Katella Av.

Movement	EB	EB	EB	EB	EB	WB	WB	WB	WB	WB	NB	NB
Directions Served	L	T	T	T	R	L	T	T	T	R	L	T
Maximum Queue (ft)	363	444	404	356	152	307	469	437	298	137	124	62
Average Queue (ft)	135	301	275	222	47	217	304	262	162	50	52	17
95th Queue (ft)	263	393	366	319	156	359	505	461	251	106	102	46
Link Distance (ft)		673	673	673			1004	1004	1004			232
Upstream Blk Time (%)												
Queuing Penalty (veh)												
Storage Bay Dist (ft)	180				120	200				120	160	
Storage Blk Time (%)	1	31		22		46	16		7			
Queuing Penalty (veh)	5	46		14		173	19		15			

Intersection: 3: Holder St. & Katella Av.

Movement	NB	SB	SB	SB
Directions Served	TR	L	T	TR
Maximum Queue (ft)	130	162	110	77
Average Queue (ft)	44	86	22	29
95th Queue (ft)	94	151	74	60
Link Distance (ft)	232		700	700
Upstream Blk Time (%)				
Queuing Penalty (veh)				
Storage Bay Dist (ft)		90		
Storage Blk Time (%)		12		
Queuing Penalty (veh)		1		

Intersection: 4: Holder St. & Driveway 2

Movement	EB	WB	SB
Directions Served	LTR	LTR	LTR
Maximum Queue (ft)	52	42	12
Average Queue (ft)	22	20	1
95th Queue (ft)	48	43	7
Link Distance (ft)	294	277	232
Upstream Blk Time (%)			
Queuing Penalty (veh)			
Storage Bay Dist (ft)			
Storage Blk Time (%)			
Queuing Penalty (veh)			

Intersection: 5: Holder St. & Driveway 3

Movement	EB	WB	SB
Directions Served	LTR	LTR	L
Maximum Queue (ft)	55	55	23
Average Queue (ft)	27	33	1
95th Queue (ft)	50	52	9
Link Distance (ft)	325	304	
Upstream Blk Time (%)			
Queuing Penalty (veh)			
Storage Bay Dist (ft)			50
Storage Blk Time (%)			
Queuing Penalty (veh)			

Intersection: 6: Driveway 4 & Holder St.

Movement	EB	SB
Directions Served	LT	LR
Maximum Queue (ft)	25	35
Average Queue (ft)	1	21
95th Queue (ft)	12	42
Link Distance (ft)	286	455
Upstream Blk Time (%)		
Queuing Penalty (veh)		
Storage Bay Dist (ft)		
Storage Blk Time (%)		
Queuing Penalty (veh)		

Network Summary

Network wide Queuing Penalty: 274

This Page Intentionally Left Blank

APPENDIX 3.1:

EXISTING TRAFFIC COUNTS – MARCH 2020

This Page Intentionally Left Blank

Volume Development

AM Peak Hour

1: Valley View Street & Katella Avenue

	NBL	NBT	NBR	SBL	SBT	SBR	EBL	EBT	EBR	WBL	WBT	WBR	TOTAL
Existing 2018:	821	1,498	272	179	1,087	207	234	956	689	198	1,174	140	7,455
Existing 2020:	800	1,404	271	224	1,082	211	128	437	467	163	741	152	6,080
Adjusted 2020:	823	1,501	273	224	1,089	211	235	958	691	198	1,177	152	7,531
Adjusted Growth:	2.8%	6.9%	0.6%	0.0%	0.7%	0.0%	83.2%	119.2%	47.9%	21.7%	58.8%	0.0%	23.9%

2: Holder Street & Katella Avenue

	NBL	NBT	NBR	SBL	SBT	SBR	EBL	EBT	EBR	WBL	WBT	WBR	TOTAL
Existing 2018:	5	2	7	198	32	182	34	1,049	92	48	1,575	146	3,370
Existing 2020:	0	0	3	197	13	175	33	701	11	14	1,149	143	2,439
Adjusted 2020:	5	2	7	198	32	182	34	1,051	92	48	1,578	146	3,377
Adjusted Growth:	#DIV/0!	#DIV/0!	133.8%	0.7%	146.7%	4.2%	3.3%	50.0%	738.2%	243.6%	37.4%	2.3%	38.5%
Growth for Dwys:		4.68198			4.53621								

3: Knott Avenue & Katella Avenue

	NBL	NBT	NBR	SBL	SBT	SBR	EBL	EBT	EBR	WBL	WBT	WBR	TOTAL
Existing 2018:	349	518	114	109	877	167	72	841	263	153	1,313	104	4,880
Existing 2020:	261	560	115	98	895	106	44	515	221	182	976	103	4,076
Adjusted 2020:	350	560	115	109	879	167	72	843	264	182	1,316	104	4,961
Adjusted Growth:	34.0%	0.0%	0.0%	11.5%	-1.8%	57.9%	64.0%	63.7%	19.3%	0.0%	34.8%	1.2%	21.7%

PM Peak Hour

1: Valley View Street & Katella Avenue

	NBL	NBT	NBR	SBL	SBT	SBR	EBL	EBT	EBR	WBL	WBT	WBR	TOTAL
Existing 2018:	654	1,474	176	224	1,351	230	241	1,063	1,005	322	998	217	7,955
Existing 2020:	584	1,344	161	187	1,166	239	260	998	815	341	808	223	7,126
Adjusted 2020:	655	1,477	176	224	1,354	239	260	1,065	1,007	341	1,000	223	8,023
Adjusted Growth:	12.2%	9.9%	9.6%	20.0%	16.1%	0.0%	0.0%	6.7%	23.6%	0.0%	23.8%	0.0%	12.6%

2: Holder Street & Katella Avenue

	NBL	NBT	NBR	SBL	SBT	SBR	EBL	EBT	EBR	WBL	WBT	WBR	TOTAL
Existing 2018:	61	41	64	211	2	97	134	1,561	3	5	1,028	188	3,395
Existing 2020:	24	8	20	203	0	113	84	1,418	4	8	955	209	3,046
Adjusted 2020:	61	41	64	211	2	113	134	1,564	4	8	1,030	209	3,443
Adjusted Growth:	154.7%	413.6%	220.7%	4.2%	#DIV/0!	0.0%	59.9%	10.3%	0.0%	0.0%	7.9%	0.0%	13.0%
Growth for Dwys:		3.19929			1.1674								

3: Knott Avenue & Katella Avenue

	NBL	NBT	NBR	SBL	SBT	SBR	EBL	EBT	EBR	WBL	WBT	WBR	TOTAL
Existing 2018:	260	882	98	148	698	71	305	1,266	411	136	836	179	5,290
Existing 2020:	257	835	117	161	538	82	312	1,179	356	210	690	181	4,918
Adjusted 2020:	261	884	117	161	700	82	312	1,269	412	210	838	181	5,426
Adjusted Growth:	1.4%	5.9%	0.0%	0.0%	30.0%	0.0%	0.0%	7.6%	15.7%	0.0%	21.4%	0.0%	10.3%

= Not adjusted from 2020 count (higher volume vs. existing 2018 plus growth)

Notes:

1. Entered Existing 2018 Total Vehicle Volume as counted.
2. Entered Existing 2020 Total Vehicle Volume as counted.
3. Developed "Adjusted 2020" volume by applying an annual growth observed over 2018 then further adjusted by adding RTP growth for City of Cypress.
RTP growth is based on the 2016-2045 SCAG RTP growth projections for the City of Cypress - average of households, population, and employment.
4. Movements where 2020 volumes were higher than 2018 with growth were not adjusted (highlighted in pink).
5. Calculated "Adjusted Growth" by movement based on comparison of Adjusted 2020 to Existing 2020 total vehicles.
6. The "Adjusted Growth" was applied (by movement) to corresponding movements for passenger cars, 2-axle, 3-axle, and 4+-axle trucks for the 2020 counts.
7. Volumes used for the analysis were flow conserved with adjacent intersections, where necessary.
8. Growth for driveways used to apply growth to 2020 turning movement volumes at the driveways. Through volumes at driveways determined based on flow conservation.

Volume Development

AM Peak Hour

1: Valley View St. & Katella Av.

PHF: 0.958 7:30 Count Date: 3/12/2020

	NBL	NBT	NBR	SBL	SBT	SBR	EBL	EBT	EBR	WBL	WBT	WBR	TOTAL
Existing 2020:	800	1,404	271	224	1,082	211	128	437	467	163	741	152	6,080
2-Axle:	4	12	4	2	9	3	2	4	4	0	10	2	56
3-Axle:	1	2	1	0	0	1	0	2	0	1	5	0	13
4+-Axle:	1	10	1	3	4	7	0	0	3	2	6	0	37
2020 PCE:	805	1,432	276	231	1,095	228	129	441	475	168	763	153	6,195
Existing PCE:	**828**	**1,531**	**278**	**231**	**1,102**	**228**	**236**	**967**	**702**	**205**	**1,211**	**153**	**7,672**
Existing PCE w 50% Use:	**828**	**1,531**	**294**	**241**	**1,102**	**228**	**236**	**985**	**702**	**206**	**1,213**	**154**	**7,720**

2: Driveway 1 & Katella Av.

PHF: 0.920 Count Date:

	NBL	NBT	NBR	SBL	SBT	SBR	EBL	EBT	EBR	WBL	WBT	WBR	TOTAL
Existing 2020:								746			1,325		2,071
2-Axle:								17			7		24
3-Axle:								1			6		7
4+-Axle:								7			6		13
2020 PCE:	0	0	0	0	0	0	0	770	0	0	1,347	0	2,116
Existing PCE:	**0**	**0**	**0**	**0**	**0**	**0**	**0**	**1,224**	**0**	**0**	**1,795**	**0**	**3,019**
Existing PCE w 50% Use:	**0**	**0**	**0**	**0**	**0**	**0**	**0**	**1,268**	**0**	**0**	**1,799**	**0**	**3,067**

3: Holder St. & Katella Av.

PHF: 0.893 7:15 Count Date: 3/12/2020

	NBL	NBT	NBR	SBL	SBT	SBR	EBL	EBT	EBR	WBL	WBT	WBR	TOTAL
Existing 2020:	1	0	3	197	15	175	33	701	12	16	1,149	143	2,445
2-Axle:	1	0	1	3	0	1	1	15	1	1	5	0	29
3-Axle:	0	0	0	0	0	0	0	1	0	1	6	0	8
4+-Axle:	0	0	0	0	0	0	0	7	0	0	6	0	13
2020 PCE:	2	0	4	199	15	176	34	724	13	18	1,170	143	2,494
Existing PCE:	**5**	**2**	**8**	**200**	**37**	**183**	**35**	**1,085**	**105**	**60**	**1,607**	**146**	**3,473**
Existing PCE w 50% Use:	**9**	**2**	**13**	**200**	**42**	**183**	**35**	**1,085**	**149**	**109**	**1,607**	**146**	**3,580**

4: Holder St. & Driveway 2

PHF: 0.653 7:45 Count Date: 3/12/2020

	NBL	NBT	NBR	SBL	SBT	SBR	EBL	EBT	EBR	WBL	WBT	WBR	TOTAL
Existing 2020:	0	4	0	2	41	0	0	0	0	0	0	0	47
2-Axle:	0	2	0	0	2	0	0	0	0	0	0	0	4
3-Axle:	0	0	0	0	1	0	0	0	0	0	0	0	1
4+-Axle:	0	0	0	0	0	0	0	0	0	0	0	0	0
2020 PCE:	0	5	0	2	43	0	0	0	0	0	0	0	50
Existing PCE:	**0**	**15**	**0**	**9**	**193**	**0**	**0**	**0**	**0**	**0**	**0**	**0**	**217**
Existing PCE w 50% Use:	**0**	**19**	**0**	**9**	**225**	**66**	**5**	**0**	**0**	**0**	**0**	**0**	**324**

Volume Development

AM Peak Hour

5: Holder St. & Driveway 3

PHF: 0.688 7:45 Count Date: 3/12/2020

	NBL	NBT	NBR	SBL	SBT	SBR	EBL	EBT	EBR	WBL	WBT	WBR	TOTAL
Existing 2020:	0	2	0	26	15	0	0	0	0	0	0	2	45
2-Axle:	0	1	0	1	1	0	0	0	0	0	0	1	4
3-Axle:	0	0	0	1	0	0	0	0	0	0	0	0	1
4+-Axle:	0	0	0	0	0	0	0	0	0	0	0	0	0
2020 PCE:	0	3	0	28	16	0	0	0	0	0	0	3	48
Existing PCE:	**0**	**4**	**0**	**125**	**68**	**0**	**0**	**0**	**0**	**0**	**0**	**12**	**208**
Existing PCE w 50% Use:	**0**	**4**	**0**	**125**	**68**	**32**	**4**	**0**	**0**	**0**	**0**	**12**	**244**

6: Holder St. & Driveway 4

PHF: 0.500 8:00 Count Date: 3/12/2020

	NBL	NBT	NBR	SBL	SBT	SBR	EBL	EBT	EBR	WBL	WBT	WBR	TOTAL
Existing 2020:	0	0	0	15	0	0	0	0	0	0	0	2	17
2-Axle:	0	0	0	1	0	0	0	0	0	0	0	1	2
3-Axle:	0	0	0	0	0	0	0	0	0	0	0	0	0
4+-Axle:	0	0	0	0	0	0	0	0	0	0	0	0	0
2020 PCE:	0	0	0	16	0	0	0	0	0	0	0	3	18
Existing PCE:	**0**	**0**	**0**	**68**	**0**	**0**	**0**	**0**	**0**	**0**	**0**	**4**	**72**
Existing PCE w 50% Use:	**0**	**0**	**0**	**68**	**0**	**0**	**0**	**0**	**0**	**0**	**0**	**4**	**72**

7: Knott Av. & Katella Av.

PHF: 0.926 7:15 Count Date: 3/12/2020

	NBL	NBT	NBR	SBL	SBT	SBR	EBL	EBT	EBR	WBL	WBT	WBR	TOTAL
Existing 2020:	261	560	115	98	895	106	44	515	221	182	976	103	4,076
2-Axle:	5	14	6	4	18	0	1	22	7	4	14	4	99
3-Axle:	0	2	1	0	2	0	0	1	1	1	7	0	15
4+-Axle:	3	4	1	0	9	0	0	3	4	3	1	0	28
2020 PCE:	270	577	121	100	924	106	45	533	234	191	992	105	4,197
Existing PCE:	**361**	**577**	**121**	**111**	**924**	**167**	**73**	**872**	**278**	**191**	**1,337**	**106**	**5,120**
Existing PCE w 50% Use:	**377**	**577**	**121**	**111**	**924**	**177**	**74**	**874**	**279**	**191**	**1,360**	**106**	**5,173**

8: Western Wy. & Katella Av.

PHF: 0.916 7:15 Count Date: 3/12/2020

	NBL	NBT	NBR	SBL	SBT	SBR	EBL	EBT	EBR	WBL	WBT	WBR	TOTAL
Existing 2020:	111	282	93	111	872	99	72	600	127	192	1,001	95	3,655
2-Axle:	0	3	4	1	11	1	2	18	4	6	8	3	61
3-Axle:	1	1	2	0	0	0	0	4	2	0	6	0	16
4+-Axle:	1	2	2	0	3	0	0	1	0	3	2	0	14
2020 PCE:	114	289	101	112	884	100	73	615	131	201	1,015	97	3,730
Existing PCE:	**153**	**289**	**101**	**124**	**884**	**157**	**120**	**1,006**	**156**	**201**	**1,368**	**98**	**4,657**
Existing PCE w 50% Use:	**153**	**289**	**101**	**124**	**884**	**162**	**120**	**1,008**	**156**	**201**	**1,386**	**98**	**4,682**

Volume Development
PM Peak Hour

1: Valley View St. & Katella Av.

PHF: 0.932 4:30 Count Date: 3/12/2020

	NBL	NBT	NBR	SBL	SBT	SBR	EBL	EBT	EBR	WBL	WBT	WBR	TOTAL
Existing 2020:	584	1,344	161	187	1,166	239	260	998	815	341	808	223	7,126
2-Axle:	1	8	0	0	2	1	1	6	1	1	4	3	28
3-Axle:	0	0	0	0	0	0	0	3	0	0	4	0	7
4+-Axle:	0	2	0	1	4	0	0	2	1	3	1	2	16
2020 PCE:	585	1,352	161	189	1,175	240	261	1,008	818	348	816	229	7,179
Existing PCE:	**656**	**1,486**	**176**	**227**	**1,364**	**240**	**261**	**1,076**	**1,010**	**348**	**1,010**	**229**	**8,082**
Existing PCE w 50% Use:	**656**	**1,486**	**177**	**228**	**1,364**	**240**	**261**	**1,078**	**1,010**	**362**	**1,026**	**238**	**8,125**

2: Driveway 1 & Katella Av.

PHF: 0.920 Count Date:

	NBL	NBT	NBR	SBL	SBT	SBR	EBL	EBT	EBR	WBL	WBT	WBR	TOTAL
Existing 2020:								1,506			1,092		2,598
2-Axle:								9			5		14
3-Axle:								3			3		6
4+-Axle:								5			8		13
2020 PCE:	0	0	0	0	0	0	0	1,524	0	0	1,114	0	2,637
Existing PCE:	**0**	**0**	**0**	**0**	**0**	**0**	**0**	**1,722**	**0**	**0**	**1,230**	**0**	**2,953**
Existing PCE w 50% Use:	**0**	**0**	**0**	**0**	**0**	**0**	**0**	**1,726**	**0**	**0**	**1,269**	**0**	**2,996**

3: Holder St. & Katella Av.

PHF: 0.940 4:30 Count Date: 3/12/2020

	NBL	NBT	NBR	SBL	SBT	SBR	EBL	EBT	EBR	WBL	WBT	WBR	TOTAL
Existing 2020:	24	8	20	203	0	113	84	1,418	4	8	955	209	3,046
2-Axle:	0	0	0	0	0	1	1	8	0	0	4	0	14
3-Axle:	0	0	0	0	0	0	0	3	0	0	3	0	6
4+-Axle:	1	0	0	0	0	0	0	4	1	1	7	0	14
2020 PCE:	26	8	20	203	0	114	85	1,433	6	10	974	209	3,087
Existing PCE:	**66**	**41**	**64**	**211**	**2**	**114**	**135**	**1,581**	**6**	**10**	**1,051**	**209**	**3,490**
Existing PCE w 50% Use:	**105**	**45**	**108**	**211**	**2**	**114**	**135**	**1,581**	**10**	**15**	**1,051**	**209**	**3,586**

4: Holder St. & Driveway 2

PHF: 0.682 4:30 Count Date: 3/12/2020

	NBL	NBT	NBR	SBL	SBT	SBR	EBL	EBT	EBR	WBL	WBT	WBR	TOTAL
Existing 2020:	0	43	0	2	10	0	0	0	0	0	0	9	64
2-Axle:	0	0	0	0	0	0	0	0	0	0	0	0	0
3-Axle:	0	0	0	0	0	0	0	0	0	0	0	0	0
4+-Axle:	0	1	0	0	2	0	0	0	0	0	0	0	3
2020 PCE:	0	45	0	2	14	0	0	0	0	0	0	9	70
Existing PCE:	**0**	**143**	**0**	**2**	**16**	**0**	**0**	**0**	**0**	**0**	**0**	**29**	**189**
Existing PCE w 50% Use:	**0**	**173**	**0**	**2**	**21**	**4**	**57**	**0**	**0**	**0**	**0**	**29**	**285**

URBAN CROSSROADS

Volume Development
PM Peak Hour

5: Holder St. & Driveway 3

PHF: 0.658 4:30 Count Date: 3/12/2020

	NBL	NBT	NBR	SBL	SBT	SBR	EBL	EBT	EBR	WBL	WBT	WBR	TOTAL
Existing 2020:	0	17	0	7	3	0	0	0	0	0	0	26	53
2-Axle:	0	0	0	0	0	0	0	0	0	0	0	0	0
3-Axle:	0	0	0	0	0	0	0	0	0	0	0	0	0
4+-Axle:	0	0	0	2	0	0	0	0	0	0	0	1	3
2020 PCE:	0	17	0	11	3	0	0	0	0	0	0	28	59
Existing PCE:	**0**	**53**	**0**	**13**	**3**	**0**	**0**	**0**	**0**	**0**	**0**	**90**	**158**
Existing PCE w 50% Use:	**0**	**53**	**0**	**13**	**3**	**5**	**30**	**0**	**0**	**0**	**0**	**90**	**193**

6: Holder St. & Driveway 4

PHF: 0.800 4:30 Count Date: 3/12/2020

	NBL	NBT	NBR	SBL	SBT	SBR	EBL	EBT	EBR	WBL	WBT	WBR	TOTAL
Existing 2020:	0	0	0	3	0	0	0	0	0	0	0	17	20
2-Axle:	0	0	0	0	0	0	0	0	0	0	0	0	0
3-Axle:	0	0	0	0	0	0	0	0	0	0	0	0	0
4+-Axle:	0	0	0	0	0	0	0	0	0	0	0	0	0
2020 PCE:	0	0	0	3	0	0	0	0	0	0	0	17	20
Existing PCE:	**0**	**0**	**0**	**3**	**0**	**0**	**0**	**0**	**0**	**0**	**0**	**53**	**56**
Existing PCE w 50% Use:	**0**	**0**	**0**	**3**	**0**	**0**	**0**	**0**	**0**	**0**	**0**	**53**	**56**

7: Knott Av. & Katella Av.

PHF: 0.972 4:45 Count Date: 3/12/2020

	NBL	NBT	NBR	SBL	SBT	SBR	EBL	EBT	EBR	WBL	WBT	WBR	TOTAL
Existing 2020:	257	835	117	161	538	82	312	1,179	356	210	690	181	4,918
2-Axle:	2	10	1	9	12	1	0	16	8	1	6	5	71
3-Axle:	0	0	0	0	0	0	0	2	0	0	2	0	4
4+-Axle:	1	4	9	2	2	0	0	4	1	1	4	0	28
2020 PCE:	260	848	136	170	548	83	312	1,197	362	213	703	184	5,014
Existing PCE:	**264**	**898**	**136**	**170**	**713**	**83**	**312**	**1,288**	**419**	**213**	**854**	**184**	**5,530**
Existing PCE w 50% Use:	**265**	**898**	**136**	**170**	**713**	**84**	**321**	**1,308**	**433**	**213**	**856**	**184**	**5,577**

8: Western Wy. & Katella Av.

PHF: 0.947 5:00 Count Date: 3/12/2020

	NBL	NBT	NBR	SBL	SBT	SBR	EBL	EBT	EBR	WBL	WBT	WBR	TOTAL
Existing 2020:	167	823	124	118	434	112	134	1,060	133	100	719	150	4,074
2-Axle:	0	3	1	0	11	0	0	8	0	2	3	0	28
3-Axle:	1	0	0	0	0	0	0	4	2	0	3	0	10
4+-Axle:	0	0	2	0	3	0	0	6	8	2	1	0	22
2020 PCE:	168	825	129	118	446	112	134	1,080	151	105	726	150	4,142
Existing PCE:	**170**	**873**	**129**	**118**	**579**	**112**	**134**	**1,162**	**175**	**105**	**881**	**150**	**4,588**
Existing PCE w 50% Use:	**170**	**873**	**129**	**118**	**579**	**112**	**138**	**1,178**	**175**	**105**	**883**	**150**	**4,610**

Counts Unlimited
PO Box 1178
Corona, CA 92878
951-268-6268

City of Cypress
N/S: Valley View Street
E/W: Katella Avenue
Weather: Clear

File Name : 03_CYP_VV_Kat AM
Site Code : 05120183
Start Date : 3/12/2020
Page No : 1

Groups Printed- Passenger Vehicles - Large 2 Axle Vehicles - 3 Axle Vehicles - 4+ Axle Trucks

	Valley View Street Southbound					Katella Avenue Westbound					Valley View Street Northbound					Katella Avenue Eastbound							
Start Time	Left	Thru	Right	RTOR	App. Total	Left	Thru	Right	RTOR	App. Total	Left	Thru	Right	RTOR	App. Total	Left	Thru	Right	RTOR	App. Total	Exclu. Total	Inclu. Total	Int. Total
07:00 AM	51	270	50	4	371	27	111	19	7	157	137	316	34	2	487	26	97	116	0	239	13	1254	1267
07:15 AM	51	277	28	1	356	31	214	42	10	287	172	360	39	10	571	20	93	108	0	221	21	1435	1456
07:30 AM	40	280	56	6	376	44	201	45	10	290	202	406	46	7	654	22	84	117	0	223	23	1543	1566
07:45 AM	56	260	50	4	366	46	219	41	7	306	211	329	83	18	623	42	141	109	0	292	29	1587	1616
Total	198	1087	184	15	1469	148	745	147	34	1040	722	1411	202	37	2335	110	415	450	0	975	86	5819	5905
08:00 AM	71	270	53	6	394	34	154	27	9	215	188	361	77	12	626	32	109	116	0	257	27	1492	1519
08:15 AM	57	272	52	4	381	39	167	39	10	245	199	308	65	13	572	32	103	125	0	260	27	1458	1485
08:30 AM	56	228	68	6	352	33	131	30	21	194	191	316	62	14	569	36	91	118	0	245	41	1360	1401
08:45 AM	50	226	31	3	307	29	156	31	10	216	169	277	57	14	503	37	105	89	0	231	27	1257	1284
Total	234	996	204	19	1434	135	608	127	50	870	747	1262	261	53	2270	137	408	448	0	993	122	5567	5689
Grand Total	432	2083	388	34	2903	283	1353	274	84	1910	1469	2673	463	90	4605	247	823	898	0	1968	208	11386	11594
Apprch %	14.9	71.8	13.4			14.8	70.8	14.3			31.9	58	10.1			12.6	41.8	45.6					
Total %	3.8	18.3	3.4		25.5	2.5	11.9	2.4		16.8	12.9	23.5	4.1		40.4	2.2	7.2	7.9		17.3	1.8	98.2	
Passenger Vehicles	419	2058	372		2883	270	1315	267		1935	1458	2630	455		4633	240	802	887		1929	0	0	11380
% Passenger Vehicles	97	98.8	95.9	100	98.2	95.4	97.2	97.4	98.8	97	99.3	98.4	98.3	100	98.7	97.2	97.4	98.8	0	98	0	0	98.2
Large 2 Axle Vehicles	8	16	4		28	3	18	6		28	7	27	5		39	3	10	8		21	0	0	116
% Large 2 Axle Vehicles	1.9	0.8	1	0	1	1.1	1.3	2.2	1.2	1.4	0.5	1	1.1	0	0.8	1.2	1.2	0.9	0	1.1	0	0	1
3 Axle Vehicles	0	2	1		3	4	9	1		14	2	3	1		6	0	4	0		4	0	0	27
% 3 Axle Vehicles	0	0.1	0.3	0	0.1	1.4	0.7	0.4	0	0.7	0.1	0.1	0.2	0	0.1	0	0.5	0	0	0.2	0	0	0.2
4+ Axle Trucks	5	7	11		23	6	11	0		17	2	13	2		17	4	7	3		14	0	0	71
% 4+ Axle Trucks	1.2	0.3	2.8	0	0.8	2.1	0.8	0	0	0.9	0.1	0.5	0.4	0	0.4	1.6	0.9	0.3	0	0.7	0	0	0.6

	Valley View Street Southbound				Katella Avenue Westbound				Valley View Street Northbound				Katella Avenue Eastbound				
Start Time	Left	Thru	Right	App. Total	Left	Thru	Right	App. Total	Left	Thru	Right	App. Total	Left	Thru	Right	App. Total	Int. Total
Peak Hour Analysis From 07:00 AM to 08:45 AM - Peak 1 of 1																	
Peak Hour for Entire Intersection Begins at 07:30 AM																	
07:30 AM	40	**280**	**56**	376	44	201	**45**	290	202	**406**	46	**654**	22	84	117	223	1543
07:45 AM	56	260	50	366	**46**	**219**	41	**306**	**211**	329	**83**	623	**42**	**141**	109	**292**	**1587**
08:00 AM	**71**	270	53	**394**	34	154	27	215	188	361	77	626	32	109	116	257	1492
08:15 AM	57	272	52	381	39	167	39	245	199	308	65	572	32	103	**125**	260	1458
Total Volume	224	1082	211	1517	163	741	152	1056	800	1404	271	2475	128	437	467	1032	6080
% App. Total	14.8	71.3	13.9		15.4	70.2	14.4		32.3	56.7	10.9		12.4	42.3	45.3		
PHF	.789	.966	.942	.963	.886	.846	.844	.863	.948	.865	.816	.946	.762	.775	.934	.884	.958

Counts Unlimited
PO Box 1178
Corona, CA 92878
951-268-6268

City of Cypress
N/S: Valley View Street
E/W: Katella Avenue
Weather: Clear

File Name : 03_CYP_VV_Kat AM
Site Code : 05120183
Start Date : 3/12/2020
Page No : 2

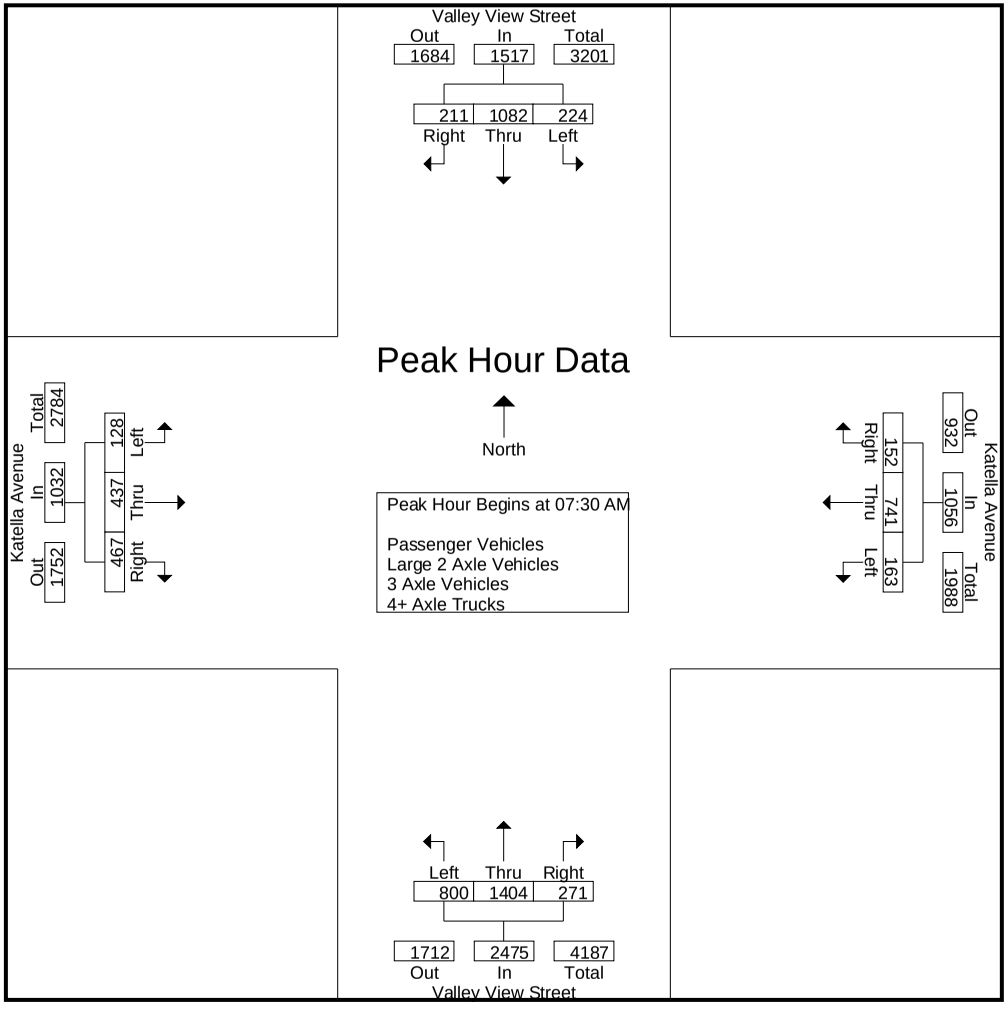

Counts Unlimited
PO Box 1178
Corona, CA 92878
951-268-6268

City of Cypress
N/S: Valley View Street
E/W: Katella Avenue
Weather: Clear

File Name : 03_CYP_VV_Kat AM
Site Code : 05120183
Start Date : 3/12/2020
Page No : 1

Groups Printed- Large 2 Axle Vehicles

	Valley View Street Southbound					Katella Avenue Westbound					Valley View Street Northbound					Katella Avenue Eastbound							
Start Time	Left	Thru	Right	RTOR	App. Total	Left	Thru	Right	RTOR	App. Total	Left	Thru	Right	RTOR	App. Total	Left	Thru	Right	RTOR	App. Total	Exclu. Total	Inclu. Total	Int. Total
07:00 AM	0	0	0	0	0	0	1	0	0	1	1	5	0	0	6	0	1	1	0	2	0	9	9
07:15 AM	1	0	0	0	1	1	2	0	0	3	2	3	1	0	6	0	2	1	0	3	0	13	13
07:30 AM	0	0	1	0	1	0	2	0	0	2	1	6	1	0	8	1	1	1	0	3	0	14	14
07:45 AM	0	2	1	0	3	0	1	0	0	1	2	4	3	0	9	0	0	0	0	0	0	13	13
Total	1	2	2	0	5	1	6	0	0	7	6	18	5	0	29	1	4	3	0	8	0	49	49
08:00 AM	2	3	1	0	6	0	2	0	0	2	0	1	0	0	1	0	2	1	0	3	0	12	12
08:15 AM	0	4	0	0	4	0	5	2	0	7	1	1	0	0	2	1	1	2	0	4	0	17	17
08:30 AM	2	4	0	0	6	0	2	1	0	3	0	3	0	0	3	1	2	1	0	4	0	16	16
08:45 AM	3	3	1	0	7	2	3	3	1	8	0	4	0	0	4	0	1	1	0	2	1	21	22
Total	7	14	2	0	23	2	12	6	1	20	1	9	0	0	10	2	6	5	0	13	1	66	67
Grand Total	8	16	4	0	28	3	18	6	1	27	7	27	5	0	39	3	10	8	0	21	1	115	116
Apprch %	28.6	57.1	14.3			11.1	66.7	22.2			17.9	69.2	12.8			14.3	47.6	38.1					
Total %	7	13.9	3.5		24.3	2.6	15.7	5.2		23.5	6.1	23.5	4.3		33.9	2.6	8.7	7		18.3	0.9	99.1	

3.1-8

	Valley View Street Southbound				Katella Avenue Westbound				Valley View Street Northbound				Katella Avenue Eastbound				
Start Time	Left	Thru	Right	App. Total	Left	Thru	Right	App. Total	Left	Thru	Right	App. Total	Left	Thru	Right	App. Total	Int. Total
Peak Hour Analysis From 07:30 AM to 08:15 AM - Peak 1 of 1																	
Peak Hour for Entire Intersection Begins at 07:30 AM																	
07:30 AM	0	0	**1**	1	0	2	0	2	1	**6**	1	8	**1**	1	1	3	14
07:45 AM	0	2	1	3	0	1	0	1	**2**	4	**3**	**9**	0	0	0	0	13
08:00 AM	**2**	3	1	**6**	0	2	0	2	0	1	0	1	0	**2**	1	3	12
08:15 AM	0	**4**	0	4	0	**5**	**2**	**7**	1	1	0	2	1	1	**2**	**4**	**17**
Total Volume	2	9	3	14	0	10	2	12	4	12	4	20	2	4	4	10	56
% App. Total	14.3	64.3	21.4		0	83.3	16.7		20	60	20		20	40	40		
PHF	.250	.563	.750	.583	.000	.500	.250	.429	.500	.500	.333	.556	.500	.500	.500	.625	.824

Counts Unlimited
PO Box 1178
Corona, CA 92878
951-268-6268

City of Cypress
N/S: Valley View Street
E/W: Katella Avenue
Weather: Clear

File Name : 03_CYP_VV_Kat AM
Site Code : 05120183
Start Date : 3/12/2020
Page No : 2

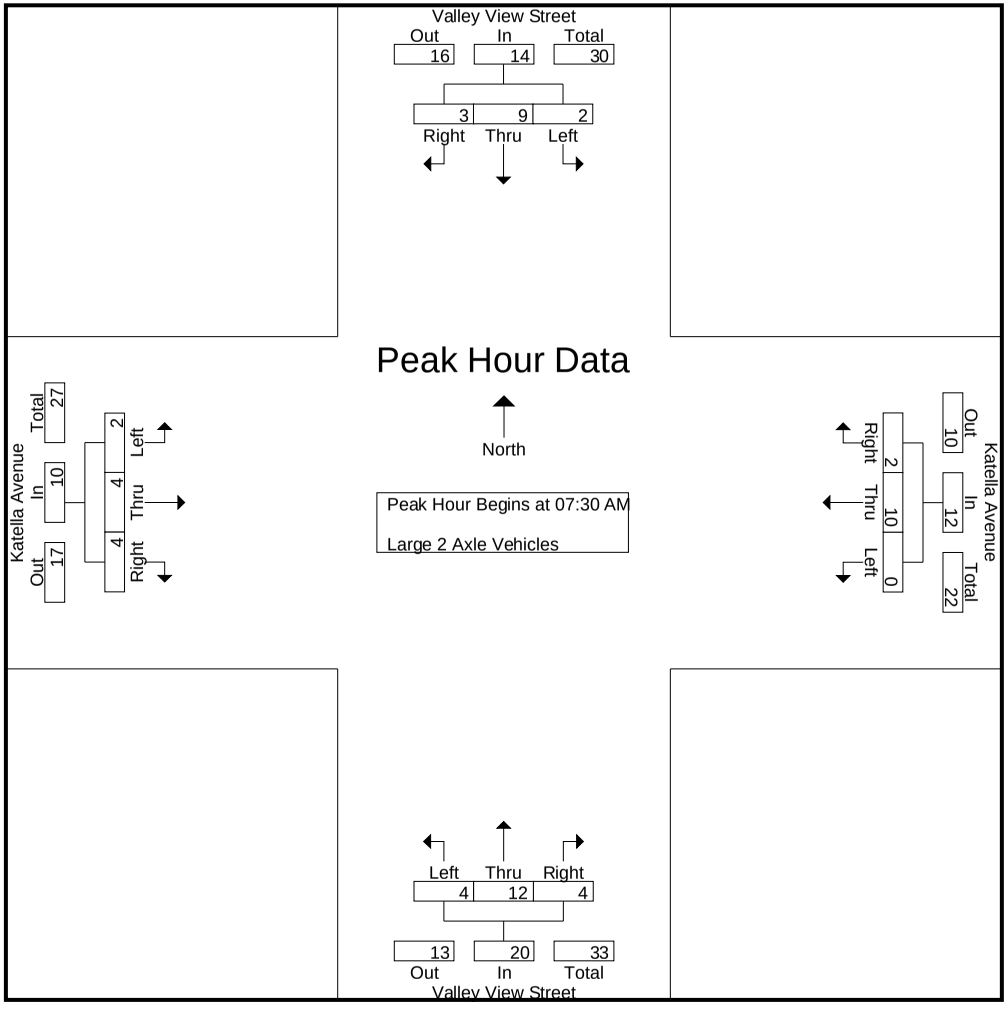

Counts Unlimited
PO Box 1178
Corona, CA 92878
951-268-6268

City of Cypress
N/S: Valley View Street
E/W: Katella Avenue
Weather: Clear

File Name : 03_CYP_VV_Kat AM
Site Code : 05120183
Start Date : 3/12/2020
Page No : 1

Groups Printed- 3 Axle Vehicles

	Valley View Street Southbound					Katella Avenue Westbound					Valley View Street Northbound					Katella Avenue Eastbound							
Start Time	Left	Thru	Right	RTOR	App. Total	Left	Thru	Right	RTOR	App. Total	Left	Thru	Right	RTOR	App. Total	Left	Thru	Right	RTOR	App. Total	Exclu. Total	Inclu. Total	Int. Total
07:00 AM	0	0	0	0	0	0	2	0	0	2	0	0	0	0	0	0	0	0	0	0	0	2	2
07:15 AM	0	1	0	0	1	1	0	0	0	1	0	0	0	0	0	0	1	0	0	1	0	3	3
07:30 AM	0	0	0	0	0	0	1	0	0	1	0	0	0	0	0	0	0	0	0	0	0	1	1
07:45 AM	0	0	0	0	0	0	2	0	0	2	0	2	0	0	2	0	1	0	0	1	0	5	5
Total	0	1	0	0	1	1	5	0	0	6	0	2	0	0	2	0	2	0	0	2	0	11	11
08:00 AM	0	0	0	0	0	0	1	0	0	1	0	0	0	0	0	0	0	0	0	0	0	1	1
08:15 AM	0	0	1	0	1	1	1	0	0	2	1	0	1	0	2	0	1	0	0	1	0	6	6
08:30 AM	0	1	0	0	1	1	1	1	0	3	1	0	0	0	1	0	0	0	0	0	0	5	5
08:45 AM	0	0	0	0	0	1	1	0	0	2	0	1	0	0	1	0	1	0	0	1	0	4	4
Total	0	1	1	0	2	3	4	1	0	8	2	1	1	0	4	0	2	0	0	2	0	16	16
Grand Total	0	2	1	0	3	4	9	1	0	14	2	3	1	0	6	0	4	0	0	4	0	27	27
Apprch %	0	66.7	33.3			28.6	64.3	7.1			33.3	50	16.7			0	100	0					
Total %	0	7.4	3.7		11.1	14.8	33.3	3.7		51.9	7.4	11.1	3.7		22.2	0	14.8	0		14.8	0	100	

3.1-10

	Valley View Street Southbound				Katella Avenue Westbound				Valley View Street Northbound				Katella Avenue Eastbound				
Start Time	Left	Thru	Right	App. Total	Left	Thru	Right	App. Total	Left	Thru	Right	App. Total	Left	Thru	Right	App. Total	Int. Total
Peak Hour Analysis From 07:30 AM to 08:15 AM - Peak 1 of 1																	
Peak Hour for Entire Intersection Begins at 07:30 AM																	
07:30 AM	0	0	0	0	0	1	0	1	0	0	0	0	0	0	0	0	1
07:45 AM	0	0	0	0	0	**2**	0	**2**	0	**2**	0	**2**	0	**1**	0	**1**	5
08:00 AM	0	0	0	0	0	1	0	1	0	0	0	0	0	0	0	0	1
08:15 AM	0	0	**1**	**1**	**1**	1	0	2	**1**	0	**1**	2	0	1	0	1	**6**
Total Volume	0	0	1	1	1	5	0	6	1	2	1	4	0	2	0	2	13
% App. Total	0	0	100		16.7	83.3	0		25	50	25		0	100	0		
PHF	.000	.000	.250	.250	.250	.625	.000	.750	.250	.250	.250	.500	.000	.500	.000	.500	.542

Counts Unlimited
PO Box 1178
Corona, CA 92878
951-268-6268

City of Cypress
N/S: Valley View Street
E/W: Katella Avenue
Weather: Clear

File Name : 03_CYP_VV_Kat AM
Site Code : 05120183
Start Date : 3/12/2020
Page No : 2

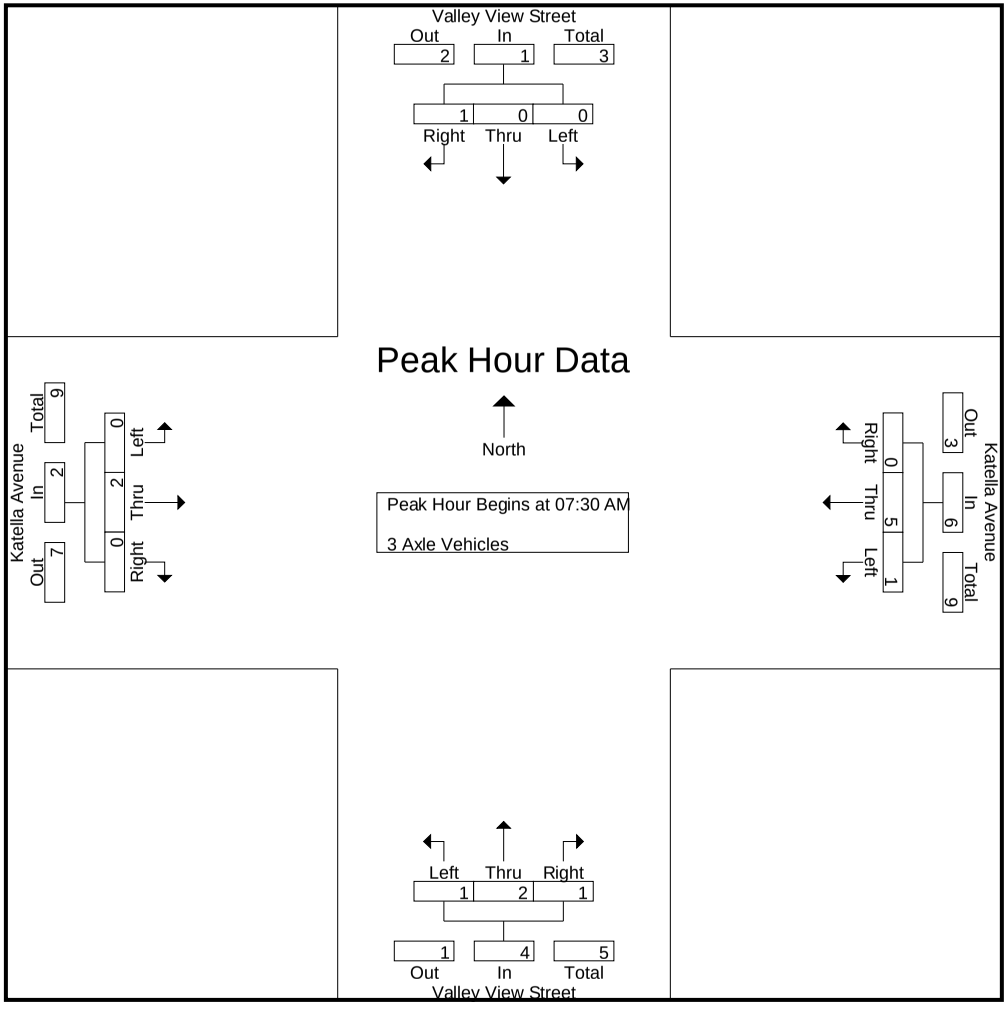

Counts Unlimited
PO Box 1178
Corona, CA 92878
951-268-6268

City of Cypress
N/S: Valley View Street
E/W: Katella Avenue
Weather: Clear

File Name : 03_CYP_VV_Kat AM
Site Code : 05120183
Start Date : 3/12/2020
Page No : 1

Groups Printed- 4+ Axle Trucks

	Valley View Street Southbound					Katella Avenue Westbound					Valley View Street Northbound					Katella Avenue Eastbound							
Start Time	Left	Thru	Right	RTOR	App. Total	Left	Thru	Right	RTOR	App. Total	Left	Thru	Right	RTOR	App. Total	Left	Thru	Right	RTOR	App. Total	Exclu. Total	Inclu. Total	Int. Total
07:00 AM	0	0	1	0	1	0	1	0	0	1	0	0	0	0	0	1	1	0	0	2	0	4	4
07:15 AM	0	1	1	0	2	1	0	0	0	1	0	0	0	0	0	1	4	0	0	5	0	8	8
07:30 AM	0	0	1	0	1	0	0	0	0	0	0	1	0	0	1	0	0	0	0	0	0	2	2
07:45 AM	1	0	2	0	3	1	3	0	0	4	1	3	1	0	5	0	0	0	0	0	0	12	12
Total	1	1	5	0	7	2	4	0	0	6	1	4	1	0	6	2	5	0	0	7	0	26	26
08:00 AM	1	2	1	0	4	0	0	0	0	0	0	2	0	0	2	0	0	1	0	1	0	7	7
08:15 AM	1	2	3	0	6	1	3	0	0	4	0	4	0	0	4	0	0	2	0	2	0	16	16
08:30 AM	1	0	2	0	3	0	1	0	0	1	0	2	0	0	2	0	1	0	0	1	0	7	7
08:45 AM	1	2	0	0	3	3	3	0	0	6	1	1	1	0	3	2	1	0	0	3	0	15	15
Total	4	6	6	0	16	4	7	0	0	11	1	9	1	0	11	2	2	3	0	7	0	45	45
Grand Total	5	7	11	0	23	6	11	0	0	17	2	13	2	0	17	4	7	3	0	14	0	71	71
Apprch %	21.7	30.4	47.8			35.3	64.7	0			11.8	76.5	11.8			28.6	50	21.4					
Total %	7	9.9	15.5		32.4	8.5	15.5	0		23.9	2.8	18.3	2.8		23.9	5.6	9.9	4.2		19.7	0	100	

3.1-12

	Valley View Street Southbound				Katella Avenue Westbound				Valley View Street Northbound				Katella Avenue Eastbound				
Start Time	Left	Thru	Right	App. Total	Left	Thru	Right	App. Total	Left	Thru	Right	App. Total	Left	Thru	Right	App. Total	Int. Total
Peak Hour Analysis From 07:30 AM to 08:15 AM - Peak 1 of 1																	
Peak Hour for Entire Intersection Begins at 07:30 AM																	
07:30 AM	0	0	1	1	0	0	0	0	0	1	0	1	0	0	0	0	2
07:45 AM	**1**	0	2	3	**1**	**3**	0	**4**	**1**	3	**1**	**5**	0	0	0	0	12
08:00 AM	1	**2**	1	4	0	0	0	0	0	2	0	2	0	0	1	1	7
08:15 AM	1	2	**3**	**6**	1	3	0	4	0	**4**	0	4	0	0	**2**	**2**	**16**
Total Volume	3	4	7	14	2	6	0	8	1	10	1	12	0	0	3	3	37
% App. Total	21.4	28.6	50		25	75	0		8.3	83.3	8.3		0	0	100		
PHF	.750	.500	.583	.583	.500	.500	.000	.500	.250	.625	.250	.600	.000	.000	.375	.375	.578

Counts Unlimited
PO Box 1178
Corona, CA 92878
951-268-6268

City of Cypress
N/S: Valley View Street
E/W: Katella Avenue
Weather: Clear

File Name : 03_CYP_VV_Kat AM
Site Code : 05120183
Start Date : 3/12/2020
Page No : 2

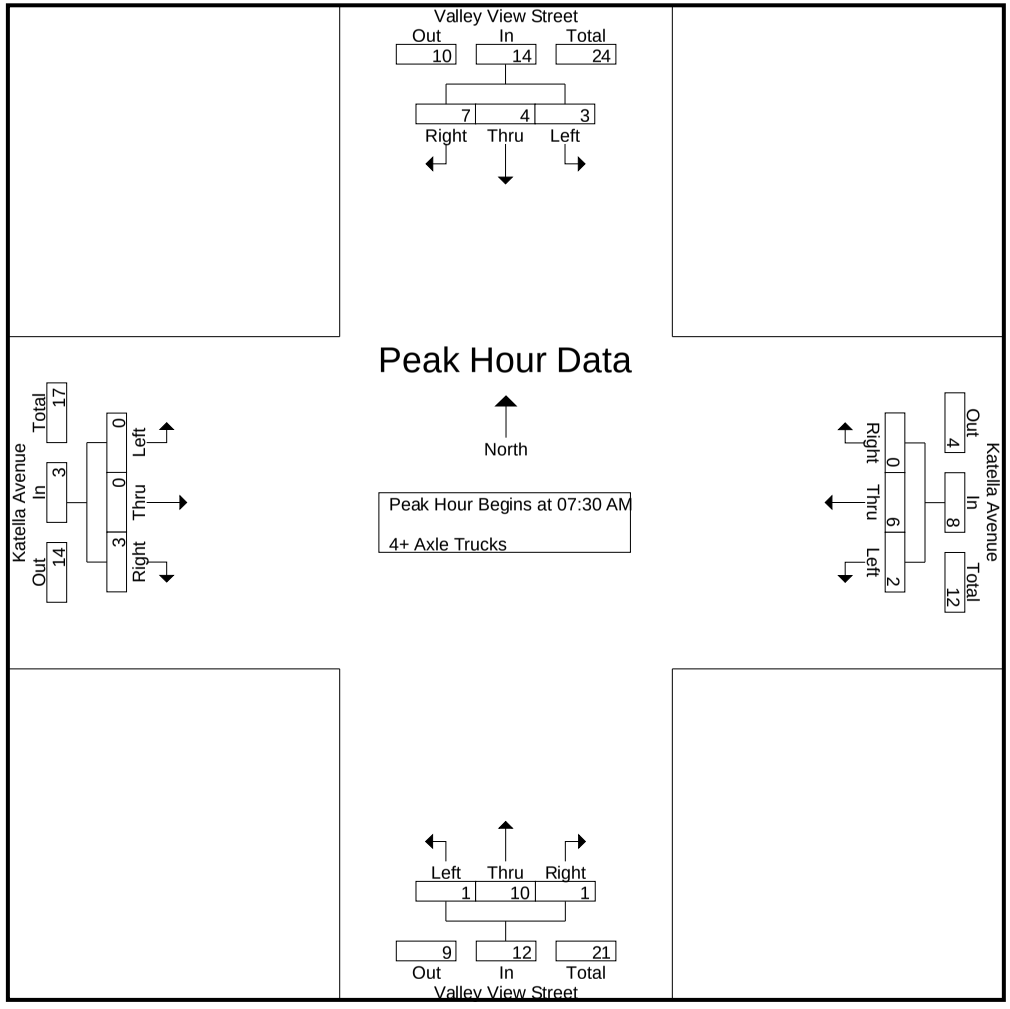

Counts Unlimited
PO Box 1178
Corona, CA 92878
951-268-6268

City of Cypress
N/S: Valley View Street
E/W: Katella Avenue
Weather: Clear

File Name : 03_CYP_VV_Kat PM
Site Code : 05120183
Start Date : 3/12/2020
Page No : 1

Groups Printed- Passenger Vehicles - Large 2 Axle Vehicles - 3 Axle Vehicles - 4+ Axle Trucks

	Valley View Street Southbound					Katella Avenue Westbound					Valley View Street Northbound					Katella Avenue Eastbound							
Start Time	Left	Thru	Right	RTOR	App. Total	Left	Thru	Right	RTOR	App. Total	Left	Thru	Right	RTOR	App. Total	Left	Thru	Right	RTOR	App. Total	Exclu. Total	Inclu. Total	Int. Total
04:00 PM	42	258	54	8	354	59	165	37	8	261	142	356	44	6	542	59	178	179	0	416	22	1573	1595
04:15 PM	40	226	50	6	316	56	185	36	6	277	139	276	47	11	462	72	231	167	0	470	23	1525	1548
04:30 PM	45	300	46	10	391	74	184	59	15	317	160	337	43	12	540	62	301	196	0	559	37	1807	1844
04:45 PM	40	258	57	12	355	74	196	40	12	310	135	308	35	6	478	62	237	196	0	495	30	1638	1668
Total	167	1042	207	36	1416	263	730	172	41	1165	576	1277	169	35	2022	255	947	738	0	1940	112	6543	6655
05:00 PM	52	341	77	14	470	106	206	72	21	384	152	362	44	11	558	65	201	234	0	500	46	1912	1958
05:15 PM	50	267	59	10	376	87	222	52	4	361	137	337	39	7	513	71	259	189	0	519	21	1769	1790
05:30 PM	59	313	64	12	436	72	208	50	6	330	163	323	48	12	534	66	193	183	0	442	30	1742	1772
05:45 PM	42	213	54	9	309	70	227	46	10	343	147	309	30	8	486	68	225	148	0	441	27	1579	1606
Total	203	1134	254	45	1591	335	863	220	41	1418	599	1331	161	38	2091	270	878	754	0	1902	124	7002	7126
Grand Total	370	2176	461	81	3007	598	1593	392	82	2583	1175	2608	330	73	4113	525	1825	1492	0	3842	236	13545	13781
Apprch %	12.3	72.4	15.3			23.2	61.7	15.2			28.6	63.4	8			13.7	47.5	38.8					
Total %	2.7	16.1	3.4		22.2	4.4	11.8	2.9		19.1	8.7	19.3	2.4		30.4	3.9	13.5	11		28.4	1.7	98.3	
Passenger Vehicles	365	2160	458		3064	592	1577	382		2629	1171	2583	328		4155	517	1800	1484		3801	0	0	13649
% Passenger Vehicles	98.6	99.3	99.3	100	99.2	99	99	97.4	95.1	98.6	99.7	99	99.4	100	99.3	98.5	98.6	99.5	0	98.9	0	0	99
Large 2 Axle Vehicles	3	6	3		12	2	10	6		19	4	17	1		22	6	14	7		27	0	0	80
% Large 2 Axle Vehicles	0.8	0.3	0.7	0	0.4	0.3	0.6	1.5	1.2	0.7	0.3	0.7	0.3	0	0.5	1.1	0.8	0.5	0	0.7	0	0	0.6
3 Axle Vehicles	1	2	0		3	0	5	0		5	0	1	1		2	0	5	0		5	0	0	15
% 3 Axle Vehicles	0.3	0.1	0	0	0.1	0	0.3	0	0	0.2	0	0	0.3	0	0	0	0.3	0	0	0.1	0	0	0.1
4+ Axle Trucks	1	8	0		9	4	1	4		12	0	7	0		7	2	6	1		9	0	0	37
% 4+ Axle Trucks	0.3	0.4	0	0	0.3	0.7	0.1	1	3.7	0.5	0	0.3	0	0	0.2	0.4	0.3	0.1	0	0.2	0	0	0.3

	Valley View Street Southbound				Katella Avenue Westbound				Valley View Street Northbound				Katella Avenue Eastbound				
Start Time	Left	Thru	Right	App. Total	Left	Thru	Right	App. Total	Left	Thru	Right	App. Total	Left	Thru	Right	App. Total	Int. Total
Peak Hour Analysis From 04:00 PM to 05:45 PM - Peak 1 of 1																	
Peak Hour for Entire Intersection Begins at 04:30 PM																	
04:30 PM	45	300	46	391	74	184	59	317	**160**	337	43	540	62	**301**	196	**559**	1807
04:45 PM	40	258	57	355	74	196	40	310	135	308	35	478	62	237	196	495	1638
05:00 PM	**52**	**341**	**77**	**470**	**106**	206	**72**	**384**	152	**362**	**44**	**558**	65	201	**234**	500	**1912**
05:15 PM	50	267	59	376	87	**222**	52	361	137	337	39	513	**71**	259	189	519	1769
Total Volume	187	1166	239	1592	341	808	223	1372	584	1344	161	2089	260	998	815	2073	7126
% App. Total	11.7	73.2	15		24.9	58.9	16.3		28	64.3	7.7		12.5	48.1	39.3		
PHF	.899	.855	.776	.847	.804	.910	.774	.893	.913	.928	.915	.936	.915	.829	.871	.927	.932

Counts Unlimited
PO Box 1178
Corona, CA 92878
951-268-6268

City of Cypress
N/S: Valley View Street
E/W: Katella Avenue
Weather: Clear

File Name : 03_CYP_VV_Kat PM
Site Code : 05120183
Start Date : 3/12/2020
Page No : 2

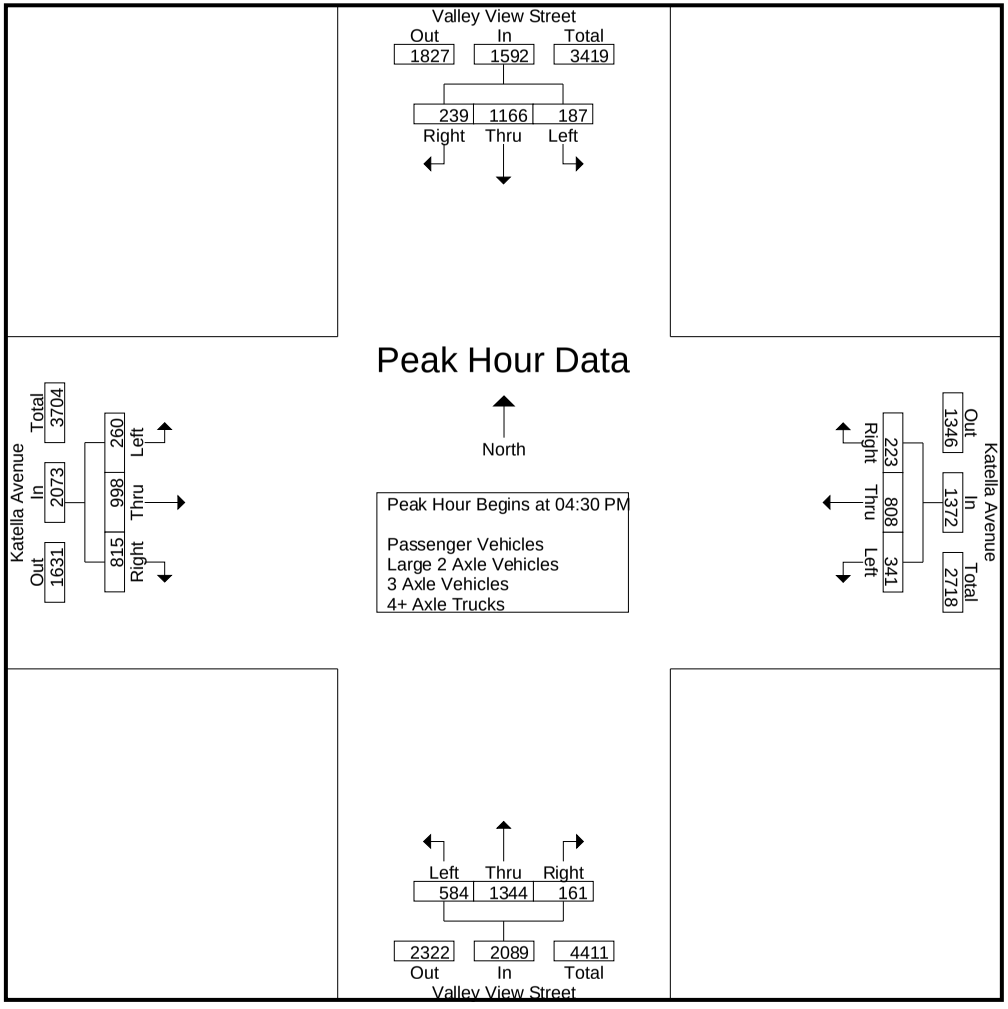

Counts Unlimited
PO Box 1178
Corona, CA 92878
951-268-6268

City of Cypress
N/S: Valley View Street
E/W: Katella Avenue
Weather: Clear

File Name : 03_CYP_VV_Kat PM
Site Code : 05120183
Start Date : 3/12/2020
Page No : 1

Groups Printed- Large 2 Axle Vehicles

	Valley View Street Southbound					Katella Avenue Westbound					Valley View Street Northbound					Katella Avenue Eastbound							
Start Time	Left	Thru	Right	RTOR	App. Total	Left	Thru	Right	RTOR	App. Total	Left	Thru	Right	RTOR	App. Total	Left	Thru	Right	RTOR	App. Total	Exclu. Total	Inclu. Total	Int. Total
04:00 PM	2	0	1	0	3	0	0	0	0	0	1	1	0	0	2	2	1	3	0	6	0	11	11
04:15 PM	0	1	1	0	2	0	4	2	0	6	2	4	1	0	7	2	6	2	0	10	0	25	25
04:30 PM	0	2	1	0	3	0	2	1	1	3	0	1	0	0	1	0	1	0	0	1	1	8	9
04:45 PM	0	0	0	0	0	1	0	1	0	2	0	3	0	0	3	1	3	0	0	4	0	9	9
Total	2	3	3	0	8	1	6	4	1	11	3	9	1	0	13	5	11	5	0	21	1	53	54
05:00 PM	0	0	0	0	0	0	1	1	0	2	1	2	0	0	3	0	0	0	0	0	0	5	5
05:15 PM	0	0	0	0	0	0	1	0	0	1	0	2	0	0	2	0	2	1	0	3	0	6	6
05:30 PM	1	3	0	0	4	1	1	0	0	2	0	4	0	0	4	1	1	0	0	2	0	12	12
05:45 PM	0	0	0	0	0	0	1	1	0	2	0	0	0	0	0	0	0	1	0	1	0	3	3
Total	1	3	0	0	4	1	4	2	0	7	1	8	0	0	9	1	3	2	0	6	0	26	26
Grand Total	3	6	3	0	12	2	10	6	1	18	4	17	1	0	22	6	14	7	0	27	1	79	80
Apprch %	25	50	25			11.1	55.6	33.3			18.2	77.3	4.5			22.2	51.9	25.9					
Total %	3.8	7.6	3.8		15.2	2.5	12.7	7.6		22.8	5.1	21.5	1.3		27.8	7.6	17.7	8.9		34.2	1.2	98.8	

3.1-16

	Valley View Street Southbound				Katella Avenue Westbound				Valley View Street Northbound				Katella Avenue Eastbound				
Start Time	Left	Thru	Right	App. Total	Left	Thru	Right	App. Total	Left	Thru	Right	App. Total	Left	Thru	Right	App. Total	Int. Total
Peak Hour Analysis From 04:30 PM to 05:15 PM - Peak 1 of 1																	
Peak Hour for Entire Intersection Begins at 04:30 PM																	
04:30 PM	0	**2**	**1**	**3**	0	**2**	**1**	**3**	0	1	0	1	0	1	0	1	8
04:45 PM	0	0	0	0	**1**	0	1	2	0	**3**	0	**3**	**1**	**3**	0	**4**	**9**
05:00 PM	0	0	0	0	0	1	1	2	**1**	2	0	3	0	0	0	0	5
05:15 PM	0	0	0	0	0	1	0	1	0	2	0	2	0	2	**1**	3	6
Total Volume	0	2	1	3	1	4	3	8	1	8	0	9	1	6	1	8	28
% App. Total	0	66.7	33.3		12.5	50	37.5		11.1	88.9	0		12.5	75	12.5		
PHF	.000	.250	.250	.250	.250	.500	.750	.667	.250	.667	.000	.750	.250	.500	.250	.500	.778

Counts Unlimited
PO Box 1178
Corona, CA 92878
951-268-6268

City of Cypress
N/S: Valley View Street
E/W: Katella Avenue
Weather: Clear

File Name : 03_CYP_VV_Kat PM
Site Code : 05120183
Start Date : 3/12/2020
Page No : 2

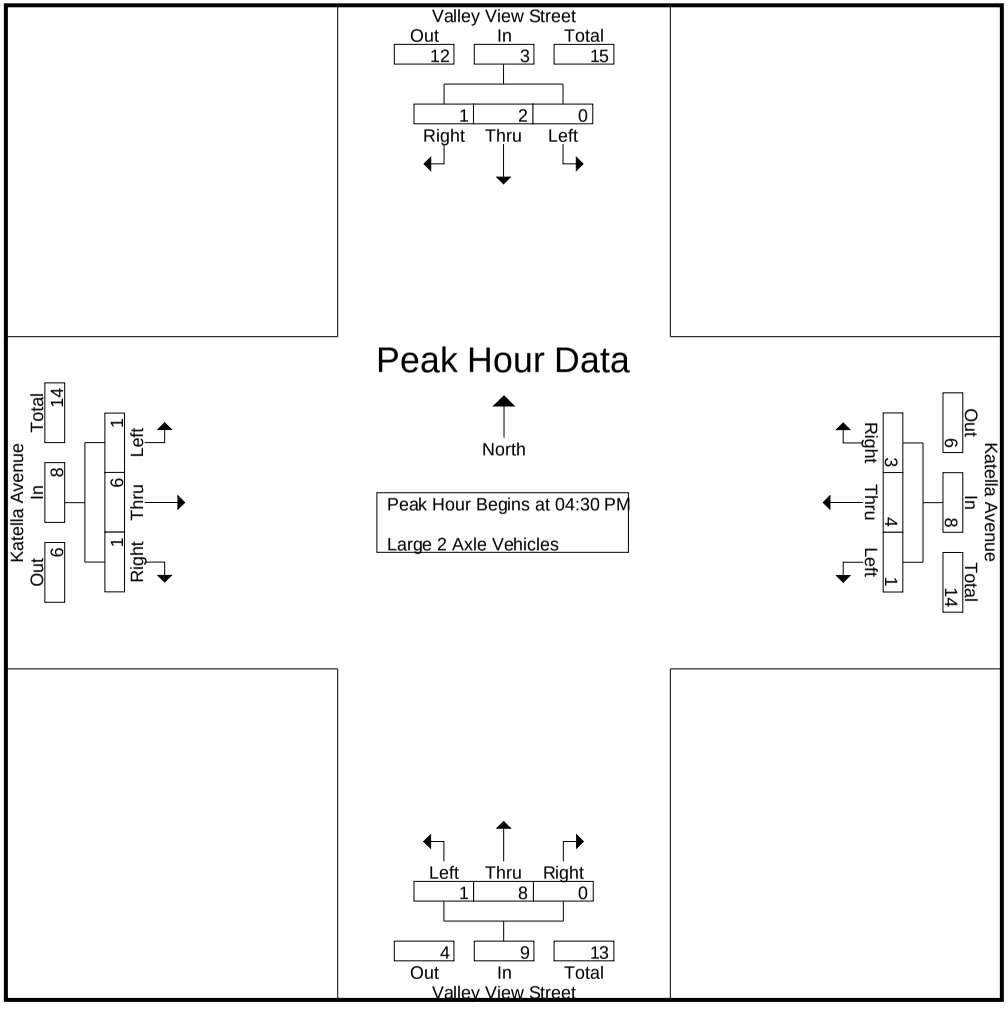

Counts Unlimited
PO Box 1178
Corona, CA 92878
951-268-6268

City of Cypress
N/S: Valley View Street
E/W: Katella Avenue
Weather: Clear

File Name : 03_CYP_VV_Kat PM
Site Code : 05120183
Start Date : 3/12/2020
Page No : 1

Groups Printed- 3 Axle Vehicles

	Valley View Street Southbound					Katella Avenue Westbound					Valley View Street Northbound					Katella Avenue Eastbound							
Start Time	Left	Thru	Right	RTOR	App. Total	Left	Thru	Right	RTOR	App. Total	Left	Thru	Right	RTOR	App. Total	Left	Thru	Right	RTOR	App. Total	Exclu. Total	Inclu. Total	Int. Total
04:00 PM	0	1	0	0	1	0	0	0	0	0	0	0	0	0	0	0	1	0	0	1	0	2	2
04:15 PM	0	0	0	0	0	0	1	0	0	1	0	0	0	0	0	0	0	0	0	0	0	1	1
04:30 PM	0	0	0	0	0	0	1	0	0	1	0	0	0	0	0	0	1	0	0	1	0	2	2
04:45 PM	0	0	0	0	0	0	1	0	0	1	0	0	0	0	0	0	2	0	0	2	0	3	3
Total	0	1	0	0	1	0	3	0	0	3	0	0	0	0	0	0	4	0	0	4	0	8	8
05:00 PM	0	0	0	0	0	0	1	0	0	1	0	0	0	0	0	0	0	0	0	0	0	1	1
05:15 PM	0	0	0	0	0	0	1	0	0	1	0	0	0	0	0	0	0	0	0	0	0	1	1
05:30 PM	1	1	0	0	2	0	0	0	0	0	0	0	1	0	1	0	1	0	0	1	0	4	4
05:45 PM	0	0	0	0	0	0	0	0	0	0	0	1	0	0	1	0	0	0	0	0	0	1	1
Total	1	1	0	0	2	0	2	0	0	2	0	1	1	0	2	0	1	0	0	1	0	7	7
Grand Total	1	2	0	0	3	0	5	0	0	5	0	1	1	0	2	0	5	0	0	5	0	15	15
Apprch %	33.3	66.7	0			0	100	0			0	50	50			0	100	0					
Total %	6.7	13.3	0		20	0	33.3	0		33.3	0	6.7	6.7		13.3	0	33.3	0		33.3	0	100	

3.1-18

	Valley View Street Southbound				Katella Avenue Westbound				Valley View Street Northbound				Katella Avenue Eastbound				
Start Time	Left	Thru	Right	App. Total	Left	Thru	Right	App. Total	Left	Thru	Right	App. Total	Left	Thru	Right	App. Total	Int. Total
Peak Hour Analysis From 04:30 PM to 05:15 PM - Peak 1 of 1																	
Peak Hour for Entire Intersection Begins at 04:30 PM																	
04:30 PM	0	0	0	0	0	**1**	0	**1**	0	0	0	0	0	1	0	1	2
04:45 PM	0	0	0	0	0	1	0	1	0	0	0	0	0	**2**	0	**2**	**3**
05:00 PM	0	0	0	0	0	1	0	1	0	0	0	0	0	0	0	0	1
05:15 PM	0	0	0	0	0	1	0	1	0	0	0	0	0	0	0	0	1
Total Volume	0	0	0	0	0	4	0	4	0	0	0	0	0	3	0	3	7
% App. Total	0	0	0		0	100	0		0	0	0		0	100	0		
PHF	.000	.000	.000	.000	.000	1.00	.000	1.00	.000	.000	.000	.000	.000	.375	.000	.375	.583

Counts Unlimited
PO Box 1178
Corona, CA 92878
951-268-6268

City of Cypress
N/S: Valley View Street
E/W: Katella Avenue
Weather: Clear

File Name : 03_CYP_VV_Kat PM
Site Code : 05120183
Start Date : 3/12/2020
Page No : 2

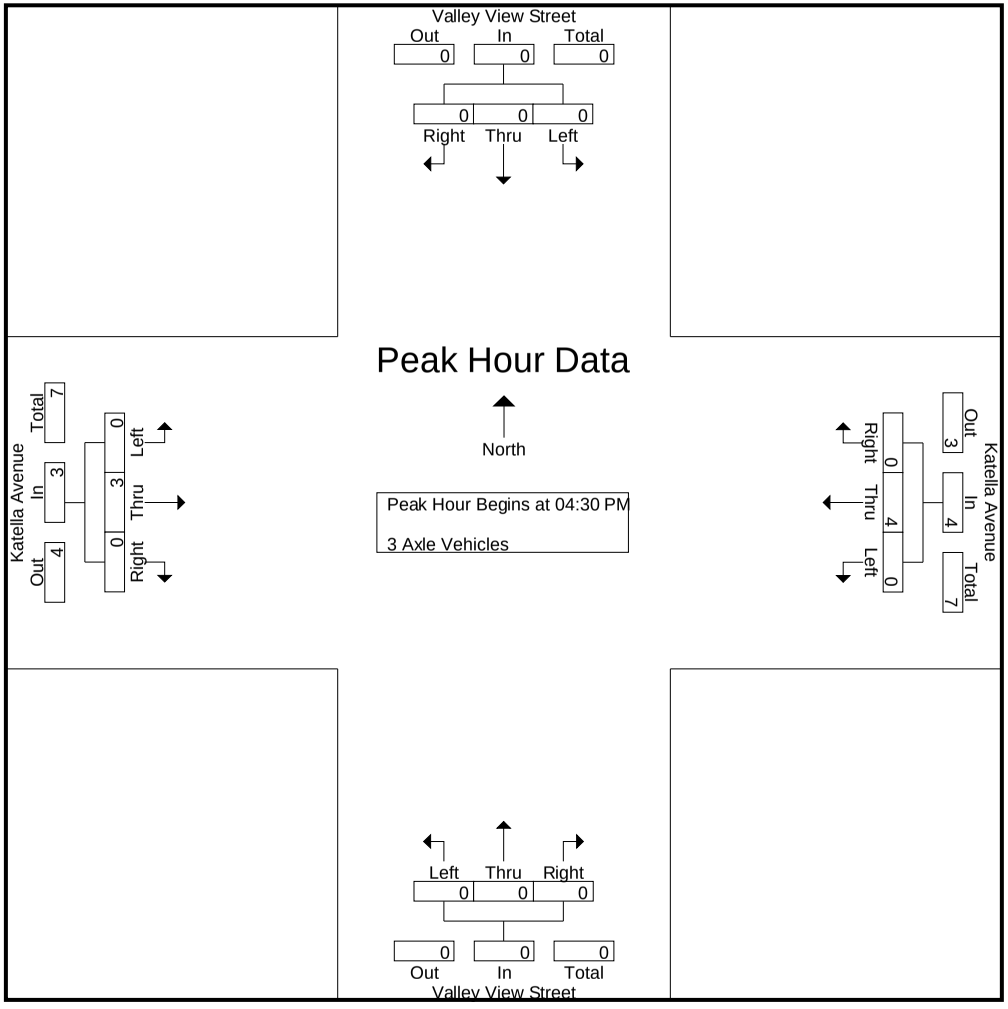

Counts Unlimited
PO Box 1178
Corona, CA 92878
951-268-6268

City of Cypress
N/S: Valley View Street
E/W: Katella Avenue
Weather: Clear

File Name : 03_CYP_VV_Kat PM
Site Code : 05120183
Start Date : 3/12/2020
Page No : 1

Groups Printed- 4+ Axle Trucks

	Valley View Street Southbound					Katella Avenue Westbound					Valley View Street Northbound					Katella Avenue Eastbound							
Start Time	Left	Thru	Right	RTOR	App. Total	Left	Thru	Right	RTOR	App. Total	Left	Thru	Right	RTOR	App. Total	Left	Thru	Right	RTOR	App. Total	Exclu. Total	Inclu. Total	Int. Total
04:00 PM	0	1	0	0	1	0	0	1	1	1	0	1	0	0	1	2	0	0	0	2	1	5	6
04:15 PM	0	0	0	0	0	0	0	1	1	1	0	2	0	0	2	0	3	0	0	3	1	6	7
04:30 PM	1	1	0	0	2	1	0	0	0	1	0	0	0	0	0	0	2	1	0	3	0	6	6
04:45 PM	0	0	0	0	0	1	1	0	0	2	0	2	0	0	2	0	0	0	0	0	0	4	4
Total	1	2	0	0	3	2	1	2	2	5	0	5	0	0	5	2	5	1	0	8	2	21	23
05:00 PM	0	1	0	0	1	0	0	1	1	1	0	0	0	0	0	0	0	0	0	0	1	2	3
05:15 PM	0	2	0	0	2	1	0	1	0	2	0	0	0	0	0	0	0	0	0	0	0	4	4
05:30 PM	0	3	0	0	3	1	0	0	0	1	0	1	0	0	1	0	0	0	0	0	0	5	5
05:45 PM	0	0	0	0	0	0	0	0	0	0	0	1	0	0	1	0	1	0	0	1	0	2	2
Total	0	6	0	0	6	2	0	2	1	4	0	2	0	0	2	0	1	0	0	1	1	13	14
Grand Total	1	8	0	0	9	4	1	4	3	9	0	7	0	0	7	2	6	1	0	9	3	34	37
Apprch %	11.1	88.9	0			44.4	11.1	44.4			0	100	0			22.2	66.7	11.1					
Total %	2.9	23.5	0		26.5	11.8	2.9	11.8		26.5	0	20.6	0		20.6	5.9	17.6	2.9		26.5	8.1	91.9	

3.1-20

	Valley View Street Southbound				Katella Avenue Westbound				Valley View Street Northbound				Katella Avenue Eastbound				
Start Time	Left	Thru	Right	App. Total	Left	Thru	Right	App. Total	Left	Thru	Right	App. Total	Left	Thru	Right	App. Total	Int. Total
Peak Hour Analysis From 04:30 PM to 05:15 PM - Peak 1 of 1																	
Peak Hour for Entire Intersection Begins at 04:30 PM																	
04:30 PM	**1**	1	0	**2**	**1**	0	0	1	0	0	0	0	0	**2**	**1**	**3**	**6**
04:45 PM	0	0	0	0	1	**1**	0	**2**	0	**2**	0	**2**	0	0	0	0	4
05:00 PM	0	1	0	1	0	0	**1**	1	0	0	0	0	0	0	0	0	2
05:15 PM	0	**2**	0	2	1	0	1	2	0	0	0	0	0	0	0	0	4
Total Volume	1	4	0	5	3	1	2	6	0	2	0	2	0	2	1	3	16
% App. Total	20	80	0		50	16.7	33.3		0	100	0		0	66.7	33.3		
PHF	.250	.500	.000	.625	.750	.250	.500	.750	.000	.250	.000	.250	.000	.250	.250	.250	.667

Counts Unlimited
PO Box 1178
Corona, CA 92878
951-268-6268

City of Cypress
N/S: Valley View Street
E/W: Katella Avenue
Weather: Clear

File Name : 03_CYP_VV_Kat PM
Site Code : 05120183
Start Date : 3/12/2020
Page No : 2

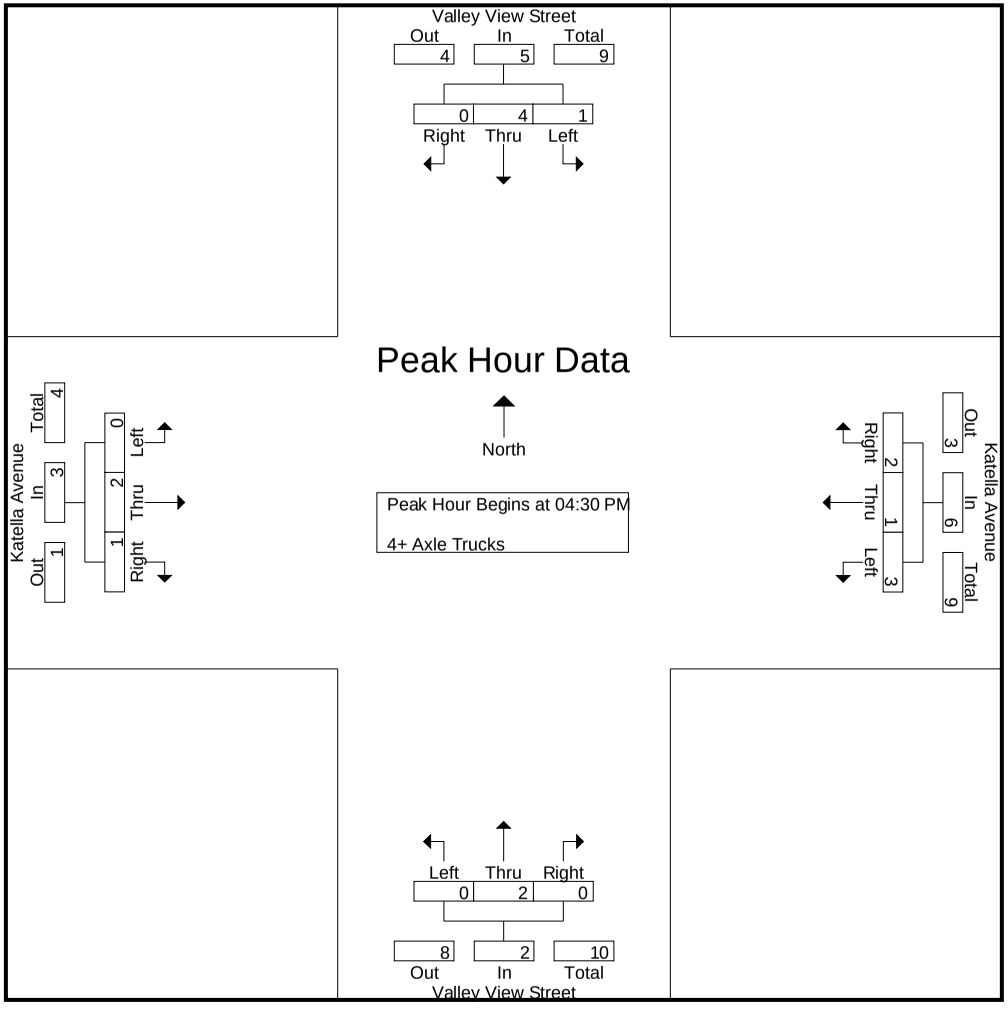

Location: Cypress
N/S: Valley View Street
E/W: Katella Avenue

Date: 3/12/2020
Day: Thursday

PEDESTRIANS

	North Leg Valley View Street	East Leg Katella Avenue	South Leg Valley View Street	West Leg Katella Avenue	
	Pedestrians	Pedestrians	Pedestrians	Pedestrians	
7:00 AM	0	0	0	1	1
7:15 AM	0	0	0	0	0
7:30 AM	1	2	1	2	6
7:45 AM	1	0	1	1	3
8:00 AM	1	1	0	0	2
8:15 AM	4	2	0	0	6
8:30 AM	2	2	0	0	4
8:45 AM	2	0	0	0	2
TOTAL VOLUMES:	11	7	2	4	24

	North Leg Valley View Street	East Leg Katella Avenue	South Leg Valley View Street	West Leg Katella Avenue	
	Pedestrians	Pedestrians	Pedestrians	Pedestrians	
4:00 PM	0	0	0	0	0
4:15 PM	1	1	0	0	2
4:30 PM	0	2	1	0	3
4:45 PM	0	1	1	0	2
5:00 PM	2	0	1	1	4
5:15 PM	3	0	0	0	3
5:30 PM	2	0	0	0	2
5:45 PM	0	2	0	0	2
TOTAL VOLUMES:	8	6	3	1	18

Counts Unlimited, Inc.
PO Box 1178
Corona, CA 92878
951-268-6268

Location: Cypress
N/S: Valley View Street
E/W: Katella Avenue

Date: 3/12/2020
Day: Thursday

BICYCLES

	Southbound Valley View Street			Westbound Katella Avenue			Northbound Valley View Street			Eastbound Katella Avenue			
	Left	Thru	Right	Left	Thru	Right	Left	Thru	Right	Left	Thru	Right	
7:00 AM	0	0	0	0	0	0	0	0	0	0	0	0	0
7:15 AM	0	1	0	0	0	0	0	0	0	0	0	1	2
7:30 AM	0	1	0	0	0	0	0	0	0	0	2	0	3
7:45 AM	0	0	0	0	0	0	1	0	0	0	0	0	1
8:00 AM	0	0	0	0	0	0	0	0	0	0	0	0	0
8:15 AM	0	0	0	0	0	0	0	0	0	0	0	0	0
8:30 AM	0	0	0	0	0	0	0	1	0	0	0	0	1
8:45 AM	0	0	0	0	0	0	0	0	0	0	0	0	0
TOTAL VOLUMES:	0	2	0	0	0	0	1	1	0	0	2	1	7

	Southbound Valley View Street			Westbound Katella Avenue			Northbound Valley View Street			Eastbound Katella Avenue			
	Left	Thru	Right	Left	Thru	Right	Left	Thru	Right	Left	Thru	Right	
4:00 PM	0	0	0	0	0	0	0	0	0	0	0	0	0
4:15 PM	0	0	0	0	0	0	0	0	0	0	0	0	0
4:30 PM	0	0	0	0	0	0	0	0	0	0	1	0	1
4:45 PM	0	0	0	0	1	0	0	0	0	0	0	0	1
5:00 PM	0	0	0	0	0	0	0	0	0	0	1	0	1
5:15 PM	0	2	0	0	0	0	0	0	0	0	0	0	2
5:30 PM	0	1	0	0	0	0	0	0	0	0	1	0	2
5:45 PM	0	0	0	0	0	0	0	0	0	0	0	0	0
TOTAL VOLUMES:	0	3	0	0	1	0	0	0	0	0	3	0	7

Counts Unlimited, Inc.
PO Box 1178
Corona, CA 92878
951-268-6268

Counts Unlimited
PO Box 1178
Corona, CA 92878
951-268-6268

City of Cypress
N/S: Holder Street
E/W: Katella Avenue
Weather: Clear

File Name : 06_CYP_Hol_Kat AM
Site Code : 05120183
Start Date : 3/12/2020
Page No : 1

Groups Printed- Passenger Vehicles - Large 2 Axle Vehicles - 3 Axle Vehicles - 4+ Axle Trucks

	Holder Street Southbound					Katella Avenue Westbound					Holder Street Northbound					Katella Avenue Eastbound							
Start Time	Left	Thru	Right	RTOR	App. Total	Left	Thru	Right	RTOR	App. Total	Left	Thru	Right	RTOR	App. Total	Left	Thru	Right	RTOR	App. Total	Exclu. Total	Inclu. Total	Int. Total
07:00 AM	33	2	29	19	64	1	197	15	4	213	0	0	1	0	1	3	155	4	0	162	23	440	463
07:15 AM	45	1	28	13	74	1	258	35	6	294	0	0	0	0	0	3	155	0	0	158	19	526	545
07:30 AM	41	4	51	25	96	4	327	33	8	364	0	0	1	0	1	4	139	1	0	144	33	605	638
07:45 AM	71	5	59	22	135	4	286	30	6	320	0	0	2	0	2	13	207	6	0	226	28	683	711
Total	190	12	167	79	369	10	1068	113	24	1191	0	0	4	0	4	23	656	11	0	690	103	2254	2357
08:00 AM	40	3	37	19	80	5	278	45	4	328	0	0	0	0	0	13	200	4	1	217	24	625	649
08:15 AM	41	1	17	6	59	2	227	34	4	263	0	0	0	0	0	15	169	6	1	190	11	512	523
08:30 AM	27	6	22	14	55	6	246	39	3	291	0	0	2	0	2	9	152	2	1	163	18	511	529
08:45 AM	34	4	30	17	68	6	189	31	4	226	1	0	1	0	2	7	168	5	0	180	21	476	497
Total	142	14	106	56	262	19	940	149	15	1108	1	0	3	0	4	44	689	17	3	750	74	2124	2198
Grand Total	332	26	273	135	631	29	2008	262	39	2299	1	0	7	0	8	67	1345	28	3	1440	177	4378	4555
Apprch %	52.6	4.1	43.3			1.3	87.3	11.4			12.5	0	87.5			4.7	93.4	1.9					
Total %	7.6	0.6	6.2		14.4	0.7	45.9	6		52.5	0	0	0.2		0.2	1.5	30.7	0.6		32.9	3.9	96.1	
Passenger Vehicles	327	24	268		751	29	1952	260		2280	0	0	7		7	65	1303	28		1399	0	0	4437
% Passenger Vehicles	98.5	92.3	98.2	97.8	98	100	97.2	99.2	100	97.5	0	0	100	0	87.5	97	96.9	100	100	97	0	0	97.4
Large 2 Axle Vehicles	5	0	5		13	0	24	1		25	0	0	0		0	1	25	0		26	0	0	64
% Large 2 Axle Vehicles	1.5	0	1.8	2.2	1.7	0	1.2	0.4	0	1.1	0	0	0	0	0	1.5	1.9	0	0	1.8	0	0	1.4
3 Axle Vehicles	0	0	0		0	0	13	1		14	1	0	0		1	0	4	0		4	0	0	19
% 3 Axle Vehicles	0	0	0	0	0	0	0.6	0.4	0	0.6	100	0	0	0	12.5	0	0.3	0	0	0.3	0	0	0.4
4+ Axle Trucks	0	2	0		2	0	19	0		19	0	0	0		0	1	13	0		14	0	0	35
% 4+ Axle Trucks	0	7.7	0	0	0.3	0	0.9	0	0	0.8	0	0	0	0	0	1.5	1	0	0	1	0	0	0.8

	Holder Street Southbound				Katella Avenue Westbound				Holder Street Northbound				Katella Avenue Eastbound				
Start Time	Left	Thru	Right	App. Total	Left	Thru	Right	App. Total	Left	Thru	Right	App. Total	Left	Thru	Right	App. Total	Int. Total
Peak Hour Analysis From 07:00 AM to 08:45 AM - Peak 1 of 1																	
Peak Hour for Entire Intersection Begins at 07:15 AM																	
07:15 AM	45	1	28	74	1	258	35	294	0	0	0	0	3	155	0	158	526
07:30 AM	41	4	51	96	4	**327**	33	**364**	0	0	1	1	4	139	1	144	605
07:45 AM	**71**	**5**	**59**	**135**	4	286	30	320	0	0	**2**	**2**	**13**	**207**	**6**	**226**	**683**
08:00 AM	40	3	37	80	**5**	278	**45**	328	0	0	0	0	13	200	4	217	625
Total Volume	197	13	175	385	14	1149	143	1306	0	0	3	3	33	701	11	745	2439
% App. Total	51.2	3.4	45.5		1.1	88	10.9		0	0	100		4.4	94.1	1.5		
PHF	.694	.650	.742	.713	.700	.878	.794	.897	.000	.000	.375	.375	.635	.847	.458	.824	.893

Counts Unlimited
PO Box 1178
Corona, CA 92878
951-268-6268

City of Cypress
N/S: Holder Street
E/W: Katella Avenue
Weather: Clear

File Name : 06_CYP_Hol_Kat AM
Site Code : 05120183
Start Date : 3/12/2020
Page No : 2

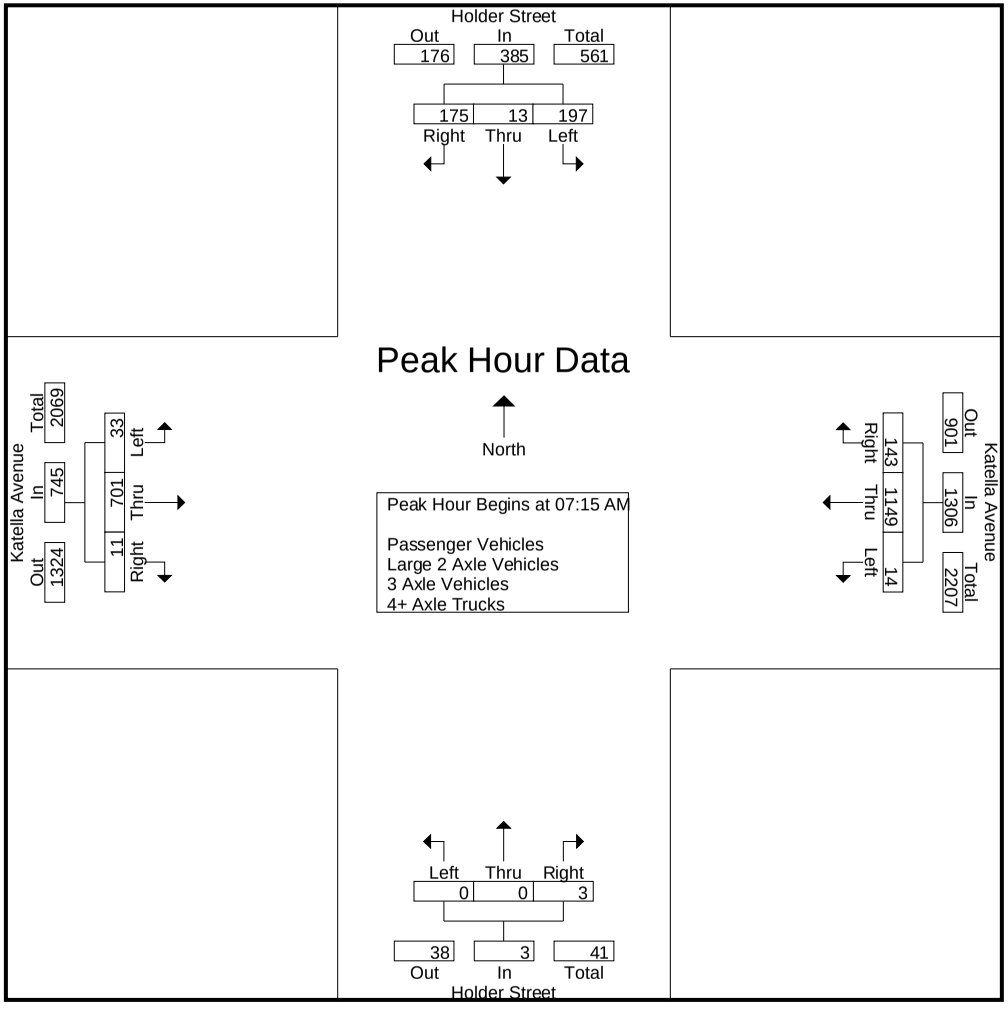

Counts Unlimited
PO Box 1178
Corona, CA 92878
951-268-6268

City of Cypress
N/S: Holder Street
E/W: Katella Avenue
Weather: Clear

File Name : 06_CYP_Hol_Kat AM
Site Code : 05120183
Start Date : 3/12/2020
Page No : 1

Groups Printed- Large 2 Axle Vehicles

	Holder Street Southbound					Katella Avenue Westbound					Holder Street Northbound					Katella Avenue Eastbound							
Start Time	Left	Thru	Right	RTOR	App. Total	Left	Thru	Right	RTOR	App. Total	Left	Thru	Right	RTOR	App. Total	Left	Thru	Right	RTOR	App. Total	Exclu. Total	Inclu. Total	Int. Total
07:00 AM	0	0	0	0	0	0	2	0	0	2	0	0	0	0	0	0	1	0	0	1	0	3	3
07:15 AM	1	0	0	0	1	0	2	0	0	2	0	0	0	0	0	0	2	0	0	2	0	5	5
07:30 AM	0	0	1	0	1	0	1	0	0	1	0	0	0	0	0	0	5	0	0	5	0	7	7
07:45 AM	1	0	0	0	1	0	0	0	0	0	0	0	0	0	0	0	5	0	0	5	0	6	6
Total	2	0	1	0	3	0	5	0	0	5	0	0	0	0	0	0	13	0	0	13	0	21	21
08:00 AM	1	0	0	0	1	0	2	0	0	2	0	0	0	0	0	1	3	0	0	4	0	7	7
08:15 AM	1	0	1	0	2	0	5	1	0	6	0	0	0	0	0	0	2	0	0	2	0	10	10
08:30 AM	1	0	3	3	4	0	4	0	0	4	0	0	0	0	0	0	3	0	0	3	3	11	14
08:45 AM	0	0	0	0	0	0	8	0	0	8	0	0	0	0	0	0	4	0	0	4	0	12	12
Total	3	0	4	3	7	0	19	1	0	20	0	0	0	0	0	1	12	0	0	13	3	40	43
Grand Total	5	0	5	3	10	0	24	1	0	25	0	0	0	0	0	1	25	0	0	26	3	61	64
Apprch %	50	0	50			0	96	4			0	0	0			3.8	96.2	0					
Total %	8.2	0	8.2		16.4	0	39.3	1.6		41	0	0	0		0	1.6	41	0		42.6	4.7	95.3	

3.1-26

	Holder Street Southbound				Katella Avenue Westbound				Holder Street Northbound				Katella Avenue Eastbound				
Start Time	Left	Thru	Right	App. Total	Left	Thru	Right	App. Total	Left	Thru	Right	App. Total	Left	Thru	Right	App. Total	Int. Total
Peak Hour Analysis From 07:15 AM to 08:00 AM - Peak 1 of 1																	
Peak Hour for Entire Intersection Begins at 07:15 AM																	
07:15 AM	**1**	0	0	**1**	0	**2**	0	**2**	0	0	0	0	0	2	0	2	5
07:30 AM	0	0	**1**	1	0	1	0	1	0	0	0	0	0	**5**	0	**5**	**7**
07:45 AM	1	0	0	1	0	0	0	0	0	0	0	0	0	5	0	5	6
08:00 AM	1	0	0	1	0	2	0	2	0	0	0	0	**1**	3	0	4	7
Total Volume	3	0	1	4	0	5	0	5	0	0	0	0	1	15	0	16	25
% App. Total	75	0	25		0	100	0		0	0	0		6.2	93.8	0		
PHF	.750	.000	.250	1.00	.000	.625	.000	.625	.000	.000	.000	.000	.250	.750	.000	.800	.893

Counts Unlimited
PO Box 1178
Corona, CA 92878
951-268-6268

City of Cypress
N/S: Holder Street
E/W: Katella Avenue
Weather: Clear

File Name : 06_CYP_Hol_Kat AM
Site Code : 05120183
Start Date : 3/12/2020
Page No : 2

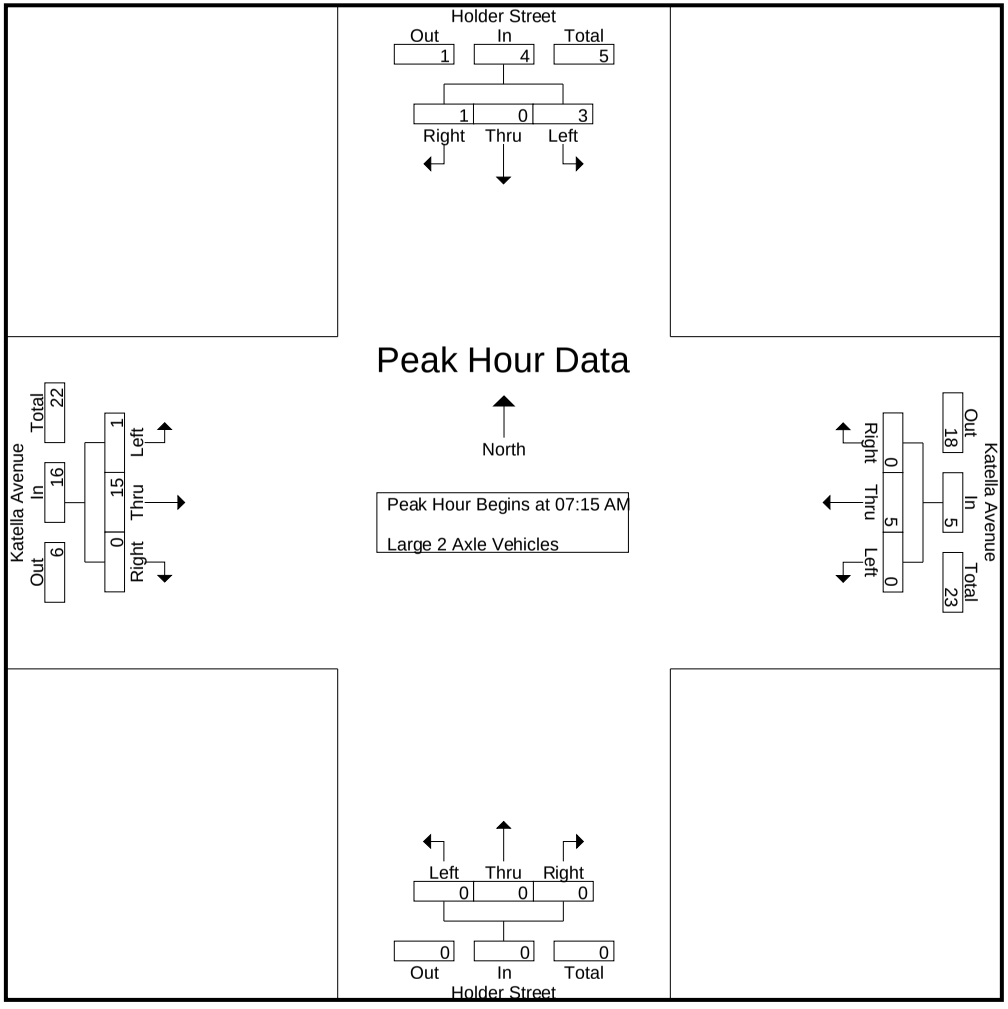

Counts Unlimited
PO Box 1178
Corona, CA 92878
951-268-6268

City of Cypress
N/S: Holder Street
E/W: Katella Avenue
Weather: Clear

File Name : 06_CYP_Hol_Kat AM
Site Code : 05120183
Start Date : 3/12/2020
Page No : 1

Groups Printed- 3 Axle Vehicles

	Holder Street Southbound					Katella Avenue Westbound					Holder Street Northbound					Katella Avenue Eastbound							
Start Time	Left	Thru	Right	RTOR	App. Total	Left	Thru	Right	RTOR	App. Total	Left	Thru	Right	RTOR	App. Total	Left	Thru	Right	RTOR	App. Total	Exclu. Total	Inclu. Total	Int. Total
07:00 AM	0	0	0	0	0	0	2	0	0	2	0	0	0	0	0	0	0	0	0	0	0	2	2
07:15 AM	0	0	0	0	0	0	1	0	0	1	0	0	0	0	0	0	0	0	0	0	0	1	1
07:30 AM	0	0	0	0	0	0	2	0	0	2	0	0	0	0	0	0	0	0	0	0	0	2	2
07:45 AM	0	0	0	0	0	0	1	0	0	1	0	0	0	0	0	0	1	0	0	1	0	2	2
Total	0	0	0	0	0	0	6	0	0	6	0	0	0	0	0	0	1	0	0	1	0	7	7
08:00 AM	0	0	0	0	0	0	2	0	0	2	0	0	0	0	0	0	0	0	0	0	0	2	2
08:15 AM	0	0	0	0	0	0	1	0	0	1	0	0	0	0	0	0	1	0	0	1	0	2	2
08:30 AM	0	0	0	0	0	0	3	0	0	3	0	0	0	0	0	0	1	0	0	1	0	4	4
08:45 AM	0	0	0	0	0	0	1	1	0	2	1	0	0	0	1	0	1	0	0	1	0	4	4
Total	0	0	0	0	0	0	7	1	0	8	1	0	0	0	1	0	3	0	0	3	0	12	12
Grand Total	0	0	0	0	0	0	13	1	0	14	1	0	0	0	1	0	4	0	0	4	0	19	19
Apprch %	0	0	0			0	92.9	7.1			100	0	0			0	100	0					
Total %	0	0	0		0	0	68.4	5.3		73.7	5.3	0	0		5.3	0	21.1	0		21.1	0	100	

3.1-28

	Holder Street Southbound				Katella Avenue Westbound				Holder Street Northbound				Katella Avenue Eastbound				
Start Time	Left	Thru	Right	App. Total	Left	Thru	Right	App. Total	Left	Thru	Right	App. Total	Left	Thru	Right	App. Total	Int. Total
Peak Hour Analysis From 07:15 AM to 08:00 AM - Peak 1 of 1																	
Peak Hour for Entire Intersection Begins at 07:15 AM																	
07:15 AM	0	0	0	0	0	1	0	1	0	0	0	0	0	0	0	0	1
07:30 AM	0	0	0	0	0	**2**	0	**2**	0	0	0	0	0	0	0	0	**2**
07:45 AM	0	0	0	0	0	1	0	1	0	0	0	0	0	**1**	0	**1**	2
08:00 AM	0	0	0	0	0	2	0	2	0	0	0	0	0	0	0	0	2
Total Volume	0	0	0	0	0	6	0	6	0	0	0	0	0	1	0	1	7
% App. Total	0	0	0		0	100	0		0	0	0		0	100	0		
PHF	.000	.000	.000	.000	.000	.750	.000	.750	.000	.000	.000	.000	.000	.250	.000	.250	.875

Counts Unlimited
PO Box 1178
Corona, CA 92878
951-268-6268

City of Cypress
N/S: Holder Street
E/W: Katella Avenue
Weather: Clear

File Name : 06_CYP_Hol_Kat AM
Site Code : 05120183
Start Date : 3/12/2020
Page No : 2

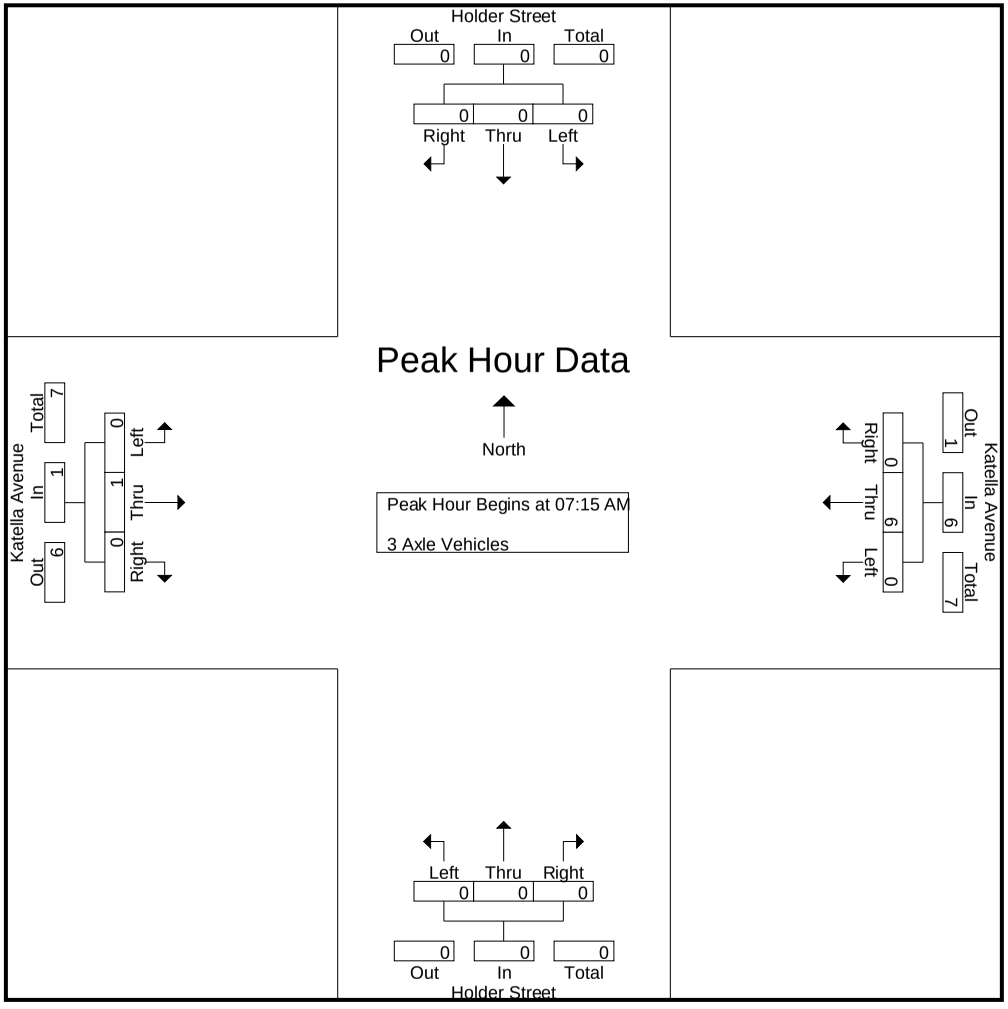

Counts Unlimited
PO Box 1178
Corona, CA 92878
951-268-6268

City of Cypress
N/S: Holder Street
E/W: Katella Avenue
Weather: Clear

File Name : 06_CYP_Hol_Kat AM
Site Code : 05120183
Start Date : 3/12/2020
Page No : 1

Groups Printed- 4+ Axle Trucks

	Holder Street Southbound					Katella Avenue Westbound					Holder Street Northbound					Katella Avenue Eastbound							
Start Time	Left	Thru	Right	RTOR	App. Total	Left	Thru	Right	RTOR	App. Total	Left	Thru	Right	RTOR	App. Total	Left	Thru	Right	RTOR	App. Total	Exclu. Total	Inclu. Total	Int. Total
07:00 AM	0	0	0	0	0	0	1	0	0	1	0	0	0	0	0	0	1	0	0	1	0	2	2
07:15 AM	0	0	0	0	0	0	1	0	0	1	0	0	0	0	0	0	6	0	0	6	0	7	7
07:30 AM	0	0	0	0	0	0	1	0	0	1	0	0	0	0	0	0	0	0	0	0	0	1	1
07:45 AM	0	0	0	0	0	0	3	0	0	3	0	0	0	0	0	0	1	0	0	1	0	4	4
Total	0	0	0	0	0	0	6	0	0	6	0	0	0	0	0	0	8	0	0	8	0	14	14
08:00 AM	0	0	0	0	0	0	1	0	0	1	0	0	0	0	0	0	0	0	0	0	0	1	1
08:15 AM	0	0	0	0	0	0	3	0	0	3	0	0	0	0	0	1	2	0	0	3	0	6	6
08:30 AM	0	2	0	0	2	0	2	0	0	2	0	0	0	0	0	0	2	0	0	2	0	6	6
08:45 AM	0	0	0	0	0	0	7	0	0	7	0	0	0	0	0	0	1	0	0	1	0	8	8
Total	0	2	0	0	2	0	13	0	0	13	0	0	0	0	0	1	5	0	0	6	0	21	21
Grand Total	0	2	0	0	2	0	19	0	0	19	0	0	0	0	0	1	13	0	0	14	0	35	35
Apprch %	0	100	0			0	100	0			0	0	0			7.1	92.9	0					
Total %	0	5.7	0		5.7	0	54.3	0		54.3	0	0	0		0	2.9	37.1	0		40	0	100	

3.1-30

	Holder Street Southbound				Katella Avenue Westbound				Holder Street Northbound				Katella Avenue Eastbound				
Start Time	Left	Thru	Right	App. Total	Left	Thru	Right	App. Total	Left	Thru	Right	App. Total	Left	Thru	Right	App. Total	Int. Total
Peak Hour Analysis From 07:15 AM to 08:00 AM - Peak 1 of 1																	
Peak Hour for Entire Intersection Begins at 07:15 AM																	
07:15 AM	0	0	0	0	0	1	0	1	0	0	0	0	0	**6**	0	**6**	**7**
07:30 AM	0	0	0	0	0	1	0	1	0	0	0	0	0	0	0	0	1
07:45 AM	0	0	0	0	0	**3**	0	**3**	0	0	0	0	0	1	0	1	4
08:00 AM	0	0	0	0	0	1	0	1	0	0	0	0	0	0	0	0	1
Total Volume	0	0	0	0	0	6	0	6	0	0	0	0	0	7	0	7	13
% App. Total	0	0	0		0	100	0		0	0	0		0	100	0		
PHF	.000	.000	.000	.000	.000	.500	.000	.500	.000	.000	.000	.000	.000	.292	.000	.292	.464

Counts Unlimited
PO Box 1178
Corona, CA 92878
951-268-6268

City of Cypress
N/S: Holder Street
E/W: Katella Avenue
Weather: Clear

File Name : 06_CYP_Hol_Kat AM
Site Code : 05120183
Start Date : 3/12/2020
Page No : 2

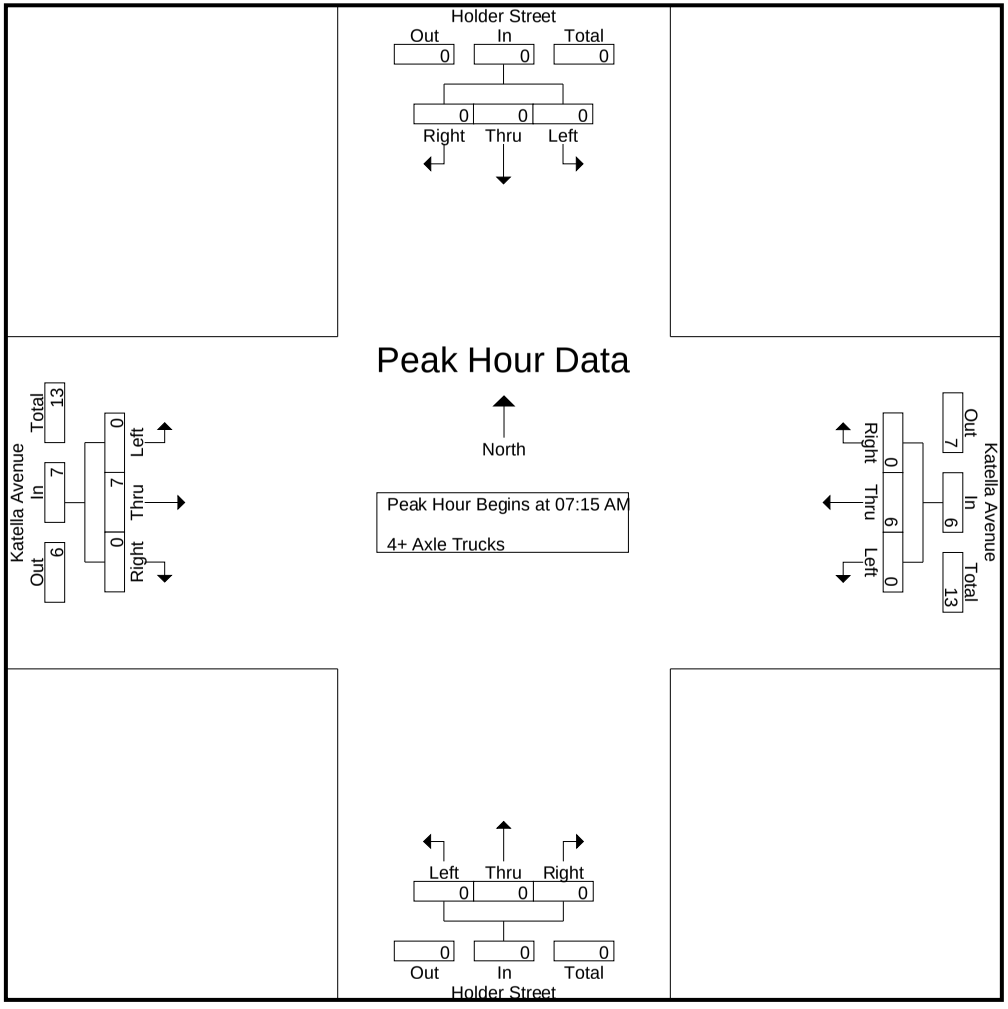

Counts Unlimited
PO Box 1178
Corona, CA 92878
951-268-6268

City of Cypress
N/S: Holder Street
E/W: Katella Avenue
Weather: Clear

File Name : 06_CYP_Hol_Kat PM
Site Code : 05120183
Start Date : 3/12/2020
Page No : 1

Groups Printed- Passenger Vehicles - Large 2 Axle Vehicles - 3 Axle Vehicles - 4+ Axle Trucks

	Holder Street Southbound					Katella Avenue Westbound					Holder Street Northbound					Katella Avenue Eastbound							
Start Time	Left	Thru	Right	RTOR	App. Total	Left	Thru	Right	RTOR	App. Total	Left	Thru	Right	RTOR	App. Total	Left	Thru	Right	RTOR	App. Total	Exclu. Total	Inclu. Total	Int. Total
04:00 PM	34	1	14	8	49	2	233	31	2	266	1	1	3	0	5	9	281	0	0	290	10	610	620
04:15 PM	37	0	13	6	50	1	217	37	4	255	3	1	2	0	6	25	331	1	0	357	10	668	678
04:30 PM	39	0	22	11	61	2	262	50	13	314	3	0	9	3	12	16	350	2	0	368	27	755	782
04:45 PM	42	0	22	11	64	3	214	41	6	258	2	1	2	0	5	19	340	0	0	359	17	686	703
Total	152	1	71	36	224	8	926	159	25	1093	9	3	16	3	28	69	1302	3	0	1374	64	2719	2783
05:00 PM	72	0	34	13	106	2	242	64	14	308	13	4	5	1	22	27	346	1	0	374	28	810	838
05:15 PM	50	0	35	26	85	1	237	54	21	292	6	3	4	1	13	22	382	1	0	405	48	795	843
05:30 PM	52	0	16	6	68	3	252	38	8	293	3	2	2	1	7	22	350	2	0	374	15	742	757
05:45 PM	46	0	19	9	65	1	252	32	4	285	4	1	3	0	8	14	318	0	0	332	13	690	703
Total	220	0	104	54	324	7	983	188	47	1178	26	10	14	3	50	85	1396	4	0	1485	104	3037	3141
Grand Total	372	1	175	90	548	15	1909	347	72	2271	35	13	30	6	78	154	2698	7	0	2859	168	5756	5924
Apprch %	67.9	0.2	31.9			0.7	84.1	15.3			44.9	16.7	38.5			5.4	94.4	0.2					
Total %	6.5	0	3		9.5	0.3	33.2	6		39.5	0.6	0.2	0.5		1.4	2.7	46.9	0.1		49.7	2.8	97.2	
Passenger Vehicles	368	1	172		630	14	1879	343		2308	34	13	30		83	153	2663	5		2821	0	0	5842
% Passenger Vehicles	98.9	100	98.3	98.9	98.7	93.3	98.4	98.8	100	98.5	97.1	100	100	100	98.8	99.4	98.7	71.4	0	98.7	0	0	98.6
Large 2 Axle Vehicles	3	0	2		6	0	18	3		21	0	0	0		0	1	20	0		21	0	0	48
% Large 2 Axle Vehicles	0.8	0	1.1	1.1	0.9	0	0.9	0.9	0	0.9	0	0	0	0	0	0.6	0.7	0	0	0.7	0	0	0.8
3 Axle Vehicles	0	0	0		0	0	4	1		5	0	0	0		0	0	5	0		5	0	0	10
% 3 Axle Vehicles	0	0	0	0	0	0	0.2	0.3	0	0.2	0	0	0	0	0	0	0.2	0	0	0.2	0	0	0.2
4+ Axle Trucks	1	0	1		2	1	8	0		9	1	0	0		1	0	10	2		12	0	0	24
% 4+ Axle Trucks	0.3	0	0.6	0	0.3	6.7	0.4	0	0	0.4	2.9	0	0	0	1.2	0	0.4	28.6	0	0.4	0	0	0.4

	Holder Street Southbound				Katella Avenue Westbound				Holder Street Northbound				Katella Avenue Eastbound				
Start Time	Left	Thru	Right	App. Total	Left	Thru	Right	App. Total	Left	Thru	Right	App. Total	Left	Thru	Right	App. Total	Int. Total
Peak Hour Analysis From 04:00 PM to 05:45 PM - Peak 1 of 1																	
Peak Hour for Entire Intersection Begins at 04:30 PM																	
04:30 PM	39	0	22	61	2	**262**	50	**314**	3	0	**9**	12	16	350	**2**	368	755
04:45 PM	42	0	22	64	**3**	214	41	258	2	1	2	5	19	340	0	359	686
05:00 PM	**72**	0	34	**106**	2	242	**64**	308	**13**	**4**	5	**22**	**27**	346	1	374	**810**
05:15 PM	50	0	**35**	85	1	237	54	292	6	3	4	13	22	**382**	1	**405**	795
Total Volume	203	0	113	316	8	955	209	1172	24	8	20	52	84	1418	4	1506	3046
% App. Total	64.2	0	35.8		0.7	81.5	17.8		46.2	15.4	38.5		5.6	94.2	0.3		
PHF	.705	.000	.807	.745	.667	.911	.816	.933	.462	.500	.556	.591	.778	.928	.500	.930	.940

Counts Unlimited
PO Box 1178
Corona, CA 92878
951-268-6268

City of Cypress
N/S: Holder Street
E/W: Katella Avenue
Weather: Clear

File Name : 06_CYP_Hol_Kat PM
Site Code : 05120183
Start Date : 3/12/2020
Page No : 2

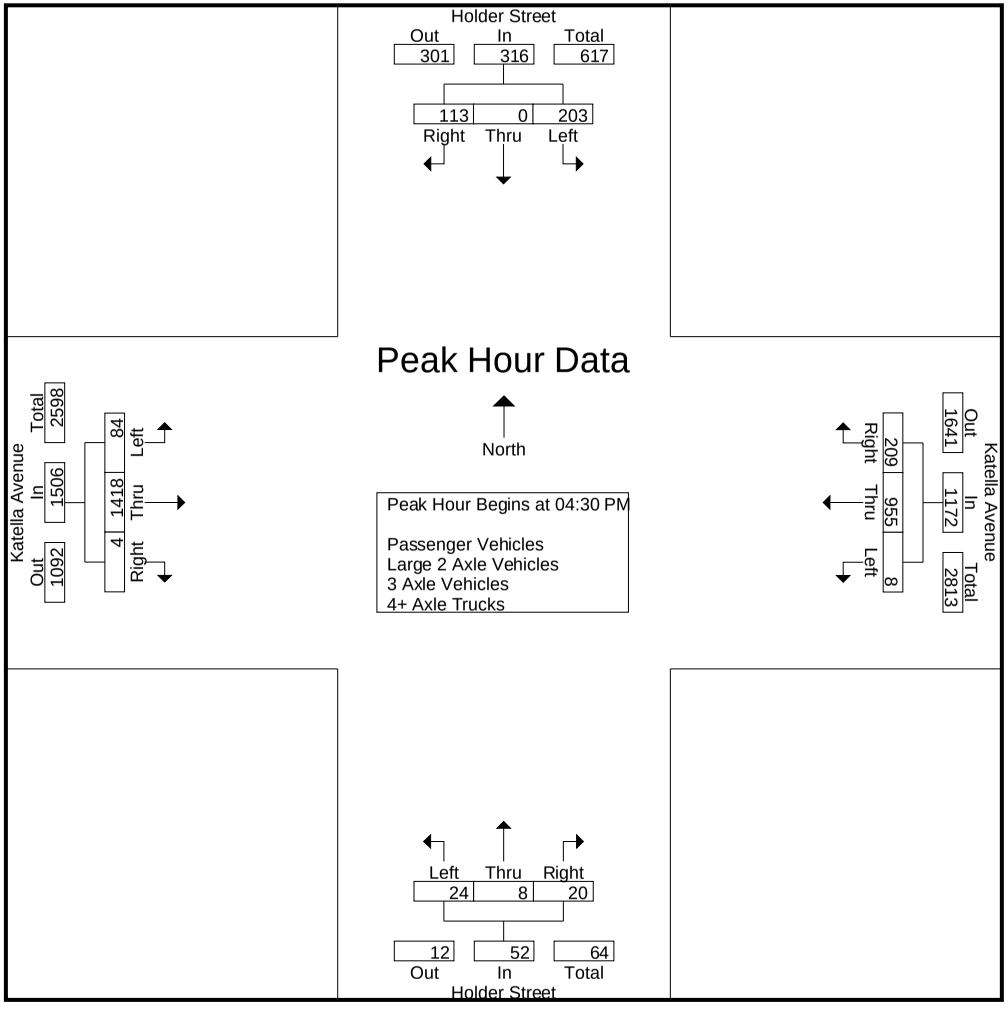

Counts Unlimited
PO Box 1178
Corona, CA 92878
951-268-6268

City of Cypress
N/S: Holder Street
E/W: Katella Avenue
Weather: Clear

File Name : 06_CYP_Hol_Kat PM
Site Code : 05120183
Start Date : 3/12/2020
Page No : 1

Groups Printed- Large 2 Axle Vehicles

	Holder Street Southbound					Katella Avenue Westbound					Holder Street Northbound					Katella Avenue Eastbound							
Start Time	Left	Thru	Right	RTOR	App. Total	Left	Thru	Right	RTOR	App. Total	Left	Thru	Right	RTOR	App. Total	Left	Thru	Right	RTOR	App. Total	Exclu. Total	Inclu. Total	Int. Total
04:00 PM	1	0	1	1	2	0	1	2	0	3	0	0	0	0	0	0	3	0	0	3	1	8	9
04:15 PM	2	0	0	0	2	0	7	0	0	7	0	0	0	0	0	0	8	0	0	8	0	17	17
04:30 PM	0	0	0	0	0	0	2	0	0	2	0	0	0	0	0	1	1	0	0	2	0	4	4
04:45 PM	0	0	1	0	1	0	2	0	0	2	0	0	0	0	0	0	4	0	0	4	0	7	7
Total	3	0	2	1	5	0	12	2	0	14	0	0	0	0	0	1	16	0	0	17	1	36	37
05:00 PM	0	0	0	0	0	0	0	0	0	0	0	0	0	0	0	0	1	0	0	1	0	1	1
05:15 PM	0	0	0	0	0	0	0	0	0	0	0	0	0	0	0	0	2	0	0	2	0	2	2
05:30 PM	0	0	0	0	0	0	4	0	0	4	0	0	0	0	0	0	1	0	0	1	0	5	5
05:45 PM	0	0	0	0	0	0	2	1	0	3	0	0	0	0	0	0	0	0	0	0	0	3	3
Total	0	0	0	0	0	0	6	1	0	7	0	0	0	0	0	0	4	0	0	4	0	11	11
Grand Total	3	0	2	1	5	0	18	3	0	21	0	0	0	0	0	1	20	0	0	21	1	47	48
Apprch %	60	0	40			0	85.7	14.3			0	0	0			4.8	95.2	0					
Total %	6.4	0	4.3		10.6	0	38.3	6.4		44.7	0	0	0		0	2.1	42.6	0		44.7	2.1	97.9	

3.1-34

	Holder Street Southbound				Katella Avenue Westbound				Holder Street Northbound				Katella Avenue Eastbound				
Start Time	Left	Thru	Right	App. Total	Left	Thru	Right	App. Total	Left	Thru	Right	App. Total	Left	Thru	Right	App. Total	Int. Total
Peak Hour Analysis From 04:30 PM to 05:15 PM - Peak 1 of 1																	
Peak Hour for Entire Intersection Begins at 04:30 PM																	
04:30 PM	0	0	0	0	0	**2**	0	**2**	0	0	0	0	**1**	1	0	2	4
04:45 PM	0	0	**1**	**1**	0	2	0	2	0	0	0	0	0	**4**	0	**4**	**7**
05:00 PM	0	0	0	0	0	0	0	0	0	0	0	0	0	1	0	1	1
05:15 PM	0	0	0	0	0	0	0	0	0	0	0	0	0	2	0	2	2
Total Volume	0	0	1	1	0	4	0	4	0	0	0	0	1	8	0	9	14
% App. Total	0	0	100		0	100	0		0	0	0		11.1	88.9	0		
PHF	.000	.000	.250	.250	.000	.500	.000	.500	.000	.000	.000	.000	.250	.500	.000	.563	.500

Counts Unlimited
PO Box 1178
Corona, CA 92878
951-268-6268

City of Cypress
N/S: Holder Street
E/W: Katella Avenue
Weather: Clear

File Name : 06_CYP_Hol_Kat PM
Site Code : 05120183
Start Date : 3/12/2020
Page No : 2

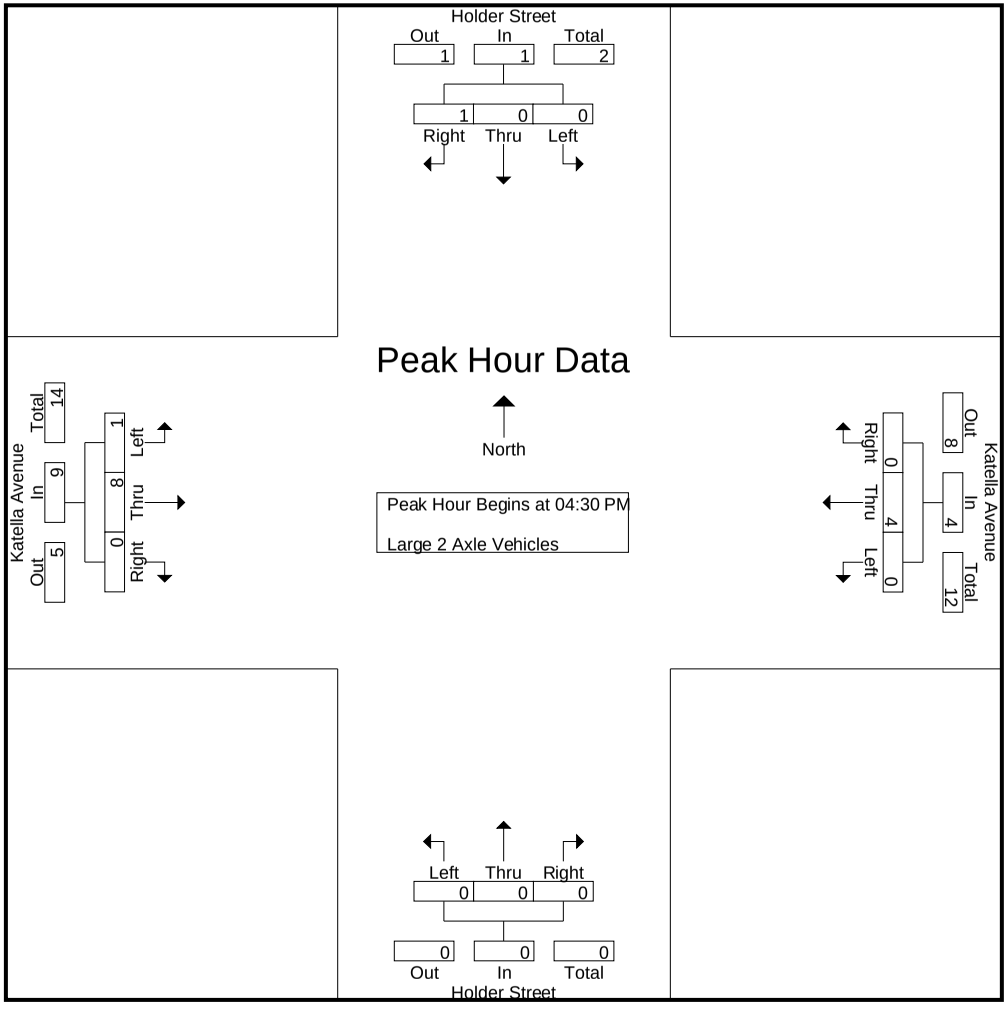

Counts Unlimited
PO Box 1178
Corona, CA 92878
951-268-6268

City of Cypress
N/S: Holder Street
E/W: Katella Avenue
Weather: Clear

File Name : 06_CYP_Hol_Kat PM
Site Code : 05120183
Start Date : 3/12/2020
Page No : 1

Groups Printed- 3 Axle Vehicles

	Holder Street Southbound					Katella Avenue Westbound					Holder Street Northbound					Katella Avenue Eastbound							
Start Time	Left	Thru	Right	RTOR	App. Total	Left	Thru	Right	RTOR	App. Total	Left	Thru	Right	RTOR	App. Total	Left	Thru	Right	RTOR	App. Total	Exclu. Total	Inclu. Total	Int. Total
04:00 PM	0	0	0	0	0	0	1	1	0	2	0	0	0	0	0	0	1	0	0	1	0	3	3
04:15 PM	0	0	0	0	0	0	0	0	0	0	0	0	0	0	0	0	0	0	0	0	0	0	0
04:30 PM	0	0	0	0	0	0	1	0	0	1	0	0	0	0	0	0	1	0	0	1	0	2	2
04:45 PM	0	0	0	0	0	0	0	0	0	0	0	0	0	0	0	0	1	0	0	1	0	1	1
Total	0	0	0	0	0	0	2	1	0	3	0	0	0	0	0	0	3	0	0	3	0	6	6
05:00 PM	0	0	0	0	0	0	1	0	0	1	0	0	0	0	0	0	1	0	0	1	0	2	2
05:15 PM	0	0	0	0	0	0	1	0	0	1	0	0	0	0	0	0	0	0	0	0	0	1	1
05:30 PM	0	0	0	0	0	0	0	0	0	0	0	0	0	0	0	0	1	0	0	1	0	1	1
05:45 PM	0	0	0	0	0	0	0	0	0	0	0	0	0	0	0	0	0	0	0	0	0	0	0
Total	0	0	0	0	0	0	2	0	0	2	0	0	0	0	0	0	2	0	0	2	0	4	4
Grand Total	0	0	0	0	0	0	4	1	0	5	0	0	0	0	0	0	5	0	0	5	0	10	10
Apprch %	0	0	0			0	80	20			0	0	0			0	100	0					
Total %	0	0	0		0	0	40	10		50	0	0	0		0	0	50	0		50	0	100	

3.1-36

	Holder Street Southbound				Katella Avenue Westbound				Holder Street Northbound				Katella Avenue Eastbound				
Start Time	Left	Thru	Right	App. Total	Left	Thru	Right	App. Total	Left	Thru	Right	App. Total	Left	Thru	Right	App. Total	Int. Total
Peak Hour Analysis From 04:30 PM to 05:15 PM - Peak 1 of 1																	
Peak Hour for Entire Intersection Begins at 04:30 PM																	
04:30 PM	0	0	0	0	0	**1**	0	**1**	0	0	0	0	0	**1**	0	**1**	**2**
04:45 PM	0	0	0	0	0	0	0	0	0	0	0	0	0	1	0	1	1
05:00 PM	0	0	0	0	0	1	0	1	0	0	0	0	0	1	0	1	2
05:15 PM	0	0	0	0	0	1	0	1	0	0	0	0	0	0	0	0	1
Total Volume	0	0	0	0	0	3	0	3	0	0	0	0	0	3	0	3	6
% App. Total	0	0	0		0	100	0		0	0	0		0	100	0		
PHF	.000	.000	.000	.000	.000	.750	.000	.750	.000	.000	.000	.000	.000	.750	.000	.750	.750

Counts Unlimited
PO Box 1178
Corona, CA 92878
951-268-6268

City of Cypress
N/S: Holder Street
E/W: Katella Avenue
Weather: Clear

File Name : 06_CYP_Hol_Kat PM
Site Code : 05120183
Start Date : 3/12/2020
Page No : 2

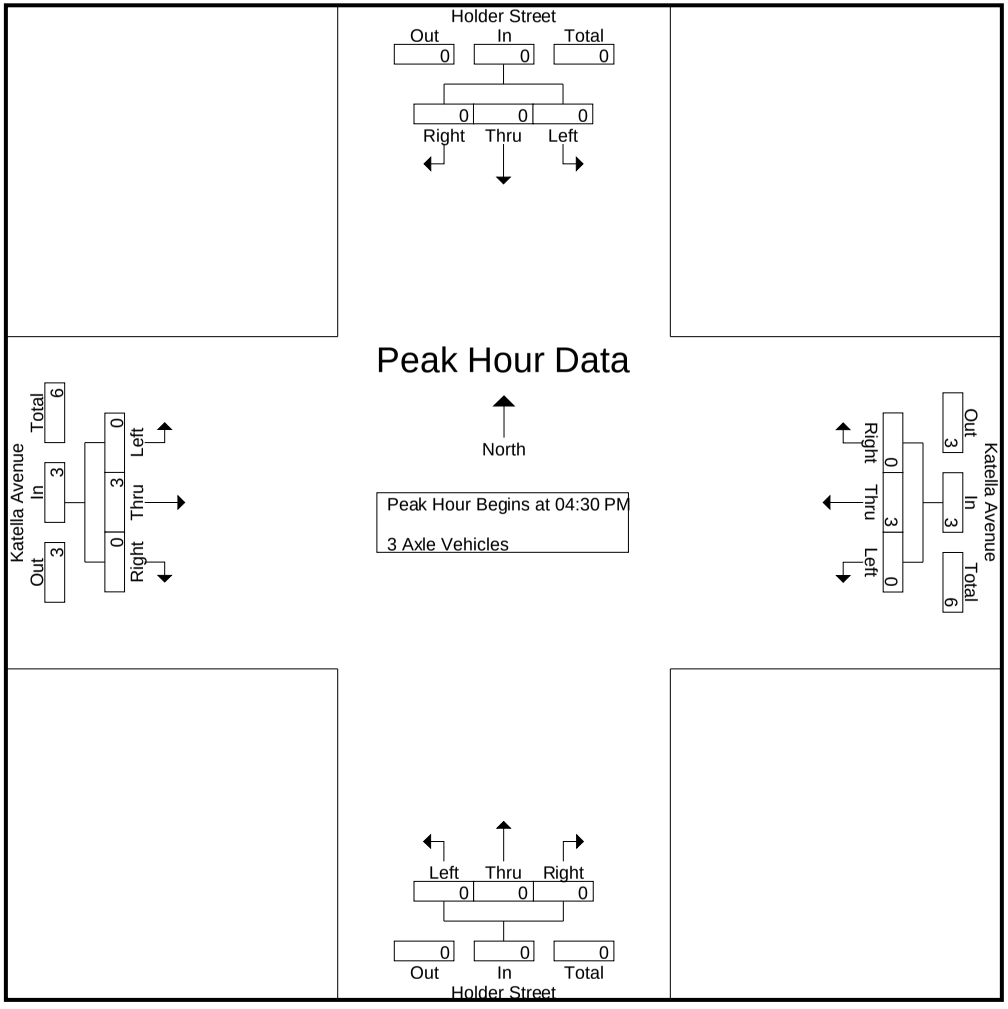

Counts Unlimited
PO Box 1178
Corona, CA 92878
951-268-6268

City of Cypress
N/S: Holder Street
E/W: Katella Avenue
Weather: Clear

File Name : 06_CYP_Hol_Kat PM
Site Code : 05120183
Start Date : 3/12/2020
Page No : 1

Groups Printed- 4+ Axle Trucks

	Holder Street Southbound					Katella Avenue Westbound					Holder Street Northbound					Katella Avenue Eastbound							
Start Time	Left	Thru	Right	RTOR	App. Total	Left	Thru	Right	RTOR	App. Total	Left	Thru	Right	RTOR	App. Total	Left	Thru	Right	RTOR	App. Total	Exclu. Total	Inclu. Total	Int. Total
04:00 PM	0	0	0	0	0	0	0	0	0	0	0	0	0	0	0	0	0	0	0	0	0	0	0
04:15 PM	1	0	1	0	2	0	1	0	0	1	0	0	0	0	0	0	2	0	0	2	0	5	5
04:30 PM	0	0	0	0	0	0	2	0	0	2	0	0	0	0	0	0	2	1	0	3	0	5	5
04:45 PM	0	0	0	0	0	0	2	0	0	2	0	0	0	0	0	0	1	0	0	1	0	3	3
Total	1	0	1	0	2	0	5	0	0	5	0	0	0	0	0	0	5	1	0	6	0	13	13
05:00 PM	0	0	0	0	0	1	1	0	0	2	1	0	0	0	1	0	1	0	0	1	0	4	4
05:15 PM	0	0	0	0	0	0	2	0	0	2	0	0	0	0	0	0	0	0	0	0	0	2	2
05:30 PM	0	0	0	0	0	0	0	0	0	0	0	0	0	0	0	0	2	1	0	3	0	3	3
05:45 PM	0	0	0	0	0	0	0	0	0	0	0	0	0	0	0	0	2	0	0	2	0	2	2
Total	0	0	0	0	0	1	3	0	0	4	1	0	0	0	1	0	5	1	0	6	0	11	11
Grand Total	1	0	1	0	2	1	8	0	0	9	1	0	0	0	1	0	10	2	0	12	0	24	24
Apprch %	50	0	50			11.1	88.9	0			100	0	0			0	83.3	16.7					
Total %	4.2	0	4.2		8.3	4.2	33.3	0		37.5	4.2	0	0		4.2	0	41.7	8.3		50	0	100	

3.1-38

	Holder Street Southbound				Katella Avenue Westbound				Holder Street Northbound				Katella Avenue Eastbound				
Start Time	Left	Thru	Right	App. Total	Left	Thru	Right	App. Total	Left	Thru	Right	App. Total	Left	Thru	Right	App. Total	Int. Total
Peak Hour Analysis From 04:30 PM to 05:15 PM - Peak 1 of 1																	
Peak Hour for Entire Intersection Begins at 04:30 PM																	
04:30 PM	0	0	0	0	0	**2**	0	**2**	0	0	0	0	0	**2**	**1**	**3**	**5**
04:45 PM	0	0	0	0	0	2	0	2	0	0	0	0	0	1	0	1	3
05:00 PM	0	0	0	0	**1**	1	0	2	**1**	0	0	**1**	0	1	0	1	4
05:15 PM	0	0	0	0	0	2	0	2	0	0	0	0	0	0	0	0	2
Total Volume	0	0	0	0	1	7	0	8	1	0	0	1	0	4	1	5	14
% App. Total	0	0	0		12.5	87.5	0		100	0	0		0	80	20		
PHF	.000	.000	.000	.000	.250	.875	.000	1.00	.250	.000	.000	.250	.000	.500	.250	.417	.700

Counts Unlimited
PO Box 1178
Corona, CA 92878
951-268-6268

City of Cypress
N/S: Holder Street
E/W: Katella Avenue
Weather: Clear

File Name : 06_CYP_Hol_Kat PM
Site Code : 05120183
Start Date : 3/12/2020
Page No : 2

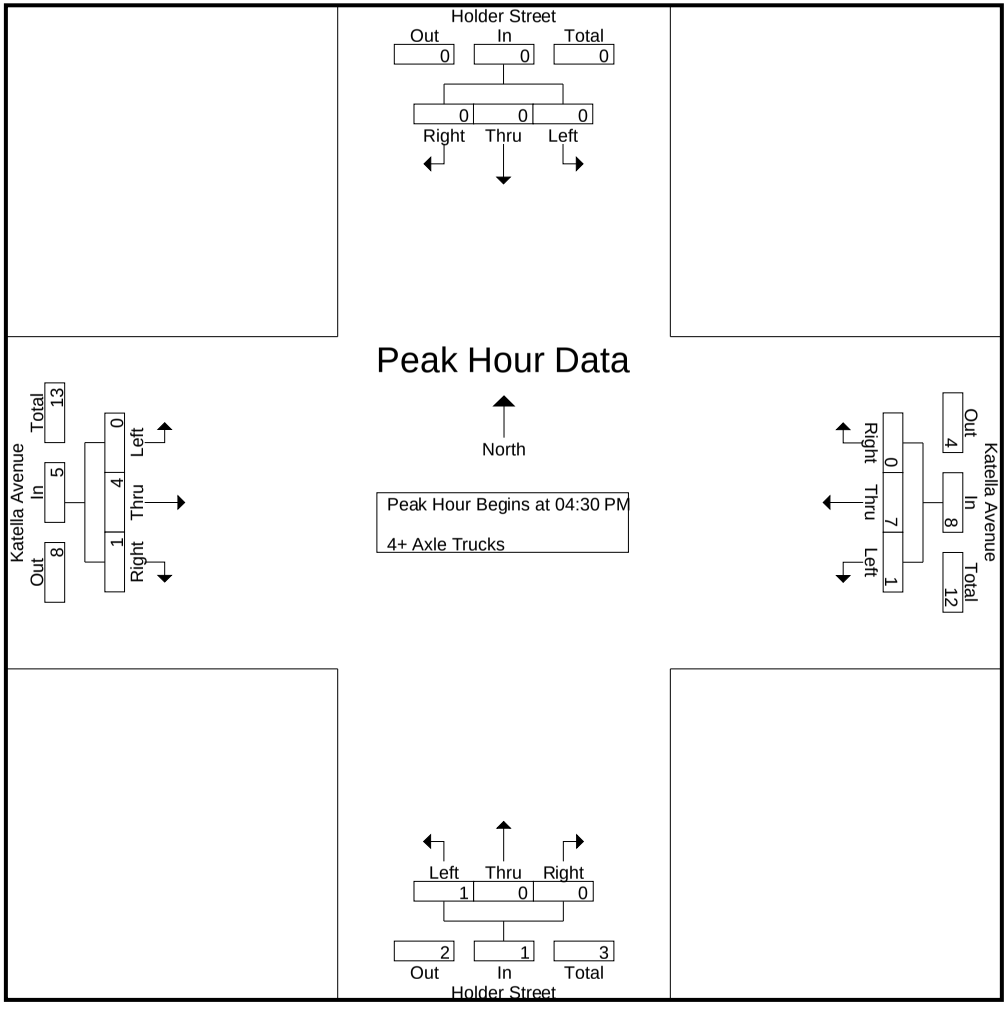

Location: Cypress
N/S: Holder Street
E/W: Katella Avenue

Date: 3/12/2020
Day: Thursday

PEDESTRIANS

	North Leg Holder Street	East Leg Katella Avenue	South Leg Holder Street	West Leg Katella Avenue	
	Pedestrians	Pedestrians	Pedestrians	Pedestrians	
7:00 AM	0	0	0	0	0
7:15 AM	0	0	0	0	0
7:30 AM	1	1	3	0	5
7:45 AM	0	0	0	0	0
8:00 AM	1	1	2	0	4
8:15 AM	2	0	2	0	4
8:30 AM	2	0	3	0	5
8:45 AM	0	0	3	0	3
TOTAL VOLUMES:	6	2	13	0	21

	North Leg Holder Street	East Leg Katella Avenue	South Leg Holder Street	West Leg Katella Avenue	
	Pedestrians	Pedestrians	Pedestrians	Pedestrians	
4:00 PM	0	1	0	0	1
4:15 PM	5	0	1	0	6
4:30 PM	0	0	0	0	0
4:45 PM	0	0	2	1	3
5:00 PM	0	0	0	0	0
5:15 PM	1	0	0	1	2
5:30 PM	2	0	0	0	2
5:45 PM	2	0	0	0	2
TOTAL VOLUMES:	10	1	3	2	16

Counts Unlimited, Inc.
PO Box 1178
Corona, CA 92878
951-268-6268

Location: Cypress
N/S: Holder Street
E/W: Katella Avenue

Date: 3/12/2020
Day: Thursday

BICYCLES

	Southbound Holder Street			Westbound Katella Avenue			Northbound Holder Street			Eastbound Katella Avenue			
	Left	Thru	Right	Left	Thru	Right	Left	Thru	Right	Left	Thru	Right	
7:00 AM	0	0	0	0	0	0	0	0	0	0	0	0	0
7:15 AM	0	0	0	0	1	0	0	0	0	0	0	0	1
7:30 AM	0	0	0	0	1	0	0	0	0	0	0	0	1
7:45 AM	0	0	0	0	0	0	0	0	0	0	0	0	0
8:00 AM	0	0	0	0	0	0	0	0	0	0	0	0	0
8:15 AM	0	0	0	0	0	0	0	0	0	0	0	0	0
8:30 AM	0	1	0	0	0	0	0	0	0	0	0	0	1
8:45 AM	0	0	0	0	0	0	0	0	0	0	0	0	0
TOTAL VOLUMES:	0	1	0	0	2	0	0	0	0	0	0	0	3

	Southbound Holder Street			Westbound Katella Avenue			Northbound Holder Street			Eastbound Katella Avenue			
	Left	Thru	Right	Left	Thru	Right	Left	Thru	Right	Left	Thru	Right	
4:00 PM	0	0	0	0	0	0	0	0	0	0	0	0	0
4:15 PM	0	0	0	0	0	0	0	0	0	0	0	0	0
4:30 PM	0	0	0	0	1	0	0	0	0	0	0	0	1
4:45 PM	0	0	0	0	0	0	0	0	0	0	0	0	0
5:00 PM	0	0	0	0	0	0	0	0	0	0	0	0	0
5:15 PM	0	0	0	0	1	0	0	0	0	0	0	0	1
5:30 PM	0	0	0	0	0	0	0	0	0	0	0	0	0
5:45 PM	0	0	0	0	0	0	0	0	0	0	0	0	0
TOTAL VOLUMES:	0	0	0	0	2	0	0	0	0	0	0	0	2

Counts Unlimited, Inc.
PO Box 1178
Corona, CA 92878
951-268-6268

Counts Unlimited
PO Box 1178
Corona, CA 92878
951-268-6268

City of Cypress
N/S: Holder Street
E/W: Driveway 2
Weather: Clear

File Name : 12_CYP_Holder_Dwy 2_AM
Site Code : 05120183
Start Date : 3/12/2020
Page No : 1

Groups Printed- Passenger Vehicles - Large 2 Axle Vehicles - 3 Axle Vehicles - 4+ Axle Trucks

	Holder Street Southbound				Driveway 2 Westbound				Holder Street Northbound				Driveway 2 Eastbound				
Start Time	Left	Thru	Right	App. Total	Left	Thru	Right	App. Total	Left	Thru	Right	App. Total	Left	Thru	Right	App. Total	Int. Total
07:00 AM	1	6	0	7	0	0	0	0	0	1	0	1	0	0	0	0	8
07:15 AM	0	2	0	2	0	0	0	0	0	0	0	0	0	0	0	0	2
07:30 AM	0	8	0	8	0	0	0	0	0	1	0	1	0	0	0	0	9
07:45 AM	2	14	0	16	0	0	0	0	0	2	0	2	0	0	0	0	18
Total	3	30	0	33	0	0	0	0	0	4	0	4	0	0	0	0	37
08:00 AM	0	7	0	7	0	0	0	0	0	0	0	0	0	0	0	0	7
08:15 AM	0	9	0	9	0	0	0	0	0	0	0	0	0	0	0	0	9
08:30 AM	0	11	0	11	0	0	0	0	0	2	0	2	0	0	0	0	13
08:45 AM	1	14	0	15	0	0	0	0	0	2	0	2	0	0	0	0	17
Total	1	41	0	42	0	0	0	0	0	4	0	4	0	0	0	0	46
Grand Total	4	71	0	75	0	0	0	0	0	8	0	8	0	0	0	0	83
Apprch %	5.3	94.7	0		0	0	0		0	100	0		0	0	0		
Total %	4.8	85.5	0	90.4	0	0	0	0	0	9.6	0	9.6	0	0	0	0	
Passenger Vehicles	4	69	0	73	0	0	0	0	0	7	0	7	0	0	0	0	80
% Passenger Vehicles	100	97.2	0	97.3	0	0	0	0	0	87.5	0	87.5	0	0	0	0	96.4
Large 2 Axle Vehicles	0	1	0	1	0	0	0	0	0	1	0	1	0	0	0	0	2
% Large 2 Axle Vehicles	0	1.4	0	1.3	0	0	0	0	0	12.5	0	12.5	0	0	0	0	2.4
3 Axle Vehicles	0	1	0	1	0	0	0	0	0	0	0	0	0	0	0	0	1
% 3 Axle Vehicles	0	1.4	0	1.3	0	0	0	0	0	0	0	0	0	0	0	0	1.2
4+ Axle Trucks	0	0	0	0	0	0	0	0	0	0	0	0	0	0	0	0	0
% 4+ Axle Trucks	0	0	0	0	0	0	0	0	0	0	0	0	0	0	0	0	0

	Holder Street Southbound				Driveway 2 Westbound				Holder Street Northbound				Driveway 2 Eastbound				
Start Time	Left	Thru	Right	App. Total	Left	Thru	Right	App. Total	Left	Thru	Right	App. Total	Left	Thru	Right	App. Total	Int. Total
Peak Hour Analysis From 07:00 AM to 08:45 AM - Peak 1 of 1																	
Peak Hour for Entire Intersection Begins at 07:45 AM																	
07:45 AM	**2**	**14**	0	**16**	0	0	0	0	0	**2**	0	**2**	0	0	0	0	**18**
08:00 AM	0	7	0	7	0	0	0	0	0	0	0	0	0	0	0	0	7
08:15 AM	0	9	0	9	0	0	0	0	0	0	0	0	0	0	0	0	9
08:30 AM	0	11	0	11	0	0	0	0	0	2	0	2	0	0	0	0	13
Total Volume	2	41	0	43	0	0	0	0	0	4	0	4	0	0	0	0	47
% App. Total	4.7	95.3	0		0	0	0		0	100	0		0	0	0		
PHF	.250	.732	.000	.672	.000	.000	.000	.000	.000	.500	.000	.500	.000	.000	.000	.000	.653

Counts Unlimited
PO Box 1178
Corona, CA 92878
951-268-6268

City of Cypress
N/S: Holder Street
E/W: Driveway 2
Weather: Clear

File Name : 12_CYP_Holder_Dwy 2_AM
Site Code : 05120183
Start Date : 3/12/2020
Page No : 2

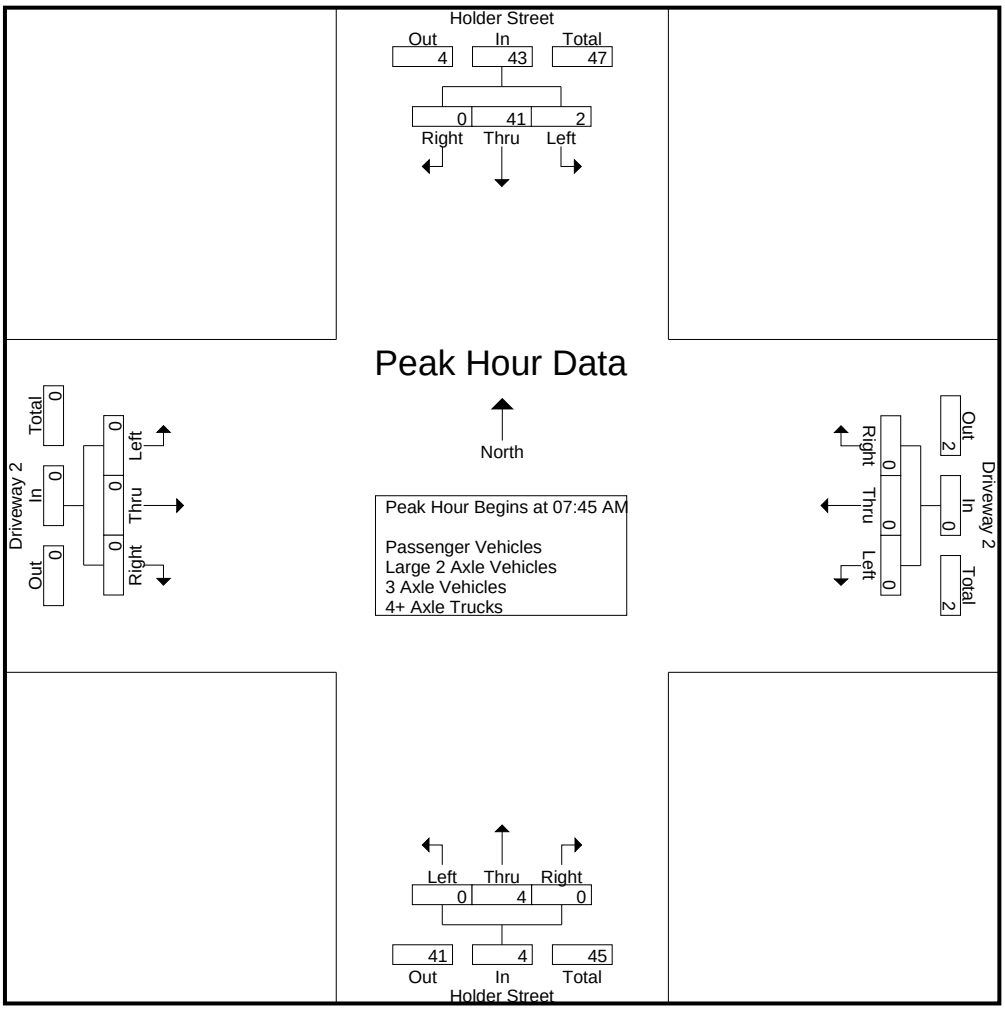

Peak Hour Analysis From 07:00 AM to 08:45 AM - Peak 1 of 1
Peak Hour for Each Approach Begins at:

	07:45 AM				07:00 AM				07:00 AM				07:00 AM			
+0 mins.	**2**	**14**	0	**16**	0	0	0	0	0	1	0	1	0	0	0	0
+15 mins.	0	7	0	7	0	0	0	0	0	0	0	0	0	0	0	0
+30 mins.	0	9	0	9	0	0	0	0	0	1	0	1	0	0	0	0
+45 mins.	0	11	0	11	0	0	0	0	0	**2**	0	**2**	0	0	0	0
Total Volume	2	41	0	43	0	0	0	0	0	4	0	4	0	0	0	0
% App. Total	4.7	95.3	0		0	0	0		0	100	0		0	0	0	
PHF	.250	.732	.000	.672	.000	.000	.000	.000	.000	.500	.000	.500	.000	.000	.000	.000

Counts Unlimited
PO Box 1178
Corona, CA 92878
951-268-6268

City of Cypress
N/S: Holder Street
E/W: Driveway 2
Weather: Clear

File Name : 12_CYP_Holder_Dwy 2_AM
Site Code : 05120183
Start Date : 3/12/2020
Page No : 1

Groups Printed- Large 2 Axle Vehicles

	Holder Street Southbound				Driveway 2 Westbound				Holder Street Northbound				Driveway 2 Eastbound				
Start Time	Left	Thru	Right	App. Total	Left	Thru	Right	App. Total	Left	Thru	Right	App. Total	Left	Thru	Right	App. Total	Int. Total
07:00 AM	0	0	0	0	0	0	0	0	0	0	0	0	0	0	0	0	0
07:15 AM	0	0	0	0	0	0	0	0	0	0	0	0	0	0	0	0	0
07:30 AM	0	0	0	0	0	0	0	0	0	0	0	0	0	0	0	0	0
07:45 AM	0	0	0	0	0	0	0	0	0	0	0	0	0	0	0	0	0
Total	0	0	0	0	0	0	0	0	0	0	0	0	0	0	0	0	0
08:00 AM	0	0	0	0	0	0	0	0	0	0	0	0	0	0	0	0	0
08:15 AM	0	0	0	0	0	0	0	0	0	0	0	0	0	0	0	0	0
08:30 AM	0	0	0	0	0	0	0	0	0	0	0	0	0	0	0	0	0
08:45 AM	0	1	0	1	0	0	0	0	0	1	0	1	0	0	0	0	2
Total	0	1	0	1	0	0	0	0	0	1	0	1	0	0	0	0	2
Grand Total	0	1	0	1	0	0	0	0	0	1	0	1	0	0	0	0	2
Apprch %	0	100	0		0	0	0		0	100	0		0	0	0		
Total %	0	50	0	50	0	0	0	0	0	50	0	50	0	0	0	0	

	Holder Street Southbound				Driveway 2 Westbound				Holder Street Northbound				Driveway 2 Eastbound				
Start Time	Left	Thru	Right	App. Total	Left	Thru	Right	App. Total	Left	Thru	Right	App. Total	Left	Thru	Right	App. Total	Int. Total
Peak Hour Analysis From 07:45 AM to 08:30 AM - Peak 1 of 1																	
Peak Hour for Entire Intersection Begins at 07:45 AM																	
07:45 AM	0	0	0	0	0	0	0	0	0	0	0	0	0	0	0	0	0
08:00 AM	0	0	0	0	0	0	0	0	0	0	0	0	0	0	0	0	0
08:15 AM	0	0	0	0	0	0	0	0	0	0	0	0	0	0	0	0	0
08:30 AM	0	0	0	0	0	0	0	0	0	0	0	0	0	0	0	0	0
Total Volume	0	0	0	0	0	0	0	0	0	0	0	0	0	0	0	0	0
% App. Total	0	0	0		0	0	0		0	0	0		0	0	0		
PHF	.000	.000	.000	.000	.000	.000	.000	.000	.000	.000	.000	.000	.000	.000	.000	.000	.000

Counts Unlimited
PO Box 1178
Corona, CA 92878
951-268-6268

City of Cypress
N/S: Holder Street
E/W: Driveway 2
Weather: Clear

File Name : 12_CYP_Holder_Dwy 2_AM
Site Code : 05120183
Start Date : 3/12/2020
Page No : 2

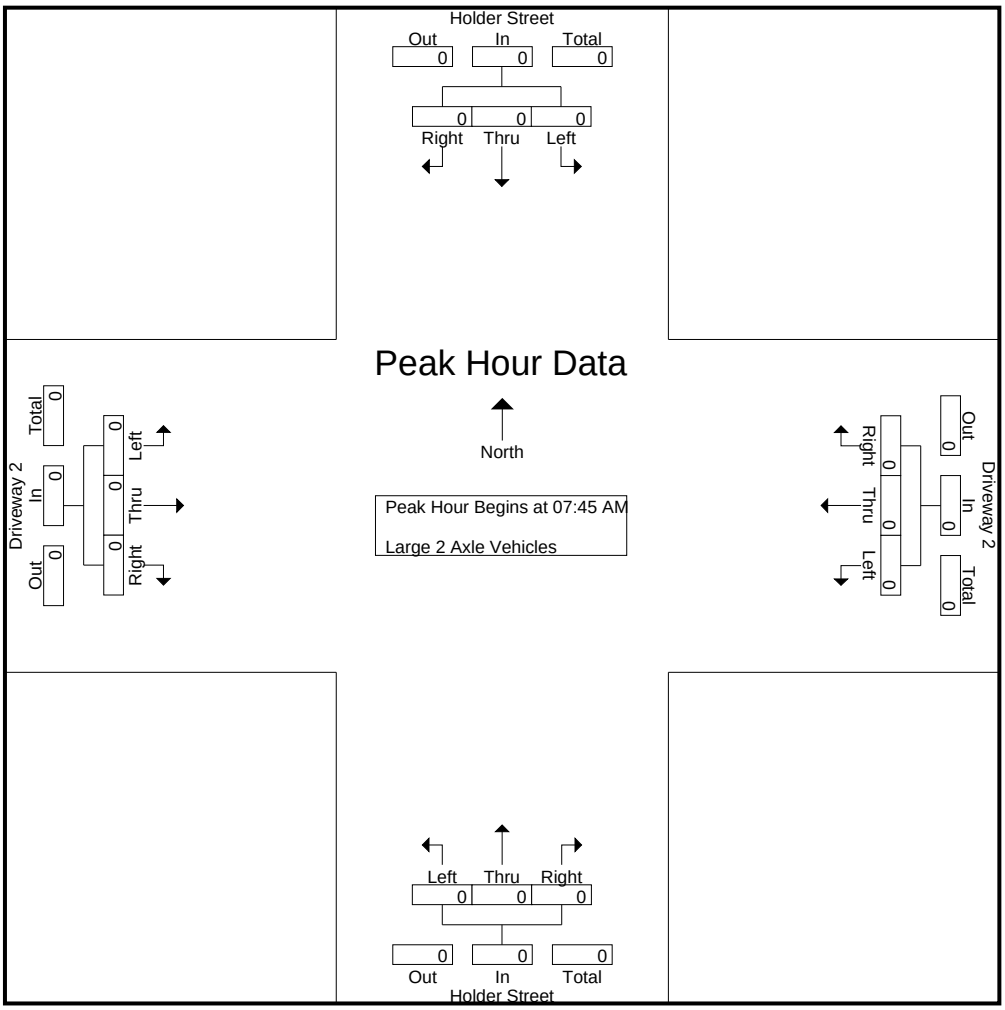

Peak Hour Analysis From 07:45 AM to 08:30 AM - Peak 1 of 1
Peak Hour for Each Approach Begins at:

	07:45 AM				07:45 AM				07:45 AM				07:45 AM			
+0 mins.	0	0	0	0	0	0	0	0	0	0	0	0	0	0	0	0
+15 mins.	0	0	0	0	0	0	0	0	0	0	0	0	0	0	0	0
+30 mins.	0	0	0	0	0	0	0	0	0	0	0	0	0	0	0	0
+45 mins.	0	0	0	0	0	0	0	0	0	0	0	0	0	0	0	0
Total Volume	0	0	0	0	0	0	0	0	0	0	0	0	0	0	0	0
% App. Total	0	0	0		0	0	0		0	0	0		0	0	0	
PHF	.000	.000	.000	.000	.000	.000	.000	.000	.000	.000	.000	.000	.000	.000	.000	.000

Counts Unlimited
PO Box 1178
Corona, CA 92878
951-268-6268

City of Cypress
N/S: Holder Street
E/W: Driveway 2
Weather: Clear

File Name : 12_CYP_Holder_Dwy 2_AM
Site Code : 05120183
Start Date : 3/12/2020
Page No : 1

Groups Printed- 3 Axle Vehicles

	Holder Street Southbound				Driveway 2 Westbound				Holder Street Northbound				Driveway 2 Eastbound				
Start Time	Left	Thru	Right	App. Total	Left	Thru	Right	App. Total	Left	Thru	Right	App. Total	Left	Thru	Right	App. Total	Int. Total
07:00 AM	0	0	0	0	0	0	0	0	0	0	0	0	0	0	0	0	0
07:15 AM	0	0	0	0	0	0	0	0	0	0	0	0	0	0	0	0	0
07:30 AM	0	0	0	0	0	0	0	0	0	0	0	0	0	0	0	0	0
07:45 AM	0	0	0	0	0	0	0	0	0	0	0	0	0	0	0	0	0
Total	0	0	0	0	0	0	0	0	0	0	0	0	0	0	0	0	0
08:00 AM	0	0	0	0	0	0	0	0	0	0	0	0	0	0	0	0	0
08:15 AM	0	0	0	0	0	0	0	0	0	0	0	0	0	0	0	0	0
08:30 AM	0	1	0	1	0	0	0	0	0	0	0	0	0	0	0	0	1
08:45 AM	0	0	0	0	0	0	0	0	0	0	0	0	0	0	0	0	0
Total	0	1	0	1	0	0	0	0	0	0	0	0	0	0	0	0	1
Grand Total	0	1	0	1	0	0	0	0	0	0	0	0	0	0	0	0	1
Apprch %	0	100	0		0	0	0		0	0	0		0	0	0		
Total %	0	100	0	100	0	0	0	0	0	0	0	0	0	0	0	0	

	Holder Street Southbound				Driveway 2 Westbound				Holder Street Northbound				Driveway 2 Eastbound				
Start Time	Left	Thru	Right	App. Total	Left	Thru	Right	App. Total	Left	Thru	Right	App. Total	Left	Thru	Right	App. Total	Int. Total
Peak Hour Analysis From 07:45 AM to 08:30 AM - Peak 1 of 1																	
Peak Hour for Entire Intersection Begins at 07:45 AM																	
07:45 AM	0	0	0	0	0	0	0	0	0	0	0	0	0	0	0	0	0
08:00 AM	0	0	0	0	0	0	0	0	0	0	0	0	0	0	0	0	0
08:15 AM	0	0	0	0	0	0	0	0	0	0	0	0	0	0	0	0	0
08:30 AM	0	**1**	0	**1**	0	0	0	0	0	0	0	0	0	0	0	0	**1**
Total Volume	0	1	0	1	0	0	0	0	0	0	0	0	0	0	0	0	1
% App. Total	0	100	0		0	0	0		0	0	0		0	0	0		
PHF	.000	.250	.000	.250	.000	.000	.000	.000	.000	.000	.000	.000	.000	.000	.000	.000	.250

Counts Unlimited
PO Box 1178
Corona, CA 92878
951-268-6268

City of Cypress
N/S: Holder Street
E/W: Driveway 2
Weather: Clear

File Name : 12_CYP_Holder_Dwy 2_AM
Site Code : 05120183
Start Date : 3/12/2020
Page No : 2

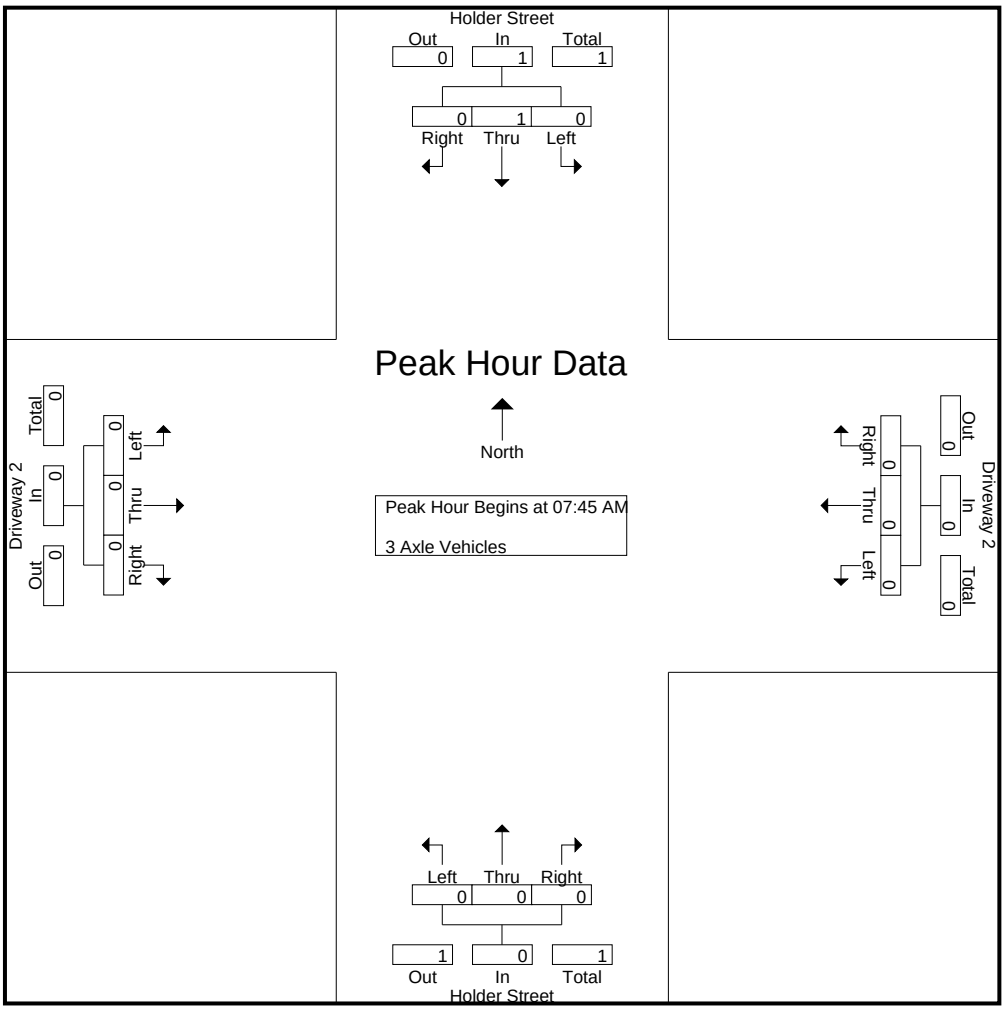

Peak Hour Analysis From 07:45 AM to 08:30 AM - Peak 1 of 1
Peak Hour for Each Approach Begins at:

	07:45 AM				07:45 AM				07:45 AM				07:45 AM			
+0 mins.	0	0	0	0	0	0	0	0	0	0	0	0	0	0	0	0
+15 mins.	0	0	0	0	0	0	0	0	0	0	0	0	0	0	0	0
+30 mins.	0	0	0	0	0	0	0	0	0	0	0	0	0	0	0	0
+45 mins.	0	**1**	0	**1**	0	0	0	0	0	0	0	0	0	0	0	0
Total Volume	0	1	0	1	0	0	0	0	0	0	0	0	0	0	0	0
% App. Total	0	100	0		0	0	0		0	0	0		0	0	0	
PHF	.000	.250	.000	.250	.000	.000	.000	.000	.000	.000	.000	.000	.000	.000	.000	.000

Counts Unlimited
PO Box 1178
Corona, CA 92878
951-268-6268

City of Cypress
N/S: Holder Street
E/W: Driveway 2
Weather: Clear

File Name : 12_CYP_Holder_Dwy 2_AM
Site Code : 05120183
Start Date : 3/12/2020
Page No : 1

Groups Printed- 4+ Axle Trucks

	Holder Street Southbound				Driveway 2 Westbound				Holder Street Northbound				Driveway 2 Eastbound				
Start Time	Left	Thru	Right	App. Total	Left	Thru	Right	App. Total	Left	Thru	Right	App. Total	Left	Thru	Right	App. Total	Int. Total
07:00 AM	0	0	0	0	0	0	0	0	0	0	0	0	0	0	0	0	0
07:15 AM	0	0	0	0	0	0	0	0	0	0	0	0	0	0	0	0	0
07:30 AM	0	0	0	0	0	0	0	0	0	0	0	0	0	0	0	0	0
07:45 AM	0	0	0	0	0	0	0	0	0	0	0	0	0	0	0	0	0
Total	0	0	0	0	0	0	0	0	0	0	0	0	0	0	0	0	0
08:00 AM	0	0	0	0	0	0	0	0	0	0	0	0	0	0	0	0	0
08:15 AM	0	0	0	0	0	0	0	0	0	0	0	0	0	0	0	0	0
08:30 AM	0	0	0	0	0	0	0	0	0	0	0	0	0	0	0	0	0
08:45 AM	0	0	0	0	0	0	0	0	0	0	0	0	0	0	0	0	0
Total	0	0	0	0	0	0	0	0	0	0	0	0	0	0	0	0	0
Grand Total	0	0	0	0	0	0	0	0	0	0	0	0	0	0	0	0	0
Apprch %	0	0	0		0	0	0		0	0	0		0	0	0		
Total %																	

	Holder Street Southbound				Driveway 2 Westbound				Holder Street Northbound				Driveway 2 Eastbound				
Start Time	Left	Thru	Right	App. Total	Left	Thru	Right	App. Total	Left	Thru	Right	App. Total	Left	Thru	Right	App. Total	Int. Total
Peak Hour Analysis From 07:45 AM to 08:30 AM - Peak 1 of 1																	
Peak Hour for Entire Intersection Begins at 07:45 AM																	
07:45 AM	0	0	0	0	0	0	0	0	0	0	0	0	0	0	0	0	0
08:00 AM	0	0	0	0	0	0	0	0	0	0	0	0	0	0	0	0	0
08:15 AM	0	0	0	0	0	0	0	0	0	0	0	0	0	0	0	0	0
08:30 AM	0	0	0	0	0	0	0	0	0	0	0	0	0	0	0	0	0
Total Volume	0	0	0	0	0	0	0	0	0	0	0	0	0	0	0	0	0
% App. Total	0	0	0		0	0	0		0	0	0		0	0	0		
PHF	.000	.000	.000	.000	.000	.000	.000	.000	.000	.000	.000	.000	.000	.000	.000	.000	.000

Counts Unlimited
PO Box 1178
Corona, CA 92878
951-268-6268

City of Cypress
N/S: Holder Street
E/W: Driveway 2
Weather: Clear

File Name : 12_CYP_Holder_Dwy 2_AM
Site Code : 05120183
Start Date : 3/12/2020
Page No : 2

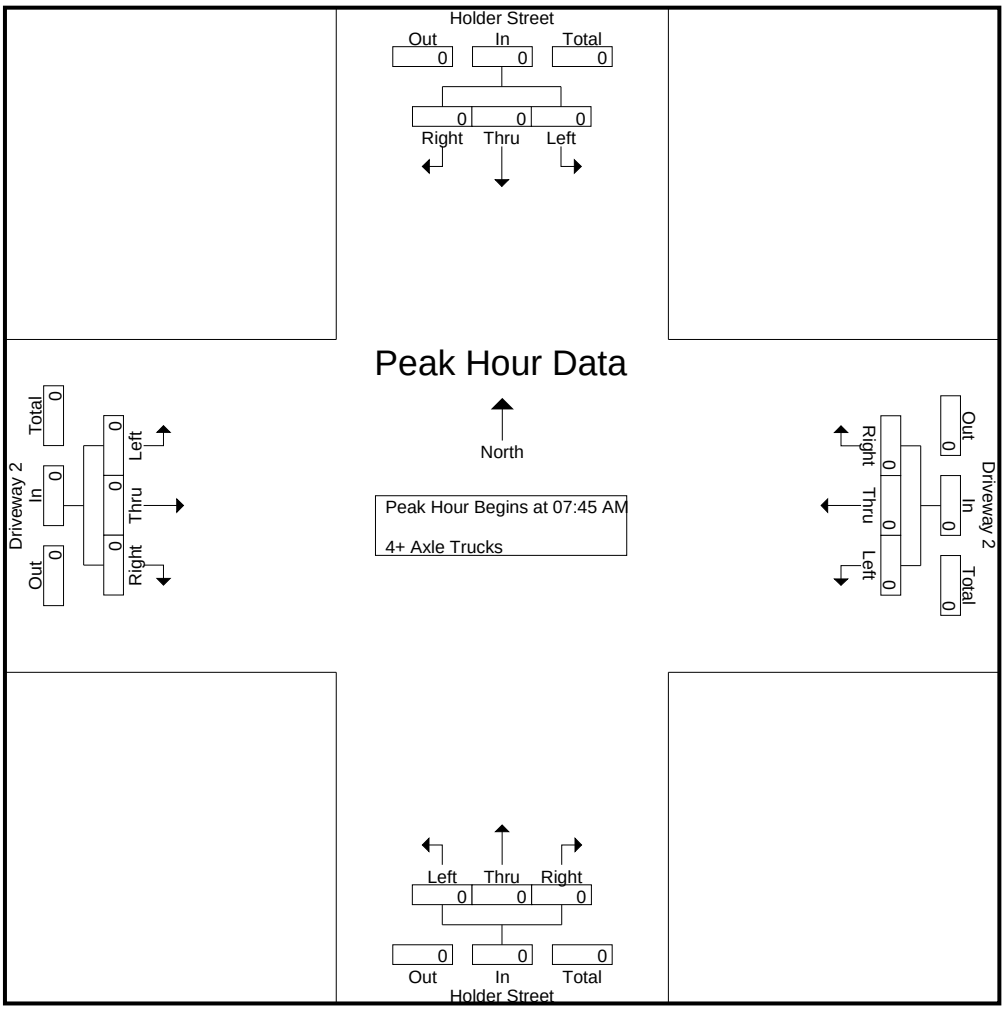

Peak Hour Analysis From 07:45 AM to 08:30 AM - Peak 1 of 1
Peak Hour for Each Approach Begins at:

	07:45 AM				07:45 AM				07:45 AM				07:45 AM			
+0 mins.	0	0	0	0	0	0	0	0	0	0	0	0	0	0	0	0
+15 mins.	0	0	0	0	0	0	0	0	0	0	0	0	0	0	0	0
+30 mins.	0	0	0	0	0	0	0	0	0	0	0	0	0	0	0	0
+45 mins.	0	0	0	0	0	0	0	0	0	0	0	0	0	0	0	0
Total Volume	0	0	0	0	0	0	0	0	0	0	0	0	0	0	0	0
% App. Total	0	0	0		0	0	0		0	0	0		0	0	0	
PHF	.000	.000	.000	.000	.000	.000	.000	.000	.000	.000	.000	.000	.000	.000	.000	.000

Counts Unlimited
PO Box 1178
Corona, CA 92878
951-268-6268

City of Cypress
N/S: Holder Street
E/W: Driveway 2
Weather: Clear

File Name : 12_CYP_Holder_Dwy 2_PM
Site Code : 05120183
Start Date : 3/12/2020
Page No : 1

Groups Printed- Passenger Vehicles - Large 2 Axle Vehicles - 3 Axle Vehicles - 4+ Axle Trucks

	Holder Street Southbound				Driveway 2 Westbound				Holder Street Northbound				Driveway 2 Eastbound				
Start Time	Left	Thru	Right	App. Total	Left	Thru	Right	App. Total	Left	Thru	Right	App. Total	Left	Thru	Right	App. Total	Int. Total
04:00 PM	0	2	0	2	0	0	0	0	0	5	0	5	0	0	0	0	7
04:15 PM	0	1	0	1	0	0	0	0	0	6	0	6	0	0	0	0	7
04:30 PM	1	3	0	4	0	0	1	1	0	11	0	11	0	0	0	0	16
04:45 PM	0	2	0	2	0	0	2	2	0	3	0	3	0	0	0	0	7
Total	1	8	0	9	0	0	3	3	0	25	0	25	0	0	0	0	37
05:00 PM	0	2	0	2	0	0	3	3	0	17	0	17	0	0	0	0	22
05:15 PM	0	1	0	1	0	0	2	2	0	12	0	12	0	0	0	0	15
05:30 PM	0	4	0	4	0	0	1	1	0	6	0	6	0	0	0	0	11
05:45 PM	0	1	0	1	0	0	2	2	0	6	0	6	0	0	0	0	9
Total	0	8	0	8	0	0	8	8	0	41	0	41	0	0	0	0	57
Grand Total	1	16	0	17	0	0	11	11	0	66	0	66	0	0	0	0	94
Apprch %	5.9	94.1	0		0	0	100		0	100	0		0	0	0		
Total %	1.1	17	0	18.1	0	0	11.7	11.7	0	70.2	0	70.2	0	0	0	0	
Passenger Vehicles	1	15	0	16	0	0	11	11	0	66	0	66	0	0	0	0	93
% Passenger Vehicles	100	93.8	0	94.1	0	0	100	100	0	100	0	100	0	0	0	0	98.9
Large 2 Axle Vehicles	0	0	0	0	0	0	0	0	0	0	0	0	0	0	0	0	0
% Large 2 Axle Vehicles	0	0	0	0	0	0	0	0	0	0	0	0	0	0	0	0	0
3 Axle Vehicles	0	0	0	0	0	0	0	0	0	0	0	0	0	0	0	0	0
% 3 Axle Vehicles	0	0	0	0	0	0	0	0	0	0	0	0	0	0	0	0	0
4+ Axle Trucks	0	1	0	1	0	0	0	0	0	0	0	0	0	0	0	0	1
% 4+ Axle Trucks	0	6.2	0	5.9	0	0	0	0	0	0	0	0	0	0	0	0	1.1

	Holder Street Southbound				Driveway 2 Westbound				Holder Street Northbound				Driveway 2 Eastbound				
Start Time	Left	Thru	Right	App. Total	Left	Thru	Right	App. Total	Left	Thru	Right	App. Total	Left	Thru	Right	App. Total	Int. Total
Peak Hour Analysis From 04:00 PM to 05:45 PM - Peak 1 of 1																	
Peak Hour for Entire Intersection Begins at 04:30 PM																	
04:30 PM	**1**	**3**	0	**4**	0	0	1	1	0	11	0	11	0	0	0	0	16
04:45 PM	0	2	0	2	0	0	2	2	0	3	0	3	0	0	0	0	7
05:00 PM	0	2	0	2	0	0	**3**	**3**	0	**17**	0	**17**	0	0	0	0	**22**
05:15 PM	0	1	0	1	0	0	2	2	0	12	0	12	0	0	0	0	15
Total Volume	1	8	0	9	0	0	8	8	0	43	0	43	0	0	0	0	60
% App. Total	11.1	88.9	0		0	0	100		0	100	0		0	0	0		
PHF	.250	.667	.000	.563	.000	.000	.667	.667	.000	.632	.000	.632	.000	.000	.000	.000	.682

Counts Unlimited
PO Box 1178
Corona, CA 92878
951-268-6268

City of Cypress
N/S: Holder Street
E/W: Driveway 2
Weather: Clear

File Name : 12_CYP_Holder_Dwy 2_PM
Site Code : 05120183
Start Date : 3/12/2020
Page No : 2

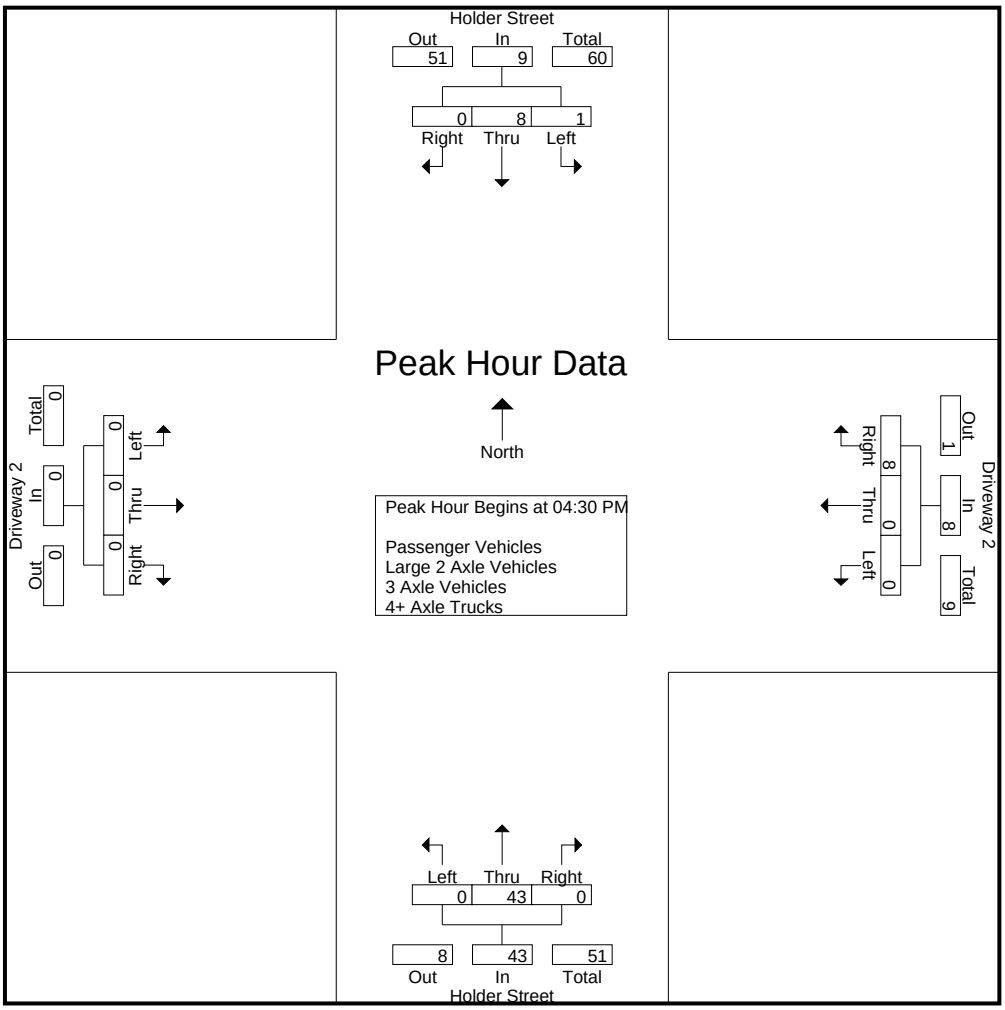

Peak Hour Analysis From 04:00 PM to 05:45 PM - Peak 1 of 1
Peak Hour for Each Approach Begins at:

	04:00 PM				04:30 PM				04:30 PM				04:00 PM			
+0 mins.	0	2	0	2	0	0	1	1	0	11	0	11	0	0	0	0
+15 mins.	0	1	0	1	0	0	2	2	0	3	0	3	0	0	0	0
+30 mins.	**1**	**3**	0	**4**	0	0	**3**	**3**	0	**17**	0	**17**	0	0	0	0
+45 mins.	0	2	0	2	0	0	2	2	0	12	0	12	0	0	0	0
Total Volume	1	8	0	9	0	0	8	8	0	43	0	43	0	0	0	0
% App. Total	11.1	88.9	0		0	0	100		0	100	0		0	0	0	
PHF	.250	.667	.000	.563	.000	.000	.667	.667	.000	.632	.000	.632	.000	.000	.000	.000

Counts Unlimited
PO Box 1178
Corona, CA 92878
951-268-6268

City of Cypress
N/S: Holder Street
E/W: Driveway 2
Weather: Clear

File Name : 12_CYP_Holder_Dwy 2_PM
Site Code : 05120183
Start Date : 3/12/2020
Page No : 1

Groups Printed- Large 2 Axle Vehicles

	Holder Street Southbound				Driveway 2 Westbound				Holder Street Northbound				Driveway 2 Eastbound				
Start Time	Left	Thru	Right	App. Total	Left	Thru	Right	App. Total	Left	Thru	Right	App. Total	Left	Thru	Right	App. Total	Int. Total
04:00 PM	0	0	0	0	0	0	0	0	0	0	0	0	0	0	0	0	0
04:15 PM	0	0	0	0	0	0	0	0	0	0	0	0	0	0	0	0	0
04:30 PM	0	0	0	0	0	0	0	0	0	0	0	0	0	0	0	0	0
04:45 PM	0	0	0	0	0	0	0	0	0	0	0	0	0	0	0	0	0
Total	0	0	0	0	0	0	0	0	0	0	0	0	0	0	0	0	0
05:00 PM	0	0	0	0	0	0	0	0	0	0	0	0	0	0	0	0	0
05:15 PM	0	0	0	0	0	0	0	0	0	0	0	0	0	0	0	0	0
05:30 PM	0	0	0	0	0	0	0	0	0	0	0	0	0	0	0	0	0
05:45 PM	0	0	0	0	0	0	0	0	0	0	0	0	0	0	0	0	0
Total	0	0	0	0	0	0	0	0	0	0	0	0	0	0	0	0	0
Grand Total	0	0	0	0	0	0	0	0	0	0	0	0	0	0	0	0	0
Apprch %	0	0	0		0	0	0		0	0	0		0	0	0		
Total %																	

	Holder Street Southbound				Driveway 2 Westbound				Holder Street Northbound				Driveway 2 Eastbound				
Start Time	Left	Thru	Right	App. Total	Left	Thru	Right	App. Total	Left	Thru	Right	App. Total	Left	Thru	Right	App. Total	Int. Total
Peak Hour Analysis From 04:30 PM to 05:15 PM - Peak 1 of 1																	
Peak Hour for Entire Intersection Begins at 04:30 PM																	
04:30 PM	0	0	0	0	0	0	0	0	0	0	0	0	0	0	0	0	0
04:45 PM	0	0	0	0	0	0	0	0	0	0	0	0	0	0	0	0	0
05:00 PM	0	0	0	0	0	0	0	0	0	0	0	0	0	0	0	0	0
05:15 PM	0	0	0	0	0	0	0	0	0	0	0	0	0	0	0	0	0
Total Volume	0	0	0	0	0	0	0	0	0	0	0	0	0	0	0	0	0
% App. Total	0	0	0		0	0	0		0	0	0		0	0	0		
PHF	.000	.000	.000	.000	.000	.000	.000	.000	.000	.000	.000	.000	.000	.000	.000	.000	.000

Counts Unlimited
PO Box 1178
Corona, CA 92878
951-268-6268

City of Cypress
N/S: Holder Street
E/W: Driveway 2
Weather: Clear

File Name : 12_CYP_Holder_Dwy 2_PM
Site Code : 05120183
Start Date : 3/12/2020
Page No : 2

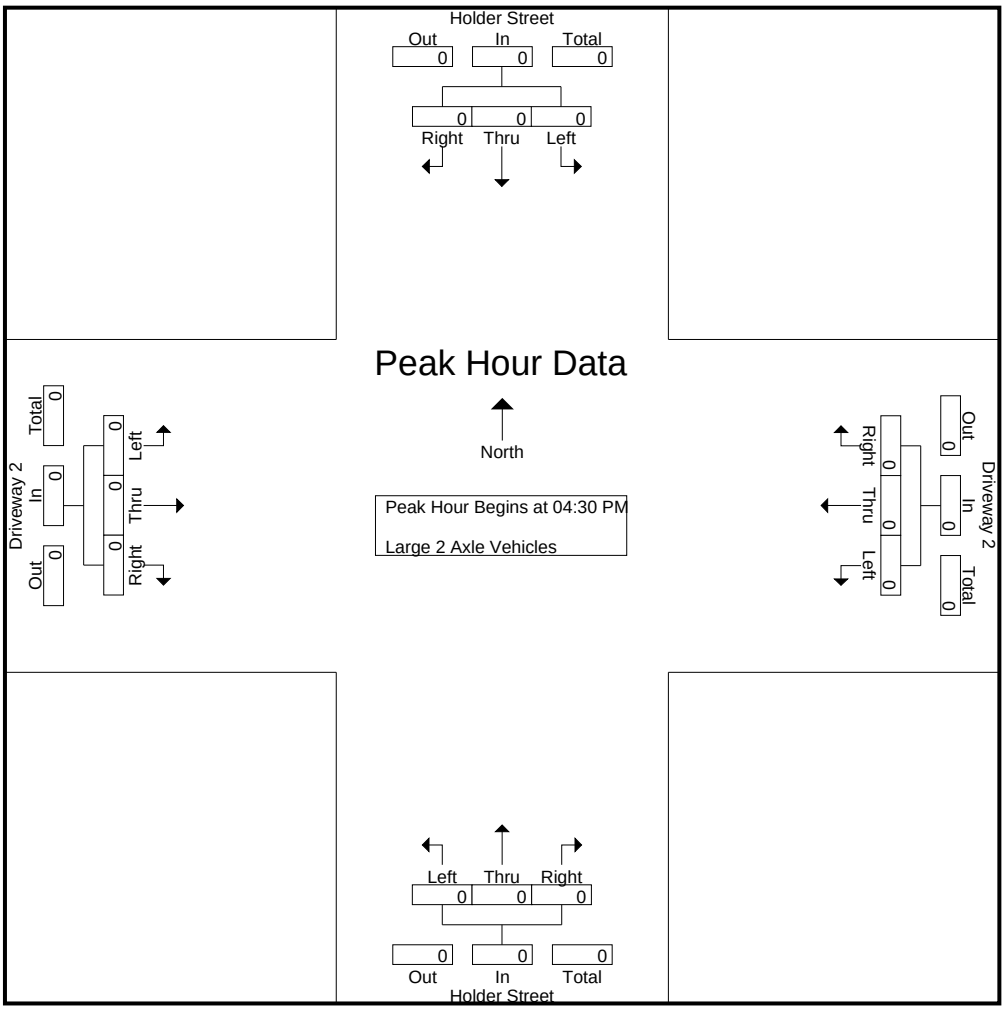

Peak Hour Analysis From 04:30 PM to 05:15 PM - Peak 1 of 1
Peak Hour for Each Approach Begins at:

	04:30 PM				04:30 PM				04:30 PM				04:30 PM			
+0 mins.	0	0	0	0	0	0	0	0	0	0	0	0	0	0	0	0
+15 mins.	0	0	0	0	0	0	0	0	0	0	0	0	0	0	0	0
+30 mins.	0	0	0	0	0	0	0	0	0	0	0	0	0	0	0	0
+45 mins.	0	0	0	0	0	0	0	0	0	0	0	0	0	0	0	0
Total Volume	0	0	0	0	0	0	0	0	0	0	0	0	0	0	0	0
% App. Total	0	0	0		0	0	0		0	0	0		0	0	0	
PHF	.000	.000	.000	.000	.000	.000	.000	.000	.000	.000	.000	.000	.000	.000	.000	.000

Counts Unlimited
PO Box 1178
Corona, CA 92878
951-268-6268

City of Cypress
N/S: Holder Street
E/W: Driveway 2
Weather: Clear

File Name : 12_CYP_Holder_Dwy 2_PM
Site Code : 05120183
Start Date : 3/12/2020
Page No : 1

Groups Printed- 3 Axle Vehicles

	Holder Street Southbound				Driveway 2 Westbound				Holder Street Northbound				Driveway 2 Eastbound				
Start Time	Left	Thru	Right	App. Total	Left	Thru	Right	App. Total	Left	Thru	Right	App. Total	Left	Thru	Right	App. Total	Int. Total
04:00 PM	0	0	0	0	0	0	0	0	0	0	0	0	0	0	0	0	0
04:15 PM	0	0	0	0	0	0	0	0	0	0	0	0	0	0	0	0	0
04:30 PM	0	0	0	0	0	0	0	0	0	0	0	0	0	0	0	0	0
04:45 PM	0	0	0	0	0	0	0	0	0	0	0	0	0	0	0	0	0
Total	0	0	0	0	0	0	0	0	0	0	0	0	0	0	0	0	0
05:00 PM	0	0	0	0	0	0	0	0	0	0	0	0	0	0	0	0	0
05:15 PM	0	0	0	0	0	0	0	0	0	0	0	0	0	0	0	0	0
05:30 PM	0	0	0	0	0	0	0	0	0	0	0	0	0	0	0	0	0
05:45 PM	0	0	0	0	0	0	0	0	0	0	0	0	0	0	0	0	0
Total	0	0	0	0	0	0	0	0	0	0	0	0	0	0	0	0	0
Grand Total	0	0	0	0	0	0	0	0	0	0	0	0	0	0	0	0	0
Apprch %	0	0	0		0	0	0		0	0	0		0	0	0		
Total %																	

	Holder Street Southbound				Driveway 2 Westbound				Holder Street Northbound				Driveway 2 Eastbound				
Start Time	Left	Thru	Right	App. Total	Left	Thru	Right	App. Total	Left	Thru	Right	App. Total	Left	Thru	Right	App. Total	Int. Total
Peak Hour Analysis From 04:30 PM to 05:15 PM - Peak 1 of 1																	
Peak Hour for Entire Intersection Begins at 04:30 PM																	
04:30 PM	0	0	0	0	0	0	0	0	0	0	0	0	0	0	0	0	0
04:45 PM	0	0	0	0	0	0	0	0	0	0	0	0	0	0	0	0	0
05:00 PM	0	0	0	0	0	0	0	0	0	0	0	0	0	0	0	0	0
05:15 PM	0	0	0	0	0	0	0	0	0	0	0	0	0	0	0	0	0
Total Volume	0	0	0	0	0	0	0	0	0	0	0	0	0	0	0	0	0
% App. Total	0	0	0		0	0	0		0	0	0		0	0	0		
PHF	.000	.000	.000	.000	.000	.000	.000	.000	.000	.000	.000	.000	.000	.000	.000	.000	.000

Counts Unlimited
PO Box 1178
Corona, CA 92878
951-268-6268

City of Cypress
N/S: Holder Street
E/W: Driveway 2
Weather: Clear

File Name : 12_CYP_Holder_Dwy 2_PM
Site Code : 05120183
Start Date : 3/12/2020
Page No : 2

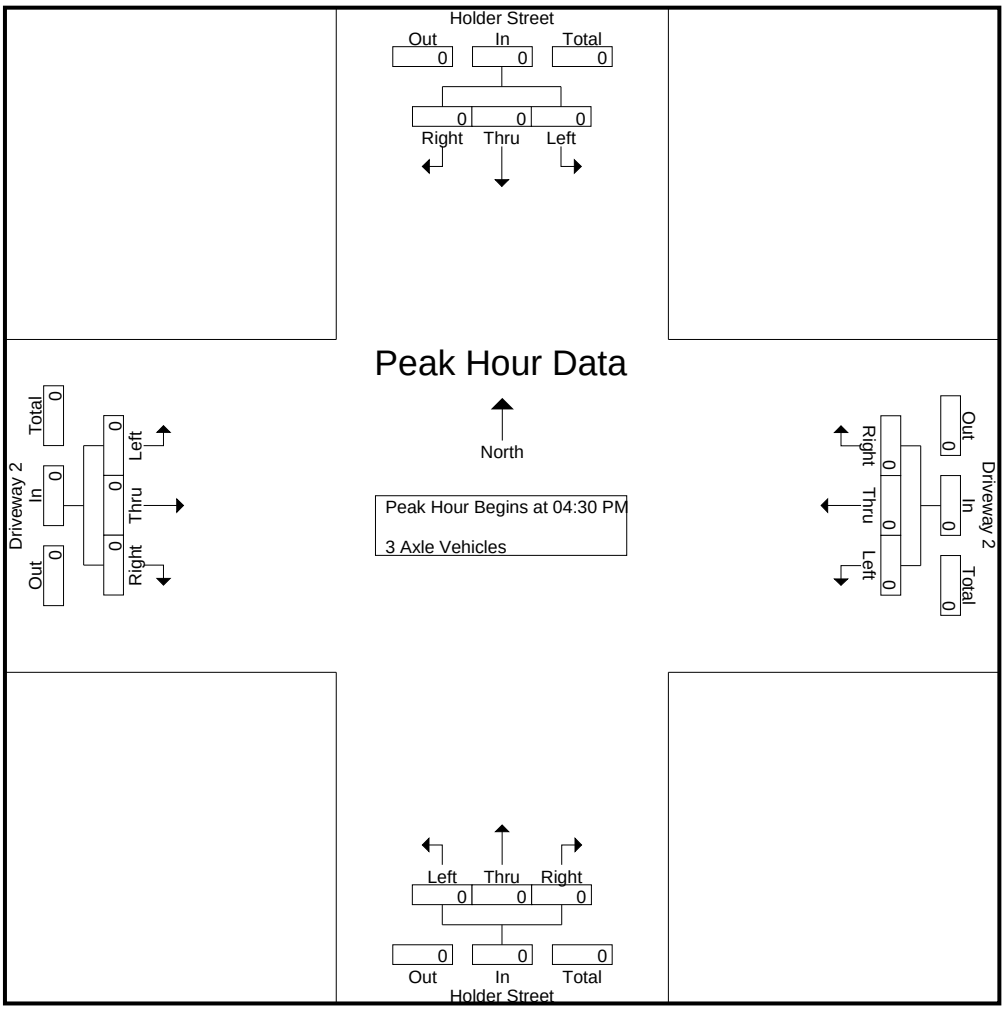

Peak Hour Analysis From 04:30 PM to 05:15 PM - Peak 1 of 1
Peak Hour for Each Approach Begins at:

	04:30 PM				04:30 PM				04:30 PM				04:30 PM			
+0 mins.	0	0	0	0	0	0	0	0	0	0	0	0	0	0	0	0
+15 mins.	0	0	0	0	0	0	0	0	0	0	0	0	0	0	0	0
+30 mins.	0	0	0	0	0	0	0	0	0	0	0	0	0	0	0	0
+45 mins.	0	0	0	0	0	0	0	0	0	0	0	0	0	0	0	0
Total Volume	0	0	0	0	0	0	0	0	0	0	0	0	0	0	0	0
% App. Total	0	0	0		0	0	0		0	0	0		0	0	0	
PHF	.000	.000	.000	.000	.000	.000	.000	.000	.000	.000	.000	.000	.000	.000	.000	.000

Counts Unlimited
PO Box 1178
Corona, CA 92878
951-268-6268

City of Cypress
N/S: Holder Street
E/W: Driveway 2
Weather: Clear

File Name : 12_CYP_Holder_Dwy 2_PM
Site Code : 05120183
Start Date : 3/12/2020
Page No : 1

Groups Printed- 4+ Axle Trucks

	Holder Street Southbound				Driveway 2 Westbound				Holder Street Northbound				Driveway 2 Eastbound				
Start Time	Left	Thru	Right	App. Total	Left	Thru	Right	App. Total	Left	Thru	Right	App. Total	Left	Thru	Right	App. Total	Int. Total
04:00 PM	0	0	0	0	0	0	0	0	0	0	0	0	0	0	0	0	0
04:15 PM	0	0	0	0	0	0	0	0	0	0	0	0	0	0	0	0	0
04:30 PM	0	1	0	1	0	0	0	0	0	0	0	0	0	0	0	0	1
04:45 PM	0	0	0	0	0	0	0	0	0	0	0	0	0	0	0	0	0
Total	0	1	0	1	0	0	0	0	0	0	0	0	0	0	0	0	1
05:00 PM	0	0	0	0	0	0	0	0	0	0	0	0	0	0	0	0	0
05:15 PM	0	0	0	0	0	0	0	0	0	0	0	0	0	0	0	0	0
05:30 PM	0	0	0	0	0	0	0	0	0	0	0	0	0	0	0	0	0
05:45 PM	0	0	0	0	0	0	0	0	0	0	0	0	0	0	0	0	0
Total	0	0	0	0	0	0	0	0	0	0	0	0	0	0	0	0	0
Grand Total	0	1	0	1	0	0	0	0	0	0	0	0	0	0	0	0	1
Apprch %	0	100	0		0	0	0		0	0	0		0	0	0		
Total %	0	100	0	100	0	0	0	0	0	0	0	0	0	0	0	0	

	Holder Street Southbound				Driveway 2 Westbound				Holder Street Northbound				Driveway 2 Eastbound				
Start Time	Left	Thru	Right	App. Total	Left	Thru	Right	App. Total	Left	Thru	Right	App. Total	Left	Thru	Right	App. Total	Int. Total
Peak Hour Analysis From 04:30 PM to 05:15 PM - Peak 1 of 1																	
Peak Hour for Entire Intersection Begins at 04:30 PM																	
04:30 PM	0	**1**	0	**1**	0	0	0	0	0	0	0	0	0	0	0	0	**1**
04:45 PM	0	0	0	0	0	0	0	0	0	0	0	0	0	0	0	0	0
05:00 PM	0	0	0	0	0	0	0	0	0	0	0	0	0	0	0	0	0
05:15 PM	0	0	0	0	0	0	0	0	0	0	0	0	0	0	0	0	0
Total Volume	0	1	0	1	0	0	0	0	0	0	0	0	0	0	0	0	1
% App. Total	0	100	0		0	0	0		0	0	0		0	0	0		
PHF	.000	.250	.000	.250	.000	.000	.000	.000	.000	.000	.000	.000	.000	.000	.000	.000	.250

Counts Unlimited
PO Box 1178
Corona, CA 92878
951-268-6268

City of Cypress
N/S: Holder Street
E/W: Driveway 2
Weather: Clear

File Name : 12_CYP_Holder_Dwy 2_PM
Site Code : 05120183
Start Date : 3/12/2020
Page No : 2

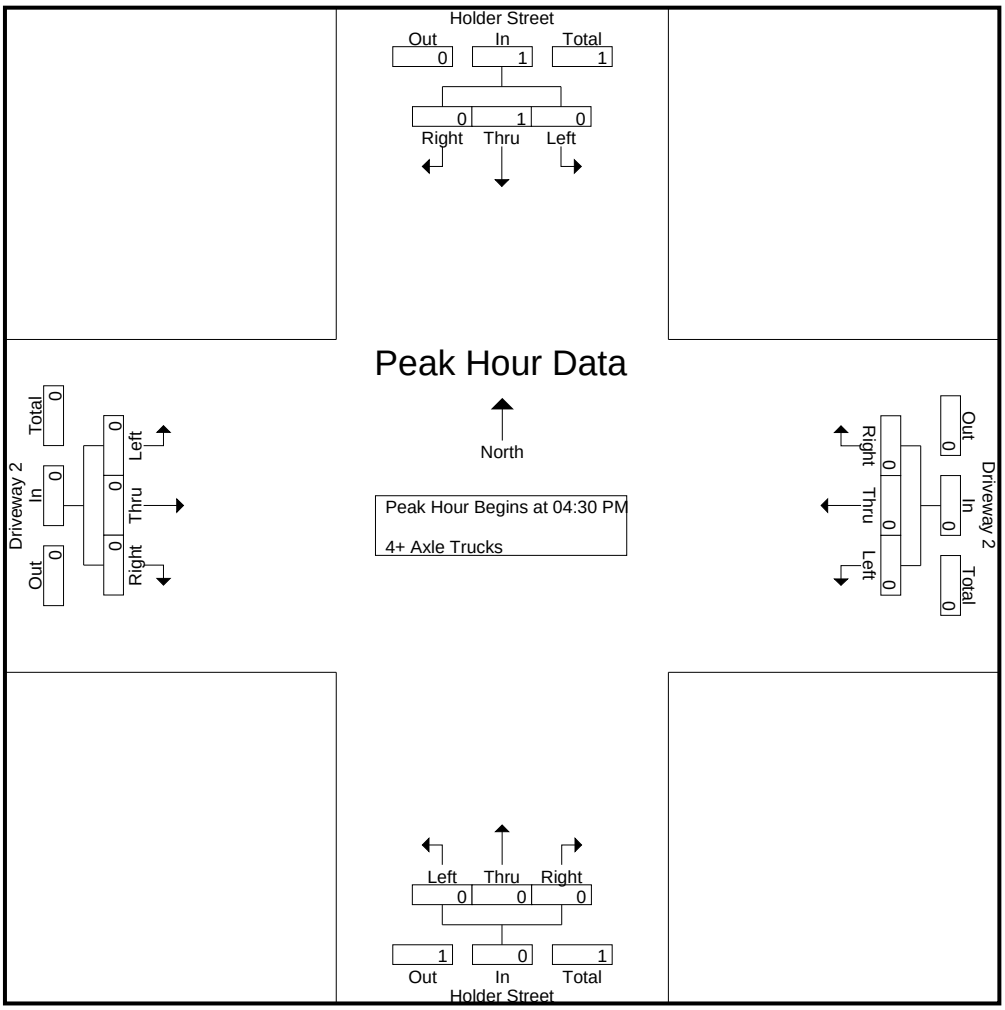

Peak Hour Analysis From 04:30 PM to 05:15 PM - Peak 1 of 1
Peak Hour for Each Approach Begins at:

	04:30 PM				04:30 PM				04:30 PM				04:30 PM			
+0 mins.	0	**1**	0	**1**	0	0	0	0	0	0	0	0	0	0	0	0
+15 mins.	0	0	0	0	0	0	0	0	0	0	0	0	0	0	0	0
+30 mins.	0	0	0	0	0	0	0	0	0	0	0	0	0	0	0	0
+45 mins.	0	0	0	0	0	0	0	0	0	0	0	0	0	0	0	0
Total Volume	0	1	0	1	0	0	0	0	0	0	0	0	0	0	0	0
% App. Total	0	100	0		0	0	0		0	0	0		0	0	0	
PHF	.000	.250	.000	.250	.000	.000	.000	.000	.000	.000	.000	.000	.000	.000	.000	.000

Location: Cypress
N/S: Holder Street
E/W: Driveway 2

Date: 3/12/2020
Day: Thursday

PEDESTRIANS

	North Leg Holder Street	East Leg Driveway 2	South Leg Holder Street	West Leg Driveway 2	
	Pedestrians	Pedestrians	Pedestrians	Pedestrians	
7:00 AM	0	0	0	0	0
7:15 AM	0	0	0	0	0
7:30 AM	0	0	0	0	0
7:45 AM	0	0	0	0	0
8:00 AM	0	0	0	0	0
8:15 AM	0	0	0	0	0
8:30 AM	0	0	0	0	0
8:45 AM	0	0	0	0	0
TOTAL VOLUMES:	0	0	0	0	0

	North Leg Holder Street	East Leg Driveway 2	South Leg Holder Street	West Leg Driveway 2	
	Pedestrians	Pedestrians	Pedestrians	Pedestrians	
4:00 PM	0	0	0	0	0
4:15 PM	0	0	0	0	0
4:30 PM	0	0	0	0	0
4:45 PM	0	0	0	0	0
5:00 PM	0	0	0	0	0
5:15 PM	0	0	0	0	0
5:30 PM	0	0	0	0	0
5:45 PM	0	0	0	0	0
TOTAL VOLUMES:	0	0	0	0	0

Location: Cypress
N/S: Holder Street
E/W: Driveway 2

Date: 3/12/2020
Day: Thursday

BICYCLES

	Southbound Holder Street			Westbound Driveway 2			Northbound Holder Street			Eastbound Driveway 2			
	Left	Thru	Right	Left	Thru	Right	Left	Thru	Right	Left	Thru	Right	
7:00 AM	0	0	0	0	0	0	0	0	0	0	0	0	0
7:15 AM	0	0	0	0	0	0	0	0	0	0	0	0	0
7:30 AM	0	0	0	0	0	0	0	0	0	0	0	0	0
7:45 AM	0	0	0	0	0	0	0	0	0	0	0	0	0
8:00 AM	0	0	0	0	0	0	0	0	0	0	0	0	0
8:15 AM	0	0	0	0	0	0	0	0	0	0	0	0	0
8:30 AM	0	0	0	0	0	0	0	0	0	0	0	0	0
8:45 AM	0	0	0	0	0	0	0	0	0	0	0	0	0
TOTAL VOLUMES:	0	0	0	0	0	0	0	0	0	0	0	0	0

	Southbound Holder Street			Westbound Driveway 2			Northbound Holder Street			Eastbound Driveway 2			
	Left	Thru	Right	Left	Thru	Right	Left	Thru	Right	Left	Thru	Right	
4:00 PM	0	0	0	0	0	0	0	0	0	0	0	0	0
4:15 PM	0	0	0	0	0	0	0	0	0	0	0	0	0
4:30 PM	0	0	0	0	0	0	0	0	0	0	0	0	0
4:45 PM	0	0	0	0	0	0	0	0	0	0	0	0	0
5:00 PM	0	0	0	0	0	0	0	0	0	0	0	0	0
5:15 PM	0	0	0	0	0	0	0	0	0	0	0	0	0
5:30 PM	0	0	0	0	0	0	0	0	0	0	0	0	0
5:45 PM	0	0	0	0	0	0	0	0	0	0	0	0	0
TOTAL VOLUMES:	0	0	0	0	0	0	0	0	0	0	0	0	0

Counts Unlimited
PO Box 1178
Corona, CA 92878
951-268-6268

City of Cypress
N/S: Holder Street
E/W: Driveway 3
Weather: Clear

File Name : 13_CYP_Holder_Dwy 3_AM
Site Code : 05120183
Start Date : 3/12/2020
Page No : 1

Groups Printed- Passenger Vehicles - Large 2 Axle Vehicles - 3 Axle Vehicles - 4+ Axle Trucks

	Holder Street Southbound				Driveway 3 Westbound				Holder Street Northbound				Driveway 3 Eastbound				
Start Time	Left	Thru	Right	App. Total	Left	Thru	Right	App. Total	Left	Thru	Right	App. Total	Left	Thru	Right	App. Total	Int. Total
07:00 AM	6	0	0	6	0	0	0	0	0	0	0	0	0	0	0	0	6
07:15 AM	2	0	0	2	0	0	0	0	0	0	0	0	0	0	0	0	2
07:30 AM	7	1	0	8	0	0	0	0	0	1	0	1	0	0	0	0	9
07:45 AM	8	6	0	14	0	0	1	1	0	1	0	1	0	0	0	0	16
Total	23	7	0	30	0	0	1	1	0	2	0	2	0	0	0	0	33
08:00 AM	5	2	0	7	0	0	0	0	0	0	0	0	0	0	0	0	7
08:15 AM	6	2	0	8	0	0	0	0	0	0	0	0	0	0	0	0	8
08:30 AM	6	5	0	11	0	0	1	1	0	1	0	1	0	0	0	0	13
08:45 AM	6	8	0	14	0	0	1	1	0	1	0	1	0	0	0	0	16
Total	23	17	0	40	0	0	2	2	0	2	0	2	0	0	0	0	44
Grand Total	46	24	0	70	0	0	3	3	0	4	0	4	0	0	0	0	77
Apprch %	65.7	34.3	0		0	0	100		0	100	0		0	0	0		
Total %	59.7	31.2	0	90.9	0	0	3.9	3.9	0	5.2	0	5.2	0	0	0	0	
Passenger Vehicles	45	23	0	68	0	0	2	2	0	3	0	3	0	0	0	0	73
% Passenger Vehicles	97.8	95.8	0	97.1	0	0	66.7	66.7	0	75	0	75	0	0	0	0	94.8
Large 2 Axle Vehicles	1	1	0	2	0	0	1	1	0	1	0	1	0	0	0	0	4
% Large 2 Axle Vehicles	2.2	4.2	0	2.9	0	0	33.3	33.3	0	25	0	25	0	0	0	0	5.2
3 Axle Vehicles	0	0	0	0	0	0	0	0	0	0	0	0	0	0	0	0	0
% 3 Axle Vehicles	0	0	0	0	0	0	0	0	0	0	0	0	0	0	0	0	0
4+ Axle Trucks	0	0	0	0	0	0	0	0	0	0	0	0	0	0	0	0	0
% 4+ Axle Trucks	0	0	0	0	0	0	0	0	0	0	0	0	0	0	0	0	0

	Holder Street Southbound				Driveway 3 Westbound				Holder Street Northbound				Driveway 3 Eastbound				
Start Time	Left	Thru	Right	App. Total	Left	Thru	Right	App. Total	Left	Thru	Right	App. Total	Left	Thru	Right	App. Total	Int. Total
Peak Hour Analysis From 07:00 AM to 08:45 AM - Peak 1 of 1																	
Peak Hour for Entire Intersection Begins at 07:45 AM																	
07:45 AM	**8**	**6**	0	**14**	0	0	**1**	**1**	0	**1**	0	**1**	0	0	0	0	**16**
08:00 AM	5	2	0	7	0	0	0	0	0	0	0	0	0	0	0	0	7
08:15 AM	6	2	0	8	0	0	0	0	0	0	0	0	0	0	0	0	8
08:30 AM	6	5	0	11	0	0	1	1	0	1	0	1	0	0	0	0	13
Total Volume	25	15	0	40	0	0	2	2	0	2	0	2	0	0	0	0	44
% App. Total	62.5	37.5	0		0	0	100		0	100	0		0	0	0		
PHF	.781	.625	.000	.714	.000	.000	.500	.500	.000	.500	.000	.500	.000	.000	.000	.000	.688

Counts Unlimited
PO Box 1178
Corona, CA 92878
951-268-6268

City of Cypress
N/S: Holder Street
E/W: Driveway 3
Weather: Clear

File Name : 13_CYP_Holder_Dwy 3_AM
Site Code : 05120183
Start Date : 3/12/2020
Page No : 2

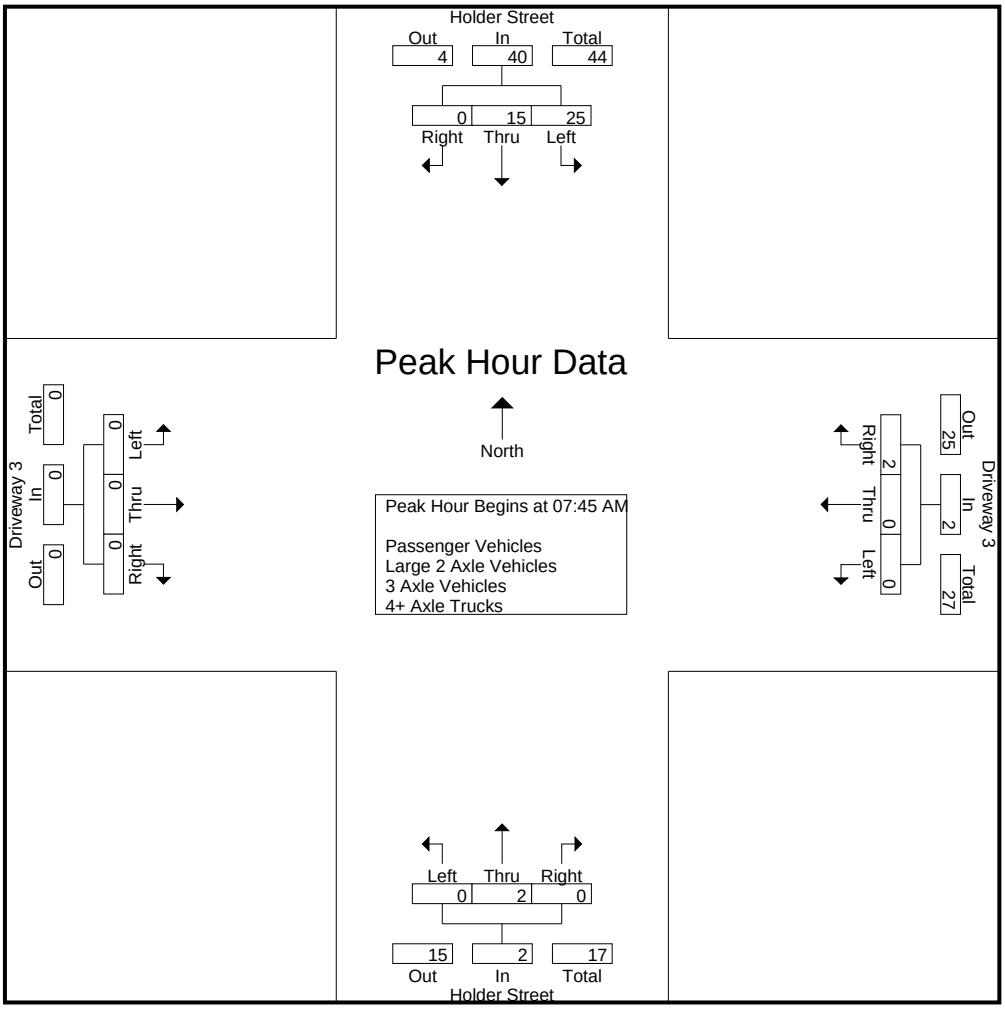

Peak Hour Analysis From 07:00 AM to 08:45 AM - Peak 1 of 1
Peak Hour for Each Approach Begins at:

	07:45 AM				07:45 AM				07:00 AM				07:00 AM			
+0 mins.	**8**	**6**	0	**14**	0	0	**1**	**1**	0	0	0	0	0	0	0	0
+15 mins.	5	2	0	7	0	0	0	0	0	0	0	0	0	0	0	0
+30 mins.	6	2	0	8	0	0	0	0	0	**1**	0	**1**	0	0	0	0
+45 mins.	6	5	0	11	0	0	1	1	0	1	0	1	0	0	0	0
Total Volume	25	15	0	40	0	0	2	2	0	2	0	2	0	0	0	0
% App. Total	62.5	37.5	0		0	0	100		0	100	0		0	0	0	
PHF	.781	.625	.000	.714	.000	.000	.500	.500	.000	.500	.000	.500	.000	.000	.000	.000

Counts Unlimited
PO Box 1178
Corona, CA 92878
951-268-6268

City of Cypress
N/S: Holder Street
E/W: Driveway 3
Weather: Clear

File Name : 13_CYP_Holder_Dwy 3_AM
Site Code : 05120183
Start Date : 3/12/2020
Page No : 1

Groups Printed- Large 2 Axle Vehicles

	Holder Street Southbound				Driveway 3 Westbound				Holder Street Northbound				Driveway 3 Eastbound				
Start Time	Left	Thru	Right	App. Total	Left	Thru	Right	App. Total	Left	Thru	Right	App. Total	Left	Thru	Right	App. Total	Int. Total
07:00 AM	0	0	0	0	0	0	0	0	0	0	0	0	0	0	0	0	0
07:15 AM	0	0	0	0	0	0	0	0	0	0	0	0	0	0	0	0	0
07:30 AM	0	0	0	0	0	0	0	0	0	0	0	0	0	0	0	0	0
07:45 AM	0	0	0	0	0	0	0	0	0	0	0	0	0	0	0	0	0
Total	0	0	0	0	0	0	0	0	0	0	0	0	0	0	0	0	0
08:00 AM	0	0	0	0	0	0	0	0	0	0	0	0	0	0	0	0	0
08:15 AM	0	0	0	0	0	0	0	0	0	0	0	0	0	0	0	0	0
08:30 AM	1	0	0	1	0	0	1	1	0	0	0	0	0	0	0	0	2
08:45 AM	0	1	0	1	0	0	0	0	0	1	0	1	0	0	0	0	2
Total	1	1	0	2	0	0	1	1	0	1	0	1	0	0	0	0	4
Grand Total	1	1	0	2	0	0	1	1	0	1	0	1	0	0	0	0	4
Apprch %	50	50	0		0	0	100		0	100	0		0	0	0		
Total %	25	25	0	50	0	0	25	25	0	25	0	25	0	0	0	0	

	Holder Street Southbound				Driveway 3 Westbound				Holder Street Northbound				Driveway 3 Eastbound				
Start Time	Left	Thru	Right	App. Total	Left	Thru	Right	App. Total	Left	Thru	Right	App. Total	Left	Thru	Right	App. Total	Int. Total
Peak Hour Analysis From 07:45 AM to 08:30 AM - Peak 1 of 1																	
Peak Hour for Entire Intersection Begins at 07:45 AM																	
07:45 AM	0	0	0	0	0	0	0	0	0	0	0	0	0	0	0	0	0
08:00 AM	0	0	0	0	0	0	0	0	0	0	0	0	0	0	0	0	0
08:15 AM	0	0	0	0	0	0	0	0	0	0	0	0	0	0	0	0	0
08:30 AM	**1**	0	0	**1**	0	0	**1**	**1**	0	0	0	0	0	0	0	0	**2**
Total Volume	1	0	0	1	0	0	1	1	0	0	0	0	0	0	0	0	2
% App. Total	100	0	0		0	0	100		0	0	0		0	0	0		
PHF	.250	.000	.000	.250	.000	.000	.250	.250	.000	.000	.000	.000	.000	.000	.000	.000	.250

Counts Unlimited
PO Box 1178
Corona, CA 92878
951-268-6268

City of Cypress
N/S: Holder Street
E/W: Driveway 3
Weather: Clear

File Name : 13_CYP_Holder_Dwy 3_AM
Site Code : 05120183
Start Date : 3/12/2020
Page No : 2

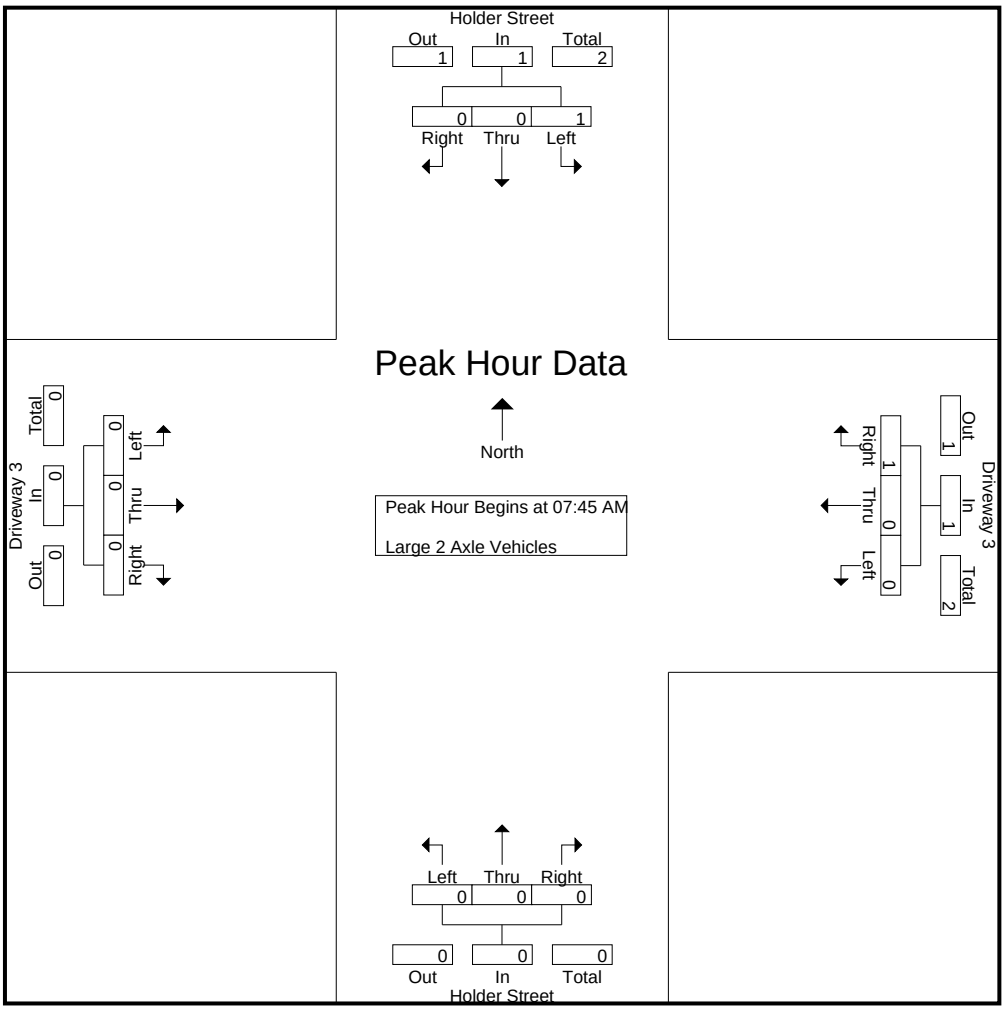

Peak Hour Analysis From 07:45 AM to 08:30 AM - Peak 1 of 1
Peak Hour for Each Approach Begins at:

	07:45 AM				07:45 AM				07:45 AM				07:45 AM			
+0 mins.	0	0	0	0	0	0	0	0	0	0	0	0	0	0	0	0
+15 mins.	0	0	0	0	0	0	0	0	0	0	0	0	0	0	0	0
+30 mins.	0	0	0	0	0	0	0	0	0	0	0	0	0	0	0	0
+45 mins.	**1**	0	0	**1**	0	0	**1**	**1**	0	0	0	0	0	0	0	0
Total Volume	1	0	0	1	0	0	1	1	0	0	0	0	0	0	0	0
% App. Total	100	0	0		0	0	100		0	0	0		0	0	0	
PHF	.250	.000	.000	.250	.000	.000	.250	.250	.000	.000	.000	.000	.000	.000	.000	.000

Counts Unlimited
PO Box 1178
Corona, CA 92878
951-268-6268

City of Cypress
N/S: Holder Street
E/W: Driveway 3
Weather: Clear

File Name : 13_CYP_Holder_Dwy 3_AM
Site Code : 05120183
Start Date : 3/12/2020
Page No : 1

Groups Printed- 3 Axle Vehicles

	Holder Street Southbound				Driveway 3 Westbound				Holder Street Northbound				Driveway 3 Eastbound				
Start Time	Left	Thru	Right	App. Total	Left	Thru	Right	App. Total	Left	Thru	Right	App. Total	Left	Thru	Right	App. Total	Int. Total
07:00 AM	0	0	0	0	0	0	0	0	0	0	0	0	0	0	0	0	0
07:15 AM	0	0	0	0	0	0	0	0	0	0	0	0	0	0	0	0	0
07:30 AM	0	0	0	0	0	0	0	0	0	0	0	0	0	0	0	0	0
07:45 AM	0	0	0	0	0	0	0	0	0	0	0	0	0	0	0	0	0
Total	0	0	0	0	0	0	0	0	0	0	0	0	0	0	0	0	0
08:00 AM	0	0	0	0	0	0	0	0	0	0	0	0	0	0	0	0	0
08:15 AM	0	0	0	0	0	0	0	0	0	0	0	0	0	0	0	0	0
08:30 AM	0	0	0	0	0	0	0	0	0	0	0	0	0	0	0	0	0
08:45 AM	0	0	0	0	0	0	0	0	0	0	0	0	0	0	0	0	0
Total	0	0	0	0	0	0	0	0	0	0	0	0	0	0	0	0	0
Grand Total	0	0	0	0	0	0	0	0	0	0	0	0	0	0	0	0	0
Apprch %	0	0	0		0	0	0		0	0	0		0	0	0		
Total %																	

	Holder Street Southbound				Driveway 3 Westbound				Holder Street Northbound				Driveway 3 Eastbound				
Start Time	Left	Thru	Right	App. Total	Left	Thru	Right	App. Total	Left	Thru	Right	App. Total	Left	Thru	Right	App. Total	Int. Total
Peak Hour Analysis From 07:45 AM to 08:30 AM - Peak 1 of 1																	
Peak Hour for Entire Intersection Begins at 07:45 AM																	
07:45 AM	0	0	0	0	0	0	0	0	0	0	0	0	0	0	0	0	0
08:00 AM	0	0	0	0	0	0	0	0	0	0	0	0	0	0	0	0	0
08:15 AM	0	0	0	0	0	0	0	0	0	0	0	0	0	0	0	0	0
08:30 AM	0	0	0	0	0	0	0	0	0	0	0	0	0	0	0	0	0
Total Volume	0	0	0	0	0	0	0	0	0	0	0	0	0	0	0	0	0
% App. Total	0	0	0		0	0	0		0	0	0		0	0	0		
PHF	.000	.000	.000	.000	.000	.000	.000	.000	.000	.000	.000	.000	.000	.000	.000	.000	.000

Counts Unlimited
PO Box 1178
Corona, CA 92878
951-268-6268

City of Cypress
N/S: Holder Street
E/W: Driveway 3
Weather: Clear

File Name : 13_CYP_Holder_Dwy 3_AM
Site Code : 05120183
Start Date : 3/12/2020
Page No : 2

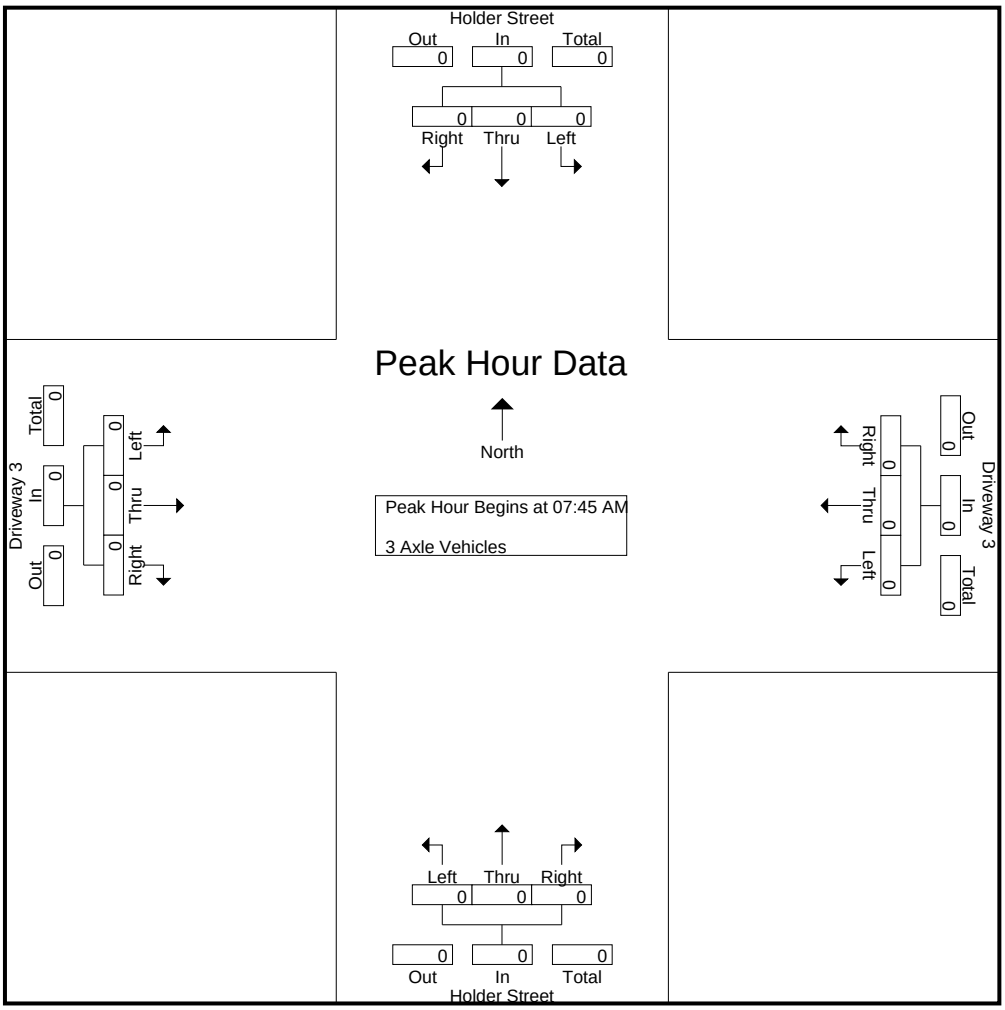

Peak Hour Analysis From 07:45 AM to 08:30 AM - Peak 1 of 1
Peak Hour for Each Approach Begins at:

	07:45 AM				07:45 AM				07:45 AM				07:45 AM			
+0 mins.	0	0	0	0	0	0	0	0	0	0	0	0	0	0	0	0
+15 mins.	0	0	0	0	0	0	0	0	0	0	0	0	0	0	0	0
+30 mins.	0	0	0	0	0	0	0	0	0	0	0	0	0	0	0	0
+45 mins.	0	0	0	0	0	0	0	0	0	0	0	0	0	0	0	0
Total Volume	0	0	0	0	0	0	0	0	0	0	0	0	0	0	0	0
% App. Total	0	0	0		0	0	0		0	0	0		0	0	0	
PHF	.000	.000	.000	.000	.000	.000	.000	.000	.000	.000	.000	.000	.000	.000	.000	.000

Counts Unlimited
PO Box 1178
Corona, CA 92878
951-268-6268

City of Cypress
N/S: Holder Street
E/W: Driveway 3
Weather: Clear

File Name : 13_CYP_Holder_Dwy 3_AM
Site Code : 05120183
Start Date : 3/12/2020
Page No : 1

Groups Printed- 4+ Axle Trucks

	Holder Street Southbound				Driveway 3 Westbound				Holder Street Northbound				Driveway 3 Eastbound				
Start Time	Left	Thru	Right	App. Total	Left	Thru	Right	App. Total	Left	Thru	Right	App. Total	Left	Thru	Right	App. Total	Int. Total
07:00 AM	0	0	0	0	0	0	0	0	0	0	0	0	0	0	0	0	0
07:15 AM	0	0	0	0	0	0	0	0	0	0	0	0	0	0	0	0	0
07:30 AM	0	0	0	0	0	0	0	0	0	0	0	0	0	0	0	0	0
07:45 AM	0	0	0	0	0	0	0	0	0	0	0	0	0	0	0	0	0
Total	0	0	0	0	0	0	0	0	0	0	0	0	0	0	0	0	0
08:00 AM	0	0	0	0	0	0	0	0	0	0	0	0	0	0	0	0	0
08:15 AM	0	0	0	0	0	0	0	0	0	0	0	0	0	0	0	0	0
08:30 AM	0	0	0	0	0	0	0	0	0	0	0	0	0	0	0	0	0
08:45 AM	0	0	0	0	0	0	0	0	0	0	0	0	0	0	0	0	0
Total	0	0	0	0	0	0	0	0	0	0	0	0	0	0	0	0	0
Grand Total	0	0	0	0	0	0	0	0	0	0	0	0	0	0	0	0	0
Apprch %	0	0	0		0	0	0		0	0	0		0	0	0		
Total %																	

	Holder Street Southbound				Driveway 3 Westbound				Holder Street Northbound				Driveway 3 Eastbound				
Start Time	Left	Thru	Right	App. Total	Left	Thru	Right	App. Total	Left	Thru	Right	App. Total	Left	Thru	Right	App. Total	Int. Total
Peak Hour Analysis From 07:45 AM to 08:30 AM - Peak 1 of 1																	
Peak Hour for Entire Intersection Begins at 07:45 AM																	
07:45 AM	0	0	0	0	0	0	0	0	0	0	0	0	0	0	0	0	0
08:00 AM	0	0	0	0	0	0	0	0	0	0	0	0	0	0	0	0	0
08:15 AM	0	0	0	0	0	0	0	0	0	0	0	0	0	0	0	0	0
08:30 AM	0	0	0	0	0	0	0	0	0	0	0	0	0	0	0	0	0
Total Volume	0	0	0	0	0	0	0	0	0	0	0	0	0	0	0	0	0
% App. Total	0	0	0		0	0	0		0	0	0		0	0	0		
PHF	.000	.000	.000	.000	.000	.000	.000	.000	.000	.000	.000	.000	.000	.000	.000	.000	.000

Counts Unlimited
PO Box 1178
Corona, CA 92878
951-268-6268

City of Cypress
N/S: Holder Street
E/W: Driveway 3
Weather: Clear

File Name : 13_CYP_Holder_Dwy 3_AM
Site Code : 05120183
Start Date : 3/12/2020
Page No : 2

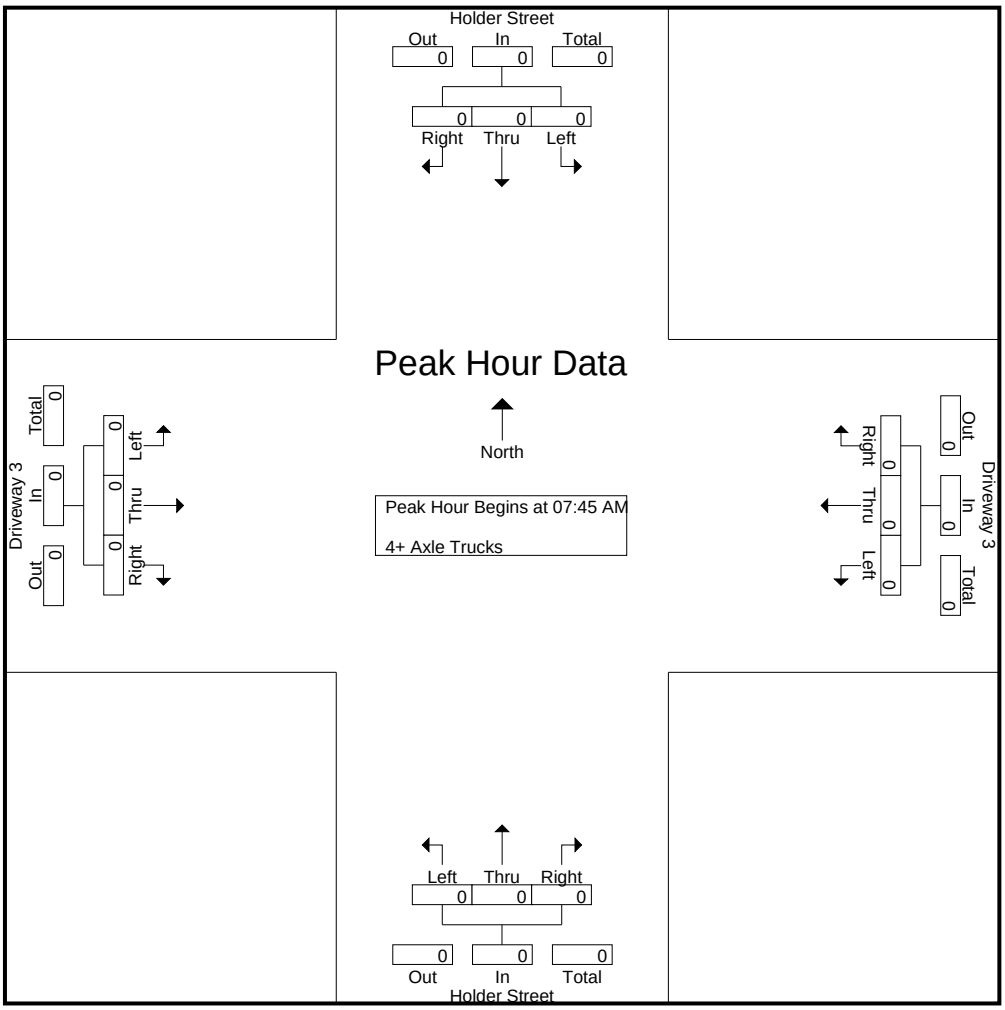

Peak Hour Analysis From 07:45 AM to 08:30 AM - Peak 1 of 1
Peak Hour for Each Approach Begins at:

	07:45 AM				07:45 AM				07:45 AM				07:45 AM			
+0 mins.	0	0	0	0	0	0	0	0	0	0	0	0	0	0	0	0
+15 mins.	0	0	0	0	0	0	0	0	0	0	0	0	0	0	0	0
+30 mins.	0	0	0	0	0	0	0	0	0	0	0	0	0	0	0	0
+45 mins.	0	0	0	0	0	0	0	0	0	0	0	0	0	0	0	0
Total Volume	0	0	0	0	0	0	0	0	0	0	0	0	0	0	0	0
% App. Total	0	0	0		0	0	0		0	0	0		0	0	0	
PHF	.000	.000	.000	.000	.000	.000	.000	.000	.000	.000	.000	.000	.000	.000	.000	.000

Counts Unlimited
PO Box 1178
Corona, CA 92878
951-268-6268

City of Cypress
N/S: Holder Street
E/W: Driveway 3
Weather: Clear

File Name : 13_CYP_Holder_Dwy 3_PM
Site Code : 05120183
Start Date : 3/12/2020
Page No : 1

Groups Printed- Passenger Vehicles - Large 2 Axle Vehicles - 3 Axle Vehicles - 4+ Axle Trucks

	Holder Street Southbound				Driveway 3 Westbound				Holder Street Northbound				Driveway 3 Eastbound				
Start Time	Left	Thru	Right	App. Total	Left	Thru	Right	App. Total	Left	Thru	Right	App. Total	Left	Thru	Right	App. Total	Int. Total
04:00 PM	1	2	0	3	0	0	2	2	0	2	0	2	0	0	0	0	7
04:15 PM	0	1	0	1	0	0	4	4	0	2	0	2	0	0	0	0	7
04:30 PM	1	1	0	2	0	0	7	7	0	4	0	4	0	0	0	0	13
04:45 PM	2	0	0	2	0	0	1	1	0	2	0	2	0	0	0	0	5
Total	4	4	0	8	0	0	14	14	0	10	0	10	0	0	0	0	32
05:00 PM	1	1	0	2	0	0	13	13	0	4	0	4	0	0	0	0	19
05:15 PM	1	0	0	1	0	0	5	5	0	7	0	7	0	0	0	0	13
05:30 PM	3	1	0	4	0	0	4	4	0	2	0	2	0	0	0	0	10
05:45 PM	1	0	0	1	0	0	5	5	0	1	0	1	0	0	0	0	7
Total	6	2	0	8	0	0	27	27	0	14	0	14	0	0	0	0	49
Grand Total	10	6	0	16	0	0	41	41	0	24	0	24	0	0	0	0	81
Apprch %	62.5	37.5	0		0	0	100		0	100	0		0	0	0		
Total %	12.3	7.4	0	19.8	0	0	50.6	50.6	0	29.6	0	29.6	0	0	0	0	
Passenger Vehicles	10	6	0	16	0	0	41	41	0	24	0	24	0	0	0	0	81
% Passenger Vehicles	100	100	0	100	0	0	100	100	0	100	0	100	0	0	0	0	100
Large 2 Axle Vehicles	0	0	0	0	0	0	0	0	0	0	0	0	0	0	0	0	0
% Large 2 Axle Vehicles	0	0	0	0	0	0	0	0	0	0	0	0	0	0	0	0	0
3 Axle Vehicles	0	0	0	0	0	0	0	0	0	0	0	0	0	0	0	0	0
% 3 Axle Vehicles	0	0	0	0	0	0	0	0	0	0	0	0	0	0	0	0	0
4+ Axle Trucks	0	0	0	0	0	0	0	0	0	0	0	0	0	0	0	0	0
% 4+ Axle Trucks	0	0	0	0	0	0	0	0	0	0	0	0	0	0	0	0	0

	Holder Street Southbound				Driveway 3 Westbound				Holder Street Northbound				Driveway 3 Eastbound				
Start Time	Left	Thru	Right	App. Total	Left	Thru	Right	App. Total	Left	Thru	Right	App. Total	Left	Thru	Right	App. Total	Int. Total
Peak Hour Analysis From 04:00 PM to 05:45 PM - Peak 1 of 1																	
Peak Hour for Entire Intersection Begins at 04:30 PM																	
04:30 PM	1	**1**	0	**2**	0	0	7	7	0	4	0	4	0	0	0	0	13
04:45 PM	**2**	0	0	2	0	0	1	1	0	2	0	2	0	0	0	0	5
05:00 PM	1	1	0	2	0	0	**13**	**13**	0	4	0	4	0	0	0	0	**19**
05:15 PM	1	0	0	1	0	0	5	5	0	**7**	0	**7**	0	0	0	0	13
Total Volume	5	2	0	7	0	0	26	26	0	17	0	17	0	0	0	0	50
% App. Total	71.4	28.6	0		0	0	100		0	100	0		0	0	0		
PHF	.625	.500	.000	.875	.000	.000	.500	.500	.000	.607	.000	.607	.000	.000	.000	.000	.658

Counts Unlimited
PO Box 1178
Corona, CA 92878
951-268-6268

City of Cypress
N/S: Holder Street
E/W: Driveway 3
Weather: Clear

File Name : 13_CYP_Holder_Dwy 3_PM
Site Code : 05120183
Start Date : 3/12/2020
Page No : 2

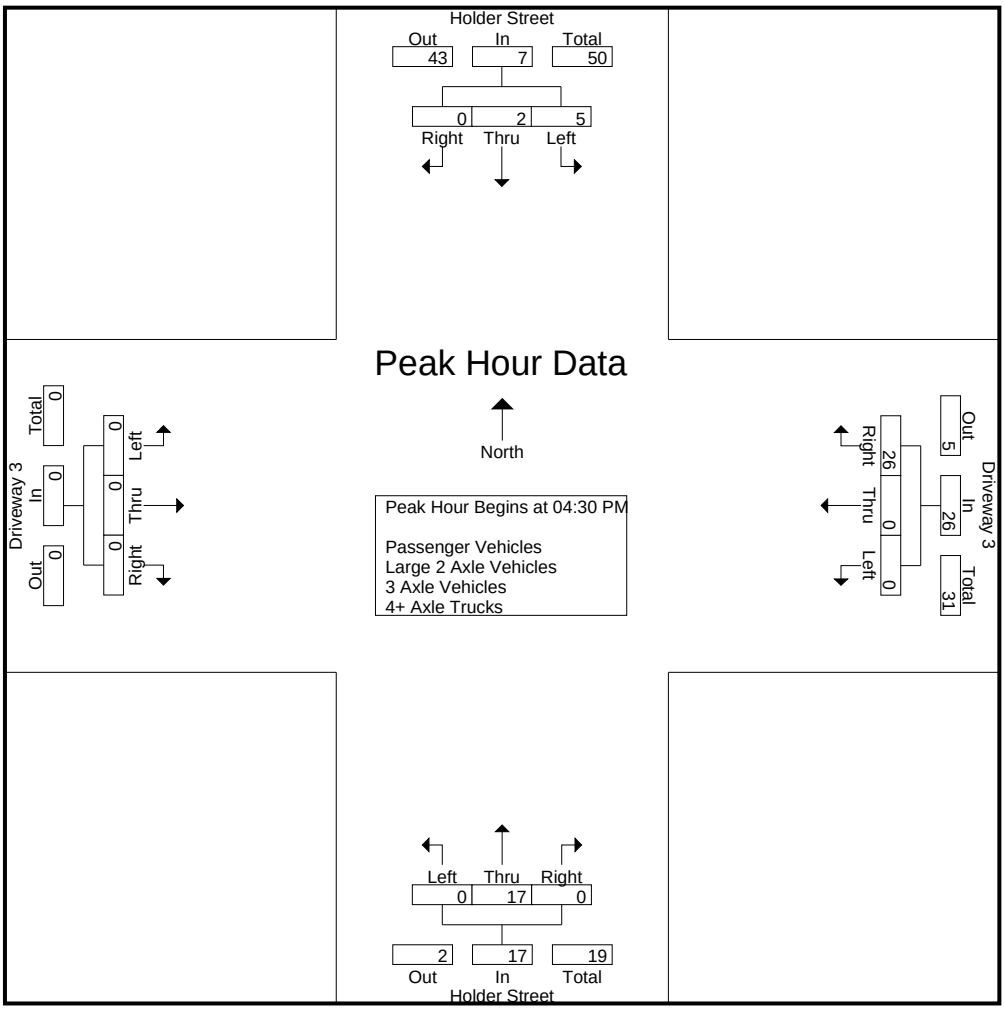

Peak Hour Analysis From 04:00 PM to 05:45 PM - Peak 1 of 1
Peak Hour for Each Approach Begins at:

	04:45 PM				05:00 PM				04:30 PM				04:00 PM			
+0 mins.	2	0	0	2	0	0	**13**	**13**	0	4	0	4	0	0	0	0
+15 mins.	1	**1**	0	2	0	0	5	5	0	2	0	2	0	0	0	0
+30 mins.	1	0	0	1	0	0	4	4	0	4	0	4	0	0	0	0
+45 mins.	**3**	1	0	**4**	0	0	5	5	0	**7**	0	**7**	0	0	0	0
Total Volume	7	2	0	9	0	0	27	27	0	17	0	17	0	0	0	0
% App. Total	77.8	22.2	0		0	0	100		0	100	0		0	0	0	
PHF	.583	.500	.000	.563	.000	.000	.519	.519	.000	.607	.000	.607	.000	.000	.000	.000

Counts Unlimited
PO Box 1178
Corona, CA 92878
951-268-6268

City of Cypress
N/S: Holder Street
E/W: Driveway 3
Weather: Clear

File Name : 13_CYP_Holder_Dwy 3_PM
Site Code : 05120183
Start Date : 3/12/2020
Page No : 1

Groups Printed- Large 2 Axle Vehicles

	Holder Street Southbound				Driveway 3 Westbound				Holder Street Northbound				Driveway 3 Eastbound				
Start Time	Left	Thru	Right	App. Total	Left	Thru	Right	App. Total	Left	Thru	Right	App. Total	Left	Thru	Right	App. Total	Int. Total
04:00 PM	0	0	0	0	0	0	0	0	0	0	0	0	0	0	0	0	0
04:15 PM	0	0	0	0	0	0	0	0	0	0	0	0	0	0	0	0	0
04:30 PM	0	0	0	0	0	0	0	0	0	0	0	0	0	0	0	0	0
04:45 PM	0	0	0	0	0	0	0	0	0	0	0	0	0	0	0	0	0
Total	0	0	0	0	0	0	0	0	0	0	0	0	0	0	0	0	0
05:00 PM	0	0	0	0	0	0	0	0	0	0	0	0	0	0	0	0	0
05:15 PM	0	0	0	0	0	0	0	0	0	0	0	0	0	0	0	0	0
05:30 PM	0	0	0	0	0	0	0	0	0	0	0	0	0	0	0	0	0
05:45 PM	0	0	0	0	0	0	0	0	0	0	0	0	0	0	0	0	0
Total	0	0	0	0	0	0	0	0	0	0	0	0	0	0	0	0	0
Grand Total	0	0	0	0	0	0	0	0	0	0	0	0	0	0	0	0	0
Apprch %	0	0	0		0	0	0		0	0	0		0	0	0		
Total %																	

	Holder Street Southbound				Driveway 3 Westbound				Holder Street Northbound				Driveway 3 Eastbound				
Start Time	Left	Thru	Right	App. Total	Left	Thru	Right	App. Total	Left	Thru	Right	App. Total	Left	Thru	Right	App. Total	Int. Total
Peak Hour Analysis From 04:30 PM to 05:15 PM - Peak 1 of 1																	
Peak Hour for Entire Intersection Begins at 04:30 PM																	
04:30 PM	0	0	0	0	0	0	0	0	0	0	0	0	0	0	0	0	0
04:45 PM	0	0	0	0	0	0	0	0	0	0	0	0	0	0	0	0	0
05:00 PM	0	0	0	0	0	0	0	0	0	0	0	0	0	0	0	0	0
05:15 PM	0	0	0	0	0	0	0	0	0	0	0	0	0	0	0	0	0
Total Volume	0	0	0	0	0	0	0	0	0	0	0	0	0	0	0	0	0
% App. Total	0	0	0		0	0	0		0	0	0		0	0	0		
PHF	.000	.000	.000	.000	.000	.000	.000	.000	.000	.000	.000	.000	.000	.000	.000	.000	.000

Counts Unlimited
PO Box 1178
Corona, CA 92878
951-268-6268

City of Cypress
N/S: Holder Street
E/W: Driveway 3
Weather: Clear

File Name : 13_CYP_Holder_Dwy 3_PM
Site Code : 05120183
Start Date : 3/12/2020
Page No : 2

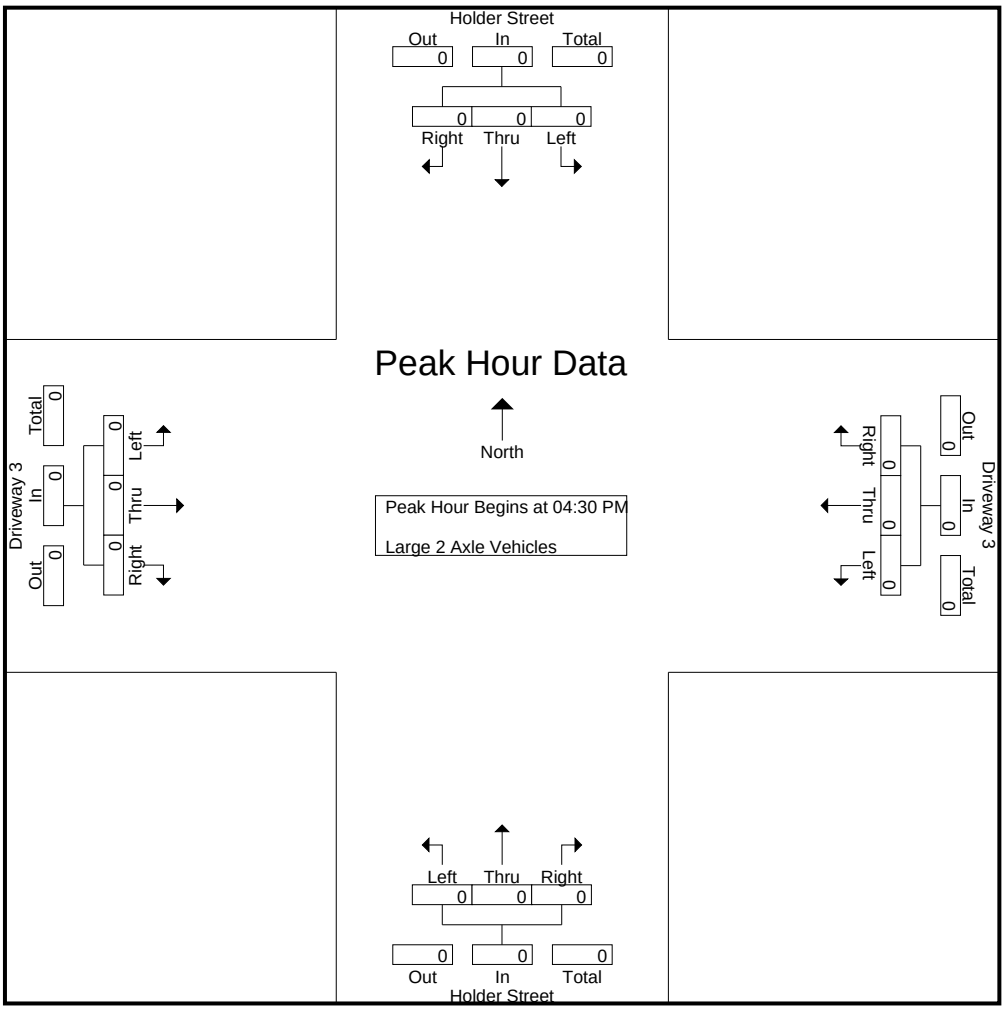

Peak Hour Analysis From 04:30 PM to 05:15 PM - Peak 1 of 1
Peak Hour for Each Approach Begins at:

	04:30 PM				04:30 PM				04:30 PM				04:30 PM			
+0 mins.	0	0	0	0	0	0	0	0	0	0	0	0	0	0	0	0
+15 mins.	0	0	0	0	0	0	0	0	0	0	0	0	0	0	0	0
+30 mins.	0	0	0	0	0	0	0	0	0	0	0	0	0	0	0	0
+45 mins.	0	0	0	0	0	0	0	0	0	0	0	0	0	0	0	0
Total Volume	0	0	0	0	0	0	0	0	0	0	0	0	0	0	0	0
% App. Total	0	0	0		0	0	0		0	0	0		0	0	0	
PHF	.000	.000	.000	.000	.000	.000	.000	.000	.000	.000	.000	.000	.000	.000	.000	.000

Counts Unlimited
PO Box 1178
Corona, CA 92878
951-268-6268

City of Cypress
N/S: Holder Street
E/W: Driveway 3
Weather: Clear

File Name : 13_CYP_Holder_Dwy 3_PM
Site Code : 05120183
Start Date : 3/12/2020
Page No : 1

Groups Printed- 3 Axle Vehicles

	Holder Street Southbound				Driveway 3 Westbound				Holder Street Northbound				Driveway 3 Eastbound				
Start Time	Left	Thru	Right	App. Total	Left	Thru	Right	App. Total	Left	Thru	Right	App. Total	Left	Thru	Right	App. Total	Int. Total
04:00 PM	0	0	0	0	0	0	0	0	0	0	0	0	0	0	0	0	0
04:15 PM	0	0	0	0	0	0	0	0	0	0	0	0	0	0	0	0	0
04:30 PM	0	0	0	0	0	0	0	0	0	0	0	0	0	0	0	0	0
04:45 PM	0	0	0	0	0	0	0	0	0	0	0	0	0	0	0	0	0
Total	0	0	0	0	0	0	0	0	0	0	0	0	0	0	0	0	0
05:00 PM	0	0	0	0	0	0	0	0	0	0	0	0	0	0	0	0	0
05:15 PM	0	0	0	0	0	0	0	0	0	0	0	0	0	0	0	0	0
05:30 PM	0	0	0	0	0	0	0	0	0	0	0	0	0	0	0	0	0
05:45 PM	0	0	0	0	0	0	0	0	0	0	0	0	0	0	0	0	0
Total	0	0	0	0	0	0	0	0	0	0	0	0	0	0	0	0	0
Grand Total	0	0	0	0	0	0	0	0	0	0	0	0	0	0	0	0	0
Apprch %	0	0	0		0	0	0		0	0	0		0	0	0		
Total %																	

	Holder Street Southbound				Driveway 3 Westbound				Holder Street Northbound				Driveway 3 Eastbound				
Start Time	Left	Thru	Right	App. Total	Left	Thru	Right	App. Total	Left	Thru	Right	App. Total	Left	Thru	Right	App. Total	Int. Total
Peak Hour Analysis From 04:30 PM to 05:15 PM - Peak 1 of 1																	
Peak Hour for Entire Intersection Begins at 04:30 PM																	
04:30 PM	0	0	0	0	0	0	0	0	0	0	0	0	0	0	0	0	0
04:45 PM	0	0	0	0	0	0	0	0	0	0	0	0	0	0	0	0	0
05:00 PM	0	0	0	0	0	0	0	0	0	0	0	0	0	0	0	0	0
05:15 PM	0	0	0	0	0	0	0	0	0	0	0	0	0	0	0	0	0
Total Volume	0	0	0	0	0	0	0	0	0	0	0	0	0	0	0	0	0
% App. Total	0	0	0		0	0	0		0	0	0		0	0	0		
PHF	.000	.000	.000	.000	.000	.000	.000	.000	.000	.000	.000	.000	.000	.000	.000	.000	.000

Counts Unlimited
PO Box 1178
Corona, CA 92878
951-268-6268

City of Cypress
N/S: Holder Street
E/W: Driveway 3
Weather: Clear

File Name : 13_CYP_Holder_Dwy 3_PM
Site Code : 05120183
Start Date : 3/12/2020
Page No : 2

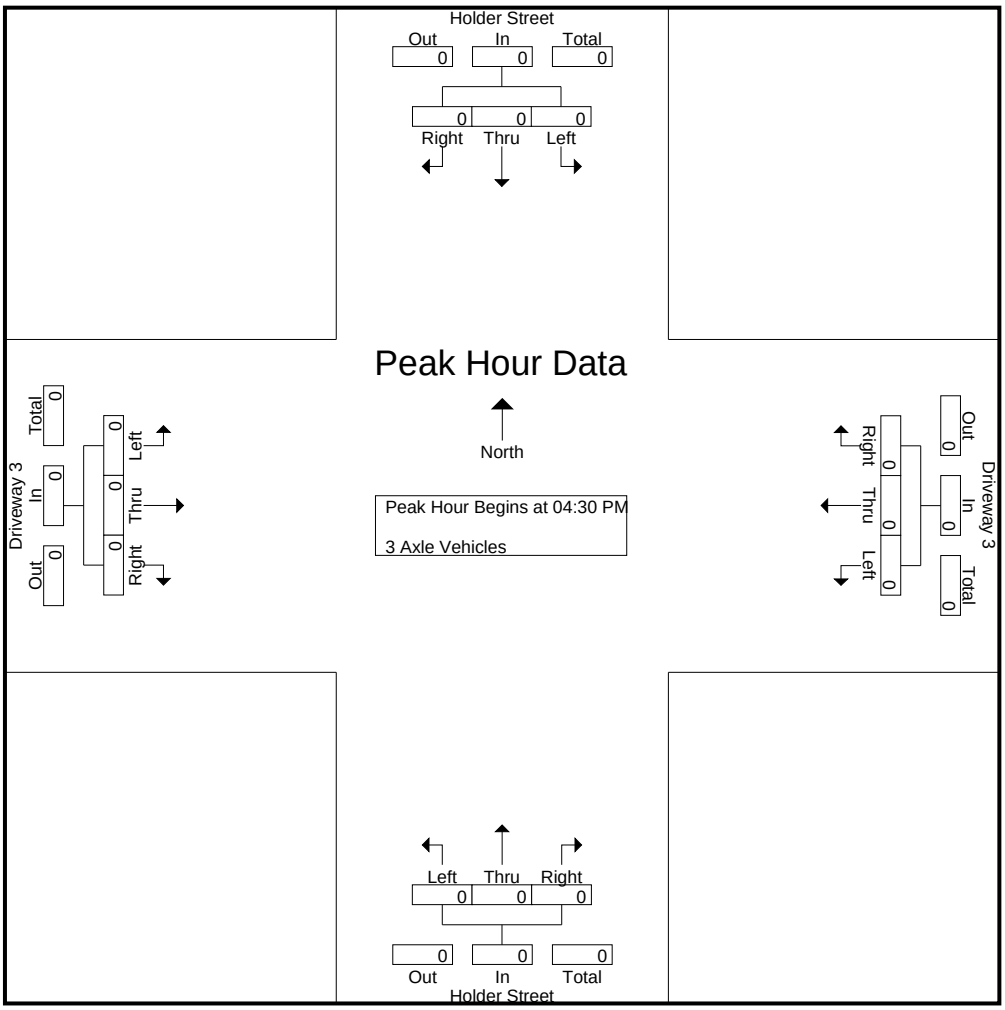

Peak Hour Analysis From 04:30 PM to 05:15 PM - Peak 1 of 1
Peak Hour for Each Approach Begins at:

	04:30 PM				04:30 PM				04:30 PM				04:30 PM			
+0 mins.	0	0	0	0	0	0	0	0	0	0	0	0	0	0	0	0
+15 mins.	0	0	0	0	0	0	0	0	0	0	0	0	0	0	0	0
+30 mins.	0	0	0	0	0	0	0	0	0	0	0	0	0	0	0	0
+45 mins.	0	0	0	0	0	0	0	0	0	0	0	0	0	0	0	0
Total Volume	0	0	0	0	0	0	0	0	0	0	0	0	0	0	0	0
% App. Total	0	0	0		0	0	0		0	0	0		0	0	0	
PHF	.000	.000	.000	.000	.000	.000	.000	.000	.000	.000	.000	.000	.000	.000	.000	.000

Counts Unlimited
PO Box 1178
Corona, CA 92878
951-268-6268

City of Cypress
N/S: Holder Street
E/W: Driveway 3
Weather: Clear

File Name : 13_CYP_Holder_Dwy 3_PM
Site Code : 05120183
Start Date : 3/12/2020
Page No : 1

Groups Printed- 4+ Axle Trucks

	Holder Street Southbound				Driveway 3 Westbound				Holder Street Northbound				Driveway 3 Eastbound				
Start Time	Left	Thru	Right	App. Total	Left	Thru	Right	App. Total	Left	Thru	Right	App. Total	Left	Thru	Right	App. Total	Int. Total
04:00 PM	0	0	0	0	0	0	0	0	0	0	0	0	0	0	0	0	0
04:15 PM	0	0	0	0	0	0	0	0	0	0	0	0	0	0	0	0	0
04:30 PM	0	0	0	0	0	0	0	0	0	0	0	0	0	0	0	0	0
04:45 PM	0	0	0	0	0	0	0	0	0	0	0	0	0	0	0	0	0
Total	0	0	0	0	0	0	0	0	0	0	0	0	0	0	0	0	0
05:00 PM	0	0	0	0	0	0	0	0	0	0	0	0	0	0	0	0	0
05:15 PM	0	0	0	0	0	0	0	0	0	0	0	0	0	0	0	0	0
05:30 PM	0	0	0	0	0	0	0	0	0	0	0	0	0	0	0	0	0
05:45 PM	0	0	0	0	0	0	0	0	0	0	0	0	0	0	0	0	0
Total	0	0	0	0	0	0	0	0	0	0	0	0	0	0	0	0	0
Grand Total	0	0	0	0	0	0	0	0	0	0	0	0	0	0	0	0	0
Apprch %	0	0	0		0	0	0		0	0	0		0	0	0		
Total %																	

	Holder Street Southbound				Driveway 3 Westbound				Holder Street Northbound				Driveway 3 Eastbound				
Start Time	Left	Thru	Right	App. Total	Left	Thru	Right	App. Total	Left	Thru	Right	App. Total	Left	Thru	Right	App. Total	Int. Total
Peak Hour Analysis From 04:30 PM to 05:15 PM - Peak 1 of 1																	
Peak Hour for Entire Intersection Begins at 04:30 PM																	
04:30 PM	0	0	0	0	0	0	0	0	0	0	0	0	0	0	0	0	0
04:45 PM	0	0	0	0	0	0	0	0	0	0	0	0	0	0	0	0	0
05:00 PM	0	0	0	0	0	0	0	0	0	0	0	0	0	0	0	0	0
05:15 PM	0	0	0	0	0	0	0	0	0	0	0	0	0	0	0	0	0
Total Volume	0	0	0	0	0	0	0	0	0	0	0	0	0	0	0	0	0
% App. Total	0	0	0		0	0	0		0	0	0		0	0	0		
PHF	.000	.000	.000	.000	.000	.000	.000	.000	.000	.000	.000	.000	.000	.000	.000	.000	.000

Counts Unlimited
PO Box 1178
Corona, CA 92878
951-268-6268

City of Cypress
N/S: Holder Street
E/W: Driveway 3
Weather: Clear

File Name : 13_CYP_Holder_Dwy 3_PM
Site Code : 05120183
Start Date : 3/12/2020
Page No : 2

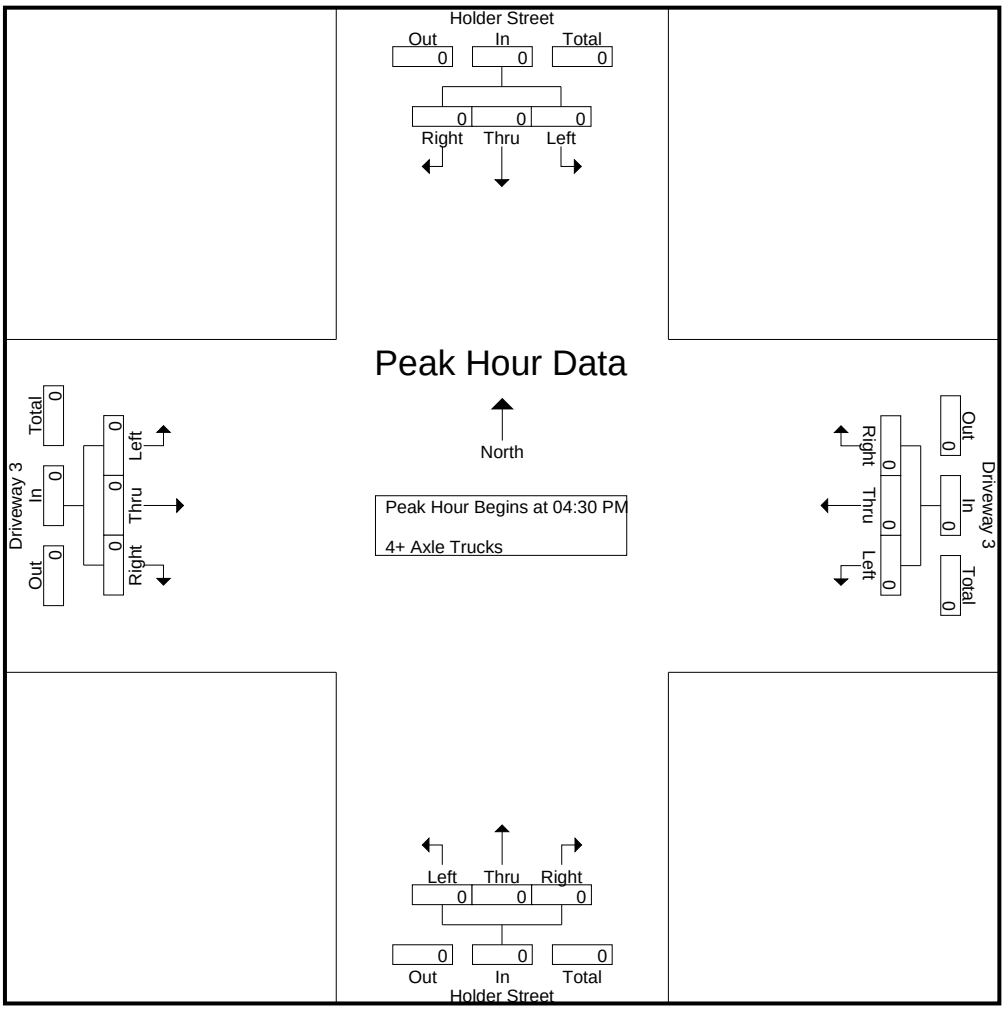

Peak Hour Analysis From 04:30 PM to 05:15 PM - Peak 1 of 1
Peak Hour for Each Approach Begins at:

	04:30 PM				04:30 PM				04:30 PM				04:30 PM			
+0 mins.	0	0	0	0	0	0	0	0	0	0	0	0	0	0	0	0
+15 mins.	0	0	0	0	0	0	0	0	0	0	0	0	0	0	0	0
+30 mins.	0	0	0	0	0	0	0	0	0	0	0	0	0	0	0	0
+45 mins.	0	0	0	0	0	0	0	0	0	0	0	0	0	0	0	0
Total Volume	0	0	0	0	0	0	0	0	0	0	0	0	0	0	0	0
% App. Total	0	0	0		0	0	0		0	0	0		0	0	0	
PHF	.000	.000	.000	.000	.000	.000	.000	.000	.000	.000	.000	.000	.000	.000	.000	.000

Location: Cypress
N/S: Holder Street
E/W: Driveway 3

Date: 3/12/2020
Day: Thursday

PEDESTRIANS

	North Leg Holder Street Pedestrians	East Leg Driveway 3 Pedestrians	South Leg Holder Street Pedestrians	West Leg Driveway 3 Pedestrians	
7:00 AM	0	0	0	0	0
7:15 AM	0	0	0	0	0
7:30 AM	0	0	0	0	0
7:45 AM	0	0	0	0	0
8:00 AM	0	0	0	0	0
8:15 AM	0	0	0	0	0
8:30 AM	0	0	0	0	0
8:45 AM	0	0	0	0	0
TOTAL VOLUMES:	0	0	0	0	0

	North Leg Holder Street Pedestrians	East Leg Driveway 3 Pedestrians	South Leg Holder Street Pedestrians	West Leg Driveway 3 Pedestrians	
4:00 PM	0	0	0	0	0
4:15 PM	0	0	0	0	0
4:30 PM	0	0	0	0	0
4:45 PM	0	0	0	0	0
5:00 PM	0	0	0	0	0
5:15 PM	0	0	0	0	0
5:30 PM	0	0	0	0	0
5:45 PM	0	0	0	0	0
TOTAL VOLUMES:	0	0	0	0	0

Location: Cypress
N/S: Holder Street
E/W: Driveway 3

Date: 3/12/2020
Day: Thursday

BICYCLES

	Southbound Holder Street			Westbound Driveway 3			Northbound Holder Street			Eastbound Driveway 3			
	Left	Thru	Right	Left	Thru	Right	Left	Thru	Right	Left	Thru	Right	
7:00 AM	0	0	0	0	0	0	0	0	0	0	0	0	0
7:15 AM	0	0	0	0	0	0	0	0	0	0	0	0	0
7:30 AM	0	0	0	0	0	0	0	0	0	0	0	0	0
7:45 AM	0	0	0	0	0	0	0	0	0	0	0	0	0
8:00 AM	0	0	0	0	0	0	0	0	0	0	0	0	0
8:15 AM	0	0	0	0	0	0	0	0	0	0	0	0	0
8:30 AM	0	0	0	0	0	0	0	0	0	0	0	0	0
8:45 AM	0	0	0	0	0	0	0	0	0	0	0	0	0
TOTAL VOLUMES:	0	0	0	0	0	0	0	0	0	0	0	0	0

	Southbound Holder Street			Westbound Driveway 3			Northbound Holder Street			Eastbound Driveway 3			
	Left	Thru	Right	Left	Thru	Right	Left	Thru	Right	Left	Thru	Right	
4:00 PM	0	0	0	0	0	0	0	0	0	0	0	0	0
4:15 PM	0	0	0	0	0	0	0	0	0	0	0	0	0
4:30 PM	0	0	0	0	0	0	0	0	0	0	0	0	0
4:45 PM	0	0	0	0	0	0	0	0	0	0	0	0	0
5:00 PM	0	0	0	0	0	0	0	0	0	0	0	0	0
5:15 PM	0	0	0	0	0	0	0	0	0	0	0	0	0
5:30 PM	0	0	0	0	0	0	0	0	0	0	0	0	0
5:45 PM	0	0	0	0	0	0	0	0	0	0	0	0	0
TOTAL VOLUMES:	0	0	0	0	0	0	0	0	0	0	0	0	0

Counts Unlimited, Inc.
PO Box 1178
Corona, CA 92878
951-268-6268

Counts Unlimited
PO Box 1178
Corona, CA 92878
951-268-6268

City of Cypress
N/S: Holder Street
E/W: Driveway 4
Weather: Clear

File Name : 14_CYP_Holder_Dwy 4_AM
Site Code : 05120183
Start Date : 3/12/2020
Page No : 1

Groups Printed- Passenger Vehicles - Large 2 Axle Vehicles - 3 Axle Vehicles - 4+ Axle Trucks

	Holder Street Southbound			Driveway 4 Westbound			Driveway 4 Eastbound			
Start Time	Left	Right	App. Total	Thru	Right	App. Total	Left	Thru	App. Total	Int. Total
07:00 AM	0	0	0	0	0	0	0	0	0	0
07:15 AM	0	0	0	0	0	0	0	0	0	0
07:30 AM	1	0	1	0	1	1	0	0	0	2
07:45 AM	6	0	6	0	1	1	0	0	0	7
Total	7	0	7	0	2	2	0	0	0	9
08:00 AM	2	0	2	0	0	0	0	0	0	2
08:15 AM	2	0	2	0	0	0	0	0	0	2
08:30 AM	3	0	3	0	1	1	0	0	0	4
08:45 AM	7	0	7	0	1	1	0	0	0	8
Total	14	0	14	0	2	2	0	0	0	16
Grand Total	21	0	21	0	4	4	0	0	0	25
Apprch %	100	0		0	100		0	0		
Total %	84	0	84	0	16	16	0	0	0	
Passenger Vehicles	20	0	20	0	3	3	0	0	0	23
% Passenger Vehicles	95.2	0	95.2	0	75	75	0	0	0	92
Large 2 Axle Vehicles	1	0	1	0	1	1	0	0	0	2
% Large 2 Axle Vehicles										
3 Axle Vehicles	0	0	0	0	0	0	0	0	0	0
% 3 Axle Vehicles	0	0	0	0	0	0	0	0	0	0
4+ Axle Trucks	0	0	0	0	0	0	0	0	0	0
% 4+ Axle Trucks	0	0	0	0	0	0	0	0	0	0

	Holder Street Southbound			Driveway 4 Westbound			Driveway 4 Eastbound			
Start Time	Left	Right	App. Total	Thru	Right	App. Total	Left	Thru	App. Total	Int. Total
Peak Hour Analysis From 07:00 AM to 08:45 AM - Peak 1 of 1										
Peak Hour for Entire Intersection Begins at 08:00 AM										
08:00 AM	2	0	2	0	0	0	0	0	0	2
08:15 AM	2	0	2	0	0	0	0	0	0	2
08:30 AM	3	0	3	0	**1**	**1**	0	0	0	4
08:45 AM	**7**	0	**7**	0	1	1	0	0	0	**8**
Total Volume	14	0	14	0	2	2	0	0	0	16
% App. Total	100	0		0	100		0	0		
PHF	.500	.000	.500	.000	.500	.500	.000	.000	.000	.500

Counts Unlimited
PO Box 1178
Corona, CA 92878
951-268-6268

City of Cypress
N/S: Holder Street
E/W: Driveway 4
Weather: Clear

File Name : 14_CYP_Holder_Dwy 4_AM
Site Code : 05120183
Start Date : 3/12/2020
Page No : 2

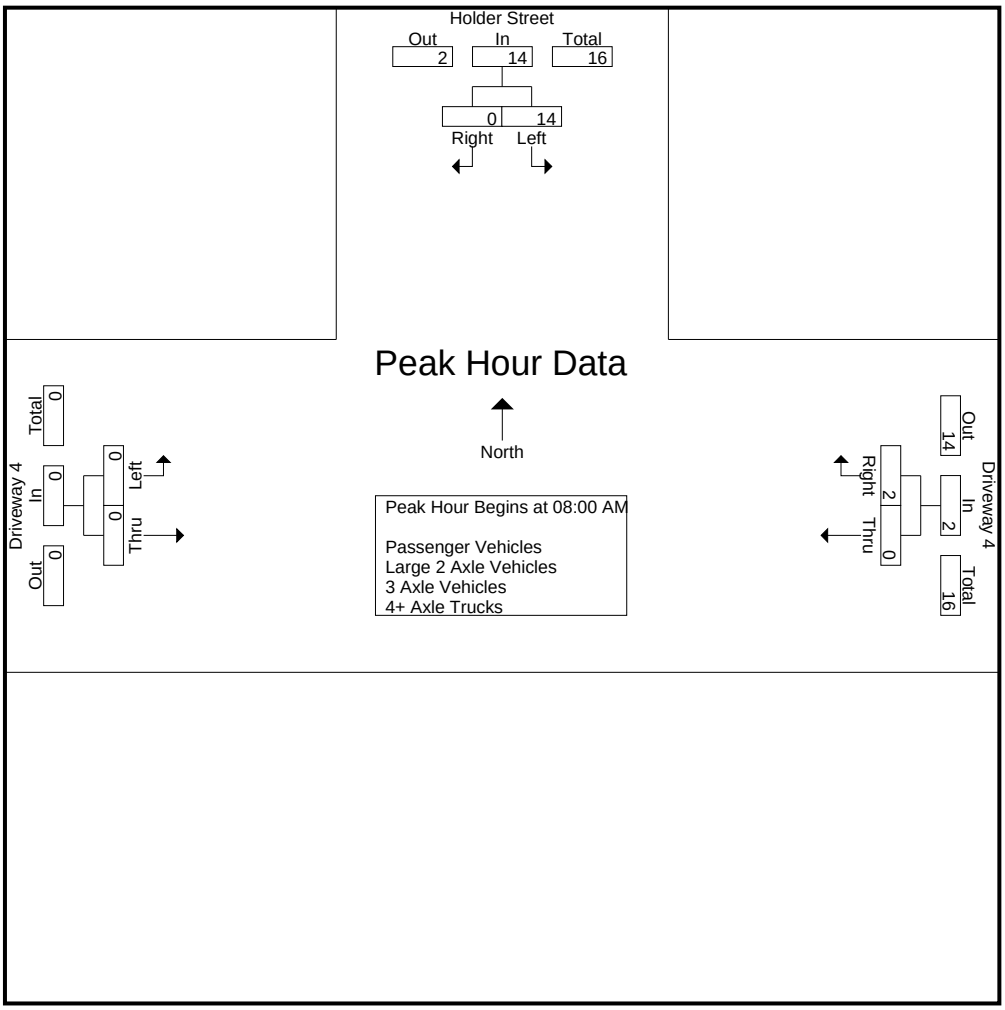

Peak Hour Analysis From 07:00 AM to 08:45 AM - Peak 1 of 1
Peak Hour for Each Approach Begins at:

	08:00 AM			07:00 AM			07:00 AM		
+0 mins.	2	0	2	0	0	0	0	0	0
+15 mins.	2	0	2	0	0	0	0	0	0
+30 mins.	3	0	3	0	**1**	**1**	0	0	0
+45 mins.	**7**	0	**7**	0	1	1	0	0	0
Total Volume	14	0	14	0	2	2	0	0	0
% App. Total	100	0		0	100		0	0	
PHF	.500	.000	.500	.000	.500	.500	.000	.000	.000

Counts Unlimited
PO Box 1178
Corona, CA 92878
951-268-6268

City of Cypress
N/S: Holder Street
E/W: Driveway 4
Weather: Clear

File Name : 14_CYP_Holder_Dwy 4_AM
Site Code : 05120183
Start Date : 3/12/2020
Page No : 1

Groups Printed- Large 2 Axle Vehicles

	Holder Street Southbound			Driveway 4 Westbound			Driveway 4 Eastbound			
Start Time	Left	Right	App. Total	Thru	Right	App. Total	Left	Thru	App. Total	Int. Total
07:00 AM	0	0	0	0	0	0	0	0	0	0
07:15 AM	0	0	0	0	0	0	0	0	0	0
07:30 AM	0	0	0	0	0	0	0	0	0	0
07:45 AM	0	0	0	0	0	0	0	0	0	0
Total	0	0	0	0	0	0	0	0	0	0
08:00 AM	0	0	0	0	0	0	0	0	0	0
08:15 AM	0	0	0	0	0	0	0	0	0	0
08:30 AM	0	0	0	0	0	0	0	0	0	0
08:45 AM	1	0	1	0	1	1	0	0	0	2
Total	1	0	1	0	1	1	0	0	0	2
Grand Total	1	0	1	0	1	1	0	0	0	2
Apprch %	100	0		0	100		0	0		
Total %	50	0	50	0	50	50	0	0	0	

	Holder Street Southbound			Driveway 4 Westbound			Driveway 4 Eastbound			
Start Time	Left	Right	App. Total	Thru	Right	App. Total	Left	Thru	App. Total	Int. Total
Peak Hour Analysis From 08:00 AM to 08:45 AM - Peak 1 of 1										
Peak Hour for Entire Intersection Begins at 08:00 AM										
08:00 AM	0	0	0	0	0	0	0	0	0	0
08:15 AM	0	0	0	0	0	0	0	0	0	0
08:30 AM	0	0	0	0	0	0	0	0	0	0
08:45 AM	**1**	0	**1**	0	**1**	**1**	0	0	0	**2**
Total Volume	1	0	1	0	1	1	0	0	0	2
% App. Total	100	0		0	100		0	0		
PHF	.250	.000	.250	.000	.250	.250	.000	.000	.000	.250

Counts Unlimited
PO Box 1178
Corona, CA 92878
951-268-6268

City of Cypress
N/S: Holder Street
E/W: Driveway 4
Weather: Clear

File Name : 14_CYP_Holder_Dwy 4_AM
Site Code : 05120183
Start Date : 3/12/2020
Page No : 2

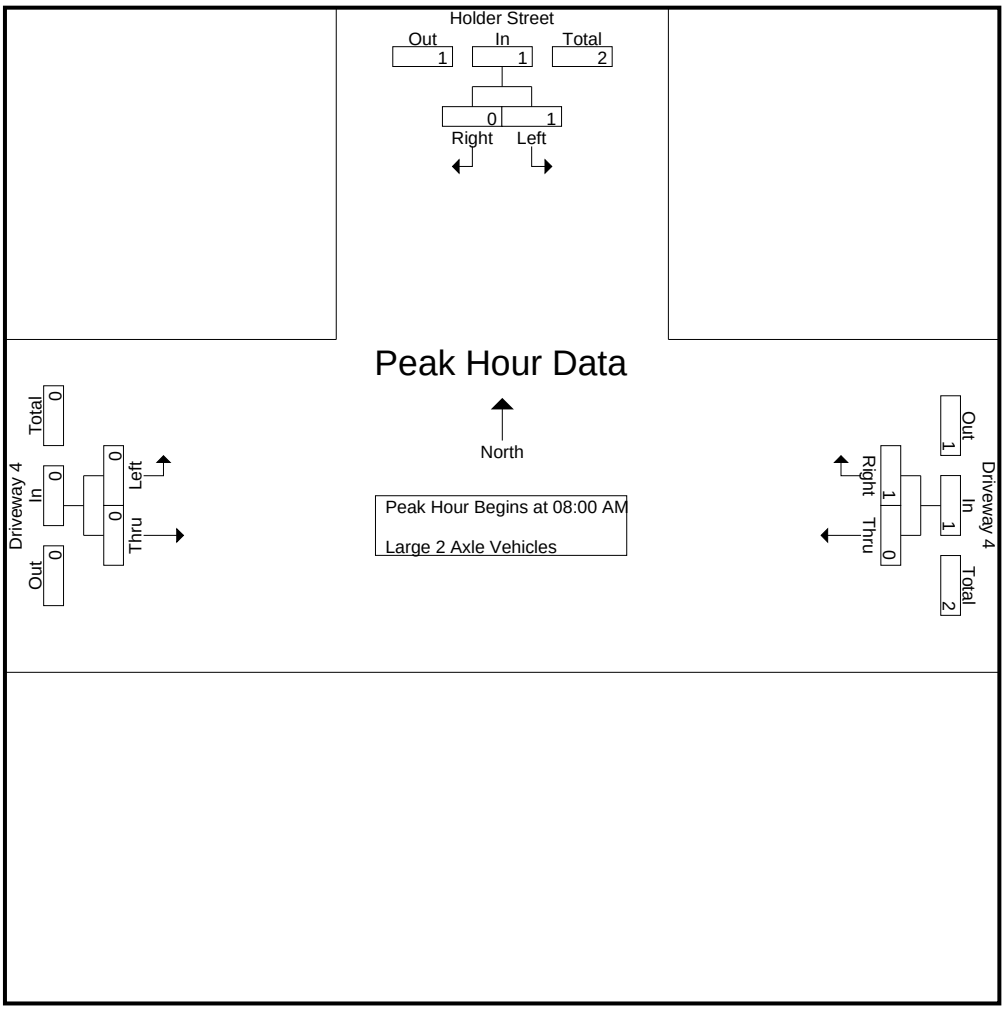

Peak Hour Analysis From 08:00 AM to 08:45 AM - Peak 1 of 1
Peak Hour for Each Approach Begins at:

	08:00 AM			08:00 AM			08:00 AM		
+0 mins.	0	0	0	0	0	0	0	0	0
+15 mins.	0	0	0	0	0	0	0	0	0
+30 mins.	0	0	0	0	0	0	0	0	0
+45 mins.	**1**	0	**1**	0	**1**	**1**	0	0	0
Total Volume	1	0	1	0	1	1	0	0	0
% App. Total	100	0		0	100		0	0	
PHF	.250	.000	.250	.000	.250	.250	.000	.000	.000

Counts Unlimited
PO Box 1178
Corona, CA 92878
951-268-6268

City of Cypress
N/S: Holder Street
E/W: Driveway 4
Weather: Clear

File Name : 14_CYP_Holder_Dwy 4_AM
Site Code : 05120183
Start Date : 3/12/2020
Page No : 1

Groups Printed- 3 Axle Vehicles

	Holder Street Southbound			Driveway 4 Westbound			Driveway 4 Eastbound			
Start Time	Left	Right	App. Total	Thru	Right	App. Total	Left	Thru	App. Total	Int. Total
07:00 AM	0	0	0	0	0	0	0	0	0	0
07:15 AM	0	0	0	0	0	0	0	0	0	0
07:30 AM	0	0	0	0	0	0	0	0	0	0
07:45 AM	0	0	0	0	0	0	0	0	0	0
Total	0	0	0	0	0	0	0	0	0	0
08:00 AM	0	0	0	0	0	0	0	0	0	0
08:15 AM	0	0	0	0	0	0	0	0	0	0
08:30 AM	0	0	0	0	0	0	0	0	0	0
08:45 AM	0	0	0	0	0	0	0	0	0	0
Total	0	0	0	0	0	0	0	0	0	0
Grand Total	0	0	0	0	0	0	0	0	0	0
Apprch %	0	0		0	0		0	0		
Total %										

	Holder Street Southbound			Driveway 4 Westbound			Driveway 4 Eastbound			
Start Time	Left	Right	App. Total	Thru	Right	App. Total	Left	Thru	App. Total	Int. Total
Peak Hour Analysis From 08:00 AM to 08:45 AM - Peak 1 of 1										
Peak Hour for Entire Intersection Begins at 08:00 AM										
08:00 AM	0	0	0	0	0	0	0	0	0	0
08:15 AM	0	0	0	0	0	0	0	0	0	0
08:30 AM	0	0	0	0	0	0	0	0	0	0
08:45 AM	0	0	0	0	0	0	0	0	0	0
Total Volume	0	0	0	0	0	0	0	0	0	0
% App. Total	0	0		0	0		0	0		
PHF	.000	.000	.000	.000	.000	.000	.000	.000	.000	.000

Counts Unlimited
PO Box 1178
Corona, CA 92878
951-268-6268

City of Cypress
N/S: Holder Street
E/W: Driveway 4
Weather: Clear

File Name : 14_CYP_Holder_Dwy 4_AM
Site Code : 05120183
Start Date : 3/12/2020
Page No : 2

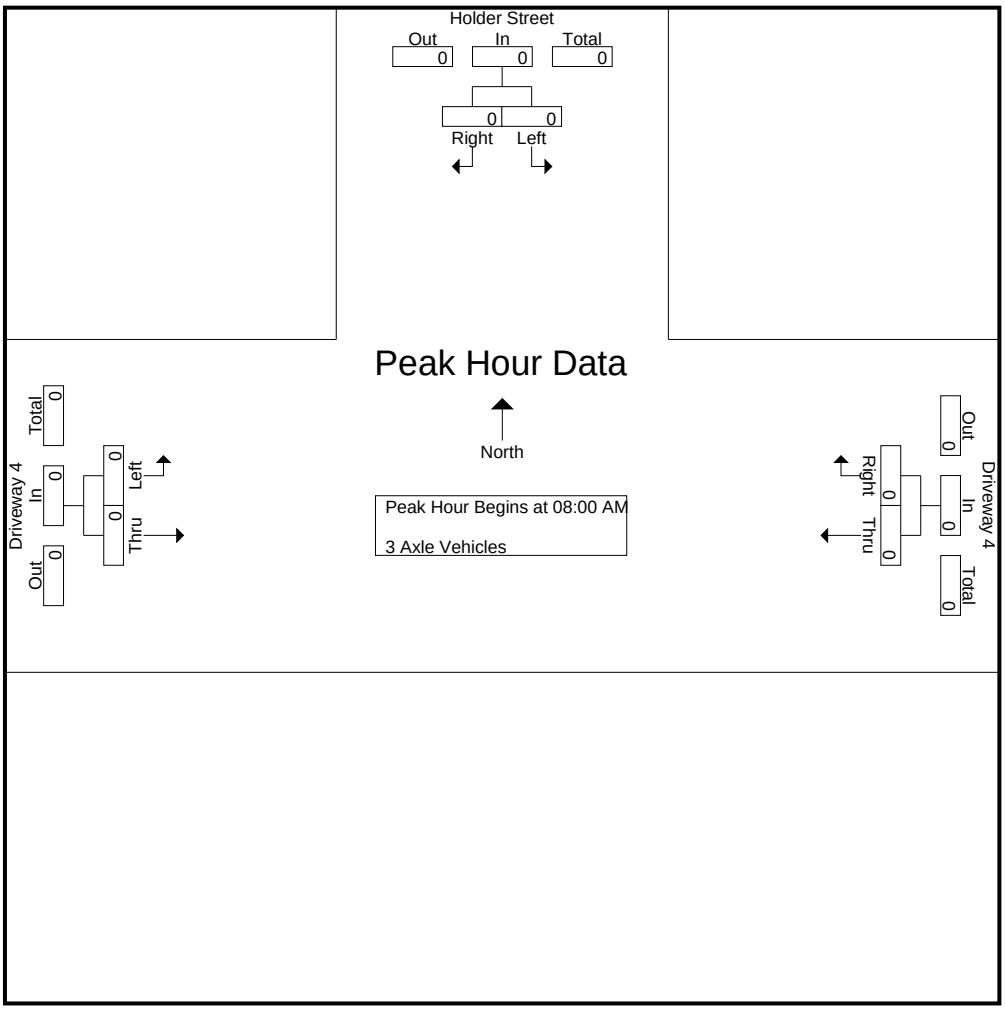

Peak Hour Analysis From 08:00 AM to 08:45 AM - Peak 1 of 1
Peak Hour for Each Approach Begins at:

	08:00 AM			08:00 AM			08:00 AM		
+0 mins.	0	0	0	0	0	0	0	0	0
+15 mins.	0	0	0	0	0	0	0	0	0
+30 mins.	0	0	0	0	0	0	0	0	0
+45 mins.	0	0	0	0	0	0	0	0	0
Total Volume	0	0	0	0	0	0	0	0	0
% App. Total	0	0		0	0		0	0	
PHF	.000	.000	.000	.000	.000	.000	.000	.000	.000

Counts Unlimited
PO Box 1178
Corona, CA 92878
951-268-6268

City of Cypress
N/S: Holder Street
E/W: Driveway 4
Weather: Clear

File Name : 14_CYP_Holder_Dwy 4_AM
Site Code : 05120183
Start Date : 3/12/2020
Page No : 1

Groups Printed- 4+ Axle Trucks

	Holder Street Southbound			Driveway 4 Westbound			Driveway 4 Eastbound			
Start Time	Left	Right	App. Total	Thru	Right	App. Total	Left	Thru	App. Total	Int. Total
07:00 AM	0	0	0	0	0	0	0	0	0	0
07:15 AM	0	0	0	0	0	0	0	0	0	0
07:30 AM	0	0	0	0	0	0	0	0	0	0
07:45 AM	0	0	0	0	0	0	0	0	0	0
Total	0	0	0	0	0	0	0	0	0	0
08:00 AM	0	0	0	0	0	0	0	0	0	0
08:15 AM	0	0	0	0	0	0	0	0	0	0
08:30 AM	0	0	0	0	0	0	0	0	0	0
08:45 AM	0	0	0	0	0	0	0	0	0	0
Total	0	0	0	0	0	0	0	0	0	0
Grand Total	0	0	0	0	0	0	0	0	0	0
Apprch %	0	0		0	0		0	0		
Total %										

	Holder Street Southbound			Driveway 4 Westbound			Driveway 4 Eastbound			
Start Time	Left	Right	App. Total	Thru	Right	App. Total	Left	Thru	App. Total	Int. Total
Peak Hour Analysis From 08:00 AM to 08:45 AM - Peak 1 of 1										
Peak Hour for Entire Intersection Begins at 08:00 AM										
08:00 AM	0	0	0	0	0	0	0	0	0	0
08:15 AM	0	0	0	0	0	0	0	0	0	0
08:30 AM	0	0	0	0	0	0	0	0	0	0
08:45 AM	0	0	0	0	0	0	0	0	0	0
Total Volume	0	0	0	0	0	0	0	0	0	0
% App. Total	0	0		0	0		0	0		
PHF	.000	.000	.000	.000	.000	.000	.000	.000	.000	.000

Counts Unlimited
PO Box 1178
Corona, CA 92878
951-268-6268

City of Cypress
N/S: Holder Street
E/W: Driveway 4
Weather: Clear

File Name : 14_CYP_Holder_Dwy 4_AM
Site Code : 05120183
Start Date : 3/12/2020
Page No : 2

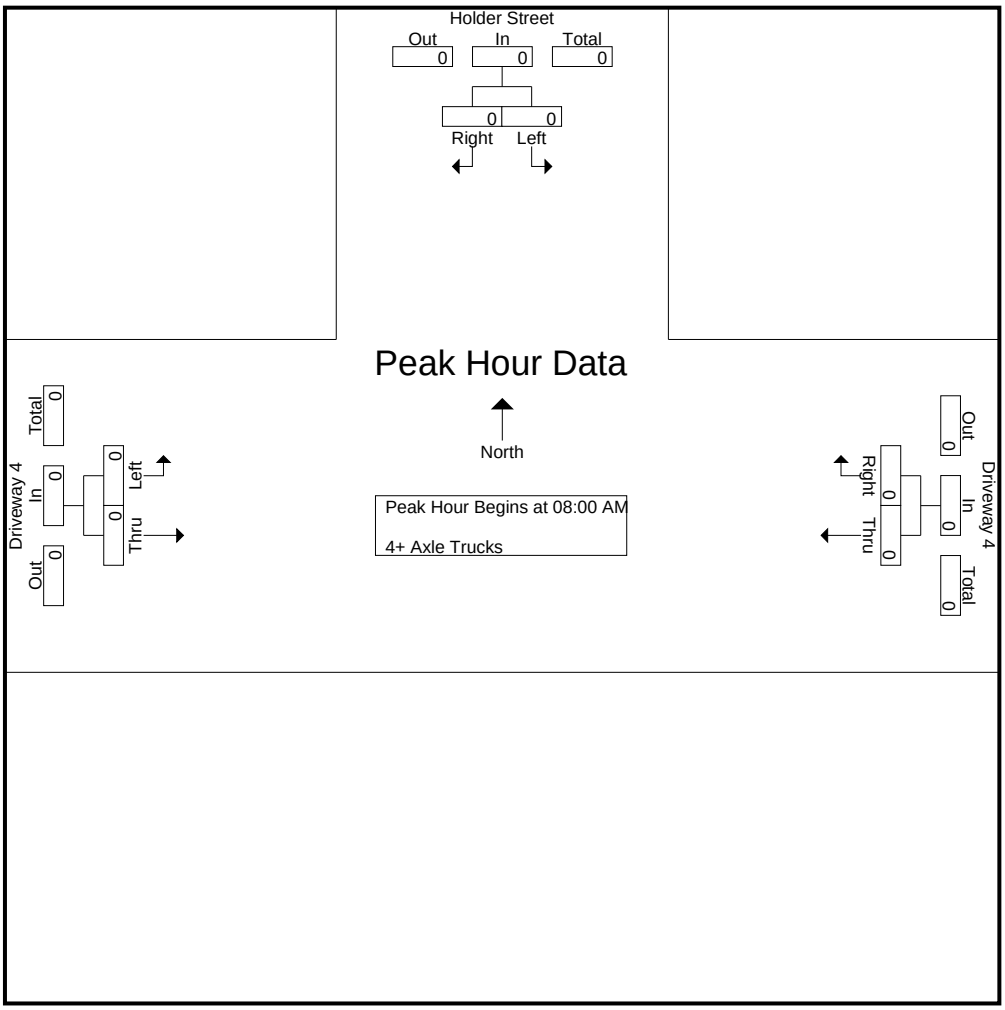

Peak Hour Analysis From 08:00 AM to 08:45 AM - Peak 1 of 1
Peak Hour for Each Approach Begins at:

	08:00 AM			08:00 AM			08:00 AM		
+0 mins.	0	0	0	0	0	0	0	0	0
+15 mins.	0	0	0	0	0	0	0	0	0
+30 mins.	0	0	0	0	0	0	0	0	0
+45 mins.	0	0	0	0	0	0	0	0	0
Total Volume	0	0	0	0	0	0	0	0	0
% App. Total	0	0		0	0		0	0	
PHF	.000	.000	.000	.000	.000	.000	.000	.000	.000

Counts Unlimited
PO Box 1178
Corona, CA 92878
951-268-6268

City of Cypress
N/S: Holder Street
E/W: Driveway 4
Weather: Clear

File Name : 14_CYP_Holder_Dwy 4_PM
Site Code : 05120183
Start Date : 3/12/2020
Page No : 1

Groups Printed- Passenger Vehicles - Large 2 Axle Vehicles - 3 Axle Vehicles - 4+ Axle Trucks

	Holder Street Southbound			Driveway 4 Westbound			Driveway 4 Eastbound			
Start Time	Left	Right	App. Total	Thru	Right	App. Total	Left	Thru	App. Total	Int. Total
04:00 PM	1	0	1	0	2	2	0	0	0	3
04:15 PM	1	0	1	0	2	2	0	0	0	3
04:30 PM	1	0	1	0	4	4	0	0	0	5
04:45 PM	0	0	0	0	1	1	0	0	0	1
Total	3	0	3	0	9	9	0	0	0	12
05:00 PM	1	0	1	0	4	4	0	0	0	5
05:15 PM	0	0	0	0	5	5	0	0	0	5
05:30 PM	0	0	0	0	1	1	0	0	0	1
05:45 PM	0	0	0	0	1	1	0	0	0	1
Total	1	0	1	0	11	11	0	0	0	12
Grand Total	4	0	4	0	20	20	0	0	0	24
Apprch %	100	0		0	100		0	0		
Total %	16.7	0	16.7	0	83.3	83.3	0	0	0	
Passenger Vehicles	4	0	4	0	20	20	0	0	0	24
% Passenger Vehicles	100	0	100	0	100	100	0	0	0	100
Large 2 Axle Vehicles	0	0	0	0	0	0	0	0	0	0
% Large 2 Axle Vehicles										
3 Axle Vehicles	0	0	0	0	0	0	0	0	0	0
% 3 Axle Vehicles	0	0	0	0	0	0	0	0	0	0
4+ Axle Trucks	0	0	0	0	0	0	0	0	0	0
% 4+ Axle Trucks	0	0	0	0	0	0	0	0	0	0

	Holder Street Southbound			Driveway 4 Westbound			Driveway 4 Eastbound			
Start Time	Left	Right	App. Total	Thru	Right	App. Total	Left	Thru	App. Total	Int. Total
Peak Hour Analysis From 04:00 PM to 05:45 PM - Peak 1 of 1										
Peak Hour for Entire Intersection Begins at 04:30 PM										
04:30 PM	**1**	0	**1**	0	4	4	0	0	0	**5**
04:45 PM	0	0	0	0	1	1	0	0	0	1
05:00 PM	1	0	1	0	4	4	0	0	0	5
05:15 PM	0	0	0	0	**5**	**5**	0	0	0	5
Total Volume	2	0	2	0	14	14	0	0	0	16
% App. Total	100	0		0	100		0	0		
PHF	.500	.000	.500	.000	.700	.700	.000	.000	.000	.800

Counts Unlimited
PO Box 1178
Corona, CA 92878
951-268-6268

City of Cypress
N/S: Holder Street
E/W: Driveway 4
Weather: Clear

File Name : 14_CYP_Holder_Dwy 4_PM
Site Code : 05120183
Start Date : 3/12/2020
Page No : 2

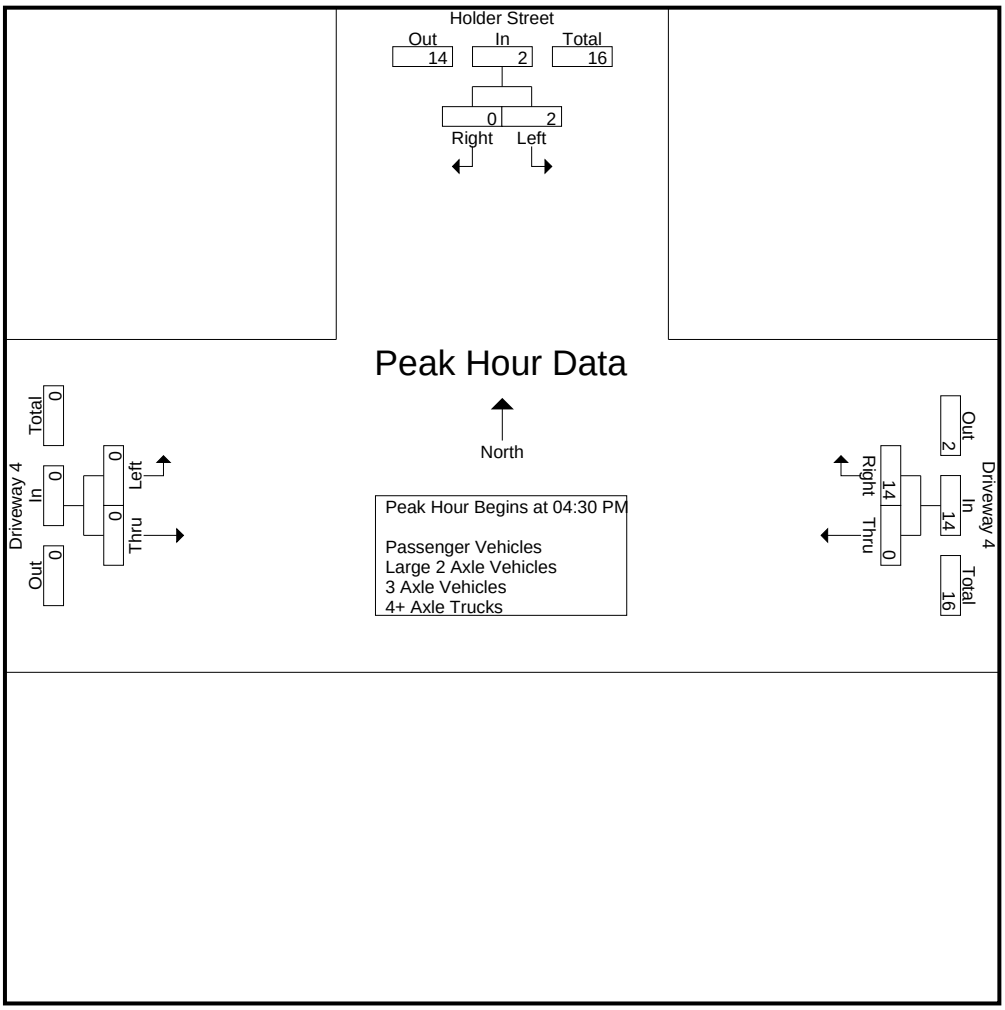

Peak Hour Analysis From 04:00 PM to 05:45 PM - Peak 1 of 1
Peak Hour for Each Approach Begins at:

	04:00 PM			04:30 PM			04:00 PM		
+0 mins.	**1**	0	**1**	0	4	4	0	0	0
+15 mins.	1	0	1	0	1	1	0	0	0
+30 mins.	1	0	1	0	4	4	0	0	0
+45 mins.	0	0	0	0	**5**	**5**	0	0	0
Total Volume	3	0	3	0	14	14	0	0	0
% App. Total	100	0		0	100		0	0	
PHF	.750	.000	.750	.000	.700	.700	.000	.000	.000

Counts Unlimited
PO Box 1178
Corona, CA 92878
951-268-6268

City of Cypress
N/S: Holder Street
E/W: Driveway 4
Weather: Clear

File Name : 14_CYP_Holder_Dwy 4_PM
Site Code : 05120183
Start Date : 3/12/2020
Page No : 1

Groups Printed- Large 2 Axle Vehicles

	Holder Street Southbound			Driveway 4 Westbound			Driveway 4 Eastbound			
Start Time	Left	Right	App. Total	Thru	Right	App. Total	Left	Thru	App. Total	Int. Total
04:00 PM	0	0	0	0	0	0	0	0	0	0
04:15 PM	0	0	0	0	0	0	0	0	0	0
04:30 PM	0	0	0	0	0	0	0	0	0	0
04:45 PM	0	0	0	0	0	0	0	0	0	0
Total	0	0	0	0	0	0	0	0	0	0
05:00 PM	0	0	0	0	0	0	0	0	0	0
05:15 PM	0	0	0	0	0	0	0	0	0	0
05:30 PM	0	0	0	0	0	0	0	0	0	0
05:45 PM	0	0	0	0	0	0	0	0	0	0
Total	0	0	0	0	0	0	0	0	0	0
Grand Total	0	0	0	0	0	0	0	0	0	0
Apprch %	0	0		0	0		0	0		
Total %										

	Holder Street Southbound			Driveway 4 Westbound			Driveway 4 Eastbound			
Start Time	Left	Right	App. Total	Thru	Right	App. Total	Left	Thru	App. Total	Int. Total
Peak Hour Analysis From 04:30 PM to 05:15 PM - Peak 1 of 1										
Peak Hour for Entire Intersection Begins at 04:30 PM										
04:30 PM	0	0	0	0	0	0	0	0	0	0
04:45 PM	0	0	0	0	0	0	0	0	0	0
05:00 PM	0	0	0	0	0	0	0	0	0	0
05:15 PM	0	0	0	0	0	0	0	0	0	0
Total Volume	0	0	0	0	0	0	0	0	0	0
% App. Total	0	0		0	0		0	0		
PHF	.000	.000	.000	.000	.000	.000	.000	.000	.000	.000

Counts Unlimited
PO Box 1178
Corona, CA 92878
951-268-6268

City of Cypress
N/S: Holder Street
E/W: Driveway 4
Weather: Clear

File Name : 14_CYP_Holder_Dwy 4_PM
Site Code : 05120183
Start Date : 3/12/2020
Page No : 2

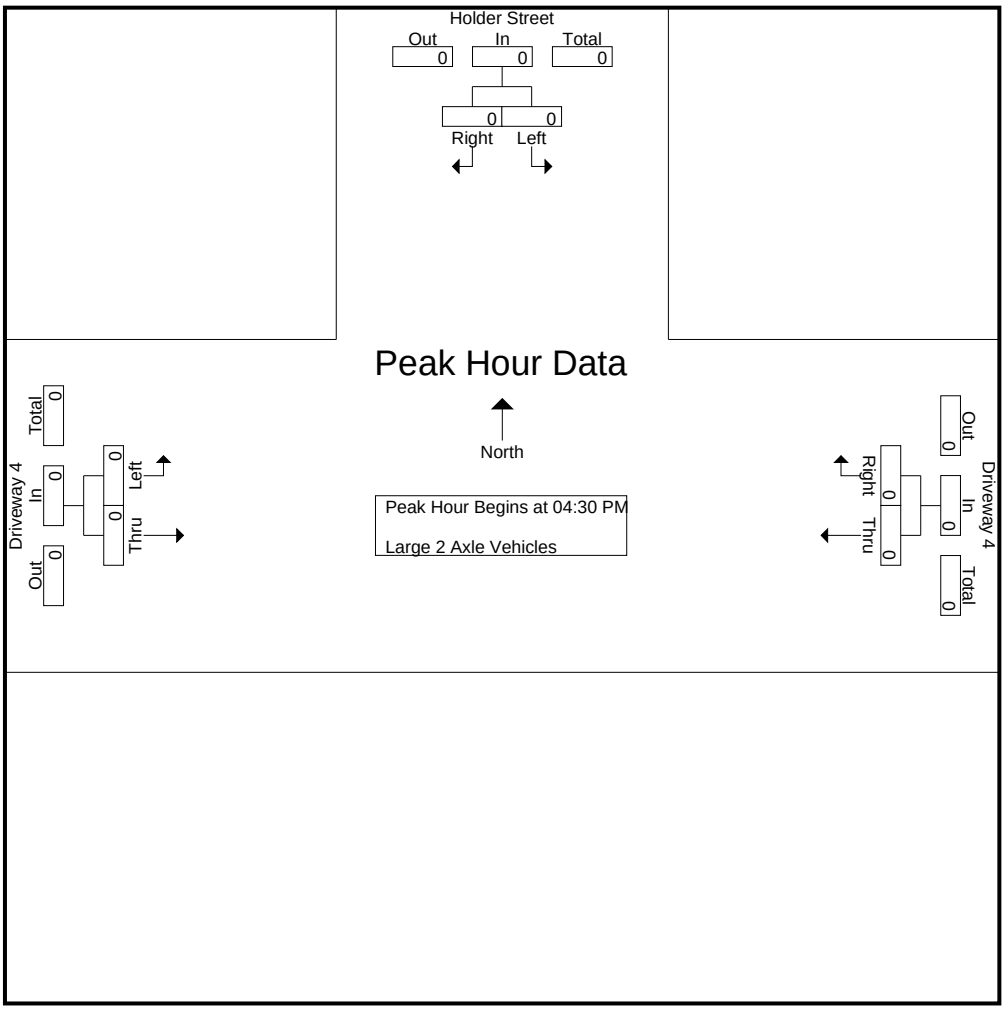

Peak Hour Analysis From 04:30 PM to 05:15 PM - Peak 1 of 1
Peak Hour for Each Approach Begins at:

	04:30 PM			04:30 PM			04:30 PM		
+0 mins.	0	0	0	0	0	0	0	0	0
+15 mins.	0	0	0	0	0	0	0	0	0
+30 mins.	0	0	0	0	0	0	0	0	0
+45 mins.	0	0	0	0	0	0	0	0	0
Total Volume	0	0	0	0	0	0	0	0	0
% App. Total	0	0		0	0		0	0	
PHF	.000	.000	.000	.000	.000	.000	.000	.000	.000

Counts Unlimited
PO Box 1178
Corona, CA 92878
951-268-6268

City of Cypress
N/S: Holder Street
E/W: Driveway 4
Weather: Clear

File Name : 14_CYP_Holder_Dwy 4_PM
Site Code : 05120183
Start Date : 3/12/2020
Page No : 1

Groups Printed- 3 Axle Vehicles

	Holder Street Southbound			Driveway 4 Westbound			Driveway 4 Eastbound			
Start Time	Left	Right	App. Total	Thru	Right	App. Total	Left	Thru	App. Total	Int. Total
04:00 PM	0	0	0	0	0	0	0	0	0	0
04:15 PM	0	0	0	0	0	0	0	0	0	0
04:30 PM	0	0	0	0	0	0	0	0	0	0
04:45 PM	0	0	0	0	0	0	0	0	0	0
Total	0	0	0	0	0	0	0	0	0	0
05:00 PM	0	0	0	0	0	0	0	0	0	0
05:15 PM	0	0	0	0	0	0	0	0	0	0
05:30 PM	0	0	0	0	0	0	0	0	0	0
05:45 PM	0	0	0	0	0	0	0	0	0	0
Total	0	0	0	0	0	0	0	0	0	0
Grand Total	0	0	0	0	0	0	0	0	0	0
Apprch %	0	0		0	0		0	0		
Total %										

	Holder Street Southbound			Driveway 4 Westbound			Driveway 4 Eastbound			
Start Time	Left	Right	App. Total	Thru	Right	App. Total	Left	Thru	App. Total	Int. Total
Peak Hour Analysis From 04:30 PM to 05:15 PM - Peak 1 of 1										
Peak Hour for Entire Intersection Begins at 04:30 PM										
04:30 PM	0	0	0	0	0	0	0	0	0	0
04:45 PM	0	0	0	0	0	0	0	0	0	0
05:00 PM	0	0	0	0	0	0	0	0	0	0
05:15 PM	0	0	0	0	0	0	0	0	0	0
Total Volume	0	0	0	0	0	0	0	0	0	0
% App. Total	0	0		0	0		0	0		
PHF	.000	.000	.000	.000	.000	.000	.000	.000	.000	.000

Counts Unlimited
PO Box 1178
Corona, CA 92878
951-268-6268

City of Cypress
N/S: Holder Street
E/W: Driveway 4
Weather: Clear

File Name : 14_CYP_Holder_Dwy 4_PM
Site Code : 05120183
Start Date : 3/12/2020
Page No : 2

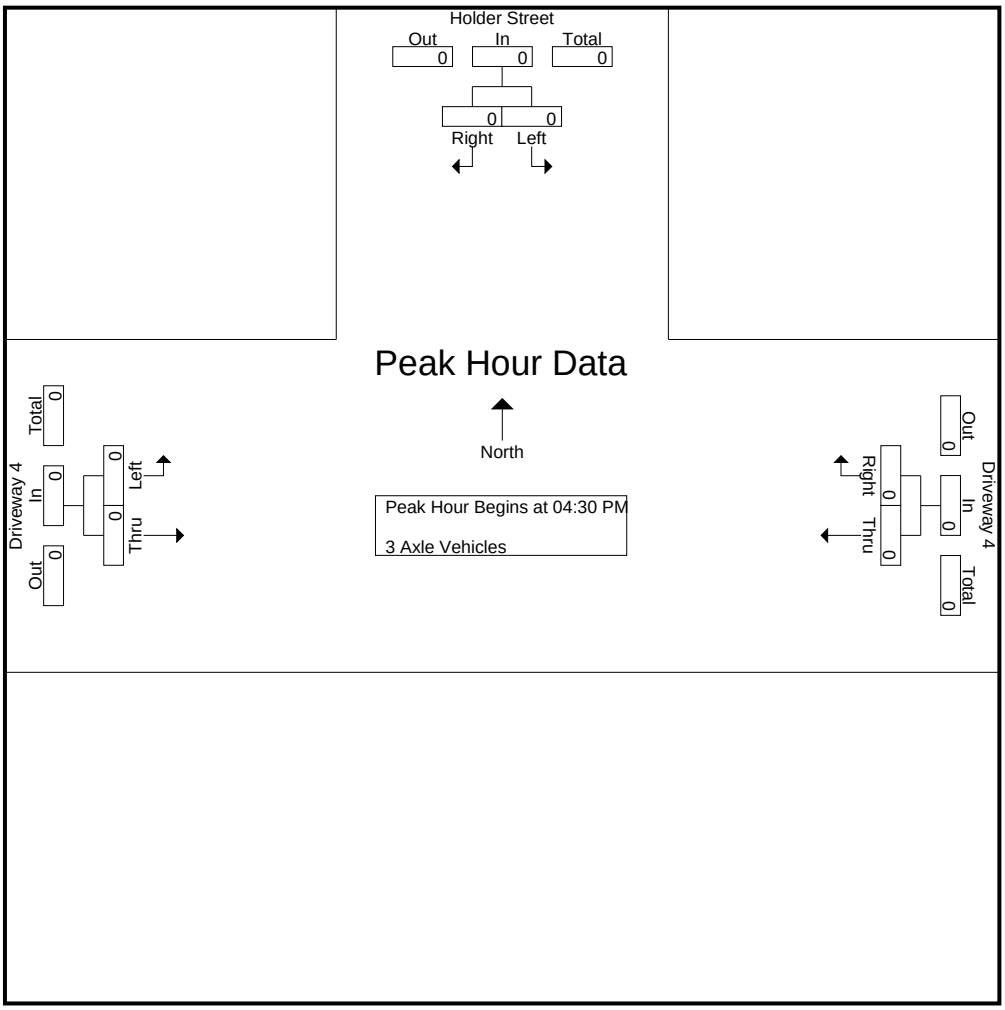

Peak Hour Analysis From 04:30 PM to 05:15 PM - Peak 1 of 1
Peak Hour for Each Approach Begins at:

	04:30 PM			04:30 PM			04:30 PM		
+0 mins.	0	0	0	0	0	0	0	0	0
+15 mins.	0	0	0	0	0	0	0	0	0
+30 mins.	0	0	0	0	0	0	0	0	0
+45 mins.	0	0	0	0	0	0	0	0	0
Total Volume	0	0	0	0	0	0	0	0	0
% App. Total	0	0		0	0		0	0	
PHF	.000	.000	.000	.000	.000	.000	.000	.000	.000

Counts Unlimited
PO Box 1178
Corona, CA 92878
951-268-6268

City of Cypress
N/S: Holder Street
E/W: Driveway 4
Weather: Clear

File Name : 14_CYP_Holder_Dwy 4_PM
Site Code : 05120183
Start Date : 3/12/2020
Page No : 1

Groups Printed- 4+ Axle Trucks

	Holder Street Southbound			Driveway 4 Westbound			Driveway 4 Eastbound			
Start Time	Left	Right	App. Total	Thru	Right	App. Total	Left	Thru	App. Total	Int. Total
04:00 PM	0	0	0	0	0	0	0	0	0	0
04:15 PM	0	0	0	0	0	0	0	0	0	0
04:30 PM	0	0	0	0	0	0	0	0	0	0
04:45 PM	0	0	0	0	0	0	0	0	0	0
Total	0	0	0	0	0	0	0	0	0	0
05:00 PM	0	0	0	0	0	0	0	0	0	0
05:15 PM	0	0	0	0	0	0	0	0	0	0
05:30 PM	0	0	0	0	0	0	0	0	0	0
05:45 PM	0	0	0	0	0	0	0	0	0	0
Total	0	0	0	0	0	0	0	0	0	0
Grand Total	0	0	0	0	0	0	0	0	0	0
Apprch %	0	0		0	0		0	0		
Total %										

	Holder Street Southbound			Driveway 4 Westbound			Driveway 4 Eastbound			
Start Time	Left	Right	App. Total	Thru	Right	App. Total	Left	Thru	App. Total	Int. Total
Peak Hour Analysis From 04:30 PM to 05:15 PM - Peak 1 of 1										
Peak Hour for Entire Intersection Begins at 04:30 PM										
04:30 PM	0	0	0	0	0	0	0	0	0	0
04:45 PM	0	0	0	0	0	0	0	0	0	0
05:00 PM	0	0	0	0	0	0	0	0	0	0
05:15 PM	0	0	0	0	0	0	0	0	0	0
Total Volume	0	0	0	0	0	0	0	0	0	0
% App. Total	0	0		0	0		0	0		
PHF	.000	.000	.000	.000	.000	.000	.000	.000	.000	.000

Counts Unlimited
PO Box 1178
Corona, CA 92878
951-268-6268

City of Cypress
N/S: Holder Street
E/W: Driveway 4
Weather: Clear

File Name : 14_CYP_Holder_Dwy 4_PM
Site Code : 05120183
Start Date : 3/12/2020
Page No : 2

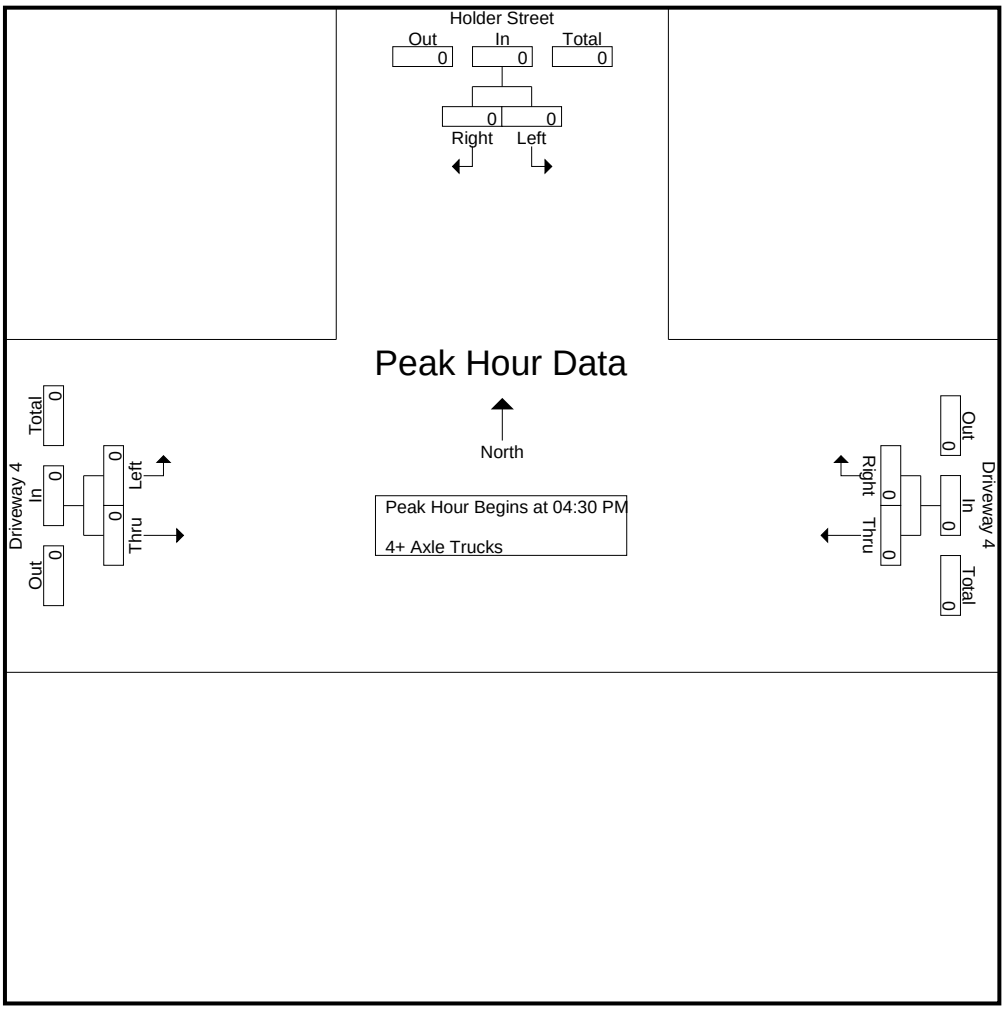

Peak Hour Analysis From 04:30 PM to 05:15 PM - Peak 1 of 1
Peak Hour for Each Approach Begins at:

	04:30 PM			04:30 PM			04:30 PM		
+0 mins.	0	0	0	0	0	0	0	0	0
+15 mins.	0	0	0	0	0	0	0	0	0
+30 mins.	0	0	0	0	0	0	0	0	0
+45 mins.	0	0	0	0	0	0	0	0	0
Total Volume	0	0	0	0	0	0	0	0	0
% App. Total	0	0		0	0		0	0	
PHF	.000	.000	.000	.000	.000	.000	.000	.000	.000

Location: Cypress
N/S: Holder Street
E/W: Driveway 4

Date: 3/12/2020
Day: Thursday

PEDESTRIANS

	North Leg Holder Street Pedestrians	East Leg Driveway 4 Pedestrians	South Leg Holder Street Pedestrians	West Leg Driveway 4 Pedestrians	
7:00 AM	0	0	0	0	0
7:15 AM	0	0	0	0	0
7:30 AM	0	0	0	0	0
7:45 AM	0	0	0	0	0
8:00 AM	0	0	0	0	0
8:15 AM	0	0	0	0	0
8:30 AM	0	0	0	0	0
8:45 AM	0	0	0	0	0
TOTAL VOLUMES:	0	0	0	0	0

	North Leg Holder Street Pedestrians	East Leg Driveway 4 Pedestrians	South Leg Holder Street Pedestrians	West Leg Driveway 4 Pedestrians	
4:00 PM	0	0	0	0	0
4:15 PM	0	0	0	0	0
4:30 PM	0	0	0	0	0
4:45 PM	0	0	0	0	0
5:00 PM	0	0	0	0	0
5:15 PM	0	0	0	0	0
5:30 PM	0	0	0	0	0
5:45 PM	0	0	0	0	0
TOTAL VOLUMES:	0	0	0	0	0

Counts Unlimited, Inc.
PO Box 1178
Corona, CA 92878
951-268-6268

Location: Cypress
N/S: Holder Street
E/W: Driveway 4

Date: 3/12/2020
Day: Thursday

BICYCLES

	Southbound Holder Street			Westbound Driveway 4			Northbound Holder Street			Eastbound Driveway 4			
	Left	Thru	Right	Left	Thru	Right	Left	Thru	Right	Left	Thru	Right	
7:00 AM	0	0	0	0	0	0	0	0	0	0	0	0	0
7:15 AM	0	0	0	0	0	0	0	0	0	0	0	0	0
7:30 AM	0	0	0	0	0	0	0	0	0	0	0	0	0
7:45 AM	0	0	0	0	0	0	0	0	0	0	0	0	0
8:00 AM	0	0	0	0	0	0	0	0	0	0	0	0	0
8:15 AM	0	0	0	0	0	0	0	0	0	0	0	0	0
8:30 AM	0	0	0	0	0	0	0	0	0	0	0	0	0
8:45 AM	0	0	0	0	0	0	0	0	0	0	0	0	0
TOTAL VOLUMES:	0	0	0	0	0	0	0	0	0	0	0	0	0

	Southbound Holder Street			Westbound Driveway 4			Northbound Holder Street			Eastbound Driveway 4			
	Left	Thru	Right	Left	Thru	Right	Left	Thru	Right	Left	Thru	Right	
4:00 PM	0	0	0	0	0	0	0	0	0	0	0	0	0
4:15 PM	0	0	0	0	0	0	0	0	0	0	0	0	0
4:30 PM	0	0	0	0	0	0	0	0	0	0	0	0	0
4:45 PM	0	0	0	0	0	0	0	0	0	0	0	0	0
5:00 PM	0	0	0	0	0	0	0	0	0	0	0	0	0
5:15 PM	0	0	0	0	0	0	0	0	0	0	0	0	0
5:30 PM	0	0	0	0	0	0	0	0	0	0	0	0	0
5:45 PM	0	0	0	0	0	0	0	0	0	0	0	0	0
TOTAL VOLUMES:	0	0	0	0	0	0	0	0	0	0	0	0	0

Counts Unlimited, Inc.
PO Box 1178
Corona, CA 92878
951-268-6268

Counts Unlimited
PO Box 1178
Corona, CA 92878
951-268-6268

City of Cypress
N/S: Knott Avenue
E/W: Katella Avenue
Weather: Clear

File Name : 09_CYP_Knott_Kat AM
Site Code : 05120183
Start Date : 3/12/2020
Page No : 1

Groups Printed- Passenger Vehicles - Large 2 Axle Vehicles - 3 Axle Vehicles - 4+ Axle Trucks

	Knott Avenue Southbound					Katella Avenue Westbound					Knott Avenue Northbound					Katella Avenue Eastbound							
Start Time	Left	Thru	Right	RTOR	App. Total	Left	Thru	Right	RTOR	App. Total	Left	Thru	Right	RTOR	App. Total	Left	Thru	Right	RTOR	App. Total	Exclu. Total	Inclu. Total	Int. Total
07:00 AM	33	199	16	4	248	23	146	13	4	182	41	92	24	5	157	8	116	51	6	175	19	762	781
07:15 AM	18	238	22	4	278	37	253	21	6	311	48	138	29	4	215	11	106	62	12	179	26	983	1009
07:30 AM	29	230	28	10	287	45	224	40	5	309	73	144	30	5	247	8	131	50	10	189	30	1032	1062
07:45 AM	29	211	28	7	268	58	272	25	6	355	77	156	34	4	267	8	143	59	10	210	27	1100	1127
Total	109	878	94	25	1081	163	895	99	21	1157	239	530	117	18	886	35	496	222	38	753	102	3877	3979
08:00 AM	22	216	28	10	266	42	227	17	2	286	63	122	22	7	207	17	135	50	11	202	30	961	991
08:15 AM	27	187	35	7	249	37	191	16	2	244	72	127	27	4	226	10	123	37	3	170	16	889	905
08:30 AM	30	172	38	4	240	30	153	21	3	204	77	107	19	3	203	12	116	35	6	163	16	810	826
08:45 AM	28	162	23	6	213	42	173	19	4	234	63	131	17	4	211	14	95	43	6	152	20	810	830
Total	107	737	124	27	968	151	744	73	11	968	275	487	85	18	847	53	469	165	26	687	82	3470	3552
Grand Total	216	1615	218	52	2049	314	1639	172	32	2125	514	1017	202	36	1733	88	965	387	64	1440	184	7347	7531
Apprch %	10.5	78.8	10.6			14.8	77.1	8.1			29.7	58.7	11.7			6.1	67	26.9					
Total %	2.9	22	3		27.9	4.3	22.3	2.3		28.9	7	13.8	2.7		23.6	1.2	13.1	5.3		19.6	2.4	97.6	
Passenger Vehicles	209	1555	213		2028	299	1588	160		2078	490	970	189		1684	87	916	369		1432	0	0	7222
% Passenger Vehicles	96.8	96.3	97.7	98.1	96.5	95.2	96.9	93	96.9	96.3	95.3	95.4	93.6	97.2	95.2	98.9	94.9	95.3	93.8	95.2	0	0	95.9
Large 2 Axle Vehicles	7	35	5		48	9	33	10		53	14	33	8		56	1	36	12		51	0	0	208
% Large 2 Axle Vehicles	3.2	2.2	2.3	1.9	2.3	2.9	2	5.8	3.1	2.5	2.7	3.2	4	2.8	3.2	1.1	3.7	3.1	3.1	3.4	0	0	2.8
3 Axle Vehicles	0	6	0		6	1	12	0		13	0	3	2		5	0	4	1		5	0	0	29
% 3 Axle Vehicles	0	0.4	0	0	0.3	0.3	0.7	0	0	0.6	0	0.3	1	0	0.3	0	0.4	0.3	0	0.3	0	0	0.4
4+ Axle Trucks	0	19	0		19	5	6	2		13	10	11	3		24	0	9	5		16	0	0	72
% 4+ Axle Trucks	0	1.2	0	0	0.9	1.6	0.4	1.2	0	0.6	1.9	1.1	1.5	0	1.4	0	0.9	1.3	3.1	1.1	0	0	1

	Knott Avenue Southbound				Katella Avenue Westbound				Knott Avenue Northbound				Katella Avenue Eastbound				
Start Time	Left	Thru	Right	App. Total	Left	Thru	Right	App. Total	Left	Thru	Right	App. Total	Left	Thru	Right	App. Total	Int. Total
Peak Hour Analysis From 07:00 AM to 08:45 AM - Peak 1 of 1																	
Peak Hour for Entire Intersection Begins at 07:15 AM																	
07:15 AM	18	**238**	22	278	37	253	21	311	48	138	29	215	11	106	**62**	179	983
07:30 AM	**29**	230	**28**	**287**	45	224	**40**	309	73	144	30	247	8	131	50	189	1032
07:45 AM	29	211	28	268	**58**	**272**	25	**355**	**77**	**156**	**34**	**267**	8	**143**	59	**210**	**1100**
08:00 AM	22	216	28	266	42	227	17	286	63	122	22	207	**17**	135	50	202	961
Total Volume	98	895	106	1099	182	976	103	1261	261	560	115	936	44	515	221	780	4076
% App. Total	8.9	81.4	9.6		14.4	77.4	8.2		27.9	59.8	12.3		5.6	66	28.3		
PHF	.845	.940	.946	.957	.784	.897	.644	.888	.847	.897	.846	.876	.647	.900	.891	.929	.926

Counts Unlimited
PO Box 1178
Corona, CA 92878
951-268-6268

City of Cypress
N/S: Knott Avenue
E/W: Katella Avenue
Weather: Clear

File Name : 09_CYP_Knott_Kat AM
Site Code : 05120183
Start Date : 3/12/2020
Page No : 2

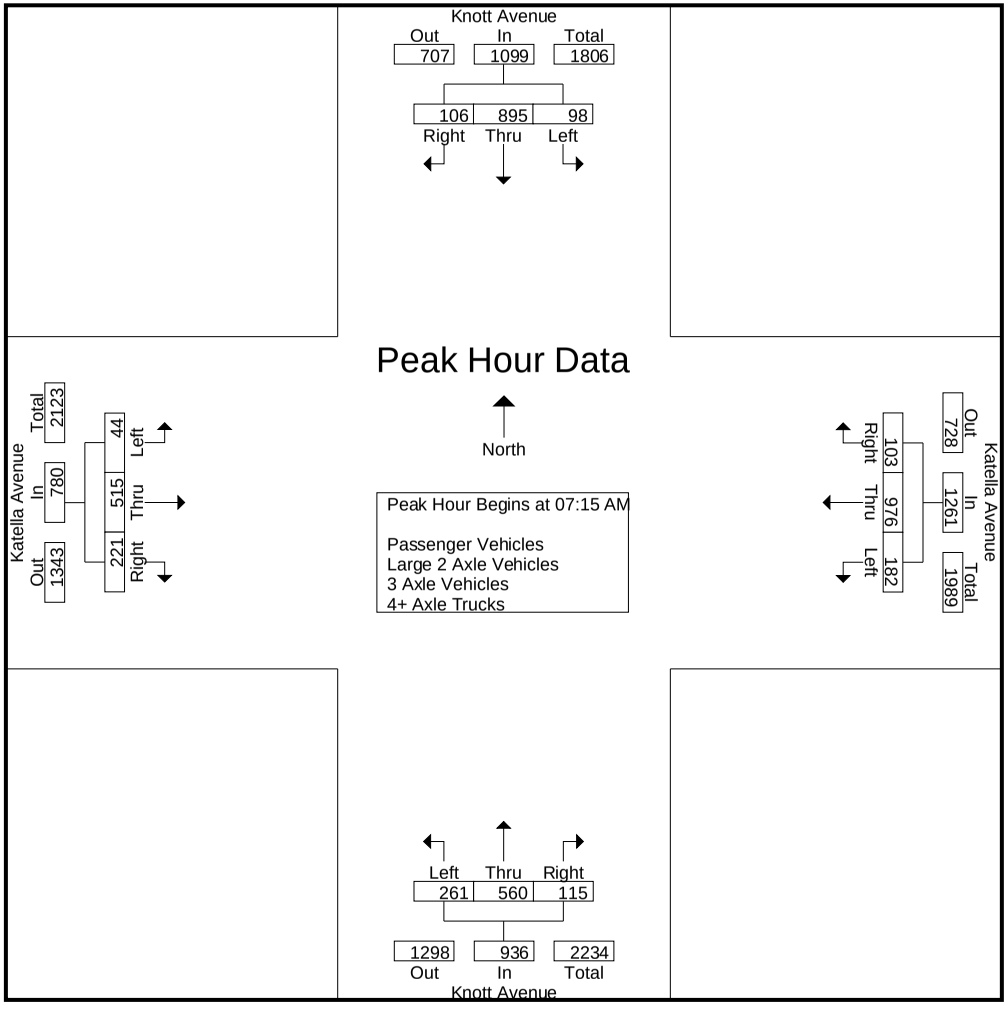

Counts Unlimited
PO Box 1178
Corona, CA 92878
951-268-6268

City of Cypress
N/S: Knott Avenue
E/W: Katella Avenue
Weather: Clear

File Name : 09_CYP_Knott_Kat AM
Site Code : 05120183
Start Date : 3/12/2020
Page No : 1

Groups Printed- Large 2 Axle Vehicles

	Knott Avenue Southbound					Katella Avenue Westbound					Knott Avenue Northbound					Katella Avenue Eastbound							
Start Time	Left	Thru	Right	RTOR	App. Total	Left	Thru	Right	RTOR	App. Total	Left	Thru	Right	RTOR	App. Total	Left	Thru	Right	RTOR	App. Total	Exclu. Total	Inclu. Total	Int. Total
07:00 AM	0	0	0	0	0	2	1	1	0	4	2	2	2	0	6	0	3	0	0	3	0	13	13
07:15 AM	1	6	0	0	7	0	6	1	0	7	1	3	3	1	7	0	4	0	0	4	1	25	26
07:30 AM	3	5	0	0	8	1	1	0	0	2	2	3	3	0	8	0	7	4	0	11	0	29	29
07:45 AM	0	3	0	0	3	2	3	1	0	6	1	4	0	0	5	1	5	1	1	7	1	21	22
Total	4	14	0	0	18	5	11	3	0	19	6	12	8	1	26	1	19	5	1	25	2	88	90
08:00 AM	0	4	0	0	4	1	4	2	0	7	1	4	0	0	5	0	6	2	0	8	0	24	24
08:15 AM	1	4	1	1	6	2	6	2	0	10	3	8	0	0	11	0	4	2	0	6	1	33	34
08:30 AM	2	7	1	0	10	0	5	3	1	8	2	6	0	0	8	0	3	2	1	5	2	31	33
08:45 AM	0	6	3	0	9	1	7	0	0	8	2	3	0	0	5	0	4	1	0	5	0	27	27
Total	3	21	5	1	29	4	22	7	1	33	8	21	0	0	29	0	17	7	1	24	3	115	118
Grand Total	7	35	5	1	47	9	33	10	1	52	14	33	8	1	55	1	36	12	2	49	5	203	208
Apprch %	14.9	74.5	10.6			17.3	63.5	19.2			25.5	60	14.5			2	73.5	24.5					
Total %	3.4	17.2	2.5		23.2	4.4	16.3	4.9		25.6	6.9	16.3	3.9		27.1	0.5	17.7	5.9		24.1	2.4	97.6	

3.1-98

	Knott Avenue Southbound				Katella Avenue Westbound				Knott Avenue Northbound				Katella Avenue Eastbound				
Start Time	Left	Thru	Right	App. Total	Left	Thru	Right	App. Total	Left	Thru	Right	App. Total	Left	Thru	Right	App. Total	Int. Total
Peak Hour Analysis From 07:15 AM to 08:00 AM - Peak 1 of 1																	
Peak Hour for Entire Intersection Begins at 07:15 AM																	
07:15 AM	1	**6**	0	7	0	**6**	1	**7**	1	3	**3**	7	0	4	0	4	25
07:30 AM	**3**	5	0	**8**	1	1	0	2	**2**	3	3	**8**	0	**7**	**4**	**11**	**29**
07:45 AM	0	3	0	3	**2**	3	1	6	1	**4**	0	5	**1**	5	1	7	21
08:00 AM	0	4	0	4	1	4	**2**	7	1	4	0	5	0	6	2	8	24
Total Volume	4	18	0	22	4	14	4	22	5	14	6	25	1	22	7	30	99
% App. Total	18.2	81.8	0		18.2	63.6	18.2		20	56	24		3.3	73.3	23.3		
PHF	.333	.750	.000	.688	.500	.583	.500	.786	.625	.875	.500	.781	.250	.786	.438	.682	.853

Counts Unlimited
PO Box 1178
Corona, CA 92878
951-268-6268

City of Cypress
N/S: Knott Avenue
E/W: Katella Avenue
Weather: Clear

File Name : 09_CYP_Knott_Kat AM
Site Code : 05120183
Start Date : 3/12/2020
Page No : 2

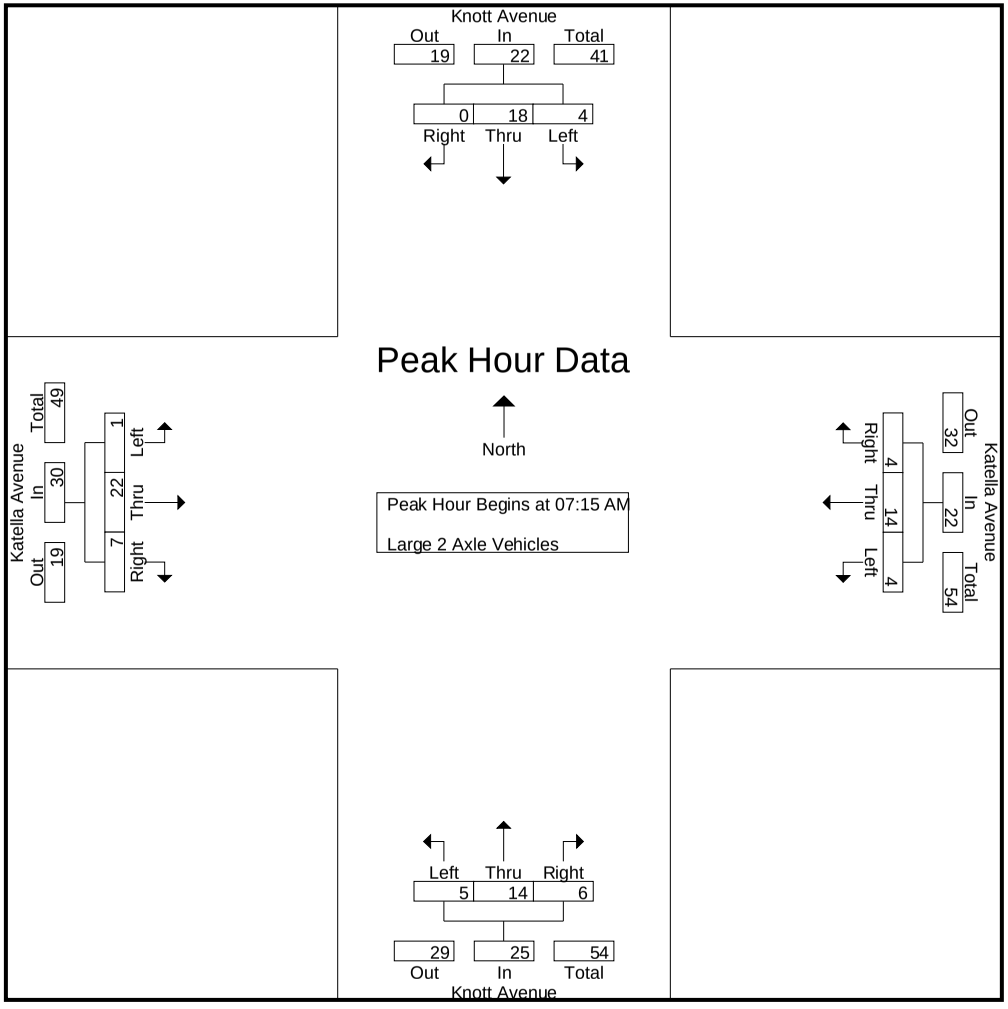

Counts Unlimited
PO Box 1178
Corona, CA 92878
951-268-6268

City of Cypress
N/S: Knott Avenue
E/W: Katella Avenue
Weather: Clear

File Name : 09_CYP_Knott_Kat AM
Site Code : 05120183
Start Date : 3/12/2020
Page No : 1

Groups Printed- 3 Axle Vehicles

	Knott Avenue Southbound					Katella Avenue Westbound					Knott Avenue Northbound					Katella Avenue Eastbound							
Start Time	Left	Thru	Right	RTOR	App. Total	Left	Thru	Right	RTOR	App. Total	Left	Thru	Right	RTOR	App. Total	Left	Thru	Right	RTOR	App. Total	Exclu. Total	Inclu. Total	Int. Total
07:00 AM	0	2	0	0	2	0	2	0	0	2	0	1	0	0	1	0	0	0	0	0	0	5	5
07:15 AM	0	1	0	0	1	0	1	0	0	1	0	0	0	0	0	0	1	1	0	2	0	4	4
07:30 AM	0	1	0	0	1	0	2	0	0	2	0	0	1	0	1	0	0	0	0	0	0	4	4
07:45 AM	0	0	0	0	0	1	1	0	0	2	0	1	0	0	1	0	0	0	0	0	0	3	3
Total	0	4	0	0	4	1	6	0	0	7	0	2	1	0	3	0	1	1	0	2	0	16	16
08:00 AM	0	0	0	0	0	0	3	0	0	3	0	1	0	0	1	0	0	0	0	0	0	4	4
08:15 AM	0	1	0	0	1	0	0	0	0	0	0	0	0	0	0	0	2	0	0	2	0	3	3
08:30 AM	0	0	0	0	0	0	3	0	0	3	0	0	1	0	1	0	0	0	0	0	0	4	4
08:45 AM	0	1	0	0	1	0	0	0	0	0	0	0	0	0	0	0	1	0	0	1	0	2	2
Total	0	2	0	0	2	0	6	0	0	6	0	1	1	0	2	0	3	0	0	3	0	13	13
Grand Total	0	6	0	0	6	1	12	0	0	13	0	3	2	0	5	0	4	1	0	5	0	29	29
Apprch %	0	100	0			7.7	92.3	0			0	60	40			0	80	20					
Total %	0	20.7	0		20.7	3.4	41.4	0		44.8	0	10.3	6.9		17.2	0	13.8	3.4		17.2	0	100	

3.1-100

	Knott Avenue Southbound				Katella Avenue Westbound				Knott Avenue Northbound				Katella Avenue Eastbound				
Start Time	Left	Thru	Right	App. Total	Left	Thru	Right	App. Total	Left	Thru	Right	App. Total	Left	Thru	Right	App. Total	Int. Total
Peak Hour Analysis From 07:15 AM to 08:00 AM - Peak 1 of 1																	
Peak Hour for Entire Intersection Begins at 07:15 AM																	
07:15 AM	0	**1**	0	**1**	0	1	0	1	0	0	0	0	0	**1**	**1**	**2**	**4**
07:30 AM	0	1	0	1	0	2	0	2	0	0	**1**	**1**	0	0	0	0	4
07:45 AM	0	0	0	0	**1**	1	0	2	0	**1**	0	1	0	0	0	0	3
08:00 AM	0	0	0	0	0	**3**	0	**3**	0	1	0	1	0	0	0	0	4
Total Volume	0	2	0	2	1	7	0	8	0	2	1	3	0	1	1	2	15
% App. Total	0	100	0		12.5	87.5	0		0	66.7	33.3		0	50	50		
PHF	.000	.500	.000	.500	.250	.583	.000	.667	.000	.500	.250	.750	.000	.250	.250	.250	.938

Counts Unlimited
PO Box 1178
Corona, CA 92878
951-268-6268

City of Cypress
N/S: Knott Avenue
E/W: Katella Avenue
Weather: Clear

File Name : 09_CYP_Knott_Kat AM
Site Code : 05120183
Start Date : 3/12/2020
Page No : 2

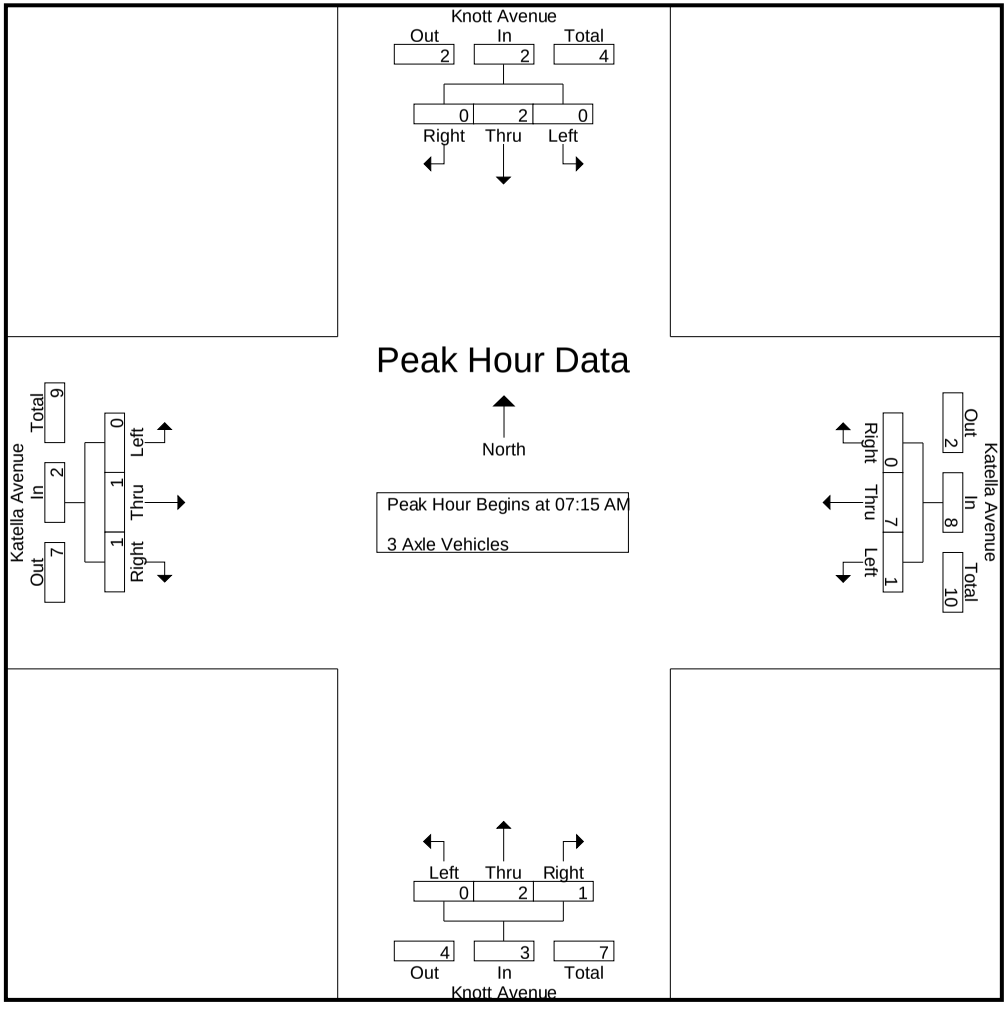

Counts Unlimited
PO Box 1178
Corona, CA 92878
951-268-6268

City of Cypress
N/S: Knott Avenue
E/W: Katella Avenue
Weather: Clear

File Name : 09_CYP_Knott_Kat AM
Site Code : 05120183
Start Date : 3/12/2020
Page No : 1

Groups Printed- 4+ Axle Trucks

	Knott Avenue Southbound					Katella Avenue Westbound					Knott Avenue Northbound					Katella Avenue Eastbound							
Start Time	Left	Thru	Right	RTOR	App. Total	Left	Thru	Right	RTOR	App. Total	Left	Thru	Right	RTOR	App. Total	Left	Thru	Right	RTOR	App. Total	Exclu. Total	Inclu. Total	Int. Total
07:00 AM	0	1	0	0	1	1	0	0	0	1	1	1	1	0	3	0	1	0	0	1	0	6	6
07:15 AM	0	0	0	0	0	2	0	0	0	2	0	1	0	0	1	0	2	2	1	4	1	7	8
07:30 AM	0	1	0	0	1	0	0	0	0	0	0	0	1	0	1	0	0	0	0	0	0	2	2
07:45 AM	0	3	0	0	3	0	0	0	0	0	3	2	0	0	5	0	1	2	1	3	1	11	12
Total	0	5	0	0	5	3	0	0	0	3	4	4	2	0	10	0	4	4	2	8	2	26	28
08:00 AM	0	5	0	0	5	1	1	0	0	2	0	1	0	0	1	0	0	0	0	0	0	8	8
08:15 AM	0	6	0	0	6	1	2	0	0	3	2	1	0	0	3	0	2	1	0	3	0	15	15
08:30 AM	0	1	0	0	1	0	1	1	0	2	1	3	1	0	5	0	1	0	0	1	0	9	9
08:45 AM	0	2	0	0	2	0	2	1	0	3	3	2	0	0	5	0	2	0	0	2	0	12	12
Total	0	14	0	0	14	2	6	2	0	10	6	7	1	0	14	0	5	1	0	6	0	44	44
Grand Total	0	19	0	0	19	5	6	2	0	13	10	11	3	0	24	0	9	5	2	14	2	70	72
Apprch %	0	100	0			38.5	46.2	15.4			41.7	45.8	12.5			0	64.3	35.7					
Total %	0	27.1	0		27.1	7.1	8.6	2.9		18.6	14.3	15.7	4.3		34.3	0	12.9	7.1		20	2.8	97.2	

3.1-102

	Knott Avenue Southbound				Katella Avenue Westbound				Knott Avenue Northbound				Katella Avenue Eastbound				
Start Time	Left	Thru	Right	App. Total	Left	Thru	Right	App. Total	Left	Thru	Right	App. Total	Left	Thru	Right	App. Total	Int. Total
Peak Hour Analysis From 07:15 AM to 08:00 AM - Peak 1 of 1																	
Peak Hour for Entire Intersection Begins at 07:15 AM																	
07:15 AM	0	0	0	0	**2**	0	0	**2**	0	1	0	1	0	**2**	**2**	**4**	7
07:30 AM	0	1	0	1	0	0	0	0	0	0	**1**	1	0	0	0	0	2
07:45 AM	0	3	0	3	0	0	0	0	**3**	**2**	0	**5**	0	1	2	3	**11**
08:00 AM	0	**5**	0	**5**	1	**1**	0	2	0	1	0	1	0	0	0	0	8
Total Volume	0	9	0	9	3	1	0	4	3	4	1	8	0	3	4	7	28
% App. Total	0	100	0		75	25	0		37.5	50	12.5		0	42.9	57.1		
PHF	.000	.450	.000	.450	.375	.250	.000	.500	.250	.500	.250	.400	.000	.375	.500	.438	.636

Counts Unlimited
PO Box 1178
Corona, CA 92878
951-268-6268

City of Cypress
N/S: Knott Avenue
E/W: Katella Avenue
Weather: Clear

File Name : 09_CYP_Knott_Kat AM
Site Code : 05120183
Start Date : 3/12/2020
Page No : 2

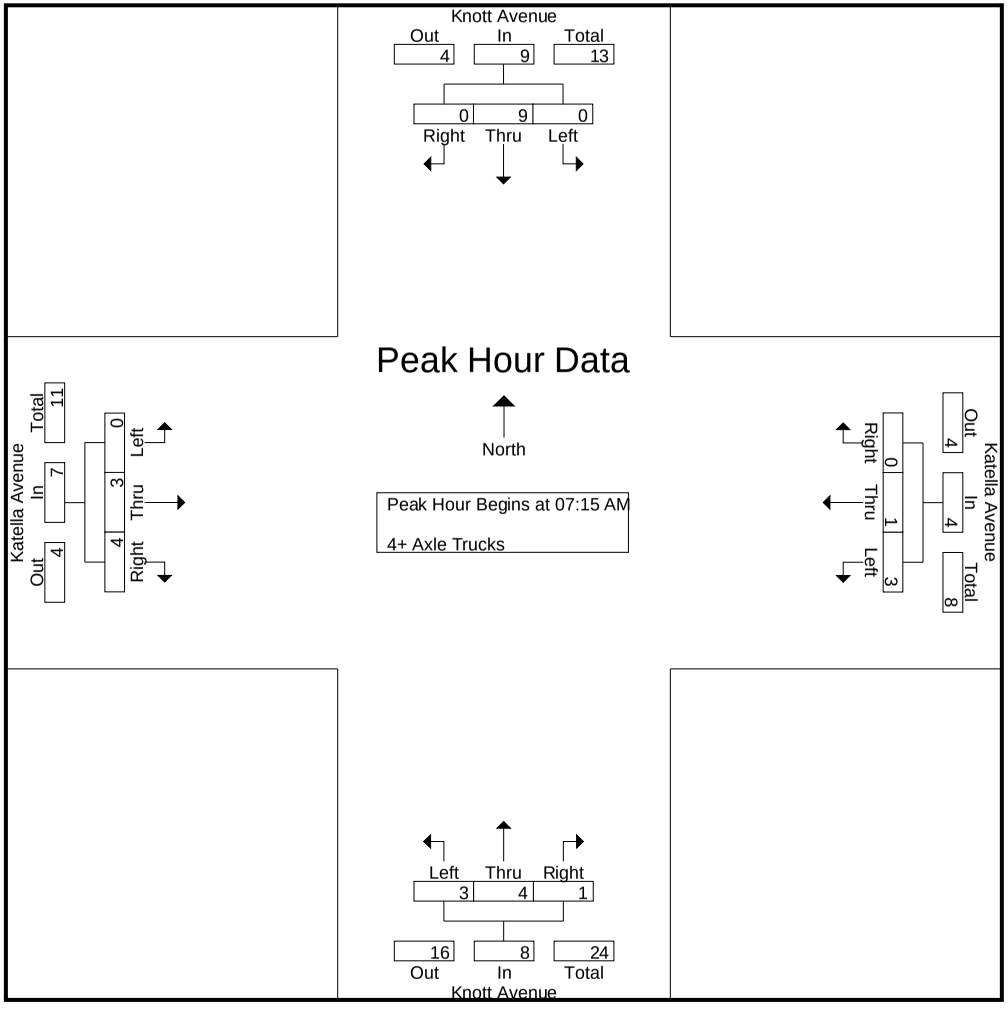

Counts Unlimited
PO Box 1178
Corona, CA 92878
951-268-6268

City of Cypress
N/S: Knott Avenue
E/W: Katella Avenue
Weather: Clear

File Name : 09_CYP_Knott_Kat PM
Site Code : 05120183
Start Date : 3/12/2020
Page No : 1

Groups Printed- Passenger Vehicles - Large 2 Axle Vehicles - 3 Axle Vehicles - 4+ Axle Trucks

	Knott Avenue Southbound					Katella Avenue Westbound					Knott Avenue Northbound					Katella Avenue Eastbound							
Start Time	Left	Thru	Right	RTOR	App. Total	Left	Thru	Right	RTOR	App. Total	Left	Thru	Right	RTOR	App. Total	Left	Thru	Right	RTOR	App. Total	Exclu. Total	Inclu. Total	Int. Total
04:00 PM	39	133	18	5	190	48	157	30	0	235	49	169	44	10	262	77	228	67	13	372	28	1059	1087
04:15 PM	43	132	18	8	193	48	179	40	3	267	60	210	28	8	298	59	226	72	13	357	32	1115	1147
04:30 PM	37	167	14	6	218	45	168	39	5	252	63	187	23	3	273	79	281	85	17	445	31	1188	1219
04:45 PM	41	123	20	6	184	52	155	48	6	255	75	240	31	6	346	77	269	83	11	429	29	1214	1243
Total	160	555	70	25	785	193	659	157	14	1009	247	806	126	27	1179	292	1004	307	54	1603	120	4576	4696
05:00 PM	38	137	16	6	191	47	152	44	6	243	52	182	22	4	256	85	312	114	16	511	32	1201	1233
05:15 PM	42	149	17	5	208	59	211	41	0	311	62	215	30	7	307	66	291	82	14	439	26	1265	1291
05:30 PM	40	129	29	7	198	52	172	48	3	272	68	198	34	4	300	84	307	77	6	468	20	1238	1258
05:45 PM	41	116	19	3	176	67	207	48	2	322	63	197	31	3	291	47	242	64	4	353	12	1142	1154
Total	161	531	81	21	773	225	742	181	11	1148	245	792	117	18	1154	282	1152	337	40	1771	90	4846	4936
Grand Total	321	1086	151	46	1558	418	1401	338	25	2157	492	1598	243	45	2333	574	2156	644	94	3374	210	9422	9632
Apprch %	20.6	69.7	9.7			19.4	65	15.7			21.1	68.5	10.4			17	63.9	19.1					
Total %	3.4	11.5	1.6		16.5	4.4	14.9	3.6		22.9	5.2	17	2.6		24.8	6.1	22.9	6.8		35.8	2.2	97.8	
Passenger Vehicles	306	1057	148		1557	415	1376	330		2145	481	1567	219		2312	573	2110	627		3401	0	0	9415
% Passenger Vehicles	95.3	97.3	98	100	97.1	99.3	98.2	97.6	96	98.3	97.8	98.1	90.1	100	97.2	99.8	97.9	97.4	96.8	98.1	0	0	97.7
Large 2 Axle Vehicles	11	23	3		37	1	16	7		25	6	19	4		29	1	33	15		52	0	0	143
% Large 2 Axle Vehicles	3.4	2.1	2	0	2.3	0.2	1.1	2.1	4	1.1	1.2	1.2	1.6	0	1.2	0.2	1.5	2.3	3.2	1.5	0	0	1.5
3 Axle Vehicles	0	0	0		0	0	4	1		5	0	2	0		2	0	4	0		4	0	0	11
% 3 Axle Vehicles	0	0	0	0	0	0	0.3	0.3	0	0.2	0	0.1	0	0	0.1	0	0.2	0	0	0.1	0	0	0.1
4+ Axle Trucks	4	6	0		10	2	5	0		7	5	10	20		35	0	9	2		11	0	0	63
% 4+ Axle Trucks	1.2	0.6	0	0	0.6	0.5	0.4	0	0	0.3	1	0.6	8.2	0	1.5	0	0.4	0.3	0	0.3	0	0	0.7

	Knott Avenue Southbound				Katella Avenue Westbound				Knott Avenue Northbound				Katella Avenue Eastbound				
Start Time	Left	Thru	Right	App. Total	Left	Thru	Right	App. Total	Left	Thru	Right	App. Total	Left	Thru	Right	App. Total	Int. Total
Peak Hour Analysis From 04:00 PM to 05:45 PM - Peak 1 of 1																	
Peak Hour for Entire Intersection Begins at 04:45 PM																	
04:45 PM	41	123	20	184	52	155	**48**	255	**75**	**240**	31	**346**	77	269	83	429	1214
05:00 PM	38	137	16	191	47	152	44	243	52	182	22	256	**85**	**312**	**114**	**511**	1201
05:15 PM	**42**	**149**	17	**208**	**59**	**211**	41	**311**	62	215	30	307	66	291	82	439	**1265**
05:30 PM	40	129	**29**	198	52	172	48	272	68	198	**34**	300	84	307	77	468	1238
Total Volume	161	538	82	781	210	690	181	1081	257	835	117	1209	312	1179	356	1847	4918
% App. Total	20.6	68.9	10.5		19.4	63.8	16.7		21.3	69.1	9.7		16.9	63.8	19.3		
PHF	.958	.903	.707	.939	.890	.818	.943	.869	.857	.870	.860	.874	.918	.945	.781	.904	.972

Counts Unlimited
PO Box 1178
Corona, CA 92878
951-268-6268

City of Cypress
N/S: Knott Avenue
E/W: Katella Avenue
Weather: Clear

File Name : 09_CYP_Knott_Kat PM
Site Code : 05120183
Start Date : 3/12/2020
Page No : 2

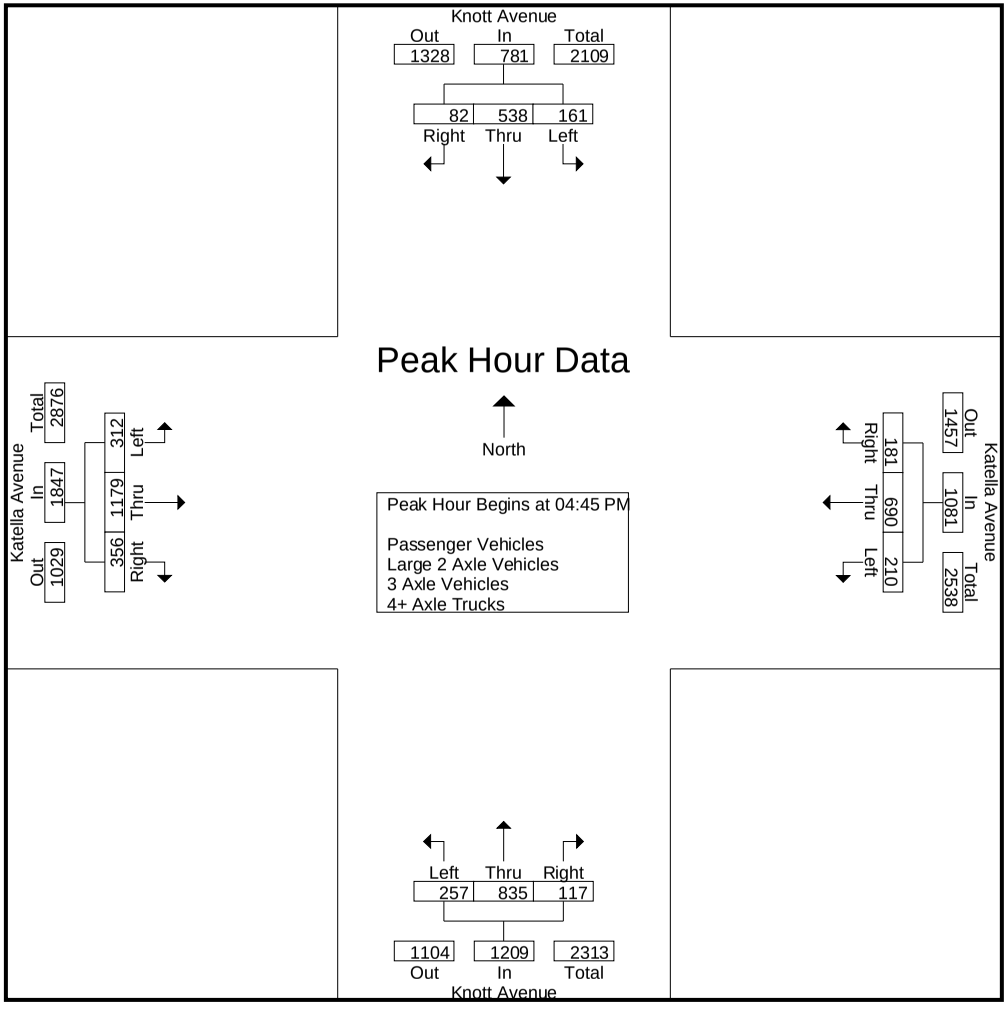

Counts Unlimited
PO Box 1178
Corona, CA 92878
951-268-6268

City of Cypress
N/S: Knott Avenue
E/W: Katella Avenue
Weather: Clear

File Name : 09_CYP_Knott_Kat PM
Site Code : 05120183
Start Date : 3/12/2020
Page No : 1

Groups Printed- Large 2 Axle Vehicles

	Knott Avenue Southbound					Katella Avenue Westbound					Knott Avenue Northbound					Katella Avenue Eastbound							
Start Time	Left	Thru	Right	RTOR	App. Total	Left	Thru	Right	RTOR	App. Total	Left	Thru	Right	RTOR	App. Total	Left	Thru	Right	RTOR	App. Total	Exclu. Total	Inclu. Total	Int. Total
04:00 PM	1	2	1	0	4	0	2	0	0	2	0	2	1	0	3	0	5	2	1	7	1	16	17
04:15 PM	0	1	1	0	2	0	5	1	0	6	1	2	0	0	3	0	8	3	0	11	0	22	22
04:30 PM	1	5	0	0	6	0	0	0	0	0	1	2	1	0	4	1	2	2	0	5	0	15	15
04:45 PM	4	3	1	0	8	0	1	1	0	2	0	2	0	0	2	0	5	3	0	8	0	20	20
Total	6	11	3	0	20	0	8	2	0	10	2	8	2	0	12	1	20	10	1	31	1	73	74
05:00 PM	0	2	0	0	2	0	1	1	0	2	0	5	0	0	5	0	3	2	1	5	1	14	15
05:15 PM	2	5	0	0	7	1	3	1	0	5	1	3	0	0	4	0	5	3	1	8	1	24	25
05:30 PM	3	2	0	0	5	0	1	2	1	3	1	0	1	0	2	0	3	0	0	3	1	13	14
05:45 PM	0	3	0	0	3	0	3	1	0	4	2	3	1	0	6	0	2	0	0	2	0	15	15
Total	5	12	0	0	17	1	8	5	1	14	4	11	2	0	17	0	13	5	2	18	3	66	69
Grand Total	11	23	3	0	37	1	16	7	1	24	6	19	4	0	29	1	33	15	3	49	4	139	143
Apprch %	29.7	62.2	8.1			4.2	66.7	29.2			20.7	65.5	13.8			2	67.3	30.6					
Total %	7.9	16.5	2.2		26.6	0.7	11.5	5		17.3	4.3	13.7	2.9		20.9	0.7	23.7	10.8		35.3	2.8	97.2	

3.1-106

	Knott Avenue Southbound				Katella Avenue Westbound				Knott Avenue Northbound				Katella Avenue Eastbound				
Start Time	Left	Thru	Right	App. Total	Left	Thru	Right	App. Total	Left	Thru	Right	App. Total	Left	Thru	Right	App. Total	Int. Total
Peak Hour Analysis From 04:45 PM to 05:30 PM - Peak 1 of 1																	
Peak Hour for Entire Intersection Begins at 04:45 PM																	
04:45 PM	**4**	3	**1**	**8**	0	1	1	2	0	2	0	2	0	**5**	**3**	**8**	20
05:00 PM	0	2	0	2	0	1	1	2	0	**5**	0	**5**	0	3	2	5	14
05:15 PM	2	**5**	0	7	**1**	**3**	1	**5**	**1**	3	0	4	0	5	3	8	**24**
05:30 PM	3	2	0	5	0	1	**2**	3	1	0	**1**	2	0	3	0	3	13
Total Volume	9	12	1	22	1	6	5	12	2	10	1	13	0	16	8	24	71
% App. Total	40.9	54.5	4.5		8.3	50	41.7		15.4	76.9	7.7		0	66.7	33.3		
PHF	.563	.600	.250	.688	.250	.500	.625	.600	.500	.500	.250	.650	.000	.800	.667	.750	.740

Counts Unlimited
PO Box 1178
Corona, CA 92878
951-268-6268

City of Cypress
N/S: Knott Avenue
E/W: Katella Avenue
Weather: Clear

File Name : 09_CYP_Knott_Kat PM
Site Code : 05120183
Start Date : 3/12/2020
Page No : 2

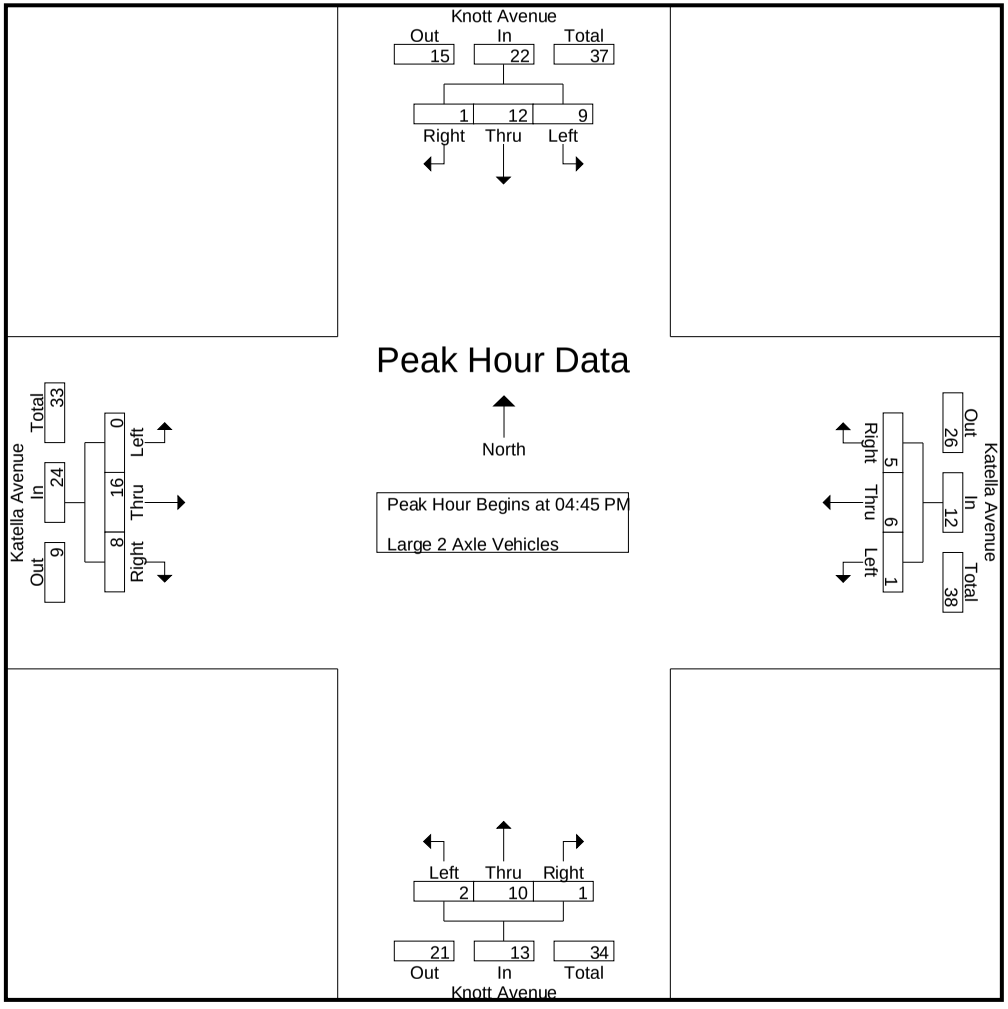

Counts Unlimited
PO Box 1178
Corona, CA 92878
951-268-6268

City of Cypress
N/S: Knott Avenue
E/W: Katella Avenue
Weather: Clear

File Name : 09_CYP_Knott_Kat PM
Site Code : 05120183
Start Date : 3/12/2020
Page No : 1

Groups Printed- 3 Axle Vehicles

	Knott Avenue Southbound					Katella Avenue Westbound					Knott Avenue Northbound					Katella Avenue Eastbound							
Start Time	Left	Thru	Right	RTOR	App. Total	Left	Thru	Right	RTOR	App. Total	Left	Thru	Right	RTOR	App. Total	Left	Thru	Right	RTOR	App. Total	Exclu. Total	Inclu. Total	Int. Total
04:00 PM	0	0	0	0	0	0	1	0	0	1	0	1	0	0	1	0	0	0	0	0	0	2	2
04:15 PM	0	0	0	0	0	0	0	0	0	0	0	0	0	0	0	0	0	0	0	0	0	0	0
04:30 PM	0	0	0	0	0	0	1	1	0	2	0	1	0	0	1	0	1	0	0	1	0	4	4
04:45 PM	0	0	0	0	0	0	0	0	0	0	0	0	0	0	0	0	0	0	0	0	0	0	0
Total	0	0	0	0	0	0	2	1	0	3	0	2	0	0	2	0	1	0	0	1	0	6	6
05:00 PM	0	0	0	0	0	0	0	0	0	0	0	0	0	0	0	0	1	0	0	1	0	1	1
05:15 PM	0	0	0	0	0	0	2	0	0	2	0	0	0	0	0	0	0	0	0	0	0	2	2
05:30 PM	0	0	0	0	0	0	0	0	0	0	0	0	0	0	0	0	1	0	0	1	0	1	1
05:45 PM	0	0	0	0	0	0	0	0	0	0	0	0	0	0	0	0	1	0	0	1	0	1	1
Total	0	0	0	0	0	0	2	0	0	2	0	0	0	0	0	0	3	0	0	3	0	5	5
Grand Total	0	0	0	0	0	0	4	1	0	5	0	2	0	0	2	0	4	0	0	4	0	11	11
Apprch %	0	0	0			0	80	20			0	100	0			0	100	0					
Total %	0	0	0		0	0	36.4	9.1		45.5	0	18.2	0		18.2	0	36.4	0		36.4	0	100	

	Knott Avenue Southbound				Katella Avenue Westbound				Knott Avenue Northbound				Katella Avenue Eastbound				
Start Time	Left	Thru	Right	App. Total	Left	Thru	Right	App. Total	Left	Thru	Right	App. Total	Left	Thru	Right	App. Total	Int. Total
Peak Hour Analysis From 04:45 PM to 05:30 PM - Peak 1 of 1																	
Peak Hour for Entire Intersection Begins at 04:45 PM																	
04:45 PM	0	0	0	0	0	0	0	0	0	0	0	0	0	0	0	0	0
05:00 PM	0	0	0	0	0	0	0	0	0	0	0	0	0	**1**	0	**1**	1
05:15 PM	0	0	0	0	0	**2**	0	**2**	0	0	0	0	0	0	0	0	**2**
05:30 PM	0	0	0	0	0	0	0	0	0	0	0	0	0	1	0	1	1
Total Volume	0	0	0	0	0	2	0	2	0	0	0	0	0	2	0	2	4
% App. Total	0	0	0		0	100	0		0	0	0		0	100	0		
PHF	.000	.000	.000	.000	.000	.250	.000	.250	.000	.000	.000	.000	.000	.500	.000	.500	.500

Counts Unlimited
PO Box 1178
Corona, CA 92878
951-268-6268

City of Cypress
N/S: Knott Avenue
E/W: Katella Avenue
Weather: Clear

File Name : 09_CYP_Knott_Kat PM
Site Code : 05120183
Start Date : 3/12/2020
Page No : 2

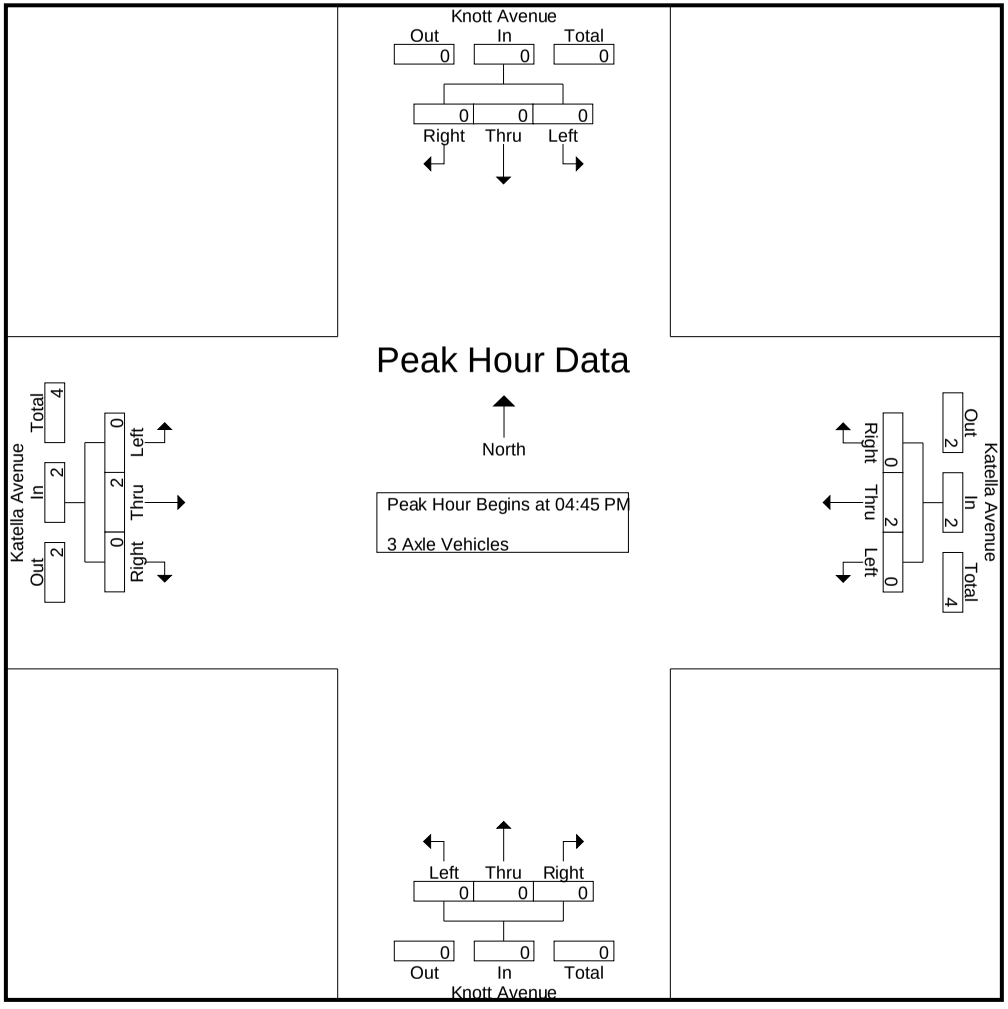

Counts Unlimited
PO Box 1178
Corona, CA 92878
951-268-6268

City of Cypress
N/S: Knott Avenue
E/W: Katella Avenue
Weather: Clear

File Name : 09_CYP_Knott_Kat PM
Site Code : 05120183
Start Date : 3/12/2020
Page No : 1

Groups Printed- 4+ Axle Trucks

	Knott Avenue Southbound					Katella Avenue Westbound					Knott Avenue Northbound					Katella Avenue Eastbound							
Start Time	Left	Thru	Right	RTOR	App. Total	Left	Thru	Right	RTOR	App. Total	Left	Thru	Right	RTOR	App. Total	Left	Thru	Right	RTOR	App. Total	Exclu. Total	Inclu. Total	Int. Total
04:00 PM	1	1	0	0	2	1	0	0	0	1	0	4	5	0	9	0	1	0	0	1	0	13	13
04:15 PM	1	2	0	0	3	0	0	0	0	0	1	1	1	0	3	0	1	0	0	1	0	7	7
04:30 PM	0	1	0	0	1	0	1	0	0	1	3	1	2	0	6	0	1	0	0	1	0	9	9
04:45 PM	0	0	0	0	0	0	1	0	0	1	0	3	3	0	6	0	1	0	0	1	0	8	8
Total	2	4	0	0	6	1	2	0	0	3	4	9	11	0	24	0	4	0	0	4	0	37	37
05:00 PM	2	1	0	0	3	0	2	0	0	2	1	0	3	0	4	0	1	0	0	1	0	10	10
05:15 PM	0	1	0	0	1	1	1	0	0	2	0	1	1	0	2	0	0	0	0	0	0	5	5
05:30 PM	0	0	0	0	0	0	0	0	0	0	0	0	2	0	2	0	2	1	0	3	0	5	5
05:45 PM	0	0	0	0	0	0	0	0	0	0	0	0	3	0	3	0	2	1	0	3	0	6	6
Total	2	2	0	0	4	1	3	0	0	4	1	1	9	0	11	0	5	2	0	7	0	26	26
Grand Total	4	6	0	0	10	2	5	0	0	7	5	10	20	0	35	0	9	2	0	11	0	63	63
Apprch %	40	60	0			28.6	71.4	0			14.3	28.6	57.1			0	81.8	18.2					
Total %	6.3	9.5	0		15.9	3.2	7.9	0		11.1	7.9	15.9	31.7		55.6	0	14.3	3.2		17.5	0	100	

3.1-110

	Knott Avenue Southbound				Katella Avenue Westbound				Knott Avenue Northbound				Katella Avenue Eastbound				
Start Time	Left	Thru	Right	App. Total	Left	Thru	Right	App. Total	Left	Thru	Right	App. Total	Left	Thru	Right	App. Total	Int. Total
Peak Hour Analysis From 04:45 PM to 05:30 PM - Peak 1 of 1																	
Peak Hour for Entire Intersection Begins at 04:45 PM																	
04:45 PM	0	0	0	0	0	1	0	1	0	**3**	**3**	**6**	0	1	0	1	8
05:00 PM	**2**	**1**	0	**3**	0	**2**	0	**2**	**1**	0	3	4	0	1	0	1	**10**
05:15 PM	0	1	0	1	**1**	1	0	2	0	1	1	2	0	0	0	0	5
05:30 PM	0	0	0	0	0	0	0	0	0	0	2	2	0	**2**	**1**	**3**	5
Total Volume	2	2	0	4	1	4	0	5	1	4	9	14	0	4	1	5	28
% App. Total	50	50	0		20	80	0		7.1	28.6	64.3		0	80	20		
PHF	.250	.500	.000	.333	.250	.500	.000	.625	.250	.333	.750	.583	.000	.500	.250	.417	.700

Counts Unlimited
PO Box 1178
Corona, CA 92878
951-268-6268

City of Cypress
N/S: Knott Avenue
E/W: Katella Avenue
Weather: Clear

File Name : 09_CYP_Knott_Kat PM
Site Code : 05120183
Start Date : 3/12/2020
Page No : 2

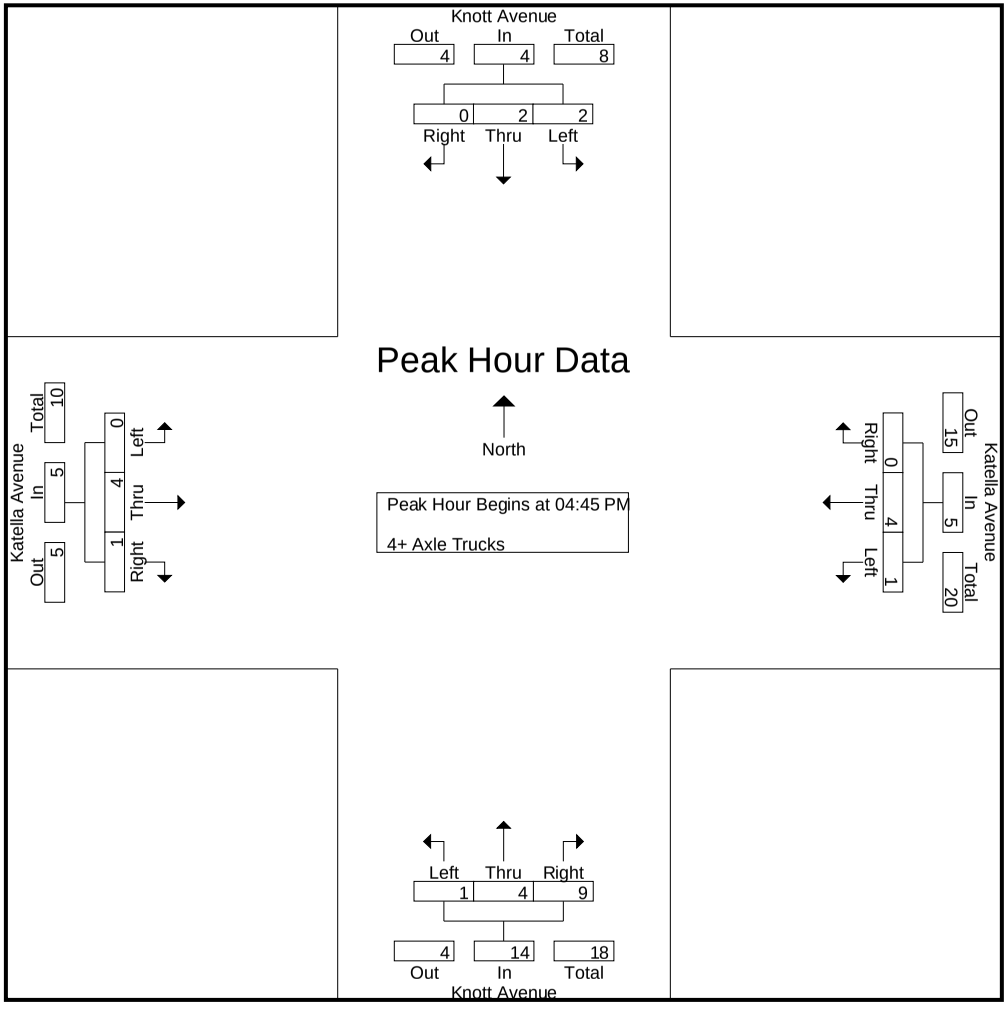

Location: Cypress
N/S: Knott Avenue
E/W: Katella Avenue

Date: 3/12/2020
Day: Thursday

PEDESTRIANS

	North Leg Knott Avenue	East Leg Katella Avenue	South Leg Knott Avenue	West Leg Katella Avenue	
	Pedestrians	Pedestrians	Pedestrians	Pedestrians	
7:00 AM	0	0	0	1	1
7:15 AM	0	0	0	1	1
7:30 AM	0	2	1	1	4
7:45 AM	0	0	0	1	1
8:00 AM	2	2	0	0	4
8:15 AM	4	1	0	3	8
8:30 AM	0	2	2	4	8
8:45 AM	1	11	1	3	16
TOTAL VOLUMES:	7	18	4	14	43

	North Leg Knott Avenue	East Leg Katella Avenue	South Leg Knott Avenue	West Leg Katella Avenue	
	Pedestrians	Pedestrians	Pedestrians	Pedestrians	
4:00 PM	5	0	3	0	8
4:15 PM	2	7	2	0	11
4:30 PM	0	2	9	2	13
4:45 PM	4	8	3	0	15
5:00 PM	3	4	2	1	10
5:15 PM	2	4	1	4	11
5:30 PM	3	1	2	1	7
5:45 PM	0	2	2	5	9
TOTAL VOLUMES:	19	28	24	13	84

Location: Cypress
N/S: Knott Avenue
E/W: Katella Avenue

Date: 3/12/2020
Day: Thursday

BICYCLES

	Southbound Knott Avenue			Westbound Katella Avenue			Northbound Knott Avenue			Eastbound Katella Avenue			
	Left	Thru	Right	Left	Thru	Right	Left	Thru	Right	Left	Thru	Right	
7:00 AM	0	0	0	0	0	0	0	0	0	0	0	0	0
7:15 AM	0	0	0	0	1	0	0	0	0	0	0	0	1
7:30 AM	0	0	0	0	0	0	0	0	0	0	0	0	0
7:45 AM	0	0	0	0	0	0	0	0	0	0	0	0	0
8:00 AM	0	0	0	0	0	0	0	0	0	0	0	0	0
8:15 AM	0	0	0	0	0	0	0	0	0	0	0	0	0
8:30 AM	0	0	0	0	0	0	0	0	0	0	0	0	0
8:45 AM	0	0	0	0	0	0	0	0	0	0	0	0	0
TOTAL VOLUMES:	0	0	0	0	1	0	0	0	0	0	0	0	1

	Southbound Knott Avenue			Westbound Katella Avenue			Northbound Knott Avenue			Eastbound Katella Avenue			
	Left	Thru	Right	Left	Thru	Right	Left	Thru	Right	Left	Thru	Right	
4:00 PM	0	0	0	0	0	0	0	0	0	0	0	0	0
4:15 PM	1	0	0	0	0	0	0	0	0	0	0	0	1
4:30 PM	0	0	0	0	0	0	0	0	0	0	0	0	0
4:45 PM	0	0	0	0	0	0	0	0	0	0	0	0	0
5:00 PM	0	0	0	0	0	0	0	0	0	0	0	0	0
5:15 PM	0	0	0	0	0	0	0	0	0	0	0	0	0
5:30 PM	0	0	0	0	0	0	0	0	0	0	0	0	0
5:45 PM	0	0	0	0	0	0	0	0	0	0	0	0	0
TOTAL VOLUMES:	1	0	0	0	0	0	0	0	0	0	0	0	1

Counts Unlimited, Inc.
PO Box 1178
Corona, CA 92878
951-268-6268

Counts Unlimited
PO Box 1178
Corona, CA 92878
951-268-6268

City of Cypress
N/S: Western Avenue
E/W: Katella Avenue
Weather: Clear

File Name : 11_CYP_West_Kat AM
Site Code : 05120183
Start Date : 3/12/2020
Page No : 1

Groups Printed- Passenger Vehicles - Large 2 Axle Vehicles - 3 Axle Vehicles - 4+ Axle Trucks

	Western Avenue Southbound					Katella Avenue Westbound					Western Avenue Northbound					Katella Avenue Eastbound							
Start Time	Left	Thru	Right	RTOR	App. Total	Left	Thru	Right	RTOR	App. Total	Left	Thru	Right	RTOR	App. Total	Left	Thru	Right	RTOR	App. Total	Exclu. Total	Inclu. Total	Int. Total
07:00 AM	14	186	15	0	215	24	165	21	3	210	14	63	10	2	87	12	155	28	10	195	15	707	722
07:15 AM	24	241	19	1	284	36	244	14	2	294	37	62	18	4	117	10	144	26	14	180	21	875	896
07:30 AM	27	212	27	3	266	50	265	28	2	343	24	70	21	6	115	26	148	29	13	203	24	927	951
07:45 AM	41	247	26	1	314	52	249	24	1	325	28	76	31	5	135	17	171	35	13	223	20	997	1017
Total	106	886	87	5	1079	162	923	87	8	1172	103	271	80	17	454	65	618	118	50	801	80	3506	3586
08:00 AM	19	172	27	4	218	54	243	29	3	326	22	74	23	4	119	19	137	37	17	193	28	856	884
08:15 AM	25	162	26	4	213	43	204	18	1	265	25	74	24	4	123	11	137	39	15	187	24	788	812
08:30 AM	16	154	29	2	199	39	179	14	1	232	17	75	20	2	112	16	95	40	15	151	20	694	714
08:45 AM	31	155	21	3	207	30	164	15	0	209	23	60	19	3	102	17	128	25	7	170	13	688	701
Total	91	643	103	13	837	166	790	76	5	1032	87	283	86	13	456	63	497	141	54	701	85	3026	3111
Grand Total	197	1529	190	18	1916	328	1713	163	13	2204	190	554	166	30	910	128	1115	259	104	1502	165	6532	6697
Apprch %	10.3	79.8	9.9			14.9	77.7	7.4			20.9	60.9	18.2			8.5	74.2	17.2					
Total %	3	23.4	2.9		29.3	5	26.2	2.5		33.7	2.9	8.5	2.5		13.9	2	17.1	4		23	2.5	97.5	
Passenger Vehicles	195	1512	188		1913	311	1675	158		2157	175	539	150		894	126	1066	248		1540	0	0	6504
% Passenger Vehicles	99	98.9	98.9	100	98.9	94.8	97.8	96.9	100	97.3	92.1	97.3	90.4	100	95.1	98.4	95.6	95.8	96.2	95.9	0	0	97.1
Large 2 Axle Vehicles	2	14	2		18	10	20	5		35	6	10	10		26	2	33	8		46	0	0	125
% Large 2 Axle Vehicles	1	0.9	1.1	0	0.9	3	1.2	3.1	0	1.6	3.2	1.8	6	0	2.8	1.6	3	3.1	2.9	2.9	0	0	1.9
3 Axle Vehicles	0	0	0		0	0	13	0		13	2	3	2		7	0	9	3		13	0	0	33
% 3 Axle Vehicles	0	0	0	0	0	0	0.8	0	0	0.6	1.1	0.5	1.2	0	0.7	0	0.8	1.2	1	0.8	0	0	0.5
4+ Axle Trucks	0	3	0		3	7	5	0		12	7	2	4		13	0	7	0		7	0	0	35
% 4+ Axle Trucks	0	0.2	0	0	0.2	2.1	0.3	0	0	0.5	3.7	0.4	2.4	0	1.4	0	0.6	0	0	0.4	0	0	0.5

	Western Avenue Southbound				Katella Avenue Westbound				Western Avenue Northbound				Katella Avenue Eastbound				
Start Time	Left	Thru	Right	App. Total	Left	Thru	Right	App. Total	Left	Thru	Right	App. Total	Left	Thru	Right	App. Total	Int. Total
Peak Hour Analysis From 07:00 AM to 08:45 AM - Peak 1 of 1																	
Peak Hour for Entire Intersection Begins at 07:15 AM																	
07:15 AM	24	241	19	284	36	244	14	294	**37**	62	18	117	10	144	26	180	875
07:30 AM	27	212	**27**	266	50	**265**	28	**343**	24	70	21	115	**26**	148	29	203	927
07:45 AM	**41**	**247**	26	**314**	52	249	24	325	28	**76**	**31**	**135**	17	**171**	35	**223**	**997**
08:00 AM	19	172	27	218	**54**	243	**29**	326	22	74	23	119	19	137	**37**	193	856
Total Volume	111	872	99	1082	192	1001	95	1288	111	282	93	486	72	600	127	799	3655
% App. Total	10.3	80.6	9.1		14.9	77.7	7.4		22.8	58	19.1		9	75.1	15.9		
PHF	.677	.883	.917	.861	.889	.944	.819	.939	.750	.928	.750	.900	.692	.877	.858	.896	.916

Counts Unlimited
PO Box 1178
Corona, CA 92878
951-268-6268

City of Cypress
N/S: Western Avenue
E/W: Katella Avenue
Weather: Clear

File Name : 11_CYP_West_Kat AM
Site Code : 05120183
Start Date : 3/12/2020
Page No : 2

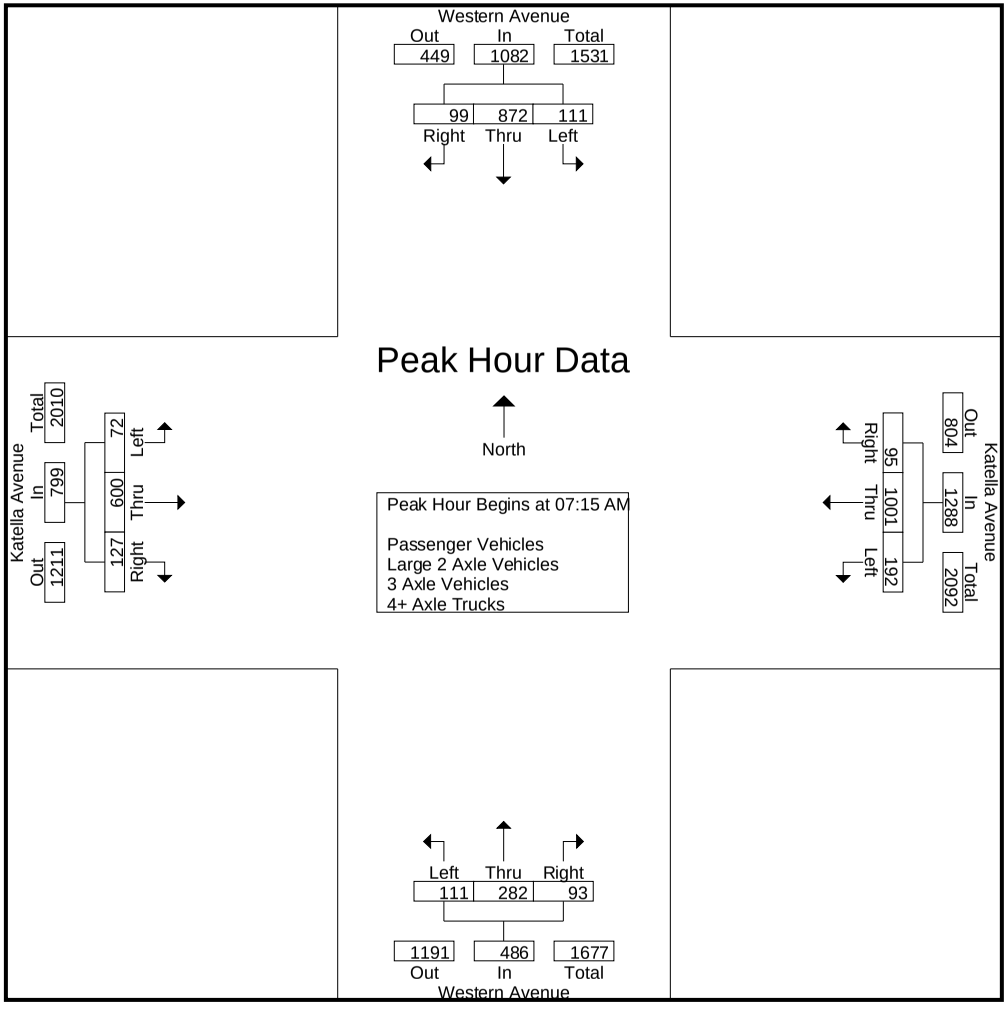

Counts Unlimited
PO Box 1178
Corona, CA 92878
951-268-6268

City of Cypress
N/S: Western Avenue
E/W: Katella Avenue
Weather: Clear

File Name : 11_CYP_West_Kat AM
Site Code : 05120183
Start Date : 3/12/2020
Page No : 1

Groups Printed- Large 2 Axle Vehicles

	Western Avenue Southbound					Katella Avenue Westbound					Western Avenue Northbound					Katella Avenue Eastbound							
Start Time	Left	Thru	Right	RTOR	App. Total	Left	Thru	Right	RTOR	App. Total	Left	Thru	Right	RTOR	App. Total	Left	Thru	Right	RTOR	App. Total	Exclu. Total	Inclu. Total	Int. Total
07:00 AM	1	0	0	0	1	0	2	0	0	2	0	0	0	0	0	0	4	0	0	4	0	7	7
07:15 AM	1	4	0	0	5	0	2	0	0	2	0	0	0	0	0	0	7	0	0	7	0	14	14
07:30 AM	0	1	0	0	1	0	1	0	0	1	0	1	2	0	3	1	3	1	0	5	0	10	10
07:45 AM	0	3	1	0	4	3	1	1	0	5	0	2	2	0	4	1	5	1	0	7	0	20	20
Total	2	8	1	0	11	3	6	1	0	10	0	3	4	0	7	2	19	2	0	23	0	51	51
08:00 AM	0	3	0	0	3	3	4	2	0	9	0	0	0	0	0	0	3	2	1	5	1	17	18
08:15 AM	0	2	0	0	2	1	4	2	0	7	3	2	0	0	5	0	3	1	1	4	1	18	19
08:30 AM	0	1	0	0	1	2	1	0	0	3	2	4	3	0	9	0	5	1	0	6	0	19	19
08:45 AM	0	0	1	0	1	1	5	0	0	6	1	1	3	0	5	0	3	2	1	5	1	17	18
Total	0	6	1	0	7	7	14	4	0	25	6	7	6	0	19	0	14	6	3	20	3	71	74
Grand Total	2	14	2	0	18	10	20	5	0	35	6	10	10	0	26	2	33	8	3	43	3	122	125
Apprch %	11.1	77.8	11.1			28.6	57.1	14.3			23.1	38.5	38.5			4.7	76.7	18.6					
Total %	1.6	11.5	1.6		14.8	8.2	16.4	4.1		28.7	4.9	8.2	8.2		21.3	1.6	27	6.6		35.2	2.4	97.6	

	Western Avenue Southbound				Katella Avenue Westbound				Western Avenue Northbound				Katella Avenue Eastbound				
Start Time	Left	Thru	Right	App. Total	Left	Thru	Right	App. Total	Left	Thru	Right	App. Total	Left	Thru	Right	App. Total	Int. Total
Peak Hour Analysis From 07:15 AM to 08:00 AM - Peak 1 of 1																	
Peak Hour for Entire Intersection Begins at 07:15 AM																	
07:15 AM	**1**	**4**	0	**5**	0	2	0	2	0	0	0	0	0	**7**	0	**7**	14
07:30 AM	0	1	0	1	0	1	0	1	0	1	**2**	3	**1**	3	1	5	10
07:45 AM	0	3	**1**	4	**3**	1	1	5	0	**2**	2	**4**	1	5	1	7	**20**
08:00 AM	0	3	0	3	3	**4**	**2**	**9**	0	0	0	0	0	3	**2**	5	17
Total Volume	1	11	1	13	6	8	3	17	0	3	4	7	2	18	4	24	61
% App. Total	7.7	84.6	7.7		35.3	47.1	17.6		0	42.9	57.1		8.3	75	16.7		
PHF	.250	.688	.250	.650	.500	.500	.375	.472	.000	.375	.500	.438	.500	.643	.500	.857	.763

Counts Unlimited
PO Box 1178
Corona, CA 92878
951-268-6268

City of Cypress
N/S: Western Avenue
E/W: Katella Avenue
Weather: Clear

File Name : 11_CYP_West_Kat AM
Site Code : 05120183
Start Date : 3/12/2020
Page No : 2

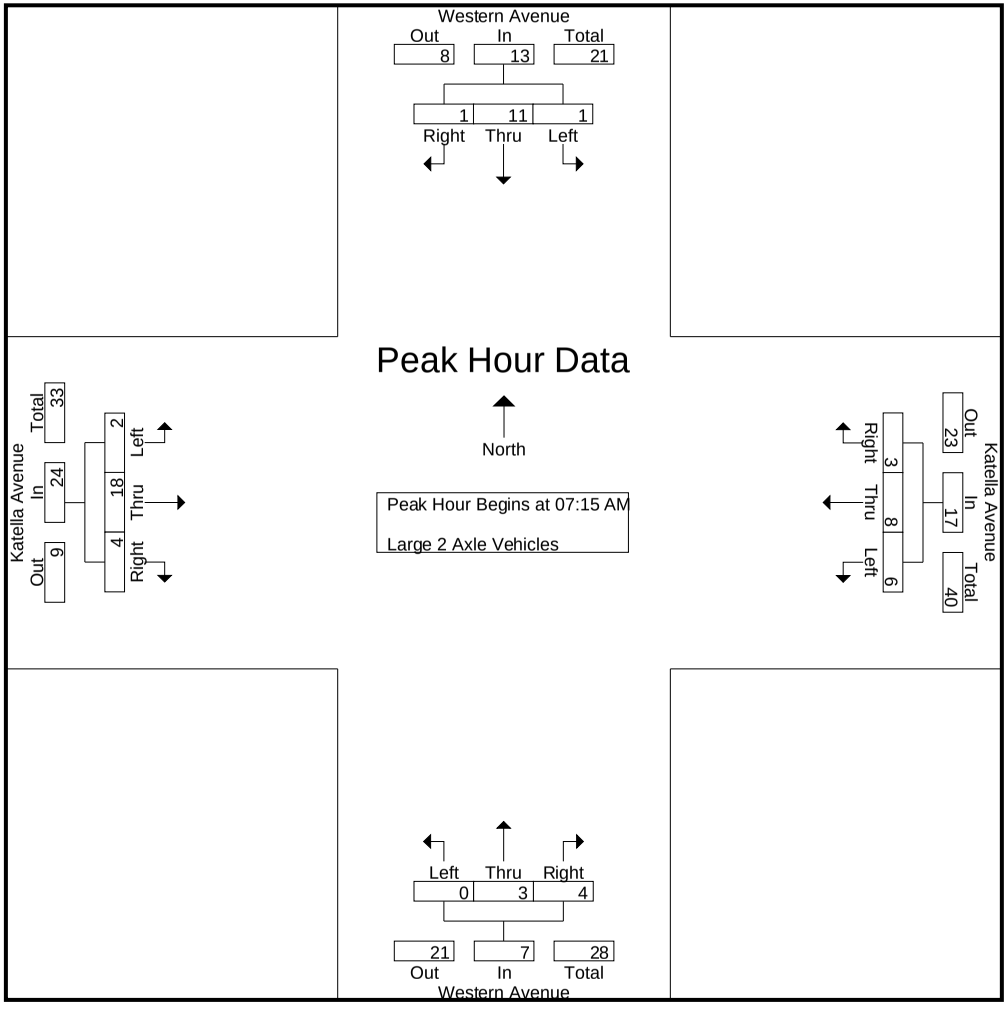

Counts Unlimited
PO Box 1178
Corona, CA 92878
951-268-6268

City of Cypress
N/S: Western Avenue
E/W: Katella Avenue
Weather: Clear

File Name : 11_CYP_West_Kat AM
Site Code : 05120183
Start Date : 3/12/2020
Page No : 1

Groups Printed- 3 Axle Vehicles

	Western Avenue Southbound					Katella Avenue Westbound					Western Avenue Northbound					Katella Avenue Eastbound							
Start Time	Left	Thru	Right	RTOR	App. Total	Left	Thru	Right	RTOR	App. Total	Left	Thru	Right	RTOR	App. Total	Left	Thru	Right	RTOR	App. Total	Exclu. Total	Inclu. Total	Int. Total
07:00 AM	0	0	0	0	0	0	2	0	0	2	0	1	0	0	1	0	0	0	0	0	0	3	3
07:15 AM	0	0	0	0	0	0	1	0	0	1	0	0	0	0	0	0	0	1	1	1	1	2	3
07:30 AM	0	0	0	0	0	0	2	0	0	2	1	1	0	0	2	0	3	1	0	4	0	8	8
07:45 AM	0	0	0	0	0	0	1	0	0	1	0	0	2	0	2	0	1	0	0	1	0	4	4
Total	0	0	0	0	0	0	6	0	0	6	1	2	2	0	5	0	4	2	1	6	1	17	18
08:00 AM	0	0	0	0	0	0	2	0	0	2	0	0	0	0	0	0	0	0	0	0	0	2	2
08:15 AM	0	0	0	0	0	0	0	0	0	0	0	1	0	0	1	0	2	0	0	2	0	3	3
08:30 AM	0	0	0	0	0	0	4	0	0	4	0	0	0	0	0	0	2	1	0	3	0	7	7
08:45 AM	0	0	0	0	0	0	1	0	0	1	1	0	0	0	1	0	1	0	0	1	0	3	3
Total	0	0	0	0	0	0	7	0	0	7	1	1	0	0	2	0	5	1	0	6	0	15	15
Grand Total	0	0	0	0	0	0	13	0	0	13	2	3	2	0	7	0	9	3	1	12	1	32	33
Apprch %	0	0	0			0	100	0			28.6	42.9	28.6			0	75	25					
Total %	0	0	0		0	0	40.6	0		40.6	6.2	9.4	6.2		21.9	0	28.1	9.4		37.5	3	97	

3.1-118

	Western Avenue Southbound				Katella Avenue Westbound				Western Avenue Northbound				Katella Avenue Eastbound				
Start Time	Left	Thru	Right	App. Total	Left	Thru	Right	App. Total	Left	Thru	Right	App. Total	Left	Thru	Right	App. Total	Int. Total
Peak Hour Analysis From 07:15 AM to 08:00 AM - Peak 1 of 1																	
Peak Hour for Entire Intersection Begins at 07:15 AM																	
07:15 AM	0	0	0	0	0	1	0	1	0	0	0	0	0	0	**1**	1	2
07:30 AM	0	0	0	0	0	**2**	0	**2**	**1**	**1**	0	**2**	0	**3**	1	**4**	**8**
07:45 AM	0	0	0	0	0	1	0	1	0	0	**2**	2	0	1	0	1	4
08:00 AM	0	0	0	0	0	2	0	2	0	0	0	0	0	0	0	0	2
Total Volume	0	0	0	0	0	6	0	6	1	1	2	4	0	4	2	6	16
% App. Total	0	0	0		0	100	0		25	25	50		0	66.7	33.3		
PHF	.000	.000	.000	.000	.000	.750	.000	.750	.250	.250	.250	.500	.000	.333	.500	.375	.500

Counts Unlimited
PO Box 1178
Corona, CA 92878
951-268-6268

City of Cypress
N/S: Western Avenue
E/W: Katella Avenue
Weather: Clear

File Name : 11_CYP_West_Kat AM
Site Code : 05120183
Start Date : 3/12/2020
Page No : 2

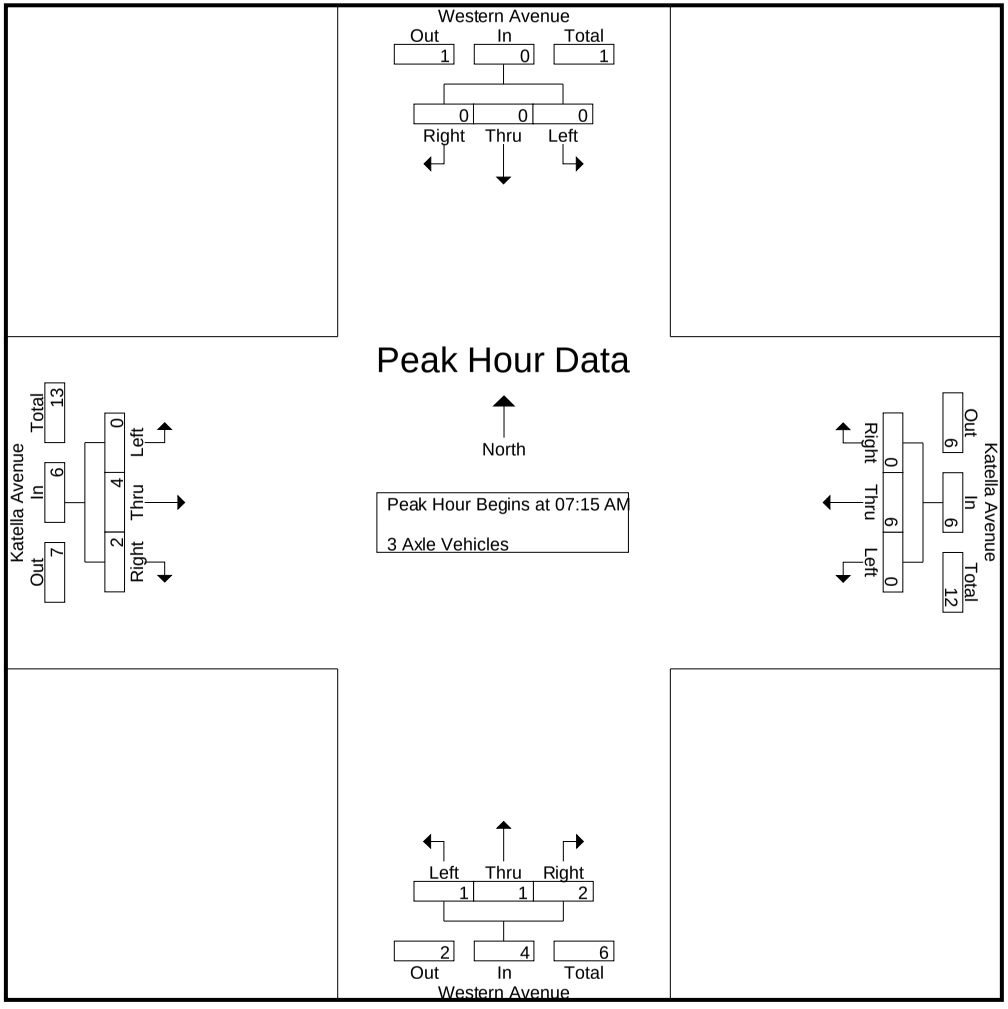

Counts Unlimited
PO Box 1178
Corona, CA 92878
951-268-6268

City of Cypress
N/S: Western Avenue
E/W: Katella Avenue
Weather: Clear

File Name : 11_CYP_West_Kat AM
Site Code : 05120183
Start Date : 3/12/2020
Page No : 1

Groups Printed- 4+ Axle Trucks

	Western Avenue Southbound					Katella Avenue Westbound					Western Avenue Northbound					Katella Avenue Eastbound							
Start Time	Left	Thru	Right	RTOR	App. Total	Left	Thru	Right	RTOR	App. Total	Left	Thru	Right	RTOR	App. Total	Left	Thru	Right	RTOR	App. Total	Exclu. Total	Inclu. Total	Int. Total
07:00 AM	0	0	0	0	0	0	0	0	0	0	1	0	0	0	1	0	2	0	0	2	0	3	3
07:15 AM	0	1	0	0	1	0	0	0	0	0	1	2	1	0	4	0	1	0	0	1	0	6	6
07:30 AM	0	1	0	0	1	0	0	0	0	0	0	0	0	0	0	0	0	0	0	0	0	1	1
07:45 AM	0	1	0	0	1	1	0	0	0	1	0	0	1	0	1	0	0	0	0	0	0	3	3
Total	0	3	0	0	3	1	0	0	0	1	2	2	2	0	6	0	3	0	0	3	0	13	13
08:00 AM	0	0	0	0	0	2	2	0	0	4	0	0	0	0	0	0	0	0	0	0	0	4	4
08:15 AM	0	0	0	0	0	2	2	0	0	4	1	0	0	0	1	0	1	0	0	1	0	6	6
08:30 AM	0	0	0	0	0	2	0	0	0	2	2	0	2	0	4	0	1	0	0	1	0	7	7
08:45 AM	0	0	0	0	0	0	1	0	0	1	2	0	0	0	2	0	2	0	0	2	0	5	5
Total	0	0	0	0	0	6	5	0	0	11	5	0	2	0	7	0	4	0	0	4	0	22	22
Grand Total	0	3	0	0	3	7	5	0	0	12	7	2	4	0	13	0	7	0	0	7	0	35	35
Apprch %	0	100	0			58.3	41.7	0			53.8	15.4	30.8			0	100	0					
Total %	0	8.6	0		8.6	20	14.3	0		34.3	20	5.7	11.4		37.1	0	20	0		20	0	100	

3.1-120

	Western Avenue Southbound				Katella Avenue Westbound				Western Avenue Northbound				Katella Avenue Eastbound				
Start Time	Left	Thru	Right	App. Total	Left	Thru	Right	App. Total	Left	Thru	Right	App. Total	Left	Thru	Right	App. Total	Int. Total
Peak Hour Analysis From 07:15 AM to 08:00 AM - Peak 1 of 1																	
Peak Hour for Entire Intersection Begins at 07:15 AM																	
07:15 AM	0	**1**	0	**1**	0	0	0	0	**1**	**2**	**1**	**4**	0	**1**	0	**1**	**6**
07:30 AM	0	1	0	1	0	0	0	0	0	0	0	0	0	0	0	0	1
07:45 AM	0	1	0	1	1	0	0	1	0	0	1	1	0	0	0	0	3
08:00 AM	0	0	0	0	**2**	**2**	0	**4**	0	0	0	0	0	0	0	0	4
Total Volume	0	3	0	3	3	2	0	5	1	2	2	5	0	1	0	1	14
% App. Total	0	100	0		60	40	0		20	40	40		0	100	0		
PHF	.000	.750	.000	.750	.375	.250	.000	.313	.250	.250	.500	.313	.000	.250	.000	.250	.583

Counts Unlimited
PO Box 1178
Corona, CA 92878
951-268-6268

City of Cypress
N/S: Western Avenue
E/W: Katella Avenue
Weather: Clear

File Name : 11_CYP_West_Kat AM
Site Code : 05120183
Start Date : 3/12/2020
Page No : 2

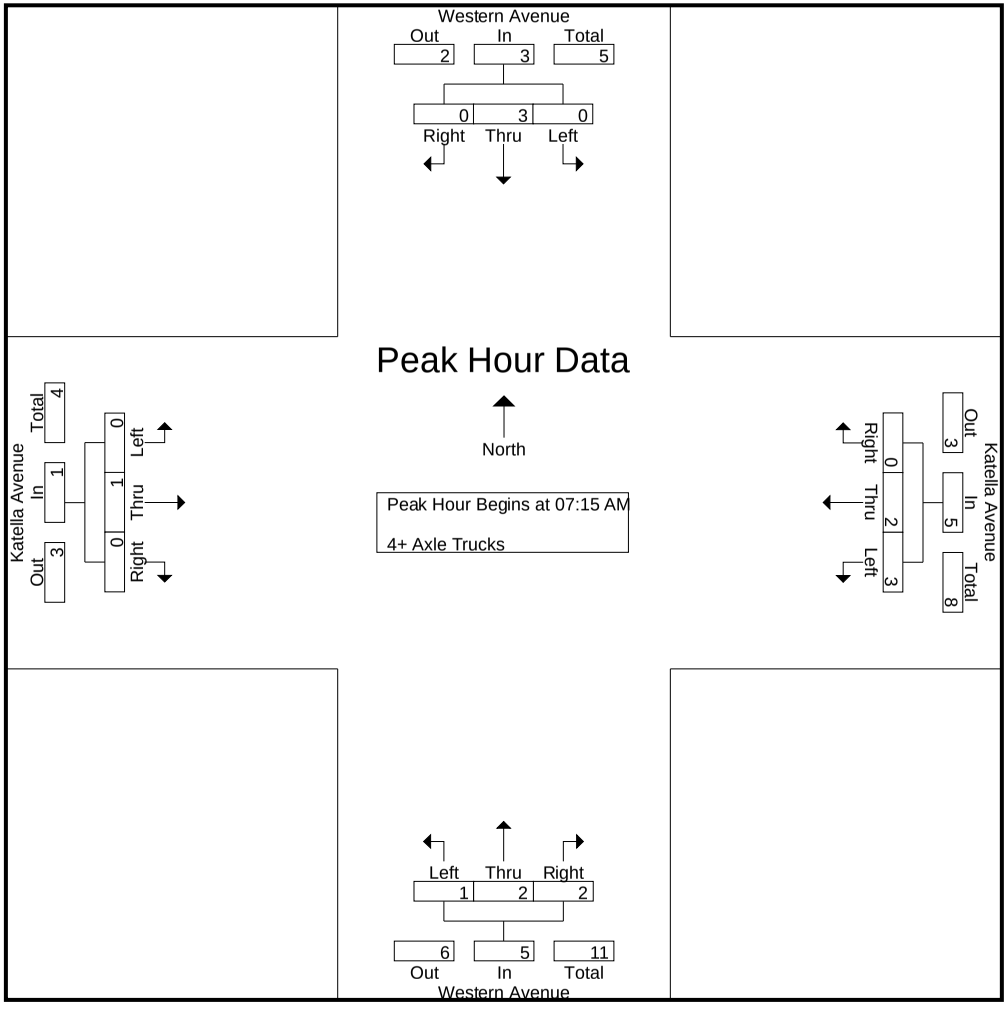

Counts Unlimited
PO Box 1178
Corona, CA 92878
951-268-6268

City of Cypress
N/S: Western Avenue
E/W: Katella Avenue
Weather: Clear

File Name : 11_CYP_West_Kat PM
Site Code : 05120183
Start Date : 3/12/2020
Page No : 1

Groups Printed- Passenger Vehicles - Large 2 Axle Vehicles - 3 Axle Vehicles - 4+ Axle Trucks

	Western Avenue Southbound					Katella Avenue Westbound					Western Avenue Northbound					Katella Avenue Eastbound							
Start Time	Left	Thru	Right	RTOR	App. Total	Left	Thru	Right	RTOR	App. Total	Left	Thru	Right	RTOR	App. Total	Left	Thru	Right	RTOR	App. Total	Exclu. Total	Inclu. Total	Int. Total
04:00 PM	22	116	24	5	162	19	161	15	1	195	28	223	32	2	283	29	184	34	6	247	14	887	901
04:15 PM	18	76	15	2	109	27	203	33	2	263	23	149	25	1	197	36	241	32	5	309	10	878	888
04:30 PM	30	112	21	3	163	26	166	35	5	227	40	219	34	4	293	35	213	29	8	277	20	960	980
04:45 PM	25	103	20	5	148	26	183	34	3	243	36	166	29	2	231	39	293	36	9	368	19	990	1009
Total	95	407	80	15	582	98	713	117	11	928	127	757	120	9	1004	139	931	131	28	1201	63	3715	3778
05:00 PM	27	94	34	5	155	19	148	30	5	197	46	237	30	3	313	28	246	35	10	309	23	974	997
05:15 PM	33	121	30	3	184	27	201	35	2	263	34	194	30	6	258	39	302	29	6	370	17	1075	1092
05:30 PM	22	111	16	6	149	26	170	37	3	233	40	213	40	3	293	33	274	35	15	342	27	1017	1044
05:45 PM	36	108	32	4	176	28	200	48	2	276	47	179	24	2	250	34	238	34	6	306	14	1008	1022
Total	118	434	112	18	664	100	719	150	12	969	167	823	124	14	1114	134	1060	133	37	1327	81	4074	4155
Grand Total	213	841	192	33	1246	198	1432	267	23	1897	294	1580	244	23	2118	273	1991	264	65	2528	144	7789	7933
Apprch %	17.1	67.5	15.4			10.4	75.5	14.1			13.9	74.6	11.5			10.8	78.8	10.4					
Total %	2.7	10.8	2.5		16	2.5	18.4	3.4		24.4	3.8	20.3	3.1		27.2	3.5	25.6	3.4		32.5	1.8	98.2	
Passenger Vehicles	213	816	192		1254	188	1414	267		1892	290	1571	229		2113	273	1943	233		2505	0	0	7764
% Passenger Vehicles	100	97	100	100	98	94.9	98.7	100	100	98.5	98.6	99.4	93.9	100	98.7	100	97.6	88.3	86.2	96.6	0	0	97.9
Large 2 Axle Vehicles	0	19	0		19	5	9	0		14	0	8	5		13	0	20	6		27	0	0	73
% Large 2 Axle Vehicles	0	2.3	0	0	1.5	2.5	0.6	0	0	0.7	0	0.5	2	0	0.6	0	1	2.3	1.5	1	0	0	0.9
3 Axle Vehicles	0	1	0		1	2	6	0		8	2	0	2		4	0	9	5		16	0	0	29
% 3 Axle Vehicles	0	0.1	0	0	0.1	1	0.4	0	0	0.4	0.7	0	0.8	0	0.2	0	0.5	1.9	3.1	0.6	0	0	0.4
4+ Axle Trucks	0	5	0		5	3	3	0		6	2	1	8		11	0	19	20		45	0	0	67
% 4+ Axle Trucks	0	0.6	0	0	0.4	1.5	0.2	0	0	0.3	0.7	0.1	3.3	0	0.5	0	1	7.6	9.2	1.7	0	0	0.8

	Western Avenue Southbound				Katella Avenue Westbound				Western Avenue Northbound				Katella Avenue Eastbound				
Start Time	Left	Thru	Right	App. Total	Left	Thru	Right	App. Total	Left	Thru	Right	App. Total	Left	Thru	Right	App. Total	Int. Total
Peak Hour Analysis From 04:00 PM to 05:45 PM - Peak 1 of 1																	
Peak Hour for Entire Intersection Begins at 05:00 PM																	
05:00 PM	27	94	**34**	155	19	148	30	197	46	**237**	30	**313**	28	246	**35**	309	974
05:15 PM	33	**121**	30	**184**	27	**201**	35	263	34	194	30	258	**39**	**302**	29	**370**	**1075**
05:30 PM	22	111	16	149	26	170	37	233	40	213	**40**	293	33	274	35	342	1017
05:45 PM	**36**	108	32	176	**28**	200	**48**	**276**	**47**	179	24	250	34	238	34	306	1008
Total Volume	118	434	112	664	100	719	150	969	167	823	124	1114	134	1060	133	1327	4074
% App. Total	17.8	65.4	16.9		10.3	74.2	15.5		15	73.9	11.1		10.1	79.9	10		
PHF	.819	.897	.824	.902	.893	.894	.781	.878	.888	.868	.775	.890	.859	.877	.950	.897	.947

Counts Unlimited
PO Box 1178
Corona, CA 92878
951-268-6268

City of Cypress
N/S: Western Avenue
E/W: Katella Avenue
Weather: Clear

File Name : 11_CYP_West_Kat PM
Site Code : 05120183
Start Date : 3/12/2020
Page No : 2

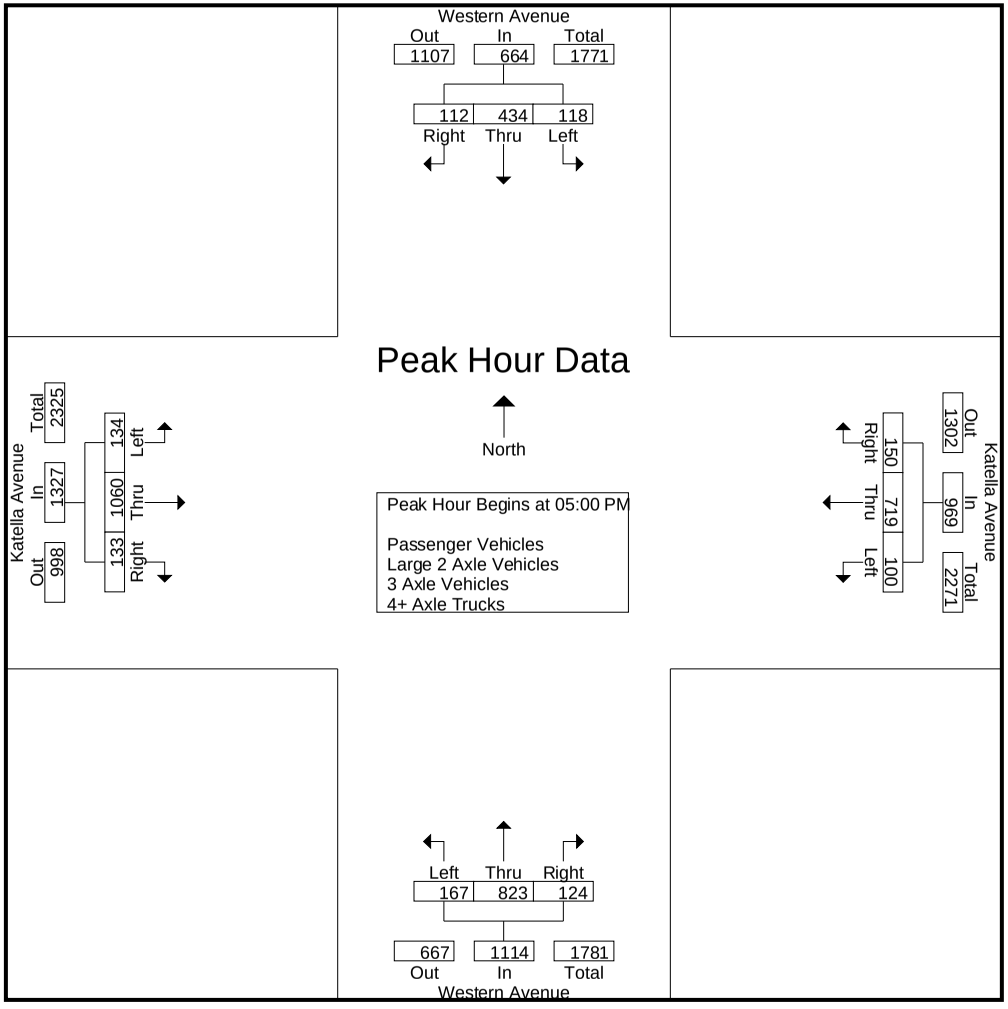

Counts Unlimited
PO Box 1178
Corona, CA 92878
951-268-6268

City of Cypress
N/S: Western Avenue
E/W: Katella Avenue
Weather: Clear

File Name : 11_CYP_West_Kat PM
Site Code : 05120183
Start Date : 3/12/2020
Page No : 1

Groups Printed- Large 2 Axle Vehicles

	Western Avenue Southbound					Katella Avenue Westbound					Western Avenue Northbound					Katella Avenue Eastbound							
Start Time	Left	Thru	Right	RTOR	App. Total	Left	Thru	Right	RTOR	App. Total	Left	Thru	Right	RTOR	App. Total	Left	Thru	Right	RTOR	App. Total	Exclu. Total	Inclu. Total	Int. Total
04:00 PM	0	1	0	0	1	1	0	0	0	1	0	1	0	0	1	0	4	2	0	6	0	9	9
04:15 PM	0	2	0	0	2	0	4	0	0	4	0	1	0	0	1	0	6	2	0	8	0	15	15
04:30 PM	0	2	0	0	2	2	0	0	0	2	0	1	2	0	3	0	1	1	0	2	0	9	9
04:45 PM	0	3	0	0	3	0	2	0	0	2	0	2	2	0	4	0	1	1	1	2	1	11	12
Total	0	8	0	0	8	3	6	0	0	9	0	5	4	0	9	0	12	6	1	18	1	44	45
05:00 PM	0	3	0	0	3	1	1	0	0	2	0	1	0	0	1	0	2	0	0	2	0	8	8
05:15 PM	0	0	0	0	0	1	0	0	0	1	0	1	0	0	1	0	3	0	0	3	0	5	5
05:30 PM	0	8	0	0	8	0	1	0	0	1	0	0	1	0	1	0	2	0	0	2	0	12	12
05:45 PM	0	0	0	0	0	0	1	0	0	1	0	1	0	0	1	0	1	0	0	1	0	3	3
Total	0	11	0	0	11	2	3	0	0	5	0	3	1	0	4	0	8	0	0	8	0	28	28
Grand Total	0	19	0	0	19	5	9	0	0	14	0	8	5	0	13	0	20	6	1	26	1	72	73
Apprch %	0	100	0			35.7	64.3	0			0	61.5	38.5			0	76.9	23.1					
Total %	0	26.4	0		26.4	6.9	12.5	0		19.4	0	11.1	6.9		18.1	0	27.8	8.3		36.1	1.4	98.6	

3.1-124

	Western Avenue Southbound				Katella Avenue Westbound				Western Avenue Northbound				Katella Avenue Eastbound				
Start Time	Left	Thru	Right	App. Total	Left	Thru	Right	App. Total	Left	Thru	Right	App. Total	Left	Thru	Right	App. Total	Int. Total
Peak Hour Analysis From 05:00 PM to 05:45 PM - Peak 1 of 1																	
Peak Hour for Entire Intersection Begins at 05:00 PM																	
05:00 PM	0	3	0	3	**1**	**1**	0	**2**	0	**1**	0	**1**	0	2	0	2	8
05:15 PM	0	0	0	0	1	0	0	1	0	1	0	1	0	**3**	0	**3**	5
05:30 PM	0	**8**	0	**8**	0	1	0	1	0	0	**1**	1	0	2	0	2	**12**
05:45 PM	0	0	0	0	0	1	0	1	0	1	0	1	0	1	0	1	3
Total Volume	0	11	0	11	2	3	0	5	0	3	1	4	0	8	0	8	28
% App. Total	0	100	0		40	60	0		0	75	25		0	100	0		
PHF	.000	.344	.000	.344	.500	.750	.000	.625	.000	.750	.250	1.00	.000	.667	.000	.667	.583

Counts Unlimited
PO Box 1178
Corona, CA 92878
951-268-6268

City of Cypress
N/S: Western Avenue
E/W: Katella Avenue
Weather: Clear

File Name : 11_CYP_West_Kat PM
Site Code : 05120183
Start Date : 3/12/2020
Page No : 2

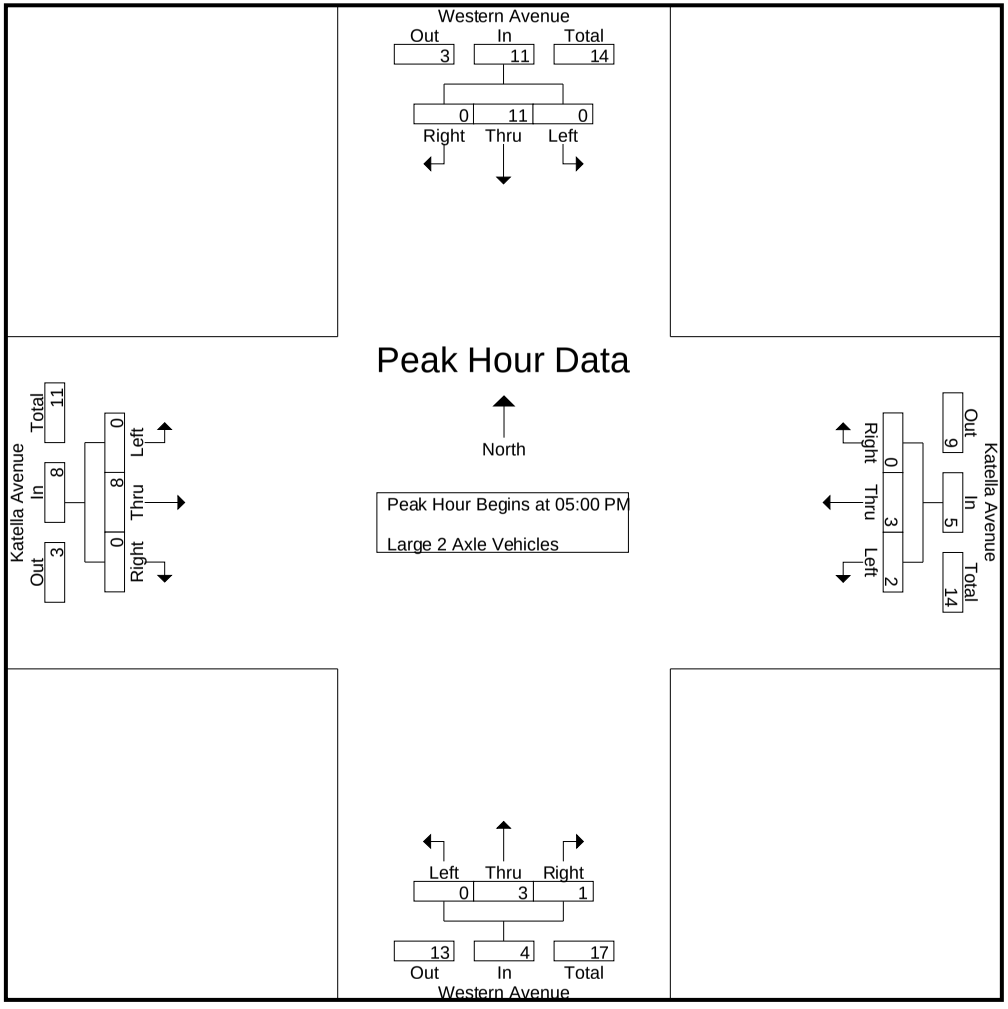

Counts Unlimited
PO Box 1178
Corona, CA 92878
951-268-6268

City of Cypress
N/S: Western Avenue
E/W: Katella Avenue
Weather: Clear

File Name : 11_CYP_West_Kat PM
Site Code : 05120183
Start Date : 3/12/2020
Page No : 1

Groups Printed- 3 Axle Vehicles

	Western Avenue Southbound					Katella Avenue Westbound					Western Avenue Northbound					Katella Avenue Eastbound							
Start Time	Left	Thru	Right	RTOR	App. Total	Left	Thru	Right	RTOR	App. Total	Left	Thru	Right	RTOR	App. Total	Left	Thru	Right	RTOR	App. Total	Exclu. Total	Inclu. Total	Int. Total
04:00 PM	0	0	0	0	0	0	2	0	0	2	0	0	0	0	0	0	2	1	0	3	0	5	5
04:15 PM	0	0	0	0	0	0	0	0	0	0	0	0	2	0	2	0	1	1	0	2	0	4	4
04:30 PM	0	1	0	0	1	1	1	0	0	2	1	0	0	0	1	0	2	1	0	3	0	7	7
04:45 PM	0	0	0	0	0	1	0	0	0	1	0	0	0	0	0	0	0	0	0	0	0	1	1
Total	0	1	0	0	1	2	3	0	0	5	1	0	2	0	3	0	5	3	0	8	0	17	17
05:00 PM	0	0	0	0	0	0	1	0	0	1	1	0	0	0	1	0	1	2	2	3	2	5	7
05:15 PM	0	0	0	0	0	0	2	0	0	2	0	0	0	0	0	0	0	0	0	0	0	2	2
05:30 PM	0	0	0	0	0	0	0	0	0	0	0	0	0	0	0	0	2	0	0	2	0	2	2
05:45 PM	0	0	0	0	0	0	0	0	0	0	0	0	0	0	0	0	1	0	0	1	0	1	1
Total	0	0	0	0	0	0	3	0	0	3	1	0	0	0	1	0	4	2	2	6	2	10	12
Grand Total	0	1	0	0	1	2	6	0	0	8	2	0	2	0	4	0	9	5	2	14	2	27	29
Apprch %	0	100	0			25	75	0			50	0	50			0	64.3	35.7					
Total %	0	3.7	0		3.7	7.4	22.2	0		29.6	7.4	0	7.4		14.8	0	33.3	18.5		51.9	6.9	93.1	

3.1-126

	Western Avenue Southbound				Katella Avenue Westbound				Western Avenue Northbound				Katella Avenue Eastbound				
Start Time	Left	Thru	Right	App. Total	Left	Thru	Right	App. Total	Left	Thru	Right	App. Total	Left	Thru	Right	App. Total	Int. Total
Peak Hour Analysis From 05:00 PM to 05:45 PM - Peak 1 of 1																	
Peak Hour for Entire Intersection Begins at 05:00 PM																	
05:00 PM	0	0	0	0	0	1	0	1	**1**	0	0	**1**	0	1	**2**	**3**	**5**
05:15 PM	0	0	0	0	0	**2**	0	**2**	0	0	0	0	0	0	0	0	2
05:30 PM	0	0	0	0	0	0	0	0	0	0	0	0	0	**2**	0	2	2
05:45 PM	0	0	0	0	0	0	0	0	0	0	0	0	0	1	0	1	1
Total Volume	0	0	0	0	0	3	0	3	1	0	0	1	0	4	2	6	10
% App. Total	0	0	0		0	100	0		100	0	0		0	66.7	33.3		
PHF	.000	.000	.000	.000	.000	.375	.000	.375	.250	.000	.000	.250	.000	.500	.250	.500	.500

Counts Unlimited
PO Box 1178
Corona, CA 92878
951-268-6268

City of Cypress
N/S: Western Avenue
E/W: Katella Avenue
Weather: Clear

File Name : 11_CYP_West_Kat PM
Site Code : 05120183
Start Date : 3/12/2020
Page No : 2

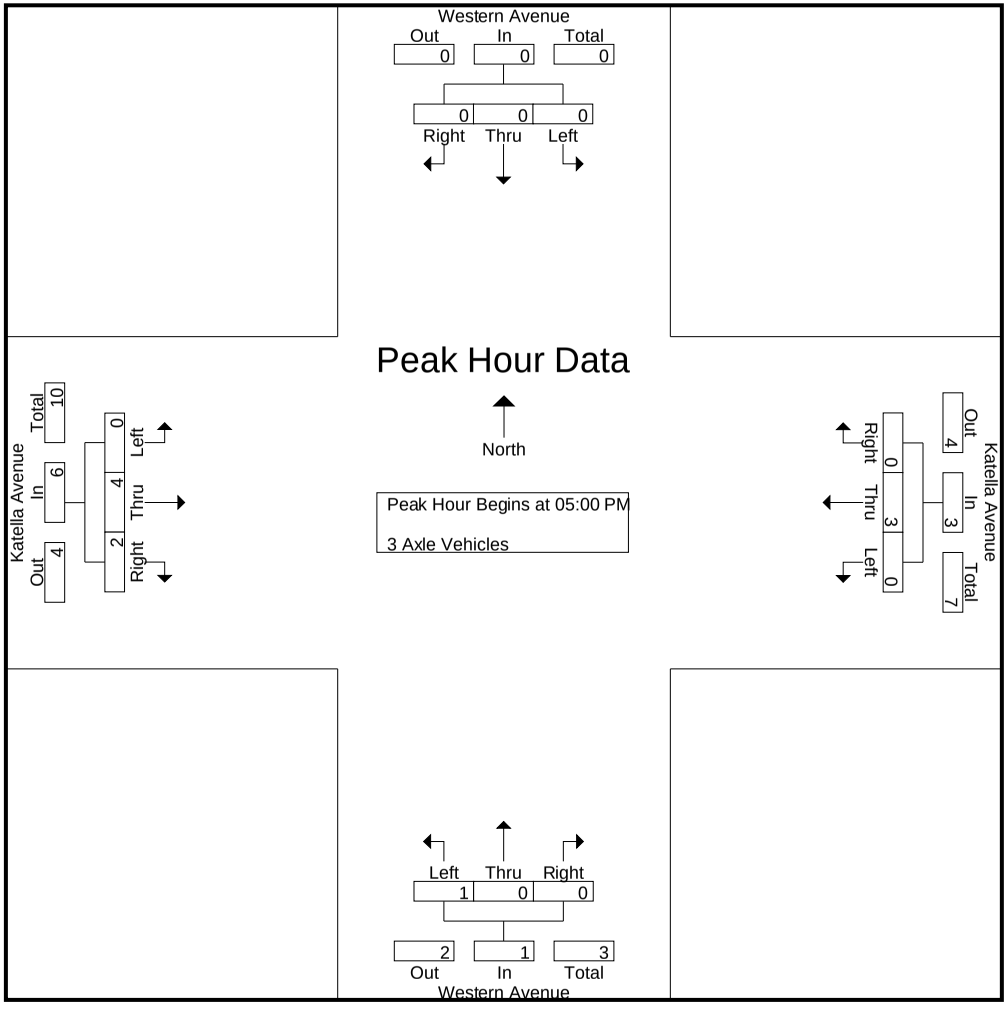

Counts Unlimited
PO Box 1178
Corona, CA 92878
951-268-6268

City of Cypress
N/S: Western Avenue
E/W: Katella Avenue
Weather: Clear

File Name : 11_CYP_West_Kat PM
Site Code : 05120183
Start Date : 3/12/2020
Page No : 1

Groups Printed- 4+ Axle Trucks

	Western Avenue Southbound					Katella Avenue Westbound					Western Avenue Northbound					Katella Avenue Eastbound							
Start Time	Left	Thru	Right	RTOR	App. Total	Left	Thru	Right	RTOR	App. Total	Left	Thru	Right	RTOR	App. Total	Left	Thru	Right	RTOR	App. Total	Exclu. Total	Inclu. Total	Int. Total
04:00 PM	0	0	0	0	0	0	0	0	0	0	0	0	2	0	2	0	5	5	1	10	1	12	13
04:15 PM	0	0	0	0	0	0	1	0	0	1	1	0	1	0	2	0	2	1	0	3	0	6	6
04:30 PM	0	2	0	0	2	1	0	0	0	1	1	1	2	0	4	0	2	1	0	3	0	10	10
04:45 PM	0	0	0	0	0	0	1	0	0	1	0	0	1	0	1	0	4	5	1	9	1	11	12
Total	0	2	0	0	2	1	2	0	0	3	2	1	6	0	9	0	13	12	2	25	2	39	41
05:00 PM	0	2	0	0	2	1	1	0	0	2	0	0	0	0	0	0	1	2	1	3	1	7	8
05:15 PM	0	1	0	0	1	1	0	0	0	1	0	0	2	0	2	0	3	2	0	5	0	9	9
05:30 PM	0	0	0	0	0	0	0	0	0	0	0	0	0	0	0	0	0	2	2	2	2	2	4
05:45 PM	0	0	0	0	0	0	0	0	0	0	0	0	0	0	0	0	2	2	1	4	1	4	5
Total	0	3	0	0	3	2	1	0	0	3	0	0	2	0	2	0	6	8	4	14	4	22	26
Grand Total	0	5	0	0	5	3	3	0	0	6	2	1	8	0	11	0	19	20	6	39	6	61	67
Apprch %	0	100	0			50	50	0			18.2	9.1	72.7			0	48.7	51.3					
Total %	0	8.2	0		8.2	4.9	4.9	0		9.8	3.3	1.6	13.1		18	0	31.1	32.8		63.9	9	91	

	Western Avenue Southbound				Katella Avenue Westbound				Western Avenue Northbound				Katella Avenue Eastbound				
Start Time	Left	Thru	Right	App. Total	Left	Thru	Right	App. Total	Left	Thru	Right	App. Total	Left	Thru	Right	App. Total	Int. Total
Peak Hour Analysis From 05:00 PM to 05:45 PM - Peak 1 of 1																	
Peak Hour for Entire Intersection Begins at 05:00 PM																	
05:00 PM	0	**2**	0	**2**	**1**	**1**	0	**2**	0	0	0	0	0	1	**2**	3	7
05:15 PM	0	1	0	1	1	0	0	1	0	0	**2**	**2**	0	**3**	2	**5**	**9**
05:30 PM	0	0	0	0	0	0	0	0	0	0	0	0	0	0	2	2	2
05:45 PM	0	0	0	0	0	0	0	0	0	0	0	0	0	2	2	4	4
Total Volume	0	3	0	3	2	1	0	3	0	0	2	2	0	6	8	14	22
% App. Total	0	100	0		66.7	33.3	0		0	0	100		0	42.9	57.1		
PHF	.000	.375	.000	.375	.500	.250	.000	.375	.000	.000	.250	.250	.000	.500	1.00	.700	.611

Counts Unlimited
PO Box 1178
Corona, CA 92878
951-268-6268

City of Cypress
N/S: Western Avenue
E/W: Katella Avenue
Weather: Clear

File Name : 11_CYP_West_Kat PM
Site Code : 05120183
Start Date : 3/12/2020
Page No : 2

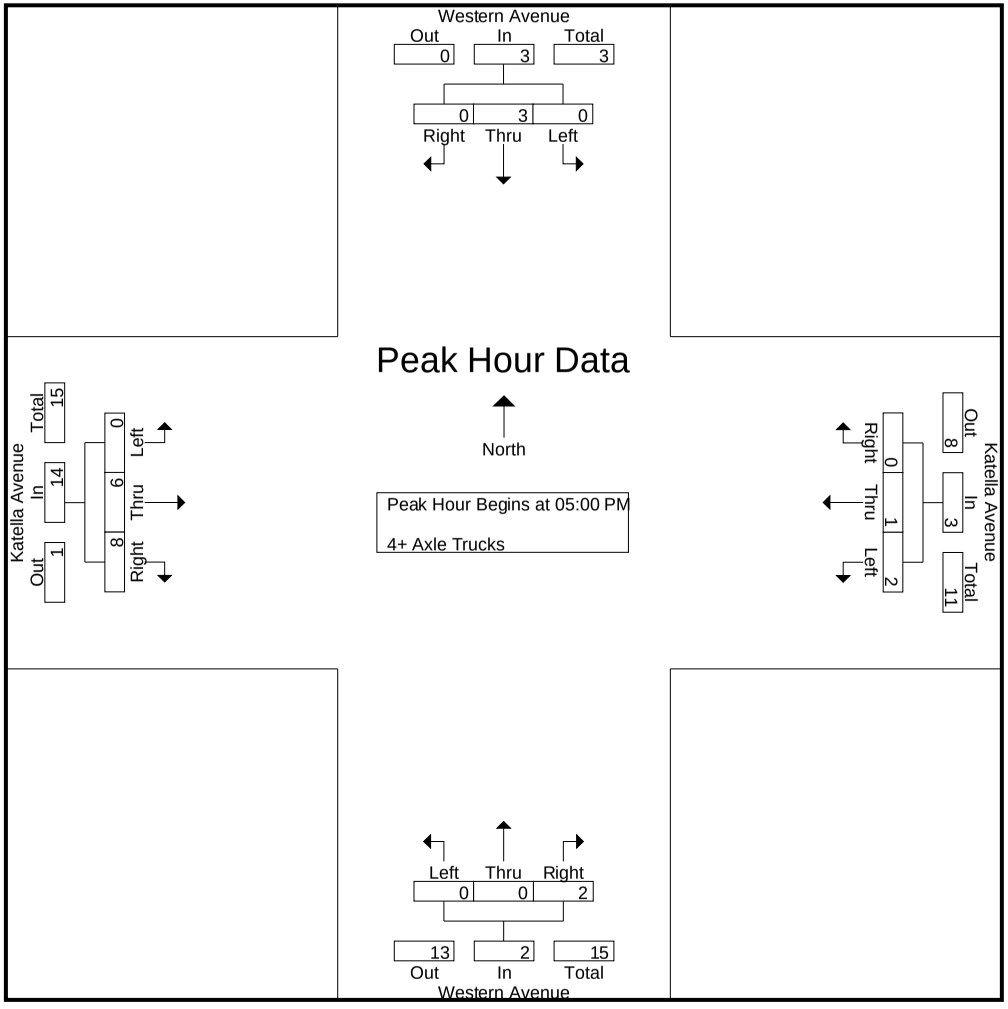

Location: Cypress
N/S: Western Avenue
E/W: Katella Avenue

Date: 3/12/2020
Day: Thursday

PEDESTRIANS

	North Leg Western Avenue	East Leg Katella Avenue	South Leg Western Avenue	West Leg Katella Avenue	
	Pedestrians	Pedestrians	Pedestrians	Pedestrians	
7:00 AM	0	1	1	0	2
7:15 AM	2	2	2	1	7
7:30 AM	0	0	1	1	2
7:45 AM	0	5	2	0	7
8:00 AM	1	5	7	2	15
8:15 AM	2	0	4	2	8
8:30 AM	1	2	3	0	6
8:45 AM	0	1	11	0	12
TOTAL VOLUMES:	6	16	31	6	59

	North Leg Western Avenue	East Leg Katella Avenue	South Leg Western Avenue	West Leg Katella Avenue	
	Pedestrians	Pedestrians	Pedestrians	Pedestrians	
4:00 PM	1	0	2	1	4
4:15 PM	0	1	6	1	8
4:30 PM	0	1	10	0	11
4:45 PM	2	3	3	1	9
5:00 PM	1	6	4	1	12
5:15 PM	1	6	3	0	10
5:30 PM	3	0	3	4	10
5:45 PM	0	2	2	1	5
TOTAL VOLUMES:	8	19	33	9	69

Counts Unlimited, Inc.
PO Box 1178
Corona, CA 92878
951-268-0268

Location: Cypress
N/S: Western Avenue
E/W: Katella Avenue

Date: 3/12/2020
Day: Thursday

BICYCLES

	Southbound Western Avenue			Westbound Katella Avenue			Northbound Western Avenue			Eastbound Katella Avenue			
	Left	Thru	Right	Left	Thru	Right	Left	Thru	Right	Left	Thru	Right	
7:00 AM	1	1	0	0	1	0	0	0	0	0	0	0	3
7:15 AM	0	2	0	0	1	0	0	0	0	0	1	0	4
7:30 AM	0	1	0	0	1	0	0	1	0	0	1	0	4
7:45 AM	0	0	1	0	0	0	0	1	0	0	1	0	3
8:00 AM	0	1	0	0	0	0	0	1	0	0	1	0	3
8:15 AM	0	0	0	0	0	0	0	0	0	0	0	0	0
8:30 AM	0	0	0	0	0	0	0	0	0	0	0	0	0
8:45 AM	0	0	0	0	0	0	0	0	0	0	0	0	0
TOTAL VOLUMES:	1	5	1	0	3	0	0	3	0	0	4	0	17

	Southbound Western Avenue			Westbound Katella Avenue			Northbound Western Avenue			Eastbound Katella Avenue			
	Left	Thru	Right	Left	Thru	Right	Left	Thru	Right	Left	Thru	Right	
4:00 PM	0	0	0	0	0	0	0	1	0	0	0	0	1
4:15 PM	0	0	0	0	0	0	0	1	0	1	0	0	2
4:30 PM	0	0	0	0	0	0	0	2	0	0	2	0	4
4:45 PM	0	0	0	0	1	0	0	0	0	1	6	0	8
5:00 PM	0	0	0	0	1	0	0	1	0	0	0	0	2
5:15 PM	0	1	0	0	0	0	0	1	0	0	2	0	4
5:30 PM	0	0	0	0	1	0	0	2	0	0	1	0	4
5:45 PM	0	1	0	0	1	0	0	2	0	0	1	0	5
TOTAL VOLUMES:	0	2	0	0	4	0	0	10	0	2	12	0	30

Counts Unlimited, Inc.
PO Box 1178
Corona, CA 92878
951-268-6268

This Page Intentionally Left Blank

APPENDIX 3.2:

EXISTING (2020) CONDITIONS INTERSECTION OPERATIONS ANALYSIS

This Page Intentionally Left Blank

Amazon Warehouse (JN 13106A)
Existing (2020)
AM Peak Hour

Level Of Service Computation Report
ICU 1(Loss as Cycle Length %) Method (Base Volume Alternative)

Intersection #101 Valley View St. & Katella Av.

Cycle (sec):	100	Critical Vol./Cap.(X):	0.829
Loss Time (sec):	10	Average Delay (sec/veh):	xxxxxx
Optimal Cycle:	74	Level Of Service:	D

Approach:	North Bound			South Bound			East Bound			West Bound		
Movement:	L - T	- R		L - T	- R		L - T	- R		L - T	- R	
Control:	Protected			Protected			Protected			Protected		
Rights:	Include			Include			Ignore			Include		
Min. Green:	0	0	0	0	0	0	0	0	0	0	0	0
Y+R:	4.0	4.0	4.0	4.0	4.0	4.0	4.0	4.0	4.0	4.0	4.0	4.0
Lanes:	3 0	3 0	1	2 0	3 0	1	2 0	3 0	1	2 0	3 0	1
Volume Module:												
Base Vol:	828	1531	294	241	1102	228	236	985	702	206	1213	154
Growth Adj:	1.00	1.00	1.00	1.00	1.00	1.00	1.00	1.00	1.00	1.00	1.00	1.00
Initial Bse:	828	1531	294	241	1102	228	236	985	702	206	1213	154
User Adj:	1.00	1.00	1.00	1.00	1.00	1.00	1.00	1.00	0.00	1.00	1.00	1.00
PHF Adj:	1.00	1.00	1.00	1.00	1.00	1.00	1.00	1.00	0.00	1.00	1.00	1.00
PHF Volume:	828	1531	294	241	1102	228	236	985	0	206	1213	154
Reduct Vol:	0	0	0	0	0	0	0	0	0	0	0	0
Reduced Vol:	828	1531	294	241	1102	228	236	985	0	206	1213	154
PCE Adj:	1.00	1.00	1.00	1.00	1.00	1.00	1.00	1.00	0.00	1.00	1.00	1.00
MLF Adj:	1.00	1.00	1.00	1.00	1.00	1.00	1.00	1.00	0.00	1.00	1.00	1.00
FinalVolume:	828	1531	294	241	1102	228	236	985	0	206	1213	154
Saturation Flow Module:												
Sat/Lane:	1600	1600	1600	1600	1600	1600	1600	1600	1600	1600	1600	1600
Adjustment:	1.00	1.00	1.00	1.00	1.00	1.00	1.00	1.00	1.00	1.00	1.00	1.00
Lanes:	3.00	3.00	1.00	2.00	3.00	1.00	2.00	3.00	1.00	2.00	3.00	1.00
Final Sat.:	4800	4800	1600	3200	4800	1600	3200	4800	1600	3200	4800	1600
Capacity Analysis Module:												
Vol/Sat:	0.17	0.32	0.18	0.08	0.23	0.14	0.07	0.21	0.00	0.06	0.25	0.10
Crit Moves:	****				****		****				****	

Amazon Warehouse (JN 13106A)
Existing (2020)
AM Peak Hour

Level Of Service Computation Report
ICU 1(Loss as Cycle Length %) Method (Base Volume Alternative)

Intersection #2 Holder St. & Katella Av.

Cycle (sec):	100	Critical Vol./Cap.(X):	0.589
Loss Time (sec):	10	Average Delay (sec/veh):	xxxxxx
Optimal Cycle:	39	Level Of Service:	A

Approach:	North Bound			South Bound			East Bound			West Bound		
Movement:	L - T - R			L - T - R			L - T - R			L - T - R		
Control:	Prot+Permit			Prot+Permit			Protected			Protected		
Rights:	Include			Include			Include			Include		
Min. Green:	0	0	0	0	0	0	0	0	0	0	0	0
Y+R:	4.0	4.0	4.0	4.0	4.0	4.0	4.0	4.0	4.0	4.0	4.0	4.0
Lanes:	1 0	1	1 0	1 0	1	1 0	1 0	3	0 1	1 0	3	0 1
Volume Module:												
Base Vol:	10	2	12	200	42	183	35	1085	154	104	1607	146
Growth Adj:	1.00	1.00	1.00	1.00	1.00	1.00	1.00	1.00	1.00	1.00	1.00	1.00
Initial Bse:	10	2	12	200	42	183	35	1085	154	104	1607	146
User Adj:	1.00	1.00	1.00	1.00	1.00	1.00	1.00	1.00	1.00	1.00	1.00	1.00
PHF Adj:	1.00	1.00	1.00	1.00	1.00	1.00	1.00	1.00	1.00	1.00	1.00	1.00
PHF Volume:	10	2	12	200	42	183	35	1085	154	104	1607	146
Reduct Vol:	0	0	0	0	0	0	0	0	0	0	0	0
Reduced Vol:	10	2	12	200	42	183	35	1085	154	104	1607	146
PCE Adj:	1.00	1.00	1.00	1.00	1.00	1.00	1.00	1.00	1.00	1.00	1.00	1.00
MLF Adj:	1.00	1.00	1.00	1.00	1.00	1.00	1.00	1.00	1.00	1.00	1.00	1.00
FinalVolume:	10	2	12	200	42	183	35	1085	154	104	1607	146
Saturation Flow Module:												
Sat/Lane:	1600	1600	1600	1600	1600	1600	1600	1600	1600	1600	1600	1600
Adjustment:	1.00	1.00	1.00	1.00	1.00	1.00	1.00	1.00	1.00	1.00	1.00	1.00
Lanes:	1.00	1.00	1.00	1.00	1.00	1.00	1.00	3.00	1.00	1.00	3.00	1.00
Final Sat.:	1600	1600	1600	1600	1600	1600	1600	4800	1600	1600	4800	1600
Capacity Analysis Module:												
Vol/Sat:	0.01	0.00	0.01	0.13	0.03	0.11	0.02	0.23	0.10	0.07	0.33	0.09
Crit Moves:			****	****			****				****	

Intersection	
Int Delay, s/veh	0.4

Movement	EBL	EBT	EBR	WBL	WBT	WBR	NBL	NBT	NBR	SBL	SBT	SBR
Lane Configurations												
Traffic Vol, veh/h	5	0	0	0	0	0	0	19	0	9	225	66
Future Vol, veh/h	5	0	0	0	0	0	0	19	0	9	225	66
Conflicting Peds, #/hr	0	0	0	0	0	0	0	0	0	0	0	0
Sign Control	Stop	Stop	Stop	Stop	Stop	Stop	Free	Free	Free	Free	Free	Free
RT Channelized	-	-	None	-	-	None	-	-	None	-	-	None
Storage Length	-	-	-	-	-	-	50	-	-	50	-	-
Veh in Median Storage, #	-	0	-	-	0	-	-	0	-	-	0	-
Grade, %	-	0	-	-	0	-	-	0	-	-	0	-
Peak Hour Factor	65	65	65	65	65	65	65	65	65	65	65	65
Heavy Vehicles, %	0	0	0	0	0	0	0	0	0	0	0	0
Mvmt Flow	8	0	0	0	0	0	0	29	0	14	346	102

Major/Minor	Minor2			Minor1			Major1			Major2		
Conflicting Flow All	454	454	397	454	505	29	448	0	0	29	0	0
Stage 1	425	425	-	29	29	-	-	-	-	-	-	-
Stage 2	29	29	-	425	476	-	-	-	-	-	-	-
Critical Hdwy	7.1	6.5	6.2	7.1	6.5	6.2	4.1	-	-	4.1	-	-
Critical Hdwy Stg 1	6.1	5.5	-	6.1	5.5	-	-	-	-	-	-	-
Critical Hdwy Stg 2	6.1	5.5	-	6.1	5.5	-	-	-	-	-	-	-
Follow-up Hdwy	3.5	4	3.3	3.5	4	3.3	2.2	-	-	2.2	-	-
Pot Cap-1 Maneuver	520	505	657	520	473	1052	1123	-	-	1597	-	-
Stage 1	611	590	-	993	875	-	-	-	-	-	-	-
Stage 2	993	875	-	611	560	-	-	-	-	-	-	-
Platoon blocked, %								-	-		-	-
Mov Cap-1 Maneuver	516	500	657	516	469	1052	1123	-	-	1597	-	-
Mov Cap-2 Maneuver	516	500	-	516	469	-	-	-	-	-	-	-
Stage 1	611	585	-	993	875	-	-	-	-	-	-	-
Stage 2	993	875	-	606	555	-	-	-	-	-	-	-

Approach	EB	WB	NB	SB
HCM Control Delay, s	12.1	0	0	0.2
HCM LOS	B	A		

Minor Lane/Major Mvmt	NBL	NBT	NBR	EBLn1	WBLn1	SBL	SBT	SBR
Capacity (veh/h)	1123	-	-	516	-	1597	-	-
HCM Lane V/C Ratio	-	-	-	0.015	-	0.009	-	-
HCM Control Delay (s)	0	-	-	12.1	0	7.3	0	-
HCM Lane LOS	A	-	-	B	A	A	A	-
HCM 95th %tile Q(veh)	0	-	-	0	-	0	-	-

Intersection	
Int Delay, s/veh	4.5

Movement	EBL	EBT	EBR	WBL	WBT	WBR	NBL	NBT	NBR	SBL	SBT	SBR
Lane Configurations												
Traffic Vol, veh/h	4	0	0	0	0	12	0	4	0	125	68	32
Future Vol, veh/h	4	0	0	0	0	12	0	4	0	125	68	32
Conflicting Peds, #/hr	0	0	0	0	0	0	0	0	0	0	0	0
Sign Control	Stop	Stop	Stop	Stop	Stop	Stop	Free	Free	Free	Free	Free	Free
RT Channelized	-	-	None	-	-	None	-	-	None	-	-	None
Storage Length	-	-	-	-	-	-	50	-	-	50	-	-
Veh in Median Storage, #	-	0	-	-	0	-	-	0	-	-	0	-
Grade, %	-	0	-	-	0	-	-	0	-	-	0	-
Peak Hour Factor	69	69	69	69	25	69	69	69	69	69	69	69
Heavy Vehicles, %	0	0	0	0	0	0	0	0	0	0	0	0
Mvmt Flow	6	0	0	0	0	17	0	6	0	181	99	46

Major/Minor	Minor2			Minor1			Major1			Major2		
Conflicting Flow All	499	490	122	490	513	6	145	0	0	6	0	0
Stage 1	484	484	-	6	6	-	-	-	-	-	-	-
Stage 2	15	6	-	484	507	-	-	-	-	-	-	-
Critical Hdwy	7.1	6.5	6.2	7.1	6.5	6.2	4.1	-	-	4.1	-	-
Critical Hdwy Stg 1	6.1	5.5	-	6.1	5.5	-	-	-	-	-	-	-
Critical Hdwy Stg 2	6.1	5.5	-	6.1	5.5	-	-	-	-	-	-	-
Follow-up Hdwy	3.5	4	3.3	3.5	4	3.3	2.2	-	-	2.2	-	-
Pot Cap-1 Maneuver	485	482	935	492	468	1083	1450	-	-	1628	-	-
Stage 1	568	555	-	1021	895	-	-	-	-	-	-	-
Stage 2	1010	895	-	568	543	-	-	-	-	-	-	-
Platoon blocked, %								-	-		-	-
Mov Cap-1 Maneuver	437	428	935	450	416	1083	1450	-	-	1628	-	-
Mov Cap-2 Maneuver	437	428	-	450	416	-	-	-	-	-	-	-
Stage 1	568	493	-	1021	895	-	-	-	-	-	-	-
Stage 2	994	895	-	505	483	-	-	-	-	-	-	-

Approach	EB	WB	NB	SB
HCM Control Delay, s	13.3	8.4	0	4.2
HCM LOS	B	A		

Minor Lane/Major Mvmt	NBL	NBT	NBR	EBLn1	WBLn1	SBL	SBT	SBR
Capacity (veh/h)	1450	-	-	437	1083	1628	-	-
HCM Lane V/C Ratio	-	-	-	0.013	0.016	0.111	-	-
HCM Control Delay (s)	0	-	-	13.3	8.4	7.5	-	-
HCM Lane LOS	A	-	-	B	A	A	-	-
HCM 95th %tile Q(veh)	0	-	-	0	0	0.4	-	-

Amazon Warehouse (JN 13106A)
Existing (2020)
AM Peak Hour

Level Of Service Computation Report
ICU 1(Loss as Cycle Length %) Method (Base Volume Alternative)

Intersection #107 Knott Av. & Katella Av.

Cycle (sec):	100	Critical Vol./Cap.(X):	0.836
Loss Time (sec):	10	Average Delay (sec/veh):	xxxxxx
Optimal Cycle:	76	Level Of Service:	D

Approach:	North Bound			South Bound			East Bound			West Bound		
Movement:	L -	T -	R	L -	T -	R	L -	T -	R	L -	T -	R
Control:	Protected			Protected			Protected			Protected		
Rights:	Include			Include			Ovl			Ovl		
Min. Green:	0	0	0	0	0	0	0	0	0	0	0	0
Y+R:	4.0	4.0	4.0	4.0	4.0	4.0	4.0	4.0	4.0	4.0	4.0	4.0
Lanes:	2 0	1 1	0	1 0	2 0	1	1 0	3 0	1	1 0	3 0	1
Volume Module:												
Base Vol:	377	577	121	111	924	177	74	874	279	191	1360	106
Growth Adj:	1.00	1.00	1.00	1.00	1.00	1.00	1.00	1.00	1.00	1.00	1.00	1.00
Initial Bse:	377	577	121	111	924	177	74	874	279	191	1360	106
User Adj:	1.00	1.00	1.00	1.00	1.00	1.00	1.00	1.00	1.00	1.00	1.00	1.00
PHF Adj:	1.00	1.00	1.00	1.00	1.00	1.00	1.00	1.00	1.00	1.00	1.00	1.00
PHF Volume:	377	577	121	111	924	177	74	874	279	191	1360	106
Reduct Vol:	0	0	0	0	0	0	0	0	0	0	0	0
Reduced Vol:	377	577	121	111	924	177	74	874	279	191	1360	106
PCE Adj:	1.00	1.00	1.00	1.00	1.00	1.00	1.00	1.00	1.00	1.00	1.00	1.00
MLF Adj:	1.00	1.00	1.00	1.00	1.00	1.00	1.00	1.00	1.00	1.00	1.00	1.00
FinalVolume:	377	577	121	111	924	177	74	874	279	191	1360	106
OvlAdjVol:									91			0
Saturation Flow Module:												
Sat/Lane:	1600	1600	1600	1600	1600	1600	1600	1600	1600	1600	1600	1600
Adjustment:	1.00	1.00	1.00	1.00	1.00	1.00	1.00	1.00	1.00	1.00	1.00	1.00
Lanes:	2.00	1.65	0.35	1.00	2.00	1.00	1.00	3.00	1.00	1.00	3.00	1.00
Final Sat.:	3200	2645	555	1600	3200	1600	1600	4800	1600	1600	4800	1600
Capacity Analysis Module:												
Vol/Sat:	0.12	0.22	0.22	0.07	0.29	0.11	0.05	0.18	0.17	0.12	0.28	0.07
OvlAdjV/S:									0.06			0.00
Crit Moves:	****				****		****				****	

Traffix 8.0.0715 (c) 2008 Dowling Assoc. Licensed to URBAN CROSSROADS, IRVINE

Amazon Warehouse (JN 13106A)
Existing (2020)
AM Peak Hour

Level Of Service Computation Report
ICU 1(Loss as Cycle Length %) Method (Base Volume Alternative)

Intersection #108 Western Wy. & Katella Av.

Cycle (sec):	100	Critical Vol./Cap.(X):	0.886
Loss Time (sec):	10	Average Delay (sec/veh):	xxxxxx
Optimal Cycle:	94	Level Of Service:	D

Approach:	North Bound			South Bound			East Bound			West Bound		
Movement:	L - T - R			L - T - R			L - T - R			L - T - R		
Control:	Protected			Protected			Protected			Protected		
Rights:	Include			Include			Ovl			Ovl		
Min. Green:	0	0	0	0	0	0	0	0	0	0	0	0
Y+R:	4.0	4.0	4.0	4.0	4.0	4.0	4.0	4.0	4.0	4.0	4.0	4.0
Lanes:	1 0	1	1 0	1 0	1	1 0	1 0	3	0 1	1 0	3	0 1
Volume Module:												
Base Vol:	153	289	101	124	884	162	120	1008	156	201	1386	98
Growth Adj:	1.00	1.00	1.00	1.00	1.00	1.00	1.00	1.00	1.00	1.00	1.00	1.00
Initial Bse:	153	289	101	124	884	162	120	1008	156	201	1386	98
User Adj:	1.00	1.00	1.00	1.00	1.00	1.00	1.00	1.00	1.00	1.00	1.00	1.00
PHF Adj:	1.00	1.00	1.00	1.00	1.00	1.00	1.00	1.00	1.00	1.00	1.00	1.00
PHF Volume:	153	289	101	124	884	162	120	1008	156	201	1386	98
Reduct Vol:	0	0	0	0	0	0	0	0	0	0	0	0
Reduced Vol:	153	289	101	124	884	162	120	1008	156	201	1386	98
PCE Adj:	1.00	1.00	1.00	1.00	1.00	1.00	1.00	1.00	1.00	1.00	1.00	1.00
MLF Adj:	1.00	1.00	1.00	1.00	1.00	1.00	1.00	1.00	1.00	1.00	1.00	1.00
FinalVolume:	153	289	101	124	884	162	120	1008	156	201	1386	98
OvlAdjVol:									3			0
Saturation Flow Module:												
Sat/Lane:	1600	1600	1600	1600	1600	1600	1600	1600	1600	1600	1600	1600
Adjustment:	1.00	1.00	1.00	1.00	1.00	1.00	1.00	1.00	1.00	1.00	1.00	1.00
Lanes:	1.00	1.48	0.52	1.00	1.69	0.31	1.00	3.00	1.00	1.00	3.00	1.00
Final Sat.:	1600	2371	829	1600	2704	496	1600	4800	1600	1600	4800	1600
Capacity Analysis Module:												
Vol/Sat:	0.10	0.12	0.12	0.08	0.33	0.33	0.08	0.21	0.10	0.13	0.29	0.06
OvlAdjV/S:									0.00			0.00
Crit Moves:	****				****		****				****	

Amazon Warehouse (JN 13106A)
Existing (2020)
PM Peak Hour

Level Of Service Computation Report
ICU 1(Loss as Cycle Length %) Method (Base Volume Alternative)

Intersection #101 Valley View St. & Katella Av.

Cycle (sec):	100	Critical Vol./Cap.(X):	0.859
Loss Time (sec):	10	Average Delay (sec/veh):	xxxxxx
Optimal Cycle:	83	Level Of Service:	D

Approach:	North Bound			South Bound			East Bound			West Bound		
Movement:	L - T - R			L - T - R			L - T - R			L - T - R		
Control:	Protected			Protected			Protected			Protected		
Rights:	Include			Include			Ignore			Include		
Min. Green:	0	0	0	0	0	0	0	0	0	0	0	0
Y+R:	4.0	4.0	4.0	4.0	4.0	4.0	4.0	4.0	4.0	4.0	4.0	4.0
Lanes:	3 0	3 0	1	2 0	3 0	1	2 0	3 0	1	2 0	3 0	1
Volume Module:												
Base Vol:	656	1486	177	228	1364	240	261	1078	1010	362	1026	238
Growth Adj:	1.00	1.00	1.00	1.00	1.00	1.00	1.00	1.00	1.00	1.00	1.00	1.00
Initial Bse:	656	1486	177	228	1364	240	261	1078	1010	362	1026	238
User Adj:	1.00	1.00	1.00	1.00	1.00	1.00	1.00	1.00	0.00	1.00	1.00	1.00
PHF Adj:	1.00	1.00	1.00	1.00	1.00	1.00	1.00	1.00	0.00	1.00	1.00	1.00
PHF Volume:	656	1486	177	228	1364	240	261	1078	0	362	1026	238
Reduct Vol:	0	0	0	0	0	0	0	0	0	0	0	0
Reduced Vol:	656	1486	177	228	1364	240	261	1078	0	362	1026	238
PCE Adj:	1.00	1.00	1.00	1.00	1.00	1.00	1.00	1.00	0.00	1.00	1.00	1.00
MLF Adj:	1.00	1.00	1.00	1.00	1.00	1.00	1.00	1.00	0.00	1.00	1.00	1.00
FinalVolume:	656	1486	177	228	1364	240	261	1078	0	362	1026	238
Saturation Flow Module:												
Sat/Lane:	1600	1600	1600	1600	1600	1600	1600	1600	1600	1600	1600	1600
Adjustment:	1.00	1.00	1.00	1.00	1.00	1.00	1.00	1.00	1.00	1.00	1.00	1.00
Lanes:	3.00	3.00	1.00	2.00	3.00	1.00	2.00	3.00	1.00	2.00	3.00	1.00
Final Sat.:	4800	4800	1600	3200	4800	1600	3200	4800	1600	3200	4800	1600
Capacity Analysis Module:												
Vol/Sat:	0.14	0.31	0.11	0.07	0.28	0.15	0.08	0.22	0.00	0.11	0.21	0.15
Crit Moves:	****				****			****		****		

Amazon Warehouse (JN 13106A)
Existing (2020)
PM Peak Hour

Level Of Service Computation Report
ICU 1(Loss as Cycle Length %) Method (Base Volume Alternative)

Intersection #2 Holder St. & Katella Av.

Cycle (sec):	100	Critical Vol./Cap.(X):	0.634
Loss Time (sec):	10	Average Delay (sec/veh):	xxxxxx
Optimal Cycle:	43	Level Of Service:	B

Approach:	North Bound			South Bound			East Bound			West Bound		
Movement:	L -	T -	R	L -	T -	R	L -	T -	R	L -	T -	R
Control:	Prot+Permit			Prot+Permit			Protected			Protected		
Rights:	Include			Include			Include			Include		
Min. Green:	0	0	0	0	0	0	0	0	0	0	0	0
Y+R:	4.0	4.0	4.0	4.0	4.0	4.0	4.0	4.0	4.0	4.0	4.0	4.0
Lanes:	1 0	1	1 0	1 0	1	1 0	1 0	3	0 1	1 0	3	0 1
Volume Module:												
Base Vol:	110	45	103	211	2	114	135	1581	11	14	1051	209
Growth Adj:	1.00	1.00	1.00	1.00	1.00	1.00	1.00	1.00	1.00	1.00	1.00	1.00
Initial Bse:	110	45	103	211	2	114	135	1581	11	14	1051	209
User Adj:	1.00	1.00	1.00	1.00	1.00	1.00	1.00	1.00	1.00	1.00	1.00	1.00
PHF Adj:	1.00	1.00	1.00	1.00	1.00	1.00	1.00	1.00	1.00	1.00	1.00	1.00
PHF Volume:	110	45	103	211	2	114	135	1581	11	14	1051	209
Reduct Vol:	0	0	0	0	0	0	0	0	0	0	0	0
Reduced Vol:	110	45	103	211	2	114	135	1581	11	14	1051	209
PCE Adj:	1.00	1.00	1.00	1.00	1.00	1.00	1.00	1.00	1.00	1.00	1.00	1.00
MLF Adj:	1.00	1.00	1.00	1.00	1.00	1.00	1.00	1.00	1.00	1.00	1.00	1.00
FinalVolume:	110	45	103	211	2	114	135	1581	11	14	1051	209
Saturation Flow Module:												
Sat/Lane:	1600	1600	1600	1600	1600	1600	1600	1600	1600	1600	1600	1600
Adjustment:	1.00	1.00	1.00	1.00	1.00	1.00	1.00	1.00	1.00	1.00	1.00	1.00
Lanes:	1.00	1.00	1.00	1.00	1.00	1.00	1.00	3.00	1.00	1.00	3.00	1.00
Final Sat.:	1600	1600	1600	1600	1600	1600	1600	4800	1600	1600	4800	1600
Capacity Analysis Module:												
Vol/Sat:	0.07	0.03	0.06	0.13	0.00	0.07	0.08	0.33	0.01	0.01	0.22	0.13
Crit Moves:			****	****				****		****		

Intersection	
Int Delay, s/veh	3.4

Movement	EBL	EBT	EBR	WBL	WBT	WBR	NBL	NBT	NBR	SBL	SBT	SBR
Lane Configurations												
Traffic Vol, veh/h	57	0	0	0	0	29	0	173	0	2	21	4
Future Vol, veh/h	57	0	0	0	0	29	0	173	0	2	21	4
Conflicting Peds, #/hr	0	0	0	0	0	0	0	0	0	0	0	0
Sign Control	Stop	Stop	Stop	Stop	Stop	Stop	Free	Free	Free	Free	Free	Free
RT Channelized	-	-	None	-	-	None	-	-	None	-	-	None
Storage Length	-	-	-	-	-	-	50	-	-	50	-	-
Veh in Median Storage, #	-	0	-	-	0	-	-	0	-	-	0	-
Grade, %	-	0	-	-	0	-	-	0	-	-	0	-
Peak Hour Factor	68	68	68	68	68	68	68	68	68	68	68	68
Heavy Vehicles, %	0	0	0	0	0	0	0	0	0	0	0	0
Mvmt Flow	84	0	0	0	0	43	0	254	0	3	31	6

Major/Minor	Minor2			Minor1			Major1			Major2		
Conflicting Flow All	316	294	34	294	297	254	37	0	0	254	0	0
Stage 1	40	40	-	254	254	-	-	-	-	-	-	-
Stage 2	276	254	-	40	43	-	-	-	-	-	-	-
Critical Hdwy	7.1	6.5	6.2	7.1	6.5	6.2	4.1	-	-	4.1	-	-
Critical Hdwy Stg 1	6.1	5.5	-	6.1	5.5	-	-	-	-	-	-	-
Critical Hdwy Stg 2	6.1	5.5	-	6.1	5.5	-	-	-	-	-	-	-
Follow-up Hdwy	3.5	4	3.3	3.5	4	3.3	2.2	-	-	2.2	-	-
Pot Cap-1 Maneuver	641	620	1045	662	618	790	1587	-	-	1323	-	-
Stage 1	980	866	-	755	701	-	-	-	-	-	-	-
Stage 2	735	701	-	980	863	-	-	-	-	-	-	-
Platoon blocked, %								-	-		-	-
Mov Cap-1 Maneuver	605	619	1045	661	617	790	1587	-	-	1323	-	-
Mov Cap-2 Maneuver	605	619	-	661	617	-	-	-	-	-	-	-
Stage 1	980	864	-	755	701	-	-	-	-	-	-	-
Stage 2	695	701	-	978	861	-	-	-	-	-	-	-

Approach	EB	WB	NB	SB
HCM Control Delay, s	11.9	9.8	0	0.6
HCM LOS	B	A		

Minor Lane/Major Mvmt	NBL	NBT	NBR	EBLn1	WBLn1	SBL	SBT	SBR
Capacity (veh/h)	1587	-	-	605	790	1323	-	-
HCM Lane V/C Ratio	-	-	-	0.139	0.054	0.002	-	-
HCM Control Delay (s)	0	-	-	11.9	9.8	7.7	0	-
HCM Lane LOS	A	-	-	B	A	A	A	-
HCM 95th %tile Q(veh)	0	-	-	0.5	0.2	0	-	-

Intersection	
Int Delay, s/veh	6.5

Movement	EBL	EBT	EBR	WBL	WBT	WBR	NBL	NBT	NBR	SBL	SBT	SBR
Lane Configurations												
Traffic Vol, veh/h	30	0	0	0	0	90	0	53	0	13	3	5
Future Vol, veh/h	30	0	0	0	0	90	0	53	0	13	3	5
Conflicting Peds, #/hr	0	0	0	0	0	0	0	0	0	0	0	0
Sign Control	Stop	Stop	Stop	Stop	Stop	Stop	Free	Free	Free	Free	Free	Free
RT Channelized	-	-	None	-	-	None	-	-	None	-	-	None
Storage Length	-	-	-	-	-	-	50	-	-	50	-	-
Veh in Median Storage, #	-	0	-	-	0	-	-	0	-	-	0	-
Grade, %	-	0	-	-	0	-	-	0	-	-	0	-
Peak Hour Factor	66	66	66	66	66	66	66	66	66	66	66	66
Heavy Vehicles, %	0	0	0	0	0	0	0	0	0	0	0	0
Mvmt Flow	45	0	0	0	0	136	0	80	0	20	5	8

Major/Minor	Minor2			Minor1			Major1			Major2		
Conflicting Flow All	197	129	9	129	133	80	13	0	0	80	0	0
Stage 1	49	49	-	80	80	-	-	-	-	-	-	-
Stage 2	148	80	-	49	53	-	-	-	-	-	-	-
Critical Hdwy	7.1	6.5	6.2	7.1	6.5	6.2	4.1	-	-	4.1	-	-
Critical Hdwy Stg 1	6.1	5.5	-	6.1	5.5	-	-	-	-	-	-	-
Critical Hdwy Stg 2	6.1	5.5	-	6.1	5.5	-	-	-	-	-	-	-
Follow-up Hdwy	3.5	4	3.3	3.5	4	3.3	2.2	-	-	2.2	-	-
Pot Cap-1 Maneuver	766	765	1079	849	761	986	1619	-	-	1531	-	-
Stage 1	969	858	-	934	832	-	-	-	-	-	-	-
Stage 2	859	832	-	969	855	-	-	-	-	-	-	-
Platoon blocked, %								-	-		-	-
Mov Cap-1 Maneuver	653	755	1079	841	751	986	1619	-	-	1531	-	-
Mov Cap-2 Maneuver	653	755	-	841	751	-	-	-	-	-	-	-
Stage 1	969	847	-	934	832	-	-	-	-	-	-	-
Stage 2	740	832	-	956	844	-	-	-	-	-	-	-

Approach	EB	WB	NB	SB
HCM Control Delay, s	10.9	9.2	0	4.6
HCM LOS	B	A		

Minor Lane/Major Mvmt	NBL	NBT	NBR	EBLn1	WBLn1	SBL	SBT	SBR
Capacity (veh/h)	1619	-	-	653	986	1531	-	-
HCM Lane V/C Ratio	-	-	-	0.07	0.138	0.013	-	-
HCM Control Delay (s)	0	-	-	10.9	9.2	7.4	-	-
HCM Lane LOS	A	-	-	B	A	A	-	-
HCM 95th %tile Q(veh)	0	-	-	0.2	0.5	0	-	-

Amazon Warehouse (JN 13106A)
Existing (2020)
PM Peak Hour

Level Of Service Computation Report
ICU 1(Loss as Cycle Length %) Method (Base Volume Alternative)

Intersection #107 Knott Av. & Katella Av.

Cycle (sec):	100	Critical Vol./Cap.(X):	0.935
Loss Time (sec):	10	Average Delay (sec/veh):	xxxxxx
Optimal Cycle:	121	Level Of Service:	E

Approach:	North Bound			South Bound			East Bound			West Bound		
Movement:	L - T	- R		L - T	- R		L - T	- R		L - T	- R	
Control:	Protected			Protected			Protected			Protected		
Rights:	Include			Include			Ovl			Ovl		
Min. Green:	0	0	0	0	0	0	0	0	0	0	0	0
Y+R:	4.0	4.0	4.0	4.0	4.0	4.0	4.0	4.0	4.0	4.0	4.0	4.0
Lanes:	2 0	1	1 0	1 0	2 0	1	1 0	3 0	1	1 0	3 0	1
Volume Module:												
Base Vol:	265	898	136	170	713	84	321	1308	433	213	856	184
Growth Adj:	1.00	1.00	1.00	1.00	1.00	1.00	1.00	1.00	1.00	1.00	1.00	1.00
Initial Bse:	265	898	136	170	713	84	321	1308	433	213	856	184
User Adj:	1.00	1.00	1.00	1.00	1.00	1.00	1.00	1.00	1.00	1.00	1.00	1.00
PHF Adj:	1.00	1.00	1.00	1.00	1.00	1.00	1.00	1.00	1.00	1.00	1.00	1.00
PHF Volume:	265	898	136	170	713	84	321	1308	433	213	856	184
Reduct Vol:	0	0	0	0	0	0	0	0	0	0	0	0
Reduced Vol:	265	898	136	170	713	84	321	1308	433	213	856	184
PCE Adj:	1.00	1.00	1.00	1.00	1.00	1.00	1.00	1.00	1.00	1.00	1.00	1.00
MLF Adj:	1.00	1.00	1.00	1.00	1.00	1.00	1.00	1.00	1.00	1.00	1.00	1.00
FinalVolume:	265	898	136	170	713	84	321	1308	433	213	856	184
OvlAdjVol:									301			14
Saturation Flow Module:												
Sat/Lane:	1600	1600	1600	1600	1600	1600	1600	1600	1600	1600	1600	1600
Adjustment:	1.00	1.00	1.00	1.00	1.00	1.00	1.00	1.00	1.00	1.00	1.00	1.00
Lanes:	2.00	1.74	0.26	1.00	2.00	1.00	1.00	3.00	1.00	1.00	3.00	1.00
Final Sat.:	3200	2779	421	1600	3200	1600	1600	4800	1600	1600	4800	1600
Capacity Analysis Module:												
Vol/Sat:	0.08	0.32	0.32	0.11	0.22	0.05	0.20	0.27	0.27	0.13	0.18	0.12
OvlAdjV/S:									0.19			0.01
Crit Moves:		****		****				****		****		

Amazon Warehouse (JN 13106A)
Existing (2020)
PM Peak Hour

Level Of Service Computation Report
ICU 1(Loss as Cycle Length %) Method (Base Volume Alternative)

Intersection #108 Western Wy. & Katella Av.

Cycle (sec):	100	Critical Vol./Cap.(X):	0.798
Loss Time (sec):	10	Average Delay (sec/veh):	xxxxxx
Optimal Cycle:	66	Level Of Service:	C

Approach:	North Bound			South Bound			East Bound			West Bound		
Movement:	L - T - R			L - T - R			L - T - R			L - T - R		
Control:	Protected			Protected			Protected			Protected		
Rights:	Include			Include			Ovl			Ovl		
Min. Green:	0	0	0	0	0	0	0	0	0	0	0	0
Y+R:	4.0	4.0	4.0	4.0	4.0	4.0	4.0	4.0	4.0	4.0	4.0	4.0
Lanes:	1 0	1	1 0	1 0	1	1 0	1 0	3	0 1	1 0	3	0 1
Volume Module:												
Base Vol:	170	873	129	118	579	112	138	1178	175	105	883	150
Growth Adj:	1.00	1.00	1.00	1.00	1.00	1.00	1.00	1.00	1.00	1.00	1.00	1.00
Initial Bse:	170	873	129	118	579	112	138	1178	175	105	883	150
User Adj:	1.00	1.00	1.00	1.00	1.00	1.00	1.00	1.00	1.00	1.00	1.00	1.00
PHF Adj:	1.00	1.00	1.00	1.00	1.00	1.00	1.00	1.00	1.00	1.00	1.00	1.00
PHF Volume:	170	873	129	118	579	112	138	1178	175	105	883	150
Reduct Vol:	0	0	0	0	0	0	0	0	0	0	0	0
Reduced Vol:	170	873	129	118	579	112	138	1178	175	105	883	150
PCE Adj:	1.00	1.00	1.00	1.00	1.00	1.00	1.00	1.00	1.00	1.00	1.00	1.00
MLF Adj:	1.00	1.00	1.00	1.00	1.00	1.00	1.00	1.00	1.00	1.00	1.00	1.00
FinalVolume:	170	873	129	118	579	112	138	1178	175	105	883	150
OvlAdjVol:									5			32
Saturation Flow Module:												
Sat/Lane:	1600	1600	1600	1600	1600	1600	1600	1600	1600	1600	1600	1600
Adjustment:	1.00	1.00	1.00	1.00	1.00	1.00	1.00	1.00	1.00	1.00	1.00	1.00
Lanes:	1.00	1.74	0.26	1.00	1.68	0.32	1.00	3.00	1.00	1.00	3.00	1.00
Final Sat.:	1600	2788	412	1600	2681	519	1600	4800	1600	1600	4800	1600
Capacity Analysis Module:												
Vol/Sat:	0.11	0.31	0.31	0.07	0.22	0.22	0.09	0.25	0.11	0.07	0.18	0.09
OvlAdjV/S:									0.00			0.02
Crit Moves:		****		****				****		****		

APPENDIX 3.3:

EXISTING (2020) TRAFFIC SIGNAL WARRANT ANALYSIS

This Page Intentionally Left Blank

Figure 4C-101 (CA). Traffic Signal Warrants Worksheet

WARRANT 3 - Peak Hour **SATISFIED = NO**
(Part A or Part B must be satisfied)

PART A **SATISFIED = NO**
(All parts 1, 2, and 3 below must be satisfied for the same one hour, for any four consecutive 15-minute periods)

1. The total delay experienced for traffic on one minor street approach (one direction only) controlled by a STOP sign equals or exceeds four vehicle-hours for a one-lane approach, or five vehicle-hours for a two-lane approach; AND	**NO**
2. The volume on the same minor street approach (one direction only) equals or exceeds 100 vph for one moving lane of traffic or 150 vph for two moving lanes; AND	**NO**
3. The total entering volume serviced during the hour equals or exceeds 800 vph for intersections with four or more approaches or 650 vph for intersections with three approaches.	**NO**

PART B **SATISFIED = NO**

APPROACH LANES	Number of Lanes	Peak Hour Volume
Both Approaches - Major Street	1	200
Highest Approach - Minor Street	1	57

The plotted points fall above the curve in Figure 4C-3. (URBAN AREAS)	**NO**
OR, The plotted point falls above the curves in Figure 4C-4. (RURAL AREAS)	**N/A**

The satisfaction of a traffic signal warrant or warrants shall not in itself require the installation of a traffic control signal.

Figure 4C-3. Warrant 3, Peak Hour

Traffic Conditions = **Existing (2020) Conditions - Weekday PM Peak Hour**

Major Street Name = **Holder St.**

Total of Both Approaches (VPH) = **200**
Number of Approach Lanes on Major Street = **1**

Minor Street Name = **Driveway 2**

High Volume Approach (VPH) = **57**
Number of Approach Lanes On Minor Street = **1**

SIGNAL WARRANT NOT SATISFIED

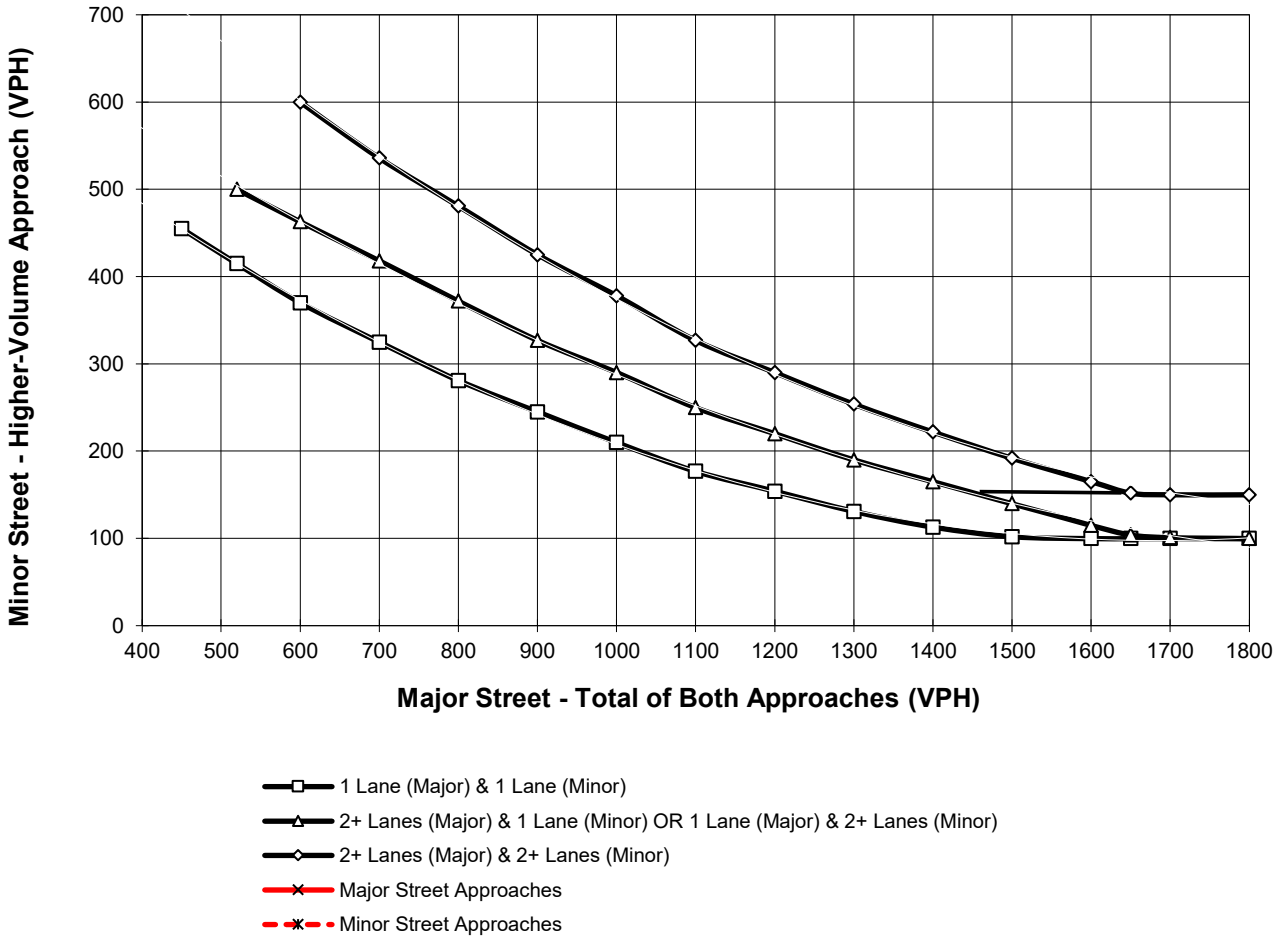

*Note: 150 vph applies as the lower threshold for a minor-street approach with two or more lanes and 100 vph applies as the lower threshold for a minor-street approach with one lane

Figure 4C-101 (CA). Traffic Signal Warrants Worksheet

WARRANT 3 - Peak Hour **SATISFIED = NO**
(Part A or Part B must be satisfied)

PART A **SATISFIED = NO**
(All parts 1, 2, and 3 below must be satisfied for the same one hour, for any four consecutive 15-minute periods)

1. The total delay experienced for traffic on one minor street approach (one direction only) controlled by a STOP sign equals or exceeds four vehicle-hours for a one-lane approach, or five vehicle-hours for a two-lane approach; AND	**NO**
2. The volume on the same minor street approach (one direction only) equals or exceeds 100 vph for one moving lane of traffic or 150 vph for two moving lanes; AND	**NO**
3. The total entering volume serviced during the hour equals or exceeds 800 vph for intersections with four or more approaches or 650 vph for intersections with three approaches.	**NO**

PART B **SATISFIED = NO**

APPROACH LANES	Number of Lanes	Peak Hour Volume
Both Approaches - Major Street	1	74
Highest Approach - Minor Street	1	90

The plotted points fall above the curve in Figure 4C-3. (URBAN AREAS)	**NO**
OR, The plotted point falls above the curves in Figure 4C-4. (RURAL AREAS)	**N/A**

The satisfaction of a traffic signal warrant or warrants shall not in itself require the installation of a traffic control signal.

Figure 4C-3. Warrant 3, Peak Hour

Traffic Conditions = **Existing (2020) Conditions - Weekday PM Peak Hour**

Major Street Name = **Holder St.**

Total of Both Approaches (VPH) = **74**
Number of Approach Lanes on Major Street = **1**

Minor Street Name = **Driveway 3**

High Volume Approach (VPH) = **90**
Number of Approach Lanes On Minor Street = **1**

SIGNAL WARRANT NOT SATISFIED

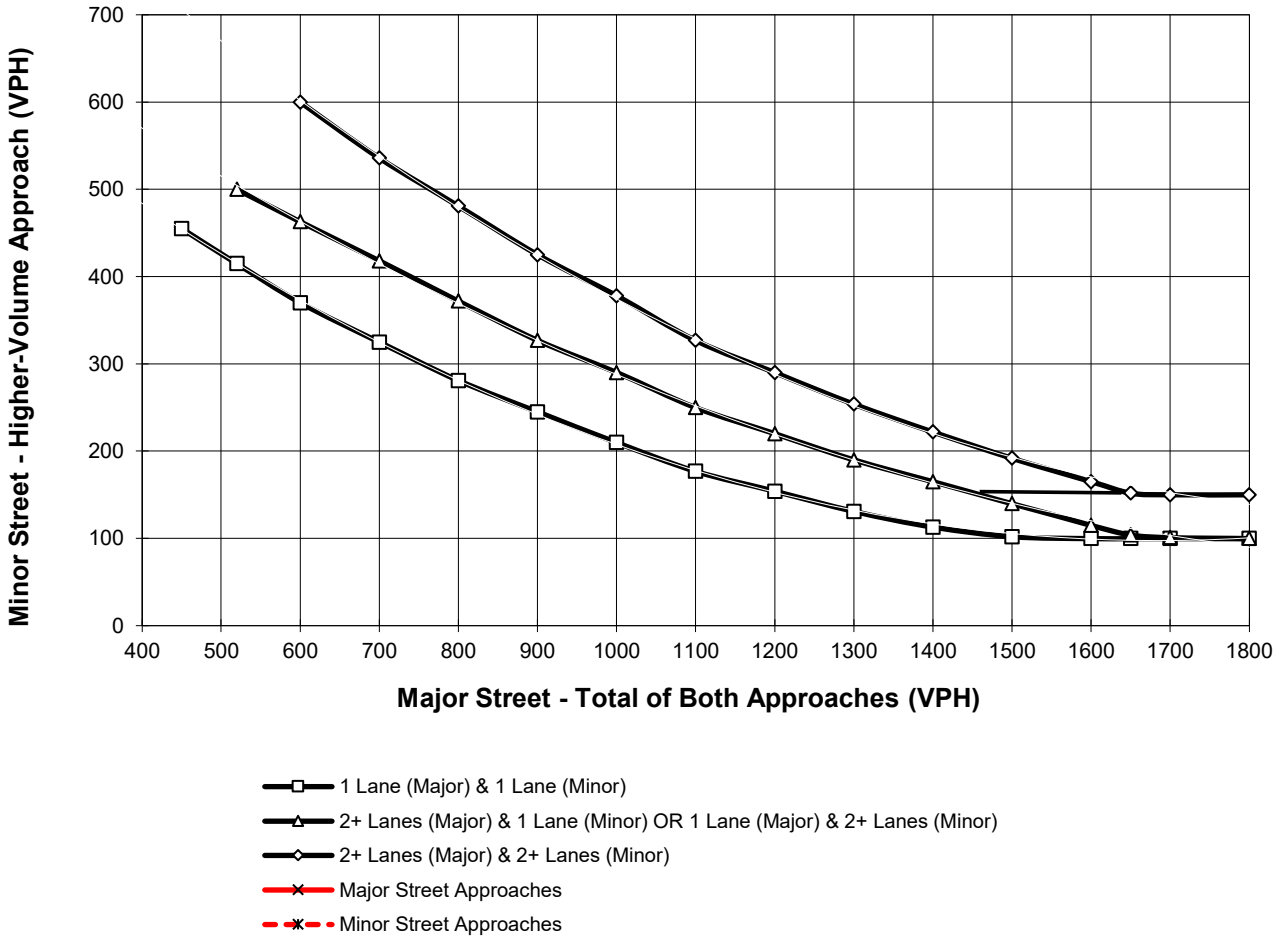

*Note: 150 vph applies as the lower threshold for a minor-street approach with two or more lanes and 100 vph applies as the lower threshold for a minor-street approach with one lane

APPENDIX 5.1:

E+P CONDITIONS INTERSECTION OPERATIONS ANALYSIS

This Page Intentionally Left Blank

Amazon Warehouse (JN 13106A)
E+P
AM Peak Hour

Level Of Service Computation Report
ICU 1(Loss as Cycle Length %) Method (Future Volume Alternative)

Intersection #101 Valley View St. & Katella Av.

Cycle (sec):	100	Critical Vol./Cap.(X):	0.844
Loss Time (sec):	10	Average Delay (sec/veh):	xxxxxx
Optimal Cycle:	78	Level Of Service:	D

Approach:	North Bound			South Bound			East Bound			West Bound		
Movement:	L -	T -	R	L -	T -	R	L -	T -	R	L -	T -	R
Control:	Protected			Protected			Protected			Protected		
Rights:	Include			Include			Ignore			Include		
Min. Green:	0	0	0	0	0	0	0	0	0	0	0	0
Y+R:	4.0	4.0	4.0	4.0	4.0	4.0	4.0	4.0	4.0	4.0	4.0	4.0
Lanes:	3 0	3 0	1	2 0	3 0	1	2 0	3 0	1	2 0	3 0	1
Volume Module:												
Base Vol:	858	1531	295	241	1102	228	236	998	702	222	1255	163
Growth Adj:	1.00	1.00	1.00	1.00	1.00	1.00	1.00	1.00	1.00	1.00	1.00	1.00
Initial Bse:	858	1531	295	241	1102	228	236	998	702	222	1255	163
Added Vol:	0	0	16	10	0	0	0	18	0	1	2	1
PasserByVol:	0	0	0	0	0	0	0	0	0	0	0	0
Initial Fut:	858	1531	311	251	1102	228	236	1016	702	223	1257	164
User Adj:	1.00	1.00	1.00	1.00	1.00	1.00	1.00	1.00	0.00	1.00	1.00	1.00
PHF Adj:	1.00	1.00	1.00	1.00	1.00	1.00	1.00	1.00	0.00	1.00	1.00	1.00
PHF Volume:	858	1531	311	251	1102	228	236	1016	0	223	1257	164
Reduct Vol:	0	0	0	0	0	0	0	0	0	0	0	0
Reduced Vol:	858	1531	311	251	1102	228	236	1016	0	223	1257	164
PCE Adj:	1.00	1.00	1.00	1.00	1.00	1.00	1.00	1.00	0.00	1.00	1.00	1.00
MLF Adj:	1.00	1.00	1.00	1.00	1.00	1.00	1.00	1.00	0.00	1.00	1.00	1.00
FinalVolume:	858	1531	311	251	1102	228	236	1016	0	223	1257	164
Saturation Flow Module:												
Sat/Lane:	1600	1600	1600	1600	1600	1600	1600	1600	1600	1600	1600	1600
Adjustment:	1.00	1.00	1.00	1.00	1.00	1.00	1.00	1.00	1.00	1.00	1.00	1.00
Lanes:	3.00	3.00	1.00	2.00	3.00	1.00	2.00	3.00	1.00	2.00	3.00	1.00
Final Sat.:	4800	4800	1600	3200	4800	1600	3200	4800	1600	3200	4800	1600
Capacity Analysis Module:												
Vol/Sat:	0.18	0.32	0.19	0.08	0.23	0.14	0.07	0.21	0.00	0.07	0.26	0.10
Crit Moves:	****				****		****				****	

Intersection	
Int Delay, s/veh	0.1

Movement	EBT	EBR	WBL	WBT	NBL	NBR
Lane Configurations						
Traffic Vol, veh/h	1262	20	0	1866	0	20
Future Vol, veh/h	1262	20	0	1866	0	20
Conflicting Peds, #/hr	0	0	0	0	0	0
Sign Control	Free	Free	Free	Free	Stop	Stop
RT Channelized	-	None	-	None	-	None
Storage Length	-	-	-	-	-	0
Veh in Median Storage, #	0	-	-	0	0	-
Grade, %	0	-	-	0	0	-
Peak Hour Factor	92	92	92	92	92	92
Heavy Vehicles, %	0	0	0	0	0	0
Mvmt Flow	1372	22	0	2028	0	22

Major/Minor	Major1		Major2		Minor1	
Conflicting Flow All	0	0	-	-	-	697
Stage 1	-	-	-	-	-	-
Stage 2	-	-	-	-	-	-
Critical Hdwy	-	-	-	-	-	7.1
Critical Hdwy Stg 1	-	-	-	-	-	-
Critical Hdwy Stg 2	-	-	-	-	-	-
Follow-up Hdwy	-	-	-	-	-	3.9
Pot Cap-1 Maneuver	-	-	0	-	0	333
Stage 1	-	-	0	-	0	-
Stage 2	-	-	0	-	0	-
Platoon blocked, %	-	-		-		
Mov Cap-1 Maneuver	-	-	-	-	-	333
Mov Cap-2 Maneuver	-	-	-	-	-	-
Stage 1	-	-	-	-	-	-
Stage 2	-	-	-	-	-	-

Approach	EB	WB	NB
HCM Control Delay, s	0	0	16.6
HCM LOS			C

Minor Lane/Major Mvmt	NBLn1	EBT	EBR	WBT
Capacity (veh/h)	333	-	-	-
HCM Lane V/C Ratio	0.065	-	-	-
HCM Control Delay (s)	16.6	-	-	-
HCM Lane LOS	C	-	-	-
HCM 95th %tile Q(veh)	0.2	-	-	-

Amazon Warehouse (JN 13106A)
E+P
AM Peak Hour

Level Of Service Computation Report
ICU 1(Loss as Cycle Length %) Method (Future Volume Alternative)

Intersection #103 Holder St. & Katella Av.

Cycle (sec):	100	Critical Vol./Cap.(X):	0.637
Loss Time (sec):	10	Average Delay (sec/veh):	xxxxxx
Optimal Cycle:	43	Level Of Service:	B

Approach:	North Bound			South Bound			East Bound			West Bound		
Movement:	L -	T -	R	L -	T -	R	L -	T -	R	L -	T -	R
Control:	Prot+Permit			Prot+Permit			Protected			Protected		
Rights:	Include			Include			Include			Include		
Min. Green:	0	0	0	0	0	0	0	0	0	0	0	0
Y+R:	4.0	4.0	4.0	4.0	4.0	4.0	4.0	4.0	4.0	4.0	4.0	4.0
Lanes:	1 0	1	1 0	1 0	1	1 0	1 0	3	0 1	1 0	3	0 1
Volume Module:												
Base Vol:	66	7	74	200	42	183	45	1095	143	123	1607	146
Growth Adj:	1.00	1.00	1.00	1.00	1.00	1.00	1.00	1.00	1.00	1.00	1.00	1.00
Initial Bse:	66	7	74	200	42	183	45	1095	143	123	1607	146
Added Vol:	4	0	5	0	5	0	0	0	44	49	0	0
PasserByVol:	0	0	0	0	0	0	0	0	0	0	0	0
Initial Fut:	70	7	79	200	47	183	45	1095	187	172	1607	146
User Adj:	1.00	1.00	1.00	1.00	1.00	1.00	1.00	1.00	1.00	1.00	1.00	1.00
PHF Adj:	1.00	1.00	1.00	1.00	1.00	1.00	1.00	1.00	1.00	1.00	1.00	1.00
PHF Volume:	70	7	79	200	47	183	45	1095	187	172	1607	146
Reduct Vol:	0	0	0	0	0	0	0	0	0	0	0	0
Reduced Vol:	70	7	79	200	47	183	45	1095	187	172	1607	146
PCE Adj:	1.00	1.00	1.00	1.00	1.00	1.00	1.00	1.00	1.00	1.00	1.00	1.00
MLF Adj:	1.00	1.00	1.00	1.00	1.00	1.00	1.00	1.00	1.00	1.00	1.00	1.00
FinalVolume:	70	7	79	200	47	183	45	1095	187	172	1607	146
Saturation Flow Module:												
Sat/Lane:	1600	1600	1600	1600	1600	1600	1600	1600	1600	1600	1600	1600
Adjustment:	1.00	1.00	1.00	1.00	1.00	1.00	1.00	1.00	1.00	1.00	1.00	1.00
Lanes:	1.00	1.00	1.00	1.00	1.00	1.00	1.00	3.00	1.00	1.00	3.00	1.00
Final Sat.:	1600	1600	1600	1600	1600	1600	1600	4800	1600	1600	4800	1600
Capacity Analysis Module:												
Vol/Sat:	0.04	0.00	0.05	0.13	0.03	0.11	0.03	0.23	0.12	0.11	0.33	0.09
Crit Moves:			****	****			****				****	

Intersection	
Int Delay, s/veh	1.2

Movement	EBL	EBT	EBR	WBL	WBT	WBR	NBL	NBT	NBR	SBL	SBT	SBR
Lane Configurations												
Traffic Vol, veh/h	31	0	0	0	0	0	0	117	0	9	268	30
Future Vol, veh/h	31	0	0	0	0	0	0	117	0	9	268	30
Conflicting Peds, #/hr	0	0	0	0	0	0	0	0	0	0	0	0
Sign Control	Stop	Stop	Stop	Stop	Stop	Stop	Free	Free	Free	Free	Free	Free
RT Channelized	-	-	None	-	-	None	-	-	None	-	-	None
Storage Length	-	-	-	-	-	-	50	-	-	50	-	-
Veh in Median Storage, #	-	0	-	-	0	-	-	0	-	-	0	-
Grade, %	-	0	-	-	0	-	-	0	-	-	0	-
Peak Hour Factor	65	65	65	65	65	65	65	65	65	65	65	65
Heavy Vehicles, %	0	0	0	0	0	0	0	0	0	0	0	0
Mvmt Flow	48	0	0	0	0	0	0	180	0	14	412	46

Major/Minor	Minor2			Minor1			Major1			Major2		
Conflicting Flow All	643	643	435	643	666	180	458	0	0	180	0	0
Stage 1	463	463	-	180	180	-	-	-	-	-	-	-
Stage 2	180	180	-	463	486	-	-	-	-	-	-	-
Critical Hdwy	7.1	6.5	6.2	7.1	6.5	6.2	4.1	-	-	4.1	-	-
Critical Hdwy Stg 1	6.1	5.5	-	6.1	5.5	-	-	-	-	-	-	-
Critical Hdwy Stg 2	6.1	5.5	-	6.1	5.5	-	-	-	-	-	-	-
Follow-up Hdwy	3.5	4	3.3	3.5	4	3.3	2.2	-	-	2.2	-	-
Pot Cap-1 Maneuver	389	394	625	389	383	868	1114	-	-	1408	-	-
Stage 1	583	568	-	826	754	-	-	-	-	-	-	-
Stage 2	826	754	-	583	554	-	-	-	-	-	-	-
Platoon blocked, %								-	-		-	-
Mov Cap-1 Maneuver	386	390	625	386	379	868	1114	-	-	1408	-	-
Mov Cap-2 Maneuver	386	390	-	386	379	-	-	-	-	-	-	-
Stage 1	583	562	-	826	754	-	-	-	-	-	-	-
Stage 2	826	754	-	577	548	-	-	-	-	-	-	-

Approach	EB	WB	NB	SB
HCM Control Delay, s	15.6	0	0	0.2
HCM LOS	C	A		

Minor Lane/Major Mvmt	NBL	NBT	NBR	EBLn1	WBLn1	SBL	SBT	SBR
Capacity (veh/h)	1114	-	-	386	-	1408	-	-
HCM Lane V/C Ratio	-	-	-	0.124	-	0.01	-	-
HCM Control Delay (s)	0	-	-	15.6	0	7.6	0	-
HCM Lane LOS	A	-	-	C	A	A	A	-
HCM 95th %tile Q(veh)	0	-	-	0.4	-	0	-	-

Intersection	
Int Delay, s/veh	6.8

Movement	EBL	EBT	EBR	WBL	WBT	WBR	NBL	NBT	NBR	SBL	SBT	SBR
Lane Configurations												
Traffic Vol, veh/h	87	0	0	0	0	12	0	19	0	125	83	61
Future Vol, veh/h	87	0	0	0	0	12	0	19	0	125	83	61
Conflicting Peds, #/hr	0	0	0	0	0	0	0	0	0	0	0	0
Sign Control	Stop	Stop	Stop	Stop	Stop	Stop	Free	Free	Free	Free	Free	Free
RT Channelized	-	-	None	-	-	None	-	-	None	-	-	None
Storage Length	-	-	-	-	-	-	50	-	-	50	-	-
Veh in Median Storage, #	-	0	-	-	0	-	-	0	-	-	0	-
Grade, %	-	0	-	-	0	-	-	0	-	-	0	-
Peak Hour Factor	69	69	69	69	25	69	69	69	69	69	69	69
Heavy Vehicles, %	0	0	0	0	0	0	0	0	0	0	0	0
Mvmt Flow	126	0	0	0	0	17	0	28	0	181	120	88

Major/Minor	Minor2			Minor1			Major1			Major2		
Conflicting Flow All	563	554	164	554	598	28	208	0	0	28	0	0
Stage 1	526	526	-	28	28	-	-	-	-	-	-	-
Stage 2	37	28	-	526	570	-	-	-	-	-	-	-
Critical Hdwy	7.1	6.5	6.2	7.1	6.5	6.2	4.1	-	-	4.1	-	-
Critical Hdwy Stg 1	6.1	5.5	-	6.1	5.5	-	-	-	-	-	-	-
Critical Hdwy Stg 2	6.1	5.5	-	6.1	5.5	-	-	-	-	-	-	-
Follow-up Hdwy	3.5	4	3.3	3.5	4	3.3	2.2	-	-	2.2	-	-
Pot Cap-1 Maneuver	440	443	886	446	418	1053	1375	-	-	1599	-	-
Stage 1	539	532	-	994	876	-	-	-	-	-	-	-
Stage 2	984	876	-	539	509	-	-	-	-	-	-	-
Platoon blocked, %								-	-		-	-
Mov Cap-1 Maneuver	395	393	886	407	371	1053	1375	-	-	1599	-	-
Mov Cap-2 Maneuver	395	393	-	407	371	-	-	-	-	-	-	-
Stage 1	539	472	-	994	876	-	-	-	-	-	-	-
Stage 2	968	876	-	478	451	-	-	-	-	-	-	-

Approach	EB	WB	NB	SB
HCM Control Delay, s	18.3	8.5	0	3.5
HCM LOS	C	A		

Minor Lane/Major Mvmt	NBL	NBT	NBR	EBLn1	WBLn1	SBL	SBT	SBR
Capacity (veh/h)	1375	-	-	395	1053	1599	-	-
HCM Lane V/C Ratio	-	-	-	0.319	0.017	0.113	-	-
HCM Control Delay (s)	0	-	-	18.3	8.5	7.5	-	-
HCM Lane LOS	A	-	-	C	A	A	-	-
HCM 95th %tile Q(veh)	0	-	-	1.4	0.1	0.4	-	-

Intersection	
Int Delay, s/veh	8.9

Movement	EBL	EBT	WBT	WBR	SBL	SBR
Lane Configurations						
Traffic Vol, veh/h	15	0	0	4	68	15
Future Vol, veh/h	15	0	0	4	68	15
Conflicting Peds, #/hr	0	0	0	0	0	0
Sign Control	Free	Free	Free	Free	Stop	Stop
RT Channelized	-	None	-	None	-	None
Storage Length	-	-	-	-	0	-
Veh in Median Storage, #	-	0	0	-	0	-
Grade, %	-	0	0	-	0	-
Peak Hour Factor	50	50	50	50	50	50
Heavy Vehicles, %	0	0	0	0	0	0
Mvmt Flow	30	0	0	8	136	30

Major/Minor	Major1		Major2		Minor2	
Conflicting Flow All	8	0	-	0	64	4
Stage 1	-	-	-	-	4	-
Stage 2	-	-	-	-	60	-
Critical Hdwy	4.1	-	-	-	6.4	6.2
Critical Hdwy Stg 1	-	-	-	-	5.4	-
Critical Hdwy Stg 2	-	-	-	-	5.4	-
Follow-up Hdwy	2.2	-	-	-	3.5	3.3
Pot Cap-1 Maneuver	1625	-	-	-	947	1085
Stage 1	-	-	-	-	1024	-
Stage 2	-	-	-	-	968	-
Platoon blocked, %		-	-	-		
Mov Cap-1 Maneuver	1625	-	-	-	930	1085
Mov Cap-2 Maneuver	-	-	-	-	930	-
Stage 1	-	-	-	-	1006	-
Stage 2	-	-	-	-	968	-

Approach	EB	WB	SB
HCM Control Delay, s	7.3	0	9.6
HCM LOS			A

Minor Lane/Major Mvmt	EBL	EBT	WBT	WBR	SBLn1
Capacity (veh/h)	1625	-	-	-	955
HCM Lane V/C Ratio	0.018	-	-	-	0.174
HCM Control Delay (s)	7.3	0	-	-	9.6
HCM Lane LOS	A	A	-	-	A
HCM 95th %tile Q(veh)	0.1	-	-	-	0.6

Amazon Warehouse (JN 13106A)
E+P
AM Peak Hour

Level Of Service Computation Report
ICU 1(Loss as Cycle Length %) Method (Future Volume Alternative)

Intersection #107 Knott Av. & Katella Av.

Cycle (sec):	100	Critical Vol./Cap.(X):	0.855
Loss Time (sec):	10	Average Delay (sec/veh):	xxxxxx
Optimal Cycle:	82	Level Of Service:	D

Approach:	North Bound			South Bound			East Bound			West Bound		
Movement:	L -	T -	R	L -	T -	R	L -	T -	R	L -	T -	R
Control:	Protected			Protected			Protected			Protected		
Rights:	Include			Include			Ovl			Ovl		
Min. Green:	0	0	0	0	0	0	0	0	0	0	0	0
Y+R:	4.0	4.0	4.0	4.0	4.0	4.0	4.0	4.0	4.0	4.0	4.0	4.0
Lanes:	2 0	1 1	0	1 0	2 0	1	1 0	3 0	1	1 0	3 0	1
Volume Module:												
Base Vol:	378	577	121	111	924	177	83	921	295	191	1373	106
Growth Adj:	1.00	1.00	1.00	1.00	1.00	1.00	1.00	1.00	1.00	1.00	1.00	1.00
Initial Bse:	378	577	121	111	924	177	83	921	295	191	1373	106
Added Vol:	16	0	0	0	0	10	1	2	1	0	23	0
PasserByVol:	0	0	0	0	0	0	0	0	0	0	0	0
Initial Fut:	394	577	121	111	924	187	84	923	296	191	1396	106
User Adj:	1.00	1.00	1.00	1.00	1.00	1.00	1.00	1.00	1.00	1.00	1.00	1.00
PHF Adj:	1.00	1.00	1.00	1.00	1.00	1.00	1.00	1.00	1.00	1.00	1.00	1.00
PHF Volume:	394	577	121	111	924	187	84	923	296	191	1396	106
Reduct Vol:	0	0	0	0	0	0	0	0	0	0	0	0
Reduced Vol:	394	577	121	111	924	187	84	923	296	191	1396	106
PCE Adj:	1.00	1.00	1.00	1.00	1.00	1.00	1.00	1.00	1.00	1.00	1.00	1.00
MLF Adj:	1.00	1.00	1.00	1.00	1.00	1.00	1.00	1.00	1.00	1.00	1.00	1.00
FinalVolume:	394	577	121	111	924	187	84	923	296	191	1396	106
OvlAdjVol:									99			0
Saturation Flow Module:												
Sat/Lane:	1600	1600	1600	1600	1600	1600	1600	1600	1600	1600	1600	1600
Adjustment:	1.00	1.00	1.00	1.00	1.00	1.00	1.00	1.00	1.00	1.00	1.00	1.00
Lanes:	2.00	1.65	0.35	1.00	2.00	1.00	1.00	3.00	1.00	1.00	3.00	1.00
Final Sat.:	3200	2645	555	1600	3200	1600	1600	4800	1600	1600	4800	1600
Capacity Analysis Module:												
Vol/Sat:	0.12	0.22	0.22	0.07	0.29	0.12	0.05	0.19	0.19	0.12	0.29	0.07
OvlAdjV/S:									0.06			0.00
Crit Moves:	****				****		****				****	

Traffix 8.0.0715 (c) 2008 Dowling Assoc. Licensed to URBAN CROSSROADS, IRVINE

Amazon Warehouse (JN 13106A)
E+P
AM Peak Hour

Level Of Service Computation Report
ICU 1(Loss as Cycle Length %) Method (Future Volume Alternative)

Intersection #108 Western Wy. & Katella Av.

Cycle (sec):	100	Critical Vol./Cap.(X):	0.897
Loss Time (sec):	10	Average Delay (sec/veh):	xxxxxx
Optimal Cycle:	99	Level Of Service:	D

Approach:	North Bound			South Bound			East Bound			West Bound		
Movement:	L -	T -	R	L -	T -	R	L -	T -	R	L -	T -	R
Control:	Protected			Protected			Protected			Protected		
Rights:	Include			Include			Ovl			Ovl		
Min. Green:	0	0	0	0	0	0	0	0	0	0	0	0
Y+R:	4.0	4.0	4.0	4.0	4.0	4.0	4.0	4.0	4.0	4.0	4.0	4.0
Lanes:	1 0	1	1 0	1 0	1	1 0	1 0	3	0 1	1 0	3	0 1
Volume Module:												
Base Vol:	153	289	101	124	884	162	125	1050	156	201	1399	98
Growth Adj:	1.00	1.00	1.00	1.00	1.00	1.00	1.00	1.00	1.00	1.00	1.00	1.00
Initial Bse:	153	289	101	124	884	162	125	1050	156	201	1399	98
Added Vol:	0	0	0	0	0	5	0	2	0	0	18	0
PasserByVol:	0	0	0	0	0	0	0	0	0	0	0	0
Initial Fut:	153	289	101	124	884	167	125	1052	156	201	1417	98
User Adj:	1.00	1.00	1.00	1.00	1.00	1.00	1.00	1.00	1.00	1.00	1.00	1.00
PHF Adj:	1.00	1.00	1.00	1.00	1.00	1.00	1.00	1.00	1.00	1.00	1.00	1.00
PHF Volume:	153	289	101	124	884	167	125	1052	156	201	1417	98
Reduct Vol:	0	0	0	0	0	0	0	0	0	0	0	0
Reduced Vol:	153	289	101	124	884	167	125	1052	156	201	1417	98
PCE Adj:	1.00	1.00	1.00	1.00	1.00	1.00	1.00	1.00	1.00	1.00	1.00	1.00
MLF Adj:	1.00	1.00	1.00	1.00	1.00	1.00	1.00	1.00	1.00	1.00	1.00	1.00
FinalVolume:	153	289	101	124	884	167	125	1052	156	201	1417	98
OvlAdjVol:									3			0
Saturation Flow Module:												
Sat/Lane:	1600	1600	1600	1600	1600	1600	1600	1600	1600	1600	1600	1600
Adjustment:	1.00	1.00	1.00	1.00	1.00	1.00	1.00	1.00	1.00	1.00	1.00	1.00
Lanes:	1.00	1.48	0.52	1.00	1.68	0.32	1.00	3.00	1.00	1.00	3.00	1.00
Final Sat.:	1600	2371	829	1600	2692	508	1600	4800	1600	1600	4800	1600
Capacity Analysis Module:												
Vol/Sat:	0.10	0.12	0.12	0.08	0.33	0.33	0.08	0.22	0.10	0.13	0.30	0.06
OvlAdjV/S:									0.00			0.00
Crit Moves:	****				****		****				****	

Amazon Warehouse (JN 13106A)
E+P
PM Peak Hour

Level Of Service Computation Report
ICU 1(Loss as Cycle Length %) Method (Future Volume Alternative)

Intersection #101 Valley View St. & Katella Av.

Cycle (sec):	100	Critical Vol./Cap.(X):	0.874
Loss Time (sec):	10	Average Delay (sec/veh):	xxxxxx
Optimal Cycle:	89	Level Of Service:	D

Approach:	North Bound			South Bound			East Bound			West Bound		
Movement:	L - T	- R		L - T	- R		L - T	- R		L - T	- R	
Control:	Protected			Protected			Protected			Protected		
Rights:	Include			Include			Ignore			Include		
Min. Green:	0	0	0	0	0	0	0	0	0	0	0	0
Y+R:	4.0	4.0	4.0	4.0	4.0	4.0	4.0	4.0	4.0	4.0	4.0	4.0
Lanes:	3 0	3 0	1	2 0	3 0	1	2 0	3 0	1	2 0	3 0	1
Volume Module:												
Base Vol:	656	1486	213	249	1364	240	261	1120	1010	369	1037	241
Growth Adj:	1.00	1.00	1.00	1.00	1.00	1.00	1.00	1.00	1.00	1.00	1.00	1.00
Initial Bse:	656	1486	213	249	1364	240	261	1120	1010	369	1037	241
Added Vol:	0	0	1	1	0	0	0	2	0	14	16	9
PasserByVol:	0	0	0	0	0	0	0	0	0	0	0	0
Initial Fut:	656	1486	214	250	1364	240	261	1122	1010	383	1053	250
User Adj:	1.00	1.00	1.00	1.00	1.00	1.00	1.00	1.00	0.00	1.00	1.00	1.00
PHF Adj:	1.00	1.00	1.00	1.00	1.00	1.00	1.00	1.00	0.00	1.00	1.00	1.00
PHF Volume:	656	1486	214	250	1364	240	261	1122	0	383	1053	250
Reduct Vol:	0	0	0	0	0	0	0	0	0	0	0	0
Reduced Vol:	656	1486	214	250	1364	240	261	1122	0	383	1053	250
PCE Adj:	1.00	1.00	1.00	1.00	1.00	1.00	1.00	1.00	0.00	1.00	1.00	1.00
MLF Adj:	1.00	1.00	1.00	1.00	1.00	1.00	1.00	1.00	0.00	1.00	1.00	1.00
FinalVolume:	656	1486	214	250	1364	240	261	1122	0	383	1053	250
Saturation Flow Module:												
Sat/Lane:	1600	1600	1600	1600	1600	1600	1600	1600	1600	1600	1600	1600
Adjustment:	1.00	1.00	1.00	1.00	1.00	1.00	1.00	1.00	1.00	1.00	1.00	1.00
Lanes:	3.00	3.00	1.00	2.00	3.00	1.00	2.00	3.00	1.00	2.00	3.00	1.00
Final Sat.:	4800	4800	1600	3200	4800	1600	3200	4800	1600	3200	4800	1600
Capacity Analysis Module:												
Vol/Sat:	0.14	0.31	0.13	0.08	0.28	0.15	0.08	0.23	0.00	0.12	0.22	0.16
Crit Moves:	****				****			****		****		

Intersection	
Int Delay, s/veh	0.2

Movement	EBT	EBR	WBL	WBT	NBL	NBR
Lane Configurations						
Traffic Vol, veh/h	1781	44	0	1290	0	24
Future Vol, veh/h	1781	44	0	1290	0	24
Conflicting Peds, #/hr	0	0	0	0	0	0
Sign Control	Free	Free	Free	Free	Stop	Stop
RT Channelized	-	None	-	None	-	None
Storage Length	-	-	-	-	-	0
Veh in Median Storage, #	0	-	-	0	0	-
Grade, %	0	-	-	0	0	-
Peak Hour Factor	92	92	92	92	92	92
Heavy Vehicles, %	0	0	0	0	0	0
Mvmt Flow	1936	48	0	1402	0	26

Major/Minor	Major1		Major2		Minor1	
Conflicting Flow All	0	0	-	-	-	992
Stage 1	-	-	-	-	-	-
Stage 2	-	-	-	-	-	-
Critical Hdwy	-	-	-	-	-	7.1
Critical Hdwy Stg 1	-	-	-	-	-	-
Critical Hdwy Stg 2	-	-	-	-	-	-
Follow-up Hdwy	-	-	-	-	-	3.9
Pot Cap-1 Maneuver	-	-	0	-	0	213
Stage 1	-	-	0	-	0	-
Stage 2	-	-	0	-	0	-
Platoon blocked, %	-	-		-		
Mov Cap-1 Maneuver	-	-	-	-	-	213
Mov Cap-2 Maneuver	-	-	-	-	-	-
Stage 1	-	-	-	-	-	-
Stage 2	-	-	-	-	-	-

Approach	EB	WB	NB
HCM Control Delay, s	0	0	24.2
HCM LOS			C

Minor Lane/Major Mvmt	NBLn1	EBT	EBR	WBT
Capacity (veh/h)	213	-	-	-
HCM Lane V/C Ratio	0.122	-	-	-
HCM Control Delay (s)	24.2	-	-	-
HCM Lane LOS	C	-	-	-
HCM 95th %tile Q(veh)	0.4	-	-	-

Amazon Warehouse (JN 13106A)
E+P
PM Peak Hour

Level Of Service Computation Report
ICU 1(Loss as Cycle Length %) Method (Future Volume Alternative)

Intersection #103 Holder St. & Katella Av.

Cycle (sec):	100	Critical Vol./Cap.(X):	0.746
Loss Time (sec):	10	Average Delay (sec/veh):	xxxxxx
Optimal Cycle:	56	Level Of Service:	C

Approach:	North Bound			South Bound			East Bound			West Bound		
Movement:	L -	T -	R	L -	T -	R	L -	T -	R	L -	T -	R
Control:	Prot+Permit			Prot+Permit			Protected			Protected		
Rights:	Include			Include			Include			Include		
Min. Green:	0	0	0	0	0	0	0	0	0	0	0	0
Y+R:	4.0	4.0	4.0	4.0	4.0	4.0	4.0	4.0	4.0	4.0	4.0	4.0
Lanes:	1 0	1	1 0	1 0	1	1 0	1 0	3	0 1	1 0	3	0 1
Volume Module:												
Base Vol:	114	47	118	211	13	114	147	1593	65	124	1051	209
Growth Adj:	1.00	1.00	1.00	1.00	1.00	1.00	1.00	1.00	1.00	1.00	1.00	1.00
Initial Bse:	114	47	118	211	13	114	147	1593	65	124	1051	209
Added Vol:	39	4	44	0	0	0	0	0	4	5	0	0
PasserByVol:	0	0	0	0	0	0	0	0	0	0	0	0
Initial Fut:	153	51	162	211	13	114	147	1593	69	129	1051	209
User Adj:	1.00	1.00	1.00	1.00	1.00	1.00	1.00	1.00	1.00	1.00	1.00	1.00
PHF Adj:	1.00	1.00	1.00	1.00	1.00	1.00	1.00	1.00	1.00	1.00	1.00	1.00
PHF Volume:	153	51	162	211	13	114	147	1593	69	129	1051	209
Reduct Vol:	0	0	0	0	0	0	0	0	0	0	0	0
Reduced Vol:	153	51	162	211	13	114	147	1593	69	129	1051	209
PCE Adj:	1.00	1.00	1.00	1.00	1.00	1.00	1.00	1.00	1.00	1.00	1.00	1.00
MLF Adj:	1.00	1.00	1.00	1.00	1.00	1.00	1.00	1.00	1.00	1.00	1.00	1.00
FinalVolume:	153	51	162	211	13	114	147	1593	69	129	1051	209
Saturation Flow Module:												
Sat/Lane:	1600	1600	1600	1600	1600	1600	1600	1600	1600	1600	1600	1600
Adjustment:	1.00	1.00	1.00	1.00	1.00	1.00	1.00	1.00	1.00	1.00	1.00	1.00
Lanes:	1.00	1.00	1.00	1.00	1.00	1.00	1.00	3.00	1.00	1.00	3.00	1.00
Final Sat.:	1600	1600	1600	1600	1600	1600	1600	4800	1600	1600	4800	1600
Capacity Analysis Module:												
Vol/Sat:	0.10	0.03	0.10	0.13	0.01	0.07	0.09	0.33	0.04	0.08	0.22	0.13
Crit Moves:			****	****				****		****		

Intersection	
Int Delay, s/veh	1.8

Movement	EBL	EBT	EBR	WBL	WBT	WBR	NBL	NBT	NBR	SBL	SBT	SBR
Lane Configurations												
Traffic Vol, veh/h	37	0	0	0	0	29	0	214	0	2	135	65
Future Vol, veh/h	37	0	0	0	0	29	0	214	0	2	135	65
Conflicting Peds, #/hr	0	0	0	0	0	0	0	0	0	0	0	0
Sign Control	Stop	Stop	Stop	Stop	Stop	Stop	Free	Free	Free	Free	Free	Free
RT Channelized	-	-	None	-	-	None	-	-	None	-	-	None
Storage Length	-	-	-	-	-	-	50	-	-	50	-	-
Veh in Median Storage, #	-	0	-	-	0	-	-	0	-	-	0	-
Grade, %	-	0	-	-	0	-	-	0	-	-	0	-
Peak Hour Factor	68	68	68	68	68	68	68	68	68	68	68	68
Heavy Vehicles, %	0	0	0	0	0	0	0	0	0	0	0	0
Mvmt Flow	54	0	0	0	0	43	0	315	0	3	199	96

Major/Minor	Minor2			Minor1			Major1			Major2		
Conflicting Flow All	590	568	247	568	616	315	295	0	0	315	0	0
Stage 1	253	253	-	315	315	-	-	-	-	-	-	-
Stage 2	337	315	-	253	301	-	-	-	-	-	-	-
Critical Hdwy	7.1	6.5	6.2	7.1	6.5	6.2	4.1	-	-	4.1	-	-
Critical Hdwy Stg 1	6.1	5.5	-	6.1	5.5	-	-	-	-	-	-	-
Critical Hdwy Stg 2	6.1	5.5	-	6.1	5.5	-	-	-	-	-	-	-
Follow-up Hdwy	3.5	4	3.3	3.5	4	3.3	2.2	-	-	2.2	-	-
Pot Cap-1 Maneuver	422	435	797	437	409	730	1278	-	-	1257	-	-
Stage 1	756	701	-	700	659	-	-	-	-	-	-	-
Stage 2	681	659	-	756	669	-	-	-	-	-	-	-
Platoon blocked, %								-	-		-	-
Mov Cap-1 Maneuver	397	434	797	436	408	730	1278	-	-	1257	-	-
Mov Cap-2 Maneuver	397	434	-	436	408	-	-	-	-	-	-	-
Stage 1	756	700	-	700	659	-	-	-	-	-	-	-
Stage 2	641	659	-	754	668	-	-	-	-	-	-	-

Approach	EB	WB	NB	SB
HCM Control Delay, s	15.5	10.2	0	0.1
HCM LOS	C	B		

Minor Lane/Major Mvmt	NBL	NBT	NBR	EBLn1	WBLn1	SBL	SBT	SBR
Capacity (veh/h)	1278	-	-	397	730	1257	-	-
HCM Lane V/C Ratio	-	-	-	0.137	0.058	0.002	-	-
HCM Control Delay (s)	0	-	-	15.5	10.2	7.9	0	-
HCM Lane LOS	A	-	-	C	B	A	A	-
HCM 95th %tile Q(veh)	0	-	-	0.5	0.2	0	-	-

Intersection	
Int Delay, s/veh	4.7

Movement	EBL	EBT	EBR	WBL	WBT	WBR	NBL	NBT	NBR	SBL	SBT	SBR
Lane Configurations												
Traffic Vol, veh/h	53	0	0	0	0	90	0	71	0	13	36	86
Future Vol, veh/h	53	0	0	0	0	90	0	71	0	13	36	86
Conflicting Peds, #/hr	0	0	0	0	0	0	0	0	0	0	0	0
Sign Control	Stop	Stop	Stop	Stop	Stop	Stop	Free	Free	Free	Free	Free	Free
RT Channelized	-	-	None	-	-	None	-	-	None	-	-	None
Storage Length	-	-	-	-	-	-	50	-	-	50	-	-
Veh in Median Storage, #	-	0	-	-	0	-	-	0	-	-	0	-
Grade, %	-	0	-	-	0	-	-	0	-	-	0	-
Peak Hour Factor	66	66	66	66	66	66	66	66	66	66	66	66
Heavy Vehicles, %	0	0	0	0	0	0	0	0	0	0	0	0
Mvmt Flow	80	0	0	0	0	136	0	108	0	20	55	130

Major/Minor	Minor2			Minor1			Major1			Major2		
Conflicting Flow All	336	268	120	268	333	108	185	0	0	108	0	0
Stage 1	160	160	-	108	108	-	-	-	-	-	-	-
Stage 2	176	108	-	160	225	-	-	-	-	-	-	-
Critical Hdwy	7.1	6.5	6.2	7.1	6.5	6.2	4.1	-	-	4.1	-	-
Critical Hdwy Stg 1	6.1	5.5	-	6.1	5.5	-	-	-	-	-	-	-
Critical Hdwy Stg 2	6.1	5.5	-	6.1	5.5	-	-	-	-	-	-	-
Follow-up Hdwy	3.5	4	3.3	3.5	4	3.3	2.2	-	-	2.2	-	-
Pot Cap-1 Maneuver	622	641	937	689	590	951	1402	-	-	1495	-	-
Stage 1	847	769	-	902	810	-	-	-	-	-	-	-
Stage 2	831	810	-	847	721	-	-	-	-	-	-	-
Platoon blocked, %								-	-		-	-
Mov Cap-1 Maneuver	527	633	937	682	582	951	1402	-	-	1495	-	-
Mov Cap-2 Maneuver	527	633	-	682	582	-	-	-	-	-	-	-
Stage 1	847	759	-	902	810	-	-	-	-	-	-	-
Stage 2	712	810	-	836	712	-	-	-	-	-	-	-

Approach	EB	WB	NB	SB
HCM Control Delay, s	13.1	9.4	0	0.7
HCM LOS	B	A		

Minor Lane/Major Mvmt	NBL	NBT	NBR	EBLn1	WBLn1	SBL	SBT	SBR
Capacity (veh/h)	1402	-	-	527	951	1495	-	-
HCM Lane V/C Ratio	-	-	-	0.152	0.143	0.013	-	-
HCM Control Delay (s)	0	-	-	13.1	9.4	7.4	-	-
HCM Lane LOS	A	-	-	B	A	A	-	-
HCM 95th %tile Q(veh)	0	-	-	0.5	0.5	0	-	-

Intersection	
Int Delay, s/veh	4.1

Movement	EBL	EBT	WBT	WBR	SBL	SBR
Lane Configurations						
Traffic Vol, veh/h	18	0	0	53	3	33
Future Vol, veh/h	18	0	0	53	3	33
Conflicting Peds, #/hr	0	0	0	0	0	0
Sign Control	Free	Free	Free	Free	Stop	Stop
RT Channelized	-	None	-	None	-	None
Storage Length	-	-	-	-	0	-
Veh in Median Storage, #	-	0	0	-	0	-
Grade, %	-	0	0	-	0	-
Peak Hour Factor	80	80	80	80	80	80
Heavy Vehicles, %	0	0	0	0	0	0
Mvmt Flow	23	0	0	66	4	41

Major/Minor	Major1		Major2		Minor2	
Conflicting Flow All	66	0	-	0	79	33
Stage 1	-	-	-	-	33	-
Stage 2	-	-	-	-	46	-
Critical Hdwy	4.1	-	-	-	6.4	6.2
Critical Hdwy Stg 1	-	-	-	-	5.4	-
Critical Hdwy Stg 2	-	-	-	-	5.4	-
Follow-up Hdwy	2.2	-	-	-	3.5	3.3
Pot Cap-1 Maneuver	1549	-	-	-	929	1046
Stage 1	-	-	-	-	995	-
Stage 2	-	-	-	-	982	-
Platoon blocked, %		-	-	-		
Mov Cap-1 Maneuver	1549	-	-	-	915	1046
Mov Cap-2 Maneuver	-	-	-	-	915	-
Stage 1	-	-	-	-	980	-
Stage 2	-	-	-	-	982	-

Approach	EB	WB	SB
HCM Control Delay, s	7.4	0	8.6
HCM LOS			A

Minor Lane/Major Mvmt	EBL	EBT	WBT	WBR	SBLn1
Capacity (veh/h)	1549	-	-	-	1034
HCM Lane V/C Ratio	0.015	-	-	-	0.044
HCM Control Delay (s)	7.4	0	-	-	8.6
HCM Lane LOS	A	A	-	-	A
HCM 95th %tile Q(veh)	0	-	-	-	0.1

Amazon Warehouse (JN 13106A)
E+P
PM Peak Hour

Level Of Service Computation Report
ICU 1(Loss as Cycle Length %) Method (Future Volume Alternative)

Intersection #107 Knott Av. & Katella Av.

Cycle (sec):	100	Critical Vol./Cap.(X):	0.942
Loss Time (sec):	10	Average Delay (sec/veh):	xxxxxx
Optimal Cycle:	126	Level Of Service:	E

Approach:	North Bound			South Bound			East Bound			West Bound		
Movement:	L - T	- R		L - T	- R		L - T	- R		L - T	- R	
Control:	Protected			Protected			Protected			Protected		
Rights:	Include			Include			Ovl			Ovl		
Min. Green:	0	0	0	0	0	0	0	0	0	0	0	0
Y+R:	4.0	4.0	4.0	4.0	4.0	4.0	4.0	4.0	4.0	4.0	4.0	4.0
Lanes:	2 0	1 1	0	1 0	2 0	1	1 0	3 0	1	1 0	3 0	1
Volume Module:												
Base Vol:	301	898	136	170	713	105	324	1321	440	213	909	184
Growth Adj:	1.00	1.00	1.00	1.00	1.00	1.00	1.00	1.00	1.00	1.00	1.00	1.00
Initial Bse:	301	898	136	170	713	105	324	1321	440	213	909	184
Added Vol:	1	0	0	0	0	1	9	20	14	0	2	0
PasserByVol:	0	0	0	0	0	0	0	0	0	0	0	0
Initial Fut:	302	898	136	170	713	106	333	1341	454	213	911	184
User Adj:	1.00	1.00	1.00	1.00	1.00	1.00	1.00	1.00	1.00	1.00	1.00	1.00
PHF Adj:	1.00	1.00	1.00	1.00	1.00	1.00	1.00	1.00	1.00	1.00	1.00	1.00
PHF Volume:	302	898	136	170	713	106	333	1341	454	213	911	184
Reduct Vol:	0	0	0	0	0	0	0	0	0	0	0	0
Reduced Vol:	302	898	136	170	713	106	333	1341	454	213	911	184
PCE Adj:	1.00	1.00	1.00	1.00	1.00	1.00	1.00	1.00	1.00	1.00	1.00	1.00
MLF Adj:	1.00	1.00	1.00	1.00	1.00	1.00	1.00	1.00	1.00	1.00	1.00	1.00
FinalVolume:	302	898	136	170	713	106	333	1341	454	213	911	184
OvlAdjVol:									303			14
Saturation Flow Module:												
Sat/Lane:	1600	1600	1600	1600	1600	1600	1600	1600	1600	1600	1600	1600
Adjustment:	1.00	1.00	1.00	1.00	1.00	1.00	1.00	1.00	1.00	1.00	1.00	1.00
Lanes:	2.00	1.74	0.26	1.00	2.00	1.00	1.00	3.00	1.00	1.00	3.00	1.00
Final Sat.:	3200	2779	421	1600	3200	1600	1600	4800	1600	1600	4800	1600
Capacity Analysis Module:												
Vol/Sat:	0.09	0.32	0.32	0.11	0.22	0.07	0.21	0.28	0.28	0.13	0.19	0.12
OvlAdjV/S:									0.19			0.01
Crit Moves:		****		****				****		****		

Amazon Warehouse (JN 13106A)
E+P
PM Peak Hour

Level Of Service Computation Report
ICU 1(Loss as Cycle Length %) Method (Future Volume Alternative)

Intersection #108 Western Wy. & Katella Av.

Cycle (sec):	100	Critical Vol./Cap.(X):	0.804
Loss Time (sec):	10	Average Delay (sec/veh):	xxxxxx
Optimal Cycle:	67	Level Of Service:	D

Approach:	North Bound			South Bound			East Bound			West Bound		
Movement:	L -	T -	R	L -	T -	R	L -	T -	R	L -	T -	R
Control:	Protected			Protected			Protected			Protected		
Rights:	Include			Include			Ovl			Ovl		
Min. Green:	0	0	0	0	0	0	0	0	0	0	0	0
Y+R:	4.0	4.0	4.0	4.0	4.0	4.0	4.0	4.0	4.0	4.0	4.0	4.0
Lanes:	1 0	1	1 0	1 0	1	1 0	1 0	3	0 1	1 0	3	0 1
Volume Module:												
Base Vol:	170	873	129	118	579	123	140	1189	175	105	925	150
Growth Adj:	1.00	1.00	1.00	1.00	1.00	1.00	1.00	1.00	1.00	1.00	1.00	1.00
Initial Bse:	170	873	129	118	579	123	140	1189	175	105	925	150
Added Vol:	0	0	0	0	0	0	4	16	0	0	2	0
PasserByVol:	0	0	0	0	0	0	0	0	0	0	0	0
Initial Fut:	170	873	129	118	579	123	144	1205	175	105	927	150
User Adj:	1.00	1.00	1.00	1.00	1.00	1.00	1.00	1.00	1.00	1.00	1.00	1.00
PHF Adj:	1.00	1.00	1.00	1.00	1.00	1.00	1.00	1.00	1.00	1.00	1.00	1.00
PHF Volume:	170	873	129	118	579	123	144	1205	175	105	927	150
Reduct Vol:	0	0	0	0	0	0	0	0	0	0	0	0
Reduced Vol:	170	873	129	118	579	123	144	1205	175	105	927	150
PCE Adj:	1.00	1.00	1.00	1.00	1.00	1.00	1.00	1.00	1.00	1.00	1.00	1.00
MLF Adj:	1.00	1.00	1.00	1.00	1.00	1.00	1.00	1.00	1.00	1.00	1.00	1.00
FinalVolume:	170	873	129	118	579	123	144	1205	175	105	927	150
OvlAdjVol:									5			32
Saturation Flow Module:												
Sat/Lane:	1600	1600	1600	1600	1600	1600	1600	1600	1600	1600	1600	1600
Adjustment:	1.00	1.00	1.00	1.00	1.00	1.00	1.00	1.00	1.00	1.00	1.00	1.00
Lanes:	1.00	1.74	0.26	1.00	1.65	0.35	1.00	3.00	1.00	1.00	3.00	1.00
Final Sat.:	1600	2788	412	1600	2639	561	1600	4800	1600	1600	4800	1600
Capacity Analysis Module:												
Vol/Sat:	0.11	0.31	0.31	0.07	0.22	0.22	0.09	0.25	0.11	0.07	0.19	0.09
OvlAdjV/S:									0.00			0.02
Crit Moves:		****		****				****		****		

APPENDIX 5.2:

E+P CONDITIONS TRAFFIC SIGNAL WARRANT ANALYSIS

This Page Intentionally Left Blank

Figure 4C-101 (CA). Traffic Signal Warrants Worksheet

WARRANT 3 - Peak Hour **SATISFIED = NO**
(Part A or Part B must be satisfied)

PART A **SATISFIED = NO**
(All parts 1, 2, and 3 below must be satisfied for the same one hour, for any four consecutive 15-minute periods)

1. The total delay experienced for traffic on one minor street approach (one direction only) controlled by a STOP sign equals or exceeds four vehicle-hours for a one-lane approach, or five vehicle-hours for a two-lane approach; AND	**NO**
2. The volume on the same minor street approach (one direction only) equals or exceeds 100 vph for one moving lane of traffic or 150 vph for two moving lanes; AND	**NO**
3. The total entering volume serviced during the hour equals or exceeds 800 vph for intersections with four or more approaches or 650 vph for intersections with three approaches.	**NO**

PART B **SATISFIED = NO**

APPROACH LANES	Number of Lanes	Peak Hour Volume
Both Approaches - Major Street	1	416
Highest Approach - Minor Street	1	37

The plotted points fall above the curve in Figure 4C-3. (URBAN AREAS)	**NO**
OR, The plotted point falls above the curves in Figure 4C-4. (RURAL AREAS)	**N/A**

The satisfaction of a traffic signal warrant or warrants shall not in itself require the installation of a traffic control signal.

Figure 4C-3. Warrant 3, Peak Hour

Traffic Conditions = **E+P Conditions - Weekday PM Peak Hour**

Major Street Name = **Holder St.**

Total of Both Approaches (VPH) = **416**
Number of Approach Lanes on Major Street = **1**

Minor Street Name = **Driveway 2**

High Volume Approach (VPH) = **37**
Number of Approach Lanes On Minor Street = **1**

SIGNAL WARRANT NOT SATISFIED

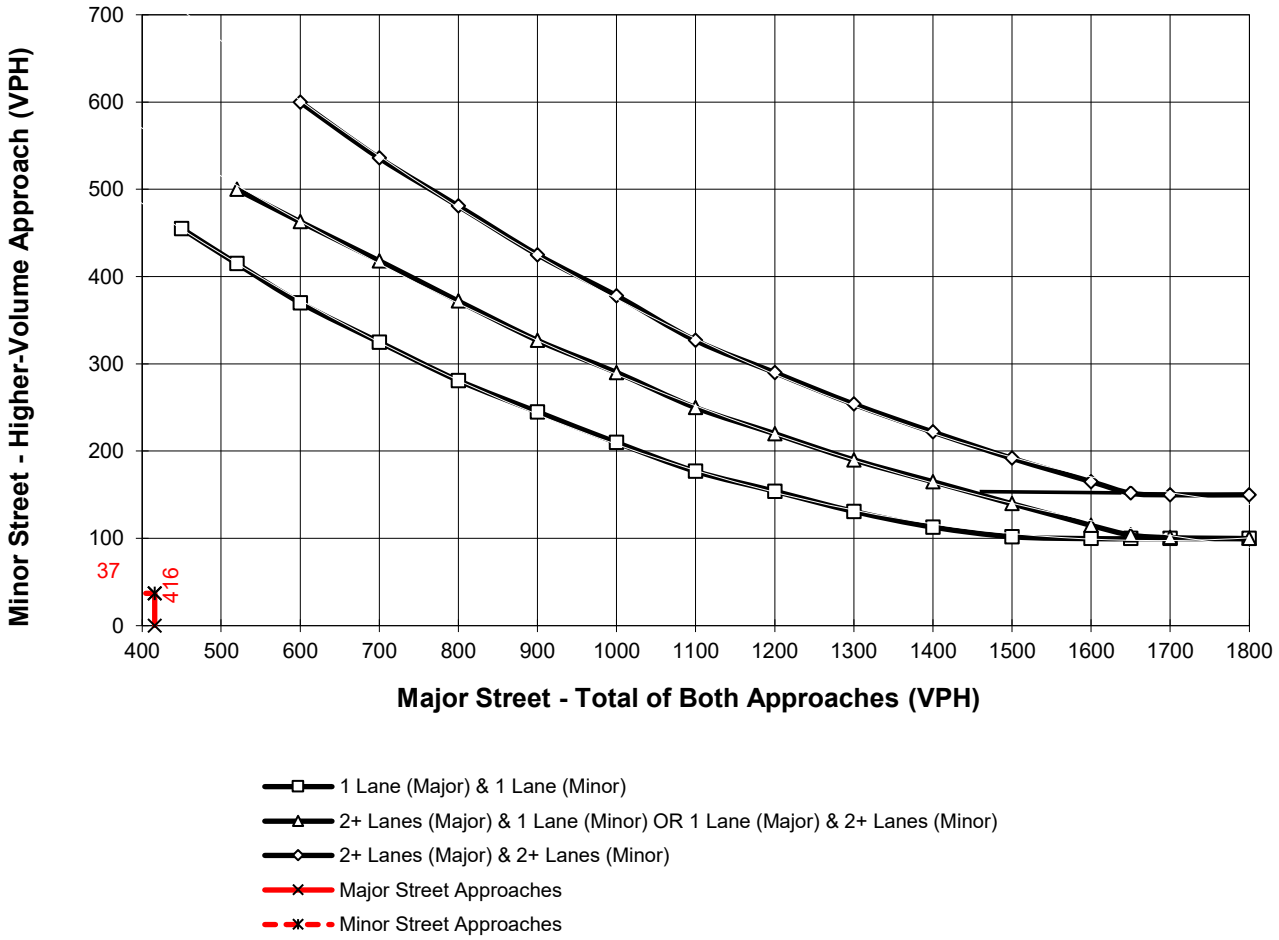

*Note: 150 vph applies as the lower threshold for a minor-street approach with two or more lanes and 100 vph applies as the lower threshold for a minor-street approach with one lane

Figure 4C-101 (CA). Traffic Signal Warrants Worksheet

WARRANT 3 - Peak Hour **SATISFIED = NO**
(Part A or Part B must be satisfied)

PART A **SATISFIED = NO**
(All parts 1, 2, and 3 below must be satisfied for the same one hour, for any four consecutive 15-minute periods)

1. The total delay experienced for traffic on one minor street approach (one direction only) controlled by a STOP sign equals or exceeds four vehicle-hours for a one-lane approach, or five vehicle-hours for a two-lane approach; AND	**NO**
2. The volume on the same minor street approach (one direction only) equals or exceeds 100 vph for one moving lane of traffic or 150 vph for two moving lanes; AND	**NO**
3. The total entering volume serviced during the hour equals or exceeds 800 vph for intersections with four or more approaches or 650 vph for intersections with three approaches.	**NO**

PART B **SATISFIED = NO**

APPROACH LANES	Number of Lanes	Peak Hour Volume
Both Approaches - Major Street	1	206
Highest Approach - Minor Street	1	90

The plotted points fall above the curve in Figure 4C-3. (URBAN AREAS)	**NO**
OR, The plotted point falls above the curves in Figure 4C-4. (RURAL AREAS)	**N/A**

The satisfaction of a traffic signal warrant or warrants shall not in itself require the installation of a traffic control signal.

Figure 4C-3. Warrant 3, Peak Hour

Traffic Conditions = **E+P Conditions - Weekday PM Peak Hour**

Major Street Name = **Holder St.**

Total of Both Approaches (VPH) = **206**
Number of Approach Lanes on Major Street = **1**

Minor Street Name = **Driveway 3**

High Volume Approach (VPH) = **90**
Number of Approach Lanes On Minor Street = **1**

SIGNAL WARRANT NOT SATISFIED

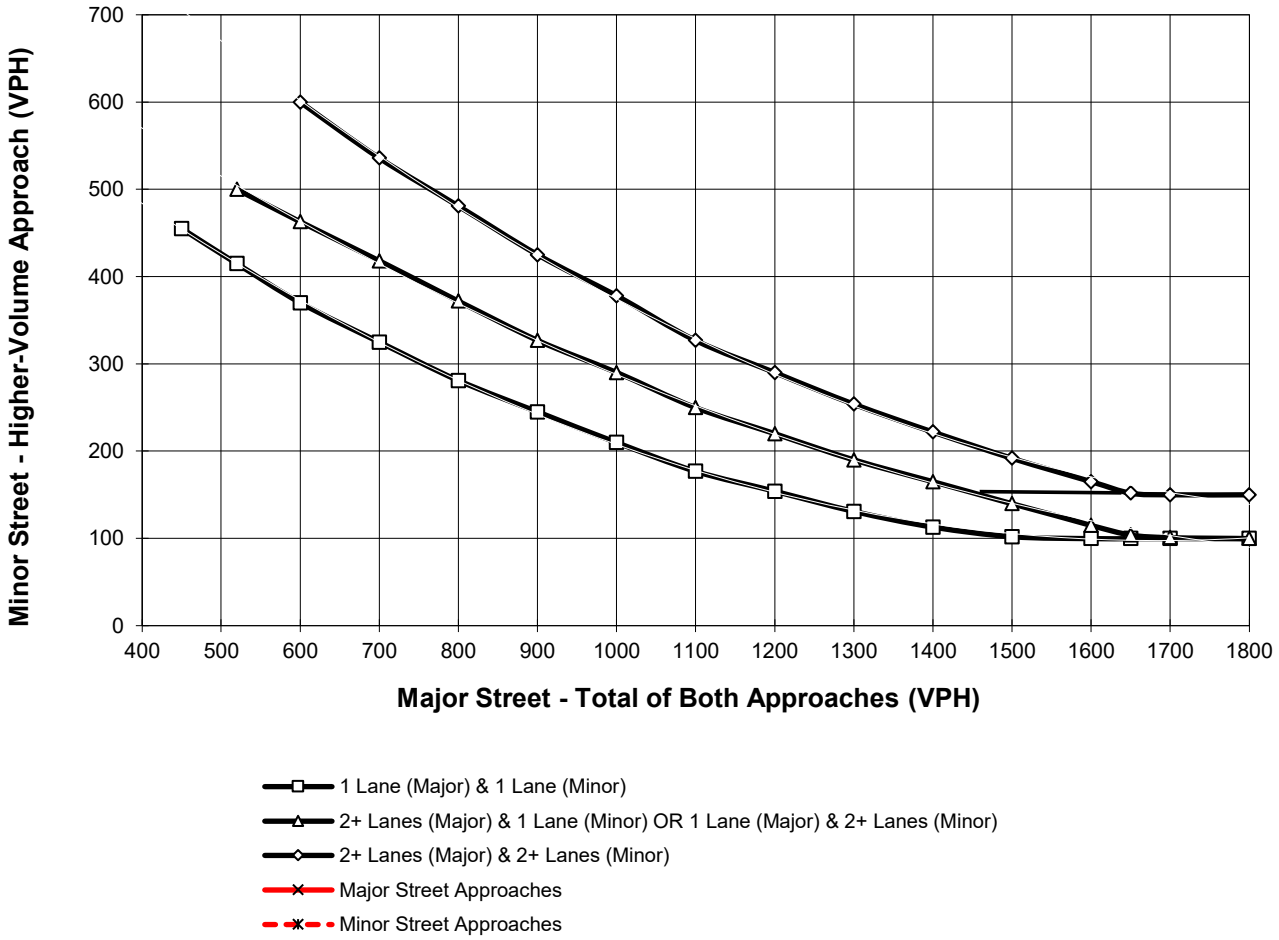

*Note: 150 vph applies as the lower threshold for a minor-street approach with two or more lanes and 100 vph applies as the lower threshold for a minor-street approach with one lane

APPENDIX 6.1:

OPENING YEAR CUMULATIVE (2021) WITHOUT PROJECT CONDITIONS INTERSECTION OPERATIONS ANALYSIS

This Page Intentionally Left Blank

Amazon Warehouse (JN 13106A)
Opening Year Cumulative (2021) Without Project
AM Peak Hour

Level Of Service Computation Report
ICU 1(Loss as Cycle Length %) Method (Base Volume Alternative)

Intersection #101 Valley View St. & Katella Av.

Cycle (sec):	100	Critical Vol./Cap.(X):	0.875
Loss Time (sec):	10	Average Delay (sec/veh):	xxxxxx
Optimal Cycle:	89	Level Of Service:	D

Approach:	North Bound			South Bound			East Bound			West Bound		
Movement:	L -	T -	R	L -	T -	R	L -	T -	R	L -	T -	R
Control:	Protected			Protected			Protected			Protected		
Rights:	Include			Include			Ignore			Include		
Min. Green:	0	0	0	0	0	0	0	0	0	0	0	0
Y+R:	4.0	4.0	4.0	4.0	4.0	4.0	4.0	4.0	4.0	4.0	4.0	4.0
Lanes:	3 0	3 0	1	2 0	3 0	1	2 0	3 0	1	2 0	3 0	1
Volume Module:												
Base Vol:	890	1565	302	248	1128	290	292	1037	765	216	1264	158
Growth Adj:	1.00	1.00	1.00	1.00	1.00	1.00	1.00	1.00	1.00	1.00	1.00	1.00
Initial Bse:	890	1565	302	248	1128	290	292	1037	765	216	1264	158
User Adj:	1.00	1.00	1.00	1.00	1.00	1.00	1.00	1.00	0.00	1.00	1.00	1.00
PHF Adj:	1.00	1.00	1.00	1.00	1.00	1.00	1.00	1.00	0.00	1.00	1.00	1.00
PHF Volume:	890	1565	302	248	1128	290	292	1037	0	216	1264	158
Reduct Vol:	0	0	0	0	0	0	0	0	0	0	0	0
Reduced Vol:	890	1565	302	248	1128	290	292	1037	0	216	1264	158
PCE Adj:	1.00	1.00	1.00	1.00	1.00	1.00	1.00	1.00	0.00	1.00	1.00	1.00
MLF Adj:	1.00	1.00	1.00	1.00	1.00	1.00	1.00	1.00	0.00	1.00	1.00	1.00
FinalVolume:	890	1565	302	248	1128	290	292	1037	0	216	1264	158
Saturation Flow Module:												
Sat/Lane:	1600	1600	1600	1600	1600	1600	1600	1600	1600	1600	1600	1600
Adjustment:	1.00	1.00	1.00	1.00	1.00	1.00	1.00	1.00	1.00	1.00	1.00	1.00
Lanes:	3.00	3.00	1.00	2.00	3.00	1.00	2.00	3.00	1.00	2.00	3.00	1.00
Final Sat.:	4800	4800	1600	3200	4800	1600	3200	4800	1600	3200	4800	1600
Capacity Analysis Module:												
Vol/Sat:	0.19	0.33	0.19	0.08	0.24	0.18	0.09	0.22	0.00	0.07	0.26	0.10
Crit Moves:	****				****		****				****	

Amazon Warehouse (JN 13106A)
Opening Year Cumulative (2021) Without Project
AM Peak Hour

Level Of Service Computation Report
ICU 1(Loss as Cycle Length %) Method (Base Volume Alternative)

Intersection #103 Holder St. & Katella Av.

Cycle (sec):	100	Critical Vol./Cap.(X):	0.607
Loss Time (sec):	10	Average Delay (sec/veh):	xxxxxx
Optimal Cycle:	41	Level Of Service:	B

Approach:	North Bound			South Bound			East Bound			West Bound		
Movement:	L -	T -	R	L -	T -	R	L -	T -	R	L -	T -	R
Control:	Prot+Permit			Prot+Permit			Protected			Protected		
Rights:	Include			Include			Include			Include		
Min. Green:	0	0	0	0	0	0	0	0	0	0	0	0
Y+R:	4.0	4.0	4.0	4.0	4.0	4.0	4.0	4.0	4.0	4.0	4.0	4.0
Lanes:	1 0	1	1 0	1 0	1	1 0	1 0	3	0 1	1 0	3	0 1
Volume Module:												
Base Vol:	9	2	13	205	43	187	35	1144	152	111	1673	149
Growth Adj:	1.00	1.00	1.00	1.00	1.00	1.00	1.00	1.00	1.00	1.00	1.00	1.00
Initial Bse:	9	2	13	205	43	187	35	1144	152	111	1673	149
User Adj:	1.00	1.00	1.00	1.00	1.00	1.00	1.00	1.00	1.00	1.00	1.00	1.00
PHF Adj:	1.00	1.00	1.00	1.00	1.00	1.00	1.00	1.00	1.00	1.00	1.00	1.00
PHF Volume:	9	2	13	205	43	187	35	1144	152	111	1673	149
Reduct Vol:	0	0	0	0	0	0	0	0	0	0	0	0
Reduced Vol:	9	2	13	205	43	187	35	1144	152	111	1673	149
PCE Adj:	1.00	1.00	1.00	1.00	1.00	1.00	1.00	1.00	1.00	1.00	1.00	1.00
MLF Adj:	1.00	1.00	1.00	1.00	1.00	1.00	1.00	1.00	1.00	1.00	1.00	1.00
FinalVolume:	9	2	13	205	43	187	35	1144	152	111	1673	149
Saturation Flow Module:												
Sat/Lane:	1600	1600	1600	1600	1600	1600	1600	1600	1600	1600	1600	1600
Adjustment:	1.00	1.00	1.00	1.00	1.00	1.00	1.00	1.00	1.00	1.00	1.00	1.00
Lanes:	1.00	1.00	1.00	1.00	1.00	1.00	1.00	3.00	1.00	1.00	3.00	1.00
Final Sat.:	1600	1600	1600	1600	1600	1600	1600	4800	1600	1600	4800	1600
Capacity Analysis Module:												
Vol/Sat:	0.01	0.00	0.01	0.13	0.03	0.12	0.02	0.24	0.10	0.07	0.35	0.09
Crit Moves:			****	****			****				****	

Intersection	
Int Delay, s/veh	0.4

Movement	EBL	EBT	EBR	WBL	WBT	WBR	NBL	NBT	NBR	SBL	SBT	SBR
Lane Configurations												
Traffic Vol, veh/h	5	0	0	0	0	0	0	20	0	9	229	67
Future Vol, veh/h	5	0	0	0	0	0	0	20	0	9	229	67
Conflicting Peds, #/hr	0	0	0	0	0	0	0	0	0	0	0	0
Sign Control	Stop	Stop	Stop	Stop	Stop	Stop	Free	Free	Free	Free	Free	Free
RT Channelized	-	-	None	-	-	None	-	-	None	-	-	None
Storage Length	-	-	-	-	-	-	50	-	-	50	-	-
Veh in Median Storage, #	-	0	-	-	0	-	-	0	-	-	0	-
Grade, %	-	0	-	-	0	-	-	0	-	-	0	-
Peak Hour Factor	65	65	65	65	65	65	65	65	65	65	65	65
Heavy Vehicles, %	0	0	0	0	0	0	0	0	0	0	0	0
Mvmt Flow	8	0	0	0	0	0	0	31	0	14	352	103

Major/Minor	Minor2			Minor1			Major1			Major2		
Conflicting Flow All	463	463	404	463	514	31	455	0	0	31	0	0
Stage 1	432	432	-	31	31	-	-	-	-	-	-	-
Stage 2	31	31	-	432	483	-	-	-	-	-	-	-
Critical Hdwy	7.1	6.5	6.2	7.1	6.5	6.2	4.1	-	-	4.1	-	-
Critical Hdwy Stg 1	6.1	5.5	-	6.1	5.5	-	-	-	-	-	-	-
Critical Hdwy Stg 2	6.1	5.5	-	6.1	5.5	-	-	-	-	-	-	-
Follow-up Hdwy	3.5	4	3.3	3.5	4	3.3	2.2	-	-	2.2	-	-
Pot Cap-1 Maneuver	513	499	651	513	467	1049	1116	-	-	1595	-	-
Stage 1	606	586	-	991	873	-	-	-	-	-	-	-
Stage 2	991	873	-	606	556	-	-	-	-	-	-	-
Platoon blocked, %								-	-		-	-
Mov Cap-1 Maneuver	509	495	651	509	463	1049	1116	-	-	1595	-	-
Mov Cap-2 Maneuver	509	495	-	509	463	-	-	-	-	-	-	-
Stage 1	606	581	-	991	873	-	-	-	-	-	-	-
Stage 2	991	873	-	601	551	-	-	-	-	-	-	-

Approach	EB	WB	NB	SB
HCM Control Delay, s	12.2	0	0	0.2
HCM LOS	B	A		

Minor Lane/Major Mvmt	NBL	NBT	NBR	EBLn1	WBLn1	SBL	SBT	SBR
Capacity (veh/h)	1116	-	-	509	-	1595	-	-
HCM Lane V/C Ratio	-	-	-	0.015	-	0.009	-	-
HCM Control Delay (s)	0	-	-	12.2	0	7.3	0	-
HCM Lane LOS	A	-	-	B	A	A	A	-
HCM 95th %tile Q(veh)	0	-	-	0	-	0	-	-

Intersection	
Int Delay, s/veh	4.5

Movement	EBL	EBT	EBR	WBL	WBT	WBR	NBL	NBT	NBR	SBL	SBT	SBR
Lane Configurations												
Traffic Vol, veh/h	4	0	0	0	0	12	0	4	0	127	69	33
Future Vol, veh/h	4	0	0	0	0	12	0	4	0	127	69	33
Conflicting Peds, #/hr	0	0	0	0	0	0	0	0	0	0	0	0
Sign Control	Stop	Stop	Stop	Stop	Stop	Stop	Free	Free	Free	Free	Free	Free
RT Channelized	-	-	None	-	-	None	-	-	None	-	-	None
Storage Length	-	-	-	-	-	-	50	-	-	50	-	-
Veh in Median Storage, #	-	0	-	-	0	-	-	0	-	-	0	-
Grade, %	-	0	-	-	0	-	-	0	-	-	0	-
Peak Hour Factor	69	69	69	69	25	69	69	69	69	69	69	69
Heavy Vehicles, %	0	0	0	0	0	0	0	0	0	0	0	0
Mvmt Flow	6	0	0	0	0	17	0	6	0	184	100	48

Major/Minor	Minor2			Minor1			Major1			Major2		
Conflicting Flow All	507	498	124	498	522	6	148	0	0	6	0	0
Stage 1	492	492	-	6	6	-	-	-	-	-	-	-
Stage 2	15	6	-	492	516	-	-	-	-	-	-	-
Critical Hdwy	7.1	6.5	6.2	7.1	6.5	6.2	4.1	-	-	4.1	-	-
Critical Hdwy Stg 1	6.1	5.5	-	6.1	5.5	-	-	-	-	-	-	-
Critical Hdwy Stg 2	6.1	5.5	-	6.1	5.5	-	-	-	-	-	-	-
Follow-up Hdwy	3.5	4	3.3	3.5	4	3.3	2.2	-	-	2.2	-	-
Pot Cap-1 Maneuver	479	477	932	486	462	1083	1446	-	-	1628	-	-
Stage 1	562	551	-	1021	895	-	-	-	-	-	-	-
Stage 2	1010	895	-	562	538	-	-	-	-	-	-	-
Platoon blocked, %								-	-		-	-
Mov Cap-1 Maneuver	431	423	932	444	410	1083	1446	-	-	1628	-	-
Mov Cap-2 Maneuver	431	423	-	444	410	-	-	-	-	-	-	-
Stage 1	562	489	-	1021	895	-	-	-	-	-	-	-
Stage 2	994	895	-	498	477	-	-	-	-	-	-	-

Approach	EB	WB	NB	SB
HCM Control Delay, s	13.5	8.4	0	4.2
HCM LOS	B	A		

Minor Lane/Major Mvmt	NBL	NBT	NBR	EBLn1	WBLn1	SBL	SBT	SBR
Capacity (veh/h)	1446	-	-	431	1083	1628	-	-
HCM Lane V/C Ratio	-	-	-	0.013	0.016	0.113	-	-
HCM Control Delay (s)	0	-	-	13.5	8.4	7.5	-	-
HCM Lane LOS	A	-	-	B	A	A	-	-
HCM 95th %tile Q(veh)	0	-	-	0	0	0.4	-	-

Amazon Warehouse (JN 13106A)
Opening Year Cumulative (2021) Without Project
AM Peak Hour

Level Of Service Computation Report
ICU 1(Loss as Cycle Length %) Method (Base Volume Alternative)

Intersection #107 Knott Av. & Katella Av.

Cycle (sec):	100	Critical Vol./Cap.(X):	0.858
Loss Time (sec):	10	Average Delay (sec/veh):	xxxxxx
Optimal Cycle:	83	Level Of Service:	D

Approach:	North Bound			South Bound			East Bound			West Bound		
Movement:	L -	T -	R	L -	T -	R	L -	T -	R	L -	T -	R
Control:	Protected			Protected			Protected			Protected		
Rights:	Include			Include			Ovl			Ovl		
Min. Green:	0	0	0	0	0	0	0	0	0	0	0	0
Y+R:	4.0	4.0	4.0	4.0	4.0	4.0	4.0	4.0	4.0	4.0	4.0	4.0
Lanes:	2 0	1 1	0	1 0	2 0	1	1 0	3 0	1	1 0	3 0	1
Volume Module:												
Base Vol:	385	589	123	115	942	181	75	929	285	196	1422	108
Growth Adj:	1.00	1.00	1.00	1.00	1.00	1.00	1.00	1.00	1.00	1.00	1.00	1.00
Initial Bse:	385	589	123	115	942	181	75	929	285	196	1422	108
User Adj:	1.00	1.00	1.00	1.00	1.00	1.00	1.00	1.00	1.00	1.00	1.00	1.00
PHF Adj:	1.00	1.00	1.00	1.00	1.00	1.00	1.00	1.00	1.00	1.00	1.00	1.00
PHF Volume:	385	589	123	115	942	181	75	929	285	196	1422	108
Reduct Vol:	0	0	0	0	0	0	0	0	0	0	0	0
Reduced Vol:	385	589	123	115	942	181	75	929	285	196	1422	108
PCE Adj:	1.00	1.00	1.00	1.00	1.00	1.00	1.00	1.00	1.00	1.00	1.00	1.00
MLF Adj:	1.00	1.00	1.00	1.00	1.00	1.00	1.00	1.00	1.00	1.00	1.00	1.00
FinalVolume:	385	589	123	115	942	181	75	929	285	196	1422	108
OvlAdjVol:									93			0
Saturation Flow Module:												
Sat/Lane:	1600	1600	1600	1600	1600	1600	1600	1600	1600	1600	1600	1600
Adjustment:	1.00	1.00	1.00	1.00	1.00	1.00	1.00	1.00	1.00	1.00	1.00	1.00
Lanes:	2.00	1.65	0.35	1.00	2.00	1.00	1.00	3.00	1.00	1.00	3.00	1.00
Final Sat.:	3200	2647	553	1600	3200	1600	1600	4800	1600	1600	4800	1600
Capacity Analysis Module:												
Vol/Sat:	0.12	0.22	0.22	0.07	0.29	0.11	0.05	0.19	0.18	0.12	0.30	0.07
OvlAdjV/S:									0.06			0.00
Crit Moves:	****				****		****				****	

Amazon Warehouse (JN 13106A)
Opening Year Cumulative (2021) Without Project
AM Peak Hour

Level Of Service Computation Report
ICU 1(Loss as Cycle Length %) Method (Base Volume Alternative)

Intersection #108 Western Wy. & Katella Av.

Cycle (sec):	100	Critical Vol./Cap.(X):	0.913
Loss Time (sec):	10	Average Delay (sec/veh):	xxxxxx
Optimal Cycle:	107	Level Of Service:	E

Approach:	North Bound			South Bound			East Bound			West Bound		
Movement:	L -	T -	R	L -	T -	R	L -	T -	R	L -	T -	R
Control:	Protected			Protected			Protected			Protected		
Rights:	Include			Include			Ovl			Ovl		
Min. Green:	0	0	0	0	0	0	0	0	0	0	0	0
Y+R:	4.0	4.0	4.0	4.0	4.0	4.0	4.0	4.0	4.0	4.0	4.0	4.0
Lanes:	1 0	1	1 0	1 0	1	1 0	1 0	3	0 1	1 0	3	0 1
Volume Module:												
Base Vol:	158	296	104	129	906	173	124	1059	165	208	1440	101
Growth Adj:	1.00	1.00	1.00	1.00	1.00	1.00	1.00	1.00	1.00	1.00	1.00	1.00
Initial Bse:	158	296	104	129	906	173	124	1059	165	208	1440	101
User Adj:	1.00	1.00	1.00	1.00	1.00	1.00	1.00	1.00	1.00	1.00	1.00	1.00
PHF Adj:	1.00	1.00	1.00	1.00	1.00	1.00	1.00	1.00	1.00	1.00	1.00	1.00
PHF Volume:	158	296	104	129	906	173	124	1059	165	208	1440	101
Reduct Vol:	0	0	0	0	0	0	0	0	0	0	0	0
Reduced Vol:	158	296	104	129	906	173	124	1059	165	208	1440	101
PCE Adj:	1.00	1.00	1.00	1.00	1.00	1.00	1.00	1.00	1.00	1.00	1.00	1.00
MLF Adj:	1.00	1.00	1.00	1.00	1.00	1.00	1.00	1.00	1.00	1.00	1.00	1.00
FinalVolume:	158	296	104	129	906	173	124	1059	165	208	1440	101
OvlAdjVol:									7			0
Saturation Flow Module:												
Sat/Lane:	1600	1600	1600	1600	1600	1600	1600	1600	1600	1600	1600	1600
Adjustment:	1.00	1.00	1.00	1.00	1.00	1.00	1.00	1.00	1.00	1.00	1.00	1.00
Lanes:	1.00	1.48	0.52	1.00	1.68	0.32	1.00	3.00	1.00	1.00	3.00	1.00
Final Sat.:	1600	2368	832	1600	2687	513	1600	4800	1600	1600	4800	1600
Capacity Analysis Module:												
Vol/Sat:	0.10	0.13	0.13	0.08	0.34	0.34	0.08	0.22	0.10	0.13	0.30	0.06
OvlAdjV/S:									0.00			0.00
Crit Moves:	****				****		****				****	

Traffix 8.0.0715 (c) 2008 Dowling Assoc. Licensed to URBAN CROSSROADS, IRVINE

Amazon Warehouse (JN 13106A)
Opening Year Cumulative (2021) Without Project
PM Peak Hour

Level Of Service Computation Report
ICU 1(Loss as Cycle Length %) Method (Base Volume Alternative)

Intersection #101 Valley View St. & Katella Av.

Cycle (sec):	100	Critical Vol./Cap.(X):	0.896
Loss Time (sec):	10	Average Delay (sec/veh):	xxxxxx
Optimal Cycle:	98	Level Of Service:	D

Approach:	North Bound			South Bound			East Bound			West Bound		
Movement:	L -	T -	R	L -	T -	R	L -	T -	R	L -	T -	R
Control:	Protected			Protected			Protected			Protected		
Rights:	Include			Include			Ignore			Include		
Min. Green:	0	0	0	0	0	0	0	0	0	0	0	0
Y+R:	4.0	4.0	4.0	4.0	4.0	4.0	4.0	4.0	4.0	4.0	4.0	4.0
Lanes:	3 0	3 0	1	2 0	3 0	1	2 0	3 0	1	2 0	3 0	1
Volume Module:												
Base Vol:	723	1521	189	234	1398	302	312	1134	1078	376	1088	244
Growth Adj:	1.00	1.00	1.00	1.00	1.00	1.00	1.00	1.00	1.00	1.00	1.00	1.00
Initial Bse:	723	1521	189	234	1398	302	312	1134	1078	376	1088	244
User Adj:	1.00	1.00	1.00	1.00	1.00	1.00	1.00	1.00	0.00	1.00	1.00	1.00
PHF Adj:	1.00	1.00	1.00	1.00	1.00	1.00	1.00	1.00	0.00	1.00	1.00	1.00
PHF Volume:	723	1521	189	234	1398	302	312	1134	0	376	1088	244
Reduct Vol:	0	0	0	0	0	0	0	0	0	0	0	0
Reduced Vol:	723	1521	189	234	1398	302	312	1134	0	376	1088	244
PCE Adj:	1.00	1.00	1.00	1.00	1.00	1.00	1.00	1.00	0.00	1.00	1.00	1.00
MLF Adj:	1.00	1.00	1.00	1.00	1.00	1.00	1.00	1.00	0.00	1.00	1.00	1.00
FinalVolume:	723	1521	189	234	1398	302	312	1134	0	376	1088	244
Saturation Flow Module:												
Sat/Lane:	1600	1600	1600	1600	1600	1600	1600	1600	1600	1600	1600	1600
Adjustment:	1.00	1.00	1.00	1.00	1.00	1.00	1.00	1.00	1.00	1.00	1.00	1.00
Lanes:	3.00	3.00	1.00	2.00	3.00	1.00	2.00	3.00	1.00	2.00	3.00	1.00
Final Sat.:	4800	4800	1600	3200	4800	1600	3200	4800	1600	3200	4800	1600
Capacity Analysis Module:												
Vol/Sat:	0.15	0.32	0.12	0.07	0.29	0.19	0.10	0.24	0.00	0.12	0.23	0.15
Crit Moves:	****				****			****		****		

Amazon Warehouse (JN 13106A)
Opening Year Cumulative (2021) Without Project
PM Peak Hour

Level Of Service Computation Report
ICU 1(Loss as Cycle Length %) Method (Base Volume Alternative)

Intersection #103 Holder St. & Katella Av.

Cycle (sec):	100	Critical Vol./Cap.(X):	0.658
Loss Time (sec):	10	Average Delay (sec/veh):	xxxxxx
Optimal Cycle:	45	Level Of Service:	B

Approach:	North Bound			South Bound			East Bound			West Bound		
Movement:	L -	T -	R	L -	T -	R	L -	T -	R	L -	T -	R
Control:	Prot+Permit			Prot+Permit			Protected			Protected		
Rights:	Include			Include			Include			Include		
Min. Green:	0	0	0	0	0	0	0	0	0	0	0	0
Y+R:	4.0	4.0	4.0	4.0	4.0	4.0	4.0	4.0	4.0	4.0	4.0	4.0
Lanes:	1 0	1	1 0	1 0	1	1 0	1 0	3	0 1	1 0	3	0 1
Volume Module:												
Base Vol:	107	46	110	216	2	116	138	1656	10	15	1122	214
Growth Adj:	1.00	1.00	1.00	1.00	1.00	1.00	1.00	1.00	1.00	1.00	1.00	1.00
Initial Bse:	107	46	110	216	2	116	138	1656	10	15	1122	214
User Adj:	1.00	1.00	1.00	1.00	1.00	1.00	1.00	1.00	1.00	1.00	1.00	1.00
PHF Adj:	1.00	1.00	1.00	1.00	1.00	1.00	1.00	1.00	1.00	1.00	1.00	1.00
PHF Volume:	107	46	110	216	2	116	138	1656	10	15	1122	214
Reduct Vol:	0	0	0	0	0	0	0	0	0	0	0	0
Reduced Vol:	107	46	110	216	2	116	138	1656	10	15	1122	214
PCE Adj:	1.00	1.00	1.00	1.00	1.00	1.00	1.00	1.00	1.00	1.00	1.00	1.00
MLF Adj:	1.00	1.00	1.00	1.00	1.00	1.00	1.00	1.00	1.00	1.00	1.00	1.00
FinalVolume:	107	46	110	216	2	116	138	1656	10	15	1122	214
Saturation Flow Module:												
Sat/Lane:	1600	1600	1600	1600	1600	1600	1600	1600	1600	1600	1600	1600
Adjustment:	1.00	1.00	1.00	1.00	1.00	1.00	1.00	1.00	1.00	1.00	1.00	1.00
Lanes:	1.00	1.00	1.00	1.00	1.00	1.00	1.00	3.00	1.00	1.00	3.00	1.00
Final Sat.:	1600	1600	1600	1600	1600	1600	1600	4800	1600	1600	4800	1600
Capacity Analysis Module:												
Vol/Sat:	0.07	0.03	0.07	0.14	0.00	0.07	0.09	0.34	0.01	0.01	0.23	0.13
Crit Moves:			****	****				****		****		

Intersection	
Int Delay, s/veh	3.4

Movement	EBL	EBT	EBR	WBL	WBT	WBR	NBL	NBT	NBR	SBL	SBT	SBR
Lane Configurations												
Traffic Vol, veh/h	58	0	0	0	0	29	0	176	0	2	21	4
Future Vol, veh/h	58	0	0	0	0	29	0	176	0	2	21	4
Conflicting Peds, #/hr	0	0	0	0	0	0	0	0	0	0	0	0
Sign Control	Stop	Stop	Stop	Stop	Stop	Stop	Free	Free	Free	Free	Free	Free
RT Channelized	-	-	None	-	-	None	-	-	None	-	-	None
Storage Length	-	-	-	-	-	-	50	-	-	50	-	-
Veh in Median Storage, #	-	0	-	-	0	-	-	0	-	-	0	-
Grade, %	-	0	-	-	0	-	-	0	-	-	0	-
Peak Hour Factor	68	68	68	68	68	68	68	68	68	68	68	68
Heavy Vehicles, %	0	0	0	0	0	0	0	0	0	0	0	0
Mvmt Flow	85	0	0	0	0	43	0	259	0	3	31	6

Major/Minor	Minor2			Minor1			Major1			Major2		
Conflicting Flow All	321	299	34	299	302	259	37	0	0	259	0	0
Stage 1	40	40	-	259	259	-	-	-	-	-	-	-
Stage 2	281	259	-	40	43	-	-	-	-	-	-	-
Critical Hdwy	7.1	6.5	6.2	7.1	6.5	6.2	4.1	-	-	4.1	-	-
Critical Hdwy Stg 1	6.1	5.5	-	6.1	5.5	-	-	-	-	-	-	-
Critical Hdwy Stg 2	6.1	5.5	-	6.1	5.5	-	-	-	-	-	-	-
Follow-up Hdwy	3.5	4	3.3	3.5	4	3.3	2.2	-	-	2.2	-	-
Pot Cap-1 Maneuver	636	616	1045	657	614	785	1587	-	-	1317	-	-
Stage 1	980	866	-	750	697	-	-	-	-	-	-	-
Stage 2	730	697	-	980	863	-	-	-	-	-	-	-
Platoon blocked, %								-	-		-	-
Mov Cap-1 Maneuver	600	615	1045	656	613	785	1587	-	-	1317	-	-
Mov Cap-2 Maneuver	600	615	-	656	613	-	-	-	-	-	-	-
Stage 1	980	864	-	750	697	-	-	-	-	-	-	-
Stage 2	690	697	-	978	861	-	-	-	-	-	-	-

Approach	EB	WB	NB	SB
HCM Control Delay, s	12	9.8	0	0.6
HCM LOS	B	A		

Minor Lane/Major Mvmt	NBL	NBT	NBR	EBLn1	WBLn1	SBL	SBT	SBR
Capacity (veh/h)	1587	-	-	600	785	1317	-	-
HCM Lane V/C Ratio	-	-	-	0.142	0.054	0.002	-	-
HCM Control Delay (s)	0	-	-	12	9.8	7.7	0	-
HCM Lane LOS	A	-	-	B	A	A	A	-
HCM 95th %tile Q(veh)	0	-	-	0.5	0.2	0	-	-

Intersection	
Int Delay, s/veh	6.5

Movement	EBL	EBT	EBR	WBL	WBT	WBR	NBL	NBT	NBR	SBL	SBT	SBR
Lane Configurations												
Traffic Vol, veh/h	31	0	0	0	0	91	0	54	0	13	3	5
Future Vol, veh/h	31	0	0	0	0	91	0	54	0	13	3	5
Conflicting Peds, #/hr	0	0	0	0	0	0	0	0	0	0	0	0
Sign Control	Stop	Stop	Stop	Stop	Stop	Stop	Free	Free	Free	Free	Free	Free
RT Channelized	-	-	None	-	-	None	-	-	None	-	-	None
Storage Length	-	-	-	-	-	-	50	-	-	50	-	-
Veh in Median Storage, #	-	0	-	-	0	-	-	0	-	-	0	-
Grade, %	-	0	-	-	0	-	-	0	-	-	0	-
Peak Hour Factor	66	66	66	66	66	66	66	66	66	66	66	66
Heavy Vehicles, %	0	0	0	0	0	0	0	0	0	0	0	0
Mvmt Flow	47	0	0	0	0	138	0	82	0	20	5	8

Major/Minor	Minor2			Minor1			Major1			Major2		
Conflicting Flow All	200	131	9	131	135	82	13	0	0	82	0	0
Stage 1	49	49	-	82	82	-	-	-	-	-	-	-
Stage 2	151	82	-	49	53	-	-	-	-	-	-	-
Critical Hdwy	7.1	6.5	6.2	7.1	6.5	6.2	4.1	-	-	4.1	-	-
Critical Hdwy Stg 1	6.1	5.5	-	6.1	5.5	-	-	-	-	-	-	-
Critical Hdwy Stg 2	6.1	5.5	-	6.1	5.5	-	-	-	-	-	-	-
Follow-up Hdwy	3.5	4	3.3	3.5	4	3.3	2.2	-	-	2.2	-	-
Pot Cap-1 Maneuver	763	763	1079	846	760	983	1619	-	-	1528	-	-
Stage 1	969	858	-	931	831	-	-	-	-	-	-	-
Stage 2	856	831	-	969	855	-	-	-	-	-	-	-
Platoon blocked, %								-	-		-	-
Mov Cap-1 Maneuver	649	753	1079	838	750	983	1619	-	-	1528	-	-
Mov Cap-2 Maneuver	649	753	-	838	750	-	-	-	-	-	-	-
Stage 1	969	847	-	931	831	-	-	-	-	-	-	-
Stage 2	736	831	-	956	844	-	-	-	-	-	-	-

Approach	EB	WB	NB	SB
HCM Control Delay, s	11	9.3	0	4.6
HCM LOS	B	A		

Minor Lane/Major Mvmt	NBL	NBT	NBR	EBLn1	WBLn1	SBL	SBT	SBR
Capacity (veh/h)	1619	-	-	649	983	1528	-	-
HCM Lane V/C Ratio	-	-	-	0.072	0.14	0.013	-	-
HCM Control Delay (s)	0	-	-	11	9.3	7.4	-	-
HCM Lane LOS	A	-	-	B	A	A	-	-
HCM 95th %tile Q(veh)	0	-	-	0.2	0.5	0	-	-

Amazon Warehouse (JN 13106A)
Opening Year Cumulative (2021) Without Project
PM Peak Hour

Level Of Service Computation Report
ICU 1(Loss as Cycle Length %) Method (Base Volume Alternative)

Intersection #107 Knott Av. & Katella Av.

Cycle (sec):	100	Critical Vol./Cap.(X):	0.961
Loss Time (sec):	10	Average Delay (sec/veh):	xxxxxx
Optimal Cycle:	144	Level Of Service:	E

Approach:	North Bound			South Bound			East Bound			West Bound		
Movement:	L -	T -	R	L -	T -	R	L -	T -	R	L -	T -	R
Control:	Protected			Protected			Protected			Protected		
Rights:	Include			Include			Ovl			Ovl		
Min. Green:	0	0	0	0	0	0	0	0	0	0	0	0
Y+R:	4.0	4.0	4.0	4.0	4.0	4.0	4.0	4.0	4.0	4.0	4.0	4.0
Lanes:	2 0	1 1	0	1 0	2 0	1	1 0	3 0	1	1 0	3 0	1
Volume Module:												
Base Vol:	270	916	139	173	727	85	327	1378	441	218	924	188
Growth Adj:	1.00	1.00	1.00	1.00	1.00	1.00	1.00	1.00	1.00	1.00	1.00	1.00
Initial Bse:	270	916	139	173	727	85	327	1378	441	218	924	188
User Adj:	1.00	1.00	1.00	1.00	1.00	1.00	1.00	1.00	1.00	1.00	1.00	1.00
PHF Adj:	1.00	1.00	1.00	1.00	1.00	1.00	1.00	1.00	1.00	1.00	1.00	1.00
PHF Volume:	270	916	139	173	727	85	327	1378	441	218	924	188
Reduct Vol:	0	0	0	0	0	0	0	0	0	0	0	0
Reduced Vol:	270	916	139	173	727	85	327	1378	441	218	924	188
PCE Adj:	1.00	1.00	1.00	1.00	1.00	1.00	1.00	1.00	1.00	1.00	1.00	1.00
MLF Adj:	1.00	1.00	1.00	1.00	1.00	1.00	1.00	1.00	1.00	1.00	1.00	1.00
FinalVolume:	270	916	139	173	727	85	327	1378	441	218	924	188
OvlAdjVol:									306			15
Saturation Flow Module:												
Sat/Lane:	1600	1600	1600	1600	1600	1600	1600	1600	1600	1600	1600	1600
Adjustment:	1.00	1.00	1.00	1.00	1.00	1.00	1.00	1.00	1.00	1.00	1.00	1.00
Lanes:	2.00	1.74	0.26	1.00	2.00	1.00	1.00	3.00	1.00	1.00	3.00	1.00
Final Sat.:	3200	2778	422	1600	3200	1600	1600	4800	1600	1600	4800	1600
Capacity Analysis Module:												
Vol/Sat:	0.08	0.33	0.33	0.11	0.23	0.05	0.20	0.29	0.28	0.14	0.19	0.12
OvlAdjV/S:									0.19			0.01
Crit Moves:		****		****				****		****		

Amazon Warehouse (JN 13106A)
Opening Year Cumulative (2021) Without Project
PM Peak Hour

Level Of Service Computation Report
ICU 1(Loss as Cycle Length %) Method (Base Volume Alternative)

Intersection #108 Western Wy. & Katella Av.

Cycle (sec):	100	Critical Vol./Cap.(X):	0.823
Loss Time (sec):	10	Average Delay (sec/veh):	xxxxxx
Optimal Cycle:	72	Level Of Service:	D

Approach:	North Bound			South Bound			East Bound			West Bound		
Movement:	L - T - R			L - T - R			L - T - R			L - T - R		
Control:	Protected			Protected			Protected			Protected		
Rights:	Include			Include			Ovl			Ovl		
Min. Green:	0	0	0	0	0	0	0	0	0	0	0	0
Y+R:	4.0	4.0	4.0	4.0	4.0	4.0	4.0	4.0	4.0	4.0	4.0	4.0
Lanes:	1 0	1	1 0	1 0	1	1 0	1 0	3	0 1	1 0	3	0 1
Volume Module:												
Base Vol:	179	895	134	122	594	119	150	1236	180	108	943	156
Growth Adj:	1.00	1.00	1.00	1.00	1.00	1.00	1.00	1.00	1.00	1.00	1.00	1.00
Initial Bse:	179	895	134	122	594	119	150	1236	180	108	943	156
User Adj:	1.00	1.00	1.00	1.00	1.00	1.00	1.00	1.00	1.00	1.00	1.00	1.00
PHF Adj:	1.00	1.00	1.00	1.00	1.00	1.00	1.00	1.00	1.00	1.00	1.00	1.00
PHF Volume:	179	895	134	122	594	119	150	1236	180	108	943	156
Reduct Vol:	0	0	0	0	0	0	0	0	0	0	0	0
Reduced Vol:	179	895	134	122	594	119	150	1236	180	108	943	156
PCE Adj:	1.00	1.00	1.00	1.00	1.00	1.00	1.00	1.00	1.00	1.00	1.00	1.00
MLF Adj:	1.00	1.00	1.00	1.00	1.00	1.00	1.00	1.00	1.00	1.00	1.00	1.00
FinalVolume:	179	895	134	122	594	119	150	1236	180	108	943	156
OvlAdjVol:									1			34
Saturation Flow Module:												
Sat/Lane:	1600	1600	1600	1600	1600	1600	1600	1600	1600	1600	1600	1600
Adjustment:	1.00	1.00	1.00	1.00	1.00	1.00	1.00	1.00	1.00	1.00	1.00	1.00
Lanes:	1.00	1.74	0.26	1.00	1.67	0.33	1.00	3.00	1.00	1.00	3.00	1.00
Final Sat.:	1600	2783	417	1600	2666	534	1600	4800	1600	1600	4800	1600
Capacity Analysis Module:												
Vol/Sat:	0.11	0.32	0.32	0.08	0.22	0.22	0.09	0.26	0.11	0.07	0.20	0.10
OvlAdjV/S:									0.00			0.02
Crit Moves:		****		****				****		****		

APPENDIX 6.2:

OPENING YEAR CUMULATIVE (2021) WITH PROJECT CONDITIONS INTERSECTION OPERATIONS ANALYSIS

This Page Intentionally Left Blank

Amazon Warehouse (JN 13106A)
Opening Year Cumulative (2021) With Project
AM Peak Hour

Level Of Service Computation Report
ICU 1(Loss as Cycle Length %) Method (Future Volume Alternative)

Intersection #101 Valley View St. & Katella Av.

Cycle (sec):	100	Critical Vol./Cap.(X):	0.884
Loss Time (sec):	10	Average Delay (sec/veh):	xxxxxx
Optimal Cycle:	93	Level Of Service:	D

Approach:	North Bound			South Bound			East Bound			West Bound		
Movement:	L - T	- R		L - T	- R		L - T	- R		L - T	- R	
Control:	Protected			Protected			Protected			Protected		
Rights:	Include			Include			Ignore			Include		
Min. Green:	0	0	0	0	0	0	0	0	0	0	0	0
Y+R:	4.0	4.0	4.0	4.0	4.0	4.0	4.0	4.0	4.0	4.0	4.0	4.0
Lanes:	3 0	3 0	1	2 0	3 0	1	2 0	3 0	1	2 0	3 0	1
Volume Module:												
Base Vol:	890	1565	303	248	1128	290	292	1049	765	232	1306	167
Growth Adj:	1.00	1.00	1.00	1.00	1.00	1.00	1.00	1.00	1.00	1.00	1.00	1.00
Initial Bse:	890	1565	303	248	1128	290	292	1049	765	232	1306	167
Added Vol:	0	0	16	10	0	0	0	18	0	1	2	1
PasserByVol:	0	0	0	0	0	0	0	0	0	0	0	0
Initial Fut:	890	1565	319	258	1128	290	292	1067	765	233	1308	168
User Adj:	1.00	1.00	1.00	1.00	1.00	1.00	1.00	1.00	0.00	1.00	1.00	1.00
PHF Adj:	1.00	1.00	1.00	1.00	1.00	1.00	1.00	1.00	0.00	1.00	1.00	1.00
PHF Volume:	890	1565	319	258	1128	290	292	1067	0	233	1308	168
Reduct Vol:	0	0	0	0	0	0	0	0	0	0	0	0
Reduced Vol:	890	1565	319	258	1128	290	292	1067	0	233	1308	168
PCE Adj:	1.00	1.00	1.00	1.00	1.00	1.00	1.00	1.00	0.00	1.00	1.00	1.00
MLF Adj:	1.00	1.00	1.00	1.00	1.00	1.00	1.00	1.00	0.00	1.00	1.00	1.00
FinalVolume:	890	1565	319	258	1128	290	292	1067	0	233	1308	168
Saturation Flow Module:												
Sat/Lane:	1600	1600	1600	1600	1600	1600	1600	1600	1600	1600	1600	1600
Adjustment:	1.00	1.00	1.00	1.00	1.00	1.00	1.00	1.00	1.00	1.00	1.00	1.00
Lanes:	3.00	3.00	1.00	2.00	3.00	1.00	2.00	3.00	1.00	2.00	3.00	1.00
Final Sat.:	4800	4800	1600	3200	4800	1600	3200	4800	1600	3200	4800	1600
Capacity Analysis Module:												
Vol/Sat:	0.19	0.33	0.20	0.08	0.24	0.18	0.09	0.22	0.00	0.07	0.27	0.11
Crit Moves:	****				****		****				****	

Intersection	
Int Delay, s/veh	0.1

Movement	EBT	EBR	WBL	WBT	NBL	NBR
Lane Configurations						
Traffic Vol, veh/h	1324	20	0	1935	0	20
Future Vol, veh/h	1324	20	0	1935	0	20
Conflicting Peds, #/hr	0	0	0	0	0	0
Sign Control	Free	Free	Free	Free	Stop	Stop
RT Channelized	-	None	-	None	-	None
Storage Length	-	-	-	-	-	0
Veh in Median Storage, #	0	-	-	0	0	-
Grade, %	0	-	-	0	0	-
Peak Hour Factor	92	92	92	92	92	92
Heavy Vehicles, %	0	0	0	0	0	0
Mvmt Flow	1439	22	0	2103	0	22

Major/Minor	Major1		Major2		Minor1	
Conflicting Flow All	0	0	-	-	-	731
Stage 1	-	-	-	-	-	-
Stage 2	-	-	-	-	-	-
Critical Hdwy	-	-	-	-	-	7.1
Critical Hdwy Stg 1	-	-	-	-	-	-
Critical Hdwy Stg 2	-	-	-	-	-	-
Follow-up Hdwy	-	-	-	-	-	3.9
Pot Cap-1 Maneuver	-	-	0	-	0	316
Stage 1	-	-	0	-	0	-
Stage 2	-	-	0	-	0	-
Platoon blocked, %	-	-		-		
Mov Cap-1 Maneuver	-	-	-	-	-	316
Mov Cap-2 Maneuver	-	-	-	-	-	-
Stage 1	-	-	-	-	-	-
Stage 2	-	-	-	-	-	-

Approach	EB	WB	NB
HCM Control Delay, s	0	0	17.2
HCM LOS			C

Minor Lane/Major Mvmt	NBLn1	EBT	EBR	WBT
Capacity (veh/h)	316	-	-	-
HCM Lane V/C Ratio	0.069	-	-	-
HCM Control Delay (s)	17.2	-	-	-
HCM Lane LOS	C	-	-	-
HCM 95th %tile Q(veh)	0.2	-	-	-

Amazon Warehouse (JN 13106A)
Opening Year Cumulative (2021) With Project
AM Peak Hour

Level Of Service Computation Report
ICU 1(Loss as Cycle Length %) Method (Future Volume Alternative)

Intersection #103 Holder St. & Katella Av.

Cycle (sec):	100	Critical Vol./Cap.(X):	0.654
Loss Time (sec):	10	Average Delay (sec/veh):	xxxxxx
Optimal Cycle:	45	Level Of Service:	B

Approach:	North Bound			South Bound			East Bound			West Bound		
Movement:	L -	T -	R	L -	T -	R	L -	T -	R	L -	T -	R
Control:	Prot+Permit			Prot+Permit			Protected			Protected		
Rights:	Include			Include			Include			Include		
Min. Green:	0	0	0	0	0	0	0	0	0	0	0	0
Y+R:	4.0	4.0	4.0	4.0	4.0	4.0	4.0	4.0	4.0	4.0	4.0	4.0
Lanes:	1 0	1	1 0	1 0	1	1 0	1 0	3	0 1	1 0	3	0 1
Volume Module:												
Base Vol:	66	7	74	205	43	187	45	1154	145	124	1673	149
Growth Adj:	1.00	1.00	1.00	1.00	1.00	1.00	1.00	1.00	1.00	1.00	1.00	1.00
Initial Bse:	66	7	74	205	43	187	45	1154	145	124	1673	149
Added Vol:	4	0	5	0	5	0	0	0	44	49	0	0
PasserByVol:	0	0	0	0	0	0	0	0	0	0	0	0
Initial Fut:	70	7	79	205	48	187	45	1154	189	173	1673	149
User Adj:	1.00	1.00	1.00	1.00	1.00	1.00	1.00	1.00	1.00	1.00	1.00	1.00
PHF Adj:	1.00	1.00	1.00	1.00	1.00	1.00	1.00	1.00	1.00	1.00	1.00	1.00
PHF Volume:	70	7	79	205	48	187	45	1154	189	173	1673	149
Reduct Vol:	0	0	0	0	0	0	0	0	0	0	0	0
Reduced Vol:	70	7	79	205	48	187	45	1154	189	173	1673	149
PCE Adj:	1.00	1.00	1.00	1.00	1.00	1.00	1.00	1.00	1.00	1.00	1.00	1.00
MLF Adj:	1.00	1.00	1.00	1.00	1.00	1.00	1.00	1.00	1.00	1.00	1.00	1.00
FinalVolume:	70	7	79	205	48	187	45	1154	189	173	1673	149
Saturation Flow Module:												
Sat/Lane:	1600	1600	1600	1600	1600	1600	1600	1600	1600	1600	1600	1600
Adjustment:	1.00	1.00	1.00	1.00	1.00	1.00	1.00	1.00	1.00	1.00	1.00	1.00
Lanes:	1.00	1.00	1.00	1.00	1.00	1.00	1.00	3.00	1.00	1.00	3.00	1.00
Final Sat.:	1600	1600	1600	1600	1600	1600	1600	4800	1600	1600	4800	1600
Capacity Analysis Module:												
Vol/Sat:	0.04	0.00	0.05	0.13	0.03	0.12	0.03	0.24	0.12	0.11	0.35	0.09
Crit Moves:			****	****			****				****	

Intersection	
Int Delay, s/veh	1.2

Movement	EBL	EBT	EBR	WBL	WBT	WBR	NBL	NBT	NBR	SBL	SBT	SBR
Lane Configurations												
Traffic Vol, veh/h	31	0	0	0	0	0	0	118	0	9	272	30
Future Vol, veh/h	31	0	0	0	0	0	0	118	0	9	272	30
Conflicting Peds, #/hr	0	0	0	0	0	0	0	0	0	0	0	0
Sign Control	Stop	Stop	Stop	Stop	Stop	Stop	Free	Free	Free	Free	Free	Free
RT Channelized	-	-	None	-	-	None	-	-	None	-	-	None
Storage Length	-	-	-	-	-	-	50	-	-	50	-	-
Veh in Median Storage, #	-	0	-	-	0	-	-	0	-	-	0	-
Grade, %	-	0	-	-	0	-	-	0	-	-	0	-
Peak Hour Factor	65	65	65	65	65	65	65	65	65	65	65	65
Heavy Vehicles, %	0	0	0	0	0	0	0	0	0	0	0	0
Mvmt Flow	48	0	0	0	0	0	0	182	0	14	418	46

Major/Minor	Minor2			Minor1			Major1			Major2		
Conflicting Flow All	651	651	441	651	674	182	464	0	0	182	0	0
Stage 1	469	469	-	182	182	-	-	-	-	-	-	-
Stage 2	182	182	-	469	492	-	-	-	-	-	-	-
Critical Hdwy	7.1	6.5	6.2	7.1	6.5	6.2	4.1	-	-	4.1	-	-
Critical Hdwy Stg 1	6.1	5.5	-	6.1	5.5	-	-	-	-	-	-	-
Critical Hdwy Stg 2	6.1	5.5	-	6.1	5.5	-	-	-	-	-	-	-
Follow-up Hdwy	3.5	4	3.3	3.5	4	3.3	2.2	-	-	2.2	-	-
Pot Cap-1 Maneuver	384	390	621	384	379	866	1108	-	-	1405	-	-
Stage 1	579	564	-	824	753	-	-	-	-	-	-	-
Stage 2	824	753	-	579	551	-	-	-	-	-	-	-
Platoon blocked, %								-	-		-	-
Mov Cap-1 Maneuver	381	386	621	381	375	866	1108	-	-	1405	-	-
Mov Cap-2 Maneuver	381	386	-	381	375	-	-	-	-	-	-	-
Stage 1	579	558	-	824	753	-	-	-	-	-	-	-
Stage 2	824	753	-	573	545	-	-	-	-	-	-	-

Approach	EB	WB	NB	SB
HCM Control Delay, s	15.8	0	0	0.2
HCM LOS	C	A		

Minor Lane/Major Mvmt	NBL	NBT	NBR	EBLn1	WBLn1	SBL	SBT	SBR
Capacity (veh/h)	1108	-	-	381	-	1405	-	-
HCM Lane V/C Ratio	-	-	-	0.125	-	0.01	-	-
HCM Control Delay (s)	0	-	-	15.8	0	7.6	0	-
HCM Lane LOS	A	-	-	C	A	A	A	-
HCM 95th %tile Q(veh)	0	-	-	0.4	-	0	-	-

Intersection	
Int Delay, s/veh	6.9

Movement	EBL	EBT	EBR	WBL	WBT	WBR	NBL	NBT	NBR	SBL	SBT	SBR
Lane Configurations												
Traffic Vol, veh/h	87	0	0	0	0	12	0	19	0	127	84	61
Future Vol, veh/h	87	0	0	0	0	12	0	19	0	127	84	61
Conflicting Peds, #/hr	0	0	0	0	0	0	0	0	0	0	0	0
Sign Control	Stop	Stop	Stop	Stop	Stop	Stop	Free	Free	Free	Free	Free	Free
RT Channelized	-	-	None	-	-	None	-	-	None	-	-	None
Storage Length	-	-	-	-	-	-	50	-	-	50	-	-
Veh in Median Storage, #	-	0	-	-	0	-	-	0	-	-	0	-
Grade, %	-	0	-	-	0	-	-	0	-	-	0	-
Peak Hour Factor	69	69	69	69	25	69	69	69	69	69	69	69
Heavy Vehicles, %	0	0	0	0	0	0	0	0	0	0	0	0
Mvmt Flow	126	0	0	0	0	17	0	28	0	184	122	88

Major/Minor	Minor2			Minor1			Major1			Major2		
Conflicting Flow All	571	562	166	562	606	28	210	0	0	28	0	0
Stage 1	534	534	-	28	28	-	-	-	-	-	-	-
Stage 2	37	28	-	534	578	-	-	-	-	-	-	-
Critical Hdwy	7.1	6.5	6.2	7.1	6.5	6.2	4.1	-	-	4.1	-	-
Critical Hdwy Stg 1	6.1	5.5	-	6.1	5.5	-	-	-	-	-	-	-
Critical Hdwy Stg 2	6.1	5.5	-	6.1	5.5	-	-	-	-	-	-	-
Follow-up Hdwy	3.5	4	3.3	3.5	4	3.3	2.2	-	-	2.2	-	-
Pot Cap-1 Maneuver	435	439	884	441	414	1053	1373	-	-	1599	-	-
Stage 1	534	528	-	994	876	-	-	-	-	-	-	-
Stage 2	984	876	-	534	504	-	-	-	-	-	-	-
Platoon blocked, %								-	-		-	-
Mov Cap-1 Maneuver	390	389	884	402	366	1053	1373	-	-	1599	-	-
Mov Cap-2 Maneuver	390	389	-	402	366	-	-	-	-	-	-	-
Stage 1	534	467	-	994	876	-	-	-	-	-	-	-
Stage 2	968	876	-	473	446	-	-	-	-	-	-	-

Approach	EB	WB	NB	SB
HCM Control Delay, s	18.6	8.5	0	3.5
HCM LOS	C	A		

Minor Lane/Major Mvmt	NBL	NBT	NBR	EBLn1	WBLn1	SBL	SBT	SBR
Capacity (veh/h)	1373	-	-	390	1053	1599	-	-
HCM Lane V/C Ratio	-	-	-	0.323	0.017	0.115	-	-
HCM Control Delay (s)	0	-	-	18.6	8.5	7.5	-	-
HCM Lane LOS	A	-	-	C	A	A	-	-
HCM 95th %tile Q(veh)	0	-	-	1.4	0.1	0.4	-	-

Intersection	
Int Delay, s/veh	8.9

Movement	EBL	EBT	WBT	WBR	SBL	SBR
Lane Configurations						
Traffic Vol, veh/h	15	0	0	4	69	15
Future Vol, veh/h	15	0	0	4	69	15
Conflicting Peds, #/hr	0	0	0	0	0	0
Sign Control	Free	Free	Free	Free	Stop	Stop
RT Channelized	-	None	-	None	-	None
Storage Length	-	-	-	-	0	-
Veh in Median Storage, #	-	0	0	-	0	-
Grade, %	-	0	0	-	0	-
Peak Hour Factor	50	50	50	50	50	50
Heavy Vehicles, %	0	0	0	0	0	0
Mvmt Flow	30	0	0	8	138	30

Major/Minor	Major1		Major2		Minor2	
Conflicting Flow All	8	0	-	0	64	4
Stage 1	-	-	-	-	4	-
Stage 2	-	-	-	-	60	-
Critical Hdwy	4.1	-	-	-	6.4	6.2
Critical Hdwy Stg 1	-	-	-	-	5.4	-
Critical Hdwy Stg 2	-	-	-	-	5.4	-
Follow-up Hdwy	2.2	-	-	-	3.5	3.3
Pot Cap-1 Maneuver	1625	-	-	-	947	1085
Stage 1	-	-	-	-	1024	-
Stage 2	-	-	-	-	968	-
Platoon blocked, %		-	-	-		
Mov Cap-1 Maneuver	1625	-	-	-	930	1085
Mov Cap-2 Maneuver	-	-	-	-	930	-
Stage 1	-	-	-	-	1006	-
Stage 2	-	-	-	-	968	-

Approach	EB	WB	SB
HCM Control Delay, s	7.3	0	9.6
HCM LOS			A

Minor Lane/Major Mvmt	EBL	EBT	WBT	WBR	SBLn1
Capacity (veh/h)	1625	-	-	-	954
HCM Lane V/C Ratio	0.018	-	-	-	0.176
HCM Control Delay (s)	7.3	0	-	-	9.6
HCM Lane LOS	A	A	-	-	A
HCM 95th %tile Q(veh)	0.1	-	-	-	0.6

Amazon Warehouse (JN 13106A)
Opening Year Cumulative (2021) With Project
AM Peak Hour

Level Of Service Computation Report
ICU 1(Loss as Cycle Length %) Method (Future Volume Alternative)

Intersection #107 Knott Av. & Katella Av.

Cycle (sec):	100	Critical Vol./Cap.(X):	0.876
Loss Time (sec):	10	Average Delay (sec/veh):	xxxxxx
Optimal Cycle:	89	Level Of Service:	D

Approach:	North Bound			South Bound			East Bound			West Bound		
Movement:	L -	T -	R	L -	T -	R	L -	T -	R	L -	T -	R
Control:	Protected			Protected			Protected			Protected		
Rights:	Include			Include			Ovl			Ovl		
Min. Green:	0	0	0	0	0	0	0	0	0	0	0	0
Y+R:	4.0	4.0	4.0	4.0	4.0	4.0	4.0	4.0	4.0	4.0	4.0	4.0
Lanes:	2 0	1 1	0	1 0	2 0	1	1 0	3 0	1	1 0	3 0	1
Volume Module:												
Base Vol:	385	589	123	115	942	181	84	976	301	196	1434	108
Growth Adj:	1.00	1.00	1.00	1.00	1.00	1.00	1.00	1.00	1.00	1.00	1.00	1.00
Initial Bse:	385	589	123	115	942	181	84	976	301	196	1434	108
Added Vol:	16	0	0	0	0	10	1	2	1	0	23	0
PasserByVol:	0	0	0	0	0	0	0	0	0	0	0	0
Initial Fut:	401	589	123	115	942	191	85	978	302	196	1457	108
User Adj:	1.00	1.00	1.00	1.00	1.00	1.00	1.00	1.00	1.00	1.00	1.00	1.00
PHF Adj:	1.00	1.00	1.00	1.00	1.00	1.00	1.00	1.00	1.00	1.00	1.00	1.00
PHF Volume:	401	589	123	115	942	191	85	978	302	196	1457	108
Reduct Vol:	0	0	0	0	0	0	0	0	0	0	0	0
Reduced Vol:	401	589	123	115	942	191	85	978	302	196	1457	108
PCE Adj:	1.00	1.00	1.00	1.00	1.00	1.00	1.00	1.00	1.00	1.00	1.00	1.00
MLF Adj:	1.00	1.00	1.00	1.00	1.00	1.00	1.00	1.00	1.00	1.00	1.00	1.00
FinalVolume:	401	589	123	115	942	191	85	978	302	196	1457	108
OvlAdjVol:									102			0
Saturation Flow Module:												
Sat/Lane:	1600	1600	1600	1600	1600	1600	1600	1600	1600	1600	1600	1600
Adjustment:	1.00	1.00	1.00	1.00	1.00	1.00	1.00	1.00	1.00	1.00	1.00	1.00
Lanes:	2.00	1.65	0.35	1.00	2.00	1.00	1.00	3.00	1.00	1.00	3.00	1.00
Final Sat.:	3200	2647	553	1600	3200	1600	1600	4800	1600	1600	4800	1600
Capacity Analysis Module:												
Vol/Sat:	0.13	0.22	0.22	0.07	0.29	0.12	0.05	0.20	0.19	0.12	0.30	0.07
OvlAdjV/S:									0.06			0.00
Crit Moves:	****				****		****				****	

Amazon Warehouse (JN 13106A)
Opening Year Cumulative (2021) With Project
AM Peak Hour

Level Of Service Computation Report
ICU 1(Loss as Cycle Length %) Method (Future Volume Alternative)

Intersection #108 Western Wy. & Katella Av.

Cycle (sec):	100	Critical Vol./Cap.(X):	0.925
Loss Time (sec):	10	Average Delay (sec/veh):	xxxxxx
Optimal Cycle:	114	Level Of Service:	E

Approach:	North Bound			South Bound			East Bound			West Bound		
Movement:	L -	T -	R	L -	T -	R	L -	T -	R	L -	T -	R
Control:	Protected			Protected			Protected			Protected		
Rights:	Include			Include			Ovl			Ovl		
Min. Green:	0	0	0	0	0	0	0	0	0	0	0	0
Y+R:	4.0	4.0	4.0	4.0	4.0	4.0	4.0	4.0	4.0	4.0	4.0	4.0
Lanes:	1 0	1	1 0	1 0	1	1 0	1 0	3	0 1	1 0	3	0 1
Volume Module:												
Base Vol:	158	296	104	129	906	173	129	1101	165	208	1453	101
Growth Adj:	1.00	1.00	1.00	1.00	1.00	1.00	1.00	1.00	1.00	1.00	1.00	1.00
Initial Bse:	158	296	104	129	906	173	129	1101	165	208	1453	101
Added Vol:	0	0	0	0	0	5	0	2	0	0	18	0
PasserByVol:	0	0	0	0	0	0	0	0	0	0	0	0
Initial Fut:	158	296	104	129	906	178	129	1103	165	208	1471	101
User Adj:	1.00	1.00	1.00	1.00	1.00	1.00	1.00	1.00	1.00	1.00	1.00	1.00
PHF Adj:	1.00	1.00	1.00	1.00	1.00	1.00	1.00	1.00	1.00	1.00	1.00	1.00
PHF Volume:	158	296	104	129	906	178	129	1103	165	208	1471	101
Reduct Vol:	0	0	0	0	0	0	0	0	0	0	0	0
Reduced Vol:	158	296	104	129	906	178	129	1103	165	208	1471	101
PCE Adj:	1.00	1.00	1.00	1.00	1.00	1.00	1.00	1.00	1.00	1.00	1.00	1.00
MLF Adj:	1.00	1.00	1.00	1.00	1.00	1.00	1.00	1.00	1.00	1.00	1.00	1.00
FinalVolume:	158	296	104	129	906	178	129	1103	165	208	1471	101
OvlAdjVol:									7			0
Saturation Flow Module:												
Sat/Lane:	1600	1600	1600	1600	1600	1600	1600	1600	1600	1600	1600	1600
Adjustment:	1.00	1.00	1.00	1.00	1.00	1.00	1.00	1.00	1.00	1.00	1.00	1.00
Lanes:	1.00	1.48	0.52	1.00	1.67	0.33	1.00	3.00	1.00	1.00	3.00	1.00
Final Sat.:	1600	2368	832	1600	2675	525	1600	4800	1600	1600	4800	1600
Capacity Analysis Module:												
Vol/Sat:	0.10	0.13	0.13	0.08	0.34	0.34	0.08	0.23	0.10	0.13	0.31	0.06
OvlAdjV/S:									0.00			0.00
Crit Moves:	****				****		****				****	

Amazon Warehouse (JN 13106A)
Opening Year Cumulative (2021) With Project
PM Peak Hour

Level Of Service Computation Report
ICU 1(Loss as Cycle Length %) Method (Future Volume Alternative)

Intersection #101 Valley View St. & Katella Av.

Cycle (sec):	100	Critical Vol./Cap.(X):	0.911
Loss Time (sec):	10	Average Delay (sec/veh):	xxxxxx
Optimal Cycle:	106	Level Of Service:	E

Approach:	North Bound			South Bound			East Bound			West Bound		
Movement:	L - T	- R		L - T	- R		L - T	- R		L - T	- R	
Control:	Protected			Protected			Protected			Protected		
Rights:	Include			Include			Ignore			Include		
Min. Green:	0	0	0	0	0	0	0	0	0	0	0	0
Y+R:	4.0	4.0	4.0	4.0	4.0	4.0	4.0	4.0	4.0	4.0	4.0	4.0
Lanes:	3 0	3 0	1	2 0	3 0	1	2 0	3 0	1	2 0	3 0	1
Volume Module:												
Base Vol:	723	1521	225	255	1398	302	312	1176	1078	382	1098	247
Growth Adj:	1.00	1.00	1.00	1.00	1.00	1.00	1.00	1.00	1.00	1.00	1.00	1.00
Initial Bse:	723	1521	225	255	1398	302	312	1176	1078	382	1098	247
Added Vol:	0	0	1	1	0	0	0	2	0	14	16	9
PasserByVol:	0	0	0	0	0	0	0	0	0	0	0	0
Initial Fut:	723	1521	226	256	1398	302	312	1178	1078	396	1114	256
User Adj:	1.00	1.00	1.00	1.00	1.00	1.00	1.00	1.00	0.00	1.00	1.00	1.00
PHF Adj:	1.00	1.00	1.00	1.00	1.00	1.00	1.00	1.00	0.00	1.00	1.00	1.00
PHF Volume:	723	1521	226	256	1398	302	312	1178	0	396	1114	256
Reduct Vol:	0	0	0	0	0	0	0	0	0	0	0	0
Reduced Vol:	723	1521	226	256	1398	302	312	1178	0	396	1114	256
PCE Adj:	1.00	1.00	1.00	1.00	1.00	1.00	1.00	1.00	0.00	1.00	1.00	1.00
MLF Adj:	1.00	1.00	1.00	1.00	1.00	1.00	1.00	1.00	0.00	1.00	1.00	1.00
FinalVolume:	723	1521	226	256	1398	302	312	1178	0	396	1114	256
Saturation Flow Module:												
Sat/Lane:	1600	1600	1600	1600	1600	1600	1600	1600	1600	1600	1600	1600
Adjustment:	1.00	1.00	1.00	1.00	1.00	1.00	1.00	1.00	1.00	1.00	1.00	1.00
Lanes:	3.00	3.00	1.00	2.00	3.00	1.00	2.00	3.00	1.00	2.00	3.00	1.00
Final Sat.:	4800	4800	1600	3200	4800	1600	3200	4800	1600	3200	4800	1600
Capacity Analysis Module:												
Vol/Sat:	0.15	0.32	0.14	0.08	0.29	0.19	0.10	0.25	0.00	0.12	0.23	0.16
Crit Moves:	****				****			****		****		

Intersection	
Int Delay, s/veh	0.2

Movement	EBT	EBR	WBL	WBT	NBL	NBR
Lane Configurations						
Traffic Vol, veh/h	1858	44	0	1365	0	24
Future Vol, veh/h	1858	44	0	1365	0	24
Conflicting Peds, #/hr	0	0	0	0	0	0
Sign Control	Free	Free	Free	Free	Stop	Stop
RT Channelized	-	None	-	None	-	None
Storage Length	-	-	-	-	-	0
Veh in Median Storage, #	0	-	-	0	0	-
Grade, %	0	-	-	0	0	-
Peak Hour Factor	92	92	92	92	92	92
Heavy Vehicles, %	0	0	0	0	0	0
Mvmt Flow	2020	48	0	1484	0	26

Major/Minor	Major1		Major2		Minor1	
Conflicting Flow All	0	0	-	-	-	1034
Stage 1	-	-	-	-	-	-
Stage 2	-	-	-	-	-	-
Critical Hdwy	-	-	-	-	-	7.1
Critical Hdwy Stg 1	-	-	-	-	-	-
Critical Hdwy Stg 2	-	-	-	-	-	-
Follow-up Hdwy	-	-	-	-	-	3.9
Pot Cap-1 Maneuver	-	-	0	-	0	200
Stage 1	-	-	0	-	0	-
Stage 2	-	-	0	-	0	-
Platoon blocked, %	-	-		-		
Mov Cap-1 Maneuver	-	-	-	-	-	200
Mov Cap-2 Maneuver	-	-	-	-	-	-
Stage 1	-	-	-	-	-	-
Stage 2	-	-	-	-	-	-

Approach	EB	WB	NB
HCM Control Delay, s	0	0	25.7
HCM LOS			D

Minor Lane/Major Mvmt	NBLn1	EBT	EBR	WBT
Capacity (veh/h)	200	-	-	-
HCM Lane V/C Ratio	0.13	-	-	-
HCM Control Delay (s)	25.7	-	-	-
HCM Lane LOS	D	-	-	-
HCM 95th %tile Q(veh)	0.4	-	-	-

Amazon Warehouse (JN 13106A)
Opening Year Cumulative (2021) With Project
PM Peak Hour

Level Of Service Computation Report
ICU 1(Loss as Cycle Length %) Method (Future Volume Alternative)

Intersection #103 Holder St. & Katella Av.

Cycle (sec):	100	Critical Vol./Cap.(X):	0.765
Loss Time (sec):	10	Average Delay (sec/veh):	xxxxxx
Optimal Cycle:	60	Level Of Service:	C

Approach:	North Bound			South Bound			East Bound			West Bound		
Movement:	L -	T -	R	L -	T -	R	L -	T -	R	L -	T -	R
Control:	Prot+Permit			Prot+Permit			Protected			Protected		
Rights:	Include			Include			Include			Include		
Min. Green:	0	0	0	0	0	0	0	0	0	0	0	0
Y+R:	4.0	4.0	4.0	4.0	4.0	4.0	4.0	4.0	4.0	4.0	4.0	4.0
Lanes:	1 0	1	1 0	1 0	1	1 0	1 0	3	0 1	1 0	3	0 1
Volume Module:												
Base Vol:	116	48	119	216	13	116	150	1668	65	124	1122	214
Growth Adj:	1.00	1.00	1.00	1.00	1.00	1.00	1.00	1.00	1.00	1.00	1.00	1.00
Initial Bse:	116	48	119	216	13	116	150	1668	65	124	1122	214
Added Vol:	39	4	44	0	0	0	0	0	4	5	0	0
PasserByVol:	0	0	0	0	0	0	0	0	0	0	0	0
Initial Fut:	155	52	163	216	13	116	150	1668	69	129	1122	214
User Adj:	1.00	1.00	1.00	1.00	1.00	1.00	1.00	1.00	1.00	1.00	1.00	1.00
PHF Adj:	1.00	1.00	1.00	1.00	1.00	1.00	1.00	1.00	1.00	1.00	1.00	1.00
PHF Volume:	155	52	163	216	13	116	150	1668	69	129	1122	214
Reduct Vol:	0	0	0	0	0	0	0	0	0	0	0	0
Reduced Vol:	155	52	163	216	13	116	150	1668	69	129	1122	214
PCE Adj:	1.00	1.00	1.00	1.00	1.00	1.00	1.00	1.00	1.00	1.00	1.00	1.00
MLF Adj:	1.00	1.00	1.00	1.00	1.00	1.00	1.00	1.00	1.00	1.00	1.00	1.00
FinalVolume:	155	52	163	216	13	116	150	1668	69	129	1122	214
Saturation Flow Module:												
Sat/Lane:	1600	1600	1600	1600	1600	1600	1600	1600	1600	1600	1600	1600
Adjustment:	1.00	1.00	1.00	1.00	1.00	1.00	1.00	1.00	1.00	1.00	1.00	1.00
Lanes:	1.00	1.00	1.00	1.00	1.00	1.00	1.00	3.00	1.00	1.00	3.00	1.00
Final Sat.:	1600	1600	1600	1600	1600	1600	1600	4800	1600	1600	4800	1600
Capacity Analysis Module:												
Vol/Sat:	0.10	0.03	0.10	0.14	0.01	0.07	0.09	0.35	0.04	0.08	0.23	0.13
Crit Moves:			****	****				****		****		

Intersection	
Int Delay, s/veh	1.8

Movement	EBL	EBT	EBR	WBL	WBT	WBR	NBL	NBT	NBR	SBL	SBT	SBR
Lane Configurations												
Traffic Vol, veh/h	37	0	0	0	0	29	0	217	0	2	135	65
Future Vol, veh/h	37	0	0	0	0	29	0	217	0	2	135	65
Conflicting Peds, #/hr	0	0	0	0	0	0	0	0	0	0	0	0
Sign Control	Stop	Stop	Stop	Stop	Stop	Stop	Free	Free	Free	Free	Free	Free
RT Channelized	-	-	None	-	-	None	-	-	None	-	-	None
Storage Length	-	-	-	-	-	-	50	-	-	50	-	-
Veh in Median Storage, #	-	0	-	-	0	-	-	0	-	-	0	-
Grade, %	-	0	-	-	0	-	-	0	-	-	0	-
Peak Hour Factor	68	68	68	68	68	68	68	68	68	68	68	68
Heavy Vehicles, %	0	0	0	0	0	0	0	0	0	0	0	0
Mvmt Flow	54	0	0	0	0	43	0	319	0	3	199	96

Major/Minor	Minor2			Minor1			Major1			Major2		
Conflicting Flow All	594	572	247	572	620	319	295	0	0	319	0	0
Stage 1	253	253	-	319	319	-	-	-	-	-	-	-
Stage 2	341	319	-	253	301	-	-	-	-	-	-	-
Critical Hdwy	7.1	6.5	6.2	7.1	6.5	6.2	4.1	-	-	4.1	-	-
Critical Hdwy Stg 1	6.1	5.5	-	6.1	5.5	-	-	-	-	-	-	-
Critical Hdwy Stg 2	6.1	5.5	-	6.1	5.5	-	-	-	-	-	-	-
Follow-up Hdwy	3.5	4	3.3	3.5	4	3.3	2.2	-	-	2.2	-	-
Pot Cap-1 Maneuver	420	433	797	434	407	726	1278	-	-	1252	-	-
Stage 1	756	701	-	697	657	-	-	-	-	-	-	-
Stage 2	678	657	-	756	669	-	-	-	-	-	-	-
Platoon blocked, %								-	-		-	-
Mov Cap-1 Maneuver	395	432	797	433	406	726	1278	-	-	1252	-	-
Mov Cap-2 Maneuver	395	432	-	433	406	-	-	-	-	-	-	-
Stage 1	756	700	-	697	657	-	-	-	-	-	-	-
Stage 2	638	657	-	754	668	-	-	-	-	-	-	-

Approach	EB	WB	NB	SB
HCM Control Delay, s	15.6	10.3	0	0.1
HCM LOS	C	B		

Minor Lane/Major Mvmt	NBL	NBT	NBR	EBLn1	WBLn1	SBL	SBT	SBR
Capacity (veh/h)	1278	-	-	395	726	1252	-	-
HCM Lane V/C Ratio	-	-	-	0.138	0.059	0.002	-	-
HCM Control Delay (s)	0	-	-	15.6	10.3	7.9	-	-
HCM Lane LOS	A	-	-	C	B	A	-	-
HCM 95th %tile Q(veh)	0	-	-	0.5	0.2	0	-	-

Intersection	
Int Delay, s/veh	4.7

Movement	EBL	EBT	EBR	WBL	WBT	WBR	NBL	NBT	NBR	SBL	SBT	SBR
Lane Configurations												
Traffic Vol, veh/h	53	0	0	0	0	91	0	72	0	13	36	86
Future Vol, veh/h	53	0	0	0	0	91	0	72	0	13	36	86
Conflicting Peds, #/hr	0	0	0	0	0	0	0	0	0	0	0	0
Sign Control	Stop	Stop	Stop	Stop	Stop	Stop	Free	Free	Free	Free	Free	Free
RT Channelized	-	-	None	-	-	None	-	-	None	-	-	None
Storage Length	-	-	-	-	-	-	50	-	-	50	-	-
Veh in Median Storage, #	-	0	-	-	0	-	-	0	-	-	0	-
Grade, %	-	0	-	-	0	-	-	0	-	-	0	-
Peak Hour Factor	66	66	66	66	66	66	66	66	66	66	66	66
Heavy Vehicles, %	0	0	0	0	0	0	0	0	0	0	0	0
Mvmt Flow	80	0	0	0	0	138	0	109	0	20	55	130

Major/Minor	Minor2			Minor1			Major1			Major2		
Conflicting Flow All	338	269	120	269	334	109	185	0	0	109	0	0
Stage 1	160	160	-	109	109	-	-	-	-	-	-	-
Stage 2	178	109	-	160	225	-	-	-	-	-	-	-
Critical Hdwy	7.1	6.5	6.2	7.1	6.5	6.2	4.1	-	-	4.1	-	-
Critical Hdwy Stg 1	6.1	5.5	-	6.1	5.5	-	-	-	-	-	-	-
Critical Hdwy Stg 2	6.1	5.5	-	6.1	5.5	-	-	-	-	-	-	-
Follow-up Hdwy	3.5	4	3.3	3.5	4	3.3	2.2	-	-	2.2	-	-
Pot Cap-1 Maneuver	620	641	937	688	589	950	1402	-	-	1494	-	-
Stage 1	847	769	-	901	809	-	-	-	-	-	-	-
Stage 2	828	809	-	847	721	-	-	-	-	-	-	-
Platoon blocked, %								-	-		-	-
Mov Cap-1 Maneuver	525	633	937	681	581	950	1402	-	-	1494	-	-
Mov Cap-2 Maneuver	525	633	-	681	581	-	-	-	-	-	-	-
Stage 1	847	759	-	901	809	-	-	-	-	-	-	-
Stage 2	708	809	-	836	712	-	-	-	-	-	-	-

Approach	EB	WB	NB	SB
HCM Control Delay, s	13.1	9.4	0	0.7
HCM LOS	B	A		

Minor Lane/Major Mvmt	NBL	NBT	NBR	EBLn1	WBLn1	SBL	SBT	SBR
Capacity (veh/h)	1402	-	-	525	950	1494	-	-
HCM Lane V/C Ratio	-	-	-	0.153	0.145	0.013	-	-
HCM Control Delay (s)	0	-	-	13.1	9.4	7.4	-	-
HCM Lane LOS	A	-	-	B	A	A	-	-
HCM 95th %tile Q(veh)	0	-	-	0.5	0.5	0	-	-

Intersection	
Int Delay, s/veh	4.1

Movement	EBL	EBT	WBT	WBR	SBL	SBR
Lane Configurations						
Traffic Vol, veh/h	18	0	0	54	3	33
Future Vol, veh/h	18	0	0	54	3	33
Conflicting Peds, #/hr	0	0	0	0	0	0
Sign Control	Free	Free	Free	Free	Stop	Stop
RT Channelized	-	None	-	None	-	None
Storage Length	-	-	-	-	0	-
Veh in Median Storage, #	-	0	0	-	0	-
Grade, %	-	0	0	-	0	-
Peak Hour Factor	80	80	80	80	80	80
Heavy Vehicles, %	0	0	0	0	0	0
Mvmt Flow	23	0	0	68	4	41

Major/Minor	Major1		Major2		Minor2	
Conflicting Flow All	68	0	-	0	80	34
Stage 1	-	-	-	-	34	-
Stage 2	-	-	-	-	46	-
Critical Hdwy	4.1	-	-	-	6.4	6.2
Critical Hdwy Stg 1	-	-	-	-	5.4	-
Critical Hdwy Stg 2	-	-	-	-	5.4	-
Follow-up Hdwy	2.2	-	-	-	3.5	3.3
Pot Cap-1 Maneuver	1546	-	-	-	927	1045
Stage 1	-	-	-	-	994	-
Stage 2	-	-	-	-	982	-
Platoon blocked, %		-	-	-		
Mov Cap-1 Maneuver	1546	-	-	-	913	1045
Mov Cap-2 Maneuver	-	-	-	-	913	-
Stage 1	-	-	-	-	979	-
Stage 2	-	-	-	-	982	-

Approach	EB	WB	SB
HCM Control Delay, s	7.4	0	8.6
HCM LOS			A

Minor Lane/Major Mvmt	EBL	EBT	WBT	WBR	SBLn1
Capacity (veh/h)	1546	-	-	-	1033
HCM Lane V/C Ratio	0.015	-	-	-	0.044
HCM Control Delay (s)	7.4	0	-	-	8.6
HCM Lane LOS	A	A	-	-	A
HCM 95th %tile Q(veh)	0	-	-	-	0.1

Amazon Warehouse (JN 13106A)
Opening Year Cumulative (2021) With Project
PM Peak Hour

Level Of Service Computation Report
ICU 1(Loss as Cycle Length %) Method (Future Volume Alternative)

Intersection #107 Knott Av. & Katella Av.

Cycle (sec):	100	Critical Vol./Cap.(X):	0.968
Loss Time (sec):	10	Average Delay (sec/veh):	xxxxxx
Optimal Cycle:	152	Level Of Service:	E

Approach:	North Bound			South Bound			East Bound			West Bound		
Movement:	L -	T -	R	L -	T -	R	L -	T -	R	L -	T -	R
Control:	Protected			Protected			Protected			Protected		
Rights:	Include			Include			Ovl			Ovl		
Min. Green:	0	0	0	0	0	0	0	0	0	0	0	0
Y+R:	4.0	4.0	4.0	4.0	4.0	4.0	4.0	4.0	4.0	4.0	4.0	4.0
Lanes:	2 0	1 1	0	1 0	2 0	1	1 0	3 0	1	1 0	3 0	1
Volume Module:												
Base Vol:	306	916	139	173	727	106	330	1391	448	218	977	188
Growth Adj:	1.00	1.00	1.00	1.00	1.00	1.00	1.00	1.00	1.00	1.00	1.00	1.00
Initial Bse:	306	916	139	173	727	106	330	1391	448	218	977	188
Added Vol:	1	0	0	0	0	1	9	20	14	0	2	0
PasserByVol:	0	0	0	0	0	0	0	0	0	0	0	0
Initial Fut:	307	916	139	173	727	107	339	1411	462	218	979	188
User Adj:	1.00	1.00	1.00	1.00	1.00	1.00	1.00	1.00	1.00	1.00	1.00	1.00
PHF Adj:	1.00	1.00	1.00	1.00	1.00	1.00	1.00	1.00	1.00	1.00	1.00	1.00
PHF Volume:	307	916	139	173	727	107	339	1411	462	218	979	188
Reduct Vol:	0	0	0	0	0	0	0	0	0	0	0	0
Reduced Vol:	307	916	139	173	727	107	339	1411	462	218	979	188
PCE Adj:	1.00	1.00	1.00	1.00	1.00	1.00	1.00	1.00	1.00	1.00	1.00	1.00
MLF Adj:	1.00	1.00	1.00	1.00	1.00	1.00	1.00	1.00	1.00	1.00	1.00	1.00
FinalVolume:	307	916	139	173	727	107	339	1411	462	218	979	188
OvlAdjVol:									309			15
Saturation Flow Module:												
Sat/Lane:	1600	1600	1600	1600	1600	1600	1600	1600	1600	1600	1600	1600
Adjustment:	1.00	1.00	1.00	1.00	1.00	1.00	1.00	1.00	1.00	1.00	1.00	1.00
Lanes:	2.00	1.74	0.26	1.00	2.00	1.00	1.00	3.00	1.00	1.00	3.00	1.00
Final Sat.:	3200	2778	422	1600	3200	1600	1600	4800	1600	1600	4800	1600
Capacity Analysis Module:												
Vol/Sat:	0.10	0.33	0.33	0.11	0.23	0.07	0.21	0.29	0.29	0.14	0.20	0.12
OvlAdjV/S:									0.19			0.01
Crit Moves:		****		****				****		****		

Amazon Warehouse (JN 13106A)
Opening Year Cumulative (2021) With Project
PM Peak Hour

Level Of Service Computation Report
ICU 1(Loss as Cycle Length %) Method (Future Volume Alternative)

Intersection #108 Western Wy. & Katella Av.

Cycle (sec):	100	Critical Vol./Cap.(X):	0.828
Loss Time (sec):	10	Average Delay (sec/veh):	xxxxxx
Optimal Cycle:	74	Level Of Service:	D

Approach:	North Bound			South Bound			East Bound			West Bound		
Movement:	L -	T -	R	L -	T -	R	L -	T -	R	L -	T -	R
Control:	Protected			Protected			Protected			Protected		
Rights:	Include			Include			Ovl			Ovl		
Min. Green:	0	0	0	0	0	0	0	0	0	0	0	0
Y+R:	4.0	4.0	4.0	4.0	4.0	4.0	4.0	4.0	4.0	4.0	4.0	4.0
Lanes:	1 0	1	1 0	1 0	1	1 0	1 0	3	0 1	1 0	3	0 1
Volume Module:												
Base Vol:	179	895	134	122	594	130	152	1246	180	108	985	156
Growth Adj:	1.00	1.00	1.00	1.00	1.00	1.00	1.00	1.00	1.00	1.00	1.00	1.00
Initial Bse:	179	895	134	122	594	130	152	1246	180	108	985	156
Added Vol:	0	0	0	0	0	0	4	16	0	0	2	0
PasserByVol:	0	0	0	0	0	0	0	0	0	0	0	0
Initial Fut:	179	895	134	122	594	130	156	1262	180	108	987	156
User Adj:	1.00	1.00	1.00	1.00	1.00	1.00	1.00	1.00	1.00	1.00	1.00	1.00
PHF Adj:	1.00	1.00	1.00	1.00	1.00	1.00	1.00	1.00	1.00	1.00	1.00	1.00
PHF Volume:	179	895	134	122	594	130	156	1262	180	108	987	156
Reduct Vol:	0	0	0	0	0	0	0	0	0	0	0	0
Reduced Vol:	179	895	134	122	594	130	156	1262	180	108	987	156
PCE Adj:	1.00	1.00	1.00	1.00	1.00	1.00	1.00	1.00	1.00	1.00	1.00	1.00
MLF Adj:	1.00	1.00	1.00	1.00	1.00	1.00	1.00	1.00	1.00	1.00	1.00	1.00
FinalVolume:	179	895	134	122	594	130	156	1262	180	108	987	156
OvlAdjVol:									1			34
Saturation Flow Module:												
Sat/Lane:	1600	1600	1600	1600	1600	1600	1600	1600	1600	1600	1600	1600
Adjustment:	1.00	1.00	1.00	1.00	1.00	1.00	1.00	1.00	1.00	1.00	1.00	1.00
Lanes:	1.00	1.74	0.26	1.00	1.64	0.36	1.00	3.00	1.00	1.00	3.00	1.00
Final Sat.:	1600	2783	417	1600	2625	575	1600	4800	1600	1600	4800	1600
Capacity Analysis Module:												
Vol/Sat:	0.11	0.32	0.32	0.08	0.23	0.23	0.10	0.26	0.11	0.07	0.21	0.10
OvlAdjV/S:									0.00			0.02
Crit Moves:		****		****				****		****		

APPENDIX 6.3:

OPENING YEAR CUMULATIVE (2021) WITHOUT PROJECT CONDITIONS TRAFFIC SIGNAL WARRANT ANALYSIS

This Page Intentionally Left Blank

Figure 4C-101 (CA). Traffic Signal Warrants Worksheet

WARRANT 3 - Peak Hour **SATISFIED = NO**
(Part A or Part B must be satisfied)

PART A **SATISFIED = NO**
(All parts 1, 2, and 3 below must be satisfied for the same one hour, for any four consecutive 15-minute periods)

1. The total delay experienced for traffic on one minor street approach (one direction only) controlled by a STOP sign equals or exceeds four vehicle-hours for a one-lane approach, or five vehicle-hours for a two-lane approach; AND	**NO**
2. The volume on the same minor street approach (one direction only) equals or exceeds 100 vph for one moving lane of traffic or 150 vph for two moving lanes; AND	**NO**
3. The total entering volume serviced during the hour equals or exceeds 800 vph for intersections with four or more approaches or 650 vph for intersections with three approaches.	**NO**

PART B **SATISFIED = NO**

APPROACH LANES	Number of Lanes	Peak Hour Volume
Both Approaches - Major Street	1	203
Highest Approach - Minor Street	1	58

The plotted points fall above the curve in Figure 4C-3. (URBAN AREAS)	**NO**
OR, The plotted point falls above the curves in Figure 4C-4. (RURAL AREAS)	**N/A**

The satisfaction of a traffic signal warrant or warrants shall not in itself require the installation of a traffic control signal.

Figure 4C-3. Warrant 3, Peak Hour

Traffic Conditions = **2021 Without Project Conditions - Weekday PM Peak Hour**

Major Street Name = **Holder St.**

Total of Both Approaches (VPH) = **203**
Number of Approach Lanes on Major Street = **1**

Minor Street Name = **Driveway 2**

High Volume Approach (VPH) = **58**
Number of Approach Lanes On Minor Street = **1**

SIGNAL WARRANT NOT SATISFIED

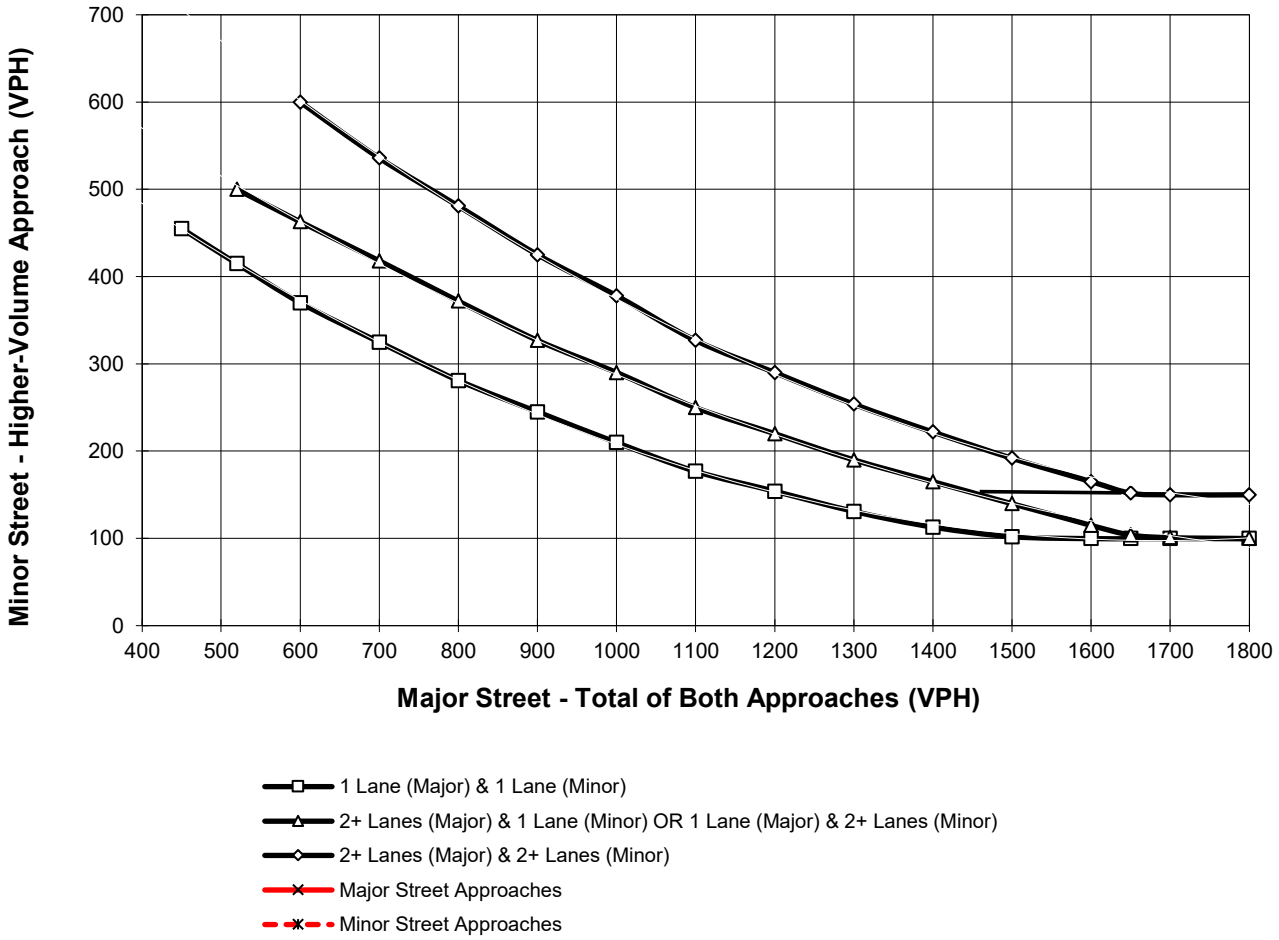

*Note: 150 vph applies as the lower threshold for a minor-street approach with two or more lanes and 100 vph applies as the lower threshold for a minor-street approach with one lane

Figure 4C-101 (CA). Traffic Signal Warrants Worksheet

WARRANT 3 - Peak Hour **SATISFIED = NO**
(Part A or Part B must be satisfied)

PART A **SATISFIED = NO**
(All parts 1, 2, and 3 below must be satisfied for the same one hour, for any four consecutive 15-minute periods)

1. The total delay experienced for traffic on one minor street approach (one direction only) controlled by a STOP sign equals or exceeds four vehicle-hours for a one-lane approach, or five vehicle-hours for a two-lane approach; AND	**NO**
2. The volume on the same minor street approach (one direction only) equals or exceeds 100 vph for one moving lane of traffic or 150 vph for two moving lanes; AND	**NO**
3. The total entering volume serviced during the hour equals or exceeds 800 vph for intersections with four or more approaches or 650 vph for intersections with three approaches.	**NO**

PART B **SATISFIED = NO**

APPROACH LANES	Number of Lanes	Peak Hour Volume
Both Approaches - Major Street	1	75
Highest Approach - Minor Street	1	91

The plotted points fall above the curve in Figure 4C-3. (URBAN AREAS)	**NO**
OR, The plotted point falls above the curves in Figure 4C-4. (RURAL AREAS)	**N/A**

The satisfaction of a traffic signal warrant or warrants shall not in itself require the installation of a traffic control signal.

Figure 4C-3. Warrant 3, Peak Hour

Traffic Conditions = **2021 Without Project Conditions - Weekday PM Peak Hour**

Major Street Name = **Holder St.**

Total of Both Approaches (VPH) = **75**
Number of Approach Lanes on Major Street = **1**

Minor Street Name = **Driveway 3**

High Volume Approach (VPH) = **91**
Number of Approach Lanes On Minor Street = **1**

SIGNAL WARRANT NOT SATISFIED

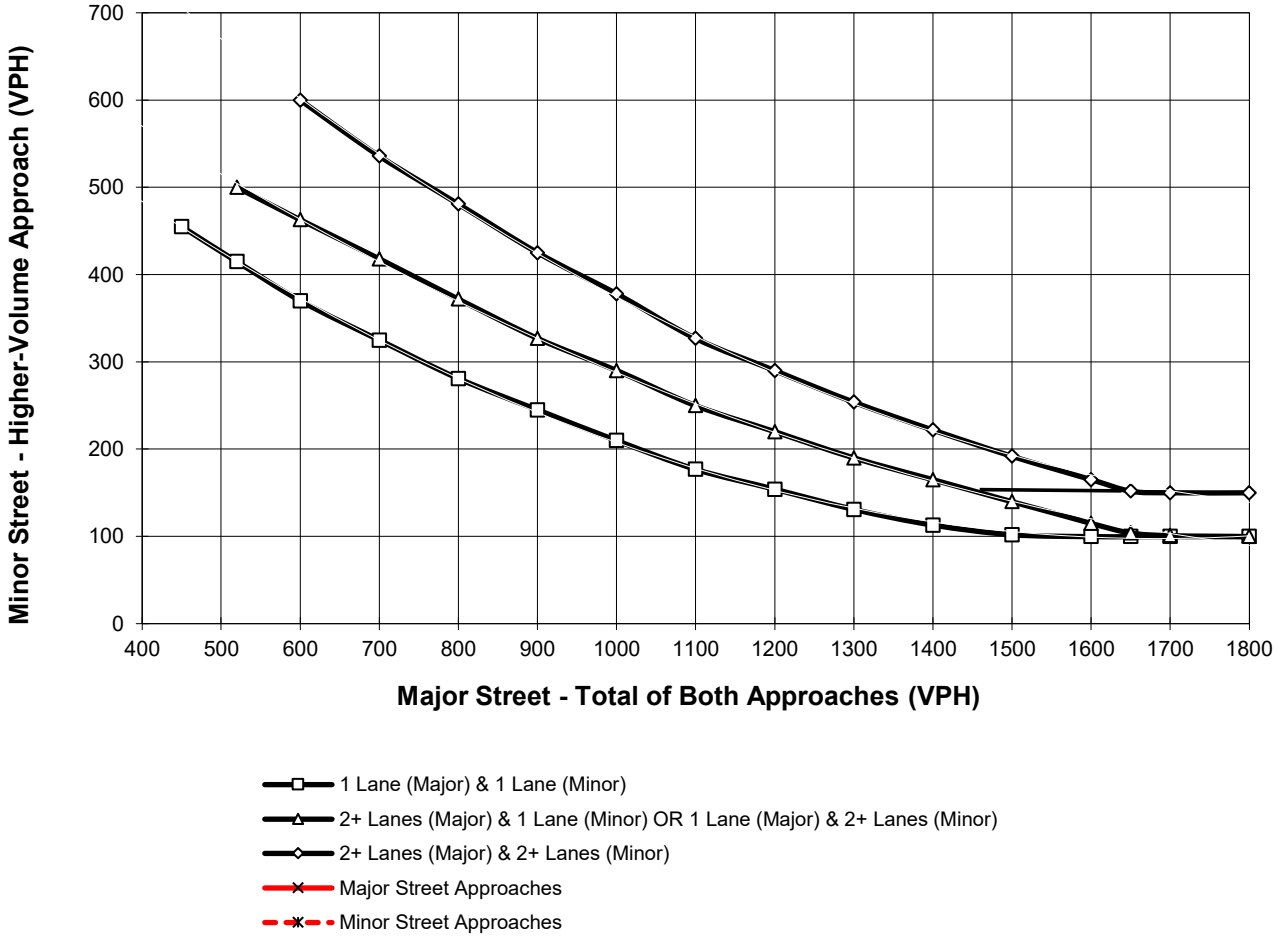

*Note: 150 vph applies as the lower threshold for a minor-street approach with two or more lanes and 100 vph applies as the lower threshold for a minor-street approach with one lane

APPENDIX 6.4:

OPENING YEAR CUMULATIVE (2021) WITH PROJECT CONDITIONS TRAFFIC SIGNAL WARRANT ANALYSIS

This Page Intentionally Left Blank

Figure 4C-101 (CA). Traffic Signal Warrants Worksheet

WARRANT 3 - Peak Hour **SATISFIED = NO**
(Part A or Part B must be satisfied)

PART A **SATISFIED = NO**
(All parts 1, 2, and 3 below must be satisfied for the same one hour, for any four consecutive 15-minute periods)

1. The total delay experienced for traffic on one minor street approach (one direction only) controlled by a STOP sign equals or exceeds four vehicle-hours for a one-lane approach, or five vehicle-hours for a two-lane approach; AND	**NO**
2. The volume on the same minor street approach (one direction only) equals or exceeds 100 vph for one moving lane of traffic or 150 vph for two moving lanes; AND	**NO**
3. The total entering volume serviced during the hour equals or exceeds 800 vph for intersections with four or more approaches or 650 vph for intersections with three approaches.	**NO**

PART B **SATISFIED = NO**

APPROACH LANES	Number of Lanes	Peak Hour Volume
Both Approaches - Major Street	1	419
Highest Approach - Minor Street	1	37

The plotted points fall above the curve in Figure 4C-3. (URBAN AREAS)	**NO**
OR, The plotted point falls above the curves in Figure 4C-4. (RURAL AREAS)	**N/A**

The satisfaction of a traffic signal warrant or warrants shall not in itself require the installation of a traffic control signal.

Figure 4C-3. Warrant 3, Peak Hour

Traffic Conditions = **2021 With Project Conditions - Weekday PM Peak Hour**

Major Street Name = **Holder St.**

Total of Both Approaches (VPH) = **419**
Number of Approach Lanes on Major Street = **1**

Minor Street Name = **Driveway 2**

High Volume Approach (VPH) = **37**
Number of Approach Lanes On Minor Street = **1**

SIGNAL WARRANT NOT SATISFIED

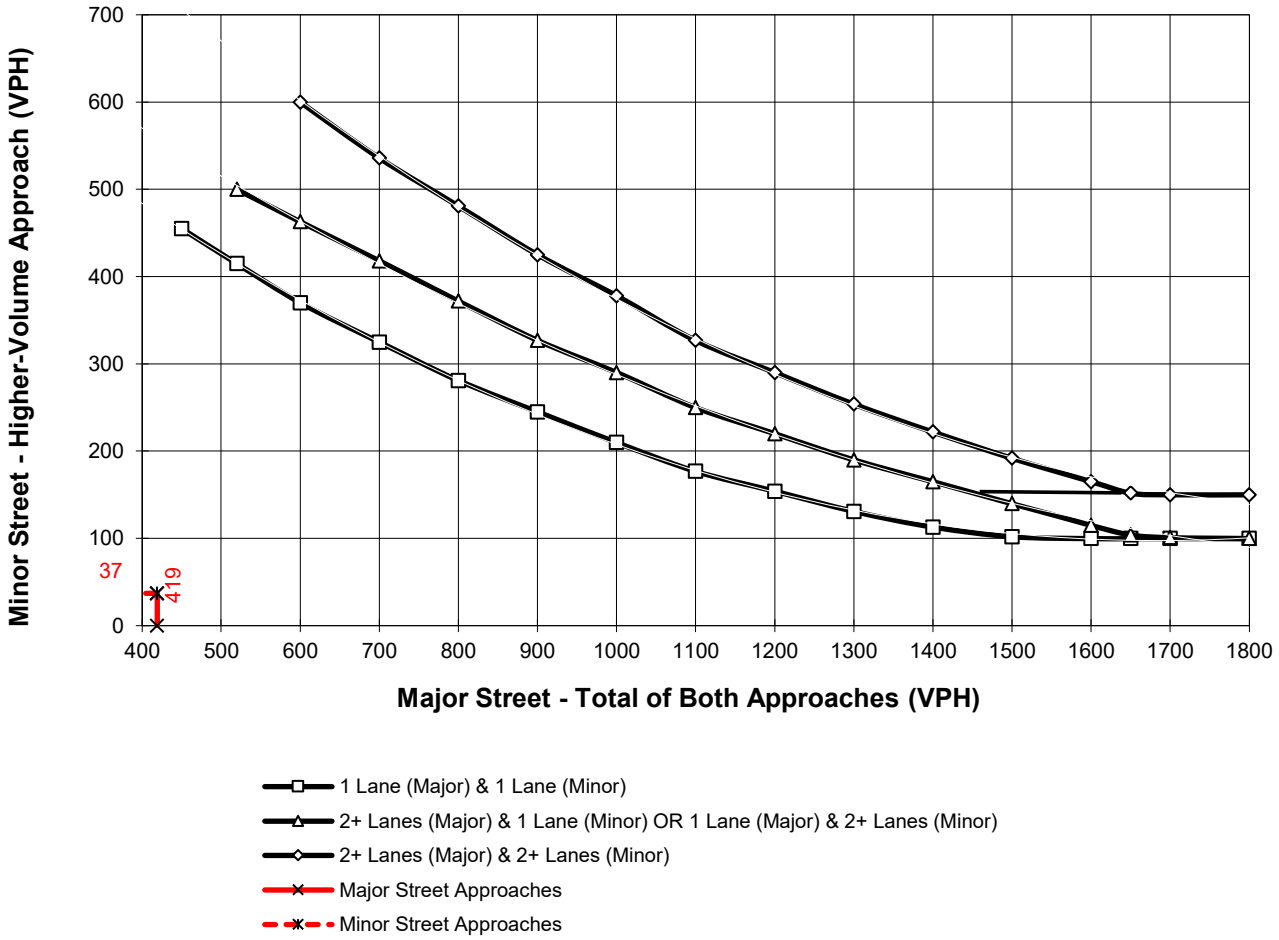

*Note: 150 vph applies as the lower threshold for a minor-street approach with two or more lanes and 100 vph applies as the lower threshold for a minor-street approach with one lane

Figure 4C-101 (CA). Traffic Signal Warrants Worksheet

WARRANT 3 - Peak Hour **SATISFIED = NO**
(Part A or Part B must be satisfied)

PART A **SATISFIED = NO**
(All parts 1, 2, and 3 below must be satisfied for the same one hour, for any four consecutive 15-minute periods)

1. The total delay experienced for traffic on one minor street approach (one direction only) controlled by a STOP sign equals or exceeds four vehicle-hours for a one-lane approach, or five vehicle-hours for a two-lane approach; AND	**NO**
2. The volume on the same minor street approach (one direction only) equals or exceeds 100 vph for one moving lane of traffic or 150 vph for two moving lanes; AND	**NO**
3. The total entering volume serviced during the hour equals or exceeds 800 vph for intersections with four or more approaches or 650 vph for intersections with three approaches.	**NO**

PART B **SATISFIED = NO**

APPROACH LANES	Number of Lanes	Peak Hour Volume
Both Approaches - Major Street	1	207
Highest Approach - Minor Street	1	91

The plotted points fall above the curve in Figure 4C-3. (URBAN AREAS)	**NO**
OR, The plotted point falls above the curves in Figure 4C-4. (RURAL AREAS)	**N/A**

The satisfaction of a traffic signal warrant or warrants shall not in itself require the installation of a traffic control signal.

Figure 4C-3. Warrant 3, Peak Hour

Traffic Conditions = **2021 With Project Conditions - Weekday PM Peak Hour**

Major Street Name = **Holder St.**

Total of Both Approaches (VPH) = **207**
Number of Approach Lanes on Major Street = **1**

Minor Street Name = **Driveway 3**

High Volume Approach (VPH) = **91**
Number of Approach Lanes On Minor Street = **1**

SIGNAL WARRANT NOT SATISFIED

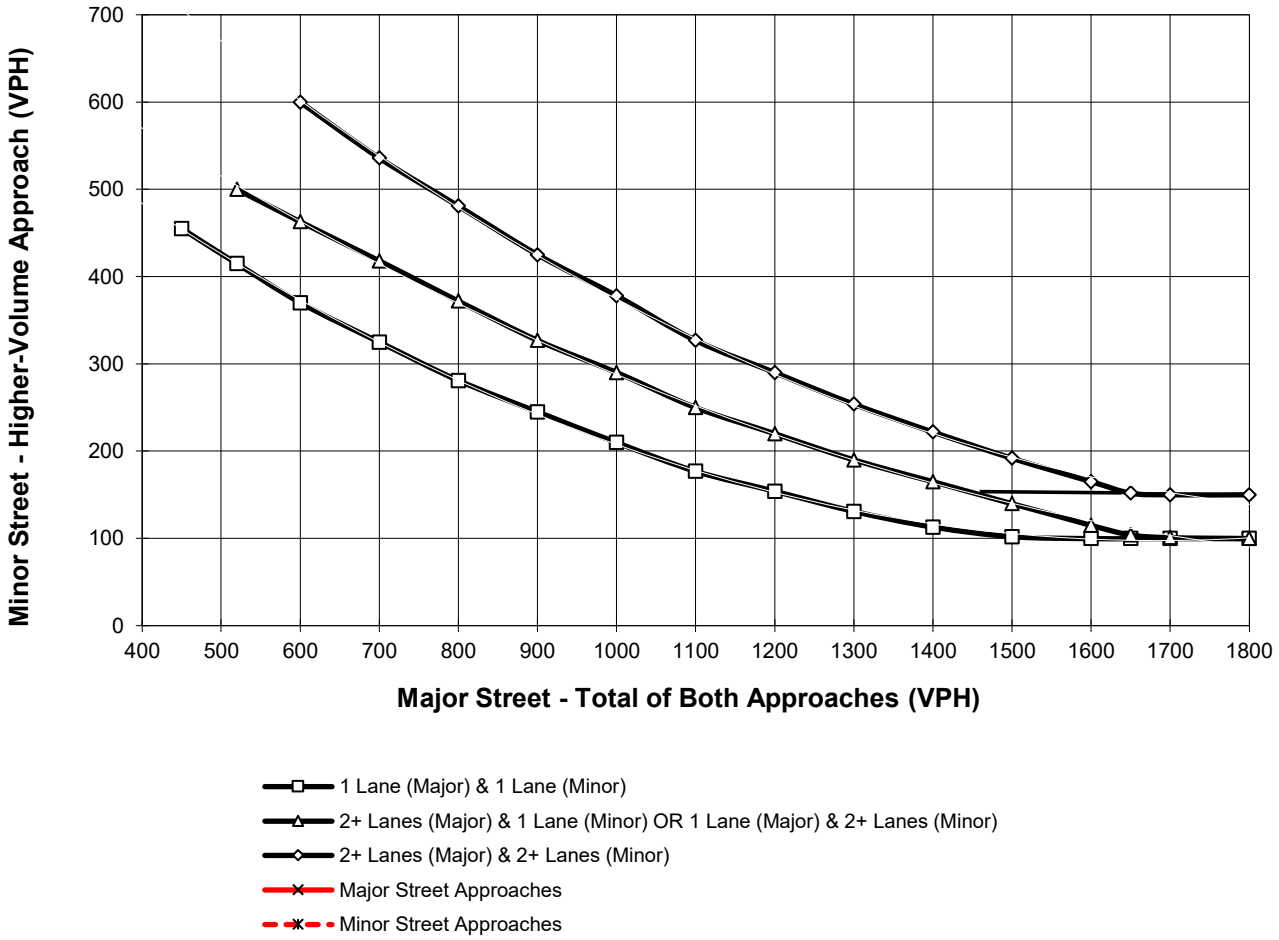

*Note: 150 vph applies as the lower threshold for a minor-street approach with two or more lanes and 100 vph applies as the lower threshold for a minor-street approach with one lane

URBAN CROSSROADS

260 E. Baker St. | Suite 200 | Costa Mesa, CA 92626 | (949) 660-1994
urbanxroads.com

July 1, 2020

Mr. Adam Schmid
Duke Realty
200 Spectrum Center Drive, Suite 1600
Irvine, CA 92618

SUBJECT: KATELLA AVENUE AMAZON FACILITY VEHICLE MILES TRAVELLED (VMT) ASSESSMENT

Dear Mr. Adam Schmid:

The following Vehicle Miles Travelled (VMT) Assessment has been prepared for the proposed Katella Avenue Amazon Facility ("**Project**"), which is located at 6400 Katella Avenue in the City of Cypress. The Project site was occupied by the North American Headquarters for Mitsubishi Motors Corporation. The proposed Project will consist of the demolition of existing buildings except the building fronting Katella Avenue and the southerly warehouse building (145,004 square feet) that will be utilized as a Delivery Station building. The remaining portion of the site will provide parking for sprinter cargo vans/flex vehicles and employees of the facility as well as access to the truck docks on the north side of the building (see Exhibit 1).

BACKGROUND

Changes to California Environmental Quality Act (CEQA) Guidelines were adopted in December 2018, which requires all lead agencies to adopt VMT as a replacement for automobile delay-based level of service (LOS) as the new measure for identifying transportation impacts for land use projects. This statewide mandate takes effect July 1, 2020. It is our understanding that the City has yet to formally adopt screening criteria, analysis methodology or thresholds for VMT. Absent formal guidelines from the City, this analysis relies on information prepared by the Governor's Office of Planning and Research (OPR) as part of their Technical Advisory on Evaluating Transportation Impacts in CEQA (December 2018) (**Technical Advisory**), which provides guidance for evaluating transportation impacts based on VMT.[1]

PROJECT SCREENING

The Technical Advisory provides details on appropriate "screening thresholds" that can be used to identify when a proposed land use project is anticipated to result in a less than significant impact without conducting a more detailed VMT analysis. Screening thresholds are broken into the following three types:

[1] Technical Advisory on Evaluating Transportation Impacts in CEQA. Office of Planning and Research (OPR), December 2018.

1. Small Project Screening
2. Map-Based Screening
3. Transit Priority Area (TPA) Screening

A land use project need only to meet one of the above screening thresholds to result in a less than significant impact.

SMALL PROJECT SCREENING

As noted in the Technical Advisory, projects that generate or attract fewer than 110 trips per day[2] will generally result in a less than significant transportation impact. As the proposed Project is anticipated to generate 2,490 trip ends per day (Katella Avenue Amazon Facility Traffic Impact Analysis, Urban Crossroads, 2020), the Project would exceed the small project daily trip threshold.

Small Project Screening threshold is not met.

MAP BASED SCREENING

The Technical Advisory also identifies "residential and office projects that locate in areas with low VMT and that incorporate similar features (density, mix of uses, and transit accessibility) will tend to exhibit similarly low VMT." Maps created with VMT data obtained from a travel demand model can illustrate areas that are currently below a VMT threshold. Although the proposed Project is not exclusively an office use, however, like office uses, the Project is an employment use and would therefore be applicable for map based VMT screening. The City of Cypress does not currently maintain a citywide map indicating areas of low VMT, so the map-based screening criteria was not utilized.

Map Based Screening threshold is not met.

TPA SCREENING

The Technical Advisory state that land use projects within ½ mile of an existing "major transit stop"[3] or an existing stop along a "high-quality transit corridor"[4] will have a less than significant impact on VMT. Consistent with Technical Advisory guidance, there are additional secondary screening checks that should also be considered when determining the appropriateness of this screening threshold.

A proposed land use project is not eligible for TPA screening if the project meets any of the following

[2] Page 12 of the OPR's Technical Advisory.
[3] Pub. Resources Code, § 21064.3 ("'Major transit stop' means a site containing an existing rail transit station, a ferry terminal served by either a bus or rail transit service, or the intersection of two or more major bus routes with a frequency of service interval of 15 minutes or less during the morning and afternoon peak commute periods.").
[4] Pub. Resources Code, § 21155 ("For purposes of this section, a high-quality transit corridor means a corridor with fixed route bus service with service intervals no longer than 15 minutes during peak commute hours.").

sub-criteria:

1) Has a Floor Area Ratio (FAR) of less than 0.75;
2) Includes more parking for use by residents, customers, or employees of the project than required by the jurisdiction (if the jurisdiction requires the project to supply parking);
3) Is inconsistent with the applicable Sustainable Communities Strategy (as determined by the lead agency, with input from the Metropolitan Planning Organization); or
4) Replaces affordable residential units with a smaller number of moderate- or high-income residential units.

The proposed Project would not meet TPA screening as the FAR proposed for the site is less than 0.75.

TPA Screening threshold is not met.

As none of the applicable VMT screening thresholds are met, a more detailed project-level VMT analysis is provided below.

VMT ANALYSIS THRESHOLDS

The Technical Advisory recommends the following numeric threshold for office uses…*"Office projects that would generate vehicle travel exceeding 15 percent below existing VMT per employee for the region may indicate a significant transportation impact. In cases where the region is substantially larger than the geography over which most workers would be expected to live, it might be appropriate to refer to a smaller geography, such as the county, that includes the area over which nearly all workers would be expected to live."*

Consistent with OPR recommendations, the appropriate geographic region selected for this analysis is Orange County where most workers for the Project are anticipated to live.

VMT ANALYSIS METHODOLOGY

The Orange County Transportation Analysis Model (OCTAM) is a useful tool to estimate VMT as it considers interaction between different land uses based on socio-economic data such as population, households, and employment. OCTAM is widely used as an appropriate trip-based modeling tool for conducting VMT analysis for land use projects in Orange County.

For this analysis, VMT has been calculated using the most current version of OCTAM (version 5.0), which was released by the Orange County Transportation Authority (OCTA) in 2020. Consistent with recommendations in the Technical Advisory, when trip-based assessments of project VMT such as that performed using OCTAM, the focus can be on home-based work trips.[6] Home-based work (HBW) VMT includes all auto vehicle trips between home and work for a given traffic analysis zone (TAZ) or group of

[6] Page 6 of the OPR's Technical Advisory.

zones and is then normalized by dividing be the number of employees present in the zone or group of zones.

PROJECT VMT

To calculate VMT for the Project, land use information such as building square footage is converted to socio-economic data (i.e., employment factors) and has been applied to a new and separate TAZ representing the Project's location within the OCTAM model. Since the zone structure in OCTAM is made up of TAZs that are larger than a single land use project and would therefore contain socio-economic data for numerous projects located within a single TAZ, utilizing a separate TAZ specific to the project allows for the isolation of trips and VMT associated with a single land use project. The new TAZ would be created with only the Project's socio-economic data. As a result, the VMT generated from the TAZ would be isolated for the Project and across the full model network. Employment information obtained from the Project applicant represents the tenant's anticipated employment during peak operational activity (i.e., 370 employees) and was inputted into the project's TAZ for both the base (2016) and future (2045) scenarios.

Upon completion of the socio-economic data update for the Project TAZ for each scenario, the OCTAM model was then run for both base (2016) and future (2045) scenarios, and calculations from the relevant OCTAM output files were performed to calculate HBW VMT for the Project's TAZ. The Project's HBW VMT is then normalized by dividing by the number of employees to determine the Project's VMT per employee. Existing/baseline VMT per employee was developed by interpolating (using linear interpolation) between the base (2016) and future (2045) VMT. As shown in Table 1, the Project VMT per employee for baseline (2020) conditions is 18.68.

TABLE 1: BASELINE 2020 PROJECT VMT PER EMPLOYEE

	Project [7]
Employment	370
HBW VMT	6,911
HBW VMT/Employee	18.68

REGIONAL VMT

Regional HBW VMT for Orange County was also calculated for the base (2016) and future (2045) scenarios based on OCTAM output files. The socio-economic data and VMT per employee for the region was calculated as a collection of TAZs (all TAZs located in Orange County) rather than a single TAZ. Similar to the VMT calculations for the Project, baseline (2020) HBW VMT for Orange County was developed by

[7] Employment data is based on information provided by the building tenant and represents employment anticipated during Peak Operational activity for the proposed development.

interpolating (using linear interpolation) between base (2016) and future (2045) VMT. Orange County baseline (2020) VMT per employee is summarized in Table 2:

TABLE 2: BASELINE 2020 ORANGE COUNTY VMT PER EMPLOYEE

	Orange County[8]
Employment	1,747,428
VMT	43,349,947
VMT/Employee	24.81

PROJECT GENERATED VMT COMPARISON TO RECOMMENDED THRESHOLD

As shown in Table 3, the Project's VMT per employee does not exceed the 15.0% below VMT per employee for the region threshold recommended in the Technical Advisory.

TABLE 3: BASELINE (2020) REGIONAL AND PROJECT VMT PER EMPLOYEE COMPARISON

Threshold Criteria	County-wide VMT/Emp (2020)	Project VMT/Emp (2020)	Project's % below County	Compared to Threshold	Potentially Significant?
HBW VMT/Employee	24.81	18.68	-24.7%	-9.7%	No

PROJECT'S EFFECT ON AREAWIDE VMT (CUMULATIVE YEAR 2040)

Metrics such as VMT per capita or VMT per employee are efficiency metrics that allow absolute VMT (or total VMT) to be converted for purposes of comparison. As stated in the Technical Advisory, "a project that falls below an efficiency based metric threshold that is aligned with long-term goals and relevant plans has no cumulative impact distinct from the project impact. Accordingly, a finding of a less than significant project impact would imply a less than significant cumulative impact, and vice versa." This approach is similar to the analysis typically conducted for greenhouse gas emissions or air quality emissions.

The proposed Project is consistent with the City's General Plan land use and therefore is consistent with the Southern California Council of Governments (SCAG) RTP/SCS, a cumulative analysis that makes a comparison of areawide daily total VMT without and with the Project was not performed.

[8] Derived using the outputs from the OCTAM 5.0 model.

If you have any questions, please contact me directly at (949) 336-5978.

Respectfully submitted,

URBAN CROSSROADS, INC.

Aric Evatt, PTP
President

Robert Vu, PE
Transportation Engineer