PARK PLAZA MEMORY CARE

MITIGATED NEGATIVE DECLARATION NO. 1866-19

Lead Agency:
City of Orange
Community Development Department • Planning Division
300 East Chapman Avenue
Orange, CA 92866-1591
(714) 744 7220
(714) 744 7222 (Fax)
www.cityoforange.org

Prepared by:

CAJA Environmental Services, LLC
15350 Sherman Way, Suite 315
Van Nuys, CA 91406
(310) 469 6700

May 2020

Sections **Page #**

Mitigated Negative Declaration No. 1866-19 1

Existing Setting 1

Project Description 4

Environmental Factors Potentially Affected 17

1. Aesthetics 19

2. Agricultural Resources 23

3. Air Quality 27

4. Biological Resources 45

5. Cultural Resources 57

6. Energy 67

7. Geology and Soils 73

8. Greenhouse Gas Emissions 80

9. Hazards and Hazardous Materials 107

10. Hydrology and Water Quality 115

11. Land Use and Planning 125

12. Mineral Resources 131

13. Noise 133

14. Population and Housing 157

15. Public Services 159

16. Recreation 164

17. Transportation 166

18. Tribal Cultural Resources 196

19. Utilities and Service Systems 200

20. Mandatory Findings of Significance 208

Figures

Figure 1 Regional Map 2
Figure 2 Aerial Map 3
Figure 3 Overall Site Plan 6
Figure 4 Fire Master Plan 7
Figure 5 Ground Floor Plan 8
Figure 6 Second Floor Plan 9
Figure 7 Fire Master Plan 10
Figure 8 Typical Unit Plan 11
Figure 9 Building Sections 12
Figure 10 North and East Exterior Elevations 13
Figure 11 South and West Exterior Elevations 14
Figure 12 Perspectives 15
Figure 13 Materials and Color Board 16
Figure 14 Arborist Site Plan 50
Figure 15 Noise Receptor & Monitoring Location Map 148
Figure 16 Vicinity Map 168
Figure 17 Existing Roadway Conditions and Intersection Control 169
Figure 18 Existing AM Peak Hour Traffic Volumes 170
Figure 19 Existing PM Peak Hour Traffic Volumes 171
Figure 20 Project Traffic Distribution Pattern 177
Figure 21 AM Peak Hour Project – Generated Traffic Volumes 179
Figure 22 PM Peak Hour Project – Generated Traffic Volumes 180
Figure 23 Existing Plus Project AM Peak Hour Traffic Volumes 181
Figure 24 Existing Plus Project PM Peak Hour Traffic Volumes 182
Figure 25 Location of Cumulative Projects 186
Figure 26 AM Peak Hour Cumulative Project Only Traffic Volumes 187
Figure 27 PM Peak Hour Cumulative Project Only Traffic Volumes 188
Figure 28 Year 2021 Cumulative Base AM Peak Hour Traffic Volumes 189
Figure 29 Year 2021 Cumulative Base PM Peak Hour Traffic Volumes 190
Figure 30 Year 2021 Cumulative Plus Project AM Peak Hour Traffic Volumes 192
Figure 31 Year 2021 Cumulative Plus Project PM Peak Hour Traffic Volumes 193

Tables

Table 1 State and Federal Ambient Air Quality Standards and Attainment for Orange County 29
Table 2 Ambient Air Quality Data – SRA No. 17 "Central Orange County" 35
Table 3 Existing Project Site Daily Operations Emissions 37
Table 4 SCAQMD Construction Emissions Thresholds 38
Table 5 SCAQMD Operational Emissions Thresholds 39
Table 6 Approximate Construction Schedule 41
Table 7 Regional and Localized Construction Emissions 41
Table 8 Regional and Localized Operational Emissions 42
Table 9 Tree Matrix 51
Table 10 Summary of Energy Use During Project Construction 69
Table 11 Estimated Project Electricity Demand 70
Table 12 Estimated Project Natural Gas Demand 70
Table 13 Estimated Project Transportation Petroleum-Based Fuel 71
Table 14 California GHG Inventory (million metric tons CO_2e) 86
Table 15 Consistency Analysis – Climate Change Scoping Plan and First Update 90
Table 16 Consistency Analysis – 2017 Scoping Plan Update 96
Table 17 Consistency with the 2016-2040 RTP/SCS 99
Table 18 Consistency with Applicable Policies of the Natural Resources Element 101
Table 19 Construction Related GHG Emissions 105
Table 20 Annual GHG Emissions Summary 106
Table 21 2-Year-Storm Event Information 120
Table 22 Project Consistency with Applicable Policies of the Land Use Element of the City of Orange General Plan 127
Table 23 A-Weighted Decibel Scale 134
Table 24 City of Orange Noise Element Table N3: Maximum Allowable Noise Exposure --- Transportation Sources 141
Table 25 City of Orange Noise Element Table N4: Maximum Allowable Noise Exposure --- Stationary Sources 142
Table 26 FTA Construction Vibration Damage Criteria 145
Table 27 Existing Noise Levels 147
Table 28 Construction Noise Levels - Grading 152
Table 29 Building Damage Vibration Levels at Off-Site Structures 155

Table 30 City of Orange Population Growth Forecasts, 2010-2035 157
Table 31 Level of Service Criteria for Signalized Intersections 173
Table 32 LOS Criteria for Unsignalized Intersections 174
Table 33 Existing Peak Hour Levels of Service 175
Table 34 Project Traffic Generation Forecast 176
Table 35 Existing (Year 2019) Plus Project Peak Hour Intersection Capacity Analysis 183
Table 36 Cumulative Projects Description and Trip Generation Estimates 185
Table 37 Year 2021 Cumulative Peak Hour Intersection Capacity Analysis 191
Table 38 Estimated Project Wastewater Generation/Water Consumption 202
Table 39 Wastewater Treatment Plant 203
Table 40 Normal Year Supply and Demand Comparison (AF) 205
Table 41 Single Dry Year Supply and Demand Comparison (AF) 205
Table 42 Multiple Dry Years Supply and Demand Comparison (AF) 205
Table 43 Landfill Capacity 206
Table 44 Estimated Project Solid Waste Generation 207

Appendices

A. AQ and GHG Modeling Results

B. Biological Resources

1. Arborist Report

2. Arborist Site Plan with Trees

C. Cultural Resources

1. Historic Resources Report

2. Archaeological Resources Letter

D. Energy Calculations

E. Geology & Soils

1. Geotechnical Report

2. Paleontological Resources Letter

F. Hazards and Hazardous Materials

1. Phase I ESA

2. Limited Phase II ESA

G. Preliminary WQMP

H. Noise Modeling Results

I. Traffic Impact Analysis

MITIGATED NEGATIVE DECLARATION NO. 1866-19

Project Title: **Reference Application Numbers:**

Park Plaza Memory Care ExpansionCUP No. 3085-19, MJSP No. 0972-19, DRC No. 4973-19, ENV No. 1866-19

Lead Agency: **Contact Person and Telephone No.:**

City of Orange

Kelly Christensen Ribuffo, Associate Planner
(714) 744-7223

Project Proponent and Address: **Contact Person and Telephone No.:**

KC Orange II, LP
5790 Feet Street, Suite 300
Carlsbad, CA 92008

Axel Guerra
(760) 804-7065

Project Location:

574 S. Glassell Street
Orange, CA 92866

EXISTING SETTING

Regional Setting:

The Project Site is located in the Old Towne area of the City of Orange (City), in the north-central portion of Orange County (County), approximately 12 miles northeast of the Pacific Ocean. The City shares its boundaries with the Cities of Anaheim to the north and west, Garden Grove to the west, Santa Ana to the west and south, and Tustin to the southeast. To the east of the City is unincorporated Orange County. The City of Villa Park is completely contained within the borders of Orange.

Existing Site Conditions:

The 0.917-acre Project Site is located at 574 S. Glassell Street and comprises Assessor's Parcel Number (APN) 390-591-19). Regional access is provided to the Project Site via State Route 22 located approximately 0.16 miles to the south; Interstate 5 located approximately 1.3 miles to the west; and State Route 55 located approximately 1.3 miles to the east. Local access is provided via S. Glassell Street and W. La Veta Avenue. The regional and local context of the Project Site is shown on Figures 1 and 2. The Project Site is bound by the existing Park Plaza Senior Living Community to the south, S. Glassell Street to the east, a church to the north, and a sports field and storage structures to the west.

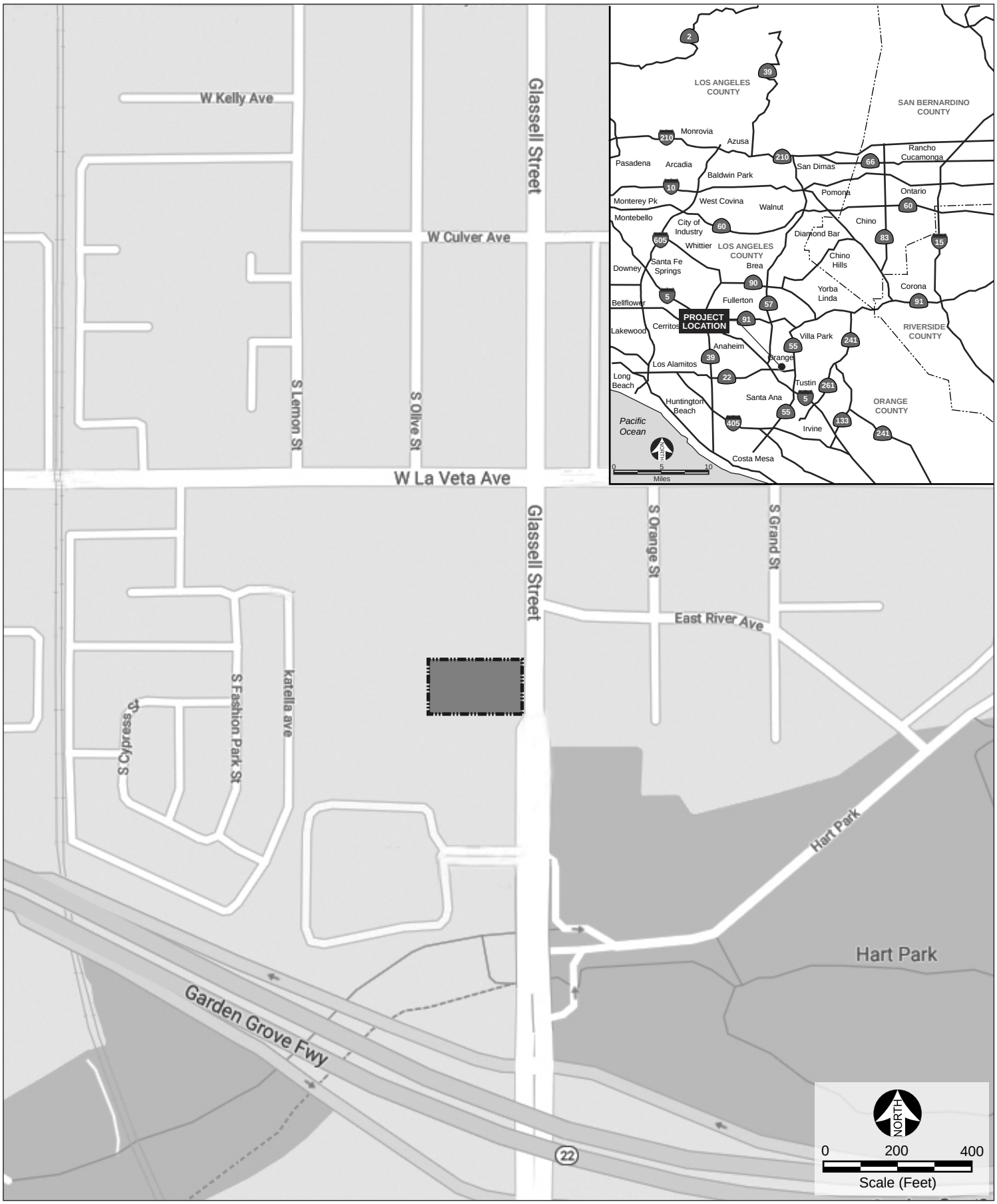

Legend

Project Site

Source: Google Maps 2019.

Figure 1
Regional Map

Legend

Project Site

Source: Google Maps 2019.

Figure 2
Aerial Map

The Project Site is currently developed with a 5,959-square-foot restaurant building and a surface parking lot. Existing vehicle access to the Project Site is provided via one driveway located at the northern edge of the site from S. Glassell Street. The existing General Plan land use designation for the Project Site is Commercial, and the existing zoning for the site is C-1 (Limited Business).

Surrounding Land Uses:

Land uses in the vicinity of the Project Site include the existing Park Plaza Senior Living Community (mentioned previously), medical uses, and condominiums to the south; the Holy Family Cathedral Church and School, W. La Veta Avenue, and a mix of single-family residential, multi-family residential, and commercial uses to the north; residential uses to the west; and single-family residential, multi-family residential, and park uses to the east. Most structures within proximity to the Project Site are one to two stories in height.

PROJECT DESCRIPTION

The Project includes demolition and removal of the existing restaurant building and surface parking lot from the Project Site and development of the site with a two-story 30,113-square-foot memory care facility that is associated with the existing Park Plaza Senior Care Community located adjacent to the south.[1] The purpose of the facility would be to provide care for residents affected by Alzheimer's and/or other dementia related issues. The proposed care facility would include 36 beds in 28 studio units and 4 (shared) 2-bedroom units. The maximum height of the building would be 32 feet. Project plans are shown on Figures 3 through 13.

The first floor would be 15,126 square feet and would include 15 units and commons, administration, circulation, and support uses. The second floor would be 15,021 square feet and would include 17 units and commons, administration, circulation, and support uses. A courtyard and covered patio would be provided on the ground level, and a covered terrace would be provided on the second floor.

Vehicle access would be provided via one driveway located in the same location as the existing driveway, at the northern edge of the Project Site on S. Glassell Street. American's With Disabilities Act (ADA) surface parking (2 spaces) would be provided near the northeast corner of the Project Site with the primary surface vehicle parking provided at the rear (west) of the building and would include 13 spaces.

The driveway along the northern edge of the Project Site would provide adequate access for the fire/emergency and trash pick-up access. A loading area would be maintained at the rear (west) of the building.

---

[1] *Although the proposed memory care facility would be associated with the existing Park Plaza Senior Care Community, the facility would be a stand-alone facility.*

Discretionary Actions

To allow for implementation of the Project, the Project Applicant is requesting approval of the following discretionary actions from the City:

- Conditional Use Permit (CUP) to allow for development and operation of a memory care facility;
- Major Site Plan Review
- Design Review
- Adoption of the Mitigated Negative Declaration

Other Public Agencies Whose Approval is Required (Responsible or Trustee Agencies):

None.

Scheduled Public Meetings or Hearings:

Meeting: Design Review Committee

Date: March 20, 2020

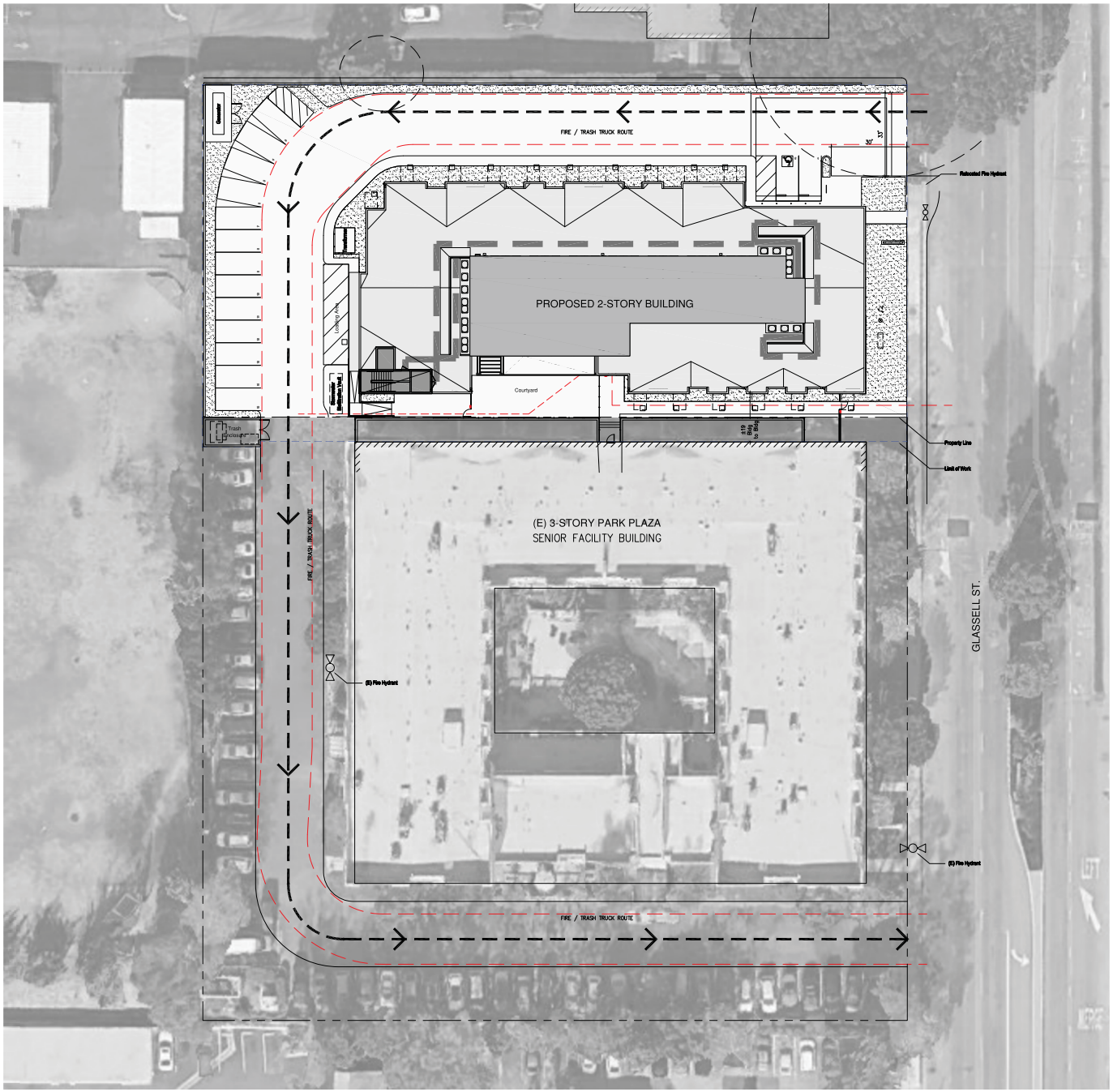

PROJECT SUMMARY:

Site Address: 574 S Glassell St., Orange, CA 92866
APN: 390-591-19
Tract Number: 10803

Zoning: Existing: C-1
Proposed: C-1

General Plan Land Use Designation:
Existing: Commercial
Proposed: Commercial

Land Use:
Existing: Restaurant
Proposed: Residential

Construction Type: V-A 1-Hr
Occupancy: Mixed; Primary Occupancy: R2.1
Secondary Occupancy: A-3

Number of Units: 32 Total Units (Density 39.3 DU/Ac)
28 Studios @443 GSF
4 Shared (2 Bedrooms) @628 GSF
36 Total Beds

Site Area: 39,960 SF (0.917 Acres)
Lot Coverage: 40%

Allowable Building Area & Height per CBC
PER 2016 CBC 506.2 & 508,

AREAS: WITHOUT HEIGHT INCREASE

R-2.1 TYPE V-A ALLOWABLE / STORY	31,500 SF
A-3 TYPE V-A ALLOWABLE / STORY	34,500 SF

HEIGHTS: WITH AREA INCREASE

R-2.1 TYPE V-A ALLOWABLE	3 STORIES
A-3 TYPE V-A ALLOWABLE	2 STORY

Building Height Allowed per Zoning: 32'
Building Height Proposed: 32', 2 Stories

Building Area Proposed:

First Floor: 15,159 GSF
~6,896 GSF - Units (15 Units)
~8,263 GSF - Commons, Admin Circulation, & Support

Second Floor: 15,041 GSF
~8,080 GSF - Units (17 Units)
~6,961 GSF - Commons, Admin Circulation, & Support

Total Gross Area: 30,200 GSF

Parking Provided: 15 Stalls (0.42/Bed)
(1 Accessible Stall - Van)

Deferred Submittal

Fire Sprinklers

Underground Fire Line Service

Fire Alarm System

NORTH

Figure 3
Overall Site Plan

Source: Shelter Architects, 2019.

ROADWAY COMPLIANCE LETTER

Leighton Consulting, Inc.
A LEIGHTON GROUP COMPANY

April 15, 2019

Project No. 12137.002

KC Orange II, LP.
5790 Fleet Street, Suite 300
Carlsbad, California 92008

Attention: Mr. Axel Guerra

Subject: **Pavement Structural Sections for Fire Access Road**
Park Plaza Memory Care Expansion
574 South Glassell Street
City of Orange, California

Reference: Leighton Consulting, Inc., 2011, Geotechnical Exploration Report, Park Plaza Memory Care Expansion, 574 South Glassell Street City of Orange, California, Project No. 12137.X02, dated January 29, 2015.

In response to the request of PLSA, the project civil engineer, Leighton Consulting, Inc. has prepared this letter report to present our recommendations for fire access road for the Park Plaza Memory Care Expansion at 574 South Glassell Street in the city of Orange, California. The fire access road, which will also be used as a driveway, will be located on the north side and west side of the proposed building.

The fire access road is called out to consist of 4.5 inches of asphalt concrete (AC) over 5 inches of aggregate base (AB). For the temporary fire access road that will also be used for construction traffic, it is preferable to construct a 3.5 inches of AC over 5 inches of AB. The final 1-inch surface wearing course may be placed after the construction is completed. Prior to placement of the surface wearing course, cracks wider than ¼ inches should be sealed and any failed pavement should be repaired. The asphalt concrete and aggregate base should be compacted to a minimum of 95 percent relative compaction. Other recommendations in the referenced report remain valid and should be implemented.

12137.002

It is our opinion that the pavement structural sections above, properly constructed and maintained, will meet the criteria of an all-weather driving surface and are capable of supporting a 68,000-pound fire-truck load.

We appreciate this opportunity to be of service. If you have any questions regarding this letter report, please do not hesitate to contact this office.

Respectfully submitted,

LEIGHTON CONSULTING, INC.

REGISTERED PROFESSIONAL ENGINEER No. 2378 CIVIL STATE OF CALIFORNIA

Djali Chandra, PE, GE
Senior Principal Engineer

DJC/djc

Distribution: (1) Addressee (PDF by email)

PARKING ENFORCEMENT LETTER

5790 Fleet Street, Suite 300 • Carlsbad, CA 92008
PHONE 760-804-7042 • FAX 760-804-5909
www.kiscoseniorliving.com

KISCO SENIOR LIVING
The Art of Living Well™

28 February 2019

Fire Prevention Bureau
Orange City Fire Department
176 S. Grand St.
Orange, CA 92866

Re: Park Plaza Memory Care
KC Orange II, LP
574 S Glassell St, Orange, CA 92866
Parking Enforcement Plan

The fire lane parking enforcement plan for the above referenced project is stated as follows:

All fire lanes within 574 S Glassell St, Orange CA 92866 shall be maintained and in no event shall parking be permitted along any portion of a street or driveway that requires fire lanes or any area designated as a fire lane for turn-around purposes either during construction or after occupancy.

Park Plaza shall adopt reasonable rules and regulations regarding the parking of vehicles along its streets, roads, and/or drives within the project that are not in conflict with applicable law.

In furtherance thereof, Park Plaza, through its officers, committees, and agents, will establish the "parking" and "no parking" areas within the property in accordance with Section 21658.2 of the California Vehicle Code and OMC 15.32.020. The law shall be enforced through such rules and regulations by all lawful means, including, written warnings, citing, keying tires, and towing vehicles in violation.

Park Plaza will contract with a certified patrol and towing company to remove vehicles that violate no parking restrictions. First time violators will receive a written warning and with subsequent violations, the vehicle shall be subject to towing. The vehicle owner shall be responsible for all costs incurred in enforcing such violation, including without limitation: towing cost, citations, and legal fees.

KC Orange II, LP

Mitch I. Ritschel, Vice President

ORANGE CITY FIRE DEPARTMENT NOTES

INSPECTION REQUIREMENTS

1. OFD site inspections are required for this project. Please schedule all field inspections at least 48 hours in advance. Call the Fire Prevention office at (714) 288-2541 for Inspection Scheduling.
2. A lumber drop inspection shall be performed prior to delivery to the site. All-weather access roads capable of supporting 68,000 lbs., topped with asphalt, concrete, or equivalent shall be in place and hydrants operational at time of lumber drop inspection.
3. For projects with fuel modification, a vegetation clearance inspection is required prior to a lumber drop inspection. To schedule an appointment call the Fire Prevention office at (714) 288-2541.
4. Phased installation of fire access roads requires additional inspections.
5. An original approved, signed, wet-stamped OFD fire master plan shall be available on-site.
6. Access roads and hydrants shall be maintained and remain clear of obstructions at all times.
7. Areas where parking is not permitted shall be clearly identified.
8. Obstruction of fire lanes and hydrants may result in cancellation or suspension of inspections and a notice of correction or citation will be issued.
9. Temporary fuel tanks of 60 or more gallons shall be reviewed, inspected, and permitted by the OFD prior to installation and use.
10. The project address shall be clearly posted and visible from the public road during construction.
11. All gates which are required for fire department access shall be equipped with either a Knox or fire department padlock.
12. Buildings of four or more stories shall be provided with stairs and a standpipe before reaching 40 feet in height.

GENERAL REQUIREMENTS

13. Fire lane widths shall be measured from top face of the curb to top face of the curb for fire lanes with standard curbs and gutters and from flow-line to flow-line for fire lanes with modified curb designs (e.g., rolled, ramped, etc). The developer is responsible to verify that all approved public works or grading department street improvement plans or precise grading plans conform to the minimum street width measurements per the approved OFD Fire Master Plan.
14. Permanent, temporary, and phased emergency access roads shall be designed and maintained to support an imposed load of 68,000 lbs. and surfaced to provide all-weather driving capabilities.
15. Additional fire lane markings may be required at the time of inspection depending on field conditions.
16. Address numbers shall be located and be of a color and sized so as to be plainly visible and legible from the roadway.
17. Access gates shall be approved prior to installation and shall be in compliance with Chapter 5 of the CFC.
18. Approved access walkways shall be provided to all required openings and all rescue windows.
19. Vegetation shall be selected and maintained in such a manner as to allow immediate access to all hydrants, valves, fire department connections, pull stations, extinguishers, sprinkler risers, alarm control panels, rescue windows, and other devices or areas used for firefighting purposes. Vegetation or building features shall not obstruct address numbers or inhibit the functioning of alarm bells, horns, or strobes.
20. Dumpsters and trash containers larger than 1.5 cubic yards shall not be stored in buildings or placed within 5 feet of combustible walls, openings or combustible roof eave lines unless protected by an approved sprinkler system.
21. Any future modification to the approved Fire Master Plan or approved site plan, including but not limited to road width, grade, speed humps, turning radii, gates or other obstructions, shall require review inspection, and approval by the OFD.
22. Approval of this plan shall not be construed as approval of any information or project conditions other than those items and requirements identified in related portions of Ver 2018 CFC and CSC and Orange Municipal Code. This project may be subject to additional requirements not stated herein upon examination of actual site and project conditions or disclosure of additional information.

SPECIFIC REQUIREMENTS

23. **An underground piping plan is required for the installation of an automatic fire sprinkler system or for a private fire hydrant system. A separate plan submittal is required.**
24. **An automatic fire sprinkler system shall be installed in accordance with applicable codes and local ordinances, amendments, and guidelines. Sprinkler systems, other than those listed in CFC Chapter 9, shall be monitored by an approved central station. Separate plan submittals for the sprinkler and monitoring systems are required. Design of an automatic fire sprinkler system shall be based on a current floor test (within 12 months of the submitted design) which has been conducted per NFPA 13 requirements and witnessed by a fire department representative.**
25. **A fire alarm system shall be installed in accordance with applicable codes and local ordinances, amendments, and guidelines. A separate plan submittal is required.**
26. **An emergency responder's radio system will be required.**
27. **All vegetation overhanging the fire access roadway shall be maintained to provide a clear height of 13'-6" at all times.**

FIRE LANE SIGNS & RED CURB DETAILS

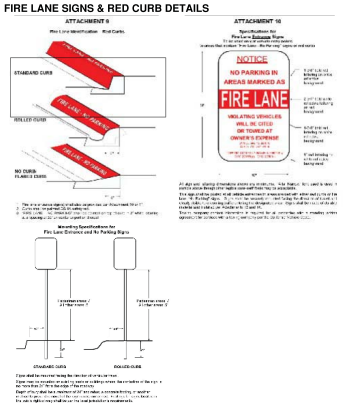

FIRE MASTER PLAN SUBMITTAL CHECKLIST

PROJECT INFORMATION		
Scope of project is clearly def ned on the plan?	☒ Yes	
Tract/Tentative Tract/Parcel Map Number provided?	☒ Yes	
Standard OFD fire master plan notes are included?	☒ Yes	(Notes are tailored to this project as applicable)
Building area, construction, occupancy, sprinklers noted?	☒ Yes	
Allowable area calculation provided on plan?	☒ Yes	☐ N/A
AM&M request letter scanned into plan?	☐ Yes	☒ N/A (No alternate methods proposed)
Sheets not relevant to fire master plan removed from set?	☒ Yes	
Access/hydrant phasing plan provided?	☐ Yes	☒ N/A (No phasing)
Operations incident planning CD/attachment s file provided?	☐ Yes	☒ No (Will provide prior to plan approval)
WATER AND HYDRANTS		
Water availability form completed and provided?	☐ Yes	☒ No (In process)
All hydrants within 400' of the site are shown on plan?	☒ Yes	
Are hydrants provided/spaced per CFC Appendix C?	☐ Yes	
ACCESS AND ROADWAYS		
Li ident of the access roadway is clearly shown on the plan?	☒ Yes	
Turning radii and width (incl. road sections) shown?	☒ Yes	
Exterior of all structures within 150' hose pull distance?	☒ Yes	☐ N/A (AM&M proposed)
Engineer's certification provided for new paving?	☐ Yes	☐ N/A (No new paving)
Walkable surface provided to required openings?	☒ Yes	
Hose and walkway grades >12% shown on plan?	☒ Yes	N/A
FIRE LANE IDENTIFICATION		
Red curbs are identified with bold or dashed lines?	☒ Yes	☐ N/A (Signs provided)
Location of each "Fire Lane—No Parking" sign shown?	☐ Yes	☒ N/A (Red curbs provided)
Fire lane entrance sign provided at each vehicle entrance?	☒ Yes	
Detail drawings of red curbs/"No Parking"/entrance signs?	☒ Yes	
GATES AND OBSTRUCTIONS		
Are all gates, fences, and planters shown?	☒ Yes	
Are vehicle gates identified as manual or electric?	☐ Yes	☒ N/A (No gates)
Manual vehicle gates have "No Parking" sign noted?	☐ Yes	☒ N/A (No manual gates)
Knox boxes/switches/keys are noted on plans?	☒ Yes	☐ N/A (No gates)
OFD gate notes/specifications included on plan?	☒ Yes	☐ N/A (No gates)
Knox form completed or submitted online?	☐ Yes	☐ N/A (No gates)
OTHER REQUIREMENTS		
Premises ID/address monument or location shown on plan?	☐ Yes	☒ N/A (Visible from street)
Trash enclosures are located at least 5' from buildings?	☒ Yes	☐ No (Enclosures are sprinklered)
Two entry points provided for 150 or more residences?	☒ Yes	☐ N/A (Non-residential project)
Buildings >55' or 75' to highest occupiable floor called out?	☐ Yes	☒ N/A (No high-rise structures*)
Parking enforcement letter provided?	☒ Yes	☐ N/A (Public streets only)

MONUMENT SIGN

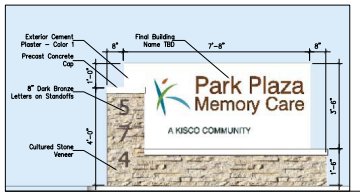

VICINITY MAP

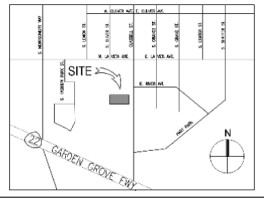

PROJECT DATA

PROJECT NAME:	PARK PLAZA MEMORY CARE
PROJECT ADDRESS:	574 S. GLASSELL ST ORANGE, CA 92868
TRACT NUMBER:	10803
PROJECT DESCRIPTION:	NEW 3-STORY 36-UNIT MEMORY CARE SENIOR LIVING COMMUNITY
BUILDING OCCUPANCY:	MIXED OCCUPANCY: PRIMARY OCCUPANCY: R2.1 SECONDARY OCCUPANCY: A-3
CONSTRUCTION TYPE:	V-A 1HR
BUILDING AREA:	32,100 GSF ALLOWED FOR R2.1 TYPE V-A PER 2018 CBC 506.2: 31,000 SF / STORY – 62,000 SF TOTAL
BUILDING HEIGHT:	32', 2 STORIES ALLOWED FOR R2.1 TYPE V-A PER 2018 CBC 506: 3 STORIES
AUTOMATIC FIRE SPRINKLER SYSTEM:	NFPA-13

SITE SECTION (NORTH-SOUTH)

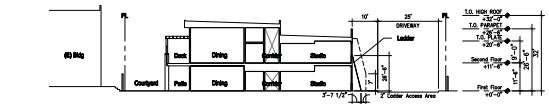

LEGEND

- Limit of Work
- Fire Access Roadway
- Hose Pull (100' Max)
- Standard Red Curb

SITE PLAN / GROUND FLOOR PLAN
SCALE: 1/16" = 1'-0"

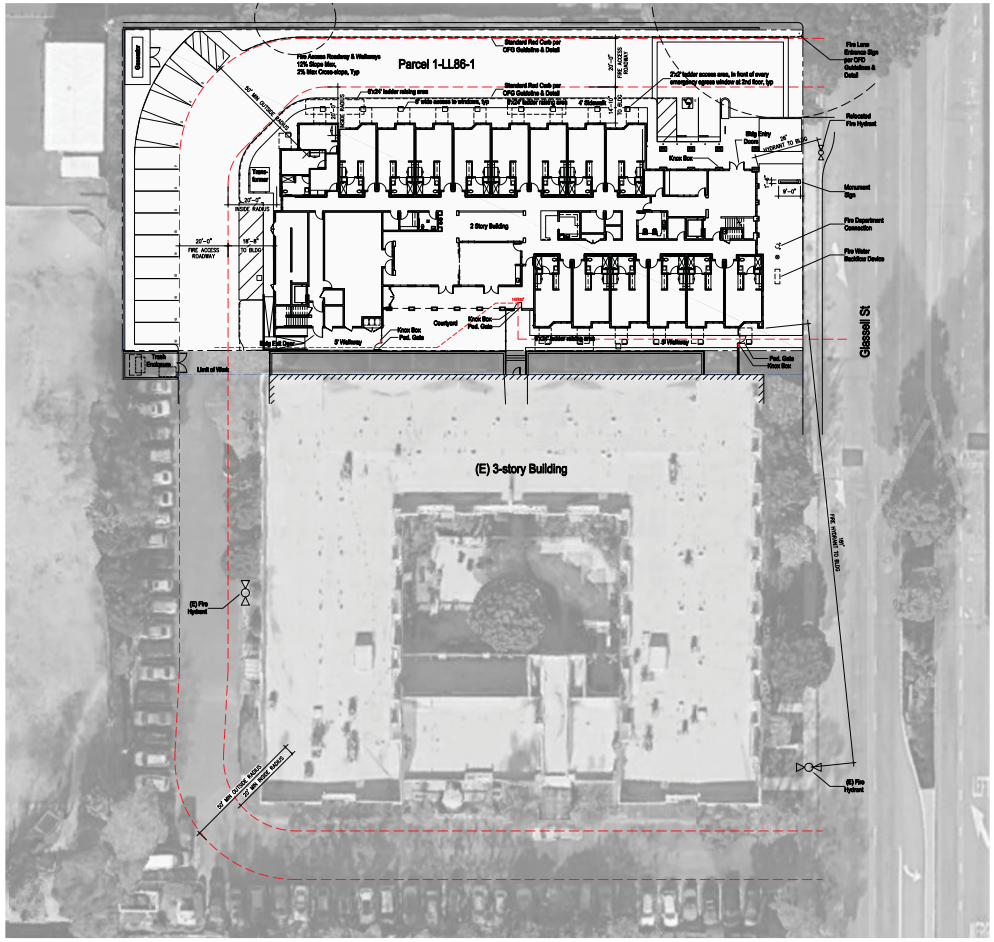

Source: Shelter Architects, 2019.

Figure 4
Fire Master Plan

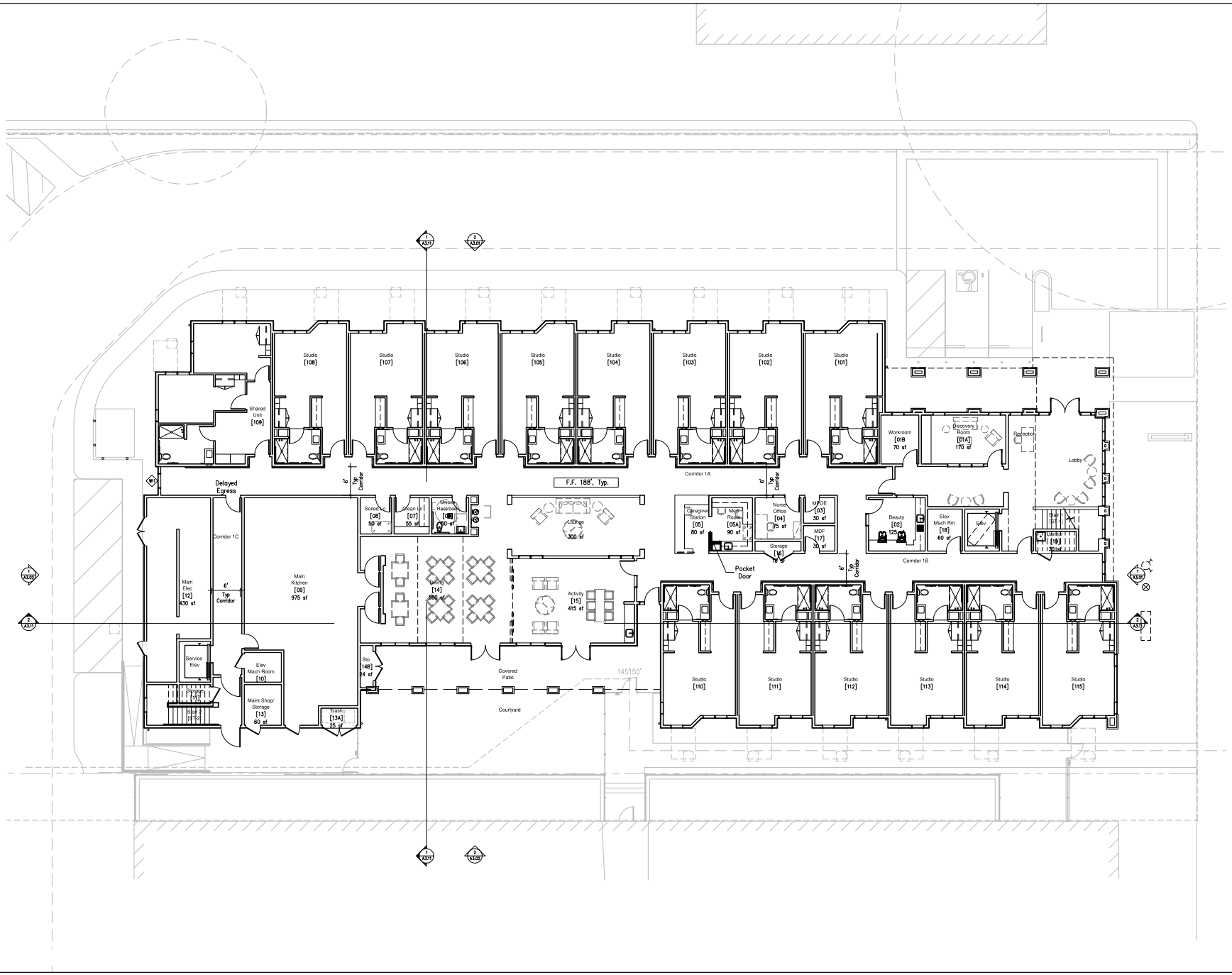

Figure 5
Ground Floor Plan

Source: Shelter Architects, 2019.

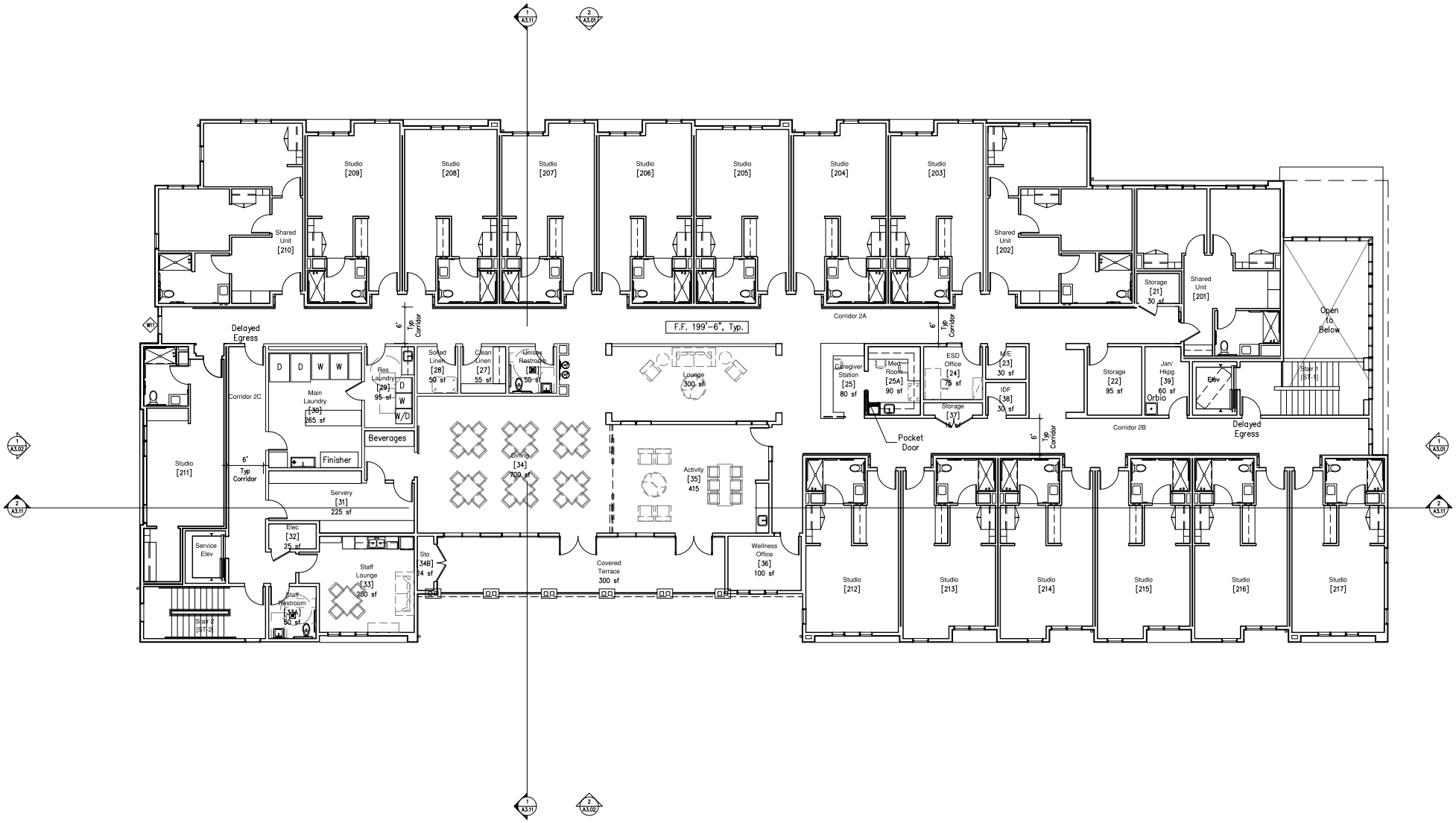

Figure 6
Second Floor Plan

Source: Shelter Architects, 2019.

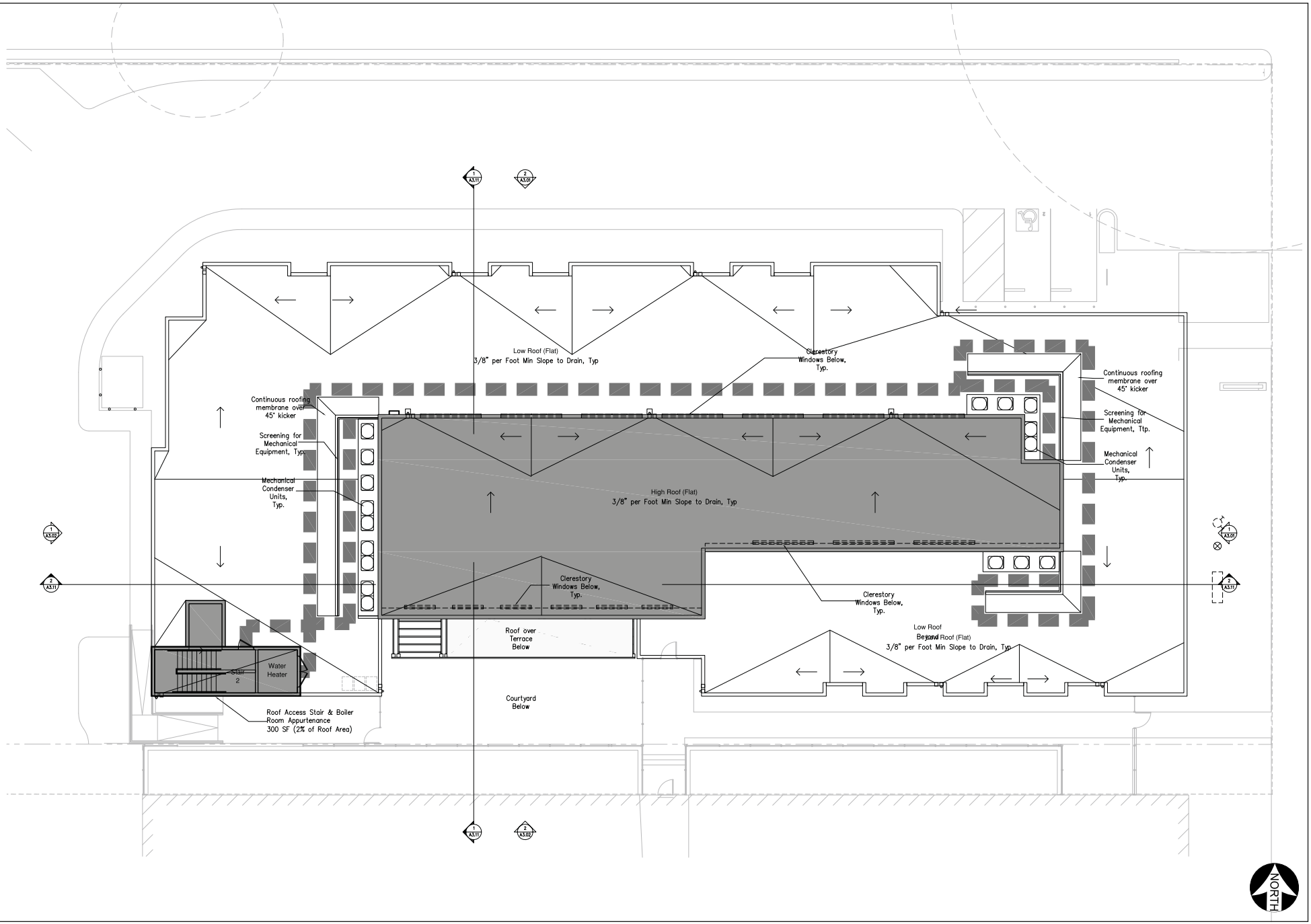

Figure 7
Roof Plan

Source: Shelter Architects, 2019.

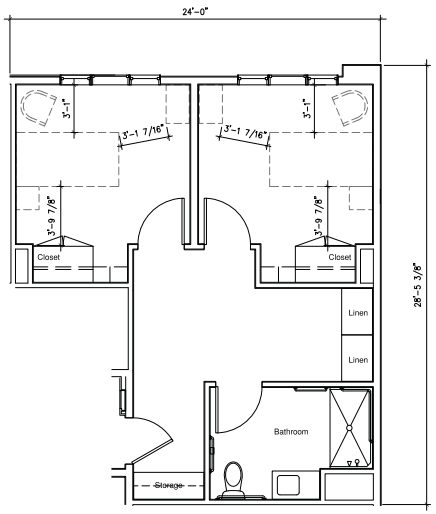

560 GSF

Atypical Shared Unit Plan [Unit 211] 4

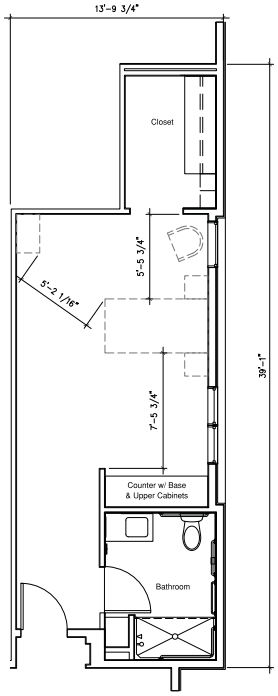

453 GSF

Atypical Studio Unit Plan [Unit 201] 3

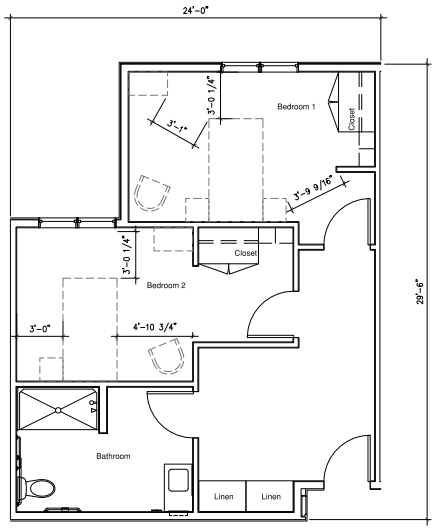

635 GSF

Typical Shared Unit Plan 2

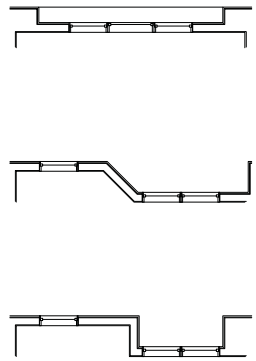

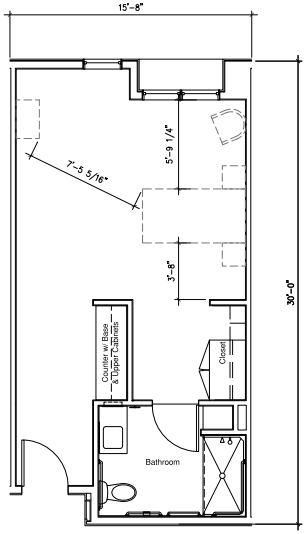

445 GSF

Typical Studio Unit Plan 1

Source: Shelter Architects, 2019.

Figure 8
Typical Unit Plan

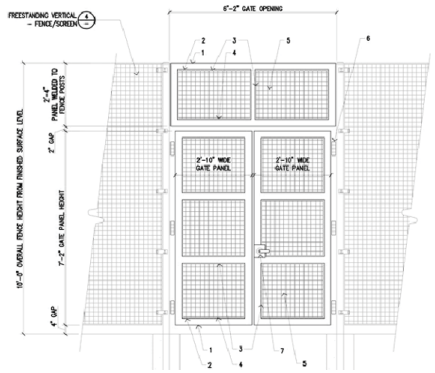

#	DESCRIPTION
1	2" X 3" X .120" TUBE STEEL FRAME – MITERED CORNERS WELDED AND GROUND SMOOTH
2	±1/8" GAP FULL PERIMETER BETWEEN FRAME AND PANEL (THICKNESS OF FENDER WASHER)
3	#304 STEEL EDGE TRIM @ VERTICAL AND TOP EDGE ONLY WITH HOLES FOR SCREWS
4	#105 STEEL EDGE TRIM
5	2" THICK greenscreen PANEL
6	GATE HINGES PER CONTRACTOR
7	LOCKING DEVICE PER SPECIFICATION SECTION 087100 AND SEE DOOR SCHEDULE ON SHEET A8.01

Generator Enclosure 3

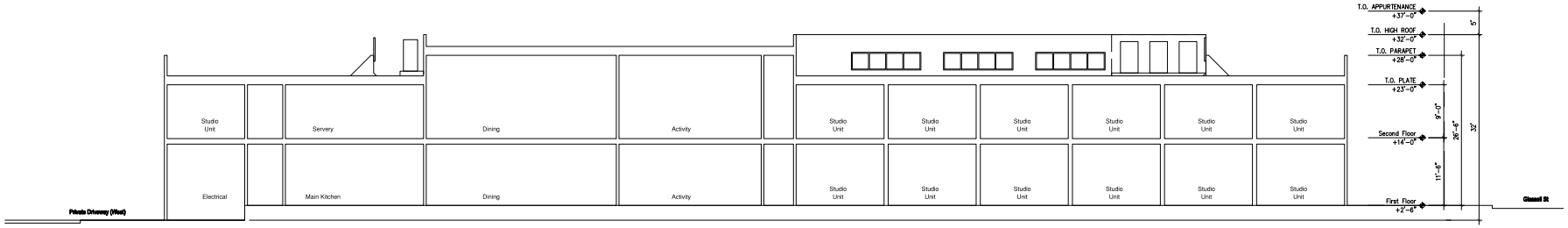

Building Section 2 2

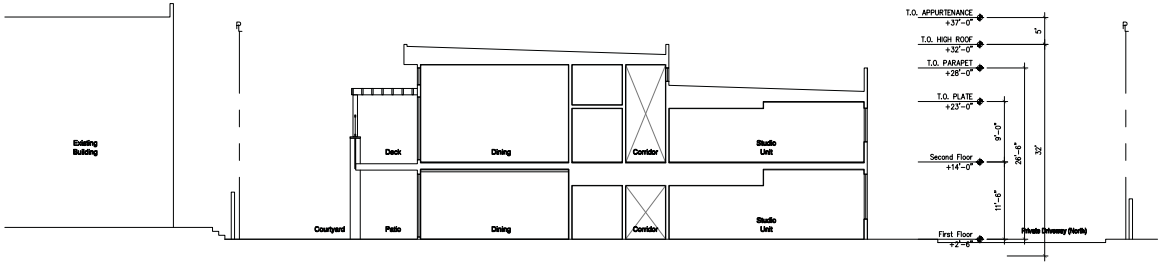

Building Section 1 1

Figure 9
Building Sections

Source: Shelter Architects, 2019.

Cementitious Board Siding - Hardie Artisan V-Groove 4

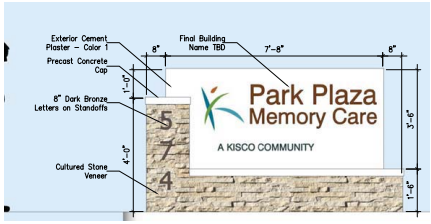

Monument Sign 3

North Elevation 2

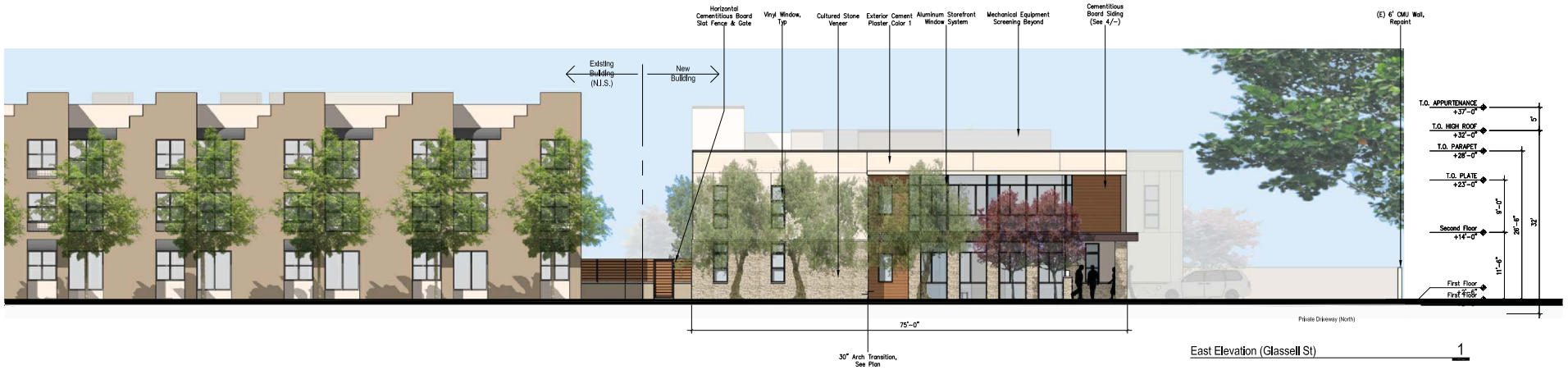

East Elevation (Glassell St) 1

Figure 10
North and East Exterior Elevations

Source: Shelter Architects, 2019.

Source: Shelter Architects, 2019.

Figure 11
South and West Exterior Elevations

Figure 12
Perspectives

Source: Shelter Architects, 2019.

3. Cementitious Board Siding Accent Color

2. Exterior Cement Plaster Color 2 Light Brown

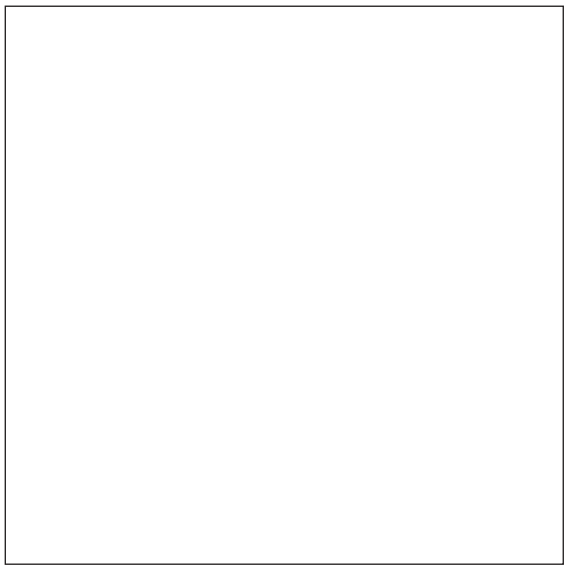

1. Exterior Cement Plaster Color 1 White

4. Cultured Stone Veneer

5. Aluminum Storefront Window Frames, Vinyl Window Color, Sim

Figure 13
Materials and Color Boards

Source: Shelter Architects, 2019.

ENVIRONMENTAL FACTORS POTENTIALLY AFFECTED

The environmental factors checked below would be potentially affected by this project, involving at least one impact that is a "Potentially Significant Impact" as indicated by the checklist on the following pages.

☐ Aesthetics	☐ Agriculture and Forest Resources	☐ Air Quality
☐ Biological Resources	☐ Cultural Resources	☐ Energy
☐ Geology/Soils	☐ Greenhouse Gas Emissions	☐ Hazards & Hazardous Materials
☐ Hydrology/Water Quality	☐ Land Use/Planning	☐ Mineral Resources
☐ Noise	☐ Population/Housing	☐ Public Services
☐ Recreation	☐ Transportation	☐ Tribal Cultural Resources
☐ Utilities/Service Systems	☐ Wildfire	☐ Mandatory Findings of Significance

DETERMINATION. On the basis of this initial evaluation:

1. I find that the proposed project **could not** have a significant effect on the environment, and a **NEGATIVE DECLARATION** will be prepared. ☐

2. I find that although the proposed project could have a significant effect on the environment, there will not be a significant effect in this case because revisions in the project have been made by or agreed to by the project proponent. **A MITIGATED NEGATIVE DECLARATION** will be prepared. ☑

3. I find that the proposed project **may have a significant effect** on the environment, and an **ENVIRONMENTAL IMPACT REPORT** is required. ☐

4. I find that the proposed project **may have a "potentially significant impact" or "potentially significant unless mitigated impact"** on the environment, but at least one effect 1) has been adequately analyzed in an earlier document pursuant to applicable legal standards, and 2) has been addressed by mitigation measures based on the earlier analysis as described on attached sheets. An **ENVIRONMENTAL IMPACT REPORT** is required, but it must analyze only the effects that remain to be addressed. ☐

5. I find that although the proposed project could have a significant effect on the environment, because all potentially significant effects (a) have been analyzed adequately in an earlier EIR or NEGATIVE DECLARATION pursuant to applicable standards, and (b) have been avoided or mitigated pursuant to that earlier EIR or NEGATIVE DECLARATION, including revisions or mitigation measures that are imposed upon the proposed project, nothing further is required. ☐

_____ _____

Name, Title *Date*

EVALUATION OF ENVIRONMENTAL IMPACTS

1. A brief explanation is required for all answers except "No Impact" answers that are adequately supported by the information sources a lead agency cites in the parentheses following each question. A "No Impact" answer is adequately supported if the referenced information sources show that the impact simply does not apply to projects like the one involved (e.g., the project falls outside a fault rupture zone). A "No Impact" answer should be explained where it is based on project-specific factors as well as general standards (e.g., the project will not expose sensitive receptors to pollutants, based on a project-specific screening analysis).
2. All answers must take account of the whole action involved, including off-site as well as on-site, cumulative as well as project-level, indirect as well as direct, and construction as well as operational impacts.
3. Once the lead agency has determined that a particular physical impact may occur, then the checklist answers must indicate whether the impact is potentially significant, less than significant with mitigation, or less than significant. "Potentially Significant Impact" is appropriate if there is substantial evidence that an effect may be significant. If there are one or more "Potentially Significant Impact" entries when the determination is made, an EIR is required.
4. "Negative Declaration: Less Than Significant With Mitigation Incorporated" applies where the incorporation of mitigation measures has reduced an effect from "Potentially Significant Impact" to a "Less Than Significant Impact." The lead agency must describe the mitigation measures, and briefly explain how they reduce the effect to a less than significant level (mitigation measures from earlier analyses may be cross-referenced, as discussed below).
5. Earlier analyses may be used where, pursuant to the tiering, program EIR, or other CEQA process, an effect has been adequately analyzed in an earlier EIR or negative declaration. Section 15063 (c)(3)(D). In this case, a brief discussion should identity the following:
    a. Earlier Analysis Used. Identify and state where they are available for review.
    b. Impacts Adequately Addressed. Identify which effects from the above checklist were within the scope of and adequately analyzed in an earlier document pursuant to applicable legal standards, and state whether such effects were addressed by mitigation measures based on the earlier analysis.
    c. Mitigation Measures. For effects that are "Less than Significant with Mitigation Measures Incorporated", describe the mitigation measures which were incorporated or refined from the earlier document and the extent to which they address site-specific conditions for the project.
6. Lead agencies are encouraged to incorporate into the checklist references to information sources for potential impacts (e.g., general plans, zoning ordinances). Reference to a previously prepared or outside document should, where appropriate, include a reference to the page or pages where the statement is substantiated.
7. Supporting Information Sources: A source list should be attached, and other sources used or individuals contacted should be cited in the discussion.
8. This is only a suggested form, and lead agencies are free to use different formats; however, lead agencies should normally address the questions from this checklist that are relevant to a project's environmental effects in whatever format is selected.
9. The explanation of each issue should identify:
    a. the significance criteria or threshold, if any, used to evaluate each question; and
    b. the mitigation measure identified, if any, to reduce the impact to less than significance.

1. **AESTHETICS.** *Would the project:*	**Potentially Significant Impact**	**Less Than Significant with Mitigation Incorporated**	**Less Than Significant Impact**	**No Impact**
(a) Have a substantial adverse effect on a scenic vista?	☐	☐	☐	☑
(b) Substantially damage scenic resources, including, but not limited to, trees, rock outcroppings, and historic buildings, within a scenic highway?	☐	☐	☐	☑
(c) In non-urbanized areas, substantially degrade the existing visual character or quality of public views of the site and its surroundings? (Public views are those that are experienced from publicly accessible vantage point.) If the project is in an urbanized area, would the project conflict with applicable zoning or other regulations governing scenic quality?	☐	☐	☑	☐
(d) Create a new source of substantial light or glare which would adversely affect day or nighttime views in the area?	☐	☐	☑	☐

Impact Analysis

(a) Would the project have a substantial adverse effect on a scenic vista?

Scenic vistas have been identified in the Natural Resources Element of the City's General Plan in the eastern portion of the City, where topography and open space allow far reaching views of undeveloped hillsides, ridgelines, and open space areas. The Project Site is located in the southwestern portion of the City in an already developed and urbanized area. Views in the vicinity of the Project Site are largely constrained by existing development, landscaping, and topography. No scenic vistas are available from near the Project Site. Thus, the Project would not have a substantial adverse effect on a scenic vista. Therefore, no impacts related to this issue would occur as a result of the Project.

Significance Determination: No Impact

Mitigation Measures: None

(b) Would the project substantially damage scenic resources, including, but not limited to, trees, rock outcroppings, and historic buildings, within a scenic highway?

No rock outcroppings are located on the Project Site. As discussed in detail in response to Checklist Question 4(a) (Cultural Resources – Historic Resources), the restaurant building on the Project Site is not a significant historic resource under CEQA. A City-designated historic tree is located adjacent to the Project Site to the northeast. As discussed in detail below in response to Checklist Question 4(e) (Biological Resources – Tree Preservation), the tree would be protected in place and with Mitigation Meausures BIO-

2 and BIO-3, impacts related to preservation of this tree would be less than significant. The Project Site is located on Glassell Street, which is a thoroughfare and entrance into the City's Old Towne Historic District. The Project Site is located adjacent to but outside of the Old Towne Historic District. Also, the site is located across Glassell Street and north of Hart Park, which is a City-designated historic resource. However, the Project would not include any direct or indirect modifications to the Old Towne Historic District or Hart Park. Additionally, the Project Site and surrounding properties (including the historic tree, Old Towne Historic District boundary near the Project Site, and Hart Park) are not visible from the nearest designated scenic highway (i.e., Santiago Canyon Road), which is approximately 5 miles away from the Project Site to the northeast. Thus, the Project would not substantially damage scenic resources, including, but not limited to, trees, rock outcroppings, and historic buildings, within a scenic highway. Therefore, no impacts related to this issue would occur as a result of the Project.

Significance Determination: No Impact

Mitigation Measures: None

(c) In non-urbanized areas, substantially degrade the existing visual character or quality of public views of the site and its surroundings? (Public views are those that are experienced from publicly accessible vantage point.) If the project is in an urbanized area, would the project conflict with applicable zoning or other regulations governing scenic quality?

The Project Site is located in an urbanized area of the City and is currently developed with a restaurant building, surface parking, and ornamental landscaping. As discussed in response to Checklist Question 4(a) (Cultural Resources – Historical Resources), the existing restaurant building on the Project Site (constructed in 1962) is not considered a significant historical resource under CEQA. The Project Site, while not located within the boundaries of the Old Towne Historic District, is directly across the street from structures within the Old Towne Historic District. Also, Hart Park, across the street and just to the south, is located within the boundaries of the Old Towne Historic District.

The Project Site containing the restaurant building was initially developed at a time when the surrounding neighborhood was already in transition. In the 1960s, along Glassell Street, there were single-family residences and institutional buildings and sites, such as the Holy Family Cathedral School and Hart Park, that were built in the 1930s, and still extant orange groves to the west of the Project Site. In the mid-century, as the local population boomed, new infill, single-family residences were constructed among existing homes. By the late 1960s, Glassell Street became a major thoroughfare to on-ramps for the new Garden Grove Freeway (State Route 22). Since that time, the Project Site area has continued to evolve. Historic aerial photographs reveal that the neighborhood in which the Project Site is located underwent substantial redevelopment between the 1960s and 1990s. By 1986, a multi-story senior-living community residence was built adjacent to the south of the Project Site on the previous site of a miniature golf course that had been associated with the restaurant building on the Project Site. All of this development contributed to a change in character within the immediate neighborhood.

While modern in appearance, the Project is designed to blend visually into the setting of this transitional neighborhood and still provide a glimpse back to what the Project Site area once was. The proposed building has not been designed to replicate any historic building type, but has instead been designed to complement the surrounding neighborhood in mass, scale, appearance and material type. The two-story scale of the building is in keeping with the many buildings in the nearby Old Towne Historic District. Additionally, the use of materials such as plaster, stone and siding can be found on structures throughout the surrounding areas, and the use of aluminum storefront and entry canopy compliments the many buildings within The Plaza. The locally designated historic tree located adjacent to the Project Site would be protected and preserved and would provide additional visual connection to the remaining historic elements such as Hart Park and the nearby Old Towne Historic District.

The Cultural Resources & Historic Preservation Element of the City's General Plan describes that part of the overall vision for the future of the City requires that "[t]he City will build upon existing assets to create a living, active, and diverse environment that compliments all lifestyles and enhances neighborhoods, without compromising the valued resources that make Orange unique." Additionally, one of the stated goals of the Cultural Resources & Historic Preservation Element is to protect neighborhood character. The Project's design, as proposed, would achieve both these goals.

The existing zoning for the Project Site is C-1 (Limited Business), which allows development and operation of a memory care facility on the Project Site with a Conditional Use Permit (CUP), as is being requested by the Project Applicant. At a height of 32 feet and two stories, the proposed building is consistent with the heights of the buildings located adjacent to the Project Site to the south and north. Additionally, because the Project would be associated with the existing senior living facility to the south of the Project Site, the Project would complement the surrounding area more than the existing restaurant building. Further, the Project would be subject to the City's Design Review process, which would ensure that the Project would comply with the City's applicable design standards. Thus, the Project would not conflict with applicable zoning or other regulations governing scenic quality. Therefore, Project impacts related to scenic quality regulations would be less than significant.

Significance Determination: Less Than Significant Impact

Mitigation Measures: None

(d) Would the project create a new source of substantial light or glare which would adversely affect day or nighttime views in the area?

The Project Site and surrounding area are located in an urbanized area of the City. The Project Site and surrounding area contain numerous sources of nighttime lighting, including streetlights, security lighting, illuminated signage, indoor building illumination (light emanating from the interior of structures that passes through windows), and automobile headlights. Glare is a common phenomenon in the Southern California area due mainly to the occurrence of a high number of days per year with direct sunlight and the highly-urbanized nature of the region, which results in a large concentration of potentially reflective surfaces.

Potentially reflective surfaces introduced by the Project include new windows at the Project Site and vehicles belonging to Project residents and visitors that are parked on or adjacent to the Project Site.

The Project would create additional sources of light and glare at the Project Site by removing the existing restaurant building from the Project Site and development the site with a memory care facility, which would have more lighting fixtures and windows than does the existing restaurant building. However, the Project's exterior lighting shall be directed and controlled in a manner as to prevent glare and direct illumination on to public sidewalks or thoroughfares, as required pursuant to the Orange Municipal Code Section 17.12.030.A, to the maximum extent feasible. While the Project would increase ambient light levels in the vicinity, this increase would not be substantial. All outdoor lighting from the Project would be concealed such that it would not be visible from public view due to controlled placement of lights and proposed shielding on the light fixtures, to the maximum extent feasible. In addition, the Project Site is located in an urbanized location that is already illuminated at night and the Project would be compatible with surrounding uses. Further**,** all glass incorporated into building facades would be either low-reflectivity or have a non-glare coating, and buildings would be constructed with materials that have minimal potential for generating glare. With compliance with the Orange Municipal Code, the Project would limit reflective surface areas and reflectivity of architectural materials. Thus, the Project would not create a new source of substantial light or glare which would adversely affect day or nighttime views in the area. Therefore, Project impacts related to light and glare would be less than significant.

2. **AGRICULTURE AND FORESTRY RESOURCES.** In determining whether impacts to agricultural resources are significant environmental effects, lead agencies may refer to the California Agricultural Land Evaluation and Site Assessment Model (1997) prepared by the California Department of Conservation as an optional model to use in assessing impacts on agriculture and farmland. In determining whether impacts to forest resources, including timberland, are significant environmental effects, lead agencies may refer to information compiled by the California Department of Forestry and Fire Protection regarding the state's inventory of forest land, including the Forest and Range Assessment Project, and the Forest Legacy Assessment project, and forest carbon measurement mythology provided in Forest Protocols adopted by the California Air Resources Board. *Would the project:*	**Potentially Significant Impact**	**Less Than Significant with Mitigation Incorporated**	**Less Than Significant Impact**	**No Impact**
(a) Convert Prime Farmland, Unique Farmland, or Farmland of Statewide Importance (Farmland), as shown on the maps prepared pursuant to the Farmland Mapping and Monitoring Program of the California Resources Agency, to non-agricultural use?	☐	☐	☐	☑
(b) Conflict the existing zoning for agricultural use, or a Williamson Act Contract?	☐	☐	☐	☑
(c) Conflict with existing zoning for, or cause rezoning of, forest land (as defined in Public Resources Code section 12220(g)), timberland (as defined by Public Resources Code section 4526), or timberland zoned Timberland Production (as defined by Government Code section 51104 (g))?	☐	☐	☐	☑
(d) Result in the loss of forest land or conversion of forest land to non-forest use?	☐	☐	☐	☑
(e) Involve other changes in the existing environment, which due to their location or nature, could result in conversion of Farmland, to non-agricultural use or conversion of forest land to non-forest use?	☐	☐	☐	☑

Impact Analysis

(a) Would the project convert Prime Farmland, Unique Farmland, or Farmland of Statewide Importance (Farmland), as shown on the maps prepared pursuant to the Farmland Mapping and Monitoring Program of the California Resources Agency, to non-agricultural use?

Important Farmland is located at the following locations in the City:

- 15 acres at the intersection of Chapman Avenue and Jamboree Road;
- 18 acres north of East Taft Avenue and east of SR-55; and
- 8 acres east of Meats Avenue and north of the City of Villa Park.

These locations are at the northern and eastern areas of the City and are not near the Project Site. No agricultural are located on or near the Project Site. Thus, the Project would not convert Prime Farmland, Unique Farmland, or Farmland of Statewide Importance to non-agricultural uses. Therefore, no impacts related to this issue would occur as a result of the Project.

Significance Determination: No Impact

Mitigation Measures: None

(b) Would the project conflict with existing zoning for agricultural use, or a Williamson Act Contract?

The Williamson Act of 1965 allows local governments to enter into contract agreements with local landowners with the purpose of trying to limit specific parcels of land to agricultural or other related open space use.[2] The Project Site and surrounding areas are urbanized and are not subject to a Williamson Act Contract. The Project Site is zoned Limited Business and is not zoned for agricultural use. Thus, the Project would not conflict with existing zoning for agricultural use or a Williamson Act Contract. Therefore, no impacts related to this issue would occur as a result of the Project.

Significance Determination: No Impact

Mitigation Measures: None

(c) Would the project conflict with existing zoning for, or cause rezoning of, forest land (as defined in Public Resources Code section 12220(g)), timberland (as defined by Public Resources Code section

---

[2] *State of California Department of Conservation, Williamson Act Program, website: http://www.conservation.ca.gov/dirp/lca/Pages/index.aspx, accessed June 2019.*

4526), or timberland zoned Timberland Production (as defined by Government Code section 51104 (g))?

The Project Site is zoned Limited Business and is not zoned for forest land or timberland. The Project Site and surrounding areas are urbanized and do not contain any timberland. Thus, the Project would not conflict with existing zoning for, or cause rezoning of, forest land (as defined in Public Resources Code section 12220(g)), timberland (as defined by Public Resources Code section 4526), or timberland zoned Timberland Production (as defined by Government Code section 51104 (g)). Therefore, no impacts related to this issue would occur as a result of the Project.

Significance Determination: No Impact

Mitigation Measures: None

(d) Would the project result in the loss of forest land or conversion of forest land to non-forest use?

The Project Site and surrounding areas are urbanized and do not contain forest land. Thus, the Project would not result in the loss of forest land. Therefore, no impacts related to this issue would occur as a result of the Project.

Significance Determination: No Impact

Mitigation Measures: None

(e) Would the project involve other changes in the existing environment, which due to their location or nature, could result in conversion of Farmland, to non-agricultural use or conversion of forest land to non-forest use?

The Project Site and surrounding areas are urbanized and do not contain farmland or forest land. Thus, the Project would not result in the conversion of Farmland to non-agricultural use or forest land to non-forest use. Therefore, no impacts related to this issue would occur as a result of the Project.

Significance Determination: No Impact

Mitigation Measures: None

Cumulative Impacts

As shown on Table 36 later in this MND, there are five cumulative projects within proximity to the Project Site. As with the Project, none of the cumulative projects is located on agricultural land or forest land. Thus, no cumulative impacts related to agricultural resources would occur.

Significance Determination: Less Than Significant Impact

Mitigation Measures: None

Cumulative Impacts

As discussed previously in response to Checklist Question 1(a) (Aesthetics – Scenic Vistas), there are no scenic vistas available from locations near the Project Site. As shown on Table 36 later in this MND, there are five cumulative projects within proximity to the Project Site. The only cumulative project that is within visual proximity of the Project Site is Cumulative Project #2, which includes development of 7 single-family homes. Because there are no scenic vistas available from the Project Site area, no cumulative impacts related to scenic vistas would occur. The degree to which any of the cumulative projects could result in impact to scenic resources would be gauged by the City on a project-by-project basis. However, there are no shared scenic resources among the cumulative projects and the Project. Cumulative Project #2 would be developed within a residential neighborhood and would compatible with the existing surrounding neighborhood. Project impacts related to visual character were found to be less than significant Thus, cumulative visual character impacts would be less than significant. All of the sites of the cumulative projects are located in an urbanized area of the City and contain existing sources of light and glare. All of the cumulative projects would be required to comply with the City's requirements related to lighting and window material. For these reasons, cumulative impacts related to aesthetics would be less than significant.

3. **AIR QUALITY.** The significance criteria established by the South Coast Air Quality Management District (SCAQMD) may be relied upon to make the following determinations. *Would the project:*	**Potentially Significant Impact**	**Less Than Significant with Mitigation Incorporated**	**Less Than Significant Impact**	**No Impact**
(a) Conflict with or obstruct implementation of the applicable Air Quality Management Plan?	☐	☐	☑	☐
(b) Result in a cumulatively considerable net increase of any criteria pollutant for which the air basin is non-attainment under an applicable federal or state ambient air quality standard?	☐	☐	☑	☐
(c) Expose sensitive receptors to substantial pollutant concentrations?	☐	☐	☑	☐
(d) Result in other emissions (such as those leading to odors) adversely affecting a substantial number of people?	☐	☐	☐	☑

Impact Analysis

This analysis in this section is based primarily on the following (refer to Appendix A):

- *Air Quality and Greenhouse Gases Modeling, NT Environmental Consulting, July 2019.*

Regulatory Framework

Federal

Clean Air Act

The Federal Clean Air Act (CAA) was first enacted in 1955 and has been amended numerous times in subsequent years, with the most recent amendments occurring in 1990. At the federal level, the United States Environmental Protection Agency (USEPA) is responsible for implementing some portions of the CAA (e.g., certain mobile source and other requirements). Other portions of the CAA (e.g., stationary source requirements) are implemented by state and local agencies. In California, the CCAA is administered by the California Air Resources Board (CARB) at the state level and by the air quality management districts and air pollution control districts at the regional and local levels.

The 1990 amendments to the CAA identify specific emission reduction goals for areas not meeting the National Ambient Air Quality Standard (NAAQS). These amendments require both a demonstration of reasonable further progress towards attainment and the incorporation of additional sanctions for failure to attain or to meet interim milestones. NAAQS have been established for seven major air pollutants: carbon monoxide (CO), nitrogen dioxide (NO_2), ozone (O_3), $PM_{2.5}$ (particulate matter, 2.5 microns), PM_{10} (particulate matter, 10 microns), sulfur dioxide (SO_2), and lead (Pb).

The CAA requires USEPA to designate areas as attainment, nonattainment, or maintenance (previously nonattainment and currently attainment) for each criteria pollutant based on whether the NAAQS have been achieved. The federal standards are shown on Table 1. USEPA has classified the Orange County portion of the South Coast Air Basin (Basin) as a nonattainment area for O_3 and $PM_{2.5}$.

State

California Clear Air Act

In addition to being subject to the requirements of the CAA, air quality in California is also governed by more stringent regulations under the California Clear Air Act (CCAA). In California the CCAA is administered by CARB at the state level and by the air quality management districts and air pollution control districts at the regional and local levels. CARB, which became part of the California Environmental Protection Agency in 1991, is responsible for meeting the state requirements of the CAA, administering the CCAA, and establishing the California Ambient Air Quality Standards (CAAQS). The CCAA, as amended in 1992, requires all air districts in the state to achieve and maintain the CAAQS. CAAQS are generally more stringent than their corresponding NAAQS and incorporate additional standards for sulfates, hydrogen sulfide, vinyl chloride, and visibility-reducing particles.

The CCAA requires CARB to designate areas within California as either attainment or nonattainment for each criteria pollutant based on whether the CAAQS thresholds have been achieved. Under the CCAA, areas are designated as nonattainment for a pollutant if air quality data shows that a state standard for the pollutant was violated at least once during the previous three calendar years. Exceedances that are affected by highly irregular or infrequent events are not considered violations of a state standard and are not used as a basis for designating areas as nonattainment. Under the CCAA, the non-desert Orange County portion of the Basin is designated as a nonattainment area for O_3, PM_{10}, and $PM_{2.5}$. The state standards and attainment/non-attainment are also shown above on Table 1.

California Air Toxics Program

CARB's Air Toxics Program was established in 1983 in response to the adoption of AB 1807, the Toxic Air Contaminant Identification and Control Act. AB 1807 directs CARB and the State Office of Environmental Health Hazard Assessment (OEHHA) to identify toxic air contaminants (TACs) and determine whether any regulatory action is necessary to reduce their risks to public health. Substances formally identified as TACs include diesel particulate matter and environmental tobacco smoke.

Table 1
State and Federal Ambient Air Quality Standards and Attainment for Orange County

Pollutant	Averaging Period	California		Federal	
		Standard	Attainment Status	Standard	Attainment Status
Ozone – O_3	1-hour	0.09 ppm (180 μg/m^3)	Non-attainment	-	-
	8-hour	0.070 ppm (137 μg/m^3)	Non-attainment	0.070 ppm (137 μg/m^3)	Non-attainment
Respirable Particulate Matter – PM_{10}	24-hour	50 μg/m^3	Non-attainment	150 μg/m^3	Maintenance
	Annual Arithmetic Mean	20 μg/m^3	Non-attainment	-	-
Fine Particulate Matter – $PM_{2.5}$	24-hour	-	-	35 μg/m^3	Non-attainment
	8-hour	12 μg/m^3	Non-attainment	12 μg/m^3	Non-attainment
Carbon Monoxide – CO	1-hour	20 ppm (23 mg/m^3)	Attainment	35 ppm (40 mg/m^3)	Maintenance
	8-hour	9.0 ppm (10 mg/m^3)	Attainment	9 ppm (10 mg/m^3)	Maintenance
Nitrogen Dioxide – NO_2	1-hour	0.18 ppm (338 μg/m^3)	Attainment	100 ppb (188 μg/m^3)	Maintenance
	Annual Arithmetic Mean	0.030 ppm (57 μg/m^3)	Attainment	53 ppb (100 μg/m^3)	Maintenance
Sulfur Dioxide – SO_2	1-hour	0.25 ppm (655 μg/m^3)	Attainment	75 ppb (196 μg/m^3)	Attainment
	24-hour	0.04 ppm (105 μg/m^3)	Attainment	-	-
Lead – Pb	30-day average	1.5 μg/m^3	Attainment	-	-
	Calendar Quarter	-	-	0.15 μg/m^3	Attainment

Source: CARB, Area Designations Maps/State and National, www.arb.ca.gov/desig/adm/adm.htm. Accessed July 29, 2019.

Air Quality and Land Use Handbook: A Community Health Perspective

Released by CARB in 2005, the *Air Quality and Land Use Handbook: A Community Health Perspective* provides recommendations regarding the siting of new sensitive land uses near potential sources of TACs (e.g., freeways, distribution centers, rail yards, ports, refineries, chrome plating facilities, dry cleaners, and gas stations), as well as the siting of new TAC sources in proximity to existing sensitive land uses.[3] The recommendations are advisory and should not necessarily be interpreted as defined "buffer zones"; if a project or sensitive land uses are within the siting distance, CARB recommends further analysis.

Regional

South Coast Air Quality Management District

The Project is located within the 6,745-square-mile Basin. The Basin includes all of Orange County and the non-desert portions of Los Angeles, Riverside, and San Bernardino counties. It is bounded by the Pacific Ocean to the west; the San Gabriel, San Bernardino, and San Jacinto Mountains to the north and east; and the San Diego County line to the south. The South Coast Air Quality Management District (SCAQMD) is the agency principally responsible for air pollution control in the Basin. Specifically, SCAQMD is responsible for planning, implementing, and enforcing programs designed to attain and maintain CAAQS established by CARB and NAAQS established by the USEPA. All projects in the SCAQMD jurisdiction are subject to SCAQMD rules and regulations, including, but not limited to, the following:

- Rule 401 Visible Emissions: This rule prohibits air discharge that results in a plume that is as dark as or darker than what is designed as No. 1 Ringelmann Chart by the United States Bureau of Mines for an aggregate of three minutes in any one hour.

- Rule 402 Nuisance: This rule prohibits the discharge of "such quantities of air contaminants or other material which cause injury, detriment, nuisance, or annoyance to any considerable number of people or the public, or which endanger the comfort, repose, health or safety of any such persons or the public, or which cause, or have a natural tendency to cause, injury or damage to business or property."

- Rule 403 Fugitive Dust: This rule mandates that projects reduce the amount of particulate matter entrained in the ambient air as a result of fugitive dust sources by requiring actions to prevent, reduce, or mitigate fugitive dust emissions from any active operation, open storage pile, or disturbed surface area.

2016 Air Quality Management Plan

The 2016 Air Quality Management Plan (2016 AQMP) was adopted in April 2017 and represents the most updated regional blueprint for achieving federal air quality standards. It relies on emissions forecasts based

---

[3] *CARB, Air Quality and Land Use Handbook, A Community Health Perspective, April 2005.*

on demographic and economic growth projections provided by the Southern California Association of Governments' (SCAG) 2016-2040 Regional Transportation Plan/Sustainable Communities Strategy (2016-2040 RTP/SCS).

Southern California Association of Governments

SCAG is the regional planning agency for Orange, Los Angeles, Ventura, Riverside, San Bernardino, and Imperial Counties that is tasked with addressing regional issues relating to transportation, the economy, community development, and the environment. As the federally designated Metropolitan Planning Organization (MPO) for the six-county Southern California region, SCAG is required by law to ensure that transportation activities conform to, and are supportive of, regional and state air quality plan goals to attain NAAQS. Additionally, SCAG is a co-producer, with the SCAQMD, of the transportation strategy and transportation control measure sections of the Basin's AQMP. The 2016-2040 RTP/SCS recognizes that transportation investments and future land use patterns are inextricably linked, and that continued recognition of this close relationship will help the region make choices that sustain existing resources and expand efficiency, mobility, and accessibility for people across the region. In particular, the 2016-2040 RTP/SCS draws a closer connection between where people live and work, and it offers a blueprint for how Southern California can grow more sustainably.

Local

City of Orange General Plan Natural Resources Element

The City of Orange General Plan Natural Resources Element identifies policies and strategies for preserving air quality within the City, and it acknowledges the interrelationships among transportation and land use planning in meeting the City's mobility and air quality goals. However, the goals and policies of the Natural Resources Element mainly direct and guide City action and would have limited to no applicability to the Project, which is a private land use development.

Pollutants and Effects

State and Federal Criteria Pollutants

Air quality is measured by the ambient air concentrations of seven pollutants that have been identified by the USEPA due to their potentially harmful effects on public health and the environment. These "criteria air pollutants" include CO, ground-level O_3, NO_2, SO_2, PM_{10} or less in diameter, $PM_{2.5}$ microns or less in diameter, and Pb. The descriptions of each criteria air pollutant below and their health effects are based on information provided by the USEPA and the SCAQMD.[4,5]

---

[4] *USEPA, Criteria Air Pollutants, www.epa.gov/criteria-air-pollutants.*

[5] *SCAQMD, Final 2012 Air Quality Management Plan, February 2013.*

Carbon Monoxide – CO

CO is a colorless and odorless gas that is released when something is burned. Outdoors, the greatest sources of CO are cars, trucks, and other vehicles or machinery that burn fossil fuels. Unvented kerosene and gas space heaters, leaking chimneys and furnaces, and gas stoves can release CO and affect air quality indoors. Breathing air with elevated concentrations of CO reduces the amount of oxygen that can be transported via the blood stream and can lead to weakened heart contractions; as a result, CO inhalation can be particularly harmful to people with chronic heart disease. At moderate concentrations, CO inhalation can cause nausea, dizziness, and headaches. High concentrations of CO may be fatal. However, such conditions are not likely to occur outdoors.

Ozone – O_3

O_3 is a colorless gas that is formed when volatile organic compounds (VOCs) and nitrogen oxides (NO_x) undergo slow photochemical reactions in the presence of ultraviolet sunlight. The greatest source of VOC and NO_x emissions is automobile exhaust. O_3 concentrations are generally highest during the summer months when direct sunlight, light wind, and warm temperatures are favorable to its formation. Elevated levels of O_3 irritate the lungs and airways and may cause throat and chest pain, as well as coughing, thereby increasing susceptibility to respiratory infections and reducing the ability to exercise. Effects are more severe in people with asthma and other respiratory ailments. Long-term exposure may lead to the scarring of lung tissue and reduced lung efficiency.

Nitrogen Dioxide – NO_2

NO_2 is primarily a byproduct of fossil fuel combustion and is therefore emitted by automobiles, power plants, and industrial facilities. The principal form of nitrogen oxide produced by fossil fuel combustion is nitric oxide (NO), which reacts quickly to form NO_2, creating the mixture of NO and NO_2 commonly called NO_x. NO_2 absorbs blue light and results in reduced visibility and a brownish-red cast to the atmosphere. NO_2 also contributes to the formation of PM_{10}. Nitrogen oxides irritate the nose and throat and increase susceptibility to respiratory infections, especially in people with asthma. Longer exposures to elevated concentrations of NO_2 may even contribute to the development of asthma. The principal concern of NO_x is as a precursor to the formation of O_3.

Sulfur Dioxide – SO_2

Sulfur oxides (SO_x) are compounds of sulfur and oxygen molecules. SO_2 is the pre-dominant form found in the lower atmosphere and is a product of burning sulfur or sulfur-containing materials. Major sources of SO_2 include power plants, large industrial facilities, diesel vehicles, and oil-burning residential heaters. SO_2 may aggravate lung diseases, especially bronchitis. It also constricts breathing passages, especially in asthmatics and people involved in moderate to heavy exercise. SO_2 may cause wheezing, shortness of breath, and coughing. High levels of particulates appear to worsen the effect of SO_2, and long-term exposure to both pollutants leads to higher rates of respiratory illnesses.

Particulate Matter (PM_{10} and $PM_{2.5}$)

The human body naturally prevents the entry of larger particles into itself. However, smaller particles less than 10 microns (PM_{10}) or even less than 2.5 microns ($PM_{2.5}$) in diameter can enter the body and become trapped in the nose, throat, and upper respiratory tract. Here, these particulates may aggravate existing heart and lung diseases, affect the body's defenses against inhaled materials, and damage lung tissue. Those most sensitive to PM_{10} and $PM_{2.5}$ include children, the elderly, and those with chronic lung and/or heart disease.

Lead – Pb

Airborne lead is emitted from industrial facilities and from the sanding or removal of old lead-based paint. Smelting and other metal processing activities are the primary sources of Pb emissions. Pb effects most commonly encountered in current populations are neurological effects in children and cardiovascular effects in adults (e.g., high blood pressure and heart disease). Infants and young children are especially sensitive to even low levels of Pb, which may contribute to behavioral problems, learning deficits, and lowered IQ.

Toxic Air Contaminants - TACs

TACs refer to a diverse group of "non-criteria" air pollutants that can affect human health but have not had ambient air quality standards established for them. This is not because they are fundamentally different from the pollutants discussed above, but because their effects tend to be local rather than regional. As discussed earlier, CARB and OEHHA determine if a substance should be formally identified, or "listed," as a TAC in California. A complete list of these substances is maintained on CARB's website.[6]

One key TAC is diesel particulate matter (diesel PM), which is emitted in diesel engine exhaust. Released in May 2015 by the SCAQMD, the Multiple Air Toxics Exposure Study in the South Coast Air Basin Final Report (Mates IV) determined that about 90 percent of the carcinogenic risk from air toxics in the Basin is attributable to mobile source emissions. Of the three carcinogenic TACs that constitute the majority of the known health risk from motor vehicle traffic – diesel PM from primarily trucks, and benzene and 1,3-butadiene from passenger vehicles – diesel PM represents the majority of the potential cancer risk from vehicle traffic.[7] Overall, diesel PM was found to account for, on average, about 68 percent of the air toxics risk in the Basin.[8]

---

[6] *CARB, Toxic Air Contaminant Identification List, www.arb.ca.gov/toxics/id/taclist.htm, last reviewed by CARB July 18, 2011.*

[7] *CARB, Air Quality and Land Use Handbook: A Community Health Perspective, April 2005.*

[8] *SCAQMD, Multiple Air Toxics Exposure Study in the South Coast Air Basin (MATES IV), May 2015.*

Volatile Organic Compounds - VOCs

VOCs are typically formed from the combustion of fuels and/or released through the evaporation of organic liquids. Some VOCs are also classified by the state as toxic air contaminants, though there are no VOC-specific ambient air quality standards. Once emitted, VOCs can mix in the air with other pollutants (e.g. NO_x, CO, SO_2, etc.) and contribute to the formation of photochemical smog.

Existing Conditions

As discussed earlier, the Project Site is located within the 6,745-square-mile Basin that includes all of Orange County and the non-desert portions of Los Angeles, Riverside, and San Bernardino Counties. Air quality within the Basin is influenced by a wide range of emissions sources, such as dense population centers, heavy vehicular traffic, and industry. These sources in addition to the topography and climate of Southern California combine to make the Basin an area of high air pollution potential. The USEPA has classified Orange County as a nonattainment area for O_3 and $PM_{2.5}$, meaning that this portion of the Basin does not meet NAAQS for these pollutants. Additionally, the Orange County portion of the Basin also does not meet CAAQS for O_3, PM_{10}, and $PM_{2.5}$. Table 1 summarizes CAAQS and NAAQS and the attainment status for Orange County with respect to each criteria pollutant.

Air Quality Monitoring Data

The SCAQMD monitors air quality conditions at 38 source receptor areas (SRA) throughout the Basin. The Project Site is located in SCAQMD's SRA No. 17, "Central Orange County." Table 2 shows pollutant levels, State and federal standards, and the number of exceedances recorded in SRA No. 17 from 2016 through 2018. The one-hour State standard for O_3 was exceeded three times during this three-year period and the federal standard was exceeded nine times. The 24-hour State standard for PM_{10} was exceeded 33 times. The 24-hour federal standard for $PM_{2.5}$ was exceeded ten times. CO and NO_2 levels did not exceed their respective CAAQS or NAAQS during this period. SO_2, and lead pollutant data is not available for SRA No. 8.

Table 2
Ambient Air Quality Data – SRA No.17 "Central Orange County"

Pollutants and State and Federal Standards	Maximum Concentrations and Frequencies of State/Federal Standards Exceedance		
	2016	**2017**	**2018**
Ozone – O_3			
Maximum 1-hour Concentration (ppm)	0.103	0.090	0.112
Days > 0.09 ppm (State 1-hour standard)	2	0	1
Days > 0.070 ppm (Federal 8-hour standard)	4	4	1
Carbon Monoxide – CO			
Maximum 1-hour Concentration (ppm)	2.6	2.5	2.3
Days > 20 ppm (State 1-hour standard)	0	0	0
Maximum 8-hour Concentration (ppm)	2.1	2.1	1.9
Days > 9.0 ppm (State 8-hour standard)	0	0	0
Nitrogen Dioxide – NO_2			
Maximum 1-hour Concentration (ppm)	0.0643	0.0812	0.0660
Days > 0.18 ppm (State 1-hour standard)	0	0	0
PM_{10}			
Maximum 24-hour Concentration ($\mu m/m^3$)	74	128	129
Days > 50 $\mu g/m^3$ (State 24-hour standard)	3	17	13
$PM_{2.5}$			
Maximum 24-hour Concentration ($\mu g/m^3$)	44.45	53.90	54.10
Days > 35 $\mu g/m^3$ (Federal 24-hour standard)	1	6	3
Sulfur Dioxide – SO_2			
Maximum 24-hour Concentration (ppb)	N/A	N/A	N/A
Days > 0.04 ppm (State 24-hour standard)	N/A	N/A	N/A

ppm = parts per million of air, by volume
$\mu g/m^3$ = micrograms per cubic meter
N/A = not available at this monitoring station.
Source: SCAQMD Historical Data by Year, www.aqmd.gov/home/air-quality/air-quality-data-studies/historical-data-by-year. Accessed July 29, 2019.

Existing Health Risk

Based on the MATES IV model, the calculated cancer risk in the Project Site area is approximately 944 in a million.[9] In general the risk near the Project Site is comparable to, if slightly below, other urbanized areas in Orange County.

---

[9] *SCAQMD, Multiple Air Toxics Exposure Study in the South Coast Air Basin (MATES IV), MATES IV Interactive Carcinogenicity Map.*

The OEHHA, on behalf of the California Environmental Protection Agency (CalEPA), provides a screening tool called CalEnvironScreen that may be used to identify California communities that are disproportionately burdened by, and vulnerable to, multiple sources of pollution. According to CalEnviroScreen 3.0, the Project's census tract is ranked 45th to 50th percentile, which means that the Project Site's pollution burden is relatively average in comparison to other communities within California.

Sensitive Receptors

Some land uses are considered more sensitive to changes in air quality than others, depending on the population groups and the activities involved. Generally speaking, sensitive land uses, or sensitive receptors, are those where sensitive individuals are most likely to spend time. Individuals most susceptible to poor air quality include children, the elderly, athletes, and those with cardiovascular and chronic respiratory diseases. As a result, sensitive receptors to air quality may include schools (i.e., elementary schools or high schools), childcare centers, parks and playgrounds, long-term health care facilities, rehabilitation facilities, convalescent facilities, retirement facilities, residences, and athletic facilities. Sensitive receptors in the vicinity of the Project Site include, but are not limited to, the following:

- Holy Family Cathedral Residences: This receptor consists of residential land uses for the church's on-site religious faculty (e.g. convents, rectory, etc.). The residential building that is nearest to the Project, "Cathedral House," is approximately 15 feet north of the Project Site at 566 S. Glassell Street.

- Holy Family Cathedral School: This school receptor is located at 530 S. Glassell Street and consists of sensitive classroom buildings as well as various outdoor recreational/athletic facilities. The nearest classroom building is approximately 200 feet to the north. The nearest outdoor facility is a grass field located directly west of the Project Site. Other outdoor plays areas are located at least 150 feet to the west.

- Glassell Street Residences: This receptor consists of residential land uses located along Glassell Street, approximately 95 feet east of the Project Site across Glassell Street.

- Fashion Park Street Residences: This receptor consists of residential land uses located along Fashion Park Street, approximately 350 feet west of the Project Site.

- Park Plaza Assisted Living Facility: This receptor includes the existing Park Plaza assisted living facilities that are located directly south of the Project Site.

- Hart Park: This park contains various outdoor athletic and recreational facilities. It is located approximately 200 feet southeast of the Project Site.

---

https://scaqmdonline.maps.arcgis.com/apps/webappviewer/index.html?id=470c30bc6daf4ef6a43f0082973ff45f Accessed July 29, 2019.

Existing Project Site Emissions

The Project Site currently contains a 5,959-square-foot restaurant building and its related surface parking. As the restaurant is no longer operational (as of December 31, 2018), the site contains no active uses and likely generates nominal, if any, anthropogenic air emissions from area, energy, mobile, or other sources. Nevertheless, emissions associated with this former use were estimated for comparison purposes and are shown on Table 3.

Table 3
Existing Project Site Daily Operations Emissions

Emissions Source	Emissions in lbs per day					
	VOC	NO_x	CO	SO_x	PM_{10}	$PM_{2.5}$
Area	<1	<1	<1	<1	<1	<1
Energy	<1	<1	<1	<1	<1	<1
Mobile Sources	1	4	13	<1	4	1
Net Regional Total	**1**	**5**	**14**	**<1**	**4**	**1**
Source: NTEC, 2019, based on CalEEMod 2016.3.2 model runs.						

Project Impacts

Methodology

The analysis below focuses on the potential change in air quality conditions that could result from the Project's construction- and operations-related air pollutant emissions. Specific methodologies used to evaluate these emissions are discussed below.

Construction

Construction of the Project could affect local and regional air quality due to the use of heavy-duty gasoline and diesel-powered construction equipment, as well as the generation of construction vehicle trips. Demolition, grading, and site preparation activities would also result in fugitive dust emissions. It is important to consider that construction emissions can vary substantially from day to day depending on levels of construction activity, the specific types of construction activities taking place and vehicles/equipment in use, and, for dust, the prevailing weather conditions.

Based on the criteria set forth in the SCAQMD CEQA Air Quality Handbook, a project would have the potential to violate an air quality standard or contribute substantially to an existing violation and result in a significant impact with regard to construction emissions if its regional emissions from both direct and indirect construction sources would exceed the threshold levels shown on Table 3.

SCAQMD localized significance thresholds (LSTs) are also included below on Table 4. LSTs represent the maximum emissions from a project that would not be expected to cause or contribute to an exceedance of the most stringent applicable federal or state ambient air quality standards. They are developed based on

the ambient concentrations of a given pollutant for a source receptor and distances to the nearest sensitive receptor. The SCAQMD provides LSTs for NO_x, CO, PM_{10}, and $PM_{2.5}$. The SCAQMD does not provide a LST for SO_2 because land use development projects typically result in negligible construction and long-term operational emissions of this pollutant. Additionally, because VOCs are not a criteria pollutant, there is no ambient standard or SCAQMD LST for VOCs. However, due to the role that VOCs play in O_3 formation and their classification as a precursor pollutant, a regional emissions threshold has been established. LSTs for the Project were obtained via the SCAQMD's mass rate look-up tables, which are used to determine whether or not a project may generate significant adverse localized air quality impacts.

Table 4
SCAQMD Construction Emissions Thresholds

Criteria Pollutant	Construction Emissions (lbs per day)	
	Regional	Localized[A]
Volatile Organic Compounds – VOCs	75	-
Nitrogen Oxides - NO_x	100	81
Carbon Monoxide – CO	550	485
Sulfur Oxides - SO_x	150	-
Respirable Particulates – PM_{10}	150	4
Fine Particulates – $PM_{2.5}$	55	3

[A] *Localized significance thresholds assumed a 1-acre and 25-meter (82-foot) receptor distance, which are the smallest site and shortest distance used for analysis in the LST guidance document. The SCAQMD has not developed LST values for VOC or SO_x. The Project is located in SRA No. 17, "Central Orange County."*

Sources: SCAQMD, Air Quality Significance Thresholds, revised April 2019; and, SCAQMD, LST Methodology Appendix C – Mass Rate LST Look-Up Table, October 2009.

The Project's construction-related emissions were estimated using SCAQMD's CalEEMod 2016.3.2 model. Modeling results are included in Appendix A. The analysis assumes that all construction activities would comply with SCAQMD Rule 403 for fugitive dust, as is mandatory for all construction projects in the Basin.

Operations

The SCAQMD has also established significance thresholds to evaluate potential impacts associated with long-term project operations. Regional thresholds and LSTs for Project operations are shown on Table 5. Operational emissions for the Project were also calculated using CalEEMod 2016.3.2.

Table 5
SCAQMD Operational Emissions Thresholds

Criteria Pollutant	Operational Emissions (lbs per day)	
	Regional	Localized[A]
Volatile Organic Compounds - VOCs	55	-
Nitrogen Oxides - NO_x	55	81
Carbon Monoxide – CO	550	485
Sulfur Oxides - SO_x	150	-
Respirable Particulates – PM_{10}	150	1
Fine Particulates – $PM_{2.5}$	55	1

[A] *Localized significance thresholds assumed a 1-acre and 25-meter (82-foot) receptor distance, which are the smallest site and shortest distance used for analysis in the LST guidance document. The SCAQMD has not developed LST values for VOC or SO_x. The Project is located in SRA No. 17, "Central Orange County."*

Sources: SCAQMD, Air Quality Significance Thresholds, revised April 2019; and, SCAQMD, LST Methodology Appendix C – Mass Rate LST Look-Up Table, October 2009.

TACs (Construction and Operations)

Potential TAC impacts are evaluated by conducting a qualitative analysis consistent with the CARB Handbook, followed by a more detailed analysis (i.e., dispersion modeling), as necessary. The qualitative analysis consists of reviewing the Project to identify any new or modified TAC emissions sources. If the qualitative evaluation does not rule out significant impacts from a new source, or modification of an existing TAC emissions source, a more detailed analysis is conducted.

(a) Would the project conflict with or obstruct implementation of the applicable Air Quality Management Plan?

The analysis below assesses the Project's consistency with the SCAQMD's 2016 AQMP and SCAG's 2016-2040 RTP/SCS. As discussed earlier, the 2016 AQMP's projections for achieving State and federal air quality goals are based on population, housing, and employment trend assumptions in SCAG's 2016-2040 RTP/SCS, which are themselves largely based on local growth forecasts from local government; therefore, a project is consistent with the 2016 AQMP, in part, if it is consistent with the population, housing, and employment assumptions and smart growth policies that were used in the formation of the AQMP.

The Project's development of a 36-bed memory care/assisted living facility would not exceed the growth assumptions of the 2016-2040 RTP/SCS. The Project Site is designated C1 (Limited Business) by the local zoning ordinance, a designation which permits senior housing and similar uses. As such, the 2016-2040 RTP/SCS's growth assumptions for the City accommodate the proposed use on the Project Site.

Development of the Project would also be consistent with the smart growth policies of the 2016-2040 RTP/SCS to increase housing and employment density within close proximity to HQTAs. Though the

Project Site is not currently located within a HQTA, the Project Site is in an area that is at the forefront of an emerging HQTA, projected to encompass the Project Site area by 2040, according to the 2016-2040 RTP/SCS. The Orange County Transportation Authority (OCTA) 59 bus route, which includes stops within 350 feet of the Project Site, provides service generally along the Glassell Street/Grand Avenue corridor between University of California Irvine and Anaheim. This line provides direct service to the Orange Transportation Center and Santa Ana Regional Transportation Center, both of which are Metrolink stations and major hubs for local and regional bus lines. The OCTA 59 bus route has approximately a 25-minute service frequency during peak commute hours. The Project Site is also located approximately 3,500 feet southwest of the Orange Transportation Center. As such, though the Project Site's location does not currently meet the definitions of a HQTA, it is nevertheless located within close proximity to a HQTA and is projected to be located within a HQTA by 2040.

To summarize the analysis in response to Checklist Question 3(a): (1) Project-related growth would be consistent with 2016 AQMP projections that are themselves based on 2016-2040 RTP/SCS projections; (2) the Project Site's location near a HQTA that is projected to encompass the Project Site by 2040 would be consistent with the latest regional land use planning strategies to reduce VMT and associated air emissions; and (3) as discussed in response to Checklist Question 3(b) (Air Quality – Cumulatively Considerable Net Increase in Criteria Pollutants), pollutant emissions associated with the Project's construction and operations would not exceed or contribute to any exceedance of ambient air quality standards and thresholds, nor would they interfere with the AQMP's attainment of air quality standards or interim emissions reductions. As a result, the Project would not conflict with or obstruct the implementation of any applicable air quality plans. Therefore, Project impacts related to AQMP consistency would be less than significant.

Significance Determination: Less Than Significant Impact

Mitigation Measures: None

(b) Would the project result in a cumulatively considerable net increase of any criteria pollutant for which the air basin is non-attainment under an applicable federal or state ambient air quality standard?

The Project would contribute to local and regional air pollutant emissions during its construction (short-term) and operations (long-term). However, as discussed in the analysis below, construction and operation of the Project would not result in exceedances of SCAQMD daily thresholds for project-specific impacts that could subsequently cause cumulatively considerable increases in emissions of pollutants for which the Basin is designated as non-attainment.

Construction Emissions

Construction of the Project is anticipated to take approximately 17 months. During this time, a variety of heavy-duty diesel-powered vehicles and equipment would be operated on-site. Demolition of the existing site uses would likely require an excavator, as well as a loader, bulldozer, or another similar grading vehicle. Grading for the Project would require similar vehicles, as well as a grader. During the demolition and

excavation phases, haul trucks would be utilized to transport demolished materials and any cut soils to a nearby landfill. The building construction phase could require vehicles such as a forklift and a crane or truck-mounted crane. Table 6 summarizes the potential construction schedule that was used to model the Project's air quality impacts.

Table 6
Approximate Construction Schedule

Phase	Duration
Demolition and Site Preparation	1.5 months
Grading	1.5 months
Building Construction	14 months
Architectural Coatings	2 months[A]
[A] *The application of architectural coatings would overlap with building construction.*	

The Project's daily regional and local emissions from construction, as estimated using SCAQMD's CalEEMod 2016.3.2 model, are shown on Table 7. Regional thresholds and LSTs for each air pollutant are also shown for comparison. As shown, the Project's unmitigated regional construction emissions would not exceed SCAQMD regional significance thresholds for VOC, NO_x, CO, SO_x, PM_{10}, or $PM_{2.5}$. Local emissions also would not exceed SCAQMD LSTs for NO_x, CO, PM_{10}, or $PM_{2.5}$. As a result, the Project's construction emissions impacts related to regional and localized air quality would be less than significant.

Table 7
Regional and Localized Construction Emissions

	Emissions in lbs per day					
	VOC	**NO_x**	**CO**	**SO_x**	**PM_{10}**	**$PM_{2.5}$**
Regional Emissions						
2020	2	16	13	<1	2	1
2021	2	14	15	<1	1	1
Maximum Regional Emissions	2	16	15	<1	2	1
Regional Daily Threshold	75	100	550	150	150	55
Exceed Threshold?	**No**	**No**	**No**	**No**	**No**	**No**
Localized Emissions						
2020	1	16	12	<1	1	1
2021	1	11	11	<1	1	1
Maximum Localized Emissions	1	16	12	<1	1	1
Localized Significance Threshold	-	81	485	-	4	3
Exceed Threshold?	**-**	**No**	**No**	**-**	**No**	**No**
Source: NTEC, 2019, based on CalEEMod 2016.3.2 model runs. LST analysis based on 1-acre site with 25-meter distances to receptors in SRA No. 17, "Central Orange County."						

Operational Emissions

Emissions associated with the Project's operation were also calculated using CalEEMod 2016.3.2. As shown on Table 8, the Project would not introduce any new major sources of air pollution; emissions would not exceed SCAQMD's regional significance thresholds for VOC, NO_x, CO, PM_{10}, and $PM_{2.5}$, nor would they exceed SCAQMD LSTs for NO_x, CO, PM_{10}, or $PM_{2.5}$. As a result, the Project's operations emissions impacts related to regional and localized air quality would be less than significant.

Table 8
Regional and Localized Operational Emissions

Emissions Source	Emissions in lbs per day					
	VOC	**NO_x**	**CO**	**SO_x**	**PM_{10}**	**$PM_{2.5}$**
Area	<1	<1	3	<1	<1	<1
Energy	<1	<1	<1	<1	<1	<1
Mobile Sources	<1	1	4	<1	1	<1
Project Regional Emissions	<1	1	6	<1	1	<1
Regional Daily Thresholds	55	55	550	150	150	55
Exceed Threshold?	**No**	**No**	**No**	**No**	**No**	**No**
Project Localized Emissions	<1	<1	3	<1	<1	<1
Localized Significance Thresholds	-	81	485	-	1	1
Exceed Threshold?	**-**	**No**	**No**	**-**	**No**	**No**

Source: NTEC, 2019, based on CalEEMod 2016.3.2 model runs. LST analysis based on 1-acre site with 25-meter distances to receptors in SRA No. 17, "Central Orange County."

Significance Determination: Less Than Significant Impact

Mitigation Measures: None

(c) Would the project expose sensitive receptors to substantial pollutant concentrations?

Construction Emissions

As discussed in the response to Checklist Question 3(b) (Air Quality – Cumulatively Considerable Net Increase in Criteria Pollutants), the Project's construction emissions would not exceed the SCAQMD's regional significance thresholds. Construction emissions also would not exceed SCAQMD LSTs, meaning that nearby sensitive receptors generally located within 25 meters of the Project would not be exposed to substantial pollutant concentrations that would present a public health concern.

The primary TAC that would be generated by construction activities is diesel PM, which would be released from the exhaust pipes of diesel-powered construction vehicles and equipment. According to SCAQMD methodology, health risks from carcinogenic air toxics such as diesel PM are usually quantified in terms of individual cancer risk. "Individual Cancer Risk" is the likelihood that a person exposed to concentrations

of TACs over a 30-year period will contract cancer based on the use of standard risk-assessment methodology. However, the anticipated duration of construction activities associated with the Project's implementation is approximately 17 months, and daily diesel PM emissions would vary considerably day by day, and by phase. After the initial three months of demolition and grading, the daily on-site activities of heavy-duty diesel-powered construction vehicles would reduce substantially. No residual emissions and corresponding individual cancer risk are anticipated after construction. As a result, construction of the Project would not expose sensitive receptors to substantial diesel PM or other pollutant concentrations. Therefore, the Project's construction impacts related to sensitive receptors would be less than significant.

Operational Emissions

As also discussed in the response to Checklist Question 3(b) (Air Quality – Cumulatively Considerable Net Increase in Criteria Pollutants), the Project's operational emissions would not exceed SCAQMD regional significance thresholds or LSTs.

Additionally, the Project does not propose typical sources of acutely and chronically hazardous TACs such as industrial manufacturing processes, automotive repair facilities, or warehouse distribution facilities. As a result, the Project's operations would not warrant the need for a health risk assessment, and this impact would be less than significant.

Though the Project would generate traffic that produces and contributes to off-site emissions, Project traffic generation would not result in exceedances of CO air quality standards at nearby roadways due to three key factors. First, CO hotspots are rare and only occur in the presence of unusual atmospheric conditions and extremely cold conditions, neither of which applies to the Project area. Second, auto-related emissions of CO continue to decline because of advances in fuel combustion technology and the increasing penetration of this technology in the vehicle fleet. As shown on Table 2, CO levels in the Project Site area are well-below federal and state standards, as are CO levels in the Basin itself. No exceedances of CO have been recorded at nearby monitoring stations for some time, and the Basin is currently designated as a CO attainment area for both CAAQS and NAAQS. Finally, the Project would not contribute to the levels of congestion and emissions necessary to trigger a potential CO hotspot. In fact, the Project would result in a net decrease of 320 vehicle trips per day.[10] Project traffic would not significantly impact any nearby intersections. Thus, the Project would not expose sensitive receptors to substantial CO concentrations as a result of CO hotspots. Therefore, the Project's operational impacts related to sensitive receptors would be less than significant.

Significance Determination: Less Than Significant Impact

Mitigation Measures: None

---

[10] *Linscott, Law & Greenspan, Engineers. Traffic Impact Analysis – Park Plaza Memory Care Project. June 2019.*

(d) Would the project result in other emissions (such as those leading to odors) adversely affecting a substantial number of people?

No other emissions, including objectionable odors, would be anticipated as a result of the construction or operations of the Project. Project construction would involve the use of conventional building materials typical to construction projects of similar type and size. Any odors that may be generated during construction would be localized and temporary in nature and would not be sufficient to affect a substantial number of people. With regard to Project operations, the Project proposes a 36-bed memory care/assisted living facility, which is not a land use frequently associated with odor complaints (e.g., agricultural uses, wastewater treatment facilities, food processing facilities, etc.). As a result, the Project would not result in other emissions, including objectionable odors, adversely affecting a substantial number of people. Therefore, no impacts related to this issue would occur as a result of the Project.

Significance Determination: No Impact

Mitigation Measures: None

Cumulative Impacts

As discussed in response to Checklist Question 3(b) (Air Quality – Cumulatively Considerable Net Increase in Criteria Pollutants), the Project would not result in cumulative considerable air quality impacts.

4. **BIOLOGICAL RESOURCES.** *Would the project*:	**Potentially Significant Impact**	**Less Than Significant with Mitigation Incorporated**	**Less Than Significant Impact**	**No Impact**
(a) Have a substantial adverse effect, either directly or through habitat modification, on any species identified as a candidate, sensitive, or special status species in local or regional plans, policies, or regulations by the California Department of Fish and Game or U.S. Fish and Wildlife Service?	☐	☐	☐	☑
(b) Have a substantial adverse effect on any riparian habitat or other sensitive natural community identified in the local or regional plans, policies, regulations by the California Department of Fish and Game or U.S. Fish and Wildlife Service?	☐	☐	☐	☑
(c) Have a substantial adverse effect on state or federally protected wetlands (including, but not limited to, marsh vernal pool, coastal, etc.) through direct removal, filling, hydrological interruption, or other means?	☐	☐	☐	☑
(d) Interfere substantially with the movement of any native resident or migratory fish or wildlife species or with established native resident or migratory wildlife corridors, or impede the use of native wildlife nursery sites?	☐	☐	☐	☑
(e) Conflict with any local policies or ordinances protecting biological resources, such as tree preservation policy or ordinance?	☐	☑	☐	☐
(f) Conflict with the provisions of an adopted Habitat Conservation Plan, Natural Community Conservation Plan, or other approved local, regional, or state habitat conservation plan?	☐	☐	☐	☑

Impact Analysis

(a) Would the project have a substantial adverse effect, either directly or through habitat modification, on any species identified as a candidate, sensitive, or special status species in local or regional plans, policies, or regulations by the California Department of Fish and Game or U.S. Fish and Wildlife Service?

The Project Site and surrounding area are located in an urbanized portion of the City. The Project Site is entirely developed with a restaurant building, surface parking, and ornamental landscaping, and does not contain any special status species or any habitat that would support special status species. Thus, the Project would not have a substantial adverse effect, either directly or through habitat modification, on any species

identified as a candidate, sensitive, or special status species. Therefore, no impacts related to this issue would occur as a result of the Project.

Significance Determination: No Impact

Mitigation Measures: None

(b) Would the project have a substantial adverse effect on any riparian habitat or other sensitive natural community identified in the local or regional plans, policies, regulations by the California Department of Fish and Game or U.S. Fish and Wildlife Service?

The Project Site and surrounding area are located in an urbanized portion of the City. The Project Site is developed with a restaurant building, surface parking, and ornamental landscaping. The Project Site does not contain any riparian habitat or other sensitive natural community. Thus, the Project would not have a substantial adverse effect on any riparian habitat or other sensitive natural community identified in the local or regional plans, policies, regulations by the California Department of Fish and Game or U.S. Fish and Wildlife Service. Therefore, no impacts related to this issue would occur as a result of the Project.

Significance Determination: No Impact

Mitigation Measures: None

(c) Would the project have a substantial adverse effect on state or federally protected wetlands (including, but not limited to, marsh vernal pool, coastal, etc.) through direct removal, filling, hydrological interruption, or other means?

The Project Site and surrounding area are located in an urbanized portion of the City. The Project Site is developed with a restaurant building, surface parking, and ornamental landscaping. The Project Site does not contain any wetlands. Thus, the Project would not have a substantial adverse effect on state or federally protected wetlands (including, but not limited to, marsh vernal pool, coastal, etc.) through direct removal, filling, hydrological interruption, or other means. Therefore, no impacts related to this issue would occur as a result of the Project.

Significance Determination: No Impact

Mitigation Measures: None

(d) Would the project interfere substantially with the movement of any native resident or migratory fish or wildlife species or with established native resident or migratory wildlife corridors, or impede the use of native wildlife nursery sites?

Although the majority of the City is characterized by urbanized areas with low habitat value for wildlife, the City's primary functional wildlife corridors are Santiago Creek through the center of the City; the northeastern portion of the City and the Southern California Edison (SCE) utility corridors, which link with Santiago Oaks Park; preserved hillsides and ridgelines in the southeastern portion of the City that link with

Peters Canyon Park; and East Orange undeveloped areas (Irvine Ranch Land Reserve and the Orange County Central/Coastal Natural Community Conservation Planning Area [NCCP]).[11] There are no NCCP Habitat Reserve, Non-Reserve Open Space, or Special Linkage designations in or around the Project Site.[12]

The Project Site and surrounding area are located in an urbanized portion of the City. The Project Site is developed with a restaurant building, surface parking, and ornamental landscaping. There are no waterways on or adjacent to the Project Site. The Project Site is not part of a migratory corridor and is not located near any native wildlife nursery sites. Thus, the Project would not interfere substantially with the movement of any native resident or migratory fish or wildlife species or with established native resident or migratory wildlife corridors, or impede the use of native wildlife nursery sites.

However, as discussed in response to Checklist Question 4(e) (Biological Resources – Tree Preservation), two mature silk oak trees (*Grevillea robusta*), which are approximately 90 feet tall, located on the eastern portion of the Project Site would be removed as part of the Project. It is possible that birds protected by the Migratory Bird Species Act (MBTA) and the California Fish and Game Code (FGC) could use these trees for nesting/breeding. The MBTA and the FGC render it unlawful to take native breeding birds, and their nests, eggs, and young. The Project has the potential to result in direct impacts on breeding birds if construction activities occur during the bird breeding season (February 1st through September 15th) and birds are nesting within the Project Site and/or immediate vicinity at that time. Temporary direct impacts on breeding birds could occur from increased noise, vibration, and dust during construction, which could adversely affect the breeding behavior of some birds, and lead to the loss (take) of eggs and chicks or nest abandonment. For these reasons, Project construction during bird breeding season could have potentially significant impacts on nesting birds.

Mitigation Measure BIO-1 includes recommendations for Project construction outside of bird breeding season (February 1st through September 15th) and precautions for construction during breeding season that include a pre-construction nesting bird survey of the site prior to the start of construction. The mitigation measure also provides recommendations if nesting birds are found on-site, including the complete avoidance of active nests until young have fledged. The implementation of Mitigation Measure BIO-1 would help to avoid, eliminate, or reduce direct impacts on breeding/nesting birds to less than significant levels. Therefore, with mitigation, Project impacts related to breeding/nesting birds would be less than significant.

Significance Determination: Less Than Significant With Mitigation Incorporated

---

[11] *Page 5.4-12 in City of Orange General Plan Program EIR: https://www.cityoforange.org/DocumentCenter/View/584/General-Plan-Environmental-Impact-Report-EIR-PDF.*

[12] *Figure 5.4-2, NCCP Habitat Reserve Area, in City of Orange General Plan Program EIR: https://www.cityoforange.org/DocumentCenter/View/584/General-Plan-Environmental-Impact-Report-EIR-PDF.*

Mitigation Measures:

BIO-1: Construction during Breeding Season and Pre-construction Breeding Bird Surveys

- Project activities that would remove or disturb potential nest sites shall be scheduled outside the breeding bird season, if feasible. The breeding bird nesting season is typically from February 1st through September 15th, but can vary slightly from year to year, usually depending on weather conditions. Removing all physical features that could potentially serve as nest sites outside of the breeding bird season shall be conducted to prevent birds from nesting within the Project Site during the breeding season and during construction activities.

- If Project activities that would remove or disturb potential nest sites cannot be avoided during February 1st through September 15th, a qualified biologist would conduct a pre-construction clearance and nesting bird survey to search for all potential nesting areas, breeding birds, and active nests or nest sites within the limits of Project disturbance up to seven days prior to mobilization, staging and other disturbances. It shall end no more than three days prior to vegetation, substrate, and structure removal and/or disturbance.

- If no breeding birds or active nests are observed during the pre-construction survey, or if they are observed and would not be disturbed, then Project activities may begin and no further mitigation would be required.

- If an active bird nest is located during the pre-construction survey and potentially would be disturbed, a no-activity buffer zone shall be delineated on maps and marked (flagging or other means) up to 500 feet for special-status avian species and raptors, or 75 feet for non-special status avian species. The limits of the buffer shall be demarcated as to not provide a specific indicator of the location of the nest to predators or people. Materials used to demarcate the nests shall be removed as soon as work is complete or the fledglings have left the nest. The biologist shall determine the appropriate size of the buffer zone based on the type of activities planned near the nest and bird species, because some bird species are more tolerant than others to noise and other disturbances. Buffer zones shall not be disturbed until a qualified biologist determines that the nest is inactive. Additionally, the area shall not be disturbed until the young have fledged, the parents are no longer feeding the young, the young have left the area, or the young would no longer be impacted by Project activities.

- Birds or their active nests shall not be disturbed, captured, handled or moved. Inactive nests may be moved by a qualified biologist, if necessary, to avoid disturbance by Project activities.

Significance Determination After Mitgation: Less Than Significant

(e) Would the project conflict with any local policies or ordinances protecting biological resources, such as tree preservation policy or ordinance?

The analysis in this section is based in part on the following (refer to Appendix B):

- *Protected Tree Report, Evergreen Arborist Consultants, Inc., February 25, 2019.*

The City's Master Street Tree Plan and the Tree Preservation Ordinance are the primary local measures to protect biological resources. The Master Street Tree Plan and the Tree Preservation Ordinance are effective procedures to monitor the potential for impacts to existing trees that provide roosting and nesting habitat for native and migratory birds throughout the City.[13] Chapter 12.32 of the City's Municipal Code establishes a Tree Preservation Program for the City, which includes the preservation of historic trees. This chapter defines historical trees as those, which by virtue of their origin, size, uniqueness, and/or national or regional rarity are now or are likely to be of historical value. Trees determined to be historic are compiled on a master list, which is maintained by the Community Services Department and approved by resolution of the City Council.[14]

A Protected Tree Report was prepared for the Project (refer to Appendix B) to assess what on- and off-site trees could be affected by the Project and to identify measues to protect trees that would not be removed as part of the Project. There are four trees that would be affected by the Project: two silk oak trees (*Grevillea robusta*) located on the eastern portion of the Project Site and two trees that are off-site but near the Project Site boundary, including an Aleppo pine tree (*Pinus halepensis*) located at the northcentral boundary of the Project Site and a large Moreton Bay Fig (*Ficus macrophulla*) (refer to Figure 14). Information regarding the condition of the trees is included on Table 9.

The two silk oak trees would be removed as part of the Project through the City's tree-removal permit process. The two off-site trees (i.e., the Moreton bay fig and the Aleppo pine tree) are proposed to be protected in place.

---

[13] *Page 5.4-23, in City of Orange General Plan Program EIR: https://www.cityoforange.org/DocumentCenter/View/584/General-Plan-Environmental-Impact-Report-EIR-PDF.*

[14] *Page 5.5-16, in City of Orange General Plan Program EIR: https://www.cityoforange.org/DocumentCenter/View/584/General-Plan-Environmental-Impact-Report-EIR-PDF.*

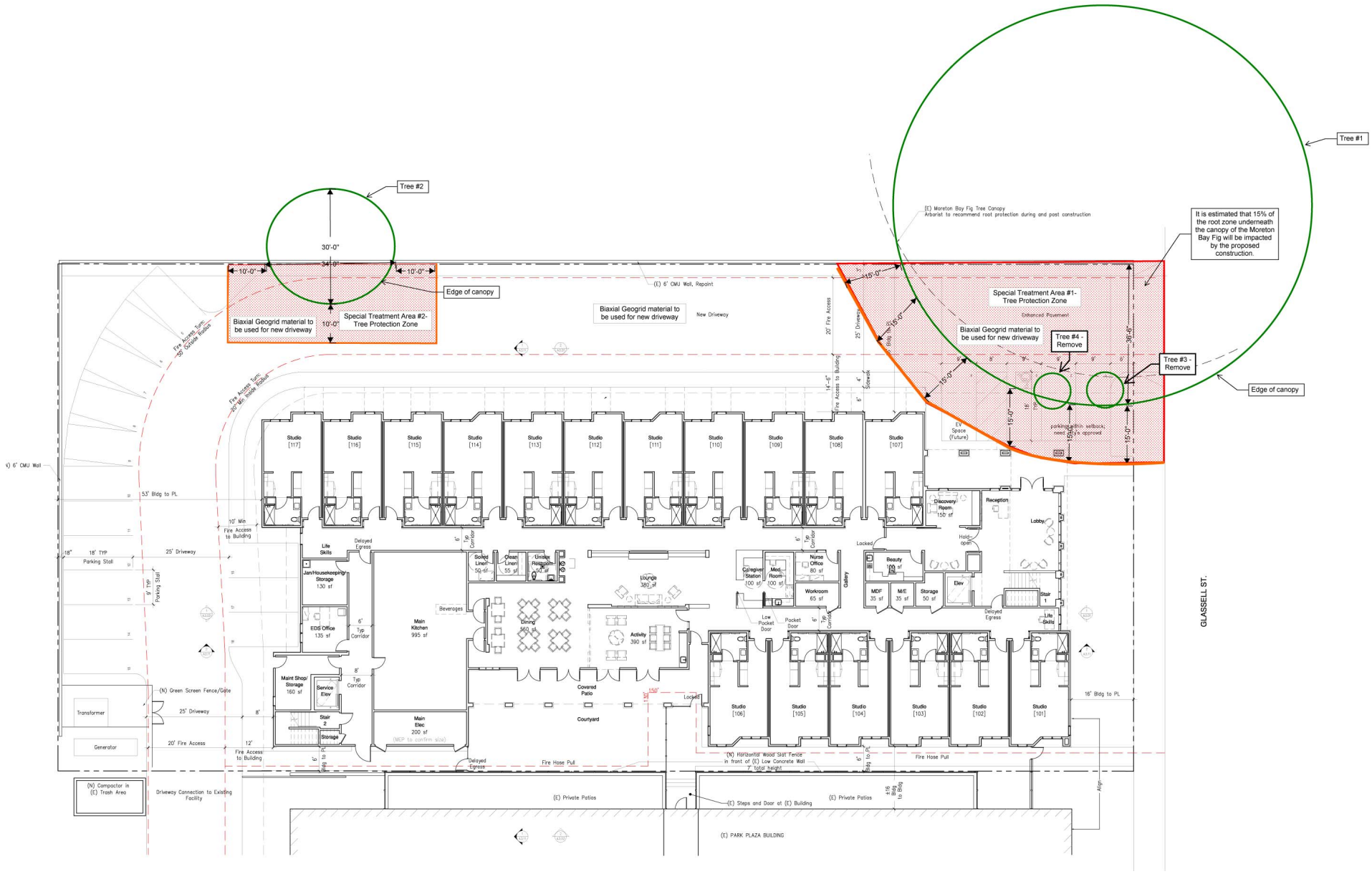

Source: Shelter Architects, 2019.

Figure 14
Arborist Site Plan

Table 9
Tree Matrix

Tree Tag	Tree	Species	Condition	DBH	Height (feet)	Canopy Width (feet)	Suitability for Preservation	Fencing Type	Tree Fencing Dimensions	Recommendation	Notes
1	Moreton Bay Fig	*Ficus macrophylla*	Good	12.5’	80	150x142	High	Type I	15’ outside dripline of tree	Protect	-
2	Aleppo Pin	*Pinus halepensis*	Fair	21”	25	30x34	High	Type I	10’ outside dripline of tree	Protect	Browning on needles
3	Silk Oak Tree	*Grevillea robusta*	Fair	45”	90	30x32	Low	NA	NA	Remove	-
4	Silk Oak Tree	*Grevillea robusta*	Fair	34”	90	34x32	Low	NA	NA	Remove	-

Source: Evergreen Arborist Consultants, Inc., 2019.

The Moreton Bay Fig tree is designated as a historic tree in the City. The tree reportedly originated in Australia and was brought to America by the early settlers. Moreton Bay Fig trees are nearly extinct, and when they remain, it is very rare. The Native Daughters of the Goldenwest have dedicated a landmark plaque near the tree to honor Henri F. Gardner, a pioneer who planted the tree at its location on March 6, 1875. The land on which the church, the rectory and the school stand (i.e., the property located to the north of the Project Site) was originally owned by the Gardner Family. As indicated on Table 9, the tree is approximately 80 feet tall, with a canopy width of approximately 150 feet by 142 feet, and is in "good" condition.

The Aleppo pine tree is approximately 25 feet tall, with a canopy width of approximately 30 feet by 34 feet, and is considered to be in "fair" condition, experiencing browning on needles.

If care is not taken during the Project's construction phase, the root system of these off-site trees could be damaged, potentially resulting in significant impacts to the trees. Lowering the grade around trees can have an immediate and long-term effect on trees. Typically, most tree roots are within the top 3 feet of soil, and most of the fine roots active in water and nutrient absorption are in the top 12 inches. Construction activities near trees may have long-term effects on the trees. Trees vary in their ability to adapt to altered growing conditions. Mature trees can have established stable biological systems in the pre-existing physical environment. Disruption of this environment by construction activities interrupts the tree's physiological processes causing depletion of energy reserves and a decline in vigor, which may result in a tree's death. Typically, this reaction develops between one to five years, but symptoms may not show for many years after injurious disruption. For the Moreton Bay Fig tree, it is estimated that approximately 15 percent of the root zone under the trees canopy would be affected by the Project's construction-related ground-disturbing activities.

To ensure that construction activities associated with the Project do not damage the two referenced off-site trees, implementation of Mitigation Measures BIO-2 and BIO-3 would be required. These measures include monitoring of the Project's ground-disturbing activities in the vicinity of the off-site trees by a qualified arborist to ensure that the tree protection measures outlined in the mitigation measures are followed. The tree protection measures would provide for the physical protective barriers to control site disturbances and activies such as grading, demolition, building, hardscape and landscape construction, infrastrure and utility installation, maintenance, or other changes near the trees.

In addition, the Project includes the installation of Biaxial Geogrid material within the proposed driveway area of the Project over the root system of the two off-site trees. This material is a stiff synthetic permeable material, consisteing of sets of tensile ribs pre-tensioned in tow directions to allow pinning down of surrounding soil, stone, and/or other material. The Biaxial Geogrid material will be placed over the roots to minimize the potential for root and soil compaction due to use of the driveway and to improve irrigation filtration for the trees.

Through use of the Biaxial Geogrid material compliance with Mitigation Measures BIO-2 and BIO-3, Project impacts related to trees would be less than significant.

Significance Determination: Less Than Significant with Mitigation Incorporated

Mitigation Measures:

BIO-2: The Project Applicant shall retain a qualified Arborist to oversee protection of the off-site trees during the applicable Project construction phases.

BIO-3: The Project Applicant shall implement all of the tree protection measures and recommendations outlined in the Protected Tree Report.

Design Guidelines—Site, Grading & Improvements

1. Project plans shall delineate a tree protection zone (TPZ) according to the dimensions shown on Table 1 of the Protected Tree Report. The TPZ shall be delineated as the boundary extending 15 feet outside of the dripline of the Moreton Bay Fig tree and the Aleppo pine tree as determined by the Project Arborist.

2. In the TPZ, all trenching, soil scraping, compaction, mass grading, finish-grading, over excavation, sub excavation, swales, bio swales, storm drains, equipment cleaning, stockpiling/dumping of materials, and equipment operation shall be avoided. Where an impact encroaches slightly within a setback, it can be reviewed on a case-by-case basis by the Project Arborist to determine appropriate protection measures.

3. All existing unused lines, pipes, and vaults within the TPZ shall be abandoned and cut off at existing grade rather than being dug up and causing subsequent root damage.

4. The permanent and temporary drainage design, including downspouts, shall not require water being discharged within the TPZ. The drainage shall not require trenching for storm drains or swales within the TPZ.

5. Underground utilities and services shall be routed beyond the TPZ.

6. The future staging area and route(s) of access shall not be in TPZ.

7. Restrict spoils and runoff from traveling into root zones, the Project's erosion control design shall establish silt fencing or straw wattles (or comparable material) along the TPZ fencing.

Design Guidelines--Proposed Landscape Design

1. Irrigation shall not spray the trunk.

2. Irrigation, valves, and lighting features shall be placed so that no trenching occurs within the TPZ.

3. New property fencing and fence posts shall be placed at least 2 feet from the tree trunk.

4. Groundcover beneath the canopy shall comprise 5-inch layer of wood chips or other high-quality mulch. Keep mulch at least 6 inches from trunk.

5. Tilling, ripping, and compaction within the TPZ shall be avoided.

6. Bender board or other edging material proposed beneath the canopy shall be placed at existing grade.

7. Roots with diameters of 2 inches or greater shall not be damaged or cut without prior assessment of the Project Arborist.

8. All tools shall be sanitized in between root cuts for roots that 0.5 inches and larger. Materials commonly used to sterilize tools include bleach (10 percent solution) or Lysol.

During Demolition and Construction

1. Tree trunks shall not be used as winch supports for moving or lifting heavy loads.

2. The removal of existing features within the TPZ shall be carefully performed to avoid excavating into root zones.

3. Roots with diameters of 2 inches or greater should not be damaged or cut without prior assessment of the Project Arborist.

4. All tools shall be sanitized in between root cuts. Materials commonly used to sterilize tools include bleach (10 percent solution) or Lysol.

5. Supplemental water shall be be provided as determined by the Project Arborist to help mitigate root loss/disturbance.

6. Spoils created during digging shall not be piled or spread on unpaved ground within the TPZ.

7. Digging holes for fence posts within the TPZ shall be manually performed. In the event a root of 2 inches or greater in diameter is encountered, the process should be shifted over by 12 inches and the process repeated.

8. Great care shall be taken by equipment operators to position their equipment to avoid the trunks of protected trees. The Project Arborist shall be consulted to provide a feasible solution if needed.

9. Dust accumulating on trunks and canopies during dry weather periods shall be periodically washed away every 3 to 4 months. Dust accumulating on trunks and canopies after grading shall also be washed at the completion of the grading.

10. The disposal of harmful products shall be prohibited beneath the canopies. Herbicide shall not be used within the TPZ on site or shall be labeled for safe use near trees.

Grading Limitations within the Tree Protection Zone

1. Grade changes within the TPZ shall not permitted. Tilling, ripping, and compaction within the TPZ shall be avoided.

2. Grade changes outside the TPZ shall not significantly alter drainage.

3. Grade changes under specifically approved circumstances shall not allow more than 6 inches of fill soil or allow more than 4 inches of existing soil to be removed from natural grade, unless mitigated.

4. Grade fills over 6 inches or impervious overlay shall incorporate an approved permanent aeration system, permeable material, or other approved mitigation.

5. Grade cuts exceeding 4 inches shall incorporate retaining walls or an appropriate transition equivalent.

(f) Would the project conflict with the provisions of an adopted Habitat Conservation Plan, Natural Community Conservation Plan, or other approved local, regional, or state habitat conservation plan?

There are no NCCP Habitat Reserve, Non-Reserve Open Space, or Special Linkage designations in or around the Project Site.[15] The Project Site and surrounding area are located in an urbanized portion of the City. The Project Site is developed with a restaurant building, surface parking, and ornamental landscaping. Thus, the Project would not conflict with the provisions of an adopted Habitat Conservation Plan, Natural Community Conservation Plan, or other approved local, regional, or state habitat conservation plan. Therefore, no impacts related to this issue would occur as a result of the Project.

Significance Determination: No Impact

Mitigation Measures: None

---

[15] *Figure 5.4-2, NCCP Habitat Reserve Area, in City of Orange General Plan Program EIR: https://www.cityoforange.org/DocumentCenter/View/584/General-Plan-Environmental-Impact-Report-EIR-PDF.*

Cumulative Impacts

As shown on Table 36 later in this MND, there are five cumulative projects within proximity to the Project Site. All of the related projects are located on developed sites and within an urbanized area of the City. None of the sites of the cumulative projects contains protected biological resources. The degree to which any trees would be removed/replaced would be addressed by the City on a project-by-project basis. Therefore, no significant cumulative impacts related to biological resources would occur.

5. CULTURAL RESOURCES: *Would the project:*	Potentially Significant Impact	Less Than Significant with Mitigation Incorporated	Less Than Significant Impact	No Impact
a. Cause a substantial adverse change in significance of a historical resource pursuant to *State CEQA Guidelines* §15064.5?	☐	☑	☐	☐
b. Cause a substantial adverse change in significance of an archaeological resource pursuant to *State CEQA Guidelines* §15064.5?	☐	☑	☐	☐
c. Disturb any human remains, including those interred outside of dedicated cemeteries?	☐	☐	☑	☐

Impact Analysis

(a) Cause a substantial adverse change in significance of a historical resource pursuant to *State CEQA Guidelines* §15064.5?

The analysis in this section is based primarily on the following (refer to Appendix C):

- *Historic Resources Evaluation, 574 South Glassell Street, Architectural Resources Group, May 2019.*

Direct Impacts

Regulatory Framework

Generally, a lead agency must consider a property a historical resource under CEQA if it is eligible for listing in the California Register of Historical Resources (California Register). The California Register is modeled after the National Register of Historic Places (National Register). Furthermore, a property is presumed to be historically significant if it is listed in a local register of historical resources or has been identified as historically significant in a historic resources survey (provided certain criteria and requirements are satisfied) unless a preponderance of evidence demonstrates that the property is not historically or culturally significant. The National Register, California Register, and local designation programs are discussed below.

National Register of Historic Places

The National Register is "an authoritative guide to be used by federal, state, and local governments, private groups, and citizens to identify the nation's cultural resources and to indicate what properties should be considered for protection from destruction or impairment."

Criteria

To be eligible for listing in the National Register, a property must be at least 50 years of age (unless the property is of "exceptional importance") and possess significance in American history and culture, architecture, or archaeology. A property of potential significance must meet one or more of the following four established criteria:

A. Associated with events that have made a significant contribution to the broad patterns of our history; or

B. Associated with the lives of persons significant in our past; or

C. Embody the distinctive characteristics of a type, period, or method of construction or that represent the work of a master, or that possess high artistic values, or that represent a significant and distinguishable entity whose components may lack individual distinction; or

D. Yield, or may be likely to yield, information important in prehistory or history.

California Register of Historical Resources

The California Register is an authoritative guide used by state and local agencies, private groups, and citizens to identify historical resources and to indicate what properties are to be protected, to the extent prudent and feasible, from substantial adverse impacts.

The California Register consists of properties that are listed automatically as well as those that must be nominated through an application and public hearing process. The California Register automatically includes the following:

- California properties listed in the National Register and those formally Determined Eligible for the National Register;
- State Historical Landmarks from No. 0770 onward; and
- Those California Points of Historical Interest that have been evaluated by the State Office of Historic Preservation (SOHP) and have been recommended to the State Historical Resources Commission for inclusion on the California Register.

Criteria and Integrity

For those properties not automatically listed, the criteria for eligibility of listing in the California Register are based upon National Register criteria, but are identified as 1-4 instead of A-D. To be eligible for listing in the California Register, a property generally must be at least 50 years of age and must possess significance at the local, state, or national level, under one or more of the following four criteria:

1. It is associated with events that have made a significant contribution to the broad patterns of local or regional history, or the cultural heritage of California or the United States; or

2. It is associated with the lives of persons important to local, California, or national history; or

3. It embodies the distinctive characteristics of a type, period, or method of construction or represents the work of a master, or possesses high artistic values; or

4. It has yielded, or has the potential to yield, information important in the prehistory or history of the local area, California, or the nation.

Properties eligible for listing in the California Register may include buildings, sites, structures, objects, and historic districts. A property less than 50 years of age may be eligible if it can be demonstrated that sufficient time has passed to understand its historical importance. While the enabling legislation for the California Register is less rigorous with regard to the issue of integrity, there is the expectation that properties reflect their appearance during their period of significance.

The California Register may also include properties identified during historic resource surveys. However, the survey must meet all of the following criteria:

1. The survey has been or will be included in the State Historic Resources Inventory;

2. The survey and the survey documentation were prepared in accordance with office [SOHP] procedures and requirements;

3. The resource is evaluated and determined by the office [SOHP] to have a significance rating of Category 1 to 5 on a DPR Form 523; and

4. If the survey is five or more years old at the time of its nomination for inclusion in the California Register, the survey is updated to identify historical resources that have become eligible or ineligible due to changed circumstances or further documentation and those that have been demolished or altered in a manner that substantially diminishes the significance of the resource.

Environmental Setting

The Project Site is developed with a restaurant that was originally connected to a miniature golf course on the adjacent land to the south. The property is located on S. Glassell St., which leads directly south from the Plaza that was the geographic and commercial heart of the town of Orange (incorporated in 1888).

The property consists of a restaurant building with a landscaped setback to the east (along S. Glassell St.) and an adjacent parking lot to the rear (west). A driveway along the north side provides access to the rear parking lot. The building is set at an angle to the street, with its south corner lying very close to the south property line. A large three-story apartment building lies to the south of the Project Site, on the former site of a miniature golf course with which the restaurant building was formerly associated. The property of Holy Family Cathedral and school lies north of the Project Site.

The restaurant was constructed in 1962 and was known as Kim's Family Restaurant. The architect of the building was William E. Swank and Associates of Orange.

The restaurant (and to a greater extent, the golf course) was originally Tiki themed, however, there was very little such material remaining on the façade. Character-defining features that associate the property with its 1962 origins include: A-frame roof/massing, siting of the building in an angular position relative to the street, lava rock and Palos Verdes stone planters and wall cladding, front trellis, and small areas of bamboo trim remaining on the rear doorways (which faced the golf course). Aside from the distinctive A-frame shape that the building retains, the building is compromised in its ability to convey its significance.

The senior housing apartment building adjacent to the south, which replaced the golf course, received its entitlements in 1985, and the golf course was removed by 1986.

Evaluation of Historical Significance

The property was evaluated for its eligibility for local historical designation with reference to the City of Orange General Plan Section for Cultural Resources and Historic Preservation. The City does not have specific criteria for local designation, but employs the criteria of the National Register of Historic Places and the California Register of Historical Resources (the City has other mechanisms for the designation of historic districts and historic preservation zoning overlays that are not relevant to the possible significance of this property). The property is evaluated under each of the California Register criteria, which mirror those of the National Register, below.

Criterion 1: Associated with events that have made a significant contribution to the broad patterns of local or regional history or the cultural heritage of California or the United States.

The property has the potential for association with the historical theme of family dining and recreation in post-war Orange County. This context has not been studied and documented to the point where there is enough information to evaluate a minor example such as this. To use the example of the Tiki theme, at least two examples have been listed in the National Register, but these were especially significant examples that had changed very little since their period of significance and serve as a testament to the role of Tiki in popular post-war culture. There is no apparent equivalent cultural value to this property.

Further, because the golf course was, arguably, the greater and more unique draw for this property as a recreational venue, its loss significantly diminishes its ability to convey any significance under the theme of post-war family recreation. The golf course was also much larger than the restaurant and appears to have carried the Tiki or Polynesian theme throughout. Therefore, along with the loss of any Tiki or Polynesian features that may have identified the restaurant and tied it into the theme, most of the theme was eliminated with the loss of the golf course.

Due to the property's inability to convey its significance in contributing to broad patterns of local history, it is not eligible under Criterion 1.

Criterion 2: Associated with the lives of persons important to local, California or national history.

No single historical person came to light with whom the property would be significantly associated. The property is not eligible under this criterion.

Criterion 3: Embodies the distinctive characteristics of a type, period, region or method of construction or represents the work of a master or possesses high artistic values.

The property's architect, William E. Swank, is not established as a well-known practitioner of the period who could be considered a "master architect," and the building does not "(possess) high artistic values."

The property may once have embodied the "distinctive characteristics of a type," serving as an example of the architectural type of an A-frame. However, it does not exhibit the cultural associations that make A-frame restaurants of historical interest due to its lack of integrity: while it is difficult to pinpoint its alterations due to lack of available evidence of its historical appearance, the property has changed businesses many times, the original pole sign no longer exists, and the entrance area does not retain the materials and decoration that the original restaurant apparently possessed (according to what little evidence we have of its early years), even if it was only minimally Tiki in its styling.

More importantly, the development of the property had two significant components that appear to have been conceived and constructed together in order to express a theme and function that both would convey: that of a Tiki or Polynesian recreational and dining environment. With the loss of the golf course, the ability of the property to convey its significance is substantially diminished. The setting of the building is no longer what it was – a restaurant set within a golf course – and the function of the building is different as well since it is a freestanding restaurant business and no longer a part of a recreational unit that would have conveyed considerably more aesthetic information about popular architecture in early 1960s Orange County.

The property is not eligible under Criterion 3 due to the lack of significance in its architect or its artistic values. It is also not eligible because of its inability to convey its significance through its embodiment of the built history of a type, period, or region.

Criterion 4: Has yielded, or has the potential to yield, information important to the prehistory or history of the local area, California or the nation.

This criterion applies mainly to potential archaeological resources.

This evaluation shows that the property was formerly a minimally Tiki-themed restaurant associated with a miniature golf course. While the context of such properties is an emerging area of historical interest in Orange County's recent past, the Historical Resources Study found that this theme is not well documented and that the historic integrity of the property appears to be too low to contribute in a meaningful way to our understanding of the theme.

Historic Integrity

Historic Integrity is defined as the ability of a property to convey its historic significance, expressed through surviving characteristics that it obtained during its period of significance. Broadly speaking, the early 1960s appearance of the building represents its period of significance. The following seven aspects of historic integrity – location, setting, design, materials, workmanship, feeling, and association – are defined by the National Park Service for use in the evaluation of properties for the National Register, and are also used as a guideline in many other designation programs. The historic integrity of 574 S. Glassell St. is analyzed below.

Location:

The property has not been moved and maintains integrity of location.

Setting:

The property's setting has been compromised by the loss of the miniature golf course with which it was associated and its replacement with a large apartment building close to the south property line. It is clear from the 1963 aerial view on page 8 that the golf course and restaurant were sited so as to complement one another. The golf course functioned in part as the setting of the restaurant and gave it thematic and recreational meaning. Without this relationship, it is simply a restaurant, which does not reflect its historic use or setting.

Design:

The property may maintain integrity of design, but there is little in the public record to document its original appearance or any alterations. An A-frame typically takes advantage of the contrast between the solid roof and the non-load-bearing end walls; no such element of the design remains present. The overall shape of the exaggerated, A-frame roof is its most important feature and remains intact, but any information about the building from its historical period contained in the building's decorative scheme appears to have been lost. The removal of the adjacent golf course also affected the integrity of design of the property as it was historically, since during that period the restaurant was a part of the larger miniature golf complex and related directly to the golf course.

Materials:

With so little documentation available, it is not known whether the building retains integrity of materials. However, this is unlikely to be an important factor in the property's potential significance.

Workmanship:

As for materials, there is not enough information available to determine the building contained significant workmanship or whether it maintains integrity of workmanship; the workmanship also is unlikely to be an important factor in the property's potential significance.

Feeling:

The building does not possess historic feeling. There is very little in the way of exterior features to identify the building with its early period or character. While still used as a restaurant, the building has little to convey about the early 1960s when it was constructed. This is due to both the alterations to the building itself (the loss of any thematic decoration) and to the compromised setting, with the loss of the golf course that completed the complex historically and its replacement with a large apartment building directly next to the restaurant.

Association:

The building's association with the historical theme of mid-century themed family dining and recreation is tenuous due to the lack of integrity noted for the aspects above. In addition to the golf course's role as the physical setting of the restaurant, it also would have had more to communicate about the family recreation themes that the property once represented. The restaurant on its own, as noted above, does not carry the associations of the recreation complex of which it was historically a part.

Conclusion

The Historic Resources Report found that the property at 574 S. Glassell St. is not eligible for the California Register and thus, is not a historic resource for purposes of CEQA. The property was once a Tiki-style restaurant associated with a neighboring miniature golf course. If intact, such a property might represent an important theme in the post-World War II culture of Southern California, and Orange County in particular. However, the miniature golf course no longer exists, and the restaurant lacks the character-defining features that would associate it with emerging historical and architectural contexts of popular culture in 1960s Orange County. The property lacks significance due to an inability to express these themes and provide information about local history. Thus, the Project would not cause a substantial adverse change in significance of a historical resource pursuant to *State CEQA Guidelines* §15064.5. Therefore, no direct impacts related to historic resources would occur as a result of the Project.

Moreton Bay Fig Tree

As discussed previously in response to Checklist Question 4(e) (Biological Resources – Tree Preservation), the Moreton Bay Fig tree that is located directly adjacent to the northeastern boundary of the Project Site is designated as a historic tree in the City. The tree reportedly originated in Australia and was brought to America by the early settlers. Moreton Bay Fig trees are nearly extinct, and when they remain, it is very rare. The Native Daughters of the Goldenwest have dedicated a landmark plaque near the tree to honor Henri F. Gardner, a pioneer who planted the tree at its location on March 6, 1875. The land on which the church, the rectory and the school stand (i.e., the property located to the north of the Project Site) was originally owned by the Gardner Family. As indicated on Table 9, the tree is approximately 80 feet tall, with a canopy width of approximately 150 feet by 142 feet, and is in "good" condition.

As discussed in detail in response to Checklist Question 4(e) (Biological Resources – Tree Preservation), if care is not taken during the ground-disturbing activities as part of the Project's construction phase, root

damage to the tree could occur and could detrimentally affect the health of the tree and the significance of the tree as a historic resources. However, Mitigation Measures BIO-2 and BIO-3 would ensure protection of the tree in place and would ensure that no significant impacts to the tree would occur. Therefore, with implementation of Mitigation Measures BIO-2 and BIO-3, potential impacts of the Project on historic resources would be less than significant.

Significance Determination: Less Than Significant With Mitigation Incorporated

Mitigation Measures: Refer to Mitigation Measures BIO-2 through BIO-3 under response to Checklist Question 4(b) (Biological Resources – Tree Preservation).

Significance Determination After Mitigation: Less Than Significant

(b) Would the project cause a substantial adverse change in significance of an archaeological resource pursuant to *State CEQA Guidelines* §15064.5?

The Project Site is currently developed with a restaurant building and a surface parking lot. The Project Site is in an urbanized area of the City and is surrounded by a mix of residential, commercial/retail, education, and office uses. The Project Site has already been subject to construction and ground-disturbing activities similar to those which would occur under the Project. According to the cultural resources records search for the Project Site (refer to Appendix C), no archaeological sites have been recorded on or within a 0.5-mile radius of the Project Site. Five historical resources have been identified within a 0.5-mile radius. Additionally, the Figure 5.5-2 (Historial Archaeology Sensitivity) of the City's General Plan EIR notes that a Chinese Boarding Area (1875-1921) has been identified in the area of the Project Site. Also, the Project Site is located just south of a sensitive area identified by the City as Early Town Development (1870s-1880s). As such, it is possible that unknown archaeological resources could exist at the Project Site and could be encountered during ground-disturbing activities associated with Project construction. If proper care is not taken, significant impacts to unknown archaeological resources could occur. However, the Project Applicant would be required to implement Mitigation Measure CUL-1, which provides direction for the proper recordation of previously undiscovered archaeological resources, should such resources be found during Project construction activities. Implementation of Mitigation Measure CUL-1 would ensure that the Project would not cause a substantial adverse change in significance of an archaeological resource pursuant to State CEQA Guidelines §15064.5. Therefore, with mitigation, Project impacts related to archaeological resources would be less than significant.

Significance Determination: Less Than Significant With Mitigation Incorporated

Mitigation Measures:

CUL-1: In the event a potentially significant cultural resource is encountered during earthwork activities, all construction activities within a 100-foot radius of the find shall cease and workers shall avoid altering the materials until a qualified archaeologist who meets the Secretary of Interior's Professional Qualification Standards for archaeology has evaluated the situation. The Project Applicant shall include a standard inadvertent discovery clause

in every construction contract to inform contractors of this requirement. Any previously undiscovered resources found during construction activities shall be recorded on appropriate Department of Parks and Recreation (DPR) forms and evaluated for significance in terms of CEQA criteria by a qualified archaeologist. Potentially significant cultural resources consist of but are not limited to stone, bone, glass, ceramics, wood, or shell artifacts, or features including hearths, structural remains, or historic dumpsites. If the resource is determined to be significant under CEQA Guidelines Section 15064.5, the qualified archaeologist shall prepare and implement a research design and archaeological data recovery plan that will capture those categories of data for which the site is significant in accordance with Section 15064.5 of the CEQA Guidelines. The archaeologist shall also perform appropriate technical analyses, prepare a comprehensive report complete with methods, results, and recommendations, and provide for the permanent curation or repatriation of the recovered resources in cooperation with the designated most likely descendant as needed. The report shall be submitted to the City of Orange, the South Central Coastal Information Center, and the State Historic Preservation Office (SHPO), if required.

Significance Determination After Mitigation: Less Than Significant

(c) Would the project disturb any human remains, including those interred outside of dedicated cemeteries?

The Project Site is located in an urbanized area of the City and is developed with a restaurant building and surface parking. Although the Project Site has been subject to grading and development in the past and no human remains are known to exist at the site, the Project would require grading and some trenching for installation of utilities, and it is possible that unknown human remains could be encountered at the site. In accordance with the State's Health and Safety Code Section 7050.5, in the event of discovery or recognition of any human remains at the Project Site, no further excavation or disturbance of the site or any nearby area reasonably suspected to overlie adjacent remains shall occur until the Orange County Coroner has determined, in accordance with Chapter 10 (commencing with Section 27460) of Part 3 of Division 2 of Title 3 of the Government Code, that the remains are not subject to the provisions of Section 27491 of the Government Code or any other related provisions of law concerning investigation of the circumstances, manner, and cause of any death, and the recommendations concerning the treatment and disposition of the human remains have been made to the person responsible for the excavation, or to his or her authorized representative, in the manner provided in Section 5097.98 of the Public Resources Code. The coroner shall make his or her determination within two working days from the time the person responsible for the excavation, or his or her authorized representative, notifies the coroner of the discovery or recognition of the human remains. If the coroner determines that the remains are not subject to his or her authority and if the coroner recognizes the human remains to be those of a Native American, or has reason to believe that they are those of a Native American, he or she shall contact, by telephone within 24 hours, the Native American Heritage Commission. Through compliance with the regulatory standards described above, potential Project impacts to human remains would be less than significant.

Significance Determination: Less Than Significant Impact

Mitigation Measures: None

Cumulative Impacts

As shown on Table 36 in this MND, there are five cumulative projects within proximity to the Project Site. There are no shared cultural resources among the cumulative projects and the Project. Thus, no significant cumulative impacts related to cultural resources would occur.

6. **ENERGY.** *Would the project*:	Potentially Significant Impact	Less Than Significant with Mitigation Incorporated	Less Than Significant Impact	No Impact
(a) Result in potential significant environmental impacts due to wasteful, inefficient, or unnecessary consumption of energy resources during project construction or operation?	☐	☐	☑	☐
(b) Conflict with or obstruct a state or local plan for renewable energy or energy efficiency?	☐	☐	☑	☐

Impact Analysis

(a) Would the project result in potential significant environmental impacts due to wasteful, inefficient, or unnecessary consumption of energy resources during project construction or operation?

(b) Would the project conflict with or obstruct a state or local plan for renewable energy or energy efficiency?

Checklist Questions 6(a) and 6(b) are addressed together, because the responses to both questions are closely related. In accordance with Appendix F of the CEQA Thresholds, the following are considered in determining the significance of the Project's energy impacts:

1. The project's energy requirements and its energy use efficiencies by amount and fuel type for each stage of the project including construction, operation, maintenance, and/or removal. If appropriate, the energy intensiveness of materials may be discussed;

2. The effects of the project on local and regional energy supplies and on requirements for additional capacity;

3. The effects of the project on peak and base period demands for electricity and other forms of energy;

4. The degree to which the project complies with existing energy standards;

5. The effects of the project on energy resources;

6. The project's projected transportation energy use requirements and its overall use of efficient transportation alternatives;

7. The degree to which the project design and/or operations incorporate energy-conservation measures, particularly those that go beyond City requirements; and

8. Whether the Project conflicts with adopted energy conservation plans.

Electricity is provided to the Project Site by Southern California Edison (SCE). Natural gas is provided to the Project Site by The Southern California Gas Company (The Gas Company). Both forms of energy are provided to the Project Site via existing infrastructure located adjacent to the site. The Project would be served by this infrastructure and would not require the need for new, expanded, or relocated energy infrastructure. For the reasons discussed below, Project impacts related to energy would be less than significant.

Project Energy Requirements

Construction

During Project construction, energy would be consumed in the form of electricity associated with the conveyance of water used for dust control and, on a limited basis, powering lights, electronic equipment, or other construction activities necessitating electrical power. As discussed below, construction activities, including the construction of the new building, typically do not involve the consumption of natural gas. Project construction would also consume energy in the form of petroleum-based fuels associated with the use of off-road construction vehicles and equipment on the Project Site, construction worker travel to and from the Project Site, and delivery and haul truck trips (e.g., hauling of demolition material to off-site reuse and disposal facilities).

As shown on Table 10 and as discussed further below, Project construction would consume approximately a total of 846 kilowatt hours (kWh) of electricity, 7,028 gallons of gasoline, and 103,084 gallons of diesel. Project construction is expected to be completed by 2021.

Electricity

As shown on Table 10, a total of approximately 846 kWh of electricity is anticipated to be consumed during Project construction. The electricity demand at any given time would vary throughout the construction period based on the construction activities being performed, and would cease upon completion of construction. When not in use, electric equipment would be powered off so as to avoid unnecessary energy consumption.

Natural Gas

Construction activities, including the construction of the new building, typically do not involve the consumption of natural gas. Accordingly, natural gas would not be supplied to support Project construction activities. Thus, there would be no demand generated by construction.

Transportation Energy

The petroleum-based fuel use summary provided on Table 10 represents the amount of transportation energy that could potentially be consumed during Project construction based on a conservative set of assumptions outlined in Appendix D. As shown, on- and off-road vehicles would consume an estimated

7,028 gallons of gasoline and approximately 103,084 gallons of diesel fuel throughout the Project's construction.

Table 10
Summary of Energy Use During Project Construction

Fuel Type	Quantity
Electricity	
Water Consumption	846 kWh
Lighting, electronic equipment, and other construction activities necessitating electrical power	N/A
Total Electricity	**846 kWh**
Gasoline	
On-Road Construction Equipment	7,028 gallons
Off-Road Construction Equipment	0 gallons
Total Gasoline	***7,028 gallons***
Diesel	
On-Road Construction Equipment	79,287 gallons
Off-Road Construction Equipment	23,797 gallons
Total Diesel	***103,084 gallons***
Total Petroleum-Based Fuel	**110,112 gallons**

kWh = kilowatt-hours

Note: Numbers have been rounded to the nearest whole number. Detailed calculations are included in Appendix D.

Operation

During operation of the Project, energy would be consumed for multiple purposes, including, but not limited to HVAC; refrigeration; lighting; and the use of electronics, equipment, and machinery. Energy would also be consumed during Project operations related to water usage, solid waste disposal, and vehicle trips. As shown on Table 11 the Project would result in a net decrease in electricity consumption of approximately 93,382 kWh when compared to the existing restaurant use. As shown on 12, the Project would result in a net decrease in natural gas consumption of approximately 1,179,611 1,000 British thermal units (kBTU) per year when compared to the existing restaurant use. As shown on Table 13, the Project would result in a net decrease in fuel of approximately 60,779 gallons per year when compared to the existing restaurant use.

Table 11
Estimated Project Electricity Demand

Land Use	Size	Total (kw-h/yr)
Existing		
Restaurant	5,959 sf	217,384
Surface Parking Lot	34,000 sf	11,900
	Total Existing	**229,284**
Proposed		
Memory Care Facility	30,113 sf	127,210
Surface Parking Lot	15,000 sf	8,692
	Project Total	**135,902**
	Less Existing	*-229,284*
	Net Total	**-93,382**

kw-h = kilowatt-hour yr = year sf =square feet

[1] *Calculated via CalEEMod. Refer to Appendix A.*

Table 12
Estimated Project Natural Gas Demand

Land Use	Size	Total (kBTU/yr)
Existing		
Restaurant	5,959 sf	1,545,290
Surface Parking Lot	34,000 sf	0
	Total Existing	**1,545,290**
Proposed		
Memory Care Facility	30,113 sf	365,679
Surface Parking Lot	15,000 sf	0
	Project Total	**365,679**
	Less Existing	*-1,545,290*
	Net Total	**-1,179,611**

kBTU = 1,000 British Thermal Units yr = year sf =square feet

[1] *Calculated via CalEEMod. Refer to Appendix A.*

Table 13
Estimated Project Transportation Petroleum-Based Fuel

Fuel Type	Gallons Per Year
Gasoline	
Project	66,9435
Less Existing	*-26,085*
Net Total Gasoline	***-43,735***
Diesel	
Project	9,041
Less Existing	*-26,085*
Net Total Diesel	***-17,044***
Total Fuel	**-60,779**
Detailed calculations are included in Appendix D.	

Effects on Local and Regional Energy Supplies

As shown on Tables 11 through 13, the Project would result in a net decrease in electricity, natural gas, and transportation fuel consumption when compared to the existing restaurant use on the Project Site. As such, the Project would reduce the effect on local and regional energy supplies.

Effects on Peak and Base Period Demands

As shown on Tables 11 through 13, the Project would result in a net decrease in electricity, natural gas, and transportation fuel consumption when compared to the existing restaurant use on the Project Site. As such, the Project would reduce the effect on peak and base period demands.

Compliance with Existing Energy Standards

The Project would be required by the City to comply with applicable Title 24 energy conservation standards

Effects on Energy Resources

As shown on Tables 11 through 13 the Project would result in a net decrease in electricity, natural gas, and transportation fuel consumption when compared to the existing restaurant use on the Project Site. As such, the Project would reduce the effect on energy resources.

Effects on Energy Resources

As shown on Tables 11 through 13, the Project would result in a net decrease in electricity, natural gas, and transportation fuel consumption when compared to the existing restaurant use on the Project Site. As such, the Project would reduce the effect on energy resources.

Transportation Fuel and Efficiency

As shown on Table 13, the Project would result in a net decrease in transportation fuel consumption when compared to the existing restaurant use on the Project Site. As such, the Project would reduce the effect on energy resources.

Compliance with Energy Conservation

In 2017, the City adopted the 2016 California Building Standards Code, which includes the California Green Building Standards Code. The City would require the Project to comply with all applicable Green Building Standards, including those related to energy conservation.

Significance Determination: Less Than Significant

Mitigation Measures: None

Cumulative Impacts

As shown on Table 36 later in this MND, there are five cumulative projects within proximity to the Project Site. It is possible that the cumulative projects could result in an increase in the demand for energy sources. However, as discussed above, the Project would result in a net decrease in energy consumption when compared to the existing restaurant use. Thus, the Project would not have the potential to contribute to any cumulative energy impacts. Therefore, cumulative energy impacts would be less than significant.

7. **GEOLOGY AND SOILS.** *Would the project:*	**Potentially Significant Impact**	**Less Than Significant with Mitigation Incorporated**	**Less Than Significant Impact**	**No Impact**
(a) Directly or indirectly cause potential substantial adverse effects, including the risk of loss, injury, or death involving:				
i) Rupture of a known earthquake fault, as delineated on the most recent Alquist-Priolo Earthquake Fault Zoning Map issued by the State Geologist for the area or based on other substantial evidence of a known fault? Refer to Division of Mines and Geology Special Publication 42.	☐	☐	☐	☑
ii.) Strong seismic ground shaking?	☐	☑	☐	☐
iii) Seismic-related ground failure, including liquefaction?	☐	☑	☐	☐
iv.) Landslides?	☐	☐	☐	☑
(b) Result in substantial soil erosion or the loss of topsoil?	☐	☐	☑	☐
(c) Be located on a geologic unit or soil that is unstable, or that would become unstable as a result of the project, and potential result in on- or off-site landslide, lateral spreading, subsidence, liquefaction, or collapse?	☐	☑	☐	☐
(d) Be located on expansive soil, as defined in Table 18-1-B of the Uniform Building Code (1994), creating substantial direct or indirect risks to life or property?	☐	☐	☐	☑
(e) Have soils incapable of adequately supporting the use of septic tanks or alternative wastewater disposal systems where sewers are not available for the disposal of wastewater?	☐	☐	☐	☑
(f) Directly or indirectly destroy a unique paleontological resource or site or unique geologic feature?	☐	☑	☐	☐

Impact Analysis

The section is based in part on the following (refer to Appendix E):

- *Geotechnical Exploration Report, Leighton Consulting, Inc., January 29, 2019.*
- *Paleontological Resources, Natural History Museum Los Angeles County, June 14, 2019.*

(a) i) Would the project directly or indirectly cause potential substantial adverse effects, including the risk of loss, injury, or death involving rupture of a known earthquake fault, as delineated on the

most recent Alquist-Priolo Earthquake Fault Zoning Map issued by the State Geologist for the area or based on other substantial evidence of a known fault?

Based on the Geotechnical Exploration Report prepared for the Project, no active faults are mapped or are known to cross the Project Site, and the site is not located within an Alquist-Priolo Earthquake Fault Zone. Thus, the Project would not directly or indirectly cause potential substantial adverse effects, including the risk of loss, injury, or death involving rupture of a known earthquake fault, as delineated on the most recent Alquist-Priolo Earthquake Fault Zoning Map issued by the State Geologist for the area or based on other substantial evidence of a known fault. Therefore, no impacts related to this issue would occur as a result of the Project.

Significance Determination: No Impact

Mitigation Measures: None

(a) ii) Would the project directly or indirectly cause potential substantial adverse effects, including the risk of loss, injury, or death involving strong seismic ground shaking?

The principal seismic hazard at the Project Site is ground shaking resulting from an earthquake occurring along any of several major active and potentially active faults in southern California. Known regional active faults that could produce significant ground shaking at the site include the San Joaquin Hills Blind Thrust and Whittier faults located approximately 6.1 miles and 9.6 miles, respectively, from the site. The intensity of ground shaking at a given location depends primarily on the earthquake magnitude, the distance from the source, and the site response characteristics. Peak horizontal ground accelerations are generally used to evaluate the intensity of ground motion. Using the United States Geological Survey (USGS) Seismic Design Maps), the peak ground acceleration for the Maximum Considered Earthquake (MCEG) adjusted for the Site Class effects (PGAM) at the Project Site is 0.53g. Based on the USGS online unified hazard tool program, the modal seismic event is Moment Magnitude (MW) 6.9 at a distance of 6.5 miles.

However, in accordance with Mitigation Measure GEO-1, the Project Applicant would be required by the City's Building Division as part of the Project's Plan Check process to comply with any recommendations made in a final Geotechnical Exploration Report that addresses the final design of the Project. In addition, the Project would be required to adhere to the latest adoption edition of the California Building Standards Code, which includes seismic design standards. Compliance with these requirements would ensure that the Project would not directly or indirectly cause potential substantial adverse effects, including the risk of loss, injury, or death involving strong seismic ground shaking. Therefore, impacts related to seismic ground shaking would be less than significant.

Significance Determination: Less Than Significant With Mitigation Incorporated

Mitigation Measures:

GEO-1: Prior to the issuance of a grading or building permit (whichever is issued first), the Project Applicant shall demonstrate to the City's Community Development Department staff that

all applicable recommendations of the Project's final Geotechnical Exploration Report have been incorporated into the Project design and grading plans.

(a) iii) Would the project directly or indirectly cause potential substantial adverse effects, including the risk of loss, injury, or death involving seismic-related ground failure, including liquefaction?

Based on the Geotechnical Exploration Report prepared for the Project, the potential for liquefaction to occur at the Project Site is considered low. It has been estimated that the Project would experience earthquake-induced settlement of approximately less than 0.5 inches. However, in accordance with Mitigation Measure GEO-1, the Project Applicant would be required by the City's Building Division as part of the Project's Plan Check process to comply with any recommendations made in a final Geotechnical Exploration Report that addresses the final design of the Project. In addition, the Project would be required to adhere to the latest adoption edition of the California Building Standards Code, which includes seismic design standards. Compliance with these requirements would ensure that the Project would not directly or indirectly cause potential substantial adverse effects, including the risk of loss, injury, or death involving strong seismic ground shaking. Therefore, impacts related to seismic-related ground failure would be less than significant.

Significance Determination: Less Than Significant With Mitigation Incorporated

Mitigation Measures:

GEO-1: Prior to the issuance of a grading or building permit (whichever is issued first), the Project Applicant shall demonstrate to the City's Community Development Department staff that all applicable recommendations of the Project's final Geotechnical Exploration Report have been incorporated into the Project design and grading plans.

(a) iv) Would the project directly or indirectly cause potential substantial adverse effects, including the risk of loss, injury, or death involving landslides?

The Project Site topography and surrounding area are generally flat and not subject to landslides. Thus, the Project would not directly or indirectly cause potential substantial adverse effects, including the risk of loss, injury, or death involving landslides. Therefore, no impacts related to this issue would occur as a result of the Project.

Significance Determination: No Impact

Mitigation Measures: None

(b) Would the project result in substantial soil erosion or the loss of topsoil?

The Project Site is completely developed with a restaurant building and surface parking and does not contain topsoil that is used for its nutrients.

Construction, grading, and excavation activities would expose areas of the Project Site to the erosional effects of wind or water for a protracted period of time. Development of the proposed project would include construction activities that would expose soils and could potentially result in substantial erosion. Excavation would be limited to that necessary for the installation of building foundations and utilities. All grading activities require adherence to the City's grading ordinance, which include requirements and standards designed to limit potential impacts to acceptable levels. During construction, the Project would be required by to prevent the transport of sediments from the Project Site through stormwater runoff and winds through the use of appropriate Best Management Practices (BMPs).

Furthermore, the State Water Resources Control Board (SWRCB) adopted a National Pollutant Discharge Elimination System (NPDES) General Permit for Stormwater Discharges Associated with Construction and Land Distrubance Activities (Construction General Permit). To obtain coverage under the Construction General Permit, a Project Applicant must submit various documents, including a Notice of Intent and a Stormwater Pollution Prevention Plan (SWPPP). Activities subject to the Construction General Permit include clearing, grading, and distrubances to the ground, such as grubbing or excavation. The purpose of the SWPPP is to identify sources of sediment and other pollutants that could affect the quality of stormwater discharges and to describe and ensure the implementations of Best Management Practices (BMPs) to reduce or eliminate sediment and other pollutants in stormwater as well as non-stormwater discharges resulting from construction activity. Potential BMPs for construction activities that could be used during the Project's construction phase include but are not limited to silt fencing, fiber rolls, hydraulic mulch, velocity dissibation device, and construction waste management. With the implementation of the NPDES regulations, Project impacts related to soil erosion would be less than significant.

Significance Determination: Less Than Significant

Mitigation Measure: None

(c) Be located on a geologic unit or soil that is unstable, or that would become unstable as a result of the project, and potential result in on- or off-site landslide, lateral spreading, subsidence, liquefaction, or collapse?

The potential for liquefaction at the Project Site is considered low and the Project Site is not subject to landslides. Additionally, it has been estimated that the Project would experience earthquake-induced settlement of approximately less than 0.5 inches. However, in accordance with Mitigation Measure GEO-1, the Project Applicant would be required by the City's Building Division as part of the Project's Plan Check process to comply with any recommendations made in a final Geotechnical Exploration Report that addresses the final design of the Project and with current California Building Code and City building. Compliance with these requirements would ensure that the Project would not directly or indirectly cause potential substantial adverse effects, including the risk of loss, injury, or death involving strong seismic ground shaking. Therefore, impacts related to geologic or soil instability would be less than significant.

Significance Determination: Less Than Significant With Mitigation Incorporated

Mitigation Measure:

GEO-1: Prior to the issuance of a grading or building permit (whichever is issued first), the Project Applicant shall demonstrate to the City's Community Development Department staff that all applicable recommendations of the Project's final Geotechnical Exploration Report have been incorporated into the Project design and grading plans.

(d) Would the project be located on expansive soil, as defined in Table 18-1-B of the Uniform Building Code (1994), creating substantial direct or indirect risks to life or property?

Based on the Geotechnical Investigation Report prepared for the Project, soils at the Project Site have a low potential for expansion. Thus, the Project would not be located on expansive soil, as defined in Table 18-1-B of the Uniform Building Code (1994), creating substantial direct or indirect risks to life or property. Therefore, no impacts related to this issue would occur as a result of the Project.

Significance Determination: No Impact

Mitigation Measures: None

(e) Would the project have soils incapable of adequately supporting the use of septic tanks or alternative wastewater disposal systems where sewers are not available for the disposal of wastewater?

The Project would not use a septic system for wastewater disposal. The Project would connect to the City's existing sewer system for wastewater disposal. Thus, the Project would not require the installation of alternate wastewater disposal systems or septic tanks. Therefore, no impacts related to this issue would occur as a result of the Project.

Significance Determination: No Impact

Mitigation Measures: None

(f) Would the project directly or indirectly destroy a unique paleontological resource or site or unique geologic feature?

Paleontological resources include fossil remains, fossil localities, and formations that have produced fossil material in other nearby areas. Paleontological resources are limited, nonrenewable, sensitive scientific and educational resources, including fossils preserved either as impressions of soft (fleshy) or hard (skeletal) parts, mineralized remains of skeletons, tracks, or burrows; other trace fossils; coprolites (fossilized excrement); seeds or pollen; and other microfossils from terrestrial, aquatic, or aerial organisms.

The City's General Plan has designated most of the planning area generally east of SR-55 as an area of paleontological resource sensitivity.[16]

The Project Site is currently developed with a restaurant building and surface parking. According to a records search conducted by the Los Angeles County Museum of Natural History conducted in June 2019, there are no known paleontological resources present within the Project Site boundaries, although there are resources within the general Project Site area. Although the Project would require relatively shallow excavation work for the building foundation, it is possible that unknown paleontological resources could be encountered. Thus, the Project Applicant would be required to implement Mitigation Measure GEO-2, which would ensure that Project impacts related to paleontological resources would be less than significant.

Significance Determination: Less Than Significant with Mitigation Incorporated

Mitigation Measure:

GEO-2: In the event a previously unrecorded paleontological deposit is encountered during construction; all activity shall cease in the vicinity of the find and redirected elsewhere, and the City shall be immediately informed of the discovery. A paleontologist shall be retained by the developer to:

- Make recommendations on the treatment of the deposits. The recommendations shall be developed in accordance with applicable provisions of Public Resource Code Section 21083.2 and State CEQA Guidelines 15126.4. The City shall be consulted on the treatment of the deposits. The applicant shall follow all recommendations made by the paleontologist. The deposits shall not be disturbed or removed until the appropriate treatment has be recommended by the paleontologist and approved by the City. No construction activity in the vicinity of the find, the boundary of which shall be determined by the paleontologist, may resume until the recommendations for treatment of the deposits have been implemented.

If applicable, the final report containing site forms, site significance, and mitigation measures shall be submitted to the Community Development Department when finalized. The final written report shall be submitted to the appropriate regional paleontological Information Center within three months after work has been completed.

Significance Determination After Mitigation: Less Than Significant

---

[16] *Page 5.5-13 in City of Orange General Plan Program EIR: http://www.cityoforange.org/civicax/filebank/blobdload.aspx?blobid=8417.*

Cumulative Impacts

As shown on Table 36 later in this MND, there are five cumulative projects within proximity to the Project Site. Geology and soils impacts are site-specific. The City considers the geotechnical, geologic, and paleontological resources impacts on a project-by-project basis. As discussed above, the Project would not result in any significant impacts related to geotechnical/geologic issues, and with mitigation, Project impacts related to paleontological resources would be less than significant. Therefore, cumulative impacts related to geology and soils would be less than significant.

8. GREENHOUSE GAS EMISSIONS. *Would the project*:	Potentially Significant Impact	Less Than Significant with Mitigation Incorporated	Less Than Significant Impact	No Impact
(a) Generate greenhouse gas emissions, either directly or indirectly, that may have a significant impact on the environment?	☐	☐	☑	☐
(b) Conflict with an applicable plan, policy or regulations adopted for the purpose of reducing the emissions of greenhouse gases?	☐	☐	☑	☐

Impact Analysis

(a) Would the project generate greenhouse gas emissions, either directly or indirectly, that may have a significant impact on the environment?

(b) Would the project conflict with an applicable plan, policy or regulations adopted for the purpose of reducing the emissions of greenhouse gases?

The analysis in this section is based primarily on the following (refer to Appendix A):

- *Air Quality and Greenhouse Gases Modeling, NT Environmental Consulting, July 2019.*

Environmental Setting

Climate Change Background

Global climate change refers to changes in average climatic conditions on Earth as a whole, including changes in temperature, wind patterns, precipitation, and storms. Global warming, a related concept, is the observed increase in average temperature of Earth's surface and atmosphere. One identified cause of global warming is an increase of greenhouse gas (GHG) emissions in the atmosphere. GHG emissions are those compounds in Earth's atmosphere that play a critical role in determining Earth's surface temperature.

Earth's natural warming process is known as the "greenhouse effect." It is called the greenhouse effect because Earth and the atmosphere surrounding it are similar to a greenhouse with glass panes in that the glass allows solar radiation (sunlight) into Earth's atmosphere but prevents radiative heat from escaping, thus warming Earth's atmosphere. Some levels of GHG emissions keep the average surface temperature of Earth close to a hospitable 60 degrees Fahrenheit. However, it is believed that excessive concentrations of anthoropogenic GHG emissions in the atmosphere can result in increased global mean temperatures, with associated adverse climatic and ecological consequences.

GHG Emissions Background

GHG emissions include CO_2, methane (CH_4), nitrous oxide (N_2O), hydrofluorocarbons (HFCs), perfluorocarbons (PFCs), sulfur hexafluoride (SF_6), and nitrogen trifluoride (NF_3).[17] Carbon dioxide is the most abundant GHG. Other GHG emissions are less abundant but have greater global warming potential than CO_2. Thus, emissions of other GHG emissions are frequently expressed in their equivalent mass of CO_2, denoted as CO_2e. Forest fires, decomposition, industrial processes, landfills, and the consumption of fossil fuels for power generation, transportation, heating, and cooking are the primary sources of GHG emissions.

Regulatory Framework

There are any number of agreements, strategies, policies, regulations, and standards that relate to GHG emissions – from international climate accords to local climate action plans. The following plans, policies, and regulations are fundamental to the Project's determination of significance with respect to its GHG emissions and consistency with these documents.

State

AB 32 (California Global Warming Solutions Act of 2006) and SB 32

In September 2005, Governor Arnold Schwarzenegger signed the California Global Warming Solutions Act of 2006, AB 32, into law. AB 32 committed the State to achieving the following:

- By 2010, reduce statewide GHG emissions to 2000 levels.[18]
- By 2020, reduce statewide GHG emissions to 1990 levels.

AB 32 further requires CARB to adopt rules and regulations that achieve the maximum technologically feasible and cost-effective GHG emissions reductions.

Signed in September 2016 by Governor Jerry Brown, SB 32 updates AB 32 to include an emissions reductions goal for the year 2030. Specifically, SB 32 requires the California Air Resources Board (CARB) to ensure that statewide GHG emissions are reduced to 40 percent below the 1990 level by 2030.

Climate Change Scoping Plan

In 2008 CARB approved a Climate Change Scoping Plan (2008 Scoping Plan) detailing the approach that California would take to reduce its GHG emissions to 1990 levels by 2020, as required by AB 32. To achieve this, CARB determined that an approximate 28.5 percent reduction in GHG emissions would be

---

[17] *As defined by California Assembly Bill (AB) 32 and Senate Bill (SB) 104.*

[18] *The 2010 target to reduce GHG emissions to 2000 levels was not met.*

necessary. That is, projected 2020 GHG emissions (i.e. emissions that would occur in 2020, absent any GHG-reducing laws and regulations) would have to be reduced by 28.5 percent.

CARB prepared a revised and expanded document, the Supplemental Functional Equivalent Document to the Climate Change Scoping Plan (Supplemental FED), approved in August 2011. As part of the Supplemental FED, CARB updated the projected 2020 emissions inventory based on then-current economic forecasts (i.e. as influenced by the economic downturn) and GHG emissions reduction measures already in place.[19] Ultimately, CARB determined that achieving the 1990 emissions levels by 2020 would require a reduction in GHG emissions of 16 percent from BAU conditions, down from the previous 28.5 percent figure.

CARB adopted the First Update to the Climate Change Scoping Plan: Building on the Framework (First Update) in 2014. The First Update found that California is on track to meet AB 32's 2020 emissions reduction mandate and determined that, by 2030, the State could reduce its GHG emissions to levels on course with those needed to achieve the 2050 target[20] if it realizes the expected benefits of its existing policy goals. CARB further identified and developed recommended actions for six focus areas key to achieving the 2050 target: (1) energy; (2) transportation (vehicles/equipment, sustainable communities, housing, fuels, and infrastructure); (3) agriculture; (4) water; (5) waste management; and (6) natural and working lands.

In December 2017, CARB adopted the 2017 Climate Change Scoping Plan Update: The Strategy for Achieving California's 2030 Greenhouse Gas Target (2017 Update). The 2017 Update builds upon the successful framework established by the 2008 Scoping Plan and the First Update and identifies new, technologically feasible, and cost-effective strategies to ensure that the state meets its GHG reduction targets in a way that promotes and rewards innovation, continues to foster economic growth, and delivers improvements to the environment and public health. It includes policies to require direct GHG reductions at some of the state's largest stationary sources and mobile sources, such as use of lower GHG fuels, efficiency regulations, and the Cap-and-Trade program, which constraints and reduces emissions at covered sources.

---

[19] *E.g. the million-solar-roofs program, AB 1493 (Pavley I) motor vehicle GHG emissions standards, and the Low Carbon Fuel Standard (LCFS). Pavley I, the first GHG standard in the nation for passenger vehicles, took effect for model years starting in 2009 to 2016. Pavley I could potentially result in a 27.7 million metric tons CO_2e reduction of GHG emissions by 2020. Pavley II covers models years 2017 to 2025 and could result in additional reductions of 4.1 million metric tons CO_2e.*

[20] *The 2050 goal of reducing GHG emissions to 80 percent below 1990 levels was originally established by Executive Order S-3-05, issued by Governor Schwarzenegger in June 2005. However, the 2050 goal was not codified by either AB 32 or SB 32.*

SB 97

Passed in August 2007, SB 97 required the State Office of Planning and Research (OPR) to prepare and develop CEQA guidelines for the effects and/or mitigation of GHG emissions, including effects associated with transportation and energy consumption. Subsequently, the Draft Guidelines Amendments for Greenhouse Gas Emissions (Guidelines Amendments) were adopted in December 2009 to address the specific obligations of public agencies when analyzing GHG emissions to determine a project's effect on the environment, as pursuant to CEQA.

However, the Guidelines Amendments provide no thresholds of significance or any specific mitigation measures; rather, they require a lead agency to make a good-faith effort to describe, calculate, or estimate the amount of GHG emissions that would result from a Project, to the extent possible based on scientific and factual data. The Guidelines Amendments give discretion to the lead agency whether to (1) use a model or methodology to quantify GHG emissions resulting from a project, and which model or methodology to use; or (2) rely on a qualitative analysis or performance-based standards. Additionally, three factors that should be considered in the evaluation of the significance of GHG emissions are identified:

(1) The extent to which a project may increase or reduce GHG emissions as compared to the existing environmental setting;

(2) Whether the project emissions exceed a threshold of significance that the lead agency determines applies to the project; and

(3) The extent to which the project complies with regulations or requirements adopted to implement a statewide, regional, or local plan for the reduction or mitigation of GHG emissions.

The administrative record for the Guidelines Amendments also clarifies "that the effects of greenhouse gas emissions are cumulative and should be analyzed in the context of CEQA's requirements for the cumulative impact analysis."[21]

The California Natural Resources Agency is required to periodically update the Guidelines Amendments to incorporate new information or criteria established by CARB pursuant to AB 32. SB 97 applies to any environmental impact report (EIR), negative declaration, mitigated negative declaration, or other document requirement by CEQA.

---

[21] *Letter from Cynthia Bryant, Director of the Governor's Office of Planning and Research, to Mike Chrisman, California Secretary for Natural Resources, dated 13 April 2009.*

Regional

2016-2040 Regional Transportation Plan/Sustainable Communities Strategy

SB 375 requires each Metropolitan Planning Organization (MPO) to adopt a Sustainable Community Strategy (SCS) encouraging compact development that reduces passenger Vehicle Miles Traveled (VMT) and trips, all for the purpose of meeting CARB-determined regional GHG emissions reduction targets.

To implement SB 375 and reduce GHG emissions via strategic land use and transportation planning, the Southern California Association of Governments (SCAG) adopted the 2016-2040 Regional Transportation Plan/Sustainable Communities Strategy (2016-2040 RPT/SCS) in April 2016. In short, the 2016-2040 RTP/SCS offers a blueprint for how Southern California can grow more sustainably, in particular by recognizing the relationship between transportation investments and land use patterns and how this relationship can sustain existing resources while expanding efficiency, mobility, and accessibility for people across the region. The 2016-2040 RTP/SCS also includes strategies focused on compact infill development and supporting infrastructure that promotes the easier public access to jobs, services, educational facilities, healthcare, and more.

To this end, the 2016-2040 RTP/SCS reinforces the trend of focusing new housing and employment in the region's High Quality Transit Area (HQTAs).[22] Though these areas currently account for just 3 percent of total land in the SCAG region, they are projected to accommodate 46 percent of the region's future household growth and 55 percent of the region's future employment growth by 2040. HQTAs are a cornerstone of land use planning best practices in the SCAG region because they concentrate roadway repair investments, leverage transit and active transportation investments, reduce regional life cycle infrastructure costs, improve accessibility, create local jobs, and have the potential to improve public health and housing affordability. As a result, HQTAs are vital to the attainment of regional GHG emissions reduction targets: successful implementation of the 2016-2040 RTP/SCS would result in more complete communities with a variety of transportation and housing choices, reducing automobile use and, crucially, associated GHG emissions.

The 2016-2040 RTP/SCS is estimated to reduce per capita passenger vehicle GHG emissions by 8 percent by 2020 and 18 percent by 2035 – compared with 2005 levels. This would meet the region's 2020 GHG reduction target of 8 percent per capita, and it exceeds the previous 13 percent target for 2035, which applied through September 30, 2018. However, in March 2018, CARB adopted updated targets requiring a 19 percent decrease in per capita passenger vehicle GHG emissions for the SCAG regional by 2035, effective as of October 1, 2018. The region's 2020 target was unchanged. As the updated CARB targets were adopted after the promulgation of the 2016-2040 RPT/SCS, it is expected that the updated 2035 target will be incorporated into the next RTP/SCS. Overall, the 2016-2040 RPT/SCS and/or the next RPT/SCS are

---

[22] *The 2016-2040 RTP/SCS defines HQTAs as areas within one-half mile of a fixed guideway transit stop or a bus transit corridor where buses pick up passengers at a frequency of every 15 minutes or less during peak commuting hours.*

expected to fulfill and exceed the region's portion of SB 375 compliance with respect to meeting the state's GHG emissions reduction goals.

Local

City of Orange General Plan Natural Resources Element

Released in 2010 and last revised in December 2015, the City's General Plan Natural Resources Element outlines the City's climate change-related goals and policies and identifies additional climate change-related policies from other portions of the General Plan. Though Policy 3.2 calls on the City to "develop and adopt a comprehensive strategy to reduce greenhouse gases (GHGs) within Orange by at least 15 percent from currently levels by 2020," it is unclear whether the City has adopted such a strategy or climate action plan.

Existing Conditions

Existing Statewide GHG Emissions

As reported by the California Energy Commission (CEC), California contributes approximately one percent of global and 8.2 percent of national GHG emissions.[23] California contains approximately 12 percent of the national population. Approximately 80 percent of GHGs in California are CO_2 emitted from fossil fuel combustion. The current California GHG inventory compiles statewide anthropogenic GHG emissions and carbon sinks/storage from years 2000 through 2016.[24] It includes estimates for CO_2, CH_4, N_2O, HFCs, PFCs, and SF_6. The 2010-2016 GHG inventory for California is presented on Table 14. As show, the GHG inventory for California in 2016 was 429.4 million $MTCO_2e$.

---

[23] *California Energy Commission. Tracking Project, Greenhouse Gas Emission Reductions. www.energy.ca.gov/renewables/tracking_progress/documents/Greenhouse_Gas_Emissions_Reductions.pdf. December 2017.*

[24] *A carbon inventory identifies and quantifies sources and sinks of greenhouse gases. Sinks are defined as a natural or artificial reservoir that accumulates and stores some carbon-containing chemical compound for an indefinite period.*

Table 14
California GHG Inventory (million metric tons CO_2e)

	2010	2011	2012	2013	2014	2015	2016
Transportation	**165.07**	**161.51**	**161.22**	**160.90**	**162.28**	**166.14**	**169.38**
On Road	**151.20**	**148.03**	**147.71**	**147.07**	**148.04**	**151.52**	**154.64**
Passenger Vehicles	114.13	111.37	111.77	111.52	112.20	116.33	119.03
Heavy Duty Vehicles	37.07	36.65	35.93	35.55	35.83	35.19	35.62
Ships & Commercial Boats	**3.66**	**3.52**	**3.43**	**3.42**	**3.49**	**3.42**	**3.24**
Aviation (Intrastate)	**3.84**	**3.73**	**3.75**	**3.93**	**3.90**	**4.22**	**4.44**
Rail	**2.24**	**2.38**	**2.38**	**2.38**	**2.38**	**2.38**	**2.37**
Off Road [1]	**2.03**	**2.13**	**2.23**	**2.33**	**2.43**	**2.53**	**2.63**
Unspecified	**2.09**	**1.72**	**1.71**	**1.77**	**2.04**	**2.07**	**2.07**
Industrial	**91.50**	**90.94**	**91.07**	**93.73**	**93.96**	**91.58**	**89.61**
Refineries and Hydrogen Production	**30.46**	**30.12**	**29.88**	**29.22**	**29.40**	**28.21**	**29.61**
General Fuel Use	**17.93**	**18.78**	**18.91**	**19.31**	**19.87**	**19.23**	**18.53**
Natural Gas	13.46	14.50	14.48	14.36	15.56	14.79	14.99
Other Fuels	4.47	4.28	4.43	4.94	4.31	4.45	3.53
Oil & Gas: Production & Processing	**16.80**	**16.73**	**16.73**	**19.11**	**19.47**	**19.58**	**17.93**
Fuel Use	15.01	14.91	14.87	16.99	17.18	17.22	15.66
Fugitive Emissions	1.80	1.82	1.86	2.12	2.29	2.36	2.27
Cement Plants	**5.57**	**6.14**	**6.92**	**7.20**	**7.61**	**7.56**	**7.60**
Clinker Production	3.46	4.08	4.65	4.93	5.27	5.17	5.15
Fuel Use	2.11	2.07	2.26	2.28	2.34	2.39	2.45
Cogeneration Heat Output	**12.61**	**11.15**	**10.81**	**10.99**	**9.64**	**8.98**	**8.00**
Other Fugitive and Process Emissions	**8.13**	**8.02**	**7.81**	**7.90**	**7.98**	**8.01**	**7.95**
Natural Gas Transmission &	3.94	3.92	3.88	3.82	3.87	3.94	3.99
Manufacturing	0.24	0.22	0.19	0.20	0.17	0.18	0.10
Wastewater Treatment	1.87	1.85	1.85	1.85	1.86	1.85	1.85
Other	2.08	2.02	1.90	2.03	2.08	2.04	2.01
Electric Power	**90.34**	**88.06**	**95.09**	**89.65**	**88.24**	**83.67**	**68.58**
In-State Generation	**46.75**	**41.20**	**51.03**	**49.47**	**51.72**	**49.93**	**42.30**
Natural Gas	40.59	35.92	45.77	45.66	46.43	45.16	38.28
Other Fuels	5.05	4.03	4.44	2.91	4.40	3.65	2.55
Fugitive and Process Emissions	1.10	1.25	0.82	0.90	0.90	1.13	1.48
Imported Electricity	**43.59**	**46.86**	**44.07**	**40.17**	**36.51**	**33.74**	**26.28**
Unspecified Imports	13.45	15.52	17.48	11.82	13.44	11.21	9.68
Specified Imports	30.14	31.34	26.59	28.35	23.07	22.52	16.60
Commercial and Residential	**45.05**	**45.50**	**42.89**	**43.54**	**37.37**	**37.94**	**39.36**
Residential Fuel Use	**29.19**	**29.64**	**27.34**	**28.14**	**22.87**	**23.29**	**24.20**
Natural Gas	26.99	27.51	25.76	26.52	21.58	21.90	22.80
Other Fuels	2.21	2.13	1.58	1.62	1.28	1.39	1.40
Commercial Fuel Use	**13.58**	**13.71**	**13.41**	**13.30**	**12.51**	**12.67**	**12.92**
Natural Gas	11.17	11.33	11.25	11.28	10.39	10.50	10.89
Other Fuels	2.41	2.38	2.16	2.02	2.12	2.16	2.03

Table 14
California GHG Inventory (million metric tons CO_2e)

	2010	2011	2012	2013	2014	2015	2016
Commercial Cogeneration Heat	**0.92**	**0.78**	**0.76**	**0.71**	**0.58**	**0.56**	**0.81**
Other Commercial and Residential	**1.36**	**1.37**	**1.38**	**1.40**	**1.41**	**1.42**	**1.43**
Agriculture	**34.27**	**34.89**	**36.08**	**34.61**	**35.95**	**34.41**	**33.84**
Livestock	**24.00**	**23.84**	**24.47**	**23.49**	**23.81**	**23.10**	**22.99**
Enteric Fermentation (Digestive	12.13	11.98	12.10	11.78	11.85	11.40	11.35
Manure Management	11.86	11.86	12.38	11.71	11.96	11.70	11.64
Crop Growing & Harvesting	**7.50**	**7.40**	**7.73**	**7.42**	**7.48**	**6.91**	**6.89**
Fertilizers	5.78	5.67	5.93	5.65	5.72	5.28	5.25
Soil Preparation and Disturbances	1.64	1.65	1.73	1.69	1.68	1.56	1.56
Crop Residue Burning	0.08	0.08	0.08	0.08	0.08	0.08	0.08
General Fuel Use	**2.77**	**3.65**	**3.88**	**3.71**	**4.66**	**4.39**	**3.95**
Diesel	1.96	2.52	2.47	2.53	3.54	3.66	3.19
Natural Gas	0.65	0.66	0.70	0.69	0.63	0.64	0.72
Gasoline	0.16	0.48	0.71	0.49	0.49	0.10	0.04
Other Fuels	0.00	0.00	0.00	0.00	0.00	0.00	0.00
High GWP	**13.52**	**14.54**	**15.54**	**16.65**	**17.70**	**18.93**	**19.78**
Ozone Depleting Substance	**13.20**	**14.21**	**15.25**	**16.38**	**17.42**	**18.37**	**19.24**
Electricity Grid SF6 Losses [4]	**0.24**	**0.25**	**0.24**	**0.18**	**0.14**	**0.42**	**0.37**
Semiconductor Manufacturing	**0.08**	**0.08**	**0.06**	**0.08**	**0.14**	**0.14**	**0.16**
Recycling and Waste	**8.37**	**8.47**	**8.49**	**8.52**	**8.59**	**8.73**	**8.81**
Landfills [3]	**8.11**	**8.19**	**8.20**	**8.22**	**8.28**	**8.40**	**8.47**
Composting	**0.26**	**0.27**	**0.29**	**0.30**	**0.31**	**0.33**	**0.34**
Included Inventory Emissions	**448.11**	**443.91**	**450.38**	**447.59**	**444.10**	**441.40**	**429.35**

[a] *Reflects emissions from combustion of fuels plus fugitive emissions.*
[b] *These categories are listed in the Industrial sector of CARB's GHG Emission Inventory sectors.*
[c] *This category is listed in the Electric Power sector of CARB's GHG Emission Inventory sectors.*
[d] *Reflects use of updated USEPA models for determining emissions from livestock and fertilizers.*
Source: CARB, 2018 of the GHG Emission Inventory, July 2018.

Existing Project Site Emissions

The Project Site currently contains a 5,959 square-foot former restaurant building and its related surface parking. As the restaurant is no longer operational (as of December 31, 2018), the site contains no active uses and likely generates nominal, if any, anthropogenic GHG emissions. Nevertheless, emissions associated with the former use were estimated for comparison purposes, and it was determined that the restaurant would have generated about 866 MT of CO_2e annually. The Project would remove this former restaurant building and all other site improvements.

Project Impacts

Methodology

Because there is no "bright line" threshold of significance for GHG emissions, the methodology for evaluating a project's impacts related to GHG emissions focuses on its consistency with statewide, regional, and local plans adopted for the purpose of reducing and/or mitigating GHG emissions. This evaluation is the sole basis for determining the significance of a project's GHG-related impacts on the environment. For this Project, as a land use development project, the most directly applicable adopted regulatory plan to reduce GHG emissions is the 2016-2040 RTP/SCS, which is designed to achieve regional GHG reductions from the land use and transportation sectors as required by SB 375 and the State's long-term climate goals. This analysis also evaluates the Project's consistency with regulations or requirements set forth by the 2008 Scoping Plan and subsequent updates, as well as climate change-related goals and policies set forth by the City of Orange General Plan.

For informational purposes, the consistency analysis also discloses the amount of GHG emissions emitted through the use of recommended air quality models. This disclosure ensures that the estimate of the Project's GHG emissions satisfies State CEQA Guidelines Section 15064.4(a), which calls for a good-faith effort to describe and calculate emissions. However, the significance of a project's GHG emissions impacts is not based on the amount of GHG emissions resulting from the project.

Construction

The Project's construction emissions were calculated using CalEEMod Version 2016.3.2. Details of the modeling assumptions and emissions factors are provided in Appendix A. GHG emissions from construction activities were modeled using a reasonable estimate of the Project's construction schedule and phasing. CalEEMod calculates emissions from off-road equipment usage and on-road vehicle travel associated with haul, delivery, and construction worker trips.

In accordance with SCAQMD guidance, GHG emissions from construction were amortized over the lifetime of the Project. Because emissions from construction activities occur over a relatively short-term period of time, they contribute a relatively small portion of the overall lifetime GHG emissions for a project. Additionally, GHG emissions reduction measures for construction equipment are relatively limited. Thus, SCAQMD recommends that construction emissions be amortized over a 30-year project lifetime, so that GHG emissions reduction measures will address construction GHG emissions as part of the operational GHG reduction strategies.[25] As a result, the Project's total construction GHG emissions were divided by 30 to determine an approximate annual construction emissions estimate comparable to operational emissions.

---

[25] *SCAQMD Governing Board Agenda Item 31. December 5, 2008.*

Operations

Similar to construction, the SCAQMD-recommended CalEEMod is used to calculate potential GHG emissions generated by new land uses on the Project Site. The Project would result in direct and indirect GHG emissions generated by related vehicle trips and operations associated with the proposed building, including: (1) building operations: emissions associated with space heating and cooling, water heating, and lighting; (2) water: emissions associated with energy used to pump, convey, treat, delivery, and re-treat water; and (3) solid water: emissions associated with waste streams (embodied energy of materials).

Climate Change Scoping Plan

Tables 15 provides an evaluation of the Project's consistency with applicable reduction actions/strategies outlined in the 2008 Scoping Plan and the First Update to that plan. The 2017 Scoping Plan Update identifies additional GHG reduction measures necessary to achieve the 2030 GHG emissions reductions target. Table 16 provides an evaluation of the Project's consistency with this update. Based on the analysis on these tables, the Project would be consistent with the State's Climate Change Scoping Plan.

2016-2040 RTP/SCS

The 2016-2040 RTP/SCS is expected to help the SCAG region, and in turn California, reach its GHG reduction goals. Implementation of the 2016-2040 RTP/SCS is projected to reduce per capita transportation emissions by 9 percent by 2020 and by 16 percent by 2035.[26] Though CARB has not set per capita GHG emissions reduction targets for passenger vehicles for 2040, the 2016-2040 RTP/SCS GHG emissions reduction trajectory shows that more aggressive GHG emissions reductions are projected for 2040. The 2016-2040 RTP/SCS would result in an estimated 8 percent decrease in per capita passenger vehicles GHG emissions by 2020, an 18 percent decrease by 2035, and a 21 percent decrease by 2040. By meeting and exceeding the SB 375 targets for 2020 and 2035, as well as achieving an approximately 21 percent decrease in per capita vehicle GHG emissions by 2040, the 2016-2040 RTP/SCS is expected to fulfill and exceed its portion of SB 375 compliance.

At the Project's regional level, the 2016-2040 RTP/SCS is an applicable plan adopted for the purpose of reducing GHG emissions. In order to assess the Project's potential to conflict with or otherwise obstruct the goals of the 2016-2040 RTP/SCS, this section analyzes the Project's land use assumptions for those utilized by SCAG in the 2016-2040 RTP/SCS. Generally, projects are considered consistent with the provisions and general policies of applicable City and regional land use plans and regulations if they are compatible with the general intent of the plans and would not preclude the attainment of their primary goals. Table 17 includes a discussion of the Project's consistency with the Actions and Strategies set forth by the 2016-2040 RTP/SCS. Based on the analysis on Table 17 the Project would be consistent with the 2016-2040 RTP/SCS.

---

[26] *CARB, Regional Greenhouse Gas Emission Reduction Targets Pursuant to SB 375, Resolution 10-31.*

Table 15
Consistency Analysis – Climate Change Scoping Plan and First Update

Actions and Strategies	Responsible Party(ies)	Project Consistency Analysis
Area Sources		
SCAQMD Rule 445 (Wood Burning Devices): Requires use of natural gas to power all cooking stoves and fireplaces.	SCAQMD	**Consistent.** Any cooking stoves would either be electric or natural gas, not wood-burning.
Energy		
California Renewables Portfolio Standard (RPS) Program: SB 2X modified California's RPS program to require that both public and investor-owned utilities in California receive at least 33 percent of their electricity from renewable sources by the year 2020. California SB 2X also requires regulated sellers of electricity to meet an interim milestone of procuring 25 percent of their energy supply from certified renewable resources by 2016.	Southern California Edison	**Consistent.** The Project would use electricity provided by Southern California Edison (SCE), which is required to meet SB 350 and subsequent SB 100 performance standards that exceed the RPS program standard. SB 100 revises the State's renewable resources targets to 44 percent by 2024, 52 percent by 2027, 60 percent by 2030, and 100 percent by 2045. According to SCE's 2018 Draft Renewable Portfolio Standard Procurement Plan, the company received 31.6 percent of its electricity from RPS-eligible resources in 2017 and is positioned to achieve the 2020 target of 33 percent.[a]
Senate Bill 350 (SB 350): The Clean Energy and Pollution Reduction Act of 2015 increases the standards of the California RPS program by requiring that the amount of electricity generated and sold to retail customers per year from eligible renewable energy resources be increased to 50 percent by 2030 and also requires the State Energy Resources Conservation and Development Commission to double the energy efficiency savings in electricity and natural gas final end uses of retail customers through energy efficiency and conservation.[b]	State Energy Resources Conservation and Development Commission, and SCE	**Consistent**. SCE would be required to generate electricity that would increase renewable energy resources to 50 percent by 2030. As SCE would provide electricity service to the Project Site, by 2030, the Project would use electricity consistent with the requirements of SB 350.
Senate Bill 1368 (SB 1368): The GHG Emissions Standard for Baseload Generation prohibits any retail seller of electricity in California from entering into a long-term financial commitment for baseload generation if the GHG emissions are higher than those from a combined-cycle natural gas power plant.	State, CEC, and SCE	**Consistent**. SCE is obligated to meet the requirements of SB 1368. As SCE provides electricity service to the Project Site, the Project would use electricity that meets the requirements under SB 1368.
California Code of Regulations (CCR), Title 20: The 2012 Appliance Efficiency Regulations, adopted by the	State and CEC.	**Consistent.** The Appliance Efficiency Regulations apply to new appliances and lighting that are sold or offered for sale

Table 15
Consistency Analysis – Climate Change Scoping Plan and First Update

Actions and Strategies	Responsible Party(ies)	Project Consistency Analysis
CEC, include standards for new appliances (e.g. refrigerators) and lighting if they are sold or offered for sale in California.		in California. The Project would include new appliances and lighting that comply with this energy efficiency standard.
CCR, Title 24, Building Standards Code: The 2013 Building Energy Efficiency Standards contained in Title 24, Part 6 (also known as the California Energy Code), requires the design of building shells and building components to conserve energy. The standards are updated periodically to allow for consideration and possible incorporation of new energy-efficient technologies and methods. The California Green Building Standards Code (Part 11, Title 24) established mandatory and voluntary standards on planning and design for sustainable site development, energy efficiency (extensive update of the California Energy Code), water conservation, material conservation, and internal air contaminants.	State and CEC	**Consistent.** Consistent with regulatory requirements, the Project must comply with applicable provisions of the OMC that in turn require compliance with Title 24 and the California Green Building Standards. The current 2016 Title 24 standards are 28 percent more efficient (for electricity) than residential construction built to the 2013 Title 24 standards and 5 percent more efficient for non-residential construction built to the 2013 Title 24 standards.[c] However on July 1, 2019, the 2019 California Building Standards Code was published, with an effective date of January 1, 2020. Though these updated standards have yet to go into effect and have not yet been adopted by the OMC, they would apply to the Project's construction, which would comment subsequent to the effective date. Residences built to the new 2019 standards will be approximately 7 percent more efficient than those built to the 2016 standards. Nonresidential buildings will be approximately 30 percent more energy efficient.[D]
Energy Independence and Security Act of 2007 (EISA): EISA requires manufacturing for sale within the United States to phase out incandescent light bulbs between 2012 and 2014, resulting in approximately 25 percent greater efficiency for light bulbs. It would result in approximately 200 percent greater efficiency for light bulbs, or similar energy savings, by 2020.	Federal/ Manufacturers	**Consistent**. EISA would serve to reduce and/or eliminate the use of incandescent light bulbs for the Project and, thus, reduce energy usage associated with lighting.
AB 1109: The Lighting Efficiency and Toxic Reduction Act prohibits a person from manufacturing for sale in the state specified general purpose lights that contain levels of hazardous substances and requires the establishment of	State/Manufacturers	**Consistent.** As with EISA, discussed above, the Project would meet the requirements under AB 1109 because it incorporates energy efficient lighting and electricity

Table 15
Consistency Analysis – Climate Change Scoping Plan and First Update

Actions and Strategies	Responsible Party(ies)	Project Consistency Analysis
minimum energy efficiency standards for all general purpose lights. The standards are structured to reduce average statewide electrical energy consumption by not less than 50 percent from the 2007 levels for indoor residential lighting and not less than 25 percent from the 2007 levels for indoor commercial and outdoor lighting by 2018.[E]		consumption that complies with local and state green building programs.
Cap-and-Trade Program: This program establishes an overall limit on GHG emissions from capped sectors (e.g. electricity generation, petroleum refining, and cement production). Facilities subject to the cap are able to trade permits to emit GHG emissions within the overall limit.	State/Manufacturers	**Consistent.** As required by AB 32 and the Climate Change Scoping Plan, the Cap-and-Trade Program covers the GHG emissions associated with electricity consumed in California, whether generated in-state or imported. Accordingly, GHG emissions associated with CEQA projects' electricity usage are covered by the Cap-and-Trade Program. Therefore, GHG emissions associated with the Project's electricity usage per year would be covered by the Cap-and-Trade Program (as SCE would be a covered entity) and would be consistent with AB 32 and the Climate Change Scoping Plan.
Mobile		
AB 1493 "Pavley Standards": AB 1493 requires the development and adoption of regulations to achieve "the maximum feasible reduction of greenhouse gases" emitted by non-commercial passenger vehicles, light-duty trucks, and other vehicles used primarily for personal transportation in the State. In compliance with AB 1493, CARB adopted regulations to reduce GHG emissions from non-commercial passenger vehicles and light duty trucks of model year 2009 through 2016. Model years 2017 through 2025 are addressed by California's Advanced Clean Cars program (discussed below).	State, CARB	**Consistent.** The Pavley regulations reduced GHG emissions from California passenger vehicles by about 22 percent in 2012 and reduced GHG emissions by about 30 percent in 2016, all while improving fuel efficiency. However, this regulatory program applies to vehicle manufacturers and not directly to land use development. Nonetheless, vehicular travel associated with the Project would benefit from the regulation in the form of reduced GHG emissions due to the increasing penetration of new vehicles in the state-wide fleet that are affected by AB 1493. Mobile source emissions generated by Project users would be reduced with the implementation of AB 1493, consistent with the reduction of GHG emissions under AB 32. The Project's mobile source GHG emissions were calculated using CalEEMod,

Table 15
Consistency Analysis – Climate Change Scoping Plan and First Update

Actions and Strategies	Responsible Party(ies)	Project Consistency Analysis
		which incorporates the implementation of AB 1493 into mobile source emissions factors.
Executive Order S-01-07: The Low Carbon Fuel Standard requires a 10-percent or greater reduction by 2020 in the average fuel carbon intensity for transportation fuels in California regulated by CARB. CARB identified the LCFS as a Discrete Early Action item under AB 32, and the final resolution (09-31) was issued on April 23, 2009.[F,G]	State, CARB	**Consistent.** This regulatory program applies to fuel suppliers and not directly to land use development. Nonetheless, GHG emissions related to the Project's associated vehicles travel would benefit from this regulation because fuel consumed by Project-related vehicles would be required to comply with the LCFS.
Advanced Clean Cars Program: In 2012 CARB approved the Advanced Clean Cars Program, a new emissions-control program for model year 2017 through 2025. The program combines the control of smog, soot, and GHG emissions with requirements for greater numbers of zero-emissions vehicles. By 2025, when the rules will be fully implemented, new automobiles will emit 34 percent fewer GHGs and 75 percent fewer smog-forming emissions.	State, CARB	**Consistent.** Similar to AV 1493, this regulatory program applies to manufactures and not directly to land use development. Nonetheless, GHG emissions generated by Project-related vehicle travel would benefit from this regulation as new vehicles increasingly penetrate the state-wide fleet, and mobile source GHG emissions generated by the Project would subsequently be reduced, consistent with AB 32 requirements. However, as CalEEMod does not yet account for this regulation, estimates of the Project's mobile source GHG emissions do not reflect the implementation of this regulatory program.
SB 375: SB 375 requires the integration of planning processes for transportation, land-use, and housing. Under SB 375, each MPO would be required to adopt a Sustainable Community Strategy (SCS) to encourage compact development that reduces passenger vehicle miles traveled and trips so that the regional will meet a target, established by CARB, for reducing GHG emissions.	State, CARB, Regional, SCAG	**Consistent.** SB 375 requires SCAG to direct the development of the SCS for the regional, which is discussed further below. The Project consists of an infill development that would be located near an emerging HQTA. As the Project would be consistent with SCAG's 2016-2040 RTP/SCS, it would not conflict with the region's obligations under SB 375 to meet the State's GHG emissions reduction goals.
Solid Waste		
California Integrated Waste Management Act of 1989 and AB 341: The California Integrated Waste Management Act of 1989 requires each jurisdiction's source reduction and recycling element to include an implementation	State	**Consistent.** GHG emissions related to solid waste generation from the Project would benefit from this regulation as it would decrease the overall amount of solid waste disposed of at landfills. The decrease in solid waste

Table 15
Consistency Analysis – Climate Change Scoping Plan and First Update

Actions and Strategies	Responsible Party(ies)	Project Consistency Analysis
schedule that shows: (1) diversion of 25 percent of all solid waste by January 1, 1995, through source reduction, recycling, and composting activities; and (2) diversion of 50 percent of all solid waste on and after January 1, 2000, through source reduction, recycling, and composting facilities.[18] AB 341 amended the California Integrated Waste Management Act of 1989 to include a provision declaring that it is the policy goal of the state that not less than 75 percent of solid waste generated by source reduced, recycled, or composted by the year 2020, and annually thereafter.[1]		would then in return decrease the amount of methane released from the decomposing solid waste. Project-related GHG emissions from solid waste generation include a 50-percent reduction in solid waste generation source emissions. The Project Applicant would only contract for waste disposal services with a company that recycles solid waste in compliance with AB 341. Additionally, the Project Applicant would be required to comply with AB 1826 (Mandatory Commercial Organics Recycling) to recycle landscape cuttings and food waste. Further, the Project would provide recycling bins at appropriate locations to promote the recycling of paper, metal, glass, and other recyclables.
Water		
CCR, Title 24, Building Standards Code: The California Green Building Standards Code (Part 11, Title 24) includes water efficiency requirements for new residential and non-residential uses, in which buildings shall demonstrate a 20-percent overall water use reduction.	State	**Consistent.** As discussed earlier, consistent with regulatory requirements, the Project must comply with applicable provisions of the OMC that in turn require compliance with Title 24 and the California Green Building Standards.
SB X7-7: The Water Conservation Act of 2009 sets an overall goal of reducing per-capita urban water use by 20 percent by December 31, 2020. The state is required to make incremental progress towards this goal by reducing per-capita water use by at least 10 percent by December 31, 2015. This is an implementing measure of the Water Sector of the AB 32 Scoping Plan. Reduction in water consumption directly reduces the energy necessary and the associated emissions to convene, treat, and distribute water; it also reduces emissions from wastewater treatment.	State	**Consistent.** The Project's mandatory consistency with the regulatory provisions of Title 24 would meet this performance-based standard.
Construction		
CARB In-Use Off-Road Regulation: CARB's in-use off-road diesel vehicle regulation ("Off-Road Diesel Fleet	CARB	**Consistent.** The Project would use construction contractors that would comply with this regulation.

Table 15
Consistency Analysis – Climate Change Scoping Plan and First Update

Actions and Strategies	Responsible Party(ies)	Project Consistency Analysis
Regulation") requires the owners of off-road diesel equipment fleets to meet fleet average emissions standards pursuant to an established compliance schedule.		
CARB In-Use On-Road Regulation: CARB's in-use on-road heavy-duty vehicle regulation ("Truck and Bus Regulation") applies to nearly all privately and federally owned diesel fueled trucks and buses, as well as privately and publicly owned school buses with a gross vehicles weight rating greater than 14,000 pounds.	CARB	**Consistent.** The Project would use construction contractors that would comply with this regulation.

[A] *Southern California Edison Company's (U 338-E) 2018 Draft Review Renewables Portfolio Standard Procurement Plan, August 2018.*
[B] *SB 340 (2015-2016 Regular Session) Stats 2015, Ch. 547.*
[C] *CEC, Adoption Hearing, 2016 Building Energy Efficiency Standards.*
[D] *CEC 2019 Building Energy Efficiency Standards Overview, March 2018.*
[E] *AB 1107 (2007-2008 Regular Session) Stats. 2007, Ch. 534.*
[F] *CARB, Initial Statement of Reason for Proposed Regulation for the Management of High Global Warming Potential Refrigerant for Stationary Sources, October 2009.*
[G] *Carbon intensity is a measure of the GHG emissions associated with the various production, distribution, and use steps in the "lifecycle" of a transportation fuel.*
[H] *California Public Resources Code Section 41780(a).*
[I] *California Public Resources Code Section 41780.01(a).*

Table 16
Consistency Analysis – 2017 Scoping Plan Update

Actions and Strategies	Responsible Party(ies)	Project Consistency Analysis
SB 350: The Clean Energy and Pollution Reduction Act of 2015 increases the standards of the California RPS program by requiring that the amount of electricity generated and sold to retail customers per year from eligible renewable energy resources be increased to 50 percent by 2030.[A] Required measures include: Increase RPS to 50 percent of retail sales by 2030. Establish annual targets for statewide energy efficiency savings and demand reduction that will achieve a cumulative doubling of statewide energy efficiency savings in electricity and natural gas end uses by 2030. Reduce GHG emissions in the electricity sector through the implementation of the above measures and other actions as modeled in IRPs to meet GHG emissions reductions planning targets in the IRP process. Load-serving entities and publicly owned utilities meet GHG emissions reductions planning targets through a combination of measures as described in IRPs.	CPUC, CEC, CARB	**Consistent.** SCE is required to generate electricity that would increase renewable energy resources to 33 percent by 2020 and 50 percent by 2030. As SCE would provide electricity service to the Project, by 2030, the Project would use electricity consistent with the requirement of SB 350. As discussed earlier, SCE is positioned to receive at least 33 percent of electricity from renewable source by 2020. As required under SB 350, doubling the energy efficiency savings from final end uses of retail customers by 2030 would primarily rely on the existing suite of building energy efficiency standards under CCR Title 24, Part 6 (consistency with this regulation is discussed below) and utility-sponsored programs such as rebates for high-efficiency appliances, HVAC systems, and insulation. As discussed earlier, the Project would comply with CalGreen and Title 24 energy efficiency standards.
Implement Mobile Source Strategy (Cleaner Technology and Fuels) At least 1.5 million zero emission and plug-in hybrid light-duty electric vehicles by 2025. At least 4.2 million zero emission and plug-in hybrid light-duty electric vehicles by 2030. Further increase GHG stringency on all light-duty vehicles beyond existing Advanced Clean Cars regulations.	CARB, CalSTA, SGC, CalTrans, CEC, OPR, Local agencies	**Consistent.** CARB approved the Advanced Clean Cars Program in 2012 that establishes an emissions control program for model year 2017 through 2025. Standards under the Advanced Clean Cars Program likely will apply to all passenger and light duty trucks used by Project users, depending on the outcome of ongoing negotiations between CARB and EPA regarding federal standards. The program also requires auto manufacturers to produce an increasing number of zero emission vehicles in the 2018 through 2025 model years. Extension of the Advanced Clean Cars Program has not yet been adopted, but it is expected that measures will be introduced to increase GHG emissions

Table 16
Consistency Analysis – 2017 Scoping Plan Update

Actions and Strategies	Responsible Party(ies)	Project Consistency Analysis
Medium- and heavy-duty GHG Phase 2. Innovative Clean Transit: Transition to a suite of to-be-determined innovative clean transit options. Assumed 20 percent of new urban buses purchased beginning in 2018 will be zero emission buses with the penetration of zero-emission technology ramped up to 100 percent of new sales in 2030. Also, new natural gas buses, starting in 2018, and diesel buses, starting in 2020, meet the optional heavy-duty low-NO_x standard. Last Mile Delivery: New regulation that would result in the use of low NO_x or cleaner engines and the deployment of increasing numbers of zero-emission trucks primarily for class 3-7 last mile delivery trucks in California. This measure assumes ZEVs comprise 2.5 percent of new Class 3–7 truck sales in local fleets starting in 2020, increasing to 10 percent in 2025 and remaining flat through 2030. Further reduce VMT through continued implementation of SB 375 and regional Sustainable Communities Strategies; forthcoming statewide implementation of SB 743; and potential additional VMT reduction strategies not specified in the Mobile Source Strategy but included in the document "Potential VMT Reduction Strategies for Discussion.		reductions stringency on light duty autos and continue adding zero emission and plug in vehicles through 2030. CARB is also developing the Innovative Clean Transit measure to encourage the purchase of advanced technology buses, such as alternative fueled or battery powered buses. This would allow fleets to phase in cleaner technology in the near future. CARB is also in the process of developing proposals for new approaches and strategies to achieve zero emission trucks under the Advanced Clean Local Trucks (Last Mile Delivery) Program.[B,C] The Project's consistency with SCAG's 2016-2040 RTP/SCS is discussed throughout this analysis. As implementation of the 2016-2040 RTP/SCS is expected to fulfill and exceed the region's obligation under SB 375, the Project's consistency with the 2016-2040 RTP/SCS also ensures its consistency with SB 375.
Increase Stringency of SB 375 Sustainable Communities Strategy (2035 Targets)	CARB	**Consistent.** Under SB 375, CARB sets regional targets for GHG emissions reductions from passenger vehicles. In 2010, CARB established targets for 2020 and 2035 for each region. As required under SB 375, CARB is required to update regional GHG emissions targets every eight years. As part of the 2018 updates, CARB proposed a passenger-

Table 16
Consistency Analysis – 2017 Scoping Plan Update

Actions and Strategies	Responsible Party(ies)	Project Consistency Analysis
		vehicles related GHG reduction of 19 percent for 2035 for the SCAG region, which is more stringent than the current reduction target of 13 percent for 2035. As discussed, the Project would be consistent with the 2016-2040 RTP/SCS and by extension SB 375.
By 2019, develop pricing policies to support low-GHG transportation (e.g. low-emission vehicles zones for heavy duty, road use, parking pricing, transit discounts)	CalSTA, Caltrans, CTC, OPR/SGC, CARB	**Consistent.** The Project would support this policy as code required parking spaces would be consistent with Title 24, which contains requirements for supporting electric vehicle charging stations.
Adopt a Low Carbon Fuel Standard with a CI reduction of 18 percent.	CARB	**Consistent.** This regulatory program applies to fuel suppliers not directly to land use development. GHG emissions related to vehicular travel associated with the Project would benefit from this regulation because fuel used by Project-related vehicles would be required to comply with LCFS. The current LCFS, adopted in 2007, requires a reduction of at least 10 percent in the carbon intensity (CI) of California's transportation fuels by 2020. On September 27, 2017, CARB amended the LCFS regulation to target a 20 percent reduction in CI from a 2010 baseline by 2030.
Implement the Short-Lived Climate Pollutant Strategy by 2030: • 40 percent reduction in methane and hydrofluorocarbon emissions below 2013 levels. • 50 percent reduction in black carbon emissions below 2013 levels.	CARB, CalRecycle, CDFA, SWRCB, Local air districts	**Consistent.** SB 605 was adopted in 2014 and directs CARB to develop a comprehensive Short-Lived Climate Pollutant (SLCP) strategy. SB 1383 was later adopted in 2016 to require CARB to set statewide 2030 emissions reduction targets of 40 percent for methane and hydrofluorocarbons and 50 percent black carbon emissions below 2013 levels.[p] The Project would comply with the CARB SLCP Reduction Strategy, which limits the use of hydrofluorocarbons for refrigeration uses.

[A] *SB 350 (2015-2016 Regular Session) Stats 2015, Ch. 547.*

Table 16
Consistency Analysis – 2017 Scoping Plan Update

Actions and Strategies	Responsible Party(ies)	Project Consistency Analysis
[B] *CARB, Advance Clean Cars, Midterm Review. www.arb.ca.gov/msprog/acc/acc-mtr.htm.*		
[C] *CARB, Advanced Clean Local Trucks (Last mile delivery and local trucks). www.arb.ca.gov/msprog/actruck/actruck.htm.*		
[D] *CARB, Reducing Short-Lived Climate Pollutants in California, www.arb.ca.gov/cc/shortlived/shortlived.htm.*		

Table 17
Consistency with the 2016-2040 RTP/SCS

Actions and Strategies	Responsible Party(ies)	Consistency Analysis
Land Use Strategies		
Reflect the changing population and demands, including combating gentrification and displacement, by increasing housing supply at a variety of affordability levels.	Local jurisdictions.	**Consistent**. The Project would consist of a memory care/assisted living facility containing 36 beds that would add to the supply of housing in metropolitan Orange County.
Focus new growth around transit.	Local jurisdictions.	**Consistent**. The Project would be located at the forefront of an emerging HQTA that is projected to encompass the Project area by 2040, according to the 2016-2040 RTP/SCS. The Project is located within 350 feet of OCTA 59 bus stops. This line provides direct service to the Orange Transportation Center and Santa Ana Regional Transportation Center, both of which are Metrolink stations and major hubs for local and regional bus lines. Therefore, the Project would be consistent with the 2016-2040 RTP/SCS strategy of focusing growth near transit facilities.
Plan for growth around livable corridors, including growth on the Livable Corridors network.	SCAG, local jurisdictions.	**Consistent.** The Project is an infill development that would be consistent with the 2016-2040 RTP/SCS strategy of focusing

Table 17
Consistency with the 2016-2040 RTP/SCS

Actions and Strategies	Responsible Party(ies)	Consistency Analysis
		growth near transit facilities and along the 2,980 miles of Livable Corridors in the region.
Provide more options for short trips through Neighborhood Mobility Areas and Complete Communities.	SCAG, local jurisdictions.	**Consistent.** Given that the Project proposes a memory care/assisted living facility, it is unclear to what degree the benefits of Neighborhood Mobility Areas and Complete Communities would reduce short trips by Project residents. However, the Project is located within walking distance of nearby transit stops and a regional park. Additionally, the Project would result in a decrease of 320 daily vehicle trips as compared with the site's existing (former) use.[A]
Protect natural and farmlands, including developing conservation strategies.	SCAG, local jurisdictions.	**Consistent.** The Project is an infill development that would help reduce demand for growth in urbanizing areas that threaten greenfields and open spaces.
Transportation Strategies		
Manage congestion through programs like the Congestion Management Program, Transportation Demand Management, and Transportation Systems management strategies.	County transportation commissions, local jurisdictions.	**Consistent**. The Project is an infill development that would minimize congestion impacts on the region because of its proximity to public transit. Additionally, the Project would result in a decrease of 320 daily vehicle trips as compared with the site's existing (former use).
Technological Innovation and 21st Century Transportation		
Promote zero-emission vehicles.	SCAG, local jurisdictions.	**Consistent.** While this action/strategy is not necessarily applicable on a project-specific basis, the Project would be consistent with the EV parking requirements set forth by Title 24.

[A] *Linscott, Law & Greenspan, Engineers. Traffic Impact Analysis – Park Plaza Memory Care Project. June 2019.*

City of Orange General Plan

As discussed in the Natural Resources Element of the City's General Plan, the City has established a GHG emissions reduction goal of at least 15 percent of 2010 levels by 2020. To achieve this goal, the General Plan advocates primarily compact "infill" future development, focusing on introducing urban-scale mixed-use projects at locations near transportation corridors and transit, and creating additional retail and employment opportunities within the City that increase the range of goods and services available to residents and improve the community's jobs-housing balance. The General Plan includes a broad spectrum of policies related to climate change. These policies have been integrated throughout the relevant General Plan elements, as detailed in Table NR-1 in the Natural Resources Element. Consistency of the Project with applicable policies from this table are discussed on Table 18. As discussed there, the Project would be substantially consistent with the City's climate change policies.

Table 18
Consistency with Applicable Policies of the Natural Resources Element

Policy	Consistency Discussion
Issue: Community form **Topic: Compact Development** **Land Use Element** 1.1: Jobs and housing balance **Urban Design Element** 1.1: Pedestrian-oriented places and connections 1.5: Street-oriented development, parking and commercial activities	**Consistent.** The Project would provide an employment source near housing and on a street with transit options for non-motorized users of the site, including pedestrians. The Project Site is also located approximately 3,500 feet southwest of the Orange Transportation Center. The Project's parking would be situated at the back of the proposed building, away from the Glassell Street.
Issue: Community form **Topic: Commercial use locations** **Urban Design Element** 6.1: Development standards for high quality building and site design integrated with infrastructure and circulation. 6.2: Infill development to benefit surrounding corridors/neighborhoods… **Economic Development Element** 4.2: Reduce land, infrastructure and environmental deficiencies within commercial corridors.	**Consistent.** The Project includes the infill development of a site that is currently developed with a vacant restaurant building and surface parking area. As discussed in response to Checklist Question 1(c) (Aesthetics – Scenic Quality Regulations), the design of the Project would compliment the surrounding neighborhood and would be subject to Design Review approval by the City to ensure the Project complies with applicable design standards.

Table 18
Consistency with Applicable Policies of the Natural Resources Element

Policy	Consistency Discussion
<u>Issue:</u> Renewable Energy **<u>Topic:</u> Reduced fossil fuel reliance** **Natural Resources Element** 2.2: Alternative transportation modes, alternative technologies, and bicycle- and pedestrian-friendly neighborhoods.	**Consistent.** Although the Project Site is not currently located within a SCAG-designated HQTA, the site is in an area that is at the forefront of an emerging HQTA, projected to encompass the Project Site area by 2040, according to the 2016-2040 RTP/SCS. The OCTA 59 bus route, which includes stops within 350 feet of the Project Site, provides service generally along the Glassell Street/Grand Avenue corridor between University of California Irvine and Anaheim. This line provides direct service to the Orange Transportation Center and Santa Ana Regional Transportation Center, both of which are Metrolink stations and major hubs for local and regional bus lines. The OCTA 59 bus route has approximately a 25-minute service frequency during peak commute hours. The Project Site is also located approximately 3,500 feet southwest of the Orange Transportation Center.
<u>Issue:</u> Transit **<u>Topic:</u> Adequate transit to employment centers** **Circulation & Mobility Element** 3.3: Incorporate transit-oriented design within commercial, employment, medium density residential, and mixed-use areas.	**Consistent.** Although the Project Site is not currently located within a SCAG-designated HQTA, the site is in an area that is at the forefront of an emerging HQTA, projected to encompass the Project Site area by 2040, according to the 2016-2040 RTP/SCS. The OCTA 59 bus route, which includes stops within 350 feet of the Project Site, provides service generally along the Glassell Street/Grand Avenue corridor between University of California Irvine and Anaheim. This line provides direct service to the Orange Transportation Center and Santa Ana Regional Transportation Center, both of which are Metrolink stations and major hubs for local and regional bus lines. The OCTA 59 bus route has approximately a 25-minute service frequency during peak commute hours. The Project Site is also located approximately 3,500 feet southwest of the Orange Transportation Center.
<u>Issue:</u> Transit **<u>Topic:</u> Non-motorized transporation** **Noise Element** 2.3: Alternative transportation modes to minimize traffic noise.	**Consistent.** Although the Project Site is not currently located within a SCAG-designated HQTA, the site is in an area that is at the forefront of an emerging HQTA, projected to encompass the Project Site area by 2040, according to the 2016-2040 RTP/SCS. The OCTA 59 bus route, which includes stops within 350 feet of the Project Site, provides service generally along the Glassell Street/Grand Avenue corridor between University

Table 18
Consistency with Applicable Policies of the Natural Resources Element

Policy	Consistency Discussion
	of California Irvine and Anaheim. This line provides direct service to the Orange Transportation Center and Santa Ana Regional Transportation Center, both of which are Metrolink stations and major hubs for local and regional bus lines. The OCTA 59 bus route has approximately a 25-minute service frequency during peak commute hours. The Project Site is also located approximately 3,500 feet southwest of the Orange Transportation Center. As discussed in response to Checklist Question 13(a) (Noise – Increase in Noise Levels), the Project's traffic noise impacts would be less than significant.
<u>Issue:</u> Transportation **<u>Topic:</u> Shorten travel distances** **Growth Management Element** 2.4: Infill development and mixed-use opportunities wherever possible as developable space becomes more limited.	**Consistent.** The Project includes the infill development of a site that is currently developed with a vacant restaurant building and surface parking area.
<u>Issue:</u> Air Quality **<u>Topic:</u> Reduce vehicle emissions** **Natural Resources Element** 2.1: Implement and enforce regional air quality management plans. 2.2: Support alternative transportation modes, alternative technologies, and bicycle- and pedestrian-friendly neighborhoods.	**Consistent.** As discussed in response to Checklist Question 3(a) (Air Quality – AQMP Consistency), the Project would be consistent with the AQMP. Through the Project Site's location on Glassell Street, which is well served by transit, the Project is pedestrian friendly.
<u>Issue:</u> Water Management **<u>Topic:</u> Water use efficiency and reduced consumption** **Natural Resources Element** 2.14: Reduce pollutant runoff from new development through use of Best Management Practices.	**Consistent.** As discussed in response to Checklist Question 10(a) (Hydrology and Water Quality – Water Quality), the Project would incorporate best management practices (BMPs) to ensure that no significant water quality impacts would occur. With the exception of some small landscaped areas, the Project Site is currently entirely developed with impervious surfaces. Under post-Project conditions, the Project Site would remain almost entirely impervious. However, as shown on

Table 18
Consistency with Applicable Policies of the Natural Resources Element

Policy	Consistency Discussion
2.15: Minimize impervious surfaces and associated urban runoff pollutants in new development and redevelopment.	Table 21 under response to Checklist Question 10(c) i) (Hydrology and Water Quality – Drainage), under the post-Project conditions, the amount of runoff from the Project Site would be controlled to below existing runoff levels.
Source: Table NR-1, Natural Resources Element, City of Orange General Plan.	

Conclusion

In summary, the plan consistency analysis provided above demonstrates that the Project complies with the plans, policies, regulations, and GHG reduction actions/strategies outlined in the Climate Change Scoping Plan and First Update, the 2017 Scoping Plan Update, the 2016-2040 RTP/SCS, and the City's General Plan. Consistency with the above plans, policies, regulations, and GHG reduction actions/strategies would reduce the Project's incremental contribution to global and statewide GHG emissions. Therefore, the Project would not conflict with any applicable plan, policy, or regulation or an agency adopted for the purpose of reducing emissions of GHG. Furthermore, because the Project is consistent and does not conflict with these plans, policies, and regulations, the Project's GHG emissions would not result in a significant impact on the environment, and Project-specific impacts with regard to climate change would be less than significant.

Project Emissions

As discussed above, compliance with applicable GHG emissions reductions plans renders a Project less than significant. In support of the consistency analysis provided above, the following quantitative calculations of the Project's GHG emissions are provided. The Project would result in direct and indirect GHG emissions generated by the following emissions sources:

- Construction: emissions associated with construction-related equipment and vehicle use.
- Area Source: emissions associated with the on-site use of landscape and other powered equipment.
- Energy Source: emissions associated with the Project's electricity and natural gas use for space heating and cooling, water heating, energy consumption, and lighting.
- Mobile Source: emissions associated with the Project's related vehicle travel.
- Water/Wastewater: emissions associated with energy used to pump, convey, deliver, and treat water.

Construction

Project construction is anticipated to last 18 months between 2020 and 2021. A summary of construction details (e.g. schedule, equipment mix, and vehicular trips) and CalEEMod modeling output files are provided in Appendix A. The GHG emissions associated with the construction of the Project were calculated for the 17 months of construction activity. A summary of GHG emissions for each year of construction is presented on Table 19.

Table 19
Construction-Related GHG Emissions

Year	Emissions ($MTCO_2e$)
2020	282
2021	112
Total	394
Amortized over 30 years	13.1
Source: NTEC, 2019.	

As shown on Table 19, construction of the Project is estimated to generate a total of 394 $MTCO_2e$. As recommended by the SCAQMD, the total GHG construction emissions were amortized over the 30-year lifetime of the Project (i.e. total construction GHG emissions were divided by 30 to determine an annual construction emissions estimate that can be added to the Project's annual operational emissions) in order to determine the Project's annual GHG emissions inventory.[27] This results in annual Project construction emissions of 13.1 $MTCO_2e$.

Operations

As shown on Table 20, the Project is estimated to generate approximately 330 $MTCO_2e$ per year, including the addition of its annualized construction-related GHG emissions. As the site's existing use was estimated to generate approximately 866 $MTCO_2e$ per year, development of the Project would result in a net decrease of site-associated GHG emissions.

[27] *SCAQMD Governing Board Agenda Item 31. December 5, 2008.*

Table 20
Annual GHG Emissions Summary

Source	Emissions ($MTCO_2e$)
Area	1
Energy	63
Mobile	222
Solid Waste	15
Water/Wastewater	16
Construction	13
Total Emissions	330
Source: NTEC, 2019.	

Significance Determination: Less Than Significant Impact

Mitigation Measures: None

Cumulative Impacts

The analysis of GHG emissions impacts, above, is a cumulative analysis. As discussed, the Project's GHG emissions impacts would not be cumulatively considerable.

9. HAZARDS AND HAZARDOUS MATERIALS. *Would the project:*	Potentially Significant Impact	Less Than Significant with Mitigation Incorporated	Less Than Significant Impact	No Impact
(a) Create a significant hazard to the public or the environment through the routine transport, use, or disposal of hazardous materials?	☐	☐	☑	☐
(b) Create a significant hazard to the public or the environment through reasonably foreseeable upset and accident conditions involving the release of hazardous materials into the environment?	☐	☑	☐	☐
(c) Emit hazardous emissions or handle hazardous or acutely hazardous materials, substances, or waste within one-quarter mile of an existing or proposed school?	☐	☐	☐	☑
(d) Be located on a site which is included on a list of hazardous materials sites compiled pursuant to Government Code §65962.5 and, as a result, would it create a significant hazard to the public or the environment?	☐	☐	☐	☑
(e) For a project located within an airport land use plan or, where such a plan has not been adopted, within two miles of a public airport or public use airport, would the project result in a safety hazard or excessive noise for people residing or working in the project area?	☐	☐	☐	☑
(f) Impair implementation of or physically interfere with an adopted emergency response plan or emergency evacuation plan?	☐	☐	☐	☑
(g) Expose people or structures, either directly or indirectly, to a significant risk of loss, injury or death involving wildland fires?	☐	☐	☐	☑

Impact Analysis

(a) Would the project create a significant hazard to the public or the environment through the routine transport, use, or disposal of hazardous materials?

The City follows the County's Hazardous Materials Inspection and Enforcement Plan. To prevent accidents, and ensure proper handling, routine inspections are conducted at businesses within the City that store, use, or handle hazardous materials. The City concentrates production of hazardous materials within its industrial area, separated from residential areas, educational uses, and institutional facilities. The City also identifies businesses transporting, manufacturing, using, and storing hazardous chemicals, and requires such

businesses to exercise caution and to mitigate potential negative effects on surrounding land uses prior to obtaining businesses licenses.[28]

During the Project's construction phase, construction equipment would use limited amounts of hazardous and flammable substances such as petroleum products like gasoline, diesel fuel, and petroleum-based oils. During construction, this equipment may require maintenance that could result in releases of oil, diesel fuel, transmission fluid, or other materials. However, BMPs included in the Project's required SWPPP would be implemented to address handling and containment of any hazardous substances during the construction phase of the Project. Compliance with these requirements would avoid significant hazard to public or environment through release of hazardous materials during Project construction.

As a memory care facility, the types of hazardous materials that would be used at the facility would include cleaning supplies and lawn/landscaping fertilizers/pesticides that are typical of a residential use. The facility could require the need for medical waste disposal, for used needles and unused medicine. However, the operators of the facility would be required to comply with existing regulations outlined in Sections 117600-118360 of the California Health and Safety Code to ensure safe and proper disposal. Through compliance with existing regulations, the Project would not create a significant hazard to the public or the environment through the routine transport, use, or disposal of hazardous materials. Therefore, Project impacts related to the routine transport, use, or disposal of hazardous materials would be less than significant.

Significance Determination: Less Than Significant Impact

Mitigation Measures: None

(b) Would the project create a significant hazard to the public or the environment through reasonably foreseeable upset and accident conditions involving the release of hazardous materials into the environment?

The section is based in part on the following (refer to Appendix F):

- *Phase I Environmental Site Assessment, Leighton Consulting, Inc., October 24, 2018.*
- *Limited Phase II Environemtnal Site Assessment, Leighton Consulting, Inc., September 6, 2019.*

Leighton Consulting, Inc. (Leighton) performed a Phase I Environmental Site Assessment (ESA) of the Project Site to identify, to the extent feasible and pursuant to the processes prescribed in ASTM International (ASTM) E1527-13, recognized environmental conditions (RECs), historical RECs (HRECs), or controlled RECs (CRECs) in connection with the Project Site.

RECs are defined, according to ASTM E1527-13 as "the presence or likely presence of any hazardous substances or petroleum products in, on, or at a property: (1) due to any release to the environment; (2)

---

[28] *Page PS-20, Orange General Plan: https://www.cityoforange.org/DocumentCenter/View/573/General-Plan---Public-Safety-Element-PDF.*

under conditions indicative of a release to the environment; or (3) under conditions that pose a material threat of a future release to the environment. De minimis conditions are not RECs."

HRECs are defined, according to ASTM E1527-13 as "a past release of any hazardous substances or petroleum products that has occurred in connection with the property and has been addressed to the satisfaction of the applicable regulatory authority or meeting unrestricted use criteria established by a regulatory authority, without subjecting the property to any required controls." CRECs are defined, according to ASTM E1527-13 as "a REC resulting from a past release of hazardous substances or petroleum products that has been addressed to the satisfaction of the applicable regulatory authority, with hazardous substances or petroleum products allowed to remain in place subject of the implementation of required controls."

The Phase I ESA revealed no evidence of RECs, HRECs, or CRECs in connection with the Project Site, except for the following:

- The historic use of the Project Site as an orchard from at least 1938 until approximately 1960 and the potential use of pesticides associated with this historic land use.

No evidence of CRECs or HRECs was identified for the Project Site.

Based on the findings of the Phase I ESA, Leighton recommended the following:

- Collect soil samples from the Project Site to assess the presence of organochlorine pesticides (OCPs) and arsenic in the near-surface soil.

As a result of the findings of the Phase I ESA, Leighton conducted a Limited Phase II ESA to determine what, if any, environmental impacts are present in the near surface soil as a result of the historic use of the Project Site, which could affect future redevelopment of the site.

The Phase II ESA concluded that soil sample analytical results indicate that soil in the southwest portion of the Project Site, in the vicinity of boring LB1, contains dieldrin at concentrations exceeding the Residential Screening Levels (RSL) for residential land use. The exceedances of dieldrin are primarily limited to soil samples collected at a depth of 0.5 feet bgs, with the exception of LB1-SW1-2.5 at 2.5 feet bgs. The northwestern lateral extent of the dieldrin-impacted soil is not well defined due to limitations posed by the current onsite structure. However, borings LB2, LB7, and LB8 provide a rough estimate of lateral delineation and indicate that the dieldrin-impacted soil is confined to the southeast portion of the Project Site.

Arsenic was detected in near surface soil samples throughout the Project Site at concentrations ranging from 1.9 milogram/kilogram (mg/kg) to 19 m/kg. Excluding arsenic data collected from boring LB1 (which is recommended for removal based on co-located elevated dieldrin concentrations), the 95 percent Upper Confidence Level (UCL) of the population mean for arsenic was calculated to be 11.22 mg/kg. Based on the results of statistical analysis, arsenic in near surface soil at the Project Site is not considered a contaminant of concern and not anticipated to pose a significant health risk to future Project residents/users.

To ensure that Project impacts related to dieldrin-impacted soil are less than significant, the Project Applicant will implement Mitigation Measure HAZ-1, which includes excavation and off-site disposal of soil to a depth of approximately 2 feet bgs in the southeastern corner of the Project Site. Deeper removals may be necessary in the vicinity of step-out boring LB1-SW2 and can be confirmed during removal activities. Upon completion of removal activities, confirmation soil samples would be collected from the resulting excavation area to ensure that the dieldrin-impacted soil has been effectively removed. All work would be completed under the oversight of a California-registered Professional Geologist or Engineer with environmental consulting experience.

Given the age of the existing restaurant building on the Project Site, it is possible that the building could contain asbestos-containing materials (ACMs) and lead-based paint (LBP). As such, the Project Applicant will implement Mitigation Measures HAZ-2 and HAZ-3, which includes the identification and abatement of ACMs and LBP by qualified professionals.

Thus, with implementation of Mitigation Measures HAZ-1 HAZ-2, and HAZ-3, the Project would not create a significant hazard to the public or the environment through reasonably foreseeable upset and accident conditions involving the release of hazardous materials into the environment, and impacts related to this issue would be less than significant.

Mitigation Measures:

HAZ-1: Prior to issuance of a building permit, the soils in the southeastern corner of the Project Site, as indicated on Figure 2 of the Limited Phase II ESA dated September 6, 2019, shall be excavated to a depth of approximately 2 feet bgs. Deeper removals may be necessary in the vicinity of step-out boring LB1-SW2 and shall be confirmed by a California-registered Professional Geologist or Engineer with environmental consulting experience during removal activities (refer to Figure 2 of the Limited Phase II ESA dated September 6, 2019). Upon completion of removal activities, confirmation soil samples will be collected from the resulting excavation area to ensure that the dieldrin-impacted soil has been effectively removed. All work will be completed under the oversight of a California-registered Professional Geologist or Engineer with environmental consulting experience. All excavated soil shall be disposed of at an appropriate landfill or other waste receival facility.

HAZ-2: Prior to issuance of a demolition permit, the Project Applicant shall retain a qualified professional to identify any ACMs in the existing building. If ACMs are identified, abatement of the ACMs shall conducted by a qualified professional in accordance with all applicable federal, state, and local regulations.

HAZ-3: Prior to issuance of a demolition permit, the Project Applicant shall retain a qualified professional to identify any LBP in the existing building. If LBP is identified, abatement of the LBP shall conducted by a qualified professional in accordance with all applicable federal, state, and local regulations.

Significance Determination: Less Than Significant With Mitigation Incorporated

(c) Would the project emit hazardous emissions or handle hazardous or acutely hazardous materials, substances, or waste within one-quarter mile of an existing or proposed school?

The Holy Family Cathedral School is located adjacent to the Project Site to the north. However, as discussed previously in response to Checklist Question 3(d) (Air Quality – Sensitive Receptors) and in response to Checklist Question 8(a) (Hazards and Hazardous Materials – Hazardous Materials), the proposed memory care facility would not emit hazardous emission or handle hazardous materials. The operators of the facility would be required to comply with existing regulations outlined in Sections 117600-118360 of the California Health and Safety Code to ensure safe and proper disposal. Through compliance with existing regulations, the Project would not create a significant hazard to the public or the environment through the routine transport, use, or disposal of hazardous materials. Thus, the Project would not emit hazardous emissions or handle hazardous or acutely hazardous materials, substances, or waste within one-quarter mile of an existing or proposed school. Therefore, no impacts related to this issue would occur as a result of the Project.

Significance Determination: No Impact

Mitigation Measures: None

(d) Would the project be located on a site which is included on a list of hazardous materials sites compiled pursuant to Government Code §65962.5 and, as a result, would it create a significant hazard to the public or the environment?

California Government Code Section 65962.5 requires various state agencies to compile lists of hazardous waste disposal facilities, unauthorized release from underground storage tanks, contaminated drinking water wells, and solid waste facilities from which there is known migration of hazardous waste. In meeting the provisions in Government Code Section 65962.5, commonly referred to as the "Cortese List," database resources that provide information regarding identified facilities or sites include EnviroStor, GeoTracker, and other lists compiled by the California Environmental Protection Agency. A review of the EnviroStor database shows that the Project Site is not listed. Thus, the Project would not be located on a site which is included on a list of hazardous materials sites compiled pursuant to Government Code §65962.5.[29] Therefore, no impacts related to this issue would occur as a result of the Project.

Significance Determination: No Impact

Mitigation Measures: None

---

[29] *Department of Toxic Substances Control, EnviroStor, https://www.envirostor.dtsc.ca.gov/public/map/, August 5, 2019*

(e) For a project located within an airport land use plan or, where such a plan has not been adopted, within two miles of a public airport or public use airport, would the project result in a safety hazard or excessive noise for people residing or working in the project area?

The airport closest to the Project Site is the John Wayne Airport located approximately 9.5 miles south of the Project Site. The Project Site is not located within an airport land use plan. Thus, the Project would not result in a safety hazard or excessive noise for people residing or working in the project area. Therefore, no impacts related to this issue would occur as a result of the Project.

Significance Determination: No Impact

Mitigation Measures: None

(f) Would the project impair implementation of or physically interfere with an adopted emergency response plan or emergency evacuation plan?

Emergency Operations Plan

The City has an emergency plan, which establishes emergency preparedness and emergency response procedures for both peacetime and wartime disasters. The plan is termed an "Emergency Operations Plan," prepared in accordance with the State Office of Emergency Services guidelines for multi-hazard functional planning. The plan consists of three parts: 1) a basic plan; 2) annexes which address specific functions and duties of response agencies; and 3) a directory of emergency response resources. Rather than focusing on specific responses for specific hazards, the City's plan concentrates on specific agency response for any type of disaster. For example, in the event of an earthquake, flood, or industrial accident, the Orange Fire Department is responsible for fire suppression, emergency medical care, and rescue operations.[30]

Emergency Shelters

The nearest Primary Site for Emergency Shelters/Assembly Points is Orange High School located at 525 N. Shaffer Street, approximately 1.6 miles north of the Project Site. All elementary schools Citywide are considered Secondary Sites.[31] The nearest elementary school to the Project Site is the Holy Family Cathedral School, located adjacent to the Project Site to the north.

Emergency Access and Evacuation

All City arterials are recognized as primary emergency response routes. In addition, non-arterials can be secondary emergency response routes. The City's Residential Neighborhood Traffic Management Program,

---

[30] *Orange General Plan, page PS-26: https://www.cityoforange.org/DocumentCenter/View/573/General-Plan---Public-Safety-Element-PDF.*

[31] *Orange General Plan, Table PS-3, Emergency Shelters/Assembly Points: https://www.cityoforange.org/DocumentCenter/View/573/General-Plan---Public-Safety-Element-PDF.*

which identifies traffic management and traffic calming tools, specifies that emergency vehicle access should be accommodated consistent with response standards with implementation of appropriate traffic management measures. Additionally, if current emergency vehicle access does not meet existing response standards, traffic calming efforts should not further degrade response times. The City's Emergency Operations Plan does not indicate evacuation routes for emergency situations. The routes of escape from disaster-stricken areas would depend on the scale and scope of the disaster.

Glassell Street is the closest designated evacuation corridor to the Project Site, running adjacent to the site to the east.[32] The Project would not affect access to this street during construction, because all construction equipment and vehicles would be staged on the Project Site and not on the street. The Project would not affect emergency access. Construction and internal circulation would comply with the applicable fire codes, as required by the Orange Fire Department. Thus, the Project would not impair implementation of or physically interfere with an adopted emergency response plan or emergency evacuation plan. Therefore, Project impacts related to interference with an emergency response or evacuation plan would be less than significant.

Significance Determination: Less Than Significant Impact

Mitigation Measures: None

(g) Would the project expose people or structures, either directly or indirectly, to a significant risk of loss, injury or death involving wildland fires?

The Project Site is not located within a Wildland High Fire Hazard area or Wildland Very High Fire Hazard area.[33] Thus, the Project would not expose people or structures to a significant risk of loss, injury or death involving wildland fires, including where wildlands are adjacent to urbanized areas or where residences are intermixed with wildlands. Therefore, no impacts related to this issue would occur as a result of the Project.

Significance Determination: No Impact

Mitigation Measures: None

Cumulative Impacts

As shown on Table 36 later in this MND, there are five cumulative projects within proximity to the Project Site. Impacts related to hazards and hazardous materials are site-specific. The City gauges such impacts on a project-by-project basis. As discussed above, the Project would not result in any significant impacts

---

[32] *Orange General Plan, Figure PS-4, Generalized Evacuation Corridors: https://www.cityoforange.org/DocumentCenter/View/573/General-Plan---Public-Safety-Element-PDF.*

[33] *Orange General Plan, Figure PS-1, Environmental and Natural Hazard Policy Map: https://www.cityoforange.org/DocumentCenter/View/573/General-Plan---Public-Safety-Element-PDF.*

related to hazards or hazardous materials. Therefore, cumulative impacts related to hazards and hazardous materials would be less than significant.

10. **HYDROLOGY AND WATER QUALITY.** *Would the project:*	**Potentially Significant Impact**	**Less Than Significant with Mitigation Incorporated**	**Less Than Significant Impact**	**No Impact**
(a) Violate any water quality standards or waste discharge requirements or otherwise substantially degrade surface or ground water quality?	☐	☐	☑	☐
(b) Substantially decrease groundwater supplies or interfere with groundwater recharge such that the project may impede sustainable groundwater management of the basin?	☐	☐	☐	☑
(c) Substantially alter the existing drainage pattern of the site or area, including through the alteration of the course of a stream or river or through the addition of impervious surfaces, in a manner that would:				
i) result in substantial erosion or siltation on or off site;	☐	☐	☑	☐
ii) substantially increase the rate or amount of surface runoff in a manner which would result in flooding on or off site;	☐	☐	☐	☑
iii) create or contribute runoff water which would exceed the capacity of existing or planned stormwater drainage systems or provide substantial additional sources of polluted runoff; or	☐	☐	☑	☐
iv) impede or redirect flood flows.	☐	☐	☐	☑
(d) In flood hazard, tsunami, or seich zones, risk release of pollutants due to project inundation?	☐	☐	☐	☑
(e) Conflict with or obstruct implementation of a water quality control plan or sustainable groundwater management plan?	☐	☐	☐	☑
(f) Potentially impact stormwater runoff from construction activities?	☐	☐	☑	☐
(g) Potentially impact stormwater runoff from post-construction activities?	☐	☐	☑	☐
(h) Would the project result in a potential for discharge of stormwater pollutants from areas of material storage, vehicle or equipment fueling, vehicle or equipment maintenance (including washing), waste handling, hazardous materials handling or storage, delivery areas, loading docks or other outdoor work areas?	☐	☐	☑	☐
(i) Result in the potential for discharge of stormwater to affect the beneficial uses of the receiving waters?	☐	☐	☑	☐

10. HYDROLOGY AND WATER QUALITY. *Would the project:*	Potentially Significant Impact	Less Than Significant with Mitigation Incorporated	Less Than Significant Impact	No Impact
(j) Create the potential for significant changes in the flow velocity or volume of stormwater runoff to cause environmental harm?	☐	☐	☐	☑
(k) Create significant increases in erosion of the project site or surrounding areas?	☐	☐	☑	☐

Impact Analysis

(a) Would the project violate any water quality standards or waste discharge requirements or otherwise substantially degrade surface or ground water quality?

The discussion below is based in part on the following (refer to Appendix G):

- *Preliminary Priority Water Quality Management Plan (WQMP), Pasco Laret Suiter & Associates, Inc., February 2019, Revised May 2019.*

Construction

Clearing, grading, excavation, and construction activities associated with the Project may impact water quality due to sheet erosion of exposed soils and subsequent deposition of particulates into local drainages, if construction occurs during a storm event. Grading activities, in particular, lead to temporarily exposed areas of loose soil, as well as sediment stockpiles, that can become susceptible to uncontrolled sheet flow, if left uncovered during a storm event. Although erosion occurs naturally in the environment, primarily from weathering by water and wind action, improperly managed construction activities can lead to substantially accelerated rates of erosion that are considered detrimental to the environment.

Prior to the issuance of grading permits, the Project Applicant would be required to comply with City and local construction requirements and provide a Notice of Intent (NOI) and Waste Discharger Identification (WDID) Number issued from the State Water Resources Control Board (SWRCB) in accordance with the requirements of the General Construction Permit to ensure the potential for soil erosion and construction impacts are minimized. In accordance with the General Construction Permit (Order No. 2009-0009-DWQ), the following Permit Registration Documents (PRDs) are required to be submitted to the SWRCB prior to commencement of construction activities:

- Notice of Intent;
- Risk Assessment (Standard or Site-Specific);
- Site Map;

- Stormwater Pollution Prevention Plan (SWPPP); and

- Annual Fee and Certification.

Construction BMPs

In accordance with the General Construction Permit, a construction SWPPP must be prepared and implemented for the Project Site, and revised as necessary, as administrative or physical conditions change. The SWPPP must be made available for review upon request, will describe construction BMPs that address pollutant source reduction, and provide measures/controls necessary to mitigate potential pollutant sources. These measures/controls include, but are not limited to: erosion controls, sediment controls, tracking controls, non-storm water management, materials & waste management, and good housekeeping practices, including the following:

- Erosion control BMPs, such as hydraulic mulch, soil binders, and geotextiles and mats, protect the soil surface by covering and/or binding the soil particles. Temporary earth dikes or drainage swales may also be employed to divert runoff away from exposed areas and into more suitable locations. If implemented correctly, erosion controls can effectively reduce the sediment loads entrained in storm water runoff from construction sites.

- Sediment controls, such as silt fencing and gravel bag berms, are designed to intercept and filter out soil particles that have been detached and transported by the force of water. All storm drain inlets on the Project Site or within the Project Site vicinity (i.e., along the street immediately adjacent to the Project Site) should be adequately protected with an impoundment (i.e., gravel bags) around the inlet and equipped with a sediment filter (i.e., fiber roll). Bags should also be placed around areas of soil disturbing activities, such as grading or clearing.

- Stabilize all construction entrance/exit points along Glassell Street to reduce the tracking of sediments onto adjacent streets by proper implementation of crushed aggregate and rumble racks as outlined within CASQA BMP sheet TC-1. Wind erosion controls such as wind screens and/or watering should be employed in conjunction with tracking controls.

- Non-storm water management BMPs prohibit the discharge of materials other than storm water, as well as reduce the potential for pollutants from discharging at their source. Examples include avoiding paving and grinding operations during the rainy season (i.e., October 1 through April 30 each year) where feasible, and performing any vehicle equipment cleaning, fueling, and maintenance in designated areas that are adequately protected and contained.

- Waste management consists of implementing procedural and structural BMPs for collecting, handling, storing and disposing of wastes generated by a construction project to prevent the release of waste materials into storm water discharges. Examples include concrete waste management, solid waste management, and sanitary septic waste management.

- Prior to commencement of construction activities, the General Construction Permit requires the Project SWPPP to be prepared in accordance with the site-specific sediment risk analyses, with erosion and sediment controls proposed for each phase of construction for the Project. The phases of construction would define the maximum amount of soil disturbed, the appropriately sized sediment basins (if necessary) and other control measures to accommodate all active soil disturbance areas and the appropriate monitoring and sampling plans. All selected BMPs for Erosion and Sediment Control will be shown on the Erosion and Sediment Control Plan(s) and the SWPPP documents.

Post-Construction BMPs

The Project includes demolition and removal of the existing restaurant building, surface parking area, and all other structures from the Project Site and development of the Project Site with a memory care facility, which includes on-site circulation and a surface parking area. The pollutants of concern for water quality are those pollutants that are anticipated (expected) or potentially could be generated by the Project, based on past and proposed land uses, along with those pollutants that have been identified by regulatory agencies as potentially impairing beneficial uses in receiving water bodies. Based on the proposed memory care use for the Project, the following pollutants could be expected: suspended solids/sediment, nutrients, heavy metals, pathogens (bacteria/virus), pesticides, oil and grease, toxic organic compounds, and trash and debris. The primary potential sources for these pollutants would be any areas traveled by vehicles, the parking area, and trash/recycling areas. The BMPs proposed for the Project would address these pollutants, if they are present.

To help prevent long-term water quality impacts associated with land use changes and in accordance with the requirements of the City and consistency with the regional Municipal Separate Storm Sewer System (MS4) storm water permit issued by the Santa Ana Regional Water Quality Control Board (RWQCB) (Order No. R8-2009-0030, amended by Order No. R8-2010-0062; NPDES Permit No. CAS618030), new development and significant redevelopment projects must prepare and implement a project-specific Water Quality Management Plan (WQMP) aimed at reducing pollutants in post-development runoff. Specifically, a project-specific WQMP includes RWQCB approved BMPs, where applicable, that address post-construction management of storm water runoff water quality. As part of the WQMP, projects must incorporate low impact development (LID), site design and source control BMPs to address post-construction storm water runoff management. In addition, new development and redevelopment projects are required to implement site design/LID and source control BMPs applicable to their specific priority project categories, as well as implement treatment control BMPs where necessary. Selection of LID and additional treatment control BMPs is based on the pollutants of concern for the specific project site and the BMP's ability to effectively treat those pollutants, in consideration of site conditions and constraints.

In the proposed condition, storm water runoff from the majority of the Project Site would be collected in a cross gutter and conveyed to a storm water BMP facility consisting of a Modular Wetland System pretreatment unit and underground perforated storage infiltration tank located in the western portion of the site. Runoff from the courtyard area along the south side of the building would be collected and conveyed in proposed storm drain to the same BMP facility. The BMP facility would provide water quality treatment

and retention via infiltration for the Project Design Capture Volume (DCV). In larger storm events, overflow would discharge from the pretreatment unit via a secondary storm drain, which would convey overflow to a pop-up drain emitter located on the neighboring property. When pressurized, the pop-up drain will allow overflow to drain out and sheet flow southerly as it does in the existing condition.

The overall approach to water quality treatment for the Project would include the incorporation of site design/LID strategies and source control measures throughout the sites in a systematic manner that maximizes the use of LID features to provide treatment of storm water and reduce runoff. LID BMPs are engineered facilities that are designed to retain or biotreat runoff on the Project Site. The current term MS4 Storm Water Permit requires the evaluation and use of LID features using the following hierarchy of treatment: infiltration, evapotranspiration, harvest/reuse, and biotreatment, etc. The full LID Design Storm Capture Volume for the Project would be met with the use of a storm water BMP facility consisting of a Modular Wetland System pretreatment unit and underground perforated storage infiltration tank. As stated above, storm water runoff would flow to the Modular Wetland System for pretreatment and continue to the underground perforated storage tank for infiltration.

Thus, with the compliance to regulatory requirements and the BMPs established for the Project in a final Water Quality Management Plan, Project construction and operation would not result in a violation of any water quality standard, Therefore, Project impacts related to water quality would be less than significant.

Significance Determination: Less Than Significant Impact

Mitigation Measures: None

(b) Would the project substantially decrease groundwater supplies or interfere with groundwater recharge such that the project may impede sustainable groundwater management of the basin?

With the exception of some small landscaped areas, the Project Site is entirely developed with impervious surfaces. During storm events, water flows from the Project Site to the local storm drain system and does not infiltrate at the Project Site to groundwater levels. The Project Site is not a source of groundwater recharge. Under post-Project conditions, the Project Site would remain almost entirely impervious. Thus, the Project would not substantially decrease groundwater supplies or interfere with groundwater recharge such that the project may impede sustainable groundwater management of the basin. Therefore, impacts related to this issue would be less than significant.

Significance Determination: No Impact

Mitigation Measures: None

(c) i) Substantially alter the existing drainage pattern of the site or area, including through the alteration of the course of a stream or river or through the addition of impervious surfaces, in a manner which would result in substantial erosion or siltation on or off-site?

Runoff from the Project Site discharges to Santiago Creek Channel, which flows to the Santa Ana River, which discharges to the Pacific Ocean. At the location where the Project Site discharges to the Santiago Creek Channel and confluences with the Santa Ana River, both channels are stabilized. This discharge condition would remain the same under the proposed condition. Table 21 shows the pre-development and post-development discharge for the Project Site for the indicated frequency of storm (Q2).

Table 21
2-Year Storm Event Information

Condition	Volume (acre feet)	Velocity (feet/second)	Time of Concentration (minute)
Pre-Development	0.11	1.16	7.94
Post-Development	0.09	1.13	8.37
Source: Pasco Laret Suiter & Associates, Inc., May 2019. Refer to Appendix G.			

As shown, under the post-development condition, the Project would result in a reduction in the overall amount and velocity of runoff from the Project Site for Q2 storm events when compared to the existing condition. As under the existing condition, runoff from the Project Site would be controlled as to not result in downstream erosion or siltation. Thus, the Project would not substantially alter the existing drainage pattern of the site or area, including through the alteration of the course of a stream or river or through the addition of impervious surfaces, in a manner which would result in substantial erosion or siltation on or off-site. Therefore, Project impacts related to erosion and siltation would be less than significant.

Significance Determination: Less Than Significant Impact

Mitigation Measures: None

(c) ii) Substantially alter the existing drainage pattern of the site or area, including through the alteration of the course of a stream or river or through the addition of impervious surfaces, in a manner which would result in flooding on or off site?

No streams or rivers are located near the Project Site. With the exception of small landscaped areas, the Project Site is entirely developed with impervious surfaces, during storm events, runoff from the Project Site enters the City local storm drain system. Under post-Project conditions, the Project Site also would be almost entirely impervious, and the amount and velocity of runoff from the Project Site would be somewhat less than under the existing condition (refer to Table 21). The Project would not increase the amount of runoff from the Project Site and would not cause flooding. Thus, the Project would not substantially alter the existing drainage pattern of the site or area, including through the alteration of the course of a stream or river, or substantially increase the rate or amount of surface runoff in a manner which would result in flooding on or off site. Therefore, no impacts related to this issue would occur as a result of the Project.

Significance Determination: No Impact

Mitigation Measures: None

(c) iii) Substantially alter the existing drainage pattern of the site or area, including through the alteration of the course of a stream or river or through the addition of impervious surfaces, in a manner which would create or contribute runoff water which would exceed the capacity of existing or planned stormwater drainage systems or provide substantial additional sources of polluted runoff?

As discussed above, with the exception of small landscaped areas, the Project Site is entirely developed with impervious surfaces, during storm events, runoff from the Project Site enters the City local storm drain system. Under post-Project conditions, the Project Site also would be almost entirely impervious, and the amount and velocity of runoff from the Project Site would be somewhat less than under the existing condition (refer to Table 21). The Project would not increase the amount of runoff from the Project Site and would not exceed the capacity of the existing storm drain. Additionally, the Project Applicant would be required to design the hydrology for the Project Site to meet the City's storm runoff requirements. Refer to response to Checklist Question 10(a) (Hydrology and Water Quality – Water Quality) regarding the Project's less-than-significant impacts related to water quality. Thus, the Project would not substantially alter the existing drainage pattern of the site or area, including through the alteration of the course of a stream or river or through the addition of impervious surfaces, in a manner which would create or contribute runoff water which would exceed the capacity of existing or planned stormwater drainage systems or provide substantial additional sources of polluted runoff. Therefore, no impacts related to storm drain capacity would occur as a result of the Project, and impacts related to water quality would be less than significant.

Significance Determination: Less Than Significant Impact

Mitigation Measures: None

(c) iv) Would the project substantially alter the existing drainage pattern of the site or area, including through the alteration of the course of a stream or river or through the addition of impervious surfaces, in a manner which would create or contribute runoff water which would impede or redirect flood flows?

The Project Site is not within a flood zone.[34] Thus, the Project would not substantially alter the existing drainage pattern of the site or area, including through the alteration of the course of a stream or river or through the addition of impervious surfaces, in a manner which would create or contribute runoff water

---

[34] *Orange General Plan Program EIR, Figure 5.6-2: https://www.cityoforange.org/DocumentCenter/View/584/General-Plan-Environmental-Impact-Report-EIR-PDF*.

which would impede or redirect flood flows. Therefore, no impacts related to this issue would occur as a result of the Project.

Significance Determination: No Impact

Mitigation Measures: None

(d) In a flood hazard, tsunami, or seiche zone, would the project risk release of pollutants due to project inundation?

As stated in response to Checklist Question 10(c) iv) (Hydrology and Water Quality – Flood Flows), the Project Site is not within a flood hazard zone. Due to the City distance from the Pacific Ocean (approximately 13 miles), the Project Site is not subject to tsunamis. Additionally, the Project Site is not located near any large bodies of water and is not subject to seiches. Portions of the City are susceptible to flood events related to dam failure resulting from a significant earthquake. The Villa Park Dam and Santiago Dam are located along Santiago Creek in the foothills of East Orange. There are substantially intervening land uses, structures, and open areas between these dams and the Project Site. Additionally, a review of the California Inundation Map maintained by the California Department of Water Resources, Division of Safety of Dams, the Project Site is not within a dam inundation area.[35] Additionally, the Project includes development of a memory care facility, which would not have any significant sources of pollutants. Thus, the Project would not risk release of pollutants due to project inundation. Therefore, no impacts would occur as a result of the Project.

Significance Determination: No Impact

Mitigation Measures: None

(e) Would the project conflict with or obstruct implementation of a water quality control plan or sustainable groundwater management?

Regarding Project impacts related to water quality, refer to response to Checklist Question 10(a) (Hydrology and Water Quality – Water Quality). Regarding Project impacts related to groundwater, refer to response to Checklist Question 10(b) (Hydrology and Water Quality – Groundwater).

Significance Determination: Less Than Significant Impact

Mitigation Measures: None

---

[35] *California Department of Water Resources, Division of Safety of Dams, https://fmds.water.ca.gov/webgis/?appid=dam_prototype_v2.*

(f) Would the project potentially impact stormwater runoff from construction activities?

Regarding Project impacts related to water quality, refer to response to Checklist Question 10(a) (Hydrology and Water Quality – Water Quality).

Significance Determination: Less Than Significant Impact

Mitigation Measures: None

(g) Would the project potentially impact stormwater runoff from post-construction activities?

Regarding Project impacts related to water quality, refer to response to Checklist Question 10(a) (Hydrology and Water Quality – Water Quality).

Significance Determination: Less Than Significant Impact

Mitigation Measures: None

(h) Would the project result in a potential for discharge of stormwater pollutants from areas of material storage, vehicle or equipment fueling, vehicle or equipment maintenance (including washing), waste handling, hazardous materials handling or storage, delivery areas, loading docks or other outdoor work areas?

Regarding Project impacts related to water quality, refer to response to Checklist Question 10(a) (Hydrology and Water Quality – Water Quality).

Significance Determination: Less Than Significant Impact

Mitigation Measures: None

(i) Would the project result in the potential for discharge of stormwater to affect the beneficial uses of the receiving waters?

Regarding Project impacts related to water quality, refer to response to Checklist Question 10(a) (Hydrology and Water Quality – Water Quality).

Significance Determination: Less Than Significant Impact

Mitigation Measures: None

(j) Would the project create the potential for significant changes in the flow velocity or volume of stormwater runoff to cause environmental harm?

With the exception of small landscaped areas, the Project Site is entirely developed with impervious surfaces, during storm events, runoff from the Project Site enters the City local storm drain system. Under post-Project conditions, the Project Site also would be almost entirely impervious, and the amount and

velocity of runoff from the Project Site would be somewhat less than under the existing condition (refer to Hydro-1). The Project would not increase the amount of runoff from the Project Site and would not exceed the capacity of the existing storm drain. Additionally, the Project Applicant would be required to design the hydrology for the Project Site to meet the City's storm runoff requirements. Thus, the Project would not create the potential for significant changes in the flow velocity or volume of stormwater runoff to cause environmental harm. Therefore, no impacts related to this issue would occur as a result of the Project.

Significance Determination: No Impact

Mitigation Measures: None

(k) Would the project create significant increases in erosion of the project site or surrounding areas?

Refer to response to Checklist Question 7(c) i) (Hydrology and Water Quality – Soil Erosion) for a discussion of soil erosion.

Significance Determination: Less Than Significant Impact

Mitigation Measures: None

Cumulative Impacts

As shown on Table 36 later in this MND, there are five cumulative projects within proximity to the Project Site. In an urbanized area, such as the setting for the Project and cumulative projects, impacts related to hydrology and water quality are addressed by the City on a project-by-project basis. Each project is required to comply with applicable drainage and water quality standards. As discussed above, the Project's impacts related to hydrology and water quality would be less than significant. Therefore, cumulative impacts related to hydrology and water quality would be less than significant.

11. LAND USE AND PLANNING. *Would the project:*	Potentially Significant Impact	Less Than Significant with Mitigation Incorporated	Less Than Significant Impact	No Impact
(a) Physically divide an established community?	☐	☐	☐	☑
(b) Cause a significant environmental impact due to a conflict with any land use plan, policy, or regulation adopted for the purpose of avoiding or mitigating an environmental effect?	☐	☐	☑	☐

Impact Analysis

(a) Would the project physically divide an established community?

The Project Site is located in an urbanized area of the City that is already served by existing well-established roadway and utility infrastructure. The Project includes development of the Project Site with a memory care facility associated with the existing senior care facility located adjacent to the south. Thus, the Project would not physically divide an established community. Therefore, no impacts related to this issue would occur as a result of the Project.

Significance Determination: No Impact

Mitigation Measures: None

(b) Would the project cause a significant environmental impact due to a conflict with any land use plan, policy, or regulation adopted for the purpose of avoiding or mitigating an environmental effect?

Consistency with Regional Plans

Southern California Association of Governments

As discussed previously in response to Checklist Question 3(a) (Air Quality – AQMP Consistency), the Southern California Association of Governments (SCAG) functions as the Metropolitan Planning Organization (MPO) for six counties: Los Angeles, Orange, San Bernardino, Riverside, Ventura, and Imperial. The SCAG region encompasses a population exceeding 18 million persons in an area of more than 38,000 square miles. As the federally-designated MPO, SCAG is mandated to research and create plans for transportation, growth management, hazardous waste management, and air quality. Applicable SCAG publications are discussed below.

2016-2040 RTP/SCS

On April 7, 2016, the Regional Council of SCAG adopted the 2016-2040 RTP/SCS, which includes a strong commitment to reduce emissions from transportation sources to comply with SB 375, improve public

health, and meet the NAAQS as set forth by the CAA. As such, the 2016-2040 RTP/SCS contains a regional commitment for the broad deployment of zero- and near-zero-emission transportation technologies in the 2016-2040 timeframe and clear steps to move toward this objective. The 2016-2040 RTP/SCS puts forth aggressive strategies addressing technology development and deployment, energy security, cost certainty, increased public support for infrastructure, GHG emissions reduction, and economic development.

The 2016-2040 RTP/SCS provides a blueprint for improving quality of life for residents by providing more choices for where they will live, work, and play, and how they will move around. It is designed to promote safe, secure, and efficient transportation systems to provide improved access to opportunities, such as jobs, education, and healthcare. Its emphasis on transit and active transportation is designed to allow residents to lead a healthier, more active lifestyle. Its goal is to create jobs, ensure the region's economic competitiveness through strategic investments in the goods movement system, and improve environmental and health outcomes for its residents by 2040. More importantly, the RTP/SCS is also designed to preserve what makes the region special, including stable and successful neighborhoods and array of open spaces for future generations.

The 2016-2040 RTP/SCS also includes examples of measures that could reduce impacts from planning, development, and transportation. It notes, however, that the example measures are not intended to serve as any kind of checklist to be used on a project-specific basis. Since every project and project setting is different, project-specific analysis is needed to identify applicable and feasible mitigation. These mitigation measures are particularly important where streamlining mechanisms under SB 375 are utilized.

The 2016-2040 RTP/SCS plans to concentrate future development and provide higher intensity development, including residential and mixed-use development in proximity to transit hubs in order to reduce VMT and thereby reduce GHG emissions from personal vehicles. Development of the Project would reduce VMT by replacing an existing restaurant use that generates more traffic than the proposed memory care facility (refer to response to Checklist Question 17(a) [Transportation – LOS Impacts]). Additionally, as discussed in response to Checklist Questions 8(a) and (b) (Greenhouse Gas Emissions), the Project would result in a net decrease in the amount of GHG emissions generated at the Project Site when compared to the existing restaurant use. For these reasons, the Project would be consistent with the 2016-2040 RTP/SCS.

South Coast Air Quality Management District

Air Quality Management Plan (AQMP)

Refer to response to Checklist Question 3(a) (Air Quality – AQMP Consistency) for a discussion of the Project's less-than-significant impacts related to consistency with the AQMP.

Orange County Transportation Authority

<u>Orange County Congestion Management Program</u>

The Orange County Congestion Management Plan (CMP) requires that a traffic impact analysis be conducted for any project generating 2,400 or more daily trips, or 1,600 or more daily trips for projects that

directly access the CMP Highway System (HS). Per the CMP guidelines, this number is based on the desire to analyze any impacts that will be 3.0 percent or more of the existing CMP highway system facilities' capacity. As discussed in response to Checklist Question 17(a) (Transportation – LOS Impacts), the Project would result in a net decrease in daily traffic trips when compared to the traffic generated by the existing restaurant use. By itself, the Project would generate a total of 149 daily trips. As such, the Project would not generate enough daily trips to trigger the requirements of the CMP. Thus, the Project would be consistent with the CMP.

Consistency with Local Plans

City of Orange General Plan

State law requires that every city and county prepare and adopt a long-range comprehensive General Plan to guide future development and to identify the community's environmental, social, and economic goals.[36] The City of Orange 2010 General Plan, adopted by the City Council on March 9, 2010, contains the following 10 Elements: Land Use, Circulation & Mobility, Growth Management, Natural Resources, Public Safety, Noise, Cultural Resources & Historic Preservation, Infrastructure, Urban Design, and Economic Development.

Table 22 includes a discussion of the Project's consistency with the applicable goals and policies of the Land Use Element. As demonstrated, the Project would be consistent with the applicable goals and policies.

Table 22
Project Consistency with Applicable Policies of the Land Use Element of the City of Orange General Plan

Objective	Project Consistency
Goal 1.0: Meet the present and future needs of all residential and business sectors with a diverse and balance mix of land uses.	
Policy 1.1: Maintain a land use structure that balances jobs and housing with available infrastructure and public and human services.	**Consistent.** The Project includes the infill development of a memory care facility as an extension of an existing senior living facility that would provide housing and care for residents in need and employment opportunities. The Project would be served by existing roadway, utility, and public services.
Policy 1.2: Balance economic gains from new development while preserving the character and densities of residential neighborhoods.	**Consistent.** The Project would not encroach on the character of established residential neighborhoods. The Project Site is located in an urban portion of the City, surrounded by mix of commercial, institutional, and residential uses. The proposed memory care facility would be an extension of the existing senior living facility

[36] *California Government Code Section 65300.*

Table 22
Project Consistency with Applicable Policies of the
Land Use Element of the City of Orange General Plan

Objective	Project Consistency
	located to the south. The proposed building would be two stories and 32 feet in height, consistent with heights of existing buildings adjacent to and near the Project Site. Additionally, the Project would be subject to the City's Design Review process to ensure consistency with applicable design standards.
Policy 1.3: Provide a range of housing densities and types to meet the diverse needs and lifestyles of residents.	**Consistent.** The Project includes development of a memory care facility to serve residents in need.
Policy 1.4: Ensure that new development reflects existing design standards, qualities, and features that are in context with nearby development.	**Consistent.** The Project Site is located in an urban portion of the City, surrounded by mix of commercial, institutional, and residential uses. The proposed memory care facility would be an extension of the existing senior living facility located to the south. The proposed building would be two stories and 32 feet in height, consistent with heights of existing buildings adjacent to and near the Project Site. Additionally, the Project would be subject to the City's Design Review process to ensure consistency with applicable design standards.
Policy 1.6: Minimize effects of new development on the privacy and character of surrounding neighborhoods.	**Consistent.** There are no residential uses adjacent to the Project Site. The Project includes infill development of the Project Site with a memory care facility that is an extension of the senior living facility to the south of the site. A church/institutional use is located to the north of the Project Site. The site is bound by a playfield to the west and S. Glassell Street to the east. The Project would not impose on the privacy or character of the surrounding neighborhood.
Policy 1.7: Provide a range of open space and park amenities to meet the diverse needs of current and new residents.	**Consistent.** The Project would include onsite amenities to serve future memory care residents.
Goal 2.0: Create successful, high quality mixed-use districts consisting of a mix of residential, commercial, office, civic, and common open space land uses, supported by alternative modes of transportation.	
Policy 2.1: Encourage development of mixed-use projects to revitalize older commercial areas throughout the City and industrial areas surrounding the historic Santa Fe Depot.	**Consistent.** The Project includes an infill development of the Project Site with a new memory care facility, replacing a restaurant building that is no longer operational.
Policy 2.4: Encourage mixed-use projects that contain a variety of compatible uses, and provide	**Consistent.** The Project includes development of a memory care facility that is an extension of the

Table 22
Project Consistency with Applicable Policies of the
Land Use Element of the City of Orange General Plan

Objective	Project Consistency
necessary supporting public and community facilities.	existing senior living facility to the south of the Project Site.
Policy 2.5: Minimize traffic and parking impacts of proposed mixed-use projects.	**Consistent.** As described in response to Checklist Question 17(a) (Transportation – LOS Impacts), the Project would result in a net decrease in traffic trips when compared to the existing/previous restaurant use. The Project would provide adequate parking to serve the proposed use. The Project would not result in any significant impacts related to traffic and parking.
Policy 2.7: Ensure that the architecture, landscape design, and site planning of mixed use projects are of the highest quality, and that they emphasize a pedestrian orientation and safe, convenient access between uses.	**Consistent.** The Project would be designed in an architectural style reflecting the eclectic mix of the area, using high quality materials. The Project would be subject to the City's Design Review process to ensure that the Project meets applicable design standards. The Project would provide appropriate pedestrian access that meets safety standards for future memory care residents.
Policy 2.8: Ensure that adequate gathering areas or plazas are incorporated within mixed-use projects and areas to allow for social interaction and community activities.	**Consistent.** The Project would provide activity areas, lounging areas, a beauty salon, a courtyard, and covered terrace for on-site social interaction and community activities.
Source: City of Orange 2010 General Plan, Land Use Element.	

Land Use Designation

Within the General Plan, the Project Site is designated General Commercial. The Land Use Element provides the following description for the General Commercial designation:

> *The General Commercial designation provides for a wide range of retail and service commercial uses and professional offices. This designation is found along many of the City's most highly- traveled roadway corridors, including Katella Avenue, Chapman A venue, and Tustin Street. Regional shopping centers, mid- and high-rise office projects, corridor shopping districts, and neighborhood corner stores are all permitted uses.*

The proposed memory care facility is allowed under the General Commercial designation. Therefore, the Project is consistent with the land use designation for the Project Site.

Zoning

The existing zoning for the Project Site is C-1 (Limited Business). The proposed memory care facility is a use that is allowed under the existing zoning with a CUP, which is requested by the Project Applicant. The Project would meet all other zoning standards for the Project Site, such as height, setbacks, floor area ratio (FAR), parking, landscaping, etc. Therefore, the Project is consistent with the existing zoning for the Project Site.

Significance Determination: Less Than Significant Impact

Mitigation Measures: None

Cumulative Impacts

As shown on Table 36 later in this MND, there are five cumulative projects within proximity to the Project Site. The degree to which the cumulative projects are considered consistent with applicable plans, policies, and regulations and could result in environmental impacts is considered by the City on a project-by-project basis The applicants of each of cumulative project would be required comply with existing standards and regulations associated with sites on with the cumulative project is being proposed and/or request relief from compliance through some sort of ministerial or discretionary approval by the City. As discussed above, the Project includes development of a memory care facility, which is a use that is allowed under the existing land use designation for the Project Site and under the existing zoning pursuant to a CUP. The Project would be consistent with applicable plans, policies, and regulations associated with development of the Project Site, and no significant environmental impacts would occur. Therefore, cumulative impacts related to land use and planning would be less than significant.

12. MINERAL RESOURCES. *Would the project:*	Potentially Significant Impact	Less Than Significant with Mitigation Incorporated	Less Than Significant Impact	No Impact
(a) Result in the loss of availability of a known mineral resource that would be of value to the region and the residents of the state?	☐	☐	☐	☑
(b) Result in the loss of availability of a locally-important mineral resource recovery site delineated on a local general plan, specific plan, or other land use plan?	☐	☐	☐	☑

Impact Analysis

(a) Would the project result in the loss of availability of a known mineral resource that would be of value to the region and the residents of the state?

Mineral resource deposits in Orange are primarily limited to the sand and gravel resources contained in and along the Santa Ana River and Santiago Creek. Sand and gravel resources are referred to collectively as "aggregate," which is used for cement concrete. However, the Project Site is not within or near any area of known mineral resources. Thus, the Project would not result in the loss of availability of a known mineral resource that would be of value to the region and the residents of the state. Therefore, no impacts related to this issue would occur as a result of the Project.

Significance Determination: No Impact

Mitigation Measures: None

(b) Would the project result in the loss of availability of a locally-important mineral resource recovery site delineated on a local general plan, specific plan, or other land use plan?

The City's General Plan Land Use Resource Area designation provides for the continued use of areas for mining and agriculture. Passive and active recreational uses are also permitted in areas with this designation. Resource Areas also serve as a holding zone for areas that are currently used for mining and agriculture, but may not have these uses in the future.[37] The Project Site is designated as Commercial within the General Plan. The Project is not located within a Resource Area or Open Space area. Thus, the Project would not result in the loss of availability of a locally-important mineral resource recovery site delineated on a local

[37] *Page LU-23, Orange General Plan: https://www.cityoforange.org/DocumentCenter/View/570/General-Plan---Land-Use-PDF.*

general plan, specific plan, or other land use plan. Therefore, no impacts related to this issue would occur as a result of the Project.

Significance Determination: No Impact

Mitigation Measures: None

Cumulative Impacts

As shown on Table 36 later in this MND, there are five cumulative projects within proximity to the Project Site. None of the sites of the cumulative projects is designated for mineral resources. As discussed above, the Project would not result in any impacts related to mineral resources. Therefore, no cumulative impacts related to mineral resources would occur.

13. **NOISE.** *Would the project:*	Potentially Significant Impact	Less Than Significant with Mitigation Incorporated	Less Than Significant Impact	No Impact
(a) Generation of a substantial temporary or permanent increase in ambient noise levels in the vicinity of the project in excess of standards established in the local general plan or noise ordinance, or applicable standards of other agencies?	☐	☐	☑	☐
(b) Generation of excessive groundborne vibration or groundborne noise levels?	☐	☐	☑	☐
(c) For a project located within the vicinity of a private airstrip or an airport land use plan, where such a plan has not been adopted, within two miles of a public airport or public use airport, would the project expose people residing or working in the project area to excessive noise levels?	☐	☐	☐	☑

Impact Analysis

This section is based primarily on the following (refer to Appendix H):

- *Noise Modeling Results, NT Environmental Consulting, July 2019.*

Environmental Setting

Fundamentals of Sound and Environmental Noise

Sound can be described in terms of its loudness (amplitude) and frequency (pitch). The standard unit of measurement for sound is the decibel, abbreviated dB. Because the human ear is not equally sensitive to sound at all frequencies, the A-weighted scale (dBA) is used to reflect the normal hearing sensitivity range of the human ear. Table 23 provides examples of A-weighted noise levels from common sources. Although the terms "sound" and "noise" are often used synonymously, noise is commonly defined as sound that is either loud, unpleasant, unexpected, or undesired.[38] Because decibels are logarithmic units, they cannot be simply added or subtracted. For example, two cars each producing 60 dBA of noise would not produce a combined 120 dBA.

[38] *California Department of Transportation (Caltrans), Technical Noise Supplement to the Traffic Noise Analysis Protocol, September 2013.*

Table 23
A-Weighted Decibel Scale

Common Noise Sources	Sound Level, dBA
Near Jet Engine	130
Rock and Roll Band	110
Jet Flyover at 1,000 feet	100
Power Motor	90
Food Blender	80
Living Room Music	70
Human Voice at 3 feet	60
Residential Air Conditioner at 50 feet	50
Bird Calls	40
Quiet Living Room	30
Average Whisper	20
Rustling Leaves	10

These noise levels are approximations intended for general reference and informational use. They do not meet the standard required for detailed noise analysis but are provided for the reader to gain a rudimentary concept of various noise levels.

Source: Cowan, James P., Handbook of Environmental Acoustics, 1993

Noise Definitions

This noise analysis discusses sound levels in terms of equivalent noise level (L_{eq}), maximum noise level (L_{max}), minimum noise level (L_{mix}), and Community Noise Equivalent Level (CNEL). Statistical descriptors (L_x) are also discussed.

Equivalent Noise Level (L_{eq})

L_{eq} represents the equivalent steady-state noise level for a stated period of time that would contain the same acoustic energy as the fluctuating, time-varying noise level of that same period. For example, the L_{eq} for one hour is the energy average noise level for that hour. L_{eq} can be thought of as a continuous noise level for a certain period that is equivalent in acoustic energy content to a fluctuating noise level of that same period. In this report L_{eq} is expressed in units of dBA.

Maximum Noise Level (Lmax)

L_{max} represents the highest instantaneous noise level of a specified time period.

Minimum Noise Level (Lmix)

L_{min} represents the lowest instantaneous noise level of a specified time period.

Community Noise Equivalent Level (CNEL)

CNEL is a weighted noise measurement scale of average sound level during a 24-hour period. Due to increased noise sensitivities during evening and night hours, human reaction to sound between 7:00 P.M. and 10:00 P.M. is as if it were actually 5 dBA higher than had it occurred between 7:00 A.M. and 7:00 P.M. From 10:00 P.M. to 7:00 A.M., humans perceive sound as if it were 10 dBA higher. To account for these sensitivities, CNEL penalizes evening noise levels between 7:00 P.M. and 10:00 P.M. by an additional 5 dBA and nighttime noise levels between 10:00 P.M. and 7:00 A.M. by an additional 10 dBA. Because of this, 24-hour CNEL figures are always higher than their corresponding 24-hour L_{eq}.

Statistical Descriptor (Lx)

L_x is used to represent the noise level exceeded *X* percent of a specified time period. For example, L_{90} represents the noise level that is exceeded 90 percent of a specified time period. L_{90} is commonly used to represent ambient or background steady-state noise levels.[39]

Effects of Environmental Noise

The degree to which noise can impact an environment ranges from levels that interfere with speech and sleep to levels that can cause adverse health effects. Most human response to noise is subjective. Factors that influence individual responses may include the intensity, frequency, and pattern of noise; the amount of background or existing noise present; and the nature of work or human activity that is exposed to intruding noise.

According to the National Institute of Health (NIH), extended or repeated exposure to sounds at or above 85 dB can cause hearing loss. Sounds of 75 dBA or less, even after continuous and repeated exposure, are unlikely to cause hearing loss.[40] The World Health Organization (WHO) reports that adults should not be exposed to sudden "impulse" noise events of 140 dB or greater. For children, this limit is 120 dB.[41]

Exposure to elevated nighttime noise levels can disrupt sleep, leading to increased levels of fatigue and decreased work or school performance. For the preservation of healthy sleeping environments, the WHO recommends that continuous interior noise levels should not exceed 30 dBA L_{eq} and that individual noise events of 45 dBA or higher be limited.[42]

---

[39] *Caltrans, Technical Noise Supplement to the Traffic Noise Analysis Protocol, September 2013.*

[40] *National Institute of Health, National Institute on Deafness and Other Communication. www.nidcd.nih.gov/health/noise-induced-hearing-loss.*

[41] *World Health Organization, Guidelines for Community Noise, 1999.*

[42] *Ibid.*

Some epidemiological studies have shown a weak association between long-term exposure to noise levels of 65 to 70 dBA L_{eq} or greater and cardiovascular effects, including ischaemic heart disease and hypertension. However, at this time, the relationship is largely inconclusive.

It is generally accepted that people with normal hearing sensitivity can barely perceive a 3 dBA change in noise levels, though if changes occur to the character of a sound (i.e., changes to the frequency content), then changes less than 3 dBA may be more noticeable.[43] Changes of 5 dBA may be readily perceptible, and changes of 10 dBA are perceived as a doubling in loudness.[44] However, few people are highly annoyed by daytime noise levels below 55 dBA.[45]

Noise Attenuation

Generally speaking, noise levels decrease, or "attenuate," as distance from noise sources to receivers increases. For each doubling of distance, noise from stationary or small, localized sources, commonly referred to as "point sources," may attenuate at the rate of 6 dBA for each doubling of distance. This attenuation is referred to as the inverse square law. For example, if a point source emits a noise level of 80 dBA at a reference distance of 50 feet its noise level would be approximately 74 dBA at a distance of 100 feet, 68 dBA at a distance of 200 feet, etc. Noise emitted by "line" sources such as highways attenuates at the rate of 3 dBA for each doubling of distance.[46]

Factors such as ground absorption and atmospheric effects may also affect the propagation of noise. In particular, ground attenuation by non-reflective surfaces such as soft dirt or grass may contribute to increased attenuation rates of up to an additional 8-10 dBA per doubling of distance.[47]

Noise is most audible when traveling by direct line of sight, an unobstructed visual path between a noise source and a receiver. Barriers that break the line of sight between noise sources and receivers, such as walls and buildings, can greatly reduce source noise levels by allowing noise to reach receivers by diffraction only. Barriers can reduce source noise levels by up to 20 dBA, though it is generally infeasible for temporary barriers to reduce source noise levels by more than 15 dBA.[48] In cases where the noise path

---

[43] *Caltrans, Technical Noise Supplement to the Traffic Noise Analysis Protocol, September 2013.*

[44] *Ibid.*

[45] *World Health Organization, Guidelines for Community Noise, 1999.*

[46] *Caltrans, Technical Noise Supplement to the Traffic Noise Analysis Protocol, September 2013.*

[47] *Ibid.*

[48] *Ibid.*

from source to receiver is direct but grazes the top of a barrier, noise attenuation of up to 5 dBA may still occur.[49]

Fundamentals of Vibration

Vibration is an oscillatory motion that can be described in terms of displacement, velocity, and acceleration.[50] Unlike noise, vibration is not a common environmental issue, as it is unusual for vibration from vehicle sources to be perceptible. Common sources of vibration may include trains, construction activities, and certain industrial operations.

Vibration Definitions

This analysis discusses vibration in terms of Peak Particle Velocity (PPV).

Peak Particle Velocity (PPV)

PPV is commonly used to describe and quantify vibration impacts to buildings and other structures. PPV levels represent the maximum instantaneous peak of a vibration signal and are generally measured in inches per second (in/sec).[51]

Effects of Vibration

High levels of vibration may cause damage to buildings or even physical personal injury. However, vibration levels rarely affect human health outside the personal operation of certain construction equipment or industrial tools. Instead, most people consider environmental vibration to be an annoyance that may affect concentration or disturb sleep. Background vibration in residential areas is usually not perceptible, and perceptible indoor vibrations are generally caused by sources within buildings themselves, such as slamming doors or heavy footsteps. Vibration from traffic on smooth roadways is rarely perceptible, even from larger vehicles such as buses or trucks.[52] The threshold of human perception of vibration is approximately 0.01-0.02 in/sec PPV.[53]

---

[49] *Ibid.*

[50] *Federal Transit Administration, Transit Noise and Vibration Impact Assessment, September 2018.*

[51] *Ibid.*

[52] *Caltrans, Transportation and Construction Vibration Guidance Manual, September 2013.*

[53] *Ibid.*

Regulatory Framework

City of Orange

General Plan

The City of Orange General Plan contains a Noise Element providing guidance for the control of noise to protect residents, workers, and visitors. Its stated goal "is to identify problems and noise sources threatening community safety and comfort and to establish policies and programs that will limit the community's exposure to excessive noise levels." To this end, the "policies, plans, and programs outlined within the Noise Element are designed to minimize the effects of human-caused noise in the community, and to improve residents' quality of life by regulating and reducing noise…" Additionally, "The Element provides direction regarding best practices and strategies to protect City residents and businesses from severe noise levels."[54] The City's General Plan Appendix contains additional implementation measures based on the Noise Element's goals and policies. Though the following goals, policies, and implementation programs would not directly regulate the Project's operational noise impacts, as Municipal Code standards would, adherence to these goals, policies, and implementation programs would ensure the Project's consistency with the City's General Plan. Some goals, policies, and implementation programs have been omitted for relevance.

The following goals and policies are taken from the City's General Plan Noise Element:

Goal 1.0: *Promote a pattern of land uses compatible with current and future noise levels.*

Policy 1.1: *Consider potential excessive noise levels when making land use planning decisions.*

Policy 1.2: *Encourage new development projects to provide sufficient spatial buffers to separate excessive noise generating land uses and noise-sensitive land uses.*

Policy 1.3: *Incorporate design features into residential and mixed-use projects that can be used to shield residents from excessive noise.*

Policy 1.4: *Ensure that acceptable noise levels are maintained near noise-sensitive areas.*

Policy 1.5: *Reduce impacts of high-noise activity centers located near residential areas.*

Policy 1.6: *Require an acoustical study for proposed developments in areas where the existing and projected noise level exceeds or would exceed the maximum allowable levels*

---

[54] *Noise Element of the City of Orange General Plan, updated December 2015.*

identified on Table N-3. The acoustical study shall be performed in accordance with the requirements set forth within this Noise Element.

<u>Goal 2.0:</u> *<u>Minimize vehicular traffic noise in residential areas and near noise-sensitive land uses.</u>*

Policy 2.1: *Encourage noise-compatible land uses along existing and future roadways, highways, and freeways.*

Policy 2.2: *Encourage coordinated site planning and traffic control measures that minimize traffic noise in noise-sensitive land use areas.*

Policy 2.3: *Encourage the use of alternative transportation modes such as walking, bicycling, mass transit, and alternative fuel vehicles to minimize traffic noise.*

Policy 2.5: *Work toward understanding and reducing traffic noise in residential neighborhoods with a focus on analyzing the effects of traffic noise exposure throughout the City.*

<u>Goal 7.0:</u> *<u>Minimize construction, maintenance vehicle, and nuisance noise in residential areas and near noise-sensitive land uses.</u>*

Policy 7.2: *Require developers and contractors to employ noise minimizing techniques during construction and maintenance operations.*

Policy 7.3: *Limit the hours of construction and maintenance operations located adjacent to noise-sensitive land uses.*

Table 24, based on Table N-3 of the Noise Element, outlines the City's noise standards for various land uses.

The Noise Element also contains the following CEQA-specific guidance for the analysis of project noise impacts:

For City analysis of noise impacts and determining appropriate mitigation under [CEQA], in addition to the maximum allowable noise level standards outlined on Tables N-3 and N-4, an increase in ambient noise levels is assumed to be a significant noise impact if a project causes ambient noise levels to exceed the following:

- *Where the existing ambient noise level is less than 65 dBA, a project related permanent increase in ambient noise levels of 5 dBA CNEL or greater.*

- *Where the existing ambient noise level is greater than 65 dBA, a project related permanent increase in ambient noise levels of 3 dBA CNEL or greater.*

Table N-3 of the Noise Element has been reproduced on Table 24. Table N-4 of the Noise Element is reproduced on Table 25.

The following implementation programs are taken from the City's General Plan appendix titled "Implementation":

Program III-18: Noise Reduction in New Construction

Require construction contractors to implement the following measures during construction activities through contract provisions and/or conditions of approval as appropriate:

- *Construction equipment shall be properly maintained per manufacturers' specifications and fitted with the best available noise suppression devices (i.e., mufflers, silencers, wraps, etc).*
- *Shroud or shield all impact tools, and muffle or shield all intake and exhaust ports on power equipment.*
- *Construction operations and related activities associated with the proposed project shall comply with the operational hours outlined in the City of Orange Municipal Code Noise Ordinance, or mitigate noise at sensitive land uses to below Orange Municipal Code standards.*
- *Construction equipment should not be idled for extended periods of time in the vicinity of noise sensitive receptors.*
- *Located fixed and/or stationary equipment as far as possible from noise sensitive receptors (e.g., generators, compressors, rock crushers, cement mixers). Shroud or shield all impact tools, and muffle or shield all intake and exhaust ports on powered construction equipment.*
- *Where feasible, temporary barriers shall be placed as close to the noise source or as close to the receptor as possible and break the line of sight between the source and receptor where modeled levels exceed applicable standards. Acoustical barriers shall be constructed [of] material having a minimum surface weight of 2 pounds per square foot or greater, and a demonstrated Sound Transmission Class (STC) rating of 25 or greater as defined by American Society for Testing and Materials (ASTM) Test Method E90. Placement, orientation, size, and density of acoustical barriers shall be specified by a qualified acoustical consultant.*

Table 24
City of Orange Noise Element Table N-3:
Maximum Allowable Noise Exposure – Transportation Sources

Land Use		CNEL (dBA)	
Designations	**Uses**	**Interior[A,C]**	**Exterior[B]**
Estate Low Density Residential	Single-family, duplex, and multiple-family	45	65
Low Density Residential	Mobile home park	N/A	65
Low Medium Density Residential			
Medium Density Residential Neighborhood	Single-family	45	65
Mixed-use	Mobile home park	N/A	65
Neighborhood Office Professional	Multiple-family, mixed-use	45	65[D,E]
Old Towne Mixed-use	Transient lodging – motels, hotels	45	65
General Commercial	Sports arenas, outdoor spectator sports	N/A	N/A
Yorba Commercial Overlay	Auditoriums, concert halls, amphitheaters	45	N/A
Urban Mixed-use	Office buildings, business, commercial and professional	50	N/A
Light Industrial	Manufacturing, utilities, agriculture	N/A	N/A
Industrial			
Public Facilities and Institutions	Schools, nursing homes, day care facilities, hospitals, convalescent facilities, dormitories	45	65
	Government Facilities – offices, fire stations, community buildings	45	N/A
	Places of Worship, Churches	45	N/A
	Libraries	45	N/A
	Utilities	N/A	N/A
	Cemeteries	N/A	N/A
Recreation Commercial	Playgrounds, neighborhood parks	N/A	70
Open Space	Golf courses, riding stables, water recreation, cemeteries	N/A	N/A
Open Space – Park			
Open Space - Ridgeline			
Resource Area			

[A] *Interior habitable environment excludes bathrooms, closets and corridors.*

[B] *Exterior noise level standard to be applied at outdoor activity areas: such as private yards, private patio or balcony of a multi-family residences. Where the location of an outdoor activity area is unknown or not applicable, the noise standard shall be applied inside the property line of the receiving land use.*

[C] *Interior noise standards shall be satisfied with windows in the closed position. Mechanical ventilation shall be provided per Uniform Building Code (UBC) requirements.*

[D] *Within the Urban Mixed-Use, Neighborhood Mixed-Use, Old Towne Mixed-Use, and Medium Density Residential land use designations, exterior space standards apply only to common outdoor recreational areas.*

[E] *Within Urban Mixed-Use and Medium Density Residential land use designations, exterior noise levels on private patios or balconies located within 250 feet of freeways (I-5, SR-57, SR-55, SR-22, or SR-241) and Smart Streets and Principal Arterials identified in the Circulation & Mobility Element that exceed 70 dB should provide additional common open space.*

N/A = Not Applicable to specified land use category or designation.

Source: City of Orange General Plan Noise Element, Table N-3.

Table 25
City of Orange Noise Element Table N-4:
Maximum Allowable Noise Exposure – Stationary Sources

Noise Level Descriptor	Daytime (7 A.M. to 10 P.M.)	Nighttime (10 P.M. to 7 A.M.)
Hourly Equivalent Level (L_{eq}), dBA	55	45
Maximum Level (L_{max}), dBA	70	65

Notes:
(1) These standards apply to new or existing noise sensitive land uses affected by new or existing non-transportation noise sources, as determined at the outdoor activity area of the receiving land use. However, these noise level standards do not apply to residential units established in conjunction with industrial or commercial uses (e.g., caretaker dwellings).
(2) Each of the noise levels specified above should be lowered by five dB for simple tone noises, noises consisting primarily of speech or music, or for recurring impulsive noises. Such noises are generally considered by residents to be particularly annoying and are a primary source of noise complaints. These noise level standards do not apply to residential units established in conjunction with industrial or commercial uses (e.g. caretaker dwellings).
(3) No standards have been included for interior noise levels. Standard construction practices that comply with the exterior noise levels identified in this table generally result in acceptable interior noise levels.
(4) The City may impose noise level standards which are more or less restrictive than those specified above based upon determination of existing low or high ambient noise levels. If the existing ambient noise level exceeds the standards listed on Table N-4 [this table], then the noise level standards shall be increased at 3 dB increments to encompass the ambient environment. Noise level standards incorporating adjustments for existing ambient noise levels shall not exceed a maximum of 70 dB L_{eq}.

Source: City of Orange General Plan Noise Element, Table N-4.

<u>Program III-19: Groundborne Noise and Vibration</u>

Implement the following measures to reduce the potential for human annoyance and architectural/structural damage resulting from elevated groundborne noise and vibration levels.

- *Construction-Induced Vibration. The City shall implement or require implementation of the following measures through contract provisions and/or conditions of approval as appropriate:*
    - *Pile driving required within a 50-foot radius of historic structures shall utilize alternative installation methods where possible (e.g., pile cushioning, jetting, pre-drilling, cast-in-place systems, resonance-free vibratory pile drivers). Specifically, geo pier style cast-in-place systems or equivalent [systems] shall be used where feasible as an alternative to pile driving to reduce the number and amplitude of impacts required for seating the pile.*
    - *The pre-existing condition of all buildings within a 50-foot radius of historic buildings within the immediate vicinity of proposed construction activities shall be recorded in the form of a preconstruction survey. The preconstruction survey shall determine conditions that exist before construction begins for use in evaluating damage caused by construction activities. Fixtures and finishes within a 50-foot radius of construction activities susceptible to damage shall be documented*

(photographically and in writing) prior to construction. All damage will be repaired back to its pre-existing conditions.

- *Vibration monitoring shall be conducted prior to and during pile driving operations occurring within 100 feet of the historic structures. Every attempt shall be made to limit construction-generated vibration levels in accordance with Caltrans recommendations during pile driving and impact activities in the vicinity of the historic structures.*
- *Provide protective covering or temporary shoring of on-site or adjacent historic features as necessary, in consultation with the Community Development Director or designee.*

Orange Municipal Code

Chapter 8.24 of the Orange Municipal Code (OMC) contains noise control regulations that would have a limited application to the Project's construction noise impacts, as the OMC exempts construction activities from the chapter's provisions during the daytime hours when the Project's construction activities would occur. Noises associated with the maintenance of the property (e.g. landscaping, cleaning, minor repair work, etc.) would similarly be exempt during daytime hours. Noises from transportation sources traveling on roadways would be subject to the City's General Plan Noise Element.

<u>8.24.050 – Exemptions from Chapter Provisions.</u>

The following activities shall be exempted from the provisions of this chapter:

E. Noise sources associated with construction, repair, remodeling, or grading of any real property, provided said activities take place between the hours of 7:00 A.M. and 8:00 P.M. on any day except for Sunday or a Federal holiday, or between the hours of 9:00 A.M. and 8:00 P.M. on Sunday or a Federal holiday. Noise generated outside of the hours specified are subject to the noise standards identified on Table 8.24.040.

I. Noise sources associated with the maintenance of real property, provided such activities take place between the hours of 7:00 A.M. and 8:00 P.M. on any day except Sunday or a Federal holiday, or between the hours of 9:00 A.M. and 8:00 P.M. on Sunday or a Federal holiday. Operation of leaf blowers are regulated under OMC Chapter 8.26.

L. Mobile noise sources including but not limited to operational noise from trains, or automobiles or trucks traveling on roadways. Transportation noise as related to noise/land use compatibility is subject to the City's General Plan Noise Element.

As referenced by Section 8.24.050(e) above, construction activities occurring outside of the stated hours would be regulated by the standards outlined on Table 8.24.040. Though the Project's construction activities would not take place outside of exempted hours, Section 8.24.040 and Table 8.24.040 are reproduced below for reference.

8.24.040 – Exterior Standards.

A. The following noise standards for fixed noise sources, unless otherwise specifically indicated, shall apply to all residential property:

Table 8.24.040

	Noise Level	Time Period
Hourly Average (L_{eq})	55 dBA	7:00 A.M. – 10:00 P.M.
	50 dBA	10:00 P.M. – 7:00 A.M.
Maximum Level	70 dBA	7:00 A.M. – 10:00 P.M.
	65 dBA	10:00 P.M. – 7:00 A.M.

B. It is unlawful for any person at any location within the City to create any noise, or to allow the creation of any noise on property owned, leased, occupied or otherwise controlled by such person, which causes the noise level when measured on any other residential property to exceed the noise standards identified on Table 8.24.040. For multi-family residential or mixed use developments located within the City's Urban Mixed Use, Neighborhood Mixed Use, Old Towne Mixed Use or Medium Density Residential General Plan land use districts, exterior noise standards shall apply to common recreation areas only and shall not apply to private exterior space (such as private yard, patio, or balcony).

C. In the event the ambient noise level exceeds the noise standards identified on Table 8.24.040 of this section, the "adjusted ambient noise level" shall be applied as the noise standard. In cases where the noise standard is adjusted due to a high ambient noise level, the noise standard shall not exceed the "adjusted ambient noise level," or 70 dBA, whichever is less. In cases where the ambient noise level is already greater than 70 dBA, the ambient noise level shall be applied as the noise standard.

D. Each of the noise limits specified on Table 8.24.040 shall be reduced by 5 dBA for impact or simple tone noises, recurring impulsive noises, or for noises consisting of speech or music.

Though Section 8.24.050 would exempt the Project's construction noise impacts from the OMC's special provisions for schools, hospitals, and churches, these provisions are reproduced below for reference.

8.24.060 – Special Provisions for Schools, Hospitals, and Churches.

It is unlawful for any person to create any noise which causes the noise level at any school, hospital or church, while the same is in use, to exceed the noise limits as specified in Section 8.24.040, or which noise level unreasonably interferes with the use of such institutions.

Section 8.24.100 of the OMC contains the following additional provision:

> *8.24.100 – Alternative Noise Prohibition.*
>
> *Notwithstanding any other provisions of this chapter and in addition thereto, it is unlawful for any person to willfully make, continue, maintain, permit or cause to be made, continued, maintained, or permitted, any loud, unnecessary and unusual noise which disturbs the peace or quiet of any residential property or which causes discomfort or annoyance to any reasonable person of normal sensitivity residing in the area. It shall be a prima facie violation of this section if any power tool, radio, receiving set, television, music amplifier, tape player, record player, compact disc player, musical instrument or similar device is played, used or permitted to be played or used between the hours of 10:00 P.M. and 7:00 A.M. when audible from a distance of one hundred (100) feet from the property line of the noise source or from a distance of one hundred fifty (150) feet from any non-stationary noise source…*

Federal Transit Administration (FTA)

For the evaluation of construction-related vibration impacts, Federal Transit Administration (FTA) guidelines and recommendations are used given the absence of applicable federal, County, or City standards specific to temporary construction activities.

Though not regulatory in nature, the FTA has established vibration impact criteria for buildings and other structures, as building and structural damages are generally the foremost concern when evaluating the impacts of construction-related vibrations. Table 26 shows the FTA's vibration guidelines for building and structural damage.

Table 26
FTA Construction Vibration Damage Criteria

Building Category	PPV (in/sec)
I. Reinforced concrete, steel or timber (no plaster)	0.5
II. Engineered concrete and masonry (no plaster)	0.3
III. Non-engineered timber and masonry buildings	0.2
IV. Buildings extremely susceptible to vibration damage	0.12
Source: Federal Transit Administration, Transit Noise and Vibration Impact Assessment, September 2018.	

Existing Conditions

Project Site

The Project Site currently contains a 5,959-square-foot former restaurant building and its related surface parking. As the restaurant is no longer operational (as of December 31, 2018), the site contains no active

uses and likely generates nominal, if any, environmental noise from on-site sources. However, this use would have generated various auto-related noises from its surface parking lot and related vehicle travel.

Noise-Sensitive Receptors

There are a number of noise-sensitive land uses in the vicinity of the Project. The City of Orange General Plan Noise Element defines "noise-sensitive land uses" as the following: residences, hospitals, convalescent and day care facilities, schools, and libraries. Local receptors include but are not limited to the following:

- Holy Family Cathedral Residences: This receptor consists of residential land uses for the church's on-site religious faculty (e.g. convents, rectory, etc.). The residential building that is nearest to the Project Site, "Cathedral House," is approximately 15 feet north of the Project at 566 S. Glassell Street.

- Holy Family Cathedral: This church receptor is located at 566 S. Glassell Street, approximately 100 feet north of the Project. Site

- Holy Family Cathedral School: This school receptor is located at 530 S. Glassell Street and consists of sensitive classroom buildings as well as various outdoor recreational/athletic facilities. The classroom building that is closest to the Project Site, approximately 200 feet to the north, would have little to no line of sight to the Project's on-site construction activities due to the intervening Holy Family Cathedral and residential buildings. Classroom buildings with line of sight to the Project Site are located approximately 285 feet to the northwest and 300 feet to the east. With regard to the receptor's outdoor recreational/athletic facilities, a grass field is located directly west of the Project. Site Other facilities such as asphalt play areas and outdoor play equipment are located at least 150 feet to the west.

- Glassell Street Residences: This receptor consists of residential land uses located along Glassell Street, approximately 95 feet east of the Project Site across Glassell Street.

- Fashion Park Street Residences: This receptor consists of residential land uses located along Fashion Park Street, approximately 350 feet west of the Project Site.

- Park Plaza Assisted Living Facility: This receptor includes the existing Park Plaza assisted living facilities that are located directly south of the Project Site.

A map identifying the location of these receptors is included as Figure 15. Other noise-sensitive receptors are located at a greater distance from the Project and would experience lesser impacts than those listed above.

Existing Ambient Noise Conditions

On March 14, 2019, noise measurements were obtained at three locations near the Project Site to determine the ambient noise conditions surrounding the Project. At all locations, the primary driver of ambient noise

levels was vehicular traffic. Ambient noise levels in the residential neighborhood along Fashion Park Street were lower, owing to reduced pass-through traffic through this neighborhood. Ambient noise levels along Glassell Street were elevated, consistent with this street's higher traffic volumes. According to the City of Orange General Plan Noise Element, Glassell Street in the Project area experiences daily noise levels in excess of 65 dBA CNEL. For the purpose of establishing daytime noise conditions in the Project's vicinity, ambient noise levels were specifically measured between 10:00 A.M. and 11:00 A.M., an off-peak traffic period that correlates with reduced environmental noise conditions. This is a conservative approach—construction noise impacts are more pronounced when compared against lower baseline noise levels. Measured noise levels are shown on Table 27.

Table 27
Existing Noise Levels

Noise Measurement Location	Sound Level (dBA L_{eq})
1. Fashion Park Street – Rosewood Avenue	58.9
2. Glassell Street – Near Holy Family Cathedral	73.1
3. Glassell Street – S of East River Avenue	66.8
Source: NTEC, 2019.	

Existing Groundborne Vibration Levels

No sources of groundborne vibration were perceptible at any noise measurement location during the course of the field noise study. It is likely that perceptible groundborne vibrations could occasionally be generated by sources such as garbage trucks and other large vehicles (e.g., semi-trucks, buses, cement trucks, etc.). However, groundborne vibration levels surrounding the Project Site are by and large imperceptible, suggesting that groundborne vibration levels are generally below the 0.01-0.02 in/sec PPV threshold of perception for humans.

Imagery via Google

Source: Noah Tanski Environmental Consulting, 2019.

Figure 15
Noise Receptor & Monitoring Location Map

Project Impacts

Methodology

The following section discusses the methods used to analyze the Project's noise impacts:

On-Site Construction Activities

OMC Section 8.24.050 would exempt construction noises from the City's noise ordinance provided that the noise-generating activities occur within the stated hours of exemption. As the Project's construction activities would conform to these exempted hours, the Project would not result in a significant construction noise impact. Nevertheless, this analysis provides construction noise projections for nearby noise-sensitive receptors for informational purposes. Reference equipment noise levels were obtained from the Federal Highway Administration's Roadway Construction Noise Model, version 1.1 (FHWA RCNM 1.1). The FHWA's TNM 2.5 noise model was utilized to model the noise impact of a grader vehicle, whose work is mobile by nature. To represent a grader, a user defined vehicle was created which was assumed to generate a continuous noise level of 85 dBA, equal to the FHWA's maximum noise level for this equipment. As a grader would not continuously emit its maximum instantaneous noise level while operating, the analysis portrays a conservative scenario.

Off-Site Construction Activities

As discussed above, the Project would limit its construction hours to those exempted by OMC Section 8.24.050 and therefore would not result in a significant construction noise impact. Nevertheless, off-site noise increases from haul trucks were estimated using the FHWA's TNM 2.5 noise model and then compared with existing ambient noise conditions along nearby roadways to determine significance.

On-Site Operational Noise Sources

The Project's potential to result in significant noise impacts from on-site operational noise sources was assessed by identifying likely on-site noise sources and considering the impacts they could produce given the nature of the source (i.e., loudness and/or whether noise would be generated during daytime or more-sensitive nighttime hours), distances to nearby noise-sensitive receptors, surrounding ambient noise levels, the presence of similar noise sources in the vicinity, and maximum allowable noise increases permitted by the City of Orange General Plan Noise Element.

Off-Site Operational Noise Sources

The Project would result in a net decrease of daily vehicle trips and therefore would not result in any noise increases due to its trip generation.

Construction Vibration Sources

The Project's potential to generate damaging levels of groundborne vibration was analyzed by identifying construction vibration sources and estimating the maximum vibration levels that they could produce at

nearby buildings, all based on the principles and guidelines recommended by the FTA in its 2018 Transit Noise and Vibration Impact Assessment manual. Vibration levels were then compared with the manual's suggested damage criteria for various building categories (refer to Table 26).

Operational Vibration Sources

Significant sources of operational vibration are generally limited to heavy equipment or industrial operations. The Project proposes to construct an assisted living memory care facility, and no such operations would take place.

Thresholds of Significance

The following thresholds are adopted to aid in the determination of the Project's noise and vibration impacts:

Construction Noise Thresholds

Section 8.24.050(e) of the OMC exempts construction noise sources from the exterior noise standards of the City's noise ordinance so long as construction activities are limited to between 7:00 A.M. and 8:00 P.M., Monday through Saturday, or between 9:00 A.M. and 8:00 P.M. on Sunday or a Federal holiday. Construction occurring outside of these time periods would be subject to the City's exterior noise standards, which are discussed above. Thus, to result in a significant impact from construction noise sources, the Project would have to generate construction noises outside the exempted hours set forth by OMC Section 8.24.050(e) that are in exceedance of the exterior noise standards laid out by OMC Section 8.24.040. Alternatively, a significant impact from construction noise sources would result should the Project result in power tool or construction vehicle operations between the hours of 10:00 P.M. and 7:00 A.M. that are audible at a distance of 100 feet from the Project's property line, pursuant to OMC Section 8.24.100.

The City of Orange General Plan Noise Element contains no quantitative construction noise thresholds.

Operational Noise Thresholds

The Project's non-mobile operational noise sources (i.e. chiefly its point sources) would be held against the exterior noise standards set forth by OMC Section 8.24.040. Thus, the Project's non-mobile operational noise sources would result in a significant impact should they generate exterior noise levels in excess of the standards set forth by OMC Section 8.24.040. Noise sources associated with construction, repair, remodeling, and grading would be exempt pursuant to OMC Section 8.24.050.

OMC Section 8.24.050(l) explicitly confers the regulation of mobile operational noise sources, namely Project-related traffic, to the City's General Plan Noise Element, which contains CEQA-specific guidance for operational noise impacts. As discussed above, "…an increase in ambient noise levels is assumed to be a significant noise impact if a project causes ambient noise levels to exceed the following:

- Where the existing ambient noise level is less than 65 dBA, a project related permanent increase in ambient noise levels of 5 dBA CNEL or greater.

- Where the existing ambient noise level is greater than 65 dBA, a project related permanent increase in ambient noise levels of 3 dBA CNEL or greater."

Groundborne Vibration Threshold

As discussed earlier, there are no federal, state, county, or City standards that would regulate the Project's vibration impacts from temporary construction activities, nor are there quantitative thresholds. As a result, the criteria identified by the FTA in its 2018 Transit Noise and Vibration Impact Assessment manual (refer to Table 26) are used where applicable and relevant to assist in analyzing the Project's groundborne vibration impacts as they pertain to Checklist Question 13(b) (Noise – Groundborne Vibration).

(a) Would the project result in exposure of persons to or generation of noise levels in excess of standards established in the local general plan or noise ordinance, or applicable standards of other agencies?

On-Site Construction Activities

The proposed construction would generate noise during the estimated 17 months of demolition, site preparation, excavation/grading, building construction, and architectural coatings activities. However, the Project would adhere to the exempted construction hours set forth by Orange Municipal Code (OMC) Section 8.24.050. As a result, the Project's construction noises would not exceed or otherwise violate the OMC's exterior noise standards, and the Project's noise impact from its construction sources would be less than significant.

On-site construction activities would include the use of heavy equipment such as excavators, graders, loaders, bulldozers, and/or backhoes. Vehicles such as forklifts, skid steer loaders, crane trucks, drill rig trucks, concrete pumping trucks, and concrete mixing trucks would also be required. Smaller equipment such as generators and various powered hand tools would also be used throughout all construction phases. However, noise from demolition and grading activities are typically the foremost concern when evaluating a project's construction noise impacts, as these activities often require the use of heavy-duty, diesel-powered earthmoving equipment. The Project's grading phase would require an excavator and a grader. Of these vehicles, grader activities would likely have the greatest noise-generating potential given the Project's lack of subgrade levels that would otherwise require extensive excavation activities.

The Project would follow standard, industry-wide "best practices" for construction in urban or otherwise noise-sensitive areas. Best practices utilized by the Project would include the following:

- Erecting temporary noise barriers around the Project's perimeter prior to the commencement of major noise-generating construction activities.

- Erecting a temporary noise barrier "penalty box" for truck-mounted cranes, concrete pumping trucks, and concrete mixing trucks that may be permitted to temporarily operate from adjacent parking spaces or public right-of-way, outside the confines of the Project's perimeter noise barriers.

- Warming-up or staging equipment away from noise-sensitive receptors.

- Placing generators, compressors, and other noisy equipment within acoustic enclosures or behind baffles or screens, especially when such equipment has line of sight to nearby noise-sensitive receptors and is not located within the confines of the Project's perimeter noise barriers.

These best practices would be consistent with the "Noise Reduction in New Construction" measures proposed in the "Implementation" appendix of the City's General Plan and discussed earlier in this section. Standard noise barrier materials, such as one-inch plywood, would have a minimum surface weight of 2 pounds per square foot or greater and an STC rating of 25 or greater.

Table 28 shows the projected noise impacts that would result from the Project's grading activities. As shown, the Project's grading activities would result in marginal noise increases at nearby noise-sensitive uses. Though grading activities may be intermittently audible due to the mobile nature of graders, which operate by driving across land back and forth to level earth, overall, resultant noise increases would not result in noticeably louder ambient noise conditions. As discussed earlier, noise increases of 3 dBA are only barely perceptible.

Table 28
Construction Noise Levels - Grading

Receptor	Construction Noise Level (dBA L_{eq})	Existing Ambient Noise Level (dBA L_{eq})	New Noise Level (dBA L_{eq})	Increase
Holy Family Cathedral Residences	63.9	73.1	73.6	0.5
Holy Family Cathedral	63.4	73.1	73.5	0.4
Holy Family Cathedral School	57.3	58.9	61.2	2.3
Holy Family Cathedral Outdoors	50.3	58.9	59.5	0.6
Glassell Street Residences	63.7	66.8	68.5	1.7
Fashion Park Street Residences	42.9	58.9	59.0	0.1
Park Plaza Assisted Living Facility:				
1st Floor:	59.4	73.1	73.3	0.2
2nd Floor:	67.3		74.1	1.0
3rd Floor:	69.0		74.5	1.4
Source: NTEC, 2019.				

Off-Site Construction Activities

As discussed earlier, the Project would adhere to the exempted construction hours set forth by Section 8.24.050. As a result, the Project's construction noises would not exceed or otherwise violate the OMC's

exterior noise standards, and the Project's noise impact from its construction sources would be less than significant. Nevertheless, the following analysis discusses the noise levels that could occur as a result of the Project's off-site construction activities.

Trucks and other construction-related vehicles would access the Project Site over the course of all construction phases. As the Project does not propose any subgrade levels, the Project's excavation/grading-related soil export would be minimal. Other phases would also require few daily truck trips. Nevertheless, a conservative maximum of 10 truck trips per hour was modeled using the FHWA's TNM 2.5 model to determine the effect that such truck activity could have along Glassell Street, which would be used to access the Project Site. According to this modeling, 10 truck trips per hour would be capable of generating noise levels of 60.3 dBA L_{eq} at land uses east of Glassell Street and 57.6 dBA L_{eq} at land uses west of Glassell Street. As field noise measurements indicate that off-peak-hour daytime ambient noise levels are between 66 dBA L_{eq} and 73 dBA L_{eq} along Glassell Street, Project-related trucks would not be capable of increasing roadside ambient noise levels by a discernable degree.

On-Site Operational Noise

The Project's potential on-site operational noise sources are identified and discussed below. As discussed, the Project's on-site operational noise impacts would be less than significant.

Mechanical Equipment

The majority of the Project's rooftop HVAC equipment would be shielded behind a parapet wall, and the rooftop HVAC equipment not shielded behind the parapet wall would instead be screened behind a metal louver. This shielding would ensure that the Project's HVAC equipment does not have direct line of site to nearby receptors. Additionally, based on the distance from the proposed memory care facility to nearby receptors, ambient noise levels, and the relatively quiet operation of modern HVAC systems, the Project's HVAC equipment would not increase off-site noise levels by a discernable degree. Additionally, the Project's existing use contains rooftop-mounted HVAC units and other mechanical systems. The Project would replace these units with more modern, and thus, presumably quieter and more efficient systems.

A backup generator would be located near the northwest corner of the Project Site. The closest sensitive receptor to this portion of the Project Site is the Holy Family Cathedral Residences, located approximately 64 feet from the closest unit. Use of this generator would be limited to during power outages, though occasional testing of the generator could periodically generate noise during daytime hours. Such infrequent usage would not significantly degrade surrounding ambient noise conditions. The backup generator would be enclosed by a 9-foot-tall masonry wall that would substantially attenuate its noise levels.

Project mechanical equipment would not exceed the exterior noise standards outlined in Section 8.24.040 of the Municipal Code at off-site locations

Auto-Related Activities

The previous restaurant use at the Project Site had a surface parking lot with 60 spaces. The Project would have 16 parking spaces, a net decrease of 44 parking spaces as compared to the site's existing use. As such, the noise levels associated with parking activities would be lower under the proposed memory care use than under use of the Project Site as restaurant with surface parking . Furthermore, the Project would result in a net decrease of 320 vehicle trips per day.[55] As a result, vehicle-related noises (e.g. engines starting, doors slamming, etc.) from the site's surface parking would also decrease.

The types of calls for emergency medical services at a memory care facility are typically associated with residents who experience a fall or residents that need to be transferred to another care facility or hospital due to an illness or injury. These types of emergency response calls do not require the need for siren use. Thus, the Project would not result in an increase in siren noise in the Project Site area.

Overall, the Project's on-site sources of operational noise would have no potential to increase surrounding noise levels by at least 3 dBA CNEL, the Noise Element's minimum threshold for permanent operational noise impacts. A 3 dBA CNEL increase represents a doubling of noise over 24 hours – the Project would not be capable of causing such an increase.

Off-Site Operational Noise

As discussed above, the Project would result in a net decrease of 320 vehicle trips per day. During the A.M. peak hour, the Project would generate just two net new trips; during the P.M. peak hour, the Project would result in a decrease of 34 trips. The Project's two net new A.M. peak hour trips would have no impact on surrounding roadway noise levels. The Project would have no potential to increase roadway noise levels by at least 3 dBA CNEL, the Noise Element's minimum threshold for permanent operational noise impacts, and this impact would be less than significant.

Significance Determination: Less Than Significant Impact

Mitigation Measures: None

(b) Would the project result in exposure of persons to or generation of excessive groundborne vibration or groundborne noise levels?

Building Damage Vibration Impact

As discussed earlier, construction of the Project would require equipment such as excavators, loaders, dozers, and graders. Large, track-mounted grading vehicles can produce vibration levels of 0.089 inches per second PPV at a reference distance of 25 feet. Other construction vehicles and equipment would have

---

[55] *Linscott, Law & Greenspan, Engineers. Traffic Impact Analysis – Park Plaza Memory Care Project, June 2019.*

lesser impacts. The Project would not require impact or vibratory pile driving. Table 29 shows the Project's estimated vibration impacts at the nearest off-site structures. As shown, the Project's construction activities would not be capable of generating groundborne vibration levels in excess of FTA building damage criteria, and the Project's impact would be less than significant.

Table 29
Building Damage Vibration Levels at Off-Site Structures

Off-Site Structures	Distance to Project Site (feet)	Condition	Significance Criteria (in/sec PPV)	Impact (in/sec PPV)	Significant?
Equipment: Excavators and large, track-mounted grading equipment.					
Holy Family Cathedral Residences	15	I. Reinforced concrete, steel, or timber	0.5	0.191	No
Holy Family Cathedral	100	I. Reinforced concrete, steel, or timber	0.5	0.011	No
Glassell Street Residences	95	I. Reinforced concrete, steel, or timber	0.5	0.012	No
Park Plaza Assisted Living Facility	10	I. Reinforced concrete, steel, or timber	0.5	0.352	No
Source: NTEC, 2019. Reference vibration levels obtained from the FTA's 2006 Transit Noise and Vibration Impact Assessment manual.					

Operational Vibrations Impact

During Project operations, there would be no significant stationary sources of groundborne vibration, such as heavy equipment of industrial operations. The Project's related vehicle travel would not be considered a significant source of vibration, as vehicle travel rarely generates perceptible groundborne vibration. As a result, the Project's potential to generate excessive ground-borne vibration levels due to its operations would be less than significant.

Significance Determination: Less Than Significant Impact

Mitigation Measures: None

(c) For a project located within the vicinity of a private airstrip or an airport land use plan, where such a plan has not been adopted, within two miles of a public airport or public use airport, would the project expose people residing or working in the project area to excessive noise levels?

The Project Site is not located in the vicinity of a private airstrip or within an airport land use plan or within two miles of any public airport. Thus, the Project would not expose people residing or working in the project area to excessive noise levels associated with an airstrip or airport. Therefore, no impacts related to this issue would occur as a result of the Project.

Significance Determination: No Impact

Mitigation Measures: None

Cumulative Impacts

As shown on Table 36 later in this MND, there are five cumulative projects within proximity to the Project Site. Only one of the cumulative projects (No. 2), located at 655 S. Glassell Street, across from the Project Site, is in close enough proximity to the Project Site to potentially create cumulative noise in concert with the Project. If both Cumulative Project No. 2 and the Project undergo construction at the same time, cumulative construction noise impacts could occur. However, as with the Project, Cumulative Project No. 2 would be required to implement best practices to minimize construction noise. Additionally, construction noise would be intermittent and temporary. Therefore, cumulative construction noise impacts would be less than significant.

Cumulative Project No. 2 includes development of seven single-family residential homes. Noise levels associated with this type of use does not typically result in noticeable permanent increases in ambient noise levels in urbanized areas, such is the context for the cumulative project. As discussed above, the Project would not result in a noticeable change in ambient noise levels onsite or offsite. Therefore, cumulative operational noise impacts would be less than significant.

14. POPULATION AND HOUSING. *Would the project:*	Potentially Significant Impact	Less Than Significant with Mitigation Incorporated	Less Than Significant Impact	No Impact
(a) Induce substantial unplanned population growth in an area, either directly (for example, by proposing new homes and businesses) or indirectly (for example, through extension of roads or other infrastructure)?	☐	☐	☑	☐
(b) Displace substantial numbers of existing people or housing, necessitating the construction of replacement housing elsewhere?	☐	☐	☐	☑

Impact Analysis

(a) Would the project induce substantial population growth in an area, either directly (for example, by proposing new homes and businesses) or indirectly (for example, through extension of roads or other infrastructure)?

Construction

Construction job opportunities created as a result of the Project are not expected to result in any substantial population growth in the area. The work requirements of most construction projects are highly specialized so that construction workers remain at a job site only for the timeframe in which their specific skills are needed to complete a phase of the construction process. Additionally, the construction workers would likely be supplied from the region's labor pool. Construction workers would not be likely to relocate their household as a consequence of working on the Project, and as such, significant housing or population impacts would not result from construction of the Project. Therefore, construction-related population growth impacts would be less than significant.

Operation

The existing land use designation for the Project Site is General Commercial. The Project does not include any change to this designation. As shown on Table 30, the City forecasts a gradual population growth with an estimated population of 153,000 in 2040.

Table 30
City of Orange Population Growth Forecasts, 2010-2035

2012	2040	Change 2012-2040
138,500	153,000	+14,500 (9.5%)
Source: SCAG, 2016-2040 RTP/SCS, Jurisdictional Forcast 2040, Table 11.		

The Project includes development of a memory care facility, which would include 36 beds to accommodate 36 residents. It is possible that these 36 residents could already live in the City and would not result in an increase in the number of residents in the City. However, it is also possible that the all 36 residents could relocate to the Project Site from areas outside of the City, resulting in a residential population increase of 36 people. However, this potential increase of 36 residents would fall within the projected increase of 14,500 people from 2012 to 2040. Additionally, the Project does not include the development of any new roads or utility infrastructure that would accommodate growth off-site. Thus, the Project would not induce substantial population growth in an area, either directly (for example, by proposing new homes and businesses) or indirectly (for example, through extension of roads or other infrastructure). Therefore, Project impacts related to population growth would be less than significant.

Significance Determination: Less Than Significant Impact

Mitigation Measures: None

(b) Would the project displace substantial numbers of existing housing necessitating the construction of replacement housing elsewhere?

The Project Site is currently developed with a restaurant building and surface parking. No housing exists on the Project Site, and no people reside at the site. Thus, the Project would not displace substantial numbers of existing housing necessitating the construction of replacement housing elsewhere. Therefore, no impacts related to this issue would occur as a result of the Project.

Significance Determination: No Impact

Mitigation Measures: None

Cumulative Impacts

As shown on Table 36 later in this MND, there are five cumulative projects within proximity to the Project Site. These cumulative projects would result in the development of 23 assisted living beds, 989 apartments/townhomes, 7 single-family residential homes, and a 907-square-foot coffee shop. These five cumulative projects are consistent with the General Plan and would not result in unplanned growth..[56] As discussed above, the Project includes development of a memory care facility, which is a use that is allowed under the existing land use designation for the Project Site and under the existing zoning pursuant to a Conditional Use Permit. The Project would not result in unplanned population growth. Therefore, cumulative impacts related to unplanned population growth would be less than significant.

---

[56] *Kelly Ribuffo, Associated Planner, City of Orange, October 28, 2019.*

15. PUBLIC SERVICES.	Potentially Significant Impact	Less Than Significant with Mitigation Incorporated	Less Than Significant Impact	No Impact
(a) Would the project result in substantial adverse physical impacts associated with the provision of new or physically altered governmental facilities, need for new or physically altered governmental facilities, the construction of which could cause significant environmental impacts, in order to maintain acceptable service ratios, response times or other performance objectives for any of the public services:				
i) Fire protection?	☐	☐	☑	☐
ii) Police protection?	☐	☐	☑	☐
iii) Schools?	☐	☐	☑	☐
iv) Parks?	☐	☐	☐	☑
v) Other public facilities?	☐	☐	☐	☑

Impact Analysis

(a) i) Fire Protection

The City of Orange Fire Department (OFD) provides fire protection and emergency medical services to the Project Site. Fire station placement is driven by the time needed to respond to medical and fire emergencies throughout the city. There are eight fire stations in the City housing seven fire engines (also called "pumpers"), one fire truck (also called a "ladder truck"), one quintuple combination pumper (also referred to as a "quint") and three rescue ambulances. The nearest fire stations to the Project Site include the following:

- Station No. 1, located at 176 S. Grand Street, approximately 0.6 miles northeast of the Project Site. Protection area includes City's Historical District and Chapman University, and stretches of the 55 and 22 Freeways.[57]

- Station No. 5, located at 1345 W. Maple Avenue, approximately 1.5 miles northwest of the Project Site. Protection area includes Children's Hospital Orange County, St. Joseph Hospital, and a nearby high-

[57] *City of Orange Fire Department: https://www.cityoforange.org/225/Locate-a-Station.*

rise district, and stretches of the 22 and 57 Freeways, a portion of the Santa Ana River, and industrial, commercial, and residential neighborhoods.[58]

- Station No. 6, located at 345 The City Drive South, approximately 2.9 miles northwest of the Project Site. Protection area includes UCI Medical Center, The Block at Orange, Theo Lacy Jail, Orange County Juvenile Justice Center, and a high-rise district, and stretches of the 22, 5 and 57 Freeways and a portion of the Santa Ana River.[59]

The City receives fire and emergency medical dispatch services from the Metro Cities Fire Authority Communications Center that serves six other cities in the County, including Anaheim, Fountain Valley, Fullerton, Garden Grove, Huntington Beach, and Newport Beach.[60] The City participates in the Standardized Emergency Management System (SEMS) for mutual aid and communication with other agencies during regional emergencies.[61]

For new buildings, safety is addressed through the plan review process. Site inspections are made of new construction and tenant improvement projects to confirm that projects are built per plan, and that there are not any special conditions on site that were not included and approved during the plan review process. Plans drawn in accordance with the current California Fire and Building Code requirements, as adopted by the City, are required in order to receive approval for conditions requiring a permit.[62]

The Project includes demolition and removal of the existing restaurant building on the Project Site and development of the site with a 36-bed memory care facility and surface parking. The Project would add 36 residents and associated staff to the Project Site that could increase the demand for fire protection services. However, adequacy of fire personnel and facilities is monitored on a consistent basis by the Fire Chief, and management staff and service needs are budgeted on an annual basis. A Fire Protection Facilities Fee Program been established that applies to new developments and would offset the demand created. According to the City's findings, the fees to finance fire protection facilities required by new development is necessary in order to avoid adversely impacting existing fire protection facilities.

Fire protection impacts would be addressed by the incorporation of the Fire Department's requirements to be included in the design and construction of the Project to ensure that fire prevention, suppression, and other life safety features are incorporated into site plan and building design, which would help to reduce any potential impacts to a less than significant level. The Project would also comply with current codes and

---

[58] *Ibid.*

[59] *Ibid.*

[60] *City of Orange Fire Department: https://www.cityoforange.org/228/Emergency-Operations.*

[61] *Page PS-24, Orange General Plan: https://www.cityoforange.org/DocumentCenter/View/573/General-Plan---Public-Safety-Element-PDF.*

[62] *Orange Fire Department: https://www.cityoforange.org/203/Plan-Review.*

ordinances applicable at the time of building permits. As shown on Figure 4 (Fire Master Plan), the Project Applicant has already entered the Plan Review process with OFD and has incorporated fire protection standards into the design of the Project. Through compliance with existing OFD and other City requirements, the Project would not result in substantial adverse physical impacts associated with the provision of new or physically altered governmental facilities, need for new or physically altered governmental facilities, the construction of which could cause significant environmental impacts, in order to maintain acceptable service ratios, response times or other performance objectives for fire protection services. Therefore, Project impacts related to fire protection services would be less than significant.

Significance Determination: Less Than Significant Impact

Mitigation Measures: None

(a) ii) Police Protection

The City of Orange Police Department (OPD) provides police protection services to the Project Site. The OPD responds to emergency situations and patrols neighborhoods and commercial areas within the City to promote a safe environment. The staff maintains official criminal records, investigates crime, and in an emergency, assesses situations and quickly dispatches appropriate emergency responses. The OPD also directs proactive crime prevention programs.[63] The OPD headquarters and main police station is located at 1107 N. Batavia Street, approximately 2.5 miles north of the Project Site.

The City of Orange is divided into 97 police reporting districts. The Project is within police reporting district #12, with boundaries of La Veta Avenue to the north, Main Street to the west, Glassell Street to the east, and the City of Santa Ana border to the south. The average crime rate for the City in 2018 was approximately 20 crimes per 1,000 residents, including a violent crime rate of 1.5 crimes per 1,000 residents and a property crime rate of 198 crimes per 1,000 residents.[64]

The Police Department does not use a standard officer-to-population or standard response time objective ratio to measure the adequacy of policing levels in the City of Orange. Instead, the Police Department analyzes demographics, service calls, population, crime trends and other changing factors to determine the level of police services needed.

Emergency response times on average, vary anywhere from four to seven minutes depending on other call priorities and location of police vehicles in relation to call location. The call response time accounts for the department's policy requiring two officers be available before responding to an emergency call. Each new development has a potential impact on response times and increased demand on police services. Using design features and adding security measures helps reduce the number of times the OPD is required to

---

[63] *Page PS-23, Orange General Plan: https://www.cityoforange.org/DocumentCenter/View/573/General-Plan---Public-Safety-Element-PDF.*

[64] *Neighborhood Scout, website: https://www.neighborhoodscout.com/ca/orange/crime, accessed August 7, 2019.*

respond. Such measures can include secured parking areas, elevators, inclusion of abundant windows and balconies providing additional "eyes on the street," on-site building management, and lighting for safety and security.

The Project includes demolition and removal of the existing restaurant building on the Project Site and development of the site with a 36-bed memory care facility and surface parking. The Project would add 36 residents and associated staff to the Project Site that could increase the demand for police protection services. However, a Police Facility Development Fee has been established that applies to new developments and would offset the demand created. According to the City's findings, the fees to finance police facilities required by new development is necessary in order to avoid adversely impacting existing police protection facilities.

The proposed facility would be staffed at all times. All entrance and exit points to the building would be monitored at all times and would be alarmed during sleeping hours. All vistors would be required to check in prior to visiting residents of the facility. Cameras and lighting would be used throughout the facility and parking lot to monitor all activity. As part of the plan check process, the OPD would review the Project plans to determine if any additional measures could be incorporated into the Project to further reduce the potential for crime to occur at the Project. Overall, the Project would have minimal need for OPD services. Thus, the Project would not result in substantial adverse physical impacts associated with the provision of new or physically altered governmental facilities, need for new or physically altered governmental facilities, the construction of which could cause significant environmental impacts, in order to maintain acceptable service ratios, response times or other performance objectives for police protection services. Therefore, Project impacts related to police protection would be less than significant.

Significance Determination: Less Than Significant Impact

Mitigation Measures: None

(a) iii) Schools

The Project includes development of a memory care facility. Residents of the facility would likely be older and would not likely have school-aged children. As such, the Project would not create a demand for school services. Additionally, the Project Applicant would be required to pay applicable developer fees to the Orange Unified School District (OUSD) to offset any indirect impacts to schools. Thus, the Project would not result in substantial adverse physical impacts associated with the provision of new or physically altered governmental facilities, need for new or physically altered governmental facilities, the construction of which could cause significant environmental impacts, in order to maintain acceptable service ratios, response times or other performance objectives for schools. Therefore, Project impacts related to schools would be less than significant.

Significance Determination: Less Than Significant Impact

Mitigation Measures: None

(a) iv) Parks

The Project includes development of a memory care facility, which would include activity areas, lounging areas, a beauty salon, a courtyard, and covered terrace for on-site recreation. Memory care residents would not leave the facility to visit parks and recreational facilities and as such, would not create a demand for off-site parks and recreational services. Thus, the Project would not result in substantial adverse physical impacts associated with the provision of new or physically altered governmental facilities, need for new or physically altered governmental facilities, the construction of which could cause significant environmental impacts, in order to maintain acceptable service ratios, response times or other performance objectives for parks and recreational services. Thus, no impacts related to this issue would occur as a result of the Project.

Significance Determination: No Impact

Mitigation Measures: None

(a) v) Other Public Facilities

The Project includes development of a memory care facility. Memory care residents would not leave the facility to visit libraries and as such, would not create a demand for library services. Thus, the Project would not result in substantial adverse physical impacts associated with the provision of new or physically altered governmental facilities, need for new or physically altered governmental facilities, the construction of which could cause significant environmental impacts, in order to maintain acceptable service ratios, response times or other performance objectives for library services. Thus, no impacts related to this issue would occur as a result of the Project.

Significance Determination: No Impact

Mitigation Measures: None

Cumulative Impacts

As shown on Table 36 later in this MND, there are five cumulative projects within proximity to the Project Site. These cumulative projects would result in the development of 23 assisted living beds, 989 apartments/townhomes, 7 single-family residential homes, and a 907-square-foot coffee shop. The degree to which these cumulative projects would require public services would be considered by the City on a project-by-project basis. As with the Project Applicant, the applicants of the cumulative projects would be required to pay applicable public services fees to the City to help offset potential impacts to public services. As discussed above, the Project's impacts related to public services would be less than significant. Therefore, cumulative impacts related to public services would be less than significant.

16. RECREATION.	Potentially Significant Impact	Less Than Significant with Mitigation Incorporated	Less Than Significant Impact	No Impact
(a) Would the project increase the use of existing neighborhood and regional parks or other recreational facilities such that substantial physical deterioration of the facility would occur or be accelerated?	☐	☐	☐	☑
(b) Does the project include recreational facilities or require the construction or expansion of recreational facilities which might have an adverse physical effect on the environment?	☐	☐	☐	☑

Impact Analysis

(a) Would the project increase the use of existing neighborhood and regional parks or other recreational facilities such that substantial physical deterioration of the facility would occur or be accelerated?

The Project includes development of a memory care facility, which would include activity areas, lounging areas, a beauty salon, a courtyard, and covered terrace for on-site recreating. Memory care residents would not leave the facility to visit parks and as such, would not create a demand for off-site parks and recreational services. Thus, the Project would not increase the use of existing neighborhood and regional parks or other recreational facilities such that substantial physical deterioration of the facility would occur or be accelerated. Thus, no impacts related to this issue would occur as a result of the Project.

Significance Determination: No Impact

Mitigation Measures: None

(b) Does the project include recreational facilities or require the construction or expansion of recreational facilities which might have an adverse physical effect on the environment?

The Project includes development of a memory care facility, which would include activity areas, lounging areas, a beauty salon, a courtyard, and covered terrace for on-site recreating. Memory care residents would not create a demand for off-site parks and recreational services. Thus, the Project would not include recreational facilities or require the construction or expansion of recreational facilities which might have an adverse physical effect on the environment. Thus, no impacts related to this issue would occur as a result of the Project.

Significance Determination: No Impact

Mitigation Measures: None

Cumulative Impacts

As shown on Table 36 later in this MND, there are five cumulative projects within proximity to the Project Site. The degree to which the cumulative projects would require recreational facilities or would include the development of recreational facilities would be considered by the City on a project-by-project basis. As discussed above, the Project would not result in any impacts related to recreation. Therefore, cumulative impacts related to recreation would be less than significant.

17. **TRANSPORTATION**. *Would the project:*	Potentially Significant Impact	Less Than Significant with Mitigation Incorporated	Less Than Significant Impact	No Impact
(a) Conflict with a program, plan, ordinance or policy addressing the circulation system, including transit, roadway, bicycle and pedestrian facilities?	☐	☐	☑	☐
(b) Conflict or be inconsistent with CEQA Guidelines Section 15064.3, subdivision (b)?[65]	☐	☐	☑	☐
(c) Substantially increase hazards to a geometric design feature (e.g., sharp curves or dangerous intersections) or incompatible uses (e.g., farm equipment)?	☐	☐	☑	☐
(d) Result in inadequate emergency access?	☐	☐	☑	☐

Impact Analysis

The section is based in part on the following (refer to Appendix I):

- *Traffic Impact Analysis, Park Plaza Memory Care Project, Linscott, Law & Greenspan, Engineers, June 21, 2019.*

(a) Would the project conflict with a program, plan, ordinance or policy addressing the circulation system, including transit, roadway, bicycle and pedestrian facilities?

Study Area

The four key study intersections selected for evaluation were determined based on coordination with City of Orange Traffic Engineering (OTE) staff and application of the "51 or more peak hour trip threshold" criteria outlined in the *City of Orange Traffic Impact Analysis Guidelines*, dated August 15, 2007. The City intersections listed below provide local access to the study area and define the extent of the boundaries for the traffic impact investigation.

Key Study Intersections

1. Glassell Street at La Veta Avenue

[65] *In accordance with CEQA Guidelines Section 15064.3(c), the City of Orange, as the lead agency, will implement the provisions of Section 15064.3 of the CEQA Guidelines, when the provisions go into effect statewide beginning July 1, 2020.*

2. Glassell Street at East River Avenue

3. Glassell Street at Park Plaza Driveway 1

4. Glassell Street at Park Plaza Driveway 2

Figure 16 illustrates the general location of the Project and depicts the study locations and surrounding street system. The level of service (LOS) investigations at these key locations were used to evaluate the potential traffic-related impacts associated with the Project, area growth, and cumulative projects.

Existing Street System

The principal local network of streets serving the Project Site includes Glassell Street and La Veta Avenue. The discussion below provides a brief synopsis of these key area streets. The descriptions are based on an inventory of existing roadway conditions.

Glassell Street is generally a four-lane, divided roadway oriented in the north-south direction and borders the Project Site to the east. Glassell Street transitions to a two-lane, undivided roadway north of La Veta Avenue. On-street parking is not permitted on the west side of Glassell Street south of East River Avenue and not permitted on the east side of Glassell Street north of East River Avenue. The posted speed limit on Glassell Street is 35 miles per hour (mph) south of La Veta Avenue and 30 mph north of La Veta Avenue. A traffic signal controls the study intersection of Glassell Street at La Veta Avenue. The study intersections of Glassell Street at East River Avenue, Park Plaza Driveway 1 and Park Plaza Driveway 2 are stop-controlled.

La Veta Avenue is generally a four-lane, divided roadway west of Glassell Street and a two-lane undivided roadway east of Orange Street oriented in the east-west direction. On-street parking is generally not permitted along this roadway west of La Veta Avenue and on-street parking is permitted east of Orange Street within the vicinity of the Project Site. The posted speed limit on La Veta Avenue is 35 mph west of Glassell Street and 30 mph east of Glassell Street.

Figure 17 presents an inventory of the existing roadway conditions for the arterials and intersections evaluated in this report. This figure identifies the number of travel lanes for key arterials, as well as intersection configurations and controls for the key area study intersections.

Existing Traffic Volumes

Existing AM peak-hour and PM peak-hour traffic volumes for the four key study intersections evaluated in this section were conducted by AimTD LLC in May 2019. Figures 18 and 19 illustrate the existing AM and PM peak-hour traffic volumes at the four key study intersections.

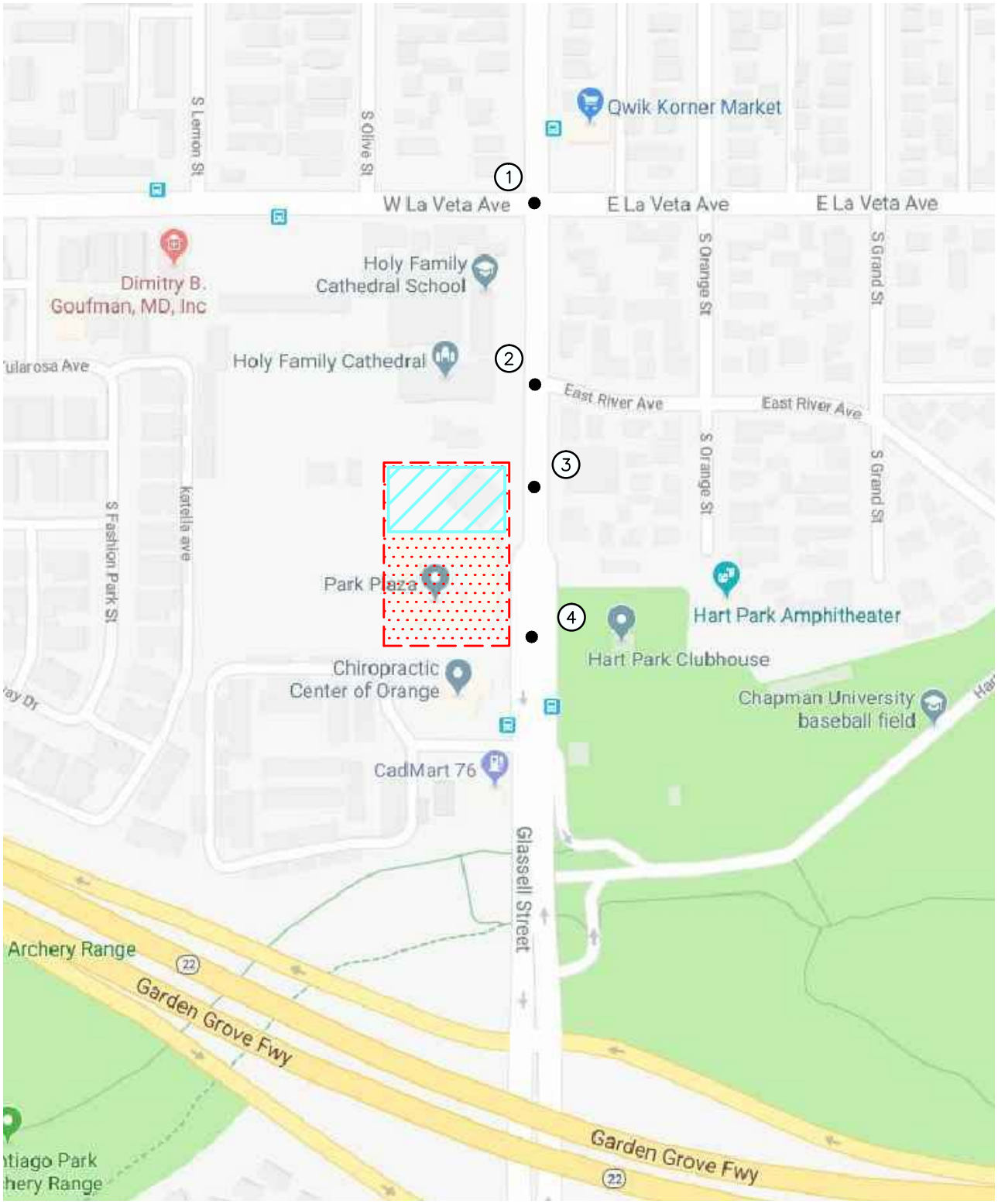

SOURCE: GOOGLE

KEY

(#) = STUDY INTERSECTION

= PROJECT SITE

= PROPOSED MEMORY CARE

NORTH

Not to Scale

Figure 16
Vicinity Map

Source: Linscott Law & Greenspan Engineers, 2019.

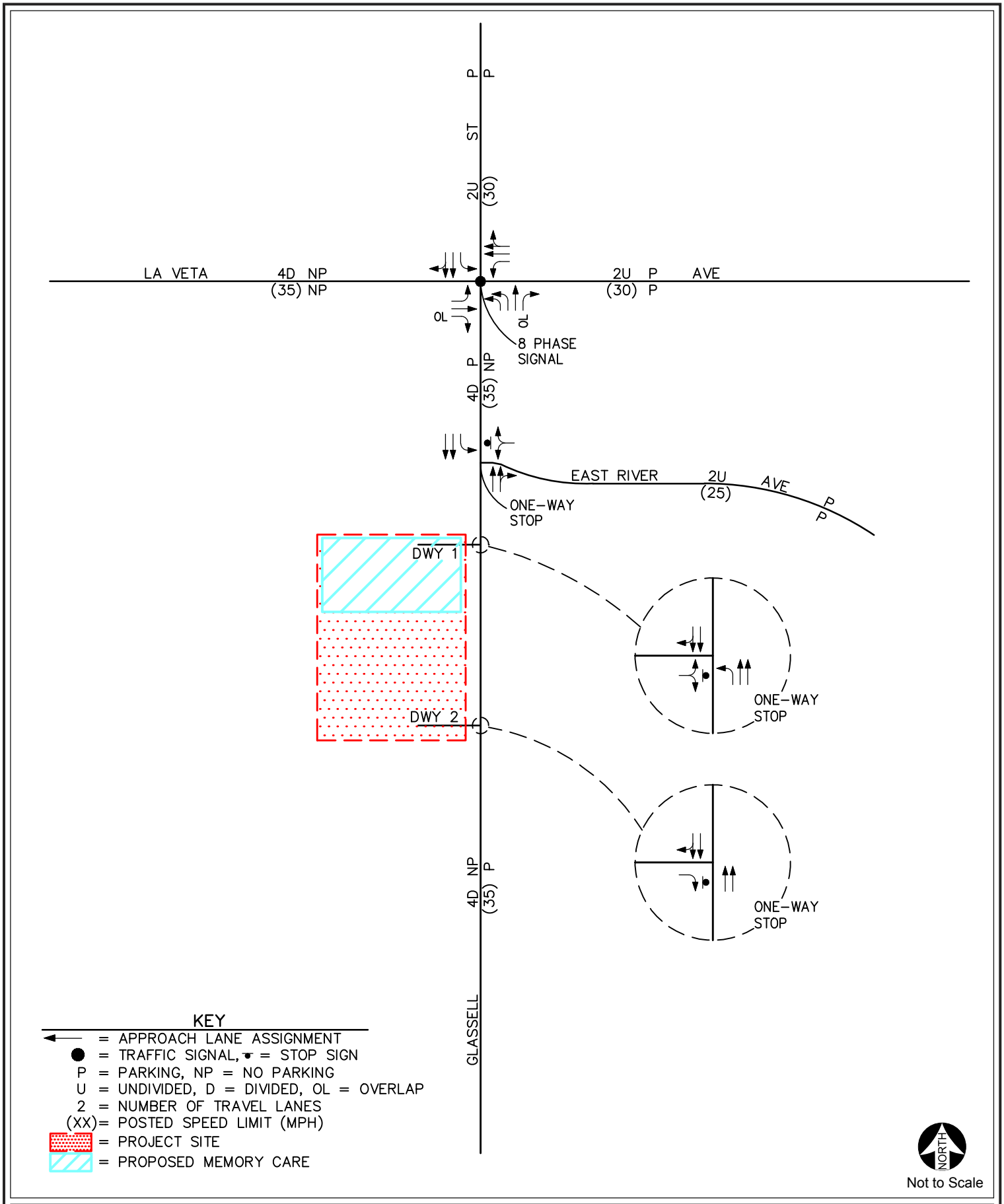

Figure 17
Existing Roadway Conditions and Intersection Controls

Source: Linscott Law & Greenspan Engineers, 2019.

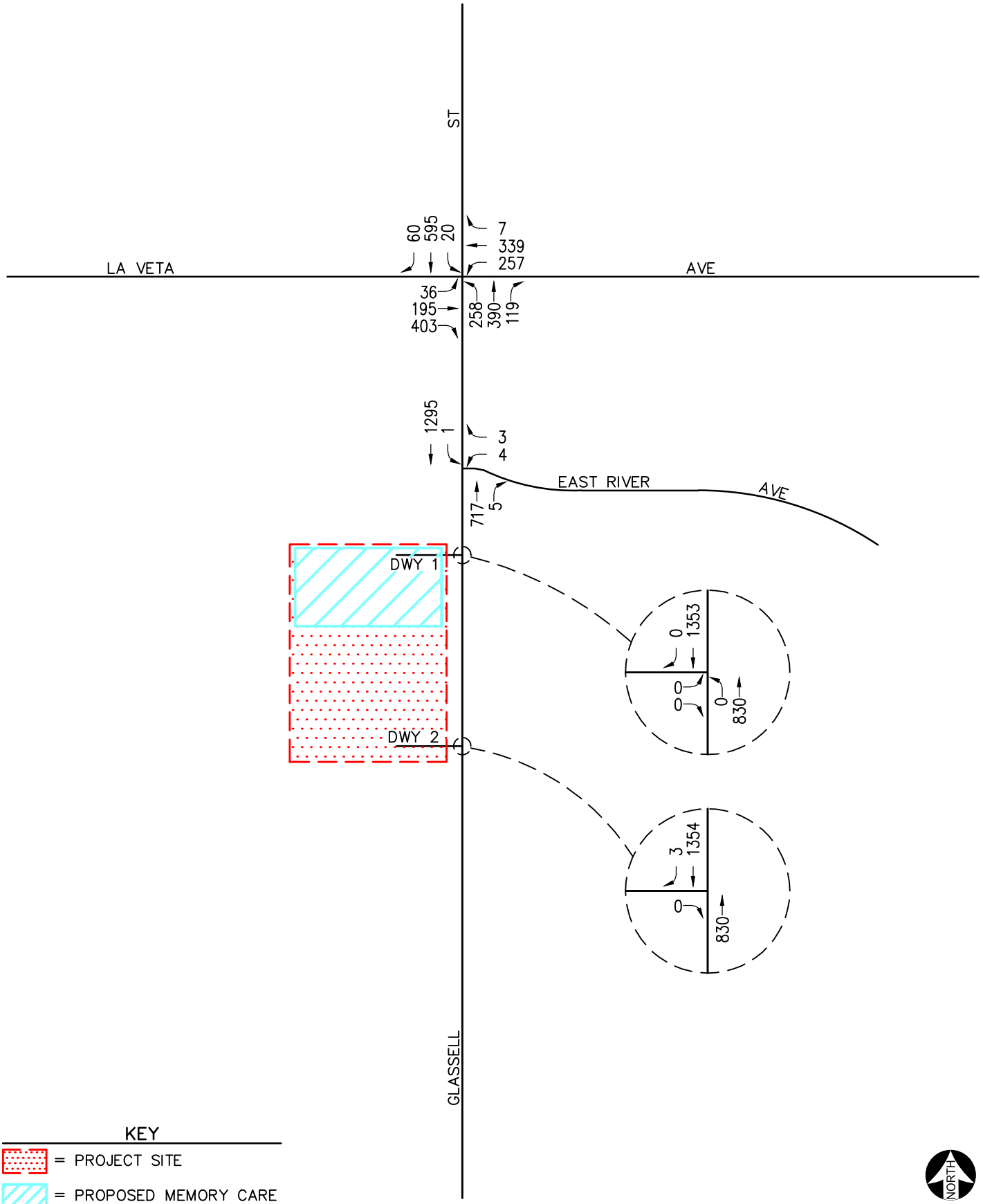

Figure 18
Existing (2019) AM Peak Hour Traffic Volumes

Source: Linscott Law & Greenspan Engineers, 2019.

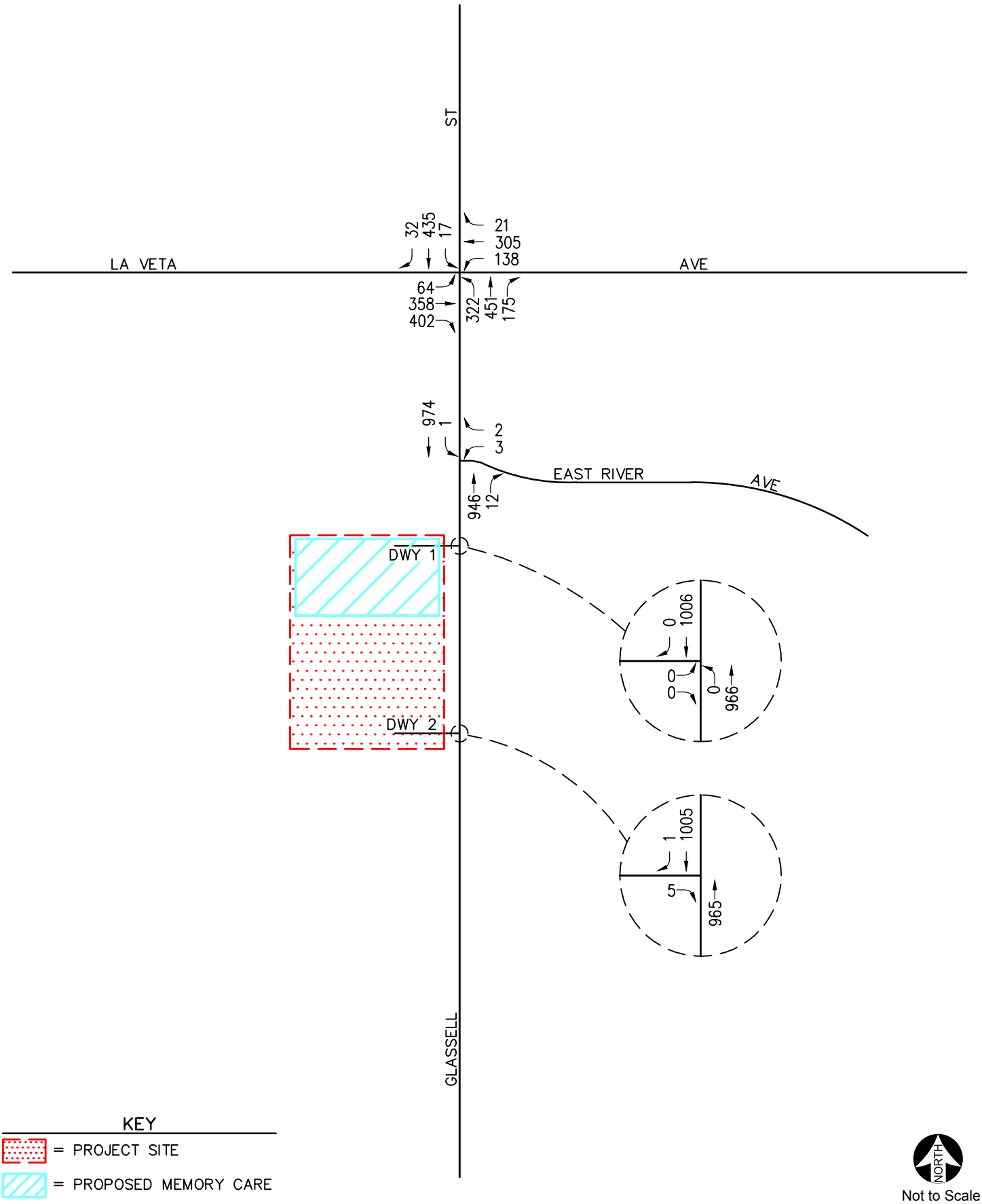

Figure 19
Existing (2019) PM Peak Hour Traffic Volumes

Source: Linscott Law & Greenspan Engineers, 2019.

Existing Intersection Conditions

Existing AM and PM peak-hour operating conditions for the four key study intersections were evaluated using the Intersection Capacity Utilization (ICU) methodology for signalized intersections and the methodology outlined in Chapter 17 of the Highway Capacity Manual 2000 (HCM2000) for unsignalized intersections.

ICU Method of Analysis (Signalized Intersections)

In conformance with City requirements, existing AM and PM peak-hour operating conditions for the key signalized study intersections were evaluated using the Intersection Capacity Utilization (ICU) method. The ICU technique is intended for signalized intersection analysis and estimates the volume to capacity (V/C) relationship for an intersection based on the individual V/C ratios for key conflicting traffic movements. The ICU numerical value represents the percent signal (green) time and thus capacity, required by existing and/or future traffic. It should be noted that the ICU methodology assumes uniform traffic distribution per intersection approach lane and optimal signal timing.

Per City requirements, the ICU calculations use a lane capacity of 1,700 vehicles per hour (vph) for through and all turn lanes. A clearance adjustment factor of 0.05 was added to each LOS calculation.

The ICU value translates to a LOS estimate, which is a relative measure of the intersection performance. The ICU value is the sum of the critical volume to capacity ratios at an intersection; it is not intended to be indicative of the LOS of each of the individual turning movements. The six qualitative categories of LOS have been defined along with the corresponding ICU value range and are shown on Table 31.

Highway Capacity Manual (HCM) Method of Analysis (Unsignalized Intersections)

The HCM unsignalized methodology for stop-controlled intersections was utilized for the analysis of the unsignalized intersections. LOS criteria for unsignalized intersections differ from LOS criteria for signalized intersections as signalized intersections are designed for heavier traffic and thus, a greater delay.

Two-Way Stop-Controlled Intersections

Two-way stop-controlled intersections compose a major street, which is uncontrolled, and a minor street, which is controlled by stop signs. LOS for a two-way stop-controlled intersection is determined by the computed or measured control delay. The control delay by movement, by approach, and for the intersection as a whole is estimated by the computed capacity for each movement. LOS is determined for each minor-street movement (or shared movement) as well as major-street left turns. The worst side street approach delay is reported. LOS is not defined for the intersection as a whole or for major-street approaches, as it is assumed that major-street through vehicles experience zero delay. The HCM control delay value range for two-way stop-controlled intersections is shown on Table 32.

Table 31
Level of Service Criteria for Signalized Intersections

Level of Service (LOS)	Intersection Capacity Utilization Value (V/C)	Level of Service Description
A	≤ 0.60	EXCELLENT. No vehicle waits longer than one red light, and no approach phase is fully used.
B	0.61 – 0.70	VERY GOOD. An occasional approach phase is fully utilized; many drivers begin to feel somewhat restricted within groups of vehicles.
C	0.71 – 0.80	GOOD. Occasionally drivers may have to wait through more than one red light; backups may develop behind turning vehicles.
D	0.81 – 0.90	FAIR. Delays may be substantial during portions of the rush hours, but enough lower volume periods occur to permit clearing of developing lines, preventing excessive backups.
E	0.91 – 1.00	POOR. Represents the most vehicles intersection approaches can accommodate; may be long lines of waiting vehicles through several signal cycles.
F	> 1.00	FAILURE. Backups from nearby locations or on cross streets may restrict or prevent movement of vehicles out of the intersection approaches. Potentially very long delays with continuously increasing queue lengths.

Source: Transportation Research Board Circular 212 – Interim Materials on Highway Capacity.

Table 32
LOS Criteria for Unsignalized Intersections

Level of Service (LOS)	Highway Capacity Manual Delay Value (sec/vph)	Level of Service Description
A	≤ 10.0	Little or no delay
B	> 10.0 and ≤ 15.0	Short traffic delays
C	> 15.0 and ≤ 25.0	Average traffic delays
D	> 25.0 and ≤ 35.0	Long traffic delays
E	> 35.0 and ≤ 50.0	Very long traffic delays
F	> 50.0	Severe congestion
Source: Highway Capacity Manual 2000, Chapter 17 (Unsignalized Intersections).		

Level of Service Criteria

According to the City of Orange General Plan Circulation Element and stated in the *City of Orange Traffic Impact Analysis Guidelines*, LOS D is the minimum acceptable condition that should be maintained during the morning and evening peak commute hours on all intersections and LOS D is the minimum acceptable condition that should be maintained daily on all roadway segments.

Existing LOS

Table 33 summarizes the existing peak-hour service level calculations for the four key study intersections based on existing traffic volumes and current street geometry. All four key study intersections currently operate at acceptable LOS D or better during the AM and PM peak hours.

Table 33
Existing Peak Hour Levels of Service

Key Intersection		Time Period	Jurisdiction	Minimum Acceptable LOS	Control Type	ICU	LOS
1.	Glassell Street at La Veta Avenue	AM PM	Orange	D	8∅ Traffic Signal	0.631 0.617	B B
2.	Glassell Street at East River Avenue	AM PM	Orange	D	One-Way Stop	-- --	B C
3.	Glassell Street at Park Plaza Driveway 1	AM PM	Orange	D	One-Way Stop	-- --	A A
4.	Glassell Street at Park Plaza Driveway 2	AM PM	Orange	D	One-Way Stop	-- --	A B

∅ = phase
Source: Linscott, Law & Greenspan, 2019.

Impact Criteria and Thresholds

Impacts to local and regional transportation systems located in the City are considered significant if the following occurs:

<u>Intersections:</u>

- An unacceptable peak-hour LOS at any of the key intersections is projected. According to the City's Circulation Element and stated in the *City of Orange Traffic Impact Analysis Guidelines*, LOS D is the minimum acceptable condition that should be maintained during the morning and evening peak hours on all intersections; and
- The project increases traffic demand at the study intersection by 1.0 percent of capacity (ICU increase ≥ 0.010), causing or worsening LOS E or LOS F (ICU > 0.900).
- An unsignalized intersection impact is considered to be significant if the project causes an intersection operating at LOS D or better to degrade to LOS E or LOS F, and the traffic signal warrant analysis determines that a traffic signal is justified.

Project Traffic Generation

Traffic generation is expressed in vehicle trip ends, defined as one-way vehicular movements, either entering or exiting the generating land use. Generation equations and/or rates used in the traffic forecasting procedure are found in the 9th Edition of *Trip Generation*, published by the Institute of Transportation Engineers (ITE).

Table 34 summarizes the trip generation rates used in forecasting the vehicular trips generated by the Project and the existing land use (i.e. existing vacant restaurant building) and also presents the Project's forecast peak hour and daily traffic volumes. For this analysis, the trip generation potential of the existing land use was estimated using ITE Land Use 931: Quality Restaurant trip rates and the trip generation potential of the Project was estimated using ITE Land Use 254: Assisted Living trip rates.

As shown on Table 34, the Project would generate 320 fewer net daily trips (one half arriving and one half departing), with 2 greater net trips (0 inbound, 2 outbound) produced in the AM peak hour, and 34 fewer net trips (-24 inbound, -10 outbound) produced in the PM peak hour on a typical weekday compared to the existing use.

It should be noted that the existing 5,595-square-foot restaurant is currently non-operational. Thus, the Project's gross trip generation of 149 daily trips (one half arriving and one half departing), with 6 trips (4 inbound, 2 outbound) produced in the AM peak hour, and 10 trips (5 inbound, 5 outbound) produced in the PM peak hour was utilized in this traffic impact analysis to provide a conservative assessment.

Table 34
Project Traffic Generation Forecast

ITE Land Use Code/Project Description	**Daily 2-Way**	**AM Peak Hour**			**PM Peak Hour**		
		Enter	**Exit**	**Total**	**Enter**	**Exit**	**Total**
Generation Rates:							
• ITE 254: Assisted Living (TE/Occupied Beds)	4.14	68%	32%	0.18	50%	50%	0.29
• ITE 931: Quality Restaurant (TE/TSF)	83.84	90%	10%	0.73	67%	33%	7.80
Generation Forecasts:							
[A] Project							
• Park Plaza Expansion – Memory Care Facility (36 Beds)	**149**	**4**	**2**	**6**	**5**	**5**	**10**
[B] Existing Land Use							
• Restaurant (5,595 SF)	469	4	0	4	29	15	44
Total "Net Increase" Project Trip Generation: Project - Existing Land Use [A]-[B]	*-320*	*0*	*2*	*2*	*-24*	*-10*	*-34*
Notes: *TE/Occupied Beds = Trip End per Occupied Beds* *TE/TSF = Trip End per Thousand Square Feet*							

Project Traffic Distribution and Assignment

Figure 20 illustrates the general, directional traffic distribution pattern for the Project. Project traffic volumes both entering and exiting the Project Site have been distributed and assigned to the adjacent street system based on the following considerations:

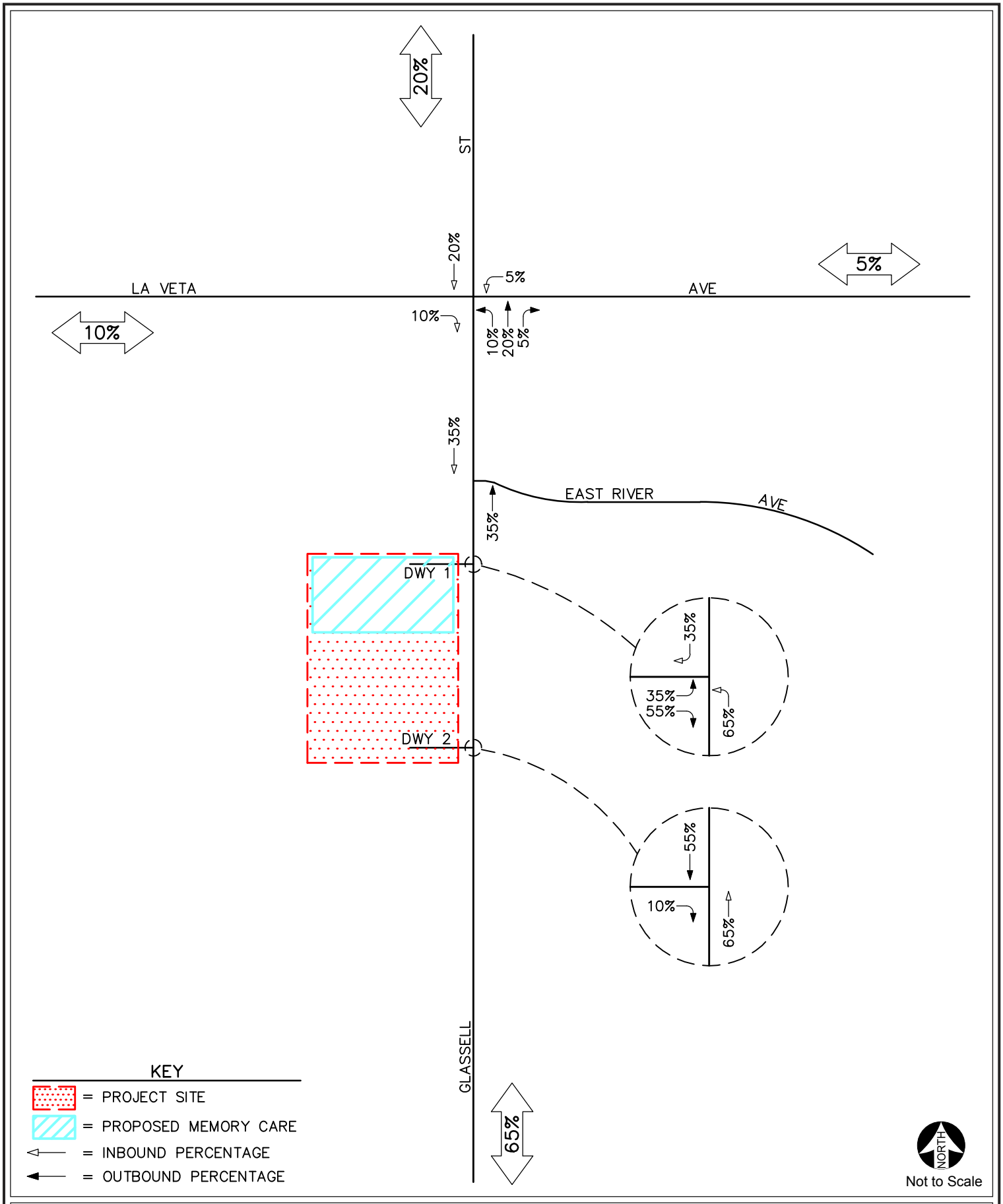

Figure 20
Project Traffic Distribution Pattern

Source: Linscott Law & Greenspan Engineers, 2019.

- Directional flows on the freeways in the immediate vicinity of the Project Site (i.e. I-5 Freeway and SR-22 Freeway);
- The Project Site's proximity to major traffic carriers (i.e. Glassell Street);
- Expected localized traffic flow patterns based on adjacent street channelization and presence of traffic signals; and
- Ingress/egress availability at the Project Site.

The anticipated AM and PM peak-hour Project traffic volumes associated with the Project are presented on Figures 21 and 22. The traffic volume assignments presented in the figures reflects the traffic distribution characteristics.

Existing Plus Project Traffic Conditions

The Existing plus Project traffic conditions have been generated based upon existing conditions and the estimated Project traffic. These forecast traffic conditions have been prepared pursuant to the California Environmental Quality Act (CEQA) guidelines, which require that the potential impacts of a Project be evaluated upon the circulation system as it currently exists. This traffic volume scenario and the related intersection capacity analyses will identify the roadway improvements necessary to mitigate the direct traffic impacts of the Project, if any.

Figures 23 and 24 present projected AM and PM peak-hour traffic volumes at the four key study intersections with the addition of the trips generated by the Project to existing traffic volumes, respectively. It should be noted that an assumption was made to account for a portion of existing outbound volume from the southernmost driveway (i.e. Park Plaza Driveway 2) that would utilize the full-access northernmost driveway (i.e. Park Plaza Driveway 1) to go northbound on Glassell Street.

Review of column (2) of Table 35 indicates that traffic associated with the Project would not significantly impact any of the four key study intersections, when compared to the LOS standards and significant impact criteria specified previously.

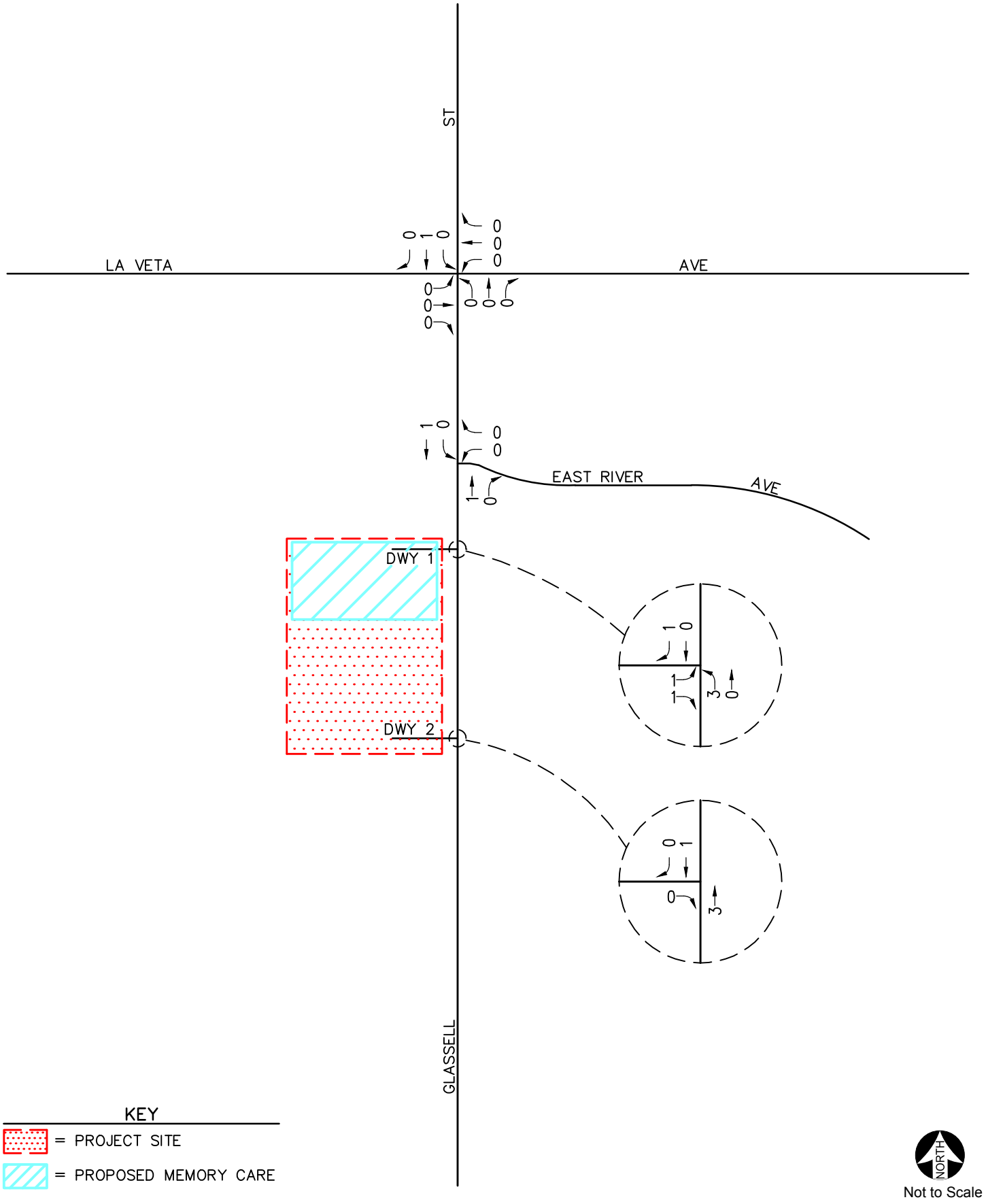

Figure 21
AM Peak Hour Project - Generated Traffic Volumes

Source: Linscott Law & Greenspan Engineers, 2019.

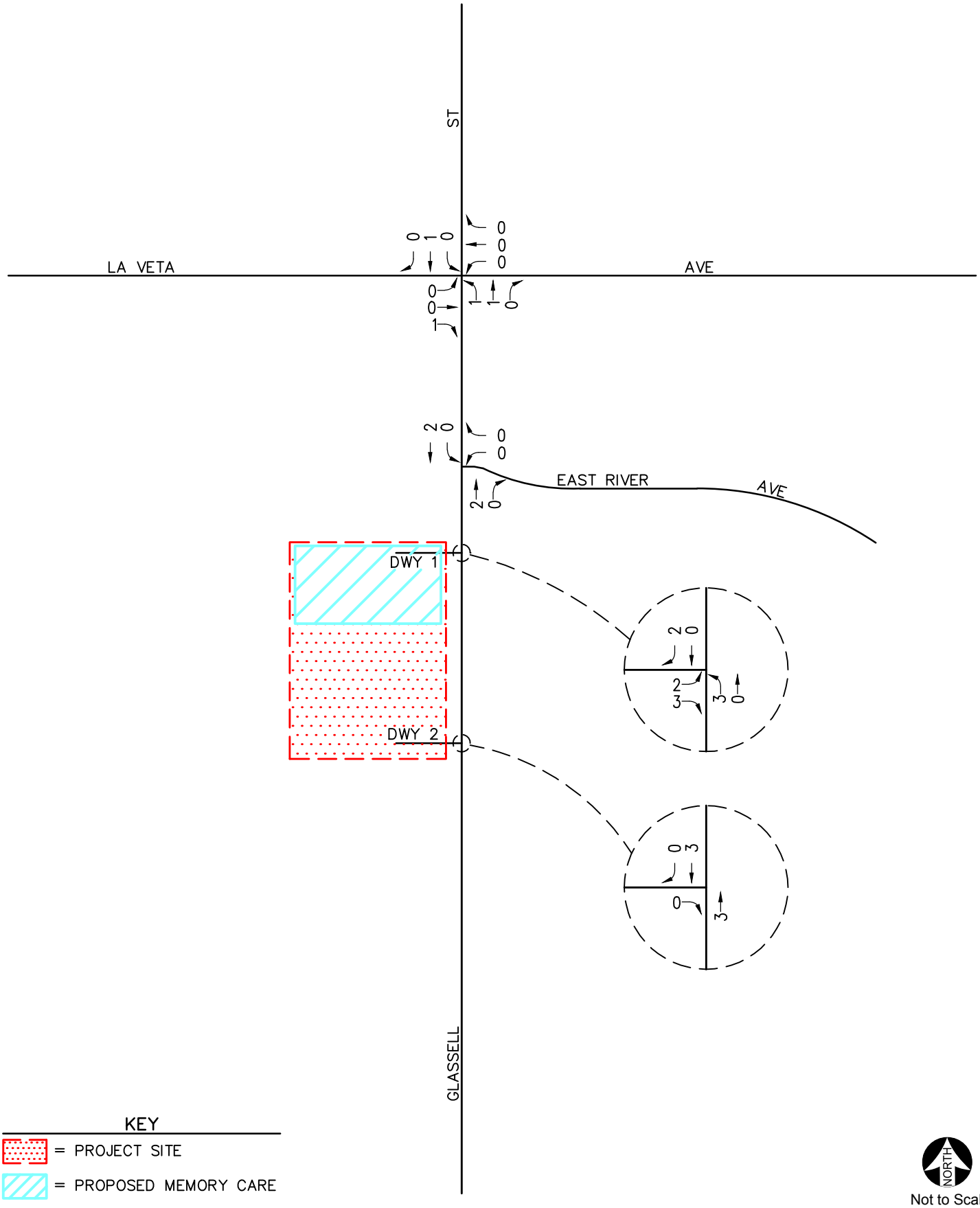

Figure 22
PM Peak Hour Project - Generated Traffic Volumes

Source: Linscott Law & Greenspan Engineers, 2019.

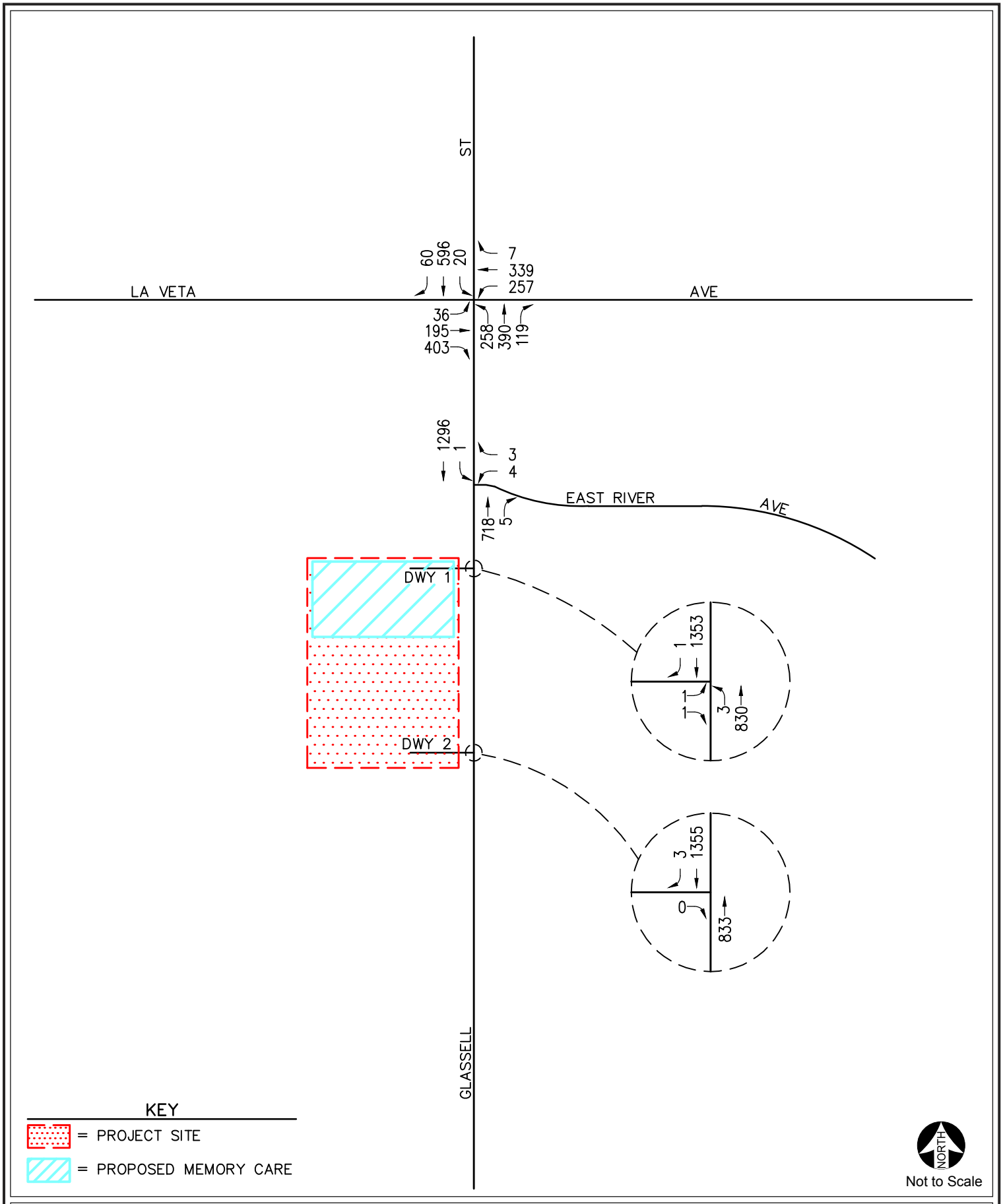

Figure 23
Existing (2019) Plus Project AM Peak Hour Traffic Volumes

Source: Linscott Law & Greenspan Engineers, 2019.

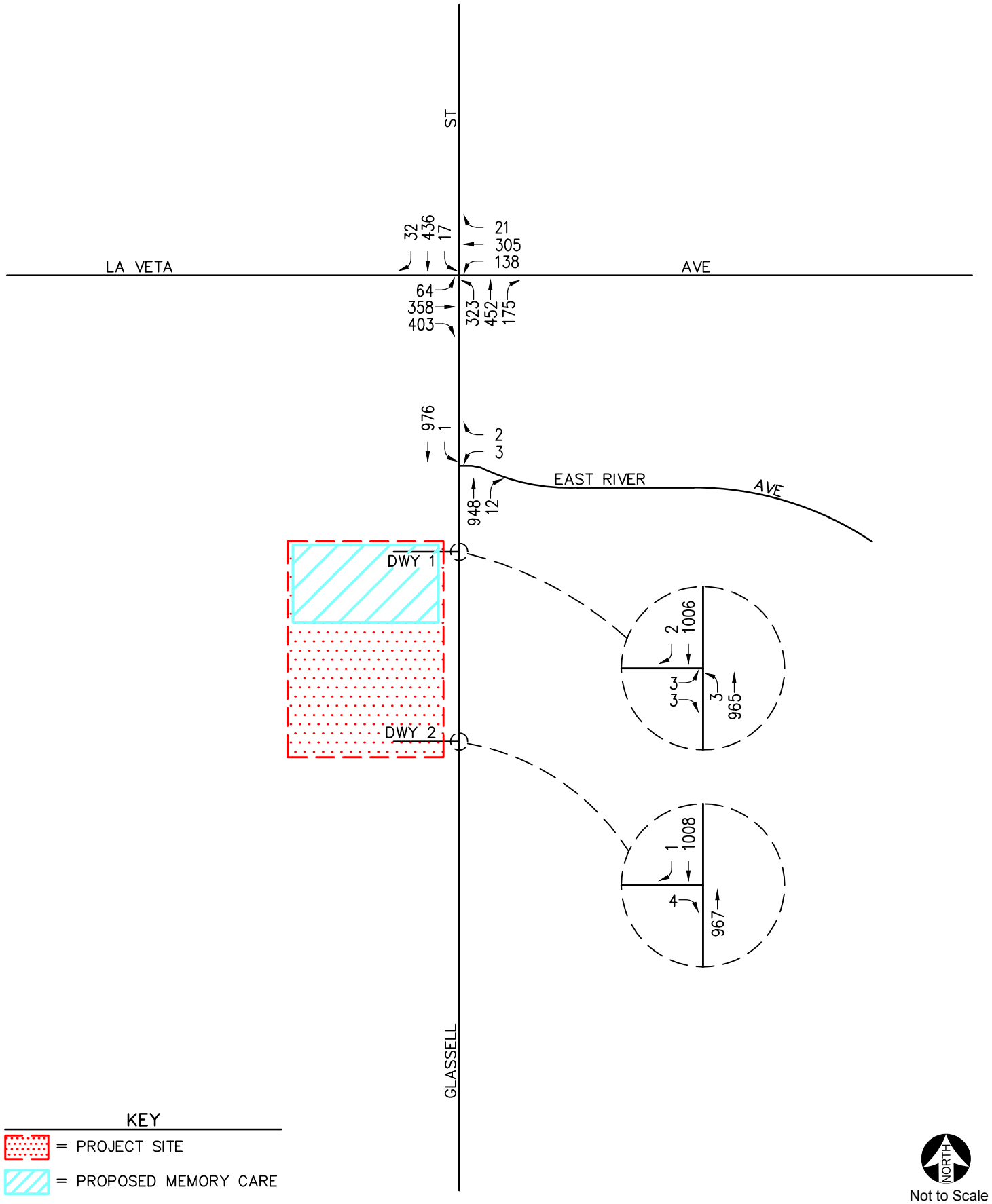

Figure 24
Existing (2019) Plus Project PM Peak Hour Traffic Volumes

Source: Linscott Law & Greenspan Engineers, 2019.

Table 35
Existing (Year 2019) Plus Project Peak Hour Intersection Capacity Analysis

#	Key Intersection	Time Period	(1) Existing (Year 2019)				(2) Existing Plus Project (Year 2019)				
			ICU	Delay (s/v)	LOS	Deficient?	ICU	Delay (s/v)	LOS	ICU or Delay Change (2)-(1)	Significant Impact?
1	Glassell Street at	AM	0.631	--	B	No	0.632	--	B	0.001	No
	La Veta Avenue	PM	0.617	--	B	No	0.618	--	B	0.001	No
2	Glassell Street at	AM	--	13.7	B	No	--	13.7	B	0.0	No
	East River Avenue	PM	--	15.2	C	No	--	15.3	C	0.1	No
3	Glassell Street at	AM	--	0.0 [a]	A	No	--	19.2	C	19.2	No
	Park Plaza Driveway 1	PM	--	0.0 [a]	A	No	--	15.2	C	15.2	No
4	Glassell Street at	AM	--	0.0 [b]	A	No	--	0.0 [b]	A	0.0	No
	Park Plaza Driveway 2	PM	--	12.1	B	No	--	12.1	B	0.0	No

s/v = seconds per vehicle (delay)
[a] The existing site of the proposed Project is currently vacant and there is no existing volume coming out of Driveway 1. Therefore, zero delay is reported for this intersection.
[b] There is no existing outbound volume coming out of Driveway 2 during the AM Peak Hour. Therefore, zero delay is reported for this intersection.

Future Traffic Conditions

Ambient Traffic Growth

Horizon year, background traffic growth estimates have been calculated using an ambient traffic growth factor. The ambient traffic growth factor is intended to include unknown and future cumulative projects in the study area, as well as account for regular growth in traffic volumes due to the development of projects outside the study area. The future growth in traffic volumes has been calculated at 1.0 percent per year. Applied to the Year 2019 existing traffic volumes, this factor results in a 2.0 percent growth in existing volumes to the near-term horizon year 2021.

Cumulative Projects Traffic Characteristics

In order to make a realistic estimate of future on-street conditions prior to implementation of the Project, the status of other known development projects (cumulative projects) in the vicinity of the Project Site has been researched at the City and the City of Santa Ana. With this information, the potential impact of the Project can be evaluated within the context of the cumulative impact of all ongoing development.

Based on research identified in the *Traffic Impact Analysis* (refer to Appendix I), there are four cumulative projects in the City and one cumulative project in the City of Santa Ana within the vicinity of the Project Site that have either been built, but not yet fully occupied, or are being processed for approval. These five cumulative projects have been included as part of the cumulative background setting.

Table 36 provides a brief description for each of the five cumulative projects. The location of the cumulative projects is shown on Figure 25. These cumulative projects are expected to generate vehicular traffic, which may affect the operating conditions of the key study intersections. The cumulative projects are forecast to generate a total of 7,233 daily trips, with 549 trips during the AM peak hour and 649 trips during the PM peak hour.

Table 36
Cumulative Projects Description and Trip Generation Estimates

Cumulative Project/Location	Land Use	Size
1. Ronald McDonald House Expansion ***383 and 389 South Batavia Street,*** ***802 West Culver Avenue*** (City of Orange)	Assisted Living	23 Beds
2. Dang Residences ***655 South Glassell Street*** (City of Orange)	Single Family Detached Housing	7 DU
3. 999 Town and Country Apartments ***999 Town and Country road*** (City of Orange)	Apartments	262 DU [b]
4. Town and Country Apartments and Townhomes ***702 West Town and Country Road*** (City of Orange)	Apartments Townhomes	653 DU [c] 74 DU [c]
5. Starbucks ***2701 North Grand Avenue*** (City of Santa Ana)	Coffee Donut Shop with Drive-Through Window	0.907 TSF

[a] Source: Trip Generation, 10th Edition, Institute of Transportation Engineers (ITE), Washington, D.C. (2017), unless otherwise noted.
[b] Source: 999 Town & Country Apartments Project Traffic Impact Analysis, prepared by LLG Engineers.
[c] Source: Town and Country Apartments and Townhomes Project Traffic Impact Analysis, prepared by LLG Engineers.

Year 2021 Without Project

The AM and PM peak-hour traffic volumes associated with the five cumulative projects are presented on Figures 26 and 27, respectively. Figures 28 and 29 present the AM and PM peak-hour cumulative traffic volumes (existing traffic + ambient growth traffic + cumulative project traffic) at the four key study intersections for the Year 2021, respectively. Table 37 summarizes the peak-hour LOS results at the 4 key study intersections for Year 2021 traffic conditions.

Year 2021 Plus Project

Figures 30 and 31 illustrate the Year 2021 forecast AM and PM peak-hour traffic volumes (respectively), with the inclusion of the trips generated by the Project. As shown on Table 37, the analysis of future (Year 2021) cumulative traffic conditions indicates that the addition of the Project would not significantly impact any of the four key study intersections, when compared to the LOS standards and significant impact criteria specified in this analysis. All four key study intersections currently operate and are forecast to continue to operate at an acceptable LOS during the AM and PM peak hours with the addition of Project generated traffic to Year 2021 cumulative traffic.

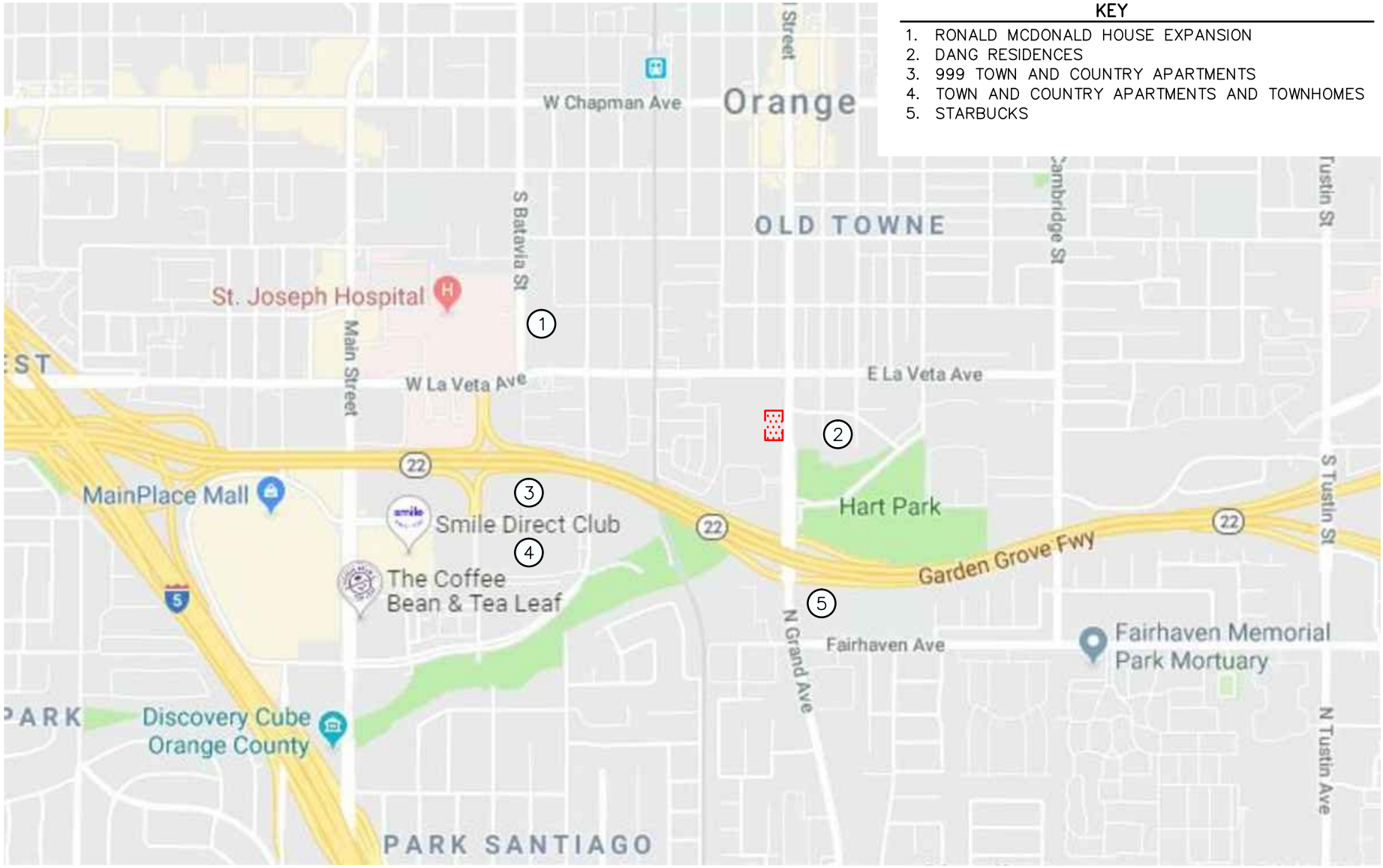

SOURCE: GOOGLE

KEY

(#) = CUMULATIVE PROJECT LOCATION

= PROJECT SITE

Figure 25
Location of Cumulative Porjects

Source: Linscott Law & Greenspan Engineers, 2019.

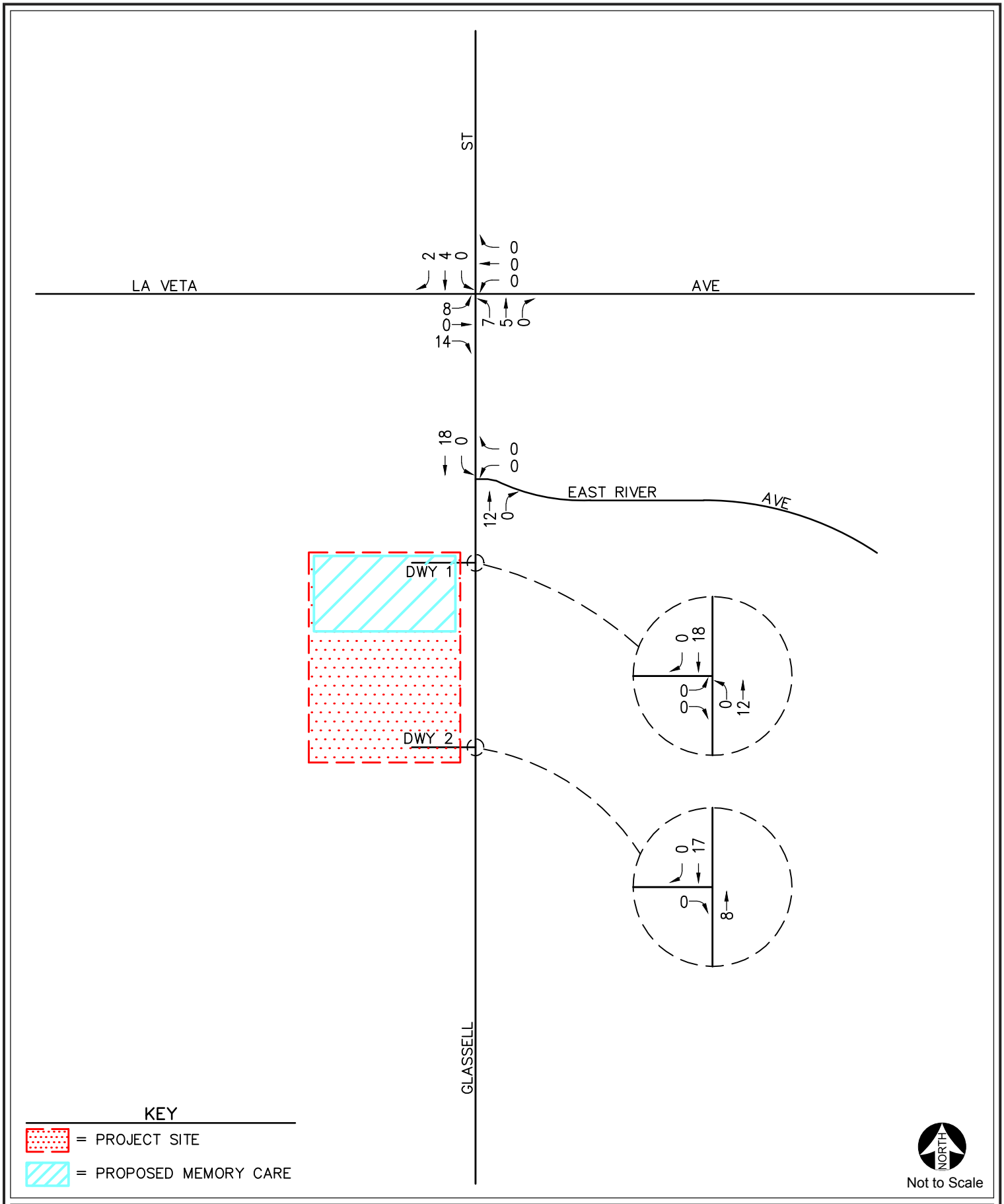

Figure 26
AM Peak Hour Cumulative Project Only Traffic Volumes

Source: Linscott Law & Greenspan Engineers, 2019.

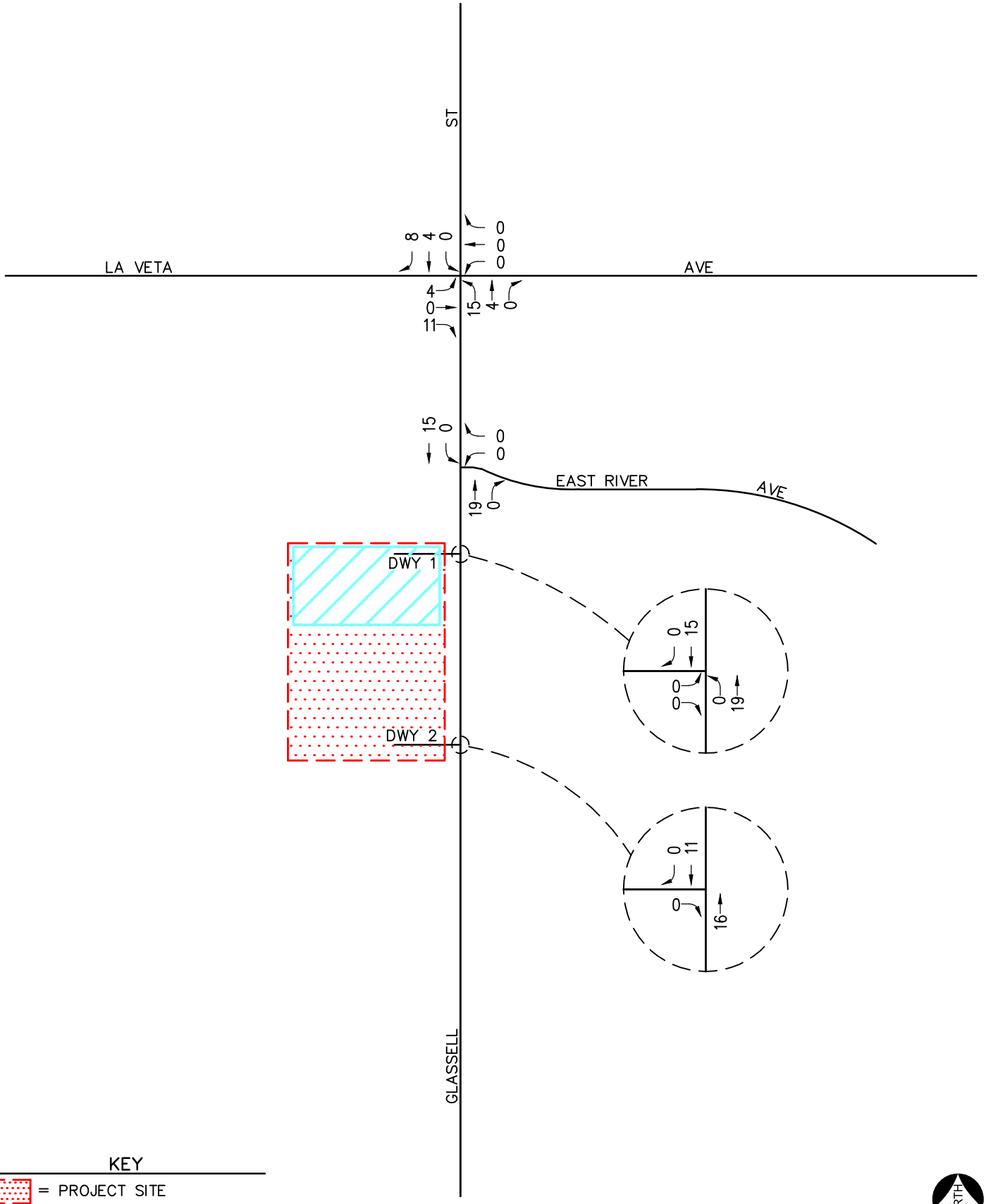

Figure 27
PM Peak Hour Cumulative Project Only Traffic Volumes

Source: Linscott Law & Greenspan Engineers, 2019.

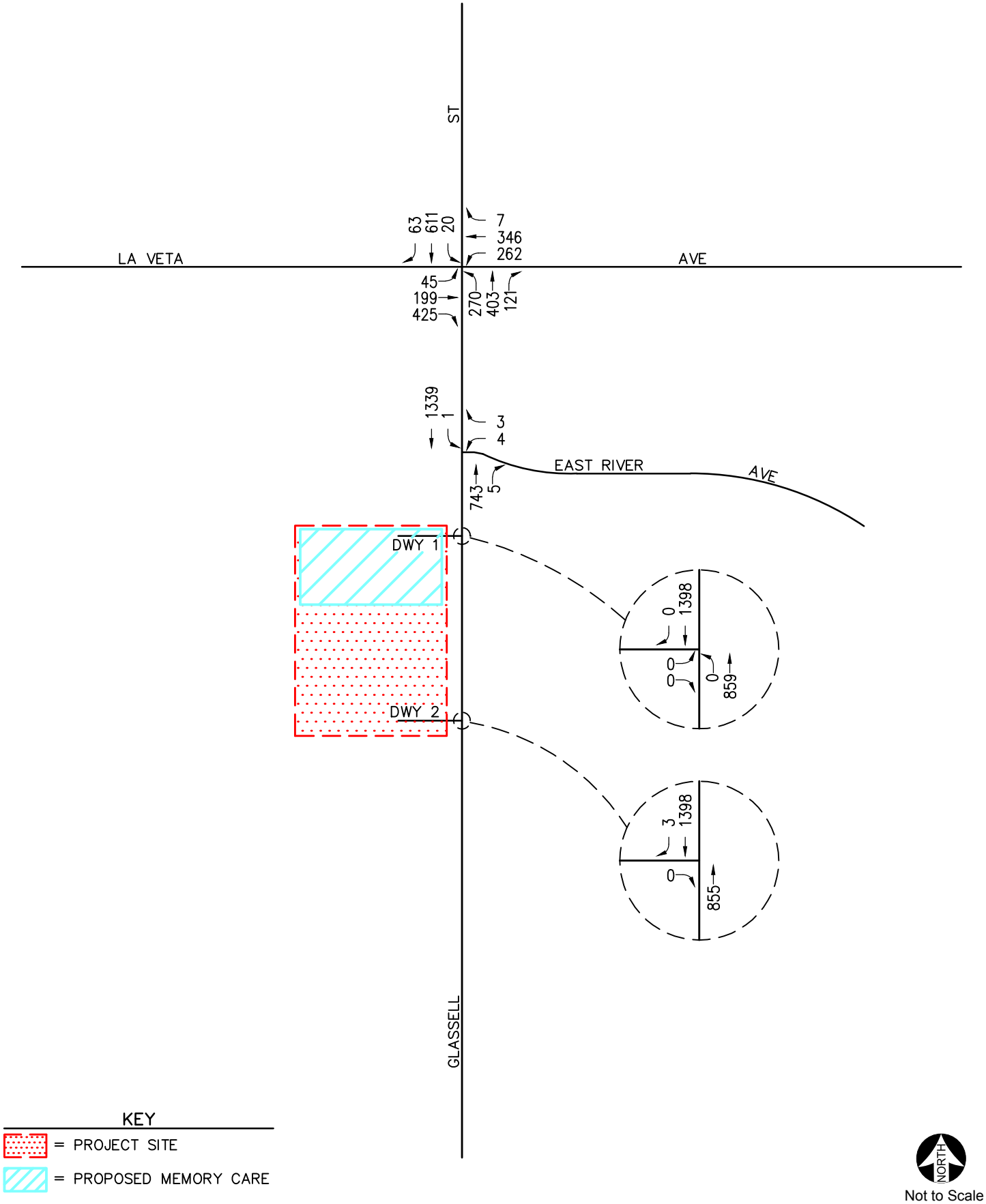

Figure 28
Year 2021 Cumulative Base AM Peak Hour Traffic Volumes

Source: Linscott Law & Greenspan Engineers, 2019.

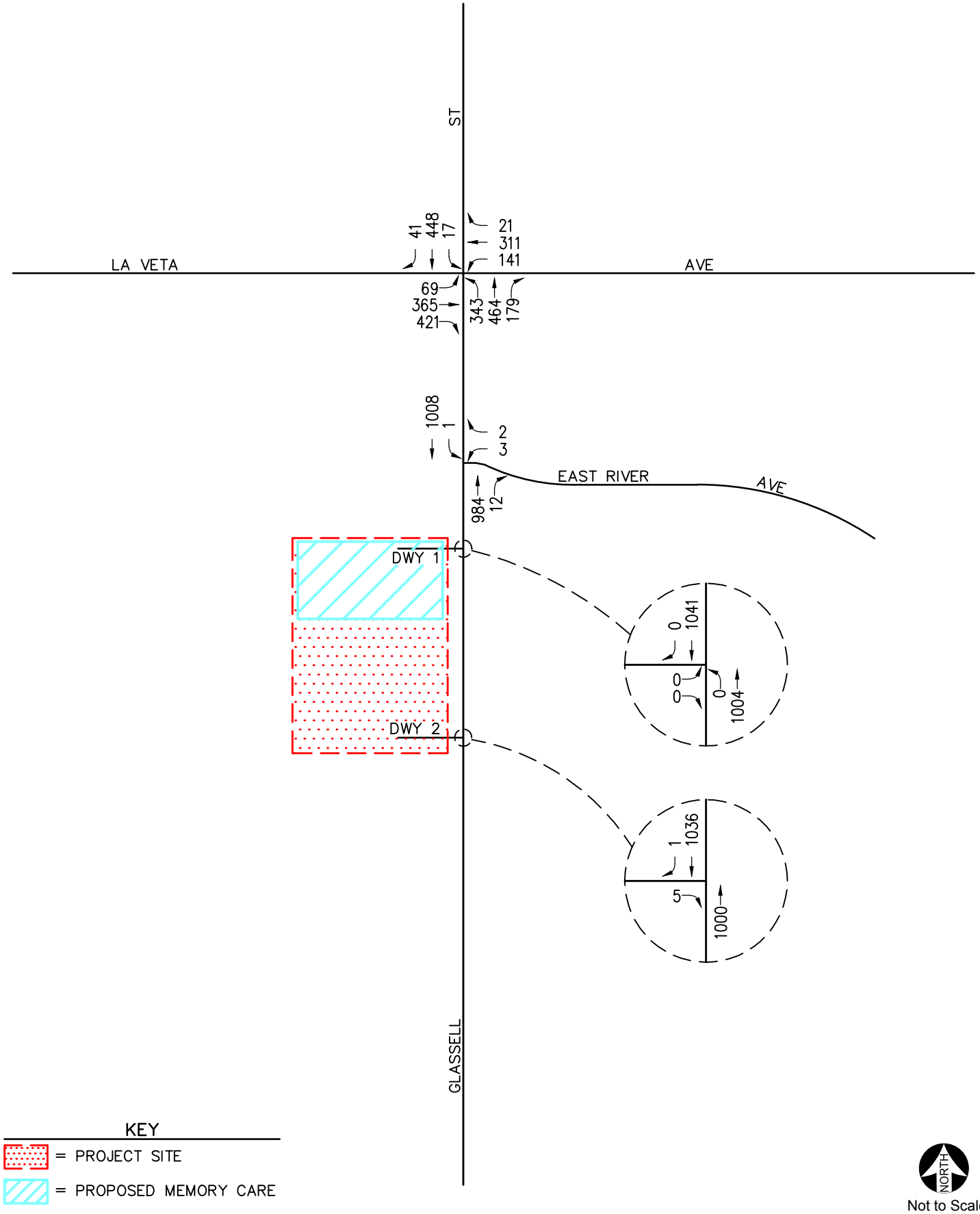

Figure 29
Year 2021 Cumulative Base PM Peak Hour Traffic Volumes

Source: Linscott Law & Greenspan Engineers, 2019.

Table 37
Year 2021 Cumulative Peak Hour Intersection Capacity Analysis

#	Key Intersectio	Time Period	(1) Existing (Year 2019)				(2) Year 2021 Cumulative Baseline				(3) Year 2021 plus Project				
			ICU	Delay (s/v)	LOS	Deficient?	ICU	Delay (s/v)	LOS	Deficient?	ICU	Delay (s/v)	LOS	ICU or Delay Change (3)-(2)	Significant Impact?
1	Glassell Street at	AM	0.631	--	B	No	0.652	--	B	No	0.632	--	B	0.001	No
	La Veta Avenue	PM	0.617	--	B	No	0.631	--	B	No	0.631	--	B	0.000	No
2	Glassell Street at	AM	--	13.7	B	No	--	14.0	B	No	--	14.0	B	0.0	No
	East River Avenue	PM	--	15.2	C	No	--	15.7	C	No	--	15.7	C	0.0	No
3	Glassell Street at	AM	--	0.0 [a]	A	No	--	0.0 [a]	A	No	--	19.9	C	19.9	No
	Park Plaza Driveway 1	PM	--	0.0 [a]	A	No	--	0.0 [a]	A	No	--	15.6	C	15.6	No
4	Glassell Street at	AM	--	0.0 [b]	A	No	--	0.0 [b]	A	No	--	0.0 [b]	A	0.0	No
	Park Plaza Driveway 2	PM	--	12.1	B	No	--	12.2	B	No	--	12.2	B	0.0	No

s/v = seconds per vehicle (delay)
[a] The existing site of the proposed Project is currently vacant and there is no existing volume coming out of Driveway 1. Therefore, zero delay is reported for this intersection.
[b] There is no existing outbound volume coming out of Driveway 2 during the AM Peak Hour. Therefore, zero delay is reported for this intersection.

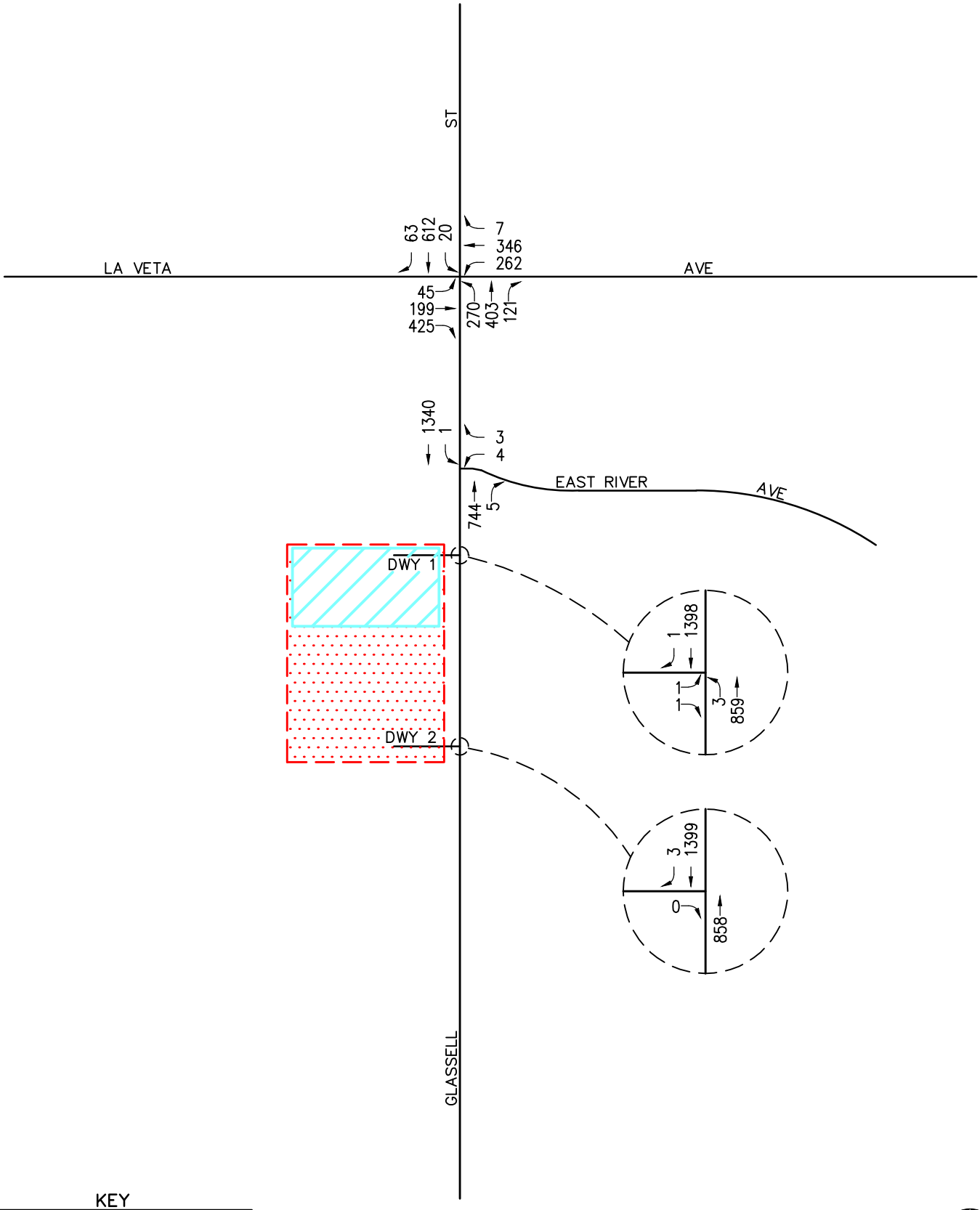

KEY

= PROJECT SITE

= PROPOSED MEMORY CARE

NORTH

Not to Scale

Figure 30
Year 2021 Cumulative Plus Project AM Peak Hour Traffic Volumes

Source: Linscott Law & Greenspan Engineers, 2019.

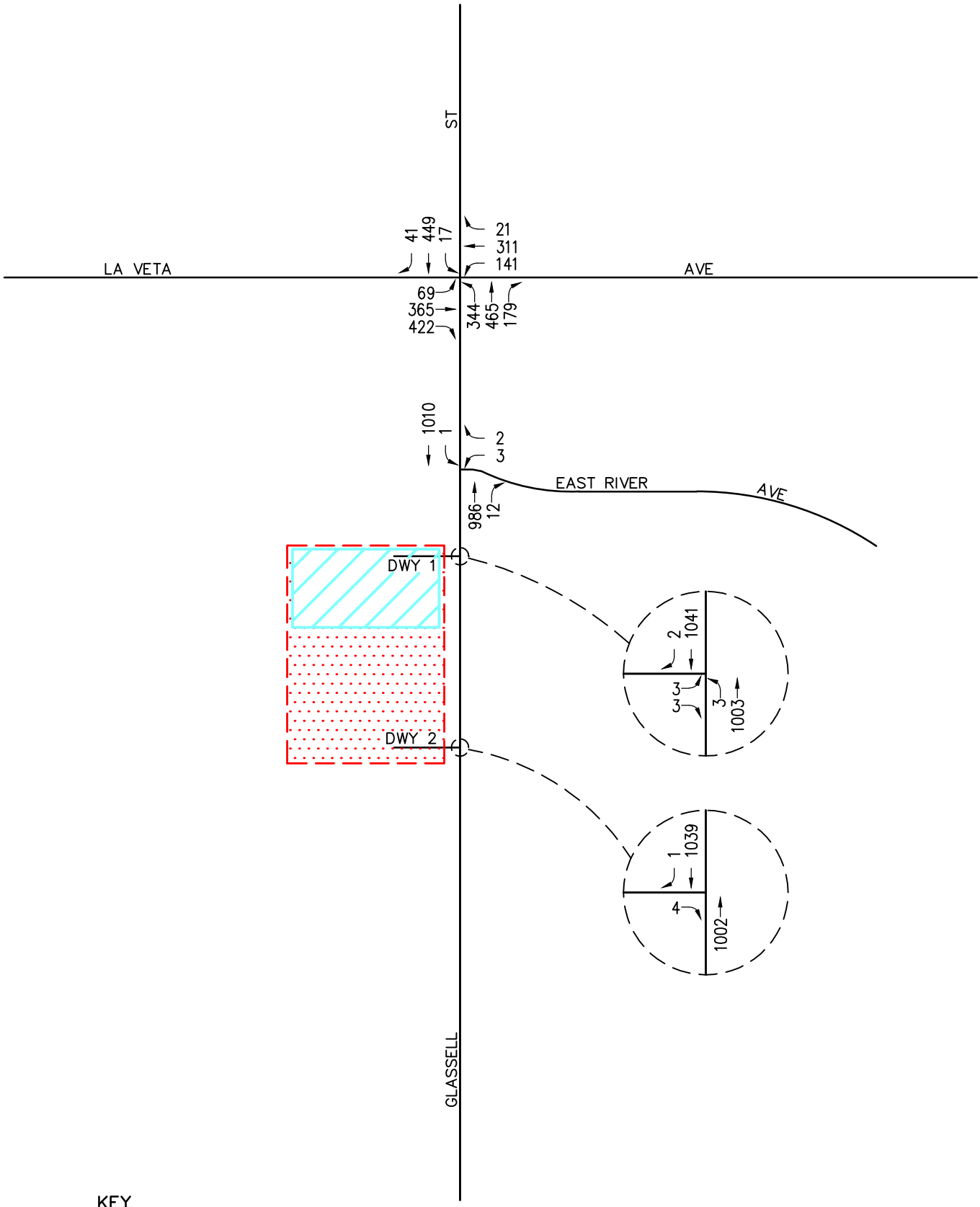

KEY

= PROJECT SITE

= PROPOSED MEMORY CARE

NORTH

Not to Scale

Figure 31
Year 2021 Cumulative Plus Project PM Peak Hour Traffic Volumes

Source: Linscott Law & Greenspan Engineers, 2019.

Significance Determination: Less Than Significant Impact

Mitigation Measures: None

(b) Would the project conflict or be inconsistent with CEQA Guidelines Section 15064.3, subdivision (b)?

In accordance with CEQA Guidelines Section 15064.3(c), the City of Orange, as the lead agency, will implement the provisions of Section 15064.3 of the CEQA Guidelines, when the provisions go into effect statewide beginning July 1, 2020.

Significance Determination: NA

Mitigation Measures: None

(c) Would the project substantially increase hazards to a design feature (e.g., sharp curves or dangerous intersections) or incompatible uses (e.g., farm equipment)?

The Project Site is located in an urbanized area of the City and is served by existing roadway infrastructure. The Project includes development of a memory care facility as an extension of an existing senior care facility located adjacent to the Project Site to the south. The Project does not include the development of any new roadway infrastructure. The Project's driveway and drive aisles would be designed and constructed to meet City standards. Thus, the Project would not substantially increase hazards to a design feature (e.g., sharp curves or dangerous intersections) or incompatible uses (e.g., farm equipment). Therefore, no significant impacts related to this issue would occur as a result of the Project.

Significance Determination: No Impact

Mitigation Measures: None

(d) Result in inadequate emergency access?

Glassell Street, located adjacent to the Project Site to the east, is the closest designated evacuation corridors within the City of Orange.[66] The Project would not affect access to Glassell Street during construction, as all construction equipment, staging, and parking would occur on the Project Site, and would not affect emergency access to any off-site properties. The Project's driveway and drive aisles would be designed and constructed to meet City standards, including Fire Code standards (refer to Figure 4). Thus, the Project would not result in inadequate emergency access. Therefore, no significant impacts related to this issue would occur as a result of the Project.

---

[66] *Orange General Plan, Figure PS-4, Generalized Evacuation Corridors: https://www.cityoforange.org/DocumentCenter/View/573/General-Plan---Public-Safety-Element-PDF*

Significance Determination: No Impact

Mitigation Measures: None

Cumulative Impacts

As discussed above and as shown on Table 37, cumulative traffic impacts would be less than significant.

18. TRIBAL CULTURAL RESOURCES. *Would the project cause a substantial adverse change in the significance of a tribal cultural resource, defined in Public Resources Code Section 21074 as either a site, feature, place, or cultural landscape that is geographically defined in terms of the size and scope of the landscape, sacred place, or object with cultural value to a California Native American tribe, and that is:*	**Potentially Significant Impact**	**Less Than Significant with Mitigation Incorporated**	**Less Than Significant Impact**	**No Impact**
(a) Listed or eligible for listing in the California Register of Historical Resources, or in a local register of historical resources as defined in Public Resources Code Section 5020.1(k); or	☐	☐	☐	☐
(b) A resource determined by the lead agency, in its discretion and supported by substantial evidence, to be significant pursuant to criteria set forth in subdivision (c) of Public Resources Code Section 5024.1. In applying the criteria set forth in subdivision (c) of Public Resources Code Section 5024.1, the lead agency shall consider the significance of the resource to a California Native American tribe.	☐	☐	☐	☐

Impact Analysis

(a) Listed or eligible for listing in the California Register of Historical Resources, or in a local register of historical resources as defined in Public Resources Code Section 5020.1(k)?

Refer to response to Checklist Question 5(a) (Cultural Resources – Historical Resources) and Checklist Question 5(b) (Cultural Resources – Archaeological Resources).

Significance Determination: Less Than Significant With Mitigation

Mitigation Measures: Refer to the mitigation measures listed in response to Checklist Question 5(a) (Cultural Resources – Historical Resources) and Checklist Question 5(b) (Cultural Resources – Archaeological Resources).

Significance Determination After Mitigation: Less Than Significant

(b) A resource determined by the lead agency, in its discretion and supported by substantial evidence, to be significant pursuant to criteria set forth in subdivision (c) of Public Resources Code Section 5024.1. In applying the criteria set forth in subdivision (c) of Public Resources Code Section 5024.1, the lead agency shall consider the significance of the resource to a California Native American tribe?

Less Than Significant With Mitigation Incorporated. Approved by Governor Brown on September 25, 2014, Assembly Bill 52 (AB52) establishes a formal consultation process for California Native American

Tribes to identify potential significant impacts to tribal cultural resources (TCRs), as defined in Public Resources Code Section 21074, as part of CEQA. Effective July 1, 2015, AB 52 applies to projects that file a Notice of Preparation of an ND or EIR on or after July 1, 2015. PRC Section 21084.2 now establishes that a project with an effect that may cause a substantial adverse change in the significance of a TCR is a project that may have a significant effect on the environment. To help determine whether a project may have such an effect, Public Resources Code Section 21080.3.1 requires a lead agency to consult with any California Native American tribe that requests consultation and is traditionally and culturally affiliated with the geographic area of a proposed project. That consultation must take place prior to the release of a negative declaration, mitigated negative declaration, or environmental impact report for a project. As a result of AB 52, the following must take place: 1) prescribed notification and response timelines; 2) consultation on alternatives, resource identification, significance determinations, impact evaluation, and mitigation measures; and 3) documentation of all consultation efforts to support CEQA findings for the administrative record.

Under AB 52, if a lead agency determines that a project may cause a substantial adverse change to a TCR, the lead agency must consider measures to mitigate that impact. PRC Section 21074 provides a definition of a TCR. In brief, in order to be considered a TCR, a resource must be either: 1) listed, or determined to be eligible for listing, on the national, State, or local register of historic resources, or 2) a resource that the lead agency chooses, in its discretion supported by substantial evidence, to treat as a TCR. In the latter instance, the lead agency must determine that the resource meets the criteria for listing in the State register of historic resources or City Designated Cultural Resource. In applying those criteria, a lead agency shall consider the value of the resource to the tribe.

As specified in AB 52, lead agencies must provide notice to tribes that are traditionally and culturally affiliated with the geographic area of a proposed project if the tribe has submitted a written request to be notified. The tribe must respond to the lead agency within 30 days of receipt of the notification if it wishes to engage in consultation on the project, and the lead agency must begin the consultation process within 30 days of receiving the request for consultation.

Pursuant to AB 52, the Community Development Department notified Native American tribes as to the Project with a 30-day consultation period on [INSERT DATE]. The Gabrieliño Band of Mission Indians-Kizh Nation requested consultation with the City on November 22, 2019. The City concluded the consultation with the Gabrieliño Band of Mission Indians-Kizh Nation on [INSERT DATE]. It is possible that unknown TCRs could exist at the Project Site that could be encountered, given the relative sensitivity of the Project Site region. As such, the Project would be required to implement Mitigation Measures TCR-1 through TCR-6 to ensure appropriate treatment of potential unknown tribal cultural resources. Compliance with these mitigation measures would ensure that Project impacts related to tribal cultural resources would be less than significant.

Significance Determination: Less Than Significant With Mitigation Incorporated

Mitigation Measures:

TCR-1: **Retain Tribal Monitor/Consultant.** The Project Applicant shall retain and compensate a Tribal monitor/consultant who is both approved by the Gabrieleño Band of Mission

Indians-Kizh Nation Tribal Government and is listed under the NAHC's Tribal Contact list for the Project Site area. The Tribal monitor/consultant shall only be present on-site during the construction phases that involve ground disturbing activities. Ground-disturbing activities are defined by the Gabrieleño Band of Mission Indians-Kizh Nation as activities that may include, but are not limited to, pavement removal, pot-holing or auguring, grubbing, tree removals, boring, grading, excavation, drilling, and trenching, within the project area. The Tribal Monitor/consultant shall complete daily monitoring logs that provide descriptions of the day's activities, including construction activities, locations, soil, and any cultural materials identified. The on-site monitoring shall end when Project grading and excavation activities are completed, or when the Tribal representatives and monitor/consultant have indicated that the site has a low potential for impacting TRCs.

TCR-2: **Unanticipated Discovery of Tribal and Archaeological Resources.** Upon discovery of any tribal or archaeological cultural resources, construction activities in the immediate vicinity of the find shall cease until the find can be assessed. All tribal and archaeological cultural resources unearthed as a result of construction activities shall be evaluated by the qualified archaeologist and Tribal monitor/consultant approved by the Gabrieleño Band of Mission Indians-Kizh Nation. If the resources are Native American in origin, the Gabrieleño Band of Mission Indians-Kizh Nation shall coordinate with the landowner regarding treatment and curation of these resources. The Tribe monitor/consultant could request preservation in place or recovery for educational purposes. Work may continue on other parts of the Project during evaluation and if necessary, additional protective mitigation takes place (CEQA Guidelines Section15064.5 (f)). If a resource is determined to constitute a "historical resource" or "unique archaeological resource," time allotment and funding sufficient to allow for implementation of avoidance measures, or appropriate mitigation, shall be available. The treatment plan established for the resources shall be in accordance with CEQA Guidelines Section 15064.5(f) for historical resources.

TCR-3: **Public Resources Code Section 21083.2(b) (Unique Archaeological Resources).** Preservation in place (i.e., avoidance) is the preferred manner of treatment. If preservation in place is not feasible, treatment may include implementation of archaeological data recovery excavations to remove the resource along with subsequent laboratory processing and analysis. All TCRs shall be returned to the Tribe. Any historic archaeological material that is not Native American in origin shall be curated at a public, non-profit institution with a research interest in the materials, such as the Natural History Museum of Los Angeles County or the Fowler Museum, if such an institution agrees to accept the material. If no institution accepts the archaeological material, they shall be offered to the Tribe or a local school or historical society in the area for educational purposes.

TCR-4: **Unanticipated Discovery of Human Remains and Associated Funerary Objections.** If human remains or funerary objects are encountered during any activities associated with the Project, work in the immediate vicinity (within a 150-foot buffer of the find) shall cease, and the County Coroner shall be contacted. If the human remains are determined to be Native American in origin by the County Coroner, the Tribal monitor/consultant shall

immediately notify the NAHC as mandated by state law to establish the Most Likely Descendent (MLD).

TCR-5: **Kizh-Gabrieleño Procedures for Burial and Funerary Remains.** If the Gabrieleño Band of Mission Indians – Kizh Nation is designated the MLD, the Koos-nas-gna Burial Policy shall be implemented. In the event that burial and funerary remains are encountered, all prepared soil and cremation soils shall be treated in the same manner as bone fragments that remain intact.

Prior to the continuation of ground-disturbing activities, the Project Applicant shall arrange a designated site location within the footprint of the Project Site for the respectful reburial of the human remains and/or ceremonial objects. In the case where discovered human remains cannot be fully documented and recovered on the same day, the remains shall be covered with muslin cloth and a steel plate that can be moved by heavy equipment placed over the excavation opening to protect the remains. If this type of steel plate is not available, a 24-hour guard should be posted outside of working hours. The Tribe monitor/consultant shall make every effort to recommend diverting the project and keeping the remains in situ and protected. If the Project cannot be diverted, it may be determined that burials could be removed. The Tribe monitor/consultant shall work closely with a qualified archaeologist to ensure that the excavation is treated carefully, ethically, and respectfully. If data recovery is approved by the Tribe monitor/consultant, documentation shall be taken that includes at a minimum detailed descriptive notes and sketches. Additional types of documentation shall be approved by the Tribe monitor/consultant for data recovery purposes. Cremations shall either be removed in bulk or by means as necessary to ensure completely recovery of all material. If the discovery of human remains includes four or more burials, the location would be considered a cemetery, and a separate treatment plan shall be created. Once complete, a final report of all activities is to be submitted to the Gabrieleño Band of Mission Indians – Kizh Nation and the NAHC. No scientific study or the utilization of any invasive and/or destructive diagnostics on human remains shall be allowed.

Each occurrence of human remains and associated funerary objects shall be stored using opaque cloth bags. All human remains, funerary objects, sacred objects and objects of cultural patrimony shall be removed to a secure container on site, if possible. These items should be retained and reburied within six months of recovery. The site of reburial/repatriation shall be on the Project Site but at a location agreed upon between the Gabrieleño Band of Mission Indians – Kizh Nation and the Project Applicant at a site to be protected in perpetuity. There shall be no publicity regarding any cultural materials recovered.

TCR-6: **Professional Standards.** Archaeological and Native American monitoring and excavation during construction activities shall be consistent with current professional standards. All feasible care to avoid any unnecessary disturbance, physical modification, or separation of human remains and associated funerary objects shall be taken. Principal personnel must meet the Secretary of Interior standards for archaeology and have a minimum of 10 years

of experience as a principal investigator working with Native American archaeological sites in Southern California. The Tribal monitor/consultant shall ensure that all other personnel are appropriately trained and qualified.

Significance Determination After Mitigation: Less Than Significant

Cumulative Impacts

As shown on Table 36 previously in this MND, there are five cumulative projects within proximity to the Project Site. For any of these cumulative projects that are subject to CEQA, the City would be required to comply with AB 52 requirements for each cumulative project. The degree to which tribal cultural resources could exist at the sites of the cumulative projects and could be affected by development is considered by the City on a project-by-project basis. As discussed above, with implementation of Mitigation Measures TCR-1 through TCR-6, no significant impacts related to TRCs would occur as a result of the Project. Therefore, cumulative impacts related to TCRs would be less than significant.

19. UTILITIES AND SERVICE SYSTEMS. *Would the project:*	Potentially Significant Impact	Less Than Significant with Mitigation Incorporated	Less Than Significant Impact	No Impact
(a) Require or result in the relocation or construction of new or expanded water, wastewater treatment or stormwater drainage, electric power, natural gas, or telecommunications facilities, the construction or relocation of which could cause significant environmental effects?	☐	☐	☑	☐
(b) Have sufficient water supplies available to serve the project and reasonably foreseeable future development during normal, dry, or multiple dry years?	☐	☐	☑	☐
(c) Result in a determination by the wastewater treatment provider which serves or may serve the project that it has adequate capacity to serve the project's projected demand in addition to the provider's existing commitments?	☐	☐	☑	☐
(d) Generate solid waste in excess of State or local standards, or in excess of the capacity of local infrastructure, or otherwise impair the attainment of solid waste reduction goals?	☐	☐	☑	☐
(e) Comply with federal, state, and local management and reduction statutes and regulations related to solid waste?	☐	☐	☑	☐

Impact Analysis

(a) Would the project require or result in the relocation or construction of new or expanded water, wastewater treatment or stormwater drainage, electric power, natural gas, or telecommunications facilities, the construction or relocation of which could cause significant environmental effects?

Water Treatment

The City relies on a combination of imported water and local groundwater to meet its water needs. The City works together with three primary agencies, Metropolitan Water District (MWD), Municipal Water District of Orange County (MWDOC), and Orange County Water District (OCWD) to ensure a safe and reliable water supply that will continue to serve the community in periods of drought and shortage. The sources of imported water supplies include the Colorado River and the State Water Project (SWP) provided by MWD and delivered through MWDOC. The City's main source of water supply is groundwater from the Lower Santa Ana River Groundwater Basin. The City's water supply is supplemented by imported water and

surface water. It is projected that by 2040, the water supply mix will be approximately 70 percent groundwater, 26 percent imported water, and 4 percent surface water.[67]

Groundwater is typically treated at the location of the groundwater pump and removes certain contaminants that are specific to the groundwater source. The MWD treats its water at a variety of water treatment plants throughout Southern California, with a combined treatment capacity of 2.3 billion gallons of water per day. The Serrano Water District operates its own water treatment plant.

As shown on Table 38, it is estimated that the Project would result in a net increase of approximate 1,556 gallons of water per day. Any portion of this amount of water that would come from groundwater would be treated at the pump and would not require new or expanded treatment facilities. Water imported by MWD would be treated by MWD treatment plants. With a combined treatment capacity of 2.3 billion gallons per day, MWD treatment plants would have sufficient existing capacity to treat the remainder (if not all) of the Project's water demand. Thus, the Project would not require or result in the construction of new water treatment facilities or expansion of existing facilities, the construction of which could cause significant environmental effects. Therefore, Project impacts related to water treatment would be less than significant.

Table 38
Estimated Project Wastewater Generation/Water Consumption

Land Use	Size	Wastewater Generation/ Water Consumption Rates[1,2]	Total (gpd)
Existing			
Restaurant	165 seats[3]	30 gpd/seat	4,950
Proposed			
Memory Care Facility Units	36 beds	75 gpd/bed	2,700
Commons, Admin, Circulation, and Support	15,224 sf	0.25 gpd/sf	3,806
		Project Subtotal	***6,506***
		Less Existing	*-4.950*
		Net Total	**1,556**

gpd = gallons per day sf = square feet

1 *The estimates of wastewater generation conservatively assume that wastewater generation equals water consumption.*
2 *Rate source: City of Los Angeles Bureau of Sanitation, Sewer Generation Rates Table, March 20, 2002.*
3 *Assumes 30 square feet per seat in dining area.*

---

67 *City of Orange, 2015 Urban Water Management Plan, June 2016.*

Wastewater Treatment

The City of Orange relies on the Orange County Sanitation District (OCSD) for the regional collection and treatment of domestic, commercial, and industrial sewage. Although OCSD operates a comprehensive regional system of collection mains and treatment plants, individual cities are responsible for installing and maintaining local collection facilities.[68]

OCSD facilities operate under a waste discharge permit issued by the Santa Ana Regional Water Quality Control Board (RWQCB).[69] The OCSD is required to comply with the State Water Resources Control Board Order No. 2006-0003-DWQ adopted May 2, 2006, entitled Statewide General Waste Discharge Requirements for Sanitary Sewer Systems.[70] The OCSD has two operating facilities that treat wastewater from residential, commercial, and industrial sources. For 2018-2019, Plant #1 processed an average daily flow of 120 million gallons of wastewater per day (mgd), and Plant #2 processed an average daily flow of 65 mgd, for a total of 185 mgd of wastewater processed per day.[71] As shown on Table 39, the two treatment plants have a surplus capacity of 91 mgd.

Table 39
Wastewater Treatment Plants

Facility	Average Flow (mgd)	Design Capacity (mgd)	Remaining Capcity (mgd)
Reclamation Plant No. 1	120	108	-12
Treatment Plant No. 2	65	168	+103
Total	**185**	**276**	**+91**

mgd – million gallons daily
Source: Page 5.12-13, City of Orange General Plan Program EIR: https://www.cityoforange.org/DocumentCenter/View/584/General-Plan-Environmental-Impact-Report-EIR-PDF. Orange County Sanitation District, website: https://www.ocsd.com/services/regional-sewer-service, accessed August 8, 2019.

As shown on Table 38, the Project would generate a net total of approximately 1,556 gallons of wastewater per day. This amount would account for approximately 0.001 percent of the remaining capacity at the OCSD facilities. As such, the two OCSD treatment plants would have adequate capacity to accommodate the wastewater generated by the Project. Additionally, the Project proposes memory care/senior living uses and

---

[68] *Page INF-2, Orange General Plan:* https://www.cityoforange.org/DocumentCenter/View/568/General-Plan----Infrastructure-Element-PDF.

[69] *Santa Ana Regional Water Quality Control Boards: http://www.waterboards.ca.gov/santaana/.*

[70] *Sewer System Management Plan, January 9, 2013: http://www.ocsd.com/Home/ShowDocument?id=14383.*

[71] *Orange County Sanitation District, website:* https://www.ocsd.com/services/regional-sewer-service, *accessed August 8, 2019.*

not any industrial or commercial land uses that could require special treatment. Thus, the Project would not require or result in the construction of new wastewater treatment facilities or expansion of existing facilities, the construction of which could cause significant environmental effects. Therefore, Project impacts related to wastewater treatment would be less than significant.

Stormwater Drainage

Refer to response to Checklist Question 10(c) iii) (Hydrology and Water Quality – Storm Drain Capacity) regarding the Project's less-than-significant impacts related to storm drain capacity.

Electric Power

Refer to response to Checklist Question 6(a) (Energy – Electricity and Natural Gas) regarding the Project's less-than-significant impacts related to electric power.

Natural Gas

Refer to response to Checklist Question 6(a) (Energy – Electricity and Natural Gas) regarding the Project's less-than-significant impacts related to natural gas.

Telecommunications

The Project Site is located in an urbanized area of the City that is already served by existing internet, cable television, and phone service, including AT&T, Spectrum, Cox Communications, and Viasat. Any facilities that are on the Project Site only serve the Project Site and would be re-established to serve the Project. The Project would not result in the relocation or construction of new or expanded telecommunications facilities, the construction or relocation of which could cause significant environmental effects. Thus, no impacts related to this issue would occur as a result of the Project

Significance Determination: Less Than Significant Impact

Mitigation Measures: None

(b) Would the project have sufficient water supplies available to serve the project and reasonably foreseeable future development during normal, dry, or multiple dry year?

As shown on Table 38, the Project would result in a net increase in water demand of approximately 1,556 gallons per day. The proposed memory care facility is a land use that is allowed with a Conditional Use Permit under the existing zoning and land use designation for the Project Site and as such, the water demand for such a use has been accounted for in the City's 2015 Urban Water Management Plan (2015 UWMP), which bases its water demand projections on water use by customer type (i.e., single-family residential, multi-family residential, commercial, institutional/government), among other factors. According to the 2015 UWMP, the City's total projected water supplies available during normal, single dry, and multiple dry years during a 20-year projection (2020 through 2040) would meet the projected water demand associated with the Project, in addition to the City's existing and planned future uses described in the 2015

UWMP (refer to Tables 40, 41, and 42)The City can meet the Project's demand through its existing water supply sources, including local groundwater, imported water, and local surface water. As the City has adequate capacity to produce the water demand required by the Project, no new or expanded water facility would be required. Impacts would therefore be less than significant. Thus, the Project would have sufficient water supplies available to serve the project and reasonably foreseeable future development during normal, dry, or multiple dry year. Therefore, Project impacts related to water supply would be less than significant.

Table 40
Normal Year Supply and Demand Comparison (AF)

	2020	2025	2030	2035	2040
Supply totals	28,000	29,500	29,500	29,500	29,500
Demand totals	28,000	29,500	29,500	29,500	29,500
Difference	0	0	0	0	0

AF = acre feet
Source: City of Orange, 2015 Urban Water Management Plan, June 2016.

Table 41
Single Dry Year Supply and Demand Comparison (AF)

	2020	2025	2030	2035	2040
Supply totals	29,680	31,270	31,270	31,270	31,270
Demand totals	29,680	31,270	31,270	31,270	31,270
Difference	0	0	0	0	0

AF = acre feet
Source: City of Orange, 2015 Urban Water Management Plan, June 2016.

Table 42
Multiple Dry Years Supply and Demand Comparison (AF)

		2020	2025	2030	2035	2040
First Year	Supply totals	29,680	31,270	31,270	31,270	31,270
	Demand totals	29,680	31,270	31,270	31,270	31,270
	Difference	0	0	0	0	0
Second year	Supply totals	29,680	31,270	31,270	31,270	31,270
	Demand totals	29,680	31,270	31,270	31,270	31,270
	Difference	0	0	0	0	0
Third year	Supply totals	29,680	31,270	31,270	31,270	31,270
	Demand totals	29,680	31,270	31,270	31,270	31,270
	Difference	0	0	0	0	0

AF = acre feet
Source: City of Orange, 2015 Urban Water Management Plan, June 2016.

Significance Determination: Less Than Significant Impact

Mitigation Measures: None

(c) Would the project result in a determination by the wastewater treatment provider which serves or may serve the project that it has adequate capacity to serve the project's projected demand in addition to the provider's existing commitments?

Refer to response to Checklist Question 19(a) (Utilities and Service Systems – Wastewater Treatment) regarding the Project's less-than-significant impacts related to wastewater treatment.

Significance Determination: Less Than Significant Impact

Mitigation Measures: None

(d) Generate solid waste in excess of State or local standards, or in excess of the capacity of local infrastructure, or otherwise impair the attainment of solid waste reduction goals?

The landfills that serve the City include Prima Deshecha Landfill in San Juan Capistrano, Olinda Alpha Sanitary Landfill in Brea, and the Frank R. Bowerman Landfill in Irvine. The Orange County Integrated Waste Management Department (IWMD) owns and operates these landfills.[72] Information regarding these landfills is detailed on Table 43. The landfills have a combined total daily disposal availability of 6,600 tons per day.

Table 43
Landfill Capacity

Name	Max Daily Permitted	Estimated Daily Disposal	Available Daily Disposal	Closure Date
Prima Deshecha Landfill	4,000 tpd	1,400 tpd	2,600 tpd	12/31/2067
Olinda Alpha Sanitary Landfill	8,000 tpd	7,000 tpd	1,000 tpd	12/31/2021
Frank R. Bowerman Landfill	11,500 tpd	8,500 tpd	3,000 tpd	12/31/2053
Prima Deshecha: https://www2.calrecycle.ca.gov/PublicNotices/Details/3656 *Olinda: https://www2.calrecycle.ca.gov/swfacilities/Directory/30-AB-0035/* *Bowerman: https://www2.calrecycle.ca.gov/swfacilities/Directory/30-AB-0360/*				

As shown on Table 44, the Project would generate a net increase of approximately 0.09 tons of solid waste per day. This amount would represent approximately 0.001 percent of the total daily available capacity of the landfills that serve the City. Thus, the project be served by a landfill with sufficient permitted capacity to accommodate the project's solid waste disposal needs. Therefore, Project impacts related to landfill capacity would be less than significant.

---

[72] *Page INF-12, Orange General Plan: https://www.cityoforange.org/DocumentCenter/View/584/General-Plan-Environmental-Impact-Report-EIR-PDF*

Table 44
Estimated Project Solid Waste Generation

Land Use	Size	Daily Solid Waste Generation Rates[1]	Total (lbs per day)[2]	Total (tpd)[2]
Existing				
Restaurant	5,959 sf	5 lbs/1,000 sf	30	0.02
Project				
Memory Care Facility				
Residential	36 beds	4 lbs/bed	144	0.07
Non-Residential	15,134 sf	5 lbs/1,000 sf	76	0.04
		Project Subtotal	***220***	***0.11***
		Less Existing	*30*	*0.02*
		Net Total	**90**	**0.09**

lbs = pounds *tpd = tons per day* *sf = square feet* *1 ton = 2,000 pounds*

[1] *Rates: CalRecycle Estimated Solid Waste Generation Rates:* http://www.calrecycle.ca.gov/LGcentral/GoalMeasure/DisposalRate/MostRecent/default.htm.

[2] *Numbers may not add up due to rounding.*

Significance Determination: Less Than Significant Impact

Mitigation Measures: None

(e) Comply with federal, state, and local statutes and regulations related to solid waste?

Trash, recyclables, and green waste within the City are collected by CR&R Waste and Recycling Services (CR&R). The Project Applicant is in the process of coordinating with CR&R to assess the waste disposal and recycling requirements and needs for the Project. The Project would share trash and recycling services through CR&R with the existing associated senior facility to the south. The shared trash and recycling receptacles would include a four-yard trash compactor, a four-yard bin for recyclable materials, and four 64-gallong carts for food waste. All green waste would be taken off-site by the landscapers and recycled at the appropriate facility. The Project would comply with federal, state, and local regulations related to waste reduction. Therefore, Project impacts related to waste reduction would be less than significant.

Significance Determination: Less Than Significant Impact

Mitigation Measures: None

Cumulative Impacts

As shown on Table 36 previously in this MND, there are five cumulative projects within proximity to the Project Site. All of the sites of the cumulative projects are located in an urbanized area of the City, are

currently developed with uses that have a demand for utilities, and are currently served by existing utility infrastructure. The degree to which each cumulative project would result in a net change in the demand for utilities would be considered by the City on a project-by-project basis. Each cumulative project would be subject to existing regulatory requirements to offset demand for utilities, as with the Project. As discussed above, Project impacts related to utilities would be less than significant. Therefore, cumulative impacts related to utilities would be less than significant.

20. MANDATORY FINDINGS OF SIGNIFICANCE.	Potentially Significant Impact	Less Than Significant with Mitigation Incorporated	Less Than Significant Impact	No Impact
(a) Does the project have the potential to degrade the quality of the environment, substantially reduce the habitat of a fish or wildlife species, cause a fish or wildlife population to drop below self-sustaining levels, threaten to eliminate a plant or animal community, reduce the number or restrict the range of a rare or endangered plant or animal or eliminate important examples of the major periods of California history or prehistory?	☐	☑	☐	☐
(b) Does the project have impacts which are individually limited, but cumulatively considerable? ("Cumulatively considerable" means that the incremental effects of a project are considerable when viewed in connection with the effects of past projects, the effects of other current projects, and the effects of probable future projects).	☐	☐	☑	☐
(c) Does the project have environmental effects which cause substantial adverse effects on human beings, either directly or indirectly?	☐	☐	☑	☐

(a) Does the project have the potential to degrade the quality of the environment, substantially reduce the habitat of a fish or wildlife species, cause a fish or wildlife population to drop below self-sustaining levels, threaten to eliminate a plant or animal community, reduce the number or restrict the range of a rare or endangered plant or animal or eliminate important examples of the major periods of California history or prehistory?

The Project Site is completely developed and is located in an urbanized area of the City. The Project would not degrade the quality of the environment, substantially reduce the habitat of a fish or wildlife species, cause a fish or wildlife population to drop below self-sustaining levels, threaten to eliminate a plant or animal community, reduce the number or restrict the range of a rare or endangered plant or animal (refer to response to Checklist Topic 4 [Biological Resources]). As discussed in response to Checklist Question 5(a) (Cultural Resources – Historical Resources), Checklist Question 5(b) (Cultural Resources – Archaeological Resources) and Checklist Question 18(b) (Tribal Cultural Resources), with mitigation, the Project would not eliminate important examples of the major periods of California history.

Significance Determination: Less Than Significant With Mitigation Incorporated

Mitigation Measures:

CUL-1: In the event a potentially significant cultural resource is encountered during earthwork activities, all construction activities within a 100-foot radius of the find shall cease and workers shall avoid altering the materials until a qualified archaeologist who meets the Secretary of Interior's Professional Qualification Standards for archaeology has evaluated the situation. The Project Applicant shall include a standard inadvertent discovery clause in every construction contract to inform contractors of this requirement. Any previously undiscovered resources found during construction activities shall be recorded on appropriate Department of Parks and Recreation (DPR) forms and evaluated for significance in terms of CEQA criteria by a qualified archaeologist. Potentially significant cultural resources consist of but are not limited to stone, bone, glass, ceramics, wood, or shell artifacts, or features including hearths, structural remains, or historic dumpsites. If the resource is determined to be significant under CEQA Guidelines Section 15064.5, the qualified archaeologist shall prepare and implement a research design and archaeological data recovery plan that will capture those categories of data for which the site is significant in accordance with Section 15064.5 of the CEQA Guidelines. The archaeologist shall also perform appropriate technical analyses, prepare a comprehensive report complete with methods, results, and recommendations, and provide for the permanent curation or repatriation of the recovered resources in cooperation with the designated most likely descendant as needed. The report shall be submitted to the City of Orange, the South Central Coastal Information Center, and the State Historic Preservation Office (SHPO), if required.

TCR-1: **Retain Tribal Monitor/Consultant.** The Project Applicant shall retain and compensate a Tribal monitor/consultant who is both approved by the Gabrieleño Band of Mission Indians-Kizh Nation Tribal Government and is listed under the NAHC's Tribal Contact list for the Project Site area. The Tribal monitor/consultant shall only be present on-site during the construction phases that involve ground disturbing activities. Ground-disturbing activities are defined by the Gabrieleño Band of Mission Indians-Kizh Nation as activities that may include, but are not limited to, pavement removal, pot-holing or auguring, grubbing, tree removals, boring, grading, excavation, drilling, and trenching, within the project area. The Tribal Monitor/consultant shall complete daily monitoring logs that provide descriptions of the day's activities, including construction activities, locations, soil, and any cultural materials identified. The on-site monitoring shall end when Project grading and excavation activities are completed, or when the Tribal representatives and monitor/consultant have indicated that the site has a low potential for impacting TRCs.

TCR-2: **Unanticipated Discovery of Tribal and Archaeological Resources.** Upon discovery of any tribal or archaeological cultural resources, construction activities in the immediate vicinity of the find shall cease until the find can be assessed. All tribal and archaeological cultural resources unearthed as a result of construction activities shall be evaluated by the qualified archaeologist and Tribal monitor/consultant approved by the Gabrieleño Band of Mission Indians-Kizh Nation. If the resources are Native American in origin, the Gabrieleño Band of Mission Indians-Kizh Nation shall coordinate with the landowner regarding treatment and curation of these resources. The Tribe monitor/consultant could

request preservation in place or recovery for educational purposes. Work may continue on other parts of the Project during evaluation and if necessary, additional protective mitigation takes place (CEQA Guidelines Section15064.5 (f)). If a resource is determined to constitute a "historical resource" or "unique archaeological resource," time allotment and funding sufficient to allow for implementation of avoidance measures, or appropriate mitigation, shall be available. The treatment plan established for the resources shall be in accordance with CEQA Guidelines Section 15064.5(f) for historical resources.

TCR-3: **Public Resources Code Section 21083.2(b) (Unique Archaeological Resources).** Preservation in place (i.e., avoidance) is the preferred manner of treatment. If preservation in place is not feasible, treatment may include implementation of archaeological data recovery excavations to remove the resource along with subsequent laboratory processing and analysis. All TCRs shall be returned to the Tribe. Any historic archaeological material that is not Native American in origin shall be curated at a public, non-profit institution with a research interest in the materials, such as the Natural History Museum of Los Angeles County or the Fowler Museum, if such an institution agrees to accept the material. If no institution accepts the archaeological material, they shall be offered to the Tribe or a local school or historical society in the area for educational purposes.

TCR-4: **Unanticipated Discovery of Human Remains and Associated Funerary Objections.** If human remains or funerary objects are encountered during any activities associated with the Project, work in the immediate vicinity (within a 150-foot buffer of the find) shall cease, and the County Coroner shall be contacted. If the human remains are determined to be Native American in origin by the County Coroner, the Tribal monitor/consultant shall immediately notify the NAHC as mandated by state law to establish the Most Likely Descendent (MLD).

TCR-5: **Kizh-Gabrieleño Procedures for Burial and Funerary Remains.** If the Gabrieleño Band of Mission Indians – Kizh Nation is designated the MLD, the Koos-nas-gna Burial Policy shall be implemented. In the event that burial and funerary remains are encountered, all prepared soil and cremation soils shall be treated in the same manner as bone fragments that remain intact.

Prior to the continuation of ground-disturbing activities, the Project Applicant shall arrange a designated site location within the footprint of the Project Site for the respectful reburial of the human remains and/or ceremonial objects. In the case where discovered human remains cannot be fully documented and recovered on the same day, the remains shall be covered with muslin cloth and a steel plate that can be moved by heavy equipment placed over the excavation opening to protect the remains. If this type of steel plate is not available, a 24-hour guard should be posted outside of working hours. The Tribe monitor/consultant shall make every effort to recommend diverting the project and keeping the remains in situ and protected. If the Project cannot be diverted, it may be determined that burials could be removed. The Tribe monitor/consultant shall work closely with a qualified archaeologist to ensure that the excavation is treated carefully, ethically, and respectfully. If data recovery is approved by the Tribe monitor/consultant, documentation shall be taken that

includes at a minimum detailed descriptive notes and sketches. Additional types of documentation shall be approved by the Tribe monitor/consultant for data recovery purposes. Cremations shall either be removed in bulk or by means as necessary to ensure completely recovery of all material. If the discovery of human remains includes four or more burials, the location would be considered a cemetery, and a separate treatment plan shall be created. Once complete, a final report of all activities is to be submitted to the Gabrieleño Band of Mission Indians – Kizh Nation and the NAHC. No scientific study or the utilization of any invasive and/or destructive diagnostics on human remains shall be allowed.

Each occurrence of human remains and associated funerary objects shall be stored using opaque cloth bags. All human remains, funerary objects, sacred objects and objects of cultural patrimony shall be removed to a secure container on site, if possible. These items should be retained and reburied within six months of recovery. The site of reburial/repatriation shall be on the Project Site but at a location agreed upon between the Gabrieleño Band of Mission Indians – Kizh Nation and the Project Applicant at a site to be protected in perpetuity. There shall be no publicity regarding any cultural materials recovered.

TCR-6: **Professional Standards.** Archaeological and Native American monitoring and excavation during construction activities shall be consistent with current professional standards. All feasible care to avoid any unnecessary disturbance, physical modification, or separation of human remains and associated funerary objects shall be taken. Principal personnel must meet the Secretary of Interior standards for archaeology and have a minimum of 10 years of experience as a principal investigator working with Native American archaeological sites in Southern California. The Tribal monitor/consultant shall ensure that all other personnel are appropriately trained and qualified.

Significance Determination After Mitigation: Less Than Significant Impact

b) Does the project have impacts which are individually limited, but cumulatively considerable? ("Cumulatively considerable" means that the incremental effects of a project are considerable when viewed in connection with the effects of past projects, the effects of other current projects, and the effects of probable future projects).

As discussed throughout this MND, the project would not have impacts that are individually limited but cumulative considerable.

Significance Determination: Less Than Significant Impact

Mitigation Measures: None

c) Does the project have environmental effects which cause substantial adverse effects on human beings, either directly or indirectly?

As discussed in response to Checklist Question 9(b) (Hazards and Hazardous Materials – Risk of Upset), with implementation of Mitigation Measures HAZ-1 through HAZ-3, the project would not have environmental effects which cause substantial adverse effects on human beings, either directly or indirectly.

Significance Determination: Less Than Significant Impact With Mitigation Incorporated

Mitigation Measures:

HAZ-1: Prior to issuance of a building permit, the soils in the southeastern corner of the Project Site, as indicated on Figure 2 of the Limited Phase II ESA dated September 6, 2019, shall be excavated to a depth of approximately 2 feet bgs. Deeper removals may be necessary in the vicinity of step-out boring LB1-SW2 and shall be confirmed by a California-registered Professional Geologist or Engineer with environmental consulting experience during removal activities (refer to Figure 2 of the Limited Phase II ESA dated September 6, 2019). Upon completion of removal activities, confirmation soil samples will be collected from the resulting excavation area to ensure that the dieldrin-impacted soil has been effectively removed. All work will be completed under the oversight of a California-registered Professional Geologist or Engineer with environmental consulting experience. All excavated soil shall be disposed of at an appropriate landfill or other waste receival facility.

HAZ-2: Prior to issuance of a demolition permit, the Project Applicant shall retain a qualified professional to identify any ACMs in the existing building. If ACMs are identified, abatement of the ACMs shall conducted by a qualified professional in accordance with all applicable federal, state, and local regulations.

HAZ-3: Prior to issuance of a demolition permit, the Project Applicant shall retain a qualified professional to identify any LBP in the existing building. If LBP is identified, abatement of the LBP shall conducted by a qualified professional in accordance with all applicable federal, state, and local regulations.

Significance Determination After Mitigation: Less Than Significant Impact

APPENDICES

PARK PLAZA MEMORY CARE

MITIGATED NEGATIVE DECLARATION NO. 1866-19

Lead Agency:
City of Orange
Community Development Department • Planning Division
300 East Chapman Avenue
Orange, CA 92866-1591
(714) 744 7220
(714) 744 7222 (Fax)
www.cityoforange.org

Prepared by:

CAJA Environmental Services, LLC
15350 Sherman Way, Suite 315
Van Nuys, CA 91406
(310) 469 6700

May 2020

APPENDICES

A. AQ and GHG Modeling Results

B. Biological Resources

1. Arborist Report

2. Arborist Site Plan with Trees

C. Cultural Resources

1. Historic Resources Report

2. Archaeological Resources Letter

D. Energy Calculations

E. Geology & Soils

1. Geotechnical Report

2. Paleontological Resources Letter

F. Hazards and Hazardous Materials

1. Phase I ESA

2. Limited Phase II ESA

G. Preliminary WQMP

H. Noise Modeling Results

I. Traffic Impact Analysis

APPENDIX A

- AQ and GHG Modeling Results

Park Plaza Memory Care - Existing

Orange County, Annual

1.0 Project Characteristics

1.1 Land Usage

Land Uses	Size	Metric	Lot Acreage	Floor Surface Area	Population
Quality Restaurant	5.96	1000sqft	0.14	5,959.00	0
Parking Lot	34.00	1000sqft	0.78	34,001.00	0

1.2 Other Project Characteristics

Urbanization	Urban	**Wind Speed (m/s)**	2.2	**Precipitation Freq (Days)**	30
Climate Zone	8			**Operational Year**	2018
Utility Company	Southern California Edison				
CO2 Intensity (lb/MWhr)	702.44	**CH4 Intensity (lb/MWhr)**	0.029	**N2O Intensity (lb/MWhr)**	0.006

1.3 User Entered Comments & Non-Default Data

Project Characteristics - Applicant Info

Land Use - Applicant Info

Construction Phase - No Construction

Off-road Equipment - No Construction

Demolition - No Construction

Trips and VMT - No Construction

Vehicle Trips - Source: Linscott, Law & Greenspan, Engineers. Traffic Impact Analysis - Park Plaza Memory Care Project. June 2019.

Energy Use -

Table Name	Column Name	Default Value	New Value
tblConstructionPhase	NumDays	10.00	0.00
tblConstructionPhase	PhaseEndDate	12/14/2018	11/30/2018
tblLandUse	LandUseSquareFeet	5,960.00	5,959.00
tblLandUse	LandUseSquareFeet	34,000.00	34,001.00
tblOffRoadEquipment	UsageHours	8.00	0.00
tblOffRoadEquipment	UsageHours	1.00	0.00
tblOffRoadEquipment	UsageHours	6.00	0.00
tblTripsAndVMT	WorkerTripNumber	10.00	0.00
tblVehicleTrips	DV_TP	18.00	0.00
tblVehicleTrips	PB_TP	44.00	0.00
tblVehicleTrips	PR_TP	38.00	100.00
tblVehicleTrips	ST_TR	94.36	83.84
tblVehicleTrips	SU_TR	72.16	83.84
tblVehicleTrips	WD_TR	89.95	83.84

2.0 Emissions Summary

2.1 Overall Construction

Unmitigated Construction

	ROG	NOx	CO	SO2	Fugitive PM10	Exhaust PM10	PM10 Total	Fugitive PM2.5	Exhaust PM2.5	PM2.5 Total	Bio- CO2	NBio- CO2	Total CO2	CH4	N2O	CO2e
Year	tons/yr										MT/yr					
2018	0.0000	0.0000	0.0000	0.0000	0.0000	0.0000	0.0000	0.0000	0.0000	0.0000	0.0000	0.0000	0.0000	0.0000	0.0000	0.0000
Maximum	**0.0000**	**0.0000**	**0.0000**	**0.0000**	**0.0000**	**0.0000**	**0.0000**	**0.0000**	**0.0000**	**0.0000**	**0.0000**	**0.0000**	**0.0000**	**0.0000**	**0.0000**	**0.0000**

Mitigated Construction

	ROG	NOx	CO	SO2	Fugitive PM10	Exhaust PM10	PM10 Total	Fugitive PM2.5	Exhaust PM2.5	PM2.5 Total	Bio- CO2	NBio- CO2	Total CO2	CH4	N2O	CO2e
Year	tons/yr										MT/yr					
2018	0.0000	0.0000	0.0000	0.0000	0.0000	0.0000	0.0000	0.0000	0.0000	0.0000	0.0000	0.0000	0.0000	0.0000	0.0000	0.0000
Maximum	**0.0000**	**0.0000**	**0.0000**	**0.0000**	**0.0000**	**0.0000**	**0.0000**	**0.0000**	**0.0000**	**0.0000**	**0.0000**	**0.0000**	**0.0000**	**0.0000**	**0.0000**	**0.0000**

	ROG	**NOx**	**CO**	**SO2**	**Fugitive PM10**	**Exhaust PM10**	**PM10 Total**	**Fugitive PM2.5**	**Exhaust PM2.5**	**PM2.5 Total**	**Bio- CO2**	**NBio-CO2**	**Total CO2**	**CH4**	**N20**	**CO2e**
Percent Reduction	**0.00**	**0.00**	**0.00**	**0.00**	**0.00**	**0.00**	**0.00**	**0.00**	**0.00**	**0.00**	**0.00**	**0.00**	**0.00**	**0.00**	**0.00**	**0.00**

Quarter	Start Date	End Date	Maximum Unmitigated ROG + NOX (tons/quarter)	Maximum Mitigated ROG + NOX (tons/quarter)
		Highest		

2.2 Overall Operational

Unmitigated Operational

	ROG	NOx	CO	SO2	Fugitive PM10	Exhaust PM10	PM10 Total	Fugitive PM2.5	Exhaust PM2.5	PM2.5 Total	Bio- CO2	NBio- CO2	Total CO2	CH4	N2O	CO2e
Category	tons/yr										MT/yr					
Area	0.0270	0.0000	5.2000e-004	0.0000		0.0000	0.0000		0.0000	0.0000	0.0000	9.9000e-004	9.9000e-004	0.0000	0.0000	1.0600e-003
Energy	8.3300e-003	0.0758	0.0636	4.5000e-004		5.7600e-003	5.7600e-003		5.7600e-003	5.7600e-003	0.0000	155.5175	155.5175	4.6000e-003	2.1400e-003	156.2688
Mobile	0.1740	0.7654	2.3823	7.5800e-003	0.6276	8.9400e-003	0.6365	0.1681	8.4300e-003	0.1765	0.0000	696.1948	696.1948	0.0322	0.0000	697.0008
Waste						0.0000	0.0000		0.0000	0.0000	1.1043	0.0000	1.1043	0.0653	0.0000	2.7358
Water						0.0000	0.0000		0.0000	0.0000	0.5739	7.9141	8.4881	0.0593	1.4600e-003	10.4049
Total	**0.2094**	**0.8412**	**2.4465**	**8.0300e-003**	**0.6276**	**0.0147**	**0.6423**	**0.1681**	**0.0142**	**0.1823**	**1.6782**	**859.6273**	**861.3055**	**0.1614**	**3.6000e-003**	**866.4114**

2.2 Overall Operational

Mitigated Operational

	ROG	NOx	CO	SO2	Fugitive PM10	Exhaust PM10	PM10 Total	Fugitive PM2.5	Exhaust PM2.5	PM2.5 Total	Bio- CO2	NBio- CO2	Total CO2	CH4	N2O	CO2e
Category	tons/yr										MT/yr					
Area	0.0270	0.0000	5.2000e-004	0.0000		0.0000	0.0000		0.0000	0.0000	0.0000	9.9000e-004	9.9000e-004	0.0000	0.0000	1.0600e-003
Energy	8.3300e-003	0.0758	0.0636	4.5000e-004		5.7600e-003	5.7600e-003		5.7600e-003	5.7600e-003	0.0000	155.5175	155.5175	4.6000e-003	2.1400e-003	156.2688
Mobile	0.1740	0.7654	2.3823	7.5800e-003	0.6276	8.9400e-003	0.6365	0.1681	8.4300e-003	0.1765	0.0000	696.1948	696.1948	0.0322	0.0000	697.0008
Waste						0.0000	0.0000		0.0000	0.0000	1.1043	0.0000	1.1043	0.0653	0.0000	2.7358
Water						0.0000	0.0000		0.0000	0.0000	0.5739	7.9141	8.4881	0.0593	1.4600e-003	10.4049
Total	**0.2094**	**0.8412**	**2.4465**	**8.0300e-003**	**0.6276**	**0.0147**	**0.6423**	**0.1681**	**0.0142**	**0.1823**	**1.6782**	**859.6273**	**861.3055**	**0.1614**	**3.6000e-003**	**866.4114**

	ROG	**NOx**	**CO**	**SO2**	**Fugitive PM10**	**Exhaust PM10**	**PM10 Total**	**Fugitive PM2.5**	**Exhaust PM2.5**	**PM2.5 Total**	**Bio- CO2**	**NBio-CO2**	**Total CO2**	**CH4**	**N20**	**CO2e**
Percent Reduction	**0.00**	**0.00**	**0.00**	**0.00**	**0.00**	**0.00**	**0.00**	**0.00**	**0.00**	**0.00**	**0.00**	**0.00**	**0.00**	**0.00**	**0.00**	**0.00**

3.0 Construction Detail

Construction Phase

Phase Number	Phase Name	Phase Type	Start Date	End Date	Num Days Week	Num Days	Phase Description
1	Demolition	Demolition	12/1/2018	11/30/2018	5	0	

Acres of Grading (Site Preparation Phase): 0

Acres of Grading (Grading Phase): 0

Acres of Paving: 0.78

Residential Indoor: 0; Residential Outdoor: 0; Non-Residential Indoor: 0; Non-Residential Outdoor: 0; Striped Parking Area: 0 (Architectural Coating – sqft)

OffRoad Equipment

Phase Name	Offroad Equipment Type	Amount	Usage Hours	Horse Power	Load Factor
Demolition	Concrete/Industrial Saws	1	0.00	81	0.73
Demolition	Rubber Tired Dozers	1	0.00	247	0.40
Demolition	Tractors/Loaders/Backhoes	2	0.00	97	0.37

Trips and VMT

Phase Name	Offroad Equipment Count	Worker Trip Number	Vendor Trip Number	Hauling Trip Number	Worker Trip Length	Vendor Trip Length	Hauling Trip Length	Worker Vehicle Class	Vendor Vehicle Class	Hauling Vehicle Class
Demolition	4	0.00	0.00	0.00	14.70	6.90	20.00	LD_Mix	HDT_Mix	HHDT

3.1 Mitigation Measures Construction

3.2 Demolition - 2018

Unmitigated Construction On-Site

	ROG	NOx	CO	SO2	Fugitive PM10	Exhaust PM10	PM10 Total	Fugitive PM2.5	Exhaust PM2.5	PM2.5 Total	Bio- CO2	NBio- CO2	Total CO2	CH4	N2O	CO2e
Category	tons/yr										MT/yr					
Fugitive Dust	0.0000	0.0000	0.0000	0.0000	0.0000	0.0000	0.0000	0.0000	0.0000	0.0000	0.0000	0.0000	0.0000	0.0000	0.0000	0.0000
Off-Road	0.0000	0.0000	0.0000	0.0000	0.0000	0.0000	0.0000	0.0000	0.0000	0.0000	0.0000	0.0000	0.0000	0.0000	0.0000	0.0000
Total	**0.0000**	**0.0000**	**0.0000**	**0.0000**	**0.0000**	**0.0000**	**0.0000**	**0.0000**	**0.0000**	**0.0000**	**0.0000**	**0.0000**	**0.0000**	**0.0000**	**0.0000**	**0.0000**

Unmitigated Construction Off-Site

	ROG	NOx	CO	SO2	Fugitive PM10	Exhaust PM10	PM10 Total	Fugitive PM2.5	Exhaust PM2.5	PM2.5 Total	Bio- CO2	NBio- CO2	Total CO2	CH4	N2O	CO2e
Category	tons/yr										MT/yr					
Hauling	0.0000	0.0000	0.0000	0.0000	0.0000	0.0000	0.0000	0.0000	0.0000	0.0000	0.0000	0.0000	0.0000	0.0000	0.0000	0.0000
Vendor	0.0000	0.0000	0.0000	0.0000	0.0000	0.0000	0.0000	0.0000	0.0000	0.0000	0.0000	0.0000	0.0000	0.0000	0.0000	0.0000
Worker	0.0000	0.0000	0.0000	0.0000	0.0000	0.0000	0.0000	0.0000	0.0000	0.0000	0.0000	0.0000	0.0000	0.0000	0.0000	0.0000
Total	**0.0000**	**0.0000**	**0.0000**	**0.0000**	**0.0000**	**0.0000**	**0.0000**	**0.0000**	**0.0000**	**0.0000**	**0.0000**	**0.0000**	**0.0000**	**0.0000**	**0.0000**	**0.0000**

3.2 Demolition - 2018

Mitigated Construction On-Site

	ROG	NOx	CO	SO2	Fugitive PM10	Exhaust PM10	PM10 Total	Fugitive PM2.5	Exhaust PM2.5	PM2.5 Total	Bio- CO2	NBio- CO2	Total CO2	CH4	N2O	CO2e
Category	tons/yr										MT/yr					
Fugitive Dust	0.0000	0.0000	0.0000	0.0000	0.0000	0.0000	0.0000	0.0000	0.0000	0.0000	0.0000	0.0000	0.0000	0.0000	0.0000	0.0000
Off-Road	0.0000	0.0000	0.0000	0.0000	0.0000	0.0000	0.0000	0.0000	0.0000	0.0000	0.0000	0.0000	0.0000	0.0000	0.0000	0.0000
Total	**0.0000**	**0.0000**	**0.0000**	**0.0000**	**0.0000**	**0.0000**	**0.0000**	**0.0000**	**0.0000**	**0.0000**	**0.0000**	**0.0000**	**0.0000**	**0.0000**	**0.0000**	**0.0000**

Mitigated Construction Off-Site

	ROG	NOx	CO	SO2	Fugitive PM10	Exhaust PM10	PM10 Total	Fugitive PM2.5	Exhaust PM2.5	PM2.5 Total	Bio- CO2	NBio- CO2	Total CO2	CH4	N2O	CO2e
Category	tons/yr										MT/yr					
Hauling	0.0000	0.0000	0.0000	0.0000	0.0000	0.0000	0.0000	0.0000	0.0000	0.0000	0.0000	0.0000	0.0000	0.0000	0.0000	0.0000
Vendor	0.0000	0.0000	0.0000	0.0000	0.0000	0.0000	0.0000	0.0000	0.0000	0.0000	0.0000	0.0000	0.0000	0.0000	0.0000	0.0000
Worker	0.0000	0.0000	0.0000	0.0000	0.0000	0.0000	0.0000	0.0000	0.0000	0.0000	0.0000	0.0000	0.0000	0.0000	0.0000	0.0000
Total	**0.0000**	**0.0000**	**0.0000**	**0.0000**	**0.0000**	**0.0000**	**0.0000**	**0.0000**	**0.0000**	**0.0000**	**0.0000**	**0.0000**	**0.0000**	**0.0000**	**0.0000**	**0.0000**

4.0 Operational Detail - Mobile

4.1 Mitigation Measures Mobile

	ROG	NOx	CO	SO2	Fugitive PM10	Exhaust PM10	PM10 Total	Fugitive PM2.5	Exhaust PM2.5	PM2.5 Total	Bio- CO2	NBio- CO2	Total CO2	CH4	N2O	CO2e
Category	tons/yr										MT/yr					
Mitigated	0.1740	0.7654	2.3823	7.5800e-003	0.6276	8.9400e-003	0.6365	0.1681	8.4300e-003	0.1765	0.0000	696.1948	696.1948	0.0322	0.0000	697.0008
Unmitigated	0.1740	0.7654	2.3823	7.5800e-003	0.6276	8.9400e-003	0.6365	0.1681	8.4300e-003	0.1765	0.0000	696.1948	696.1948	0.0322	0.0000	697.0008

4.2 Trip Summary Information

	Average Daily Trip Rate			Unmitigated	Mitigated
Land Use	Weekday	Saturday	Sunday	Annual VMT	Annual VMT
Parking Lot	0.00	0.00	0.00		
Quality Restaurant	499.69	499.69	499.69	1,654,979	1,654,979
Total	499.69	499.69	499.69	1,654,979	1,654,979

4.3 Trip Type Information

	Miles			Trip %			Trip Purpose %		
Land Use	H-W or C-W	H-S or C-C	H-O or C-NW	H-W or C-W	H-S or C-C	H-O or C-NW	Primary	Diverted	Pass-by
Parking Lot	16.60	8.40	6.90	0.00	0.00	0.00	0	0	0
Quality Restaurant	16.60	8.40	6.90	12.00	69.00	19.00	100	0	0

4.4 Fleet Mix

Land Use	LDA	LDT1	LDT2	MDV	LHD1	LHD2	MHD	HHD	OBUS	UBUS	MCY	SBUS	MH
Parking Lot	0.548103	0.044682	0.212159	0.122193	0.018321	0.005803	0.023836	0.015181	0.001595	0.001677	0.004786	0.000580	0.001085
Quality Restaurant	0.548103	0.044682	0.212159	0.122193	0.018321	0.005803	0.023836	0.015181	0.001595	0.001677	0.004786	0.000580	0.001085

5.0 Energy Detail

Historical Energy Use: N

5.1 Mitigation Measures Energy

	ROG	NOx	CO	SO2	Fugitive PM10	Exhaust PM10	PM10 Total	Fugitive PM2.5	Exhaust PM2.5	PM2.5 Total	Bio- CO2	NBio- CO2	Total CO2	CH4	N2O	CO2e
Category	tons/yr										MT/yr					
Electricity Mitigated						0.0000	0.0000		0.0000	0.0000	0.0000	73.0550	73.0550	3.0200e-003	6.2000e-004	73.3164
Electricity Unmitigated						0.0000	0.0000		0.0000	0.0000	0.0000	73.0550	73.0550	3.0200e-003	6.2000e-004	73.3164
NaturalGas Mitigated	8.3300e-003	0.0758	0.0636	4.5000e-004		5.7600e-003	5.7600e-003		5.7600e-003	5.7600e-003	0.0000	82.4625	82.4625	1.5800e-003	1.5100e-003	82.9525
NaturalGas Unmitigated	8.3300e-003	0.0758	0.0636	4.5000e-004		5.7600e-003	5.7600e-003		5.7600e-003	5.7600e-003	0.0000	82.4625	82.4625	1.5800e-003	1.5100e-003	82.9525

5.2 Energy by Land Use - NaturalGas

Unmitigated

	NaturalGas Use	ROG	NOx	CO	SO2	Fugitive PM10	Exhaust PM10	PM10 Total	Fugitive PM2.5	Exhaust PM2.5	PM2.5 Total	Bio- CO2	NBio- CO2	Total CO2	CH4	N2O	CO2e
Land Use	kBTU/yr	tons/yr										MT/yr					
Parking Lot	0	0.0000	0.0000	0.0000	0.0000		0.0000	0.0000		0.0000	0.0000	0.0000	0.0000	0.0000	0.0000	0.0000	0.0000
Quality Restaurant	1.54529e+006	8.3300e-003	0.0758	0.0636	4.5000e-004		5.7600e-003	5.7600e-003		5.7600e-003	5.7600e-003	0.0000	82.4625	82.4625	1.5800e-003	1.5100e-003	82.9525
Total		**8.3300e-003**	**0.0758**	**0.0636**	**4.5000e-004**		**5.7600e-003**	**5.7600e-003**		**5.7600e-003**	**5.7600e-003**	**0.0000**	**82.4625**	**82.4625**	**1.5800e-003**	**1.5100e-003**	**82.9525**

Mitigated

	NaturalGas Use	ROG	NOx	CO	SO2	Fugitive PM10	Exhaust PM10	PM10 Total	Fugitive PM2.5	Exhaust PM2.5	PM2.5 Total	Bio- CO2	NBio- CO2	Total CO2	CH4	N2O	CO2e
Land Use	kBTU/yr	tons/yr										MT/yr					
Parking Lot	0	0.0000	0.0000	0.0000	0.0000		0.0000	0.0000		0.0000	0.0000	0.0000	0.0000	0.0000	0.0000	0.0000	0.0000
Quality Restaurant	1.54529e+006	8.3300e-003	0.0758	0.0636	4.5000e-004		5.7600e-003	5.7600e-003		5.7600e-003	5.7600e-003	0.0000	82.4625	82.4625	1.5800e-003	1.5100e-003	82.9525
Total		**8.3300e-003**	**0.0758**	**0.0636**	**4.5000e-004**		**5.7600e-003**	**5.7600e-003**		**5.7600e-003**	**5.7600e-003**	**0.0000**	**82.4625**	**82.4625**	**1.5800e-003**	**1.5100e-003**	**82.9525**

5.3 Energy by Land Use - Electricity

Unmitigated

	Electricity Use	Total CO2	CH4	N2O	CO2e
Land Use	kWh/yr	MT/yr			
Parking Lot	11900.3	3.7917	1.6000e-004	3.0000e-005	3.8053
Quality Restaurant	217384	69.2633	2.8600e-003	5.9000e-004	69.5111
Total		**73.0550**	**3.0200e-003**	**6.2000e-004**	**73.3164**

Mitigated

	Electricity Use	Total CO2	CH4	N2O	CO2e
Land Use	kWh/yr	MT/yr			
Parking Lot	11900.3	3.7917	1.6000e-004	3.0000e-005	3.8053
Quality Restaurant	217384	69.2633	2.8600e-003	5.9000e-004	69.5111
Total		**73.0550**	**3.0200e-003**	**6.2000e-004**	**73.3164**

6.0 Area Detail

6.1 Mitigation Measures Area

	ROG	NOx	CO	SO2	Fugitive PM10	Exhaust PM10	PM10 Total	Fugitive PM2.5	Exhaust PM2.5	PM2.5 Total	Bio- CO2	NBio- CO2	Total CO2	CH4	N2O	CO2e
Category	tons/yr										MT/yr					
Mitigated	0.0270	0.0000	5.2000e-004	0.0000		0.0000	0.0000		0.0000	0.0000	0.0000	9.9000e-004	9.9000e-004	0.0000	0.0000	1.0600e-003
Unmitigated	0.0270	0.0000	5.2000e-004	0.0000		0.0000	0.0000		0.0000	0.0000	0.0000	9.9000e-004	9.9000e-004	0.0000	0.0000	1.0600e-003

6.2 Area by SubCategory

Unmitigated

	ROG	NOx	CO	SO2	Fugitive PM10	Exhaust PM10	PM10 Total	Fugitive PM2.5	Exhaust PM2.5	PM2.5 Total	Bio- CO2	NBio- CO2	Total CO2	CH4	N2O	CO2e
SubCategory	tons/yr										MT/yr					
Architectural Coating	3.2300e-003					0.0000	0.0000		0.0000	0.0000	0.0000	0.0000	0.0000	0.0000	0.0000	0.0000
Consumer Products	0.0237					0.0000	0.0000		0.0000	0.0000	0.0000	0.0000	0.0000	0.0000	0.0000	0.0000
Landscaping	5.0000e-005	0.0000	5.2000e-004	0.0000		0.0000	0.0000		0.0000	0.0000	0.0000	9.9000e-004	9.9000e-004	0.0000	0.0000	1.0600e-003
Total	**0.0270**	**0.0000**	**5.2000e-004**	**0.0000**		**0.0000**	**0.0000**		**0.0000**	**0.0000**	**0.0000**	**9.9000e-004**	**9.9000e-004**	**0.0000**	**0.0000**	**1.0600e-003**

6.2 Area by SubCategory

Mitigated

	ROG	NOx	CO	SO2	Fugitive PM10	Exhaust PM10	PM10 Total	Fugitive PM2.5	Exhaust PM2.5	PM2.5 Total	Bio- CO2	NBio- CO2	Total CO2	CH4	N2O	CO2e
SubCategory	tons/yr										MT/yr					
Architectural Coating	3.2300e-003					0.0000	0.0000		0.0000	0.0000	0.0000	0.0000	0.0000	0.0000	0.0000	0.0000
Consumer Products	0.0237					0.0000	0.0000		0.0000	0.0000	0.0000	0.0000	0.0000	0.0000	0.0000	0.0000
Landscaping	5.0000e-005	0.0000	5.2000e-004	0.0000		0.0000	0.0000		0.0000	0.0000	0.0000	9.9000e-004	9.9000e-004	0.0000	0.0000	1.0600e-003
Total	**0.0270**	**0.0000**	**5.2000e-004**	**0.0000**		**0.0000**	**0.0000**		**0.0000**	**0.0000**	**0.0000**	**9.9000e-004**	**9.9000e-004**	**0.0000**	**0.0000**	**1.0600e-003**

7.0 Water Detail

7.1 Mitigation Measures Water

	Total CO2	CH4	N2O	CO2e
Category	MT/yr			
Mitigated	8.4881	0.0593	1.4600e-003	10.4049
Unmitigated	8.4881	0.0593	1.4600e-003	10.4049

7.2 Water by Land Use

Unmitigated

	Indoor/Outdoor Use	Total CO2	CH4	N2O	CO2e
Land Use	Mgal	MT/yr			
Parking Lot	0 / 0	0.0000	0.0000	0.0000	0.0000
Quality Restaurant	1.80906 / 0.115472	8.4881	0.0593	1.4600e-003	10.4049
Total		**8.4881**	**0.0593**	**1.4600e-003**	**10.4049**

7.2 Water by Land Use

Mitigated

	Indoor/Outdoor Use	Total CO2	CH4	N2O	CO2e
Land Use	Mgal	MT/yr			
Parking Lot	0 / 0	0.0000	0.0000	0.0000	0.0000
Quality Restaurant	1.80906 / 0.115472	8.4881	0.0593	1.4600e-003	10.4049
Total		**8.4881**	**0.0593**	**1.4600e-003**	**10.4049**

8.0 Waste Detail

8.1 Mitigation Measures Waste

Category/Year

	Total CO2	CH4	N2O	CO2e
	MT/yr			
Mitigated	1.1043	0.0653	0.0000	2.7358
Unmitigated	1.1043	0.0653	0.0000	2.7358

8.2 Waste by Land Use

Unmitigated

	Waste Disposed	Total CO2	CH4	N2O	CO2e
Land Use	tons	MT/yr			
Parking Lot	0	0.0000	0.0000	0.0000	0.0000
Quality Restaurant	5.44	1.1043	0.0653	0.0000	2.7358
Total		**1.1043**	**0.0653**	**0.0000**	**2.7358**

Mitigated

	Waste Disposed	Total CO2	CH4	N2O	CO2e
Land Use	tons	MT/yr			
Parking Lot	0	0.0000	0.0000	0.0000	0.0000
Quality Restaurant	5.44	1.1043	0.0653	0.0000	2.7358
Total		**1.1043**	**0.0653**	**0.0000**	**2.7358**

9.0 Operational Offroad

Equipment Type	Number	Hours/Day	Days/Year	Horse Power	Load Factor	Fuel Type

10.0 Stationary Equipment

Fire Pumps and Emergency Generators

Equipment Type	Number	Hours/Day	Hours/Year	Horse Power	Load Factor	Fuel Type

Boilers

Equipment Type	Number	Heat Input/Day	Heat Input/Year	Boiler Rating	Fuel Type

User Defined Equipment

Equipment Type	Number

11.0 Vegetation

Park Plaza Memory Care - Existing

Orange County, Summer

1.0 Project Characteristics

1.1 Land Usage

Land Uses	Size	Metric	Lot Acreage	Floor Surface Area	Population
Quality Restaurant	5.96	1000sqft	0.14	5,959.00	0
Parking Lot	34.00	1000sqft	0.78	34,001.00	0

1.2 Other Project Characteristics

Urbanization	Urban	**Wind Speed (m/s)**	2.2	**Precipitation Freq (Days)**	30
Climate Zone	8			**Operational Year**	2018
Utility Company	Southern California Edison				
CO2 Intensity (lb/MWhr)	702.44	**CH4 Intensity (lb/MWhr)**	0.029	**N2O Intensity (lb/MWhr)**	0.006

1.3 User Entered Comments & Non-Default Data

Project Characteristics - Applicant Info

Land Use - Applicant Info

Construction Phase - No Construction

Off-road Equipment - No Construction

Demolition - No Construction

Trips and VMT - No Construction

Vehicle Trips - Source: Linscott, Law & Greenspan, Engineers. Traffic Impact Analysis - Park Plaza Memory Care Project. June 2019.

Energy Use -

Table Name	Column Name	Default Value	New Value
tblConstructionPhase	NumDays	10.00	0.00
tblConstructionPhase	PhaseEndDate	12/14/2018	11/30/2018
tblLandUse	LandUseSquareFeet	5,960.00	5,959.00
tblLandUse	LandUseSquareFeet	34,000.00	34,001.00
tblOffRoadEquipment	UsageHours	8.00	0.00
tblOffRoadEquipment	UsageHours	1.00	0.00
tblOffRoadEquipment	UsageHours	6.00	0.00
tblTripsAndVMT	WorkerTripNumber	10.00	0.00
tblVehicleTrips	DV_TP	18.00	0.00
tblVehicleTrips	PB_TP	44.00	0.00
tblVehicleTrips	PR_TP	38.00	100.00
tblVehicleTrips	ST_TR	94.36	83.84
tblVehicleTrips	SU_TR	72.16	83.84
tblVehicleTrips	WD_TR	89.95	83.84

2.0 Emissions Summary

2.1 Overall Construction (Maximum Daily Emission)

Unmitigated Construction

	ROG	NOx	CO	SO2	Fugitive PM10	Exhaust PM10	PM10 Total	Fugitive PM2.5	Exhaust PM2.5	PM2.5 Total	Bio- CO2	NBio- CO2	Total CO2	CH4	N2O	CO2e
Year	lb/day										lb/day					
2018	0.0000	0.0000	0.0000	0.0000	0.0000	0.0000	0.0000	0.0000	0.0000	0.0000	0.0000	0.0000	0.0000	0.0000	0.0000	0.0000
Maximum	**0.0000**	**0.0000**	**0.0000**	**0.0000**	**0.0000**	**0.0000**	**0.0000**	**0.0000**	**0.0000**	**0.0000**	**0.0000**	**0.0000**	**0.0000**	**0.0000**	**0.0000**	**0.0000**

Mitigated Construction

	ROG	NOx	CO	SO2	Fugitive PM10	Exhaust PM10	PM10 Total	Fugitive PM2.5	Exhaust PM2.5	PM2.5 Total	Bio- CO2	NBio- CO2	Total CO2	CH4	N2O	CO2e
Year	lb/day										lb/day					
2018	0.0000	0.0000	0.0000	0.0000	0.0000	0.0000	0.0000	0.0000	0.0000	0.0000	0.0000	0.0000	0.0000	0.0000	0.0000	0.0000
Maximum	**0.0000**	**0.0000**	**0.0000**	**0.0000**	**0.0000**	**0.0000**	**0.0000**	**0.0000**	**0.0000**	**0.0000**	**0.0000**	**0.0000**	**0.0000**	**0.0000**	**0.0000**	**0.0000**

	ROG	**NOx**	**CO**	**SO2**	**Fugitive PM10**	**Exhaust PM10**	**PM10 Total**	**Fugitive PM2.5**	**Exhaust PM2.5**	**PM2.5 Total**	**Bio- CO2**	**NBio-CO2**	**Total CO2**	**CH4**	**N20**	**CO2e**
Percent Reduction	**0.00**	**0.00**	**0.00**	**0.00**	**0.00**	**0.00**	**0.00**	**0.00**	**0.00**	**0.00**	**0.00**	**0.00**	**0.00**	**0.00**	**0.00**	**0.00**

2.2 Overall Operational

Unmitigated Operational

	ROG	NOx	CO	SO2	Fugitive PM10	Exhaust PM10	PM10 Total	Fugitive PM2.5	Exhaust PM2.5	PM2.5 Total	Bio- CO2	NBio- CO2	Total CO2	CH4	N2O	CO2e
Category	lb/day										lb/day					
Area	0.1482	4.0000e-005	4.1400e-003	0.0000		1.0000e-005	1.0000e-005		1.0000e-005	1.0000e-005		8.7500e-003	8.7500e-003	2.0000e-005		9.3500e-003
Energy	0.0457	0.4151	0.3487	2.4900e-003		0.0315	0.0315		0.0315	0.0315		498.0783	498.0783	9.5500e-003	9.1300e-003	501.0381
Mobile	0.9963	3.9909	13.4666	0.0431	3.5100	0.0491	3.5591	0.9386	0.0463	0.9849		4,361.9651	4,361.9651	0.1968		4,366.8843
Total	**1.1902**	**4.4060**	**13.8194**	**0.0456**	**3.5100**	**0.0806**	**3.5906**	**0.9386**	**0.0778**	**1.0164**		**4,860.0522**	**4,860.0522**	**0.2063**	**9.1300e-003**	**4,867.9318**

Mitigated Operational

	ROG	NOx	CO	SO2	Fugitive PM10	Exhaust PM10	PM10 Total	Fugitive PM2.5	Exhaust PM2.5	PM2.5 Total	Bio- CO2	NBio- CO2	Total CO2	CH4	N2O	CO2e
Category	lb/day										lb/day					
Area	0.1482	4.0000e-005	4.1400e-003	0.0000		1.0000e-005	1.0000e-005		1.0000e-005	1.0000e-005		8.7500e-003	8.7500e-003	2.0000e-005		9.3500e-003
Energy	0.0457	0.4151	0.3487	2.4900e-003		0.0315	0.0315		0.0315	0.0315		498.0783	498.0783	9.5500e-003	9.1300e-003	501.0381
Mobile	0.9963	3.9909	13.4666	0.0431	3.5100	0.0491	3.5591	0.9386	0.0463	0.9849		4,361.9651	4,361.9651	0.1968		4,366.8843
Total	**1.1902**	**4.4060**	**13.8194**	**0.0456**	**3.5100**	**0.0806**	**3.5906**	**0.9386**	**0.0778**	**1.0164**		**4,860.0522**	**4,860.0522**	**0.2063**	**9.1300e-003**	**4,867.9318**

	ROG	NOx	CO	SO2	Fugitive PM10	Exhaust PM10	PM10 Total	Fugitive PM2.5	Exhaust PM2.5	PM2.5 Total	Bio- CO2	NBio-CO2	Total CO2	CH4	N20	CO2e
Percent Reduction	**0.00**	**0.00**	**0.00**	**0.00**	**0.00**	**0.00**	**0.00**	**0.00**	**0.00**	**0.00**	**0.00**	**0.00**	**0.00**	**0.00**	**0.00**	**0.00**

3.0 Construction Detail

Construction Phase

Phase Number	Phase Name	Phase Type	Start Date	End Date	Num Days Week	Num Days	Phase Description
1	Demolition	Demolition	12/1/2018	11/30/2018	5	0	

Acres of Grading (Site Preparation Phase): 0

Acres of Grading (Grading Phase): 0

Acres of Paving: 0.78

Residential Indoor: 0; Residential Outdoor: 0; Non-Residential Indoor: 0; Non-Residential Outdoor: 0; Striped Parking Area: 0 (Architectural Coating – sqft)

OffRoad Equipment

Phase Name	Offroad Equipment Type	Amount	Usage Hours	Horse Power	Load Factor
Demolition	Concrete/Industrial Saws	1	0.00	81	0.73
Demolition	Rubber Tired Dozers	1	0.00	247	0.40
Demolition	Tractors/Loaders/Backhoes	2	0.00	97	0.37

Trips and VMT

Phase Name	Offroad Equipment Count	Worker Trip Number	Vendor Trip Number	Hauling Trip Number	Worker Trip Length	Vendor Trip Length	Hauling Trip Length	Worker Vehicle Class	Vendor Vehicle Class	Hauling Vehicle Class
Demolition	4	0.00	0.00	0.00	14.70	6.90	20.00	LD_Mix	HDT_Mix	HHDT

3.1 Mitigation Measures Construction

3.2 Demolition - 2018

Unmitigated Construction On-Site

	ROG	NOx	CO	SO2	Fugitive PM10	Exhaust PM10	PM10 Total	Fugitive PM2.5	Exhaust PM2.5	PM2.5 Total	Bio- CO2	NBio- CO2	Total CO2	CH4	N2O	CO2e
Category	lb/day										lb/day					
Fugitive Dust	0.0000	0.0000	0.0000	0.0000	0.0000	0.0000	0.0000	0.0000	0.0000	0.0000	0.0000	0.0000	0.0000	0.0000	0.0000	0.0000
Off-Road	0.0000	0.0000	0.0000	0.0000	0.0000	0.0000	0.0000	0.0000	0.0000	0.0000	0.0000	0.0000	0.0000	0.0000	0.0000	0.0000
Total	**0.0000**	**0.0000**	**0.0000**	**0.0000**	**0.0000**	**0.0000**	**0.0000**	**0.0000**	**0.0000**	**0.0000**	**0.0000**	**0.0000**	**0.0000**	**0.0000**	**0.0000**	**0.0000**

Unmitigated Construction Off-Site

	ROG	NOx	CO	SO2	Fugitive PM10	Exhaust PM10	PM10 Total	Fugitive PM2.5	Exhaust PM2.5	PM2.5 Total	Bio- CO2	NBio- CO2	Total CO2	CH4	N2O	CO2e
Category	lb/day										lb/day					
Hauling	0.0000	0.0000	0.0000	0.0000	0.0000	0.0000	0.0000	0.0000	0.0000	0.0000	0.0000	0.0000	0.0000	0.0000	0.0000	0.0000
Vendor	0.0000	0.0000	0.0000	0.0000	0.0000	0.0000	0.0000	0.0000	0.0000	0.0000	0.0000	0.0000	0.0000	0.0000	0.0000	0.0000
Worker	0.0000	0.0000	0.0000	0.0000	0.0000	0.0000	0.0000	0.0000	0.0000	0.0000	0.0000	0.0000	0.0000	0.0000	0.0000	0.0000
Total	**0.0000**	**0.0000**	**0.0000**	**0.0000**	**0.0000**	**0.0000**	**0.0000**	**0.0000**	**0.0000**	**0.0000**	**0.0000**	**0.0000**	**0.0000**	**0.0000**	**0.0000**	**0.0000**

3.2 Demolition - 2018

Mitigated Construction On-Site

	ROG	NOx	CO	SO2	Fugitive PM10	Exhaust PM10	PM10 Total	Fugitive PM2.5	Exhaust PM2.5	PM2.5 Total	Bio- CO2	NBio- CO2	Total CO2	CH4	N2O	CO2e
Category	lb/day										lb/day					
Fugitive Dust	0.0000	0.0000	0.0000	0.0000	0.0000	0.0000	0.0000	0.0000	0.0000	0.0000	0.0000	0.0000	0.0000	0.0000	0.0000	0.0000
Off-Road	0.0000	0.0000	0.0000	0.0000	0.0000	0.0000	0.0000	0.0000	0.0000	0.0000	0.0000	0.0000	0.0000	0.0000	0.0000	0.0000
Total	**0.0000**	**0.0000**	**0.0000**	**0.0000**	**0.0000**	**0.0000**	**0.0000**	**0.0000**	**0.0000**	**0.0000**	**0.0000**	**0.0000**	**0.0000**	**0.0000**	**0.0000**	**0.0000**

Mitigated Construction Off-Site

	ROG	NOx	CO	SO2	Fugitive PM10	Exhaust PM10	PM10 Total	Fugitive PM2.5	Exhaust PM2.5	PM2.5 Total	Bio- CO2	NBio- CO2	Total CO2	CH4	N2O	CO2e
Category	lb/day										lb/day					
Hauling	0.0000	0.0000	0.0000	0.0000	0.0000	0.0000	0.0000	0.0000	0.0000	0.0000	0.0000	0.0000	0.0000	0.0000	0.0000	0.0000
Vendor	0.0000	0.0000	0.0000	0.0000	0.0000	0.0000	0.0000	0.0000	0.0000	0.0000	0.0000	0.0000	0.0000	0.0000	0.0000	0.0000
Worker	0.0000	0.0000	0.0000	0.0000	0.0000	0.0000	0.0000	0.0000	0.0000	0.0000	0.0000	0.0000	0.0000	0.0000	0.0000	0.0000
Total	**0.0000**	**0.0000**	**0.0000**	**0.0000**	**0.0000**	**0.0000**	**0.0000**	**0.0000**	**0.0000**	**0.0000**	**0.0000**	**0.0000**	**0.0000**	**0.0000**	**0.0000**	**0.0000**

4.0 Operational Detail - Mobile

4.1 Mitigation Measures Mobile

	ROG	NOx	CO	SO2	Fugitive PM10	Exhaust PM10	PM10 Total	Fugitive PM2.5	Exhaust PM2.5	PM2.5 Total	Bio- CO2	NBio- CO2	Total CO2	CH4	N2O	CO2e
Category	lb/day										lb/day					
Mitigated	0.9963	3.9909	13.4666	0.0431	3.5100	0.0491	3.5591	0.9386	0.0463	0.9849		4,361.9651	4,361.9651	0.1968		4,366.8843
Unmitigated	0.9963	3.9909	13.4666	0.0431	3.5100	0.0491	3.5591	0.9386	0.0463	0.9849		4,361.9651	4,361.9651	0.1968		4,366.8843

4.2 Trip Summary Information

	Average Daily Trip Rate			Unmitigated	Mitigated
Land Use	Weekday	Saturday	Sunday	Annual VMT	Annual VMT
Parking Lot	0.00	0.00	0.00		
Quality Restaurant	499.69	499.69	499.69	1,654,979	1,654,979
Total	499.69	499.69	499.69	1,654,979	1,654,979

4.3 Trip Type Information

	Miles			Trip %			Trip Purpose %		
Land Use	H-W or C-W	H-S or C-C	H-O or C-NW	H-W or C-W	H-S or C-C	H-O or C-NW	Primary	Diverted	Pass-by
Parking Lot	16.60	8.40	6.90	0.00	0.00	0.00	0	0	0
Quality Restaurant	16.60	8.40	6.90	12.00	69.00	19.00	100	0	0

4.4 Fleet Mix

Land Use	LDA	LDT1	LDT2	MDV	LHD1	LHD2	MHD	HHD	OBUS	UBUS	MCY	SBUS	MH
Parking Lot	0.548103	0.044682	0.212159	0.122193	0.018321	0.005803	0.023836	0.015181	0.001595	0.001677	0.004786	0.000580	0.001085
Quality Restaurant	0.548103	0.044682	0.212159	0.122193	0.018321	0.005803	0.023836	0.015181	0.001595	0.001677	0.004786	0.000580	0.001085

5.0 Energy Detail

Historical Energy Use: N

5.1 Mitigation Measures Energy

	ROG	NOx	CO	SO2	Fugitive PM10	Exhaust PM10	PM10 Total	Fugitive PM2.5	Exhaust PM2.5	PM2.5 Total	Bio- CO2	NBio- CO2	Total CO2	CH4	N2O	CO2e
Category	lb/day										lb/day					
NaturalGas Mitigated	0.0457	0.4151	0.3487	2.4900e-003		0.0315	0.0315		0.0315	0.0315		498.0783	498.0783	9.5500e-003	9.1300e-003	501.0381
NaturalGas Unmitigated	0.0457	0.4151	0.3487	2.4900e-003		0.0315	0.0315		0.0315	0.0315		498.0783	498.0783	9.5500e-003	9.1300e-003	501.0381

5.2 Energy by Land Use - NaturalGas

Unmitigated

	NaturalGas Use	ROG	NOx	CO	SO2	Fugitive PM10	Exhaust PM10	PM10 Total	Fugitive PM2.5	Exhaust PM2.5	PM2.5 Total	Bio- CO2	NBio- CO2	Total CO2	CH4	N2O	CO2e
Land Use	kBTU/yr	lb/day										lb/day					
Parking Lot	0	0.0000	0.0000	0.0000	0.0000		0.0000	0.0000		0.0000	0.0000		0.0000	0.0000	0.0000	0.0000	0.0000
Quality Restaurant	4233.67	0.0457	0.4151	0.3487	2.4900e-003		0.0315	0.0315		0.0315	0.0315		498.0783	498.0783	9.5500e-003	9.1300e-003	501.0381
Total		**0.0457**	**0.4151**	**0.3487**	**2.4900e-003**		**0.0315**	**0.0315**		**0.0315**	**0.0315**		**498.0783**	**498.0783**	**9.5500e-003**	**9.1300e-003**	**501.0381**

Mitigated

	NaturalGas Use	ROG	NOx	CO	SO2	Fugitive PM10	Exhaust PM10	PM10 Total	Fugitive PM2.5	Exhaust PM2.5	PM2.5 Total	Bio- CO2	NBio- CO2	Total CO2	CH4	N2O	CO2e
Land Use	kBTU/yr	lb/day										lb/day					
Parking Lot	0	0.0000	0.0000	0.0000	0.0000		0.0000	0.0000		0.0000	0.0000		0.0000	0.0000	0.0000	0.0000	0.0000
Quality Restaurant	4.23367	0.0457	0.4151	0.3487	2.4900e-003		0.0315	0.0315		0.0315	0.0315		498.0783	498.0783	9.5500e-003	9.1300e-003	501.0381
Total		**0.0457**	**0.4151**	**0.3487**	**2.4900e-003**		**0.0315**	**0.0315**		**0.0315**	**0.0315**		**498.0783**	**498.0783**	**9.5500e-003**	**9.1300e-003**	**501.0381**

6.0 Area Detail

6.1 Mitigation Measures Area

	ROG	NOx	CO	SO2	Fugitive PM10	Exhaust PM10	PM10 Total	Fugitive PM2.5	Exhaust PM2.5	PM2.5 Total	Bio- CO2	NBio- CO2	Total CO2	CH4	N2O	CO2e
Category	lb/day										lb/day					
Mitigated	0.1482	4.0000e-005	4.1400e-003	0.0000		1.0000e-005	1.0000e-005		1.0000e-005	1.0000e-005		8.7500e-003	8.7500e-003	2.0000e-005		9.3500e-003
Unmitigated	0.1482	4.0000e-005	4.1400e-003	0.0000		1.0000e-005	1.0000e-005		1.0000e-005	1.0000e-005		8.7500e-003	8.7500e-003	2.0000e-005		9.3500e-003

6.2 Area by SubCategory

Unmitigated

	ROG	NOx	CO	SO2	Fugitive PM10	Exhaust PM10	PM10 Total	Fugitive PM2.5	Exhaust PM2.5	PM2.5 Total	Bio- CO2	NBio- CO2	Total CO2	CH4	N2O	CO2e
SubCategory	lb/day										lb/day					
Architectural Coating	0.0177					0.0000	0.0000		0.0000	0.0000			0.0000			0.0000
Consumer Products	0.1300					0.0000	0.0000		0.0000	0.0000			0.0000			0.0000
Landscaping	4.0000e-004	4.0000e-005	4.1400e-003	0.0000		1.0000e-005	1.0000e-005		1.0000e-005	1.0000e-005		8.7500e-003	8.7500e-003	2.0000e-005		9.3500e-003
Total	**0.1482**	**4.0000e-005**	**4.1400e-003**	**0.0000**		**1.0000e-005**	**1.0000e-005**		**1.0000e-005**	**1.0000e-005**		**8.7500e-003**	**8.7500e-003**	**2.0000e-005**		**9.3500e-003**

6.2 Area by SubCategory

Mitigated

	ROG	NOx	CO	SO2	Fugitive PM10	Exhaust PM10	PM10 Total	Fugitive PM2.5	Exhaust PM2.5	PM2.5 Total	Bio- CO2	NBio- CO2	Total CO2	CH4	N2O	CO2e
SubCategory	lb/day										lb/day					
Architectural Coating	0.0177					0.0000	0.0000		0.0000	0.0000			0.0000			0.0000
Consumer Products	0.1300					0.0000	0.0000		0.0000	0.0000			0.0000			0.0000
Landscaping	4.0000e-004	4.0000e-005	4.1400e-003	0.0000		1.0000e-005	1.0000e-005		1.0000e-005	1.0000e-005		8.7500e-003	8.7500e-003	2.0000e-005		9.3500e-003
Total	**0.1482**	**4.0000e-005**	**4.1400e-003**	**0.0000**		**1.0000e-005**	**1.0000e-005**		**1.0000e-005**	**1.0000e-005**		**8.7500e-003**	**8.7500e-003**	**2.0000e-005**		**9.3500e-003**

7.0 Water Detail

7.1 Mitigation Measures Water

8.0 Waste Detail

8.1 Mitigation Measures Waste

9.0 Operational Offroad

Equipment Type	Number	Hours/Day	Days/Year	Horse Power	Load Factor	Fuel Type

10.0 Stationary Equipment

Fire Pumps and Emergency Generators

Equipment Type	Number	Hours/Day	Hours/Year	Horse Power	Load Factor	Fuel Type

Boilers

Equipment Type	Number	Heat Input/Day	Heat Input/Year	Boiler Rating	Fuel Type

User Defined Equipment

Equipment Type	Number

11.0 Vegetation

Park Plaza Memory Care - Existing

Orange County, Winter

1.0 Project Characteristics

1.1 Land Usage

Land Uses	Size	Metric	Lot Acreage	Floor Surface Area	Population
Quality Restaurant	5.96	1000sqft	0.14	5,959.00	0
Parking Lot	34.00	1000sqft	0.78	34,001.00	0

1.2 Other Project Characteristics

Urbanization	Urban	**Wind Speed (m/s)**	2.2	**Precipitation Freq (Days)**	30
Climate Zone	8			**Operational Year**	2018
Utility Company	Southern California Edison				
CO2 Intensity (lb/MWhr)	702.44	**CH4 Intensity (lb/MWhr)**	0.029	**N2O Intensity (lb/MWhr)**	0.006

1.3 User Entered Comments & Non-Default Data

Project Characteristics - Applicant Info

Land Use - Applicant Info

Construction Phase - No Construction

Off-road Equipment - No Construction

Demolition - No Construction

Trips and VMT - No Construction

Vehicle Trips - Source: Linscott, Law & Greenspan, Engineers. Traffic Impact Analysis - Park Plaza Memory Care Project. June 2019.

Energy Use -

Table Name	Column Name	Default Value	New Value
tblConstructionPhase	NumDays	10.00	0.00
tblConstructionPhase	PhaseEndDate	12/14/2018	11/30/2018
tblLandUse	LandUseSquareFeet	5,960.00	5,959.00
tblLandUse	LandUseSquareFeet	34,000.00	34,001.00
tblOffRoadEquipment	UsageHours	8.00	0.00
tblOffRoadEquipment	UsageHours	1.00	0.00
tblOffRoadEquipment	UsageHours	6.00	0.00
tblTripsAndVMT	WorkerTripNumber	10.00	0.00
tblVehicleTrips	DV_TP	18.00	0.00
tblVehicleTrips	PB_TP	44.00	0.00
tblVehicleTrips	PR_TP	38.00	100.00
tblVehicleTrips	ST_TR	94.36	83.84
tblVehicleTrips	SU_TR	72.16	83.84
tblVehicleTrips	WD_TR	89.95	83.84

2.0 Emissions Summary

2.1 Overall Construction (Maximum Daily Emission)

Unmitigated Construction

	ROG	NOx	CO	SO2	Fugitive PM10	Exhaust PM10	PM10 Total	Fugitive PM2.5	Exhaust PM2.5	PM2.5 Total	Bio- CO2	NBio- CO2	Total CO2	CH4	N2O	CO2e
Year	lb/day										lb/day					
2018	0.0000	0.0000	0.0000	0.0000	0.0000	0.0000	0.0000	0.0000	0.0000	0.0000	0.0000	0.0000	0.0000	0.0000	0.0000	0.0000
Maximum	**0.0000**	**0.0000**	**0.0000**	**0.0000**	**0.0000**	**0.0000**	**0.0000**	**0.0000**	**0.0000**	**0.0000**	**0.0000**	**0.0000**	**0.0000**	**0.0000**	**0.0000**	**0.0000**

Mitigated Construction

	ROG	NOx	CO	SO2	Fugitive PM10	Exhaust PM10	PM10 Total	Fugitive PM2.5	Exhaust PM2.5	PM2.5 Total	Bio- CO2	NBio- CO2	Total CO2	CH4	N2O	CO2e
Year	lb/day										lb/day					
2018	0.0000	0.0000	0.0000	0.0000	0.0000	0.0000	0.0000	0.0000	0.0000	0.0000	0.0000	0.0000	0.0000	0.0000	0.0000	0.0000
Maximum	**0.0000**	**0.0000**	**0.0000**	**0.0000**	**0.0000**	**0.0000**	**0.0000**	**0.0000**	**0.0000**	**0.0000**	**0.0000**	**0.0000**	**0.0000**	**0.0000**	**0.0000**	**0.0000**

	ROG	**NOx**	**CO**	**SO2**	**Fugitive PM10**	**Exhaust PM10**	**PM10 Total**	**Fugitive PM2.5**	**Exhaust PM2.5**	**PM2.5 Total**	**Bio- CO2**	**NBio-CO2**	**Total CO2**	**CH4**	**N20**	**CO2e**
Percent Reduction	**0.00**	**0.00**	**0.00**	**0.00**	**0.00**	**0.00**	**0.00**	**0.00**	**0.00**	**0.00**	**0.00**	**0.00**	**0.00**	**0.00**	**0.00**	**0.00**

2.2 Overall Operational

Unmitigated Operational

	ROG	NOx	CO	SO2	Fugitive PM10	Exhaust PM10	PM10 Total	Fugitive PM2.5	Exhaust PM2.5	PM2.5 Total	Bio- CO2	NBio- CO2	Total CO2	CH4	N2O	CO2e
Category	lb/day										lb/day					
Area	0.1482	4.0000e-005	4.1400e-003	0.0000		1.0000e-005	1.0000e-005		1.0000e-005	1.0000e-005		8.7500e-003	8.7500e-003	2.0000e-005		9.3500e-003
Energy	0.0457	0.4151	0.3487	2.4900e-003		0.0315	0.0315		0.0315	0.0315		498.0783	498.0783	9.5500e-003	9.1300e-003	501.0381
Mobile	0.9859	4.1310	12.9226	0.0412	3.5100	0.0494	3.5593	0.9386	0.0465	0.9851		4,165.4499	4,165.4499	0.1956		4,170.3401
Total	**1.1797**	**4.5461**	**13.2754**	**0.0436**	**3.5100**	**0.0809**	**3.5909**	**0.9386**	**0.0781**	**1.0167**		**4,663.5369**	**4,663.5369**	**0.2052**	**9.1300e-003**	**4,671.3876**

Mitigated Operational

	ROG	NOx	CO	SO2	Fugitive PM10	Exhaust PM10	PM10 Total	Fugitive PM2.5	Exhaust PM2.5	PM2.5 Total	Bio- CO2	NBio- CO2	Total CO2	CH4	N2O	CO2e
Category	lb/day										lb/day					
Area	0.1482	4.0000e-005	4.1400e-003	0.0000		1.0000e-005	1.0000e-005		1.0000e-005	1.0000e-005		8.7500e-003	8.7500e-003	2.0000e-005		9.3500e-003
Energy	0.0457	0.4151	0.3487	2.4900e-003		0.0315	0.0315		0.0315	0.0315		498.0783	498.0783	9.5500e-003	9.1300e-003	501.0381
Mobile	0.9859	4.1310	12.9226	0.0412	3.5100	0.0494	3.5593	0.9386	0.0465	0.9851		4,165.4499	4,165.4499	0.1956		4,170.3401
Total	**1.1797**	**4.5461**	**13.2754**	**0.0436**	**3.5100**	**0.0809**	**3.5909**	**0.9386**	**0.0781**	**1.0167**		**4,663.5369**	**4,663.5369**	**0.2052**	**9.1300e-003**	**4,671.3876**

	ROG	NOx	CO	SO2	Fugitive PM10	Exhaust PM10	PM10 Total	Fugitive PM2.5	Exhaust PM2.5	PM2.5 Total	Bio- CO2	NBio-CO2	Total CO2	CH4	N20	CO2e
Percent Reduction	**0.00**	**0.00**	**0.00**	**0.00**	**0.00**	**0.00**	**0.00**	**0.00**	**0.00**	**0.00**	**0.00**	**0.00**	**0.00**	**0.00**	**0.00**	**0.00**

3.0 Construction Detail

Construction Phase

Phase Number	Phase Name	Phase Type	Start Date	End Date	Num Days Week	Num Days	Phase Description
1	Demolition	Demolition	12/1/2018	11/30/2018	5	0	

Acres of Grading (Site Preparation Phase): 0

Acres of Grading (Grading Phase): 0

Acres of Paving: 0.78

Residential Indoor: 0; Residential Outdoor: 0; Non-Residential Indoor: 0; Non-Residential Outdoor: 0; Striped Parking Area: 0 (Architectural Coating – sqft)

OffRoad Equipment

Phase Name	Offroad Equipment Type	Amount	Usage Hours	Horse Power	Load Factor
Demolition	Concrete/Industrial Saws	1	0.00	81	0.73
Demolition	Rubber Tired Dozers	1	0.00	247	0.40
Demolition	Tractors/Loaders/Backhoes	2	0.00	97	0.37

Trips and VMT

Phase Name	Offroad Equipment Count	Worker Trip Number	Vendor Trip Number	Hauling Trip Number	Worker Trip Length	Vendor Trip Length	Hauling Trip Length	Worker Vehicle Class	Vendor Vehicle Class	Hauling Vehicle Class
Demolition	4	0.00	0.00	0.00	14.70	6.90	20.00	LD_Mix	HDT_Mix	HHDT

3.1 Mitigation Measures Construction

3.2 Demolition - 2018

Unmitigated Construction On-Site

	ROG	NOx	CO	SO2	Fugitive PM10	Exhaust PM10	PM10 Total	Fugitive PM2.5	Exhaust PM2.5	PM2.5 Total	Bio- CO2	NBio- CO2	Total CO2	CH4	N2O	CO2e
Category	lb/day										lb/day					
Fugitive Dust	0.0000	0.0000	0.0000	0.0000	0.0000	0.0000	0.0000	0.0000	0.0000	0.0000	0.0000	0.0000	0.0000	0.0000	0.0000	0.0000
Off-Road	0.0000	0.0000	0.0000	0.0000	0.0000	0.0000	0.0000	0.0000	0.0000	0.0000	0.0000	0.0000	0.0000	0.0000	0.0000	0.0000
Total	**0.0000**	**0.0000**	**0.0000**	**0.0000**	**0.0000**	**0.0000**	**0.0000**	**0.0000**	**0.0000**	**0.0000**	**0.0000**	**0.0000**	**0.0000**	**0.0000**	**0.0000**	**0.0000**

Unmitigated Construction Off-Site

	ROG	NOx	CO	SO2	Fugitive PM10	Exhaust PM10	PM10 Total	Fugitive PM2.5	Exhaust PM2.5	PM2.5 Total	Bio- CO2	NBio- CO2	Total CO2	CH4	N2O	CO2e
Category	lb/day										lb/day					
Hauling	0.0000	0.0000	0.0000	0.0000	0.0000	0.0000	0.0000	0.0000	0.0000	0.0000	0.0000	0.0000	0.0000	0.0000	0.0000	0.0000
Vendor	0.0000	0.0000	0.0000	0.0000	0.0000	0.0000	0.0000	0.0000	0.0000	0.0000	0.0000	0.0000	0.0000	0.0000	0.0000	0.0000
Worker	0.0000	0.0000	0.0000	0.0000	0.0000	0.0000	0.0000	0.0000	0.0000	0.0000	0.0000	0.0000	0.0000	0.0000	0.0000	0.0000
Total	**0.0000**	**0.0000**	**0.0000**	**0.0000**	**0.0000**	**0.0000**	**0.0000**	**0.0000**	**0.0000**	**0.0000**	**0.0000**	**0.0000**	**0.0000**	**0.0000**	**0.0000**	**0.0000**

3.2 Demolition - 2018

Mitigated Construction On-Site

	ROG	NOx	CO	SO2	Fugitive PM10	Exhaust PM10	PM10 Total	Fugitive PM2.5	Exhaust PM2.5	PM2.5 Total	Bio- CO2	NBio- CO2	Total CO2	CH4	N2O	CO2e
Category	lb/day										lb/day					
Fugitive Dust	0.0000	0.0000	0.0000	0.0000	0.0000	0.0000	0.0000	0.0000	0.0000	0.0000	0.0000	0.0000	0.0000	0.0000	0.0000	0.0000
Off-Road	0.0000	0.0000	0.0000	0.0000	0.0000	0.0000	0.0000	0.0000	0.0000	0.0000	0.0000	0.0000	0.0000	0.0000	0.0000	0.0000
Total	**0.0000**	**0.0000**	**0.0000**	**0.0000**	**0.0000**	**0.0000**	**0.0000**	**0.0000**	**0.0000**	**0.0000**	**0.0000**	**0.0000**	**0.0000**	**0.0000**	**0.0000**	**0.0000**

Mitigated Construction Off-Site

	ROG	NOx	CO	SO2	Fugitive PM10	Exhaust PM10	PM10 Total	Fugitive PM2.5	Exhaust PM2.5	PM2.5 Total	Bio- CO2	NBio- CO2	Total CO2	CH4	N2O	CO2e
Category	lb/day										lb/day					
Hauling	0.0000	0.0000	0.0000	0.0000	0.0000	0.0000	0.0000	0.0000	0.0000	0.0000	0.0000	0.0000	0.0000	0.0000	0.0000	0.0000
Vendor	0.0000	0.0000	0.0000	0.0000	0.0000	0.0000	0.0000	0.0000	0.0000	0.0000	0.0000	0.0000	0.0000	0.0000	0.0000	0.0000
Worker	0.0000	0.0000	0.0000	0.0000	0.0000	0.0000	0.0000	0.0000	0.0000	0.0000	0.0000	0.0000	0.0000	0.0000	0.0000	0.0000
Total	**0.0000**	**0.0000**	**0.0000**	**0.0000**	**0.0000**	**0.0000**	**0.0000**	**0.0000**	**0.0000**	**0.0000**	**0.0000**	**0.0000**	**0.0000**	**0.0000**	**0.0000**	**0.0000**

4.0 Operational Detail - Mobile

4.1 Mitigation Measures Mobile

	ROG	NOx	CO	SO2	Fugitive PM10	Exhaust PM10	PM10 Total	Fugitive PM2.5	Exhaust PM2.5	PM2.5 Total	Bio- CO2	NBio- CO2	Total CO2	CH4	N2O	CO2e
Category	lb/day										lb/day					
Mitigated	0.9859	4.1310	12.9226	0.0412	3.5100	0.0494	3.5593	0.9386	0.0465	0.9851		4,165.4499	4,165.4499	0.1956		4,170.3401
Unmitigated	0.9859	4.1310	12.9226	0.0412	3.5100	0.0494	3.5593	0.9386	0.0465	0.9851		4,165.4499	4,165.4499	0.1956		4,170.3401

4.2 Trip Summary Information

	Average Daily Trip Rate			Unmitigated	Mitigated
Land Use	Weekday	Saturday	Sunday	Annual VMT	Annual VMT
Parking Lot	0.00	0.00	0.00		
Quality Restaurant	499.69	499.69	499.69	1,654,979	1,654,979
Total	499.69	499.69	499.69	1,654,979	1,654,979

4.3 Trip Type Information

	Miles			Trip %			Trip Purpose %		
Land Use	H-W or C-W	H-S or C-C	H-O or C-NW	H-W or C-W	H-S or C-C	H-O or C-NW	Primary	Diverted	Pass-by
Parking Lot	16.60	8.40	6.90	0.00	0.00	0.00	0	0	0
Quality Restaurant	16.60	8.40	6.90	12.00	69.00	19.00	100	0	0

4.4 Fleet Mix

Land Use	LDA	LDT1	LDT2	MDV	LHD1	LHD2	MHD	HHD	OBUS	UBUS	MCY	SBUS	MH
Parking Lot	0.548103	0.044682	0.212159	0.122193	0.018321	0.005803	0.023836	0.015181	0.001595	0.001677	0.004786	0.000580	0.001085
Quality Restaurant	0.548103	0.044682	0.212159	0.122193	0.018321	0.005803	0.023836	0.015181	0.001595	0.001677	0.004786	0.000580	0.001085

5.0 Energy Detail

Historical Energy Use: N

5.1 Mitigation Measures Energy

	ROG	NOx	CO	SO2	Fugitive PM10	Exhaust PM10	PM10 Total	Fugitive PM2.5	Exhaust PM2.5	PM2.5 Total	Bio- CO2	NBio- CO2	Total CO2	CH4	N2O	CO2e
Category	lb/day										lb/day					
NaturalGas Mitigated	0.0457	0.4151	0.3487	2.4900e-003		0.0315	0.0315		0.0315	0.0315		498.0783	498.0783	9.5500e-003	9.1300e-003	501.0381
NaturalGas Unmitigated	0.0457	0.4151	0.3487	2.4900e-003		0.0315	0.0315		0.0315	0.0315		498.0783	498.0783	9.5500e-003	9.1300e-003	501.0381

5.2 Energy by Land Use - NaturalGas

Unmitigated

	NaturalGas Use	ROG	NOx	CO	SO2	Fugitive PM10	Exhaust PM10	PM10 Total	Fugitive PM2.5	Exhaust PM2.5	PM2.5 Total	Bio- CO2	NBio- CO2	Total CO2	CH4	N2O	CO2e
Land Use	kBTU/yr	lb/day										lb/day					
Parking Lot	0	0.0000	0.0000	0.0000	0.0000		0.0000	0.0000		0.0000	0.0000		0.0000	0.0000	0.0000	0.0000	0.0000
Quality Restaurant	4233.67	0.0457	0.4151	0.3487	2.4900e-003		0.0315	0.0315		0.0315	0.0315		498.0783	498.0783	9.5500e-003	9.1300e-003	501.0381
Total		**0.0457**	**0.4151**	**0.3487**	**2.4900e-003**		**0.0315**	**0.0315**		**0.0315**	**0.0315**		**498.0783**	**498.0783**	**9.5500e-003**	**9.1300e-003**	**501.0381**

Mitigated

	NaturalGas Use	ROG	NOx	CO	SO2	Fugitive PM10	Exhaust PM10	PM10 Total	Fugitive PM2.5	Exhaust PM2.5	PM2.5 Total	Bio- CO2	NBio- CO2	Total CO2	CH4	N2O	CO2e
Land Use	kBTU/yr	lb/day										lb/day					
Parking Lot	0	0.0000	0.0000	0.0000	0.0000		0.0000	0.0000		0.0000	0.0000		0.0000	0.0000	0.0000	0.0000	0.0000
Quality Restaurant	4.23367	0.0457	0.4151	0.3487	2.4900e-003		0.0315	0.0315		0.0315	0.0315		498.0783	498.0783	9.5500e-003	9.1300e-003	501.0381
Total		**0.0457**	**0.4151**	**0.3487**	**2.4900e-003**		**0.0315**	**0.0315**		**0.0315**	**0.0315**		**498.0783**	**498.0783**	**9.5500e-003**	**9.1300e-003**	**501.0381**

6.0 Area Detail

6.1 Mitigation Measures Area

	ROG	NOx	CO	SO2	Fugitive PM10	Exhaust PM10	PM10 Total	Fugitive PM2.5	Exhaust PM2.5	PM2.5 Total	Bio- CO2	NBio- CO2	Total CO2	CH4	N2O	CO2e
Category	lb/day										lb/day					
Mitigated	0.1482	4.0000e-005	4.1400e-003	0.0000		1.0000e-005	1.0000e-005		1.0000e-005	1.0000e-005		8.7500e-003	8.7500e-003	2.0000e-005		9.3500e-003
Unmitigated	0.1482	4.0000e-005	4.1400e-003	0.0000		1.0000e-005	1.0000e-005		1.0000e-005	1.0000e-005		8.7500e-003	8.7500e-003	2.0000e-005		9.3500e-003

6.2 Area by SubCategory

Unmitigated

	ROG	NOx	CO	SO2	Fugitive PM10	Exhaust PM10	PM10 Total	Fugitive PM2.5	Exhaust PM2.5	PM2.5 Total	Bio- CO2	NBio- CO2	Total CO2	CH4	N2O	CO2e
SubCategory	lb/day										lb/day					
Architectural Coating	0.0177					0.0000	0.0000		0.0000	0.0000			0.0000			0.0000
Consumer Products	0.1300					0.0000	0.0000		0.0000	0.0000			0.0000			0.0000
Landscaping	4.0000e-004	4.0000e-005	4.1400e-003	0.0000		1.0000e-005	1.0000e-005		1.0000e-005	1.0000e-005		8.7500e-003	8.7500e-003	2.0000e-005		9.3500e-003
Total	**0.1482**	**4.0000e-005**	**4.1400e-003**	**0.0000**		**1.0000e-005**	**1.0000e-005**		**1.0000e-005**	**1.0000e-005**		**8.7500e-003**	**8.7500e-003**	**2.0000e-005**		**9.3500e-003**

6.2 Area by SubCategory

Mitigated

	ROG	NOx	CO	SO2	Fugitive PM10	Exhaust PM10	PM10 Total	Fugitive PM2.5	Exhaust PM2.5	PM2.5 Total	Bio- CO2	NBio- CO2	Total CO2	CH4	N2O	CO2e
SubCategory	lb/day										lb/day					
Architectural Coating	0.0177					0.0000	0.0000		0.0000	0.0000			0.0000			0.0000
Consumer Products	0.1300					0.0000	0.0000		0.0000	0.0000			0.0000			0.0000
Landscaping	4.0000e-004	4.0000e-005	4.1400e-003	0.0000		1.0000e-005	1.0000e-005		1.0000e-005	1.0000e-005		8.7500e-003	8.7500e-003	2.0000e-005		9.3500e-003
Total	**0.1482**	**4.0000e-005**	**4.1400e-003**	**0.0000**		**1.0000e-005**	**1.0000e-005**		**1.0000e-005**	**1.0000e-005**		**8.7500e-003**	**8.7500e-003**	**2.0000e-005**		**9.3500e-003**

7.0 Water Detail

7.1 Mitigation Measures Water

8.0 Waste Detail

8.1 Mitigation Measures Waste

9.0 Operational Offroad

Equipment Type	Number	Hours/Day	Days/Year	Horse Power	Load Factor	Fuel Type

10.0 Stationary Equipment

Fire Pumps and Emergency Generators

Equipment Type	Number	Hours/Day	Hours/Year	Horse Power	Load Factor	Fuel Type

Boilers

Equipment Type	Number	Heat Input/Day	Heat Input/Year	Boiler Rating	Fuel Type

User Defined Equipment

Equipment Type	Number

11.0 Vegetation

Park Plaza Memory Care - Future

Orange County, Annual

1.0 Project Characteristics

1.1 Land Usage

Land Uses	Size	Metric	Lot Acreage	Floor Surface Area	Population
Parking Lot	15.00	Space	0.57	24,834.00	0
Congregate Care (Assisted Living)	32.00	Dwelling Unit	0.35	30.11	36

1.2 Other Project Characteristics

Urbanization	Urban	**Wind Speed (m/s)**	2.2	**Precipitation Freq (Days)**	30
Climate Zone	8			**Operational Year**	2021
Utility Company	Southern California Edison				
CO2 Intensity (lb/MWhr)	702.44	**CH4 Intensity (lb/MWhr)**	0.029	**N2O Intensity (lb/MWhr)**	0.006

1.3 User Entered Comments & Non-Default Data

Project Characteristics - Applicant Info

Land Use - Applicant Info

Construction Phase - Applicant Info

Off-road Equipment - COnsultant Assumptions

Off-road Equipment - Consultant Assumptions

Off-road Equipment - Consultant Assumptions

Off-road Equipment - Consultant Assumptions

Trips and VMT - Consultant Assumptions

Demolition - Consultant Assumptions

Grading - Applicant Info

Vehicle Trips - Source: Linscott, Law & Greenspan, Engineers. Traffic Impact Analysis - Park Plaza Memory Care Project. June 2019. Trip rate adjusted to account for per 36 beds, not per 32 dwelling units.

Woodstoves - Applicant Info.

Energy Use -

Construction Off-road Equipment Mitigation - Assumes SCAQMD Rule 403 control efficiences

Table Name	Column Name	Default Value	New Value
tblConstDustMitigation	CleanPavedRoadPercentReduction	0	46
tblConstDustMitigation	WaterExposedAreaPM10PercentReduction	61	55
tblConstDustMitigation	WaterExposedAreaPM25PercentReduction	61	55
tblConstructionPhase	NumDays	5.00	39.00
tblConstructionPhase	NumDays	100.00	300.00
tblConstructionPhase	NumDays	10.00	33.00
tblConstructionPhase	NumDays	2.00	32.00
tblFireplaces	FireplaceDayYear	25.00	0.00
tblFireplaces	FireplaceHourDay	3.00	0.00
tblFireplaces	FireplaceWoodMass	1,019.20	0.00

tblFireplaces	NumberGas	27.20	0.00
tblFireplaces	NumberNoFireplace	3.20	0.00
tblFireplaces	NumberWood	1.60	0.00
tblGrading	AcresOfGrading	16.00	0.92
tblLandUse	LandUseSquareFeet	6,000.00	24,834.00
tblLandUse	LandUseSquareFeet	32,000.00	30.11
tblLandUse	LotAcreage	0.13	0.57
tblLandUse	LotAcreage	2.00	0.35
tblLandUse	Population	92.00	36.00
tblOffRoadEquipment	OffRoadEquipmentUnitAmount	2.00	1.00
tblOffRoadEquipment	OffRoadEquipmentUnitAmount	2.00	1.00
tblOffRoadEquipment	OffRoadEquipmentUnitAmount	2.00	1.00
tblOffRoadEquipment	UsageHours	6.00	8.00
tblOffRoadEquipment	UsageHours	6.00	8.00
tblOffRoadEquipment	UsageHours	6.00	8.00
tblOffRoadEquipment	UsageHours	6.00	8.00
tblTripsAndVMT	HaulingTripLength	20.00	40.00
tblTripsAndVMT	WorkerTripNumber	10.00	8.00
tblTripsAndVMT	WorkerTripNumber	13.00	10.00
tblVehicleTrips	DV_TP	11.00	0.00
tblVehicleTrips	HO_TTP	40.60	41.00
tblVehicleTrips	HS_TTP	19.20	19.00
tblVehicleTrips	HW_TTP	40.20	40.00
tblVehicleTrips	PB_TP	3.00	0.00
tblVehicleTrips	PR_TP	86.00	100.00
tblVehicleTrips	ST_TR	2.20	4.66
tblVehicleTrips	SU_TR	2.44	4.66

tblVehicleTrips	WD_TR	2.74	4.66
tblWoodstoves	NumberCatalytic	1.60	0.00
tblWoodstoves	NumberNoncatalytic	1.60	0.00
tblWoodstoves	WoodstoveDayYear	25.00	0.00
tblWoodstoves	WoodstoveWoodMass	999.60	0.00

2.0 Emissions Summary

2.1 Overall Construction

Unmitigated Construction

	ROG	NOx	CO	SO2	Fugitive PM10	Exhaust PM10	PM10 Total	Fugitive PM2.5	Exhaust PM2.5	PM2.5 Total	Bio- CO2	NBio- CO2	Total CO2	CH4	N2O	CO2e
Year	tons/yr										MT/yr					
2020	0.1935	1.7868	1.6254	3.1600e-003	0.0974	0.0875	0.1849	0.0253	0.0817	0.1070	0.0000	280.0454	280.0454	0.0633	0.0000	281.6272
2021	0.0807	0.6648	0.6918	1.2800e-003	0.0224	0.0330	0.0554	6.0100e-003	0.0308	0.0368	0.0000	111.6716	111.6716	0.0254	0.0000	112.3055
Maximum	**0.1935**	**1.7868**	**1.6254**	**3.1600e-003**	**0.0974**	**0.0875**	**0.1849**	**0.0253**	**0.0817**	**0.1070**	**0.0000**	**280.0454**	**280.0454**	**0.0633**	**0.0000**	**281.6272**

Mitigated Construction

	ROG	NOx	CO	SO2	Fugitive PM10	Exhaust PM10	PM10 Total	Fugitive PM2.5	Exhaust PM2.5	PM2.5 Total	Bio- CO2	NBio- CO2	Total CO2	CH4	N2O	CO2e
Year	tons/yr										MT/yr					
2020	0.1935	1.7867	1.6254	3.1600e-003	0.0518	0.0875	0.1393	0.0140	0.0817	0.0957	0.0000	280.0452	280.0452	0.0633	0.0000	281.6269
2021	0.0807	0.6648	0.6918	1.2800e-003	0.0137	0.0330	0.0466	3.8500e-003	0.0308	0.0347	0.0000	111.6715	111.6715	0.0254	0.0000	112.3054
Maximum	**0.1935**	**1.7867**	**1.6254**	**3.1600e-003**	**0.0518**	**0.0875**	**0.1393**	**0.0140**	**0.0817**	**0.0957**	**0.0000**	**280.0452**	**280.0452**	**0.0633**	**0.0000**	**281.6269**

	ROG	**NOx**	**CO**	**SO2**	**Fugitive PM10**	**Exhaust PM10**	**PM10 Total**	**Fugitive PM2.5**	**Exhaust PM2.5**	**PM2.5 Total**	**Bio- CO2**	**NBio-CO2**	**Total CO2**	**CH4**	**N20**	**CO2e**
Percent Reduction	**0.00**	**0.00**	**0.00**	**0.00**	**45.36**	**0.00**	**22.62**	**43.08**	**0.00**	**9.36**	**0.00**	**0.00**	**0.00**	**0.00**	**0.00**	**0.00**

Quarter	Start Date	End Date	Maximum Unmitigated ROG + NOX (tons/quarter)	Maximum Mitigated ROG + NOX (tons/quarter)
1	**1-1-2020**	**3-31-2020**	0.5123	0.5123
2	**4-1-2020**	**6-30-2020**	0.4793	0.4793
3	**7-1-2020**	**9-30-2020**	0.4846	0.4846
4	**10-1-2020**	**12-31-2020**	0.4854	0.4854
5	**1-1-2021**	**3-31-2021**	0.4343	0.4343
6	**4-1-2021**	**6-30-2021**	0.3150	0.3150
		Highest	0.5123	0.5123

2.2 Overall Operational

Unmitigated Operational

	ROG	NOx	CO	SO2	Fugitive PM10	Exhaust PM10	PM10 Total	Fugitive PM2.5	Exhaust PM2.5	PM2.5 Total	Bio- CO2	NBio- CO2	Total CO2	CH4	N2O	CO2e
Category	tons/yr										MT/yr					
Area	0.0121	3.8200e-003	0.3309	2.0000e-005		1.8200e-003	1.8200e-003		1.8200e-003	1.8200e-003	0.0000	0.5394	0.5394	5.2000e-004	0.0000	0.5525
Energy	1.9700e-003	0.0169	7.1700e-003	1.1000e-004		1.3600e-003	1.3600e-003		1.3600e-003	1.3600e-003	0.0000	62.8151	62.8151	2.1600e-003	7.3000e-004	63.0860
Mobile	0.0431	0.1935	0.6280	2.4100e-003	0.2176	1.7700e-003	0.2193	0.0583	1.6500e-003	0.0599	0.0000	221.9941	221.9941	9.1100e-003	0.0000	222.2218
Waste						0.0000	0.0000		0.0000	0.0000	5.9273	0.0000	5.9273	0.3503	0.0000	14.6847
Water						0.0000	0.0000		0.0000	0.0000	0.6615	13.3028	13.9642	0.0685	1.7200e-003	16.1883
Total	**0.0572**	**0.2142**	**0.9661**	**2.5400e-003**	**0.2176**	**4.9500e-003**	**0.2225**	**0.0583**	**4.8300e-003**	**0.0631**	**6.5888**	**298.6514**	**305.2402**	**0.4306**	**2.4500e-003**	**316.7333**

2.2 Overall Operational

Mitigated Operational

	ROG	NOx	CO	SO2	Fugitive PM10	Exhaust PM10	PM10 Total	Fugitive PM2.5	Exhaust PM2.5	PM2.5 Total	Bio- CO2	NBio- CO2	Total CO2	CH4	N2O	CO2e
Category	tons/yr										MT/yr					
Area	0.0121	3.8200e-003	0.3309	2.0000e-005		1.8200e-003	1.8200e-003		1.8200e-003	1.8200e-003	0.0000	0.5394	0.5394	5.2000e-004	0.0000	0.5525
Energy	1.9700e-003	0.0169	7.1700e-003	1.1000e-004		1.3600e-003	1.3600e-003		1.3600e-003	1.3600e-003	0.0000	62.8151	62.8151	2.1600e-003	7.3000e-004	63.0860
Mobile	0.0431	0.1935	0.6280	2.4100e-003	0.2176	1.7700e-003	0.2193	0.0583	1.6500e-003	0.0599	0.0000	221.9941	221.9941	9.1100e-003	0.0000	222.2218
Waste						0.0000	0.0000		0.0000	0.0000	5.9273	0.0000	5.9273	0.3503	0.0000	14.6847
Water						0.0000	0.0000		0.0000	0.0000	0.6615	13.3028	13.9642	0.0685	1.7200e-003	16.1883
Total	**0.0572**	**0.2142**	**0.9661**	**2.5400e-003**	**0.2176**	**4.9500e-003**	**0.2225**	**0.0583**	**4.8300e-003**	**0.0631**	**6.5888**	**298.6514**	**305.2402**	**0.4306**	**2.4500e-003**	**316.7333**

	ROG	NOx	CO	SO2	Fugitive PM10	Exhaust PM10	PM10 Total	Fugitive PM2.5	Exhaust PM2.5	PM2.5 Total	Bio- CO2	NBio-CO2	Total CO2	CH4	N20	CO2e
Percent Reduction	**0.00**	**0.00**	**0.00**	**0.00**	**0.00**	**0.00**	**0.00**	**0.00**	**0.00**	**0.00**	**0.00**	**0.00**	**0.00**	**0.00**	**0.00**	**0.00**

3.0 Construction Detail

Construction Phase

Phase Number	Phase Name	Phase Type	Start Date	End Date	Num Days Week	Num Days	Phase Description
1	Demolition	Demolition	1/1/2020	2/14/2020	5	33	
2	Grading	Grading	2/17/2020	3/31/2020	5	32	
3	Building Construction	Building Construction	4/1/2020	5/25/2021	5	300	
4	Architectural Coating	Architectural Coating	4/1/2021	5/25/2021	5	39	

Acres of Grading (Site Preparation Phase): 0

Acres of Grading (Grading Phase): 0.92

Acres of Paving: 0.57

Residential Indoor: 61; Residential Outdoor: 20; Non-Residential Indoor: 0; Non-Residential Outdoor: 0; Striped Parking Area: 1,490 (Architectural Coating – sqft)

OffRoad Equipment

Phase Name	Offroad Equipment Type	Amount	Usage Hours	Horse Power	Load Factor
Demolition	Concrete/Industrial Saws	1	8.00	81	0.73
Demolition	Excavators	1	8.00	158	0.38
Building Construction	Cranes	1	4.00	231	0.29
Demolition	Tractors/Loaders/Backhoes	1	8.00	97	0.37
Grading	Concrete/Industrial Saws	1	8.00	81	0.73
Grading	Excavators	1	8.00	158	0.38
Grading	Graders	1	8.00	187	0.41
Demolition	Rubber Tired Dozers	1	1.00	247	0.40
Grading	Tractors/Loaders/Backhoes	1	8.00	97	0.37
Building Construction	Aerial Lifts	1	8.00	63	0.31
Grading	Rubber Tired Dozers	1	1.00	247	0.40
Building Construction	Forklifts	2	8.00	89	0.20
Building Construction	Pavers	1	8.00	130	0.42
Building Construction	Tractors/Loaders/Backhoes	1	8.00	97	0.37
Building Construction	Welders	1	8.00	46	0.45
Architectural Coating	Air Compressors	1	8.00	78	0.48

Trips and VMT

Phase Name	Offroad Equipment Count	Worker Trip Number	Vendor Trip Number	Hauling Trip Number	Worker Trip Length	Vendor Trip Length	Hauling Trip Length	Worker Vehicle Class	Vendor Vehicle Class	Hauling Vehicle Class
Demolition	4	8.00	0.00	332.00	14.70	6.90	40.00	LD_Mix	HDT_Mix	HHDT
Grading	5	10.00	0.00	0.00	14.70	6.90	20.00	LD_Mix	HDT_Mix	HHDT
Building Construction	7	33.00	7.00	0.00	14.70	6.90	20.00	LD_Mix	HDT_Mix	HHDT
Architectural Coating	1	7.00	0.00	0.00	14.70	6.90	20.00	LD_Mix	HDT_Mix	HHDT

3.1 Mitigation Measures Construction

Water Exposed Area

Clean Paved Roads

3.2 Demolition - 2020

Unmitigated Construction On-Site

	ROG	NOx	CO	SO2	Fugitive PM10	Exhaust PM10	PM10 Total	Fugitive PM2.5	Exhaust PM2.5	PM2.5 Total	Bio- CO2	NBio- CO2	Total CO2	CH4	N2O	CO2e
Category	tons/yr										MT/yr					
Fugitive Dust					0.0360	0.0000	0.0360	5.4400e-003	0.0000	5.4400e-003	0.0000	0.0000	0.0000	0.0000	0.0000	0.0000
Off-Road	0.0166	0.1523	0.1609	2.6000e-004		8.5400e-003	8.5400e-003		8.1200e-003	8.1200e-003	0.0000	22.4075	22.4075	4.9400e-003	0.0000	22.5310
Total	**0.0166**	**0.1523**	**0.1609**	**2.6000e-004**	**0.0360**	**8.5400e-003**	**0.0445**	**5.4400e-003**	**8.1200e-003**	**0.0136**	**0.0000**	**22.4075**	**22.4075**	**4.9400e-003**	**0.0000**	**22.5310**

3.2 Demolition - 2020

Unmitigated Construction Off-Site

	ROG	NOx	CO	SO2	Fugitive PM10	Exhaust PM10	PM10 Total	Fugitive PM2.5	Exhaust PM2.5	PM2.5 Total	Bio- CO2	NBio- CO2	Total CO2	CH4	N2O	CO2e
Category	tons/yr										MT/yr					
Hauling	2.2700e-003	0.0792	0.0212	2.4000e-004	5.6900e-003	2.9000e-004	5.9800e-003	1.5600e-003	2.8000e-004	1.8400e-003	0.0000	24.0863	24.0863	2.4300e-003	0.0000	24.1471
Vendor	0.0000	0.0000	0.0000	0.0000	0.0000	0.0000	0.0000	0.0000	0.0000	0.0000	0.0000	0.0000	0.0000	0.0000	0.0000	0.0000
Worker	5.1000e-004	3.6000e-004	4.0900e-003	1.0000e-005	1.4500e-003	1.0000e-005	1.4600e-003	3.8000e-004	1.0000e-005	3.9000e-004	0.0000	1.2542	1.2542	3.0000e-005	0.0000	1.2549
Total	**2.7800e-003**	**0.0795**	**0.0253**	**2.5000e-004**	**7.1400e-003**	**3.0000e-004**	**7.4400e-003**	**1.9400e-003**	**2.9000e-004**	**2.2300e-003**	**0.0000**	**25.3405**	**25.3405**	**2.4600e-003**	**0.0000**	**25.4020**

Mitigated Construction On-Site

	ROG	NOx	CO	SO2	Fugitive PM10	Exhaust PM10	PM10 Total	Fugitive PM2.5	Exhaust PM2.5	PM2.5 Total	Bio- CO2	NBio- CO2	Total CO2	CH4	N2O	CO2e
Category	tons/yr										MT/yr					
Fugitive Dust					0.0162	0.0000	0.0162	2.4500e-003	0.0000	2.4500e-003	0.0000	0.0000	0.0000	0.0000	0.0000	0.0000
Off-Road	0.0166	0.1523	0.1609	2.6000e-004		8.5400e-003	8.5400e-003		8.1200e-003	8.1200e-003	0.0000	22.4074	22.4074	4.9400e-003	0.0000	22.5309
Total	**0.0166**	**0.1523**	**0.1609**	**2.6000e-004**	**0.0162**	**8.5400e-003**	**0.0247**	**2.4500e-003**	**8.1200e-003**	**0.0106**	**0.0000**	**22.4074**	**22.4074**	**4.9400e-003**	**0.0000**	**22.5309**

3.2 Demolition - 2020

Mitigated Construction Off-Site

	ROG	NOx	CO	SO2	Fugitive PM10	Exhaust PM10	PM10 Total	Fugitive PM2.5	Exhaust PM2.5	PM2.5 Total	Bio- CO2	NBio- CO2	Total CO2	CH4	N2O	CO2e
Category	tons/yr										MT/yr					
Hauling	2.2700e-003	0.0792	0.0212	2.4000e-004	3.7100e-003	2.9000e-004	4.0000e-003	1.0700e-003	2.8000e-004	1.3500e-003	0.0000	24.0863	24.0863	2.4300e-003	0.0000	24.1471
Vendor	0.0000	0.0000	0.0000	0.0000	0.0000	0.0000	0.0000	0.0000	0.0000	0.0000	0.0000	0.0000	0.0000	0.0000	0.0000	0.0000
Worker	5.1000e-004	3.6000e-004	4.0900e-003	1.0000e-005	8.7000e-004	1.0000e-005	8.8000e-004	2.4000e-004	1.0000e-005	2.5000e-004	0.0000	1.2542	1.2542	3.0000e-005	0.0000	1.2549
Total	**2.7800e-003**	**0.0795**	**0.0253**	**2.5000e-004**	**4.5800e-003**	**3.0000e-004**	**4.8800e-003**	**1.3100e-003**	**2.9000e-004**	**1.6000e-003**	**0.0000**	**25.3405**	**25.3405**	**2.4600e-003**	**0.0000**	**25.4020**

3.3 Grading - 2020

Unmitigated Construction On-Site

	ROG	NOx	CO	SO2	Fugitive PM10	Exhaust PM10	PM10 Total	Fugitive PM2.5	Exhaust PM2.5	PM2.5 Total	Bio- CO2	NBio- CO2	Total CO2	CH4	N2O	CO2e
Category	tons/yr										MT/yr					
Fugitive Dust					0.0125	0.0000	0.0125	6.6700e-003	0.0000	6.6700e-003	0.0000	0.0000	0.0000	0.0000	0.0000	0.0000
Off-Road	0.0237	0.2489	0.1850	3.6000e-004		0.0115	0.0115		0.0109	0.0109	0.0000	31.0575	31.0575	7.8100e-003	0.0000	31.2527
Total	**0.0237**	**0.2489**	**0.1850**	**3.6000e-004**	**0.0125**	**0.0115**	**0.0241**	**6.6700e-003**	**0.0109**	**0.0175**	**0.0000**	**31.0575**	**31.0575**	**7.8100e-003**	**0.0000**	**31.2527**

3.3 Grading - 2020

Unmitigated Construction Off-Site

	ROG	NOx	CO	SO2	Fugitive PM10	Exhaust PM10	PM10 Total	Fugitive PM2.5	Exhaust PM2.5	PM2.5 Total	Bio- CO2	NBio- CO2	Total CO2	CH4	N2O	CO2e
Category	tons/yr										MT/yr					
Hauling	0.0000	0.0000	0.0000	0.0000	0.0000	0.0000	0.0000	0.0000	0.0000	0.0000	0.0000	0.0000	0.0000	0.0000	0.0000	0.0000
Vendor	0.0000	0.0000	0.0000	0.0000	0.0000	0.0000	0.0000	0.0000	0.0000	0.0000	0.0000	0.0000	0.0000	0.0000	0.0000	0.0000
Worker	6.2000e-004	4.4000e-004	4.9600e-003	2.0000e-005	1.7600e-003	1.0000e-005	1.7700e-003	4.7000e-004	1.0000e-005	4.8000e-004	0.0000	1.5203	1.5203	3.0000e-005	0.0000	1.5211
Total	**6.2000e-004**	**4.4000e-004**	**4.9600e-003**	**2.0000e-005**	**1.7600e-003**	**1.0000e-005**	**1.7700e-003**	**4.7000e-004**	**1.0000e-005**	**4.8000e-004**	**0.0000**	**1.5203**	**1.5203**	**3.0000e-005**	**0.0000**	**1.5211**

Mitigated Construction On-Site

	ROG	NOx	CO	SO2	Fugitive PM10	Exhaust PM10	PM10 Total	Fugitive PM2.5	Exhaust PM2.5	PM2.5 Total	Bio- CO2	NBio- CO2	Total CO2	CH4	N2O	CO2e
Category	tons/yr										MT/yr					
Fugitive Dust					5.6400e-003	0.0000	5.6400e-003	3.0000e-003	0.0000	3.0000e-003	0.0000	0.0000	0.0000	0.0000	0.0000	0.0000
Off-Road	0.0237	0.2489	0.1850	3.6000e-004		0.0115	0.0115		0.0109	0.0109	0.0000	31.0574	31.0574	7.8100e-003	0.0000	31.2526
Total	**0.0237**	**0.2489**	**0.1850**	**3.6000e-004**	**5.6400e-003**	**0.0115**	**0.0172**	**3.0000e-003**	**0.0109**	**0.0139**	**0.0000**	**31.0574**	**31.0574**	**7.8100e-003**	**0.0000**	**31.2526**

3.3 Grading - 2020

Mitigated Construction Off-Site

	ROG	NOx	CO	SO2	Fugitive PM10	Exhaust PM10	PM10 Total	Fugitive PM2.5	Exhaust PM2.5	PM2.5 Total	Bio- CO2	NBio- CO2	Total CO2	CH4	N2O	CO2e
Category	tons/yr										MT/yr					
Hauling	0.0000	0.0000	0.0000	0.0000	0.0000	0.0000	0.0000	0.0000	0.0000	0.0000	0.0000	0.0000	0.0000	0.0000	0.0000	0.0000
Vendor	0.0000	0.0000	0.0000	0.0000	0.0000	0.0000	0.0000	0.0000	0.0000	0.0000	0.0000	0.0000	0.0000	0.0000	0.0000	0.0000
Worker	6.2000e-004	4.4000e-004	4.9600e-003	2.0000e-005	1.0600e-003	1.0000e-005	1.0700e-003	2.9000e-004	1.0000e-005	3.1000e-004	0.0000	1.5203	1.5203	3.0000e-005	0.0000	1.5211
Total	**6.2000e-004**	**4.4000e-004**	**4.9600e-003**	**2.0000e-005**	**1.0600e-003**	**1.0000e-005**	**1.0700e-003**	**2.9000e-004**	**1.0000e-005**	**3.1000e-004**	**0.0000**	**1.5203**	**1.5203**	**3.0000e-005**	**0.0000**	**1.5211**

3.4 Building Construction - 2020

Unmitigated Construction On-Site

	ROG	NOx	CO	SO2	Fugitive PM10	Exhaust PM10	PM10 Total	Fugitive PM2.5	Exhaust PM2.5	PM2.5 Total	Bio- CO2	NBio- CO2	Total CO2	CH4	N2O	CO2e
Category	tons/yr										MT/yr					
Off-Road	0.1348	1.2235	1.1286	1.7700e-003		0.0665	0.0665		0.0619	0.0619	0.0000	152.0506	152.0506	0.0459	0.0000	153.1986
Total	**0.1348**	**1.2235**	**1.1286**	**1.7700e-003**		**0.0665**	**0.0665**		**0.0619**	**0.0619**	**0.0000**	**152.0506**	**152.0506**	**0.0459**	**0.0000**	**153.1986**

3.4 Building Construction - 2020

Unmitigated Construction Off-Site

	ROG	NOx	CO	SO2	Fugitive PM10	Exhaust PM10	PM10 Total	Fugitive PM2.5	Exhaust PM2.5	PM2.5 Total	Bio- CO2	NBio- CO2	Total CO2	CH4	N2O	CO2e
Category	tons/yr										MT/yr					
Hauling	0.0000	0.0000	0.0000	0.0000	0.0000	0.0000	0.0000	0.0000	0.0000	0.0000	0.0000	0.0000	0.0000	0.0000	0.0000	0.0000
Vendor	2.2500e-003	0.0731	0.0199	1.7000e-004	4.3400e-003	3.8000e-004	4.7200e-003	1.2500e-003	3.6000e-004	1.6100e-003	0.0000	16.7842	16.7842	1.4000e-003	0.0000	16.8192
Worker	0.0127	8.8800e-003	0.1008	3.4000e-004	0.0357	2.4000e-004	0.0359	9.4800e-003	2.2000e-004	9.7000e-003	0.0000	30.8850	30.8850	7.0000e-004	0.0000	30.9026
Total	**0.0149**	**0.0820**	**0.1207**	**5.1000e-004**	**0.0400**	**6.2000e-004**	**0.0406**	**0.0107**	**5.8000e-004**	**0.0113**	**0.0000**	**47.6691**	**47.6691**	**2.1000e-003**	**0.0000**	**47.7218**

Mitigated Construction On-Site

	ROG	NOx	CO	SO2	Fugitive PM10	Exhaust PM10	PM10 Total	Fugitive PM2.5	Exhaust PM2.5	PM2.5 Total	Bio- CO2	NBio- CO2	Total CO2	CH4	N2O	CO2e
Category	tons/yr										MT/yr					
Off-Road	0.1348	1.2235	1.1286	1.7700e-003		0.0665	0.0665		0.0619	0.0619	0.0000	152.0504	152.0504	0.0459	0.0000	153.1984
Total	**0.1348**	**1.2235**	**1.1286**	**1.7700e-003**		**0.0665**	**0.0665**		**0.0619**	**0.0619**	**0.0000**	**152.0504**	**152.0504**	**0.0459**	**0.0000**	**153.1984**

3.4 Building Construction - 2020

Mitigated Construction Off-Site

	ROG	NOx	CO	SO2	Fugitive PM10	Exhaust PM10	PM10 Total	Fugitive PM2.5	Exhaust PM2.5	PM2.5 Total	Bio- CO2	NBio- CO2	Total CO2	CH4	N2O	CO2e
Category	tons/yr										MT/yr					
Hauling	0.0000	0.0000	0.0000	0.0000	0.0000	0.0000	0.0000	0.0000	0.0000	0.0000	0.0000	0.0000	0.0000	0.0000	0.0000	0.0000
Vendor	2.2500e-003	0.0731	0.0199	1.7000e-004	2.9200e-003	3.8000e-004	3.3000e-003	9.0000e-004	3.6000e-004	1.2700e-003	0.0000	16.7842	16.7842	1.4000e-003	0.0000	16.8192
Worker	0.0127	8.8800e-003	0.1008	3.4000e-004	0.0215	2.4000e-004	0.0217	5.9800e-003	2.2000e-004	6.2000e-003	0.0000	30.8850	30.8850	7.0000e-004	0.0000	30.9026
Total	**0.0149**	**0.0820**	**0.1207**	**5.1000e-004**	**0.0244**	**6.2000e-004**	**0.0250**	**6.8800e-003**	**5.8000e-004**	**7.4700e-003**	**0.0000**	**47.6691**	**47.6691**	**2.1000e-003**	**0.0000**	**47.7218**

3.4 Building Construction - 2021

Unmitigated Construction On-Site

	ROG	NOx	CO	SO2	Fugitive PM10	Exhaust PM10	PM10 Total	Fugitive PM2.5	Exhaust PM2.5	PM2.5 Total	Bio- CO2	NBio- CO2	Total CO2	CH4	N2O	CO2e
Category	tons/yr										MT/yr					
Off-Road	0.0638	0.5862	0.5822	9.3000e-004		0.0303	0.0303		0.0282	0.0282	0.0000	79.4936	79.4936	0.0238	0.0000	80.0895
Total	**0.0638**	**0.5862**	**0.5822**	**9.3000e-004**		**0.0303**	**0.0303**		**0.0282**	**0.0282**	**0.0000**	**79.4936**	**79.4936**	**0.0238**	**0.0000**	**80.0895**

3.4 Building Construction - 2021

Unmitigated Construction Off-Site

	ROG	NOx	CO	SO2	Fugitive PM10	Exhaust PM10	PM10 Total	Fugitive PM2.5	Exhaust PM2.5	PM2.5 Total	Bio- CO2	NBio- CO2	Total CO2	CH4	N2O	CO2e
Category	tons/yr										MT/yr					
Hauling	0.0000	0.0000	0.0000	0.0000	0.0000	0.0000	0.0000	0.0000	0.0000	0.0000	0.0000	0.0000	0.0000	0.0000	0.0000	0.0000
Vendor	9.8000e-004	0.0344	9.6300e-003	9.0000e-005	2.2700e-003	7.0000e-005	2.3400e-003	6.5000e-004	7.0000e-005	7.2000e-004	0.0000	8.6999	8.6999	7.0000e-004	0.0000	8.7175
Worker	6.2300e-003	4.1900e-003	0.0488	1.7000e-004	0.0187	1.2000e-004	0.0188	4.9500e-003	1.1000e-004	5.0700e-003	0.0000	15.5876	15.5876	3.3000e-004	0.0000	15.5960
Total	**7.2100e-003**	**0.0385**	**0.0585**	**2.6000e-004**	**0.0209**	**1.9000e-004**	**0.0211**	**5.6000e-003**	**1.8000e-004**	**5.7900e-003**	**0.0000**	**24.2875**	**24.2875**	**1.0300e-003**	**0.0000**	**24.3135**

Mitigated Construction On-Site

	ROG	NOx	CO	SO2	Fugitive PM10	Exhaust PM10	PM10 Total	Fugitive PM2.5	Exhaust PM2.5	PM2.5 Total	Bio- CO2	NBio- CO2	Total CO2	CH4	N2O	CO2e
Category	tons/yr										MT/yr					
Off-Road	0.0638	0.5862	0.5822	9.3000e-004		0.0303	0.0303		0.0282	0.0282	0.0000	79.4935	79.4935	0.0238	0.0000	80.0895
Total	**0.0638**	**0.5862**	**0.5822**	**9.3000e-004**		**0.0303**	**0.0303**		**0.0282**	**0.0282**	**0.0000**	**79.4935**	**79.4935**	**0.0238**	**0.0000**	**80.0895**

3.4 Building Construction - 2021

Mitigated Construction Off-Site

	ROG	NOx	CO	SO2	Fugitive PM10	Exhaust PM10	PM10 Total	Fugitive PM2.5	Exhaust PM2.5	PM2.5 Total	Bio- CO2	NBio- CO2	Total CO2	CH4	N2O	CO2e
Category	tons/yr										MT/yr					
Hauling	0.0000	0.0000	0.0000	0.0000	0.0000	0.0000	0.0000	0.0000	0.0000	0.0000	0.0000	0.0000	0.0000	0.0000	0.0000	0.0000
Vendor	9.8000e-004	0.0344	9.6300e-003	9.0000e-005	1.5300e-003	7.0000e-005	1.6000e-003	4.7000e-004	7.0000e-005	5.4000e-004	0.0000	8.6999	8.6999	7.0000e-004	0.0000	8.7175
Worker	6.2300e-003	4.1900e-003	0.0488	1.7000e-004	0.0112	1.2000e-004	0.0113	3.1300e-003	1.1000e-004	3.2400e-003	0.0000	15.5876	15.5876	3.3000e-004	0.0000	15.5960
Total	**7.2100e-003**	**0.0385**	**0.0585**	**2.6000e-004**	**0.0128**	**1.9000e-004**	**0.0129**	**3.6000e-003**	**1.8000e-004**	**3.7800e-003**	**0.0000**	**24.2875**	**24.2875**	**1.0300e-003**	**0.0000**	**24.3135**

3.5 Architectural Coating - 2021

Unmitigated Construction On-Site

	ROG	NOx	CO	SO2	Fugitive PM10	Exhaust PM10	PM10 Total	Fugitive PM2.5	Exhaust PM2.5	PM2.5 Total	Bio- CO2	NBio- CO2	Total CO2	CH4	N2O	CO2e
Category	tons/yr										MT/yr					
Archit. Coating	3.5500e-003					0.0000	0.0000		0.0000	0.0000	0.0000	0.0000	0.0000	0.0000	0.0000	0.0000
Off-Road	5.6900e-003	0.0397	0.0473	8.0000e-005		2.4500e-003	2.4500e-003		2.4500e-003	2.4500e-003	0.0000	6.6385	6.6385	4.6000e-004	0.0000	6.6499
Total	**9.2400e-003**	**0.0397**	**0.0473**	**8.0000e-005**		**2.4500e-003**	**2.4500e-003**		**2.4500e-003**	**2.4500e-003**	**0.0000**	**6.6385**	**6.6385**	**4.6000e-004**	**0.0000**	**6.6499**

3.5 Architectural Coating - 2021

Unmitigated Construction Off-Site

	ROG	NOx	CO	SO2	Fugitive PM10	Exhaust PM10	PM10 Total	Fugitive PM2.5	Exhaust PM2.5	PM2.5 Total	Bio- CO2	NBio- CO2	Total CO2	CH4	N2O	CO2e
Category	tons/yr										MT/yr					
Hauling	0.0000	0.0000	0.0000	0.0000	0.0000	0.0000	0.0000	0.0000	0.0000	0.0000	0.0000	0.0000	0.0000	0.0000	0.0000	0.0000
Vendor	0.0000	0.0000	0.0000	0.0000	0.0000	0.0000	0.0000	0.0000	0.0000	0.0000	0.0000	0.0000	0.0000	0.0000	0.0000	0.0000
Worker	5.0000e-004	3.4000e-004	3.9200e-003	1.0000e-005	1.5000e-003	1.0000e-005	1.5100e-003	4.0000e-004	1.0000e-005	4.1000e-004	0.0000	1.2520	1.2520	3.0000e-005	0.0000	1.2526
Total	**5.0000e-004**	**3.4000e-004**	**3.9200e-003**	**1.0000e-005**	**1.5000e-003**	**1.0000e-005**	**1.5100e-003**	**4.0000e-004**	**1.0000e-005**	**4.1000e-004**	**0.0000**	**1.2520**	**1.2520**	**3.0000e-005**	**0.0000**	**1.2526**

Mitigated Construction On-Site

	ROG	NOx	CO	SO2	Fugitive PM10	Exhaust PM10	PM10 Total	Fugitive PM2.5	Exhaust PM2.5	PM2.5 Total	Bio- CO2	NBio- CO2	Total CO2	CH4	N2O	CO2e
Category	tons/yr										MT/yr					
Archit. Coating	3.5500e-003					0.0000	0.0000		0.0000	0.0000	0.0000	0.0000	0.0000	0.0000	0.0000	0.0000
Off-Road	5.6900e-003	0.0397	0.0473	8.0000e-005		2.4500e-003	2.4500e-003		2.4500e-003	2.4500e-003	0.0000	6.6385	6.6385	4.6000e-004	0.0000	6.6498
Total	**9.2400e-003**	**0.0397**	**0.0473**	**8.0000e-005**		**2.4500e-003**	**2.4500e-003**		**2.4500e-003**	**2.4500e-003**	**0.0000**	**6.6385**	**6.6385**	**4.6000e-004**	**0.0000**	**6.6498**

3.5 Architectural Coating - 2021

Mitigated Construction Off-Site

	ROG	NOx	CO	SO2	Fugitive PM10	Exhaust PM10	PM10 Total	Fugitive PM2.5	Exhaust PM2.5	PM2.5 Total	Bio- CO2	NBio- CO2	Total CO2	CH4	N2O	CO2e
Category	tons/yr										MT/yr					
Hauling	0.0000	0.0000	0.0000	0.0000	0.0000	0.0000	0.0000	0.0000	0.0000	0.0000	0.0000	0.0000	0.0000	0.0000	0.0000	0.0000
Vendor	0.0000	0.0000	0.0000	0.0000	0.0000	0.0000	0.0000	0.0000	0.0000	0.0000	0.0000	0.0000	0.0000	0.0000	0.0000	0.0000
Worker	5.0000e-004	3.4000e-004	3.9200e-003	1.0000e-005	9.0000e-004	1.0000e-005	9.1000e-004	2.5000e-004	1.0000e-005	2.6000e-004	0.0000	1.2520	1.2520	3.0000e-005	0.0000	1.2526
Total	**5.0000e-004**	**3.4000e-004**	**3.9200e-003**	**1.0000e-005**	**9.0000e-004**	**1.0000e-005**	**9.1000e-004**	**2.5000e-004**	**1.0000e-005**	**2.6000e-004**	**0.0000**	**1.2520**	**1.2520**	**3.0000e-005**	**0.0000**	**1.2526**

4.0 Operational Detail - Mobile

4.1 Mitigation Measures Mobile

	ROG	NOx	CO	SO2	Fugitive PM10	Exhaust PM10	PM10 Total	Fugitive PM2.5	Exhaust PM2.5	PM2.5 Total	Bio- CO2	NBio- CO2	Total CO2	CH4	N2O	CO2e
Category	tons/yr										MT/yr					
Mitigated	0.0431	0.1935	0.6280	2.4100e-003	0.2176	1.7700e-003	0.2193	0.0583	1.6500e-003	0.0599	0.0000	221.9941	221.9941	9.1100e-003	0.0000	222.2218
Unmitigated	0.0431	0.1935	0.6280	2.4100e-003	0.2176	1.7700e-003	0.2193	0.0583	1.6500e-003	0.0599	0.0000	221.9941	221.9941	9.1100e-003	0.0000	222.2218

4.2 Trip Summary Information

	Average Daily Trip Rate			Unmitigated	Mitigated
Land Use	Weekday	Saturday	Sunday	Annual VMT	Annual VMT
Congregate Care (Assisted Living)	149.12	149.12	149.12	573,628	573,628
Parking Lot	0.00	0.00	0.00		
Total	149.12	149.12	149.12	573,628	573,628

4.3 Trip Type Information

	Miles			Trip %			Trip Purpose %		
Land Use	H-W or C-W	H-S or C-C	H-O or C-NW	H-W or C-W	H-S or C-C	H-O or C-NW	Primary	Diverted	Pass-by
Congregate Care (Assisted	14.70	5.90	8.70	40.00	19.00	41.00	100	0	0
Parking Lot	16.60	8.40	6.90	0.00	0.00	0.00	0	0	0

4.4 Fleet Mix

Land Use	LDA	LDT1	LDT2	MDV	LHD1	LHD2	MHD	HHD	OBUS	UBUS	MCY	SBUS	MH
Congregate Care (Assisted Living)	0.558976	0.043534	0.209821	0.113949	0.016111	0.005791	0.025447	0.016654	0.001713	0.001553	0.004896	0.000590	0.000966
Parking Lot	0.558976	0.043534	0.209821	0.113949	0.016111	0.005791	0.025447	0.016654	0.001713	0.001553	0.004896	0.000590	0.000966

5.0 Energy Detail

Historical Energy Use: N

5.1 Mitigation Measures Energy

	ROG	NOx	CO	SO2	Fugitive PM10	Exhaust PM10	PM10 Total	Fugitive PM2.5	Exhaust PM2.5	PM2.5 Total	Bio- CO2	NBio- CO2	Total CO2	CH4	N2O	CO2e
Category	tons/yr										MT/yr					
Electricity Mitigated						0.0000	0.0000		0.0000	0.0000	0.0000	43.3011	43.3011	1.7900e-003	3.7000e-004	43.4560
Electricity Unmitigated						0.0000	0.0000		0.0000	0.0000	0.0000	43.3011	43.3011	1.7900e-003	3.7000e-004	43.4560
NaturalGas Mitigated	1.9700e-003	0.0169	7.1700e-003	1.1000e-004		1.3600e-003	1.3600e-003		1.3600e-003	1.3600e-003	0.0000	19.5140	19.5140	3.7000e-004	3.6000e-004	19.6300
NaturalGas Unmitigated	1.9700e-003	0.0169	7.1700e-003	1.1000e-004		1.3600e-003	1.3600e-003		1.3600e-003	1.3600e-003	0.0000	19.5140	19.5140	3.7000e-004	3.6000e-004	19.6300

5.2 Energy by Land Use - NaturalGas

Unmitigated

	NaturalGas Use	ROG	NOx	CO	SO2	Fugitive PM10	Exhaust PM10	PM10 Total	Fugitive PM2.5	Exhaust PM2.5	PM2.5 Total	Bio- CO2	NBio- CO2	Total CO2	CH4	N2O	CO2e
Land Use	kBTU/yr	tons/yr										MT/yr					
Congregate Care (Assisted Living)	365679	1.9700e-003	0.0169	7.1700e-003	1.1000e-004		1.3600e-003	1.3600e-003		1.3600e-003	1.3600e-003	0.0000	19.5140	19.5140	3.7000e-004	3.6000e-004	19.6300
Parking Lot	0	0.0000	0.0000	0.0000	0.0000		0.0000	0.0000		0.0000	0.0000	0.0000	0.0000	0.0000	0.0000	0.0000	0.0000
Total		**1.9700e-003**	**0.0169**	**7.1700e-003**	**1.1000e-004**		**1.3600e-003**	**1.3600e-003**		**1.3600e-003**	**1.3600e-003**	**0.0000**	**19.5140**	**19.5140**	**3.7000e-004**	**3.6000e-004**	**19.6300**

Mitigated

	NaturalGas Use	ROG	NOx	CO	SO2	Fugitive PM10	Exhaust PM10	PM10 Total	Fugitive PM2.5	Exhaust PM2.5	PM2.5 Total	Bio- CO2	NBio- CO2	Total CO2	CH4	N2O	CO2e
Land Use	kBTU/yr	tons/yr										MT/yr					
Congregate Care (Assisted Living)	365679	1.9700e-003	0.0169	7.1700e-003	1.1000e-004		1.3600e-003	1.3600e-003		1.3600e-003	1.3600e-003	0.0000	19.5140	19.5140	3.7000e-004	3.6000e-004	19.6300
Parking Lot	0	0.0000	0.0000	0.0000	0.0000		0.0000	0.0000		0.0000	0.0000	0.0000	0.0000	0.0000	0.0000	0.0000	0.0000
Total		**1.9700e-003**	**0.0169**	**7.1700e-003**	**1.1000e-004**		**1.3600e-003**	**1.3600e-003**		**1.3600e-003**	**1.3600e-003**	**0.0000**	**19.5140**	**19.5140**	**3.7000e-004**	**3.6000e-004**	**19.6300**

5.3 Energy by Land Use - Electricity

Unmitigated

	Electricity Use	Total CO2	CH4	N2O	CO2e
Land Use	kWh/yr	MT/yr			
Congregate Care (Assisted Living)	127210	40.5317	1.6700e-003	3.5000e-004	40.6767
Parking Lot	8691.9	2.7694	1.1000e-004	2.0000e-005	2.7793
Total		**43.3011**	**1.7800e-003**	**3.7000e-004**	**43.4560**

Mitigated

	Electricity Use	Total CO2	CH4	N2O	CO2e
Land Use	kWh/yr	MT/yr			
Congregate Care (Assisted Living)	127210	40.5317	1.6700e-003	3.5000e-004	40.6767
Parking Lot	8691.9	2.7694	1.1000e-004	2.0000e-005	2.7793
Total		**43.3011**	**1.7800e-003**	**3.7000e-004**	**43.4560**

6.0 Area Detail

6.1 Mitigation Measures Area

	ROG	NOx	CO	SO2	Fugitive PM10	Exhaust PM10	PM10 Total	Fugitive PM2.5	Exhaust PM2.5	PM2.5 Total	Bio- CO2	NBio- CO2	Total CO2	CH4	N2O	CO2e
Category	tons/yr										MT/yr					
Mitigated	0.0121	3.8200e-003	0.3309	2.0000e-005		1.8200e-003	1.8200e-003		1.8200e-003	1.8200e-003	0.0000	0.5394	0.5394	5.2000e-004	0.0000	0.5525
Unmitigated	0.0121	3.8200e-003	0.3309	2.0000e-005		1.8200e-003	1.8200e-003		1.8200e-003	1.8200e-003	0.0000	0.5394	0.5394	5.2000e-004	0.0000	0.5525

6.2 Area by SubCategory

Unmitigated

	ROG	NOx	CO	SO2	Fugitive PM10	Exhaust PM10	PM10 Total	Fugitive PM2.5	Exhaust PM2.5	PM2.5 Total	Bio- CO2	NBio- CO2	Total CO2	CH4	N2O	CO2e
SubCategory	tons/yr										MT/yr					
Architectural Coating	3.5000e-004					0.0000	0.0000		0.0000	0.0000	0.0000	0.0000	0.0000	0.0000	0.0000	0.0000
Consumer Products	1.7100e-003					0.0000	0.0000		0.0000	0.0000	0.0000	0.0000	0.0000	0.0000	0.0000	0.0000
Hearth	0.0000	0.0000	0.0000	0.0000		0.0000	0.0000		0.0000	0.0000	0.0000	0.0000	0.0000	0.0000	0.0000	0.0000
Landscaping	0.0100	3.8200e-003	0.3309	2.0000e-005		1.8200e-003	1.8200e-003		1.8200e-003	1.8200e-003	0.0000	0.5394	0.5394	5.2000e-004	0.0000	0.5525
Total	**0.0121**	**3.8200e-003**	**0.3309**	**2.0000e-005**		**1.8200e-003**	**1.8200e-003**		**1.8200e-003**	**1.8200e-003**	**0.0000**	**0.5394**	**0.5394**	**5.2000e-004**	**0.0000**	**0.5525**

6.2 Area by SubCategory

Mitigated

	ROG	NOx	CO	SO2	Fugitive PM10	Exhaust PM10	PM10 Total	Fugitive PM2.5	Exhaust PM2.5	PM2.5 Total	Bio- CO2	NBio- CO2	Total CO2	CH4	N2O	CO2e
SubCategory	tons/yr										MT/yr					
Architectural Coating	3.5000e-004					0.0000	0.0000		0.0000	0.0000	0.0000	0.0000	0.0000	0.0000	0.0000	0.0000
Consumer Products	1.7100e-003					0.0000	0.0000		0.0000	0.0000	0.0000	0.0000	0.0000	0.0000	0.0000	0.0000
Hearth	0.0000	0.0000	0.0000	0.0000		0.0000	0.0000		0.0000	0.0000	0.0000	0.0000	0.0000	0.0000	0.0000	0.0000
Landscaping	0.0100	3.8200e-003	0.3309	2.0000e-005		1.8200e-003	1.8200e-003		1.8200e-003	1.8200e-003	0.0000	0.5394	0.5394	5.2000e-004	0.0000	0.5525
Total	**0.0121**	**3.8200e-003**	**0.3309**	**2.0000e-005**		**1.8200e-003**	**1.8200e-003**		**1.8200e-003**	**1.8200e-003**	**0.0000**	**0.5394**	**0.5394**	**5.2000e-004**	**0.0000**	**0.5525**

7.0 Water Detail

7.1 Mitigation Measures Water

	Total CO2	CH4	N2O	CO2e
Category	MT/yr			
Mitigated	13.9642	0.0685	1.7200e-003	16.1883
Unmitigated	13.9642	0.0685	1.7200e-003	16.1883

7.2 Water by Land Use

Unmitigated

	Indoor/Outdoor Use	Total CO2	CH4	N2O	CO2e
Land Use	Mgal	MT/yr			
Congregate Care (Assisted Living)	2.08493 / 1.31441	13.9642	0.0685	1.7200e-003	16.1883
Parking Lot	0 / 0	0.0000	0.0000	0.0000	0.0000
Total		**13.9642**	**0.0685**	**1.7200e-003**	**16.1883**

7.2 Water by Land Use

Mitigated

	Indoor/Outdoor Use	Total CO2	CH4	N2O	CO2e
Land Use	Mgal	MT/yr			
Congregate Care (Assisted Living)	2.08493 / 1.31441	13.9642	0.0685	1.7200e-003	16.1883
Parking Lot	0 / 0	0.0000	0.0000	0.0000	0.0000
Total		**13.9642**	**0.0685**	**1.7200e-003**	**16.1883**

8.0 Waste Detail

8.1 Mitigation Measures Waste

Category/Year

	Total CO2	CH4	N2O	CO2e
	MT/yr			
Mitigated	5.9273	0.3503	0.0000	14.6847
Unmitigated	5.9273	0.3503	0.0000	14.6847

8.2 Waste by Land Use

Unmitigated

	Waste Disposed	Total CO2	CH4	N2O	CO2e
Land Use	tons	MT/yr			
Congregate Care (Assisted Living)	29.2	5.9273	0.3503	0.0000	14.6847
Parking Lot	0	0.0000	0.0000	0.0000	0.0000
Total		**5.9273**	**0.3503**	**0.0000**	**14.6847**

Mitigated

	Waste Disposed	Total CO2	CH4	N2O	CO2e
Land Use	tons	MT/yr			
Congregate Care (Assisted Living)	29.2	5.9273	0.3503	0.0000	14.6847
Parking Lot	0	0.0000	0.0000	0.0000	0.0000
Total		**5.9273**	**0.3503**	**0.0000**	**14.6847**

9.0 Operational Offroad

Equipment Type	Number	Hours/Day	Days/Year	Horse Power	Load Factor	Fuel Type

10.0 Stationary Equipment

Fire Pumps and Emergency Generators

Equipment Type	Number	Hours/Day	Hours/Year	Horse Power	Load Factor	Fuel Type

Boilers

Equipment Type	Number	Heat Input/Day	Heat Input/Year	Boiler Rating	Fuel Type

User Defined Equipment

Equipment Type	Number

11.0 Vegetation

Park Plaza Memory Care - Future

Orange County, Summer

1.0 Project Characteristics

1.1 Land Usage

Land Uses	Size	Metric	Lot Acreage	Floor Surface Area	Population
Parking Lot	15.00	Space	0.57	24,834.00	0
Congregate Care (Assisted Living)	32.00	Dwelling Unit	0.35	30.11	36

1.2 Other Project Characteristics

Urbanization	Urban	**Wind Speed (m/s)**	2.2	**Precipitation Freq (Days)**	30
Climate Zone	8			**Operational Year**	2021
Utility Company	Southern California Edison				
CO2 Intensity (lb/MWhr)	702.44	**CH4 Intensity (lb/MWhr)**	0.029	**N2O Intensity (lb/MWhr)**	0.006

1.3 User Entered Comments & Non-Default Data

Park Plaza Memory Care - Future - Orange County, Summer

Project Characteristics - Applicant Info

Land Use - Applicant Info

Construction Phase - Applicant Info

Off-road Equipment - COnsultant Assumptions

Off-road Equipment - Consultant Assumptions

Off-road Equipment - Consultant Assumptions

Off-road Equipment - Consultant Assumptions

Trips and VMT - Consultant Assumptions

Demolition - Consultant Assumptions

Grading - Applicant Info

Vehicle Trips - Source: Linscott, Law & Greenspan, Engineers. Traffic Impact Analysis - Park Plaza Memory Care Project. June 2019. Trip rate adjusted to account for per 36 beds, not per 32 dwelling units.

Woodstoves - Applicant Info.

Energy Use -

Construction Off-road Equipment Mitigation - Assumes SCAQMD Rule 403 control efficiences

Table Name	Column Name	Default Value	New Value
tblConstDustMitigation	CleanPavedRoadPercentReduction	0	46
tblConstDustMitigation	WaterExposedAreaPM10PercentReduction	61	55
tblConstDustMitigation	WaterExposedAreaPM25PercentReduction	61	55
tblConstructionPhase	NumDays	5.00	39.00
tblConstructionPhase	NumDays	100.00	300.00
tblConstructionPhase	NumDays	10.00	33.00
tblConstructionPhase	NumDays	2.00	32.00
tblFireplaces	FireplaceDayYear	25.00	0.00
tblFireplaces	FireplaceHourDay	3.00	0.00
tblFireplaces	FireplaceWoodMass	1,019.20	0.00

tblFireplaces	NumberGas	27.20	0.00
tblFireplaces	NumberNoFireplace	3.20	0.00
tblFireplaces	NumberWood	1.60	0.00
tblGrading	AcresOfGrading	16.00	0.92
tblLandUse	LandUseSquareFeet	6,000.00	24,834.00
tblLandUse	LandUseSquareFeet	32,000.00	30.11
tblLandUse	LotAcreage	0.13	0.57
tblLandUse	LotAcreage	2.00	0.35
tblLandUse	Population	92.00	36.00
tblOffRoadEquipment	OffRoadEquipmentUnitAmount	2.00	1.00
tblOffRoadEquipment	OffRoadEquipmentUnitAmount	2.00	1.00
tblOffRoadEquipment	OffRoadEquipmentUnitAmount	2.00	1.00
tblOffRoadEquipment	UsageHours	6.00	8.00
tblOffRoadEquipment	UsageHours	6.00	8.00
tblOffRoadEquipment	UsageHours	6.00	8.00
tblOffRoadEquipment	UsageHours	6.00	8.00
tblTripsAndVMT	HaulingTripLength	20.00	40.00
tblTripsAndVMT	WorkerTripNumber	10.00	8.00
tblTripsAndVMT	WorkerTripNumber	13.00	10.00
tblVehicleTrips	DV_TP	11.00	0.00
tblVehicleTrips	HO_TTP	40.60	41.00
tblVehicleTrips	HS_TTP	19.20	19.00
tblVehicleTrips	HW_TTP	40.20	40.00
tblVehicleTrips	PB_TP	3.00	0.00
tblVehicleTrips	PR_TP	86.00	100.00
tblVehicleTrips	ST_TR	2.20	4.66
tblVehicleTrips	SU_TR	2.44	4.66

tblVehicleTrips	WD_TR	2.74	4.66
tblWoodstoves	NumberCatalytic	1.60	0.00
tblWoodstoves	NumberNoncatalytic	1.60	0.00
tblWoodstoves	WoodstoveDayYear	25.00	0.00
tblWoodstoves	WoodstoveWoodMass	999.60	0.00

2.0 Emissions Summary

2.1 Overall Construction (Maximum Daily Emission)

Unmitigated Construction

	ROG	NOx	CO	SO2	Fugitive PM10	Exhaust PM10	PM10 Total	Fugitive PM2.5	Exhaust PM2.5	PM2.5 Total	Bio- CO2	NBio- CO2	Total CO2	CH4	N2O	CO2e
Year	lb/day										lb/day					
2020	1.5219	15.5827	12.7301	0.0309	2.6190	0.7205	3.1546	0.4495	0.6787	1.1254	0.0000	3,198.7421	3,198.7421	0.5404	0.0000	3,211.0793
2021	1.8756	14.1631	15.1215	0.0279	0.4918	0.7183	1.2101	0.1314	0.6769	0.8083	0.0000	2,685.7860	2,685.7860	0.5597	0.0000	2,699.7793
Maximum	**1.8756**	**15.5827**	**15.1215**	**0.0309**	**2.6190**	**0.7205**	**3.1546**	**0.4495**	**0.6787**	**1.1254**	**0.0000**	**3,198.7421**	**3,198.7421**	**0.5597**	**0.0000**	**3,211.0793**

Mitigated Construction

	ROG	NOx	CO	SO2	Fugitive PM10	Exhaust PM10	PM10 Total	Fugitive PM2.5	Exhaust PM2.5	PM2.5 Total	Bio- CO2	NBio- CO2	Total CO2	CH4	N2O	CO2e
Year	lb/day										lb/day					
2020	1.5219	15.5827	12.7301	0.0309	1.2622	0.7205	1.7977	0.2292	0.6787	0.8850	0.0000	3,198.7421	3,198.7421	0.5404	0.0000	3,211.0793
2021	1.8756	14.1631	15.1215	0.0279	0.2983	0.7183	1.0167	0.0840	0.6769	0.7608	0.0000	2,685.7860	2,685.7860	0.5597	0.0000	2,699.7793
Maximum	**1.8756**	**15.5827**	**15.1215**	**0.0309**	**1.2622**	**0.7205**	**1.7977**	**0.2292**	**0.6787**	**0.8850**	**0.0000**	**3,198.7421**	**3,198.7421**	**0.5597**	**0.0000**	**3,211.0793**

	ROG	**NOx**	**CO**	**SO2**	**Fugitive PM10**	**Exhaust PM10**	**PM10 Total**	**Fugitive PM2.5**	**Exhaust PM2.5**	**PM2.5 Total**	**Bio- CO2**	**NBio-CO2**	**Total CO2**	**CH4**	**N20**	**CO2e**
Percent Reduction	**0.00**	**0.00**	**0.00**	**0.00**	**49.84**	**0.00**	**35.52**	**46.09**	**0.00**	**14.89**	**0.00**	**0.00**	**0.00**	**0.00**	**0.00**	**0.00**

2.2 Overall Operational

Unmitigated Operational

	ROG	NOx	CO	SO2	Fugitive PM10	Exhaust PM10	PM10 Total	Fugitive PM2.5	Exhaust PM2.5	PM2.5 Total	Bio- CO2	NBio- CO2	Total CO2	CH4	N2O	CO2e
Category	lb/day										lb/day					
Area	0.0916	0.0306	2.6473	1.4000e-004		0.0146	0.0146		0.0146	0.0146	0.0000	4.7570	4.7570	4.6200e-003	0.0000	4.8723
Energy	0.0108	0.0923	0.0393	5.9000e-004		7.4600e-003	7.4600e-003		7.4600e-003	7.4600e-003		117.8658	117.8658	2.2600e-003	2.1600e-003	118.5662
Mobile	0.2475	1.0121	3.5758	0.0137	1.2167	9.7100e-003	1.2265	0.3254	9.0400e-003	0.3344		1,390.0498	1,390.0498	0.0556		1,391.4405
Total	**0.3500**	**1.1350**	**6.2624**	**0.0144**	**1.2167**	**0.0318**	**1.2485**	**0.3254**	**0.0311**	**0.3565**	**0.0000**	**1,512.6726**	**1,512.6726**	**0.0625**	**2.1600e-003**	**1,514.8791**

Mitigated Operational

	ROG	NOx	CO	SO2	Fugitive PM10	Exhaust PM10	PM10 Total	Fugitive PM2.5	Exhaust PM2.5	PM2.5 Total	Bio- CO2	NBio- CO2	Total CO2	CH4	N2O	CO2e
Category	lb/day										lb/day					
Area	0.0916	0.0306	2.6473	1.4000e-004		0.0146	0.0146		0.0146	0.0146	0.0000	4.7570	4.7570	4.6200e-003	0.0000	4.8723
Energy	0.0108	0.0923	0.0393	5.9000e-004		7.4600e-003	7.4600e-003		7.4600e-003	7.4600e-003		117.8658	117.8658	2.2600e-003	2.1600e-003	118.5662
Mobile	0.2475	1.0121	3.5758	0.0137	1.2167	9.7100e-003	1.2265	0.3254	9.0400e-003	0.3344		1,390.0498	1,390.0498	0.0556		1,391.4405
Total	**0.3500**	**1.1350**	**6.2624**	**0.0144**	**1.2167**	**0.0318**	**1.2485**	**0.3254**	**0.0311**	**0.3565**	**0.0000**	**1,512.6726**	**1,512.6726**	**0.0625**	**2.1600e-003**	**1,514.8791**

	ROG	NOx	CO	SO2	Fugitive PM10	Exhaust PM10	PM10 Total	Fugitive PM2.5	Exhaust PM2.5	PM2.5 Total	Bio- CO2	NBio-CO2	Total CO2	CH4	N20	CO2e
Percent Reduction	**0.00**	**0.00**	**0.00**	**0.00**	**0.00**	**0.00**	**0.00**	**0.00**	**0.00**	**0.00**	**0.00**	**0.00**	**0.00**	**0.00**	**0.00**	**0.00**

3.0 Construction Detail

Construction Phase

Phase Number	Phase Name	Phase Type	Start Date	End Date	Num Days Week	Num Days	Phase Description
1	Demolition	Demolition	1/1/2020	2/14/2020	5	33	
2	Grading	Grading	2/17/2020	3/31/2020	5	32	
3	Building Construction	Building Construction	4/1/2020	5/25/2021	5	300	
4	Architectural Coating	Architectural Coating	4/1/2021	5/25/2021	5	39	

Acres of Grading (Site Preparation Phase): 0

Acres of Grading (Grading Phase): 0.92

Acres of Paving: 0.57

Residential Indoor: 61; Residential Outdoor: 20; Non-Residential Indoor: 0; Non-Residential Outdoor: 0; Striped Parking Area: 1,490 (Architectural Coating – sqft)

OffRoad Equipment

Park Plaza Memory Care - Future - Orange County, Summer

Phase Name	Offroad Equipment Type	Amount	Usage Hours	Horse Power	Load Factor
Demolition	Concrete/Industrial Saws	1	8.00	81	0.73
Demolition	Excavators	1	8.00	158	0.38
Building Construction	Cranes	1	4.00	231	0.29
Demolition	Tractors/Loaders/Backhoes	1	8.00	97	0.37
Grading	Concrete/Industrial Saws	1	8.00	81	0.73
Grading	Excavators	1	8.00	158	0.38
Grading	Graders	1	8.00	187	0.41
Demolition	Rubber Tired Dozers	1	1.00	247	0.40
Grading	Tractors/Loaders/Backhoes	1	8.00	97	0.37
Building Construction	Aerial Lifts	1	8.00	63	0.31
Grading	Rubber Tired Dozers	1	1.00	247	0.40
Building Construction	Forklifts	2	8.00	89	0.20
Building Construction	Pavers	1	8.00	130	0.42
Building Construction	Tractors/Loaders/Backhoes	1	8.00	97	0.37
Building Construction	Welders	1	8.00	46	0.45
Architectural Coating	Air Compressors	1	8.00	78	0.48

Trips and VMT

Phase Name	Offroad Equipment Count	Worker Trip Number	Vendor Trip Number	Hauling Trip Number	Worker Trip Length	Vendor Trip Length	Hauling Trip Length	Worker Vehicle Class	Vendor Vehicle Class	Hauling Vehicle Class
Demolition	4	8.00	0.00	332.00	14.70	6.90	40.00	LD_Mix	HDT_Mix	HHDT
Grading	5	10.00	0.00	0.00	14.70	6.90	20.00	LD_Mix	HDT_Mix	HHDT
Building Construction	7	33.00	7.00	0.00	14.70	6.90	20.00	LD_Mix	HDT_Mix	HHDT
Architectural Coating	1	7.00	0.00	0.00	14.70	6.90	20.00	LD_Mix	HDT_Mix	HHDT

3.1 Mitigation Measures Construction

Water Exposed Area

Clean Paved Roads

3.2 Demolition - 2020

Unmitigated Construction On-Site

	ROG	NOx	CO	SO2	Fugitive PM10	Exhaust PM10	PM10 Total	Fugitive PM2.5	Exhaust PM2.5	PM2.5 Total	Bio- CO2	NBio- CO2	Total CO2	CH4	N2O	CO2e
Category	lb/day										lb/day					
Fugitive Dust					2.1795	0.0000	2.1795	0.3300	0.0000	0.3300			0.0000			0.0000
Off-Road	1.0076	9.2329	9.7505	0.0156		0.5175	0.5175		0.4920	0.4920		1,496.9694	1,496.9694	0.3300		1,505.2197
Total	**1.0076**	**9.2329**	**9.7505**	**0.0156**	**2.1795**	**0.5175**	**2.6970**	**0.3300**	**0.4920**	**0.8219**		**1,496.9694**	**1,496.9694**	**0.3300**		**1,505.2197**

3.2 Demolition - 2020

Unmitigated Construction Off-Site

	ROG	NOx	CO	SO2	Fugitive PM10	Exhaust PM10	PM10 Total	Fugitive PM2.5	Exhaust PM2.5	PM2.5 Total	Bio- CO2	NBio- CO2	Total CO2	CH4	N2O	CO2e
Category	lb/day										lb/day					
Hauling	0.1366	4.6073	1.2697	0.0145	0.3501	0.0175	0.3676	0.0958	0.0167	0.1125		1,614.5692	1,614.5692	0.1615		1,618.6064
Vendor	0.0000	0.0000	0.0000	0.0000	0.0000	0.0000	0.0000	0.0000	0.0000	0.0000		0.0000	0.0000	0.0000		0.0000
Worker	0.0307	0.0194	0.2619	8.7000e-004	0.0894	5.9000e-004	0.0900	0.0237	5.4000e-004	0.0243		87.2035	87.2035	1.9900e-003		87.2532
Total	**0.1674**	**4.6267**	**1.5315**	**0.0154**	**0.4396**	**0.0180**	**0.4576**	**0.1195**	**0.0172**	**0.1368**		**1,701.7727**	**1,701.7727**	**0.1635**		**1,705.8595**

Mitigated Construction On-Site

	ROG	NOx	CO	SO2	Fugitive PM10	Exhaust PM10	PM10 Total	Fugitive PM2.5	Exhaust PM2.5	PM2.5 Total	Bio- CO2	NBio- CO2	Total CO2	CH4	N2O	CO2e
Category	lb/day										lb/day					
Fugitive Dust					0.9808	0.0000	0.9808	0.1485	0.0000	0.1485			0.0000			0.0000
Off-Road	1.0076	9.2329	9.7505	0.0156		0.5175	0.5175		0.4920	0.4920	0.0000	1,496.9694	1,496.9694	0.3300		1,505.2197
Total	**1.0076**	**9.2329**	**9.7505**	**0.0156**	**0.9808**	**0.5175**	**1.4983**	**0.1485**	**0.4920**	**0.6405**	**0.0000**	**1,496.9694**	**1,496.9694**	**0.3300**		**1,505.2197**

3.2 Demolition - 2020

Mitigated Construction Off-Site

	ROG	NOx	CO	SO2	Fugitive PM10	Exhaust PM10	PM10 Total	Fugitive PM2.5	Exhaust PM2.5	PM2.5 Total	Bio- CO2	NBio- CO2	Total CO2	CH4	N2O	CO2e
Category	lb/day										lb/day					
Hauling	0.1366	4.6073	1.2697	0.0145	0.2278	0.0175	0.2452	0.0658	0.0167	0.0825		1,614.5692	1,614.5692	0.1615		1,618.6064
Vendor	0.0000	0.0000	0.0000	0.0000	0.0000	0.0000	0.0000	0.0000	0.0000	0.0000		0.0000	0.0000	0.0000		0.0000
Worker	0.0307	0.0194	0.2619	8.7000e-004	0.0537	5.9000e-004	0.0543	0.0149	5.4000e-004	0.0155		87.2035	87.2035	1.9900e-003		87.2532
Total	**0.1674**	**4.6267**	**1.5315**	**0.0154**	**0.2814**	**0.0180**	**0.2995**	**0.0807**	**0.0172**	**0.0980**		**1,701.7727**	**1,701.7727**	**0.1635**		**1,705.8595**

3.3 Grading - 2020

Unmitigated Construction On-Site

	ROG	NOx	CO	SO2	Fugitive PM10	Exhaust PM10	PM10 Total	Fugitive PM2.5	Exhaust PM2.5	PM2.5 Total	Bio- CO2	NBio- CO2	Total CO2	CH4	N2O	CO2e
Category	lb/day										lb/day					
Fugitive Dust					0.7833	0.0000	0.7833	0.4171	0.0000	0.4171			0.0000			0.0000
Off-Road	1.4834	15.5585	11.5650	0.0222		0.7197	0.7197		0.6780	0.6780		2,139.6881	2,139.6881	0.5379		2,153.1351
Total	**1.4834**	**15.5585**	**11.5650**	**0.0222**	**0.7833**	**0.7197**	**1.5030**	**0.4171**	**0.6780**	**1.0951**		**2,139.6881**	**2,139.6881**	**0.5379**		**2,153.1351**

3.3 Grading - 2020

Unmitigated Construction Off-Site

	ROG	NOx	CO	SO2	Fugitive PM10	Exhaust PM10	PM10 Total	Fugitive PM2.5	Exhaust PM2.5	PM2.5 Total	Bio- CO2	NBio- CO2	Total CO2	CH4	N2O	CO2e
Category	lb/day										lb/day					
Hauling	0.0000	0.0000	0.0000	0.0000	0.0000	0.0000	0.0000	0.0000	0.0000	0.0000		0.0000	0.0000	0.0000		0.0000
Vendor	0.0000	0.0000	0.0000	0.0000	0.0000	0.0000	0.0000	0.0000	0.0000	0.0000		0.0000	0.0000	0.0000		0.0000
Worker	0.0384	0.0242	0.3273	1.0900e-003	0.1118	7.4000e-004	0.1125	0.0296	6.8000e-004	0.0303		109.0044	109.0044	2.4800e-003		109.0665
Total	**0.0384**	**0.0242**	**0.3273**	**1.0900e-003**	**0.1118**	**7.4000e-004**	**0.1125**	**0.0296**	**6.8000e-004**	**0.0303**		**109.0044**	**109.0044**	**2.4800e-003**		**109.0665**

Mitigated Construction On-Site

	ROG	NOx	CO	SO2	Fugitive PM10	Exhaust PM10	PM10 Total	Fugitive PM2.5	Exhaust PM2.5	PM2.5 Total	Bio- CO2	NBio- CO2	Total CO2	CH4	N2O	CO2e
Category	lb/day										lb/day					
Fugitive Dust					0.3525	0.0000	0.3525	0.1877	0.0000	0.1877			0.0000			0.0000
Off-Road	1.4834	15.5585	11.5650	0.0222		0.7197	0.7197		0.6780	0.6780	0.0000	2,139.6881	2,139.6881	0.5379		2,153.1351
Total	**1.4834**	**15.5585**	**11.5650**	**0.0222**	**0.3525**	**0.7197**	**1.0722**	**0.1877**	**0.6780**	**0.8657**	**0.0000**	**2,139.6881**	**2,139.6881**	**0.5379**		**2,153.1351**

3.3 Grading - 2020

Mitigated Construction Off-Site

	ROG	NOx	CO	SO2	Fugitive PM10	Exhaust PM10	PM10 Total	Fugitive PM2.5	Exhaust PM2.5	PM2.5 Total	Bio- CO2	NBio- CO2	Total CO2	CH4	N2O	CO2e
Category	lb/day										lb/day					
Hauling	0.0000	0.0000	0.0000	0.0000	0.0000	0.0000	0.0000	0.0000	0.0000	0.0000		0.0000	0.0000	0.0000		0.0000
Vendor	0.0000	0.0000	0.0000	0.0000	0.0000	0.0000	0.0000	0.0000	0.0000	0.0000		0.0000	0.0000	0.0000		0.0000
Worker	0.0384	0.0242	0.3273	1.0900e-003	0.0671	7.4000e-004	0.0678	0.0187	6.8000e-004	0.0194		109.0044	109.0044	2.4800e-003		109.0665
Total	**0.0384**	**0.0242**	**0.3273**	**1.0900e-003**	**0.0671**	**7.4000e-004**	**0.0678**	**0.0187**	**6.8000e-004**	**0.0194**		**109.0044**	**109.0044**	**2.4800e-003**		**109.0665**

3.4 Building Construction - 2020

Unmitigated Construction On-Site

	ROG	NOx	CO	SO2	Fugitive PM10	Exhaust PM10	PM10 Total	Fugitive PM2.5	Exhaust PM2.5	PM2.5 Total	Bio- CO2	NBio- CO2	Total CO2	CH4	N2O	CO2e
Category	lb/day										lb/day					
Off-Road	1.3686	12.4212	11.4575	0.0180		0.6754	0.6754		0.6283	0.6283		1,701.5947	1,701.5947	0.5139		1,714.4420
Total	**1.3686**	**12.4212**	**11.4575**	**0.0180**		**0.6754**	**0.6754**		**0.6283**	**0.6283**		**1,701.5947**	**1,701.5947**	**0.5139**		**1,714.4420**

3.4 Building Construction - 2020

Unmitigated Construction Off-Site

	ROG	NOx	CO	SO2	Fugitive PM10	Exhaust PM10	PM10 Total	Fugitive PM2.5	Exhaust PM2.5	PM2.5 Total	Bio- CO2	NBio- CO2	Total CO2	CH4	N2O	CO2e
Category	lb/day										lb/day					
Hauling	0.0000	0.0000	0.0000	0.0000	0.0000	0.0000	0.0000	0.0000	0.0000	0.0000		0.0000	0.0000	0.0000		0.0000
Vendor	0.0224	0.7292	0.1925	1.7400e-003	0.0447	3.8100e-003	0.0485	0.0129	3.6400e-003	0.0165		189.7903	189.7903	0.0154		190.1740
Worker	0.1268	0.0799	1.0802	3.6100e-003	0.3689	2.4400e-003	0.3713	0.0978	2.2500e-003	0.1001		359.7144	359.7144	8.2000e-003		359.9194
Total	**0.1492**	**0.8091**	**1.2727**	**5.3500e-003**	**0.4136**	**6.2500e-003**	**0.4198**	**0.1107**	**5.8900e-003**	**0.1166**		**549.5046**	**549.5046**	**0.0236**		**550.0934**

Mitigated Construction On-Site

	ROG	NOx	CO	SO2	Fugitive PM10	Exhaust PM10	PM10 Total	Fugitive PM2.5	Exhaust PM2.5	PM2.5 Total	Bio- CO2	NBio- CO2	Total CO2	CH4	N2O	CO2e
Category	lb/day										lb/day					
Off-Road	1.3686	12.4212	11.4575	0.0180		0.6754	0.6754		0.6283	0.6283	0.0000	1,701.5947	1,701.5947	0.5139		1,714.4420
Total	**1.3686**	**12.4212**	**11.4575**	**0.0180**		**0.6754**	**0.6754**		**0.6283**	**0.6283**	**0.0000**	**1,701.5947**	**1,701.5947**	**0.5139**		**1,714.4420**

3.4 Building Construction - 2020

Mitigated Construction Off-Site

	ROG	NOx	CO	SO2	Fugitive PM10	Exhaust PM10	PM10 Total	Fugitive PM2.5	Exhaust PM2.5	PM2.5 Total	Bio- CO2	NBio- CO2	Total CO2	CH4	N2O	CO2e
Category	lb/day										lb/day					
Hauling	0.0000	0.0000	0.0000	0.0000	0.0000	0.0000	0.0000	0.0000	0.0000	0.0000		0.0000	0.0000	0.0000		0.0000
Vendor	0.0224	0.7292	0.1925	1.7400e-003	0.0300	3.8100e-003	0.0338	9.2700e-003	3.6400e-003	0.0129		189.7903	189.7903	0.0154		190.1740
Worker	0.1268	0.0799	1.0802	3.6100e-003	0.2214	2.4400e-003	0.2238	0.0616	2.2500e-003	0.0639		359.7144	359.7144	8.2000e-003		359.9194
Total	**0.1492**	**0.8091**	**1.2727**	**5.3500e-003**	**0.2514**	**6.2500e-003**	**0.2576**	**0.0709**	**5.8900e-003**	**0.0768**		**549.5046**	**549.5046**	**0.0236**		**550.0934**

3.4 Building Construction - 2021

Unmitigated Construction On-Site

	ROG	NOx	CO	SO2	Fugitive PM10	Exhaust PM10	PM10 Total	Fugitive PM2.5	Exhaust PM2.5	PM2.5 Total	Bio- CO2	NBio- CO2	Total CO2	CH4	N2O	CO2e
Category	lb/day										lb/day					
Off-Road	1.2388	11.3833	11.3050	0.0180		0.5886	0.5886		0.5474	0.5474		1,701.4895	1,701.4895	0.5102		1,714.2448
Total	**1.2388**	**11.3833**	**11.3050**	**0.0180**		**0.5886**	**0.5886**		**0.5474**	**0.5474**		**1,701.4895**	**1,701.4895**	**0.5102**		**1,714.2448**

3.4 Building Construction - 2021

Unmitigated Construction Off-Site

	ROG	NOx	CO	SO2	Fugitive PM10	Exhaust PM10	PM10 Total	Fugitive PM2.5	Exhaust PM2.5	PM2.5 Total	Bio- CO2	NBio- CO2	Total CO2	CH4	N2O	CO2e
Category	lb/day										lb/day					
Hauling	0.0000	0.0000	0.0000	0.0000	0.0000	0.0000	0.0000	0.0000	0.0000	0.0000		0.0000	0.0000	0.0000		0.0000
Vendor	0.0187	0.6567	0.1781	1.7300e-003	0.0447	1.3600e-003	0.0461	0.0129	1.3000e-003	0.0142		188.1548	188.1548	0.0148		188.5236
Worker	0.1191	0.0721	1.0023	3.4800e-003	0.3689	2.3900e-003	0.3713	0.0978	2.2000e-003	0.1000		347.2241	347.2241	7.4400e-003		347.4100
Total	**0.1378**	**0.7288**	**1.1804**	**5.2100e-003**	**0.4136**	**3.7500e-003**	**0.4173**	**0.1107**	**3.5000e-003**	**0.1142**		**535.3788**	**535.3788**	**0.0222**		**535.9336**

Mitigated Construction On-Site

	ROG	NOx	CO	SO2	Fugitive PM10	Exhaust PM10	PM10 Total	Fugitive PM2.5	Exhaust PM2.5	PM2.5 Total	Bio- CO2	NBio- CO2	Total CO2	CH4	N2O	CO2e
Category	lb/day										lb/day					
Off-Road	1.2388	11.3833	11.3050	0.0180		0.5886	0.5886		0.5474	0.5474	0.0000	1,701.4895	1,701.4895	0.5102		1,714.2448
Total	**1.2388**	**11.3833**	**11.3050**	**0.0180**		**0.5886**	**0.5886**		**0.5474**	**0.5474**	**0.0000**	**1,701.4895**	**1,701.4895**	**0.5102**		**1,714.2448**

3.4 Building Construction - 2021

Mitigated Construction Off-Site

	ROG	NOx	CO	SO2	Fugitive PM10	Exhaust PM10	PM10 Total	Fugitive PM2.5	Exhaust PM2.5	PM2.5 Total	Bio- CO2	NBio- CO2	Total CO2	CH4	N2O	CO2e
Category	lb/day										lb/day					
Hauling	0.0000	0.0000	0.0000	0.0000	0.0000	0.0000	0.0000	0.0000	0.0000	0.0000		0.0000	0.0000	0.0000		0.0000
Vendor	0.0187	0.6567	0.1781	1.7300e-003	0.0300	1.3600e-003	0.0314	9.2700e-003	1.3000e-003	0.0106		188.1548	188.1548	0.0148		188.5236
Worker	0.1191	0.0721	1.0023	3.4800e-003	0.2214	2.3900e-003	0.2237	0.0616	2.2000e-003	0.0638		347.2241	347.2241	7.4400e-003		347.4100
Total	**0.1378**	**0.7288**	**1.1804**	**5.2100e-003**	**0.2514**	**3.7500e-003**	**0.2551**	**0.0709**	**3.5000e-003**	**0.0744**		**535.3788**	**535.3788**	**0.0222**		**535.9336**

3.5 Architectural Coating - 2021

Unmitigated Construction On-Site

	ROG	NOx	CO	SO2	Fugitive PM10	Exhaust PM10	PM10 Total	Fugitive PM2.5	Exhaust PM2.5	PM2.5 Total	Bio- CO2	NBio- CO2	Total CO2	CH4	N2O	CO2e
Category	lb/day										lb/day					
Archit. Coating	0.1819					0.0000	0.0000		0.0000	0.0000			0.0000			0.0000
Off-Road	0.2919	2.0358	2.4234	3.9600e-003		0.1255	0.1255		0.1255	0.1255		375.2641	375.2641	0.0258		375.9079
Total	**0.4738**	**2.0358**	**2.4234**	**3.9600e-003**		**0.1255**	**0.1255**		**0.1255**	**0.1255**		**375.2641**	**375.2641**	**0.0258**		**375.9079**

3.5 Architectural Coating - 2021

Unmitigated Construction Off-Site

	ROG	NOx	CO	SO2	Fugitive PM10	Exhaust PM10	PM10 Total	Fugitive PM2.5	Exhaust PM2.5	PM2.5 Total	Bio- CO2	NBio- CO2	Total CO2	CH4	N2O	CO2e
Category	lb/day										lb/day					
Hauling	0.0000	0.0000	0.0000	0.0000	0.0000	0.0000	0.0000	0.0000	0.0000	0.0000		0.0000	0.0000	0.0000		0.0000
Vendor	0.0000	0.0000	0.0000	0.0000	0.0000	0.0000	0.0000	0.0000	0.0000	0.0000		0.0000	0.0000	0.0000		0.0000
Worker	0.0253	0.0153	0.2126	7.4000e-004	0.0782	5.1000e-004	0.0788	0.0208	4.7000e-004	0.0212		73.6536	73.6536	1.5800e-003		73.6930
Total	**0.0253**	**0.0153**	**0.2126**	**7.4000e-004**	**0.0782**	**5.1000e-004**	**0.0788**	**0.0208**	**4.7000e-004**	**0.0212**		**73.6536**	**73.6536**	**1.5800e-003**		**73.6930**

Mitigated Construction On-Site

	ROG	NOx	CO	SO2	Fugitive PM10	Exhaust PM10	PM10 Total	Fugitive PM2.5	Exhaust PM2.5	PM2.5 Total	Bio- CO2	NBio- CO2	Total CO2	CH4	N2O	CO2e
Category	lb/day										lb/day					
Archit. Coating	0.1819					0.0000	0.0000		0.0000	0.0000			0.0000			0.0000
Off-Road	0.2919	2.0358	2.4234	3.9600e-003		0.1255	0.1255		0.1255	0.1255	0.0000	375.2641	375.2641	0.0258		375.9079
Total	**0.4738**	**2.0358**	**2.4234**	**3.9600e-003**		**0.1255**	**0.1255**		**0.1255**	**0.1255**	**0.0000**	**375.2641**	**375.2641**	**0.0258**		**375.9079**

3.5 Architectural Coating - 2021

Mitigated Construction Off-Site

	ROG	NOx	CO	SO2	Fugitive PM10	Exhaust PM10	PM10 Total	Fugitive PM2.5	Exhaust PM2.5	PM2.5 Total	Bio- CO2	NBio- CO2	Total CO2	CH4	N2O	CO2e
Category	lb/day										lb/day					
Hauling	0.0000	0.0000	0.0000	0.0000	0.0000	0.0000	0.0000	0.0000	0.0000	0.0000		0.0000	0.0000	0.0000		0.0000
Vendor	0.0000	0.0000	0.0000	0.0000	0.0000	0.0000	0.0000	0.0000	0.0000	0.0000		0.0000	0.0000	0.0000		0.0000
Worker	0.0253	0.0153	0.2126	7.4000e-004	0.0470	5.1000e-004	0.0475	0.0131	4.7000e-004	0.0135		73.6536	73.6536	1.5800e-003		73.6930
Total	**0.0253**	**0.0153**	**0.2126**	**7.4000e-004**	**0.0470**	**5.1000e-004**	**0.0475**	**0.0131**	**4.7000e-004**	**0.0135**		**73.6536**	**73.6536**	**1.5800e-003**		**73.6930**

4.0 Operational Detail - Mobile

4.1 Mitigation Measures Mobile

	ROG	NOx	CO	SO2	Fugitive PM10	Exhaust PM10	PM10 Total	Fugitive PM2.5	Exhaust PM2.5	PM2.5 Total	Bio- CO2	NBio- CO2	Total CO2	CH4	N2O	CO2e
Category	lb/day										lb/day					
Mitigated	0.2475	1.0121	3.5758	0.0137	1.2167	9.7100e-003	1.2265	0.3254	9.0400e-003	0.3344		1,390.0498	1,390.0498	0.0556		1,391.4405
Unmitigated	0.2475	1.0121	3.5758	0.0137	1.2167	9.7100e-003	1.2265	0.3254	9.0400e-003	0.3344		1,390.0498	1,390.0498	0.0556		1,391.4405

4.2 Trip Summary Information

	Average Daily Trip Rate			Unmitigated	Mitigated
Land Use	Weekday	Saturday	Sunday	Annual VMT	Annual VMT
Congregate Care (Assisted Living)	149.12	149.12	149.12	573,628	573,628
Parking Lot	0.00	0.00	0.00		
Total	149.12	149.12	149.12	573,628	573,628

4.3 Trip Type Information

	Miles			Trip %			Trip Purpose %		
Land Use	H-W or C-W	H-S or C-C	H-O or C-NW	H-W or C-W	H-S or C-C	H-O or C-NW	Primary	Diverted	Pass-by
Congregate Care (Assisted	14.70	5.90	8.70	40.00	19.00	41.00	100	0	0
Parking Lot	16.60	8.40	6.90	0.00	0.00	0.00	0	0	0

4.4 Fleet Mix

Land Use	LDA	LDT1	LDT2	MDV	LHD1	LHD2	MHD	HHD	OBUS	UBUS	MCY	SBUS	MH
Congregate Care (Assisted Living)	0.558976	0.043534	0.209821	0.113949	0.016111	0.005791	0.025447	0.016654	0.001713	0.001553	0.004896	0.000590	0.000966
Parking Lot	0.558976	0.043534	0.209821	0.113949	0.016111	0.005791	0.025447	0.016654	0.001713	0.001553	0.004896	0.000590	0.000966

5.0 Energy Detail

Historical Energy Use: N

5.1 Mitigation Measures Energy

	ROG	NOx	CO	SO2	Fugitive PM10	Exhaust PM10	PM10 Total	Fugitive PM2.5	Exhaust PM2.5	PM2.5 Total	Bio- CO2	NBio- CO2	Total CO2	CH4	N2O	CO2e
Category	lb/day										lb/day					
NaturalGas Mitigated	0.0108	0.0923	0.0393	5.9000e-004		7.4600e-003	7.4600e-003		7.4600e-003	7.4600e-003		117.8658	117.8658	2.2600e-003	2.1600e-003	118.5662
NaturalGas Unmitigated	0.0108	0.0923	0.0393	5.9000e-004		7.4600e-003	7.4600e-003		7.4600e-003	7.4600e-003		117.8658	117.8658	2.2600e-003	2.1600e-003	118.5662

5.2 Energy by Land Use - NaturalGas

Unmitigated

	NaturalGas Use	ROG	NOx	CO	SO2	Fugitive PM10	Exhaust PM10	PM10 Total	Fugitive PM2.5	Exhaust PM2.5	PM2.5 Total	Bio- CO2	NBio- CO2	Total CO2	CH4	N2O	CO2e
Land Use	kBTU/yr	lb/day										lb/day					
Congregate Care (Assisted Living)	1001.86	0.0108	0.0923	0.0393	5.9000e-004		7.4600e-003	7.4600e-003		7.4600e-003	7.4600e-003		117.8658	117.8658	2.2600e-003	2.1600e-003	118.5662
Parking Lot	0	0.0000	0.0000	0.0000	0.0000		0.0000	0.0000		0.0000	0.0000		0.0000	0.0000	0.0000	0.0000	0.0000
Total		**0.0108**	**0.0923**	**0.0393**	**5.9000e-004**		**7.4600e-003**	**7.4600e-003**		**7.4600e-003**	**7.4600e-003**		**117.8658**	**117.8658**	**2.2600e-003**	**2.1600e-003**	**118.5662**

Mitigated

	NaturalGas Use	ROG	NOx	CO	SO2	Fugitive PM10	Exhaust PM10	PM10 Total	Fugitive PM2.5	Exhaust PM2.5	PM2.5 Total	Bio- CO2	NBio- CO2	Total CO2	CH4	N2O	CO2e
Land Use	kBTU/yr	lb/day										lb/day					
Congregate Care (Assisted Living)	1.00186	0.0108	0.0923	0.0393	5.9000e-004		7.4600e-003	7.4600e-003		7.4600e-003	7.4600e-003		117.8658	117.8658	2.2600e-003	2.1600e-003	118.5662
Parking Lot	0	0.0000	0.0000	0.0000	0.0000		0.0000	0.0000		0.0000	0.0000		0.0000	0.0000	0.0000	0.0000	0.0000
Total		**0.0108**	**0.0923**	**0.0393**	**5.9000e-004**		**7.4600e-003**	**7.4600e-003**		**7.4600e-003**	**7.4600e-003**		**117.8658**	**117.8658**	**2.2600e-003**	**2.1600e-003**	**118.5662**

6.0 Area Detail

6.1 Mitigation Measures Area

	ROG	NOx	CO	SO2	Fugitive PM10	Exhaust PM10	PM10 Total	Fugitive PM2.5	Exhaust PM2.5	PM2.5 Total	Bio- CO2	NBio- CO2	Total CO2	CH4	N2O	CO2e
Category	lb/day										lb/day					
Mitigated	0.0916	0.0306	2.6473	1.4000e-004		0.0146	0.0146		0.0146	0.0146	0.0000	4.7570	4.7570	4.6200e-003	0.0000	4.8723
Unmitigated	0.0916	0.0306	2.6473	1.4000e-004		0.0146	0.0146		0.0146	0.0146	0.0000	4.7570	4.7570	4.6200e-003	0.0000	4.8723

6.2 Area by SubCategory

Unmitigated

	ROG	NOx	CO	SO2	Fugitive PM10	Exhaust PM10	PM10 Total	Fugitive PM2.5	Exhaust PM2.5	PM2.5 Total	Bio- CO2	NBio- CO2	Total CO2	CH4	N2O	CO2e
SubCategory	lb/day										lb/day					
Architectural Coating	1.9400e-003					0.0000	0.0000		0.0000	0.0000			0.0000			0.0000
Consumer Products	9.3900e-003					0.0000	0.0000		0.0000	0.0000			0.0000			0.0000
Hearth	0.0000	0.0000	0.0000	0.0000		0.0000	0.0000		0.0000	0.0000	0.0000	0.0000	0.0000	0.0000	0.0000	0.0000
Landscaping	0.0803	0.0306	2.6473	1.4000e-004		0.0146	0.0146		0.0146	0.0146		4.7570	4.7570	4.6200e-003		4.8723
Total	**0.0916**	**0.0306**	**2.6473**	**1.4000e-004**		**0.0146**	**0.0146**		**0.0146**	**0.0146**	**0.0000**	**4.7570**	**4.7570**	**4.6200e-003**	**0.0000**	**4.8723**

6.2 Area by SubCategory

Mitigated

	ROG	NOx	CO	SO2	Fugitive PM10	Exhaust PM10	PM10 Total	Fugitive PM2.5	Exhaust PM2.5	PM2.5 Total	Bio- CO2	NBio- CO2	Total CO2	CH4	N2O	CO2e
SubCategory	lb/day										lb/day					
Architectural Coating	1.9400e-003					0.0000	0.0000		0.0000	0.0000			0.0000			0.0000
Consumer Products	9.3900e-003					0.0000	0.0000		0.0000	0.0000			0.0000			0.0000
Hearth	0.0000	0.0000	0.0000	0.0000		0.0000	0.0000		0.0000	0.0000	0.0000	0.0000	0.0000	0.0000	0.0000	0.0000
Landscaping	0.0803	0.0306	2.6473	1.4000e-004		0.0146	0.0146		0.0146	0.0146		4.7570	4.7570	4.6200e-003		4.8723
Total	**0.0916**	**0.0306**	**2.6473**	**1.4000e-004**		**0.0146**	**0.0146**		**0.0146**	**0.0146**	**0.0000**	**4.7570**	**4.7570**	**4.6200e-003**	**0.0000**	**4.8723**

7.0 Water Detail

7.1 Mitigation Measures Water

8.0 Waste Detail

8.1 Mitigation Measures Waste

9.0 Operational Offroad

Equipment Type	Number	Hours/Day	Days/Year	Horse Power	Load Factor	Fuel Type

10.0 Stationary Equipment

Fire Pumps and Emergency Generators

Equipment Type	Number	Hours/Day	Hours/Year	Horse Power	Load Factor	Fuel Type

Boilers

Equipment Type	Number	Heat Input/Day	Heat Input/Year	Boiler Rating	Fuel Type

User Defined Equipment

Equipment Type	Number

11.0 Vegetation

Park Plaza Memory Care - Future

Orange County, Winter

1.0 Project Characteristics

1.1 Land Usage

Land Uses	Size	Metric	Lot Acreage	Floor Surface Area	Population
Parking Lot	15.00	Space	0.57	24,834.00	0
Congregate Care (Assisted Living)	32.00	Dwelling Unit	0.35	30.11	36

1.2 Other Project Characteristics

Urbanization	Urban	**Wind Speed (m/s)**	2.2	**Precipitation Freq (Days)**	30
Climate Zone	8			**Operational Year**	2021
Utility Company	Southern California Edison				
CO2 Intensity (lb/MWhr)	702.44	**CH4 Intensity (lb/MWhr)**	0.029	**N2O Intensity (lb/MWhr)**	0.006

1.3 User Entered Comments & Non-Default Data

Park Plaza Memory Care - Future - Orange County, Winter

Project Characteristics - Applicant Info

Land Use - Applicant Info

Construction Phase - Applicant Info

Off-road Equipment - COnsultant Assumptions

Off-road Equipment - Consultant Assumptions

Off-road Equipment - Consultant Assumptions

Off-road Equipment - Consultant Assumptions

Trips and VMT - Consultant Assumptions

Demolition - Consultant Assumptions

Grading - Applicant Info

Vehicle Trips - Source: Linscott, Law & Greenspan, Engineers. Traffic Impact Analysis - Park Plaza Memory Care Project. June 2019. Trip rate adjusted to account for per 36 beds, not per 32 dwelling units.

Woodstoves - Applicant Info.

Energy Use -

Construction Off-road Equipment Mitigation - Assumes SCAQMD Rule 403 control efficiences

Table Name	Column Name	Default Value	New Value
tblConstDustMitigation	CleanPavedRoadPercentReduction	0	46
tblConstDustMitigation	WaterExposedAreaPM10PercentReduction	61	55
tblConstDustMitigation	WaterExposedAreaPM25PercentReduction	61	55
tblConstructionPhase	NumDays	5.00	39.00
tblConstructionPhase	NumDays	100.00	300.00
tblConstructionPhase	NumDays	10.00	33.00
tblConstructionPhase	NumDays	2.00	32.00
tblFireplaces	FireplaceDayYear	25.00	0.00
tblFireplaces	FireplaceHourDay	3.00	0.00
tblFireplaces	FireplaceWoodMass	1,019.20	0.00

tblFireplaces	NumberGas	27.20	0.00
tblFireplaces	NumberNoFireplace	3.20	0.00
tblFireplaces	NumberWood	1.60	0.00
tblGrading	AcresOfGrading	16.00	0.92
tblLandUse	LandUseSquareFeet	6,000.00	24,834.00
tblLandUse	LandUseSquareFeet	32,000.00	30.11
tblLandUse	LotAcreage	0.13	0.57
tblLandUse	LotAcreage	2.00	0.35
tblLandUse	Population	92.00	36.00
tblOffRoadEquipment	OffRoadEquipmentUnitAmount	2.00	1.00
tblOffRoadEquipment	OffRoadEquipmentUnitAmount	2.00	1.00
tblOffRoadEquipment	OffRoadEquipmentUnitAmount	2.00	1.00
tblOffRoadEquipment	UsageHours	6.00	8.00
tblOffRoadEquipment	UsageHours	6.00	8.00
tblOffRoadEquipment	UsageHours	6.00	8.00
tblOffRoadEquipment	UsageHours	6.00	8.00
tblTripsAndVMT	HaulingTripLength	20.00	40.00
tblTripsAndVMT	WorkerTripNumber	10.00	8.00
tblTripsAndVMT	WorkerTripNumber	13.00	10.00
tblVehicleTrips	DV_TP	11.00	0.00
tblVehicleTrips	HO_TTP	40.60	41.00
tblVehicleTrips	HS_TTP	19.20	19.00
tblVehicleTrips	HW_TTP	40.20	40.00
tblVehicleTrips	PB_TP	3.00	0.00
tblVehicleTrips	PR_TP	86.00	100.00
tblVehicleTrips	ST_TR	2.20	4.66
tblVehicleTrips	SU_TR	2.44	4.66

tblVehicleTrips	WD_TR	2.74	4.66
tblWoodstoves	NumberCatalytic	1.60	0.00
tblWoodstoves	NumberNoncatalytic	1.60	0.00
tblWoodstoves	WoodstoveDayYear	25.00	0.00
tblWoodstoves	WoodstoveWoodMass	999.60	0.00

2.0 Emissions Summary

2.1 Overall Construction (Maximum Daily Emission)

Unmitigated Construction

	ROG	NOx	CO	SO2	Fugitive PM10	Exhaust PM10	PM10 Total	Fugitive PM2.5	Exhaust PM2.5	PM2.5 Total	Bio- CO2	NBio- CO2	Total CO2	CH4	N2O	CO2e
Year	lb/day										lb/day					
2020	1.5352	15.5851	12.6668	0.0308	2.6190	0.7205	3.1547	0.4495	0.6787	1.1254	0.0000	3,181.1123	3,181.1123	0.5402	0.0000	3,193.4992
2021	1.8956	14.1702	15.0449	0.0276	0.4918	0.7184	1.2102	0.1314	0.6769	0.8084	0.0000	2,658.6188	2,658.6188	0.5600	0.0000	2,672.6180
Maximum	**1.8956**	**15.5851**	**15.0449**	**0.0308**	**2.6190**	**0.7205**	**3.1547**	**0.4495**	**0.6787**	**1.1254**	**0.0000**	**3,181.1123**	**3,181.1123**	**0.5600**	**0.0000**	**3,193.4992**

Mitigated Construction

	ROG	NOx	CO	SO2	Fugitive PM10	Exhaust PM10	PM10 Total	Fugitive PM2.5	Exhaust PM2.5	PM2.5 Total	Bio- CO2	NBio- CO2	Total CO2	CH4	N2O	CO2e
Year	lb/day										lb/day					
2020	1.5352	15.5851	12.6668	0.0308	1.2622	0.7205	1.7979	0.2292	0.6787	0.8850	0.0000	3,181.1123	3,181.1123	0.5402	0.0000	3,193.4992
2021	1.8956	14.1702	15.0449	0.0276	0.2983	0.7184	1.0167	0.0840	0.6769	0.7609	0.0000	2,658.6188	2,658.6188	0.5600	0.0000	2,672.6180
Maximum	**1.8956**	**15.5851**	**15.0449**	**0.0308**	**1.2622**	**0.7205**	**1.7979**	**0.2292**	**0.6787**	**0.8850**	**0.0000**	**3,181.1123**	**3,181.1123**	**0.5600**	**0.0000**	**3,193.4992**

	ROG	**NOx**	**CO**	**SO2**	**Fugitive PM10**	**Exhaust PM10**	**PM10 Total**	**Fugitive PM2.5**	**Exhaust PM2.5**	**PM2.5 Total**	**Bio- CO2**	**NBio-CO2**	**Total CO2**	**CH4**	**N20**	**CO2e**
Percent Reduction	**0.00**	**0.00**	**0.00**	**0.00**	**49.84**	**0.00**	**35.52**	**46.09**	**0.00**	**14.89**	**0.00**	**0.00**	**0.00**	**0.00**	**0.00**	**0.00**

2.2 Overall Operational

Unmitigated Operational

	ROG	NOx	CO	SO2	Fugitive PM10	Exhaust PM10	PM10 Total	Fugitive PM2.5	Exhaust PM2.5	PM2.5 Total	Bio- CO2	NBio- CO2	Total CO2	CH4	N2O	CO2e
Category	lb/day										lb/day					
Area	0.0916	0.0306	2.6473	1.4000e-004		0.0146	0.0146		0.0146	0.0146	0.0000	4.7570	4.7570	4.6200e-003	0.0000	4.8723
Energy	0.0108	0.0923	0.0393	5.9000e-004		7.4600e-003	7.4600e-003		7.4600e-003	7.4600e-003		117.8658	117.8658	2.2600e-003	2.1600e-003	118.5662
Mobile	0.2434	1.0449	3.3996	0.0131	1.2167	9.7500e-003	1.2265	0.3254	9.0800e-003	0.3345		1,328.5044	1,328.5044	0.0553		1,329.8858
Total	**0.3459**	**1.1678**	**6.0862**	**0.0138**	**1.2167**	**0.0318**	**1.2486**	**0.3254**	**0.0311**	**0.3565**	**0.0000**	**1,451.1272**	**1,451.1272**	**0.0621**	**2.1600e-003**	**1,453.3244**

Mitigated Operational

	ROG	NOx	CO	SO2	Fugitive PM10	Exhaust PM10	PM10 Total	Fugitive PM2.5	Exhaust PM2.5	PM2.5 Total	Bio- CO2	NBio- CO2	Total CO2	CH4	N2O	CO2e
Category	lb/day										lb/day					
Area	0.0916	0.0306	2.6473	1.4000e-004		0.0146	0.0146		0.0146	0.0146	0.0000	4.7570	4.7570	4.6200e-003	0.0000	4.8723
Energy	0.0108	0.0923	0.0393	5.9000e-004		7.4600e-003	7.4600e-003		7.4600e-003	7.4600e-003		117.8658	117.8658	2.2600e-003	2.1600e-003	118.5662
Mobile	0.2434	1.0449	3.3996	0.0131	1.2167	9.7500e-003	1.2265	0.3254	9.0800e-003	0.3345		1,328.5044	1,328.5044	0.0553		1,329.8858
Total	**0.3459**	**1.1678**	**6.0862**	**0.0138**	**1.2167**	**0.0318**	**1.2486**	**0.3254**	**0.0311**	**0.3565**	**0.0000**	**1,451.1272**	**1,451.1272**	**0.0621**	**2.1600e-003**	**1,453.3244**

	ROG	NOx	CO	SO2	Fugitive PM10	Exhaust PM10	PM10 Total	Fugitive PM2.5	Exhaust PM2.5	PM2.5 Total	Bio- CO2	NBio-CO2	Total CO2	CH4	N20	CO2e
Percent Reduction	**0.00**	**0.00**	**0.00**	**0.00**	**0.00**	**0.00**	**0.00**	**0.00**	**0.00**	**0.00**	**0.00**	**0.00**	**0.00**	**0.00**	**0.00**	**0.00**

3.0 Construction Detail

Construction Phase

Phase Number	Phase Name	Phase Type	Start Date	End Date	Num Days Week	Num Days	Phase Description
1	Demolition	Demolition	1/1/2020	2/14/2020	5	33	
2	Grading	Grading	2/17/2020	3/31/2020	5	32	
3	Building Construction	Building Construction	4/1/2020	5/25/2021	5	300	
4	Architectural Coating	Architectural Coating	4/1/2021	5/25/2021	5	39	

Acres of Grading (Site Preparation Phase): 0

Acres of Grading (Grading Phase): 0.92

Acres of Paving: 0.57

Residential Indoor: 61; Residential Outdoor: 20; Non-Residential Indoor: 0; Non-Residential Outdoor: 0; Striped Parking Area: 1,490 (Architectural Coating – sqft)

OffRoad Equipment

Phase Name	Offroad Equipment Type	Amount	Usage Hours	Horse Power	Load Factor
Demolition	Concrete/Industrial Saws	1	8.00	81	0.73
Demolition	Excavators	1	8.00	158	0.38
Building Construction	Cranes	1	4.00	231	0.29
Demolition	Tractors/Loaders/Backhoes	1	8.00	97	0.37
Grading	Concrete/Industrial Saws	1	8.00	81	0.73
Grading	Excavators	1	8.00	158	0.38
Grading	Graders	1	8.00	187	0.41
Demolition	Rubber Tired Dozers	1	1.00	247	0.40
Grading	Tractors/Loaders/Backhoes	1	8.00	97	0.37
Building Construction	Aerial Lifts	1	8.00	63	0.31
Grading	Rubber Tired Dozers	1	1.00	247	0.40
Building Construction	Forklifts	2	8.00	89	0.20
Building Construction	Pavers	1	8.00	130	0.42
Building Construction	Tractors/Loaders/Backhoes	1	8.00	97	0.37
Building Construction	Welders	1	8.00	46	0.45
Architectural Coating	Air Compressors	1	8.00	78	0.48

Trips and VMT

Phase Name	Offroad Equipment Count	Worker Trip Number	Vendor Trip Number	Hauling Trip Number	Worker Trip Length	Vendor Trip Length	Hauling Trip Length	Worker Vehicle Class	Vendor Vehicle Class	Hauling Vehicle Class
Demolition	4	8.00	0.00	332.00	14.70	6.90	40.00	LD_Mix	HDT_Mix	HHDT
Grading	5	10.00	0.00	0.00	14.70	6.90	20.00	LD_Mix	HDT_Mix	HHDT
Building Construction	7	33.00	7.00	0.00	14.70	6.90	20.00	LD_Mix	HDT_Mix	HHDT
Architectural Coating	1	7.00	0.00	0.00	14.70	6.90	20.00	LD_Mix	HDT_Mix	HHDT

3.1 Mitigation Measures Construction

Water Exposed Area

Clean Paved Roads

3.2 Demolition - 2020

Unmitigated Construction On-Site

	ROG	NOx	CO	SO2	Fugitive PM10	Exhaust PM10	PM10 Total	Fugitive PM2.5	Exhaust PM2.5	PM2.5 Total	Bio- CO2	NBio- CO2	Total CO2	CH4	N2O	CO2e
Category	lb/day										lb/day					
Fugitive Dust					2.1795	0.0000	2.1795	0.3300	0.0000	0.3300			0.0000			0.0000
Off-Road	1.0076	9.2329	9.7505	0.0156		0.5175	0.5175		0.4920	0.4920		1,496.9694	1,496.9694	0.3300		1,505.2197
Total	**1.0076**	**9.2329**	**9.7505**	**0.0156**	**2.1795**	**0.5175**	**2.6970**	**0.3300**	**0.4920**	**0.8219**		**1,496.9694**	**1,496.9694**	**0.3300**		**1,505.2197**

3.2 Demolition - 2020

Unmitigated Construction Off-Site

	ROG	NOx	CO	SO2	Fugitive PM10	Exhaust PM10	PM10 Total	Fugitive PM2.5	Exhaust PM2.5	PM2.5 Total	Bio- CO2	NBio- CO2	Total CO2	CH4	N2O	CO2e
Category	lb/day										lb/day					
Hauling	0.1385	4.7122	1.3028	0.0144	0.3501	0.0176	0.3678	0.0958	0.0169	0.1127		1,601.6132	1,601.6132	0.1636		1,605.7027
Vendor	0.0000	0.0000	0.0000	0.0000	0.0000	0.0000	0.0000	0.0000	0.0000	0.0000		0.0000	0.0000	0.0000		0.0000
Worker	0.0347	0.0213	0.2420	8.3000e-004	0.0894	5.9000e-004	0.0900	0.0237	5.4000e-004	0.0243		82.5297	82.5297	1.8800e-003		82.5768
Total	**0.1732**	**4.7334**	**1.5448**	**0.0152**	**0.4396**	**0.0182**	**0.4578**	**0.1195**	**0.0174**	**0.1369**		**1,684.1429**	**1,684.1429**	**0.1655**		**1,688.2795**

Mitigated Construction On-Site

	ROG	NOx	CO	SO2	Fugitive PM10	Exhaust PM10	PM10 Total	Fugitive PM2.5	Exhaust PM2.5	PM2.5 Total	Bio- CO2	NBio- CO2	Total CO2	CH4	N2O	CO2e
Category	lb/day										lb/day					
Fugitive Dust					0.9808	0.0000	0.9808	0.1485	0.0000	0.1485			0.0000			0.0000
Off-Road	1.0076	9.2329	9.7505	0.0156		0.5175	0.5175		0.4920	0.4920	0.0000	1,496.9694	1,496.9694	0.3300		1,505.2197
Total	**1.0076**	**9.2329**	**9.7505**	**0.0156**	**0.9808**	**0.5175**	**1.4983**	**0.1485**	**0.4920**	**0.6405**	**0.0000**	**1,496.9694**	**1,496.9694**	**0.3300**		**1,505.2197**

3.2 Demolition - 2020

Mitigated Construction Off-Site

	ROG	NOx	CO	SO2	Fugitive PM10	Exhaust PM10	PM10 Total	Fugitive PM2.5	Exhaust PM2.5	PM2.5 Total	Bio- CO2	NBio- CO2	Total CO2	CH4	N2O	CO2e
Category	lb/day										lb/day					
Hauling	0.1385	4.7122	1.3028	0.0144	0.2278	0.0176	0.2454	0.0658	0.0169	0.0827		1,601.6132	1,601.6132	0.1636		1,605.7027
Vendor	0.0000	0.0000	0.0000	0.0000	0.0000	0.0000	0.0000	0.0000	0.0000	0.0000		0.0000	0.0000	0.0000		0.0000
Worker	0.0347	0.0213	0.2420	8.3000e-004	0.0537	5.9000e-004	0.0543	0.0149	5.4000e-004	0.0155		82.5297	82.5297	1.8800e-003		82.5768
Total	**0.1732**	**4.7334**	**1.5448**	**0.0152**	**0.2814**	**0.0182**	**0.2996**	**0.0807**	**0.0174**	**0.0981**		**1,684.1429**	**1,684.1429**	**0.1655**		**1,688.2795**

3.3 Grading - 2020

Unmitigated Construction On-Site

	ROG	NOx	CO	SO2	Fugitive PM10	Exhaust PM10	PM10 Total	Fugitive PM2.5	Exhaust PM2.5	PM2.5 Total	Bio- CO2	NBio- CO2	Total CO2	CH4	N2O	CO2e
Category	lb/day										lb/day					
Fugitive Dust					0.7833	0.0000	0.7833	0.4171	0.0000	0.4171			0.0000			0.0000
Off-Road	1.4834	15.5585	11.5650	0.0222		0.7197	0.7197		0.6780	0.6780		2,139.6881	2,139.6881	0.5379		2,153.1351
Total	**1.4834**	**15.5585**	**11.5650**	**0.0222**	**0.7833**	**0.7197**	**1.5030**	**0.4171**	**0.6780**	**1.0951**		**2,139.6881**	**2,139.6881**	**0.5379**		**2,153.1351**

3.3 Grading - 2020

Unmitigated Construction Off-Site

	ROG	NOx	CO	SO2	Fugitive PM10	Exhaust PM10	PM10 Total	Fugitive PM2.5	Exhaust PM2.5	PM2.5 Total	Bio- CO2	NBio- CO2	Total CO2	CH4	N2O	CO2e
Category	lb/day										lb/day					
Hauling	0.0000	0.0000	0.0000	0.0000	0.0000	0.0000	0.0000	0.0000	0.0000	0.0000		0.0000	0.0000	0.0000		0.0000
Vendor	0.0000	0.0000	0.0000	0.0000	0.0000	0.0000	0.0000	0.0000	0.0000	0.0000		0.0000	0.0000	0.0000		0.0000
Worker	0.0434	0.0266	0.3025	1.0300e-003	0.1118	7.4000e-004	0.1125	0.0296	6.8000e-004	0.0303		103.1621	103.1621	2.3500e-003		103.2210
Total	**0.0434**	**0.0266**	**0.3025**	**1.0300e-003**	**0.1118**	**7.4000e-004**	**0.1125**	**0.0296**	**6.8000e-004**	**0.0303**		**103.1621**	**103.1621**	**2.3500e-003**		**103.2210**

Mitigated Construction On-Site

	ROG	NOx	CO	SO2	Fugitive PM10	Exhaust PM10	PM10 Total	Fugitive PM2.5	Exhaust PM2.5	PM2.5 Total	Bio- CO2	NBio- CO2	Total CO2	CH4	N2O	CO2e
Category	lb/day										lb/day					
Fugitive Dust					0.3525	0.0000	0.3525	0.1877	0.0000	0.1877			0.0000			0.0000
Off-Road	1.4834	15.5585	11.5650	0.0222		0.7197	0.7197		0.6780	0.6780	0.0000	2,139.6881	2,139.6881	0.5379		2,153.1351
Total	**1.4834**	**15.5585**	**11.5650**	**0.0222**	**0.3525**	**0.7197**	**1.0722**	**0.1877**	**0.6780**	**0.8657**	**0.0000**	**2,139.6881**	**2,139.6881**	**0.5379**		**2,153.1351**

3.3 Grading - 2020

Mitigated Construction Off-Site

	ROG	NOx	CO	SO2	Fugitive PM10	Exhaust PM10	PM10 Total	Fugitive PM2.5	Exhaust PM2.5	PM2.5 Total	Bio- CO2	NBio- CO2	Total CO2	CH4	N2O	CO2e
Category	lb/day										lb/day					
Hauling	0.0000	0.0000	0.0000	0.0000	0.0000	0.0000	0.0000	0.0000	0.0000	0.0000		0.0000	0.0000	0.0000		0.0000
Vendor	0.0000	0.0000	0.0000	0.0000	0.0000	0.0000	0.0000	0.0000	0.0000	0.0000		0.0000	0.0000	0.0000		0.0000
Worker	0.0434	0.0266	0.3025	1.0300e-003	0.0671	7.4000e-004	0.0678	0.0187	6.8000e-004	0.0194		103.1621	103.1621	2.3500e-003		103.2210
Total	**0.0434**	**0.0266**	**0.3025**	**1.0300e-003**	**0.0671**	**7.4000e-004**	**0.0678**	**0.0187**	**6.8000e-004**	**0.0194**		**103.1621**	**103.1621**	**2.3500e-003**		**103.2210**

3.4 Building Construction - 2020

Unmitigated Construction On-Site

	ROG	NOx	CO	SO2	Fugitive PM10	Exhaust PM10	PM10 Total	Fugitive PM2.5	Exhaust PM2.5	PM2.5 Total	Bio- CO2	NBio- CO2	Total CO2	CH4	N2O	CO2e
Category	lb/day										lb/day					
Off-Road	1.3686	12.4212	11.4575	0.0180		0.6754	0.6754		0.6283	0.6283		1,701.5947	1,701.5947	0.5139		1,714.4420
Total	**1.3686**	**12.4212**	**11.4575**	**0.0180**		**0.6754**	**0.6754**		**0.6283**	**0.6283**		**1,701.5947**	**1,701.5947**	**0.5139**		**1,714.4420**

3.4 Building Construction - 2020

Unmitigated Construction Off-Site

	ROG	NOx	CO	SO2	Fugitive PM10	Exhaust PM10	PM10 Total	Fugitive PM2.5	Exhaust PM2.5	PM2.5 Total	Bio- CO2	NBio- CO2	Total CO2	CH4	N2O	CO2e
Category	lb/day										lb/day					
Hauling	0.0000	0.0000	0.0000	0.0000	0.0000	0.0000	0.0000	0.0000	0.0000	0.0000		0.0000	0.0000	0.0000		0.0000
Vendor	0.0234	0.7290	0.2110	1.7000e-003	0.0447	3.8700e-003	0.0486	0.0129	3.7000e-003	0.0166		185.1262	185.1262	0.0161		185.5293
Worker	0.1433	0.0878	0.9984	3.4100e-003	0.3689	2.4400e-003	0.3713	0.0978	2.2500e-003	0.1001		340.4350	340.4350	7.7700e-003		340.6292
Total	**0.1667**	**0.8168**	**1.2093**	**5.1100e-003**	**0.4136**	**6.3100e-003**	**0.4199**	**0.1107**	**5.9500e-003**	**0.1166**		**525.5612**	**525.5612**	**0.0239**		**526.1585**

Mitigated Construction On-Site

	ROG	NOx	CO	SO2	Fugitive PM10	Exhaust PM10	PM10 Total	Fugitive PM2.5	Exhaust PM2.5	PM2.5 Total	Bio- CO2	NBio- CO2	Total CO2	CH4	N2O	CO2e
Category	lb/day										lb/day					
Off-Road	1.3686	12.4212	11.4575	0.0180		0.6754	0.6754		0.6283	0.6283	0.0000	1,701.5947	1,701.5947	0.5139		1,714.4420
Total	**1.3686**	**12.4212**	**11.4575**	**0.0180**		**0.6754**	**0.6754**		**0.6283**	**0.6283**	**0.0000**	**1,701.5947**	**1,701.5947**	**0.5139**		**1,714.4420**

3.4 Building Construction - 2020

Mitigated Construction Off-Site

	ROG	NOx	CO	SO2	Fugitive PM10	Exhaust PM10	PM10 Total	Fugitive PM2.5	Exhaust PM2.5	PM2.5 Total	Bio- CO2	NBio- CO2	Total CO2	CH4	N2O	CO2e
Category	lb/day										lb/day					
Hauling	0.0000	0.0000	0.0000	0.0000	0.0000	0.0000	0.0000	0.0000	0.0000	0.0000		0.0000	0.0000	0.0000		0.0000
Vendor	0.0234	0.7290	0.2110	1.7000e-003	0.0300	3.8700e-003	0.0339	9.2700e-003	3.7000e-003	0.0130		185.1262	185.1262	0.0161		185.5293
Worker	0.1433	0.0878	0.9984	3.4100e-003	0.2214	2.4400e-003	0.2238	0.0616	2.2500e-003	0.0639		340.4350	340.4350	7.7700e-003		340.6292
Total	**0.1667**	**0.8168**	**1.2093**	**5.1100e-003**	**0.2514**	**6.3100e-003**	**0.2577**	**0.0709**	**5.9500e-003**	**0.0768**		**525.5612**	**525.5612**	**0.0239**		**526.1585**

3.4 Building Construction - 2021

Unmitigated Construction On-Site

	ROG	NOx	CO	SO2	Fugitive PM10	Exhaust PM10	PM10 Total	Fugitive PM2.5	Exhaust PM2.5	PM2.5 Total	Bio- CO2	NBio- CO2	Total CO2	CH4	N2O	CO2e
Category	lb/day										lb/day					
Off-Road	1.2388	11.3833	11.3050	0.0180		0.5886	0.5886		0.5474	0.5474		1,701.4895	1,701.4895	0.5102		1,714.2448
Total	**1.2388**	**11.3833**	**11.3050**	**0.0180**		**0.5886**	**0.5886**		**0.5474**	**0.5474**		**1,701.4895**	**1,701.4895**	**0.5102**		**1,714.2448**

3.4 Building Construction - 2021

Unmitigated Construction Off-Site

	ROG	NOx	CO	SO2	Fugitive PM10	Exhaust PM10	PM10 Total	Fugitive PM2.5	Exhaust PM2.5	PM2.5 Total	Bio- CO2	NBio- CO2	Total CO2	CH4	N2O	CO2e
Category	lb/day										lb/day					
Hauling	0.0000	0.0000	0.0000	0.0000	0.0000	0.0000	0.0000	0.0000	0.0000	0.0000		0.0000	0.0000	0.0000		0.0000
Vendor	0.0196	0.6552	0.1954	1.6800e-003	0.0447	1.4200e-003	0.0461	0.0129	1.3500e-003	0.0142		183.5323	183.5323	0.0155		183.9192
Worker	0.1349	0.0792	0.9249	3.2900e-003	0.3689	2.3900e-003	0.3713	0.0978	2.2000e-003	0.1000		328.6246	328.6246	7.0400e-003		328.8006
Total	**0.1545**	**0.7343**	**1.1203**	**4.9700e-003**	**0.4136**	**3.8100e-003**	**0.4174**	**0.1107**	**3.5500e-003**	**0.1142**		**512.1569**	**512.1569**	**0.0225**		**512.7197**

Mitigated Construction On-Site

	ROG	NOx	CO	SO2	Fugitive PM10	Exhaust PM10	PM10 Total	Fugitive PM2.5	Exhaust PM2.5	PM2.5 Total	Bio- CO2	NBio- CO2	Total CO2	CH4	N2O	CO2e
Category	lb/day										lb/day					
Off-Road	1.2388	11.3833	11.3050	0.0180		0.5886	0.5886		0.5474	0.5474	0.0000	1,701.4895	1,701.4895	0.5102		1,714.2448
Total	**1.2388**	**11.3833**	**11.3050**	**0.0180**		**0.5886**	**0.5886**		**0.5474**	**0.5474**	**0.0000**	**1,701.4895**	**1,701.4895**	**0.5102**		**1,714.2448**

3.4 Building Construction - 2021

Mitigated Construction Off-Site

	ROG	NOx	CO	SO2	Fugitive PM10	Exhaust PM10	PM10 Total	Fugitive PM2.5	Exhaust PM2.5	PM2.5 Total	Bio- CO2	NBio- CO2	Total CO2	CH4	N2O	CO2e
Category	lb/day										lb/day					
Hauling	0.0000	0.0000	0.0000	0.0000	0.0000	0.0000	0.0000	0.0000	0.0000	0.0000		0.0000	0.0000	0.0000		0.0000
Vendor	0.0196	0.6552	0.1954	1.6800e-003	0.0300	1.4200e-003	0.0315	9.2700e-003	1.3500e-003	0.0106		183.5323	183.5323	0.0155		183.9192
Worker	0.1349	0.0792	0.9249	3.2900e-003	0.2214	2.3900e-003	0.2237	0.0616	2.2000e-003	0.0638		328.6246	328.6246	7.0400e-003		328.8006
Total	**0.1545**	**0.7343**	**1.1203**	**4.9700e-003**	**0.2514**	**3.8100e-003**	**0.2552**	**0.0709**	**3.5500e-003**	**0.0744**		**512.1569**	**512.1569**	**0.0225**		**512.7197**

3.5 Architectural Coating - 2021

Unmitigated Construction On-Site

	ROG	NOx	CO	SO2	Fugitive PM10	Exhaust PM10	PM10 Total	Fugitive PM2.5	Exhaust PM2.5	PM2.5 Total	Bio- CO2	NBio- CO2	Total CO2	CH4	N2O	CO2e
Category	lb/day										lb/day					
Archit. Coating	0.1819					0.0000	0.0000		0.0000	0.0000			0.0000			0.0000
Off-Road	0.2919	2.0358	2.4234	3.9600e-003		0.1255	0.1255		0.1255	0.1255		375.2641	375.2641	0.0258		375.9079
Total	**0.4738**	**2.0358**	**2.4234**	**3.9600e-003**		**0.1255**	**0.1255**		**0.1255**	**0.1255**		**375.2641**	**375.2641**	**0.0258**		**375.9079**

3.5 Architectural Coating - 2021

Unmitigated Construction Off-Site

	ROG	NOx	CO	SO2	Fugitive PM10	Exhaust PM10	PM10 Total	Fugitive PM2.5	Exhaust PM2.5	PM2.5 Total	Bio- CO2	NBio- CO2	Total CO2	CH4	N2O	CO2e
Category	lb/day										lb/day					
Hauling	0.0000	0.0000	0.0000	0.0000	0.0000	0.0000	0.0000	0.0000	0.0000	0.0000		0.0000	0.0000	0.0000		0.0000
Vendor	0.0000	0.0000	0.0000	0.0000	0.0000	0.0000	0.0000	0.0000	0.0000	0.0000		0.0000	0.0000	0.0000		0.0000
Worker	0.0286	0.0168	0.1962	7.0000e-004	0.0782	5.1000e-004	0.0788	0.0208	4.7000e-004	0.0212		69.7083	69.7083	1.4900e-003		69.7456
Total	**0.0286**	**0.0168**	**0.1962**	**7.0000e-004**	**0.0782**	**5.1000e-004**	**0.0788**	**0.0208**	**4.7000e-004**	**0.0212**		**69.7083**	**69.7083**	**1.4900e-003**		**69.7456**

Mitigated Construction On-Site

	ROG	NOx	CO	SO2	Fugitive PM10	Exhaust PM10	PM10 Total	Fugitive PM2.5	Exhaust PM2.5	PM2.5 Total	Bio- CO2	NBio- CO2	Total CO2	CH4	N2O	CO2e
Category	lb/day										lb/day					
Archit. Coating	0.1819					0.0000	0.0000		0.0000	0.0000			0.0000			0.0000
Off-Road	0.2919	2.0358	2.4234	3.9600e-003		0.1255	0.1255		0.1255	0.1255	0.0000	375.2641	375.2641	0.0258		375.9079
Total	**0.4738**	**2.0358**	**2.4234**	**3.9600e-003**		**0.1255**	**0.1255**		**0.1255**	**0.1255**	**0.0000**	**375.2641**	**375.2641**	**0.0258**		**375.9079**

3.5 Architectural Coating - 2021

Mitigated Construction Off-Site

	ROG	NOx	CO	SO2	Fugitive PM10	Exhaust PM10	PM10 Total	Fugitive PM2.5	Exhaust PM2.5	PM2.5 Total	Bio- CO2	NBio- CO2	Total CO2	CH4	N2O	CO2e
Category	lb/day										lb/day					
Hauling	0.0000	0.0000	0.0000	0.0000	0.0000	0.0000	0.0000	0.0000	0.0000	0.0000		0.0000	0.0000	0.0000		0.0000
Vendor	0.0000	0.0000	0.0000	0.0000	0.0000	0.0000	0.0000	0.0000	0.0000	0.0000		0.0000	0.0000	0.0000		0.0000
Worker	0.0286	0.0168	0.1962	7.0000e-004	0.0470	5.1000e-004	0.0475	0.0131	4.7000e-004	0.0135		69.7083	69.7083	1.4900e-003		69.7456
Total	**0.0286**	**0.0168**	**0.1962**	**7.0000e-004**	**0.0470**	**5.1000e-004**	**0.0475**	**0.0131**	**4.7000e-004**	**0.0135**		**69.7083**	**69.7083**	**1.4900e-003**		**69.7456**

4.0 Operational Detail - Mobile

4.1 Mitigation Measures Mobile

	ROG	NOx	CO	SO2	Fugitive PM10	Exhaust PM10	PM10 Total	Fugitive PM2.5	Exhaust PM2.5	PM2.5 Total	Bio- CO2	NBio- CO2	Total CO2	CH4	N2O	CO2e
Category	lb/day										lb/day					
Mitigated	0.2434	1.0449	3.3996	0.0131	1.2167	9.7500e-003	1.2265	0.3254	9.0800e-003	0.3345		1,328.5044	1,328.5044	0.0553		1,329.8858
Unmitigated	0.2434	1.0449	3.3996	0.0131	1.2167	9.7500e-003	1.2265	0.3254	9.0800e-003	0.3345		1,328.5044	1,328.5044	0.0553		1,329.8858

4.2 Trip Summary Information

	Average Daily Trip Rate			Unmitigated	Mitigated
Land Use	Weekday	Saturday	Sunday	Annual VMT	Annual VMT
Congregate Care (Assisted Living)	149.12	149.12	149.12	573,628	573,628
Parking Lot	0.00	0.00	0.00		
Total	149.12	149.12	149.12	573,628	573,628

4.3 Trip Type Information

	Miles			Trip %			Trip Purpose %		
Land Use	H-W or C-W	H-S or C-C	H-O or C-NW	H-W or C-W	H-S or C-C	H-O or C-NW	Primary	Diverted	Pass-by
Congregate Care (Assisted	14.70	5.90	8.70	40.00	19.00	41.00	100	0	0
Parking Lot	16.60	8.40	6.90	0.00	0.00	0.00	0	0	0

4.4 Fleet Mix

Land Use	LDA	LDT1	LDT2	MDV	LHD1	LHD2	MHD	HHD	OBUS	UBUS	MCY	SBUS	MH
Congregate Care (Assisted Living)	0.558976	0.043534	0.209821	0.113949	0.016111	0.005791	0.025447	0.016654	0.001713	0.001553	0.004896	0.000590	0.000966
Parking Lot	0.558976	0.043534	0.209821	0.113949	0.016111	0.005791	0.025447	0.016654	0.001713	0.001553	0.004896	0.000590	0.000966

5.0 Energy Detail

Historical Energy Use: N

5.1 Mitigation Measures Energy

	ROG	NOx	CO	SO2	Fugitive PM10	Exhaust PM10	PM10 Total	Fugitive PM2.5	Exhaust PM2.5	PM2.5 Total	Bio- CO2	NBio- CO2	Total CO2	CH4	N2O	CO2e
Category	lb/day										lb/day					
NaturalGas Mitigated	0.0108	0.0923	0.0393	5.9000e-004		7.4600e-003	7.4600e-003		7.4600e-003	7.4600e-003		117.8658	117.8658	2.2600e-003	2.1600e-003	118.5662
NaturalGas Unmitigated	0.0108	0.0923	0.0393	5.9000e-004		7.4600e-003	7.4600e-003		7.4600e-003	7.4600e-003		117.8658	117.8658	2.2600e-003	2.1600e-003	118.5662

5.2 Energy by Land Use - NaturalGas

Unmitigated

	NaturalGas Use	ROG	NOx	CO	SO2	Fugitive PM10	Exhaust PM10	PM10 Total	Fugitive PM2.5	Exhaust PM2.5	PM2.5 Total	Bio- CO2	NBio- CO2	Total CO2	CH4	N2O	CO2e
Land Use	kBTU/yr	lb/day										lb/day					
Congregate Care (Assisted Living)	1001.86	0.0108	0.0923	0.0393	5.9000e-004		7.4600e-003	7.4600e-003		7.4600e-003	7.4600e-003		117.8658	117.8658	2.2600e-003	2.1600e-003	118.5662
Parking Lot	0	0.0000	0.0000	0.0000	0.0000		0.0000	0.0000		0.0000	0.0000		0.0000	0.0000	0.0000	0.0000	0.0000
Total		**0.0108**	**0.0923**	**0.0393**	**5.9000e-004**		**7.4600e-003**	**7.4600e-003**		**7.4600e-003**	**7.4600e-003**		**117.8658**	**117.8658**	**2.2600e-003**	**2.1600e-003**	**118.5662**

Mitigated

	NaturalGas Use	ROG	NOx	CO	SO2	Fugitive PM10	Exhaust PM10	PM10 Total	Fugitive PM2.5	Exhaust PM2.5	PM2.5 Total	Bio- CO2	NBio- CO2	Total CO2	CH4	N2O	CO2e
Land Use	kBTU/yr	lb/day										lb/day					
Congregate Care (Assisted Living)	1.00186	0.0108	0.0923	0.0393	5.9000e-004		7.4600e-003	7.4600e-003		7.4600e-003	7.4600e-003		117.8658	117.8658	2.2600e-003	2.1600e-003	118.5662
Parking Lot	0	0.0000	0.0000	0.0000	0.0000		0.0000	0.0000		0.0000	0.0000		0.0000	0.0000	0.0000	0.0000	0.0000
Total		**0.0108**	**0.0923**	**0.0393**	**5.9000e-004**		**7.4600e-003**	**7.4600e-003**		**7.4600e-003**	**7.4600e-003**		**117.8658**	**117.8658**	**2.2600e-003**	**2.1600e-003**	**118.5662**

6.0 Area Detail

6.1 Mitigation Measures Area

	ROG	NOx	CO	SO2	Fugitive PM10	Exhaust PM10	PM10 Total	Fugitive PM2.5	Exhaust PM2.5	PM2.5 Total	Bio- CO2	NBio- CO2	Total CO2	CH4	N2O	CO2e
Category	lb/day										lb/day					
Mitigated	0.0916	0.0306	2.6473	1.4000e-004		0.0146	0.0146		0.0146	0.0146	0.0000	4.7570	4.7570	4.6200e-003	0.0000	4.8723
Unmitigated	0.0916	0.0306	2.6473	1.4000e-004		0.0146	0.0146		0.0146	0.0146	0.0000	4.7570	4.7570	4.6200e-003	0.0000	4.8723

6.2 Area by SubCategory

Unmitigated

	ROG	NOx	CO	SO2	Fugitive PM10	Exhaust PM10	PM10 Total	Fugitive PM2.5	Exhaust PM2.5	PM2.5 Total	Bio- CO2	NBio- CO2	Total CO2	CH4	N2O	CO2e
SubCategory	lb/day										lb/day					
Architectural Coating	1.9400e-003					0.0000	0.0000		0.0000	0.0000			0.0000			0.0000
Consumer Products	9.3900e-003					0.0000	0.0000		0.0000	0.0000			0.0000			0.0000
Hearth	0.0000	0.0000	0.0000	0.0000		0.0000	0.0000		0.0000	0.0000	0.0000	0.0000	0.0000	0.0000	0.0000	0.0000
Landscaping	0.0803	0.0306	2.6473	1.4000e-004		0.0146	0.0146		0.0146	0.0146		4.7570	4.7570	4.6200e-003		4.8723
Total	**0.0916**	**0.0306**	**2.6473**	**1.4000e-004**		**0.0146**	**0.0146**		**0.0146**	**0.0146**	**0.0000**	**4.7570**	**4.7570**	**4.6200e-003**	**0.0000**	**4.8723**

6.2 Area by SubCategory

Mitigated

	ROG	NOx	CO	SO2	Fugitive PM10	Exhaust PM10	PM10 Total	Fugitive PM2.5	Exhaust PM2.5	PM2.5 Total	Bio- CO2	NBio- CO2	Total CO2	CH4	N2O	CO2e
SubCategory	lb/day										lb/day					
Architectural Coating	1.9400e-003					0.0000	0.0000		0.0000	0.0000			0.0000			0.0000
Consumer Products	9.3900e-003					0.0000	0.0000		0.0000	0.0000			0.0000			0.0000
Hearth	0.0000	0.0000	0.0000	0.0000		0.0000	0.0000		0.0000	0.0000	0.0000	0.0000	0.0000	0.0000	0.0000	0.0000
Landscaping	0.0803	0.0306	2.6473	1.4000e-004		0.0146	0.0146		0.0146	0.0146		4.7570	4.7570	4.6200e-003		4.8723
Total	**0.0916**	**0.0306**	**2.6473**	**1.4000e-004**		**0.0146**	**0.0146**		**0.0146**	**0.0146**	**0.0000**	**4.7570**	**4.7570**	**4.6200e-003**	**0.0000**	**4.8723**

7.0 Water Detail

7.1 Mitigation Measures Water

8.0 Waste Detail

8.1 Mitigation Measures Waste

9.0 Operational Offroad

Equipment Type	Number	Hours/Day	Days/Year	Horse Power	Load Factor	Fuel Type

10.0 Stationary Equipment

Fire Pumps and Emergency Generators

Equipment Type	Number	Hours/Day	Hours/Year	Horse Power	Load Factor	Fuel Type

Boilers

Equipment Type	Number	Heat Input/Day	Heat Input/Year	Boiler Rating	Fuel Type

User Defined Equipment

Equipment Type	Number

11.0 Vegetation

APPENDIX B

- Arborist Report
- Arborist Site Plan with Trees

Protected Tree Report

February 25, 2019

Report Prepared on Behalf of:
Mr. Axel Guerra
Kisco Senior Living
5790 Fleet Street Suite 300
Carlsbad, CA 92008

Project Location:
574 S Glassell St,
Orange CA. 92866

Prepared by:
Evergreen Arborist Consultants, Inc.
Michael Green
Registered Consulting Arborist No.: 602
Certified Arborist No.: WE9464A
5670 Wilshire Blvd. Suite 1800
Los Angeles, CA 90036
310.913.5203

© 2019 Evergreen Arborists Consultants. All Rights Reserved.

Table of Contents

1.0 Introduction.....3

2.0 Background and Project Description 3

3.0 Observations and Summary 4

4.0 Summary Statement 4

Matrix of Trees, Table 1 5

5.0 Tree Preservation Guidelines 6

6.0 Tree Protection Measures 6

7.0 Conclusions 9

8.0 Recommendations 10

9.0 Definitions 12

Attachments

Attachment A - Aerial Image 19

Attachment B - Site Plan 20

Attachment C - Site Photos 21

Attachment D - Road Building over Tree Root Zone 25

Report Writer 27

Assumptions and Limitations 28

1.0 Introduction

This arborist report discusses the impact of the proposed construction of a multi-unit senior living facility at 574 S. Glassell Street and a replacement driveway near two offsite trees on an adjacent property located at 2629 E. Chapman, Orange, CA. The subject property has two silk oak trees in the front entrance driveway. Two adjacent offsite trees with large canopies overhang the subject property: one Moreton bay fig and one Aleppo pine (see Matrix of Trees). The two silk oak trees are proposed for removal due to the construction of the driveway for the project. The two adjacent offsite trees, a Moreton bay fig and an Aleppo pine, are to be preserved and protected throughout the duration of the project.

Purpose and Use of Report

Kisco Senior Living engaged the services of Evergreen Arborist Consultants (EAC) to evaluate four trees and prepare a report. This report presents my observations and opinions concerning the four subject trees. Information in this report is limited to the condition of the trees during my inspection on January 21, 2019. The report is to be used by Kisco Senior Living at their discretion.

Limits of Agreement

The examination of the trees is based on my visual inspection. My site examination and the information in this report is limited to the date, time and condition of the trees at the time of my inspection. My examination is not considered as a tree risk assessment, and emphasizes tree preservation during development. This report is not intended as and does not represent legal advice and should not be relied upon to take the place of such advice. All measurements are approximate.

2.0 Background and Project Description

The property is located on one parcel in a mixed commercial and residential neighborhood zone. The site use consists of an existing restaurant building and parking lot. The topography of the site is flat. The proposed new building and driveway were not under construction at the time of my inspection.

Four trees were inventoried, two silk oak trees, one Moreton bay fig and one Aleppo pine tree as depicted on the attached Site Plan and shown with tree I.D. numbers. Onsite silk oak trees #3 and #4 are proposed for removal due to the construction of the new driveway for the project.

3.0 Observations & Summary

Each listed tree is assigned "Good," "Fair," "Poor" or "Dead/Dying" condition rating as a means to cumulatively measure their physiological health, structural integrity, anticipated life span, location, size, and specie type. A description of these ratings with the assigned tree numbers are presented below.

Good: These trees appear in overall good health, seem structurally stable, and have a high potential of providing long-term contribution to the site. They are the most suitable for retention and protection.

Applies to tree #1.

Fair: These trees require frequent care throughout their remaining life span and provide less significance to the site than those assigned a high suitability. They may be worthy of retention, but not at the expense of significant design revisions.

Applies to trees #2, #3 and #4.

Poor: These trees are predisposed to irreparable health and structural problems that are expected to worsen regardless of measures employed. Low suitability for preservation or survival from development impacts suggest they are appropriate for removal and replacement with suitable landscape trees.

Applies to no trees.

Dead or dying: Applies to no trees.

4.0 Summary Statement

If all the EAC recommendations are implemented, including two Special Treatment Areas for the driveway design; and the City of Orange tree ordinance regulations are followed, the trees proposed for retention (see Matrix of Trees) would be reasonably preserved and protected. Therefore, significant detrimental impacts to the protected trees including the historic Morton Bay Fig, would be avoided.

Matrix of Trees, Table 1

Tree Tag	Tree	Species	Condition	DBH - Inches	Height - Feet	Canopy Width - Feet	Suitability for Preservation	Fencing Type	Tree Fencing Dimensions	Recommendation	Notes
1	Moreton Bay Fig	*Ficus macrophylla*	Good	12.5 ft	80'	150' x 142'	High	Type I	15' outside dripeline of tree	Protect	
2	Aleppo Pine	*Pinus halepensis*	Fair	21"	25'	30' x 34'	High	Type I	10' outside dripeline of tree	Protect	Browning on needles
3	Silk Oak Tree	*Grevillea robusta*	Fair	45"	90'	30' x 32'	Low	NA	NA	Remove	
4	Silk Oak Tree	*Grevillea robusta*	Fair	34"	90'	34' x 32'	Low	NA	NA	Remove	

Plans shall delineate TPZ fencing according to Table 1 dimensions. Trees #1 and #2 – install Type I chain link fencing to provide protection during the all construction step phases. Relocation or entry requires coordination with project arborist.

5.0 Tree Preservation Guidelines

The proposed trees designated for protection (see Matrix of Trees) must be protected by the contractors in the TPZ. The trees listed in this report under "preserve" are suitable for preservation and have the potential for longevity at the site. The trees proposed for retention are rated for suitability for preservation based upon age, health, structural condition, and ability to safely coexist within a development environment. If all my recommendations are implemented, including two Special Treatment Areas for driveway's design materials; and the City of Orange tree ordinance regulations are followed, the trees proposed for retention (see Matrix of Trees) would be reasonably preserved and protected. Significant detrimental impact to the protected trees would be avoided.

Construction activities near trees may have long-term effects on trees. Trees vary in their ability to adapt to altered growing conditions. Mature trees can have established stable biological systems in the pre-existing physical environment. Disruption of this environment by construction activities interrupts the tree's physiological processes causing depletion of energy reserves and a decline in vigor, which may result in a tree's death. Typically, this reaction develops between one to five years, but symptoms may not show for many years after injurious disruption. The tree protection regulations are intended to guide a construction project to ensure that appropriate design and best practices will be implemented in the field to eliminate undesirable consequences that may result from uninformed or careless acts, and preserve both trees and property values.

The Best Management Practices (BMP) are designed to preserve and protect tree health by avoiding damage to tree roots, trunk, or crown. Site development and detailed planning conditions are important components to avoid disturbance within the Tree Protection Zone (TPZ) for all trees designated for protection. Tree protection provides for the physical protective barriers to control site disturbances and activities such as grading, demolition, building, hardscape and landscape construction, infrastructure and utility installation, maintenance, or other changes. Any of these impacts can affect the structural integrity, stability and vigor of protected trees.

6.0 Tree Protection Measures

The recommended Tree Protection Measures presented within this section serve as general design guidelines to help mitigate or avoid tree injury to remain consistent with the City goals, policy and ordinance requirements. The measures listed are intended to be utilized as Conditions of Approval by the approving review body. They are subject to revision upon any changes to the project plans reviewed and the Project Arborist must be consulted in the event any measure cannot be feasibly implemented. Please note any referenced distances from trunks are intended

from the closest edge (face) of their outermost perimeter at soil grade. At a minimum, a Type I chain link fencing should also be installed 15-feet outside the dripline of tree #1 and 10-feet outside the dripline of tree #2.

5.1 Design Guidelines—Site, Grading & Improvements

1. In the TPZ, all trenching, soil scraping, compaction, mass grading, finish-grading, over excavation, sub excavation, swales, bio swales, storm drains, equipment cleaning, stockpiling/dumping of materials, and equipment operation shall be avoided. Where an impact encroaches slightly within a setback, it can be reviewed on a case-by-case basis by the Project Arborist to determine appropriate mitigation measures.

2. All existing unused lines, pipes, and vaults within the TPZ should be abandoned and cut off at existing grade rather than being dug up and causing subsequent root damage.

3. The permanent and temporary drainage design, including downspouts, should not require water being discharged within the TPZ. The drainage should not require trenching for storm drains or swales within the TPZ.

4. Underground utilities and services should be routed beyond the TPZ.

5. The future staging area and route(s) of access should not be in TPZ.

6. Restrict spoils and runoff from traveling into root zones, the future erosion control design should establish any silt fencing or straw wattles away from the tree's trunk (not against it) and as close to the canopy's edge as possible.

5.2 Design Guidelines--Proposed Landscape Design

7. Plant material installed beneath the canopies of the protected trees, if applicable, must be appropriate and planted at least 3 feet from the trunk.

8. Irrigation should not spray the trunk.

9. Irrigation, valves, and lighting features should be placed so that no trenching occurs within the TPZ.

10. New property fencing and fence posts should be placed at least 2 feet from the tree trunk.

11. Groundcover beneath the canopy should be comprised of a 5" layer of wood chips or other high-quality mulch. Keep mulch at least 6 inches from trunk.

12. Tilling, ripping, and compaction within the TPZ should be avoided.

13. Bender board or other edging material proposed beneath the canopy should be placed at existing grade.

14. Roots with diameters of 2 inches or greater should not be damaged or cut without prior assessment of the Project Arborist. All tools shall be sanitized in between cuts. Materials commonly used to sterilize tools include bleach (10 percent solution) or Lysol. An hourly rate shall be charged for these inspections.

5.3 During Demolition and Construction

1. Tree trunks shall not be used as winch supports for moving or lifting heavy loads.

2. The removal of existing features within the TPZ must be carefully performed to avoid excavating into root zones.

3. Roots with diameters of 2 inches or greater should not be damaged or cut without prior assessment of the Project Arborist. All tools shall be sanitized in between cuts. Materials commonly used to sterilize tools include bleach (10 percent solution) or Lysol. An hourly rate shall be charged for these inspections.

4. Supplemental water will be needed to help mitigate root loss/disturbance.

5. Spoils created during digging shall not be piled or spread on unpaved ground within the TPZ.

6. Digging holes for fence posts within the TPZ should be manually performed. In the event a root of 2 inches or greater in diameter is encountered, the process should be shifted over by 12 inches and the process repeated.

7. Great care must be taken by equipment operators to position their equipment to avoid the trunks of protected trees. The Project Arborist can be consulted to provide a feasible solution if needed.

8. Dust accumulating on trunks and canopies during dry weather periods and should be periodically washed away every 3 to 4 months. Dust accumulating on trunks and canopies after grading should also be washed at the completion of the grading.

9. The disposal of harmful products is prohibited beneath the canopies. Herbicide should not be used within a TPZ on site or should be labeled for safe use near trees.

5.4 Soil Compaction

Soil compaction is a complex set of physical, chemical, and biological constraints on tree growth. Principal components leading to limited growth are the loss of aeration and pore space, poor gas exchange with the atmosphere, lack of available water, and mechanical impedance of root growth. Soil compaction is considered to be the largest single factor responsible for the decline of trees on construction sites.

5.5 Grading Limitations within the Tree Protection Zone

1. Lowering the grade around trees can have an immediate and long-term effect on trees. Typically, most roots are within the top 3 feet of soil, and most of the fine roots active in water and nutrient absorption are in the top 12 inches.

2. Grade changes within the TPZ are not permitted. Tilling, ripping, and compaction within the TPZ should be avoided.

3. Grade changes outside the TPZ shall not significantly alter drainage.

4. Grade changes under specifically approved circumstances shall not allow more than 6 inches of fill soil or allow more than 4 inches of existing soil to be removed from natural grade, unless mitigated.

5. Grade fills over 6 inches or impervious overlay shall incorporate an approved permanent aeration system, permeable material, or other approved mitigation.

6. Grade cuts exceeding 4 inches shall incorporate retaining walls or an appropriate transition equivalent.

7. Roots with diameters of 2 inches or greater should not be damaged or cut without prior assessment of the Project Arborist. All tools shall be sanitized in between cuts. Materials commonly used to sterilize tools include bleach (10 percent solution) or Lysol. An hourly rate shall be charged for these inspections.

7.0 Conclusions

In my professional opinion, the project could proceed with minimal negative effect on protected trees #1 & #2, providing the following conditions are met and incorporated into the approved plan set:

1. Trees #1 and #2, are to be preserved throughout the duration of the project. They should be preserved by using Type I chain link fencing underneath the canopy of the tree. It is estimated that 15% of the root zone underneath the canopy of the Moreton Bay Fig will be impacted by the proposed construction. The 15% percent was derived by taking the square footage of the proposed construction underneath the canopy (approximately 2,600 sq. ft.). and dividing it by tree canopy (approximately 19,500 sq. ft.). The impact should be less than significant if the construction adheres to this report.

   Trees #3 and #4 will be significantly impacted by the proposed construction of the new driveway for the project and are therefore not suitable for preservation.

8.0 Recommendations

1. Tree Protection Sheet. This report in its entirety shall be added to the approved building permit plan sets as a critical reference for contractor implementation. The contractor should be familiar with the specific instructions and responsibilities revolving around the trees to be protected. It is recommended that prior to commencement a professional arborist be retained to work with the contractor and his personnel during critical phases of the project.

2. Trees #3 and #4 will be significantly impacted by the proposed construction of the new driveway for the project, are not suitable for preservation and therefore are scheduled to be removed.

3. Trees #1and #2, will need to be preserved throughout the duration of the project. They should be preserved by using Type I chain link fencing underneath the canopy of the tree.

4. All pruning for trees #1 and #2, should be performed by a qualified tree trimmer and should be consistent with ANSI A300 Standards - Part I Pruning, and the most recent edition of the International Society of Arboriculture Best Management Practices for Tree Pruning and Utility Pruning of Trees. All pruning shall be monitored and supervised by a Registered Consulting Arborist from EAC. All tools shall be sanitized in between cuts when pruning the tree. Materials commonly used to sterilize tools include bleach (10 percent solution) or Lysol.

5. An hourly rate shall be charged for these inspections. All recommendations are at the client’s expense.

8.1 Special Treatment Areas (STA) #1 & #2 (see Site Plan, Sheet A2.01)

6. Exposed roots at the site of trees #1 and #2, to remain and should be immediately covered with burlap, carpet remnants or other material and kept moist until top soil can be replaced.

7. Roots with diameters of 2-inches or greater should not be damaged or cut without prior assessment of the Project Arborist. An hourly rate shall be charged for these inspections. Roots should be flush-cut with hand pruners, hand loppers, and/or handsaw (as appropriate) for roots ½ inch or greater in diameter. All tools shall be sanitized in between cuts. Materials commonly used to sterilize tools include bleach (10 percent solution) or Lysol.

8. All underground utilities and services shall be rerouted outside the tree protection zone.

9. Basic design steps for new driveway shall be as follows.
    a. Remove existing asphalt and only a limited amount of existing base rock for releveling. Removal of should be performed by a jackhammer or comparable tool to break material into small enough pieces to be removed by hand.
    b. Specify limits to rock, soil & root removal from historic trees. Set the grading elevation specifically beforehand (not at building permit).
        i. We recommend “pot holes” (two to three holes, approximately 18 x 18-inches wide) per STA area to determine root depth.
        ii. Tip. Leave as much existing rock as possible to avoid excess root removal.
    c. Lay Geogrid (follow manufacturer recommendations), new layer of base rock (depth per Engineer) and pervious surface above the newly established base.
    d. Pervious driving surfaces over the historic tree roots should be low impact. Consider the following materials:
        i. pervious asphalt, pervious concrete (ground or coarse), pervious pavers (color stained SF-Rima stone, ceramic or equiv.)
        ii. Note: Overall finished grade. The engineered strength required for each of these materials can impose a different thickness (height) to the overall finished surface. It is a priority to select the material early in design for this elevation element. The remainder of the site would be based off this level for water management and driving surfaces.

10. If additional site inspections by the Project Arborist are required, an hourly rate is charged.

11. Fenced enclosures should be erected around all trees to be protected to keep crowns and branching structure clear from contact by equipment, materials, and activities; preserve

roots and soil condition in an intact and non-compacted state; and identify the Tree Protection Zone in which no soil disturbance is permitted and activities are restricted, unless otherwise approved by the Project Arborist.

12. A 'Warning' sign should be prominently displayed on each protective enclosure. The sign will be a minimum of 8.5 inches x 11 inches and clearly state the following:

TREE PROTECTION ZONE **This Fence Shall Not be Removed**

13. A Type I Chain Link Tree Protection Fence should be preserved throughout the duration of the project. The fences should enclose the area under the canopy drip line or TPZ.

9.0 Definitions

1. Basal flair or root crown means the tree trunk where it emerges from the root system and flairs out to create the base of the tree.

2. Canopy means the area of a tree that consists primarily of branches and leaves.

3. Drip line means the outermost area of the tree canopy (leafy area of tree).

4. Root Protection Zone means the area within a circle with a radius equal to the greatest distance from the trunk to any overhanging foliage in the tree canopy.

5. Diameter at Standard Height (DSH) means the diameter of the perimeter tree trunk at 4.5 feet (or 54 inches) above natural grade level. The diameter may be calculated by using the following formula: DSH = circumference at 4.5 feet x 3.142 (D=C x Pi). The City of Orange Tree Ordinance uses this trunk sizing formula.

6. Disturbance refers to all of the various activities from construction, improvements or landscaping that may damage trees.

7. Drip line area means the area within X distance from the trunk of a tree, measured from the perimeter of the trunk of the tree at 54 inches above natural grade, where X equals a distance ten times the diameter of the trunk at 54 inches above natural grade.

8. Pruning Restrictions. To preserve the natural character of the historic Morton Bay Fig #1, some limited crown raising on the project side may be required to achieve 14' vertical clearance but yet allow naturally growing branches to extend over the property line, new

parking and drive isle. Cutting vertically at property line would negatively alter the tree's intrinsic character and is not advised. Excessive Pruning may also mean: removing in excess, one-fourth (25 percent) or greater, of the functioning leaf, stem or root area. Pruning in excess of 25 percent is injurious to the tree and is a prohibited act. Excessive pruning typically results in the tree appearing as a 'bonsai', 'lion's-tailed', 'lolly-popped', overly thinned or unbalanced.

9. Root pruning may include the cutting of any root 2 inches or greater in diameter and/or severing in excess of 25 percent of the roots. Roots can only be pruned outside the drip line.

10. Structural defect means any structural weakness or deformity of a tree or its parts. A tree with a structural defect can be verified to be hazardous by a certified arborist.

Fencing

Required fencing should not be removed until completion of project.

The fence should enclose the area under the canopy drip line or TPZ of the tree to be saved throughout the life of the project, or until final improvement work within the area is required, typically near the end of the project. Tree fencing should be erected before demolition, grading or construction begins. Contact the Project Arborist for timing of TPZ alteration, access or removal.

WARNING SIGN POSTED TO FENCING

This warning sign shall be posted to the fencing. A warning sign shall be prominently displayed on the fence. The sign shall be a minimum of 8.5 x 11 inches and clearly state: WARNING - Tree Protection Zone - This fence shall not be removed according to the City of Orange. For illustration purposes only

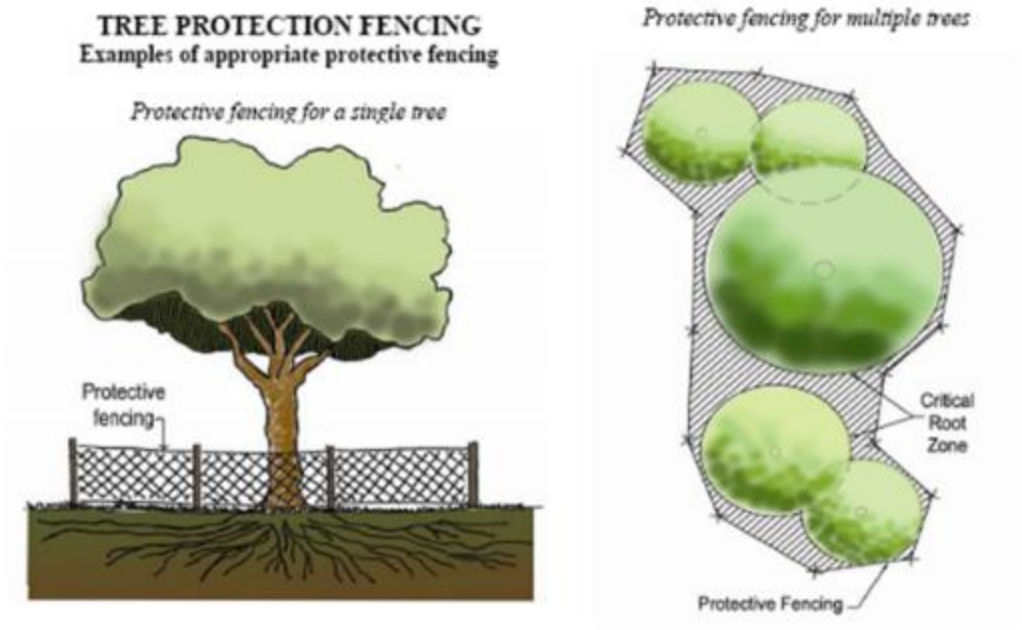

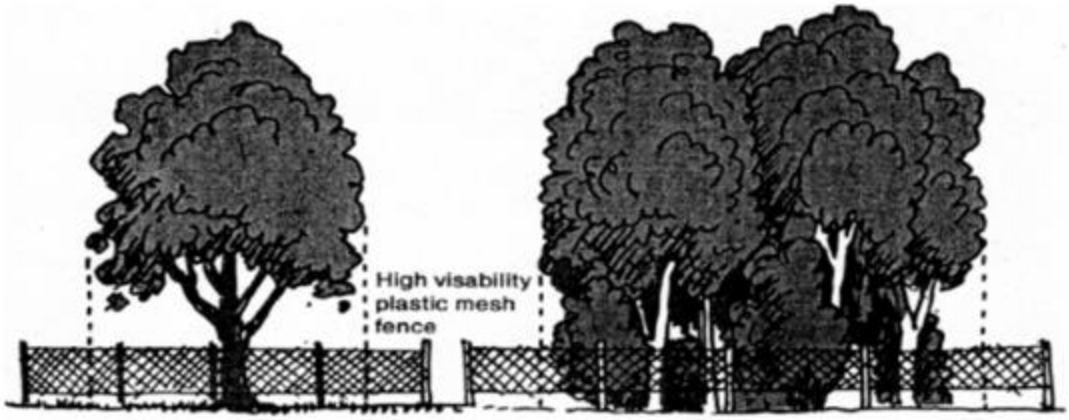

Type I Tree Protection Fencing encloses a partial area of the canopy dripline. The fencing shall enclose the area under the canopy to be saved throughout the life of the project, or until final improvement work within the area is required, typically near the end of the project. Contractor is responsible for protecting roots.

For illustration purposes only.

Tree photo not taken from current site. For illustration purposes only.

Example of Type I Chain link fencing underneath the dripline of tree canopy. For illustration purposes only

USE OF HERBICIDE IS NOT ALLOWED WITHIN 20 FEET OF THE TREE'S DRIPLINE.

No Dumping Allowed Around the Protected Tree. Prohibited activities are:

Storage or parking vehicles, building materials, refuse, excavated materials spoils or dumping of poisonous materials on or around trees and roots. Poisonous materials include, but are not limited to, paint, petroleum products, concrete or stucco mix, dirty water or any other material which may be deleterious to tree health.

PRUNING

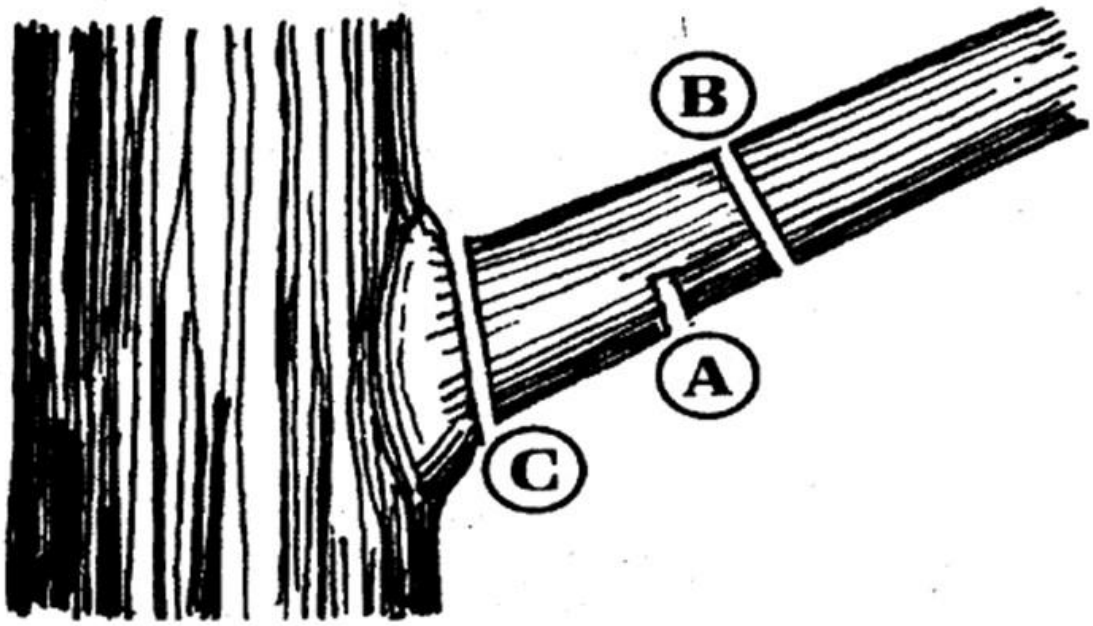

Provided By: National Arbor Day Foundation Illustrations

Figure 1. Recommended pruning cut example.

When removing a branch, always cut outside the branch bark ridge and collar. Do not make a flush cut adjacent to the trunk of the tree or branch being pruned.

- **A.** Make a partial cut from beneath, at a point several inches away from the trunk.
- **B.** Make a second cut from above several inches out from the first cut, to allow the limb to fall safely.
- **C.** Complete the job with a final cut just outside the branch collar, the raised area that surrounds the branch where it joins the trunk.

WOUNDS TO THE TRUNK AND LIMBS CAUSED DURING THE CONSTRUCTION OF THE PROJECT SHALL BE TREATED as stated above.

TREE TOPPING: It shall be unlawful for any person to top any tree without a tree permit approved by the Project Arborist. If the Project Arborist determines that crown reduction of the tree is necessary because the tree has been severely damaged by storms or other causes, or is in circumstance which makes other pruning practices impractical, the Project Arborist may issue a tree permit allowing topping of the tree.

Attachment A – Aerial Image

Figure 2. Google Aerial. Subject trees outlined in red.

Attachment B – Site Plan

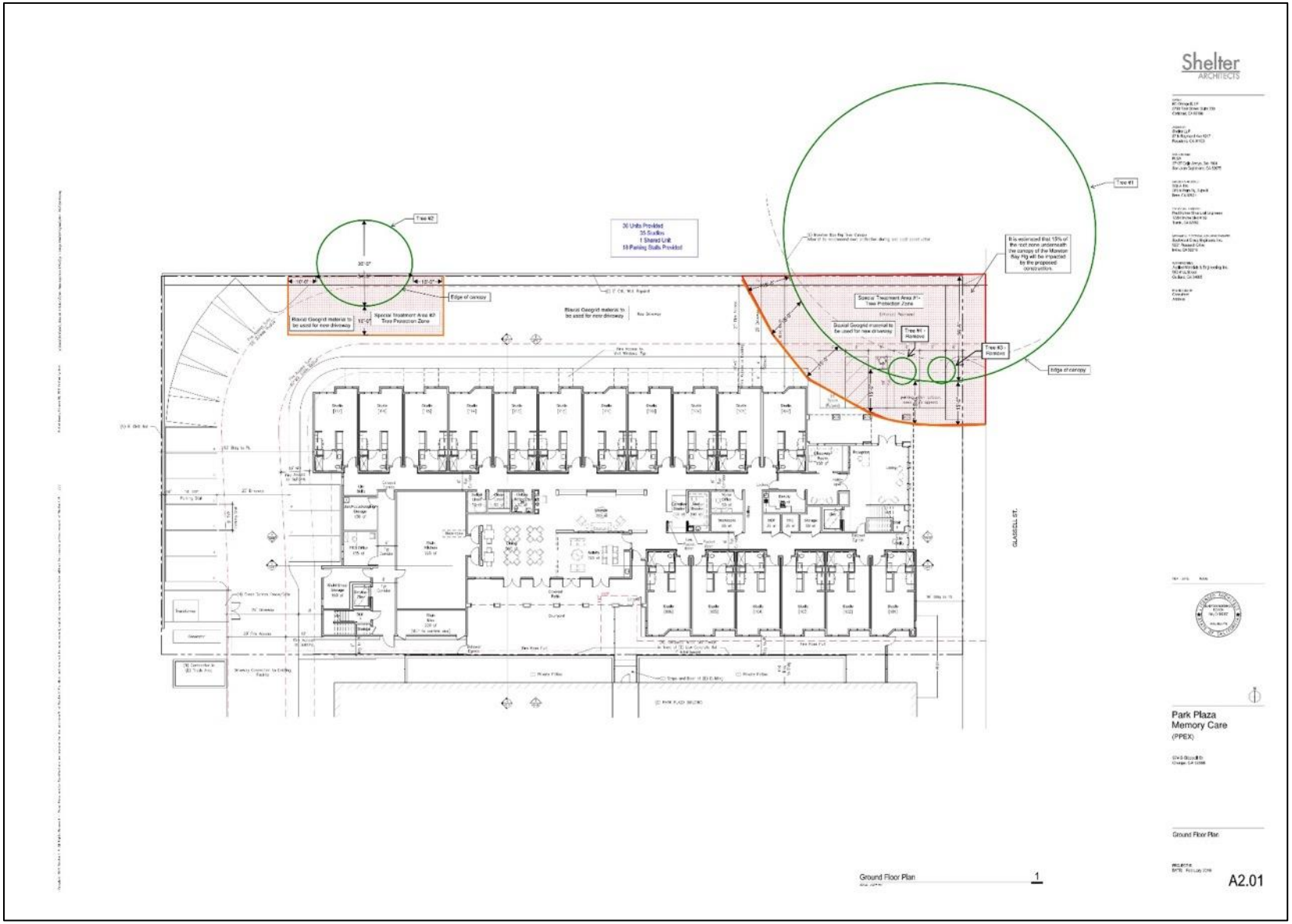

Attachment C – Site Photos

Tree #1

Tree #1. Tree protection zone to extend 15-feet beyond the dripline of the tree canopy. Biaxial Geogrid material to be used for new driveway.

Tree #2. Tree protection zone to extend 15-feet beyond the dripline of the tree canopy. Biaxial Geogrid material to be used for new driveway.

Trees #3 and #4

574 S Glassell St
Orange CA. 92866

Attachment D – Road Building over Tree Root Zone

Road building over soft soil or tree root zone using Biaxial Geogrid material

ADDENDUM 7
www.cityofpaloalto.org

Dave Dockter, Landscape Specialist, City of Palo Alto

Synopsis
Biaxial geogrid material is used as a subgrade layer below aggregate (rock) in reinforcing pavement and all-season road building applications. It is a stiff synthetic permeable material consisting of sets of tensile ribs pre-tensioned in two directions to allow pinning down of surrounding soil, stone, or other material. Geogrid can be constructed over soft soils or tree root zones, improves filtration, reduces base thickness needed, compaction of underlying parent soil (85%) and incidents of tire ruts and soil migration. Product specifications and details are available from manufacturer at http://www.tensarcorp.com.html.

Tensar BX-1100 or equivalent is acceptable for use over tree root zones when recommended under purview of consulting arborist.

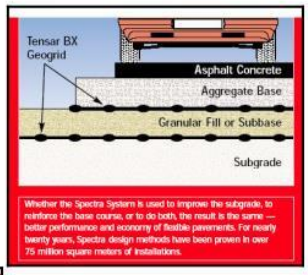

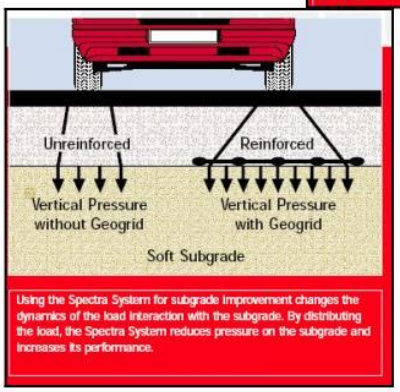

Figures supplied by manufacturer

Geogrid Soil Stengthing_Road building over soft soil or tree root zone — Dave Dockter, Landscape Specialist

Road building over soft soil or tree root zone using Biaxial Geogrid material

- No additional compaction. To protect the root zones affected by a driveway in the root zone of a protected tree, consider the best management practice use of Tensar BX-1100 Biaxial Geogrid to minimize required compaction and to relieve the roots from strain caused by passing cars. With Tensar BX-1100 geogrid, compaction can be limited to 85%, and is more than adequate (BX-1200 material is rated for freeways).

Figure 7 – Tensar Biaxial Geogrid – not just a geotextile

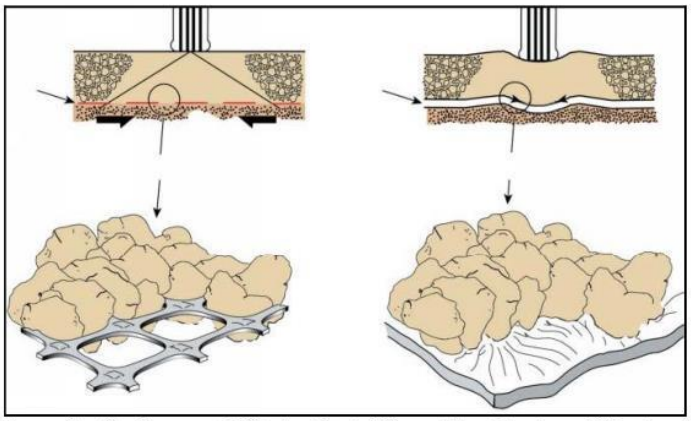

Figure 8 – Confinement Effect – Biaxial Geogrid vs Tensioned Membranes

- Soil Analysis: The soil analysis should be performed and may show existing compaction of 85%-95% at test sites. Generally, the soil will not need additional compaction to support the Biaxial Geogrid. Once installed the Geogrid will disperse the load from vehicles.
- Permeable surfaces. Proposed driveways should be evaluated for the percentage of cover within the drip line area of the trees. To allow the needed water to reach the roots consider the use of permeable paver stones. The advantages over concrete include permeability, attractiveness; they won't crack, and are known to have good traction.

Geogrid Soil Stengthing_Road building over soft soil or tree root zone Dave Dockter, Landscape Specialist

574 S Glassell St
Orange CA. 92866

Report Prepared by:

Michael Green

This arborist report is prepared by Michael Green. He has over 15 years of experience in the landscape industry. His background includes hands-on experience in tree care, plant health care, landscape maintenance, landscape construction, and irrigation design and water management. His experience in the landscape industry makes him an excellent choice for preserving trees during construction. He has a Bachelor of Science degree in agribusiness from California State Polytechnic University, San Luis Obispo.

Certifications, Licenses, and Professional Associations

Registered Consulting Arborist No.: 602, American Society of Consulting Arborists (ASCA)
Certified Arborist, International Society of Arboriculture (ISA)
Certified Irrigation Auditor (IA)
Licensed California Landscape Contractor (C-27)
California Licensed Pesticide Applicator, (QAL)
Tree Risk Assessment Qualified (ISA)

Ruben Green, contributing

He is president of Evergreen Arborists Consultants, Inc. with more than 33 years of experience in the landscape industry. His background includes hands-on experience in tree care, landscape maintenance, construction, and irrigation management. He has a Master's degree in plant science from California State Polytechnic University, Pomona. He provides detailed investigations, independent analysis, and expert witness testimony since 2003. He is a Registered Consulting Arborist with the American Society of Consulting Arborists (ASCA), a certified arborist and a certified tree risk assessor with the International Society of Arboriculture (ISA), licensed pesticide applicator (QAL) with the state of California, and a (C-27) licensed California contractor.

574 S Glassell St
Orange CA. 92866

Assumptions and Limitations

My field methods are evaluated with a 100 percent ground visual survey. No climbing, excavating, coring, boring, sounding of the trunk, or drilling was performed. Trees that require an additional inspection for risk and hazard evaluation beyond the visual ground inspection will be billed under a separate proposal. All inspections are visual ground inspections and are not considered as a risk inspection. No digging, root collar excavation, drilling, coring, or climbing was performed. A risk assessment includes but not be limited to a root collar excavation, climbing the tree, and further examining the upper side of branches and upper trunk and stems. My site examination and the information in this report are limited to the date and time the inspection occurred. The information in this report was limited to the condition of the trees during my inspection.

Additional inspection(s) require a separate agreement between both parties in writing. Site inspections only provide a "snapshot" of the tree. Changes in environmental conditions such as but not limited to construction, surrounding site changes, flooding, root damage, fires, pruning practices, lack of maintenance, grade changes, and wind can impact the tree's conditions, structure, safety, risk factor, and health, etc. A consulting arborist cannot detect every condition that could possibly lead to the structural failure of a tree. Trees are living organisms that fail in ways we do not fully understand. Conditions are often hidden within trees and/or below ground under the tree. Arborists cannot guarantee that a tree will be healthy or safe under all circumstances or for a specified period of time. Likewise, remedial treatment does not guarantee outcome or results. The web provides numerous tree risk assessment sites that offer tips for tree care and detecting and/or identifying potential tree hazards. If the client believes the tree's condition has changed since the date of this inspection, the arborist should be contacted ASAP. Future inspections, canopy inspections, and root collar examinations are under the client's discretion.

Evergreen Arborists Consultants, Inc., its employees, or related companies, makes no guaranties, express or implied to the tree's health, risk, hazard, condition, potential for failure or future condition. Evergreen Arborists Consultants, Inc., its employees shall not be liable to client/owner or any other party(s) for loss of property, loss of life, loss of use, loss of profits or income(s), special damages, incidental damages, consequential damages, incidental damages, or damages arising from the failure of inspection(s) or weather conditions. This report is not valid until paid in full. The Client acknowledges and agrees that all intellectual property rights and title, including without limitation, all copyright in this Assessment shall remain solely with Evergreen Arborist Consultants, Inc. Possession of this Assessment, or a copy thereof, does not entitle the Client or any third party to the right of publication or reproduction of the Assessment for any purpose save and except where Evergreen Arborist Consultants, Inc. has given its prior written consent. The client shall hold this arborist harmless against any and all claims for injuries to persons or property on the premises.

574 S Glassell St
Orange CA. 92866

A consulting arborist is a tree specialist who uses their education, knowledge, training, and experience to examine trees, recommend measures to enhance the beauty and health of trees and attempt to reduce the risk of living near trees. Clients may choose to accept or disregard the recommendations of the arborist or seek additional advice. Any treatment(s), such as pruning and removal of trees, but not limited to, property boundaries, property ownership, site lines, disputes between neighbors, landlord-tenant matters, etc. are beyond the scope of this work. This arborist relies and accepts information from his client to be complete and accurate. The client hiring this arborist accepts full responsibility for authorizing the recommended treatment(s) or remedial measure(s) and holds this arborist harmless. Trees can be managed, but they cannot be controlled. To live near a tree is to accept some degree of risk. The only way to eliminate all risks is to eliminate all trees.

.

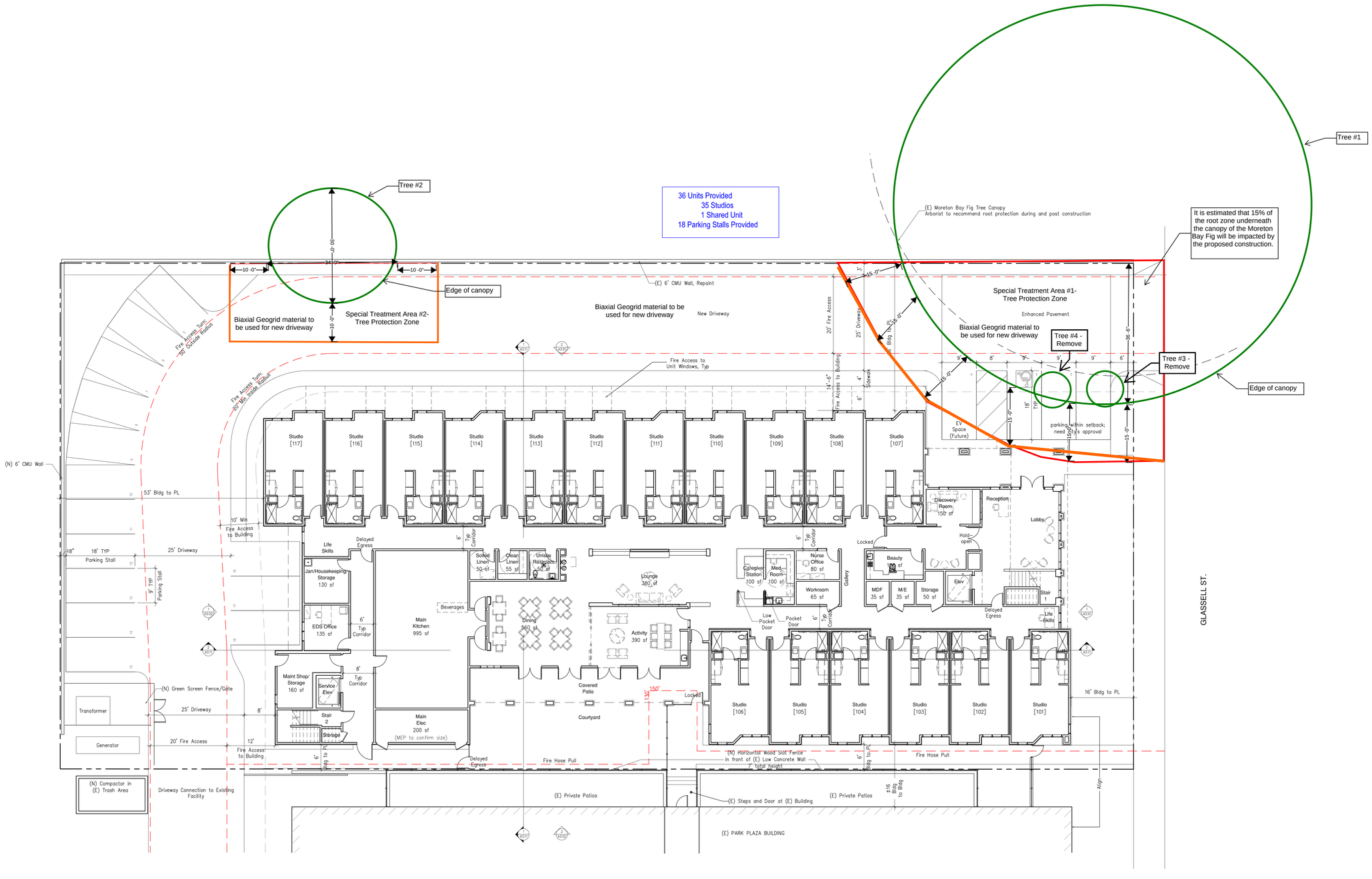

Ground Floor Plan 1

SCALE: 3/32" = 1'-0"

Shelter ARCHITECTS

OWNER
KC Orange II, LP
5790 Fleet Street, Suite 300
Carlsbad, CA 92008

ARCHITECT
Shelter *LLP*
87 N Raymond Ave #217
Pasadena, CA 91103

CIVIL ENGINEER
PLSA
27127 Calle Arroyo, Ste 1904
San Juan Capistrano, CA 92675

LANDSCAPE ARCHITECT
SOLA, Inc
360 N Palm St., Suite B
Brea, CA 92821

STRUCTURAL ENGINEER
Paul Rohrer Structural Engineers
17291 Irvine Blvd #152
Tustin, CA 92780

MECHANICAL, ELECTRICAL & PLUMBING ENGINEER
Southwest Group Engineers, Inc.
9201 Research Drive
Irvine, CA 92618

WATERPROOFING
Applied Materials & Engineering, Inc.
980 41st. Street
Oakland, CA 94608

INTERIOR DESIGN
Consultant
Address

REV DATE ISSUE

LICENSED ARCHITECT
LADYS MALDONADO BOWEN
No. C-30397
REN. 06/30/19
STATE OF CALIFORNIA

N

Park Plaza Memory Care

(PPEX)

574 S Glassell St
Orange, CA 92866

Ground Floor Plan

PROJECT #:
DATE: February 2019

A2.01

Copyright 2015 Shelter LLP All Rights Reserved – These Plans and/or Specifications are intended for the sole benefit of Shelter LLP's client and may not be used, reused, copied, or reproduced in any form without the express written consent of Shelter LLP. ///

Plotted Monday February 04, 2019 11:41am by Mark C:\Users\Mark\Box_SHELTER_PROJECTS\Park Plaza Expansion (PPEX)\3 - Design Files\phase\acad\CAD- PPEX\A2-01.dwg

APPENDIX C

- Historic Resources Report
- Archaeological Resources Letter

574 S. GLASSELL ST.
ORANGE, CALIF.

HISTORIC RESOURCES EVALUATION

Prepared for:
Zion Enterprises
1044 Calle Recodo, Suite A
San Clemente, CA 92673

Prepared by:

Architectural
Resources Group

May 16, 2016

INTRODUCTION

Zion Enterprises has requested this Historic Resources Evaluation to determine the historical significance of the restaurant property at 574 S. Glassell St. in the City of Orange.

To complete our evaluation, ARG made a site visit to inspect and photograph the exteriors and surroundings of the property; conducted research into building permits and other City records to establish dates of construction and alterations; consulted books about the popular culture and design of the period and the architectural type; searched on-line sources that usually contain information and discussions for resources comparable to the subject property; and applied criteria of the California Register of Historical Resources to determine whether the property should be considered a historical resource. A description of the property and its history is included below, with an evaluation of its historical significance.

This evaluation was prepared by Jennifer Trotoux, Associate, Andrew Goodrich, and Mickie Torres-Gil, all Architectural Historians and Historic Preservation Planners with ARG in Pasadena. Katie Horak provided oversight as Principal in Charge. The project manager, Jennifer Trotoux, has been with ARG for nine years and has twenty years of experience in the evaluation of historic resources in Southern California. All ARG staff meet the Secretary of the Interior's Professional Qualifications Standards in History and Architectural History.

As a result of this study, ARG found that the property lacks the historic integrity that would allow it to communicate more about the period of its construction or about its original use as a mid-century family restaurant connected to a recreational venue. This is apparently due to alterations, though the record with the city is scant. Therefore, it is not considered historically significant and is not a historical resource for purposes of the California Environmental Quality Act (CEQA).

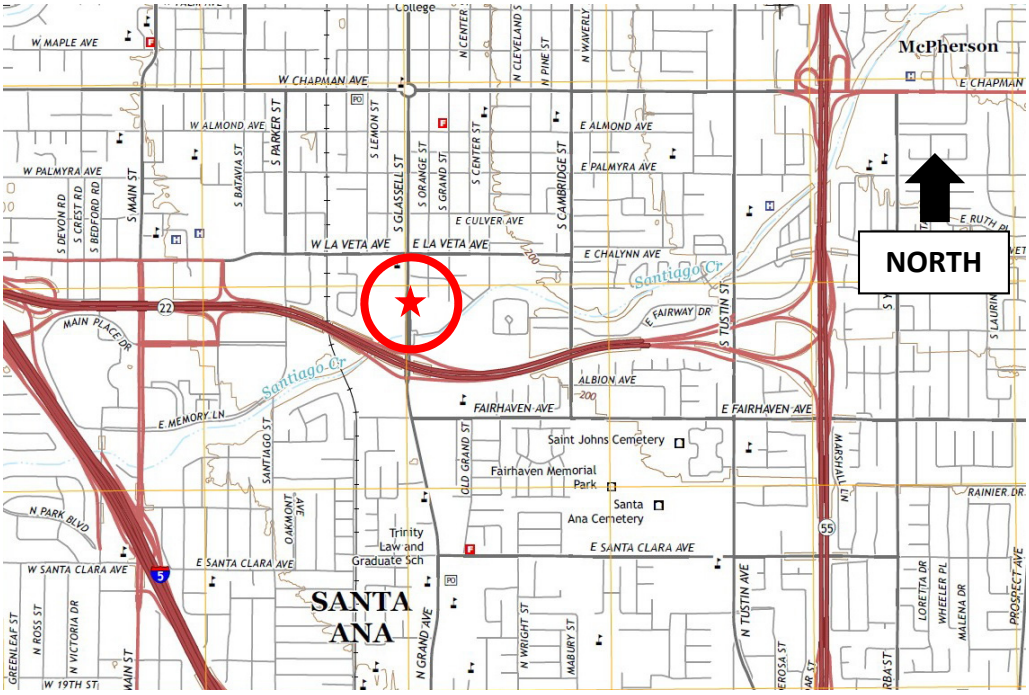

Location Map: The subject property is indicated by the red star at 574 S Glassell St., north of the 22 (Garden Grove) Freeway and northwest of Hart Park. (Image source: USGS Quad Map, Orange).

Vicinity Aerial Image: Satellite view of the subject property (in red) and its surroundings. Apartment building to the south was the location of the golf course referenced in the property history. (Image source: Google Maps)

ARCHITECTURAL DESCRIPTION

The property consists of a restaurant building with a landscaped setback to the east (along S. Glassell St.) and an adjacent parking lot to the rear (west). A driveway along the north side provides access to the rear parking lot. The building is set at an angle to the street, with its south corner lying very close to the south property line. A large three-story apartment building lies to the south of the subject property, on the former site of a miniature golf course with which the restaurant building was formerly associated. The property of Holy Family Cathedral and school lies north of the subject property.

The restaurant is one and one and a half stories in height. Its massing consists of a large gabled A-frame roof clad in composition shingle, and an adjacent one-story, flat-roofed wing to the north. Four large rafters of the gable extend to the ground, past the edge of the eaves, on the landscaped front side of the building. A band of windows is located along this south side beneath the eaves. The entrance is within the gable front, sheltered by a trellis with raking supports. This feature continues across the façade, along with a planter at the building's base, interrupted in the second bay by a perpendicular flagstone-clad wall that frames a planter at the entrance. These appear to be original features that carried the Tiki theme of the dining and recreation complex.

The exterior of the building is finished in stucco. The gable end contains double doors offset to the left with a wood trim piece continuing the line of the lintel across the wall. Similar trim frames the window above and divides the façade into thinly framed panels. A centered second-floor window is inset from this façade, with a lattice of wood slats passing in front of it, two vertical pairs and two horizontal pairs that cross near the outer edges of the opening. Horizontal wood slats form a gable-end vent that fills the upper triangle of the gable end above the window. The divisions of the window opening extend into this portion of the façade.

The rear of the building is largely windowless and utilitarian. A lean-to on the rear of the building was the location of rentals to serve the adjacent miniature golf course. The openings here still retain bamboo trim associated with the Tiki theme of the course.

The landscape design is limited to lawn and shaped hedges that fill the spaces between the extended rafters and cover the lower portion of the south-facing side windows. Smaller, recent plantings fill the areas adjacent to the entrance. A pair of large silk oak trees grow in a low, lava-rock-clad planter in the front of the driveway. The trees may pre-date the restaurant.

Character-defining features that associate the property with its 1962 origins include: A-frame roof/massing, siting of the building in an angular position relative to the street, lava rock and Palos Verdes stone planters and wall cladding, front trellis, and small areas of bamboo trim remaining on the rear doorways (which faced the golf course).

Alterations

While we were able to locate memorabilia associated with the restaurant and golf course, we did not locate any early photos of the restaurant itself. Research with the City of Orange also revealed very little in the permit files that would indicate what changes were made to the building over time. Knowing that the restaurant (and to a greater extent, the golf course) was originally Tiki themed, we were able to identify limited areas with features such as bamboo trim (on the rear where the golf course rentals took place) that likely contributed to its early appearance. However, there was very little such material remaining on the façade. This leads us to conclude that either 1) the building had an interesting A-frame and wing profile in its original incarnation but lacked much thematic elaboration or 2) nearly all of the

building's thematic decoration has been removed over the years. It is unclear which is the case, but the building is not Tiki-themed today.

A few minor alterations are known to have taken place in recent years according to our review of earlier Google Street View images (2008-2015). The extended "Tiki torches" attached to the front trellis were removed between April 2014 and March 2015, with the beams that they were attached to cut down to the top of the trellis. The windows to the right of the entrance were removed and filled in and the front doors replaced in mid-2015. Any earlier alterations are difficult to determine, since the only early image of the front of the building known to us is the illustration that appeared on a matchbook (see p. 7). This image does not seem to have reflected the actual appearance of the building, but rather the idea behind the building's design and/or the restaurant's theme. The building is depicted as a Tiki-style A-frame, with lava rock at the base, freestanding torches in the front, and vertical wood siding throughout the upper part of the "A." It appears that the stucco may be original. The stickwork in the gable-end vent or window over the entrance may also be original; it was in place as early as 2008 prior to the other alterations.

With so little information available in the permit record, and no earlier architectural drawings or photographs to refer to, the original appearance of the building cannot conclusively be determined. The following known alterations are summarized with the approximate dates they occurred. The earliest photo image of the primary façade that we were able to locate was from 2008. It is not known what alterations may have occurred prior to that.

Many of these alterations are quite minor. They are, however, the only ones that we are able to identify with the available information. Other alterations may have taken place prior to those we are aware of, and this may also help to explain why the property, aside from the distinctive A-frame shape that it retains, is compromised in its ability to convey its significance. Refer also to the discussion of historic integrity below (pp. 13-14).

ALTERATION	DATE RANGE OF ALTERATION
Front door replaced	Between May 2014 and March 2015
Infilled windows on main façade	Between May 2014 and March 2015
Torches removed	Between May 2014 and March 2015
Outriggers in gable end cut	Between May 2014 and March 2015
Mechanical screen added	Unknown; reversible and not a significant alteration
Signs changed	Most recently in 1988
Golf course and associated landscape removed/new building constructed on adjacent site	Major change to setting.
Stone planter at entrance painted	Between May 2014 and March 2015; not a significant alteration.

574 S. GLASSELL ST.

View north on Glassell St. of setting; building at left. Moreton Bay Fig Tree on neighboring property (ARG, Nov. 2015).

View west of subject property (ARG, Nov. 2015).

View southwest of primary façade (ARG, Nov. 2015).

Landscaped setback and signage (ARG, Nov. 2015).

Main gable and entrance, view west (ARG, Nov. 2015).

Detail of main entrance area, view southwest (ARG, Nov. 2015).

North façade from driveway, view south (ARG, Nov. 2015).

Rear façade, view south (ARG, Nov. 2015).

Rear/south façade. Doors on rear portion of building were the location of sales and rental for the miniature golf course (ARG, Nov. 2015).

Parking lot, view east (ARG, Nov. 2015).

Comparison between May 2014 appearance (above left) and minor alterations (above right) completed prior to March 2015. Replaced front doors, removed windows to right of door, and removed torches. (2012 Image source: Google Street View, May 2014)

HISTORIC CONTEXT AND PROPERTY HISTORY

The subject property is a restaurant that was originally connected to a miniature golf course on the adjacent land to the south. The property is located on S. Glassell St., which leads directly south from the Plaza that was the geographic and commercial heart of the town of Orange (incorporated in 1888). Just ten years prior to its construction, the subject property had been a part of an orange grove.

Typical of the patterns of older Orange County towns, Orange began to increase greatly in land area as unincorporated agricultural property was annexed to the city following World War II (and soon after developed for residences and businesses). The population also burgeoned, doubling between 1950 and 1960 just prior to the development of the subject property. Changes in the local landscape and population were addressed by the City with the establishment of a new library in 1961 and a low-scale, Modernist Civic Center not far from the historic Plaza in 1963. By the late 1960s, Glassell Street led directly to the new Garden Grove Freeway's (State Route 22) access ramps, placing the property on an important thoroughfare.

The subject property was constructed in 1962 and was known as Kim's Family Restaurant. While no building permits were available, we did locate site plans for the restaurant, a roof plan, and drawings for the freestanding sign with the City of Orange. These documents were only available for viewing on a computer screen and had very poor resolution, limiting the amount of information that they could supply.

The architect of the building was William E. Swank and Associates of Orange. The owner's name in the title block of an early drawing is only partially legible ("M. Papa(?)rus"). The date in the title block is not legible. For the building itself, a ground floor plan and a site plan appear to be the only architectural plans available in city records.

Three sign drawings were found in city records. The earliest on file dates to 1962, completed by Santa Ana Neon Co. for Kim's Family Restaurant. The pole sign has two posts that lean in towards each other at the top, echoing the A-frame of the roof. The design of the main body of the sign is not fully depicted. Below it is a shaped horizontal figure spanning the poles, and below that a narrow rectangular box that presumably carried a lettered message.

As an indication of changes in the City of Orange, the approval for the original sign of the restaurant notes that there was some disagreement among commissioners. The motion was approved "subject to no moving or flashing parts," while a Commissioner Murphy dissented and noted that "flashing parts might be appropriate in certain areas" of the city.

The date on the second sign drawing is difficult to read but appears to be 1965. This drawing, for another early sign by Luminart Neon Co. of Whittier, shows a design for "Mr. K Restaurant" with "Buffeteria" spelled out at the top of the lower, changeable-lettering portion of the sign. Following the pole sign typology of the period, a larger upper panel contains the business name in a distinctive design, while a smaller panel below it, accommodating changeable letters for more timely messages to be read at a closer distance, sits below it. A tapered pole terminates in a high spike above the upper panel.

The original signs were approved prior to 1988. Drawings for the current sign (then for Home Cafeteria Chinese Food) are also present in city records and were approved in 1988. The plastic face of the main box of this sign has since been changed out for a different business.

The senior housing apartment building adjacent to the south, which replaced the golf course, received its entitlements in 1985, and the golf course was removed by 1986.

Graphics from the original Kim's family restaurant and adjacent miniature golf course. (Image source: user "BigBroTiki," posted Dec. 28, 2008 to Tiki Central discussion forum, www.tikiroom.com)

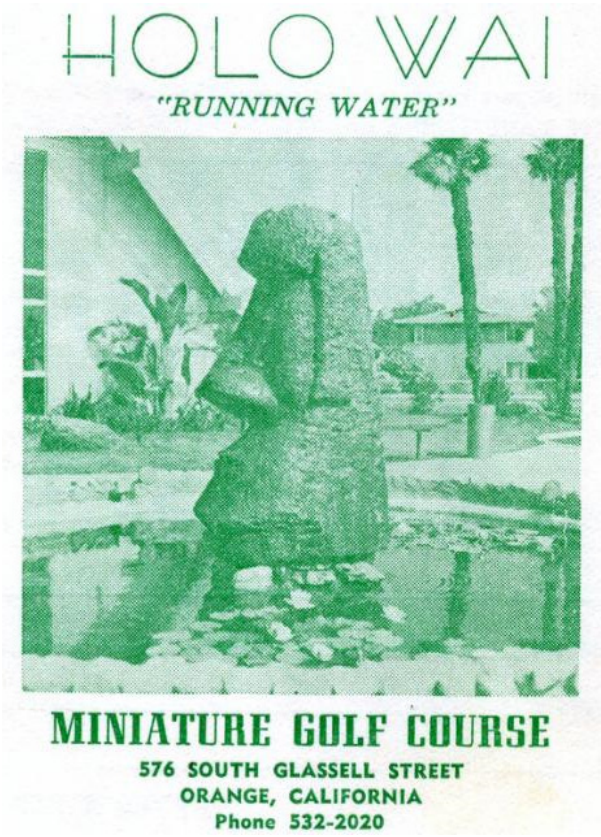

Graphics from the adjacent miniature golf course, Holo Wai. Rear of restaurant A-frame is seen at left. (Image source: Kent Kanouse, posted Dec. 28, 2008 to Tiki Central discussion forum, www.tikiroom.com)

Early aerial view (1963) of the original extent of the property showing relationship between the restaurant (at an angle at upper right) and the adjacent Holo Wai Miniature Golf Course that provided its original setting (www.historicaerials.com). Compare with aerial map showing vicinity on page 2.

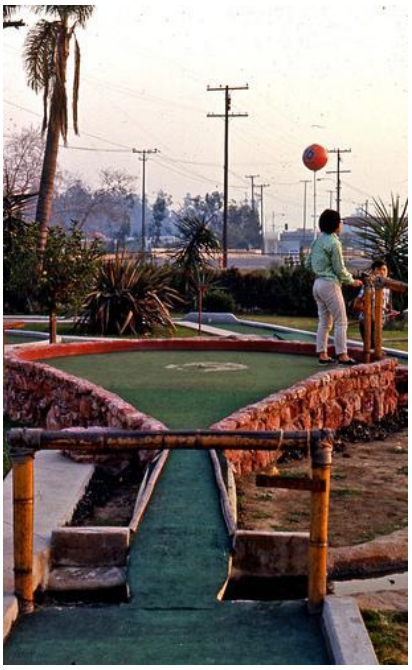

Two 1967 views of the Holo Wai miniature golf course. Restaurant not pictured. (Image source: Kent Kanouse via Flickr)

Historic Contexts: Mid-Century Family Recreation

Miniature golf courses were popular sites for family entertainment and recreation in post-war Orange County. Golf was for many years an elitist sport requiring vast amounts of land for a course and ample leisure time to play. In the post-war period, however, golf became popularized through television broadcasts and made more accessible through the increased availability of public courses. Miniature golf echoed the popularity of the real game, required much less time and resources, and made it available to a broad audience of all ages and income levels. In the newly developing suburban landscape of post-war Orange County (of which the expanding City of Orange was a part), miniature golf was one of a number of increasingly popular and available recreational activities that were oriented toward teenagers and families. These activities also included indoor recreation such as bowling, ice skating, and roller skating, all of which filled a need for the Baby Boom generation, who were just reaching their teenaged years in the early 1960s.

Casual family dining was also an important social activity of the period that had its own aesthetic. Orange County in the 1950s and 1960s had many themed restaurants, ranging from Swedish Smorgasbords such as the Villa Sweden to many examples of Tiki restaurants. The Tiki theme was a Polynesian fantasy style that was popularized after the return of soldiers from Hawaii and the South Pacific after World War II and the admission of Hawaii to U. S. statehood in 1959. It was particularly popular throughout Southern California, with many examples in Orange County. The Kona Hut in Laguna Beach (early 1950s), Sam's Seafood in Sunset Beach (1960) were two examples. Even Disneyland followed suit with the Enchanted Tiki Room at Disneyland (1963). While Kim's Family Restaurant (or at least the adjacent miniature golf course) appears to be remembered locally in Orange, it may not have been widely known. This serves to illustrate that there were likely numerous examples for local consumption that made the trend-driven genre somewhat commonplace during the early 1960s.

Architect Steven Izenour, in his introduction to the 1985 book *Googie: Fifties Coffee Shop Architecture,* notes that when examining the recent past, "absolute aesthetic judgements of good and bad, high and low, are less important than a sure sense of time, place and meaning." At their most evocative, 1960s themed restaurants were total environments. The atmosphere for a Tiki theme restaurant or bar was created by a synthesis of a grand entrance gesture (often an A-frame) attached to an otherwise unremarkable building, with extensive amounts of custom-made statuary and decorative elements (most in Southern California produced by the still-active Oceanic Arts in Whittier). These could include stone or wood "Tiki" heads, water features, colored mood lighting, exotic plants, reeded matting covering the walls, bamboo trim, and ceramic lamps and drinkware. Nautical elements such as rope, life preservers, preserved or fake fish, fishing floats, and shells often played into the theme. It is not known whether Kim's Family Restaurant had much, if any, of this type of décor.

A period Tiki interior exhibiting the characteristics described above (Mauna Loa Restaurant, location unknown (restaurants from Manitoba to Mexico operated under this name).

As historical themes, mid-century recreation and dining are still a growing field of study. The Kahiki Supper Club in Columbus, Ohio was listed in the National Register of Historic Places in 1997 (demolished in 2000), as was the Mai-Kai Restaurant in Fort Lauderdale, Florida in 2015. These especially significant examples were clearly indicative of trends in mid-century American culture and were among the most expressive and intact examples. Most examples of the type appear to have disappeared with changing public tastes, escalating land values, and intensification of land use. The phenomenon is, however, well documented due to the engaging and plentiful printed graphics and photographic images available and the nostalgic chord that its strikes with those who grew up with it. For purposes of this particular study, it is sufficient to note that the subject property was associated with a theme of growing historical note. However, the sense of "time, place, and meaning" identified by Steven Izenour (above) is absent from this example.

The extensive decoration that is associated with good examples in their original form gave life to the themes expressed by the businesses and the buildings, and there is little or none of that present in the

property today. The theme may have been carried out by the building, but we have little documentation of to what extent this may have been true. It is clear, however, that the building was set within, and not simply next door to, the golf course. The aerial views showing its siting with respect to the golf course make this clear, as does the photo of the rear of the building with the golf course in the foreground found on page 8. A landscaped setting was critical for a building to be imbued with the Tiki theme, whether in the form of a setback, a courtyard, or both. See examples in Appendix. The golf course which is now gone provided that landscaped setting for the restaurant building. This is a substantial alteration that does not allow the restaurant on its own to communicate its cultural values or thematic references.

Historic Contexts: A-Frame Buildings

Historian Chad Randl published a cultural and architectural study of the A-frame phenomenon in 2004. The form first gained popularity as a simple, tent-like shape for vacation houses – compact, allowing for shelter combined with extensive glass in the recessed gable-end wall, and modernist and distinctive in appearance. "The joining of A-frames and commercial activity was natural. Even at the peak of their popularity in the mid-1960s, triangular buildings were still odd enough to attract attention," he notes (Randl 127). Such buildings provided a distinctive profile that was well suited to the commercial strips of the post-war suburban landscape. On a small scale, they were popular with fast food chains and casual restaurants, used most notably by restaurants associated with motels (Howard Johnson's was the most widespread example).

While it originated with an alpine association, the A-frame form was also commonly used for Tiki restaurants and bars, such as the subject property as it is depicted in the matchbook cover on p. 7 above. The A-frame was also used as a signifier on conventional buildings that did not actually have an A-frame shape, such as Tiki-themed courtyard apartment buildings of the 1960s. A shallow triangular, shingled, over-scaled form would frame the street entrance of an apartment building to attract attention on the street and to suggest the stylistic theme of the building.

While residences and churches exist that took the A-frame type to a higher artistic plane, A-frame restaurants were generally popular, commercial examples that, by their shape, called attention to the businesses that occupied them within a commercial strip environment. In Orange, S. Glassell St. is not a typical commercial strip, but it is an extension of a major street that was developed at a later date on a larger scale, directly south of the early 20th century neighborhoods of Orange. Even Holy Family Church on the neighboring property to the north, built in the same period, refers to the Modernist A-frame type in its massing and profile.

EVALUATION OF HISTORICAL SIGNIFICANCE

The property is evaluated herein for its eligibility for local historical designation with reference to the City of Orange General Plan Section for Cultural Resources and Historic Preservation. The City of Orange does not have specific criteria for local designation, but employs the criteria of the National Register of Historic Places and the California Register of Historical Resources (the City has other mechanisms for the designation of historic districts and historic preservation zoning overlays which are not relevant to the possible significance of this property). The property is evaluated under each of the California Register criteria, which mirror those of the National Register, below.

Criterion 1: Associated with events that have made a significant contribution to the broad patterns of local or regional history or the cultural heritage of California or the United States.

The property has the potential for association with the historical theme of family dining and recreation in post-war Orange County. This context has not been studied and documented to the

point where there is enough information to evaluate a minor example such as this. To use the example of the Tiki theme, at least two examples have been listed in the National Register, but these were especially significant examples that had changed very little since their period of significance and serve as a testament to the role of Tiki in popular post-war culture. There is no apparent equivalent cultural value to this property.

Further, because the golf course was, arguably, the greater and more unique draw for this property as a recreational venue, its loss significantly diminishes its ability to convey any significance under the theme of post-war family recreation. The golf course was also much larger than the restaurant and appears to have carried the Tiki or Polynesian theme throughout. Therefore, along with the loss of any Tiki or Polynesian features that may have identified the restaurant and tied it into the theme, most of the theme was eliminated with the loss of the golf course.

Due to the property's inability to convey its significance in contributing to broad patterns of local history, it is not eligible under Criterion 1.

Criterion 2: Associated with the lives of persons important to local, California or national history.

No single historical person came to light with whom the property would be significantly associated. The property is not eligible under this criterion.

Criterion 3: Embodies the distinctive characteristics of a type, period, region or method of construction or represents the work of a master or possesses high artistic values.

The property's architect, William E. Swank, is not established as a well-known practitioner of the period who could be considered a "master architect," and the building does not "(possess) high artistic values."

The property may once have embodied the "distinctive characteristics of a type," serving as an example of the architectural type of an A-frame. However, it does not exhibit the cultural associations that make A-frame restaurants of historical interest due to its lack of integrity: while it is difficult to pinpoint its alterations due to lack of available evidence of its historical appearance, the property has changed businesses many times, the original pole sign no longer exists, and the entrance area does not retain the materials and decoration that the original restaurant apparently possessed (according to what little evidence we have of its early years), even if it was only minimally Tiki in its styling.

More importantly, the development of the property had two significant components that appear to have been conceived and constructed together in order to express a theme and function that both would convey: that of a Tiki or Polynesian recreational and dining environment. With the loss of the golf course, the ability of the property to convey its significance is substantially diminished. The setting of the building is no longer what it was – a restaurant set within a golf course – and the function of the building is different as well since it is a freestanding restaurant business and no longer a part of a recreational unit that would have conveyed considerably more aesthetic information about popular architecture in early 1960s Orange County.

The property is not eligible under Criterion 3 due to the lack of significance in its architect or its artistic values. It is also not eligible because of its inability to convey its significance through its embodiment of the built history of a type, period, or region.

Criterion 4: Has yielded, or has the potential to yield, information important to the prehistory or history of the local area, California or the nation.

This criterion applies mainly to potential archaeological resources, and is outside of the scope of this study.

This evaluation shows that the subject property was formerly a minimally Tiki-themed restaurant associated with a miniature golf course. While the context of such properties are an emerging area of historical interest in Orange County's recent past, we find that this theme is not well documented and that the historic integrity of the property appears to be too low to contribute in a meaningful way to our understanding of the theme.

Historic Integrity

Historic Integrity is defined as the ability of a property to convey its historic significance, expressed through surviving characteristics that it obtained during its period of significance. Broadly speaking, the early 1960s appearance of the building represents its period of significance. The following seven aspects of historic integrity – location, setting, design, materials, workmanship, feeling, and association – are defined by the National Park Service for use in the evaluation of properties for the National Register, and are also used as a guideline in many other designation programs. The historic integrity of 574 S. Glassell St. is analyzed below:

Location:

The property has not been moved and maintains integrity of location.

Setting:

The property's setting has been compromised by the loss of the miniature golf course with which it was associated and its replacement with a large apartment building close to the south property line. It is clear from the 1963 aerial view on page 8 that the golf course and restaurant were sited so as to complement one another. The golf course functioned in part as the setting of the restaurant and gave it thematic and recreational meaning. Without this relationship, it is simply a restaurant, which does not reflect its historic use or setting.

Design:

The property may maintain integrity of design, but there is little in the public record to document its original appearance or any alterations. An A-frame typically takes advantage of the contrast between the solid roof and the non-load-bearing end walls; no such element of the design remains present. The overall shape of the exaggerated, A-frame roof is its most important feature and remains intact, but any information about the building from its historical period contained in the building's decorative scheme appears to have been lost. The removal of the adjacent golf course also affected the integrity of design of the property as it was historically, since during that period the restaurant was a part of the larger miniature golf complex and related directly to the golf course.

Materials:

With so little documentation available, it is not known whether the building retains integrity of materials. However, this is unlikely to be an important factor in the property's potential significance.

Workmanship:

As for materials, there is not enough information available to determine the building contained significant workmanship or whether it maintains integrity of workmanship; the workmanship also is unlikely to be an important factor in the property's potential significance.

Feeling:

The building does not possess historic feeling. There is very little in the way of exterior features to identify the building with its early period or character. While still used as a restaurant, the building has little to convey about the early 1960s when it was constructed. This is due to both the alterations to the building itself (the loss of any thematic decoration) and to the compromised setting, with the loss of the golf course that completed the complex historically and its replacement with a large apartment building directly next to the restaurant.

Association:

The building's association with the historical theme of mid-century themed family dining and recreation is tenuous due to the lack of integrity noted for the aspects above. In addition to the golf course's role as the physical setting of the restaurant, it also would have had more to communicate about the family recreation themes that the property once represented. The restaurant on its own, as noted above, does not carry the associations of the recreation complex of which it was historically a part.

While it proved difficult to document specific changes that were made to the building itself over time due to the lack of early images or permits, the property as a whole does not evoke its appearance in the early 1960s. The loss of the Tiki-themed miniature golf course represents a loss of a significant component that made it of interest in the cultural, aesthetic and thematic contexts of 1960s Orange County.

CONCLUSION

This study finds that the property at 574 S. Glassell St. is not eligible for the California Register and is therefore not a historic resource for purposes of CEQA. The property was once a Tiki-style restaurant associated with a neighboring miniature golf course. If intact, such a property might represent an important theme in the post-World War II culture of Southern California, and Orange County in particular. However, the miniature golf course no longer exists, and the restaurant lacks the character-defining features that would associate it with emerging historical and architectural contexts of popular culture in 1960s Orange County. The property lacks significance due to an inability to express these themes and provide information about local history.

RESOURCES

Auer, Michael J. *Preservation Brief #25: Preservation of Historic Signs.* Web. Accessed 3 Dec 2015. http://www.nps.gov/tps/how-to-preserve/briefs/25-signs.htm

City of Orange Building Permit Records.

Hess, Alan. *Googie: Fifties Coffee Shop Architecture.* New York: Chronicle Books, 1985.

"Historic Aerials." Web. Accessed 1-8 December 2015. www.historicaerials.com Aerial photographic images dated 1946, 1952, 1963, 1966, 1972, 1980, 1995, 2002, 2004, 2005, 2009, 2010, and 2012.

"History of Orange." City of Orange web site. Accessed 7 December 2015. http://www.cityoforange.org/about/history.asp

Jepsen, Chris. "Tiki Lagoon." Web log. Accessed 29 April and 11 May 2016. http://tikilagoon.blogspot.com/.

----. "O. C. History Round-Up." Web log. Accessed 2 May 2016. http://ochistorical.blogspot.com/.

Randle, Chad. *A-frame.* New York: Princeton Architectural Press, 2004.

Tiki Central, discussion forums on Holo Wai Miniature Golf and Kim's Restaurant. Web. Accessed 25 Nov 2015. http://www.tikiroom.com/tikicentral/bb/viewtopic.php?topic=22578&forum=2

Venturi, Robert, Denise Scott Brown, and Steven Izenour. *Learning from Las Vegas.* Cambridge: MIT Press, Rev. ed. 1991.

Additional on-line sources are noted in the links below in the Appendix.

APPENDIX:
Images of Tiki and A-frame buildings, mostly located in Orange County.

	Don the Beachcomber, originally Sam's Seafood, Huntington Beach; Tiki Architecture (web log) http://tikiarchitecture.blogspot.com/2010_06_01_archive.html
	Sam's Seafood, Sunset Beach. Chris Jepsen, Trader Chris's Tiki Lagoon (web log) http://tikilagoon.blogspot.com/

	Hana Kiki Garden Apartments, 1147 W. Memory Lane, Santa Ana. Chris Jepsen, O. C. History Roundup (web log) http://ochistorical.blogspot.com/2012/02/tiki-mystery-solved.html
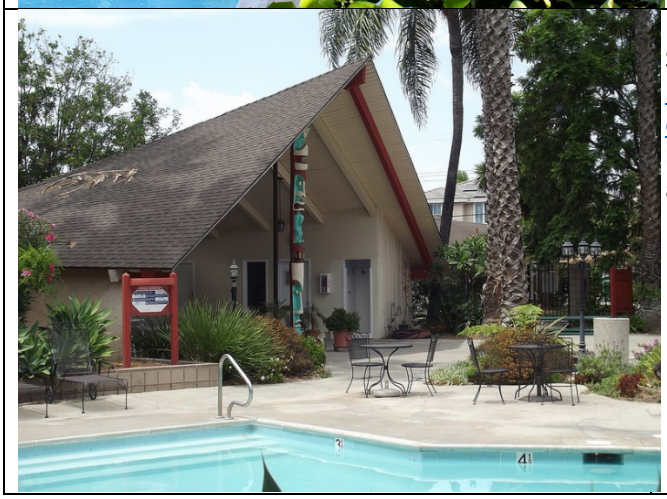	Islander Apartments, 2724 N. Bristol Ave., Santa Ana. http://flickrhivemind.net/Tags/santaana,tropical Includes poolside setting, tropical landscaping, tiki-figured carved center post, and distinctive signage at the street (see next row).

	Islander Apartments, 2724 N. Bristol Ave., Orange County Googie Archive (web log) http://googier.blogspot.com/2007/05/islander-apartments.html Includes poolside setting, tropical landscaping, tiki-figured carved center post, and distinctive signage at the street (see next row).
	Outrigger Apartments, Pasadena, in 2008. Roadside Architecture (web log). http://www.roadarch.com/tiki6.html

	Disneyland, Enchanted Tiki Room, 1963 image. http://www.ebay.com/itm/1963-Disneyland-Tiki-Room-Photo-11x14-Enchanted-Disney-Adventureland-/131001650608
	Sam's Seafood, historic image of owners in 1950. Photo: Sharon Katsaris. http://thehulagirls.blogspot.com/2015/06/save-don-beachcomber-sams-seafood.html
	The Islander, Stockton, CA. Image shows relationship of A-frame entrance and large-scale themed signage (vintage image, date not known). http://blogs.esanjoaquin.com/stockton-metro-columnist/2012/10/25/tiki-god-discovered/

South Central Coastal Information Center
California State University, Fullerton
Department of Anthropology MH-426
800 North State College Boulevard
Fullerton, CA 92834-6846
657.278.5395
California Historical Resources Information System
Los Angeles, Orange, Ventura and San Bernardino Counties
sccic@fullerton.edu

6/11/2019 SCCIC File #: 20296.6458

Sherrie Cruz
CAJA Environmental Services, LLC
15350 Sherman Way, Suite 315
Van Nuys, CA 91406

Re: Record Search Results for the Park Plaza Expansion Project

The South Central Coastal Information Center received your records search request for the project area referenced above, located on the Orange, CA USGS 7.5' quadrangle. The following summary reflects the results of the records search for the project area and a ½-mile radius. The search includes a review of all recorded archaeological and built-environment resources as well as a review of cultural resource reports on file. In addition, the California Points of Historical Interest (SPHI), the California Historical Landmarks (SHL), the California Register of Historical Resources (CAL REG), the National Register of Historic Places (NRHP), and the California State Historic Properties Directory (HPD) listings were reviewed for the above referenced project site and a ¼-mile radius. Due to the sensitive nature of cultural resources, archaeological site locations are not released.

RECORDS SEARCH RESULTS SUMMARY

Archaeological Resources* (*see note below)	Within project area: 0 Within ½-mile radius: 0
Built-Environment Resources	Within project area: 0 Within ½-mile radius: 5
Reports and Studies	Within project area: 0 Within ½-mile radius: 13
OHP Historic Properties Directory (HPD)	Within project area: 0 Within ¼-mile radius: 187
California Points of Historical Interest (SPHI)	Within project area: 0 Within ¼-mile radius: 0
California Historical Landmarks (SHL)	Within project area: 0 Within ¼-mile radius: 0
California Register of Historical Resources (CAL REG)	Within project area: 0 Within ¼-mile radius: 107
National Register of Historic Places (NRHP)	Within project area: 0 Within ¼-mile radius: 107

HISTORIC MAP REVIEW – The Anaheim, CA (1896, 1942) 15' USGS historic maps indicated that in 1896 there was one building within the project area. There were several improved roads and buildings present in the project search radius which was located in the historic place name of Orange. The Santiago Creek ran just south of the project area and the Atchison Topeka and Santa Fe R.R. ran to the west. In 1942, the building within the project area was no longer visible and no additional features appeared. There was much development in the area with more improved roads and buildings. All other features mentioned above were still present.

RECOMMENDATIONS

The archaeological sensitivity of the project location is unknown because there are no previous studies for the subject property. Additionally, the natural ground-surface appears to be obscured by urban development; therefore, surface artifacts would not be visible during a survey. While there are currently no recorded archaeological sites within the project area, buried resources could potentially be unearthed during project activities. Therefore, customary caution and a halt-work condition should be in place for all ground-disturbing activities. In the event that any evidence of cultural resources is discovered, all work within the vicinity of the find should stop until a qualified archaeological consultant can assess the find and make recommendations. Excavation of potential cultural resources should not be attempted by project personnel. It is also recommended that the Native American Heritage Commission be consulted to identify if any additional traditional cultural properties or other sacred sites are known to be in the area. The NAHC may also refer you to local tribes with particular knowledge of potential sensitivity. The NAHC and local tribes may offer additional recommendations to what is provided here and may request an archaeological monitor. Finally, the built-environment resources on the property are 45 years or older, therefore, a qualified architectural historian should be retained to study the property and make recommendations regarding those structures.

For your convenience, you may find a professional consultant**at www.chrisinfo.org. Any resulting reports by the qualified consultant should be submitted to the South Central Coastal Information Center as soon as possible.

**The SCCIC does not endorse any particular consultant and makes no claims about the qualifications of any person listed. Each consultant on this list self-reports that they meet current professional standards.

If you have any questions regarding the results presented herein, please contact the office at 657.278.5395 Monday through Thursday 9:00 am to 3:30 pm. Should you require any additional information for the above referenced project, reference the SCCIC number listed above when making inquiries. Requests made after initial invoicing will result in the preparation of a separate invoice.

Thank you for using the California Historical Resources Information System,

Isabela Kott
GIS Technician/Staff Researcher

*=When we report that no archaeological resources are recorded in your project area or within a specified radius around the project area; that does not necessarily mean that nothing is there. It may simply mean that the area has not yet been studied and that no information regarding the archaeological sensitivity of the property is available. The reported records search result does not preclude the possibility that surface or buried artifacts may be found during a survey of the property or ground-disturbing activities.

Due to processing delays and other factors, not all of the historical resource reports and resource records that have been submitted to the Office of Historic Preservation are available via this records search. Additional information may be available through the federal, state, and local agencies that produced or paid for historical resource management work in the search area. Additionally, Native American tribes have historical resource information not in the California Historical Resources Information System (CHRIS) Inventory, and you should contact the California Native American Heritage Commission for information on local/regional tribal contacts.

The California Office of Historic Preservation (OHP) contracts with the California Historical Resources Information System's (CHRIS) regional Information Centers (ICs) to maintain information in the CHRIS inventory and make it available to local, state, and federal agencies, cultural resource professionals, Native American tribes, researchers, and the public. Recommendations made by IC coordinators or their staff regarding the interpretation and application of this information are advisory only. Such recommendations do not necessarily represent the evaluation or opinion of the State Historic Preservation Officer in carrying out the OHP's regulatory authority under federal and state law.

APPENDIX D

- Energy Calculations

Existing Annual VMT: **1,654,979**

					Fuel	
Fleet Mix	auto	91%	1,506,031	gas (mpg)	22.5	66,934.71
	other	9%	148,948	diesel (mpg)	5.71	26,085.48
						93,020.19

Project Annual VMT: **573,628**

Fleet Mix	auto	91%	522,001	gas (mpg)	22.5	23,200.07
	other	9%	51,627	diesel (mpg)	5.71	9,041.42
						32,241.49

Net Project Annual VMT: **-1,081,351**

Fleet Mix	auto	91%	-984,029	gas (mpg)	22.5	-43,734.64
	other	9%	-97,322	diesel (mpg)	5.71	-17,044.06
						-60,778.70

Worker Fuel (Gasoline, on-road)

phase	trips	length (miles)	days	total Miles	MPG	Gallons
Demolition	8	14.7	33	3,881	22.5	172.48
Grading	10	14.7	32	4,704	22.5	209.07
Building Construction	33	14.7	300	145,530	22.5	6,468.00
Architectural Coating	7	14.7	39	4,013	22.5	178.36
						7,027.91

Vender Fuel (Diesel, on-road)

phase	trips	length (miles)	days	total Miles	MPG	Gallons
Demolition	0	6.9	33	0	5.71	0.00
Grading	0	6.9	32	0	5.71	0.00
Building Construction	7	6.9	300	14,490	5.71	2,537.65
Architectural Coating	0	6.9	39	0	5.71	0.00
						2,537.65

Haul Fuel (Diesel, on-road)

phase	trips	length (miles)	days	total Miles	MPG	Gallons
Demolition	332	40	33	438,240	5.71	76,749.56
Grading	0	40	32	0	5.71	0.00
Building Construction	0	40	300	0	5.71	0.00
Architectural Coating	0	40	39	0	5.71	0.00
						76,749.56

Total On-Road Gas	**7,027.91**
Total On-Road Diesl	**79,287.22**

Construction Equipment (Diesel, off-road)

Phase	Equipment	Units	Hours	HP	Load Factor	Ave. Daily Load Factor	Days	HP Hours
Demolition	Concrete/Industrial Saw	1	8	81	0.73	0.6	33	9,366.19
	Excavators	1	8	158	0.38	0.6	33	9,510.34
	Tractors/Loaders/Backhoes	1	8	97	0.37	0.6	33	5,684.98
	Rubber Tired Dozers	1	1	247	0.4	0.6	33	1,956.24
Grading	concrete/Industrial Saw	1	8	81	0.73	0.6	32	9,082.37
	excavators	1	8	158	0.41	0.6	32	9,950.21
	Graders	1	8	187	0.41	0.6	32	11,776.51
	tractors/Loaders/Backhoes	1	8	97	0.37	0.6	32	5,512.70
	Rubber Tired Dozers	1	1	247	0.4	0.6	32	1,896.96
Building Construction	cranes	1	4	231	0.29	0.6	300	48,232.80
	Aerial Lifts	1	8	63	0.31	0.6	300	28,123.20
	Off-Highway Tractors	1	7	97	0.37	0.6	300	45,221.40
	forklifts	2	8	89	0.2	0.6	300	25,632.00
	pavers	1	8	130	0.42	0.6	300	78,624.00
	tractors/Loaders/Backhoes	1	8	97	0.37	0.6	300	51,681.60
	Welders	1	8	46	0.45	0.6	300	29,808.00
Architectural Coating	Air Compressor	1	8	78	0.48	0.6	578	103,873.54

Total	**475,933.03**	103,083.87
		110,111.77
Fuel Usage	**23,796.65**	

HP = hoursepower. Gallons of diesel fuel per HP-hour - 0.05.

Equipment assumptions are provided in the CalEEMod output files for the Project and fuel usage estimate of 0.05 gallons of diesel fuel per horsepower-hour is from the SCAQMD CEQA Air Quality Handbook, Table A9-3E.

Water Usage for fugitive dust control during construction
Water application rate = 3,020 gallons/acre/day
Each gallon of delivered potable water in Southern California is associated with 0.009727 kWhr of electricity).

Grading 32 days x .9 acres x 3,020 gallons = 86,976 gallons x 0.009727 = 846 kWhr

APPENDIX E

- Geotechnical Report
- Paleontological Resources Letter

GEOTECHNICAL EXPLORATION REPORT
PARK PLAZA MEMORY CARE EXPANSION
574 SOUTH GLASSELL STREET
CITY OF ORANGE, CALIFORNIA

Prepared for:

KSL Anaheim II, LP

5791 Fleet Street, Suite 300
Carlsbad, California 92008

Project No. 12137.002

January 29, 2019

Leighton Consulting, Inc.

A LEIGHTON GROUP COMPANY

Leighton Consulting, Inc.
A LEIGHTON GROUP COMPANY

January 29, 2019

Project No. 12137.002

KSL Anaheim II, LP
5791 Fleet Street, Suite 300
Carlsbad, California 92008

Attention: Mr. Alex Guerra

Subject: **Geotechnical Exploration Report**
Park Plaza Memory Care Expansion
574 South Glassell Street
City of Orange, California

Leighton Consulting, Inc. has prepared this geotechnical exploration report for the proposed Park Plaza Memory Care Expansion at 574 South Glassell Street in the city of Orange, California. The site is an approximately 0.9-acre rectangular lot, currently occupied by a one-story building that is used as a restaurant, surrounded by a paved parking area. We understand that the project consists of a two-story building for a new assisted living facility with associated parking stalls and driveways.

Our subsurface exploration indicates that the site is underlain by a thin layer of man-made fill associated with construction of the existing improvements at the site and quaternary-age alluvial fan deposits. The fill is up to 4 to 5 feet thick and consisted mainly of silty sand. Below the fill, the alluvium generally consisted of dense to very dense sand and stiff to very stiff sandy clay. Groundwater was not encountered in the borings drilled to a maximum depth of 33 feet below the existing grade. No known active or potentially active faults are mapped to cross the site, and the site is not located within an Alquist-Priolo Special Studies Zones. However, significant ground shaking should be anticipated at the site during the expected design life of the proposed structure.

Based on the results of our exploration, the development is feasible from a geotechnical standpoint. Presented in this report are our findings and recommendations for the proposed development.

17781 Cowan ▪ Irvine, CA 92614-6009
949.250.1421 ▪ 949.250.1114 Fax

We appreciate this opportunity to be of service. If you have any questions regarding this report, please do not hesitate to contact this office.

Respectfully submitted,

LEIGHTON CONSULTING, INC.

Christian Delgadillo, PE 83331
Project Engineer

Djan Chandra, PE, GE 2376
Senior Principal Engineer

CD/DJC/lr

Distribution: (1) Addressee (PDF via email)

Leighton

TABLE OF CONTENTS

Section **Page**

1.0 INTRODUCTION 1

1.1 Site Location and Proposed Project 1
1.2 Purpose and Scope of Exploration 1

2.0 GEOTECHNICAL FINDINGS 3

2.1 Geologic Setting 3
2.2 Subsurface Soil Conditions 3

2.2.1 Collapsible and Compressible Potential 3
2.2.2 Expansion Potential 4
2.2.3 Corrosivity of Soils 4

2.3 Groundwater Conditions 4
2.4 Faulting and Seismicity 4
2.5 Secondary Seismic Hazards 5

2.5.1 Liquefaction 5
2.5.2 Earthquake-Induced Settlement 6
2.5.3 Seismically-Induced Landslides 6
2.5.4 Earthquake-Induced Flooding 6
2.5.5 Seiches and Tsunamis 6

3.0 GEOTECHNICAL RECOMMENDATIONS 7

3.1 Earthwork 7

3.1.1 Site Preparation 7
3.1.2 Overexcavation 7
3.1.3 Fill Placement and Compaction 8

3.2 Seismic Design Parameters 8
3.3 Foundation Design 9

3.3.1 Allowable Bearing Capacity 9
3.3.2 Lateral Load Resistance 9

3.4 Slab-on-Grade Floor Slabs 9
3.5 Lateral Earth Pressures 10
3.6 Cement Type and Corrosion Protection 11
3.7 Pavement Design 11
3.9 Concrete Flatwork 12
3.10 Surface Drainage 13
3.11 Temporary Excavation 13
3.12 Trench Backfill 14
3.13 Plan Review 14

Leighton

TABLE OF CONTENTS (Cont'd)

Section Page

3.14 Geotechnical Observation during Construction..... 14

4.0 REFERENCES 15

5.0 LIMITATIONS..... 17

LIST OF ATTACHMENTS

Important Information About Your Geotechnical Engineering Report Rear of Text

Figure 1 – Site Location Map Rear of Text
Figure 2 – Boring Location Map Rear of Text

Appendix A – Geotechnical Boring Logs
Appendix B – Laboratory Test Results
Appendix C – General Earthwork and Grading Recommendations

Leighton

1.0 INTRODUCTION

1.1 Site Location and Proposed Project

The proposed Park Plaza Memory Care Expansion site is located at 574 South Glassell in the city of Orange, California. The site location and immediate vicinity are shown on Figure 1, *Site Location Map.* The site is an approximately 0.9-acre rectangular lot, located west of South Glassell Street and bounded by Holy Family Cathedral Church and School to the north, a vacant land to the west, and Park Plaza Senior Facility to the south. The site is currently occupied by a one-story building that is used as a restaurant, surrounded by a paved parking area.

Based on a conceptual plan provided by you and our communications with you, we understand that the project consists of a two-story building for a new assisted living facility, occupying a footprint area of approximately 14,000 square feet. The facility will include the associated parking stalls and driveways.

1.2 Purpose and Scope of Exploration

The purpose of our geotechnical exploration was to evaluate the subsurface conditions and general soil characteristics at the project site in order to provide geotechnical parameters for design and construction of the project. The scope of this exploration included the following tasks:

- *Background Review* – A background review was performed of readily available, relevant geotechnical and geological literature pertinent to the site. References used in preparation of this report are listed in Section 4.0.

- *Pre-Field Exploration Activities* – A site visit was performed by a member of our technical staff to mark the boring locations. Underground Service Alert (USA) was notified to locate and mark existing underground utilities prior to our subsurface exploration.

- *Field Exploration* – On December 13, 2018, we advanced three hollow-stem auger borings (LB-1 through LB-3) to depths of 26½ to 33 feet below existing grade. The borings were geotechnically logged and sampled using Standard Penetration Test (SPT) and California Ring samplers at selected intervals. The SPT and Ring samplers were driven into the soil with a 140-pound hammer, free falling 30 inches. The number of blows was noted for every 6 inches of sampler penetration. Relatively undisturbed samples were collected

from the borings using the Ring sampler. The sampling procedures generally followed ASTM D 1586 and D 3550 for SPT and split-barrel sampling of soil. In addition to driven samples, representative bulk soil samples were also collected from the borings. Each soil sample collected was described in general conformance with the Unified Soil Classification System (USCS). The samples were sealed, packaged, and transported to our soil laboratory. The soil descriptions and depths are noted on the boring logs included in Appendix A, *Geotechnical Boring Logs*. The approximate locations of the borings are shown on Figure 2, *Boring Location Map*.

- *Laboratory Tests* – Laboratory tests were performed on selected soil samples obtained during our field investigation. The laboratory testing program was designed to evaluate the physical and engineering characteristics of the onsite soil. Tests performed during this exploration include:

  - Moisture content and dry density (ASTM D 2216 and ASTM D 2937);
  - Percent Passing No. 200 Sieve (ASTM D 1140);
  - Consolidation (ASTM D 2435);
  - Direct Shear (ASTM D 3080);
  - R-Value (California Test Method 301); and
  - Corrosivity Suite – pH, Sulfate, Chloride, and Resistivity (California Test Methods 417, 422, and 532/643).

  Results of moisture content and dry density testing are presented on the boring logs in Appendix A. Other laboratory test results are presented in Appendix B, *Laboratory Test Results*.

- *Engineering Analysis* - The data obtained from our background review, field exploration, and laboratory testing program were evaluated and analyzed to develop the recommendations for the project.

- *Report Preparation* - The results of the exploration are summarized in this report presenting our findings and recommendations.

2.0 GEOTECHNICAL FINDINGS

2.1 Geologic Setting

The subject site is located in the Downey Plain within the southeastern margin of the Los Angeles Basin, a large structural depression within the Peninsular Ranges geomorphic province of California. In general, the Downey Plain is bordered by the Coyote and Peralta Hills on the north, the Santa Ana Mountains and Tustin Plain to the east, the Pacific Ocean to the south and Los Angeles County to the west. Several broadly warped coastal mesas represent uplifted areas along the Newport-Inglewood structural zone. These mesas are separated by erosional gaps which were created by historic routes of the Santa Ana River.

The near-surface native soils at the site are Quaternary-age, non-marine young alluvial fan deposits comprised of varying proportions of sand, gravel and cobbles, silt, and clay deposited by the Santiago Creek and Santa Ana River.

2.2 Subsurface Soil Conditions

Our subsurface exploration indicates that the site is underlain by a thin layer of man-made fill associated with construction of the existing improvements at the site and quaternary-age alluvial fan deposits. The fill is up to 4 to 5 feet thick and consisted mainly of silty sand. Below the fill, the alluvium generally consisted of dense to very dense sand and stiff to very stiff sandy clay. A very dense sandy gravel layer was encountered in Boring LB-1 at a depth of 10 feet. Boring LB-3 was terminated at a depth of 33 feet due to drilling rig auger refusal in a layer very dense sand with gravel at this depth. Detailed descriptions of the soils encountered in the borings are presented on the boring logs in Appendix A.

2.2.1 Collapsible and Compressible Potential

Hydrocollapse potential refers to the potential settlement of a soil under existing or future stresses (loads) upon being wetted. Soil compressibility refers to settlement potential of soils when subjected to increased loads, such as from a fill surcharge or building loads.

Based on the soils encountered during the field exploration and our review of the laboratory test results, the soils have low collapse potential and low to moderate compressibility potential under the expected loads.

2.2.2 Expansion Potential

The near-surface soils generally consisted of granular materials; as such, the near-surface soils are expected to have very low to low expansion potential.

2.2.3 Corrosivity of Soils

In general, soil environments that are detrimental to concrete have high concentrations of soluble sulfates and/or pH values of less than 5.5. Soils with chloride content greater than 500 parts per million (ppm) per California Test 532 are considered corrosive to steel, either in the form of reinforcement protected by concrete cover or plain steel substructures, such as steel pipes. Additionally, soils with a minimum resistivity of less than 1,000 Ohm-cm are considered corrosive to ferrous metal. Based on the laboratory test results, the subsurface soils at the site are considered to have low sulfate content and, therefore, not considered corrosive to concrete. The soils, however, are considered moderately corrosive to ferrous metal in direct contact with the soils.

2.3 Groundwater Conditions

Groundwater was not encountered in our borings drilled to a maximum depth of 33 feet below the existing grade. The historically high groundwater level for this area, according to the California Geologic Survey (1997), is on the order of 40 feet below the existing ground surface. Deep excavations are not expected for the proposed project; therefore, groundwater is not anticipated to adversely impact construction of the proposed project.

The groundwater level is expected to fluctuate seasonally. Fluctuations of the groundwater level, localized zones of perched water, and an increase in soil moisture should be anticipated during and following the rainy seasons or period of locally intense rainfall or storm water runoff.

2.4 Faulting and Seismicity

No active faults are mapped or known to cross the site, and the site is not located within an Alquist-Priolo Earthquake Fault Zone (Bryant and Hart, 2007). The principal seismic hazard at the site is ground shaking resulting from an earthquake occurring along any of several major active and potentially active faults in southern

California. Known regional active faults that could produce significant ground shaking at the site include the San Joaquin Hills Blind Thrust and Whittier faults located approximately 6.1 miles and 9.6 miles, respectively, from the site.

The intensity of ground shaking at a given location depends primarily upon the earthquake magnitude, the distance from the source, and the site response characteristics. Peak horizontal ground accelerations are generally used to evaluate the intensity of ground motion.

Using the United States Geological Survey (USGS) Seismic Design Maps (USGS, 2018), the peak ground acceleration for the Maximum Considered Earthquake (MCE_G) adjusted for the Site Class effects (PGA_M) is 0.53g. Based on the USGS online unified hazard tool program (USGS, 2014), the modal seismic event is Moment Magnitude (M_W) 6.9 at a distance of 6.5 miles.

2.5 Secondary Seismic Hazards

Secondary seismic hazards in the region could include soil liquefaction and the associated surface manifestation, earthquake-induced landsliding and flooding, seiches, and tsunamis. A site-specific evaluation of these potential hazards is discussed in the following sections.

2.5.1 Liquefaction

Liquefaction is a seismic phenomenon in which loose, saturated, granular soils behave similarly to a fluid when subjected to high-intensity ground shaking. Liquefaction occurs when three general conditions exist: 1) shallow groundwater; 2) low density, fine, clean sandy soils; and 3) strong ground motion. Effects of liquefaction can include sand boils, settlement, and bearing capacity failures below structural foundations.

Review of the *Seismic Hazard Zone Map for the Orange Quadrangle* (CGS, 1998) indicates that the subject site is not located within an area that has been identified by the State of California as being potentially susceptible to the occurrence of liquefaction. Additionally, due to the presence dense to very dense sandy soils and a relatively deep historically high groundwater of 40 feet below grade, the liquefaction potential at the site is very low.

2.5.2 Earthquake-Induced Settlement

Seismically-induced settlement consists of dry dynamic settlement (above groundwater) and liquefaction-induced settlement (below groundwater). These settlements occur primarily within loose to medium dense sandy soil due to reduction in volume during, and shortly after, an earthquake event. We have performed analyses to calculate the potential earthquake-induced settlement at the site. The settlements of these strata were estimated to result in a cumulative settlement of less than ½ inches. Differential settlement is estimated to be approximately one half of the total settlement.

2.5.3 Seismically-Induced Landslides

No significant ground slopes exist at the site and in the vicinity. Therefore, the potential for seismically-induced landslides is considered negligible.

2.5.4 Earthquake-Induced Flooding

Earthquake-induced flooding can be caused by failure of dams or other water-retaining structures as a result of earthquakes. Due to the absence of these structures near the site, the potential for earthquake-induced flooding of the site in considered low.

2.5.5 Seiches and Tsunamis

Seiches are large waves generated in enclosed bodies of water in response to ground shaking. Tsunamis are waves generated in large bodies of water by fault displacement or major ground movement. Based on the absence of an enclosed water body near the site and the inland location of the site, seiche and tsunami risks at the site are considered negligible.

3.0 GEOTECHNICAL RECOMMENDATIONS

The recommendations presented in this report are based upon the exhibited geotechnical engineering properties of the soils and their anticipated response both during and after construction as well as proper field observation and testing during construction. The recommendations are considered minimum and may be superseded by more restrictive requirements of the architect, structural engineer, building code, or governing agencies.

The geotechnical consultant should review the grading plan, foundation plan and specifications as they become available to verify that the recommendations presented in this report have been incorporated into the plans prepared for the project.

3.1 Earthwork

We recommend all earthwork for the project be performed in accordance with the following recommendations, future grading plan review report(s), the City of Orange grading requirements and the *General Earthwork and Grading Specifications* included in Appendix C. In case of conflict the following recommendations shall supersede those provided in Appendix C.

Earthwork is expected to consist of subgrade preparation, precise grading, foundation excavation, and other site improvement work. Recommendations for site earthwork are provided in the following sections.

3.1.1 Site Preparation

Prior to construction, the site should be cleared of existing improvements and debris. Existing utility and irrigation lines should also be removed if they interfere with the proposed construction. Cavities resulting from removal of the existing underground structures and lines should be excavated to expose competent material before being properly backfilled under the observation and testing of the geotechnical consultant.

3.1.2 Overexcavation

To reduce the potential of adverse differential settlement and to provide uniform support, we recommend that the footings and slab-on-grade for the proposed building be underlain by a minimum 3 feet of compacted fill established on competent soils. The overexcavation should extend laterally 3 feet beyond the outside edges of the foundation, except where it

is constrained by the property lines or existing improvements to be protected in-place.

Pavement and concrete flatwork should be underlain by a minimum 12 inches of compacted fill. Prior to replacing the overexcavated material, the area should be scarified a minimum of 6 inches, moisture-conditioned to at least 2 to 4 percentage points above optimum moisture content, and recompacted to a minimum 90 percent relative compaction. Local conditions may be encountered that could require additional overexcavation beyond the above noted minimum to obtain an acceptable subgrade. The actual depths and lateral extents of remedial grading will be determined by the geotechnical consultant based on subsurface conditions encountered during grading.

3.1.3 Fill Placement and Compaction

The onsite soils, to be used as compacted structural fill, should be free of organic material or construction debris. Any imported fill soil should be approved by the geotechnical engineer prior to placement as fill. Fill soils should be placed in loose lifts not exceeding 8 inches, moisture-conditioned to at least 2 to 4 percentage points above optimum moisture content, and compacted to a minimum of 90 percent of the maximum dry density as determined by ASTM D 1557.

3.2 Seismic Design Parameters

Design parameters for minimum seismic load based on the 2016 California Building Code are as follows:

Table 1 – 2016 CBC Based Seismic Design Parameters

Categorization/Coefficient	Design Value
Site Class	D
Adjusted (5% damped) spectral response acceleration parameter at short period, S_{MS}	1.486g
Adjusted (5% damped) spectral response acceleration parameter at a period of 1 sec, S_{M1}	0.814g
Design (5% damped) spectral response acceleration parameter at short period, S_{DS}	0.991g
Design (5% damped) spectral response acceleration parameter at a period of 1 sec, S_{D1}	0.543g

3.3 Foundation Design

3.3.1 Allowable Bearing Capacity

Upon completion of the recommended site preparation as described in this report, the proposed building may be supported by a shallow spread footing foundation system. The footings should be embedded at a depth of least 18 inches below exterior grade with a minimum width of 12 inches. A net allowable soil bearing capacity of 2,000 pounds per square foot (psf) may be used for design of the footings. The allowable capacity may be increase by 300 psf for each additional foot of footing depth or width to a maximum value of 4,000 psf. The recommended values for bearing capacity can be increased by one-third for transient loads such as wind and seismic forces. Settlement induced by static loading is anticipated to be on the order of 1 inch. Differential settlement can be taken as half the total settlement over a horizontal distance of 30 feet.

3.3.2 Lateral Load Resistance

The soil resistance available to withstand lateral loads on a shallow foundation is a function of the frictional resistance along the base of the footing and the passive resistance that may develop as the face of the structure tends to move into the soil. The frictional resistance between the base of the foundation and the subgrade soil may be computed using a coefficient of friction of 0.30. The passive resistance may be computed using an equivalent fluid pressure of 300 pcf to a maximum value of 3,000 psf, assuming there is constant contact between the footing and undisturbed soil. The above coefficient of friction and passive resistance are values without an appreciable factor of safety, so the structural engineer should apply the applicable factors of safety and/or load factors during design.

3.4 Slab-on-Grade Floor Slabs

Slab-on-grade floor slabs should be placed on properly prepared subgrade soils as described in Section 3.1. The floor slabs are recommended to be underlain by a synthetic sheeting to serve as a retarder to moisture vapor transmission in areas where a moisture-sensitive floor covering (such as vinyl, tile, or carpet) or equipment is planned. The sheeting is recommended to be a minimum 15-mil thick and consist of polyethylene or similar material that meets or exceeds

specifications for ASTM E1745 Class A vapor retarders. Vapor barrier seams should be overlapped a minimum of 6 inches and taped or otherwise sealed. A two-inch thick sand layer is recommended below the vapor barrier to prevent punctures.

3.5 Lateral Earth Pressures

The following lateral earth pressures may be used for the design of retaining walls with a drained and level backfill.

Table 2 – Equivalent Earth Pressures

Condition	Equivalent Fluid Unit Weight with Granular and Level Backfill (psf/feet)
Active	40
At-Rest	60
Passive	300

Retaining structures should be provided with a drainage system to prevent buildup of hydrostatic pressure behind the wall. The above values do not contain an appreciable factor of safety, so the structural engineer should apply the applicable factors of safety and/or load factors during design. Walls that are free to rotate or deflect may be designed using active earth pressure. For walls that are fixed against rotation, the at-rest pressure should be used.

In addition to the above lateral pressures from retained earth, lateral pressures from other superimposed loads, such as those from vehicle traffic and adjacent structures, should be added, if the surcharge loads fall within a horizontal distance behind the wall equal to the full height of the wall from the foundation level. The surcharge loads should be added to the above recommended lateral earth pressures.

Resistance to lateral loads will be provided by a combination of friction between the soil and structure interface and passive pressure acting against the retaining wall. For calculating lateral resistance, a passive pressure of 300 psf per foot of depth to a maximum of 3,000 psf and a frictional coefficient of 0.30 may be used.

Backfills for retaining walls should be compacted to a minimum of 90 percent relative compaction (based on ASTM D 1557). During construction of retaining

walls, the backcut should be made in accordance with the requirements of Cal/OSHA Construction Safety Orders. Relatively light construction equipment should be used to backfill retaining walls. We also recommend using at-rest pressures for design of walls supporting settlement-sensitive structures.

3.6 Cement Type and Corrosion Protection

Based on the available laboratory test results, the near-surface soils at the site are expected to have low sulfate content. Type II cement may be used for concrete in contact with onsite soils and the concrete should be designed for "negligible" sulfate exposure in accordance with ACI 318 (ACI, 2011). However, Type V cement should be used for concrete expected to be in contact with recycled water.

The soils are considered moderately corrosive to buried ferrous metals. Ferrous pipe should be avoided by using high-density polyethylene (HDPE) or other non-ferrous pipe when possible. Ferrous pipe, if used, should be protected by polyethylene bags, tap or coatings, di-electric fittings or other means to separate the pipe from onsite soils.

3.7 Pavement Design

Driveways and parking areas can be constructed using conventional asphalt concrete (AC) over aggregate base (AB). We have designed the pavement sections using the R-value of 50 for different Traffic Indices (TI) and the minimum pavement thickness is presented in the following table. R-value of the tested near-surface soil sample was 58. The pavement design was performed using the method in the *Orange County Highway Design Manual*.

Table 3 - Pavement Sections

Traffic Index	Flexible Pavement (feet)	
	AC	AB
5 or less	3.0	4.5
6	3.5	5.0
7	4.5	5.0
8	5.0	5.5

Concrete pavement, if used, may consist of 6 inches of Portland Cement Concrete (PCC) over 6 inches of AB. The PCC pavement sections should be provided with crack-control joints spaced no more than 10 feet on-center each way, to control where cracks develop.

All pavement construction should be performed in accordance with the *Standard Specifications for Public Works Construction*. Field inspection and periodic testing, as needed during placement of the base course materials, should be undertaken to ensure that the requirements of the standard specifications are fulfilled. Prior to placement of aggregate base, the subgrade soil should be processed to a minimum depth of 8 inches, moisture-conditioned, as necessary, and recompacted to a minimum of 90 percent relative compaction. Localized areas of loose soils may be encountered that require deeper removal and recompaction. The actual extent of the removal depth will be best determined during construction when direct observation of the subgrade soils can be made.

Aggregate base should be moisture conditioned, as necessary, and compacted to a minimum of 95 percent relative compaction.

Aggregate base and asphalt materials should conform to Sections 200-2 and 203, respectively, of the *Standard Specifications for Public Works Construction*. PCC should conform to Section 201 of the *Standard Specifications for Public Works Construction*.

3.9 Concrete Flatwork

Exterior concrete slabs such as sidewalks, courtyards and pedestrian access ramps often crack after concrete placement and during curing. Inclusion of joints at frequent intervals and reinforcement will help control the locations of the cracks, and thus reduce the unsightly appearance. When cracking occurs, repairs may be needed to mitigate the trip hazard and/or improve the appearance.

There are a number of well-known steps that can be taken during construction to reduce the amount of cracking or its consequences. These steps include, but are not limited to, the following. As a minimum, exterior concrete slabs should be at least 4 inches thick, and driveways or ramps should have the edges thickened to at least 6 inches. Construction or weakened plane joints should be spaced at

intervals of 8 feet or less. We suggest concrete slabs be reinforced using No. 3 rebar, 18 inches on center in both directions, placed at mid-thickness.

Cracking of concrete is often not due to settlement or heave of soils, but often due to other factors such as the use of too high a water/cement ratio and/or inadequate steps taken to prevent moisture loss during curing. These causes of concrete distress can be reduced by proper design of the concrete mix and by proper placement and curing of the concrete.

3.10 Surface Drainage

Ponding of water adjacent to structures should be avoided. During and after construction, positive drainage should be provided to direct surface water away from structures towards suitable, non-erosive drainage devices.

Drainage of surface water away from the proposed structure should be provided by adequate slopes to all graded and paved surfaces. Where good surface drainage is not possible, subdrains should be provided within planter areas to prevent accumulation of water within the upper soils. Proper drainage will be important to minimize infiltration of water into adjacent subgrade soils. Such drainage will also be important for proper plant growth.

3.11 Temporary Excavation

All temporary excavations should be performed in accordance with project plans, specifications, and all OSHA requirements. Excavations 5 feet or deeper should be laid back or shored in accordance with OSHA requirements before personnel are allowed to enter. No surcharge loads should be permitted within a horizontal distance equal to the height of cut or 5 feet, whichever is greater from the top of the cut, unless the cut is shored. Based on our borings, the soils at the project site should be readily excavated using conventional excavating equipment in good working condition.

During construction, the soil conditions should be regularly evaluated to verify that conditions are as anticipated. The contractor shall be responsible for providing the “competent person” required by OSHA standards to evaluate soil conditions. Close coordination between the competent person and the geotechnical engineer should be maintained to facilitate construction while providing safe excavations.

3.12 Trench Backfill

Utility trenches can be backfilled with the onsite material, provided it is free of debris, organic material and oversized material (greater than 6 inches in diameter). All backfill should be placed in thin lifts (appropriate for the type of compaction equipment), moisture conditioned above optimum, and mechanically compacted to at least 90 percent relative compaction, relative to the ASTM D 1557 laboratory maximum density.

Prior to backfilling the trench, pipes should be bedded in and covered with sand that exhibits a Sand Equivalent (SE) of 30 or greater. The pipe bedding should extend at least 4 inches below the pipeline invert and at least 12 inches over the top of the pipeline. The bedding and shading sand is recommended to be densified in place by vibratory, lightweight compaction equipment and not by water jetting. Jetting or hydro-consolidation is not suitable for this project site and will result in unstable saturated subgrade.

Where utility trenches cross underneath building footing, the trenches should be plugged by a minimum of 2 feet of impermeable clayey soils or sand/cement slurry to reduce the potential for water intrusion underneath the slab.

3.13 Plan Review

The final grading and foundation plans should implement the recommendations presented in this report and should be reviewed by the project geotechnical consultant.

3.14 Geotechnical Observation during Construction

All grading and excavation should be performed under the observation and testing of the geotechnical consultant at the following stages:

- Upon completion of site clearing;
- During site earthwork;
- During preparation of subgrades;
- During fill placement;
- During excavation and backfilling of all utility trenches;
- Placement of asphalt concrete; and
- When any unusual or unexpected geotechnical conditions are encountered.

4.0 REFERENCES

American Concrete Institute (ACI), 2014, Building Code Requirements for Structural Concrete (ACI 318-14) and Commentary.

Bryant, W.A., and Hart, E.W., 2007, Fault Rupture Hazard Zones in California, Alquist-Priolo Earthquake Fault Zoning Act with Index to Earthquake Zones Maps, Department of Conservation, California Geological Survey, Special Publication 42, 2007 Interim Revision.

California Building Standards Commission, 2016, 2016 California Building Code, California Code of Regulations, Title 24, Part 2, Volume 2 of 2, Based on 2012 International Building Code, Effective January 1, 2017.

California Geological Survey (CGS), 2000, CD-ROM containing digital images of Official Maps of Alquist-Priolo Earthquake Fault Zones that affect the Southern Region, DMG CD 2000-003 2000.

_____, 1997, Seismic Hazard Zone Report for the Orange, California 7.5-Minute Quadrangle Map, Seismic Hazard Zone Report No. 11 (Revised 2001).

_____, 1998, State of California Seismic Hazard Zones Map – Tustin Quadrangle, Revised Official Map, Released April 15, 1998.

Morton, P.K. and Miller, R.V., 1981, Geologic Map of Orange County, California, Showing Mines and Mineral Deposits, Plate 1 of California Division of Mines and Geology, Bulletin 204.

Public Works Standards, Inc., 2018, *Standard Specifications for Public Works Construction, 2018 Edition,* published by BNI Building News.

Tokimatsu, K., and Seed, H.R., 1987, Evaluation of Settlements in Sands due to Earthquake Shaking, Journal of Geotechnical Engineering, v. 113, n.8, p. 861-878.

United States Geological Survey (USGS), 2014, Earthquake Hazards Program - Unified Hazard Tool, https://earthquake.usgs.gov/hazards/interactive/.

_____, 2015a, Interactive Fault Map, http://earthquake.usgs.gov/hazards/qfaults/map/

_____, 2015b, Interactive Geologic Map, http://ngmdb.usgs.gov/maps/MapView/

_____, 2018, United States Seismic Design Maps website, see: https://earthquake.usgs.gov/hazards/designmaps/usdesign.php

Yerkes, R.F., McCollouch, T.H., Schoellhamer, J.E. and Vedder, J.G, 1965, Geology of the Los Angeles Basin, California - An Introduction: U.S. Geological Survey Professional Paper 420-A pp. 57.

Youd, T.L, Idriss, I.M., Andrus, R.D., Arango, I., Castro, G., Christian, J.T., Dobry, R., Finn, L., Harder, L.F., Hynes, M.E., Ishihara, K., Koester, J.P., Liao, S.C., Marcuson, W.F. III, Martin, G.R., Mitchell, J.K., Moriwaki, Y., Power, M.S., Robertson, P.K., Seed, R.B., Stokoe, K.H. II, 2001, "Liquefaction Resistance of Soils: Summary Report from the 1996 NCEER and 1998 NCEER/NSF Workshops on Evaluation of Liquefaction Resistance of Soils", Journal of Geotechnical and Geoenvironmental Engineering, , Vol. 127, No. 10, October 2001.

5.0 LIMITATIONS

This report was based solely on data obtained from a limited number of geotechnical exploration, and soil samples and tests. Such information is, by necessity, incomplete. The nature of many sites is such that differing soil or geologic conditions can be present within small distances and under varying climatic conditions. Changes in subsurface conditions can and do occur over time. Therefore, the findings, conclusions, and recommendations presented in this report are only valid if Leighton Consulting has the opportunity to observe subsurface conditions during grading and construction, to confirm that our preliminary data are representative for the site. Leighton Consulting should also review the construction plans and project specifications, when available, to comment on the geotechnical aspects.

It should be noted that the recommendations in this report are subject to the limitations presented in this section. An information sheet prepared by GBC (Geotechnical Business Council) is also included at the rear of the text. We recommend that all individuals using this report read the limitations along with the attached information sheet.

Our professional services were performed in accordance with the prevailing standard of professional care as practiced by other geotechnical engineers in the area. We do not make any warranty, either expressed or implied. The report may not be used by others or for other projects without the expressed written consent of our client and our firm.

Important Information about This

Geotechnical-Engineering Report

Subsurface problems are a principal cause of construction delays, cost overruns, claims, and disputes.

While you cannot eliminate all such risks, you can manage them. The following information is provided to help.

The Geoprofessional Business Association (GBA) has prepared this advisory to help you – assumedly a client representative – interpret and apply this geotechnical-engineering report as effectively as possible. In that way, clients can benefit from a lowered exposure to the subsurface problems that, for decades, have been a principal cause of construction delays, cost overruns, claims, and disputes. If you have questions or want more information about any of the issues discussed below, contact your GBA-member geotechnical engineer. Active involvement in the Geoprofessional Business Association exposes geotechnical engineers to a wide array of risk-confrontation techniques that can be of genuine benefit for everyone involved with a construction project.

Geotechnical-Engineering Services Are Performed for Specific Purposes, Persons, and Projects

Geotechnical engineers structure their services to meet the specific needs of their clients. A geotechnical-engineering study conducted for a given civil engineer will not likely meet the needs of a civil-works constructor or even a different civil engineer. Because each geotechnical-engineering study is unique, each geotechnical-engineering report is unique, prepared *solely* for the client. *Those who rely on a geotechnical-engineering report prepared for a different client can be seriously misled*. No one except authorized client representatives should rely on this geotechnical-engineering report without first conferring with the geotechnical engineer who prepared it. *And no one – not even you – should apply this report for any purpose or project except the one originally contemplated.*

Read this Report in Full

Costly problems have occurred because those relying on a geotechnical-engineering report did not read it *in its entirety*. Do not rely on an executive summary. Do not read selected elements only. *Read this report in full.*

You Need to Inform Your Geotechnical Engineer about Change

Your geotechnical engineer considered unique, project-specific factors when designing the study behind this report and developing the confirmation-dependent recommendations the report conveys. A few typical factors include:

- the client's goals, objectives, budget, schedule, and risk-management preferences;
- the general nature of the structure involved, its size, configuration, and performance criteria;
- the structure's location and orientation on the site; and
- other planned or existing site improvements, such as retaining walls, access roads, parking lots, and underground utilities.

Typical changes that could erode the reliability of this report include those that affect:

- the site's size or shape;
- the function of the proposed structure, as when it's changed from a parking garage to an office building, or from a light-industrial plant to a refrigerated warehouse;
- the elevation, configuration, location, orientation, or weight of the proposed structure;
- the composition of the design team; or
- project ownership.

As a general rule, *always* inform your geotechnical engineer of project changes – even minor ones – and request an assessment of their impact. *The geotechnical engineer who prepared this report cannot accept responsibility or liability for problems that arise because the geotechnical engineer was not informed about developments the engineer otherwise would have considered.*

This Report May Not Be Reliable

Do not rely on this report if your geotechnical engineer prepared it:

- for a different client;
- for a different project;
- for a different site (that may or may not include all or a portion of the original site); or
- before important events occurred at the site or adjacent to it; e.g., man-made events like construction or environmental remediation, or natural events like floods, droughts, earthquakes, or groundwater fluctuations.

Note, too, that it could be unwise to rely on a geotechnical-engineering report whose reliability may have been affected by the passage of time, because of factors like changed subsurface conditions; new or modified codes, standards, or regulations; or new techniques or tools. *If your geotechnical engineer has not indicated an "apply-by" date on the report, ask what it should be*, and, in general, *if you are the least bit uncertain* about the continued reliability of this report, contact your geotechnical engineer before applying it. A minor amount of additional testing or analysis – if any is required at all – could prevent major problems.

Most of the "Findings" Related in This Report Are Professional Opinions

Before construction begins, geotechnical engineers explore a site's subsurface through various sampling and testing procedures. *Geotechnical engineers can observe actual subsurface conditions only at those specific locations where sampling and testing were performed*. The data derived from that sampling and testing were reviewed by your geotechnical engineer, who then applied professional judgment to form opinions about subsurface conditions throughout the site. Actual sitewide-subsurface conditions may differ – maybe significantly – from those indicated in this report. Confront that risk by retaining your geotechnical engineer to serve on the design team from project start to project finish, so the individual can provide informed guidance quickly, whenever needed.

This Report's Recommendations Are Confirmation-Dependent

The recommendations included in this report – including any options or alternatives – are confirmation-dependent. In other words, *they are not final*, because the geotechnical engineer who developed them relied heavily on judgment and opinion to do so. Your geotechnical engineer can finalize the recommendations *only after observing actual subsurface conditions* revealed during construction. If through observation your geotechnical engineer confirms that the conditions assumed to exist actually do exist, the recommendations can be relied upon, assuming no other changes have occurred. *The geotechnical engineer who prepared this report cannot assume responsibility or liability for confirmation-dependent recommendations if you fail to retain that engineer to perform construction observation*.

This Report Could Be Misinterpreted

Other design professionals' misinterpretation of geotechnical-engineering reports has resulted in costly problems. Confront that risk by having your geotechnical engineer serve as a full-time member of the design team, to:

- confer with other design-team members,
- help develop specifications,
- review pertinent elements of other design professionals' plans and specifications, and
- be on hand quickly whenever geotechnical-engineering guidance is needed.

You should also confront the risk of constructors misinterpreting this report. Do so by retaining your geotechnical engineer to participate in prebid and preconstruction conferences and to perform construction observation.

Give Constructors a Complete Report and Guidance

Some owners and design professionals mistakenly believe they can shift unanticipated-subsurface-conditions liability to constructors by limiting the information they provide for bid preparation. To help prevent the costly, contentious problems this practice has caused, include the complete geotechnical-engineering report, along with any attachments or appendices, with your contract documents, *but be certain to note conspicuously that you've included the material for informational purposes only*. To avoid misunderstanding, you may also want to note that "informational purposes" means constructors have no right to rely on the interpretations, opinions, conclusions, or recommendations in the report, but they may rely on the factual data relative to the specific times, locations, and depths/elevations referenced. Be certain that constructors know they may learn about specific project requirements, including options selected from the report, *only* from the design drawings and specifications. Remind constructors that they may perform their own studies if they want to, and *be sure to allow enough time* to permit them to do so. Only then might you be in a position to give constructors the information available to you, while requiring them to at least share some of the financial responsibilities stemming from unanticipated conditions. Conducting prebid and preconstruction conferences can also be valuable in this respect.

Read Responsibility Provisions Closely

Some client representatives, design professionals, and constructors do not realize that geotechnical engineering is far less exact than other engineering disciplines. That lack of understanding has nurtured unrealistic expectations that have resulted in disappointments, delays, cost overruns, claims, and disputes. To confront that risk, geotechnical engineers commonly include explanatory provisions in their reports. Sometimes labeled "limitations," many of these provisions indicate where geotechnical engineers' responsibilities begin and end, to help others recognize their own responsibilities and risks. *Read these provisions closely*. Ask questions. Your geotechnical engineer should respond fully and frankly.

Geoenvironmental Concerns Are Not Covered

The personnel, equipment, and techniques used to perform an environmental study – e.g., a "phase-one" or "phase-two" environmental site assessment – differ significantly from those used to perform a geotechnical-engineering study. For that reason, a geotechnical-engineering report does not usually relate any environmental findings, conclusions, or recommendations; e.g., about the likelihood of encountering underground storage tanks or regulated contaminants. *Unanticipated subsurface environmental problems have led to project failures*. If you have not yet obtained your own environmental information, ask your geotechnical consultant for risk-management guidance. As a general rule, *do not rely on an environmental report prepared for a different client, site, or project, or that is more than six months old.*

Obtain Professional Assistance to Deal with Moisture Infiltration and Mold

While your geotechnical engineer may have addressed groundwater, water infiltration, or similar issues in this report, none of the engineer's services were designed, conducted, or intended to prevent uncontrolled migration of moisture – including water vapor – from the soil through building slabs and walls and into the building interior, where it can cause mold growth and material-performance deficiencies. Accordingly, ***proper implementation of the geotechnical engineer's recommendations will not of itself be sufficient to prevent moisture infiltration.*** Confront the risk of moisture infiltration by including building-envelope or mold specialists on the design team. ***Geotechnical engineers are not building-envelope or mold specialists.***

GEOPROFESSIONAL BUSINESS ASSOCIATION

Telephone: 301/565-2733
e-mail: info@geoprofessional.org www.geoprofessional.org

Copyright 2016 by Geoprofessional Business Association (GBA). Duplication, reproduction, or copying of this document, in whole or in part, by any means whatsoever, is strictly prohibited, except with GBA's specific written permission. Excerpting, quoting, or otherwise extracting wording from this document is permitted only with the express written permission of GBA, and only for purposes of scholarly research or book review. Only members of GBA may use this document or its wording as a complement to or as an element of a report of any kind. Any other firm, individual, or other entity that so uses this document without being a GBA member could be committing negligent

Project: 12137.002	Eng/Geol: DJC
Scale:1 " = 2,000 '	Date: January 2019

Base Map: ESRI ArcGIS Online 2019
Thematic Information: Leighton
Author: Leighton Geomatics (btran)

SITE LOCATION MAP

Park Plaza Memory Care Expansion
574 South Glassell Street
Orange, California

Figure 1

Leighton

Map Saved as V:\Drafting\12137\002\Maps\12137-002_F01_SLM_2019-01-22.mxd on 1/22/2019 4:47:23 PM

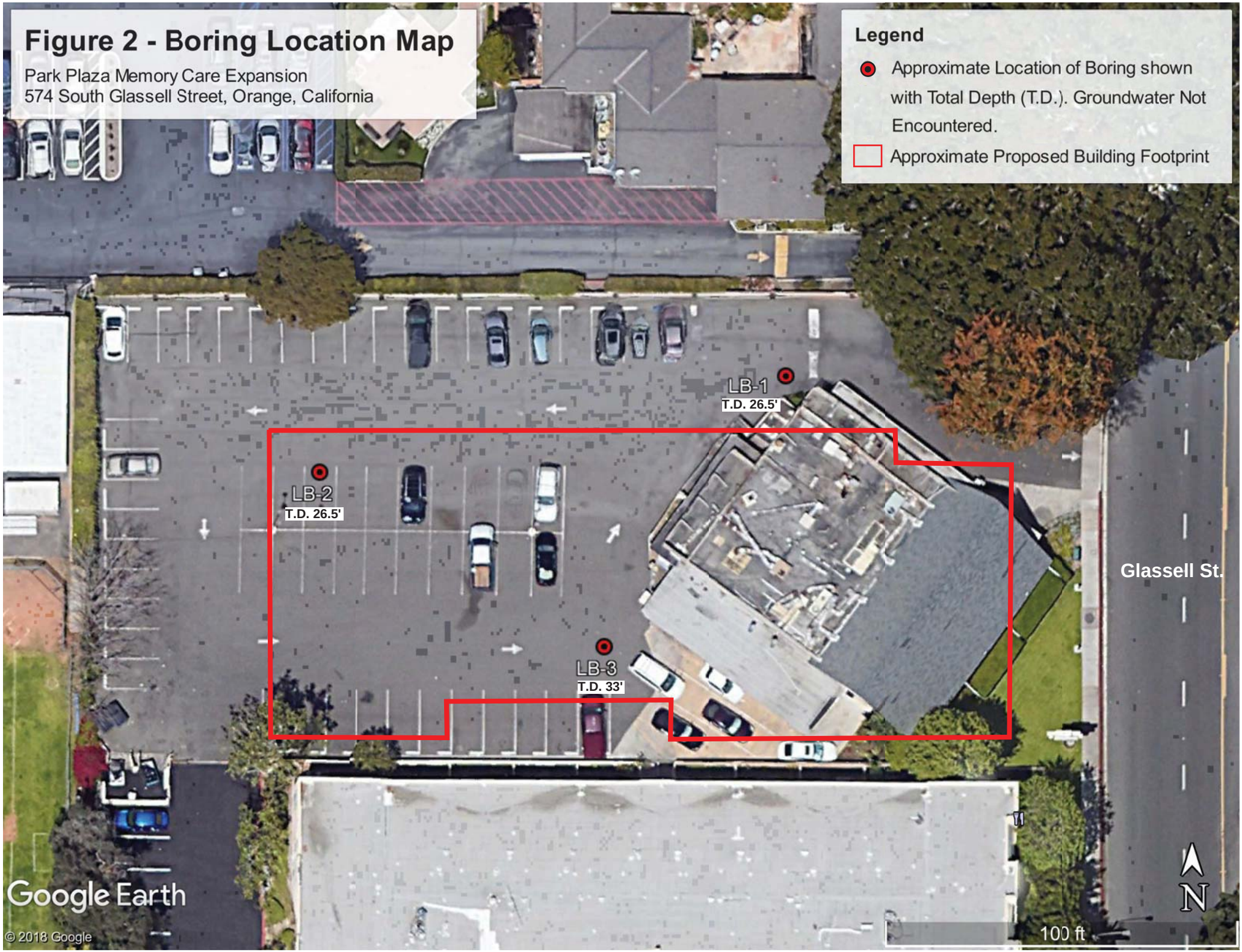
Figure 2 - Boring Location Map
Park Plaza Memory Care Expansion
574 South Glassell Street, Orange, California
Legend
Approximate Location of Boring shown with Total Depth (T.D.). Groundwater Not Encountered.
Approximate Proposed Building Footprint
LB-1
T.D. 26.5'
LB-2
T.D. 26.5'
LB-3
T.D. 33'
Glassell St.
N
100 ft
Google Earth
© 2018 Google

APPENDIX A

GEOTECHNICAL BORING LOGS

Leighton

GEOTECHNICAL BORING LOG LB-1

Project No.	12137.002	**Date Drilled**	12-13-18
Project	Park Plaza Memory Care Expansion	**Logged By**	CD
Drilling Co.	2R Drilling, Inc.	**Hole Diameter**	8"
Drilling Method	Hollow Stem Auger - 140lb - Autohammer - 30" Drop	**Ground Elevation**	'
Location	See Figure 2 - *Boring Location Map*	**Sampled By**	CD

Elevation Feet	Depth Feet	Graphic Log (N / S)	Attitudes	Sample No.	Blows Per 6 Inches	Dry Density pcf	Moisture Content, %	Soil Class. (U.S.C.S.)	SOIL DESCRIPTION	Type of Tests
	0			B-1				SM	Surface: 5 inches of asphalt concrete **Artificial Fill (Af)** @ 0.4': Silty SAND, slightly moist, yellowish brown, fine sand, trace of clay	RV
	5			R-1	2 3 5	111	11	CL	**Quaternary-aged young alluvial fan deposits (Qyf)** @ 5': Sandy CLAY, stiff, yellowish brown, moist, FeO staining, trace subroudned gravel, low plasticity	
	10			R-2	21 50/6"	127	2	GW	@ 10': Well-graded GRAVEL with Sand, very dense, olive brown, slightly moist, fine to coarse gravel, subangular to subrounded, fine to coarse sand	
	15			R-3	26 36 35	130	2		@ 15': Fine sand	
	20			R-4	29 38 38	130	2	SP	@ 20': Poorly-graded SAND with Gravel, very dense, olive brown, slightly moist, fine to coarse gravel, fine to medium sand	
	25			S-5	50/5"				@ 25': No recovery	
	30								Total depth of boring: 26.5 feet Groundwater not encountered during drilling Backfilled with soil cuttings, tamped, and patched with cold asphalt	

This Soil Description applies only to a location of the exploration at the time of sampling. Subsurface conditions may differ at other locations and may change with time. The description is a simplification of the actual conditions encountered. Transitions between soil types may be gradual.

SAMPLE TYPES:
- B BULK SAMPLE
- C CORE SAMPLE
- G GRAB SAMPLE
- R RING SAMPLE
- S SPLIT SPOON SAMPLE
- T TUBE SAMPLE

TYPE OF TESTS:
- -200 % FINES PASSING
- AL ATTERBERG LIMITS
- CN CONSOLIDATION
- CO COLLAPSE
- CR CORROSION
- CU UNDRAINED TRIAXIAL
- DS DIRECT SHEAR
- EI EXPANSION INDEX
- H HYDROMETER
- MD MAXIMUM DENSITY
- PP POCKET PENETROMETER
- RV R VALUE
- SA SIEVE ANALYSIS
- SE SAND EQUIVALENT
- SG SPECIFIC GRAVITY
- UC UNCONFINED COMPRESSIVE STRENGTH

*** * * This log is a part of a report by Leighton and should not be used as a stand-alone document. * * ***

GEOTECHNICAL BORING LOG LB-2

Project No.	12137.002	**Date Drilled**	12-13-18
Project	Park Plaza Memory Care Expansion	**Logged By**	CD
Drilling Co.	2R Drilling, Inc.	**Hole Diameter**	8"
Drilling Method	Hollow Stem Auger - 140lb - Autohammer - 30" Drop	**Ground Elevation**	'
Location	See Figure 2 - *Boring Location Map*	**Sampled By**	CD

Elevation Feet	Depth Feet	Graphic Log (N / S)	Attitudes	Sample No.	Blows Per 6 Inches	Dry Density pcf	Moisture Content, %	Soil Class. (U.S.C.S.)	SOIL DESCRIPTION	Type of Tests
	0							SM	Surface: 2.5 inches of asphalt concrete **Artificial Fill (Af)** @ 0.2': Silty SAND, slightly moist, yellowish brown, fine sand, trace of clay	
				R-1	2 3 3	95	17	CL	**Quaternary-aged young alluvial fan deposits (Qyf)** @ 2': Sandy CLAY, medium stiff, yellowish brown, moist, fine sand, low plasticity	DS
	5			R-2	3 3 5	111	13	SC	@ 5': Clayey SAND, stiff, yellowish brown, moist, fine sand, trace subrounded gravel, nonplastic to low plasticity	CN
	10			S-3	24 20 20			SP	@ 10': Poorly-graded SAND with Gravel, dense,olive brown, slightly moist, subangular to subrounded gravel	
	15			R-4	23 34 47	115	2		@ 15': Very dense, fine to coarse gravel, fine to medium sand	
									@ 18': Rig chatter, hard drilling	
	20			S-5	33 17 17					
	25			S-6	15 23 30			SW	@ 25': Well-graded SAND, very dense, olive brown, slightly moist, fine to coarse sand, little fine gravel	
	30								Total depth of boring: 26.5 feet Groundwater not encountered during drilling Backfilled with soil cuttings, tamped, and patched with cold asphalt	

This Soil Description applies only to a location of the exploration at the time of sampling. Subsurface conditions may differ at other locations and may change with time. The description is a simplification of the actual conditions encountered. Transitions between soil types may be gradual.

SAMPLE TYPES:
- B BULK SAMPLE
- C CORE SAMPLE
- G GRAB SAMPLE
- R RING SAMPLE
- S SPLIT SPOON SAMPLE
- T TUBE SAMPLE

TYPE OF TESTS:
- -200 % FINES PASSING
- AL ATTERBERG LIMITS
- CN CONSOLIDATION
- CO COLLAPSE
- CR CORROSION
- CU UNDRAINED TRIAXIAL
- DS DIRECT SHEAR
- EI EXPANSION INDEX
- H HYDROMETER
- MD MAXIMUM DENSITY
- PP POCKET PENETROMETER
- RV R VALUE
- SA SIEVE ANALYSIS
- SE SAND EQUIVALENT
- SG SPECIFIC GRAVITY
- UC UNCONFINED COMPRESSIVE STRENGTH

*** * * This log is a part of a report by Leighton and should not be used as a stand-alone document. * * ***

GEOTECHNICAL BORING LOG LB-3

Project No.	12137.002	**Date Drilled**	12-13-18
Project	Park Plaza Memory Care Expansion	**Logged By**	CD
Drilling Co.	2R Drilling, Inc.	**Hole Diameter**	8"
Drilling Method	Hollow Stem Auger - 140lb - Autohammer - 30" Drop	**Ground Elevation**	'
Location	See Figure 2 - *Boring Location Map*	**Sampled By**	CD

Elevation Feet	Depth Feet	Graphic Log (N / S)	Attitudes	Sample No.	Blows Per 6 Inches	Dry Density pcf	Moisture Content, %	Soil Class. (U.S.C.S.)	SOIL DESCRIPTION	Type of Tests
	0							SM	Surface: 4 inches of asphalt concrete	
				B-1					**Artificial Fill (Af)** @ 0.3': Silty SAND, slightly moist, yellowish brown, fine sand, trace of clay	CR
				R-1	3 4 4	102	7		**Quaternary-aged young alluvial fan deposits (Qyf)** @ 2': Silty SAND, loose, yellowish brown, moist, fine sand	CN
	5			R-2	2 3 5	115	13	CL	@ 5': Sandy CLAY, stiff, brown, moist, low plasticity, fine sand, trace fine gravel, subangular gravel	-200
	10			R-3	8 17 20	108	4	SP-SM	@ 10': Poorly-graded SAND with Silt, dense, olive brown, slightly moist, fine sand, little gravel, fine subangular gravel	
	15			S-4	7 4 4			SM	@ 15': Silty SAND, medium dense, yellowish brown, moist, fine sand, trace of clay	
	20			R-5	3 5 7	117	15	CL	@ 21': Sandy CLAY, very stiff, reddish brown, moist, low plasticity, trace subangular gravel	
	25			S-6	2 2 3					
	30									

This Soil Description applies only to a location of the exploration at the time of sampling. Subsurface conditions may differ at other locations and may change with time. The description is a simplification of the actual conditions encountered. Transitions between soil types may be gradual.

SAMPLE TYPES:
- B BULK SAMPLE
- C CORE SAMPLE
- G GRAB SAMPLE
- R RING SAMPLE
- S SPLIT SPOON SAMPLE
- T TUBE SAMPLE

TYPE OF TESTS:
- -200 % FINES PASSING
- AL ATTERBERG LIMITS
- CN CONSOLIDATION
- CO COLLAPSE
- CR CORROSION
- CU UNDRAINED TRIAXIAL
- DS DIRECT SHEAR
- EI EXPANSION INDEX
- H HYDROMETER
- MD MAXIMUM DENSITY
- PP POCKET PENETROMETER
- RV R VALUE
- SA SIEVE ANALYSIS
- SE SAND EQUIVALENT
- SG SPECIFIC GRAVITY
- UC UNCONFINED COMPRESSIVE STRENGTH

*** * * This log is a part of a report by Leighton and should not be used as a stand-alone document. * * ***

GEOTECHNICAL BORING LOG LB-3

Project No.	12137.002	**Date Drilled**	12-13-18
Project	Park Plaza Memory Care Expansion	**Logged By**	CD
Drilling Co.	2R Drilling, Inc.	**Hole Diameter**	8"
Drilling Method	Hollow Stem Auger - 140lb - Autohammer - 30" Drop	**Ground Elevation**	'
Location	See Figure 2 - *Boring Location Map*	**Sampled By**	CD

Elevation Feet	Depth Feet	Graphic Log (N S)	Attitudes	Sample No.	Blows Per 6 Inches	Dry Density pcf	Moisture Content, %	Soil Class. (U.S.C.S.)	SOIL DESCRIPTION	Type of Tests
	30			S-7	25 21 27			SP	@ 30': Poorly-graded SAND with Gravel, very dense, grayish brown, slightly moist, fine sand, fine to coarse gravel, subangular @ 32': Very hard drilling	
									@ 33': Auger refusal	
	35								Total depth of boring: 33 feet (Auger refusal) Groundwater not encountered during drilling Backfilled with soil cuttings, tamped, and patched with cold asphalt	
	40									
	45									
	50									
	55									
	60									

This Soil Description applies only to a location of the exploration at the time of sampling. Subsurface conditions may differ at other locations and may change with time. The description is a simplification of the actual conditions encountered. Transitions between soil types may be gradual.

SAMPLE TYPES:
- B BULK SAMPLE
- C CORE SAMPLE
- G GRAB SAMPLE
- R RING SAMPLE
- S SPLIT SPOON SAMPLE
- T TUBE SAMPLE

TYPE OF TESTS:
- -200 % FINES PASSING
- AL ATTERBERG LIMITS
- CN CONSOLIDATION
- CO COLLAPSE
- CR CORROSION
- CU UNDRAINED TRIAXIAL
- DS DIRECT SHEAR
- EI EXPANSION INDEX
- H HYDROMETER
- MD MAXIMUM DENSITY
- PP POCKET PENETROMETER
- RV R VALUE
- SA SIEVE ANALYSIS
- SE SAND EQUIVALENT
- SG SPECIFIC GRAVITY
- UC UNCONFINED COMPRESSIVE STRENGTH

*** * * This log is a part of a report by Leighton and should not be used as a stand-alone document. * * ***

APPENDIX B

LABORATORY TEST RESULTS

Leighton

Boring No.	LB-3							
Sample No.	R-2							
Depth (ft.)	5.0							
Sample Type	Ring							
Soil Identification	Brown sandy silty clay s(CL-ML)							
Moisture Correction								
Wet Weight of Soil + Container (g)	0.00							
Dry Weight of Soil + Container (g)	0.00							
Weight of Container (g)	1.00							
Moisture Content (%)	0.00							
Sample Dry Weight Determination								
Weight of Sample + Container (g)	472.67							
Weight of Container (g)	78.64							
Weight of Dry Sample (g)	394.03							
Container No.:								
After Wash								
Method (A or B)	B							
Dry Weight of Sample + Cont. (g)	235.08							
Weight of Container (g)	78.64							
Dry Weight of Sample (g)	156.44							
% Passing No. 200 Sieve	**60.3**							
% Retained No. 200 Sieve	39.7							

Leighton

PERCENT PASSING
No. 200 SIEVE
ASTM D 1140

Project Name: Park Plaza Expansion
Project No.: 12137.002

Tested By: R. Manning Date: 12/21/18

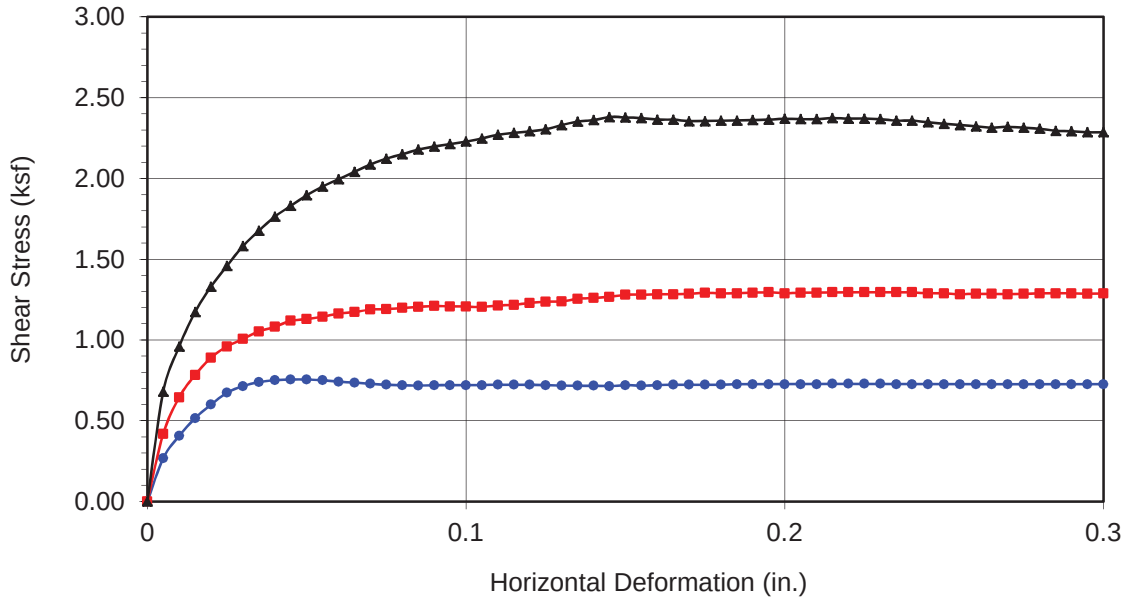

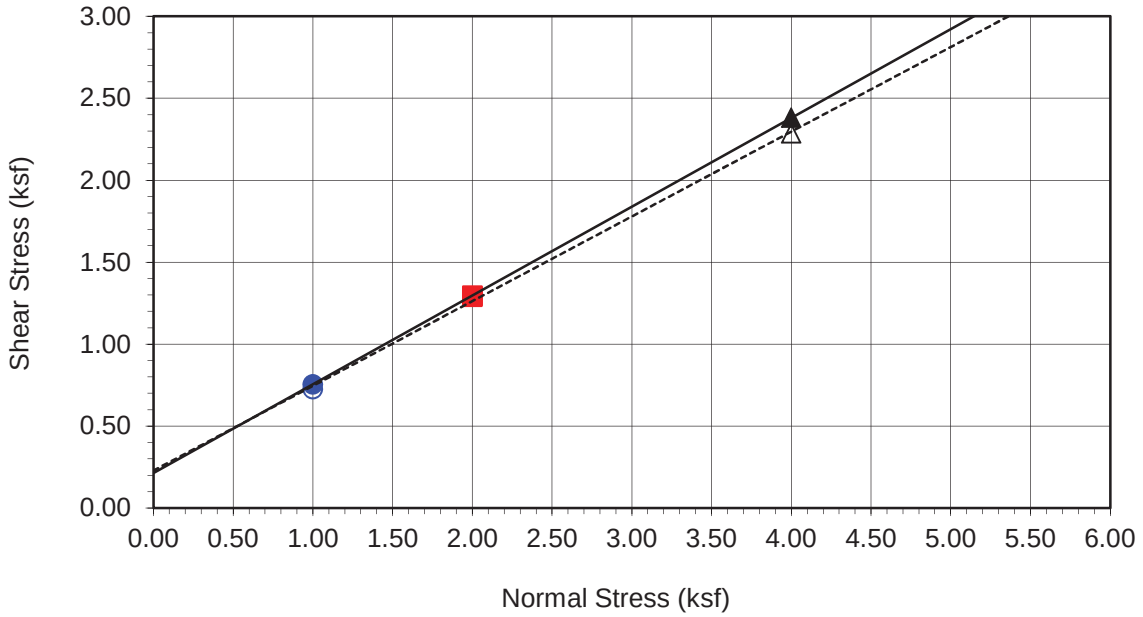

Boring No.	**LB-2**
Sample No.	**R-1**
Depth (ft)	**2**
Sample Type:	Ring
Soil Identification: Dark yellowish brown silty clay (CL-ML)	

Strength Parameters

	C (psf)	ϕ (^{o})
Peak	213	28
Ultimate	228	27

Normal Stress (kip/ft²)	1.000	2.000	4.000
Peak Shear Stress (kip/ft²)	● 0.755	■ 1.295	▲ 2.380
Shear Stress @ End of Test (ksf)	○ 0.726	□ 1.289	△ 2.286
Deformation Rate (in./min.)	0.0017	0.0017	0.0017
Initial Sample Height (in.)	1.000	1.000	1.000
Diameter (in.)	2.415	2.415	2.415
Initial Moisture Content (%)	17.11	17.11	17.11
Dry Density (pcf)	92.1	92.9	99.2
Saturation (%)	55.6	56.7	66.1
Soil Height Before Shearing (in.)	0.9923	0.9859	0.9745
Final Moisture Content (%)	24.4	24.9	24.0

Leighton

DIRECT SHEAR TEST RESULTS

Consolidated Drained - ASTM D 3080

Project No.: 12137.002

Park Plaza Expansion

12-18

DS LB-2, R-1 @ 2

Time Readings

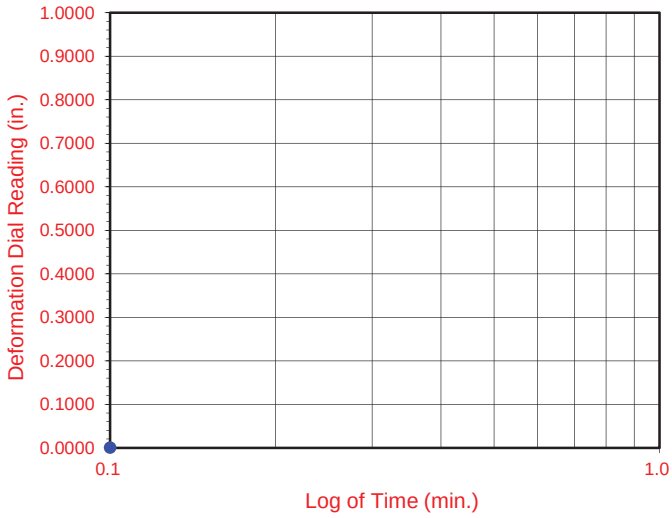

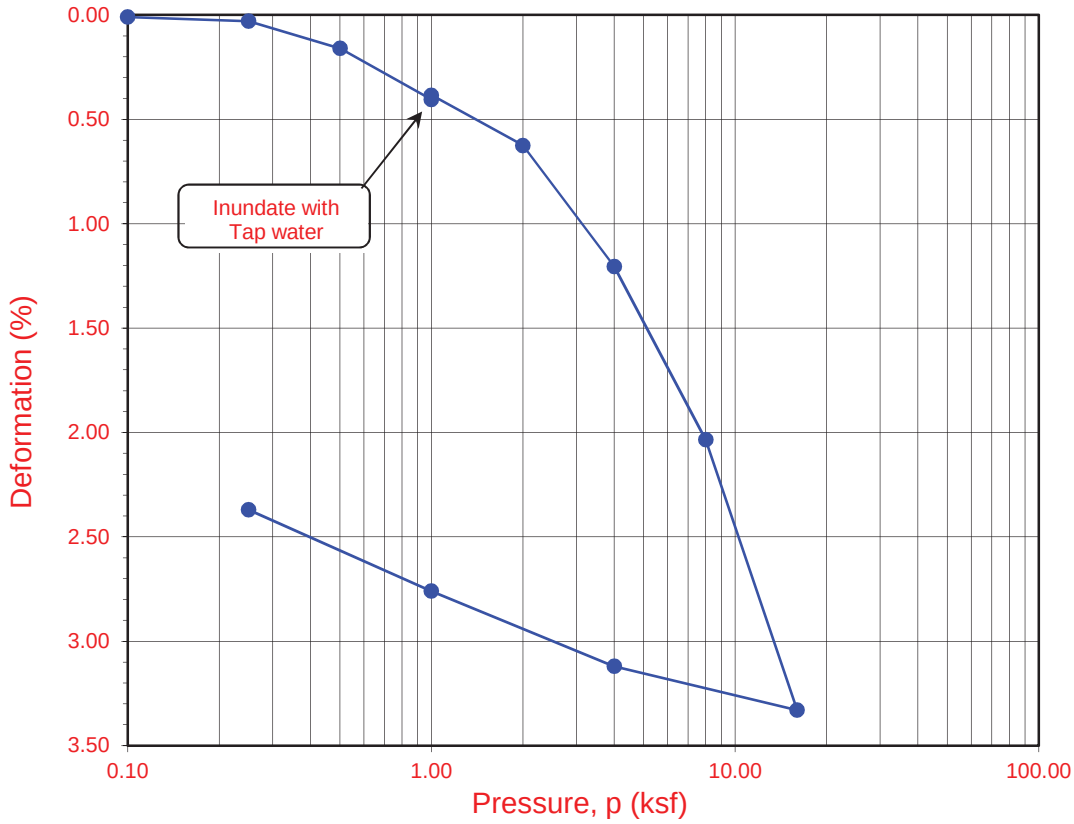

Boring No.	Sample No.	Depth (ft.)	Moisture Content (%)		Dry Density (pcf)		Void Ratio		Degree of Saturation (%)	
			Initial	Final	Initial	Final	Initial	Final	Initial	Final
LB-2	**R-2**	**5.0**	**12.7**	**17.3**	**111.3**	**110.7**	**0.515**	**0.479**	**67**	**89**

Soil Identification: Dark olive brown clayey sand (SC)

Leighton

ONE-DIMENSIONAL CONSOLIDATION PROPERTIES of SOILS
ASTM D 2435

Project No.: 12137.002

Park Plaza Expansion

01-19

Time Readings

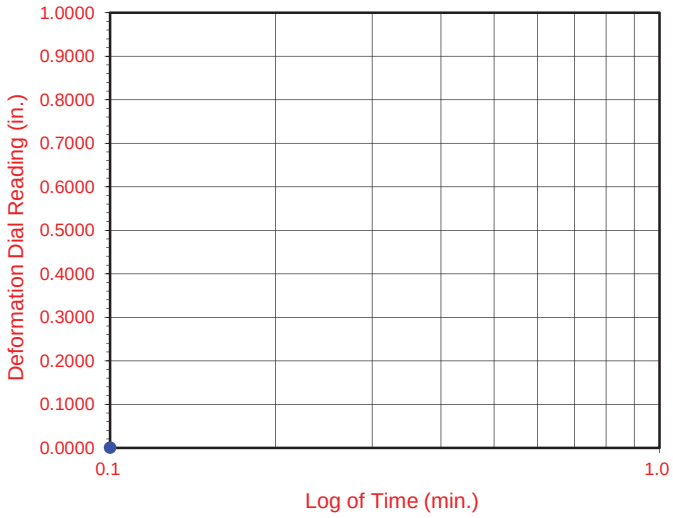

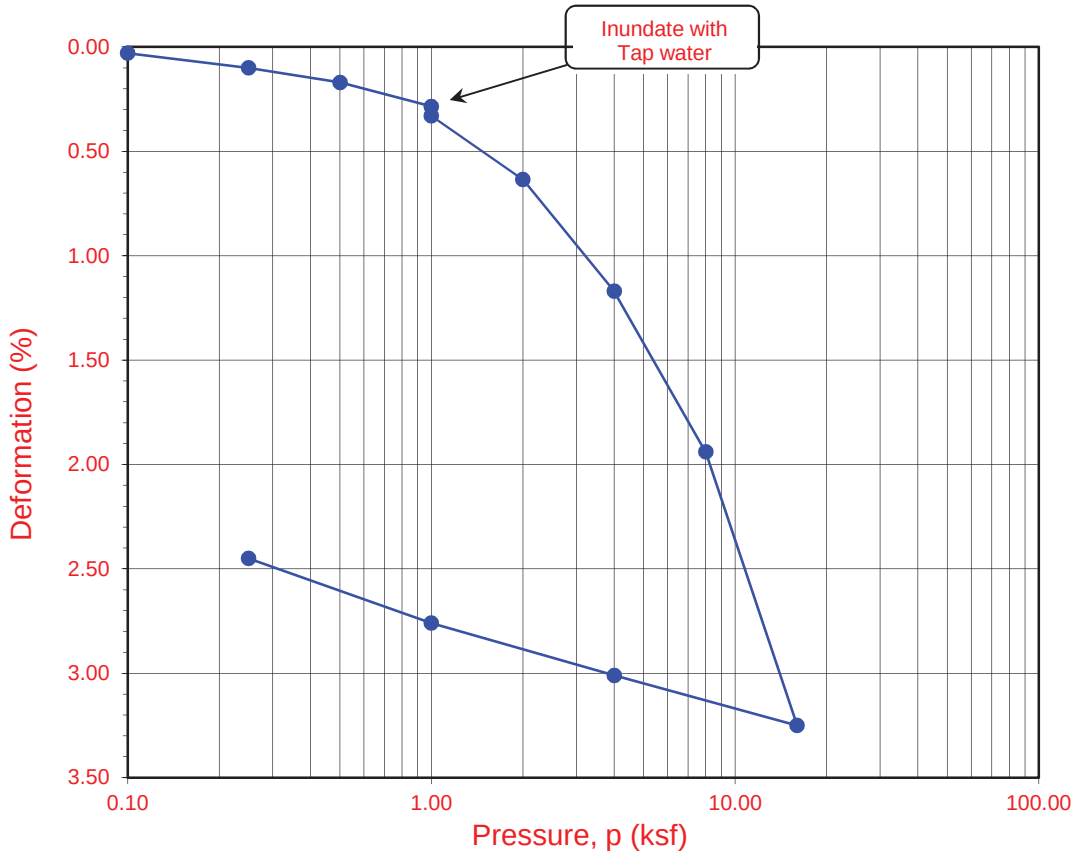

Boring No.	Sample No.	Depth (ft.)	Moisture Content (%)		Dry Density (pcf)		Void Ratio		Degree of Saturation (%)	
			Initial	Final	Initial	Final	Initial	Final	Initial	Final
LB-3	**R-1**	**2.0**	**6.8**	**19.2**	**101.8**	**103.5**	**0.656**	**0.615**	**28**	**82**

Soil Identification: Dark yellowish brown silty sand (SM)

Leighton

ONE-DIMENSIONAL CONSOLIDATION PROPERTIES of SOILS
ASTM D 2435

Project No.: 12137.002

Park Plaza Expansion

01-19

Leighton

SOIL RESISTIVITY TEST

DOT CA TEST 643

Project Name:	Park Plaza Expansion	Tested By :	G. Berdy	Date:	01/02/19
Project No. :	12137.002	Data Input By:	J. Ward	Date:	01/09/19
Boring No.:	LB-3	Depth (ft.) :	1-5		
Sample No. :	B-1				
Soil Identification:*	Yellowish brown SM				

*California Test 643 requires soil specimens to consist only of portions of samples passing through the No. 8 US Standard Sieve before resistivity testing. Therefore, this test method may not be representative for coarser materials.

Specimen No.	Water Added (ml) (Wa)	Adjusted Moisture Content (MC)	Resistance Reading (ohm)	Soil Resistivity (ohm-cm)
1	30	25.26	5500	5500
2	40	33.08	5300	5300
3	50	40.90	5500	5500
4				
5				

Moisture Content (%) (MCi)	1.81
Wet Wt. of Soil + Cont. (g)	225.38
Dry Wt. of Soil + Cont. (g)	222.61
Wt. of Container (g)	69.47
Container No.	
Initial Soil Wt. (g) (Wt)	130.22
Box Constant	1.000
MC =(((1+Mci/100)x(Wa/Wt+1))-1)x100	

Min. Resistivity (ohm-cm)	Moisture Content (%)	Sulfate Content (ppm)	Chloride Content (ppm)	Soil pH	
				pH	Temp. (°C)
DOT CA Test 643		DOT CA Test 417 Part II	DOT CA Test 422	DOT CA Test 643	
5300	**33.1**	**59**	**31**	**7.28**	**22.4**

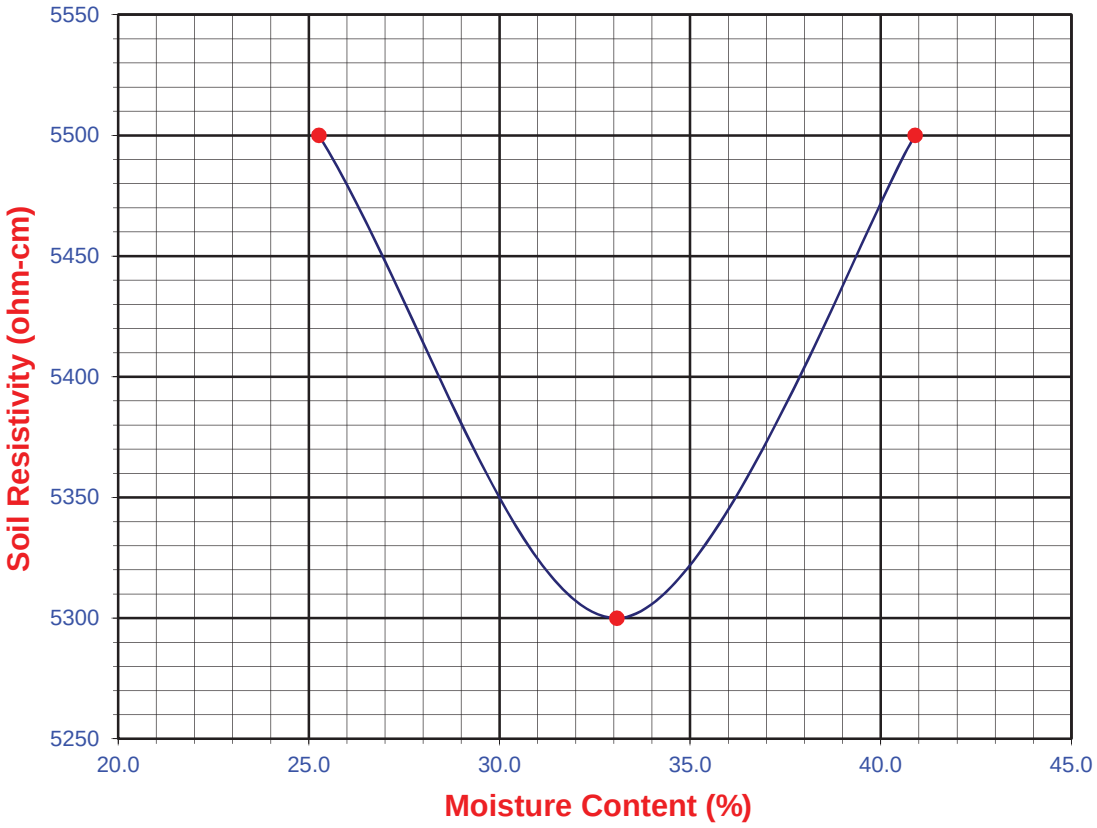

Leighton

R-VALUE TEST RESULTS

DOT CA Test 301

PROJECT NAME:	Park Plaza Expansion	PROJECT NUMBER:	12137.002
BORING NUMBER:	LB-1	DEPTH (FT.):	1-5
SAMPLE NUMBER:	B-1	TECHNICIAN:	S. Felter
SAMPLE DESCRIPTION:	Brown silty sand (SM)	DATE COMPLETED:	12/27/2019

TEST SPECIMEN	a	b	c
MOISTURE AT COMPACTION %	12.9	13.4	13.8
HEIGHT OF SAMPLE, Inches	2.40	2.52	2.60
DRY DENSITY, pcf	114.8	114.7	110.1
COMPACTOR PRESSURE, psi	350	350	300
EXUDATION PRESSURE, psi	594	434	277
EXPANSION, Inches x 10exp-4	58	39	30
STABILITY Ph 2,000 lbs (160 psi)	35	37	41
TURNS DISPLACEMENT	5.34	5.50	5.57
R-VALUE UNCORRECTED	63	60	57
R-VALUE CORRECTED	61	60	59

DESIGN CALCULATION DATA	a	b	c
GRAVEL EQUIVALENT FACTOR	1.0	1.0	1.0
TRAFFIC INDEX	5.0	5.0	5.0
STABILOMETER THICKNESS, ft.	0.62	0.64	0.66
EXPANSION PRESSURE THICKNESS, ft.	1.93	1.30	1.00

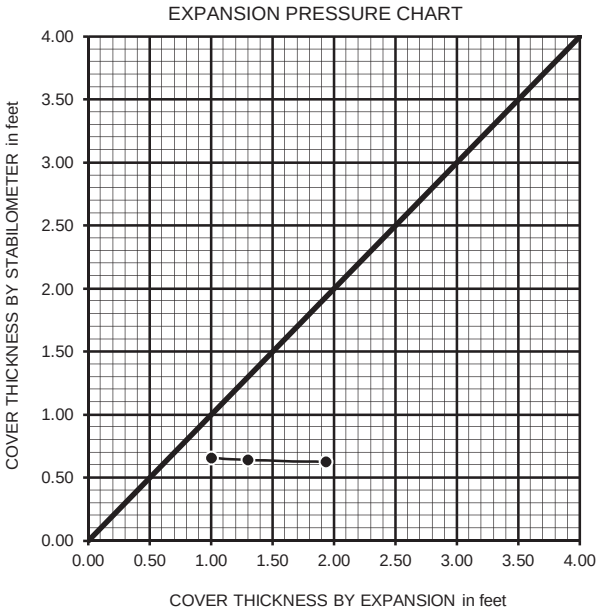

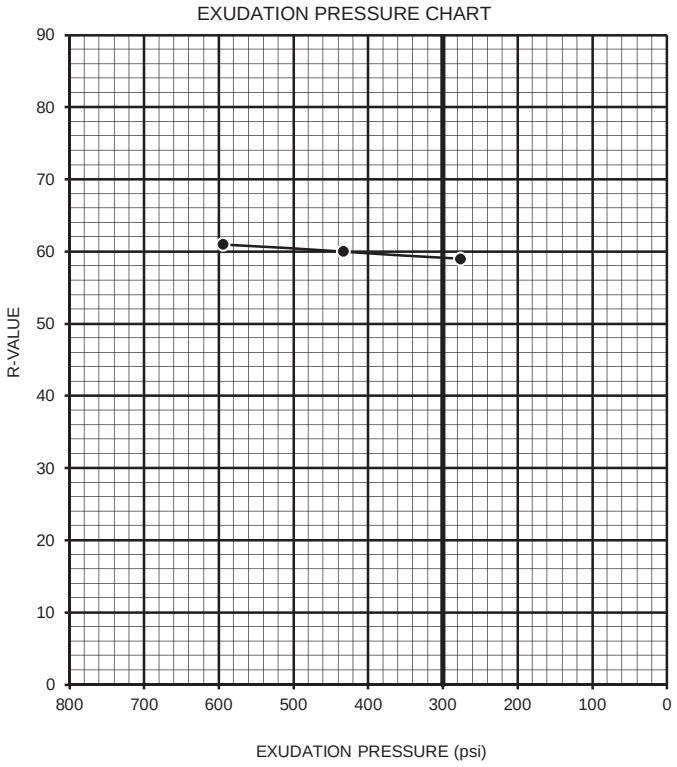

R-VALUE BY EXPANSION:	58
R-VALUE BY EXUDATION:	59
EQUILIBRIUM R-VALUE:	58

APPENDIX C

GENERAL EARTHWORK AND GRADING RECOMMENDATIONS

Leighton

APPENDIX C

LEIGHTON CONSULTING, INC.
EARTHWORK AND GRADING GUIDE SPECIFICATIONS

TABLE OF CONTENTS

Section — Appendix C Page

C-1.0 GENERAL 1

C-1.1 Intent 1
C-1.2 Role of Leighton Consulting, Inc. 1
C-1.3 The Earthwork Contractor 1

C-2.0 PREPARATION OF AREAS TO BE FILLED 2

C-2.1 Clearing and Grubbing 2
C-2.2 Processing 3
C-2.3 Overexcavation 3
C-2.4 Benching 3
C-2.5 Evaluation/Acceptance of Fill Areas 3

C-3.0 FILL MATERIAL 4

C-3.1 Fill Quality 4
C-3.2 Oversize 4
C-3.3 Import 4

C-4.0 FILL PLACEMENT AND COMPACTION 4

C-4.1 Fill Layers 4
C-4.2 Fill Moisture Conditioning 5
C-4.3 Compaction of Fill 5
C-4.4 Compaction of Fill Slopes 5
C-4.5 Compaction Testing 5
C-4.6 Compaction Test Locations 5

C-5.0 EXCAVATION 6

C-6.0 TRENCH BACKFILLS 6

C-6.1 Safety 6
C-6.2 Bedding and Backfill 6
C-6.3 Lift Thickness 7

Leighton

C-1.0 GENERAL

C-1.1 Intent

These Earthwork and Grading Guide Specifications are for grading and earthwork shown on the current, approved grading plan(s) and/or indicated in the Leighton Consulting, Inc. geotechnical report(s). These Guide Specifications are a part of the recommendations contained in the geotechnical report(s). In case of conflict, the project-specific recommendations in the geotechnical report shall supersede these Guide Specifications. Leighton Consulting, Inc. shall provide geotechnical observation and testing during earthwork and grading. Based on these observations and tests, Leighton Consulting, Inc. may provide new or revised recommendations that could supersede these specifications or the recommendations in the geotechnical report(s).

C-1.2 Role of Leighton Consulting, Inc.

Prior to commencement of earthwork and grading, Leighton Consulting, Inc. shall meet with the earthwork contractor to review the earthwork contractor's work plan, to schedule sufficient personnel to perform the appropriate level of observation, mapping and compaction testing. During earthwork and grading, Leighton Consulting, Inc. shall observe, map, and document subsurface exposures to verify geotechnical design assumptions. If observed conditions are found to be significantly different than the interpreted assumptions during the design phase, Leighton Consulting, Inc. shall inform the owner, recommend appropriate changes in design to accommodate these observed conditions, and notify the review agency where required. Subsurface areas to be geotechnically observed, mapped, elevations recorded, and/or tested include (1) natural ground after clearing to receiving fill but before fill is placed, (2) bottoms of all "remedial removal" areas, (3) all key bottoms, and (4) benches made on sloping ground to receive fill.

Leighton Consulting, Inc. shall observe moisture-conditioning and processing of the subgrade and fill materials, and perform relative compaction testing of fill to determine the attained relative compaction. Leighton Consulting, Inc. shall provide *Daily Field Reports* to the owner and the Contractor on a routine and frequent basis.

C-1.3 The Earthwork Contractor

The earthwork contractor (Contractor) shall be qualified, experienced and knowledgeable in earthwork logistics, preparation and processing of ground to receive fill, moisture-conditioning and processing of fill, and compacting fill. The Contractor shall review and accept the plans, geotechnical report(s), and these Guide

Specifications prior to commencement of grading. The Contractor shall be solely responsible for performing grading and backfilling in accordance with the current, approved plans and specifications.

The Contractor shall inform the owner and Leighton Consulting, Inc. of changes in work schedules at least one working day in advance of such changes so that appropriate observations and tests can be planned and accomplished. The Contractor shall not assume that Leighton Consulting, Inc. is aware of all grading operations.

The Contractor shall have the sole responsibility to provide adequate equipment and methods to accomplish earthwork and grading in accordance with the applicable grading codes and agency ordinances, these Guide Specifications, and recommendations in the approved geotechnical report(s) and grading plan(s). If, in the opinion of Leighton Consulting, Inc., unsatisfactory conditions, such as unsuitable soil, improper moisture condition, inadequate compaction, adverse weather, etc., are resulting in a quality of work less than required in these specifications, Leighton Consulting, Inc. shall reject the work and may recommend to the owner that earthwork and grading be stopped until unsatisfactory condition(s) are rectified.

C-2.0 PREPARATION OF AREAS TO BE FILLED

C-2.1 Clearing and Grubbing

Vegetation, such as brush, grass, roots and other deleterious material shall be sufficiently removed and properly disposed of in a method acceptable to the owner, governing agencies and Leighton Consulting, Inc.. Care should be taken not to encroach upon or otherwise damage native and/or historic trees designated by the Owner or appropriate agencies to remain. Pavements, flatwork or other construction should not extend under the “drip line” of designated trees to remain.

Leighton Consulting, Inc. shall evaluate the extent of these removals depending on specific site conditions. Earth fill material shall not contain more than 3 percent of organic materials (by dry weight: ASTM D 2974). Nesting of the organic materials shall not be allowed.

If potentially hazardous materials are encountered, the Contractor shall stop work in the affected area, and a hazardous material specialist shall be informed immediately for proper evaluation and handling of these materials prior to continuing to work in that area. As presently defined by the State of California, most refined petroleum products (gasoline, diesel fuel, motor oil, grease, coolant, etc.) have chemical constituents that

are considered to be hazardous waste. As such, the indiscriminate dumping or spillage of these fluids onto the ground may constitute a misdemeanor, punishable by fines and/or imprisonment, and shall not be allowed.

C-2.2 Processing

Existing ground that has been declared satisfactory for support of fill, by Leighton Consulting, Inc., shall be scarified to a minimum depth of 6 inches (15 cm). Existing ground that is not satisfactory shall be over-excavated as specified in the following Section C-2.3. Scarification shall continue until soils are broken down and free of large clay lumps or clods and the working surface is reasonably uniform, flat, and free of uneven features that would inhibit uniform compaction.

C-2.3 Overexcavation

In addition to removals and over-excavations recommended in the approved geotechnical report(s) and the grading plan, soft, loose, dry, saturated, spongy, organic-rich, highly fractured or otherwise unsuitable ground shall be over-excavated to competent ground as evaluated by Leighton Consulting, Inc. during grading. All undocumented fill soils under proposed structure footprints should be excavated

C-2.4 Benching

Where fills are to be placed on ground with slopes steeper than 5:1 (horizontal to vertical units), (>20 percent grade) the ground shall be stepped or benched. The lowest bench or key shall be a minimum of 15 feet (4.5 m) wide and at least 2 feet (0.6 m) deep, into competent material as evaluated by Leighton Consulting, Inc.. Other benches shall be excavated a minimum height of 4 feet (1.2 m) into competent material or as otherwise recommended by Leighton Consulting, Inc.. Fill placed on ground sloping flatter than 5:1 (horizontal to vertical units), (<20 percent grade) shall also be benched or otherwise over-excavated to provide a flat subgrade for the fill.

C-2.5 Evaluation/Acceptance of Fill Areas

All areas to receive fill, including removal and processed areas, key bottoms, and benches, shall be observed, mapped, elevations recorded, and/or tested prior to being accepted by Leighton Consulting, Inc. as suitable to receive fill. The Contractor shall obtain a written acceptance (*Daily Field Report*) from Leighton Consulting, Inc. prior to fill placement. A licensed surveyor shall provide the survey control for determining elevations of processed areas, keys and benches.

C-3.0 FILL MATERIAL

C-3.1 Fill Quality

Material to be used as fill shall be essentially free of organic matter and other deleterious substances evaluated and accepted by Leighton Consulting, Inc. prior to placement. Soils of poor quality, such as those with unacceptable gradation, high expansion potential, or low strength shall be placed in areas acceptable to Leighton Consulting, Inc. or mixed with other soils to achieve satisfactory fill material.

C-3.2 Oversize

Oversize material defined as rock, or other irreducible material with a maximum dimension greater than 6 inches (15 cm), shall not be buried or placed in fill unless location, materials and placement methods are specifically accepted by Leighton Consulting, Inc.. Placement operations shall be such that nesting of oversized material does not occur and such that oversize material is completely surrounded by compacted or densified fill. Oversize material shall not be placed within 10 feet (3 m) measured vertically from finish grade, or within 2 feet (0.61 m) of future utilities or underground construction.

C-3.3 Import

If importing of fill material is required for grading, proposed import material shall meet the requirements of Section C-3.1, and be free of hazardous materials ("contaminants") and rock larger than 3-inches (8 cm) in largest dimension. All import soils shall have an Expansion Index (EI) of 20 or less and a sulfate content no greater than (≤) 500 parts-per-million (ppm). A representative sample of a potential import source shall be given to Leighton Consulting, Inc. at least four full working days before importing begins, so that suitability of this import material can be determined and appropriate tests performed.

C-4.0 FILL PLACEMENT AND COMPACTION

C-4.1 Fill Layers

Approved fill material shall be placed in areas prepared to receive fill, as described in Section C-2.0, above, in near-horizontal layers not exceeding 8 inches (20 cm) in loose thickness. Leighton Consulting, Inc. may accept thicker layers if testing indicates the grading procedures can adequately compact the thicker layers, and only if the building officials with the appropriate jurisdiction approve. Each layer shall be spread evenly and mixed thoroughly to attain relative uniformity of material and moisture throughout.

C-4.2 Fill Moisture Conditioning

Fill soils shall be watered, dried back, blended and/or mixed, as necessary to attain a relatively uniform moisture content at or slightly over optimum. Maximum density and optimum soil moisture content tests shall be performed in accordance with the American Society of Testing and Materials (ASTM) Test Method D 1557.

C-4.3 Compaction of Fill

After each layer has been moisture-conditioned, mixed, and evenly spread, each layer shall be uniformly compacted to not-less-than (≥) 90 percent of the maximum dry density as determined by ASTM Test Method D 1557. In some cases, structural fill may be specified (see project-specific geotechnical report) to be uniformly compacted to at-least (≥) 95 percent of the ASTM D 1557 modified Proctor laboratory maximum dry density. For fills thicker than (>) 15 feet (4.5 m), the portion of fill deeper than 15 feet below proposed finish grade shall be compacted to 95 percent of the ASTM D 1557 laboratory maximum density. Compaction equipment shall be adequately sized and be either specifically designed for soil compaction or of proven reliability to efficiently achieve the specified level of compaction with uniformity.

C-4.4 Compaction of Fill Slopes

In addition to normal compaction procedures specified above, compaction of slopes shall be accomplished by back rolling of slopes with sheepsfoot rollers at increments of 3 to 4 feet (1 to 1.2 m) in fill elevation, or by other methods producing satisfactory results acceptable to Leighton Consulting, Inc.. Upon completion of grading, relative compaction of the fill, out to the slope face, shall be at least 90 percent of the ASTM D 1557 laboratory maximum density.

C-4.5 Compaction Testing

Field-tests for moisture content and relative compaction of the fill soils shall be performed by Leighton Consulting, Inc.. Location and frequency of tests shall be at our field representative(s) discretion based on field conditions encountered. Compaction test locations will not necessarily be selected on a random basis. Test locations shall be selected to verify adequacy of compaction levels in areas that are judged to be prone to inadequate compaction (such as close to slope faces and at the fill/bedrock benches).

C-4.6 Compaction Test Locations

Leighton Consulting, Inc. shall document the approximate elevation and horizontal coordinates of each density test location. The Contractor shall coordinate with the project surveyor to assure that sufficient grade stakes are established so that Leighton

Consulting, Inc. can determine the test locations with sufficient accuracy. Adequate grade stakes shall be provided.

C-5.0 EXCAVATION

Excavations, as well as over-excavation for remedial purposes, shall be evaluated by Leighton Consulting, Inc. during grading. Remedial removal depths shown on geotechnical plans are estimates only. The actual extent of removal shall be determined by Leighton Consulting, Inc. based on the field evaluation of exposed conditions during grading. Where fill-over-cut slopes are to be graded, the cut portion of the slope shall be made, then observed and reviewed by Leighton Consulting, Inc. prior to placement of materials for construction of the fill portion of the slope, unless otherwise recommended by Leighton Consulting, Inc.

C-6.0 TRENCH BACKFILLS

C-6.1 Safety

The Contractor shall follow all OSHA and Cal/OSHA requirements for safety of trench excavations. Work should be performed in accordance with Article 6 of the *California Construction Safety Orders*, 2009 Edition or more current (see also: http://www.dir.ca.gov/title8/sb4a6.html).

C-6.2 Bedding and Backfill

All utility trench bedding and backfill shall be performed in accordance with applicable provisions of the 2018 Edition of the *Standard Specifications for Public Works Construction* (Green Book). Bedding material shall have a Sand Equivalent greater than 30 (SE>30). Bedding shall be placed to 1-foot (0.3 m) over the top of the conduit, and densified by jetting in areas of granular soils, if allowed by the permitting agency. Otherwise, the pipe-bedding zone should be backfilled with Controlled Low Strength Material (CLSM) consisting of at least one sack of Portland cement per cubic-yard of sand, and conforming to Section 201-6 of the 2018 Edition of the *Standard Specifications for Public Works Construction* (Green Book). Backfill over the bedding zone shall be placed and densified mechanically to a minimum of 90 percent of relative compaction (ASTM D 1557) from 1 foot (0.3 m) above the top of the conduit to the surface. Backfill above the pipe zone shall **not** be jetted. Jetting of the bedding around the conduits shall be observed by Leighton Consulting, Inc. and backfill above the pipe zone (bedding) shall be observed and tested by Leighton Consulting, Inc..

C-6.3 Lift Thickness

Lift thickness of trench backfill shall not exceed those allowed in the Standard Specifications of Public Works Construction unless the Contractor can demonstrate to Leighton Consulting, Inc. that the fill lift can be compacted to the minimum relative compaction by his alternative equipment and method, and only if the building officials with the appropriate jurisdiction approve.

Natural History Museum
of Los Angeles County
900 Exposition Boulevard
Los Angeles, CA 90007

tel 213.763.DINO
www.nhm.org

Vertebrate Paleontology Section
Telephone: (213) 763-3325
Fax: (213) 746-7431
e-mail: smcleod@nhm.org

26 December 2013

CAJA Environmental Services, LLC
11990 West San Vicente Boulevard, Suite 200
Los Angeles, CA 90049

Attn: Seth Wulkan, Assistant Project Manager

re: Paleontological resources for the proposed 1100 Town and Country Road Project, in the City of Orange, Orange County, project area

Dear Seth:

I have conducted a thorough search of our paleontology collection records for the locality and specimen data for the proposed 1100 Town and Country Road Project, in the City of Orange, Orange County, project area as outlined on the portion of the Orange USGS topographic quadrangle map that you sent to me via e-mail on 27 November 2013. We do not have any vertebrate fossil localities that lie within the project boundaries, but we do have localities nearby from the same sedimentary units that occur as subsurface deposits in the proposed project area.

Surficial sediments in all of the proposed project area and in the surrounding vicinity consist of younger terrestrial Quaternary Alluvium, primarily as flood deposits from the Santiago Creek just to the south or the Santa Ana River to the west, with older terrestrial Quaternary sediments occurring at various depths. These younger Quaternary deposits typically do not contain significant vertebrate fossils, at least in the uppermost layers, but we have a vertebrate fossil locality, LACM 1652, along Rio Vista Avenue south of Lincoln Avenue due north of the proposed project area, that produced a fossil specimen of sheep, *Ovis*. Our closest fossil locality in older Quaternary sediments is LACM 4943, situated almost due east of locality LACM 1652 along Fletcher Avenue east of Glassell Street east of the Santa Ana River, that produced a specimen of fossil horse, *Equus*, at a depth of 8-10 feet below the surface.

Shallow excavations in the uppermost layers of the younger Quaternary alluvial sediments in the proposed project site area are unlikely to uncover significant fossil vertebrate remains. Deeper excavations at the proposed project site area, however, may well encounter significant vertebrate fossils in older Quaternary sediments. Any substantial excavations below the uppermost layers, therefore, should be closely monitored to quickly and professionally collect any specimens without impeding development. Any fossils recovered during mitigation should be deposited in an accredited and permanent scientific institution for the benefit of current and future generations.

This records search covers only the vertebrate paleontology records of the Natural History Museum of Los Angeles County. It is not intended to be a thorough paleontological survey of the proposed project area covering other institutional records, a literature survey, or any potential on-site survey.

Sincerely,

Samuel A. McLeod

Samuel A. McLeod, Ph.D.
Vertebrate Paleontology

enclosure: invoice

APPENDIX F

- Phase I ESA
- Limited Phase II ESA

PHASE I ENVIRONMENTAL SITE ASSESSMENT
574 SOUTH GLASSELL STREET,
ORANGE, CALIFORNIA

Prepared For:

KSL COMMUNITIES ASK LLC

5790 Fleet Street, Suite 300
Carlsbad, California 92008

Project No. 12137.001

October 24, 2018

Leighton Consulting, Inc.

A LEIGHTON GROUP COMPANY

Leighton Consulting, Inc.
A LEIGHTON GROUP COMPANY

October 24, 2018

Project No. 12137.001

KSL Communities ASK LLC
5790 Fleet Street, Suite 300
Carlsbad, California 92008

Attention: Mr. Axel Guerra

Subject: Phase I Environmental Site Assessment
574 South Glassell Street
Orange, California

Leighton Consulting, Inc. (Leighton) is pleased to present this Phase I Environmental Site Assessment Report for the property located at 574 South Glassell Street in the city of Orange, California (subject site). Leighton declares that, to the best of our professional knowledge and belief, we meet the definition of Environmental Professional as defined in §312.10 of 40 Code of Federal Regulations (CFR) 312, and the ASTM International (ASTM) Standard E1527-13.

Leighton has the specific qualifications based on education, training, and experience to assess a property of the nature, history, and setting of the subject site. Leighton has developed and performed the all appropriate inquiries in conformance with the standards and practices set forth in 40 CFR Part 312.

If you have questions regarding this report, please contact us. We appreciate the opportunity to be of service to KSL Communities ASK LLC.

PROFESSIONAL GEOLOGIST
BRYNN F. McCULLOCH
No. 8798
STATE OF CALIFORNIA

Respectfully submitted,

LEIGHTON CONSULTING, INC.

Brynn McCulloch, PG 8798
Associate Geologist

BFM
Distribution: (1 PDF) Addressee

17781 Cowan ▪ Irvine, CA 92614-6009
949.250.1421 ▪ 949.250.1114 Fax

TABLE OF CONTENTS

Section Page

1.0 INTRODUCTION 1

1.1 Authorization 1
1.2 Purpose 1
1.3 Scope of Work 2
1.4 Significant Assumptions 2
1.5 Limitations and Exceptions 2
1.6 Special Terms and Conditions 3
1.7 User Reliance 4
1.8 Important Information about Geoenvironmental Reports 4

2.0 SITE DESCRIPTION 5

2.1 Location and Legal Description 5
2.2 Subject Site Vicinity General Characteristics 5
2.3 Current Use of the Subject Site 5
2.4 Descriptions of Structures, Roads and Other Improvements on the Property 5
2.5 Current Uses of Adjoining Properties 6

3.0 USER PROVIDED INFORMATION 7

3.1 Environmental Liens or Activity and Use Limitations 7
3.2 Specialized Knowledge 7
3.3 Commonly Known or Reasonably Ascertainable Information 7
3.4 Valuation Reduction for Environmental Issues 7
3.5 Owner, Property Manager, and Occupant Information 7
3.6 Reason for Performing Phase I ESA 8
3.7 Other 8

4.0 RECORDS REVIEW 9

4.1 Physical Setting Source(s) 9

4.1.1 Topography 9
4.1.2 Surface Water 9
4.1.3 Geology and Soils 9
4.1.4 Hydrogeology 9
4.1.5 Oil and Gas Fields 10

4.2 Standard Environmental Record Sources 10

Leighton

TABLE OF CONTENTS (Continued)

Section Page

4.2.1 Subject Site 10
4.2.2 Offsite 10
4.2.3 Vapor Encroachment 13
4.2.4 Regulatory Agency Contacts 13
4.2.5 Other Reports 14

4.3 Historical Use Information on the Property 14

4.3.1 Aerial Photographs 14
4.3.2 Historical Topographic Maps 15
4.3.3 Fire Insurance Maps 16
4.3.4 Historical City Directories 16
4.3.5 Building Department Records 17
4.3.6 Other Historical Sources 17
4.3.7 Summary of Historical Land Use 18

5.0 SITE RECONNAISSANCE 19

5.1 Methodology and Limiting Conditions 19
5.2 General Property Setting 19
5.3 Exterior and Interior Observations 19

5.3.1 Hazardous Substances, Drums, and Other Chemical Containers 19
5.3.2 Storage Tanks 19
5.3.3 Polychlorinated Biphenyls (PCBs) 20
5.3.4 Waste Disposal 20
5.3.5 Dumping 20
5.3.6 Pits, Ponds, Lagoons, Septic Systems, Wastewater, Drains, Cisterns, and Sumps 20
5.3.7 Pesticide Use 20
5.3.8 Staining, Discolored Soils, Corrosion 20
5.3.9 Stressed Vegetation 20
5.3.10 Unusual Odors 21
5.3.11 Onsite Wells 21
5.3.12 Other Observations 21

6.0 INTERVIEWS 22

6.1 Interview with Owner 22

Leighton

TABLE OF CONTENTS (Continued)

Section Page

6.2 Interview with Property Manager 22
6.3 Interviews with Occupants 22
6.4 Interviews with Local Government Officials 22
6.5 Interviews with Others 22

7.0 FINDINGS 23

7.1 Onsite 23
7.2 Offsite 23
7.3 Data Gaps 24

8.0 OPINION 25

8.1 Onsite 25
8.2 Offsite 25

9.0 CONCLUSIONS AND RECOMMENDATIONS 26

10.0 DEVIATIONS 27

11.0 ADDITIONAL SERVICES 28

12.0 QUALIFICATIONS OF ENVIRONMENTAL PROFESSIONALS 29

12.1 Corporate 29
12.2 Individual 29
12.3 Environmental Professional Statement 29

List of Accompanying Illustrations and Appendices
Figure 1 – Site Location Map
Figure 2 – Site Plan

Appendix A – References
Appendix B – Site Reconnaissance Photos
Appendix C – Interview Forms
Appendix D – Environmental Lien and AUL Search Report
Appendix E – Environmental Radius Report and Vapor Encroachment Screen
Appendix F – Historical Research Documentation
Appendix G – GBA Geoenvironmental Report

1.0 INTRODUCTION

1.1 Authorization

Leighton Consulting, Inc. (Leighton) performed a Phase I Environmental Site Assessment (ESA) of the property located at 574 South Glassell Street in the city of Orange, Orange County, California (subject site – Figure 1) in accordance with the authorization of KSL Communities ASK LLC (KSL).

1.2 Purpose

The purpose of the Phase I ESA was to identify, to the extent feasible and pursuant to the processes prescribed in ASTM International (ASTM) E1527-13, recognized environmental conditions (RECs), historical RECs (HRECs), or controlled RECs (CRECs) in connection with the subject site.

RECs are defined, according to ASTM E1527-13 as "*the presence or likely presence of any hazardous substances or petroleum products in, on, or at a property: (1) due to any release to the environment; (2) under conditions indicative of a release to the environment; or (3) under conditions that pose a material threat of a future release to the environment. De minimis conditions are not RECs.*"

HRECs are defined, according to ASTM E1527-13 as "*a past release of any hazardous substances or petroleum products that has occurred in connection with the property and has been addressed to the satisfaction of the applicable regulatory authority or meeting unrestricted use criteria established by a regulatory authority, without subjecting the property to any required controls.*"

CRECs are defined, according to ASTM E1527-13 as "*a REC resulting from a past release of hazardous substances or petroleum products that has been addressed to the satisfaction of the applicable regulatory authority, with hazardous substances or petroleum products allowed to remain in place subject to the implementation of required controls.*" (ASTM E1527-13, 2013).

1.3 Scope of Work

The scope of work was performed in accordance with Leighton's proposal dated August 13, 2018 and included the following tasks:

- A reconnaissance-level visit of the subject site for evidence of the release(s) of hazardous materials and petroleum products and to assess the potential for onsite releases of hazardous materials and petroleum products;
- Records review (including review of previous environmental reports, selected governmental databases, and historical review);
- Interviews; and
- Preparation of this report presenting our findings.

1.4 Significant Assumptions

Leighton assumes that the purpose of this Phase I ESA is to provide appropriate inquiry into the previous ownership and use of the subject site so that the Client may qualify for the Comprehensive Environmental Response, Compensation and Liability Act (CERCLA) landowner liability protections as defined in CERCLA, 42 USC §9601(35)(B). Leighton also assumes that the information provided by the Client and its agents, regulatory database provider, and regulatory agencies is true and reliable.

1.5 Limitations and Exceptions

Leighton performed the Phase I ESA in conformance with the scope and limitations of ASTM E1527-13 of the subject site. Other than the non-scope items shown in Section 1.6 that were not applicable, there were no exceptions to, or deletions from, this practice.

Property specific activities performed by Leighton and information collected regarding these activities are summarized within this report. The findings of the Phase I ESA are presented in Section 7.0. Opinions, and conclusions drawn by Leighton, based on the information collected as part of the Phase I ESA, are presented in Sections 8.0 and 9.0, respectively. References are included as Appendix A. Subject site photographs are presented in Appendix B. Completed interview forms are included as Appendix C. The Environmental Lien and

Activities and Use Limitations (AUL) Search report is included in Appendix D. The Environmental Radius Report and Vapor Encroachment Screen are included as Appendix E. Historical documentation is provided in Appendix F.

This Phase I ESA was conducted in a manner consistent with the level of care and skill ordinarily exercised by members of the profession currently practicing in the same locality under similar conditions.

The observations and conclusions presented in this report are professional opinions based on the scope of activities, work schedule, and information obtained through the Phase I ESA described herein. Opinions presented herein apply to property conditions existing at the time of our study and cannot necessarily be taken to apply to property conditions or changes that we are not aware of or have not had the opportunity to evaluate. It must be recognized that conclusions drawn from these data are limited to the amount, type, distribution, and integrity of the information collected at the time of the investigation, the methods utilized to collect and evaluate the data, and that a full and complete determination of environmental risks cannot be made. Although Leighton has taken steps to obtain true copies of available information, we make no representation or warranty with respect to the accuracy or completeness of this information.

This practice does not address whether requirements in addition to all appropriate inquiry have been met in order to qualify for the landowner liability protections including the continuing obligation not to impede the integrity and effectiveness of activity and use limitations, or the duty to take reasonable steps to prevent releases, or the duty to comply with legally required release reporting obligations. Users should also be aware that there are likely to be other legal obligations with regard to hazardous substances or petroleum products discovered on the subject site that are not addressed in this practice and that may pose risks of civil and/or criminal sanctions for non-compliance.

1.6 Special Terms and Conditions

The scope of work for this Phase I ESA did not include testing of electrical equipment for the presence of PCBs or collection of other environmental samples such as soil, groundwater, air, building materials, paint, or other media; assessment of natural hazards such as naturally occurring asbestos, radon gas or methane gas; assessment of the potential presence of radionuclides; or

assessment of nonchemical hazards such as the potential for damage from earthquakes or floods, or the presence of endangered species or wildlife habitats. This Phase I ESA also did not include an extensive assessment of the environmental compliance status of the subject site or of businesses operating at the subject site.

1.7 User Reliance

This report is for the exclusive use of KSL. Use of this report by any other party shall be at such party's sole risk.

1.8 Important Information about Geoenvironmental Reports

KSL is referred to Appendix G regarding important information provided by Geoprofessional Business Association (GBA) on geoenvironmental studies and reports.

2.0 SITE DESCRIPTION

2.1 Location and Legal Description

The subject site is located on the west side of South Glassell Street, approximately 140 feet south of the intersection with East River Avenue, at the address of 574 South Glassell Street in the city of Orange, Orange County, California (Figure 1). The Orange County Assessor's office designated the subject site as Assessor Parcel Number (APN) 390-591-19. A legal description for the subject site is included in the Environmental Lien and AUL Search Report attached in Appendix D.

2.2 Subject Site Vicinity General Characteristics

The subject site vicinity is generally developed for residential use. A church and school border the property to the north and west.

2.3 Current Use of the Subject Site

The subject site is an approximately 0.85-acre rectangular lot that is currently occupied by a restaurant and associated parking lot (Appendix B, Photos 1 through 10).

2.4 Descriptions of Structures, Roads and Other Improvements on the Property

The subject site is developed with one, approximately 5,900-square foot, single-story building and an asphalt-paved parking lot. The building was constructed circa 1960.

The following utilities provide service to the subject site.

Natural Gas:	Southern California Gas Company
Source of Potable Water:	City of Orange
Electric:	Southern California Edison
Sewage Disposal:	City of Orange
Solid Waste Disposal:	CR&R

2.5 Current Uses of Adjoining Properties

The subject site is bordered to the east by South Glassell Street, followed by residential properties; to the south by Park Plaza, an existing senior assisted living center; and to the north and west by the Holy Family Cathedral Church and school.

3.0 USER PROVIDED INFORMATION

The user of this Phase I ESA is identified as KSL. As a part of the ASTM E1527-13 process, Mr. Axel Guerra of KSL, completed a questionnaire for the subject site. A copy of this questionnaire is provided in Appendix C.

3.1 Environmental Liens or Activity and Use Limitations

Mr. Guerra indicated that he was not aware of environmental liens or AULs filed or recorded for the subject site.

No environmental liens or AULs were identified in the Environmental Lien and AUL Search report provided by Environmental Data Resources, Inc. (EDR), dated September 17, 2018. A copy of the Environmental Lien and AUL Search report is included in Appendix D.

3.2 Specialized Knowledge

Mr. Guerra acknowledged that KSL currently operates the senior living community adjacent to the south of the subject site. Mr. Guerra had no other specialized knowledge or experience with the subject site or nearby properties.

3.3 Commonly Known or Reasonably Ascertainable Information

Mr. Guerra was not aware of any commonly known or reasonably ascertainable information related to the subject site.

3.4 Valuation Reduction for Environmental Issues

Mr. Guerra indicated that the purchase price being paid for the subject site is based on fair market value.

3.5 Owner, Property Manager, and Occupant Information

According to the Environmental Lien and AUL Search report, the subject site is currently owned and managed by Xiang Hue and Tsuai Ling Zhang Trustees Ben Jong and Ruby H. Tzou. The subject site is occupied by the Yen Ching restaurant.

3.6 Reason for Performing Phase I ESA

According to Mr. Guerra, the reason for requesting this Phase I ESA is for due diligence purposes related to the purchase of the subject site.

3.7 Other

No other information was provided by Mr. Guerra.

4.0 RECORDS REVIEW

4.1 Physical Setting Source(s)

Leighton reviewed pertinent maps and readily available literature for information on the physiography and hydrogeology of the subject site. A summary of this information is presented in the following subsections.

4.1.1 Topography

The subject site is located in Section 31 of Township 4 South, Range 9 West of the San Bernardino Baseline and Meridian. Topographic map coverage of the subject site vicinity is provided by the United States Geological Survey (USGS) Orange, California Quadrangle (2012). The elevation of the subject site is approximately 185 feet above mean sea level and the topography is relatively flat.

4.1.2 Surface Water

Surface water was not observed on the subject site or adjacent properties. Santiago Creek is located approximately 645 feet south of the subject site.

4.1.3 Geology and Soils

The subject site is located in the southeast portion of the Los Angeles Basin, near the northwestern edge of the Santa Ana Mountains. The Los Angeles Basin is a structural depression in which a thick sequence of marine sediments has accumulated since late Miocene time. The subject site is generally underlain in the near surface by Holocene and Pleistocene alluvial deposits consisting of sands and gravels with less common silts and clays. The depth to sedimentary bedrock is expected to be greater than 980 feet.

4.1.4 Hydrogeology

The subject site is located within the Coastal Plain of Orange County Groundwater Basin, underlying the lower Santa Ana Watershed. The principal water-bearing formations of the Coastal Plain of Orange County are dominated by a deep structural depression containing a thick

accumulation of fresh water-bearing interbedded marine and continental sand, silt and clay deposits (CDWR 1967).

Geotracker, a State Water Resources Control Board (SWRCB) online data warehouse which tracks regulatory data about underground fuel tanks, fuel pipelines, and public drinking water supplies, was reviewed regarding reported depths to groundwater in the vicinity. Groundwater in the vicinity of the subject site was reported at a depth greater than 90 feet below ground surface (bgs). The actual flow direction of groundwater beneath the subject site is not known; however, based on the surface topography in the subject site vicinity, the flow direction of groundwater is inferred to be generally toward the southwest.

4.1.5 Oil and Gas Fields

Leighton reviewed the California Department of Conservation, Division of Oil, Gas, and Geothermal Resources (DOGGR), Online Mapping System, on August 15, 2018. Evidence of oil wells or oil field-related facilities was not indicated on the subject site or within 0.25-miles of the subject site:

4.2 Standard Environmental Record Sources

A search of selected government databases was conducted by Leighton using the EDR Radius Map™ Report with GeoCheck® environmental database report system. Details and descriptions of the database search are provided in the EDR database report. The database report meets the government records search requirements of ASTM E1527-13 Standard Practice for Environmental Site Assessments: Phase I Environmental Site Assessment Process. The database listings were reviewed within the specified radii established by the ASTM E1527-13. A copy of this report is included in Appendix E.

4.2.1 Subject Site

The subject site was not identified in the EDR database report.

4.2.2 Offsite

Information in the EDR database report was reviewed for facilities of potential environmental concern to the subject site. Additionally, the

SWRCB Geotracker website and DTSC Envirostor website were used to supplement the information in the EDR database report.

The database search results for offsite properties, including those found within the “orphaned” unmapped listings, with potential to adversely impact the subject site are listed in the table below:

Table 1 - Databases Searched

Database	Search Distance (radius)	Properties of Potential Concern
Federal NPL List	1.0-mile	No
Delisted NPL List	1.0-mile	No
Federal CERCLIS List	0.5-mile	No
CERCLIS – No Further Action	0.5-mile	No
CORRACTS	1.0-mile	**Yes (1)**
Federal RCRA TSDF List	0.5-mile	**Yes (1)**
RCRA Generators List	0.25-mile	**Yes (2)**
US ENG Controls List	0.5-miles	No
US INST Controls List	0.5-mile	No
US Brownfields	0.5-mile	No
Historic CAL-Sites	1.0-mile	No
SWRCY	0.5-mile	No
Response	1.0-mile	No
Envirostor	1.0-mile	**Yes (5)**
SCH	0.25-mile	No
SWF/LF Facilities	0.5-mile	No
LUST Facilities	0.5-mile	**Yes (4)**
CAL FID UST	0.25-mile	**Yes (1)**
SLIC	0.5-mile	No
UST	0.25-mile	**Yes (2)**
Historical UST	0.25-mile	**Yes (3)**
AST	0.25-mile	No
SWEEPS UST	0.25-mile	**Yes (1)**
DEED	0.5-mile	No
VCP	0.5-mile	No
Drycleaners	0.25-mile	No
Indian RESERV	1.0-mile	No
Indian LUST	0.5-mile	No
Indian UST	0.25-mile	No
EDR Manufactured Gas Plants	1.0-mile	**Yes (1)**
EDR Historical Auto Stations	0.25-mile	**Yes (1)**
EDR Historical Cleaners	0.25-mile	No

See EDR Radius Report (Appendix E) for list of acronyms and data sources

The listings identified in the EDR database report were reviewed and not interpreted to represent an adverse effect to the subject site at the time of this report preparation based on one or more of the following:

- Type of release (soil only);
- Closure received from regulatory agency;
- Distance of the facility to the subject site; and
- Direction of groundwater flow (southwest) and location of the facility to the subject site (cross-gradient or down-gradient).

4.2.3 Vapor Encroachment

Leighton reviewed the Vapor Encroachment Screen (VES) produced using EDR's Vapor Encroachment Worksheet application that gathers regulatory database information from the accompanying Radius Report and allows the user to integrate groundwater information, regional geology, and other information to evaluate the concern for potential vapor encroachment from onsite activities and from adjacent properties. The VES application was designed by EDR to assist parties seeking to meet the search requirements of the ASTM Standard Practice for Assessment of Vapor Encroachment into Structures on Property Involved in Real Estate Transactions (E2600-10), also referred to as the Tier 1 VES, as defined by ASTM E2600-10.

Using the VES application, no offsite properties with potential to impact the subject site were identified; therefore, vapor encroachment is not considered a REC. A copy of the VES report has been included as Appendix E.

4.2.4 Regulatory Agency Contacts

On September 12, 2018, Leighton requested regulatory records for the address associated with the subject site. The following agencies were contacted or their respective online databases were researched:

- DTSC (Cypress and Chatsworth offices);
- Santa Ana Reginal Water Quality Control Board (SARWQCB);

- City of Orange Fire Department (OFD);
- Orange County Health Care Agency (OCHCA); and
- South Coast Air Quality Management District (SCAQMD).

Records were not found for the subject site at the DTSC, SARWQCB, OCHCA, and SCAQMD.

As of the date of this report, a response has not yet been received from the OFD. Any response altering the conclusions and recommendations of this report will be forwarded in the form of an addendum.

National Pipeline Mapping System (NPMS)

Leighton reviewed records posted on the National Pipeline Mapping System's NPMS Public Map Viewer on August 15, 2018. No pipelines containing hazardous liquids were shown on or adjacent to the subject site (NPMS, 2018).

4.2.5 Other Reports

No other reports were reviewed in preparation of this Phase I ESA.

4.3 Historical Use Information on the Property

Leighton reviewed selected historical information on the subject site. These references were reviewed for evidence of activities, which would suggest the presence of hazardous substances at the subject site and to evaluate the potential for the subject site to be impacted by offsite sources of contamination. The following paragraphs are a chronological summary of the review.

4.3.1 Aerial Photographs

Historical aerial photographs were reviewed for information regarding past subject site uses. Aerial photographs dated 1938, 1946, 1952, 1963, 1966, 1972, 1977, 1985, 1989, 1995, 2005, 2009, 2012, and 2016, provided by EDR, were reviewed. Copies of these photographs are included in Appendix F.

In the **1938, 1946,** and **1952** aerial photographs, the subject site and surrounding properties to the north, west, and south are observed to be orchards. A structure, possibly the present-day church, is also observed to the north of the subject site. South Glassell Street, followed by residential properties, is observed to the east of the subject site.

In the **1963** aerial photograph, the present-day structure is observed in the eastern portion of the subject site. The western portion of the subject site is observed to be a parking lot. What appears to be an adjoining miniature golf course (Holo Wai Miniature Golf) is observed to the south of the subject site and it appears to be associated with the onsite parking lot and structure. The present-day Holy Family Cathedral Church and school are observed to the north and west of the subject site. Land use changes are not observed on the surrounding properties to the east.

In the **1966, 1972, 1977,** and **1985** aerial photographs, significant land use changes are not observed on the subject site and surrounding properties.

In the **1989** aerial photograph, the subject site is observed to be in its present-day use and configuration. The present-day Park Plaza senior assisted living center is observed to the south of the subject site. Land use changes are not observed on the surrounding properties to the north, west, and east.

In the **1995**, **2005, 2009, 2012,** and **2016** aerial photographs, the subject site and surrounding properties are observed to be in their present-day use and configuration.

4.3.2 Historical Topographic Maps

Historical topographic maps provided in the EDR Historical Topographic Map Report were reviewed for information regarding past subject site uses, and include the following quadrangles: Anaheim (1896, 1898, 1901, 1942), Corona (1902), and Orange (1932, 1935, 1949, 1950, 1964, 1972, 1981, and 2012). Copies of these maps are provided in Appendix F.

1896, 1898, 1901, 1902, 1932, and **1935:** No structures, tanks, or wells are depicted on the subject site. Scattered residences are depicted in the subject site vicinity. Santiago Creek is depicted to the south of the subject site.

1942, 1949, and **1950:** Orchards are depicted on the subject site and surrounding properties to the north, west, and south. One small structure is depicted to the north of the subject site in the 1949 and 1950 topographic maps. South Glassell Street, followed by a red-shaded residential area, is depicted to the east of the subject site.

1964, 1972, and **1981:** The present-day structure is depicted in the eastern portion of the subject site. The Holy Family School is depicted to the north and west of the subject site. No structures are depicted to the south of the subject site. South Glassell Street, followed by a red-shaded residential area, is depicted to the east of the subject site.

2012: Only landmark buildings are shown on the topographic map. No buildings are depicted on the subject site and surrounding properties. South Glassell Street is depicted adjacent to the east of the subject site.

4.3.3 Fire Insurance Maps

Fire insurance maps, or Sanborn® maps, are detailed city plans showing building footprints, construction details, use of structure, street address, etc. The maps were designed to assist fire insurance agents in determining the degree of hazard associated with a particular property. Sanborn Maps were produced from approximately 1867 to the present for commercial, industrial, and residential sections of approximately 12,000 cities and towns in the United States.

Sanborn® Maps were not published for the subject site; however, maps were published for the adjacent properties to the east of the subject site, across South Glassell Street, in 1922, 1929, 1950, and 1954. The adjacent properties to the east of the subject site are depicted as residential properties in each Sanborn® Map. No properties of environmental concern were noted.

4.3.4 Historical City Directories

City Directories have been published for cities and towns across the US since the 1700s. Originally a list of residents, the City Directory developed into a tool for locating individuals and businesses in particular. For each street address listed, the directory recorded the name of the resident or business that operated from this addresses. While City Directory

coverage is usually comprehensive for major cities, it may be sporadic for rural areas and small towns. The purpose of the City Directory research was to attempt to determine the businesses that were historically located at the subject site and adjacent addresses.

Leighton reviewed the EDR City Directory Abstract dated September 10, 2018 (Appendix F). Records were reviewed from 1920 to 2014 at approximate 5-year intervals. The subject site was identified in the city directory search as the following occupant:

Occupant	Year(s)
Kims Family Restaurant, Mr. K Restaurant & Buffeteria	1965
Mr. T Cleaners, Mr. T Restaurant	1966
Villa Sweden Restaurant	1975
Yen Ching Restaurant	1980, 1991, 2005, 2010, and 2014

Several residences were listed for the surrounding properties. No surrounding properties of concern were included in the city directory report.

4.3.5 Building Department Records

Leighton reviewed the EDR City Directory Abstract dated September 10, 2018 (Appendix F). No permits of environmental concern were noted in the report.

4.3.6 Other Historical Sources

Other historical sources were not reviewed as a part of this Phase I ESA.

4.3.7 Summary of Historical Land Use

Based on historical records, land usage is summarized as follows:

Time Period	Land Usage	Reference
Prior to 1896	Unknown	None Available
Approximately 1898 to 1938	Vacant, undeveloped land	Aerial Photographs Topographic Maps
Approximately 1938 to 1960	Orchards	Aerial Photographs Topographic Maps
Approximately 1960 to 1986	Restaurant and Clubhouse of adjacent Holo Wai Miniature Golf course	Aerial Photographs Topographic Maps City Directories
Approximately 1986 to present	Restaurant	Site Reconnaissance Aerial Photographs Topographic Maps City Directories

5.0 SITE RECONNAISSANCE

5.1 Methodology and Limiting Conditions

On September 14, 2018, a representative of Leighton conducted a reconnaissance–level assessment of the subject site, which consisted of observing and documenting existing conditions of the subject site and nature of the neighboring development. Photographs of the subject site are presented in Appendix B and their view directions are noted on Figure 2. Items noted during the subject site reconnaissance are also depicted on Figure 2.

5.2 General Property Setting

The subject site vicinity is generally developed for residential use. A church and school border the property to the north and west.

The subject site is an approximately 0.85-acre rectangular lot that is currently occupied by a restaurant and associated parking lot (Appendix B, Photos 1 through 10). The subject site is developed with one, approximately 5,900-square foot, single-story building and an asphalt-paved parking lot. The building was constructed circa 1960.

5.3 Exterior and Interior Observations

5.3.1 Hazardous Substances, Drums, and Other Chemical Containers

Other than small quantities (less than 5 gallons) of general cleaning supplies, no hazardous substance, drums, or other chemical containers were observed onsite.

5.3.2 Storage Tanks

Evidence of underground storage tanks (USTs) (such as vent lines, fill or overfill ports) and/or aboveground storage tanks was not observed on the subject site.

5.3.3 Polychlorinated Biphenyls (PCBs)

No transformers or other equipment containing PCBs were observed onsite.

5.3.4 Waste Disposal

General waste is stored in bins located in the southwest corner of the subject site and is regularly removed from the site by the CR&R.

5.3.5 Dumping

Evidence of active dumping was not observed on the subject site.

5.3.6 Pits, Ponds, Lagoons, Septic Systems, Wastewater, Drains, Cisterns, and Sumps

One in-floor grease trap was observed within the kitchen portion of the onsite building. Food grade grease was observed within the grease trap. The grease trap is not considered a REC associated with the subject site.

Several floor drains were located in the kitchen portion of the onsite building. The drains appeared to be free of oil or other hazardous substances.

Evidence of pits, ponds, lagoons, septic systems, cisterns, and sumps was not observed on the subject site.

5.3.7 Pesticide Use

Evidence of pesticide use was not observed on the subject site.

5.3.8 Staining, Discolored Soils, Corrosion

Stained, discolored soil or evidence of corrosion was not observed on the subject site.

5.3.9 Stressed Vegetation

Evidence of stressed vegetation was not observed on the subject site.

5.3.10 Unusual Odors

Unusual odors were not detected on the subject site.

5.3.11 Onsite Wells

Oil, gas production, or water wells were not observed on the subject site.

5.3.12 Other Observations

An abandoned grease trap or other piece of kitchen equipment was located in the southwest corner of the subject site, near the onsite dumpsters. This equipment is not considered a REC associated with the subject site.

6.0 INTERVIEWS

Leighton conducted interviews with persons having knowledge of current or past subject site usage. Interviews were conducted either orally or in the form of a written questionnaire. Written responses, if any, are included as Appendix C.

6.1 Interview with Owner

An owner interview form was forwarded to the current owner of the subject site on September 14, 2018. As of the date of this report, a completed interview form has not yet been received by Leighton.

6.2 Interview with Property Manager

The current property manager was not interviewed as part of this Phase I ESA.

6.3 Interviews with Occupants

Current restaurant employees were not interviewed as part of this Phase I ESA.

6.4 Interviews with Local Government Officials

Leighton did not interview employees with local government agencies to request information regarding historic and current uses of the subject site with the exception of those noted in Section 4.2.

6.5 Interviews with Others

Leighton did not conduct additional interviews for this Phase I ESA.

7.0 FINDINGS

Leighton performed a Phase I ESA of the property located at 574 South Glassell Street in the city of Orange, Orange County, California (subject site – Figure 1) in accordance with KSL's authorization.

7.1 Onsite

Historically, the subject site was orchards from at least 1938 until approximately 1960, when the present-day building was constructed onsite. The structure housed a restaurant and the clubhouse associated with the adjacent Holo Wai Miniature Golf Course, located to the south of the subject site. The adjacent miniature golf course closed in the mid-1980s, and the subject site remained a restaurant and parking lot.

Currently, the subject site is an approximately 0.85-acre rectangular lot that is currently occupied by a restaurant and associated parking lot (Appendix B, Photos 1 through 10). The subject site is developed with one, approximately 5,900-square foot, single-story building and an asphalt-paved parking lot. The building was constructed circa 1960.

7.2 Offsite

Historically, the adjacent properties to the north, west, and south were orchards until approximately 1960, when the Holy Family Catherdral Church and school were constructed to the north and west of the subejct site. The Holo Wai Miniatrue Golf course was located to the south of the subject site from approximately 1960 until the mid-1980s. In the mid-1980s, the miniature golf course was demolished and the present-day senior assisted living center was constructed to the south of the subject site.

Currently, the subject site is bordered to the east by South Glassell Street, followed by residential properties; to the south by Park Plaza, an existing senior assisted living center; and to the north and west by the Holy Family Cathedral Church and school.

No offsite properties with potential to impact the subject site were identified during the completion of this Phase I ESA.

7.3 Data Gaps

The following data gaps were identified by Leighton:

- Completed Owner and User Questionnaires have not been received by Leighton.
- The OFD has not responded to our request for public records.

It is Leighton's opinion, based on other reasonably obtained data, that this data gap is not significant to identifying RECs in connection with the subject site.

8.0 OPINION

8.1 Onsite

It is Leighton's opinion that the historic use of the subject site as an orchard presents an environmental concern and is considered a REC. No other RECs were identified for the subject site

It is Leighton's opinion that no CRECs or HRECs were identified for the subject site.

8.2 Offsite

No offsite RECs were identified that would negatively impact the subject site.

9.0 CONCLUSIONS AND RECOMMENDATIONS

Leighton has performed a Phase I ESA in conformance with the scope and limitations of ASTM E1527-13 of the property located at 574 South Glassell Street in the city of Orange, Orange County, California. Any exceptions to, or deletions from, this practice are described in Section 1.5 of this report. This assessment has revealed no evidence of RECs, HRECs, or CRECs in connection with the subject site, except for the following:

- The historic use of the subject site as an orchard from at least 1938 until approximately 1960 and the potential use of pesticides associated with this historic land use.

No evidence of CRECs or HRECs was identified for the subject site.

Based on the findings of this Phase I ESA, Leighton recommends the following:

- Collect soil samples from the subject site to assess the presence of organochlorine pesticides (OCPs) and arsenic in the near-surface soil.

In general, observations should be made during future property development for areas of possible contamination such as, but not limited to, the presence of underground facilities, buried debris, waste drums, and tanks, stained soil or odorous soils. Should such materials be encountered, further investigation and analysis may be necessary at that time.

10.0 DEVIATIONS

Leighton did not deviate from or alter the scope of work, as defined in Section 1.3 of this report. Significant data gaps were not identified that affect the ability of Leighton to identify RECs at the subject site.

11.0 ADDITIONAL SERVICES

Leighton did not perform work outside the scope of work as defined in Section 1.3 of this report.

12.0 QUALIFICATIONS OF ENVIRONMENTAL PROFESSIONALS

12.1 Corporate

Leighton is a California corporation, providing geotechnical and environmental consulting services throughout California. We are solely a consulting firm without interests in real property other than our office locations in Southern California. We provide professional environmental consulting services including application of science and engineering to environmental compliance, hazardous materials/waste assessment and cleanup, and management of hazardous, solid and industrial waste. Phase I Environmental Site Assessments are a part of this practice area and have been conducted by us.

12.2 Individual

The qualifications of the Associate Geologist and the other Leighton environmental professionals involved in this Phase I ESA meet the Leighton corporate requirements for performing Phase I ESAs as specified by ASTM E1527-13. In addition, Ms. Brynn McCulloch is a Professional Geologist (PG).

12.3 Environmental Professional Statement

I declare that, to the best of my professional knowledge and belief, I meet the definition of Environmental Professional, as defined by §312.10 of 40 CFR Part 312.

I have the specific qualifications based on education, training, and experience to assess a property of the nature, history, and setting of the Site. I have developed and performed all the appropriate inquiries in conformance with the standards and practices set forth in 40 CFR Part 312.

Brynn McCulloch, PG
Associate Geologist

Project: 12137.001	Eng/Geol: BFM
Scale: 1 " = 2,000 '	Date: September 2018

Base Map: ESRI ArcGIS Online 2018
Thematic Information: Leighton
Author: Leighton Geomatics (mmurphy)

SITE LOCATION MAP

574 South Glassell Street
Orange, California

Figure 1

Leighton

Map Saved as P:\Drafting\12137\001\Maps\12137-001_F01_SLM_2018-09-20.mxd on 9/20/2018 1:28:08 PM

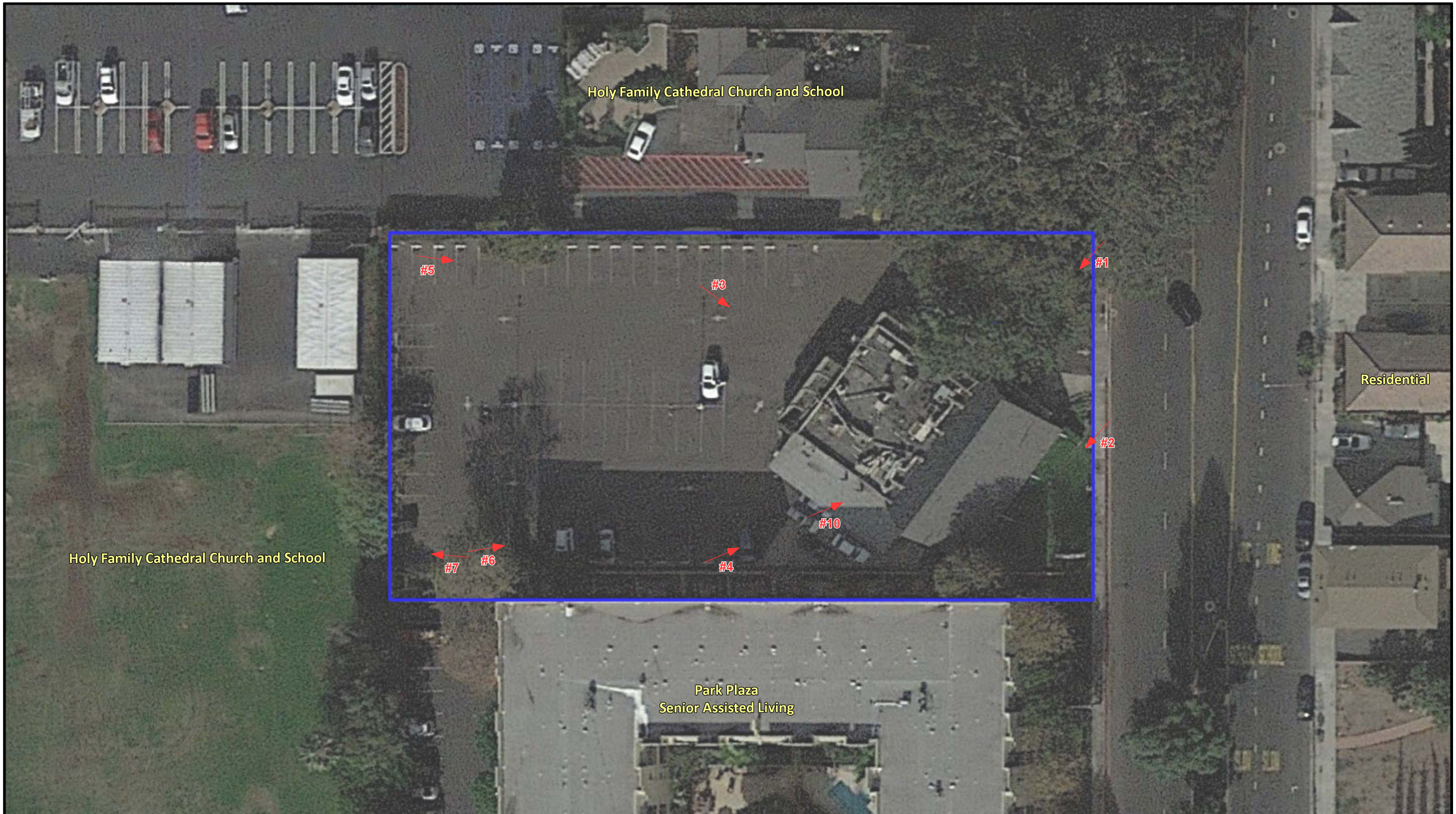

LEGEND

Approximate Subject Site Boundary

#10 Photo ID and Direction

SITE PLAN

574 South Glassell Street
Orange, California

Project No.	12137.001
Scale	Not to Scale
Engr./Geol.	BFM
Drafted By	BFM
Date	September 2018

Figure No. 2

APPENDIX A

APPENDIX A

References

ASTM International, 2013, Standard Practice for Environmental Site Assessments: Phase I Environmental Site Assessment Process, Designation E1527-13, dated November 6, 2013

California Department of Conservation, Division of Oil, Gas, and Geothermal Resources, Online Mapping System, Accessed August 15, 2018

Department of Toxic Substances Control, Envirostor Online Database, Accessed August 15, 2018

EDR Aerial Photo Decade Package, September 10, 2018

EDR Building Permit Report, September 10, 2018

EDR Certified Sanborn Map Report, September 10, 2018

EDR City Directory Abstract, September 10, 2018

EDR Environmental Lien and AUL Search Report, September 17, 2018

EDR Historical Topographic Map Report, September 10, 2018

EDR Radius Map Report with GeoCheck®, September 10, 2018

State Water Resources Control Board, Geotracker Online Database, Accessed August 15, 2018

APPENDIX B

Leighton Consulting, Inc.	**PHOTOGRAPHIC RECORD** **September 14, 2018**	
Client Name: KSL	**Site Location: 574 S. Glassell Street, Orange, CA**	**Project No.** **12137.001**

Photo No. 1	
View Direction of Photo: Southwest	
Description: View of the northeast portion of the subject site.	

Photo No. 2	
View Direction of Photo: Southwest	
Description: View of the southeast portion of the subject site.	

Leighton Consulting, Inc.	**PHOTOGRAPHIC RECORD** **September 14, 2018**	
Client Name: KSL	**Site Location: 574 S. Glassell Street, Orange, CA**	**Project No.** **12137.001**

Photo No. 3	
View Direction of Photo: Southeast	
Description: View of the western exterior of the onsite structure.	

Photo No. 4	
View Direction of Photo: Northeast	
Description: View of the southern exterior of the onsite structure.	

Leighton Consulting, Inc.	**PHOTOGRAPHIC RECORD** **September 14, 2018**	
Client Name: KSL	**Site Location: 574 S. Glassell Street, Orange, CA**	**Project No.** **12137.001**

Photo No. **5**	
View Direction of Photo: East	
Description: View of the onsite parking lot.	

Photo No. 6	
View Direction of Photo: East	
Description: View of the onsite parking lot.	

Leighton Consulting, Inc.	**PHOTOGRAPHIC RECORD** **September 14, 2018**	
Client Name: KSL	**Site Location: 574 S. Glassell Street, Orange, CA**	**Project No.** **12137.001**

Photo No. 7	
View Direction of Photo: West	
Description: View of the dumpsters located in the southwest corner of the subject site.	

Photo No. 8	
View Direction of Photo: NA	
Description: View of the in-floor grease trap located within the kitchen portion of the onsite structure.	

Leighton Consulting, Inc.	**PHOTOGRAPHIC RECORD** **September 14, 2018**	
Client Name: KSL	**Site Location: 574 S. Glassell Street, Orange, CA**	**Project No.** **12137.001**

Photo No. 9	
View Direction of Photo: NA	
Description: View of a floor drain located within the kitchen portion of the onsite structure.	

Photo No. 10	
View Direction of Photo: Northeast	
Description: View of several small containers of general cleaning supplies located in the southern portion of the onsite structure.	

APPENDIX C

Leighton

Phase I ESA Users Questionnaire

Project Name: PPEX

Complete and Correct Address(es) of the Property and APN(s):

574 S Glassell St, Orange CA

User Company Name:	**User Name/Title:**
KSL COMMUNITIES ASK, LLC	Axel Guerra / Acquisition & Development Manager

User Phone/Email: 760-804-7065 / axel.guerra@kiscosl.com

Interviewee Name and Relationship to Project:

Axel Guerra - Acquisition Manager

Site Owner: The Zhang Trust dated 7/29/1993 and Ben Jong Tzou & Ruby H. Tzou

Reason Phase I is required:

Due diligence for potential acquisition of 574 S Glassell St.

Type of property:

Commercial Land and Improvements

Type of property transaction (e.g., Sale, purchase, exchange):

Purchase

Any scope of services beyond the ASTM Practice E 1527:

N/A

All Parties that will rely on the Phase I report:

KSL COMMUNITIES ASK, LLC

Name and Contact Information for Site Contact:

JoAnne Tang / 949-201-8246

Any special terms or conditions:

N/A

Any other pertinent knowledge or experience with the property (e.g., prior reports, documents, correspondence concerning the environmental conditions of the property):

None

(1). Environmental cleanup liens that are filed or recorded against the site (40 CFR 312.25).

Did a search of recorded land title records (or judicial records where appropriate identify any environmental liens filed or recorded against the property under federal, tribal, state or local law? ☐ Yes | ■ No

If Yes, Describe:

(2). Activity and land use limitations (AULs) that are in place on the site or that have been filed or recorded in a registry (40 CFR 312.26).

Did a search of recorded land title records (or judicial records where appropriate) identify any AULs, such as engineering controls, land use restrictions or institutional controls that are in place at the property and/or have been filed or recorded against the property under federal, tribal, state or local law? ☐ Yes | ■ No

If Yes, Describe:

(3). Specialized knowledge or experience of the person seeking to qualify for the Landowners Liability Protections (LLP) (40 CFR 312.28).

Do you have any specialized knowledge or experience related to the property or the property or nearby properties? For example, are you involved in the same line of business as the current or former occupants of the property or an adjoining property so that you would have specialized knowledge of the chemicals and processes used by this type of business?

■ Yes | ☐ No

If Yes, Describe: Kisco currently operates the senior living community adjacent to the south.

(4). Relationship of the purchase price to the fair market value of the property if it were not contaminated (40 DRF 312.29).

Does the purchase price being paid for this property reasonably reflect the fair market value of the property?

■ Yes | ☐ No

If you conclude that there is a difference, have you considered whether the lower purchase price is because contamination is known or believed to be present at the property? ☐ Yes | ☐ No

If Yes, Describe:

(5). Commonly known or reasonable ascertainable information about the property (40 CFR 312.30).

Are you aware of commonly known or *reasonably ascertainable* information about the property that would help the *environmental professional* to identify conditions indicative of releases or threatened releases? For example, as user,

(a.) Do you know the past uses of the property? ☐ Yes | ■ No

(b.) Do you know of specific chemicals that are present or once were present at the property? ☐ Yes | ☒ No

(c.) Do you know of spills or other chemical releases that have taken place at the property? ☐ Yes | ☒ No

(d.) Do you know of any environmental cleanups that have taken place at the property? ☐ Yes | ☒ No

If Yes, Describe:

(6). The degree of obviousness of the presence of likely presence of contamination at the property, and the ability to detect the contamination by appropriate investigation (40 CFR 312.31).

Based on your knowledge and experience related to the *property* are there any *obvious* indicators that point to the presence or likely presence of contamination at the *property?* ☐ Yes | ■ No

If Yes, Describe:

Signature

09/19/18

Date

Leighton

APPENDIX D

Kisco Glassell
574 S. Glassell Street
Orange, CA 92866

Inquiry Number: 5425269.1
September 17, 2018

EDR Environmental Lien and AUL Search

Environmental Data Resources Inc

6 Armstrong Road
Shelton, CT 06484
800.352.0050
www.edrnet.com

EDR Environmental Lien and AUL Search

The EDR Environmental Lien and AUL Search Report provides results from a search of available current land title records for environmental cleanup liens and other activity and use limitations, such as engineering controls and institutional controls.

A network of professional, trained researchers, following established procedures, uses client supplied address information to:

- search for parcel information and/or legal description;
- search for ownership information;
- research official land title documents recorded at jurisdictional agencies such as recorders' offices, registries of deeds, county clerks' offices, etc.;
- access a copy of the deed;
- search for environmental encumbering instrument(s) associated with the deed;
- provide a copy of any environmental encumbrance(s) based upon a review of key words in the instrument(s) (title, parties involved, and description); and
- provide a copy of the deed or cite documents reviewed.

Thank you for your business.
Please contact EDR at 1-800-352-0050
with any questions or comments.

Disclaimer - Copyright and Trademark Notice

This Report contains certain information obtained from a variety of public and other sources reasonably available to Environmental Data Resources, Inc. It cannot be concluded from this Report that coverage information for the target and surrounding properties does not exist from other sources. **NO WARRANTY EXPRESSED OR IMPLIED, IS MADE WHATSOEVER IN CONNECTION WITH THIS REPORT. ENVIRONMENTAL DATA RESOURCES, INC. SPECIFICALLY DISCLAIMS THE MAKING OF ANY SUCH WARRANTIES, INCLUDING WITHOUT LIMITATION, MERCHANTABILITY OR FITNESS FOR A PARTICULAR USE OR PURPOSE. ALL RISK IS ASSUMED BY THE USER. IN NO EVENT SHALL ENVIRONMENTAL DATA RESOURCES, INC. BE LIABLE TO ANYONE, WHETHER ARISING OUT OF ERRORS OR OMISSIONS, NEGLIGENCE, ACCIDENT OR ANY OTHER CAUSE, FOR ANY LOSS OR DAMAGE, INCLUDING, WITHOUT LIMITATION, SPECIAL, INCIDENTAL, CONSEQUENTIAL, OR EXEMPLARY DAMAGES. ANY LIABILITY ON THE PART OF ENVIRONMENTAL DATA RESOURCES, INC. IS STRICTLY LIMITED TO A REFUND OF THE AMOUNT PAID FOR THIS REPORT.** Purchaser accepts this Report "AS IS". Any analyses, estimates, ratings, environmental risk levels or risk codes provided in this Report are provided for illustrative purposes only, and are not intended to provide, nor should they be interpreted as providing any facts regarding, or prediction orforecast of, any environmental risk for any property. Only a Phase I Environmental Site Assessment performed by an environmental professional can provide information regarding the environmental risk for any property. Additionally, the information provided in this Report is not to be construed as legal advice.

Copyright 2017 by Environmental Data Resources, Inc. All rights reserved. Reproduction in any media or format, in whole or in part, of any report or map of Environmental Data Resources, Inc. or its affiliates is prohibited without prior written permission.

EDR and its logos (including Sanborn and Sanborn Map) are trademarks of Environmental Data Resources, Inc. or its affiliates. All other trademarks used herein are the property of their respective owners.

EDR Environmental Lien and AUL Search

TARGET PROPERTY INFORMATION

ADDRESS

574 S. Glassell Street
Kisco Glassell
Orange, CA 92866

RESEARCH SOURCE

Source 1:

Orange Recorder
Orange, CA

PROPERTY INFORMATION

Deed 1:

Type of Deed:	deed
Title is vested in:	Xiang Hue & Tsuai Ling Zhang Trustees Ben Jong & R
Title received from:	Nancy Louise Anson Laura Leticia Nisita Cathleen D
Deed Dated	11/24/2014
Deed Recorded:	12/19/2014
Book:	NA
Page:	na
Volume:	na
Instrument:	na
Docket:	NA
Land Record Comments:	
Miscellaneous Comments:	
Legal Description:	See Exhibit
Legal Current Owner:	Xiang Hue & Tsuai Ling Zhang Trustees Ben Jong & Ruby H Tzou
Parcel # / Property Identifier:	390-591-19
Comments:	See Exhibit

ENVIRONMENTAL LIEN

Environmental Lien: Found ☐ Not Found ☒

OTHER ACTIVITY AND USE LIMITATIONS (AULs)

AULs: Found ☐ Not Found ☒

Deed Exhibit 1

Recording Requested By
First American Title Company
National Commercial Services
RECORDING REQUESTED BY:
First American Title Insurance Company

AND WHEN RECORDED MAIL TO:

Charles Zhang
1044 Calle Recodo #A
San Clemente, CA 92673

Recorded in Official Records, Orange County
Hugh Nguyen, Clerk-Recorder

24.00

* $ R 0 0 0 7 1 7 3 9 0 9 $ *

2014000548580 8:00 am 12/19/14

105 402 D10 7 08

550.00 550.00 0.00 0.00 18.00 0.00 0.00 0.00

THIS SPACE FOR RECORDER'S USE ONLY:

Title Order No.: NCS-700677-ONT1 Escrow No.: 050660-JW

GRANT DEED

THE UNDERSIGNED GRANTOR(S) DECLARE(S)
DOCUMENTARY TRANSFER TAX is $1,100.00

[X] computed on full value of property conveyed, or
[ ] computed on full value less value of liens or encumbrances remaining at time of sale.
[ ] Unincorporated area [X] City of Orange **AND**

FOR A VALUABLE CONSIDERATION, receipt of which is hereby acknowledged,

Nancy Louise Anson, as to an undivided 25% interest; Laura Leticia Nisita, as to an undivided 25% interest and Cathleen Diane Drake as successor trustee of the Gardner Fund of the Gardner Chesley Trust dated May 24, 1962, as amended, as to an undivided 50% interest

hereby GRANT(s) to:

Xiang-Hue Zhang and Tsuai-Ling Zhang Trustees of The Zhang Trust Dated July 29, 1993, as to an undivided 70% interest and Ben Jong Tzou and Ruby H. Tzou, Husband and Wife as Joint Tenants as to an undivided 30% interest, all as Tenants in Common

the real property in the City of Orange, County of Orange, State of California, described as:
LEGAL DESCRIPTION ATTACHED HERETO AS EXHIBIT "A" AND MADE A PART HEREOF

SUBJECT TO:
(1) General and Special County and City (if any) Taxes for the current fiscal year, not due or delinquent, including any special levies, payments for which are included therein and collected therewith.
(2) Lien of Supplemental Taxes, if any, assessed pursuant to the provisions of Chapter 3.5 (commencing with Section 75) of the Revenue and Taxation Code of the State of California.
(3) Covenants, Conditions and Restrictions, reservation easements for public utilities, districts, water companies, alleys and streets, rights and rights of way of record, if any; also exception of oil, gas, minerals and hydrocarbons, and/or lease, if any, without the right of surface entry.

GRANT DEED CONTINUED ON NEXT PAGE
Mail Tax Statement to: SAME AS ABOVE or Address Noted Below:
Charles Zhang 1044 Calle Recodo #A San Clemente, CA 92673

CONTINUATION OF GRANT DEED

Escrow No.: 050660-JW

A notary public or other officer completing this certificate verifies only the identity of the individual who signed the document to which this certificate is attached, and not the truthfulness, accuracy, or validity of that document.

DATED November 24, 2014
STATE OF ~~CALIFORNIA~~ MINNESOTA
COUNTY OF HENNEPIN

On DECEMBER 8TH, 2014
before me, DORIAN JOSEPH STROTHER
A Notary Public personally appeared
NANCY, ANSON
LOUISE DS
who proved to me on the basis of satisfactory evidence to be the person(s) whose name(s) is/are subscribed to the within instrument and acknowledged to me that he/she/they executed the same in his/her/their authorized capacity(ies), and that by his/her/their signature(s) on the instrument the person(s), or the entity upon behalf of which the person(s) acted, executed the instrument.
I certify under PENALTY OF PERJURY under the laws of the State of California that the foregoing paragraph is true and correct.
WITNESS my hand and official seal.

SIGNATURE ATTACHED HERETO AS EXHIBIT AND MADE A PART HEREOF. Exhibit One

Signature _____ DS N.A. (Seal)

Dorian Joseph Strother
Notary Public - Minnesota
My Commission Expires 01/31/2016

CONTINUATION OF GRANT DEED

Escrow No.: 050660-JW

A notary public or other officer completing this certificate verifies only the identity of the individual who signed the document to which this certificate is attached, and not the truthfulness, accuracy, or validity of that document.

DATED November 24, 2014
STATE OF CALIFORNIA
COUNTY OF Orange

On Nov 24 2014
before me, James T. Duncan,
A Notary Public personally appeared
Cathleen Bribe Drake

who proved to me on the basis of satisfactory evidence to be the person(s) whose name(s) is/are subscribed to the within instrument and acknowledged to me that he/she/they executed the same in his/her/their authorized capacity(ies), and that by his/her/their signature(s) on the instrument the person(s), or the entity upon behalf of which the person(s) acted, executed the instrument.
I certify under PENALTY OF PERJURY under the laws of the State of California that the foregoing paragraph is true and correct.
WITNESS my hand and official seal.

Signature _____

SIGNATURE ATTACHED HERETO AS EXHIBIT AND MADE A PART HEREOF. Exhibit Two

BCT3 JAMES T. DUNCAN BCT3
COMM...1966395
NOTARY PUBLIC-CALIFORNIA
ORANGE COUNTY
My Term Exp. Feb. 9, 2016

(Seal)

CONTINUATION OF GRANT DEED

Escrow No.: 050660-JW

A notary public or other officer completing this certificate verifies only the identity of the individual who signed the document to which this certificate is attached, and not the truthfulness, accuracy, or validity of that document.

DATED November 24, 2014
STATE OF CALIFORNIA Florida
COUNTY OF Lee

On December 3 2014
before me, ROY L. MARSH III,
A Notary Public personally appeared
LAURA LETICIA NISITA

who proved to me on the basis of satisfactory evidence to be the person(s) whose name(s) is/are subscribed to the within instrument and acknowledged to me that he/she/they executed the same in his/her/their authorized capacity(ies), and that by his/her/their signature(s) on the instrument the person(s), or the entity upon behalf of which the person(s) acted, executed the instrument.
I certify under PENALTY OF PERJURY under the laws of the State of California that the foregoing paragraph is true and correct.
WITNESS my hand and official seal.

Signature _____

COUNTERPART

(page 1 of 3)

~~Nancy Louise Anson~~

Laura Leticia Nisita
Laura Leticia Nisita

~~Cathleen Diane Drake as successor trustee of the Gardner Fund of the Gardner Chesley Trust dated May 24, 1962, as amended~~

BY: _____
~~Cathleen Diane Drake, Successor Trustee~~

(Seal)

NOTARY PUBLIC STATE OF FLORIDA

Roy L. Marsh, III
Notary Public
State of Florida
My Commission Expires November 14, 2016
Commission No. EE 851574

SIGNATURE EXHIBIT

Exhibit One

Nancy Louise Anson, a beneficiary of the Chesley Fund of the Gardner Chesley Trust dated May 24, 1962, as amended

By: Nancy Anson
Nancy Louise Anson, Beneficary

~~Laura Leticia Nisita, a beneficiary of the Chesley Fund of the Gardner Chesley Trust dated May 24, 1962, as amended~~

COUNTERPART (Page 3 of 3)

By: _____
~~Laura Leticia Nisita, Beneficiary~~

Cathleen Diane Drake as successor trustee of the Gardner Fund of the Gardner Chesley Trust dated May 24, 1962, as amended

BY: COUNTERPART (Page 3 of 3)
Cathleen Diane Drake, Successor Trustee

SIGNATURE EXHIBIT

Exhibit Two

Nancy Louise Anson, a beneficiary of the Chesley Fund of the Gardner Chesley Trust dated May 24, 1962, as amended

By: COUNTERPART (Page 2 of 3)

Nancy Louise Anson, Beneficary

Laura Leticia Nisita, a beneficiary of the Chesley Fund of the Gardner Chesley Trust dated May 24, 1962, as amended

(Page 2 of 3

By: COUNTERPART

Laura Leticia Nisita, Beneficiary

Cathleen Diane Drake as successor trustee of the Gardner Fund of the Gardner Chesley Trust dated May 24, 1962, as amended

BY: Cathleen Diane Drake

Cathleen Diane Drake, Successor Trustee

Exhibit A

PARCEL 1, AS SHOWN ON EXHIBIT "B" ATTACHED TO THAT CERTAIN APPLICATION FOR LOT LINE ADJUSTMENT LL 86-1 RECORDED JANUARY 15, 1986 AS INSTRUMENT NO. 86-018979 OF OFFICIAL RECORDS OF ORANGE COUNTY, CALIFORNIA.

APN: 390-591-19

APPENDIX E

Kisco Glassell
574 S. Glassell Street
Orange, CA 92866

Inquiry Number: 5417961.2s
September 10, 2018

The EDR Radius Map™ Report with GeoCheck®

6 Armstrong Road, 4th floor
Shelton, CT 06484
Toll Free: 800.352.0050
www.edrnet.com

TABLE OF CONTENTS

SECTION	PAGE
Executive Summary	ES1
Overview Map	2
Detail Map	3
Map Findings Summary	4
Map Findings	8
Orphan Summary	38
Government Records Searched/Data Currency Tracking	GR-1

GEOCHECK ADDENDUM

Physical Setting Source Addendum	A-1
Physical Setting Source Summary	A-2
Physical Setting SSURGO Soil Map	A-6
Physical Setting Source Map	A-10
Physical Setting Source Map Findings	A-12
Physical Setting Source Records Searched	PSGR-1

Thank you for your business.
Please contact EDR at 1-800-352-0050
with any questions or comments.

Disclaimer - Copyright and Trademark Notice

This Report contains certain information obtained from a variety of public and other sources reasonably available to Environmental Data Resources, Inc. It cannot be concluded from this Report that coverage information for the target and surrounding properties does not exist from other sources. **NO WARRANTY EXPRESSED OR IMPLIED, IS MADE WHATSOEVER IN CONNECTION WITH THIS REPORT. ENVIRONMENTAL DATA RESOURCES, INC. SPECIFICALLY DISCLAIMS THE MAKING OF ANY SUCH WARRANTIES, INCLUDING WITHOUT LIMITATION, MERCHANTABILITY OR FITNESS FOR A PARTICULAR USE OR PURPOSE. ALL RISK IS ASSUMED BY THE USER. IN NO EVENT SHALL ENVIRONMENTAL DATA RESOURCES, INC. BE LIABLE TO ANYONE, WHETHER ARISING OUT OF ERRORS OR OMISSIONS, NEGLIGENCE, ACCIDENT OR ANY OTHER CAUSE, FOR ANY LOSS OF DAMAGE, INCLUDING, WITHOUT LIMITATION, SPECIAL, INCIDENTAL, CONSEQUENTIAL, OR EXEMPLARY DAMAGES. ANY LIABILITY ON THE PART OF ENVIRONMENTAL DATA RESOURCES, INC. IS STRICTLY LIMITED TO A REFUND OF THE AMOUNT PAID FOR THIS REPORT.** Purchaser accepts this Report "AS IS". Any analyses, estimates, ratings, environmental risk levels or risk codes provided in this Report are provided for illustrative purposes only, and are not intended to provide, nor should they be interpreted as providing any facts regarding, or prediction or forecast of, any environmental risk for any property. Only a Phase I Environmental Site Assessment performed by an environmental professional can provide information regarding the environmental risk for any property. Additionally, the information provided in this Report is not to be construed as legal advice.

Copyright 2018 by Environmental Data Resources, Inc. All rights reserved. Reproduction in any media or format, in whole or in part, of any report or map of Environmental Data Resources, Inc., or its affiliates, is prohibited without prior written permission.

EDR and its logos (including Sanborn and Sanborn Map) are trademarks of Environmental Data Resources, Inc. or its affiliates. All other trademarks used herein are the property of their respective owners.

EXECUTIVE SUMMARY

A search of available environmental records was conducted by Environmental Data Resources, Inc (EDR). The report was designed to assist parties seeking to meet the search requirements of EPA's Standards and Practices for All Appropriate Inquiries (40 CFR Part 312), the ASTM Standard Practice for Environmental Site Assessments (E 1527-13), the ASTM Standard Practice for Environmental Site Assessments for Forestland or Rural Property (E 2247-16), the ASTM Standard Practice for Limited Environmental Due Diligence: Transaction Screen Process (E 1528-14) or custom requirements developed for the evaluation of environmental risk associated with a parcel of real estate.

TARGET PROPERTY INFORMATION

ADDRESS

574 S. GLASSELL STREET
ORANGE, CA 92866

COORDINATES

Latitude (North):	33.7790580 - 33˚ 46' 44.60''
Longitude (West):	117.8537520 - 117˚ 51' 13.50''
Universal Tranverse Mercator:	Zone 11
UTM X (Meters):	420951.4
UTM Y (Meters):	3737792.5
Elevation:	185 ft. above sea level

USGS TOPOGRAPHIC MAP ASSOCIATED WITH TARGET PROPERTY

Target Property Map:	5641308 ORANGE, CA
Version Date:	2012

AERIAL PHOTOGRAPHY IN THIS REPORT

Portions of Photo from:	20140514
Source:	USDA

MAPPED SITES SUMMARY

Target Property Address:
574 S. GLASSELL STREET
ORANGE, CA 92866

Click on Map ID to see full detail.

MAP ID	SITE NAME	ADDRESS	DATABASE ACRONYMS	RELATIVE ELEVATION	DIST (ft. & mi.) DIRECTION
1	SR 22 - FILLING LEWI		CIWQS	Higher	1 ft.
2	UNOCAZ SS. NO. 5299	684 S. CLASSELL ST.	UST	Higher	338, 0.064, East
3	NU-WAY LAUNDRY	302 W LAVETA ST	EDR Hist Cleaner	Higher	493, 0.093, NW
A4	DANNYS UNION SERVICE	684 S GLASSELL ST	RCRA-SQG, FINDS, ECHO	Lower	525, 0.099, South
A5	UNION OIL SERVICE ST	684 S GLASSELL	SWEEPS UST, HIST UST, CA FID UST	Lower	525, 0.099, South
A6	CADNICKS 76 255299	684 S GLASSELL ST	UST	Lower	525, 0.099, South
A7	76 STATION 5299	684 GLASSELL	LUST	Lower	525, 0.099, South
A8	DANNYS UNICAL	684 S GLASSELL ST	EDR Hist Auto	Lower	525, 0.099, South
A9	STATION #5299	684 S GLASSELL ST	HIST UST	Lower	525, 0.099, South
A10	UNION OIL SERVICE ST	684 S GLASSELL	HIST UST	Lower	525, 0.099, South
11	ROBERT J DUNN M D IN	392 S GLASSELL ST	RCRA-SQG, FINDS, ECHO	Higher	1247, 0.236, North
12	CREST CLEANERS	2739 NORTH GRAND AVE	ENVIROSTOR	Higher	1549, 0.293, South
B13	GOODYEAR TIRE CENTER	2705 GRAND AVE	LUST, HIST CORTESE	Higher	1848, 0.350, South
B14	EXXON SERVICE STATIO	2701 N. GRAND AVE	LUST	Lower	1929, 0.365, South
B15	EXXON SERVICE STATIO	2701 N N. GRAND AVE	LUST	Lower	1974, 0.374, South
C16	AMF VOIT INC	426 W ALMOND	SEMS-ARCHIVE, CORRACTS, RCRA-TSDF, RCRA-SQG,...	Lower	2566, 0.486, NNW
C17	AMF NEWPORT DIVERS	426 WEST ALMOND	ENVIROSTOR	Lower	2566, 0.486, NNW
18	ACE CLEANERS	2525 NORTH GRAND AVE	ENVIROSTOR	Lower	2928, 0.555, South
D19	SO CAL GAS/ORANGE MG	E OF PIXSLEY ST BTW	ENVIROSTOR, VCP	Lower	3029, 0.574, NNW
D20	SO CAL GAS/ORANGE MG	E OF PIXSLEY BTW CHA	EDR MGP	Lower	3249, 0.615, NNW
21	UNOCAL	2525 NORTH MAIN	Notify 65	Lower	4830, 0.915, SW

EXECUTIVE SUMMARY

TARGET PROPERTY SEARCH RESULTS

The target property was not listed in any of the databases searched by EDR.

DATABASES WITH NO MAPPED SITES

No mapped sites were found in EDR's search of available ("reasonably ascertainable ") government records either on the target property or within the search radius around the target property for the following databases:

STANDARD ENVIRONMENTAL RECORDS

Federal NPL site list

NPL ..... National Priority List
Proposed NPL ..... Proposed National Priority List Sites
NPL LIENS ..... Federal Superfund Liens

Federal Delisted NPL site list

Delisted NPL ..... National Priority List Deletions

Federal CERCLIS list

FEDERAL FACILITY ..... Federal Facility Site Information listing
SEMS ..... Superfund Enterprise Management System

Federal RCRA generators list

RCRA-LQG ..... RCRA - Large Quantity Generators
RCRA-CESQG ..... RCRA - Conditionally Exempt Small Quantity Generator

Federal institutional controls / engineering controls registries

LUCIS ..... Land Use Control Information System
US ENG CONTROLS ..... Engineering Controls Sites List
US INST CONTROL ..... Sites with Institutional Controls

Federal ERNS list

ERNS ..... Emergency Response Notification System

State- and tribal - equivalent NPL

RESPONSE ..... State Response Sites

State and tribal landfill and/or solid waste disposal site lists

SWF/LF ..... Solid Waste Information System

EXECUTIVE SUMMARY

State and tribal leaking storage tank lists

INDIAN LUST ---------- Leaking Underground Storage Tanks on Indian Land
CPS-SLIC ---------- Statewide SLIC Cases

State and tribal registered storage tank lists

FEMA UST ---------- Underground Storage Tank Listing
AST ---------- Aboveground Petroleum Storage Tank Facilities
INDIAN UST ---------- Underground Storage Tanks on Indian Land

State and tribal voluntary cleanup sites

VCP ---------- Voluntary Cleanup Program Properties
INDIAN VCP ---------- Voluntary Cleanup Priority Listing

State and tribal Brownfields sites

BROWNFIELDS ---------- Considered Brownfieds Sites Listing

ADDITIONAL ENVIRONMENTAL RECORDS

Local Brownfield lists

US BROWNFIELDS ---------- A Listing of Brownfields Sites

Local Lists of Landfill / Solid Waste Disposal Sites

WMUDS/SWAT ---------- Waste Management Unit Database
SWRCY ---------- Recycler Database
HAULERS ---------- Registered Waste Tire Haulers Listing
INDIAN ODI ---------- Report on the Status of Open Dumps on Indian Lands
ODI ---------- Open Dump Inventory
DEBRIS REGION 9 ---------- Torres Martinez Reservation Illegal Dump Site Locations
IHS OPEN DUMPS ---------- Open Dumps on Indian Land

Local Lists of Hazardous waste / Contaminated Sites

US HIST CDL ---------- Delisted National Clandestine Laboratory Register
HIST Cal-Sites ---------- Historical Calsites Database
SCH ---------- School Property Evaluation Program
CDL ---------- Clandestine Drug Labs
Toxic Pits ---------- Toxic Pits Cleanup Act Sites
US CDL ---------- National Clandestine Laboratory Register
CERS HAZ WASTE ---------- CERS HAZ WASTE

Local Lists of Registered Storage Tanks

CERS TANKS ---------- California Environmental Reporting System (CERS) Tanks

Local Land Records

LIENS ---------- Environmental Liens Listing

LIENS 2	CERCLA Lien Information
DEED	Deed Restriction Listing

Records of Emergency Release Reports

HMIRS	Hazardous Materials Information Reporting System
CHMIRS	California Hazardous Material Incident Report System
LDS	Land Disposal Sites Listing
MCS	Military Cleanup Sites Listing
Orange Co. Industrial Site	List of Industrial Site Cleanups
SPILLS 90	SPILLS 90 data from FirstSearch

Other Ascertainable Records

RCRA NonGen / NLR	RCRA - Non Generators / No Longer Regulated
FUDS	Formerly Used Defense Sites
DOD	Department of Defense Sites
SCRD DRYCLEANERS	State Coalition for Remediation of Drycleaners Listing
US FIN ASSUR	Financial Assurance Information
EPA WATCH LIST	EPA WATCH LIST
2020 COR ACTION	2020 Corrective Action Program List
TSCA	Toxic Substances Control Act
TRIS	Toxic Chemical Release Inventory System
SSTS	Section 7 Tracking Systems
ROD	Records Of Decision
RMP	Risk Management Plans
RAATS	RCRA Administrative Action Tracking System
PRP	Potentially Responsible Parties
PADS	PCB Activity Database System
ICIS	Integrated Compliance Information System
FTTS	FIFRA/ TSCA Tracking System - FIFRA (Federal Insecticide, Fungicide, & Rodenticide Act)/TSCA (Toxic Substances Control Act)
MLTS	Material Licensing Tracking System
COAL ASH DOE	Steam-Electric Plant Operation Data
COAL ASH EPA	Coal Combustion Residues Surface Impoundments List
PCB TRANSFORMER	PCB Transformer Registration Database
RADINFO	Radiation Information Database
HIST FTTS	FIFRA/TSCA Tracking System Administrative Case Listing
DOT OPS	Incident and Accident Data
CONSENT	Superfund (CERCLA) Consent Decrees
INDIAN RESERV	Indian Reservations
FUSRAP	Formerly Utilized Sites Remedial Action Program
UMTRA	Uranium Mill Tailings Sites
LEAD SMELTERS	Lead Smelter Sites
US AIRS	Aerometric Information Retrieval System Facility Subsystem
US MINES	Mines Master Index File
ABANDONED MINES	Abandoned Mines
FINDS	Facility Index System/Facility Registry System
DOCKET HWC	Hazardous Waste Compliance Docket Listing
UXO	Unexploded Ordnance Sites
ECHO	Enforcement & Compliance History Information
FUELS PROGRAM	EPA Fuels Program Registered Listing
CA BOND EXP. PLAN	Bond Expenditure Plan
Cortese	"Cortese" Hazardous Waste & Substances Sites List
CUPA Listings	CUPA Resources List

EXECUTIVE SUMMARY

DRYCLEANERS	Cleaner Facilities
EMI	Emissions Inventory Data
ENF	Enforcement Action Listing
Financial Assurance	Financial Assurance Information Listing
HAZNET	Facility and Manifest Data
ICE	ICE
HWT	Registered Hazardous Waste Transporter Database
MINES	Mines Site Location Listing
MWMP	Medical Waste Management Program Listing
NPDES	NPDES Permits Listing
PEST LIC	Pesticide Regulation Licenses Listing
PROC	Certified Processors Database
UIC	UIC Listing
WASTEWATER PITS	Oil Wastewater Pits Listing
WDS	Waste Discharge System
WIP	Well Investigation Program Case List
WELL STIM PROJ	Well Stimulation Project (GEOTRACKER)
CERS	CERS
MILITARY PRIV SITES	MILITARY PRIV SITES (GEOTRACKER)
UIC GEO	UIC GEO (GEOTRACKER)
SAMPLING POINT	SAMPLING POINT (GEOTRACKER)
PROJECT	PROJECT (GEOTRACKER)
PROD WATER PONDS	PROD WATER PONDS (GEOTRACKER)
OTHER OIL GAS	OTHER OIL & GAS (GEOTRACKER)
NON-CASE INFO	NON-CASE INFO (GEOTRACKER)

EDR RECOVERED GOVERNMENT ARCHIVES

Exclusive Recovered Govt. Archives

RGA LF	Recovered Government Archive Solid Waste Facilities List
RGA LUST	Recovered Government Archive Leaking Underground Storage Tank

SURROUNDING SITES: SEARCH RESULTS

Surrounding sites were identified in the following databases.

Elevations have been determined from the USGS Digital Elevation Model and should be evaluated on a relative (not an absolute) basis. Relative elevation information between sites of close proximity should be field verified. Sites with an elevation equal to or higher than the target property have been differentiated below from sites with an elevation lower than the target property.
Page numbers and map identification numbers refer to the EDR Radius Map report where detailed data on individual sites can be reviewed.

Sites listed in ***bold italics*** are in multiple databases.

Unmappable (orphan) sites are not considered in the foregoing analysis.

STANDARD ENVIRONMENTAL RECORDS

Federal CERCLIS NFRAP site list

SEMS-ARCHIVE: SEMS-ARCHIVE (Superfund Enterprise Management System Archive) tracks sites that have no

further interest under the Federal Superfund Program based on available information. The list was formerly known as the CERCLIS-NFRAP, renamed to SEMS ARCHIVE by the EPA in 2015. EPA may perform a minimal level of assessment work at a site while it is archived if site conditions change and/or new information becomes available. Archived sites have been removed and archived from the inventory of SEMS sites. Archived status indicates that, to the best of EPA's knowledge, assessment at a site has been completed and that EPA has determined no further steps will be taken to list the site on the National Priorities List (NPL), unless information indicates this decision was not appropriate or other considerations require a recommendation for listing at a later time. The decision does not necessarily mean that there is no hazard associated with a given site; it only means that. based upon available information, the location is not judged to be potential NPL site.

A review of the SEMS-ARCHIVE list, as provided by EDR, and dated 07/17/2018 has revealed that there is 1 SEMS-ARCHIVE site within approximately 0.5 miles of the target property.

Lower Elevation	Address	Direction / Distance	Map ID	Page
AMF VOIT INC Site ID: 0900117 EPA Id: CAD049901176	***426 W ALMOND***	***NNW 1/4 - 1/2 (0.486 mi.)***	***C16***	***22***

Federal RCRA CORRACTS facilities list

CORRACTS: CORRACTS is a list of handlers with RCRA Corrective Action Activity. This report shows which nationally-defined corrective action core events have occurred for every handler that has had corrective action activity.

A review of the CORRACTS list, as provided by EDR, and dated 03/01/2018 has revealed that there is 1 CORRACTS site within approximately 1 mile of the target property.

Lower Elevation	Address	Direction / Distance	Map ID	Page
AMF VOIT INC EPA ID:: CAD049901176	***426 W ALMOND***	***NNW 1/4 - 1/2 (0.486 mi.)***	***C16***	***22***

Federal RCRA non-CORRACTS TSD facilities list

RCRA-TSDF: RCRAInfo is EPA's comprehensive information system, providing access to data supporting the Resource Conservation and Recovery Act (RCRA) of 1976 and the Hazardous and Solid Waste Amendments (HSWA) of 1984. The database includes selective information on sites which generate, transport, store, treat and/or dispose of hazardous waste as defined by the Resource Conservation and Recovery Act (RCRA). Transporters are individuals or entities that move hazardous waste from the generator offsite to a facility that can recycle, treat, store, or dispose of the waste. TSDFs treat, store, or dispose of the waste.

A review of the RCRA-TSDF list, as provided by EDR, and dated 03/01/2018 has revealed that there is 1 RCRA-TSDF site within approximately 0.5 miles of the target property.

Lower Elevation	Address	Direction / Distance	Map ID	Page
AMF VOIT INC EPA ID:: CAD049901176	***426 W ALMOND***	***NNW 1/4 - 1/2 (0.486 mi.)***	***C16***	***22***

Federal RCRA generators list

RCRA-SQG: RCRAInfo is EPA's comprehensive information system, providing access to data supporting the Resource Conservation and Recovery Act (RCRA) of 1976 and the Hazardous and Solid Waste Amendments (HSWA) of 1984. The database includes selective information on sites which generate, transport, store, treat and/or dispose of hazardous waste as defined by the Resource Conservation and Recovery Act (RCRA). Small quantity generators (SQGs) generate between 100 kg and 1,000 kg of hazardous waste per month.

A review of the RCRA-SQG list, as provided by EDR, and dated 03/01/2018 has revealed that there are 2 RCRA-SQG sites within approximately 0.25 miles of the target property.

Equal/Higher Elevation	Address	Direction / Distance	Map ID	Page
ROBERT J DUNN M D IN EPA ID:: CAD983646316	***392 S GLASSELL ST***	***N 1/8 - 1/4 (0.236 mi.)***	***11***	***16***

Lower Elevation	Address	Direction / Distance	Map ID	Page
DANNYS UNION SERVICE EPA ID:: CAD982008815	***684 S GLASSELL ST***	***S 0 - 1/8 (0.099 mi.)***	***A4***	***9***

State- and tribal - equivalent CERCLIS

ENVIROSTOR: The Department of Toxic Substances Control's (DTSC's) Site Mitigation and Brownfields Reuse Program's (SMBRP's) EnviroStor database identifes sites that have known contamination or sites for which there may be reasons to investigate further. The database includes the following site types: Federal Superfund sites (National Priorities List (NPL)); State Response, including Military Facilities and State Superfund; Voluntary Cleanup; and School sites. EnviroStor provides similar information to the information that was available in CalSites, and provides additional site information, including, but not limited to, identification of formerly-contaminated properties that have been released for reuse, properties where environmental deed restrictions have been recorded to prevent inappropriate land uses, and risk characterization information that is used to assess potential impacts to public health and the environment at contaminated sites.

A review of the ENVIROSTOR list, as provided by EDR, and dated 07/30/2018 has revealed that there are 5 ENVIROSTOR sites within approximately 1 mile of the target property.

Equal/Higher Elevation	Address	Direction / Distance	Map ID	Page
CREST CLEANERS Facility Id: 30720012 Status: Refer: 1248 Local Agency	2739 NORTH GRAND AVE	S 1/4 - 1/2 (0.293 mi.)	12	17

Lower Elevation	Address	Direction / Distance	Map ID	Page
AMF VOIT INC Facility Id: 80001403 Status: * Completed	***426 W ALMOND***	***NNW 1/4 - 1/2 (0.486 mi.)***	***C16***	***22***
AMF NEWPORT DIVERS Facility Id: 30340005 Status: Refer: Other Agency	426 WEST ALMOND	NNW 1/4 - 1/2 (0.486 mi.)	C17	29
ACE CLEANERS	2525 NORTH GRAND AVE	S 1/2 - 1 (0.555 mi.)	18	30

Facility Id: 30720004
Status: Refer: 1248 Local Agency

SO CAL GAS/ORANGE MG	***E OF PIXSLEY ST BTW***	***NNW 1/2 - 1 (0.574 mi.)***	***D19***	***31***

Facility Id: 30490106
Status: Active

State and tribal leaking storage tank lists

LUST: Leaking Underground Storage Tank (LUST) Sites included in GeoTracker. GeoTracker is the Water Boards data management system for sites that impact, or have the potential to impact, water quality in California, with emphasis on groundwater.

A review of the LUST list, as provided by EDR, has revealed that there are 4 LUST sites within approximately 0.5 miles of the target property.

Equal/Higher Elevation	Address	Direction / Distance	Map ID	Page
GOODYEAR TIRE CENTER	***2705 GRAND AVE***	***S 1/4 - 1/2 (0.350 mi.)***	***B13***	***18***

Database: LUST REG 8, Date of Government Version: 02/14/2005
Global ID: T0605901721
Facility Status: Case Closed

Lower Elevation	Address	Direction / Distance	Map ID	Page
76 STATION 5299	684 GLASSELL	S 0 - 1/8 (0.099 mi.)	A7	12

Database: LUST, Date of Government Version: 06/11/2018
Database: ORANGE CO. LUST, Date of Government Version: 04/02/2018
Status: Completed - Case Closed
Facility Id: 05UT004
Global Id: T0605910252

EXXON SERVICE STATIO	2701 N. GRAND AVE	S 1/4 - 1/2 (0.365 mi.)	B14	20

Database: LUST REG 8, Date of Government Version: 02/14/2005
Global ID: T0605900699
Facility Status: Case Closed

EXXON SERVICE STATIO	2701 N N. GRAND AVE	S 1/4 - 1/2 (0.374 mi.)	B15	21

Database: LUST, Date of Government Version: 06/11/2018
Status: Completed - Case Closed
Global Id: T0605900699

State and tribal registered storage tank lists

UST: The Underground Storage Tank database contains registered USTs. USTs are regulated under Subtitle I of the Resource Conservation and Recovery Act (RCRA). The data come from the State Water Resources Control Board's Hazardous Substance Storage Container Database.

A review of the UST list, as provided by EDR, has revealed that there are 2 UST sites within approximately 0.25 miles of the target property.

Equal/Higher Elevation	Address	Direction / Distance	Map ID	Page
UNOCAZ SS. NO. 5299	684 S. CLASSELL ST.	E 0 - 1/8 (0.064 mi.)	2	8

Database: UST, Date of Government Version: 06/11/2018

Facility Id: 30-030-000002

Lower Elevation	Address	Direction / Distance	Map ID	Page
CADNICKS 76 255299 Database: UST, Date of Government Version: 06/11/2018 Facility Id: FA0060020	684 S GLASSELL ST	S 0 - 1/8 (0.099 mi.)	A6	12

ADDITIONAL ENVIRONMENTAL RECORDS

Local Lists of Registered Storage Tanks

SWEEPS UST: Statewide Environmental Evaluation and Planning System. This underground storage tank listing was updated and maintained by a company contacted by the SWRCB in the early 1990's. The listing is no longer updated or maintained. The local agency is the contact for more information on a site on the SWEEPS list.

A review of the SWEEPS UST list, as provided by EDR, and dated 06/01/1994 has revealed that there is 1 SWEEPS UST site within approximately 0.25 miles of the target property.

Lower Elevation	Address	Direction / Distance	Map ID	Page
UNION OIL SERVICE ST Status: A Tank Status: A Comp Number: 17859	***684 S GLASSELL***	***S 0 - 1/8 (0.099 mi.)***	***A5***	***10***

HIST UST: Historical UST Registered Database.

A review of the HIST UST list, as provided by EDR, and dated 10/15/1990 has revealed that there are 3 HIST UST sites within approximately 0.25 miles of the target property.

Lower Elevation	Address	Direction / Distance	Map ID	Page
UNION OIL SERVICE ST	***684 S GLASSELL***	***S 0 - 1/8 (0.099 mi.)***	***A5***	***10***
STATION #5299 Facility Id: 00000043675	684 S GLASSELL ST	S 0 - 1/8 (0.099 mi.)	A9	15
UNION OIL SERVICE ST Facility Id: 00000017859	684 S GLASSELL	S 0 - 1/8 (0.099 mi.)	A10	15

CA FID UST: The Facility Inventory Database contains active and inactive underground storage tank locations. The source is the State Water Resource Control Board.

A review of the CA FID UST list, as provided by EDR, and dated 10/31/1994 has revealed that there is 1 CA FID UST site within approximately 0.25 miles of the target property.

Lower Elevation	Address	Direction / Distance	Map ID	Page
UNION OIL SERVICE ST	***684 S GLASSELL***	***S 0 - 1/8 (0.099 mi.)***	***A5***	***10***

Facility Id: 30001592
Status: A

Other Ascertainable Records

HIST CORTESE: The sites for the list are designated by the State Water Resource Control Board [LUST], the Integrated Waste Board [SWF/LS], and the Department of Toxic Substances Control [CALSITES]. This listing is no longer updated by the state agency.

A review of the HIST CORTESE list, as provided by EDR, and dated 04/01/2001 has revealed that there is 1 HIST CORTESE site within approximately 0.5 miles of the target property.

Equal/Higher Elevation	Address	Direction / Distance	Map ID	Page
GOODYEAR TIRE CENTER Reg Id: 083002400T	***2705 GRAND AVE***	***S 1/4 - 1/2 (0.350 mi.)***	***B13***	***18***

HWP: Detailed information on permitted hazardous waste facilities and corrective action ("cleanups") tracked in EnviroStor.

A review of the HWP list, as provided by EDR, and dated 05/21/2018 has revealed that there is 1 HWP site within approximately 1 mile of the target property.

Lower Elevation	Address	Direction / Distance	Map ID	Page
AMF VOIT INC EPA Id: CAD049901176 Cleanup Status: NON-OPERATING	***426 W ALMOND***	***NNW 1/4 - 1/2 (0.486 mi.)***	***C16***	***22***

Notify 65: Listings of all Proposition 65 incidents reported to counties by the State Water Resources Control Board and the Regional Water Quality Control Board. This database is no longer updated by the reporting agency.

A review of the Notify 65 list, as provided by EDR, and dated 06/18/2018 has revealed that there is 1 Notify 65 site within approximately 1 mile of the target property.

Lower Elevation	Address	Direction / Distance	Map ID	Page
UNOCAL	2525 NORTH MAIN	SW 1/2 - 1 (0.915 mi.)	21	37

CIWQS: The California Integrated Water Quality System (CIWQS) is a computer system used by the State and Regional Water Quality Control Boards to track information about places of environmental interest, manage permits and other orders, track inspections, and manage violations and enforcement activities.

A review of the CIWQS list, as provided by EDR, and dated 06/04/2018 has revealed that there is 1 CIWQS site within approximately 0.001 miles of the target property.

Equal/Higher Elevation	Address	Direction / Distance	Map ID	Page
SR 22 - FILLING LEWI		0 - 1/8 (0.000 mi.)	1	8

EXECUTIVE SUMMARY

EDR HIGH RISK HISTORICAL RECORDS

EDR Exclusive Records

EDR MGP: The EDR Proprietary Manufactured Gas Plant Database includes records of coal gas plants (manufactured gas plants) compiled by EDR's researchers. Manufactured gas sites were used in the United States from the 1800's to 1950's to produce a gas that could be distributed and used as fuel. These plants used whale oil, rosin, coal, or a mixture of coal, oil, and water that also produced a significant amount of waste. Many of the byproducts of the gas production, such as coal tar (oily waste containing volatile and non-volatile chemicals), sludges, oils and other compounds are potentially hazardous to human health and the environment. The byproduct from this process was frequently disposed of directly at the plant site and can remain or spread slowly, serving as a continuous source of soil and groundwater contamination.

A review of the EDR MGP list, as provided by EDR, has revealed that there is 1 EDR MGP site within approximately 1 mile of the target property.

Lower Elevation	Address	Direction / Distance	Map ID	Page
SO CAL GAS/ORANGE MG	E OF PIXSLEY BTW CHA	NNW 1/2 - 1 (0.615 mi.)	D20	36

EDR Hist Auto: EDR has searched selected national collections of business directories and has collected listings of potential gas station/filling station/service station sites that were available to EDR researchers. EDR's review was limited to those categories of sources that might, in EDR's opinion, include gas station/filling station/service station establishments. The categories reviewed included, but were not limited to gas, gas station, gasoline station, filling station, auto, automobile repair, auto service station, service station, etc. This database falls within a category of information EDR classifies as "High Risk Historical Records", or HRHR. EDR's HRHR effort presents unique and sometimes proprietary data about past sites and operations that typically create environmental concerns, but may not show up in current government records searches.

A review of the EDR Hist Auto list, as provided by EDR, has revealed that there is 1 EDR Hist Auto site within approximately 0.125 miles of the target property.

Lower Elevation	Address	Direction / Distance	Map ID	Page
DANNYS UNICAL	684 S GLASSELL ST	S 0 - 1/8 (0.099 mi.)	A8	14

EDR Hist Cleaner: EDR has searched selected national collections of business directories and has collected listings of potential dry cleaner sites that were available to EDR researchers. EDR's review was limited to those categories of sources that might, in EDR's opinion, include dry cleaning establishments. The categories reviewed included, but were not limited to dry cleaners, cleaners, laundry, laundromat, cleaning/laundry, wash & dry etc. This database falls within a category of information EDR classifies as "High Risk Historical Records", or HRHR. EDR's HRHR effort presents unique and sometimes proprietary data about past sites and operations that typically create environmental concerns, but may not show up in current government records searches.

A review of the EDR Hist Cleaner list, as provided by EDR, has revealed that there is 1 EDR Hist Cleaner site within approximately 0.125 miles of the target property.

Equal/Higher Elevation	Address	Direction / Distance	Map ID	Page
NU-WAY LAUNDRY	302 W LAVETA ST	NW 0 - 1/8 (0.093 mi.)	3	8

EXECUTIVE SUMMARY

There were no unmapped sites in this report.

OVERVIEW MAP - 5417961.2S

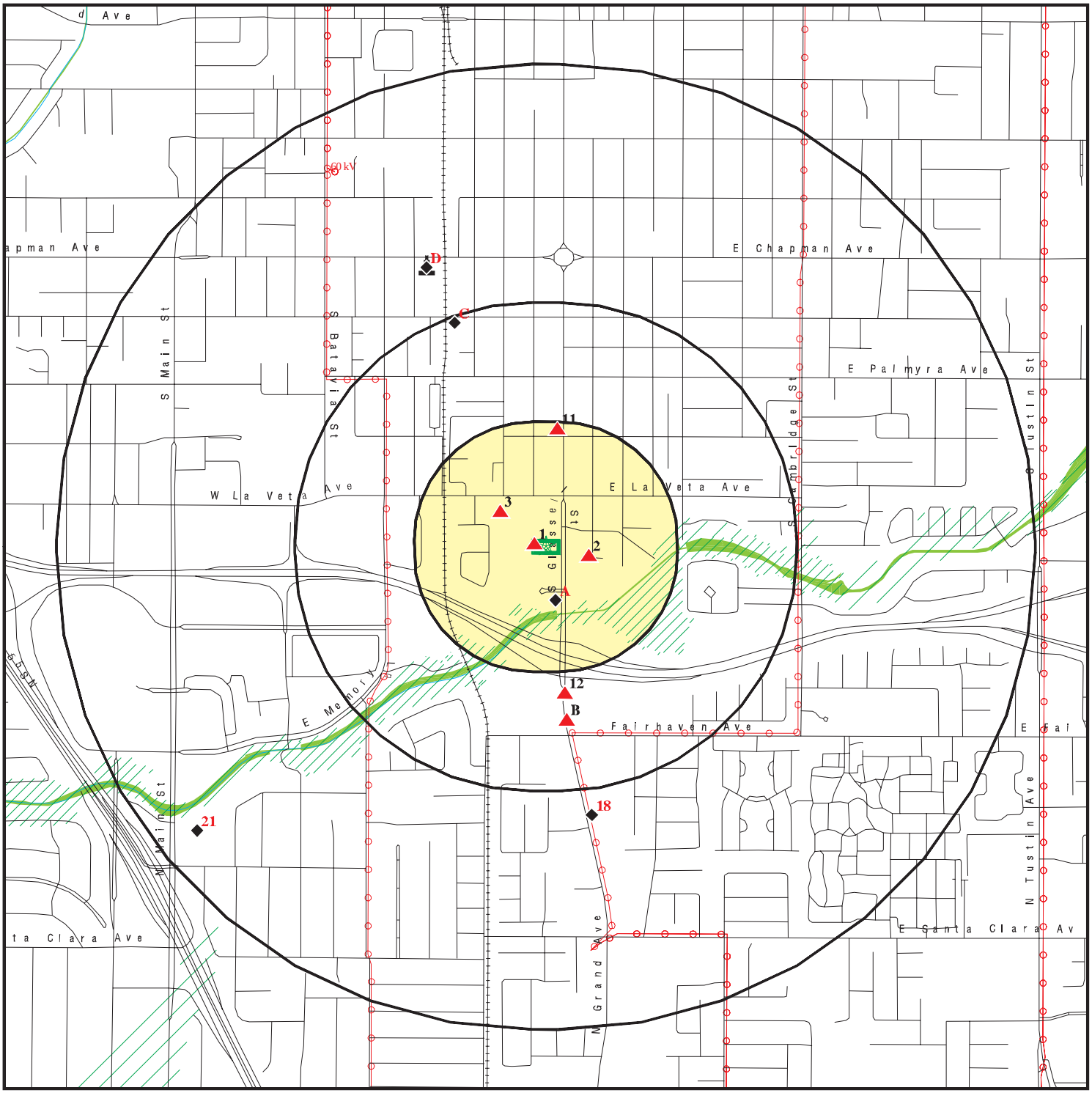

Target Property

Sites at elevations higher than or equal to the target property

Sites at elevations lower than the target property

Manufactured Gas Plants

National Priority List Sites

Dept. Defense Sites

0 1/4 1/2 1 Miles

Indian Reservations BIA

Power transmission lines

100-year flood zone

500-year flood zone

National Wetland Inventory

State Wetlands

Upgradient Area

Areas of Concern

This report includes Interactive Map Layers to display and/or hide map information. The legend includes only those icons for the default map view.

SITE NAME:	Kisco Glassell	CLIENT:	Leighton Consulting
ADDRESS:	574 S. Glassell Street Orange CA 92866	CONTACT:	Brynn Mcculloch
		INQUIRY #:	5417961.2s
LAT/LONG:	33.779058 / 117.853752	DATE:	September 10, 2018 12:37 pm

Copyright © 2018 EDR, Inc. © 2015 TomTom Rel. 2015.

DETAIL MAP - 5417961.2S

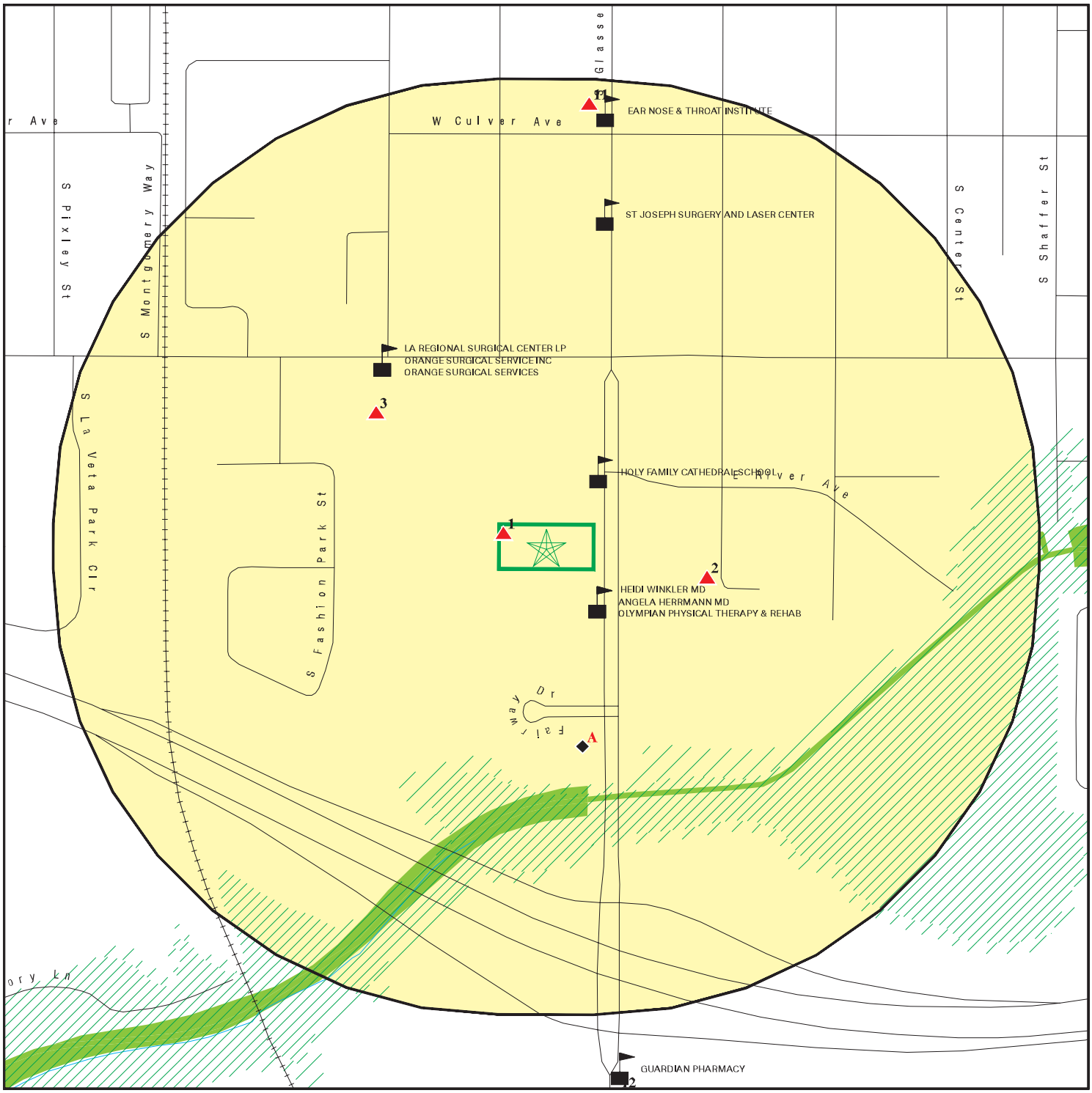

Target Property

Sites at elevations higher than or equal to the target property

Sites at elevations lower than the target property

Manufactured Gas Plants

Sensitive Receptors

National Priority List Sites

Dept. Defense Sites

0 1/16 1/8 1/4 Miles

Indian Reservations BIA

100-year flood zone

500-year flood zone

National Wetland Inventory

State Wetlands

Areas of Concern

This report includes Interactive Map Layers to display and/or hide map information. The legend includes only those icons for the default map view.

SITE NAME:	Kisco Glassell	CLIENT:	Leighton Consulting
ADDRESS:	574 S. Glassell Street Orange CA 92866	CONTACT:	Brynn Mcculloch
LAT/LONG:	33.779058 / 117.853752	INQUIRY #:	5417961.2s
		DATE:	September 10, 2018 12:44 pm

Copyright © 2018 EDR, Inc. © 2015 TomTom Rel. 2015.

MAP FINDINGS SUMMARY

Database	Search Distance (Miles)	Target Property	< 1/8	1/8 - 1/4	1/4 - 1/2	1/2 - 1	> 1	Total Plotted
STANDARD ENVIRONMENTAL RECORDS								
Federal NPL site list								
NPL	1.000		0	0	0	0	NR	0
Proposed NPL	1.000		0	0	0	0	NR	0
NPL LIENS	0.001		0	NR	NR	NR	NR	0
Federal Delisted NPL site list								
Delisted NPL	1.000		0	0	0	0	NR	0
Federal CERCLIS list								
FEDERAL FACILITY	0.500		0	0	0	NR	NR	0
SEMS	0.500		0	0	0	NR	NR	0
Federal CERCLIS NFRAP site list								
SEMS-ARCHIVE	0.500		0	0	1	NR	NR	1
Federal RCRA CORRACTS facilities list								
CORRACTS	1.000		0	0	1	0	NR	1
Federal RCRA non-CORRACTS TSD facilities list								
RCRA-TSDF	0.500		0	0	1	NR	NR	1
Federal RCRA generators list								
RCRA-LQG	0.250		0	0	NR	NR	NR	0
RCRA-SQG	0.250		1	1	NR	NR	NR	2
RCRA-CESQG	0.250		0	0	NR	NR	NR	0
Federal institutional controls / engineering controls registries								
LUCIS	0.500		0	0	0	NR	NR	0
US ENG CONTROLS	0.500		0	0	0	NR	NR	0
US INST CONTROL	0.500		0	0	0	NR	NR	0
Federal ERNS list								
ERNS	0.001		0	NR	NR	NR	NR	0
State- and tribal - equivalent NPL								
RESPONSE	1.000		0	0	0	0	NR	0
State- and tribal - equivalent CERCLIS								
ENVIROSTOR	1.000		0	0	3	2	NR	5
State and tribal landfill and/or solid waste disposal site lists								
SWF/LF	0.500		0	0	0	NR	NR	0
State and tribal leaking storage tank lists								
LUST	0.500		1	0	3	NR	NR	4

MAP FINDINGS SUMMARY

Database	Search Distance (Miles)	Target Property	< 1/8	1/8 - 1/4	1/4 - 1/2	1/2 - 1	> 1	Total Plotted
INDIAN LUST	0.500		0	0	0	NR	NR	0
CPS-SLIC	0.500		0	0	0	NR	NR	0
State and tribal registered storage tank lists								
FEMA UST	0.250		0	0	NR	NR	NR	0
UST	0.250		2	0	NR	NR	NR	2
AST	0.250		0	0	NR	NR	NR	0
INDIAN UST	0.250		0	0	NR	NR	NR	0
State and tribal voluntary cleanup sites								
VCP	0.500		0	0	0	NR	NR	0
INDIAN VCP	0.500		0	0	0	NR	NR	0
State and tribal Brownfields sites								
BROWNFIELDS	0.500		0	0	0	NR	NR	0
ADDITIONAL ENVIRONMENTAL RECORDS								
Local Brownfield lists								
US BROWNFIELDS	0.500		0	0	0	NR	NR	0
Local Lists of Landfill / Solid Waste Disposal Sites								
WMUDS/SWAT	0.500		0	0	0	NR	NR	0
SWRCY	0.500		0	0	0	NR	NR	0
HAULERS	0.001		0	NR	NR	NR	NR	0
INDIAN ODI	0.500		0	0	0	NR	NR	0
ODI	0.500		0	0	0	NR	NR	0
DEBRIS REGION 9	0.500		0	0	0	NR	NR	0
IHS OPEN DUMPS	0.500		0	0	0	NR	NR	0
Local Lists of Hazardous waste / Contaminated Sites								
US HIST CDL	0.001		0	NR	NR	NR	NR	0
HIST Cal-Sites	1.000		0	0	0	0	NR	0
SCH	0.250		0	0	NR	NR	NR	0
CDL	0.001		0	NR	NR	NR	NR	0
Toxic Pits	1.000		0	0	0	0	NR	0
US CDL	0.001		0	NR	NR	NR	NR	0
CERS HAZ WASTE	0.250		0	0	NR	NR	NR	0
Local Lists of Registered Storage Tanks								
SWEEPS UST	0.250		1	0	NR	NR	NR	1
HIST UST	0.250		3	0	NR	NR	NR	3
CA FID UST	0.250		1	0	NR	NR	NR	1
CERS TANKS	0.250		0	0	NR	NR	NR	0
Local Land Records								
LIENS	0.001		0	NR	NR	NR	NR	0
LIENS 2	0.001		0	NR	NR	NR	NR	0

MAP FINDINGS SUMMARY

Database	Search Distance (Miles)	Target Property	< 1/8	1/8 - 1/4	1/4 - 1/2	1/2 - 1	> 1	Total Plotted
DEED	0.500		0	0	0	NR	NR	0
Records of Emergency Release Reports								
HMIRS	0.001		0	NR	NR	NR	NR	0
CHMIRS	0.001		0	NR	NR	NR	NR	0
LDS	0.001		0	NR	NR	NR	NR	0
MCS	0.001		0	NR	NR	NR	NR	0
Orange Co. Industrial Site	0.001		0	NR	NR	NR	NR	0
SPILLS 90	0.001		0	NR	NR	NR	NR	0
Other Ascertainable Records								
RCRA NonGen / NLR	0.250		0	0	NR	NR	NR	0
FUDS	1.000		0	0	0	0	NR	0
DOD	1.000		0	0	0	0	NR	0
SCRD DRYCLEANERS	0.500		0	0	0	NR	NR	0
US FIN ASSUR	0.001		0	NR	NR	NR	NR	0
EPA WATCH LIST	0.001		0	NR	NR	NR	NR	0
2020 COR ACTION	0.250		0	0	NR	NR	NR	0
TSCA	0.001		0	NR	NR	NR	NR	0
TRIS	0.001		0	NR	NR	NR	NR	0
SSTS	0.001		0	NR	NR	NR	NR	0
ROD	1.000		0	0	0	0	NR	0
RMP	0.001		0	NR	NR	NR	NR	0
RAATS	0.001		0	NR	NR	NR	NR	0
PRP	0.001		0	NR	NR	NR	NR	0
PADS	0.001		0	NR	NR	NR	NR	0
ICIS	0.001		0	NR	NR	NR	NR	0
FTTS	0.001		0	NR	NR	NR	NR	0
MLTS	0.001		0	NR	NR	NR	NR	0
COAL ASH DOE	0.001		0	NR	NR	NR	NR	0
COAL ASH EPA	0.500		0	0	0	NR	NR	0
PCB TRANSFORMER	0.001		0	NR	NR	NR	NR	0
RADINFO	0.001		0	NR	NR	NR	NR	0
HIST FTTS	0.001		0	NR	NR	NR	NR	0
DOT OPS	0.001		0	NR	NR	NR	NR	0
CONSENT	1.000		0	0	0	0	NR	0
INDIAN RESERV	0.001		0	NR	NR	NR	NR	0
FUSRAP	1.000		0	0	0	0	NR	0
UMTRA	0.500		0	0	0	NR	NR	0
LEAD SMELTERS	0.001		0	NR	NR	NR	NR	0
US AIRS	0.001		0	NR	NR	NR	NR	0
US MINES	0.250		0	0	NR	NR	NR	0
ABANDONED MINES	0.001		0	NR	NR	NR	NR	0
FINDS	0.001		0	NR	NR	NR	NR	0
DOCKET HWC	0.001		0	NR	NR	NR	NR	0
UXO	1.000		0	0	0	0	NR	0
ECHO	0.001		0	NR	NR	NR	NR	0
FUELS PROGRAM	0.250		0	0	NR	NR	NR	0
CA BOND EXP. PLAN	1.000		0	0	0	0	NR	0
Cortese	0.500		0	0	0	NR	NR	0
CUPA Listings	0.250		0	0	NR	NR	NR	0

MAP FINDINGS SUMMARY

Database	Search Distance (Miles)	Target Property	< 1/8	1/8 - 1/4	1/4 - 1/2	1/2 - 1	> 1	Total Plotted
DRYCLEANERS	0.250		0	0	NR	NR	NR	0
EMI	0.001		0	NR	NR	NR	NR	0
ENF	0.001		0	NR	NR	NR	NR	0
Financial Assurance	0.001		0	NR	NR	NR	NR	0
HAZNET	0.001		0	NR	NR	NR	NR	0
ICE	0.001		0	NR	NR	NR	NR	0
HIST CORTESE	0.500		0	0	1	NR	NR	1
HWP	1.000		0	0	1	0	NR	1
HWT	0.250		0	0	NR	NR	NR	0
MINES	0.001		0	NR	NR	NR	NR	0
MWMP	0.250		0	0	NR	NR	NR	0
NPDES	0.001		0	NR	NR	NR	NR	0
PEST LIC	0.001		0	NR	NR	NR	NR	0
PROC	0.500		0	0	0	NR	NR	0
Notify 65	1.000		0	0	0	1	NR	1
UIC	0.001		0	NR	NR	NR	NR	0
WASTEWATER PITS	0.500		0	0	0	NR	NR	0
WDS	0.001		0	NR	NR	NR	NR	0
WIP	0.250		0	0	NR	NR	NR	0
WELL STIM PROJ	0.001		0	NR	NR	NR	NR	0
CERS	0.001		0	NR	NR	NR	NR	0
MILITARY PRIV SITES	0.001		0	NR	NR	NR	NR	0
CIWQS	0.001		1	NR	NR	NR	NR	1
UIC GEO	0.001		0	NR	NR	NR	NR	0
SAMPLING POINT	0.001		0	NR	NR	NR	NR	0
PROJECT	0.001		0	NR	NR	NR	NR	0
PROD WATER PONDS	0.001		0	NR	NR	NR	NR	0
OTHER OIL GAS	0.001		0	NR	NR	NR	NR	0
NON-CASE INFO	0.001		0	NR	NR	NR	NR	0
EDR HIGH RISK HISTORICAL RECORDS								
EDR Exclusive Records								
EDR MGP	1.000		0	0	0	1	NR	1
EDR Hist Auto	0.125		1	NR	NR	NR	NR	1
EDR Hist Cleaner	0.125		1	NR	NR	NR	NR	1
EDR RECOVERED GOVERNMENT ARCHIVES								
Exclusive Recovered Govt. Archives								
RGA LF	0.001		0	NR	NR	NR	NR	0
RGA LUST	0.001		0	NR	NR	NR	NR	0
- Totals --		0	12	1	11	4	0	28

NOTES:

TP = Target Property

NR = Not Requested at this Search Distance

Sites may be listed in more than one database

1 **SR 22 - FILLING LEWIS CHANNEL** **CIWQS** **S121676080**
N/A

< 1/8 **ORANGE, CA**
1 ft.

Relative:
Higher

Actual:
185 ft.

CIWQS:

Agency:	Orange Cnty Transportation Authority
Agency Address:	550 South Main Street, Orange, CA 92613-1584
Place/Project Type:	Other
SIC/NAICS:	Not reported
Region:	8
Program:	WDR
Regulatory Measure Status:	Historical
Regulatory Measure Type:	WDR
Order Number:	R8-2005-0055
WDID:	8 303511001
NPDES Number:	Not reported
Adoption Date:	04/15/2005
Effective Date:	04/15/2005
Termination Date:	12/01/2006
Expiration/Review Date:	04/15/2020
Design Flow:	0
Major/Minor:	Not reported
Complexity:	C
TTWQ:	3
Enforcement Actions within 5 years:	0
Violations within 5 years:	0
Latitude:	33.77917
Longitude:	-117.85417

---

2 **UNOCAZ SS. NO. 5299** **UST** **U003782013**
East **684 S. CLASSELL ST.** **N/A**
< 1/8 **ORANGE, CA 92666**
0.064 mi.
338 ft.

Relative:
Higher

Actual:
191 ft.

UST:

Facility ID:	30-030-000002
Permitting Agency:	ORANGE, CITY OF
Latitude:	33.7788102
Longitude:	-117.8521818

---

3 **NU-WAY LAUNDRY** **EDR Hist Cleaner** **1009196485**
NW **302 W LAVETA ST** **N/A**
< 1/8 **ORANGE, CA**
0.093 mi.
493 ft.

Relative:
Higher

Actual:
185 ft.

EDR Hist Cleaner

Year:	Name:	Type:
1925	NU-WAY LAUNDRY	LAUNDRIES

A4	**DANNYS UNION SERVICE**	**RCRA-SQG**	**1000323823**
South	**684 S GLASSELL ST**	**FINDS**	**CAD982008815**
< 1/8	**ORANGE, CA 92866**	**ECHO**	
0.099 mi.			
525 ft.	**Site 1 of 7 in cluster A**		

Relative:
Lower

Actual:
182 ft.

RCRA-SQG:

Date form received by agency:	06/26/1987
Facility name:	DANNYS UNION SERVICE
Facility address:	684 S GLASSELL ST ORANGE, CA 92866
EPA ID:	CAD982008815
Contact:	ENVIRONMENTAL MANAGER
Contact address:	684 S GLASSELL ORANGE, CA 92666
Contact country:	US
Contact telephone:	714-639-6720
Contact email:	Not reported
EPA Region:	09
Classification:	Small Small Quantity Generator
Description:	Handler: generates more than 100 and less than 1000 kg of hazardous waste during any calendar month and accumulates less than 6000 kg of hazardous waste at any time; or generates 100 kg or less of hazardous waste during any calendar month, and accumulates more than 1000 kg of hazardous waste at any time

Owner/Operator Summary:

Owner/operator name:	DANIEL W LENTZ UNION OIL
Owner/operator address:	NOT REQUIRED NOT REQUIRED, ME 99999
Owner/operator country:	Not reported
Owner/operator telephone:	415-555-1212
Owner/operator email:	Not reported
Owner/operator fax:	Not reported
Owner/operator extension:	Not reported
Legal status:	Private
Owner/Operator Type:	Owner
Owner/Op start date:	Not reported
Owner/Op end date:	Not reported

Owner/operator name:	NOT REQUIRED
Owner/operator address:	NOT REQUIRED NOT REQUIRED, ME 99999
Owner/operator country:	Not reported
Owner/operator telephone:	415-555-1212
Owner/operator email:	Not reported
Owner/operator fax:	Not reported
Owner/operator extension:	Not reported
Legal status:	Private
Owner/Operator Type:	Operator
Owner/Op start date:	Not reported
Owner/Op end date:	Not reported

Handler Activities Summary:

U.S. importer of hazardous waste:	No
Mixed waste (haz. and radioactive):	No
Recycler of hazardous waste:	No
Transporter of hazardous waste:	No

DANNYS UNION SERVICE (Continued) **1000323823**

Treater, storer or disposer of HW:	No
Underground injection activity:	No
On-site burner exemption:	No
Furnace exemption:	No
Used oil fuel burner:	No
Used oil processor:	No
User oil refiner:	No
Used oil fuel marketer to burner:	No
Used oil Specification marketer:	No
Used oil transfer facility:	No
Used oil transporter:	No

Violation Status: No violations found

FINDS:

Registry ID: 110008274508

Environmental Interest/Information System
RCRAInfo is a national information system that supports the Resource Conservation and Recovery Act (RCRA) program through the tracking of events and activities related to facilities that generate, transport, and treat, store, or dispose of hazardous waste. RCRAInfo allows RCRA program staff to track the notification, permit, compliance, and corrective action activities required under RCRA.

Click this hyperlink while viewing on your computer to access additional FINDS: detail in the EDR Site Report.

ECHO:

Envid:	1000323823
Registry ID:	110008274508
DFR URL:	http://echo.epa.gov/detailed-facility-report?fid=110008274508

A5
South
< 1/8
0.099 mi.
525 ft.

UNION OIL SERVICE STATION #529
684 S GLASSELL
ORANGE, CA 92666

SWEEPS UST **S101629969**
HIST UST **N/A**
CA FID UST

Site 2 of 7 in cluster A

Relative:
Lower

Actual:
182 ft.

SWEEPS UST:

Status:	Active
Comp Number:	17859
Number:	9
Board Of Equalization:	44-000051
Referral Date:	06-21-93
Action Date:	06-21-93
Created Date:	10-13-88
Owner Tank Id:	Not reported
SWRCB Tank Id:	30-030-017859-000001
Tank Status:	A
Capacity:	12000
Active Date:	06-21-93
Tank Use:	M.V. FUEL
STG:	P
Content:	REG UNLEADED
Number Of Tanks:	3

UNION OIL SERVICE STATION #529 (Continued) **S101629969**

Status:	Active
Comp Number:	17859
Number:	9
Board Of Equalization:	44-000051
Referral Date:	06-21-93
Action Date:	06-21-93
Created Date:	10-13-88
Owner Tank Id:	Not reported
SWRCB Tank Id:	30-030-017859-000002
Tank Status:	A
Capacity:	12000
Active Date:	06-21-93
Tank Use:	M.V. FUEL
STG:	P
Content:	REG UNLEADED
Number Of Tanks:	Not reported

Status:	Active
Comp Number:	17859
Number:	9
Board Of Equalization:	44-000051
Referral Date:	06-21-93
Action Date:	06-21-93
Created Date:	10-13-88
Owner Tank Id:	Not reported
SWRCB Tank Id:	30-030-017859-000003
Tank Status:	A
Capacity:	500
Active Date:	06-21-93
Tank Use:	OIL
STG:	W
Content:	WASTE OIL
Number Of Tanks:	Not reported

HIST UST:

File Number:	0002D671
URL:	http://geotracker.waterboards.ca.gov/ustpdfs/pdf/0002D671.pdf
Region:	Not reported
Facility ID:	Not reported
Facility Type:	Not reported
Other Type:	Not reported
Contact Name:	Not reported
Telephone:	Not reported
Owner Name:	Not reported
Owner Address:	Not reported
Owner City,St,Zip:	Not reported
Total Tanks:	Not reported

Tank Num:	Not reported
Container Num:	Not reported
Year Installed:	Not reported
Tank Capacity:	Not reported
Tank Used for:	Not reported
Type of Fuel:	Not reported
Container Construction Thickness:	Not reported
Leak Detection:	Not reported

UNION OIL SERVICE STATION #529 (Continued) **S101629969**

Click here for Geo Tracker PDF:

CA FID UST:

Facility ID:	30001592
Regulated By:	UTNKA
Regulated ID:	00017859
Cortese Code:	Not reported
SIC Code:	Not reported
Facility Phone:	7146396720
Mail To:	Not reported
Mailing Address:	684 S GLASSELL
Mailing Address 2:	Not reported
Mailing City,St,Zip:	ORANGE 92666
Contact:	Not reported
Contact Phone:	Not reported
DUNs Number:	Not reported
NPDES Number:	Not reported
EPA ID:	Not reported
Comments:	Not reported
Status:	Active

A6 **CADNICKS 76 255299** **UST** **U004264505**
South **684 S GLASSELL ST** **N/A**
< 1/8 **ORANGE, CA 92866**
0.099 mi.
525 ft. **Site 3 of 7 in cluster A**

Relative:
Lower

Actual:
182 ft.

UST:

Facility ID:	FA0060020
Permitting Agency:	Orange County Environmental Health
Latitude:	33.77742
Longitude:	-117.85353

A7 **76 STATION 5299** **LUST** **S106875513**
South **684 GLASSELL** **N/A**
< 1/8 **ORANGE, CA 92866**
0.099 mi.
525 ft. **Site 4 of 7 in cluster A**

Relative:
Lower

Actual:
182 ft.

LUST:

Lead Agency:	ORANGE COUNTY LOP
Case Type:	LUST Cleanup Site
Geo Track:	http://geotracker.waterboards.ca.gov/profile_report.asp?global_id=T0605910252
Global Id:	T0605910252
Latitude:	33.798452
Longitude:	-117.853079
Status:	Completed - Case Closed
Status Date:	01/11/2006
Case Worker:	SR
RB Case Number:	Not reported
Local Agency:	ORANGE COUNTY LOP
File Location:	Local Agency
Local Case Number:	05UT004
Potential Media Affect:	Soil
Potential Contaminants of Concern:	Gasoline
Site History:	Not reported

76 STATION 5299 (Continued) **S106875513**

LUST:

Global Id:	T0605910252
Contact Type:	Regional Board Caseworker
Contact Name:	Ken Williams
Organization Name:	SANTA ANA RWQCB (REGION 8)
Address:	3737 MAIN STREET, SUITE 500
City:	RIVERSIDE
Email:	kwilliams@waterboards.ca.gov
Phone Number:	Not reported

Global Id:	T0605910252
Contact Type:	Local Agency Caseworker
Contact Name:	SHYAMALA RAJAGOPAL
Organization Name:	ORANGE COUNTY LOP
Address:	1241 E. DYER ROAD SUITE 120
City:	SANTA ANA
Email:	srajagopal@ochca.com
Phone Number:	7144336262

LUST:

Global Id:	T0605910252
Action Type:	ENFORCEMENT
Date:	01/11/2006
Action:	Closure/No Further Action Letter

Global Id:	T0605910252
Action Type:	Other
Date:	04/04/2005
Action:	Leak Reported

Global Id:	T0605910252
Action Type:	ENFORCEMENT
Date:	04/04/2005
Action:	Notice of Responsibility

Global Id:	T0605910252
Action Type:	ENFORCEMENT
Date:	06/07/2005
Action:	Staff Letter

Global Id:	T0605910252
Action Type:	Other
Date:	03/14/2005
Action:	Leak Discovery

LUST:

Global Id:	T0605910252
Status:	Open - Case Begin Date
Status Date:	03/14/2005

Global Id:	T0605910252
Status:	Open - Site Assessment
Status Date:	04/04/2005

Global Id:	T0605910252
Status:	Completed - Case Closed

76 STATION 5299 (Continued) **S106875513**

Status Date: 01/11/2006

ORANGE CO. LUST:
Region: ORANGE
Facility Id: 05UT004
Released Substance: Gasoline-Automotive (motor gasoline and additives), leaded & unleaded
Date Closed: 01/11/2006
Record ID: RO0003336

A8 **DANNYS UNICAL** **EDR Hist Auto** **1020823752**
South **684 S GLASSELL ST** **N/A**
< 1/8 **ORANGE, CA 92666**
0.099 mi.
525 ft. **Site 5 of 7 in cluster A**

Relative: EDR Hist Auto
Lower

Actual:
182 ft.

Year:	Name:	Type:
1986	DANNYS UNION	General Automotive Repair Shops
1987	DANNYS UNION	General Automotive Repair Shops
1988	DANNYS UNION	General Automotive Repair Shops
1989	DANNYS UNION	General Automotive Repair Shops
1990	DANNYS UNION	General Automotive Repair Shops
1991	DANNYS UNION	General Automotive Repair Shops
1992	DANNYS UNION	General Automotive Repair Shops
1993	DANNYS UNICAL	General Automotive Repair Shops
1994	DANNYS UNICAL	Gasoline Service Stations
1995	DANNYS UNICAL	Gasoline Service Stations
1996	DANNYS UNICAL	Gasoline Service Stations
1997	DANNYS UNICAL	Gasoline Service Stations
1998	DANNYS UNICSERVICE	Gasoline Service Stations
1999	DANNYS UNICAL	Gasoline Service Stations
2000	DANNYS UNICAL	Gasoline Service Stations
2001	GAS PROS INC	Gasoline Service Stations
2001	R & A MALIK INC	Gasoline Service Stations
2002	GAS PROS INC	Gasoline Service Stations
2002	R & A MALIK INC	Gasoline Service Stations
2003	GAS PROS INC	Gasoline Service Stations
2005	JEMS ORANGE 76	Gasoline Service Stations
2005	DANNY S UNION 76 SERVICE	Gasoline Service Stations, NEC
2006	JEMS ORANGE 76	Gasoline Service Stations
2006	DANNY S UNION 76 SERVICE	Gasoline Service Stations, NEC
2007	JEMS ORANGE 76	Gasoline Service Stations
2008	JEMS ORANGE 76	Gasoline Service Stations
2008	DANNY S UNION 76 SERVICE	Gasoline Service Stations, NEC
2009	DANNY S UNION 76 SERVICE	Gasoline Service Stations, NEC
2009	JEMS ORANGE 76	Gasoline Service Stations
2010	JEMS ORANGE 76	Gasoline Service Stations
2010	DANNY S UNION 76 SERVICE	Gasoline Service Stations, NEC
2011	DANNY S UNION 76 SERVICE	Gasoline Service Stations, NEC
2012	DANNY S UNION 76 SERVICE	Gasoline Service Stations, NEC
2013	CADNICKS INC	Gasoline Service Stations
2014	CADNICKS INC	Gasoline Service Stations

A9 South < 1/8 0.099 mi. 525 ft. | **STATION #5299** | **HIST UST** | **U001577528** **N/A**
684 S GLASSELL ST
ORANGE, CA 92666

Site 6 of 7 in cluster A

Relative: Lower
Actual: 182 ft.

HIST UST:

File Number:	Not reported
URL:	Not reported
Region:	STATE
Facility ID:	00000043675
Facility Type:	Gas Station
Other Type:	Not reported
Contact Name:	DANIEL W. LENTZ
Telephone:	7146396720
Owner Name:	UNION OIL COMPANY OF CALIFORNI
Owner Address:	1450 FRAZEE ROAD
Owner City,St,Zip:	SAN DIEGO, CA 92108
Total Tanks:	0001
Tank Num:	001
Container Num:	5299-00
Year Installed:	1965
Tank Capacity:	00000000
Tank Used for:	WASTE
Type of Fuel:	Not reported
Container Construction Thickness:	6
Leak Detection:	Visual

A10 South < 1/8 0.099 mi. 525 ft. | **UNION OIL SERVICE STATION 529** | **HIST UST** | **U001577532** **N/A**
684 S GLASSELL
ORANGE, CA 92666

Site 7 of 7 in cluster A

Relative: Lower
Actual: 182 ft.

HIST UST:

File Number:	0002D601
URL:	http://geotracker.waterboards.ca.gov/ustpdfs/pdf/0002D601.pdf
Region:	STATE
Facility ID:	00000017859
Facility Type:	Gas Station
Other Type:	Not reported
Contact Name:	DANIEL LENTZ
Telephone:	7146396720
Owner Name:	UNION OIL COMPANY OF CALIFORNI
Owner Address:	123 CAMINO DELA REINA
Owner City,St,Zip:	SAN DIEGO, CA 92108
Total Tanks:	0003
Tank Num:	001
Container Num:	5299-34
Year Installed:	1965
Tank Capacity:	00000280
Tank Used for:	WASTE
Type of Fuel:	WASTE OIL
Container Construction Thickness:	Not reported
Leak Detection:	None
Tank Num:	002
Container Num:	5299-11

UNION OIL SERVICE STATION 529 (Continued) **U001577532**

Year Installed:	1965
Tank Capacity:	00010000
Tank Used for:	PRODUCT
Type of Fuel:	UNLEADED
Container Construction Thickness:	Not reported
Leak Detection:	Stock Inventor, 10

Tank Num:	003
Container Num:	5299-22
Year Installed:	1965
Tank Capacity:	00010000
Tank Used for:	PRODUCT
Type of Fuel:	PREMIUM
Container Construction Thickness:	Not reported
Leak Detection:	Stock Inventor, 10

Click here for Geo Tracker PDF:

11
North
1/8-1/4
0.236 mi.
1247 ft.

ROBERT J DUNN M D INC
392 S GLASSELL ST
ORANGE, CA 92866

RCRA-SQG **1000818722**
FINDS **CAD983646316**
ECHO

Relative:
Higher

Actual:
189 ft.

RCRA-SQG:

Date form received by agency:	08/20/1992
Facility name:	ROBERT J DUNN M D INC
Facility address:	392 S GLASSELL ST ORANGE, CA 92866
EPA ID:	CAD983646316
Contact:	MARGE DUNN
Contact address:	392 S GLASSELL ST ORANGE, CA 92666
Contact country:	US
Contact telephone:	714-997-4920
Contact email:	Not reported
EPA Region:	09
Classification:	Small Small Quantity Generator
Description:	Handler: generates more than 100 and less than 1000 kg of hazardous waste during any calendar month and accumulates less than 6000 kg of hazardous waste at any time; or generates 100 kg or less of hazardous waste during any calendar month, and accumulates more than 1000 kg of hazardous waste at any time

Owner/Operator Summary:

Owner/operator name:	ROBERT J DUNN M D INC
Owner/operator address:	392 S GLASSELL ST ORANGE, CA 92666
Owner/operator country:	Not reported
Owner/operator telephone:	714-997-4920
Owner/operator email:	Not reported
Owner/operator fax:	Not reported
Owner/operator extension:	Not reported
Legal status:	Private
Owner/Operator Type:	Owner
Owner/Op start date:	Not reported
Owner/Op end date:	Not reported

ROBERT J DUNN M D INC (Continued) **1000818722**

Handler Activities Summary:

U.S. importer of hazardous waste:	No
Mixed waste (haz. and radioactive):	No
Recycler of hazardous waste:	No
Transporter of hazardous waste:	No
Treater, storer or disposer of HW:	No
Underground injection activity:	No
On-site burner exemption:	No
Furnace exemption:	No
Used oil fuel burner:	No
Used oil processor:	No
User oil refiner:	No
Used oil fuel marketer to burner:	No
Used oil Specification marketer:	No
Used oil transfer facility:	No
Used oil transporter:	No

Violation Status: No violations found

FINDS:

Registry ID: 110008283936

Environmental Interest/Information System

California Hazardous Waste Tracking System - Datamart (HWTS-DATAMART) provides California with information on hazardous waste shipments for generators, transporters, and treatment, storage, and disposal facilities.

RCRAInfo is a national information system that supports the Resource Conservation and Recovery Act (RCRA) program through the tracking of events and activities related to facilities that generate, transport, and treat, store, or dispose of hazardous waste. RCRAInfo allows RCRA program staff to track the notification, permit, compliance, and corrective action activities required under RCRA.

Click this hyperlink while viewing on your computer to access additional FINDS: detail in the EDR Site Report.

ECHO:

Envid:	1000818722
Registry ID:	110008283936
DFR URL:	http://echo.epa.gov/detailed-facility-report?fid=110008283936

---

12 South 1/4-1/2 0.293 mi. 1549 ft. | **CREST CLEANERS** | **ENVIROSTOR** | **S106797630**
2739 NORTH GRAND AVENUE | **N/A**
SANTA ANA, CA 92701

Relative: Higher
Actual: 186 ft.

ENVIROSTOR:

Facility ID:	30720012
Status:	Refer: 1248 Local Agency
Status Date:	04/26/2001
Site Code:	Not reported
Site Type:	Evaluation

CREST CLEANERS (Continued) **S106797630**

Site Type Detailed: Evaluation
Acres: Not reported
NPL: NO
Regulatory Agencies: NONE SPECIFIED
Lead Agency: NONE SPECIFIED
Program Manager: Not reported
Supervisor: Referred - Not Assigned
Division Branch: Cleanup Cypress
Assembly: 69
Senate: Not reported
Special Program: Not reported
Restricted Use: NO
Site Mgmt Req: NONE SPECIFIED
Funding: Not Applicable
Latitude: 33.77445
Longitude: -117.8520
APN: NONE SPECIFIED
Past Use: NONE SPECIFIED
Potential COC: NONE SPECIFIED
Confirmed COC: NONE SPECIFIED
Potential Description: NONE SPECIFIED
Alias Name: 30720012
Alias Type: Envirostor ID Number

Completed Info:
Completed Area Name: PROJECT WIDE
Completed Sub Area Name: Not reported
Completed Document Type: SB 1248 Notification
Completed Date: 04/18/2001
Comments: SB 1248 Orange County

Future Area Name: Not reported
Future Sub Area Name: Not reported
Future Document Type: Not reported
Future Due Date: Not reported
Schedule Area Name: Not reported
Schedule Sub Area Name: Not reported
Schedule Document Type: Not reported
Schedule Due Date: Not reported
Schedule Revised Date: Not reported

B13 **GOODYEAR TIRE CENTER #1658** **LUST** **S102430890**
South **2705 GRAND AVE** **HIST CORTESE** **N/A**
1/4-1/2 **SANTA ANA, CA 92705**
0.350 mi.
1848 ft. **Site 1 of 3 in cluster B**

Relative:
Higher

Actual:
185 ft.

LUST REG 8:
Region: 8
County: Orange
Regional Board: Santa Ana Region
Facility Status: Case Closed
Case Number: 083002400T
Local Case Num: Not reported
Case Type: Soil only
Substance: Waste Oil
Qty Leaked: Not reported
Abate Method: Excavate and Dispose - remove contaminated soil and dispose in

GOODYEAR TIRE CENTER #1658 (Continued) **S102430890**

	approved site
Cross Street:	Not reported
Enf Type:	CLOS
Funding:	Not reported
How Discovered:	Tank Closure
How Stopped:	Not reported
Leak Cause:	UNK
Leak Source:	UNK
Global ID:	T0605901721
How Stopped Date:	11/10/1993
Enter Date:	4/11/1994
Date Confirmation of Leak Began:	Not reported
Date Preliminary Assessment Began:	10/24/1994
Discover Date:	11/10/1993
Enforcement Date:	Not reported
Close Date:	11/3/1994
Date Prelim Assessment Workplan Submitted:	Not reported
Date Pollution Characterization Began:	Not reported
Date Remediation Plan Submitted:	Not reported
Date Remedial Action Underway:	Not reported
Date Post Remedial Action Monitoring:	Not reported
Enter Date:	4/11/1994
GW Qualifies:	Not reported
Soil Qualifies:	Not reported
Operator:	Not reported
Facility Contact:	Not reported
Interim:	Yes
Oversite Program:	LUST
Latitude:	33.7101548
Longitude:	-117.8507901
MTBE Date:	Not reported
Max MTBE GW:	Not reported
MTBE Concentration:	0
Max MTBE Soil:	Not reported
MTBE Fuel:	0
MTBE Tested:	Not Required to be Tested.
MTBE Class:	*
Staff:	VJJ
Staff Initials:	JB
Lead Agency:	Local Agency
Local Agency:	Santa Ana, Orange County
Hydr Basin #:	COASTAL PLAIN OF ORA
Beneficial:	Not reported
Priority:	Not reported
Cleanup Fund Id:	Not reported
Work Suspended:	Not reported
Summary:	Not reported

HIST CORTESE:

Region:	CORTESE
Facility County Code:	30
Reg By:	LTNKA
Reg Id:	083002400T

B14 South 1/4-1/2 0.365 mi. 1929 ft. | **EXXON SERVICE STATION #3981**
2701 N. GRAND AVE
SANTA ANA, CA 92701

Site 2 of 3 in cluster B

LUST | **S105960692**
N/A

Relative: Lower

Actual: 184 ft.

LUST REG 8:

Region:	8
County:	Orange
Regional Board:	Santa Ana Region
Facility Status:	Case Closed
Case Number:	083000885T
Local Case Num:	Not reported
Case Type:	Soil only
Substance:	Gasoline
Qty Leaked:	Not reported
Abate Method:	Not reported
Cross Street:	FAIRHAVEN
Enf Type:	CLOS
Funding:	Not reported
How Discovered:	Tank Test
How Stopped:	Not reported
Leak Cause:	UNK
Leak Source:	Piping
Global ID:	T0605900699
How Stopped Date:	5/25/1988
Enter Date:	6/15/1988
Date Confirmation of Leak Began:	Not reported
Date Preliminary Assessment Began:	Not reported
Discover Date:	5/25/1988
Enforcement Date:	Not reported
Close Date:	5/4/1994
Date Prelim Assessment Workplan Submitted:	Not reported
Date Pollution Characterization Began:	6/22/1988
Date Remediation Plan Submitted:	Not reported
Date Remedial Action Underway:	Not reported
Date Post Remedial Action Monitoring:	Not reported
Enter Date:	6/15/1988
GW Qualifies:	Not reported
Soil Qualifies:	Not reported
Operator:	Not reported
Facility Contact:	Not reported
Interim:	Not reported
Oversite Program:	LUST
Latitude:	33.77346994
Longitude:	-117.8527474
MTBE Date:	Not reported
Max MTBE GW:	Not reported
MTBE Concentration:	0
Max MTBE Soil:	Not reported
MTBE Fuel:	1
MTBE Tested:	Site NOT Tested for MTBE.Includes Unknown and Not Analyzed.
MTBE Class:	*
Staff:	CAB
Staff Initials:	JB
Lead Agency:	Local Agency
Local Agency:	Santa Ana, Orange County
Hydr Basin #:	COASTAL PLAIN OF ORA
Beneficial:	Not reported

EXXON SERVICE STATION #3981 (Continued) **S105960692**

Priority: Not reported
Cleanup Fund Id: Not reported
Work Suspended: Not reported
Summary: Not reported

B15 **EXXON SERVICE STATION #3981** **LUST** **S109284566**
South **2701 N N. GRAND AVE** **N/A**
1/4-1/2 **SANTA ANA, CA 92701**
0.374 mi.
1974 ft. **Site 3 of 3 in cluster B**

Relative:
Lower

Actual:
183 ft.

LUST:
Lead Agency: SANTA ANA, CITY OF
Case Type: LUST Cleanup Site
Geo Track: http://geotracker.waterboards.ca.gov/profile_report.asp?global_id=T0605900699
Global Id: T0605900699
Latitude: 33.77346994
Longitude: -117.8527474
Status: Completed - Case Closed
Status Date: 05/04/1994
Case Worker: CC
RB Case Number: 083000885T
Local Agency: SANTA ANA, CITY OF
File Location: Not reported
Local Case Number: Not reported
Potential Media Affect: Soil
Potential Contaminants of Concern: Gasoline
Site History: Not reported

LUST:
Global Id: T0605900699
Contact Type: Regional Board Caseworker
Contact Name: CARL BERNHARDT
Organization Name: SANTA ANA RWQCB (REGION 8)
Address: 3737 MAIN STREET, SUITE 500
City: RIVERSIDE
Email: cbernhardt@waterboards.ca.gov
Phone Number: 9517824495

Global Id: T0605900699
Contact Type: Local Agency Caseworker
Contact Name: CHRISTOPHER CIRAULO
Organization Name: SANTA ANA, CITY OF
Address: 1439 S. BROADWAY
City: SANTA ANA
Email: cciraulo@santa-ana.org
Phone Number: Not reported

LUST:
Global Id: T0605900699
Action Type: ENFORCEMENT
Date: 05/04/1994
Action: Closure/No Further Action Letter

Global Id: T0605900699
Action Type: Other
Date: 05/25/1988
Action: Leak Discovery

EXXON SERVICE STATION #3981 (Continued) **S109284566**

Global Id: T0605900699
Action Type: Other
Date: 05/25/1988
Action: Leak Reported

Global Id: T0605900699
Action Type: Other
Date: 05/25/1988
Action: Leak Stopped

LUST:
Global Id: T0605900699
Status: Open - Case Begin Date
Status Date: 05/25/1988

Global Id: T0605900699
Status: Open - Site Assessment
Status Date: 06/22/1988

Global Id: T0605900699
Status: Completed - Case Closed
Status Date: 05/04/1994

C16 **AMF VOIT INC** **SEMS-ARCHIVE** **1000135647**
NNW **426 W ALMOND** **CORRACTS** **CAD049901176**
1/4-1/2 **ORANGE, CA 92866** **RCRA-TSDF**
0.486 mi. **RCRA-SQG**
2566 ft. **Site 1 of 2 in cluster C** **ENVIROSTOR**
Orange Co. Industrial Site
Relative: **FINDS**
Lower **ECHO**
Actual: **HWP**
184 ft.

SEMS Archive:
Site ID: 900117
EPA ID: CAD049901176
Cong District: 39
FIPS Code: 6059
FF: N
NPL: Not on the NPL
Non NPL Status: NFRAP-Site does not qualify for the NPL based on existing information

SEMS Archive Detail:
Region: 9
Site ID: 900117
EPA ID: CAD049901176
Site Name: AMF VOIT INC
NPL: N
FF: N
OU: 0
Action Code: VS
Action Name: ARCH SITE
SEQ: 1
Start Date: Not reported
Finish Date: 1989-10-06 00:00:00
Qual: Not reported
Current Action Lead: EPA Perf In-Hse

AMF VOIT INC (Continued) **1000135647**

Region:	9
Site ID:	900117
EPA ID:	CAD049901176
Site Name:	AMF VOIT INC
NPL:	N
FF:	N
OU:	0
Action Code:	PA
Action Name:	PA
SEQ:	1
Start Date:	Not reported
Finish Date:	1989-10-06 00:00:00
Qual:	N
Current Action Lead:	St Perf

Region:	9
Site ID:	900117
EPA ID:	CAD049901176
Site Name:	AMF VOIT INC
NPL:	N
FF:	N
OU:	0
Action Code:	DS
Action Name:	DISCVRY
SEQ:	1
Start Date:	1987-12-01 00:00:00
Finish Date:	1987-12-01 00:00:00
Qual:	Not reported
Current Action Lead:	St Perf

CORRACTS:

EPA ID:	CAD049901176
EPA Region:	9
Area Name:	ENTIRE FACILITY
Actual Date:	19881007
Action:	CA049PA
NAICS Code(s):	339932 33992 Game, Toy, and Children's Vehicle Manufacturing Sporting and Athletic Goods Manufacturing
Original schedule date:	Not reported
Schedule end date:	Not reported

EPA ID:	CAD049901176
EPA Region:	9
Area Name:	ENTIRE FACILITY
Actual Date:	19881007
Action:	CA075LO - CA Prioritization, Facility or area was assigned a low corrective action priority
NAICS Code(s):	339932 33992 Game, Toy, and Children's Vehicle Manufacturing Sporting and Athletic Goods Manufacturing
Original schedule date:	Not reported
Schedule end date:	Not reported

AMF VOIT INC (Continued) **1000135647**

EPA ID: CAD049901176
EPA Region: 9
Area Name: ENTIRE FACILITY
Actual Date: 19881007
Action: CA074LO
NAICS Code(s): 339932 33992
Game, Toy, and Children's Vehicle Manufacturing
Sporting and Athletic Goods Manufacturing
Original schedule date: Not reported
Schedule end date: Not reported

EPA ID: CAD049901176
EPA Region: 9
Area Name: ENTIRE FACILITY
Actual Date: 19881007
Action: CA050 - RFA Completed
NAICS Code(s): 339932 33992
Game, Toy, and Children's Vehicle Manufacturing
Sporting and Athletic Goods Manufacturing
Original schedule date: Not reported
Schedule end date: Not reported

RCRA-TSDF:
Date form received by agency: 09/01/1996
Facility name: AMF VOIT INC
Facility address: 426 W ALMOND
ORANGE, CA 92866
EPA ID: CAD049901176
Contact: Not reported
Contact address: Not reported
Not reported
Contact country: US
Contact telephone: Not reported
Contact email: Not reported
EPA Region: 09
Land type: Private
Classification: TSDF
Description: Handler is engaged in the treatment, storage or disposal of hazardous waste

Owner/Operator Summary:
Owner/operator name: AMF INCORPORATED
Owner/operator address: NOT REQUIRED
NOT REQUIRED, ME 99999
Owner/operator country: Not reported
Owner/operator telephone: 415-555-1212
Owner/operator email: Not reported
Owner/operator fax: Not reported
Owner/operator extension: Not reported
Legal status: Private
Owner/Operator Type: Owner
Owner/Op start date: Not reported
Owner/Op end date: Not reported

Owner/operator name: A M F VOIT INC
Owner/operator address: 3801 S HARBOR BLVD

AMF VOIT INC (Continued) **1000135647**

	SANTA ANA, CA 92704
Owner/operator country:	Not reported
Owner/operator telephone:	714-546-4220
Owner/operator email:	Not reported
Owner/operator fax:	Not reported
Owner/operator extension:	Not reported
Legal status:	Private
Owner/Operator Type:	Operator
Owner/Op start date:	Not reported
Owner/Op end date:	Not reported

Owner/operator name:	LYLE SHELTON AND JOSEPH LAMONICA
Owner/operator address:	427 W PALMYRA ST
	ORANGE, CA 92666
Owner/operator country:	Not reported
Owner/operator telephone:	415-555-1212
Owner/operator email:	Not reported
Owner/operator fax:	Not reported
Owner/operator extension:	Not reported
Legal status:	Private
Owner/Operator Type:	Owner
Owner/Op start date:	Not reported
Owner/Op end date:	Not reported

Handler Activities Summary:

U.S. importer of hazardous waste:	No
Mixed waste (haz. and radioactive):	No
Recycler of hazardous waste:	No
Transporter of hazardous waste:	No
Treater, storer or disposer of HW:	No
Underground injection activity:	No
On-site burner exemption:	No
Furnace exemption:	No
Used oil fuel burner:	No
Used oil processor:	No
User oil refiner:	No
Used oil fuel marketer to burner:	No
Used oil Specification marketer:	No
Used oil transfer facility:	No
Used oil transporter:	No

Historical Generators:

Date form received by agency:	08/18/1980
Site name:	AMF VOIT INC
Classification:	Not a generator, verified

Corrective Action Summary:

Event date:	10/07/1988
Event:	PA OR CERCLA INSPECTION
Event date:	10/07/1988
Event:	CA PRIORITIZATION-LOW CA PRIORITY
Event date:	10/07/1988
Event:	NCAPS RANKING/PRIORITY

AMF VOIT INC (Continued) **1000135647**

Event date: 10/07/1988
Event: RFA COMPLETED

Facility Has Received Notices of Violations:
Regulation violated: F - 262.10-12.A
Area of violation: Generators - General
Date violation determined: 08/29/1986
Date achieved compliance: 12/01/1987
Violation lead agency: State
Enforcement action: Not reported
Enforcement action date: Not reported
Enf. disposition status: Not reported
Enf. disp. status date: Not reported
Enforcement lead agency: Not reported
Proposed penalty amount: Not reported
Final penalty amount: Not reported
Paid penalty amount: Not reported

Evaluation Action Summary:
Evaluation date: 03/11/1992
Evaluation: COMPLIANCE EVALUATION INSPECTION ON-SITE
Area of violation: Not reported
Date achieved compliance: Not reported
Evaluation lead agency: State

Evaluation date: 08/26/1987
Evaluation: FINANCIAL RECORD REVIEW
Area of violation: Not reported
Date achieved compliance: Not reported
Evaluation lead agency: State

Evaluation date: 08/29/1986
Evaluation: COMPLIANCE EVALUATION INSPECTION ON-SITE
Area of violation: Generators - General
Date achieved compliance: 12/01/1987
Evaluation lead agency: State

Evaluation date: 08/04/1986
Evaluation: FINANCIAL RECORD REVIEW
Area of violation: Not reported
Date achieved compliance: Not reported
Evaluation lead agency: State

ENVIROSTOR:
Facility ID: 80001403
Status: * Completed
Status Date: 01/01/2008
Site Code: Not reported
Site Type: Corrective Action
Site Type Detailed: Corrective Action
Acres: 0
NPL: NO
Regulatory Agencies: NONE SPECIFIED
Lead Agency: NONE SPECIFIED
Program Manager: Not reported
Supervisor: * Unknown
Division Branch: Cleanup Cypress

AMF VOIT INC (Continued) **1000135647**

Assembly: 68
Senate: 37
Special Program: Not reported
Restricted Use: NO
Site Mgmt Req: NONE SPECIFIED
Funding: Not reported
Latitude: 33.78517
Longitude: -117.8571
APN: NONE SPECIFIED
Past Use: NONE SPECIFIED
Potential COC: NONE SPECIFIED
Confirmed COC: NONE SPECIFIED
Potential Description: NONE SPECIFIED
Alias Name: CAD049901176
Alias Type: EPA Identification Number
Alias Name: 30340005
Alias Type: Envirostor ID Number
Alias Name: 80001403
Alias Type: Envirostor ID Number

Completed Info:
Completed Area Name: PROJECT WIDE
Completed Sub Area Name: Not reported
Completed Document Type: RCRA Facility Assessment Report
Completed Date: 10/07/1988
Comments: Not reported

Completed Area Name: PROJECT WIDE
Completed Sub Area Name: Not reported
Completed Document Type: Preliminary Assessment Report
Completed Date: 06/01/1988
Comments: A PA conducted. PA states NFA. Date of PA is listed as June 1988.

Completed Area Name: PROJECT WIDE
Completed Sub Area Name: Not reported
Completed Document Type: Consent Order
Completed Date: 06/01/1988
Comments: Not reported

Completed Area Name: PROJECT WIDE
Completed Sub Area Name: Not reported
Completed Document Type: RCRA Facility Assessment Report
Completed Date: 10/07/1988
Comments: Not reported

Completed Area Name: PROJECT WIDE
Completed Sub Area Name: Not reported
Completed Document Type: * CA Process is Terminated
Completed Date: 06/01/1988
Comments: A PA conducted. PA states NFA. Date of PA is listed as June 1988.

Future Area Name: Not reported
Future Sub Area Name: Not reported
Future Document Type: Not reported
Future Due Date: Not reported
Schedule Area Name: Not reported
Schedule Sub Area Name: Not reported
Schedule Document Type: Not reported

AMF VOIT INC (Continued) **1000135647**

Schedule Due Date: Not reported
Schedule Revised Date: Not reported

Orange Co. Industrial Site:
Case ID: 07IC002
Record ID: RO0003429
Current Status: CLOSED 6/23/2008
Closure Type: Closure certification issued
Released Chemical: TRICHLOROETHYLENE, PERCHLOROETHYLENE

FINDS:

Registry ID: 110000913398

Environmental Interest/Information System
RCRAInfo is a national information system that supports the Resource Conservation and Recovery Act (RCRA) program through the tracking of events and activities related to facilities that generate, transport, and treat, store, or dispose of hazardous waste. RCRAInfo allows RCRA program staff to track the notification, permit, compliance, and corrective action activities required under RCRA.

Click this hyperlink while viewing on your computer to access additional FINDS: detail in the EDR Site Report.

ECHO:
Envid: 1000135647
Registry ID: 110000913398
DFR URL: http://echo.epa.gov/detailed-facility-report?fid=110000913398

HWP:
EPA Id: CAD049901176
Cleanup Status: NON-OPERATING
Latitude: 33.78643
Longitude: -117.8564
Facility Type: Historical - Non-Operating
Facility Size: Not reported
Team: Not reported
Supervisor: Not reported
Site Code: Not reported
Assembly District: 68
Senate District: 37
Public Information Officer: Not reported
Public Information Officer: Not reported

Activities:
EPA Id: CAD049901176
Facility Type: Historical - Non-Operating
Unit Names: CONTAIN1, TANKTRT1
Event Description: New Operating Permit - APPLICATION PART A RECEIVED
Actual Date: 11/04/1980

EPA Id: CAD049901176
Facility Type: Historical - Non-Operating
Unit Names: CONTAIN1, TANKTRT1

AMF VOIT INC (Continued) **1000135647**

Event Description: New Operating Permit - FINAL PERMIT - WITHDRAWAL REQUEST ACKNOWLEDGED
Actual Date: 11/09/1992

EPA Id: CAD049901176
Facility Type: Historical - Non-Operating
Unit Names: CONTAIN1, TANKTRT1
Event Description: New Operating Permit - FINAL PERMIT - WITHDRAWAL REQUEST RECEIVED
Actual Date: 06/08/1981

Alias:
EPA Id: CAD049901176
Facility Type: Historical - Non-Operating
Alias Type: Envirostor ID Number
Alias: 30340005

C17 **AMF NEWPORT DIVERS** **ENVIROSTOR** **S101481447**
NNW **426 WEST ALMOND** **N/A**
1/4-1/2 **ORANGE, CA 92667**
0.486 mi.
2566 ft. **Site 2 of 2 in cluster C**

Relative:
Lower

Actual:
184 ft.

ENVIROSTOR:
Facility ID: 30340005
Status: Refer: Other Agency
Status Date: 06/21/1988
Site Code: Not reported
Site Type: Historical
Site Type Detailed: * Historical
Acres: Not reported
NPL: NO
Regulatory Agencies: NONE SPECIFIED
Lead Agency: NONE SPECIFIED
Program Manager: Not reported
Supervisor: * Mmonroy
Division Branch: Cleanup Cypress
Assembly: 68
Senate: 37
Special Program: * CERC2
Restricted Use: NO
Site Mgmt Req: NONE SPECIFIED
Funding: Not reported
Latitude: 33.78517
Longitude: -117.8571
APN: NONE SPECIFIED
Past Use: NONE SPECIFIED
Potential COC: * HALOGENATED SOLVENTS * Metals - Other Inorganic Solid Waste * ACID SOLUTION 2>PH WITH METALS * UNSPECIFIED ACID SOLUTION * UNSPECIFIED OIL CONTAINING WASTE * UNSPECIFIED SLUDGE WASTE * UNSPECIFIED SOLVENT MIXTURES Cyanide (free Nickel
Confirmed COC: NONE SPECIFIED
Potential Description: NONE SPECIFIED
Alias Name: JBL ENTERPRISES
Alias Type: Alternate Name
Alias Name: CAD049901176
Alias Type: EPA Identification Number
Alias Name: 30340005

AMF NEWPORT DIVERS (Continued) **S101481447**

Alias Type: Envirostor ID Number

Completed Info:

Completed Area Name: PROJECT WIDE
Completed Sub Area Name: Not reported
Completed Document Type: Site Screening
Completed Date: 10/26/1994
Comments: DATABASE VALIDATION PROGRAM CONFIRMS NFA FOR DTSC.

Completed Area Name: PROJECT WIDE
Completed Sub Area Name: Not reported
Completed Document Type: Preliminary Assessment Report
Completed Date: 06/30/1988
Comments: PRELIM ASSESS DONE NO FURTHER ACTION, NO GROUNDWATER OR SURFACEWATER CONTAMINATION

Completed Area Name: PROJECT WIDE
Completed Sub Area Name: Not reported
Completed Document Type: Site Screening
Completed Date: 03/26/1987
Comments: DRIVE-BY REQUIRED SITE SCREENING DONE RATIONALE FOR PA: NEED ADDITIONAL INFO.

Completed Area Name: PROJECT WIDE
Completed Sub Area Name: Not reported
Completed Document Type: * Discovery
Completed Date: 09/06/1982
Comments: FACILITY IDENTIFIED I'D FROM ASP FILES

Future Area Name: Not reported
Future Sub Area Name: Not reported
Future Document Type: Not reported
Future Due Date: Not reported
Schedule Area Name: Not reported
Schedule Sub Area Name: Not reported
Schedule Document Type: Not reported
Schedule Due Date: Not reported
Schedule Revised Date: Not reported

18
South
1/2-1
0.555 mi.
2928 ft.

ACE CLEANERS **ENVIROSTOR** **S106797624**
2525 NORTH GRAND AVENUE **N/A**
SANTA ANA, CA 92705

Relative:
Lower

Actual:
182 ft.

ENVIROSTOR:

Facility ID: 30720004
Status: Refer: 1248 Local Agency
Status Date: 04/05/2004
Site Code: Not reported
Site Type: Evaluation
Site Type Detailed: Evaluation
Acres: 0
NPL: NO
Regulatory Agencies: ORANGE COUNTY
Lead Agency: ORANGE COUNTY
Program Manager: Not reported
Supervisor: Referred - Not Assigned

ACE CLEANERS (Continued) **S106797624**

Division Branch:	Cleanup Cypress
Assembly:	69
Senate:	34
Special Program:	Not reported
Restricted Use:	NO
Site Mgmt Req:	NONE SPECIFIED
Funding:	Not Applicable
Latitude:	33.77089
Longitude:	-117.8515
APN:	396-361-05
Past Use:	NONE SPECIFIED
Potential COC:	NONE SPECIFIED
Confirmed COC:	NONE SPECIFIED
Potential Description:	NONE SPECIFIED
Alias Name:	396-361-05
Alias Type:	APN
Alias Name:	30720004
Alias Type:	Envirostor ID Number

Completed Info:

Completed Area Name:	Not reported
Completed Sub Area Name:	Not reported
Completed Document Type:	Not reported
Completed Date:	Not reported
Comments:	Not reported
Future Area Name:	Not reported
Future Sub Area Name:	Not reported
Future Document Type:	Not reported
Future Due Date:	Not reported
Schedule Area Name:	Not reported
Schedule Sub Area Name:	Not reported
Schedule Document Type:	Not reported
Schedule Due Date:	Not reported
Schedule Revised Date:	Not reported

D19 **SO CAL GAS/ORANGE MGP** **ENVIROSTOR** **S101481479**
NNW **E OF PIXSLEY ST BTW CHAPMAN & ALMOND AVE** **VCP** **N/A**
1/2-1 **ORANGE, CA 92868**
0.574 mi.
3029 ft. **Site 1 of 2 in cluster D**

Relative:
Lower

Actual:
182 ft.

ENVIROSTOR:

Facility ID:	30490106
Status:	Active
Status Date:	11/16/2017
Site Code:	401811
Site Type:	Voluntary Cleanup
Site Type Detailed:	Voluntary Cleanup
Acres:	0.25
NPL:	NO
Regulatory Agencies:	SMBRP
Lead Agency:	SMBRP
Program Manager:	Rania Zabaneh
Supervisor:	Eileen Mananian
Division Branch:	Cleanup Cypress
Assembly:	68
Senate:	37

SO CAL GAS/ORANGE MGP (Continued) **S101481479**

Special Program: Voluntary Cleanup Program
Restricted Use: NO
Site Mgmt Req: NONE SPECIFIED
Funding: Responsible Party
Latitude: 33.78710
Longitude: -117.8575
APN: NONE SPECIFIED
Past Use: MANUFACTURED GAS PLANT
Potential COC: Polynuclear aromatic hydrocarbons (PAHs
Confirmed COC: Polynuclear aromatic hydrocarbons (PAHs
Potential Description: SOIL
Alias Name: SOUTHERN CALIFORNIA GAS
Alias Type: Alternate Name
Alias Name: SOUTHERN CALIFORNIA GAS COMPANY
Alias Type: Alternate Name
Alias Name: TOWN GAS PLANT ORANGE #1
Alias Type: Alternate Name
Alias Name: 110033606042
Alias Type: EPA (FRS #)
Alias Name: 400293
Alias Type: Project Code (Site Code)
Alias Name: 401811
Alias Type: Project Code (Site Code)
Alias Name: 30490106
Alias Type: Envirostor ID Number

Completed Info:
Completed Area Name: PROJECT WIDE
Completed Sub Area Name: Not reported
Completed Document Type: Certification
Completed Date: 06/08/1994
Comments: Not reported

Completed Area Name: PROJECT WIDE
Completed Sub Area Name: Not reported
Completed Document Type: * Engineering Evaluation / Cost Analysis
Completed Date: 06/30/1993
Comments: Not reported

Completed Area Name: PROJECT WIDE
Completed Sub Area Name: Not reported
Completed Document Type: Preliminary Endangerment Assessment Report
Completed Date: 03/12/1992
Comments: DTSC approved So. Cal. Gas Co.PEA Report recomm. a removal action be performed to reduce risk of future exposure to the "lamp black" material buried on site.

Completed Area Name: PROJECT WIDE
Completed Sub Area Name: Not reported
Completed Document Type: Site Screening
Completed Date: 06/06/1991
Comments: Department requested that a preliminary endangerment Assessment be conducted on 02/27/1991. Southern California Gas Company representatives discussed PEA with DHS on 5/8/91. Contractors will conduct preliminary investigation activities with DHS supervision.

Completed Area Name: PROJECT WIDE
Completed Sub Area Name: Not reported

SO CAL GAS/ORANGE MGP (Continued) **S101481479**

Completed Document Type: Removal Action Completion Report
Completed Date: 03/08/1994
Comments: Not reported

Completed Area Name: PROJECT WIDE
Completed Sub Area Name: Not reported
Completed Document Type: Other Report
Completed Date: 05/17/2017
Comments: DTSC reviewed the documents regarding the construction project that SoCalGas is currently undertaking and which revealed PAHs contamination not previously removed, had a conference call with SoCalGas and their consultant (on 5/10/2017), and discussed the situation internally. DTSC then emailed Ben Ellis of SoCalGas that DTSC is not requiring a VCA at this time and to submit a Tech Memo with their plans to remove and dispose of the contaminated soils and after the fieldwork is done to submit a completion report for DTSC's review.

Completed Area Name: PROJECT WIDE
Completed Sub Area Name: Not reported
Completed Document Type: Technical Report
Completed Date: 04/24/2018
Comments: See response to comment # 3 in the RTCs from the Obeservation and Monitoring Report. This activity is closed.

Completed Area Name: PROJECT WIDE
Completed Sub Area Name: Not reported
Completed Document Type: Fieldwork
Completed Date: 04/25/2018
Comments: Not reported

Completed Area Name: PROJECT WIDE
Completed Sub Area Name: Not reported
Completed Document Type: * CEQA
Completed Date: 12/13/1993
Comments: Not reported

Completed Area Name: PROJECT WIDE
Completed Sub Area Name: Not reported
Completed Document Type: Voluntary Cleanup Agreement
Completed Date: 08/20/1993
Comments: Not reported

Future Area Name: PROJECT WIDE
Future Sub Area Name: Not reported
Future Document Type: Certification
Future Due Date: 2019
Future Area Name: PROJECT WIDE
Future Sub Area Name: Not reported
Future Document Type: Land Use Restriction
Future Due Date: 2019
Schedule Area Name: PROJECT WIDE
Schedule Sub Area Name: Not reported
Schedule Document Type: Public Notice
Schedule Due Date: 06/30/2019
Schedule Revised Date: Not reported
Schedule Area Name: PROJECT WIDE

SO CAL GAS/ORANGE MGP (Continued) **S101481479**

Schedule Sub Area Name:	Not reported
Schedule Document Type:	CEQA - Notice of Exemption
Schedule Due Date:	06/30/2019
Schedule Revised Date:	Not reported
Schedule Area Name:	PROJECT WIDE
Schedule Sub Area Name:	Not reported
Schedule Document Type:	De-Certification
Schedule Due Date:	06/30/2019
Schedule Revised Date:	Not reported

VCP:

Facility ID:	30490106
Site Type:	Voluntary Cleanup
Site Type Detail:	Voluntary Cleanup
Site Mgmt. Req.:	NONE SPECIFIED
Acres:	0.25
National Priorities List:	NO
Cleanup Oversight Agencies:	SMBRP
Lead Agency:	SMBRP
Lead Agency Description:	DTSC - Site Cleanup Program
Project Manager:	Rania Zabaneh
Supervisor:	Eileen Mananian
Division Branch:	Cleanup Cypress
Site Code:	401811
Assembly:	68
Senate:	37
Special Programs Code:	Voluntary Cleanup Program
Status:	Active
Status Date:	11/16/2017
Restricted Use:	NO
Funding:	Responsible Party
Lat/Long:	33.78710 / -117.8575
APN:	NONE SPECIFIED
Past Use:	MANUFACTURED GAS PLANT
Potential COC:	30019
Confirmed COC:	30019
Potential Description:	SOIL
Alias Name:	SOUTHERN CALIFORNIA GAS
Alias Type:	Alternate Name
Alias Name:	SOUTHERN CALIFORNIA GAS COMPANY
Alias Type:	Alternate Name
Alias Name:	TOWN GAS PLANT ORANGE #1
Alias Type:	Alternate Name
Alias Name:	110033606042
Alias Type:	EPA (FRS #)
Alias Name:	400293
Alias Type:	Project Code (Site Code)
Alias Name:	401811
Alias Type:	Project Code (Site Code)
Alias Name:	30490106
Alias Type:	Envirostor ID Number

Completed Info:

Completed Area Name:	PROJECT WIDE
Completed Sub Area Name:	Not reported
Completed Document Type:	Certification
Completed Date:	06/08/1994

SO CAL GAS/ORANGE MGP (Continued) **S101481479**

Comments: Not reported

Completed Area Name: PROJECT WIDE
Completed Sub Area Name: Not reported
Completed Document Type: * Engineering Evaluation / Cost Analysis
Completed Date: 06/30/1993
Comments: Not reported

Completed Area Name: PROJECT WIDE
Completed Sub Area Name: Not reported
Completed Document Type: Preliminary Endangerment Assessment Report
Completed Date: 03/12/1992
Comments: DTSC approved So. Cal. Gas Co.PEA Report recomm. a removal action be performed to reduce risk of future exposure to the "lamp black" material buried on site.

Completed Area Name: PROJECT WIDE
Completed Sub Area Name: Not reported
Completed Document Type: Site Screening
Completed Date: 06/06/1991
Comments: Department requested that a preliminary endangerment Assessment be conducted on 02/27/1991. Southern California Gas Company representatives discussed PEA with DHS on 5/8/91. Contractors will conduct preliminary investigation activities with DHS supervision.

Completed Area Name: PROJECT WIDE
Completed Sub Area Name: Not reported
Completed Document Type: Removal Action Completion Report
Completed Date: 03/08/1994
Comments: Not reported

Completed Area Name: PROJECT WIDE
Completed Sub Area Name: Not reported
Completed Document Type: Other Report
Completed Date: 05/17/2017
Comments: DTSC reviewed the documents regarding the construction project that SoCalGas is currently undertaking and which revealed PAHs contamination not previously removed, had a conference call with SoCalGas and their consultant (on 5/10/2017), and discussed the situation internally. DTSC then emailed Ben Ellis of SoCalGas that DTSC is not requiring a VCA at this time and to submit a Tech Memo with their plans to remove and dispose of the contaminated soils and after the fieldwork is done to submit a completion report for DTSC's review.

Completed Area Name: PROJECT WIDE
Completed Sub Area Name: Not reported
Completed Document Type: Technical Report
Completed Date: 04/24/2018
Comments: See response to comment # 3 in the RTCs from the Obeservation and Monitoring Report. This activity is closed.

Completed Area Name: PROJECT WIDE
Completed Sub Area Name: Not reported
Completed Document Type: Fieldwork
Completed Date: 04/25/2018
Comments: Not reported

SO CAL GAS/ORANGE MGP (Continued) **S101481479**

Completed Area Name:	PROJECT WIDE
Completed Sub Area Name:	Not reported
Completed Document Type:	* CEQA
Completed Date:	12/13/1993
Comments:	Not reported

Completed Area Name:	PROJECT WIDE
Completed Sub Area Name:	Not reported
Completed Document Type:	Voluntary Cleanup Agreement
Completed Date:	08/20/1993
Comments:	Not reported

Future Area Name:	PROJECT WIDE
Future Sub Area Name:	Not reported
Future Document Type:	Certification
Future Due Date:	2019
Future Area Name:	PROJECT WIDE
Future Sub Area Name:	Not reported
Future Document Type:	Land Use Restriction
Future Due Date:	2019
Schedule Area Name:	PROJECT WIDE
Schedule Sub Area Name:	Not reported
Schedule Document Type:	Public Notice
Schedule Due Date:	06/30/2019
Schedule Revised Date:	Not reported
Schedule Area Name:	PROJECT WIDE
Schedule Sub Area Name:	Not reported
Schedule Document Type:	CEQA - Notice of Exemption
Schedule Due Date:	06/30/2019
Schedule Revised Date:	Not reported
Schedule Area Name:	PROJECT WIDE
Schedule Sub Area Name:	Not reported
Schedule Document Type:	De-Certification
Schedule Due Date:	06/30/2019
Schedule Revised Date:	Not reported

D20 **SO CAL GAS/ORANGE MGP** **EDR MGP** **1008407728**
NNW **E OF PIXSLEY BTW CHAPMAN AND ALMOND** **N/A**
1/2-1 **ORANGE, CA 92666**
0.615 mi.
3249 ft. **Site 2 of 2 in cluster D**

Relative:
Lower

Actual:
180 ft.

Manufactured Gas Plants:

The site is on a 0.25 acre lot located in the City of Orange. The MGP operated from 1905 to 1911. The site is currently used as an unmanned natural gas meter and regulator station. A PEA approved in April 1993 revealed that the site's soil is impacteed with PAHs and TPH. Groundwater does not appear to be affected. A Removal Action is scheduled in September 1993 to remove 2 - 6 feet of the site's surface soil to health base levels.

21
SW
1/2-1
0.915 mi.
4830 ft.

UNOCAL
2525 NORTH MAIN
SANTA ANA, CA 90603

Notify 65

S100178946
N/A

Relative:
Lower

Actual:
149 ft.

NOTIFY 65:

Date Reported:	Not reported
Staff Initials:	Not reported
Board File Number:	Not reported
Facility Type:	Not reported
Discharge Date:	Not reported
Issue Date:	Not reported
Incident Description:	Not reported

Count: 0 records.

ORPHAN SUMMARY

City	EDR ID	Site Name	Site Address	Zip	Database(s)
		NO SITES FOUND			

GOVERNMENT RECORDS SEARCHED / DATA CURRENCY TRACKING

To maintain currency of the following federal and state databases, EDR contacts the appropriate governmental agency on a monthly or quarterly basis, as required.

Number of Days to Update: Provides confirmation that EDR is reporting records that have been updated within 90 days from the date the government agency made the information available to the public.

STANDARD ENVIRONMENTAL RECORDS

Federal NPL site list

NPL: National Priority List

National Priorities List (Superfund). The NPL is a subset of CERCLIS and identifies over 1,200 sites for priority cleanup under the Superfund Program. NPL sites may encompass relatively large areas. As such, EDR provides polygon coverage for over 1,000 NPL site boundaries produced by EPA's Environmental Photographic Interpretation Center (EPIC) and regional EPA offices.

Date of Government Version: 07/17/2018
Date Data Arrived at EDR: 08/09/2018
Date Made Active in Reports: 09/07/2018
Number of Days to Update: 29

Source: EPA
Telephone: N/A
Last EDR Contact: 08/09/2018
Next Scheduled EDR Contact: 10/15/2018
Data Release Frequency: Quarterly

NPL Site Boundaries

Sources:

EPA's Environmental Photographic Interpretation Center (EPIC)
Telephone: 202-564-7333

EPA Region 1
Telephone 617-918-1143

EPA Region 6
Telephone: 214-655-6659

EPA Region 3
Telephone 215-814-5418

EPA Region 7
Telephone: 913-551-7247

EPA Region 4
Telephone 404-562-8033

EPA Region 8
Telephone: 303-312-6774

EPA Region 5
Telephone 312-886-6686

EPA Region 9
Telephone: 415-947-4246

EPA Region 10
Telephone 206-553-8665

Proposed NPL: Proposed National Priority List Sites

A site that has been proposed for listing on the National Priorities List through the issuance of a proposed rule in the Federal Register. EPA then accepts public comments on the site, responds to the comments, and places on the NPL those sites that continue to meet the requirements for listing.

Date of Government Version: 07/17/2018
Date Data Arrived at EDR: 08/09/2018
Date Made Active in Reports: 09/07/2018
Number of Days to Update: 29

Source: EPA
Telephone: N/A
Last EDR Contact: 08/09/2018
Next Scheduled EDR Contact: 10/15/2018
Data Release Frequency: Quarterly

NPL LIENS: Federal Superfund Liens

Federal Superfund Liens. Under the authority granted the USEPA by CERCLA of 1980, the USEPA has the authority to file liens against real property in order to recover remedial action expenditures or when the property owner received notification of potential liability. USEPA compiles a listing of filed notices of Superfund Liens.

Date of Government Version: 10/15/1991
Date Data Arrived at EDR: 02/02/1994
Date Made Active in Reports: 03/30/1994
Number of Days to Update: 56

Source: EPA
Telephone: 202-564-4267
Last EDR Contact: 08/15/2011
Next Scheduled EDR Contact: 11/28/2011
Data Release Frequency: No Update Planned

Federal Delisted NPL site list

Delisted NPL: National Priority List Deletions

The National Oil and Hazardous Substances Pollution Contingency Plan (NCP) establishes the criteria that the EPA uses to delete sites from the NPL. In accordance with 40 CFR 300.425.(e), sites may be deleted from the NPL where no further response is appropriate.

Date of Government Version: 07/17/2018
Date Data Arrived at EDR: 08/09/2018
Date Made Active in Reports: 09/07/2018
Number of Days to Update: 29

Source: EPA
Telephone: N/A
Last EDR Contact: 08/09/2018
Next Scheduled EDR Contact: 10/15/2018
Data Release Frequency: Quarterly

Federal CERCLIS list

FEDERAL FACILITY: Federal Facility Site Information listing

A listing of National Priority List (NPL) and Base Realignment and Closure (BRAC) sites found in the Comprehensive Environmental Response, Compensation and Liability Information System (CERCLIS) Database where EPA Federal Facilities Restoration and Reuse Office is involved in cleanup activities.

Date of Government Version: 11/07/2016
Date Data Arrived at EDR: 01/05/2017
Date Made Active in Reports: 04/07/2017
Number of Days to Update: 92

Source: Environmental Protection Agency
Telephone: 703-603-8704
Last EDR Contact: 07/06/2018
Next Scheduled EDR Contact: 10/15/2018
Data Release Frequency: Varies

SEMS: Superfund Enterprise Management System

SEMS (Superfund Enterprise Management System) tracks hazardous waste sites, potentially hazardous waste sites, and remedial activities performed in support of EPA's Superfund Program across the United States. The list was formerly know as CERCLIS, renamed to SEMS by the EPA in 2015. The list contains data on potentially hazardous waste sites that have been reported to the USEPA by states, municipalities, private companies and private persons, pursuant to Section 103 of the Comprehensive Environmental Response, Compensation, and Liability Act (CERCLA). This dataset also contains sites which are either proposed to or on the National Priorities List (NPL) and the sites which are in the screening and assessment phase for possible inclusion on the NPL.

Date of Government Version: 07/17/2018
Date Data Arrived at EDR: 08/09/2018
Date Made Active in Reports: 09/07/2018
Number of Days to Update: 29

Source: EPA
Telephone: 800-424-9346
Last EDR Contact: 08/09/2018
Next Scheduled EDR Contact: 10/29/2018
Data Release Frequency: Quarterly

Federal CERCLIS NFRAP site list

SEMS-ARCHIVE: Superfund Enterprise Management System Archive

SEMS-ARCHIVE (Superfund Enterprise Management System Archive) tracks sites that have no further interest under the Federal Superfund Program based on available information. The list was formerly known as the CERCLIS-NFRAP, renamed to SEMS ARCHIVE by the EPA in 2015. EPA may perform a minimal level of assessment work at a site while it is archived if site conditions change and/or new information becomes available. Archived sites have been removed and archived from the inventory of SEMS sites. Archived status indicates that, to the best of EPA's knowledge, assessment at a site has been completed and that EPA has determined no further steps will be taken to list the site on the National Priorities List (NPL), unless information indicates this decision was not appropriate or other considerations require a recommendation for listing at a later time. The decision does not necessarily mean that there is no hazard associated with a given site; it only means that. based upon available information, the location is not judged to be potential NPL site.

Date of Government Version: 07/17/2018
Date Data Arrived at EDR: 08/09/2018
Date Made Active in Reports: 09/07/2018
Number of Days to Update: 29

Source: EPA
Telephone: 800-424-9346
Last EDR Contact: 08/09/2018
Next Scheduled EDR Contact: 10/29/2018
Data Release Frequency: Quarterly

Federal RCRA CORRACTS facilities list

CORRACTS: Corrective Action Report
CORRACTS identifies hazardous waste handlers with RCRA corrective action activity.

Date of Government Version: 03/01/2018
Date Data Arrived at EDR: 03/28/2018
Date Made Active in Reports: 06/22/2018
Number of Days to Update: 86

Source: EPA
Telephone: 800-424-9346
Last EDR Contact: 06/28/2018
Next Scheduled EDR Contact: 10/08/2018
Data Release Frequency: Quarterly

Federal RCRA non-CORRACTS TSD facilities list

RCRA-TSDF: RCRA - Treatment, Storage and Disposal
RCRAInfo is EPA's comprehensive information system, providing access to data supporting the Resource Conservation and Recovery Act (RCRA) of 1976 and the Hazardous and Solid Waste Amendments (HSWA) of 1984. The database includes selective information on sites which generate, transport, store, treat and/or dispose of hazardous waste as defined by the Resource Conservation and Recovery Act (RCRA). Transporters are individuals or entities that move hazardous waste from the generator offsite to a facility that can recycle, treat, store, or dispose of the waste. TSDFs treat, store, or dispose of the waste.

Date of Government Version: 03/01/2018
Date Data Arrived at EDR: 03/28/2018
Date Made Active in Reports: 06/22/2018
Number of Days to Update: 86

Source: Environmental Protection Agency
Telephone: (415) 495-8895
Last EDR Contact: 06/28/2018
Next Scheduled EDR Contact: 10/08/2018
Data Release Frequency: Quarterly

Federal RCRA generators list

RCRA-LQG: RCRA - Large Quantity Generators
RCRAInfo is EPA's comprehensive information system, providing access to data supporting the Resource Conservation and Recovery Act (RCRA) of 1976 and the Hazardous and Solid Waste Amendments (HSWA) of 1984. The database includes selective information on sites which generate, transport, store, treat and/or dispose of hazardous waste as defined by the Resource Conservation and Recovery Act (RCRA). Large quantity generators (LQGs) generate over 1,000 kilograms (kg) of hazardous waste, or over 1 kg of acutely hazardous waste per month.

Date of Government Version: 03/01/2018
Date Data Arrived at EDR: 03/28/2018
Date Made Active in Reports: 06/22/2018
Number of Days to Update: 86

Source: Environmental Protection Agency
Telephone: (415) 495-8895
Last EDR Contact: 06/28/2018
Next Scheduled EDR Contact: 10/08/2018
Data Release Frequency: Quarterly

RCRA-SQG: RCRA - Small Quantity Generators

RCRAInfo is EPA's comprehensive information system, providing access to data supporting the Resource Conservation and Recovery Act (RCRA) of 1976 and the Hazardous and Solid Waste Amendments (HSWA) of 1984. The database includes selective information on sites which generate, transport, store, treat and/or dispose of hazardous waste as defined by the Resource Conservation and Recovery Act (RCRA). Small quantity generators (SQGs) generate between 100 kg and 1,000 kg of hazardous waste per month.

Date of Government Version: 03/01/2018
Date Data Arrived at EDR: 03/28/2018
Date Made Active in Reports: 06/22/2018
Number of Days to Update: 86

Source: Environmental Protection Agency
Telephone: (415) 495-8895
Last EDR Contact: 06/28/2018
Next Scheduled EDR Contact: 10/08/2018
Data Release Frequency: Quarterly

RCRA-CESQG: RCRA - Conditionally Exempt Small Quantity Generators

RCRAInfo is EPA's comprehensive information system, providing access to data supporting the Resource Conservation and Recovery Act (RCRA) of 1976 and the Hazardous and Solid Waste Amendments (HSWA) of 1984. The database includes selective information on sites which generate, transport, store, treat and/or dispose of hazardous waste as defined by the Resource Conservation and Recovery Act (RCRA). Conditionally exempt small quantity generators (CESQGs) generate less than 100 kg of hazardous waste, or less than 1 kg of acutely hazardous waste per month.

Date of Government Version: 03/01/2018
Date Data Arrived at EDR: 03/28/2018
Date Made Active in Reports: 06/22/2018
Number of Days to Update: 86

Source: Environmental Protection Agency
Telephone: (415) 495-8895
Last EDR Contact: 06/28/2018
Next Scheduled EDR Contact: 10/08/2018
Data Release Frequency: Quarterly

Federal institutional controls / engineering controls registries

LUCIS: Land Use Control Information System

LUCIS contains records of land use control information pertaining to the former Navy Base Realignment and Closure properties.

Date of Government Version: 05/14/2018
Date Data Arrived at EDR: 05/18/2018
Date Made Active in Reports: 07/20/2018
Number of Days to Update: 63

Source: Department of the Navy
Telephone: 843-820-7326
Last EDR Contact: 07/16/2018
Next Scheduled EDR Contact: 11/26/2018
Data Release Frequency: Varies

US ENG CONTROLS: Engineering Controls Sites List

A listing of sites with engineering controls in place. Engineering controls include various forms of caps, building foundations, liners, and treatment methods to create pathway elimination for regulated substances to enter environmental media or effect human health.

Date of Government Version: 02/13/2018
Date Data Arrived at EDR: 02/27/2018
Date Made Active in Reports: 05/11/2018
Number of Days to Update: 73

Source: Environmental Protection Agency
Telephone: 703-603-0695
Last EDR Contact: 08/28/2018
Next Scheduled EDR Contact: 12/10/2018
Data Release Frequency: Varies

US INST CONTROL: Sites with Institutional Controls

A listing of sites with institutional controls in place. Institutional controls include administrative measures, such as groundwater use restrictions, construction restrictions, property use restrictions, and post remediation care requirements intended to prevent exposure to contaminants remaining on site. Deed restrictions are generally required as part of the institutional controls.

Date of Government Version: 02/13/2018
Date Data Arrived at EDR: 02/27/2018
Date Made Active in Reports: 05/11/2018
Number of Days to Update: 73

Source: Environmental Protection Agency
Telephone: 703-603-0695
Last EDR Contact: 08/28/2018
Next Scheduled EDR Contact: 12/10/2018
Data Release Frequency: Varies

Federal ERNS list

ERNS: Emergency Response Notification System

Emergency Response Notification System. ERNS records and stores information on reported releases of oil and hazardous substances.

Date of Government Version: 03/19/2018
Date Data Arrived at EDR: 03/27/2018
Date Made Active in Reports: 06/08/2018
Number of Days to Update: 73

Source: National Response Center, United States Coast Guard
Telephone: 202-267-2180
Last EDR Contact: 06/27/2018
Next Scheduled EDR Contact: 10/08/2018
Data Release Frequency: Quarterly

State- and tribal - equivalent NPL

RESPONSE: State Response Sites

Identifies confirmed release sites where DTSC is involved in remediation, either in a lead or oversight capacity. These confirmed release sites are generally high-priority and high potential risk.

Date of Government Version: 07/30/2018
Date Data Arrived at EDR: 07/31/2018
Date Made Active in Reports: 09/07/2018
Number of Days to Update: 38

Source: Department of Toxic Substances Control
Telephone: 916-323-3400
Last EDR Contact: 07/31/2018
Next Scheduled EDR Contact: 11/12/2018
Data Release Frequency: Quarterly

State- and tribal - equivalent CERCLIS

ENVIROSTOR: EnviroStor Database

The Department of Toxic Substances Control's (DTSC's) Site Mitigation and Brownfields Reuse Program's (SMBRP's) EnviroStor database identifes sites that have known contamination or sites for which there may be reasons to investigate further. The database includes the following site types: Federal Superfund sites (National Priorities List (NPL)); State Response, including Military Facilities and State Superfund; Voluntary Cleanup; and School sites. EnviroStor provides similar information to the information that was available in CalSites, and provides additional site information, including, but not limited to, identification of formerly-contaminated properties that have been released for reuse, properties where environmental deed restrictions have been recorded to prevent inappropriate land uses, and risk characterization information that is used to assess potential impacts to public health and the environment at contaminated sites.

Date of Government Version: 07/30/2018
Date Data Arrived at EDR: 07/31/2018
Date Made Active in Reports: 09/07/2018
Number of Days to Update: 38

Source: Department of Toxic Substances Control
Telephone: 916-323-3400
Last EDR Contact: 07/31/2018
Next Scheduled EDR Contact: 11/12/2018
Data Release Frequency: Quarterly

State and tribal landfill and/or solid waste disposal site lists

SWF/LF (SWIS): Solid Waste Information System

Active, Closed and Inactive Landfills. SWF/LF records typically contain an inve ntory of solid waste disposal facilities or landfills. These may be active or i nactive facilities or open dumps that failed to meet RCRA Section 4004 criteria for solid waste landfills or disposal sites.

Date of Government Version: 08/08/2018
Date Data Arrived at EDR: 08/10/2018
Date Made Active in Reports: 08/24/2018
Number of Days to Update: 14

Source: Department of Resources Recycling and Recovery
Telephone: 916-341-6320
Last EDR Contact: 08/10/2018
Next Scheduled EDR Contact: 11/26/2018
Data Release Frequency: Quarterly

State and tribal leaking storage tank lists

LUST REG 7: Leaking Underground Storage Tank Case Listing
Leaking Underground Storage Tank locations. Imperial, Riverside, San Diego, Santa Barbara counties.

Date of Government Version: 02/26/2004
Date Data Arrived at EDR: 02/26/2004
Date Made Active in Reports: 03/24/2004
Number of Days to Update: 27

Source: California Regional Water Quality Control Board Colorado River Basin Region (7)
Telephone: 760-776-8943
Last EDR Contact: 08/01/2011
Next Scheduled EDR Contact: 11/14/2011
Data Release Frequency: No Update Planned

LUST: Leaking Underground Fuel Tank Report (GEOTRACKER)
Leaking Underground Storage Tank (LUST) Sites included in GeoTracker. GeoTracker is the Water Boards data management system for sites that impact, or have the potential to impact, water quality in California, with emphasis on groundwater.

Date of Government Version: 06/11/2018
Date Data Arrived at EDR: 06/13/2018
Date Made Active in Reports: 07/17/2018
Number of Days to Update: 34

Source: State Water Resources Control Board
Telephone: see region list
Last EDR Contact: 06/13/2018
Next Scheduled EDR Contact: 09/24/2018
Data Release Frequency: Quarterly

LUST REG 9: Leaking Underground Storage Tank Report
Orange, Riverside, San Diego counties. For more current information, please refer to the State Water Resources Control Board's LUST database.

Date of Government Version: 03/01/2001
Date Data Arrived at EDR: 04/23/2001
Date Made Active in Reports: 05/21/2001
Number of Days to Update: 28

Source: California Regional Water Quality Control Board San Diego Region (9)
Telephone: 858-637-5595
Last EDR Contact: 09/26/2011
Next Scheduled EDR Contact: 01/09/2012
Data Release Frequency: No Update Planned

LUST REG 8: Leaking Underground Storage Tanks
California Regional Water Quality Control Board Santa Ana Region (8). For more current information, please refer to the State Water Resources Control Board's LUST database.

Date of Government Version: 02/14/2005
Date Data Arrived at EDR: 02/15/2005
Date Made Active in Reports: 03/28/2005
Number of Days to Update: 41

Source: California Regional Water Quality Control Board Santa Ana Region (8)
Telephone: 909-782-4496
Last EDR Contact: 08/15/2011
Next Scheduled EDR Contact: 11/28/2011
Data Release Frequency: Varies

LUST REG 6V: Leaking Underground Storage Tank Case Listing
Leaking Underground Storage Tank locations. Inyo, Kern, Los Angeles, Mono, San Bernardino counties.

Date of Government Version: 06/07/2005
Date Data Arrived at EDR: 06/07/2005
Date Made Active in Reports: 06/29/2005
Number of Days to Update: 22

Source: California Regional Water Quality Control Board Victorville Branch Office (6)
Telephone: 760-241-7365
Last EDR Contact: 09/12/2011
Next Scheduled EDR Contact: 12/26/2011
Data Release Frequency: No Update Planned

LUST REG 6L: Leaking Underground Storage Tank Case Listing
For more current information, please refer to the State Water Resources Control Board's LUST database.

Date of Government Version: 09/09/2003
Date Data Arrived at EDR: 09/10/2003
Date Made Active in Reports: 10/07/2003
Number of Days to Update: 27

Source: California Regional Water Quality Control Board Lahontan Region (6)
Telephone: 530-542-5572
Last EDR Contact: 09/12/2011
Next Scheduled EDR Contact: 12/26/2011
Data Release Frequency: No Update Planned

LUST REG 5: Leaking Underground Storage Tank Database
Leaking Underground Storage Tank locations. Alameda, Alpine, Amador, Butte, Colusa, Contra Costa, Calveras, El Dorado, Fresno, Glenn, Kern, Kings, Lake, Lassen, Madera, Mariposa, Merced, Modoc, Napa, Nevada, Placer, Plumas, Sacramento, San Joaquin, Shasta, Solano, Stanislaus, Sutter, Tehama, Tulare, Tuolumne, Yolo, Yuba counties.

Date of Government Version: 07/01/2008
Date Data Arrived at EDR: 07/22/2008
Date Made Active in Reports: 07/31/2008
Number of Days to Update: 9

Source: California Regional Water Quality Control Board Central Valley Region (5)
Telephone: 916-464-4834
Last EDR Contact: 07/01/2011
Next Scheduled EDR Contact: 10/17/2011
Data Release Frequency: No Update Planned

LUST REG 4: Underground Storage Tank Leak List

Los Angeles, Ventura counties. For more current information, please refer to the State Water Resources Control Board's LUST database.

Date of Government Version: 09/07/2004
Date Data Arrived at EDR: 09/07/2004
Date Made Active in Reports: 10/12/2004
Number of Days to Update: 35

Source: California Regional Water Quality Control Board Los Angeles Region (4)
Telephone: 213-576-6710
Last EDR Contact: 09/06/2011
Next Scheduled EDR Contact: 12/19/2011
Data Release Frequency: No Update Planned

LUST REG 3: Leaking Underground Storage Tank Database

Leaking Underground Storage Tank locations. Monterey, San Benito, San Luis Obispo, Santa Barbara, Santa Cruz counties.

Date of Government Version: 05/19/2003
Date Data Arrived at EDR: 05/19/2003
Date Made Active in Reports: 06/02/2003
Number of Days to Update: 14

Source: California Regional Water Quality Control Board Central Coast Region (3)
Telephone: 805-542-4786
Last EDR Contact: 07/18/2011
Next Scheduled EDR Contact: 10/31/2011
Data Release Frequency: No Update Planned

LUST REG 2: Fuel Leak List

Leaking Underground Storage Tank locations. Alameda, Contra Costa, Marin, Napa, San Francisco, San Mateo, Santa Clara, Solano, Sonoma counties.

Date of Government Version: 09/30/2004
Date Data Arrived at EDR: 10/20/2004
Date Made Active in Reports: 11/19/2004
Number of Days to Update: 30

Source: California Regional Water Quality Control Board San Francisco Bay Region (2)
Telephone: 510-622-2433
Last EDR Contact: 09/19/2011
Next Scheduled EDR Contact: 01/02/2012
Data Release Frequency: Quarterly

LUST REG 1: Active Toxic Site Investigation

Del Norte, Humboldt, Lake, Mendocino, Modoc, Siskiyou, Sonoma, Trinity counties. For more current information, please refer to the State Water Resources Control Board's LUST database.

Date of Government Version: 02/01/2001
Date Data Arrived at EDR: 02/28/2001
Date Made Active in Reports: 03/29/2001
Number of Days to Update: 29

Source: California Regional Water Quality Control Board North Coast (1)
Telephone: 707-570-3769
Last EDR Contact: 08/01/2011
Next Scheduled EDR Contact: 11/14/2011
Data Release Frequency: No Update Planned

INDIAN LUST R8: Leaking Underground Storage Tanks on Indian Land

LUSTs on Indian land in Colorado, Montana, North Dakota, South Dakota, Utah and Wyoming.

Date of Government Version: 04/25/2018
Date Data Arrived at EDR: 05/18/2018
Date Made Active in Reports: 07/20/2018
Number of Days to Update: 63

Source: EPA Region 8
Telephone: 303-312-6271
Last EDR Contact: 07/27/2018
Next Scheduled EDR Contact: 11/05/2018
Data Release Frequency: Varies

INDIAN LUST R9: Leaking Underground Storage Tanks on Indian Land

LUSTs on Indian land in Arizona, California, New Mexico and Nevada

Date of Government Version: 04/10/2018
Date Data Arrived at EDR: 05/18/2018
Date Made Active in Reports: 07/20/2018
Number of Days to Update: 63

Source: Environmental Protection Agency
Telephone: 415-972-3372
Last EDR Contact: 07/27/2018
Next Scheduled EDR Contact: 11/05/2018
Data Release Frequency: Varies

INDIAN LUST R7: Leaking Underground Storage Tanks on Indian Land
LUSTs on Indian land in Iowa, Kansas, and Nebraska

Date of Government Version: 04/24/2018
Date Data Arrived at EDR: 05/18/2018
Date Made Active in Reports: 07/20/2018
Number of Days to Update: 63

Source: EPA Region 7
Telephone: 913-551-7003
Last EDR Contact: 07/27/2018
Next Scheduled EDR Contact: 11/05/2018
Data Release Frequency: Varies

INDIAN LUST R5: Leaking Underground Storage Tanks on Indian Land
Leaking underground storage tanks located on Indian Land in Michigan, Minnesota and Wisconsin.

Date of Government Version: 04/12/2018
Date Data Arrived at EDR: 05/18/2018
Date Made Active in Reports: 07/20/2018
Number of Days to Update: 63

Source: EPA, Region 5
Telephone: 312-886-7439
Last EDR Contact: 07/27/2018
Next Scheduled EDR Contact: 11/05/2018
Data Release Frequency: Varies

INDIAN LUST R6: Leaking Underground Storage Tanks on Indian Land
LUSTs on Indian land in New Mexico and Oklahoma.

Date of Government Version: 04/01/2018
Date Data Arrived at EDR: 05/18/2018
Date Made Active in Reports: 07/20/2018
Number of Days to Update: 63

Source: EPA Region 6
Telephone: 214-665-6597
Last EDR Contact: 07/27/2018
Next Scheduled EDR Contact: 11/05/2018
Data Release Frequency: Varies

INDIAN LUST R4: Leaking Underground Storage Tanks on Indian Land
LUSTs on Indian land in Florida, Mississippi and North Carolina.

Date of Government Version: 05/08/2018
Date Data Arrived at EDR: 05/18/2018
Date Made Active in Reports: 07/20/2018
Number of Days to Update: 63

Source: EPA Region 4
Telephone: 404-562-8677
Last EDR Contact: 07/27/2018
Next Scheduled EDR Contact: 11/05/2018
Data Release Frequency: Varies

INDIAN LUST R1: Leaking Underground Storage Tanks on Indian Land
A listing of leaking underground storage tank locations on Indian Land.

Date of Government Version: 04/13/2018
Date Data Arrived at EDR: 05/18/2018
Date Made Active in Reports: 07/20/2018
Number of Days to Update: 63

Source: EPA Region 1
Telephone: 617-918-1313
Last EDR Contact: 07/27/2018
Next Scheduled EDR Contact: 11/05/2018
Data Release Frequency: Varies

INDIAN LUST R10: Leaking Underground Storage Tanks on Indian Land
LUSTs on Indian land in Alaska, Idaho, Oregon and Washington.

Date of Government Version: 04/12/2018
Date Data Arrived at EDR: 05/18/2018
Date Made Active in Reports: 07/20/2018
Number of Days to Update: 63

Source: EPA Region 10
Telephone: 206-553-2857
Last EDR Contact: 07/27/2018
Next Scheduled EDR Contact: 11/05/2018
Data Release Frequency: Varies

CPS-SLIC: Statewide SLIC Cases (GEOTRACKER)
Cleanup Program Sites (CPS; also known as Site Cleanups [SC] and formerly known as Spills, Leaks, Investigations, and Cleanups [SLIC] sites) included in GeoTracker. GeoTracker is the Water Boards data management system for sites that impact, or have the potential to impact, water quality in California, with emphasis on groundwater.

Date of Government Version: 06/11/2018
Date Data Arrived at EDR: 06/13/2018
Date Made Active in Reports: 07/17/2018
Number of Days to Update: 34

Source: State Water Resources Control Board
Telephone: 866-480-1028
Last EDR Contact: 12/12/2018
Next Scheduled EDR Contact: 09/24/2018
Data Release Frequency: Varies

SLIC REG 1: Active Toxic Site Investigations
The SLIC (Spills, Leaks, Investigations and Cleanup) program is designed to protect and restore water quality from spills, leaks, and similar discharges.

Date of Government Version: 04/03/2003
Date Data Arrived at EDR: 04/07/2003
Date Made Active in Reports: 04/25/2003
Number of Days to Update: 18

Source: California Regional Water Quality Control Board, North Coast Region (1)
Telephone: 707-576-2220
Last EDR Contact: 08/01/2011
Next Scheduled EDR Contact: 11/14/2011
Data Release Frequency: No Update Planned

SLIC REG 2: Spills, Leaks, Investigation & Cleanup Cost Recovery Listing
The SLIC (Spills, Leaks, Investigations and Cleanup) program is designed to protect and restore water quality from spills, leaks, and similar discharges.

Date of Government Version: 09/30/2004
Date Data Arrived at EDR: 10/20/2004
Date Made Active in Reports: 11/19/2004
Number of Days to Update: 30

Source: Regional Water Quality Control Board San Francisco Bay Region (2)
Telephone: 510-286-0457
Last EDR Contact: 09/19/2011
Next Scheduled EDR Contact: 01/02/2012
Data Release Frequency: Quarterly

SLIC REG 3: Spills, Leaks, Investigation & Cleanup Cost Recovery Listing
The SLIC (Spills, Leaks, Investigations and Cleanup) program is designed to protect and restore water quality from spills, leaks, and similar discharges.

Date of Government Version: 05/18/2006
Date Data Arrived at EDR: 05/18/2006
Date Made Active in Reports: 06/15/2006
Number of Days to Update: 28

Source: California Regional Water Quality Control Board Central Coast Region (3)
Telephone: 805-549-3147
Last EDR Contact: 07/18/2011
Next Scheduled EDR Contact: 10/31/2011
Data Release Frequency: Semi-Annually

SLIC REG 4: Spills, Leaks, Investigation & Cleanup Cost Recovery Listing
The SLIC (Spills, Leaks, Investigations and Cleanup) program is designed to protect and restore water quality from spills, leaks, and similar discharges.

Date of Government Version: 11/17/2004
Date Data Arrived at EDR: 11/18/2004
Date Made Active in Reports: 01/04/2005
Number of Days to Update: 47

Source: Region Water Quality Control Board Los Angeles Region (4)
Telephone: 213-576-6600
Last EDR Contact: 07/01/2011
Next Scheduled EDR Contact: 10/17/2011
Data Release Frequency: Varies

SLIC REG 5: Spills, Leaks, Investigation & Cleanup Cost Recovery Listing
The SLIC (Spills, Leaks, Investigations and Cleanup) program is designed to protect and restore water quality from spills, leaks, and similar discharges.

Date of Government Version: 04/01/2005
Date Data Arrived at EDR: 04/05/2005
Date Made Active in Reports: 04/21/2005
Number of Days to Update: 16

Source: Regional Water Quality Control Board Central Valley Region (5)
Telephone: 916-464-3291
Last EDR Contact: 09/12/2011
Next Scheduled EDR Contact: 12/26/2011
Data Release Frequency: Semi-Annually

SLIC REG 6V: Spills, Leaks, Investigation & Cleanup Cost Recovery Listing
The SLIC (Spills, Leaks, Investigations and Cleanup) program is designed to protect and restore water quality from spills, leaks, and similar discharges.

Date of Government Version: 05/24/2005
Date Data Arrived at EDR: 05/25/2005
Date Made Active in Reports: 06/16/2005
Number of Days to Update: 22

Source: Regional Water Quality Control Board, Victorville Branch
Telephone: 619-241-6583
Last EDR Contact: 08/15/2011
Next Scheduled EDR Contact: 11/28/2011
Data Release Frequency: Semi-Annually

SLIC REG 6L: SLIC Sites
The SLIC (Spills, Leaks, Investigations and Cleanup) program is designed to protect and restore water quality from spills, leaks, and similar discharges.

Date of Government Version: 09/07/2004
Date Data Arrived at EDR: 09/07/2004
Date Made Active in Reports: 10/12/2004
Number of Days to Update: 35

Source: California Regional Water Quality Control Board, Lahontan Region
Telephone: 530-542-5574
Last EDR Contact: 08/15/2011
Next Scheduled EDR Contact: 11/28/2011
Data Release Frequency: No Update Planned

SLIC REG 7: SLIC List
The SLIC (Spills, Leaks, Investigations and Cleanup) program is designed to protect and restore water quality from spills, leaks, and similar discharges.

Date of Government Version: 11/24/2004
Date Data Arrived at EDR: 11/29/2004
Date Made Active in Reports: 01/04/2005
Number of Days to Update: 36

Source: California Regional Quality Control Board, Colorado River Basin Region
Telephone: 760-346-7491
Last EDR Contact: 08/01/2011
Next Scheduled EDR Contact: 11/14/2011
Data Release Frequency: No Update Planned

SLIC REG 8: Spills, Leaks, Investigation & Cleanup Cost Recovery Listing
The SLIC (Spills, Leaks, Investigations and Cleanup) program is designed to protect and restore water quality from spills, leaks, and similar discharges.

Date of Government Version: 04/03/2008
Date Data Arrived at EDR: 04/03/2008
Date Made Active in Reports: 04/14/2008
Number of Days to Update: 11

Source: California Region Water Quality Control Board Santa Ana Region (8)
Telephone: 951-782-3298
Last EDR Contact: 09/12/2011
Next Scheduled EDR Contact: 12/26/2011
Data Release Frequency: Semi-Annually

SLIC REG 9: Spills, Leaks, Investigation & Cleanup Cost Recovery Listing
The SLIC (Spills, Leaks, Investigations and Cleanup) program is designed to protect and restore water quality from spills, leaks, and similar discharges.

Date of Government Version: 09/10/2007
Date Data Arrived at EDR: 09/11/2007
Date Made Active in Reports: 09/28/2007
Number of Days to Update: 17

Source: California Regional Water Quality Control Board San Diego Region (9)
Telephone: 858-467-2980
Last EDR Contact: 08/08/2011
Next Scheduled EDR Contact: 11/21/2011
Data Release Frequency: Annually

State and tribal registered storage tank lists

FEMA UST: Underground Storage Tank Listing
A listing of all FEMA owned underground storage tanks.

Date of Government Version: 05/15/2017
Date Data Arrived at EDR: 05/30/2017
Date Made Active in Reports: 10/13/2017
Number of Days to Update: 136

Source: FEMA
Telephone: 202-646-5797
Last EDR Contact: 07/11/2018
Next Scheduled EDR Contact: 10/22/2018
Data Release Frequency: Varies

MILITARY UST SITES: Military UST Sites (GEOTRACKER)
Military ust sites

Date of Government Version: 06/11/2018
Date Data Arrived at EDR: 06/13/2018
Date Made Active in Reports: 07/18/2018
Number of Days to Update: 35

Source: State Water Resources Control Board
Telephone: 866-480-1028
Last EDR Contact: 12/12/2018
Next Scheduled EDR Contact: 09/24/2018
Data Release Frequency: Varies

UST: Active UST Facilities
Active UST facilities gathered from the local regulatory agencies

Date of Government Version: 06/11/2018
Date Data Arrived at EDR: 06/13/2018
Date Made Active in Reports: 07/09/2018
Number of Days to Update: 26

Source: SWRCB
Telephone: 916-341-5851
Last EDR Contact: 06/13/2018
Next Scheduled EDR Contact: 09/24/2018
Data Release Frequency: Semi-Annually

UST CLOSURE: Proposed Closure of Underground Storage Tank (UST) Cases
UST cases that are being considered for closure by either the State Water Resources Control Board or the Executive Director have been posted for a 60-day public comment period. UST Case Closures being proposed for consideration by the State Water Resources Control Board. These are primarily UST cases that meet closure criteria under the decisional framework in State Water Board Resolution No. 92-49 and other Board orders. UST Case Closures proposed for consideration by the Executive Director pursuant to State Water Board Resolution No. 2012-0061. These are cases that meet the criteria of the Low-Threat UST Case Closure Policy. UST Case Closure Review Denials and Approved Orders.

Date of Government Version: 06/11/2018
Date Data Arrived at EDR: 06/13/2018
Date Made Active in Reports: 07/10/2018
Number of Days to Update: 27

Source: State Water Resources Control Board
Telephone: 916-327-7844
Last EDR Contact: 06/13/2018
Next Scheduled EDR Contact: 09/24/2018
Data Release Frequency: Varies

AST: Aboveground Petroleum Storage Tank Facilities
A listing of aboveground storage tank petroleum storage tank locations.

Date of Government Version: 07/06/2016
Date Data Arrived at EDR: 07/12/2016
Date Made Active in Reports: 09/19/2016
Number of Days to Update: 69

Source: California Environmental Protection Agency
Telephone: 916-327-5092
Last EDR Contact: 06/21/2018
Next Scheduled EDR Contact: 10/01/2018
Data Release Frequency: Quarterly

INDIAN UST R9: Underground Storage Tanks on Indian Land
The Indian Underground Storage Tank (UST) database provides information about underground storage tanks on Indian land in EPA Region 9 (Arizona, California, Hawaii, Nevada, the Pacific Islands, and Tribal Nations).

Date of Government Version: 04/10/2018
Date Data Arrived at EDR: 05/18/2018
Date Made Active in Reports: 07/20/2018
Number of Days to Update: 63

Source: EPA Region 9
Telephone: 415-972-3368
Last EDR Contact: 07/27/2018
Next Scheduled EDR Contact: 11/05/2018
Data Release Frequency: Varies

INDIAN UST R8: Underground Storage Tanks on Indian Land
The Indian Underground Storage Tank (UST) database provides information about underground storage tanks on Indian land in EPA Region 8 (Colorado, Montana, North Dakota, South Dakota, Utah, Wyoming and 27 Tribal Nations).

Date of Government Version: 04/25/2018
Date Data Arrived at EDR: 05/18/2018
Date Made Active in Reports: 07/20/2018
Number of Days to Update: 63

Source: EPA Region 8
Telephone: 303-312-6137
Last EDR Contact: 07/27/2018
Next Scheduled EDR Contact: 11/05/2018
Data Release Frequency: Varies

INDIAN UST R7: Underground Storage Tanks on Indian Land
The Indian Underground Storage Tank (UST) database provides information about underground storage tanks on Indian land in EPA Region 7 (Iowa, Kansas, Missouri, Nebraska, and 9 Tribal Nations).

Date of Government Version: 04/24/2018
Date Data Arrived at EDR: 05/18/2018
Date Made Active in Reports: 07/20/2018
Number of Days to Update: 63

Source: EPA Region 7
Telephone: 913-551-7003
Last EDR Contact: 07/27/2018
Next Scheduled EDR Contact: 11/05/2018
Data Release Frequency: Varies

INDIAN UST R6: Underground Storage Tanks on Indian Land
The Indian Underground Storage Tank (UST) database provides information about underground storage tanks on Indian land in EPA Region 6 (Louisiana, Arkansas, Oklahoma, New Mexico, Texas and 65 Tribes).

Date of Government Version: 04/01/2018
Date Data Arrived at EDR: 05/18/2018
Date Made Active in Reports: 07/20/2018
Number of Days to Update: 63

Source: EPA Region 6
Telephone: 214-665-7591
Last EDR Contact: 07/27/2018
Next Scheduled EDR Contact: 11/05/2018
Data Release Frequency: Varies

INDIAN UST R10: Underground Storage Tanks on Indian Land
The Indian Underground Storage Tank (UST) database provides information about underground storage tanks on Indian land in EPA Region 10 (Alaska, Idaho, Oregon, Washington, and Tribal Nations).

Date of Government Version: 04/12/2018
Date Data Arrived at EDR: 05/18/2018
Date Made Active in Reports: 07/20/2018
Number of Days to Update: 63

Source: EPA Region 10
Telephone: 206-553-2857
Last EDR Contact: 07/27/2018
Next Scheduled EDR Contact: 11/05/2018
Data Release Frequency: Varies

INDIAN UST R1: Underground Storage Tanks on Indian Land
The Indian Underground Storage Tank (UST) database provides information about underground storage tanks on Indian land in EPA Region 1 (Connecticut, Maine, Massachusetts, New Hampshire, Rhode Island, Vermont and ten Tribal Nations).

Date of Government Version: 04/13/2018
Date Data Arrived at EDR: 05/18/2018
Date Made Active in Reports: 07/20/2018
Number of Days to Update: 63

Source: EPA, Region 1
Telephone: 617-918-1313
Last EDR Contact: 07/27/2018
Next Scheduled EDR Contact: 11/05/2018
Data Release Frequency: Varies

INDIAN UST R4: Underground Storage Tanks on Indian Land
The Indian Underground Storage Tank (UST) database provides information about underground storage tanks on Indian land in EPA Region 4 (Alabama, Florida, Georgia, Kentucky, Mississippi, North Carolina, South Carolina, Tennessee and Tribal Nations)

Date of Government Version: 05/08/2018
Date Data Arrived at EDR: 05/18/2018
Date Made Active in Reports: 07/20/2018
Number of Days to Update: 63

Source: EPA Region 4
Telephone: 404-562-9424
Last EDR Contact: 07/27/2018
Next Scheduled EDR Contact: 11/05/2018
Data Release Frequency: Varies

INDIAN UST R5: Underground Storage Tanks on Indian Land
The Indian Underground Storage Tank (UST) database provides information about underground storage tanks on Indian land in EPA Region 5 (Michigan, Minnesota and Wisconsin and Tribal Nations).

Date of Government Version: 04/12/2018
Date Data Arrived at EDR: 05/18/2018
Date Made Active in Reports: 07/20/2018
Number of Days to Update: 63

Source: EPA Region 5
Telephone: 312-886-6136
Last EDR Contact: 07/27/2018
Next Scheduled EDR Contact: 11/05/2018
Data Release Frequency: Varies

State and tribal voluntary cleanup sites

VCP: Voluntary Cleanup Program Properties
Contains low threat level properties with either confirmed or unconfirmed releases and the project proponents have request that DTSC oversee investigation and/or cleanup activities and have agreed to provide coverage for DTSC's costs.

Date of Government Version: 07/30/2018
Date Data Arrived at EDR: 07/31/2018
Date Made Active in Reports: 09/07/2018
Number of Days to Update: 38

Source: Department of Toxic Substances Control
Telephone: 916-323-3400
Last EDR Contact: 07/31/2018
Next Scheduled EDR Contact: 11/12/2018
Data Release Frequency: Quarterly

INDIAN VCP R7: Voluntary Cleanup Priority Lisitng
A listing of voluntary cleanup priority sites located on Indian Land located in Region 7.

Date of Government Version: 03/20/2008
Date Data Arrived at EDR: 04/22/2008
Date Made Active in Reports: 05/19/2008
Number of Days to Update: 27

Source: EPA, Region 7
Telephone: 913-551-7365
Last EDR Contact: 04/20/2009
Next Scheduled EDR Contact: 07/20/2009
Data Release Frequency: Varies

INDIAN VCP R1: Voluntary Cleanup Priority Listing
A listing of voluntary cleanup priority sites located on Indian Land located in Region 1.

Date of Government Version: 07/27/2015
Date Data Arrived at EDR: 09/29/2015
Date Made Active in Reports: 02/18/2016
Number of Days to Update: 142

Source: EPA, Region 1
Telephone: 617-918-1102
Last EDR Contact: 06/22/2018
Next Scheduled EDR Contact: 10/08/2018
Data Release Frequency: Varies

State and tribal Brownfields sites

BROWNFIELDS: Considered Brownfieds Sites Listing
A listing of sites the SWRCB considers to be Brownfields since these are sites have come to them through the MOA Process.

Date of Government Version: 06/25/2018
Date Data Arrived at EDR: 06/27/2018
Date Made Active in Reports: 08/06/2018
Number of Days to Update: 40

Source: State Water Resources Control Board
Telephone: 916-323-7905
Last EDR Contact: 06/27/2018
Next Scheduled EDR Contact: 10/08/2018
Data Release Frequency: Quarterly

ADDITIONAL ENVIRONMENTAL RECORDS

Local Brownfield lists

US BROWNFIELDS: A Listing of Brownfields Sites
Brownfields are real property, the expansion, redevelopment, or reuse of which may be complicated by the presence or potential presence of a hazardous substance, pollutant, or contaminant. Cleaning up and reinvesting in these properties takes development pressures off of undeveloped, open land, and both improves and protects the environment. Assessment, Cleanup and Redevelopment Exchange System (ACRES) stores information reported by EPA Brownfields grant recipients on brownfields properties assessed or cleaned up with grant funding as well as information on Targeted Brownfields Assessments performed by EPA Regions. A listing of ACRES Brownfield sites is obtained from Cleanups in My Community. Cleanups in My Community provides information on Brownfields properties for which information is reported back to EPA, as well as areas served by Brownfields grant programs.

Date of Government Version: 03/19/2018
Date Data Arrived at EDR: 03/21/2018
Date Made Active in Reports: 06/08/2018
Number of Days to Update: 79

Source: Environmental Protection Agency
Telephone: 202-566-2777
Last EDR Contact: 06/20/2018
Next Scheduled EDR Contact: 10/01/2018
Data Release Frequency: Semi-Annually

Local Lists of Landfill / Solid Waste Disposal Sites

WMUDS/SWAT: Waste Management Unit Database
Waste Management Unit Database System. WMUDS is used by the State Water Resources Control Board staff and the Regional Water Quality Control Boards for program tracking and inventory of waste management units. WMUDS is composed of the following databases: Facility Information, Scheduled Inspections Information, Waste Management Unit Information, SWAT Program Information, SWAT Report Summary Information, SWAT Report Summary Data, Chapter 15 (formerly Subchapter 15) Information, Chapter 15 Monitoring Parameters, TPCA Program Information, RCRA Program Information, Closure Information, and Interested Parties Information.

Date of Government Version: 04/01/2000
Date Data Arrived at EDR: 04/10/2000
Date Made Active in Reports: 05/10/2000
Number of Days to Update: 30

Source: State Water Resources Control Board
Telephone: 916-227-4448
Last EDR Contact: 07/24/2018
Next Scheduled EDR Contact: 11/12/2018
Data Release Frequency: No Update Planned

SWRCY: Recycler Database
A listing of recycling facilities in California.

Date of Government Version: 06/11/2018
Date Data Arrived at EDR: 06/13/2018
Date Made Active in Reports: 08/06/2018
Number of Days to Update: 54

Source: Department of Conservation
Telephone: 916-323-3836
Last EDR Contact: 06/13/2018
Next Scheduled EDR Contact: 09/24/2018
Data Release Frequency: Quarterly

HAULERS: Registered Waste Tire Haulers Listing
A listing of registered waste tire haulers.

Date of Government Version: 05/29/2018
Date Data Arrived at EDR: 05/30/2018
Date Made Active in Reports: 07/17/2018
Number of Days to Update: 48

Source: Integrated Waste Management Board
Telephone: 916-341-6422
Last EDR Contact: 08/07/2018
Next Scheduled EDR Contact: 11/26/2018
Data Release Frequency: Varies

INDIAN ODI: Report on the Status of Open Dumps on Indian Lands
Location of open dumps on Indian land.

Date of Government Version: 12/31/1998
Date Data Arrived at EDR: 12/03/2007
Date Made Active in Reports: 01/24/2008
Number of Days to Update: 52

Source: Environmental Protection Agency
Telephone: 703-308-8245
Last EDR Contact: 07/30/2018
Next Scheduled EDR Contact: 11/12/2018
Data Release Frequency: Varies

ODI: Open Dump Inventory
An open dump is defined as a disposal facility that does not comply with one or more of the Part 257 or Part 258 Subtitle D Criteria.

Date of Government Version: 06/30/1985
Date Data Arrived at EDR: 08/09/2004
Date Made Active in Reports: 09/17/2004
Number of Days to Update: 39

Source: Environmental Protection Agency
Telephone: 800-424-9346
Last EDR Contact: 06/09/2004
Next Scheduled EDR Contact: N/A
Data Release Frequency: No Update Planned

DEBRIS REGION 9: Torres Martinez Reservation Illegal Dump Site Locations
A listing of illegal dump sites location on the Torres Martinez Indian Reservation located in eastern Riverside County and northern Imperial County, California.

Date of Government Version: 01/12/2009
Date Data Arrived at EDR: 05/07/2009
Date Made Active in Reports: 09/21/2009
Number of Days to Update: 137

Source: EPA, Region 9
Telephone: 415-947-4219
Last EDR Contact: 07/17/2018
Next Scheduled EDR Contact: 11/05/2018
Data Release Frequency: No Update Planned

IHS OPEN DUMPS: Open Dumps on Indian Land
A listing of all open dumps located on Indian Land in the United States.

Date of Government Version: 04/01/2014
Date Data Arrived at EDR: 08/06/2014
Date Made Active in Reports: 01/29/2015
Number of Days to Update: 176

Source: Department of Health & Human Serivces, Indian Health Service
Telephone: 301-443-1452
Last EDR Contact: 08/03/2018
Next Scheduled EDR Contact: 11/12/2018
Data Release Frequency: Varies

Local Lists of Hazardous waste / Contaminated Sites

US HIST CDL: National Clandestine Laboratory Register

A listing of clandestine drug lab locations that have been removed from the DEAs National Clandestine Laboratory Register.

Date of Government Version: 02/22/2018
Date Data Arrived at EDR: 03/01/2018
Date Made Active in Reports: 05/11/2018
Number of Days to Update: 71

Source: Drug Enforcement Administration
Telephone: 202-307-1000
Last EDR Contact: 05/30/2018
Next Scheduled EDR Contact: 09/10/2018
Data Release Frequency: No Update Planned

HIST CAL-SITES: Calsites Database

The Calsites database contains potential or confirmed hazardous substance release properties. In 1996, California EPA reevaluated and significantly reduced the number of sites in the Calsites database. No longer updated by the state agency. It has been replaced by ENVIROSTOR.

Date of Government Version: 08/08/2005
Date Data Arrived at EDR: 08/03/2006
Date Made Active in Reports: 08/24/2006
Number of Days to Update: 21

Source: Department of Toxic Substance Control
Telephone: 916-323-3400
Last EDR Contact: 02/23/2009
Next Scheduled EDR Contact: 05/25/2009
Data Release Frequency: No Update Planned

SCH: School Property Evaluation Program

This category contains proposed and existing school sites that are being evaluated by DTSC for possible hazardous materials contamination. In some cases, these properties may be listed in the CalSites category depending on the level of threat to public health and safety or the environment they pose.

Date of Government Version: 07/30/2018
Date Data Arrived at EDR: 07/31/2018
Date Made Active in Reports: 09/07/2018
Number of Days to Update: 38

Source: Department of Toxic Substances Control
Telephone: 916-323-3400
Last EDR Contact: 07/31/2018
Next Scheduled EDR Contact: 11/12/2018
Data Release Frequency: Quarterly

CDL: Clandestine Drug Labs

A listing of drug lab locations. Listing of a location in this database does not indicate that any illegal drug lab materials were or were not present there, and does not constitute a determination that the location either requires or does not require additional cleanup work.

Date of Government Version: 12/31/2017
Date Data Arrived at EDR: 06/12/2018
Date Made Active in Reports: 08/06/2018
Number of Days to Update: 55

Source: Department of Toxic Substances Control
Telephone: 916-255-6504
Last EDR Contact: 08/17/2018
Next Scheduled EDR Contact: 10/22/2018
Data Release Frequency: Varies

TOXIC PITS: Toxic Pits Cleanup Act Sites

Toxic PITS Cleanup Act Sites. TOXIC PITS identifies sites suspected of containing hazardous substances where cleanup has not yet been completed.

Date of Government Version: 07/01/1995
Date Data Arrived at EDR: 08/30/1995
Date Made Active in Reports: 09/26/1995
Number of Days to Update: 27

Source: State Water Resources Control Board
Telephone: 916-227-4364
Last EDR Contact: 01/26/2009
Next Scheduled EDR Contact: 04/27/2009
Data Release Frequency: No Update Planned

US CDL: Clandestine Drug Labs

A listing of clandestine drug lab locations. The U.S. Department of Justice ("the Department") provides this web site as a public service. It contains addresses of some locations where law enforcement agencies reported they found chemicals or other items that indicated the presence of either clandestine drug laboratories or dumpsites. In most cases, the source of the entries is not the Department, and the Department has not verified the entry and does not guarantee its accuracy. Members of the public must verify the accuracy of all entries by, for example, contacting local law enforcement and local health departments.

Date of Government Version: 02/22/2018
Date Data Arrived at EDR: 03/01/2018
Date Made Active in Reports: 05/11/2018
Number of Days to Update: 71

Source: Drug Enforcement Administration
Telephone: 202-307-1000
Last EDR Contact: 08/28/2018
Next Scheduled EDR Contact: 12/10/2018
Data Release Frequency: Quarterly

CERS HAZ WASTE: CERS HAZ WASTE

List of sites in the California Environmental Protection Agency (CalEPA) Regulated Site Portal which fall under the Hazardous Chemical Management, Hazardous Waste Onsite Treatment, Household Hazardous Waste Collection, Hazardous Waste Generator, and RCRA LQ HW Generator programs.

Date of Government Version: 07/23/2018
Date Data Arrived at EDR: 07/25/2018
Date Made Active in Reports: 09/05/2018
Number of Days to Update: 42

Source: CalEPA
Telephone: 916-323-2514
Last EDR Contact: 07/25/2018
Next Scheduled EDR Contact: 11/05/2018
Data Release Frequency: Quarterly

Local Lists of Registered Storage Tanks

SWEEPS UST: SWEEPS UST Listing

Statewide Environmental Evaluation and Planning System. This underground storage tank listing was updated and maintained by a company contacted by the SWRCB in the early 1990's. The listing is no longer updated or maintained. The local agency is the contact for more information on a site on the SWEEPS list.

Date of Government Version: 06/01/1994
Date Data Arrived at EDR: 07/07/2005
Date Made Active in Reports: 08/11/2005
Number of Days to Update: 35

Source: State Water Resources Control Board
Telephone: N/A
Last EDR Contact: 06/03/2005
Next Scheduled EDR Contact: N/A
Data Release Frequency: No Update Planned

UST MENDOCINO: Mendocino County UST Database

A listing of underground storage tank locations in Mendocino County.

Date of Government Version: 03/28/2018
Date Data Arrived at EDR: 05/25/2018
Date Made Active in Reports: 07/10/2018
Number of Days to Update: 46

Source: Department of Public Health
Telephone: 707-463-4466
Last EDR Contact: 08/24/2018
Next Scheduled EDR Contact: 12/10/2018
Data Release Frequency: Annually

HIST UST: Hazardous Substance Storage Container Database

The Hazardous Substance Storage Container Database is a historical listing of UST sites. Refer to local/county source for current data.

Date of Government Version: 10/15/1990
Date Data Arrived at EDR: 01/25/1991
Date Made Active in Reports: 02/12/1991
Number of Days to Update: 18

Source: State Water Resources Control Board
Telephone: 916-341-5851
Last EDR Contact: 07/26/2001
Next Scheduled EDR Contact: N/A
Data Release Frequency: No Update Planned

SAN FRANCISCO AST: Aboveground Storage Tank Site Listing

Aboveground storage tank sites

Date of Government Version: 04/19/2018
Date Data Arrived at EDR: 04/24/2018
Date Made Active in Reports: 05/04/2018
Number of Days to Update: 10

Source: San Francisco County Department of Public Health
Telephone: 415-252-3896
Last EDR Contact: 08/01/2018
Next Scheduled EDR Contact: 11/19/2018
Data Release Frequency: Varies

CA FID UST: Facility Inventory Database

The Facility Inventory Database (FID) contains a historical listing of active and inactive underground storage tank locations from the State Water Resource Control Board. Refer to local/county source for current data.

Date of Government Version: 10/31/1994
Date Data Arrived at EDR: 09/05/1995
Date Made Active in Reports: 09/29/1995
Number of Days to Update: 24

Source: California Environmental Protection Agency
Telephone: 916-341-5851
Last EDR Contact: 12/28/1998
Next Scheduled EDR Contact: N/A
Data Release Frequency: No Update Planned

CERS TANKS: California Environmental Reporting System (CERS) Tanks
List of sites in the California Environmental Protection Agency (CalEPA) Regulated Site Portal which fall under the Aboveground Petroleum Storage and Underground Storage Tank regulatory programs.

Date of Government Version: 07/23/2018
Date Data Arrived at EDR: 07/25/2018
Date Made Active in Reports: 09/05/2018
Number of Days to Update: 42

Source: California Environmental Protection Agency
Telephone: 916-323-2514
Last EDR Contact: 07/25/2018
Next Scheduled EDR Contact: 11/05/2018
Data Release Frequency: Quarterly

Local Land Records

LIENS: Environmental Liens Listing
A listing of property locations with environmental liens for California where DTSC is a lien holder.

Date of Government Version: 05/31/2018
Date Data Arrived at EDR: 06/05/2018
Date Made Active in Reports: 07/18/2018
Number of Days to Update: 43

Source: Department of Toxic Substances Control
Telephone: 916-323-3400
Last EDR Contact: 08/29/2018
Next Scheduled EDR Contact: 12/17/2018
Data Release Frequency: Varies

LIENS 2: CERCLA Lien Information
A Federal CERCLA ('Superfund') lien can exist by operation of law at any site or property at which EPA has spent Superfund monies. These monies are spent to investigate and address releases and threatened releases of contamination. CERCLIS provides information as to the identity of these sites and properties.

Date of Government Version: 05/13/2018
Date Data Arrived at EDR: 05/30/2018
Date Made Active in Reports: 06/29/2018
Number of Days to Update: 30

Source: Environmental Protection Agency
Telephone: 202-564-6023
Last EDR Contact: 08/09/2018
Next Scheduled EDR Contact: 11/05/2018
Data Release Frequency: Semi-Annually

DEED: Deed Restriction Listing
Site Mitigation and Brownfields Reuse Program Facility Sites with Deed Restrictions & Hazardous Waste Management Program Facility Sites with Deed / Land Use Restriction. The DTSC Site Mitigation and Brownfields Reuse Program (SMBRP) list includes sites cleaned up under the program's oversight and generally does not include current or former hazardous waste facilities that required a hazardous waste facility permit. The list represents deed restrictions that are active. Some sites have multiple deed restrictions. The DTSC Hazardous Waste Management Program (HWMP) has developed a list of current or former hazardous waste facilities that have a recorded land use restriction at the local county recorder's office. The land use restrictions on this list were required by the DTSC HWMP as a result of the presence of hazardous substances that remain on site after the facility (or part of the facility) has been closed or cleaned up. The types of land use restriction include deed notice, deed restriction, or a land use restriction that binds current and future owners.

Date of Government Version: 06/04/2018
Date Data Arrived at EDR: 06/06/2018
Date Made Active in Reports: 07/17/2018
Number of Days to Update: 41

Source: DTSC and SWRCB
Telephone: 916-323-3400
Last EDR Contact: 09/05/2018
Next Scheduled EDR Contact: 12/17/2018
Data Release Frequency: Semi-Annually

Records of Emergency Release Reports

HMIRS: Hazardous Materials Information Reporting System
Hazardous Materials Incident Report System. HMIRS contains hazardous material spill incidents reported to DOT.

Date of Government Version: 03/26/2018
Date Data Arrived at EDR: 03/27/2018
Date Made Active in Reports: 06/08/2018
Number of Days to Update: 73

Source: U.S. Department of Transportation
Telephone: 202-366-4555
Last EDR Contact: 03/27/2018
Next Scheduled EDR Contact: 07/09/2018
Data Release Frequency: Quarterly

CHMIRS: California Hazardous Material Incident Report System
California Hazardous Material Incident Reporting System. CHMIRS contains information on reported hazardous material incidents (accidental releases or spills).

Date of Government Version: 04/06/2018
Date Data Arrived at EDR: 04/24/2018
Date Made Active in Reports: 06/14/2018
Number of Days to Update: 51

Source: Office of Emergency Services
Telephone: 916-845-8400
Last EDR Contact: 07/27/2018
Next Scheduled EDR Contact: 11/05/2018
Data Release Frequency: Semi-Annually

LDS: Land Disposal Sites Listing (GEOTRACKER)
Land Disposal sites (Landfills) included in GeoTracker. GeoTracker is the Water Boards data management system for sites that impact, or have the potential to impact, water quality in California, with emphasis on groundwater.

Date of Government Version: 06/11/2018
Date Data Arrived at EDR: 06/13/2018
Date Made Active in Reports: 07/17/2018
Number of Days to Update: 34

Source: State Water Qualilty Control Board
Telephone: 866-480-1028
Last EDR Contact: 12/12/2018
Next Scheduled EDR Contact: 09/24/2018
Data Release Frequency: Quarterly

MCS: Military Cleanup Sites Listing (GEOTRACKER)
Military sites (consisting of: Military UST sites; Military Privatized sites; and Military Cleanup sites [formerly known as DoD non UST]) included in GeoTracker. GeoTracker is the Water Boards data management system for sites that impact, or have the potential to impact, water quality in California, with emphasis on groundwater.

Date of Government Version: 06/11/2018
Date Data Arrived at EDR: 06/13/2018
Date Made Active in Reports: 07/17/2018
Number of Days to Update: 34

Source: State Water Resources Control Board
Telephone: 866-480-1028
Last EDR Contact: 12/12/2018
Next Scheduled EDR Contact: 09/24/2018
Data Release Frequency: Quarterly

SPILLS 90: SPILLS90 data from FirstSearch
Spills 90 includes those spill and release records available exclusively from FirstSearch databases. Typically, they may include chemical, oil and/or hazardous substance spills recorded after 1990. Duplicate records that are already included in EDR incident and release records are not included in Spills 90.

Date of Government Version: 06/06/2012
Date Data Arrived at EDR: 01/03/2013
Date Made Active in Reports: 02/22/2013
Number of Days to Update: 50

Source: FirstSearch
Telephone: N/A
Last EDR Contact: 01/03/2013
Next Scheduled EDR Contact: N/A
Data Release Frequency: No Update Planned

Other Ascertainable Records

RCRA NonGen / NLR: RCRA - Non Generators / No Longer Regulated
RCRAInfo is EPA's comprehensive information system, providing access to data supporting the Resource Conservation and Recovery Act (RCRA) of 1976 and the Hazardous and Solid Waste Amendments (HSWA) of 1984. The database includes selective information on sites which generate, transport, store, treat and/or dispose of hazardous waste as defined by the Resource Conservation and Recovery Act (RCRA). Non-Generators do not presently generate hazardous waste.

Date of Government Version: 03/01/2018
Date Data Arrived at EDR: 03/28/2018
Date Made Active in Reports: 06/22/2018
Number of Days to Update: 86

Source: Environmental Protection Agency
Telephone: (415) 495-8895
Last EDR Contact: 06/28/2018
Next Scheduled EDR Contact: 10/08/2018
Data Release Frequency: Quarterly

FUDS: Formerly Used Defense Sites

The listing includes locations of Formerly Used Defense Sites properties where the US Army Corps of Engineers is actively working or will take necessary cleanup actions.

Date of Government Version: 01/31/2015
Date Data Arrived at EDR: 07/08/2015
Date Made Active in Reports: 10/13/2015
Number of Days to Update: 97

Source: U.S. Army Corps of Engineers
Telephone: 202-528-4285
Last EDR Contact: 08/24/2018
Next Scheduled EDR Contact: 12/03/2018
Data Release Frequency: Varies

DOD: Department of Defense Sites

This data set consists of federally owned or administered lands, administered by the Department of Defense, that have any area equal to or greater than 640 acres of the United States, Puerto Rico, and the U.S. Virgin Islands.

Date of Government Version: 12/31/2005
Date Data Arrived at EDR: 11/10/2006
Date Made Active in Reports: 01/11/2007
Number of Days to Update: 62

Source: USGS
Telephone: 888-275-8747
Last EDR Contact: 07/11/2018
Next Scheduled EDR Contact: 10/22/2018
Data Release Frequency: Semi-Annually

FEDLAND: Federal and Indian Lands

Federally and Indian administrated lands of the United States. Lands included are administrated by: Army Corps of Engineers, Bureau of Reclamation, National Wild and Scenic River, National Wildlife Refuge, Public Domain Land, Wilderness, Wilderness Study Area, Wildlife Management Area, Bureau of Indian Affairs, Bureau of Land Management, Department of Justice, Forest Service, Fish and Wildlife Service, National Park Service.

Date of Government Version: 12/31/2005
Date Data Arrived at EDR: 02/06/2006
Date Made Active in Reports: 01/11/2007
Number of Days to Update: 339

Source: U.S. Geological Survey
Telephone: 888-275-8747
Last EDR Contact: 07/13/2018
Next Scheduled EDR Contact: 10/22/2018
Data Release Frequency: N/A

SCRD DRYCLEANERS: State Coalition for Remediation of Drycleaners Listing

The State Coalition for Remediation of Drycleaners was established in 1998, with support from the U.S. EPA Office of Superfund Remediation and Technology Innovation. It is comprised of representatives of states with established drycleaner remediation programs. Currently the member states are Alabama, Connecticut, Florida, Illinois, Kansas, Minnesota, Missouri, North Carolina, Oregon, South Carolina, Tennessee, Texas, and Wisconsin.

Date of Government Version: 01/01/2017
Date Data Arrived at EDR: 02/03/2017
Date Made Active in Reports: 04/07/2017
Number of Days to Update: 63

Source: Environmental Protection Agency
Telephone: 615-532-8599
Last EDR Contact: 08/17/2018
Next Scheduled EDR Contact: 11/26/2018
Data Release Frequency: Varies

US FIN ASSUR: Financial Assurance Information

All owners and operators of facilities that treat, store, or dispose of hazardous waste are required to provide proof that they will have sufficient funds to pay for the clean up, closure, and post-closure care of their facilities.

Date of Government Version: 03/01/2018
Date Data Arrived at EDR: 03/27/2018
Date Made Active in Reports: 06/22/2018
Number of Days to Update: 87

Source: Environmental Protection Agency
Telephone: 202-566-1917
Last EDR Contact: 06/27/2018
Next Scheduled EDR Contact: 10/08/2018
Data Release Frequency: Quarterly

EPA WATCH LIST: EPA WATCH LIST

EPA maintains a "Watch List" to facilitate dialogue between EPA, state and local environmental agencies on enforcement matters relating to facilities with alleged violations identified as either significant or high priority. Being on the Watch List does not mean that the facility has actually violated the law only that an investigation by EPA or a state or local environmental agency has led those organizations to allege that an unproven violation has in fact occurred. Being on the Watch List does not represent a higher level of concern regarding the alleged violations that were detected, but instead indicates cases requiring additional dialogue between EPA, state and local agencies - primarily because of the length of time the alleged violation has gone unaddressed or unresolved.

Date of Government Version: 08/30/2013
Date Data Arrived at EDR: 03/21/2014
Date Made Active in Reports: 06/17/2014
Number of Days to Update: 88

Source: Environmental Protection Agency
Telephone: 617-520-3000
Last EDR Contact: 08/03/2018
Next Scheduled EDR Contact: 11/19/2018
Data Release Frequency: Quarterly

2020 COR ACTION: 2020 Corrective Action Program List

The EPA has set ambitious goals for the RCRA Corrective Action program by creating the 2020 Corrective Action Universe. This RCRA cleanup baseline includes facilities expected to need corrective action. The 2020 universe contains a wide variety of sites. Some properties are heavily contaminated while others were contaminated but have since been cleaned up. Still others have not been fully investigated yet, and may require little or no remediation. Inclusion in the 2020 Universe does not necessarily imply failure on the part of a facility to meet its RCRA obligations.

Date of Government Version: 09/30/2017
Date Data Arrived at EDR: 05/08/2018
Date Made Active in Reports: 07/20/2018
Number of Days to Update: 73

Source: Environmental Protection Agency
Telephone: 703-308-4044
Last EDR Contact: 08/10/2018
Next Scheduled EDR Contact: 11/19/2018
Data Release Frequency: Varies

TSCA: Toxic Substances Control Act

Toxic Substances Control Act. TSCA identifies manufacturers and importers of chemical substances included on the TSCA Chemical Substance Inventory list. It includes data on the production volume of these substances by plant site.

Date of Government Version: 12/31/2016
Date Data Arrived at EDR: 06/21/2017
Date Made Active in Reports: 01/05/2018
Number of Days to Update: 198

Source: EPA
Telephone: 202-260-5521
Last EDR Contact: 06/22/2018
Next Scheduled EDR Contact: 10/01/2018
Data Release Frequency: Every 4 Years

TRIS: Toxic Chemical Release Inventory System

Toxic Release Inventory System. TRIS identifies facilities which release toxic chemicals to the air, water and land in reportable quantities under SARA Title III Section 313.

Date of Government Version: 12/31/2016
Date Data Arrived at EDR: 01/10/2018
Date Made Active in Reports: 01/12/2018
Number of Days to Update: 2

Source: EPA
Telephone: 202-566-0250
Last EDR Contact: 08/24/2018
Next Scheduled EDR Contact: 12/03/2018
Data Release Frequency: Annually

SSTS: Section 7 Tracking Systems

Section 7 of the Federal Insecticide, Fungicide and Rodenticide Act, as amended (92 Stat. 829) requires all registered pesticide-producing establishments to submit a report to the Environmental Protection Agency by March 1st each year. Each establishment must report the types and amounts of pesticides, active ingredients and devices being produced, and those having been produced and sold or distributed in the past year.

Date of Government Version: 12/31/2009
Date Data Arrived at EDR: 12/10/2010
Date Made Active in Reports: 02/25/2011
Number of Days to Update: 77

Source: EPA
Telephone: 202-564-4203
Last EDR Contact: 07/27/2018
Next Scheduled EDR Contact: 11/05/2018
Data Release Frequency: Annually

ROD: Records Of Decision

Record of Decision. ROD documents mandate a permanent remedy at an NPL (Superfund) site containing technical and health information to aid in the cleanup.

Date of Government Version: 05/13/2018
Date Data Arrived at EDR: 05/30/2018
Date Made Active in Reports: 06/29/2018
Number of Days to Update: 30

Source: EPA
Telephone: 703-416-0223
Last EDR Contact: 09/07/2018
Next Scheduled EDR Contact: 12/17/2018
Data Release Frequency: Annually

RMP: Risk Management Plans

When Congress passed the Clean Air Act Amendments of 1990, it required EPA to publish regulations and guidance for chemical accident prevention at facilities using extremely hazardous substances. The Risk Management Program Rule (RMP Rule) was written to implement Section 112(r) of these amendments. The rule, which built upon existing industry codes and standards, requires companies of all sizes that use certain flammable and toxic substances to develop a Risk Management Program, which includes a(n): Hazard assessment that details the potential effects of an accidental release, an accident history of the last five years, and an evaluation of worst-case and alternative accidental releases; Prevention program that includes safety precautions and maintenance, monitoring, and employee training measures; and Emergency response program that spells out emergency health care, employee training measures and procedures for informing the public and response agencies (e.g the fire department) should an accident occur.

Date of Government Version: 05/01/2018
Date Data Arrived at EDR: 05/17/2018
Date Made Active in Reports: 09/07/2018
Number of Days to Update: 113

Source: Environmental Protection Agency
Telephone: 202-564-8600
Last EDR Contact: 07/20/2018
Next Scheduled EDR Contact: 11/05/2018
Data Release Frequency: Varies

RAATS: RCRA Administrative Action Tracking System

RCRA Administration Action Tracking System. RAATS contains records based on enforcement actions issued under RCRA pertaining to major violators and includes administrative and civil actions brought by the EPA. For administration actions after September 30, 1995, data entry in the RAATS database was discontinued. EPA will retain a copy of the database for historical records. It was necessary to terminate RAATS because a decrease in agency resources made it impossible to continue to update the information contained in the database.

Date of Government Version: 04/17/1995
Date Data Arrived at EDR: 07/03/1995
Date Made Active in Reports: 08/07/1995
Number of Days to Update: 35

Source: EPA
Telephone: 202-564-4104
Last EDR Contact: 06/02/2008
Next Scheduled EDR Contact: 09/01/2008
Data Release Frequency: No Update Planned

PRP: Potentially Responsible Parties

A listing of verified Potentially Responsible Parties

Date of Government Version: 10/25/2013
Date Data Arrived at EDR: 10/17/2014
Date Made Active in Reports: 10/20/2014
Number of Days to Update: 3

Source: EPA
Telephone: 202-564-6023
Last EDR Contact: 08/09/2018
Next Scheduled EDR Contact: 11/19/2018
Data Release Frequency: Quarterly

PADS: PCB Activity Database System

PCB Activity Database. PADS Identifies generators, transporters, commercial storers and/or brokers and disposers of PCB's who are required to notify the EPA of such activities.

Date of Government Version: 06/01/2017
Date Data Arrived at EDR: 06/09/2017
Date Made Active in Reports: 10/13/2017
Number of Days to Update: 126

Source: EPA
Telephone: 202-566-0500
Last EDR Contact: 07/13/2018
Next Scheduled EDR Contact: 10/22/2018
Data Release Frequency: Annually

ICIS: Integrated Compliance Information System
The Integrated Compliance Information System (ICIS) supports the information needs of the national enforcement and compliance program as well as the unique needs of the National Pollutant Discharge Elimination System (NPDES) program.

Date of Government Version: 11/18/2016
Date Data Arrived at EDR: 11/23/2016
Date Made Active in Reports: 02/10/2017
Number of Days to Update: 79

Source: Environmental Protection Agency
Telephone: 202-564-2501
Last EDR Contact: 07/09/2018
Next Scheduled EDR Contact: 10/22/2018
Data Release Frequency: Quarterly

FTTS: FIFRA/ TSCA Tracking System - FIFRA (Federal Insecticide, Fungicide, & Rodenticide Act)/TSCA (Toxic Substances Control Act)
FTTS tracks administrative cases and pesticide enforcement actions and compliance activities related to FIFRA, TSCA and EPCRA (Emergency Planning and Community Right-to-Know Act). To maintain currency, EDR contacts the Agency on a quarterly basis.

Date of Government Version: 04/09/2009
Date Data Arrived at EDR: 04/16/2009
Date Made Active in Reports: 05/11/2009
Number of Days to Update: 25

Source: EPA/Office of Prevention, Pesticides and Toxic Substances
Telephone: 202-566-1667
Last EDR Contact: 08/18/2017
Next Scheduled EDR Contact: 12/04/2017
Data Release Frequency: Quarterly

FTTS INSP: FIFRA/ TSCA Tracking System - FIFRA (Federal Insecticide, Fungicide, & Rodenticide Act)/TSCA (Toxic Substances Control Act)
A listing of FIFRA/TSCA Tracking System (FTTS) inspections and enforcements.

Date of Government Version: 04/09/2009
Date Data Arrived at EDR: 04/16/2009
Date Made Active in Reports: 05/11/2009
Number of Days to Update: 25

Source: EPA
Telephone: 202-566-1667
Last EDR Contact: 08/18/2017
Next Scheduled EDR Contact: 12/04/2017
Data Release Frequency: Quarterly

MLTS: Material Licensing Tracking System
MLTS is maintained by the Nuclear Regulatory Commission and contains a list of approximately 8,100 sites which possess or use radioactive materials and which are subject to NRC licensing requirements. To maintain currency, EDR contacts the Agency on a quarterly basis.

Date of Government Version: 08/30/2016
Date Data Arrived at EDR: 09/08/2016
Date Made Active in Reports: 10/21/2016
Number of Days to Update: 43

Source: Nuclear Regulatory Commission
Telephone: 301-415-7169
Last EDR Contact: 07/23/2018
Next Scheduled EDR Contact: 11/05/2018
Data Release Frequency: Quarterly

COAL ASH DOE: Steam-Electric Plant Operation Data
A listing of power plants that store ash in surface ponds.

Date of Government Version: 12/31/2005
Date Data Arrived at EDR: 08/07/2009
Date Made Active in Reports: 10/22/2009
Number of Days to Update: 76

Source: Department of Energy
Telephone: 202-586-8719
Last EDR Contact: 09/07/2018
Next Scheduled EDR Contact: 12/17/2018
Data Release Frequency: Varies

COAL ASH EPA: Coal Combustion Residues Surface Impoundments List
A listing of coal combustion residues surface impoundments with high hazard potential ratings.

Date of Government Version: 07/01/2014
Date Data Arrived at EDR: 09/10/2014
Date Made Active in Reports: 10/20/2014
Number of Days to Update: 40

Source: Environmental Protection Agency
Telephone: N/A
Last EDR Contact: 09/04/2018
Next Scheduled EDR Contact: 12/17/2018
Data Release Frequency: Varies

PCB TRANSFORMER: PCB Transformer Registration Database
The database of PCB transformer registrations that includes all PCB registration submittals.

Date of Government Version: 05/24/2017
Date Data Arrived at EDR: 11/30/2017
Date Made Active in Reports: 12/15/2017
Number of Days to Update: 15

Source: Environmental Protection Agency
Telephone: 202-566-0517
Last EDR Contact: 07/27/2018
Next Scheduled EDR Contact: 11/05/2018
Data Release Frequency: Varies

RADINFO: Radiation Information Database
The Radiation Information Database (RADINFO) contains information about facilities that are regulated by U.S. Environmental Protection Agency (EPA) regulations for radiation and radioactivity.

Date of Government Version: 04/03/2018
Date Data Arrived at EDR: 04/05/2018
Date Made Active in Reports: 06/29/2018
Number of Days to Update: 85

Source: Environmental Protection Agency
Telephone: 202-343-9775
Last EDR Contact: 07/05/2018
Next Scheduled EDR Contact: 10/15/2018
Data Release Frequency: Quarterly

HIST FTTS: FIFRA/TSCA Tracking System Administrative Case Listing
A complete administrative case listing from the FIFRA/TSCA Tracking System (FTTS) for all ten EPA regions. The information was obtained from the National Compliance Database (NCDB). NCDB supports the implementation of FIFRA (Federal Insecticide, Fungicide, and Rodenticide Act) and TSCA (Toxic Substances Control Act). Some EPA regions are now closing out records. Because of that, and the fact that some EPA regions are not providing EPA Headquarters with updated records, it was decided to create a HIST FTTS database. It included records that may not be included in the newer FTTS database updates. This database is no longer updated.

Date of Government Version: 10/19/2006
Date Data Arrived at EDR: 03/01/2007
Date Made Active in Reports: 04/10/2007
Number of Days to Update: 40

Source: Environmental Protection Agency
Telephone: 202-564-2501
Last EDR Contact: 12/17/2007
Next Scheduled EDR Contact: 03/17/2008
Data Release Frequency: No Update Planned

HIST FTTS INSP: FIFRA/TSCA Tracking System Inspection & Enforcement Case Listing
A complete inspection and enforcement case listing from the FIFRA/TSCA Tracking System (FTTS) for all ten EPA regions. The information was obtained from the National Compliance Database (NCDB). NCDB supports the implementation of FIFRA (Federal Insecticide, Fungicide, and Rodenticide Act) and TSCA (Toxic Substances Control Act). Some EPA regions are now closing out records. Because of that, and the fact that some EPA regions are not providing EPA Headquarters with updated records, it was decided to create a HIST FTTS database. It included records that may not be included in the newer FTTS database updates. This database is no longer updated.

Date of Government Version: 10/19/2006
Date Data Arrived at EDR: 03/01/2007
Date Made Active in Reports: 04/10/2007
Number of Days to Update: 40

Source: Environmental Protection Agency
Telephone: 202-564-2501
Last EDR Contact: 12/17/2008
Next Scheduled EDR Contact: 03/17/2008
Data Release Frequency: No Update Planned

DOT OPS: Incident and Accident Data
Department of Transporation, Office of Pipeline Safety Incident and Accident data.

Date of Government Version: 07/31/2012
Date Data Arrived at EDR: 08/07/2012
Date Made Active in Reports: 09/18/2012
Number of Days to Update: 42

Source: Department of Transporation, Office of Pipeline Safety
Telephone: 202-366-4595
Last EDR Contact: 08/09/2018
Next Scheduled EDR Contact: 11/12/2018
Data Release Frequency: Varies

CONSENT: Superfund (CERCLA) Consent Decrees
Major legal settlements that establish responsibility and standards for cleanup at NPL (Superfund) sites. Released periodically by United States District Courts after settlement by parties to litigation matters.

Date of Government Version: 03/31/2018
Date Data Arrived at EDR: 04/16/2018
Date Made Active in Reports: 06/29/2018
Number of Days to Update: 74

Source: Department of Justice, Consent Decree Library
Telephone: Varies
Last EDR Contact: 07/09/2018
Next Scheduled EDR Contact: 10/01/2018
Data Release Frequency: Varies

BRS: Biennial Reporting System

The Biennial Reporting System is a national system administered by the EPA that collects data on the generation and management of hazardous waste. BRS captures detailed data from two groups: Large Quantity Generators (LQG) and Treatment, Storage, and Disposal Facilities.

Date of Government Version: 12/31/2015
Date Data Arrived at EDR: 02/22/2017
Date Made Active in Reports: 09/28/2017
Number of Days to Update: 218

Source: EPA/NTIS
Telephone: 800-424-9346
Last EDR Contact: 08/24/2018
Next Scheduled EDR Contact: 12/03/2018
Data Release Frequency: Biennially

INDIAN RESERV: Indian Reservations

This map layer portrays Indian administered lands of the United States that have any area equal to or greater than 640 acres.

Date of Government Version: 12/31/2014
Date Data Arrived at EDR: 07/14/2015
Date Made Active in Reports: 01/10/2017
Number of Days to Update: 546

Source: USGS
Telephone: 202-208-3710
Last EDR Contact: 07/11/2018
Next Scheduled EDR Contact: 10/22/2018
Data Release Frequency: Semi-Annually

FUSRAP: Formerly Utilized Sites Remedial Action Program

DOE established the Formerly Utilized Sites Remedial Action Program (FUSRAP) in 1974 to remediate sites where radioactive contamination remained from Manhattan Project and early U.S. Atomic Energy Commission (AEC) operations.

Date of Government Version: 12/23/2016
Date Data Arrived at EDR: 12/27/2016
Date Made Active in Reports: 02/17/2017
Number of Days to Update: 52

Source: Department of Energy
Telephone: 202-586-3559
Last EDR Contact: 08/01/2018
Next Scheduled EDR Contact: 11/19/2018
Data Release Frequency: Varies

UMTRA: Uranium Mill Tailings Sites

Uranium ore was mined by private companies for federal government use in national defense programs. When the mills shut down, large piles of the sand-like material (mill tailings) remain after uranium has been extracted from the ore. Levels of human exposure to radioactive materials from the piles are low; however, in some cases tailings were used as construction materials before the potential health hazards of the tailings were recognized.

Date of Government Version: 06/23/2017
Date Data Arrived at EDR: 10/11/2017
Date Made Active in Reports: 11/03/2017
Number of Days to Update: 23

Source: Department of Energy
Telephone: 505-845-0011
Last EDR Contact: 08/20/2018
Next Scheduled EDR Contact: 12/03/2018
Data Release Frequency: Varies

LEAD SMELTER 1: Lead Smelter Sites

A listing of former lead smelter site locations.

Date of Government Version: 05/13/2018
Date Data Arrived at EDR: 05/30/2018
Date Made Active in Reports: 06/29/2018
Number of Days to Update: 30

Source: Environmental Protection Agency
Telephone: 703-603-8787
Last EDR Contact: 08/09/2018
Next Scheduled EDR Contact: 10/15/2018
Data Release Frequency: Varies

LEAD SMELTER 2: Lead Smelter Sites

A list of several hundred sites in the U.S. where secondary lead smelting was done from 1931and 1964. These sites may pose a threat to public health through ingestion or inhalation of contaminated soil or dust

Date of Government Version: 04/05/2001
Date Data Arrived at EDR: 10/27/2010
Date Made Active in Reports: 12/02/2010
Number of Days to Update: 36

Source: American Journal of Public Health
Telephone: 703-305-6451
Last EDR Contact: 12/02/2009
Next Scheduled EDR Contact: N/A
Data Release Frequency: No Update Planned

US AIRS (AFS): Aerometric Information Retrieval System Facility Subsystem (AFS)

The database is a sub-system of Aerometric Information Retrieval System (AIRS). AFS contains compliance data on air pollution point sources regulated by the U.S. EPA and/or state and local air regulatory agencies. This information comes from source reports by various stationary sources of air pollution, such as electric power plants, steel mills, factories, and universities, and provides information about the air pollutants they produce. Action, air program, air program pollutant, and general level plant data. It is used to track emissions and compliance data from industrial plants.

Date of Government Version: 10/12/2016
Date Data Arrived at EDR: 10/26/2016
Date Made Active in Reports: 02/03/2017
Number of Days to Update: 100

Source: EPA
Telephone: 202-564-2496
Last EDR Contact: 09/26/2017
Next Scheduled EDR Contact: 01/08/2018
Data Release Frequency: Annually

US AIRS MINOR: Air Facility System Data

A listing of minor source facilities.

Date of Government Version: 10/12/2016
Date Data Arrived at EDR: 10/26/2016
Date Made Active in Reports: 02/03/2017
Number of Days to Update: 100

Source: EPA
Telephone: 202-564-2496
Last EDR Contact: 09/26/2017
Next Scheduled EDR Contact: 01/08/2018
Data Release Frequency: Annually

US MINES: Mines Master Index File

Contains all mine identification numbers issued for mines active or opened since 1971. The data also includes violation information.

Date of Government Version: 05/03/2018
Date Data Arrived at EDR: 05/31/2018
Date Made Active in Reports: 06/29/2018
Number of Days to Update: 29

Source: Department of Labor, Mine Safety and Health Administration
Telephone: 303-231-5959
Last EDR Contact: 08/29/2018
Next Scheduled EDR Contact: 12/10/2018
Data Release Frequency: Semi-Annually

US MINES 2: Ferrous and Nonferrous Metal Mines Database Listing

This map layer includes ferrous (ferrous metal mines are facilities that extract ferrous metals, such as iron ore or molybdenum) and nonferrous (Nonferrous metal mines are facilities that extract nonferrous metals, such as gold, silver, copper, zinc, and lead) metal mines in the United States.

Date of Government Version: 12/05/2005
Date Data Arrived at EDR: 02/29/2008
Date Made Active in Reports: 04/18/2008
Number of Days to Update: 49

Source: USGS
Telephone: 703-648-7709
Last EDR Contact: 08/31/2018
Next Scheduled EDR Contact: 12/10/2018
Data Release Frequency: Varies

US MINES 3: Active Mines & Mineral Plants Database Listing

Active Mines and Mineral Processing Plant operations for commodities monitored by the Minerals Information Team of the USGS.

Date of Government Version: 04/14/2011
Date Data Arrived at EDR: 06/08/2011
Date Made Active in Reports: 09/13/2011
Number of Days to Update: 97

Source: USGS
Telephone: 703-648-7709
Last EDR Contact: 08/31/2018
Next Scheduled EDR Contact: 12/10/2018
Data Release Frequency: Varies

GOVERNMENT RECORDS SEARCHED / DATA CURRENCY TRACKING

ABANDONED MINES: Abandoned Mines

An inventory of land and water impacted by past mining (primarily coal mining) is maintained by OSMRE to provide information needed to implement the Surface Mining Control and Reclamation Act of 1977 (SMCRA). The inventory contains information on the location, type, and extent of AML impacts, as well as, information on the cost associated with the reclamation of those problems. The inventory is based upon field surveys by State, Tribal, and OSMRE program officials. It is dynamic to the extent that it is modified as new problems are identified and existing problems are reclaimed.

Date of Government Version: 03/08/2018
Date Data Arrived at EDR: 03/13/2018
Date Made Active in Reports: 06/08/2018
Number of Days to Update: 87

Source: Department of Interior
Telephone: 202-208-2609
Last EDR Contact: 06/20/2018
Next Scheduled EDR Contact: 09/24/2018
Data Release Frequency: Quarterly

FINDS: Facility Index System/Facility Registry System

Facility Index System. FINDS contains both facility information and 'pointers' to other sources that contain more detail. EDR includes the following FINDS databases in this report: PCS (Permit Compliance System), AIRS (Aerometric Information Retrieval System), DOCKET (Enforcement Docket used to manage and track information on civil judicial enforcement cases for all environmental statutes), FURS (Federal Underground Injection Control), C-DOCKET (Criminal Docket System used to track criminal enforcement actions for all environmental statutes), FFIS (Federal Facilities Information System), STATE (State Environmental Laws and Statutes), and PADS (PCB Activity Data System).

Date of Government Version: 02/21/2018
Date Data Arrived at EDR: 02/23/2018
Date Made Active in Reports: 03/23/2018
Number of Days to Update: 28

Source: EPA
Telephone: (415) 947-8000
Last EDR Contact: 09/05/2018
Next Scheduled EDR Contact: 12/17/2018
Data Release Frequency: Quarterly

UXO: Unexploded Ordnance Sites

A listing of unexploded ordnance site locations

Date of Government Version: 09/30/2016
Date Data Arrived at EDR: 10/31/2017
Date Made Active in Reports: 01/12/2018
Number of Days to Update: 73

Source: Department of Defense
Telephone: 703-704-1564
Last EDR Contact: 07/13/2018
Next Scheduled EDR Contact: 10/29/2018
Data Release Frequency: Varies

DOCKET HWC: Hazardous Waste Compliance Docket Listing

A complete list of the Federal Agency Hazardous Waste Compliance Docket Facilities.

Date of Government Version: 01/04/2018
Date Data Arrived at EDR: 01/19/2018
Date Made Active in Reports: 04/13/2018
Number of Days to Update: 84

Source: Environmental Protection Agency
Telephone: 202-564-0527
Last EDR Contact: 08/31/2018
Next Scheduled EDR Contact: 12/10/2018
Data Release Frequency: Varies

ECHO: Enforcement & Compliance History Information

ECHO provides integrated compliance and enforcement information for about 800,000 regulated facilities nationwide.

Date of Government Version: 02/25/2018
Date Data Arrived at EDR: 03/17/2018
Date Made Active in Reports: 06/08/2018
Number of Days to Update: 83

Source: Environmental Protection Agency
Telephone: 202-564-2280
Last EDR Contact: 09/05/2018
Next Scheduled EDR Contact: 12/17/2018
Data Release Frequency: Quarterly

FUELS PROGRAM: EPA Fuels Program Registered Listing

This listing includes facilities that are registered under the Part 80 (Code of Federal Regulations) EPA Fuels Programs. All companies now are required to submit new and updated registrations.

Date of Government Version: 05/21/2018
Date Data Arrived at EDR: 05/23/2018
Date Made Active in Reports: 09/07/2018
Number of Days to Update: 107

Source: EPA
Telephone: 800-385-6164
Last EDR Contact: 08/22/2018
Next Scheduled EDR Contact: 12/03/2018
Data Release Frequency: Quarterly

CA BOND EXP. PLAN: Bond Expenditure Plan

Department of Health Services developed a site-specific expenditure plan as the basis for an appropriation of Hazardous Substance Cleanup Bond Act funds. It is not updated.

Date of Government Version: 01/01/1989
Date Data Arrived at EDR: 07/27/1994
Date Made Active in Reports: 08/02/1994
Number of Days to Update: 6

Source: Department of Health Services
Telephone: 916-255-2118
Last EDR Contact: 05/31/1994
Next Scheduled EDR Contact: N/A
Data Release Frequency: No Update Planned

CORTESE: "Cortese" Hazardous Waste & Substances Sites List

The sites for the list are designated by the State Water Resource Control Board (LUST), the Integrated Waste Board (SWF/LS), and the Department of Toxic Substances Control (Cal-Sites).

Date of Government Version: 06/25/2018
Date Data Arrived at EDR: 06/27/2018
Date Made Active in Reports: 08/06/2018
Number of Days to Update: 40

Source: CAL EPA/Office of Emergency Information
Telephone: 916-323-3400
Last EDR Contact: 06/27/2018
Next Scheduled EDR Contact: 10/08/2018
Data Release Frequency: Quarterly

CUPA SAN FRANCISCO CO: CUPA SAN FRANCISCO CO

Cupa facilities

Date of Government Version: 04/20/2018
Date Data Arrived at EDR: 04/24/2018
Date Made Active in Reports: 05/04/2018
Number of Days to Update: 10

Source: San Francisco County Department of Environmental Health
Telephone: 415-252-3896
Last EDR Contact: 08/01/2018
Next Scheduled EDR Contact: 11/19/2018
Data Release Frequency: Varies

CUPA LIVERMORE-PLEASANTON: CUPA Facility Listing

list of facilities associated with the various CUPA programs in Livermore-Pleasanton

Date of Government Version: 04/03/2018
Date Data Arrived at EDR: 05/07/2018
Date Made Active in Reports: 06/15/2018
Number of Days to Update: 39

Source: Livermore-Pleasanton Fire Department
Telephone: 925-454-2361
Last EDR Contact: 08/24/2018
Next Scheduled EDR Contact: 11/26/2018
Data Release Frequency: Varies

DRYCLEANERS: Cleaner Facilities

A list of drycleaner related facilities that have EPA ID numbers. These are facilities with certain SIC codes: power laundries, family and commercial; garment pressing and cleaner's agents; linen supply; coin-operated laundries and cleaning; drycleaning plants, except rugs; carpet and upholster cleaning; industrial launderers; laundry and garment services.

Date of Government Version: 05/31/2018
Date Data Arrived at EDR: 06/20/2018
Date Made Active in Reports: 08/06/2018
Number of Days to Update: 47

Source: Department of Toxic Substance Control
Telephone: 916-327-4498
Last EDR Contact: 08/29/2018
Next Scheduled EDR Contact: 12/17/2018
Data Release Frequency: Annually

DRYCLEAN AVAQMD: Antelope Valley Air Quality Management District Drycleaner Listing

A listing of dry cleaners in the Antelope Valley Air Quality Management District.

Date of Government Version: 06/25/2018
Date Data Arrived at EDR: 06/28/2018
Date Made Active in Reports: 08/06/2018
Number of Days to Update: 39

Source: Antelope Valley Air Quality Management District
Telephone: 661-723-8070
Last EDR Contact: 08/29/2018
Next Scheduled EDR Contact: 12/17/2018
Data Release Frequency: Varies

DRYCLEAN SOUTH COAST: DRYCLEAN SOUTH COAST

A listing of dry cleaners in the South Coast Air Quality Management District

Date of Government Version: 03/16/2018
Date Data Arrived at EDR: 03/20/2018
Date Made Active in Reports: 05/04/2018
Number of Days to Update: 45

Source: South Coast Air Quality Management District
Telephone: 909-396-3211
Last EDR Contact: 08/22/2018
Next Scheduled EDR Contact: 12/10/2018
Data Release Frequency: Varies

EMI: Emissions Inventory Data

Toxics and criteria pollutant emissions data collected by the ARB and local air pollution agencies.

Date of Government Version: 12/31/2017
Date Data Arrived at EDR: 06/20/2018
Date Made Active in Reports: 08/06/2018
Number of Days to Update: 47

Source: California Air Resources Board
Telephone: 916-322-2990
Last EDR Contact: 06/20/2018
Next Scheduled EDR Contact: 10/01/2018
Data Release Frequency: Varies

ENF: Enforcement Action Listing

A listing of Water Board Enforcement Actions. Formal is everything except Oral/Verbal Communication, Notice of Violation, Expedited Payment Letter, and Staff Enforcement Letter.

Date of Government Version: 08/01/2018
Date Data Arrived at EDR: 08/02/2018
Date Made Active in Reports: 09/07/2018
Number of Days to Update: 36

Source: State Water Resoruces Control Board
Telephone: 916-445-9379
Last EDR Contact: 08/01/2018
Next Scheduled EDR Contact: 11/05/2018
Data Release Frequency: Varies

Financial Assurance 1: Financial Assurance Information Listing

Financial Assurance information

Date of Government Version: 04/18/2018
Date Data Arrived at EDR: 04/20/2018
Date Made Active in Reports: 06/19/2018
Number of Days to Update: 60

Source: Department of Toxic Substances Control
Telephone: 916-255-3628
Last EDR Contact: 07/17/2018
Next Scheduled EDR Contact: 11/05/2018
Data Release Frequency: Varies

Financial Assurance 2: Financial Assurance Information Listing

A listing of financial assurance information for solid waste facilities. Financial assurance is intended to ensure that resources are available to pay for the cost of closure, post-closure care, and corrective measures if the owner or operator of a regulated facility is unable or unwilling to pay.

Date of Government Version: 05/14/2018
Date Data Arrived at EDR: 05/15/2018
Date Made Active in Reports: 06/22/2018
Number of Days to Update: 38

Source: California Integrated Waste Management Board
Telephone: 916-341-6066
Last EDR Contact: 08/07/2018
Next Scheduled EDR Contact: 11/26/2018
Data Release Frequency: Varies

HAZNET: Facility and Manifest Data

Facility and Manifest Data. The data is extracted from the copies of hazardous waste manifests received each year by the DTSC. The annual volume of manifests is typically 700,000 - 1,000,000 annually, representing approximately 350,000 - 500,000 shipments. Data are from the manifests submitted without correction, and therefore many contain some invalid values for data elements such as generator ID, TSD ID, waste category, and disposal method. This database begins with calendar year 1993.

Date of Government Version: 12/31/2016
Date Data Arrived at EDR: 07/12/2017
Date Made Active in Reports: 10/17/2017
Number of Days to Update: 97

Source: California Environmental Protection Agency
Telephone: 916-255-1136
Last EDR Contact: 07/13/2018
Next Scheduled EDR Contact: 10/22/2018
Data Release Frequency: Annually

ICE: ICE
Contains data pertaining to the Permitted Facilities with Inspections / Enforcements sites tracked in Envirostor.

Date of Government Version: 05/21/2018
Date Data Arrived at EDR: 05/23/2018
Date Made Active in Reports: 07/17/2018
Number of Days to Update: 55

Source: Department of Toxic Subsances Control
Telephone: 877-786-9427
Last EDR Contact: 08/21/2018
Next Scheduled EDR Contact: 12/03/2018
Data Release Frequency: Quarterly

HIST CORTESE: Hazardous Waste & Substance Site List
The sites for the list are designated by the State Water Resource Control Board [LUST], the Integrated Waste Board [SWF/LS], and the Department of Toxic Substances Control [CALSITES]. This listing is no longer updated by the state agency.

Date of Government Version: 04/01/2001
Date Data Arrived at EDR: 01/22/2009
Date Made Active in Reports: 04/08/2009
Number of Days to Update: 76

Source: Department of Toxic Substances Control
Telephone: 916-323-3400
Last EDR Contact: 01/22/2009
Next Scheduled EDR Contact: N/A
Data Release Frequency: No Update Planned

HWP: EnviroStor Permitted Facilities Listing
Detailed information on permitted hazardous waste facilities and corrective action ("cleanups") tracked in EnviroStor.

Date of Government Version: 05/21/2018
Date Data Arrived at EDR: 05/23/2018
Date Made Active in Reports: 07/17/2018
Number of Days to Update: 55

Source: Department of Toxic Substances Control
Telephone: 916-323-3400
Last EDR Contact: 08/21/2018
Next Scheduled EDR Contact: 12/03/2018
Data Release Frequency: Quarterly

HWT: Registered Hazardous Waste Transporter Database
A listing of hazardous waste transporters. In California, unless specifically exempted, it is unlawful for any person to transport hazardous wastes unless the person holds a valid registration issued by DTSC. A hazardous waste transporter registration is valid for one year and is assigned a unique registration number.

Date of Government Version: 07/09/2018
Date Data Arrived at EDR: 07/11/2018
Date Made Active in Reports: 08/24/2018
Number of Days to Update: 44

Source: Department of Toxic Substances Control
Telephone: 916-440-7145
Last EDR Contact: 07/11/2018
Next Scheduled EDR Contact: 10/22/2018
Data Release Frequency: Quarterly

MINES: Mines Site Location Listing
A listing of mine site locations from the Office of Mine Reclamation.

Date of Government Version: 06/11/2018
Date Data Arrived at EDR: 06/13/2018
Date Made Active in Reports: 08/06/2018
Number of Days to Update: 54

Source: Department of Conservation
Telephone: 916-322-1080
Last EDR Contact: 06/13/2018
Next Scheduled EDR Contact: 09/24/2018
Data Release Frequency: Quarterly

MWMP: Medical Waste Management Program Listing
The Medical Waste Management Program (MWMP) ensures the proper handling and disposal of medical waste by permitting and inspecting medical waste Offsite Treatment Facilities (PDF) and Transfer Stations (PDF) throughout the state. MWMP also oversees all Medical Waste Transporters.

Date of Government Version: 05/23/2018
Date Data Arrived at EDR: 06/06/2018
Date Made Active in Reports: 07/18/2018
Number of Days to Update: 42

Source: Department of Public Health
Telephone: 916-558-1784
Last EDR Contact: 09/05/2018
Next Scheduled EDR Contact: 12/17/2018
Data Release Frequency: Varies

NPDES: NPDES Permits Listing
A listing of NPDES permits, including stormwater.

Date of Government Version: 05/14/2018
Date Data Arrived at EDR: 05/16/2018
Date Made Active in Reports: 07/05/2018
Number of Days to Update: 50

Source: State Water Resources Control Board
Telephone: 916-445-9379
Last EDR Contact: 08/10/2018
Next Scheduled EDR Contact: 11/26/2018
Data Release Frequency: Quarterly

PEST LIC: Pesticide Regulation Licenses Listing
A listing of licenses and certificates issued by the Department of Pesticide Regulation. The DPR issues licenses and/or certificates to: Persons and businesses that apply or sell pesticides; Pest control dealers and brokers; Persons who advise on agricultural pesticide applications.

Date of Government Version: 06/04/2018
Date Data Arrived at EDR: 06/06/2018
Date Made Active in Reports: 07/19/2018
Number of Days to Update: 43

Source: Department of Pesticide Regulation
Telephone: 916-445-4038
Last EDR Contact: 09/05/2018
Next Scheduled EDR Contact: 12/17/2018
Data Release Frequency: Quarterly

PROC: Certified Processors Database
A listing of certified processors.

Date of Government Version: 06/11/2018
Date Data Arrived at EDR: 06/13/2018
Date Made Active in Reports: 08/06/2018
Number of Days to Update: 54

Source: Department of Conservation
Telephone: 916-323-3836
Last EDR Contact: 06/13/2018
Next Scheduled EDR Contact: 09/24/2018
Data Release Frequency: Quarterly

NOTIFY 65: Proposition 65 Records
Listings of all Proposition 65 incidents reported to counties by the State Water Resources Control Board and the Regional Water Quality Control Board. This database is no longer updated by the reporting agency.

Date of Government Version: 06/18/2018
Date Data Arrived at EDR: 06/20/2018
Date Made Active in Reports: 08/06/2018
Number of Days to Update: 47

Source: State Water Resources Control Board
Telephone: 916-445-3846
Last EDR Contact: 06/14/2018
Next Scheduled EDR Contact: 10/01/2018
Data Release Frequency: No Update Planned

UIC: UIC Listing
A listing of wells identified as underground injection wells, in the California Oil and Gas Wells database.

Date of Government Version: 04/27/2018
Date Data Arrived at EDR: 06/13/2018
Date Made Active in Reports: 07/17/2018
Number of Days to Update: 34

Source: Deaprtment of Conservation
Telephone: 916-445-2408
Last EDR Contact: 06/13/2018
Next Scheduled EDR Contact: 09/24/2018
Data Release Frequency: Varies

WASTEWATER PITS: Oil Wastewater Pits Listing
Water officials discovered that oil producers have been dumping chemical-laden wastewater into hundreds of unlined pits that are operating without proper permits. Inspections completed by the Central Valley Regional Water Quality Control Board revealed the existence of previously unidentified waste sites. The water boards review found that more than one-third of the region's active disposal pits are operating without permission.

Date of Government Version: 04/10/2018
Date Data Arrived at EDR: 04/13/2018
Date Made Active in Reports: 06/19/2018
Number of Days to Update: 67

Source: RWQCB, Central Valley Region
Telephone: 559-445-5577
Last EDR Contact: 07/11/2018
Next Scheduled EDR Contact: 10/22/2018
Data Release Frequency: Varies

WDS: Waste Discharge System
Sites which have been issued waste discharge requirements.

Date of Government Version: 06/19/2007
Date Data Arrived at EDR: 06/20/2007
Date Made Active in Reports: 06/29/2007
Number of Days to Update: 9

Source: State Water Resources Control Board
Telephone: 916-341-5227
Last EDR Contact: 08/17/2018
Next Scheduled EDR Contact: 12/03/2018
Data Release Frequency: Quarterly

WIP: Well Investigation Program Case List
Well Investigation Program case in the San Gabriel and San Fernando Valley area.

Date of Government Version: 07/03/2009
Date Data Arrived at EDR: 07/21/2009
Date Made Active in Reports: 08/03/2009
Number of Days to Update: 13

Source: Los Angeles Water Quality Control Board
Telephone: 213-576-6726
Last EDR Contact: 06/25/2018
Next Scheduled EDR Contact: 10/08/2018
Data Release Frequency: Varies

PROJECT: Project Sites (GEOTRACKER)
Projects sites

Date of Government Version: 06/11/2018
Date Data Arrived at EDR: 06/13/2018
Date Made Active in Reports: 07/18/2018
Number of Days to Update: 35

Source: State Water Resources Control Board
Telephone: 866-480-1028
Last EDR Contact: 12/12/2018
Next Scheduled EDR Contact: 09/24/2018
Data Release Frequency: Varies

NON-CASE INFO: Non-Case Information Sites (GEOTRACKER)
Non-Case Information sites

Date of Government Version: 06/11/2018
Date Data Arrived at EDR: 06/13/2018
Date Made Active in Reports: 07/18/2018
Number of Days to Update: 35

Source: State Water Resources Control Board
Telephone: 866-480-1028
Last EDR Contact: 12/12/2018
Next Scheduled EDR Contact: 09/24/2018
Data Release Frequency: Varies

OTHER OIL GAS: Other Oil & Gas Projects Sites (GEOTRACKER)
Other Oil & Gas Projects sites

Date of Government Version: 06/11/2018
Date Data Arrived at EDR: 06/13/2018
Date Made Active in Reports: 07/18/2018
Number of Days to Update: 35

Source: State Water Resources Control Board
Telephone: 866-480-1028
Last EDR Contact: 12/12/2018
Next Scheduled EDR Contact: 09/24/2018
Data Release Frequency: Varies

MILITARY PRIV SITES: Military Privatized Sites (GEOTRACKER)
Military privatized sites

Date of Government Version: 06/11/2018
Date Data Arrived at EDR: 06/13/2018
Date Made Active in Reports: 07/18/2018
Number of Days to Update: 35

Source: State Water Resources Control Board
Telephone: 866-480-1028
Last EDR Contact: 12/12/2018
Next Scheduled EDR Contact: 09/24/2018
Data Release Frequency: Varies

CIWQS: California Integrated Water Quality System

The California Integrated Water Quality System (CIWQS) is a computer system used by the State and Regional Water Quality Control Boards to track information about places of environmental interest, manage permits and other orders, track inspections, and manage violations and enforcement activities.

Date of Government Version: 06/04/2018
Date Data Arrived at EDR: 06/06/2018
Date Made Active in Reports: 07/13/2018
Number of Days to Update: 37

Source: State Water Resources Control Board
Telephone: 866-794-4977
Last EDR Contact: 09/05/2018
Next Scheduled EDR Contact: 12/17/2018
Data Release Frequency: Varies

CERS: CalEPA Regulated Site Portal Data

The CalEPA Regulated Site Portal database combines data about environmentally regulated sites and facilities in California into a single database. It combines data from a variety of state and federal databases, and provides an overview of regulated activities across the spectrum of environmental programs for any given location in California. These activities include hazardous materials and waste, state and federal cleanups, impacted ground and surface waters, and toxic materials

Date of Government Version: 07/23/2018
Date Data Arrived at EDR: 07/25/2018
Date Made Active in Reports: 09/05/2018
Number of Days to Update: 42

Source: California Environmental Protection Agency
Telephone: 916-323-2514
Last EDR Contact: 07/25/2018
Next Scheduled EDR Contact: 11/05/2018
Data Release Frequency: Varies

WELL STIM PROJ: Well Stimulation Project (GEOTRACKER)

Includes areas of groundwater monitoring plans, a depiction of the monitoring network, and the facilities, boundaries, and subsurface characteristics of the oilfield and the features (oil and gas wells, produced water ponds, UIC wells, water supply wells, etc?) being monitored

Date of Government Version: 06/11/2018
Date Data Arrived at EDR: 06/13/2018
Date Made Active in Reports: 07/18/2018
Number of Days to Update: 35

Source: State Water Resources Control Board
Telephone: 866-480-1028
Last EDR Contact: 12/12/2018
Next Scheduled EDR Contact: 09/24/2018
Data Release Frequency: Varies

PROD WATER PONDS: Produced Water Ponds Sites (GEOTRACKER)

Produced water ponds sites

Date of Government Version: 06/11/2018
Date Data Arrived at EDR: 06/13/2018
Date Made Active in Reports: 07/18/2018
Number of Days to Update: 35

Source: State Water Resources Control Board
Telephone: 866-480-1028
Last EDR Contact: 12/12/2018
Next Scheduled EDR Contact: 09/24/2018
Data Release Frequency: Varies

SAMPLING POINT: Sampling Point ? Public Sites (GEOTRACKER)

Sampling point - public sites

Date of Government Version: 06/11/2018
Date Data Arrived at EDR: 06/13/2018
Date Made Active in Reports: 07/18/2018
Number of Days to Update: 35

Source: State Water Resources Control Board
Telephone: 866-480-1028
Last EDR Contact: 12/12/2018
Next Scheduled EDR Contact: 09/24/2018
Data Release Frequency: Varies

UIC GEO: Underground Injection Control Sites (GEOTRACKER)

Underground control injection sites

Date of Government Version: 06/11/2018
Date Data Arrived at EDR: 06/13/2018
Date Made Active in Reports: 07/18/2018
Number of Days to Update: 35

Source: State Water Resource Control Board
Telephone: 866-480-1028
Last EDR Contact: 12/12/2018
Next Scheduled EDR Contact: 09/24/2018
Data Release Frequency: Varies

EDR HIGH RISK HISTORICAL RECORDS

EDR Exclusive Records

EDR MGP: EDR Proprietary Manufactured Gas Plants

The EDR Proprietary Manufactured Gas Plant Database includes records of coal gas plants (manufactured gas plants) compiled by EDR's researchers. Manufactured gas sites were used in the United States from the 1800's to 1950's to produce a gas that could be distributed and used as fuel. These plants used whale oil, rosin, coal, or a mixture of coal, oil, and water that also produced a significant amount of waste. Many of the byproducts of the gas production, such as coal tar (oily waste containing volatile and non-volatile chemicals), sludges, oils and other compounds are potentially hazardous to human health and the environment. The byproduct from this process was frequently disposed of directly at the plant site and can remain or spread slowly, serving as a continuous source of soil and groundwater contamination.

Date of Government Version: N/A
Date Data Arrived at EDR: N/A
Date Made Active in Reports: N/A
Number of Days to Update: N/A

Source: EDR, Inc.
Telephone: N/A
Last EDR Contact: N/A
Next Scheduled EDR Contact: N/A
Data Release Frequency: No Update Planned

EDR Hist Auto: EDR Exclusive Historical Auto Stations

EDR has searched selected national collections of business directories and has collected listings of potential gas station/filling station/service station sites that were available to EDR researchers. EDR's review was limited to those categories of sources that might, in EDR's opinion, include gas station/filling station/service station establishments. The categories reviewed included, but were not limited to gas, gas station, gasoline station, filling station, auto, automobile repair, auto service station, service station, etc. This database falls within a category of information EDR classifies as "High Risk Historical Records", or HRHR. EDR's HRHR effort presents unique and sometimes proprietary data about past sites and operations that typically create environmental concerns, but may not show up in current government records searches.

Date of Government Version: N/A
Date Data Arrived at EDR: N/A
Date Made Active in Reports: N/A
Number of Days to Update: N/A

Source: EDR, Inc.
Telephone: N/A
Last EDR Contact: N/A
Next Scheduled EDR Contact: N/A
Data Release Frequency: Varies

EDR Hist Cleaner: EDR Exclusive Historical Cleaners

EDR has searched selected national collections of business directories and has collected listings of potential dry cleaner sites that were available to EDR researchers. EDR's review was limited to those categories of sources that might, in EDR's opinion, include dry cleaning establishments. The categories reviewed included, but were not limited to dry cleaners, cleaners, laundry, laundromat, cleaning/laundry, wash & dry etc. This database falls within a category of information EDR classifies as "High Risk Historical Records", or HRHR. EDR's HRHR effort presents unique and sometimes proprietary data about past sites and operations that typically create environmental concerns, but may not show up in current government records searches.

Date of Government Version: N/A
Date Data Arrived at EDR: N/A
Date Made Active in Reports: N/A
Number of Days to Update: N/A

Source: EDR, Inc.
Telephone: N/A
Last EDR Contact: N/A
Next Scheduled EDR Contact: N/A
Data Release Frequency: Varies

EDR RECOVERED GOVERNMENT ARCHIVES

Exclusive Recovered Govt. Archives

RGA LF: Recovered Government Archive Solid Waste Facilities List

The EDR Recovered Government Archive Landfill database provides a list of landfills derived from historical databases and includes many records that no longer appear in current government lists. Compiled from Records formerly available from the Department of Resources Recycling and Recovery in California.

Date of Government Version: N/A
Date Data Arrived at EDR: 07/01/2013
Date Made Active in Reports: 01/13/2014
Number of Days to Update: 196

Source: Department of Resources Recycling and Recovery
Telephone: N/A
Last EDR Contact: 06/01/2012
Next Scheduled EDR Contact: N/A
Data Release Frequency: Varies

RGA LUST: Recovered Government Archive Leaking Underground Storage Tank
The EDR Recovered Government Archive Leaking Underground Storage Tank database provides a list of LUST incidents derived from historical databases and includes many records that no longer appear in current government lists. Compiled from Records formerly available from the State Water Resources Control Board in California.

Date of Government Version: N/A
Date Data Arrived at EDR: 07/01/2013
Date Made Active in Reports: 12/30/2013
Number of Days to Update: 182

Source: State Water Resources Control Board
Telephone: N/A
Last EDR Contact: 06/01/2012
Next Scheduled EDR Contact: N/A
Data Release Frequency: Varies

COUNTY RECORDS

ALAMEDA COUNTY:

CS ALAMEDA: Contaminated Sites
A listing of contaminated sites overseen by the Toxic Release Program (oil and groundwater contamination from chemical releases and spills) and the Leaking Underground Storage Tank Program (soil and ground water contamination from leaking petroleum USTs).

Date of Government Version: 08/03/2018
Date Data Arrived at EDR: 08/06/2018
Date Made Active in Reports: 09/05/2018
Number of Days to Update: 30

Source: Alameda County Environmental Health Services
Telephone: 510-567-6700
Last EDR Contact: 08/01/2018
Next Scheduled EDR Contact: 10/22/2018
Data Release Frequency: Semi-Annually

UST ALAMEDA: Underground Tanks
Underground storage tank sites located in Alameda county.

Date of Government Version: 04/05/2018
Date Data Arrived at EDR: 04/10/2018
Date Made Active in Reports: 05/04/2018
Number of Days to Update: 24

Source: Alameda County Environmental Health Services
Telephone: 510-567-6700
Last EDR Contact: 07/05/2018
Next Scheduled EDR Contact: 04/24/2047
Data Release Frequency: Semi-Annually

AMADOR COUNTY:

CUPA AMADOR: CUPA Facility List
Cupa Facility List

Date of Government Version: 07/01/2018
Date Data Arrived at EDR: 07/24/2018
Date Made Active in Reports: 08/20/2018
Number of Days to Update: 27

Source: Amador County Environmental Health
Telephone: 209-223-6439
Last EDR Contact: 08/29/2018
Next Scheduled EDR Contact: 12/17/2018
Data Release Frequency: Varies

BUTTE COUNTY:

CUPA BUTTE: CUPA Facility Listing
Cupa facility list.

Date of Government Version: 04/21/2017
Date Data Arrived at EDR: 04/25/2017
Date Made Active in Reports: 08/09/2017
Number of Days to Update: 106

Source: Public Health Department
Telephone: 530-538-7149
Last EDR Contact: 07/05/2018
Next Scheduled EDR Contact: 10/22/2018
Data Release Frequency: No Update Planned

CALVERAS COUNTY:

CUPA CALVERAS: CUPA Facility Listing
Cupa Facility Listing

Date of Government Version: 08/02/2018
Date Data Arrived at EDR: 08/06/2018
Date Made Active in Reports: 08/20/2018
Number of Days to Update: 14

Source: Calveras County Environmental Health
Telephone: 209-754-6399
Last EDR Contact: 06/25/2018
Next Scheduled EDR Contact: 10/08/2018
Data Release Frequency: Quarterly

COLUSA COUNTY:

CUPA COLUSA: CUPA Facility List
Cupa facility list.

Date of Government Version: 05/23/2018
Date Data Arrived at EDR: 05/24/2018
Date Made Active in Reports: 07/13/2018
Number of Days to Update: 50

Source: Health & Human Services
Telephone: 530-458-0396
Last EDR Contact: 08/17/2018
Next Scheduled EDR Contact: 11/19/2018
Data Release Frequency: Semi-Annually

CONTRA COSTA COUNTY:

SL CONTRA COSTA: Site List
List includes sites from the underground tank, hazardous waste generator and business plan/2185 programs.

Date of Government Version: 05/21/2018
Date Data Arrived at EDR: 05/25/2018
Date Made Active in Reports: 07/20/2018
Number of Days to Update: 56

Source: Contra Costa Health Services Department
Telephone: 925-646-2286
Last EDR Contact: 07/30/2018
Next Scheduled EDR Contact: 11/12/2018
Data Release Frequency: Semi-Annually

DEL NORTE COUNTY:

CUPA DEL NORTE: CUPA Facility List
Cupa Facility list

Date of Government Version: 04/27/2018
Date Data Arrived at EDR: 05/02/2018
Date Made Active in Reports: 06/15/2018
Number of Days to Update: 44

Source: Del Norte County Environmental Health Division
Telephone: 707-465-0426
Last EDR Contact: 07/24/2018
Next Scheduled EDR Contact: 11/12/2018
Data Release Frequency: Varies

EL DORADO COUNTY:

CUPA EL DORADO: CUPA Facility List
CUPA facility list.

Date of Government Version: 07/12/2018
Date Data Arrived at EDR: 07/12/2018
Date Made Active in Reports: 08/20/2018
Number of Days to Update: 39

Source: El Dorado County Environmental Management Department
Telephone: 530-621-6623
Last EDR Contact: 07/30/2018
Next Scheduled EDR Contact: 11/12/2018
Data Release Frequency: Varies

FRESNO COUNTY:

CUPA FRESNO: CUPA Resources List
Certified Unified Program Agency. CUPA's are responsible for implementing a unified hazardous materials and hazardous waste management regulatory program. The agency provides oversight of businesses that deal with hazardous materials, operate underground storage tanks or aboveground storage tanks.

Date of Government Version: 07/11/2018
Date Data Arrived at EDR: 07/17/2018
Date Made Active in Reports: 08/30/2018
Number of Days to Update: 44

Source: Dept. of Community Health
Telephone: 559-445-3271
Last EDR Contact: 07/11/2018
Next Scheduled EDR Contact: 10/15/2018
Data Release Frequency: Semi-Annually

GLENN COUNTY:

CUPA GLENN: CUPA Facility List
Cupa facility list

Date of Government Version: 01/22/2018
Date Data Arrived at EDR: 01/24/2018
Date Made Active in Reports: 03/14/2018
Number of Days to Update: 49

Source: Glenn County Air Pollution Control District
Telephone: 830-934-6500
Last EDR Contact: 07/17/2018
Next Scheduled EDR Contact: 11/05/2018
Data Release Frequency: Varies

HUMBOLDT COUNTY:

CUPA HUMBOLDT: CUPA Facility List
CUPA facility list.

Date of Government Version: 07/11/2018
Date Data Arrived at EDR: 07/13/2018
Date Made Active in Reports: 08/22/2018
Number of Days to Update: 40

Source: Humboldt County Environmental Health
Telephone: N/A
Last EDR Contact: 08/20/2018
Next Scheduled EDR Contact: 12/03/2018
Data Release Frequency: Semi-Annually

IMPERIAL COUNTY:

CUPA IMPERIAL: CUPA Facility List
Cupa facility list.

Date of Government Version: 07/17/2018
Date Data Arrived at EDR: 07/24/2018
Date Made Active in Reports: 09/05/2018
Number of Days to Update: 43

Source: San Diego Border Field Office
Telephone: 760-339-2777
Last EDR Contact: 07/17/2018
Next Scheduled EDR Contact: 11/05/2018
Data Release Frequency: Varies

INYO COUNTY:

CUPA INYO: CUPA Facility List
Cupa facility list.

Date of Government Version: 04/02/2018
Date Data Arrived at EDR: 04/03/2018
Date Made Active in Reports: 06/14/2018
Number of Days to Update: 72

Source: Inyo County Environmental Health Services
Telephone: 760-878-0238
Last EDR Contact: 08/29/2018
Next Scheduled EDR Contact: 12/03/2018
Data Release Frequency: Varies

KERN COUNTY:

UST KERN: Underground Storage Tank Sites & Tank Listing
Kern County Sites and Tanks Listing.

Date of Government Version: 05/02/2018
Date Data Arrived at EDR: 05/07/2018
Date Made Active in Reports: 07/18/2018
Number of Days to Update: 72

Source: Kern County Environment Health Services Department
Telephone: 661-862-8700
Last EDR Contact: 07/20/2018
Next Scheduled EDR Contact: 11/19/2018
Data Release Frequency: Quarterly

KINGS COUNTY:

CUPA KINGS: CUPA Facility List
A listing of sites included in the county's Certified Unified Program Agency database. California's Secretary for Environmental Protection established the unified hazardous materials and hazardous waste regulatory program as required by chapter 6.11 of the California Health and Safety Code. The Unified Program consolidates the administration, permits, inspections, and enforcement activities.

Date of Government Version: 06/12/2018
Date Data Arrived at EDR: 06/15/2018
Date Made Active in Reports: 07/13/2018
Number of Days to Update: 28

Source: Kings County Department of Public Health
Telephone: 559-584-1411
Last EDR Contact: 08/17/2018
Next Scheduled EDR Contact: 12/03/2018
Data Release Frequency: Varies

LAKE COUNTY:

CUPA LAKE: CUPA Facility List
Cupa facility list

Date of Government Version: 08/08/2018
Date Data Arrived at EDR: 08/09/2018
Date Made Active in Reports: 08/22/2018
Number of Days to Update: 13

Source: Lake County Environmental Health
Telephone: 707-263-1164
Last EDR Contact: 07/16/2018
Next Scheduled EDR Contact: 10/29/2018
Data Release Frequency: Varies

LASSEN COUNTY:

CUPA LASSEN: CUPA Facility List
Cupa facility list

Date of Government Version: 07/27/2018
Date Data Arrived at EDR: 08/06/2018
Date Made Active in Reports: 09/05/2018
Number of Days to Update: 30

Source: Lassen County Environmental Health
Telephone: 530-251-8528
Last EDR Contact: 08/01/2018
Next Scheduled EDR Contact: 11/05/2018
Data Release Frequency: Varies

LOS ANGELES COUNTY:

AOCONCERN: San Gabriel Valley Areas of Concern
San Gabriel Valley areas where VOC contamination is at or above the MCL as designated by region 9 EPA office.

Date of Government Version: 03/30/2009
Date Data Arrived at EDR: 03/31/2009
Date Made Active in Reports: 10/23/2009
Number of Days to Update: 206

Source: EPA Region 9
Telephone: 415-972-3178
Last EDR Contact: 06/13/2018
Next Scheduled EDR Contact: 10/01/2018
Data Release Frequency: No Update Planned

HMS LOS ANGELES: HMS: Street Number List
Industrial Waste and Underground Storage Tank Sites.

Date of Government Version: 04/12/2018
Date Data Arrived at EDR: 04/16/2018
Date Made Active in Reports: 06/15/2018
Number of Days to Update: 60

Source: Department of Public Works
Telephone: 626-458-3517
Last EDR Contact: 07/05/2018
Next Scheduled EDR Contact: 10/22/2018
Data Release Frequency: Semi-Annually

LF LOS ANGELES: List of Solid Waste Facilities
Solid Waste Facilities in Los Angeles County.

Date of Government Version: 07/16/2018
Date Data Arrived at EDR: 07/18/2018
Date Made Active in Reports: 08/24/2018
Number of Days to Update: 37

Source: La County Department of Public Works
Telephone: 818-458-5185
Last EDR Contact: 07/18/2018
Next Scheduled EDR Contact: 10/29/2018
Data Release Frequency: Varies

LF LOS ANGELES CITY: City of Los Angeles Landfills
Landfills owned and maintained by the City of Los Angeles.

Date of Government Version: 01/01/2018
Date Data Arrived at EDR: 05/01/2018
Date Made Active in Reports: 05/14/2018
Number of Days to Update: 13

Source: Engineering & Construction Division
Telephone: 213-473-7869
Last EDR Contact: 07/11/2018
Next Scheduled EDR Contact: 10/29/2018
Data Release Frequency: Varies

SITE MIT LOS ANGELES: Site Mitigation List
Industrial sites that have had some sort of spill or complaint.

Date of Government Version: 04/01/2018
Date Data Arrived at EDR: 04/17/2018
Date Made Active in Reports: 06/19/2018
Number of Days to Update: 63

Source: Community Health Services
Telephone: 323-890-7806
Last EDR Contact: 07/20/2018
Next Scheduled EDR Contact: 10/29/2018
Data Release Frequency: Annually

UST EL SEGUNDO: City of El Segundo Underground Storage Tank
Underground storage tank sites located in El Segundo city.

Date of Government Version: 01/21/2017
Date Data Arrived at EDR: 04/19/2017
Date Made Active in Reports: 05/10/2017
Number of Days to Update: 21

Source: City of El Segundo Fire Department
Telephone: 310-524-2236
Last EDR Contact: 07/11/2018
Next Scheduled EDR Contact: 10/29/2018
Data Release Frequency: Semi-Annually

UST LONG BEACH: City of Long Beach Underground Storage Tank
Underground storage tank sites located in the city of Long Beach.

Date of Government Version: 03/09/2017
Date Data Arrived at EDR: 03/10/2017
Date Made Active in Reports: 05/03/2017
Number of Days to Update: 54

Source: City of Long Beach Fire Department
Telephone: 562-570-2563
Last EDR Contact: 07/17/2018
Next Scheduled EDR Contact: 11/05/2018
Data Release Frequency: Annually

UST TORRANCE: City of Torrance Underground Storage Tank
Underground storage tank sites located in the city of Torrance.

Date of Government Version: 01/04/2018
Date Data Arrived at EDR: 01/05/2018
Date Made Active in Reports: 01/18/2018
Number of Days to Update: 13

Source: City of Torrance Fire Department
Telephone: 310-618-2973
Last EDR Contact: 07/23/2018
Next Scheduled EDR Contact: 10/22/2018
Data Release Frequency: Semi-Annually

MADERA COUNTY:

CUPA MADERA: CUPA Facility List
A listing of sites included in the county's Certified Unified Program Agency database. California's Secretary for Environmental Protection established the unified hazardous materials and hazardous waste regulatory program as required by chapter 6.11 of the California Health and Safety Code. The Unified Program consolidates the administration, permits, inspections, and enforcement activities.

Date of Government Version: 05/22/2018
Date Data Arrived at EDR: 05/24/2018
Date Made Active in Reports: 07/31/2018
Number of Days to Update: 68

Source: Madera County Environmental Health
Telephone: 559-675-7823
Last EDR Contact: 08/17/2018
Next Scheduled EDR Contact: 12/03/2018
Data Release Frequency: Varies

MARIN COUNTY:

UST MARIN: Underground Storage Tank Sites
Currently permitted USTs in Marin County.

Date of Government Version: 03/30/2018
Date Data Arrived at EDR: 04/06/2018
Date Made Active in Reports: 05/04/2018
Number of Days to Update: 28

Source: Public Works Department Waste Management
Telephone: 415-473-6647
Last EDR Contact: 07/11/2018
Next Scheduled EDR Contact: 10/15/2018
Data Release Frequency: Semi-Annually

MERCED COUNTY:

CUPA MERCED: CUPA Facility List
CUPA facility list.

Date of Government Version: 05/30/2018
Date Data Arrived at EDR: 06/01/2018
Date Made Active in Reports: 07/13/2018
Number of Days to Update: 42

Source: Merced County Environmental Health
Telephone: 209-381-1094
Last EDR Contact: 08/29/2018
Next Scheduled EDR Contact: 12/03/2018
Data Release Frequency: Varies

MONO COUNTY:

CUPA MONO: CUPA Facility List
CUPA Facility List

Date of Government Version: 05/22/2018
Date Data Arrived at EDR: 05/24/2018
Date Made Active in Reports: 07/13/2018
Number of Days to Update: 50

Source: Mono County Health Department
Telephone: 760-932-5580
Last EDR Contact: 08/24/2018
Next Scheduled EDR Contact: 12/10/2018
Data Release Frequency: Varies

MONTEREY COUNTY:

CUPA MONTEREY: CUPA Facility Listing
CUPA Program listing from the Environmental Health Division.

Date of Government Version: 07/30/2018
Date Data Arrived at EDR: 08/02/2018
Date Made Active in Reports: 09/05/2018
Number of Days to Update: 34

Source: Monterey County Health Department
Telephone: 831-796-1297
Last EDR Contact: 07/02/2018
Next Scheduled EDR Contact: 10/15/2018
Data Release Frequency: Varies

NAPA COUNTY:

LUST NAPA: Sites With Reported Contamination
A listing of leaking underground storage tank sites located in Napa county.

Date of Government Version: 01/09/2017
Date Data Arrived at EDR: 01/11/2017
Date Made Active in Reports: 03/02/2017
Number of Days to Update: 50

Source: Napa County Department of Environmental Management
Telephone: 707-253-4269
Last EDR Contact: 08/24/2018
Next Scheduled EDR Contact: 12/10/2018
Data Release Frequency: No Update Planned

UST NAPA: Closed and Operating Underground Storage Tank Sites
Underground storage tank sites located in Napa county.

Date of Government Version: 05/23/2018
Date Data Arrived at EDR: 05/31/2018
Date Made Active in Reports: 07/11/2018
Number of Days to Update: 41

Source: Napa County Department of Environmental Management
Telephone: 707-253-4269
Last EDR Contact: 08/24/2018
Next Scheduled EDR Contact: 12/10/2018
Data Release Frequency: No Update Planned

NEVADA COUNTY:

CUPA NEVADA: CUPA Facility List
CUPA facility list.

Date of Government Version: 07/31/2018
Date Data Arrived at EDR: 08/02/2018
Date Made Active in Reports: 09/05/2018
Number of Days to Update: 34

Source: Community Development Agency
Telephone: 530-265-1467
Last EDR Contact: 07/24/2018
Next Scheduled EDR Contact: 11/12/2018
Data Release Frequency: Varies

ORANGE COUNTY:

IND_SITE ORANGE: List of Industrial Site Cleanups
Petroleum and non-petroleum spills.

Date of Government Version: 04/02/2018
Date Data Arrived at EDR: 05/11/2018
Date Made Active in Reports: 06/22/2018
Number of Days to Update: 42

Source: Health Care Agency
Telephone: 714-834-3446
Last EDR Contact: 05/07/2018
Next Scheduled EDR Contact: 11/19/2018
Data Release Frequency: Annually

LUST ORANGE: List of Underground Storage Tank Cleanups
Orange County Underground Storage Tank Cleanups (LUST).

Date of Government Version: 04/02/2018
Date Data Arrived at EDR: 05/11/2018
Date Made Active in Reports: 06/25/2018
Number of Days to Update: 45

Source: Health Care Agency
Telephone: 714-834-3446
Last EDR Contact: 08/03/2018
Next Scheduled EDR Contact: 11/19/2018
Data Release Frequency: Quarterly

UST ORANGE: List of Underground Storage Tank Facilities
Orange County Underground Storage Tank Facilities (UST).

Date of Government Version: 04/02/2018
Date Data Arrived at EDR: 05/08/2018
Date Made Active in Reports: 07/10/2018
Number of Days to Update: 63

Source: Health Care Agency
Telephone: 714-834-3446
Last EDR Contact: 08/06/2018
Next Scheduled EDR Contact: 11/19/2018
Data Release Frequency: Quarterly

PLACER COUNTY:

MS PLACER: Master List of Facilities
List includes aboveground tanks, underground tanks and cleanup sites.

Date of Government Version: 05/31/2018
Date Data Arrived at EDR: 06/05/2018
Date Made Active in Reports: 07/18/2018
Number of Days to Update: 43

Source: Placer County Health and Human Services
Telephone: 530-745-2363
Last EDR Contact: 08/29/2018
Next Scheduled EDR Contact: 12/17/2018
Data Release Frequency: Semi-Annually

PLUMAS COUNTY:

CUPA PLUMAS: CUPA Facility List
Plumas County CUPA Program facilities.

Date of Government Version: 07/19/2018
Date Data Arrived at EDR: 07/25/2018
Date Made Active in Reports: 09/05/2018
Number of Days to Update: 42

Source: Plumas County Environmental Health
Telephone: 530-283-6355
Last EDR Contact: 07/17/2018
Next Scheduled EDR Contact: 11/05/2018
Data Release Frequency: Varies

RIVERSIDE COUNTY:

LUST RIVERSIDE: Listing of Underground Tank Cleanup Sites
Riverside County Underground Storage Tank Cleanup Sites (LUST).

Date of Government Version: 07/09/2018
Date Data Arrived at EDR: 07/13/2018
Date Made Active in Reports: 08/24/2018
Number of Days to Update: 42

Source: Department of Environmental Health
Telephone: 951-358-5055
Last EDR Contact: 06/18/2018
Next Scheduled EDR Contact: 10/01/2018
Data Release Frequency: Quarterly

UST RIVERSIDE: Underground Storage Tank Tank List
Underground storage tank sites located in Riverside county.

Date of Government Version: 04/05/2018
Date Data Arrived at EDR: 04/10/2018
Date Made Active in Reports: 05/04/2018
Number of Days to Update: 24

Source: Department of Environmental Health
Telephone: 951-358-5055
Last EDR Contact: 06/18/2018
Next Scheduled EDR Contact: 10/01/2018
Data Release Frequency: Quarterly

SACRAMENTO COUNTY:

CS SACRAMENTO: Toxic Site Clean-Up List
List of sites where unauthorized releases of potentially hazardous materials have occurred.

Date of Government Version: 05/07/2018
Date Data Arrived at EDR: 07/03/2018
Date Made Active in Reports: 08/13/2018
Number of Days to Update: 41

Source: Sacramento County Environmental Management
Telephone: 916-875-8406
Last EDR Contact: 07/03/2018
Next Scheduled EDR Contact: 10/15/2018
Data Release Frequency: Quarterly

ML SACRAMENTO: Master Hazardous Materials Facility List

Any business that has hazardous materials on site - hazardous material storage sites, underground storage tanks, waste generators.

Date of Government Version: 05/14/2018
Date Data Arrived at EDR: 07/03/2018
Date Made Active in Reports: 08/13/2018
Number of Days to Update: 41

Source: Sacramento County Environmental Management
Telephone: 916-875-8406
Last EDR Contact: 07/03/2018
Next Scheduled EDR Contact: 10/15/2018
Data Release Frequency: Quarterly

SAN BENITO COUNTY:

CUPA SAN BENITO: CUPA Facility List

Cupa facility list

Date of Government Version: 08/07/2018
Date Data Arrived at EDR: 08/09/2018
Date Made Active in Reports: 09/05/2018
Number of Days to Update: 27

Source: San Benito County Environmental Health
Telephone: N/A
Last EDR Contact: 08/01/2018
Next Scheduled EDR Contact: 11/19/2018
Data Release Frequency: Varies

SAN BERNARDINO COUNTY:

PERMITS SAN BERNARDINO: Hazardous Material Permits

This listing includes underground storage tanks, medical waste handlers/generators, hazardous materials handlers, hazardous waste generators, and waste oil generators/handlers.

Date of Government Version: 04/09/2018
Date Data Arrived at EDR: 04/11/2018
Date Made Active in Reports: 06/19/2018
Number of Days to Update: 69

Source: San Bernardino County Fire Department Hazardous Materials Division
Telephone: 909-387-3041
Last EDR Contact: 07/24/2018
Next Scheduled EDR Contact: 11/19/2018
Data Release Frequency: Quarterly

SAN DIEGO COUNTY:

HMMD SAN DIEGO: Hazardous Materials Management Division Database

The database includes: HE58 - This report contains the business name, site address, business phone number, establishment 'H' permit number, type of permit, and the business status. HE17 - In addition to providing the same information provided in the HE58 listing, HE17 provides inspection dates, violations received by the establishment, hazardous waste generated, the quantity, method of storage, treatment/disposal of waste and the hauler, and information on underground storage tanks. Unauthorized Release List - Includes a summary of environmental contamination cases in San Diego County (underground tank cases, non-tank cases, groundwater contamination, and soil contamination are included.)

Date of Government Version: 06/04/2018
Date Data Arrived at EDR: 06/06/2018
Date Made Active in Reports: 07/17/2018
Number of Days to Update: 41

Source: Hazardous Materials Management Division
Telephone: 619-338-2268
Last EDR Contact: 09/06/2018
Next Scheduled EDR Contact: 12/17/2018
Data Release Frequency: Quarterly

LF SAN DIEGO: Solid Waste Facilities
San Diego County Solid Waste Facilities.

Date of Government Version: 04/18/2018
Date Data Arrived at EDR: 04/24/2018
Date Made Active in Reports: 06/19/2018
Number of Days to Update: 56

Source: Department of Health Services
Telephone: 619-338-2209
Last EDR Contact: 07/17/2018
Next Scheduled EDR Contact: 11/05/2018
Data Release Frequency: Varies

SAN DIEGO CO LOP: Local Oversight Program Listing
A listing of all LOP release sites that are or were under the County of San Diego's jurisdiction. Included are closed or transferred cases, open cases, and cases that did not have a case type indicated. The cases without a case type are mostly complaints; however, some of them could be LOP cases.

Date of Government Version: 07/17/2018
Date Data Arrived at EDR: 07/24/2018
Date Made Active in Reports: 08/24/2018
Number of Days to Update: 31

Source: Department of Environmental Health
Telephone: 858-505-6874
Last EDR Contact: 07/17/2018
Next Scheduled EDR Contact: 11/05/2018
Data Release Frequency: Varies

SAN DIEGO CO. SAM: Environmental Case Listing
The listing contains all underground tank release cases and projects pertaining to properties contaminated with hazardous substances that are actively under review by the Site Assessment and Mitigation Program.

Date of Government Version: 03/23/2010
Date Data Arrived at EDR: 06/15/2010
Date Made Active in Reports: 07/09/2010
Number of Days to Update: 24

Source: San Diego County Department of Environmental Health
Telephone: 619-338-2371
Last EDR Contact: 08/29/2018
Next Scheduled EDR Contact: 12/17/2018
Data Release Frequency: No Update Planned

SAN FRANCISCO COUNTY:

LUST SAN FRANCISCO: Local Oversite Facilities
A listing of leaking underground storage tank sites located in San Francisco county.

Date of Government Version: 09/19/2008
Date Data Arrived at EDR: 09/19/2008
Date Made Active in Reports: 09/29/2008
Number of Days to Update: 10

Source: Department Of Public Health San Francisco County
Telephone: 415-252-3920
Last EDR Contact: 08/01/2018
Next Scheduled EDR Contact: 11/19/2018
Data Release Frequency: Quarterly

UST SAN FRANCISCO: Underground Storage Tank Information
Underground storage tank sites located in San Francisco county.

Date of Government Version: 06/07/2018
Date Data Arrived at EDR: 06/12/2018
Date Made Active in Reports: 07/10/2018
Number of Days to Update: 28

Source: Department of Public Health
Telephone: 415-252-3920
Last EDR Contact: 08/01/2018
Next Scheduled EDR Contact: 11/19/2018
Data Release Frequency: Quarterly

SAN JOAQUIN COUNTY:

UST SAN JOAQUIN: San Joaquin Co. UST
A listing of underground storage tank locations in San Joaquin county.

Date of Government Version: 06/22/2018
Date Data Arrived at EDR: 06/26/2018
Date Made Active in Reports: 07/11/2018
Number of Days to Update: 15

Source: Environmental Health Department
Telephone: N/A
Last EDR Contact: 06/14/2018
Next Scheduled EDR Contact: 10/01/2018
Data Release Frequency: Semi-Annually

SAN LUIS OBISPO COUNTY:

CUPA SAN LUIS OBISPO: CUPA Facility List
Cupa Facility List.

Date of Government Version: 08/20/2018
Date Data Arrived at EDR: 08/21/2018
Date Made Active in Reports: 09/07/2018
Number of Days to Update: 17

Source: San Luis Obispo County Public Health Department
Telephone: 805-781-5596
Last EDR Contact: 08/17/2018
Next Scheduled EDR Contact: 12/03/2018
Data Release Frequency: Varies

SAN MATEO COUNTY:

BI SAN MATEO: Business Inventory
List includes Hazardous Materials Business Plan, hazardous waste generators, and underground storage tanks.

Date of Government Version: 06/12/2018
Date Data Arrived at EDR: 06/15/2018
Date Made Active in Reports: 08/06/2018
Number of Days to Update: 52

Source: San Mateo County Environmental Health Services Division
Telephone: 650-363-1921
Last EDR Contact: 06/06/2018
Next Scheduled EDR Contact: 09/24/2018
Data Release Frequency: Annually

LUST SAN MATEO: Fuel Leak List
A listing of leaking underground storage tank sites located in San Mateo county.

Date of Government Version: 06/12/2018
Date Data Arrived at EDR: 06/15/2018
Date Made Active in Reports: 08/13/2018
Number of Days to Update: 59

Source: San Mateo County Environmental Health Services Division
Telephone: 650-363-1921
Last EDR Contact: 06/06/2018
Next Scheduled EDR Contact: 09/24/2018
Data Release Frequency: Semi-Annually

SANTA BARBARA COUNTY:

CUPA SANTA BARBARA: CUPA Facility Listing
CUPA Program Listing from the Environmental Health Services division.

Date of Government Version: 09/08/2011
Date Data Arrived at EDR: 09/09/2011
Date Made Active in Reports: 10/07/2011
Number of Days to Update: 28

Source: Santa Barbara County Public Health Department
Telephone: 805-686-8167
Last EDR Contact: 08/17/2018
Next Scheduled EDR Contact: 12/03/2018
Data Release Frequency: Varies

SANTA CLARA COUNTY:

CUPA SANTA CLARA: Cupa Facility List
Cupa facility list

Date of Government Version: 08/17/2018
Date Data Arrived at EDR: 08/22/2018
Date Made Active in Reports: 09/07/2018
Number of Days to Update: 16

Source: Department of Environmental Health
Telephone: 408-918-1973
Last EDR Contact: 08/17/2018
Next Scheduled EDR Contact: 12/03/2018
Data Release Frequency: Varies

HIST LUST SANTA CLARA: HIST LUST - Fuel Leak Site Activity Report
A listing of open and closed leaking underground storage tanks. This listing is no longer updated by the county. Leaking underground storage tanks are now handled by the Department of Environmental Health.

Date of Government Version: 03/29/2005
Date Data Arrived at EDR: 03/30/2005
Date Made Active in Reports: 04/21/2005
Number of Days to Update: 22

Source: Santa Clara Valley Water District
Telephone: 408-265-2600
Last EDR Contact: 03/23/2009
Next Scheduled EDR Contact: 06/22/2009
Data Release Frequency: No Update Planned

LUST SANTA CLARA: LOP Listing
A listing of leaking underground storage tanks located in Santa Clara county.

Date of Government Version: 03/03/2014
Date Data Arrived at EDR: 03/05/2014
Date Made Active in Reports: 03/18/2014
Number of Days to Update: 13

Source: Department of Environmental Health
Telephone: 408-918-3417
Last EDR Contact: 08/24/2018
Next Scheduled EDR Contact: 12/10/2018
Data Release Frequency: Annually

SAN JOSE HAZMAT: Hazardous Material Facilities
Hazardous material facilities, including underground storage tank sites.

Date of Government Version: 05/16/2018
Date Data Arrived at EDR: 05/22/2018
Date Made Active in Reports: 07/19/2018
Number of Days to Update: 58

Source: City of San Jose Fire Department
Telephone: 408-535-7694
Last EDR Contact: 08/01/2018
Next Scheduled EDR Contact: 11/19/2018
Data Release Frequency: Annually

SANTA CRUZ COUNTY:

CUPA SANTA CRUZ: CUPA Facility List
CUPA facility listing.

Date of Government Version: 01/21/2017
Date Data Arrived at EDR: 02/22/2017
Date Made Active in Reports: 05/23/2017
Number of Days to Update: 90

Source: Santa Cruz County Environmental Health
Telephone: 831-464-2761
Last EDR Contact: 08/17/2018
Next Scheduled EDR Contact: 12/03/2018
Data Release Frequency: Varies

SHASTA COUNTY:

CUPA SHASTA: CUPA Facility List
Cupa Facility List.

Date of Government Version: 06/15/2017
Date Data Arrived at EDR: 06/19/2017
Date Made Active in Reports: 08/09/2017
Number of Days to Update: 51

Source: Shasta County Department of Resource Management
Telephone: 530-225-5789
Last EDR Contact: 08/17/2018
Next Scheduled EDR Contact: 12/03/2018
Data Release Frequency: Varies

SOLANO COUNTY:

LUST SOLANO: Leaking Underground Storage Tanks
A listing of leaking underground storage tank sites located in Solano county.

Date of Government Version: 06/04/2018
Date Data Arrived at EDR: 06/08/2018
Date Made Active in Reports: 07/18/2018
Number of Days to Update: 40

Source: Solano County Department of Environmental Management
Telephone: 707-784-6770
Last EDR Contact: 08/29/2018
Next Scheduled EDR Contact: 12/17/2018
Data Release Frequency: Quarterly

UST SOLANO: Underground Storage Tanks
Underground storage tank sites located in Solano county.

Date of Government Version: 06/04/2018
Date Data Arrived at EDR: 06/12/2018
Date Made Active in Reports: 07/12/2018
Number of Days to Update: 30

Source: Solano County Department of Environmental Management
Telephone: 707-784-6770
Last EDR Contact: 08/29/2018
Next Scheduled EDR Contact: 12/17/2018
Data Release Frequency: Quarterly

SONOMA COUNTY:

CUPA SONOMA: Cupa Facility List
Cupa Facility list

Date of Government Version: 06/19/2018
Date Data Arrived at EDR: 06/26/2018
Date Made Active in Reports: 07/17/2018
Number of Days to Update: 21

Source: County of Sonoma Fire & Emergency Services Department
Telephone: 707-565-1174
Last EDR Contact: 06/21/2018
Next Scheduled EDR Contact: 10/08/2018
Data Release Frequency: Varies

LUST SONOMA: Leaking Underground Storage Tank Sites
A listing of leaking underground storage tank sites located in Sonoma county.

Date of Government Version: 07/03/2018
Date Data Arrived at EDR: 07/10/2018
Date Made Active in Reports: 08/24/2018
Number of Days to Update: 45

Source: Department of Health Services
Telephone: 707-565-6565
Last EDR Contact: 06/21/2018
Next Scheduled EDR Contact: 10/08/2018
Data Release Frequency: Quarterly

STANISLAUS COUNTY:

CUPA STANISLAUS: CUPA Facility List
Cupa facility list

Date of Government Version: 08/14/2018
Date Data Arrived at EDR: 08/16/2018
Date Made Active in Reports: 08/24/2018
Number of Days to Update: 8

Source: Stanislaus County Department of Ennvironmental Protection
Telephone: 209-525-6751
Last EDR Contact: 07/16/2018
Next Scheduled EDR Contact: 10/29/2018
Data Release Frequency: Varies

SUTTER COUNTY:

UST SUTTER: Underground Storage Tanks
Underground storage tank sites located in Sutter county.

Date of Government Version: 06/04/2018
Date Data Arrived at EDR: 06/08/2018
Date Made Active in Reports: 07/11/2018
Number of Days to Update: 33

Source: Sutter County Department of Agriculture
Telephone: 530-822-7500
Last EDR Contact: 08/29/2018
Next Scheduled EDR Contact: 12/17/2018
Data Release Frequency: Semi-Annually

TEHAMA COUNTY:

CUPA TEHAMA: CUPA Facility List
Cupa facilities

Date of Government Version: 07/17/2018
Date Data Arrived at EDR: 08/02/2018
Date Made Active in Reports: 09/07/2018
Number of Days to Update: 36

Source: Tehama County Department of Environmental Health
Telephone: 530-527-8020
Last EDR Contact: 08/01/2018
Next Scheduled EDR Contact: 11/19/2018
Data Release Frequency: Varies

TRINITY COUNTY:

CUPA TRINITY: CUPA Facility List
Cupa facility list

Date of Government Version: 07/17/2018
Date Data Arrived at EDR: 07/24/2018
Date Made Active in Reports: 09/07/2018
Number of Days to Update: 45

Source: Department of Toxic Substances Control
Telephone: 760-352-0381
Last EDR Contact: 07/17/2018
Next Scheduled EDR Contact: 11/05/2018
Data Release Frequency: Varies

TULARE COUNTY:

CUPA TULARE: CUPA Facility List
Cupa program facilities

Date of Government Version: 03/19/2018
Date Data Arrived at EDR: 03/22/2018
Date Made Active in Reports: 04/17/2018
Number of Days to Update: 26

Source: Tulare County Environmental Health Services Division
Telephone: 559-624-7400
Last EDR Contact: 08/24/2018
Next Scheduled EDR Contact: 11/19/2018
Data Release Frequency: Varies

TUOLUMNE COUNTY:

CUPA TUOLUMNE: CUPA Facility List
Cupa facility list

Date of Government Version: 04/23/2018
Date Data Arrived at EDR: 04/25/2018
Date Made Active in Reports: 06/25/2018
Number of Days to Update: 61

Source: Divison of Environmental Health
Telephone: 209-533-5633
Last EDR Contact: 07/17/2018
Next Scheduled EDR Contact: 11/05/2018
Data Release Frequency: Varies

VENTURA COUNTY:

BWT VENTURA: Business Plan, Hazardous Waste Producers, and Operating Underground Tanks
The BWT list indicates by site address whether the Environmental Health Division has Business Plan (B), Waste Producer (W), and/or Underground Tank (T) information.

Date of Government Version: 07/02/2018
Date Data Arrived at EDR: 07/26/2018
Date Made Active in Reports: 09/05/2018
Number of Days to Update: 41

Source: Ventura County Environmental Health Division
Telephone: 805-654-2813
Last EDR Contact: 07/23/2018
Next Scheduled EDR Contact: 11/05/2018
Data Release Frequency: Quarterly

LF VENTURA: Inventory of Illegal Abandoned and Inactive Sites
Ventura County Inventory of Closed, Illegal Abandoned, and Inactive Sites.

Date of Government Version: 12/01/2011
Date Data Arrived at EDR: 12/01/2011
Date Made Active in Reports: 01/19/2012
Number of Days to Update: 49

Source: Environmental Health Division
Telephone: 805-654-2813
Last EDR Contact: 06/27/2018
Next Scheduled EDR Contact: 10/15/2018
Data Release Frequency: Annually

LUST VENTURA: Listing of Underground Tank Cleanup Sites
Ventura County Underground Storage Tank Cleanup Sites (LUST).

Date of Government Version: 05/29/2008
Date Data Arrived at EDR: 06/24/2008
Date Made Active in Reports: 07/31/2008
Number of Days to Update: 37

Source: Environmental Health Division
Telephone: 805-654-2813
Last EDR Contact: 08/07/2018
Next Scheduled EDR Contact: 11/26/2018
Data Release Frequency: Quarterly

MED WASTE VENTURA: Medical Waste Program List
To protect public health and safety and the environment from potential exposure to disease causing agents, the Environmental Health Division Medical Waste Program regulates the generation, handling, storage, treatment and disposal of medical waste throughout the County.

Date of Government Version: 07/02/2018
Date Data Arrived at EDR: 07/26/2018
Date Made Active in Reports: 08/24/2018
Number of Days to Update: 29

Source: Ventura County Resource Management Agency
Telephone: 805-654-2813
Last EDR Contact: 07/23/2018
Next Scheduled EDR Contact: 11/05/2018
Data Release Frequency: Quarterly

UST VENTURA: Underground Tank Closed Sites List
Ventura County Operating Underground Storage Tank Sites (UST)/Underground Tank Closed Sites List.

Date of Government Version: 04/26/2018
Date Data Arrived at EDR: 06/13/2018
Date Made Active in Reports: 07/11/2018
Number of Days to Update: 28

Source: Environmental Health Division
Telephone: 805-654-2813
Last EDR Contact: 06/13/2018
Next Scheduled EDR Contact: 09/24/2018
Data Release Frequency: Quarterly

YOLO COUNTY:

UST YOLO: Underground Storage Tank Comprehensive Facility Report
Underground storage tank sites located in Yolo county.

Date of Government Version: 06/20/2018
Date Data Arrived at EDR: 07/03/2018
Date Made Active in Reports: 07/12/2018
Number of Days to Update: 9

Source: Yolo County Department of Health
Telephone: 530-666-8646
Last EDR Contact: 06/27/2018
Next Scheduled EDR Contact: 10/15/2018
Data Release Frequency: Annually

YUBA COUNTY:

CUPA YUBA: CUPA Facility List
CUPA facility listing for Yuba County.

Date of Government Version: 05/10/2018
Date Data Arrived at EDR: 05/15/2018
Date Made Active in Reports: 06/15/2018
Number of Days to Update: 31

Source: Yuba County Environmental Health Department
Telephone: 530-749-7523
Last EDR Contact: 08/07/2018
Next Scheduled EDR Contact: 11/12/2018
Data Release Frequency: Varies

OTHER DATABASE(S)

Depending on the geographic area covered by this report, the data provided in these specialty databases may or may not be complete. For example, the existence of wetlands information data in a specific report does not mean that all wetlands in the area covered by the report are included. Moreover, the absence of any reported wetlands information does not necessarily mean that wetlands do not exist in the area covered by the report.

CT MANIFEST: Hazardous Waste Manifest Data
Facility and manifest data. Manifest is a document that lists and tracks hazardous waste from the generator through transporters to a tsd facility.

Date of Government Version: 01/03/2018
Date Data Arrived at EDR: 02/14/2018
Date Made Active in Reports: 03/22/2018
Number of Days to Update: 36

Source: Department of Energy & Environmental Protection
Telephone: 860-424-3375
Last EDR Contact: 08/09/2018
Next Scheduled EDR Contact: 11/26/2018
Data Release Frequency: No Update Planned

NJ MANIFEST: Manifest Information
Hazardous waste manifest information.

Date of Government Version: 12/31/2017
Date Data Arrived at EDR: 07/13/2018
Date Made Active in Reports: 08/01/2018
Number of Days to Update: 19

Source: Department of Environmental Protection
Telephone: N/A
Last EDR Contact: 07/13/2018
Next Scheduled EDR Contact: 10/22/2018
Data Release Frequency: Annually

NY MANIFEST: Facility and Manifest Data
Manifest is a document that lists and tracks hazardous waste from the generator through transporters to a TSD facility.

Date of Government Version: 07/01/2018
Date Data Arrived at EDR: 08/01/2018
Date Made Active in Reports: 08/31/2018
Number of Days to Update: 30

Source: Department of Environmental Conservation
Telephone: 518-402-8651
Last EDR Contact: 08/01/2018
Next Scheduled EDR Contact: 11/12/2018
Data Release Frequency: Quarterly

PA MANIFEST: Manifest Information
Hazardous waste manifest information.

Date of Government Version: 12/31/2016
Date Data Arrived at EDR: 07/25/2017
Date Made Active in Reports: 09/25/2017
Number of Days to Update: 62

Source: Department of Environmental Protection
Telephone: 717-783-8990
Last EDR Contact: 07/12/2018
Next Scheduled EDR Contact: 10/29/2018
Data Release Frequency: Annually

RI MANIFEST: Manifest information
Hazardous waste manifest information

Date of Government Version: 12/31/2017
Date Data Arrived at EDR: 02/23/2018
Date Made Active in Reports: 04/09/2018
Number of Days to Update: 45

Source: Department of Environmental Management
Telephone: 401-222-2797
Last EDR Contact: 08/21/2018
Next Scheduled EDR Contact: 12/03/2018
Data Release Frequency: Annually

WI MANIFEST: Manifest Information
Hazardous waste manifest information.

Date of Government Version: 12/31/2017
Date Data Arrived at EDR: 06/15/2018
Date Made Active in Reports: 07/09/2018
Number of Days to Update: 24

Source: Department of Natural Resources
Telephone: N/A
Last EDR Contact: 09/06/2018
Next Scheduled EDR Contact: 12/24/2018
Data Release Frequency: Annually

Oil/Gas Pipelines
Source: PennWell Corporation
Petroleum Bundle (Crude Oil, Refined Products, Petrochemicals, Gas Liquids (LPG/NGL), and Specialty Gases (Miscellaneous)) N = Natural Gas Bundle (Natural Gas, Gas Liquids (LPG/NGL), and Specialty Gases (Miscellaneous)). This map includes information copyrighted by PennWell Corporation. This information is provided on a best effort basis and PennWell Corporation does not guarantee its accuracy nor warrant its fitness for any particular purpose. Such information has been reprinted with the permission of PennWell.

Electric Power Transmission Line Data
Source: PennWell Corporation
This map includes information copyrighted by PennWell Corporation. This information is provided on a best effort basis and PennWell Corporation does not guarantee its accuracy nor warrant its fitness for any particular purpose. Such information has been reprinted with the permission of PennWell.

Sensitive Receptors: There are individuals deemed sensitive receptors due to their fragile immune systems and special sensitivity to environmental discharges. These sensitive receptors typically include the elderly, the sick, and children. While the location of all sensitive receptors cannot be determined, EDR indicates those buildings and facilities - schools, daycares, hospitals, medical centers, and nursing homes - where individuals who are sensitive receptors are likely to be located.

AHA Hospitals:
Source: American Hospital Association, Inc.
Telephone: 312-280-5991
The database includes a listing of hospitals based on the American Hospital Association's annual survey of hospitals.

Medical Centers: Provider of Services Listing
Source: Centers for Medicare & Medicaid Services
Telephone: 410-786-3000
A listing of hospitals with Medicare provider number, produced by Centers of Medicare & Medicaid Services, a federal agency within the U.S. Department of Health and Human Services.

Nursing Homes
Source: National Institutes of Health
Telephone: 301-594-6248
Information on Medicare and Medicaid certified nursing homes in the United States.

Public Schools
Source: National Center for Education Statistics
Telephone: 202-502-7300
The National Center for Education Statistics' primary database on elementary and secondary public education in the United States. It is a comprehensive, annual, national statistical database of all public elementary and secondary schools and school districts, which contains data that are comparable across all states.

Private Schools
Source: National Center for Education Statistics
Telephone: 202-502-7300
The National Center for Education Statistics' primary database on private school locations in the United States.

Daycare Centers: Licensed Facilities
Source: Department of Social Services
Telephone: 916-657-4041

Flood Zone Data: This data was obtained from the Federal Emergency Management Agency (FEMA). It depicts 100-year and 500-year flood zones as defined by FEMA. It includes the National Flood Hazard Layer (NFHL) which incorporates Flood Insurance Rate Map (FIRM) data and Q3 data from FEMA in areas not covered by NFHL.
Source: FEMA
Telephone: 877-336-2627
Date of Government Version: 2003, 2015

NWI: National Wetlands Inventory. This data, available in select counties across the country, was obtained by EDR in 2002, 2005 and 2010 from the U.S. Fish and Wildlife Service.

State Wetlands Data: Wetland Inventory
Source: Department of Fish and Wildlife
Telephone: 916-445-0411

Current USGS 7.5 Minute Topographic Map
Source: U.S. Geological Survey

STREET AND ADDRESS INFORMATION

© 2015 TomTom North America, Inc. All rights reserved. This material is proprietary and the subject of copyright protection and other intellectual property rights owned by or licensed to Tele Atlas North America, Inc. The use of this material is subject to the terms of a license agreement. You will be held liable for any unauthorized copying or disclosure of this material.

GEOCHECK ®- PHYSICAL SETTING SOURCE ADDENDUM

TARGET PROPERTY ADDRESS

KISCO GLASSELL
574 S. GLASSELL STREET
ORANGE, CA 92866

TARGET PROPERTY COORDINATES

Latitude (North):	33.779058 - 33˚ 46' 44.61''
Longitude (West):	117.853752 - 117˚ 51' 13.51''
Universal Tranverse Mercator:	Zone 11
UTM X (Meters):	420951.4
UTM Y (Meters):	3737792.5
Elevation:	185 ft. above sea level

USGS TOPOGRAPHIC MAP

Target Property Map:	5641308 ORANGE, CA
Version Date:	2012

EDR's GeoCheck Physical Setting Source Addendum is provided to assist the environmental professional in forming an opinion about the impact of potential contaminant migration.

Assessment of the impact of contaminant migration generally has two principle investigative components:

1. Groundwater flow direction, and
2. Groundwater flow velocity.

Groundwater flow direction may be impacted by surface topography, hydrology, hydrogeology, characteristics of the soil, and nearby wells. Groundwater flow velocity is generally impacted by the nature of the geologic strata.

GEOCHECK® - PHYSICAL SETTING SOURCE SUMMARY

GROUNDWATER FLOW DIRECTION INFORMATION

Groundwater flow direction for a particular site is best determined by a qualified environmental professional using site-specific well data. If such data is not reasonably ascertainable, it may be necessary to rely on other sources of information, such as surface topographic information, hydrologic information, hydrogeologic data collected on nearby properties, and regional groundwater flow information (from deep aquifers).

TOPOGRAPHIC INFORMATION

Surface topography may be indicative of the direction of surficial groundwater flow. This information can be used to assist the environmental professional in forming an opinion about the impact of nearby contaminated properties or, should contamination exist on the target property, what downgradient sites might be impacted.

TARGET PROPERTY TOPOGRAPHY

General Topographic Gradient: General WSW

SURROUNDING TOPOGRAPHY: ELEVATION PROFILES

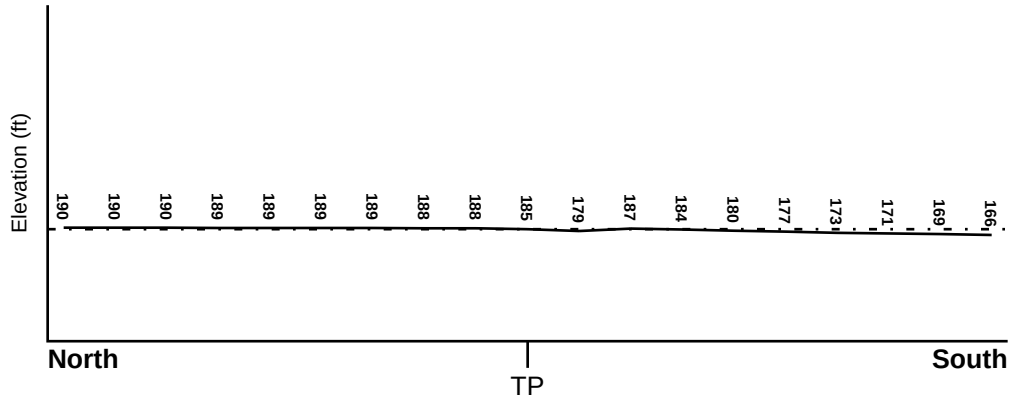

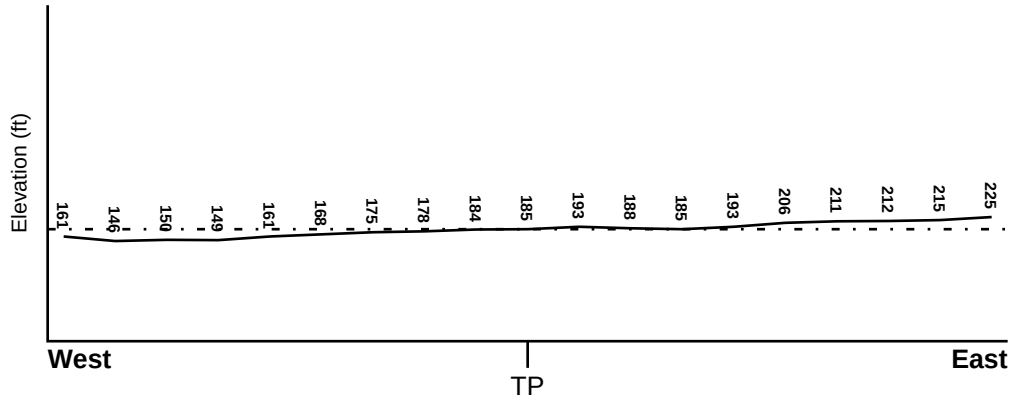

Target Property Elevation: 185 ft.

0 1/2 1 Miles

Source: Topography has been determined from the USGS 7.5' Digital Elevation Model and should be evaluated on a relative (not an absolute) basis. Relative elevation information between sites of close proximity should be field verified.

GEOCHECK® - PHYSICAL SETTING SOURCE SUMMARY

HYDROLOGIC INFORMATION

Surface water can act as a hydrologic barrier to groundwater flow. Such hydrologic information can be used to assist the environmental professional in forming an opinion about the impact of nearby contaminated properties or, should contamination exist on the target property, what downgradient sites might be impacted.

Refer to the Physical Setting Source Map following this summary for hydrologic information (major waterways and bodies of water).

FEMA FLOOD ZONE

Flood Plain Panel at Target Property	FEMA Source Type
06059C0163J	FEMA FIRM Flood data

Additional Panels in search area:	FEMA Source Type
06059C0161J	FEMA FIRM Flood data
06059C0162J	FEMA FIRM Flood data
06059C0164J	FEMA FIRM Flood data

NATIONAL WETLAND INVENTORY

NWI Quad at Target Property	NWI Electronic Data Coverage
ORANGE	YES - refer to the Overview Map and Detail Map

HYDROGEOLOGIC INFORMATION

Hydrogeologic information obtained by installation of wells on a specific site can often be an indicator of groundwater flow direction in the immediate area. Such hydrogeologic information can be used to assist the environmental professional in forming an opinion about the impact of nearby contaminated properties or, should contamination exist on the target property, what downgradient sites might be impacted.

Site-Specific Hydrogeological Data*:

Search Radius:	1.25 miles
Status:	Not found

AQUIFLOW®

Search Radius: 1.000 Mile.

EDR has developed the AQUIFLOW Information System to provide data on the general direction of groundwater flow at specific points. EDR has reviewed reports submitted by environmental professionals to regulatory authorities at select sites and has extracted the date of the report, groundwater flow direction as determined hydrogeologically, and the depth to water table.

MAP ID	LOCATION FROM TP	GENERAL DIRECTION GROUNDWATER FLOW
7	1/4 - 1/2 Mile South	Not Reported
18	1/2 - 1 Mile WNW	SW
20	1/2 - 1 Mile NE	SW
23	1/2 - 1 Mile North	S
1G	1/2 - 1 Mile North	S
2G	1/2 - 1 Mile NE	SW

* ©1996 Site−specific hydrogeological data gathered by CERCLIS Alerts, Inc., Bainbridge Island, WA. All rights reserved. All of the information and opinions presented are those of the cited EPA report(s), which were completed under a Comprehensive Environmental Response Compensation and Liability Information System (CERCLIS) investigation.

GEOCHECK® - PHYSICAL SETTING SOURCE SUMMARY

MAP ID	LOCATION FROM TP	GENERAL DIRECTION GROUNDWATER FLOW
3G	1/2 - 1 Mile WNW	SW
4G	1/4 - 1/2 Mile South	Not Reported

For additional site information, refer to Physical Setting Source Map Findings.

GEOCHECK® - PHYSICAL SETTING SOURCE SUMMARY

GROUNDWATER FLOW VELOCITY INFORMATION

Groundwater flow velocity information for a particular site is best determined by a qualified environmental professional using site specific geologic and soil strata data. If such data are not reasonably ascertainable, it may be necessary to rely on other sources of information, including geologic age identification, rock stratigraphic unit and soil characteristics data collected on nearby properties and regional soil information. In general, contaminant plumes move more quickly through sandy-gravelly types of soils than silty-clayey types of soils.

GEOLOGIC INFORMATION IN GENERAL AREA OF TARGET PROPERTY

Geologic information can be used by the environmental professional in forming an opinion about the relative speed at which contaminant migration may be occurring.

ROCK STRATIGRAPHIC UNIT

Era:	Cenozoic
System:	Quaternary
Series:	Quaternary
Code:	Q *(decoded above as Era, System & Series)*

GEOLOGIC AGE IDENTIFICATION

Category: Stratifed Sequence

Geologic Age and Rock Stratigraphic Unit Source: P.G. Schruben, R.E. Arndt and W.J. Bawiec, Geology of the Conterminous U.S. at 1:2,500,000 Scale - a digital representation of the 1974 P.B. King and H.M. Beikman Map, USGS Digital Data Series DDS - 11 (1994).

SSURGO SOIL MAP - 5417961.2s

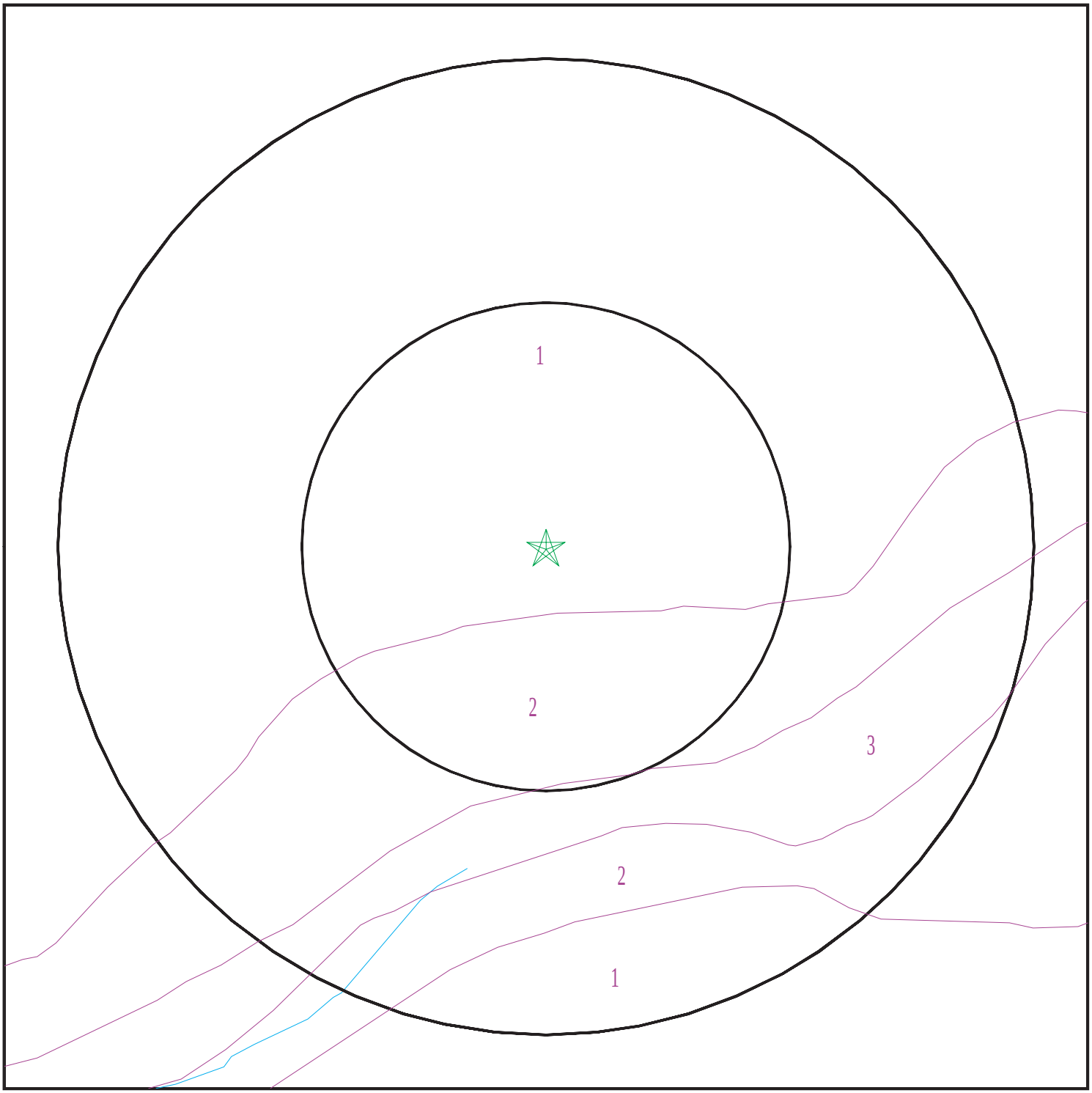

Target Property
SSURGO Soil
Water

0 1/16 1/8 1/4 Miles

N

SITE NAME:	Kisco Glassell	CLIENT:	Leighton Consulting
ADDRESS:	574 S. Glassell Street Orange CA 92866	CONTACT:	Brynn Mcculloch
		INQUIRY #:	5417961.2s
LAT/LONG:	33.779058 / 117.853752	DATE:	September 10, 2018 12:46 pm

Copyright © 2018 EDR, Inc. © 2015 TomTom Rel. 2015.

GEOCHECK® - PHYSICAL SETTING SOURCE SUMMARY

DOMINANT SOIL COMPOSITION IN GENERAL AREA OF TARGET PROPERTY

The U.S. Department of Agriculture's (USDA) Soil Conservation Service (SCS) leads the National Cooperative Soil Survey (NCSS) and is responsible for collecting, storing, maintaining and distributing soil survey information for privately owned lands in the United States. A soil map in a soil survey is a representation of soil patterns in a landscape. The following information is based on Soil Conservation Service SSURGO data.

Soil Map ID: 1

Soil Component Name: SAN EMIGDIO

Soil Surface Texture: fine sandy loam

Hydrologic Group: Class B - Moderate infiltration rates. Deep and moderately deep, moderately well and well drained soils with moderately coarse textures.

Soil Drainage Class: Well drained

Hydric Status: Not hydric

Corrosion Potential - Uncoated Steel: High

Depth to Bedrock Min: > 0 inches

Depth to Watertable Min: > 0 inches

Soil Layer Information							
	Boundary			Classification		Saturated hydraulic conductivity micro m/sec	Soil Reaction (pH)
Layer	Upper	Lower	Soil Texture Class	AASHTO Group	Unified Soil		
1	0 inches	7 inches	fine sandy loam	Not reported	Not reported	Max: 42 Min: 14	Max: 8.4 Min: 7.9
2	7 inches	61 inches	stratified gravelly loamy coarse sand to very fine sandy loam	Not reported	Not reported	Max: 42 Min: 14	Max: 8.4 Min: 7.9

Soil Map ID: 2

Soil Component Name: SOBOBA

Soil Surface Texture: gravelly loamy sand

Hydrologic Group: Class A - High infiltration rates. Soils are deep, well drained to excessively drained sands and gravels.

Soil Drainage Class: Excessively drained

Hydric Status: Not hydric

Corrosion Potential - Uncoated Steel: Low

Depth to Bedrock Min: > 0 inches

Depth to Watertable Min: > 0 inches

Soil Layer Information							
	Boundary			Classification		Saturated hydraulic conductivity micro m/sec	Soil Reaction (pH)
Layer	Upper	Lower	Soil Texture Class	AASHTO Group	Unified Soil		
1	0 inches	9 inches	gravelly loamy sand	Granular materials (35 pct. or less passing No. 200), Stone Fragments, Gravel and Sand.	COARSE-GRAINED SOILIS, Gravels, Clean Gravels, Well-graded gravel.	Max: 141 Min: 141	Max: 7.8 Min: 6.1
2	9 inches	59 inches	very gravelly sand	Granular materials (35 pct. or less passing No. 200), Stone Fragments, Gravel and Sand.	COARSE-GRAINED SOILIS, Gravels, Clean Gravels, Well-graded gravel.	Max: 141 Min: 141	Max: 7.8 Min: 6.1

Soil Map ID: 3

Soil Component Name: RIVERWASH

Soil Surface Texture: sand

Hydrologic Group: Class D - Very slow infiltration rates. Soils are clayey, have a high water table, or are shallow to an impervious layer.

Soil Drainage Class:
Hydric Status: All hydric

Corrosion Potential - Uncoated Steel: Not Reported

Depth to Bedrock Min: > 0 inches

Depth to Watertable Min: > 31 inches

GEOCHECK® - PHYSICAL SETTING SOURCE SUMMARY

Soil Layer Information							
	Boundary			Classification		Saturated hydraulic conductivity micro m/sec	Soil Reaction (pH)
Layer	Upper	Lower	Soil Texture Class	AASHTO Group	Unified Soil		
1	0 inches	5 inches	sand	Granular materials (35 pct. or less passing No. 200), Stone Fragments, Gravel and Sand.	COARSE-GRAINED SOILS, Sands, Sands with fines, Silty Sand.	Max: 141 Min: 42	Max: Min:
2	5 inches	59 inches	stratified coarse sand to sandy loam	Granular materials (35 pct. or less passing No. 200), Stone Fragments, Gravel and Sand.	COARSE-GRAINED SOILS, Sands, Sands with fines, Silty Sand.	Max: 141 Min: 42	Max: Min:

LOCAL / REGIONAL WATER AGENCY RECORDS

EDR Local/Regional Water Agency records provide water well information to assist the environmental professional in assessing sources that may impact ground water flow direction, and in forming an opinion about the impact of contaminant migration on nearby drinking water wells.

WELL SEARCH DISTANCE INFORMATION

DATABASE	SEARCH DISTANCE (miles)
Federal USGS	1.000
Federal FRDS PWS	Nearest PWS within 0.001 miles
State Database	1.000

FEDERAL USGS WELL INFORMATION

MAP ID	WELL ID	LOCATION FROM TP
1	USGS40000138103	1/4 - 1/2 Mile SW
6	USGS40000138098	1/4 - 1/2 Mile SW
B8	USGS40000138160	1/2 - 1 Mile NNW
B11	USGS40000154213	1/2 - 1 Mile NNW
C12	USGS40000138097	1/2 - 1 Mile ESE
D16	USGS40000138060	1/2 - 1 Mile ESE
17	USGS40000138155	1/2 - 1 Mile ENE

GEOCHECK® - PHYSICAL SETTING SOURCE SUMMARY

FEDERAL USGS WELL INFORMATION

MAP ID	WELL ID	LOCATION FROM TP
19	USGS40000137999	1/2 - 1 Mile SSE

FEDERAL FRDS PUBLIC WATER SUPPLY SYSTEM INFORMATION

MAP ID	WELL ID	LOCATION FROM TP
No PWS System Found		

Note: PWS System location is not always the same as well location.

STATE DATABASE WELL INFORMATION

MAP ID	WELL ID	LOCATION FROM TP
A2	5051	1/4 - 1/2 Mile NNE
A3	5035	1/4 - 1/2 Mile NNE
A4	5059	1/4 - 1/2 Mile NNE
A5	5058	1/4 - 1/2 Mile NNE
B9	CADW60000017032	1/2 - 1 Mile NNW
C10	CADW60000017033	1/2 - 1 Mile ESE
13	CADW60000032211	1/2 - 1 Mile ESE
D14	CADW60000033211	1/2 - 1 Mile ESE
21	CADW60000018505	1/2 - 1 Mile SE
22	5052	1/2 - 1 Mile NNW

OTHER STATE DATABASE INFORMATION

STATE OIL/GAS WELL INFORMATION

MAP ID	WELL ID	LOCATION FROM TP
1	CAOG11000218042	1/2 - 1 Mile South

PHYSICAL SETTING SOURCE MAP - 5417961.2s

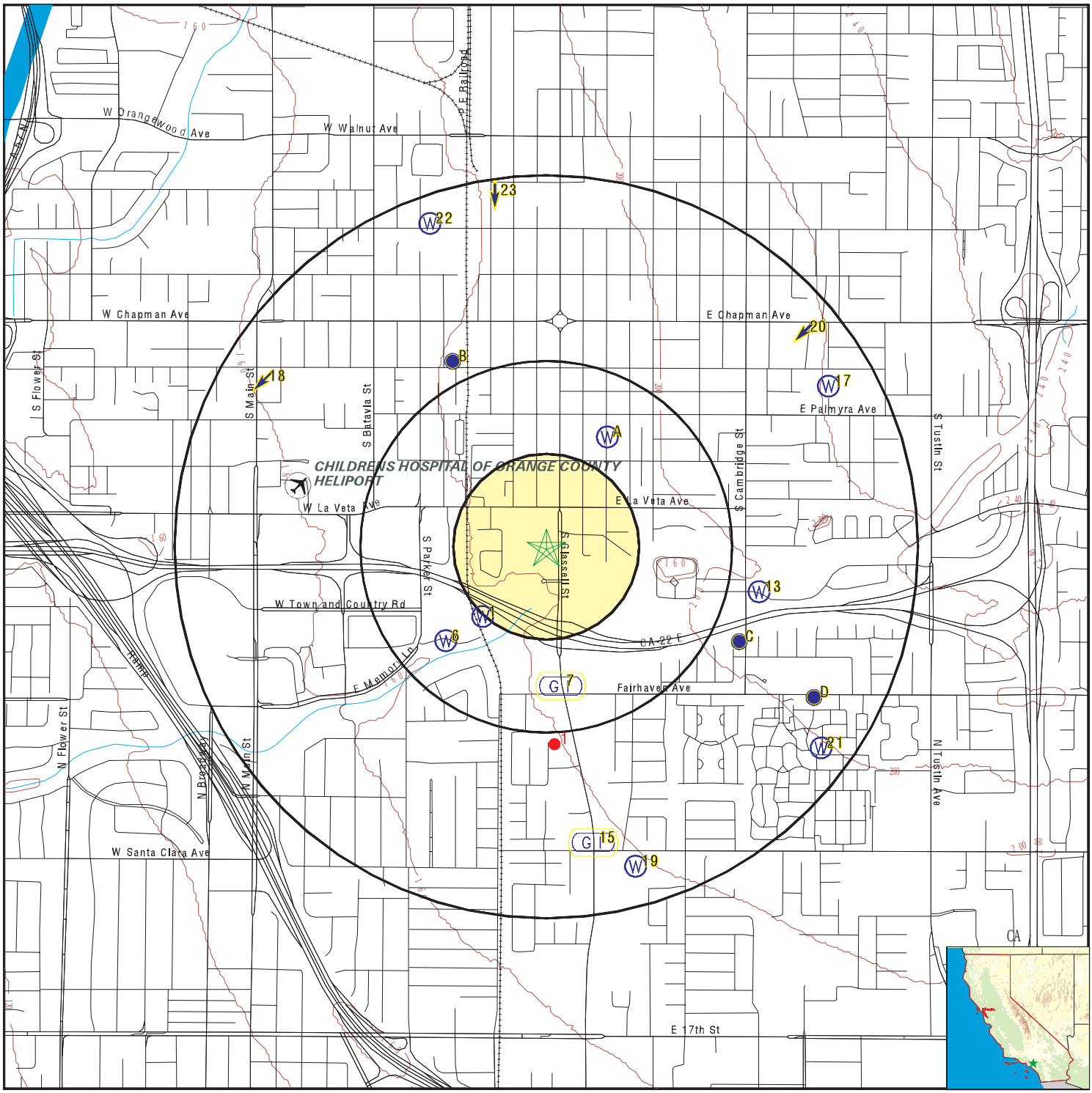

County Boundary
Major Roads
Contour Lines
Earthquake Fault Lines
Airports
Earthquake epicenter, Richter 5 or greater
Water Wells
Public Water Supply Wells
Cluster of Multiple Icons

0 1/4 1/2 1 Miles

Groundwater Flow Direction
Indeterminate Groundwater Flow at Location
Groundwater Flow Varies at Location
Closest Hydrogeological Data
Oil, gas or related wells

N

SITE NAME:	Kisco Glassell	CLIENT:	Leighton Consulting
ADDRESS:	574 S. Glassell Street Orange CA 92866	CONTACT:	Brynn Mcculloch
		INQUIRY #:	5417961.2s
LAT/LONG:	33.779058 / 117.853752	DATE:	September 10, 2018 12:45 pm

Copyright © 2018 EDR, Inc. © 2015 TomTom Rel. 2015.

Map ID Direction Distance Elevation	Database	EDR ID Number
1 **SW** **1/4 - 1/2 Mile** **Lower**	**FED USGS**	**USGS40000138103**

Organization ID:	USGS-CA		
Organization Name:	USGS California Water Science Center		
Monitor Location:	004S009W31R001S	Type:	Well
Description:	Not Reported	HUC:	Not Reported
Drainage Area:	Not Reported	Drainage Area Units:	Not Reported
Contrib Drainage Area:	Not Reported	Contrib Drainage Area Unts:	Not Reported
Aquifer:	California Coastal Basin aquifers		
Formation Type:	Not Reported	Aquifer Type:	Not Reported
Construction Date:	1976	Well Depth:	1200
Well Depth Units:	ft	Well Hole Depth:	1200
Well Hole Depth Units:	ft		

A2 **NNE** **1/4 - 1/2 Mile** **Higher**	**CA WELLS**	**5051**

Seq:	5051	Prim sta c:	04S/09W-31B01 S
Frds no:	3010027006	County:	30
District:	08	User id:	TEE
System no:	3010027	Water type:	G
Source nam:	WELL 06 - DESTROYED	Station ty:	WELL/AMBNT/MUN/INTAKE/SUPPLY
Latitude:	334700.0	Longitude:	1175100.0
Precision:	8	Status:	DS
Comment 1:	Not Reported	Comment 2:	Not Reported
Comment 3:	Not Reported	Comment 4:	Not Reported
Comment 5:	Not Reported	Comment 6:	Not Reported
Comment 7:	Not Reported		

System no:	3010027	System nam:	CITY OF ORANGE
Hqname:	Not Reported	Address:	P O BOX 449
City:	ORANGE	State:	Not Reported
Zip:	92666	Zip ext:	Not Reported
Pop serv:	116800	Connection:	30144
Area serve:	ORANGE		

A3 **NNE** **1/4 - 1/2 Mile** **Higher**	**CA WELLS**	**5035**

Seq:	5035	Prim sta c:	04S/09W-18B02 S
Frds no:	3010027001	County:	30
District:	08	User id:	TEE
System no:	3010027	Water type:	G
Source nam:	WELL 01 - INACTIVE	Station ty:	WELL/AMBNT/MUN/INTAKE/SUPPLY
Latitude:	334700.0	Longitude:	1175100.0
Precision:	5	Status:	IU
Comment 1:	Not Reported	Comment 2:	Not Reported
Comment 3:	Not Reported	Comment 4:	Not Reported
Comment 5:	Not Reported	Comment 6:	Not Reported
Comment 7:	Not Reported		

System no:	3010027	System nam:	CITY OF ORANGE
Hqname:	Not Reported	Address:	P O BOX 449
City:	ORANGE	State:	Not Reported
Zip:	92666	Zip ext:	Not Reported
Pop serv:	116800	Connection:	30144
Area serve:	ORANGE		

A4
NNE
1/4 - 1/2 Mile
Higher

CA WELLS 5059

Seq:	5059	Prim sta c:	04S/09W-32P02 S
Frds no:	3010038039	County:	30
District:	08	User id:	TEE
System no:	3010038	Water type:	G
Source nam:	WELL 38	Station ty:	WELL/AMBNT/MUN/INTAKE
Latitude:	334700.0	Longitude:	1175100.0
Precision:	3	Status:	AU
Comment 1:	Not Reported	Comment 2:	Not Reported
Comment 3:	Not Reported	Comment 4:	Not Reported
Comment 5:	Not Reported	Comment 6:	Not Reported
Comment 7:	Not Reported		

System no:	3010038	System nam:	City of Santa Ana
Hqname:	Not Reported	Address:	220 S. DAISY AVE., BLDG. A
City:	SANTA ANA	State:	CA
Zip:	92703	Zip ext:	Not Reported
Pop serv:	293700	Connection:	43613
Area serve:	CITY OF SANTA ANA		

Sample date:	21-FEB-18	Finding:	426.
Chemical:	TOTAL DISSOLVED SOLIDS	Report units:	MG/L
Dlr:	0.		

Sample date:	21-FEB-18	Finding:	1.06
Chemical:	NITRATE + NITRITE (AS N)	Report units:	MG/L
Dlr:	0.4		

Sample date:	21-FEB-18	Finding:	5.42
Chemical:	GROSS ALPHA	Report units:	PCI/L
Dlr:	3.		

Sample date:	21-FEB-18	Finding:	1.82
Chemical:	GROSS ALPHA COUNTING ERROR	Report units:	PCI/L
Dlr:	0.		

Sample date:	21-FEB-18	Finding:	9.6e-002
Chemical:	RADIUM 226 COUNTING ERROR	Report units:	PCI/L
Dlr:	0.		

Sample date:	21-FEB-18	Finding:	1.4e-002
Chemical:	RADIUM 228	Report units:	PCI/L
Dlr:	1.		

Sample date:	21-FEB-18	Finding:	0.602
Chemical:	RADIUM 228 COUNTING ERROR	Report units:	PCI/L
Dlr:	0.		

Sample date:	21-FEB-18	Finding:	0.848
Chemical:	URANIUM COUNTING ERROR	Report units:	PCI/L

Dlr:	0.		
Sample date:	21-FEB-18	Finding:	1.11
Chemical:	GROSS ALPHA MDA95	Report units:	PCI/L
Dlr:	0.		
Sample date:	21-FEB-18	Finding:	0.342
Chemical:	URANIUM MDA95	Report units:	PCI/L
Dlr:	0.		
Sample date:	21-FEB-18	Finding:	0.304
Chemical:	RADIUM 226 MDA95	Report units:	PCI/L
Dlr:	0.		
Sample date:	21-FEB-18	Finding:	0.4
Chemical:	RADIUM 228 MDA95	Report units:	PCI/L
Dlr:	0.		
Sample date:	21-FEB-18	Finding:	652.
Chemical:	SPECIFIC CONDUCTANCE	Report units:	US
Dlr:	0.		
Sample date:	21-FEB-18	Finding:	7.9
Chemical:	PH, LABORATORY	Report units:	Not Reported
Dlr:	0.		
Sample date:	21-FEB-18	Finding:	158.
Chemical:	ALKALINITY (TOTAL) AS CACO3	Report units:	MG/L
Dlr:	0.		
Sample date:	21-FEB-18	Finding:	158.
Chemical:	BICARBONATE ALKALINITY	Report units:	MG/L
Dlr:	0.		
Sample date:	21-FEB-18	Finding:	1.06
Chemical:	NITRATE (AS N)	Report units:	MG/L
Dlr:	0.4		
Sample date:	21-FEB-18	Finding:	0.31
Chemical:	TOTAL ORGANIC CARBON (TOC)	Report units:	MG/L
Dlr:	0.3		
Sample date:	21-FEB-18	Finding:	191.
Chemical:	HARDNESS (TOTAL) AS CACO3	Report units:	MG/L
Dlr:	0.		
Sample date:	21-FEB-18	Finding:	56.6
Chemical:	CALCIUM	Report units:	MG/L
Dlr:	0.		
Sample date:	21-FEB-18	Finding:	12.
Chemical:	MAGNESIUM	Report units:	MG/L
Dlr:	0.		
Sample date:	21-FEB-18	Finding:	69.9
Chemical:	SODIUM	Report units:	MG/L
Dlr:	0.		
Sample date:	21-FEB-18	Finding:	1.8
Chemical:	POTASSIUM	Report units:	MG/L
Dlr:	0.		

Sample date:	21-FEB-18	Finding:	58.1
Chemical:	CHLORIDE	Report units:	MG/L
Dlr:	0.		
Sample date:	21-FEB-18	Finding:	84.6
Chemical:	SULFATE	Report units:	MG/L
Dlr:	0.5		
Sample date:	21-FEB-18	Finding:	0.49
Chemical:	FLUORIDE (F) (NATURAL-SOURCE)	Report units:	MG/L
Dlr:	0.1		
Sample date:	21-FEB-18	Finding:	220.
Chemical:	BORON	Report units:	UG/L
Dlr:	100.		
Sample date:	16-FEB-16	Finding:	534.
Chemical:	SPECIFIC CONDUCTANCE	Report units:	US
Dlr:	0.		
Sample date:	16-FEB-16	Finding:	7.8
Chemical:	PH, LABORATORY	Report units:	Not Reported
Dlr:	0.		
Sample date:	16-FEB-16	Finding:	148.
Chemical:	ALKALINITY (TOTAL) AS CACO3	Report units:	MG/L
Dlr:	0.		
Sample date:	16-FEB-16	Finding:	180.
Chemical:	BICARBONATE ALKALINITY	Report units:	MG/L
Dlr:	0.		
Sample date:	16-FEB-16	Finding:	0.72
Chemical:	NITRATE (AS N)	Report units:	MG/L
Dlr:	0.4		
Sample date:	16-FEB-16	Finding:	140.
Chemical:	HARDNESS (TOTAL) AS CACO3	Report units:	MG/L
Dlr:	0.		
Sample date:	16-FEB-16	Finding:	41.9
Chemical:	CALCIUM	Report units:	MG/L
Dlr:	0.		
Sample date:	16-FEB-16	Finding:	8.6
Chemical:	MAGNESIUM	Report units:	MG/L
Dlr:	0.		
Sample date:	16-FEB-16	Finding:	66.7
Chemical:	SODIUM	Report units:	MG/L
Dlr:	0.		
Sample date:	16-FEB-16	Finding:	1.6
Chemical:	POTASSIUM	Report units:	MG/L
Dlr:	0.		
Sample date:	16-FEB-16	Finding:	46.4
Chemical:	CHLORIDE	Report units:	MG/L
Dlr:	0.		
Sample date:	16-FEB-16	Finding:	72.1
Chemical:	SULFATE	Report units:	MG/L

Dlr:	0.5		
Sample date:	16-FEB-16	Finding:	0.5
Chemical:	FLUORIDE (F) (NATURAL-SOURCE)	Report units:	MG/L
Dlr:	0.1		
Sample date:	16-FEB-16	Finding:	210.
Chemical:	BORON	Report units:	UG/L
Dlr:	100.		
Sample date:	16-FEB-16	Finding:	308.
Chemical:	TOTAL DISSOLVED SOLIDS	Report units:	MG/L
Dlr:	0.		
Sample date:	16-FEB-16	Finding:	0.2
Chemical:	TURBIDITY, LABORATORY	Report units:	NTU
Dlr:	0.1		
Sample date:	16-FEB-16	Finding:	0.13
Chemical:	BROMIDE	Report units:	MG/L
Dlr:	0.		
Sample date:	16-FEB-16	Finding:	0.72
Chemical:	NITRATE + NITRITE (AS N)	Report units:	MG/L
Dlr:	0.4		
Sample date:	20-MAY-14	Finding:	0.47
Chemical:	FLUORIDE (F) (NATURAL-SOURCE)	Report units:	MG/L
Dlr:	0.1		
Sample date:	18-FEB-14	Finding:	146.
Chemical:	ALKALINITY (TOTAL) AS CACO3	Report units:	MG/L
Dlr:	0.		
Sample date:	18-FEB-14	Finding:	146.
Chemical:	BICARBONATE ALKALINITY	Report units:	MG/L
Dlr:	0.		
Sample date:	18-FEB-14	Finding:	0.34
Chemical:	TOTAL ORGANIC CARBON (TOC)	Report units:	MG/L
Dlr:	0.3		
Sample date:	18-FEB-14	Finding:	134.
Chemical:	HARDNESS (TOTAL) AS CACO3	Report units:	MG/L
Dlr:	0.		
Sample date:	18-FEB-14	Finding:	40.3
Chemical:	CALCIUM	Report units:	MG/L
Dlr:	0.		
Sample date:	18-FEB-14	Finding:	8.
Chemical:	MAGNESIUM	Report units:	MG/L
Dlr:	0.		
Sample date:	18-FEB-14	Finding:	64.
Chemical:	SODIUM	Report units:	MG/L
Dlr:	0.		
Sample date:	18-FEB-14	Finding:	1.6
Chemical:	POTASSIUM	Report units:	MG/L
Dlr:	0.		

Sample date:	18-FEB-14	Finding:	42.4
Chemical:	CHLORIDE	Report units:	MG/L
Dlr:	0.		
Sample date:	18-FEB-14	Finding:	66.9
Chemical:	SULFATE	Report units:	MG/L
Dlr:	0.5		
Sample date:	18-FEB-14	Finding:	200.
Chemical:	BORON	Report units:	UG/L
Dlr:	100.		
Sample date:	18-FEB-14	Finding:	340.
Chemical:	TOTAL DISSOLVED SOLIDS	Report units:	MG/L
Dlr:	0.		
Sample date:	18-FEB-14	Finding:	3.26
Chemical:	NITRATE (AS NO3)	Report units:	MG/L
Dlr:	2.		
Sample date:	18-FEB-14	Finding:	0.1
Chemical:	BROMIDE	Report units:	MG/L
Dlr:	0.		
Sample date:	18-FEB-14	Finding:	740.
Chemical:	NITRATE + NITRITE (AS N)	Report units:	MG/L
Dlr:	0.4		
Sample date:	18-FEB-14	Finding:	0.845
Chemical:	GROSS ALPHA COUNTING ERROR	Report units:	PCI/L
Dlr:	0.		
Sample date:	18-FEB-14	Finding:	0.614
Chemical:	RADIUM 228 COUNTING ERROR	Report units:	PCI/L
Dlr:	0.		
Sample date:	18-FEB-14	Finding:	1.3
Chemical:	URANIUM (PCI/L)	Report units:	PCI/L
Dlr:	1.		
Sample date:	18-FEB-14	Finding:	0.794
Chemical:	URANIUM COUNTING ERROR	Report units:	PCI/L
Dlr:	0.		
Sample date:	18-FEB-14	Finding:	1.11
Chemical:	GROSS ALPHA MDA95	Report units:	PCI/L
Dlr:	0.		
Sample date:	18-FEB-14	Finding:	0.3
Chemical:	URANIUM MDA95	Report units:	PCI/L
Dlr:	0.		
Sample date:	18-FEB-14	Finding:	0.253
Chemical:	RADIUM 228 MDA95	Report units:	PCI/L
Dlr:	0.		
Sample date:	18-FEB-14	Finding:	0.182
Chemical:	RA-226 OR TOTAL RA BY 903.0 C.E.	Report units:	PCI/L
Dlr:	0.		
Sample date:	18-FEB-14	Finding:	0.322
Chemical:	RADIUM, TOTAL, MDA95-NTNC ONLY, BY 903.0		

Report units:	PCI/L	Dlr:	0.
Sample date:	18-FEB-14	Finding:	557.
Chemical:	SPECIFIC CONDUCTANCE	Report units:	US
Dlr:	0.		
Sample date:	18-FEB-14	Finding:	8.
Chemical:	PH, LABORATORY	Report units:	Not Reported
Dlr:	0.		
Sample date:	18-FEB-14	Finding:	145.
Chemical:	ALKALINITY (TOTAL) AS CACO3	Report units:	MG/L
Dlr:	0.		
Sample date:	18-FEB-14	Finding:	145.
Chemical:	BICARBONATE ALKALINITY	Report units:	MG/L
Dlr:	0.		
Sample date:	18-FEB-14	Finding:	0.35
Chemical:	TOTAL ORGANIC CARBON (TOC)	Report units:	MG/L
Dlr:	0.3		
Sample date:	18-FEB-14	Finding:	127.
Chemical:	HARDNESS (TOTAL) AS CACO3	Report units:	MG/L
Dlr:	0.		
Sample date:	18-FEB-14	Finding:	38.2
Chemical:	CALCIUM	Report units:	MG/L
Dlr:	0.		
Sample date:	18-FEB-14	Finding:	7.7
Chemical:	MAGNESIUM	Report units:	MG/L
Dlr:	0.		
Sample date:	18-FEB-14	Finding:	60.5
Chemical:	SODIUM	Report units:	MG/L
Dlr:	0.		
Sample date:	18-FEB-14	Finding:	1.5
Chemical:	POTASSIUM	Report units:	MG/L
Dlr:	0.		
Sample date:	18-FEB-14	Finding:	42.4
Chemical:	CHLORIDE	Report units:	MG/L
Dlr:	0.		
Sample date:	18-FEB-14	Finding:	67.1
Chemical:	SULFATE	Report units:	MG/L
Dlr:	0.5		
Sample date:	18-FEB-14	Finding:	190.
Chemical:	BORON	Report units:	UG/L
Dlr:	100.		
Sample date:	18-FEB-14	Finding:	358.
Chemical:	TOTAL DISSOLVED SOLIDS	Report units:	MG/L
Dlr:	0.		
Sample date:	18-FEB-14	Finding:	0.1
Chemical:	BROMIDE	Report units:	MG/L
Dlr:	0.		

Sample date:	18-FEB-14	Finding:	557.
Chemical:	SPECIFIC CONDUCTANCE	Report units:	US
Dlr:	0.		
Sample date:	18-FEB-14	Finding:	8.
Chemical:	PH, LABORATORY	Report units:	Not Reported
Dlr:	0.		
Sample date:	26-NOV-13	Finding:	2.8
Chemical:	ARSENIC	Report units:	UG/L
Dlr:	2.		
Sample date:	26-NOV-13	Finding:	0.8
Chemical:	FLUORIDE (F) (NATURAL-SOURCE)	Report units:	MG/L
Dlr:	0.1		
Sample date:	26-NOV-13	Finding:	294.
Chemical:	TOTAL DISSOLVED SOLIDS	Report units:	MG/L
Dlr:	0.		
Sample date:	26-NOV-13	Finding:	0.2
Chemical:	TURBIDITY, LABORATORY	Report units:	NTU
Dlr:	0.1		
Sample date:	26-NOV-13	Finding:	0.11
Chemical:	BROMIDE	Report units:	MG/L
Dlr:	0.		
Sample date:	26-NOV-13	Finding:	360.
Chemical:	BORON	Report units:	UG/L
Dlr:	100.		
Sample date:	26-NOV-13	Finding:	52.8
Chemical:	SULFATE	Report units:	MG/L
Dlr:	0.5		
Sample date:	26-NOV-13	Finding:	529.
Chemical:	SPECIFIC CONDUCTANCE	Report units:	US
Dlr:	0.		
Sample date:	26-NOV-13	Finding:	8.1
Chemical:	PH, LABORATORY	Report units:	Not Reported
Dlr:	0.		
Sample date:	26-NOV-13	Finding:	141.
Chemical:	ALKALINITY (TOTAL) AS CACO3	Report units:	MG/L
Dlr:	0.		
Sample date:	26-NOV-13	Finding:	141.
Chemical:	BICARBONATE ALKALINITY	Report units:	MG/L
Dlr:	0.		
Sample date:	26-NOV-13	Finding:	0.41
Chemical:	TOTAL ORGANIC CARBON (TOC)	Report units:	MG/L
Dlr:	0.3		
Sample date:	26-NOV-13	Finding:	81.6
Chemical:	HARDNESS (TOTAL) AS CACO3	Report units:	MG/L
Dlr:	0.		
Sample date:	26-NOV-13	Finding:	24.4
Chemical:	CALCIUM	Report units:	MG/L

Dlr:	0.		
Sample date:	26-NOV-13	Finding:	5.
Chemical:	MAGNESIUM	Report units:	MG/L
Dlr:	0.		
Sample date:	26-NOV-13	Finding:	81.
Chemical:	SODIUM	Report units:	MG/L
Dlr:	0.		
Sample date:	26-NOV-13	Finding:	1.5
Chemical:	POTASSIUM	Report units:	MG/L
Dlr:	0.		
Sample date:	26-NOV-13	Finding:	37.8
Chemical:	CHLORIDE	Report units:	MG/L
Dlr:	0.		
Sample date:	19-FEB-13	Finding:	900.
Chemical:	NITRATE + NITRITE (AS N)	Report units:	MG/L
Dlr:	0.4		
Sample date:	19-FEB-13	Finding:	4.
Chemical:	NITRATE (AS NO3)	Report units:	MG/L
Dlr:	2.		
Sample date:	16-FEB-12	Finding:	870.
Chemical:	NITRATE + NITRITE (AS N)	Report units:	MG/L
Dlr:	0.4		
Sample date:	16-FEB-12	Finding:	3.8
Chemical:	NITRATE (AS NO3)	Report units:	MG/L
Dlr:	2.		

A5
NNE
1/4 - 1/2 Mile
Higher

CA WELLS 5058

Seq:	5058	Prim sta c:	04S/09W-32P01 S
Frds no:	3010038023	County:	30
District:	08	User id:	TEE
System no:	3010038	Water type:	G
Source nam:	WELL 22	Station ty:	WELL/AMBNT/MUN/INTAKE/SUPPLY
Latitude:	334700.0	Longitude:	1175100.0
Precision:	8	Status:	AU
Comment 1:	Not Reported	Comment 2:	Not Reported
Comment 3:	Not Reported	Comment 4:	Not Reported
Comment 5:	Not Reported	Comment 6:	Not Reported
Comment 7:	Not Reported		
System no:	3010038	System nam:	City of Santa Ana
Hqname:	Not Reported	Address:	220 S. DAISY AVE., BLDG. A
City:	SANTA ANA	State:	CA
Zip:	92703	Zip ext:	Not Reported
Pop serv:	293700	Connection:	43613
Area serve:	CITY OF SANTA ANA		

Map ID Direction Distance Elevation		Database	EDR ID Number
6 **SW** **1/4 - 1/2 Mile** **Lower**		**FED USGS**	**USGS40000138098**

Organization ID:	USGS-CA		
Organization Name:	USGS California Water Science Center		
Monitor Location:	004S009W31Q001S	Type:	Well
Description:	Not Reported	HUC:	Not Reported
Drainage Area:	Not Reported	Drainage Area Units:	Not Reported
Contrib Drainage Area:	Not Reported	Contrib Drainage Area Unts:	Not Reported
Aquifer:	California Coastal Basin aquifers		
Formation Type:	Not Reported	Aquifer Type:	Not Reported
Construction Date:	1976	Well Depth:	1200
Well Depth Units:	ft	Well Hole Depth:	1200
Well Hole Depth Units:	ft		

---

7 **South** **1/4 - 1/2 Mile** **Higher**	Site ID:	083000885T	**AQUIFLOW**	**38939**
	Groundwater Flow:	Not Reported		
	Shallow Water Depth:	Not Reported		
	Deep Water Depth:	Not Reported		
	Average Water Depth:	175		
	Date:	06/30/1993		

B8 **NNW** **1/2 - 1 Mile** **Lower**	**FED USGS**	**USGS40000138160**

Organization ID:	USGS-CA		
Organization Name:	USGS California Water Science Center		
Monitor Location:	004S009W31B001S	Type:	Well
Description:	Not Reported	HUC:	18070203
Drainage Area:	Not Reported	Drainage Area Units:	Not Reported
Contrib Drainage Area:	Not Reported	Contrib Drainage Area Unts:	Not Reported
Aquifer:	California Coastal Basin aquifers		
Formation Type:	Not Reported	Aquifer Type:	Not Reported
Construction Date:	Not Reported	Well Depth:	Not Reported
Well Depth Units:	Not Reported	Well Hole Depth:	Not Reported
Well Hole Depth Units:	Not Reported		

Ground water levels,Number of Measurements:	1	Level reading date:	1977-03-09
Feet below surface:	166.00	Feet to sea level:	Not Reported
Note:	Not Reported		

B9 **NNW** **1/2 - 1 Mile** **Lower**	**CA WELLS**	**CADW60000017032**

Objectid:	17032	Latitude:	33.7861
Longitude:	-117.8587	Site code:	337861N1178587W001
State well numbe:	04S09W31B001S	Local well name:	''
Well use id:	6	Well use descrip:	Unknown
County id:	30	County name:	Orange

Basin code:	'8-1'	Basin desc:	Coastal Plain Of Orange County
Dwr region id:	80238	Dwr region:	Southern Region Office
Site id:	CADW60000017032		

C10
ESE
1/2 - 1 Mile
Higher

CA WELLS **CADW60000017033**

Objectid:	17033	Latitude:	33.7754
Longitude:	-117.8448	Site code:	337754N1178448W001
State well numbe:	04S09W32P001S	Local well name:	''
Well use id:	6	Well use descrip:	Unknown
County id:	30	County name:	Orange
Basin code:	'8-1'	Basin desc:	Coastal Plain Of Orange County
Dwr region id:	80238	Dwr region:	Southern Region Office
Site id:	CADW60000017033		

B11
NNW
1/2 - 1 Mile
Lower

FED USGS **USGS40000154213**

Organization ID:	USGS-CA		
Organization Name:	USGS California Water Science Center		
Monitor Location:	004S009W31B002S	Type:	Well
Description:	Not Reported	HUC:	18090206
Drainage Area:	Not Reported	Drainage Area Units:	Not Reported
Contrib Drainage Area:	Not Reported	Contrib Drainage Area Unts:	Not Reported
Aquifer:	California Coastal Basin aquifers		
Formation Type:	Not Reported	Aquifer Type:	Not Reported
Construction Date:	19771222	Well Depth:	714
Well Depth Units:	ft	Well Hole Depth:	714
Well Hole Depth Units:	ft		

Ground water levels,Number of Measurements:	10	Level reading date:	1985-11-07
Feet below surface:	Not Reported	Feet to sea level:	Not Reported
Note:	The measurement was discontinued.		
Level reading date:	1984-08-30	Feet below surface:	149.20
Feet to sea level:	Not Reported	Note:	The site had been pumped recently.
Level reading date:	1983-11-02	Feet below surface:	125.79
Feet to sea level:	Not Reported	Note:	Not Reported
Level reading date:	1982-01-25	Feet below surface:	140.27
Feet to sea level:	Not Reported	Note:	Not Reported
Level reading date:	1981-02-05	Feet below surface:	125.15
Feet to sea level:	Not Reported	Note:	Not Reported
Level reading date:	1980-06-11	Feet below surface:	105.93
Feet to sea level:	Not Reported	Note:	Not Reported
Level reading date:	1980-02-12	Feet below surface:	144.15
Feet to sea level:	Not Reported	Note:	Not Reported
Level reading date:	1979-11-14	Feet below surface:	152.88
Feet to sea level:	Not Reported	Note:	Not Reported

Level reading date:	1979-05-02	Feet below surface:	134.71
Feet to sea level:	Not Reported	Note:	Not Reported
Level reading date:	1979-02-07	Feet below surface:	141.33
Feet to sea level:	Not Reported	Note:	Not Reported

C12
ESE
1/2 - 1 Mile
Higher

FED USGS **USGS40000138097**

Organization ID:	USGS-CA		
Organization Name:	USGS California Water Science Center		
Monitor Location:	004S009W32P002S	Type:	Well
Description:	Not Reported	HUC:	18070203
Drainage Area:	Not Reported	Drainage Area Units:	Not Reported
Contrib Drainage Area:	Not Reported	Contrib Drainage Area Unts:	Not Reported
Aquifer:	California Coastal Basin aquifers		
Formation Type:	Alluvium	Aquifer Type:	Unconfined single aquifer
Construction Date:	19920818	Well Depth:	1300
Well Depth Units:	ft	Well Hole Depth:	1510
Well Hole Depth Units:	ft		

Ground water levels,Number of Measurements:	3	Level reading date:	2004-05-21
Feet below surface:	228	Feet to sea level:	Not Reported
Note:	Not Reported		
Level reading date:	2003-05-19	Feet below surface:	217
Feet to sea level:	Not Reported	Note:	Not Reported
Level reading date:	1999-04-26	Feet below surface:	167
Feet to sea level:	Not Reported	Note:	Not Reported

13
ESE
1/2 - 1 Mile
Higher

CA WELLS **CADW60000032211**

Objectid:	32211	Latitude:	33.7773
Longitude:	-117.8438	Site code:	337773N1178438W001
State well numbe:	04S09W32K001S	Local well name:	''
Well use id:	6	Well use descrip:	Unknown
County id:	30	County name:	Orange
Basin code:	'8-1'	Basin desc:	Coastal Plain Of Orange County
Dwr region id:	80238	Dwr region:	Southern Region Office
Site id:	CADW60000032211		

D14
ESE
1/2 - 1 Mile
Higher

CA WELLS **CADW60000033211**

Objectid:	33211	Latitude:	33.7732
Longitude:	-117.8417	Site code:	337732N1178417W001
State well numbe:	05S09W05B003S	Local well name:	''
Well use id:	6	Well use descrip:	Unknown
County id:	30	County name:	Orange
Basin code:	'8-1'	Basin desc:	Coastal Plain Of Orange County

Dwr region id:	80238	Dwr region:	Southern Region Office
Site id:	CADW60000033211		

15
South
1/2 - 1 Mile
Lower

AQUIFLOW **34233**

Site ID:	083000043T
Groundwater Flow:	Not Reported
Shallow Water Depth:	Not Reported
Deep Water Depth:	Not Reported
Average Water Depth:	98
Date:	10/30/1998

D16
ESE
1/2 - 1 Mile
Higher

FED USGS **USGS40000138060**

Organization ID:	USGS-CA		
Organization Name:	USGS California Water Science Center		
Monitor Location:	005S009W05B003S	Type:	Well
Description:	Not Reported	HUC:	Not Reported
Drainage Area:	Not Reported	Drainage Area Units:	Not Reported
Contrib Drainage Area:	Not Reported	Contrib Drainage Area Unts:	Not Reported
Aquifer:	California Coastal Basin aquifers		
Formation Type:	Not Reported	Aquifer Type:	Not Reported
Construction Date:	Not Reported	Well Depth:	500
Well Depth Units:	ft	Well Hole Depth:	Not Reported
Well Hole Depth Units:	Not Reported		

Ground water levels,Number of Measurements:	1	Level reading date:	2000-11-07
Feet below surface:	156.8	Feet to sea level:	Not Reported
Note:	Not Reported		

17
ENE
1/2 - 1 Mile
Higher

FED USGS **USGS40000138155**

Organization ID:	USGS-CA		
Organization Name:	USGS California Water Science Center		
Monitor Location:	004S009W32B004S	Type:	Well
Description:	Not Reported	HUC:	Not Reported
Drainage Area:	Not Reported	Drainage Area Units:	Not Reported
Contrib Drainage Area:	Not Reported	Contrib Drainage Area Unts:	Not Reported
Aquifer:	California Coastal Basin aquifers		
Formation Type:	Not Reported	Aquifer Type:	Not Reported
Construction Date:	19980428	Well Depth:	905
Well Depth Units:	ft	Well Hole Depth:	993
Well Hole Depth Units:	ft		

Ground water levels,Number of Measurements:	1	Level reading date:	1998-07-05
Feet below surface:	204	Feet to sea level:	Not Reported
Note:	Not Reported		

Map ID Direction Distance Elevation			Database	EDR ID Number
18 **WNW** **1/2 - 1 Mile** **Lower**	Site ID: Groundwater Flow: Shallow Water Depth: Deep Water Depth: Average Water Depth: Date:	083001866T SW 90 94 Not Reported 10/05/1998	**AQUIFLOW**	**65308**

19
SSE
1/2 - 1 Mile
Lower

FED USGS **USGS40000137999**

Organization ID:	USGS-CA		
Organization Name:	USGS California Water Science Center		
Monitor Location:	005S009W07A001S	Type:	Well
Description:	NAWQA DATA ENTRY COM + VER 06/15/2000 SDIONNE		
HUC:	18070203	Drainage Area:	Not Reported
Drainage Area Units:	Not Reported	Contrib Drainage Area:	Not Reported
Contrib Drainage Area Unts:	Not Reported	Aquifer:	California Coastal Basin aquifers
Formation Type:	Quaternary Alluvium	Aquifer Type:	Confined single aquifer
Construction Date:	19991203	Well Depth:	143.5
Well Depth Units:	ft	Well Hole Depth:	143.5
Well Hole Depth Units:	ft		

Ground water levels,Number of Measurements:	1	Level reading date:	2000-06-08
Feet below surface:	109.93	Feet to sea level:	Not Reported
Note:	Not Reported		

20 **NE** **1/2 - 1 Mile** **Higher**	Site ID: Groundwater Flow: Shallow Water Depth: Deep Water Depth: Average Water Depth: Date:	083001266T SW 140 200 Not Reported 03/22/1999	**AQUIFLOW**	**49768**

21
SE
1/2 - 1 Mile
Higher

CA WELLS **CADW60000018505**

Objectid:	18505	Latitude:	33.7712
Longitude:	-117.8409	Site code:	337712N1178409W001
State well numbe:	05S09W05B001S	Local well name:	''
Well use id:	6	Well use descrip:	Unknown
County id:	30	County name:	Orange
Basin code:	'8-1'	Basin desc:	Coastal Plain Of Orange County
Dwr region id:	80238	Dwr region:	Southern Region Office
Site id:	CADW60000018505		

Map ID Direction Distance Elevation	Database	EDR ID Number
22 **NNW** **1/2 - 1 Mile** **Lower**	**CA WELLS**	**5052**

Seq:	5052	Prim sta c:	04S/09W-31B02 S
Frds no:	3010027016	County:	30
District:	08	User id:	TEE
System no:	3010027	Water type:	G
Source nam:	WELL 18	Station ty:	WELL/AMBNT/MUN/INTAKE/SUPPLY
Latitude:	334730.0	Longitude:	1175130.0
Precision:	5	Status:	AU
Comment 1:	Not Reported	Comment 2:	Not Reported
Comment 3:	Not Reported	Comment 4:	Not Reported
Comment 5:	Not Reported	Comment 6:	Not Reported
Comment 7:	Not Reported		

System no:	3010027	System nam:	CITY OF ORANGE
Hqname:	Not Reported	Address:	P O BOX 449
City:	ORANGE	State:	Not Reported
Zip:	92666	Zip ext:	Not Reported
Pop serv:	116800	Connection:	30144
Area serve:	ORANGE		

Sample date:	18-MAY-17	Finding:	2.73
Chemical:	NITRATE + NITRITE (AS N)	Report units:	MG/L
Dlr:	0.4		

Sample date:	18-MAY-17	Finding:	2.73
Chemical:	NITRATE (AS N)	Report units:	MG/L
Dlr:	0.4		

Sample date:	25-APR-17	Finding:	2.7
Chemical:	NITRATE + NITRITE (AS N)	Report units:	MG/L
Dlr:	0.4		

Sample date:	25-APR-17	Finding:	2.7
Chemical:	NITRATE (AS N)	Report units:	MG/L
Dlr:	0.4		

Sample date:	25-APR-16	Finding:	2.84
Chemical:	NITRATE (AS N)	Report units:	MG/L
Dlr:	0.4		

Sample date:	25-APR-16	Finding:	2.84
Chemical:	NITRATE + NITRITE (AS N)	Report units:	MG/L
Dlr:	0.4		

Sample date:	19-JAN-16	Finding:	2.63
Chemical:	NITRATE + NITRITE (AS N)	Report units:	MG/L
Dlr:	0.4		

Sample date:	19-JAN-16	Finding:	2.63
Chemical:	NITRATE (AS N)	Report units:	MG/L
Dlr:	0.4		

Sample date:	28-APR-15	Finding:	43.5
Chemical:	SODIUM	Report units:	MG/L
Dlr:	0.		

Sample date:	28-APR-15	Finding:	0.16
Chemical:	BROMIDE	Report units:	MG/L
Dlr:	0.		
Sample date:	28-APR-15	Finding:	770.
Chemical:	SPECIFIC CONDUCTANCE	Report units:	US
Dlr:	0.		
Sample date:	28-APR-15	Finding:	7.9
Chemical:	PH, LABORATORY	Report units:	Not Reported
Dlr:	0.		
Sample date:	28-APR-15	Finding:	160.
Chemical:	ALKALINITY (TOTAL) AS CACO3	Report units:	MG/L
Dlr:	0.		
Sample date:	28-APR-15	Finding:	195.
Chemical:	BICARBONATE ALKALINITY	Report units:	MG/L
Dlr:	0.		
Sample date:	28-APR-15	Finding:	305.
Chemical:	HARDNESS (TOTAL) AS CACO3	Report units:	MG/L
Dlr:	0.		
Sample date:	28-APR-15	Finding:	92.4
Chemical:	CALCIUM	Report units:	MG/L
Dlr:	0.		
Sample date:	28-APR-15	Finding:	18.
Chemical:	MAGNESIUM	Report units:	MG/L
Dlr:	0.		
Sample date:	28-APR-15	Finding:	2830.
Chemical:	NITRATE + NITRITE (AS N)	Report units:	MG/L
Dlr:	0.4		
Sample date:	28-APR-15	Finding:	2.6
Chemical:	POTASSIUM	Report units:	MG/L
Dlr:	0.		
Sample date:	28-APR-15	Finding:	72.2
Chemical:	CHLORIDE	Report units:	MG/L
Dlr:	0.		
Sample date:	28-APR-15	Finding:	115.
Chemical:	SULFATE	Report units:	MG/L
Dlr:	0.5		
Sample date:	28-APR-15	Finding:	0.37
Chemical:	FLUORIDE (F) (NATURAL-SOURCE)	Report units:	MG/L
Dlr:	0.1		
Sample date:	28-APR-15	Finding:	130.
Chemical:	BARIUM	Report units:	UG/L
Dlr:	100.		
Sample date:	28-APR-15	Finding:	478.
Chemical:	TOTAL DISSOLVED SOLIDS	Report units:	MG/L
Dlr:	0.		
Sample date:	25-FEB-15	Finding:	2790.
Chemical:	NITRATE + NITRITE (AS N)	Report units:	MG/L

Dlr:	0.4		
Sample date:	13-MAR-14	Finding:	2680.
Chemical:	NITRATE + NITRITE (AS N)	Report units:	MG/L
Dlr:	0.4		
Sample date:	13-MAR-14	Finding:	5.96
Chemical:	GROSS ALPHA	Report units:	PCI/L
Dlr:	3.		
Sample date:	13-MAR-14	Finding:	1.93
Chemical:	GROSS ALPHA COUNTING ERROR	Report units:	PCI/L
Dlr:	0.		
Sample date:	13-MAR-14	Finding:	0.47
Chemical:	RADIUM 228 COUNTING ERROR	Report units:	PCI/L
Dlr:	0.		
Sample date:	13-MAR-14	Finding:	0.47
Chemical:	RADIUM, TOTAL, MDA95-NTNC ONLY, BY 903.0		
Report units:	PCI/L	Dlr:	0.
Sample date:	13-MAR-14	Finding:	1.22
Chemical:	URANIUM COUNTING ERROR	Report units:	PCI/L
Dlr:	0.		
Sample date:	13-MAR-14	Finding:	1.11
Chemical:	GROSS ALPHA MDA95	Report units:	PCI/L
Dlr:	0.		
Sample date:	13-MAR-14	Finding:	0.3
Chemical:	URANIUM MDA95	Report units:	PCI/L
Dlr:	0.		
Sample date:	13-MAR-14	Finding:	0.2
Chemical:	RADIUM 228 MDA95	Report units:	PCI/L
Dlr:	0.		
Sample date:	13-MAR-14	Finding:	0.125
Chemical:	RA-226 OR TOTAL RA BY 903.0 C.E.	Report units:	PCI/L
Dlr:	0.		
Sample date:	13-MAR-14	Finding:	3.79
Chemical:	URANIUM (PCI/L)	Report units:	PCI/L
Dlr:	1.		
Sample date:	21-MAY-13	Finding:	794.
Chemical:	SPECIFIC CONDUCTANCE	Report units:	US
Dlr:	0.		
Sample date:	21-MAY-13	Finding:	113.
Chemical:	BARIUM	Report units:	UG/L
Dlr:	100.		
Sample date:	06-MAR-13	Finding:	2810.
Chemical:	NITRATE + NITRITE (AS N)	Report units:	MG/L
Dlr:	0.4		
Sample date:	31-MAY-12	Finding:	93.4
Chemical:	CALCIUM	Report units:	MG/L
Dlr:	0.		

Sample date:	31-MAY-12	Finding:	305.
Chemical:	HARDNESS (TOTAL) AS CACO3	Report units:	MG/L
Dlr:	0.		
Sample date:	31-MAY-12	Finding:	43.8
Chemical:	SODIUM	Report units:	MG/L
Dlr:	0.		
Sample date:	31-MAY-12	Finding:	2.8
Chemical:	POTASSIUM	Report units:	MG/L
Dlr:	0.		
Sample date:	31-MAY-12	Finding:	75.1
Chemical:	CHLORIDE	Report units:	MG/L
Dlr:	0.		
Sample date:	31-MAY-12	Finding:	119.
Chemical:	SULFATE	Report units:	MG/L
Dlr:	0.5		
Sample date:	31-MAY-12	Finding:	0.33
Chemical:	FLUORIDE (F) (NATURAL-SOURCE)	Report units:	MG/L
Dlr:	0.1		
Sample date:	31-MAY-12	Finding:	122.
Chemical:	BARIUM	Report units:	UG/L
Dlr:	100.		
Sample date:	31-MAY-12	Finding:	464.
Chemical:	TOTAL DISSOLVED SOLIDS	Report units:	MG/L
Dlr:	0.		
Sample date:	31-MAY-12	Finding:	0.2
Chemical:	BROMIDE	Report units:	MG/L
Dlr:	0.		
Sample date:	31-MAY-12	Finding:	2600.
Chemical:	NITRATE + NITRITE (AS N)	Report units:	MG/L
Dlr:	0.4		
Sample date:	31-MAY-12	Finding:	17.4
Chemical:	MAGNESIUM	Report units:	MG/L
Dlr:	0.		
Sample date:	31-MAY-12	Finding:	193.
Chemical:	BICARBONATE ALKALINITY	Report units:	MG/L
Dlr:	0.		
Sample date:	31-MAY-12	Finding:	782.
Chemical:	SPECIFIC CONDUCTANCE	Report units:	US
Dlr:	0.		
Sample date:	31-MAY-12	Finding:	7.9
Chemical:	PH, LABORATORY	Report units:	Not Reported
Dlr:	0.		
Sample date:	31-MAY-12	Finding:	159.
Chemical:	ALKALINITY (TOTAL) AS CACO3	Report units:	MG/L
Dlr:	0.		
Sample date:	27-FEB-12	Finding:	2700.
Chemical:	NITRATE + NITRITE (AS N)	Report units:	MG/L

Dlr: 0.4

23 **North** **1/2 - 1 Mile** **Lower**	Site ID: Groundwater Flow: Shallow Water Depth: Deep Water Depth: Average Water Depth: Date:	083002889T S Not Reported Not Reported 100 10/07/1996	**AQUIFLOW**	**69433**
1G **North** **1/2 - 1 Mile** **Lower**	Site ID: Groundwater Flow: Shallow Water Depth: Deep Water Depth: Average Water Depth: Date:	083002889T S Not Reported Not Reported 100 10/07/1996	**AQUIFLOW**	**69433**
2G **NE** **1/2 - 1 Mile** **Lower**	Site ID: Groundwater Flow: Shallow Water Depth: Deep Water Depth: Average Water Depth: Date:	083001266T SW 140 200 Not Reported 03/22/1999	**AQUIFLOW**	**49768**
3G **WNW** **1/2 - 1 Mile** **Lower**	Site ID: Groundwater Flow: Shallow Water Depth: Deep Water Depth: Average Water Depth: Date:	083001866T SW 90 94 Not Reported 10/05/1998	**AQUIFLOW**	**65308**
4G **South** **1/4 - 1/2 Mile** **Lower**	Site ID: Groundwater Flow: Shallow Water Depth: Deep Water Depth: Average Water Depth: Date:	083000885T Not Reported Not Reported Not Reported 175 06/30/1993	**AQUIFLOW**	**38939**
5G **South** **1/2 - 1 Mile** **Lower**	Site ID: Groundwater Flow: Shallow Water Depth: Deep Water Depth: Average Water Depth: Date:	083000043T Not Reported Not Reported Not Reported 98 10/30/1998	**AQUIFLOW**	**34233**

Map ID Direction Distance	Database	EDR ID Number
1 **South** **1/2 - 1 Mile**	**OIL_GAS**	**CAOG11000218042**

Districtnu:	1	Apinumber:	05901266
Blmwell:	N	Redrillcan:	Not Reported
Dryhole:	Y	Wellstatus:	P
Operatorna:	Trustees Dev. Association	Countyname:	Orange
Fieldname:	Any Field	Areaname:	Any Area
Section:	6	Township:	05S
Range:	09W	Basemeridi:	SB
Elevation:	Not Reported	Locationde:	Not Reported
Gissourcec:	hud	Comments:	Not Reported
Leasename:	Not Reported	Wellnumber:	1
Epawell:	N	Hydraulica:	N
Confidenti:	N	Spuddate:	Not Reported
Welldeptha:	0	Redrillfoo:	0
Abandonedd:	Not Reported	Completion:	Not Reported
Directiona:	Unknown	Gissymbol:	PDH
Site id:	CAOG11000218042		

GEOCHECK® - PHYSICAL SETTING SOURCE MAP FINDINGS
RADON

AREA RADON INFORMATION

State Database: CA Radon

Radon Test Results

Zipcode	Num Tests	> 4 pCi/L
92866	18	0

Federal EPA Radon Zone for ORANGE County: 3

Note: Zone 1 indoor average level > 4 pCi/L.
: Zone 2 indoor average level >= 2 pCi/L and <= 4 pCi/L.
: Zone 3 indoor average level < 2 pCi/L.

Federal Area Radon Information for ORANGE COUNTY, CA

Number of sites tested: 30

Area	Average Activity	% <4 pCi/L	% 4-20 pCi/L	% >20 pCi/L
Living Area - 1st Floor	0.763 pCi/L	100%	0%	0%
Living Area - 2nd Floor	Not Reported	Not Reported	Not Reported	Not Reported
Basement	Not Reported	Not Reported	Not Reported	Not Reported

PHYSICAL SETTING SOURCE RECORDS SEARCHED

TOPOGRAPHIC INFORMATION

USGS 7.5' Digital Elevation Model (DEM)
Source: United States Geologic Survey
EDR acquired the USGS 7.5' Digital Elevation Model in 2002 and updated it in 2006. The 7.5 minute DEM corresponds to the USGS 1:24,000- and 1:25,000-scale topographic quadrangle maps. The DEM provides elevation data with consistent elevation units and projection.

Current USGS 7.5 Minute Topographic Map
Source: U.S. Geological Survey

HYDROLOGIC INFORMATION

Flood Zone Data: This data was obtained from the Federal Emergency Management Agency (FEMA). It depicts 100-year and 500-year flood zones as defined by FEMA. It includes the National Flood Hazard Layer (NFHL) which incorporates Flood Insurance Rate Map (FIRM) data and Q3 data from FEMA in areas not covered by NFHL.
Source: FEMA
Telephone: 877-336-2627
Date of Government Version: 2003, 2015

NWI: National Wetlands Inventory. This data, available in select counties across the country, was obtained by EDR in 2002, 2005 and 2010 from the U.S. Fish and Wildlife Service.

State Wetlands Data: Wetland Inventory
Source: Department of Fish and Wildlife
Telephone: 916-445-0411

HYDROGEOLOGIC INFORMATION

AQUIFLOW^{R} Information System
Source: EDR proprietary database of groundwater flow information
EDR has developed the AQUIFLOW Information System (AIS) to provide data on the general direction of groundwater flow at specific points. EDR has reviewed reports submitted to regulatory authorities at select sites and has extracted the date of the report, hydrogeologically determined groundwater flow direction and depth to water table information.

GEOLOGIC INFORMATION

Geologic Age and Rock Stratigraphic Unit
Source: P.G. Schruben, R.E. Arndt and W.J. Bawiec, Geology of the Conterminous U.S. at 1:2,500,000 Scale - A digital representation of the 1974 P.B. King and H.M. Beikman Map, USGS Digital Data Series DDS - 11 (1994).

STATSGO: State Soil Geographic Database
Source: Department of Agriculture, Natural Resources Conservation Service (NRCS)
The U.S. Department of Agriculture's (USDA) Natural Resources Conservation Service (NRCS) leads the national Conservation Soil Survey (NCSS) and is responsible for collecting, storing, maintaining and distributing soil survey information for privately owned lands in the United States. A soil map in a soil survey is a representation of soil patterns in a landscape. Soil maps for STATSGO are compiled by generalizing more detailed (SSURGO) soil survey maps.

SSURGO: Soil Survey Geographic Database
Source: Department of Agriculture, Natural Resources Conservation Service (NRCS)
Telephone: 800-672-5559
SSURGO is the most detailed level of mapping done by the Natural Resources Conservation Service, mapping scales generally range from 1:12,000 to 1:63,360. Field mapping methods using national standards are used to construct the soil maps in the Soil Survey Geographic (SSURGO) database. SSURGO digitizing duplicates the original soil survey maps. This level of mapping is designed for use by landowners, townships and county natural resource planning and management.

PHYSICAL SETTING SOURCE RECORDS SEARCHED

LOCAL / REGIONAL WATER AGENCY RECORDS

FEDERAL WATER WELLS

PWS: Public Water Systems
Source: EPA/Office of Drinking Water
Telephone: 202-564-3750
Public Water System data from the Federal Reporting Data System. A PWS is any water system which provides water to at least 25 people for at least 60 days annually. PWSs provide water from wells, rivers and other sources.

PWS ENF: Public Water Systems Violation and Enforcement Data
Source: EPA/Office of Drinking Water
Telephone: 202-564-3750
Violation and Enforcement data for Public Water Systems from the Safe Drinking Water Information System (SDWIS) after August 1995. Prior to August 1995, the data came from the Federal Reporting Data System (FRDS).

USGS Water Wells: USGS National Water Inventory System (NWIS)
This database contains descriptive information on sites where the USGS collects or has collected data on surface water and/or groundwater. The groundwater data includes information on wells, springs, and other sources of groundwater.

STATE RECORDS

Water Well Database
Source: Department of Water Resources
Telephone: 916-651-9648

California Drinking Water Quality Database
Source: Department of Public Health
Telephone: 916-324-2319
The database includes all drinking water compliance and special studies monitoring for the state of California since 1984. It consists of over 3,200,000 individual analyses along with well and water system information.

OTHER STATE DATABASE INFORMATION

California Oil and Gas Well Locations
Source: Department of Conservation
Telephone: 916-323-1779
Oil and Gas well locations in the state.

RADON

State Database: CA Radon
Source: Department of Health Services
Telephone: 916-324-2208
Radon Database for California

Area Radon Information
Source: USGS
Telephone: 703-356-4020
The National Radon Database has been developed by the U.S. Environmental Protection Agency (USEPA) and is a compilation of the EPA/State Residential Radon Survey and the National Residential Radon Survey. The study covers the years 1986 - 1992. Where necessary data has been supplemented by information collected at private sources such as universities and research institutions.

EPA Radon Zones
Source: EPA
Telephone: 703-356-4020
Sections 307 & 309 of IRAA directed EPA to list and identify areas of U.S. with the potential for elevated indoor radon levels.

PHYSICAL SETTING SOURCE RECORDS SEARCHED

OTHER

Airport Landing Facilities: Private and public use landing facilities
Source: Federal Aviation Administration, 800-457-6656

Epicenters: World earthquake epicenters, Richter 5 or greater
Source: Department of Commerce, National Oceanic and Atmospheric Administration

California Earthquake Fault Lines: The fault lines displayed on EDR's Topographic map are digitized quaternary fault lines, prepared in 1975 by the United State Geological Survey. Additional information (also from 1975) regarding activity at specific fault lines comes from California's Preliminary Fault Activity Map prepared by the California Division of Mines and Geology.

STREET AND ADDRESS INFORMATION

© 2015 TomTom North America, Inc. All rights reserved. This material is proprietary and the subject of copyright protection and other intellectual property rights owned by or licensed to Tele Atlas North America, Inc. The use of this material is subject to the terms of a license agreement. You will be held liable for any unauthorized copying or disclosure of this material.

Kisco Glassell
574 S. Glassell Street
Orange, CA 92866

Inquiry Number: 5417961.2s
September 19, 2018

EDR Vapor Encroachment Screen

Prepared using EDR's Vapor Encroachment Worksheet

EDR® Environmental Data Resources Inc

6 Armstrong Road, 4th floor
Shelton, CT 06484
Toll Free: 800.352.0050
www.edrnet.com

TABLE OF CONTENTS

SECTION	PAGE
Executive Summary	**ES1**
Primary Map	**2**
Secondary Map	**3**
Map Findings	**4**
Record Sources and Currency	**GR-1**

Thank you for your business.
Please contact EDR at 1-800-352-0050
with any questions or comments.

Disclaimer - Copyright and Trademark Notice

The EDR Vapor Encroachment Worksheet enables EDR's customers to make certain online modifications that effects maps, text and calculations contained in this Report. As a result, maps, text and calculations contained in this Report may have been so modified. EDR has not taken any action to verify any such modifications, and this report and the findings set forth herein must be read in light of this fact. Environmental Data Resources shall not be responsible for any customer's decision to include or not include in any final report any records determined to be within the relevant minimum search distances.

This report contains information obtained from a variety of public and other sources reasonably available to Environmental Data Resources, Inc. It cannot be concluded from this Report that coverage information for the target and surrounding properties does not exist from other sources. **NO WARRANTY EXPRESSED OR IMPLIED, IS MADE WHATSOEVER IN CONNECTION WITH THIS REPORT. ENVIRONMENTAL DATA RESOURCES, INC. SPECIFICALLY DISCLAIMS THE MAKING OF ANYSUCH WARRANTIES, INCLUDING WITHOUT LIMITATION, MERCHANTABILITY OR FITNESS FOR A PARTICULAR USE OR PURPOSE. ALL RISK IS ASSUMED BY THE USER. IN NO EVENT SHALL ENVIRONMENTAL DATA RESOURCES, INC. BE LIABLE TO ANYONE, WHETHER ARISING OUT OF ERRORS OR OMISSIONS, NEGLIGENCE, ACCIDENT OR ANY OTHER CAUSE, FOR ANY LOSS OR DAMAGE, INCLUDING, WITHOUT LIMITATION, SPECIAL, INCIDENTAL, CONSEQUENTIAL, OR EXEMPLARY DAMAGES.ANY LIABILITY ON THE PART OF ENVIRONMENTAL DATA RESOURCES, INC. IS STRICTLY LIMITED TO A REFUND OF THE AMOUNT PAID FOR THIS REPORT.** Purchaser accepts this report "AS IS". Any analyses, estimates, ratings, or risk codes provided in this report are provided for illustrative purposes only, and are not intended to provide, nor should they be interpreted as providing any facts regarding, or prediction or forecast of, any environmental risk for any property. Only a Phase I Environmental Site Assessment performed by an environmental professional can produce information regarding the environmental risk for any property. Additionally, the information provided in this Report is not to be construed as legal advice.

Copyright 2018 by Environmental Data Resources, Inc. All rights reserved. Reproduction in any media or format, in whole or in part, of any report or map of Environmental Data Resources, Inc., or its affiliates, is prohibited without prior written permission.

EDR and its logos (including Sanborn and Sanborn Map) are trademarks of Environmental Data Resources, Inc. or its affiliates. All other trademarks used herein are the property of their respective owners.

EXECUTIVE SUMMARY

A search of available environmental records was conducted by EDR. The report was designed to assist parties seeking to meet the search requirements of the ASTM Standard Practice for Assessment of Vapor Encroachment into Structures on Property Involved in Real Estate Transactions (E 2600).

STANDARD ENVIRONMENTAL RECORDS	Default Area of Concern (Miles)*	property	1/10	> 1/10
Federal NPL site list	1.0	0	0	0
Federal Delisted NPL site list	1.0	0	0	0
Federal CERCLIS list	0.5	0	0	0
Federal CERCLIS NFRAP site list	0.5	0	0	0
Federal RCRA CORRACTS facilities list	1.0	0	0	0
Federal RCRA non-CORRACTS TSD facilities list	0.5	0	0	0
Federal RCRA generators list	0.25	0	0	0
Federal institutional controls / engineering controls registries	0.5	0	0	0
Federal ERNS list	0.001	0	0	-
State- and tribal - equivalent NPL	1.0	0	0	0
State- and tribal - equivalent CERCLIS	1.0	0	0	0
State and tribal landfill and/or solid waste disposal site lists	0.5	0	0	0
State and tribal leaking storage tank lists	0.5	0	0	0
State and tribal registered storage tank lists	0.25	0	0	0
State and tribal institutional control / engineering control registries	not searched	-	-	-
State and tribal voluntary cleanup sites	0.5	0	0	0
State and tribal Brownfields sites	0.5	0	0	0

ADDITIONAL ENVIRONMENTAL RECORDS				
Local Brownfield lists	0.5	0	0	0
Local Lists of Landfill / Solid Waste Disposal Sites	0.5	0	0	0
Local Lists of Hazardous waste / Contaminated Sites	1.0	0	0	0
Local Lists of Registered Storage Tanks	0.25	0	0	0
Local Land Records	0.5	0	0	0
Records of Emergency Release Reports	0.5	0	0	0
Other Ascertainable Records	1.0	0	0	0

EDR HIGH RISK HISTORICAL RECORDS				
EDR Exclusive Records	1.0	0	0	0
Exclusive Recovered Govt. Archives	0.001	0	0	-

EXECUTIVE SUMMARY

EDR RECOVERED GOVERNMENT ARCHIVES

EDR Exclusive Records	1.0	0	0	0
Exclusive Recovered Govt. Archives	0.001	0	0	-

*The Default Area of Concern may be adjusted by the environmental professional using experience and professional judgement. Each category may include several databases, and each database may have a different distance. A list of individual databases is provided at the back of this report.

EXECUTIVE SUMMARY

TARGET PROPERTY INFORMATION

ADDRESS

KISCO GLASSELL
574 S. GLASSELL STREET
ORANGE, CA 92866

COORDINATES

Latitude (North):	33.779058 - 33° 46′ 44.603577″
Longitude (West):	117.853752 - 117° 51′ 13.50769″
Elevation:	185 ft. above sea level

EXECUTIVE SUMMARY

SEARCH RESULTS

Unmappable (orphan) sites are not considered in the foregoing analysis.

STANDARD ENVIRONMENTAL RECORDS

Name	Address	Dist/Dir	Map ID	Page
Not Reported				

ADDITIONAL ENVIRONMENTAL RECORDS

Name	Address	Dist/Dir	Map ID	Page
Not Reported				

EDR HIGH RISK HISTORICAL RECORDS

Name	Address	Dist/Dir	Map ID	Page
Not Reported				

EDR RECOVERED GOVERNMENT ARCHIVES

Name	Address	Dist/Dir	Map ID	Page
Not Reported				

PRIMARY MAP - 5417961.2S

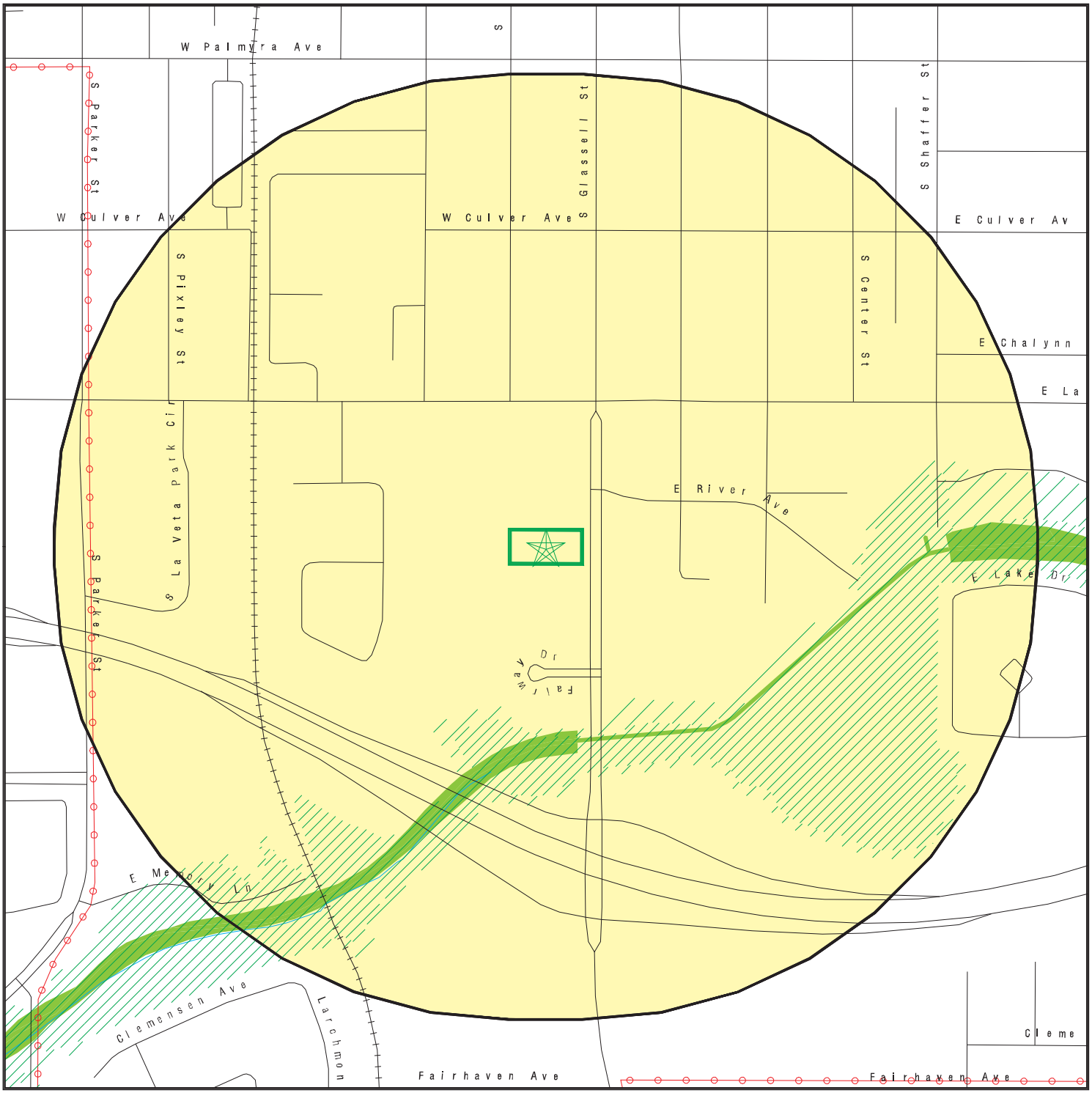

0 300 1/3 Miles

- Target Property
- Sites at elevations higher than or equal to the target property
- Sites at elevations lower than the target property
- Manufactured Gas Plants
- Sensitive Receptors
- National Priority List Sites
- Dept. Defense Sites
- Indian Reservations BIA
- Power transmission lines
- 100-year flood zone
- 500-year flood zone
- National Wetland Inventory
- State Wetlands
- Areas of Concern

This report includes Interactive Map Layers to display and/or hide map information. The legend includes only those icons for the default map view.

SITE NAME: Kisco Glassell ADDRESS: 574 S. Glassell Street Orange CA 92866 LAT/LONG: 33.779058 / 117.853752	CLIENT: Leighton Consulting CONTACT: Brynn Mcculloch INQUIRY #: 5417961.2s DATE: September 10, 2018 12:39 pm

Copyright © 2018 EDR, Inc. © 2015 TomTom Rel. 2015.

SECONDARY MAP - 5417961.2S

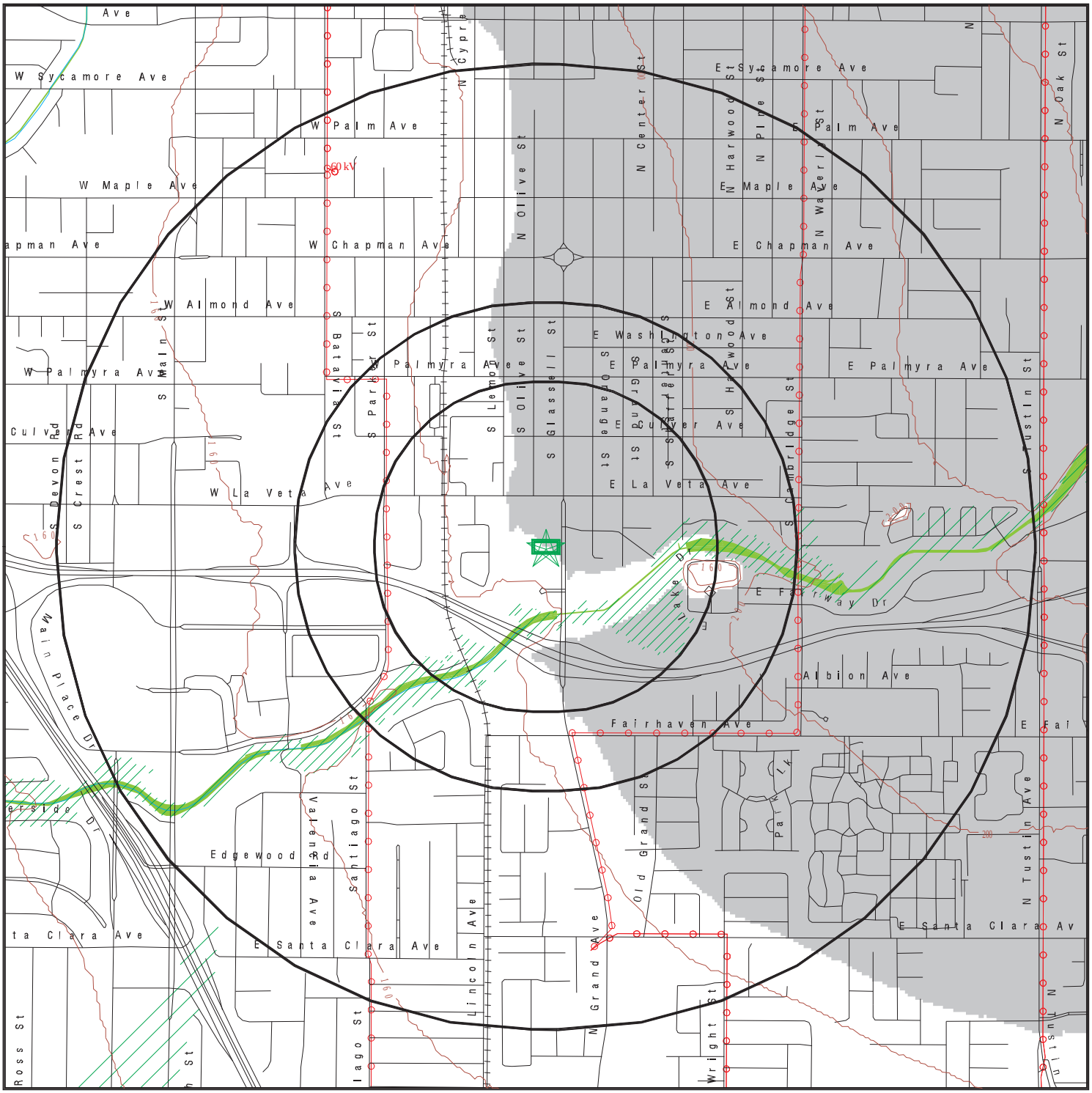

Target Property

Sites at elevations higher than or equal to the target property

Sites at elevations lower than the target property

Manufactured Gas Plants

National Priority List Sites

Dept. Defense Sites

0 1/3 1/2 1 Miles

Indian Reservations BIA

Power transmission lines

100-year flood zone

500-year flood zone

National Wetland Inventory

State Wetlands

Upgradient Area

Areas of Concern

This report includes Interactive Map Layers to display and/or hide map information. The legend includes only those icons for the default map view.

SITE NAME: Kisco Glassell	CLIENT: Leighton Consulting
ADDRESS: 574 S. Glassell Street Orange CA 92866	CONTACT: Brynn Mcculloch
LAT/LONG: 33.779058 / 117.853752	INQUIRY #: 5417961.2s
	DATE: September 10, 2018 12:34 pm

Copyright © 2018 EDR, Inc. © 2015 TomTom Rel. 2015.

MAP FINDINGS

LEGEND

FACILITY NAME **FACILITY ADDRESS, CITY, ST, ZIP**			EDR SITE ID NUMBER
◆ **MAP ID#**	Direction Distance Range Relative Elevation	(Distance feet / miles) Feet Above Sea Level	ASTM 2600 Record Sources found in this report. Each database searched has been assigned to one or more categories. For detailed information about categorization, see the section of the report Records Searched and Currency.
Worksheet: **Comments:** Comments may be added on the online Vapor Encroachment Worksheet.			

DATABASE ACRONYM: Applicable categories (A hoverbox with database description).

GOVERNMENT RECORDS SEARCHED / DATA CURRENCY TRACKING

St	Acronym	Full Name	Government Agency	Gov Date	Arvl. Date	Active Date
ENVIRONMENTAL RECORDS						
Federal NPL site list						
US	NPL	National Priority List	EPA	07/17/2018	08/09/2018	09/07/2018
US	Proposed NPL	Proposed National Priority List Sites	EPA	07/17/2018	08/09/2018	09/07/2018
US	NPL LIENS	Federal Superfund Liens	EPA	10/15/1991	02/02/1994	03/30/1994
Federal CERCLIS list						
US	SEMS	Superfund Enterprise Management System	EPA	07/17/2018	08/09/2018	09/07/2018
Federal RCRA CORRACTS facilities list						
US	CORRACTS	Corrective Action Report	EPA	03/01/2018	03/28/2018	06/22/2018
Federal RCRA TSD facilities list						
US	RCRA-TSDF	RCRA - Treatment, Storage and Disposal	Environmental Protection Agency	03/01/2018	03/28/2018	06/22/2018
Federal RCRA generators list						
US	RCRA-LQG	RCRA - Large Quantity Generators	Environmental Protection Agency	03/01/2018	03/28/2018	06/22/2018
US	RCRA-SQG	RCRA - Small Quantity Generators	Environmental Protection Agency	03/01/2018	03/28/2018	06/22/2018
US	RCRA-CESQG	RCRA - Conditionally Exempt Small Quantity Generators	Environmental Protection Agency	03/01/2018	03/28/2018	06/22/2018
Federal institutional controls / engineering controls registries						
US	LUCIS	Land Use Control Information System	Department of the Navy	05/14/2018	05/18/2018	07/20/2018
US	US ENG CONTROLS	Engineering Controls Sites List	Environmental Protection Agency	02/13/2018	02/27/2018	05/11/2018
US	US INST CONTROL	Sites with Institutional Controls	Environmental Protection Agency	02/13/2018	02/27/2018	05/11/2018
Federal ERNS list						
US	ERNS	Emergency Response Notification System	National Response Center, United States Coast	03/19/2018	03/27/2018	06/08/2018
State and tribal - equivalent NPL						
CA	RESPONSE	State Response Sites	Department of Toxic Substances Control	07/30/2018	07/31/2018	09/07/2018
State and tribal - equivalent CERCLIS						
CA	ENVIROSTOR	EnviroStor Database	Department of Toxic Substances Control	07/30/2018	07/31/2018	09/07/2018
State and tribal landfill / solid waste disposal						
CA	SWF/LF (SWIS)	Solid Waste Information System	Department of Resources Recycling and Recover	08/08/2018	08/10/2018	08/24/2018
State and tribal leaking storage tank lists						
CA	LUST REG 1	Active Toxic Site Investigation	California Regional Water Quality Control Boa	02/01/2001	02/28/2001	03/29/2001
CA	LUST REG 7	Leaking Underground Storage Tank Case Listing	California Regional Water Quality Control Boa	02/26/2004	02/26/2004	03/24/2004
CA	LUST REG 8	Leaking Underground Storage Tanks	California Regional Water Quality Control Boa	02/14/2005	02/15/2005	03/28/2005
CA	LUST REG 6V	Leaking Underground Storage Tank Case Listing	California Regional Water Quality Control Boa	06/07/2005	06/07/2005	06/29/2005
CA	LUST REG 6L	Leaking Underground Storage Tank Case Listing	California Regional Water Quality Control Boa	09/09/2003	09/10/2003	10/07/2003
CA	LUST REG 5	Leaking Underground Storage Tank Database	California Regional Water Quality Control Boa	07/01/2008	07/22/2008	07/31/2008
CA	LUST	Leaking Underground Fuel Tank Report (GEOTRACKER)	State Water Resources Control Board	06/11/2018	06/13/2018	07/17/2018

GOVERNMENT RECORDS SEARCHED / DATA CURRENCY TRACKING

St	Acronym	Full Name	Government Agency	Gov Date	Arvl. Date	Active Date
CA	LUST REG 2	Fuel Leak List	California Regional Water Quality Control Boa	09/30/2004	10/20/2004	11/19/2004
CA	LUST REG 3	Leaking Underground Storage Tank Database	California Regional Water Quality Control Boa	05/19/2003	05/19/2003	06/02/2003
CA	LUST REG 4	Underground Storage Tank Leak List	California Regional Water Quality Control Boa	09/07/2004	09/07/2004	10/12/2004
CA	LUST REG 9	Leaking Underground Storage Tank Report	California Regional Water Quality Control Boa	03/01/2001	04/23/2001	05/21/2001
US	INDIAN LUST R10	Leaking Underground Storage Tanks on Indian Land	EPA Region 10	04/12/2018	05/18/2018	07/20/2018
US	INDIAN LUST R9	Leaking Underground Storage Tanks on Indian Land	Environmental Protection Agency	04/10/2018	05/18/2018	07/20/2018
US	INDIAN LUST R8	Leaking Underground Storage Tanks on Indian Land	EPA Region 8	04/25/2018	05/18/2018	07/20/2018
US	INDIAN LUST R7	Leaking Underground Storage Tanks on Indian Land	EPA Region 7	04/24/2018	05/18/2018	07/20/2018
US	INDIAN LUST R6	Leaking Underground Storage Tanks on Indian Land	EPA Region 6	04/01/2018	05/18/2018	07/20/2018
US	INDIAN LUST R4	Leaking Underground Storage Tanks on Indian Land	EPA Region 4	05/08/2018	05/18/2018	07/20/2018
US	INDIAN LUST R1	Leaking Underground Storage Tanks on Indian Land	EPA Region 1	04/13/2018	05/18/2018	07/20/2018
US	INDIAN LUST R5	Leaking Underground Storage Tanks on Indian Land	EPA, Region 5	04/12/2018	05/18/2018	07/20/2018
CA	CPS-SLIC	Statewide SLIC Cases (GEOTRACKER)	State Water Resources Control Board	06/11/2018	06/13/2018	07/17/2018
CA	SLIC REG 1	Active Toxic Site Investigations	California Regional Water Quality Control Boa	04/03/2003	04/07/2003	04/25/2003
CA	SLIC REG 2	Spills, Leaks, Investigation & Cleanup Cost Recovery Listing	Regional Water Quality Control Board San Fran	09/30/2004	10/20/2004	11/19/2004
CA	SLIC REG 3	Spills, Leaks, Investigation & Cleanup Cost Recovery Listing	California Regional Water Quality Control Boa	05/18/2006	05/18/2006	06/15/2006
CA	SLIC REG 4	Spills, Leaks, Investigation & Cleanup Cost Recovery Listing	Region Water Quality Control Board Los Angele	11/17/2004	11/18/2004	01/04/2005
CA	SLIC REG 5	Spills, Leaks, Investigation & Cleanup Cost Recovery Listing	Regional Water Quality Control Board Central	04/01/2005	04/05/2005	04/21/2005
CA	SLIC REG 6V	Spills, Leaks, Investigation & Cleanup Cost Recovery Listing	Regional Water Quality Control Board, Victorv	05/24/2005	05/25/2005	06/16/2005
CA	SLIC REG 6L	SLIC Sites	California Regional Water Quality Control Boa	09/07/2004	09/07/2004	10/12/2004
CA	SLIC REG 7	SLIC List	California Regional Quality Control Board, Co	11/24/2004	11/29/2004	01/04/2005
CA	SLIC REG 8	Spills, Leaks, Investigation & Cleanup Cost Recovery Listing	California Region Water Quality Control Board	04/03/2008	04/03/2008	04/14/2008
CA	SLIC REG 9	Spills, Leaks, Investigation & Cleanup Cost Recovery Listing	California Regional Water Quality Control Boa	09/10/2007	09/11/2007	09/28/2007
State and tribal registered storage tank lists						
CA	UST	Active UST Facilities	SWRCB	06/11/2018	06/13/2018	07/09/2018
CA	MILITARY UST SITES	Military UST Sites (GEOTRACKER)	State Water Resources Control Board	06/11/2018	06/13/2018	07/18/2018
CA	UST CLOSURE	Proposed Closure of Underground Storage Tank (UST) Cases	State Water Resources Control Board	06/11/2018	06/13/2018	07/10/2018
CA	UST MENDOCINO	Mendocino County UST Database	Department of Public Health	03/28/2018	05/25/2018	07/10/2018
CA	AST	Aboveground Petroleum Storage Tank Facilities	California Environmental Protection Agency	07/06/2016	07/12/2016	09/19/2016
US	INDIAN UST R10	Underground Storage Tanks on Indian Land	EPA Region 10	04/12/2018	05/18/2018	07/20/2018
US	INDIAN UST R9	Underground Storage Tanks on Indian Land	EPA Region 9	04/10/2018	05/18/2018	07/20/2018
US	INDIAN UST R8	Underground Storage Tanks on Indian Land	EPA Region 8	04/25/2018	05/18/2018	07/20/2018
US	INDIAN UST R7	Underground Storage Tanks on Indian Land	EPA Region 7	04/24/2018	05/18/2018	07/20/2018
US	INDIAN UST R6	Underground Storage Tanks on Indian Land	EPA Region 6	04/01/2018	05/18/2018	07/20/2018
US	INDIAN UST R1	Underground Storage Tanks on Indian Land	EPA, Region 1	04/13/2018	05/18/2018	07/20/2018
US	INDIAN UST R4	Underground Storage Tanks on Indian Land	EPA Region 4	05/08/2018	05/18/2018	07/20/2018
US	INDIAN UST R5	Underground Storage Tanks on Indian Land	EPA Region 5	04/12/2018	05/18/2018	07/20/2018
US	FEMA UST	Underground Storage Tank Listing	FEMA	05/15/2017	05/30/2017	10/13/2017

GOVERNMENT RECORDS SEARCHED / DATA CURRENCY TRACKING

St	Acronym	Full Name	Government Agency	Gov Date	Arvl. Date	Active Date
State and tribal voluntary cleanup sites						
US	INDIAN VCP R1	Voluntary Cleanup Priority Listing	EPA, Region 1	07/27/2015	09/29/2015	02/18/2016
CA	VCP	Voluntary Cleanup Program Properties	Department of Toxic Substances Control	07/30/2018	07/31/2018	09/07/2018
US	INDIAN VCP R7	Voluntary Cleanup Priority Lisitng	EPA, Region 7	03/20/2008	04/22/2008	05/19/2008
State and tribal Brownfields sites						
CA	BROWNFIELDS	Considered Brownfieds Sites Listing	State Water Resources Control Board	06/25/2018	06/27/2018	08/06/2018
Other Records						
US	CONSENT	Superfund (CERCLA) Consent Decrees	Department of Justice, Consent Decree Library	03/31/2018	04/16/2018	06/29/2018
US	ROD	Records Of Decision	EPA	05/13/2018	05/30/2018	06/29/2018
US	LIENS 2	CERCLA Lien Information	Environmental Protection Agency	05/13/2018	05/30/2018	06/29/2018
CA	HIST CAL-SITES	Calsites Database	Department of Toxic Substance Control	08/08/2005	08/03/2006	08/24/2006
US	DEBRIS REGION 9	Torres Martinez Reservation Illegal Dump Site Locations	EPA, Region 9	01/12/2009	05/07/2009	09/21/2009
CA	SWRCY	Recycler Database	Department of Conservation	06/11/2018	06/13/2018	08/06/2018
CA	CA FID UST	Facility Inventory Database	California Environmental Protection Agency	10/31/1994	09/05/1995	09/29/1995
CA	HIST UST	Hazardous Substance Storage Container Database	State Water Resources Control Board	10/15/1990	01/25/1991	02/12/1991
CA	SAN FRANCISCO AST	Aboveground Storage Tank Site Listing	San Francisco County Department of Public Hea	04/19/2018	04/24/2018	05/04/2018
CA	SWEEPS UST	SWEEPS UST Listing	State Water Resources Control Board	06/01/1994	07/07/2005	08/11/2005
US	LEAD SMELTER 2	Lead Smelter Sites	American Journal of Public Health	04/05/2001	10/27/2010	12/02/2010
US	LEAD SMELTER 1	Lead Smelter Sites	Environmental Protection Agency	05/13/2018	05/30/2018	06/29/2018
US	2020 COR ACTION	2020 Corrective Action Program List	Environmental Protection Agency	09/30/2017	05/08/2018	07/20/2018
US	PCB TRANSFORMER	PCB Transformer Registration Database	Environmental Protection Agency	05/24/2017	11/30/2017	12/15/2017
US	FUSRAP	Formerly Utilized Sites Remedial Action Program	Department of Energy	12/23/2016	12/27/2016	02/17/2017
US	EPA WATCH LIST	EPA WATCH LIST	Environmental Protection Agency	08/30/2013	03/21/2014	06/17/2014
US	US FIN ASSUR	Financial Assurance Information	Environmental Protection Agency	03/01/2018	03/27/2018	06/22/2018
US	US AIRS MINOR	Air Facility System Data	EPA	10/12/2016	10/26/2016	02/03/2017
US	US AIRS (AFS)	Aerometric Information Retrieval System Facility Subsystem (	EPA	10/12/2016	10/26/2016	02/03/2017
US	US HIST CDL	National Clandestine Laboratory Register	Drug Enforcement Administration	02/22/2018	03/01/2018	05/11/2018
US	SCRD DRYCLEANERS	State Coalition for Remediation of Drycleaners Listing	Environmental Protection Agency	01/01/2017	02/03/2017	04/07/2017
US	COAL ASH EPA	Coal Combustion Residues Surface Impoundments List	Environmental Protection Agency	07/01/2014	09/10/2014	10/20/2014
US	COAL ASH DOE	Steam-Electric Plant Operation Data	Department of Energy	12/31/2005	08/07/2009	10/22/2009
US	Delisted NPL	National Priority List Deletions	EPA	07/17/2018	08/09/2018	09/07/2018
US	SEMS-ARCHIVE	Superfund Enterprise Management System Archive	EPA	07/17/2018	08/09/2018	09/07/2018
US	RCRA NonGen / NLR	RCRA - Non Generators / No Longer Regulated	Environmental Protection Agency	03/01/2018	03/28/2018	06/22/2018
US	HMIRS	Hazardous Materials Information Reporting System	U.S. Department of Transportation	03/26/2018	03/27/2018	06/08/2018
US	DOT OPS	Incident and Accident Data	Department of Transporation, Office of Pipeli	07/31/2012	08/07/2012	09/18/2012
US	US CDL	Clandestine Drug Labs	Drug Enforcement Administration	02/22/2018	03/01/2018	05/11/2018
US	US BROWNFIELDS	A Listing of Brownfields Sites	Environmental Protection Agency	03/19/2018	03/21/2018	06/08/2018
US	DOD	Department of Defense Sites	USGS	12/31/2005	11/10/2006	01/11/2007
US	FEDLAND	Federal and Indian Lands	U.S. Geological Survey	12/31/2005	02/06/2006	01/11/2007
US	FUDS	Formerly Used Defense Sites	U.S. Army Corps of Engineers	01/31/2015	07/08/2015	10/13/2015
US	UMTRA	Uranium Mill Tailings Sites	Department of Energy	06/23/2017	10/11/2017	11/03/2017
US	ODI	Open Dump Inventory	Environmental Protection Agency	06/30/1985	08/09/2004	09/17/2004
US	US MINES	Mines Master Index File	Department of Labor, Mine Safety and Health A	05/03/2018	05/31/2018	06/29/2018
US	US MINES 2	Ferrous and Nonferrous Metal Mines Database Listing	USGS	12/05/2005	02/29/2008	04/18/2008

GOVERNMENT RECORDS SEARCHED / DATA CURRENCY TRACKING

St	Acronym	Full Name	Government Agency	Gov Date	Arvl. Date	Active Date
US	US MINES 3	Active Mines & Mineral Plants Database Listing	USGS	04/14/2011	06/08/2011	09/13/2011
US	PRP	Potentially Responsible Parties	EPA	10/25/2013	10/17/2014	10/20/2014
US	TRIS	Toxic Chemical Release Inventory System	EPA	12/31/2016	01/10/2018	01/12/2018
US	TSCA	Toxic Substances Control Act	EPA	12/31/2016	06/21/2017	01/05/2018
US	FTTS	FIFRA/ TSCA Tracking System - FIFRA (Federal Insecticide, Fu	EPA/Office of Prevention, Pesticides and Toxi	04/09/2009	04/16/2009	05/11/2009
US	FTTS INSP	FIFRA/ TSCA Tracking System - FIFRA (Federal Insecticide, Fu	EPA	04/09/2009	04/16/2009	05/11/2009
US	HIST FTTS	FIFRA/TSCA Tracking System Administrative Case Listing	Environmental Protection Agency	10/19/2006	03/01/2007	04/10/2007
US	HIST FTTS INSP	FIFRA/TSCA Tracking System Inspection & Enforcement Case Lis	Environmental Protection Agency	10/19/2006	03/01/2007	04/10/2007
US	SSTS	Section 7 Tracking Systems	EPA	12/31/2009	12/10/2010	02/25/2011
US	ICIS	Integrated Compliance Information System	Environmental Protection Agency	11/18/2016	11/23/2016	02/10/2017
US	PADS	PCB Activity Database System	EPA	06/01/2017	06/09/2017	10/13/2017
US	MLTS	Material Licensing Tracking System	Nuclear Regulatory Commission	08/30/2016	09/08/2016	10/21/2016
US	RADINFO	Radiation Information Database	Environmental Protection Agency	04/03/2018	04/05/2018	06/29/2018
US	FINDS	Facility Index System/Facility Registry System	EPA	02/21/2018	02/23/2018	03/23/2018
US	RAATS	RCRA Administrative Action Tracking System	EPA	04/17/1995	07/03/1995	08/07/1995
US	RMP	Risk Management Plans	Environmental Protection Agency	05/01/2018	05/17/2018	09/07/2018
US	BRS	Biennial Reporting System	EPA/NTIS	12/31/2015	02/22/2017	09/28/2017
US	PWS	Public Water System Data	EPA	12/17/2013	01/09/2014	10/15/2014
US	INDIAN RESERV	Indian Reservations	USGS	12/31/2014	07/14/2015	01/10/2017
US	INDIAN ODI	Report on the Status of Open Dumps on Indian Lands	Environmental Protection Agency	12/31/1998	12/03/2007	01/24/2008
CA	CA BOND EXP. PLAN	Bond Expenditure Plan	Department of Health Services	01/01/1989	07/27/1994	08/02/1994
CA	CDL	Clandestine Drug Labs	Department of Toxic Substances Control	12/31/2017	06/12/2018	08/06/2018
CA	CHMIRS	California Hazardous Material Incident Report System	Office of Emergency Services	04/06/2018	04/24/2018	06/14/2018
CA	CORTESE	"Cortese" Hazardous Waste & Substances Sites List	CAL EPA/Office of Emergency Information	06/25/2018	06/27/2018	08/06/2018
CA	CUPA LIVERMORE-PLEASANTON	CUPA Facility Listing	Livermore-Pleasanton Fire Department	04/03/2018	05/07/2018	06/15/2018
CA	CUPA SAN FRANCISCO CO	CUPA SAN FRANCISCO CO	San Francisco County Department of Environmen	04/20/2018	04/24/2018	05/04/2018
CA	DEED	Deed Restriction Listing	DTSC and SWRCB	06/04/2018	06/06/2018	07/17/2018
CA	DRYCLEAN SOUTH COAST	DRYCLEAN SOUTH COAST	South Coast Air Quality Management District	03/16/2018	03/20/2018	05/04/2018
CA	DRYCLEANERS	Cleaner Facilities	Department of Toxic Substance Control	05/31/2018	06/20/2018	08/06/2018
CA	DRYCLEAN AVAQMD	Antelope Valley Air Quality Management District Drycleaner L	Antelope Valley Air Quality Management Distri	06/25/2018	06/28/2018	08/06/2018
CA	EMI	Emissions Inventory Data	California Air Resources Board	12/31/2017	06/20/2018	08/06/2018
CA	ENF	Enforcement Action Listing	State Water Resoruces Control Board	08/01/2018	08/02/2018	09/07/2018
CA	Financial Assurance 1	Financial Assurance Information Listing	Department of Toxic Substances Control	04/18/2018	04/20/2018	06/19/2018
CA	Financial Assurance 2	Financial Assurance Information Listing	California Integrated Waste Management Board	05/14/2018	05/15/2018	06/22/2018
CA	HAULERS	Registered Waste Tire Haulers Listing	Integrated Waste Management Board	05/29/2018	05/30/2018	07/17/2018
CA	HAZNET	Facility and Manifest Data	California Environmental Protection Agency	12/31/2016	07/12/2017	10/17/2017
CA	HIST CORTESE	Hazardous Waste & Substance Site List	Department of Toxic Substances Control	04/01/2001	01/22/2009	04/08/2009
CA	HWP	EnviroStor Permitted Facilities Listing	Department of Toxic Substances Control	05/21/2018	05/23/2018	07/17/2018
CA	HWT	Registered Hazardous Waste Transporter Database	Department of Toxic Substances Control	07/09/2018	07/11/2018	08/24/2018
CA	ICE	ICE	Department of Toxic Subsances Control	05/21/2018	05/23/2018	07/17/2018
CA	LDS	Land Disposal Sites Listing (GEOTRACKER)	State Water Qualilty Control Board	06/11/2018	06/13/2018	07/17/2018
CA	LIENS	Environmental Liens Listing	Department of Toxic Substances Control	05/31/2018	06/05/2018	07/18/2018
CA	MCS	Military Cleanup Sites Listing (GEOTRACKER)	State Water Resources Control Board	06/11/2018	06/13/2018	07/17/2018
CA	MINES	Mines Site Location Listing	Department of Conservation	06/11/2018	06/13/2018	08/06/2018
CA	MWMP	Medical Waste Management Program Listing	Department of Public Health	05/23/2018	06/06/2018	07/18/2018
CA	NPDES	NPDES Permits Listing	State Water Resources Control Board	05/14/2018	05/16/2018	07/05/2018
CA	PEST LIC	Pesticide Regulation Licenses Listing	Department of Pesticide Regulation	06/04/2018	06/06/2018	07/19/2018

GOVERNMENT RECORDS SEARCHED / DATA CURRENCY TRACKING

St	Acronym	Full Name	Government Agency	Gov Date	Arvl. Date	Active Date
CA	PROC	Certified Processors Database	Department of Conservation	06/11/2018	06/13/2018	08/06/2018
CA	NOTIFY 65	Proposition 65 Records	State Water Resources Control Board	06/18/2018	06/20/2018	08/06/2018
CA	SCH	School Property Evaluation Program	Department of Toxic Substances Control	07/30/2018	07/31/2018	09/07/2018
CA	SPILLS 90	SPILLS90 data from FirstSearch	FirstSearch	06/06/2012	01/03/2013	02/22/2013
CA	TOXIC PITS	Toxic Pits Cleanup Act Sites	State Water Resources Control Board	07/01/1995	08/30/1995	09/26/1995
CA	UIC	UIC Listing	Deaprtment of Conservation	04/27/2018	06/13/2018	07/17/2018
CA	WASTEWATER PITS	Oil Wastewater Pits Listing	RWQCB, Central Valley Region	04/10/2018	04/13/2018	06/19/2018
CA	WDS	Waste Discharge System	State Water Resources Control Board	06/19/2007	06/20/2007	06/29/2007
CA	WIP	Well Investigation Program Case List	Los Angeles Water Quality Control Board	07/03/2009	07/21/2009	08/03/2009
CA	WMUDS/SWAT	Waste Management Unit Database	State Water Resources Control Board	04/01/2000	04/10/2000	05/10/2000
US	UXO	Unexploded Ordnance Sites	Department of Defense	09/30/2016	10/31/2017	01/12/2018
CA	CERS TANKS	California Environmental Reporting System (CERS) Tanks	California Environmental Protection Agency	07/23/2018	07/25/2018	09/05/2018
US	ABANDONED MINES	Abandoned Mines	Department of Interior	03/08/2018	03/13/2018	06/08/2018
CA	CIWQS	California Integrated Water Quality System	State Water Resources Control Board	06/04/2018	06/06/2018	07/13/2018
CA	PROJECT	Project Sites (GEOTRACKER)	State Water Resources Control Board	06/11/2018	06/13/2018	07/18/2018
CA	SAMPLING POINT	Sampling Point ? Public Sites (GEOTRACKER)	State Water Resources Control Board	06/11/2018	06/13/2018	07/18/2018
CA	UIC GEO	Underground Injection Control Sites (GEOTRACKER)	State Water Resource Control Board	06/11/2018	06/13/2018	07/18/2018
US	ECHO	Enforcement & Compliance History Information	Environmental Protection Agency	02/25/2018	03/17/2018	06/08/2018
CA	PROD WATER PONDS	Produced Water Ponds Sites (GEOTRACKER)	State Water Resources Control Board	06/11/2018	06/13/2018	07/18/2018
US	FUELS PROGRAM	EPA Fuels Program Registered Listing	EPA	05/21/2018	05/23/2018	09/07/2018
US	IHS OPEN DUMPS	Open Dumps on Indian Land	Department of Health & Human Serivces, Indian	04/01/2014	08/06/2014	01/29/2015
US	DOCKET HWC	Hazardous Waste Compliance Docket Listing	Environmental Protection Agency	01/04/2018	01/19/2018	04/13/2018
CA	CERS HAZ WASTE	CERS HAZ WASTE	CalEPA	07/23/2018	07/25/2018	09/05/2018
CA	WELL STIM PROJ	Well Stimulation Project (GEOTRACKER)	State Water Resources Control Board	06/11/2018	06/13/2018	07/18/2018
CA	OTHER OIL GAS	Other Oil & Gas Projects Sites (GEOTRACKER)	State Water Resources Control Board	06/11/2018	06/13/2018	07/18/2018
CA	MILITARY PRIV SITES	Military Privatized Sites (GEOTRACKER)	State Water Resources Control Board	06/11/2018	06/13/2018	07/18/2018
CA	NON-CASE INFO	Non-Case Information Sites (GEOTRACKER)	State Water Resources Control Board	06/11/2018	06/13/2018	07/18/2018
CA	CERS	CalEPA Regulated Site Portal Data	California Environmental Protection Agency	07/23/2018	07/25/2018	09/05/2018
HISTORICAL USE RECORDS						
US	EDR MGP	EDR Proprietary Manufactured Gas Plants	EDR, Inc.			
US	EDR Hist Auto	EDR Exclusive Historical Auto Stations	EDR, Inc.			
US	EDR Hist Cleaner	EDR Exclusive Historical Cleaners	EDR, Inc.			
CA	RGA LF	Recovered Government Archive Solid Waste Facilities List	Department of Resources Recycling and Recover		07/01/2013	01/13/2014
CA	RGA LUST	Recovered Government Archive Leaking Underground Storage Tan	State Water Resources Control Board		07/01/2013	12/30/2013

GOVERNMENT RECORDS SEARCHED / DATA CURRENCY TRACKING

St	Acronym	Full Name	Government Agency	Gov Date	Arvl. Date	Active Date
COUNTY RECORDS						
CA	CS ALAMEDA	Contaminated Sites	Alameda County Environmental Health Services	08/03/2018	08/06/2018	09/05/2018
CA	UST ALAMEDA	Underground Tanks	Alameda County Environmental Health Services	04/05/2018	04/10/2018	05/04/2018
CA	CUPA AMADOR	CUPA Facility List	Amador County Environmental Health	07/01/2018	07/24/2018	08/20/2018
CA	CUPA BUTTE	CUPA Facility Listing	Public Health Department	04/21/2017	04/25/2017	08/09/2017
CA	CUPA CALVERAS	CUPA Facility Listing	Calveras County Environmental Health	08/02/2018	08/06/2018	08/20/2018
CA	CUPA COLUSA	CUPA Facility List	Health & Human Services	05/23/2018	05/24/2018	07/13/2018
CA	SL CONTRA COSTA	Site List	Contra Costa Health Services Department	05/21/2018	05/25/2018	07/20/2018
CA	CUPA DEL NORTE	CUPA Facility List	Del Norte County Environmental Health Divisio	04/27/2018	05/02/2018	06/15/2018
CA	CUPA EL DORADO	CUPA Facility List	El Dorado County Environmental Management Dep	07/12/2018	07/12/2018	08/20/2018
CA	CUPA FRESNO	CUPA Resources List	Dept. of Community Health	07/11/2018	07/17/2018	08/30/2018
CA	CUPA GLENN	CUPA Facility List	Glenn County Air Pollution Control District	01/22/2018	01/24/2018	03/14/2018
CA	CUPA HUMBOLDT	CUPA Facility List	Humboldt County Environmental Health	07/11/2018	07/13/2018	08/22/2018
CA	CUPA IMPERIAL	CUPA Facility List	San Diego Border Field Office	07/17/2018	07/24/2018	09/05/2018
CA	CUPA INYO	CUPA Facility List	Inyo County Environmental Health Services	04/02/2018	04/03/2018	06/14/2018
CA	UST KERN	Underground Storage Tank Sites & Tank Listing	Kern County Environment Health Services Depar	05/02/2018	05/07/2018	07/18/2018
CA	CUPA KINGS	CUPA Facility List	Kings County Department of Public Health	06/12/2018	06/15/2018	07/13/2018
CA	CUPA LAKE	CUPA Facility List	Lake County Environmental Health	08/08/2018	08/09/2018	08/22/2018
CA	CUPA LASSEN	CUPA Facility List	Lassen County Environmental Health	07/27/2018	08/06/2018	09/05/2018
CA	AOCONCERN	San Gabriel Valley Areas of Concern	EPA Region 9	03/30/2009	03/31/2009	10/23/2009
CA	HMS LOS ANGELES	HMS: Street Number List	Department of Public Works	04/12/2018	04/16/2018	06/15/2018
CA	LF LOS ANGELES	List of Solid Waste Facilities	La County Department of Public Works	07/16/2018	07/18/2018	08/24/2018
CA	LF LOS ANGELES CITY	City of Los Angeles Landfills	Engineering & Construction Division	01/01/2018	05/01/2018	05/14/2018
CA	SITE MIT LOS ANGELES	Site Mitigation List	Community Health Services	04/01/2018	04/17/2018	06/19/2018
CA	UST EL SEGUNDO	City of El Segundo Underground Storage Tank	City of El Segundo Fire Department	01/21/2017	04/19/2017	05/10/2017
CA	UST LONG BEACH	City of Long Beach Underground Storage Tank	City of Long Beach Fire Department	03/09/2017	03/10/2017	05/03/2017
CA	UST TORRANCE	City of Torrance Underground Storage Tank	City of Torrance Fire Department	01/04/2018	01/05/2018	01/18/2018
CA	CUPA MADERA	CUPA Facility List	Madera County Environmental Health	05/22/2018	05/24/2018	07/31/2018
CA	UST MARIN	Underground Storage Tank Sites	Public Works Department Waste Management	03/30/2018	04/06/2018	05/04/2018
CA	CUPA MERCED	CUPA Facility List	Merced County Environmental Health	05/30/2018	06/01/2018	07/13/2018
CA	CUPA MONO	CUPA Facility List	Mono County Health Department	05/22/2018	05/24/2018	07/13/2018
CA	CUPA MONTEREY	CUPA Facility Listing	Monterey County Health Department	07/30/2018	08/02/2018	09/05/2018
CA	LUST NAPA	Sites With Reported Contamination	Napa County Department of Environmental Manag	01/09/2017	01/11/2017	03/02/2017
CA	UST NAPA	Closed and Operating Underground Storage Tank Sites	Napa County Department of Environmental Manag	05/23/2018	05/31/2018	07/11/2018
CA	CUPA NEVADA	CUPA Facility List	Community Development Agency	07/31/2018	08/02/2018	09/05/2018
CA	IND_SITE ORANGE	List of Industrial Site Cleanups	Health Care Agency	04/02/2018	05/11/2018	06/22/2018
CA	LUST ORANGE	List of Underground Storage Tank Cleanups	Health Care Agency	04/02/2018	05/11/2018	06/25/2018
CA	UST ORANGE	List of Underground Storage Tank Facilities	Health Care Agency	04/02/2018	05/08/2018	07/10/2018
CA	MS PLACER	Master List of Facilities	Placer County Health and Human Services	05/31/2018	06/05/2018	07/18/2018
CA	CUPA PLUMAS	CUPA Facility List	Plumas County Environmental Health	07/19/2018	07/25/2018	09/05/2018
CA	LUST RIVERSIDE	Listing of Underground Tank Cleanup Sites	Department of Environmental Health	07/09/2018	07/13/2018	08/24/2018
CA	UST RIVERSIDE	Underground Storage Tank Tank List	Department of Environmental Health	04/05/2018	04/10/2018	05/04/2018
CA	CS SACRAMENTO	Toxic Site Clean-Up List	Sacramento County Environmental Management	05/07/2018	07/03/2018	08/13/2018
CA	ML SACRAMENTO	Master Hazardous Materials Facility List	Sacramento County Environmental Management	05/14/2018	07/03/2018	08/13/2018
CA	CUPA SAN BENITO	CUPA Facility List	San Benito County Environmental Health	08/07/2018	08/09/2018	09/05/2018
CA	PERMITS SAN BERNARDINO	Hazardous Material Permits	San Bernardino County Fire Department Hazardo	04/09/2018	04/11/2018	06/19/2018

GOVERNMENT RECORDS SEARCHED / DATA CURRENCY TRACKING

St	Acronym	Full Name	Government Agency	Gov Date	Arvl. Date	Active Date
CA	HMMD SAN DIEGO	Hazardous Materials Management Division Database	Hazardous Materials Management Division	06/04/2018	06/06/2018	07/17/2018
CA	LF SAN DIEGO	Solid Waste Facilities	Department of Health Services	04/18/2018	04/24/2018	06/19/2018
CA	SAN DIEGO CO LOP	Local Oversight Program Listing	Department of Environmental Health	07/17/2018	07/24/2018	08/24/2018
CA	SAN DIEGO CO. SAM	Environmental Case Listing	San Diego County Department of Environmental	03/23/2010	06/15/2010	07/09/2010
CA	LUST SAN FRANCISCO	Local Oversite Facilities	Department Of Public Health San Francisco Cou	09/19/2008	09/19/2008	09/29/2008
CA	UST SAN FRANCISCO	Underground Storage Tank Information	Department of Public Health	06/07/2018	06/12/2018	07/10/2018
CA	UST SAN JOAQUIN	San Joaquin Co. UST	Environmental Health Department	06/22/2018	06/26/2018	07/11/2018
CA	CUPA SAN LUIS OBISPO	CUPA Facility List	San Luis Obispo County Public Health Departme	08/20/2018	08/21/2018	09/07/2018
CA	BI SAN MATEO	Business Inventory	San Mateo County Environmental Health Service	06/12/2018	06/15/2018	08/06/2018
CA	LUST SAN MATEO	Fuel Leak List	San Mateo County Environmental Health Service	06/12/2018	06/15/2018	08/13/2018
CA	CUPA SANTA BARBARA	CUPA Facility Listing	Santa Barbara County Public Health Department	09/08/2011	09/09/2011	10/07/2011
CA	CUPA SANTA CLARA	Cupa Facility List	Department of Environmental Health	08/17/2018	08/22/2018	09/07/2018
CA	HIST LUST SANTA CLARA	HIST LUST - Fuel Leak Site Activity Report	Santa Clara Valley Water District	03/29/2005	03/30/2005	04/21/2005
CA	LUST SANTA CLARA	LOP Listing	Department of Environmental Health	03/03/2014	03/05/2014	03/18/2014
CA	SAN JOSE HAZMAT	Hazardous Material Facilities	City of San Jose Fire Department	05/16/2018	05/22/2018	07/19/2018
CA	CUPA SANTA CRUZ	CUPA Facility List	Santa Cruz County Environmental Health	01/21/2017	02/22/2017	05/23/2017
CA	CUPA SHASTA	CUPA Facility List	Shasta County Department of Resource Manageme	06/15/2017	06/19/2017	08/09/2017
CA	LUST SOLANO	Leaking Underground Storage Tanks	Solano County Department of Environmental Man	06/04/2018	06/08/2018	07/18/2018
CA	UST SOLANO	Underground Storage Tanks	Solano County Department of Environmental Man	06/04/2018	06/12/2018	07/12/2018
CA	CUPA SONOMA	Cupa Facility List	County of Sonoma Fire & Emergency Services De	06/19/2018	06/26/2018	07/17/2018
CA	LUST SONOMA	Leaking Underground Storage Tank Sites	Department of Health Services	07/03/2018	07/10/2018	08/24/2018
CA	CUPA STANISLAUS	CUPA Facility List	Stanislaus County Department of Ennvironmenta	08/14/2018	08/16/2018	08/24/2018
CA	UST SUTTER	Underground Storage Tanks	Sutter County Department of Agriculture	06/04/2018	06/08/2018	07/11/2018
CA	CUPA TEHAMA	CUPA Facility List	Tehama County Department of Environmental Hea	07/17/2018	08/02/2018	09/07/2018
CA	CUPA TRINITY	CUPA Facility List	Department of Toxic Substances Control	07/17/2018	07/24/2018	09/07/2018
CA	CUPA TULARE	CUPA Facility List	Tulare County Environmental Health Services D	03/19/2018	03/22/2018	04/17/2018
CA	CUPA TUOLUMNE	CUPA Facility List	Divison of Environmental Health	04/23/2018	04/25/2018	06/25/2018
CA	BWT VENTURA	Business Plan, Hazardous Waste Producers, and Operating Unde	Ventura County Environmental Health Division	07/02/2018	07/26/2018	09/05/2018
CA	LF VENTURA	Inventory of Illegal Abandoned and Inactive Sites	Environmental Health Division	12/01/2011	12/01/2011	01/19/2012
CA	LUST VENTURA	Listing of Underground Tank Cleanup Sites	Environmental Health Division	05/29/2008	06/24/2008	07/31/2008
CA	MED WASTE VENTURA	Medical Waste Program List	Ventura County Resource Management Agency	07/02/2018	07/26/2018	08/24/2018
CA	UST VENTURA	Underground Tank Closed Sites List	Environmental Health Division	04/26/2018	06/13/2018	07/11/2018
CA	UST YOLO	Underground Storage Tank Comprehensive Facility Report	Yolo County Department of Health	06/20/2018	07/03/2018	07/12/2018
CA	CUPA YUBA	CUPA Facility List	Yuba County Environmental Health Department	05/10/2018	05/15/2018	06/15/2018

STREET AND ADDRESS INFORMATION

© 2015 TomTom North America, Inc. All rights reserved. This material is proprietary and the subject of copyright protection and other intellectual property rights owned by or licensed to Tele Atlas North America, Inc. The use of this material is subject to the terms of a license agreement. You will be held liable for any unauthorized copying or disclosure of this material.

APPENDIX F

Kisco Glassell

574 S. Glassell Street

Orange, CA 92866

Inquiry Number: 5417961.11

September 10, 2018

The EDR Aerial Photo Decade Package

6 Armstrong Road, 4th floor
Shelton, CT 06484
Toll Free: 800.352.0050
www.edrnet.com

EDR Aerial Photo Decade Package

09/10/18

Site Name:

Kisco Glassell
574 S. Glassell Street
Orange, CA 92866
EDR Inquiry # 5417961.11

Client Name:

Leighton Consulting
17781 Cowan
Irvine, CA 92614
Contact: Brynn Mcculloch

Environmental Data Resources, Inc. (EDR) Aerial Photo Decade Package is a screening tool designed to assist environmental professionals in evaluating potential liability on a target property resulting from past activities. EDR's professional researchers provide digitally reproduced historical aerial photographs, and when available, provide one photo per decade.

Search Results:

Year	***Scale***	***Details***	***Source***
2016	1"=500'	Flight Year: 2016	USDA/NAIP
2012	1"=500'	Flight Year: 2012	USDA/NAIP
2009	1"=500'	Flight Year: 2009	USDA/NAIP
2005	1"=500'	Flight Year: 2005	USDA/NAIP
1995	1"=500'	Acquisition Date: October 03, 1995	USGS/DOQQ
1989	1"=500'	Flight Date: August 03, 1989	USDA
1985	1"=500'	Flight Date: September 13, 1985	USDA
1977	1"=500'	Flight Date: January 18, 1977	EDR Proprietary Brewster Pacific
1972	1"=500'	Flight Date: October 30, 1972	USGS
1966	1"=500'	Flight Date: April 16, 1966	USGS
1963	1"=500'	Flight Date: February 28, 1963	USGS
1952	1"=500'	Flight Date: December 12, 1952	USDA
1946	1"=500'	Flight Date: December 29, 1946	USGS
1938	1"=500'	Flight Date: June 21, 1938	USDA

When delivered electronically by EDR, the aerial photo images included with this report are for ONE TIME USE ONLY. Further reproduction of these aerial photo images is prohibited without permission from EDR. For more information contact your EDR Account Executive.

Disclaimer - Copyright and Trademark Notice

This Report contains certain information obtained from a variety of public and other sources reasonably available to Environmental Data Resources, Inc. It cannot be concluded from this Report that coverage information for the target and surrounding properties does not exist from other sources. NO WARRANTY EXPRESSED OR IMPLIED, IS MADE WHATSOEVER IN CONNECTION WITH THIS REPORT. ENVIRONMENTAL DATA RESOURCES, INC. SPECIFICALLY DISCLAIMS THE MAKING OF ANY SUCH WARRANTIES, INCLUDING WITHOUT LIMITATION, MERCHANTABILITY OR FITNESS FOR A PARTICULAR USE OR PURPOSE. ALL RISK IS ASSUMED BY THE USER. IN NO EVENT SHALL ENVIRONMENTAL DATA RESOURCES, INC. BE LIABLE TO ANYONE, WHETHER ARISING OUT OF ERRORS OR OMISSIONS, NEGLIGENCE, ACCIDENT OR ANY OTHER CAUSE, FOR ANY LOSS OF DAMAGE, INCLUDING, WITHOUT LIMITATION, SPECIAL, INCIDENTAL, CONSEQUENTIAL, OR EXEMPLARY DAMAGES. ANY LIABILITY ON THE PART OF ENVIRONMENTAL DATA RESOURCES, INC. IS STRICTLY LIMITED TO A REFUND OF THE AMOUNT PAID FOR THIS REPORT. Purchaser accepts this Report "AS IS". Any analyses, estimates, ratings, environmental risk levels or risk codes provided in this Report are provided for illustrative purposes only, and are not intended to provide, nor should they be interpreted as providing any facts regarding, or prediction or forecast of, any environmental risk for any property. Only a Phase I Environmental Site Assessment performed by an environmental professional can provide information regarding the environmental risk for any property. Additionally, the information provided in this Report is not to be construed as legal advice.

Copyright 2018 by Environmental Data Resources, Inc. All rights reserved. Reproduction in any media or format, in whole or in part, of any report or map of Environmental Data Resources, Inc., or its affiliates, is prohibited without prior written permission.

EDR and its logos (including Sanborn and Sanborn Map) are trademarks of Environmental Data Resources, Inc. or its affiliates. All other trademarks used herein are the property of their respective owners.

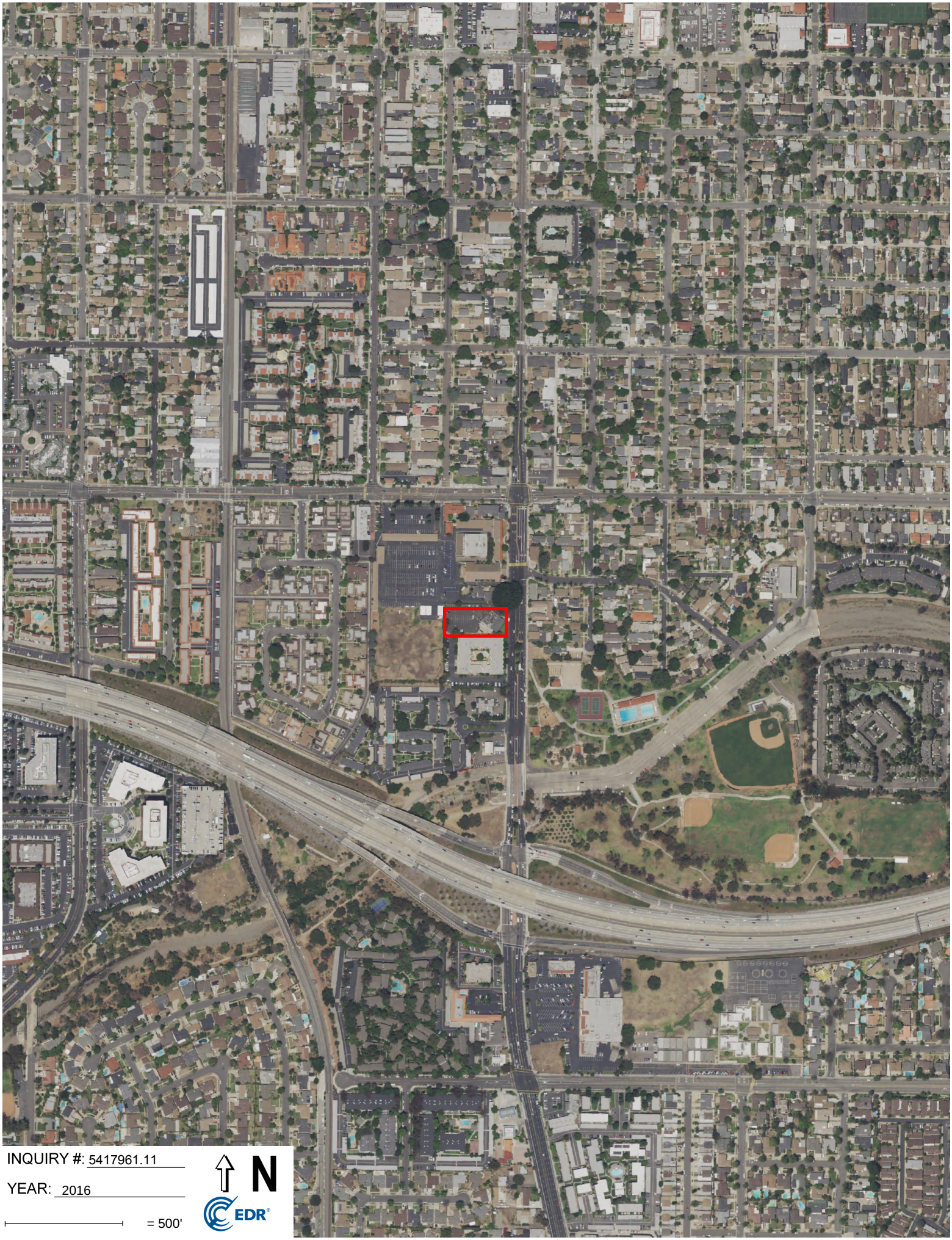

INQUIRY #: 5417961.11

YEAR: 2016

= 500'

N

EDR

INQUIRY #: 5417961.11
YEAR: 2012
= 500'
N
EDR

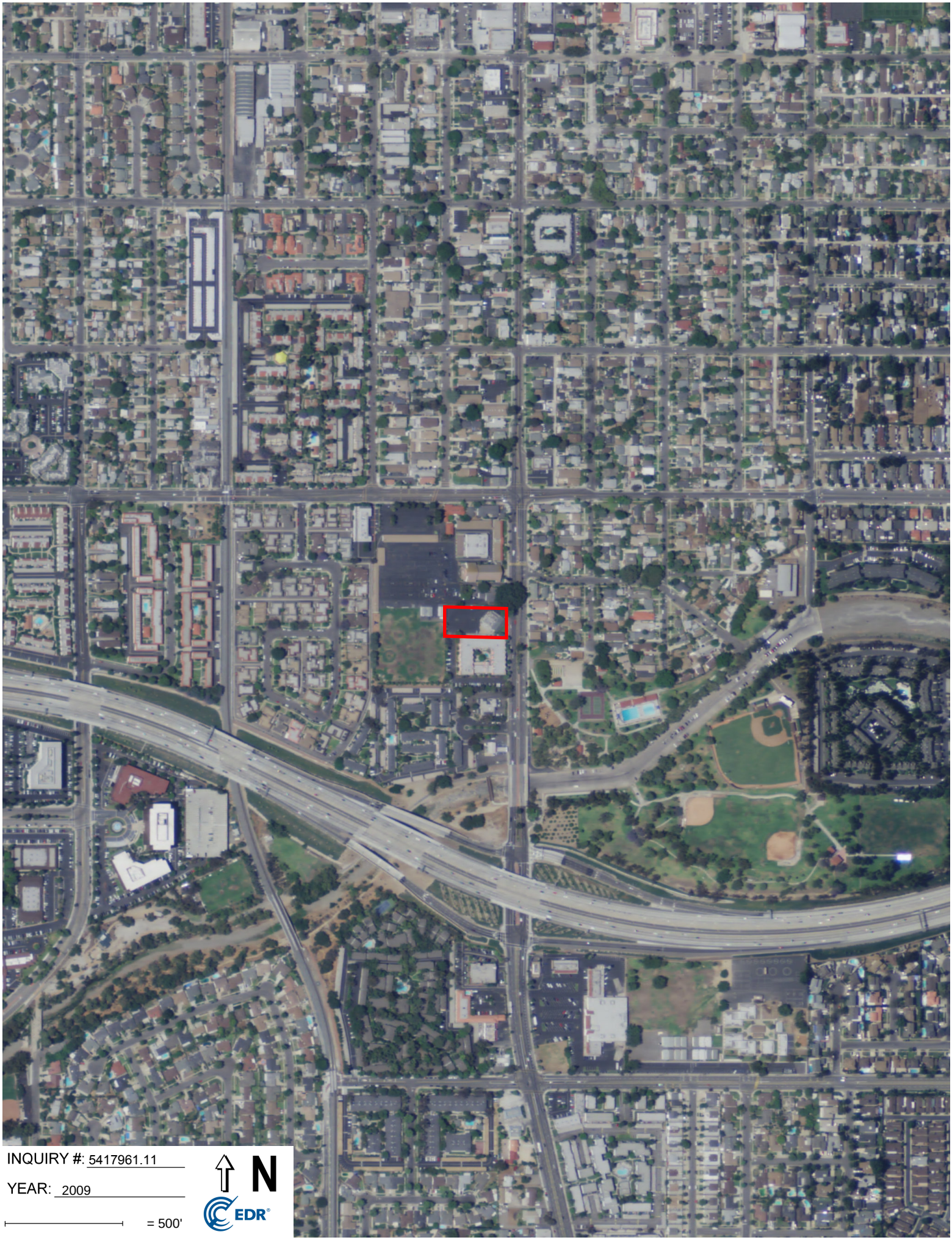
INQUIRY #: 5417961.11
YEAR: 2009
= 500'
N
EDR

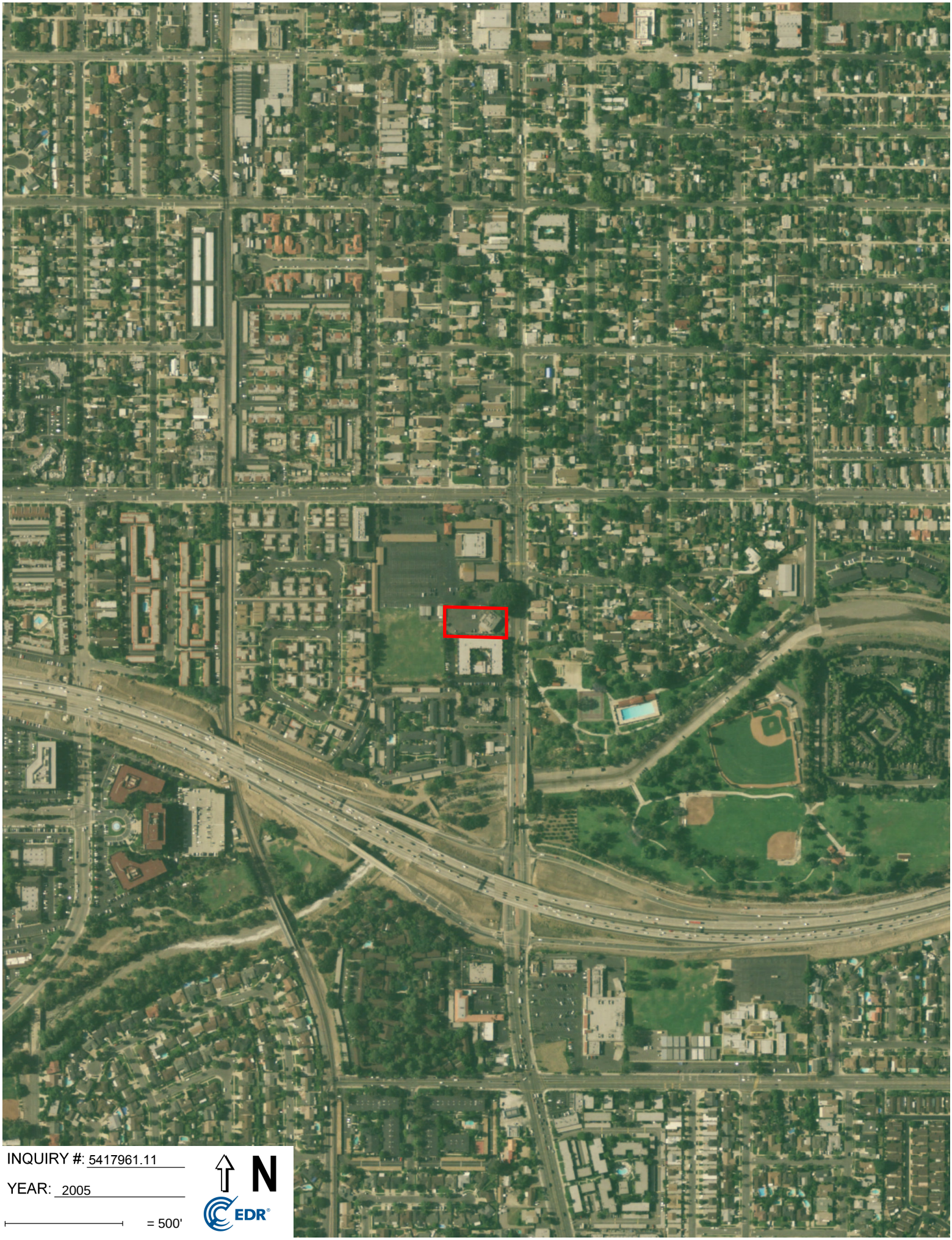
INQUIRY #: 5417961.11
YEAR: 2005
= 500'
N
EDR

INQUIRY #: 5417961.11
YEAR: 1995
= 500'
N
EDR

INQUIRY #: 5417961.11

YEAR: 1989

= 500'

N

EDR

INQUIRY #: 5417961.11
YEAR: 1985
= 500'
N
EDR

INQUIRY #: 5417961.11

YEAR: 1977

= 500'

N

EDR

INQUIRY #: 5417961.11

YEAR: 1972

= 500'

N

EDR

INQUIRY #: 5417961.11

YEAR: 1966

= 500'

N

EDR

INQUIRY #: 5417961.11
YEAR: 1963
= 500'
N
EDR

INQUIRY #: 5417961.11

YEAR: 1952

= 500'

N

EDR

INQUIRY #: 5417961.11

YEAR: 1946

= 500'

N

EDR

INQUIRY #: 5417961.11
YEAR: 1938
= 500'
N
EDR

Kisco Glassell

574 S. Glassell Street

Orange, CA 92866

Inquiry Number: 5417961.4

September 10, 2018

EDR Historical Topo Map Report

with QuadMatch™

6 Armstrong Road, 4th floor
Shelton, CT 06484
Toll Free: 800.352.0050
www.edrnet.com

EDR Historical Topo Map Report

09/10/18

Site Name:	Client Name:
Kisco Glassell	Leighton Consulting
574 S. Glassell Street	17781 Cowan
Orange, CA 92866	Irvine, CA 92614
EDR Inquiry # 5417961.4	Contact: Brynn Mcculloch

EDR Topographic Map Library has been searched by EDR and maps covering the target property location as provided by Leighton Consulting were identified for the years listed below. EDR's Historical Topo Map Report is designed to assist professionals in evaluating potential liability on a target property resulting from past activities. EDRs Historical Topo Map Report includes a search of a collection of public and private color historical topographic maps, dating back to the late 1800s.

Search Results:

P.O.# 12137.001

Project: Kisco Glassell

Coordinates:

Latitude:	33.779058 33° 46' 45" North
Longitude:	-117.853752 -117° 51' 14" West
UTM Zone:	Zone 11 North
UTM X Meters:	420953.19
UTM Y Meters:	3737986.26
Elevation:	185.00' above sea level

Maps Provided:

2012	1932
1981	1902
1972	1901
1964	1898
1950	1896
1949	
1942	
1935	

Disclaimer - Copyright and Trademark Notice

This Report contains certain information obtained from a variety of public and other sources reasonably available to Environmental Data Resources, Inc. It cannot be concluded from this Report that coverage information for the target and surrounding properties does not exist from other sources. NO WARRANTY EXPRESSED OR IMPLIED, IS MADE WHATSOEVER IN CONNECTION WITH THIS REPORT. ENVIRONMENTAL DATA RESOURCES, INC. SPECIFICALLY DISCLAIMS THE MAKING OF ANY SUCH WARRANTIES, INCLUDING WITHOUT LIMITATION, MERCHANTABILITY OR FITNESS FOR A PARTICULAR USE OR PURPOSE. ALL RISK IS ASSUMED BY THE USER. IN NO EVENT SHALL ENVIRONMENTAL DATA RESOURCES, INC. BE LIABLE TO ANYONE, WHETHER ARISING OUT OF ERRORS OR OMISSIONS, NEGLIGENCE, ACCIDENT OR ANY OTHER CAUSE, FOR ANY LOSS OF DAMAGE, INCLUDING, WITHOUT LIMITATION, SPECIAL, INCIDENTAL, CONSEQUENTIAL, OR EXEMPLARY DAMAGES. ANY LIABILITY ON THE PART OF ENVIRONMENTAL DATA RESOURCES, INC. IS STRICTLY LIMITED TO A REFUND OF THE AMOUNT PAID FOR THIS REPORT. Purchaser accepts this Report "AS IS". Any analyses, estimates, ratings, environmental risk levels or risk codes provided in this Report are provided for illustrative purposes only, and are not intended to provide, nor should they be interpreted as providing any facts regarding, or prediction or forecast of, any environmental risk for any property. Only a Phase I Environmental Site Assessment performed by an environmental professional can provide information regarding the environmental risk for any property. Additionally, the information provided in this Report is not to be construed as legal advice.

Copyright 2018 by Environmental Data Resources, Inc. All rights reserved. Reproduction in any media or format, in whole or in part, of any report or map of Environmental Data Resources, Inc., or its affiliates, is prohibited without prior written permission.

EDR and its logos (including Sanborn and Sanborn Map) are trademarks of Environmental Data Resources, Inc. or its affiliates. All other trademarks used herein are the property of their respective owners.

Topo Sheet Key

This EDR Topo Map Report is based upon the following USGS topographic map sheets.

2012 Source Sheets

Orange
2012
7.5-minute, 24000

Anaheim
2012
7.5-minute, 24000

1981 Source Sheets

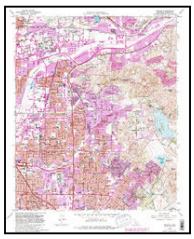

Orange
1981
7.5-minute, 24000
Aerial Photo Revised 1978

Anaheim
1981
7.5-minute, 24000
Aerial Photo Revised 1963

1972 Source Sheets

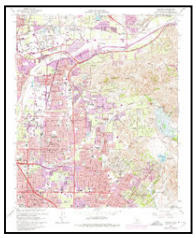

Orange
1972
7.5-minute, 24000
Aerial Photo Revised 1972

Anaheim
1972
7.5-minute, 24000
Aerial Photo Revised 1972

1964 Source Sheets

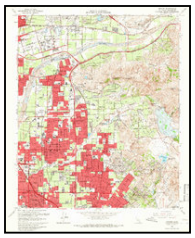

Orange
1964
7.5-minute, 24000
Aerial Photo Revised 1963

Topo Sheet Key

This EDR Topo Map Report is based upon the following USGS topographic map sheets.

1950 Source Sheets

Orange
1950
7.5-minute, 24000
Aerial Photo Revised 1946

Anaheim
1950
7.5-minute, 24000
Aerial Photo Revised 1947

1949 Source Sheets

Orange
1949
7.5-minute, 24000
Aerial Photo Revised 1946

Anaheim
1949
7.5-minute, 24000
Aerial Photo Revised 1947

1942 Source Sheets

ANAHEIM
1942
15-minute, 50000

1935 Source Sheets

Garden Grove
1935
7.5-minute, 31680

Orange
1935
7.5-minute, 31680

Topo Sheet Key

This EDR Topo Map Report is based upon the following USGS topographic map sheets.

1932 Source Sheets

Orange
1932
7.5-minute, 31680

1902 Source Sheets

Corona
1902
30-minute, 125000

1901 Source Sheets

Anaheim
1901
15-minute, 62500

1898 Source Sheets

Anaheim
1898
15-minute, 62500

Topo Sheet Key

This EDR Topo Map Report is based upon the following USGS topographic map sheets.

1896 Source Sheets

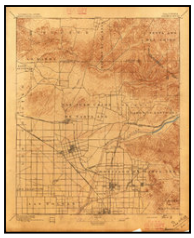

Anaheim
1896
15-minute, 62500

Historical Topo Map

2012

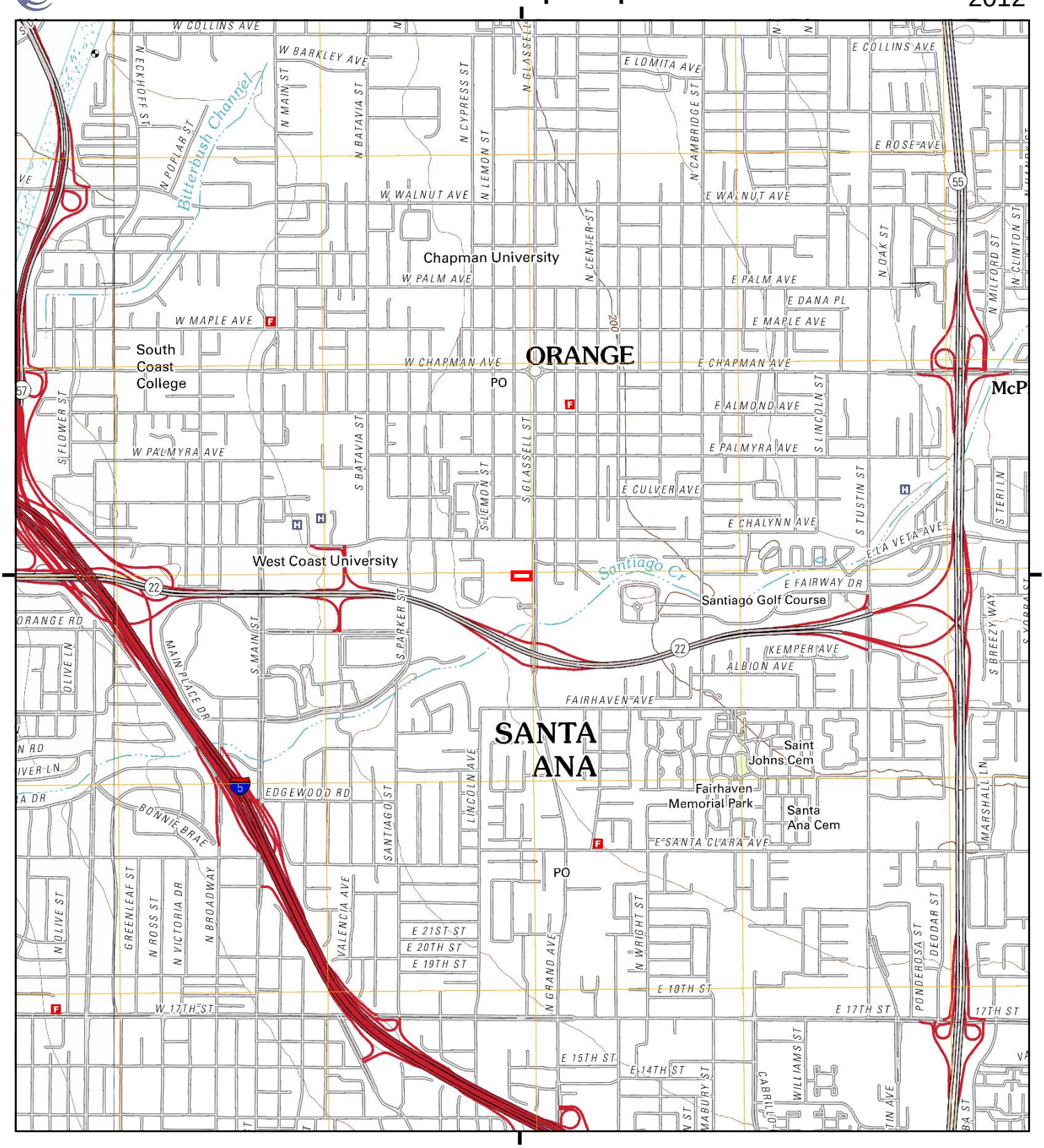

This report includes information from the following map sheet(s).

0 Miles 0.25 0.5 1 1.5

NW N NE
W E
SW S SE

TP, Orange, 2012, 7.5-minute
NW, Anaheim, 2012, 7.5-minute

SITE NAME: Kisco Glassell
ADDRESS: 574 S. Glassell Street
Orange, CA 92866
CLIENT: Leighton Consulting

N

Historical Topo Map

1981

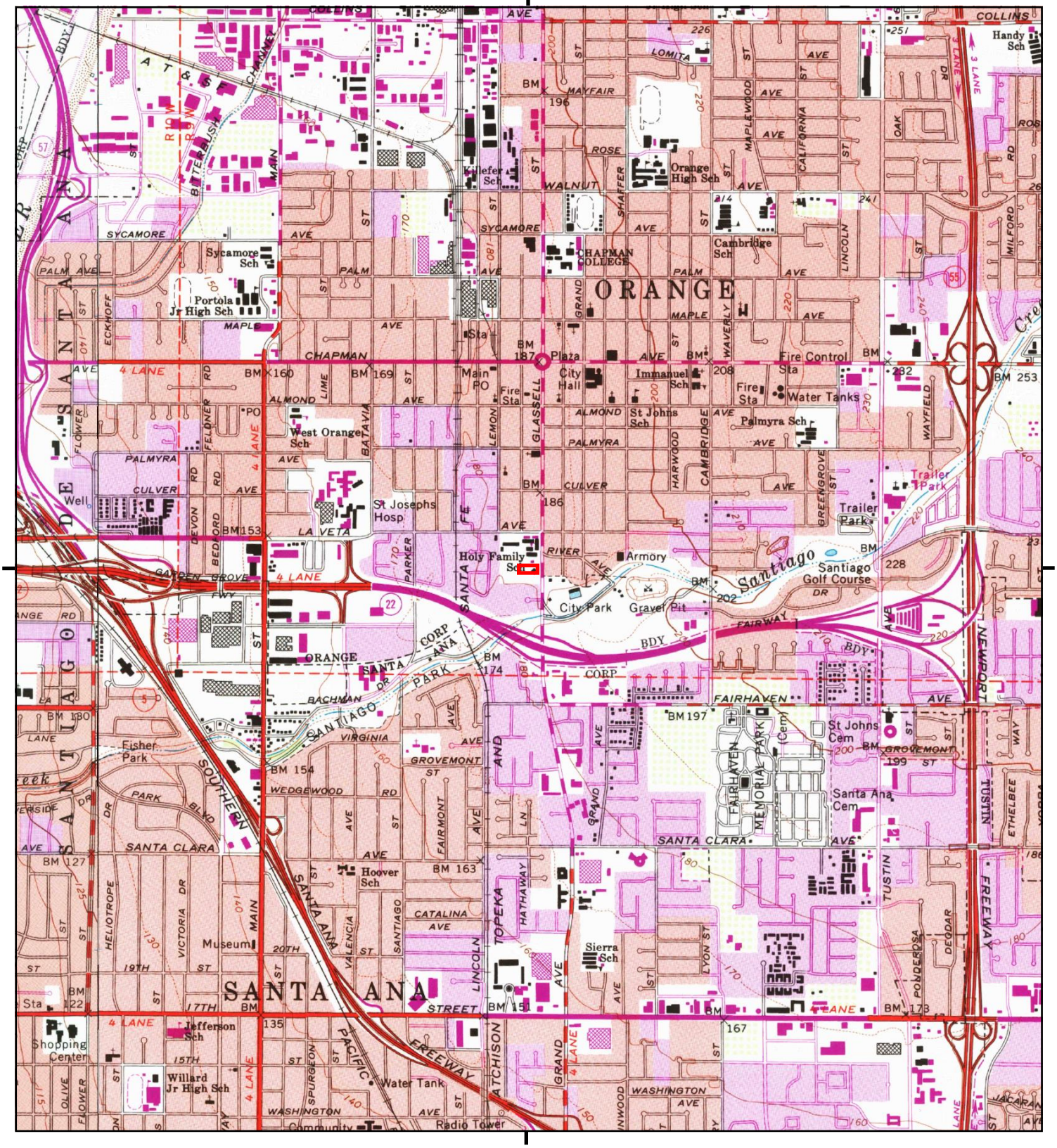

This report includes information from the following map sheet(s).

0 Miles 0.25 0.5 1 1.5

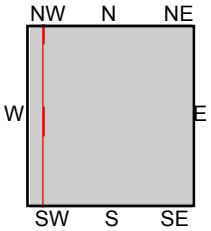

TP, Orange, 1981, 7.5-minute
NW, Anaheim, 1981, 7.5-minute

SITE NAME: Kisco Glassell
ADDRESS: 574 S. Glassell Street
Orange, CA 92866
CLIENT: Leighton Consulting

N

Historical Topo Map

1972

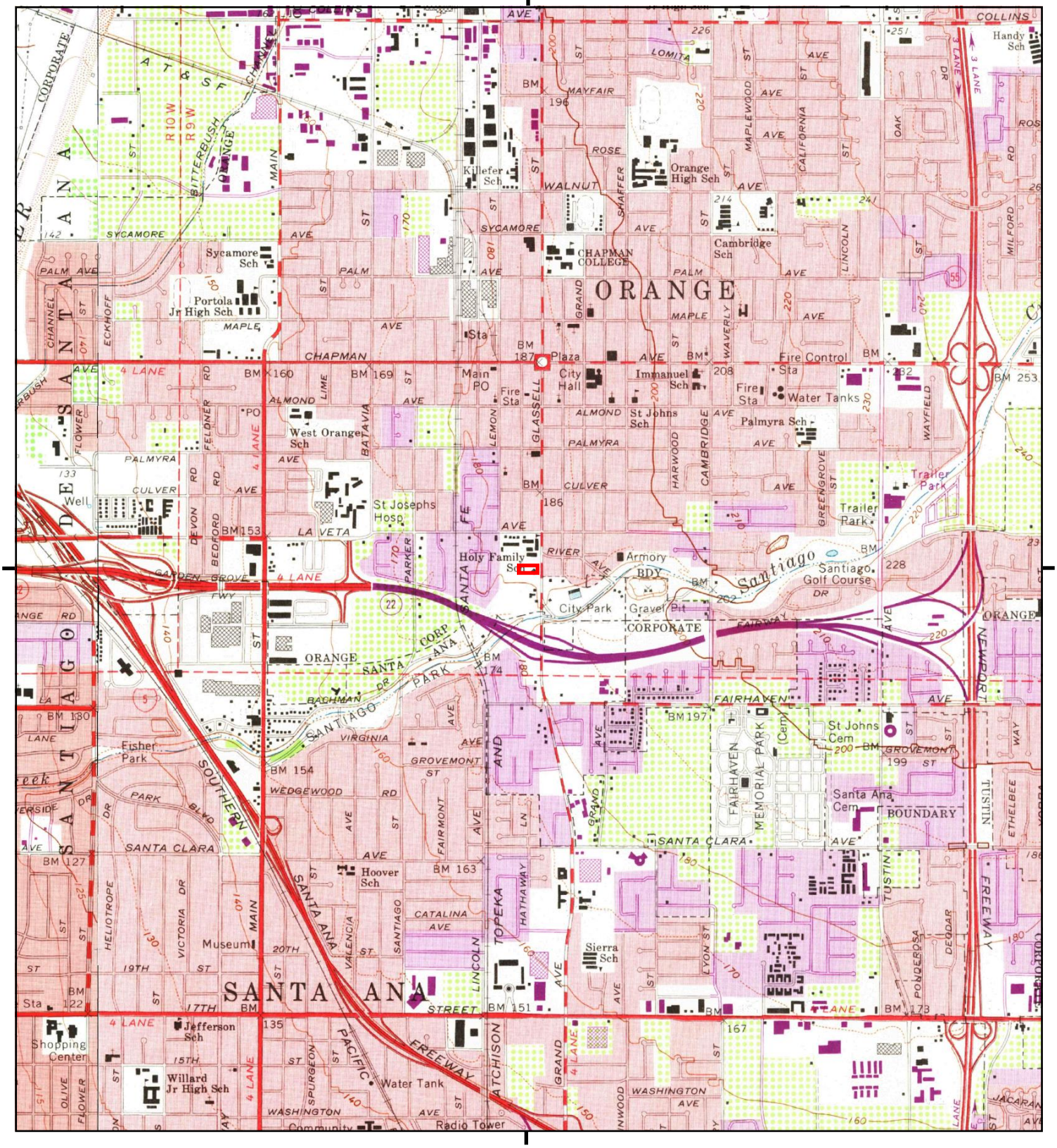

This report includes information from the following map sheet(s).

0 Miles 0.25 0.5 1 1.5

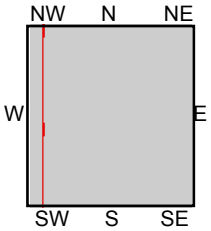

TP, Orange, 1972, 7.5-minute
NW, Anaheim, 1972, 7.5-minute

SITE NAME: Kisco Glassell
ADDRESS: 574 S. Glassell Street
Orange, CA 92866
CLIENT: Leighton Consulting

N

Historical Topo Map

1964

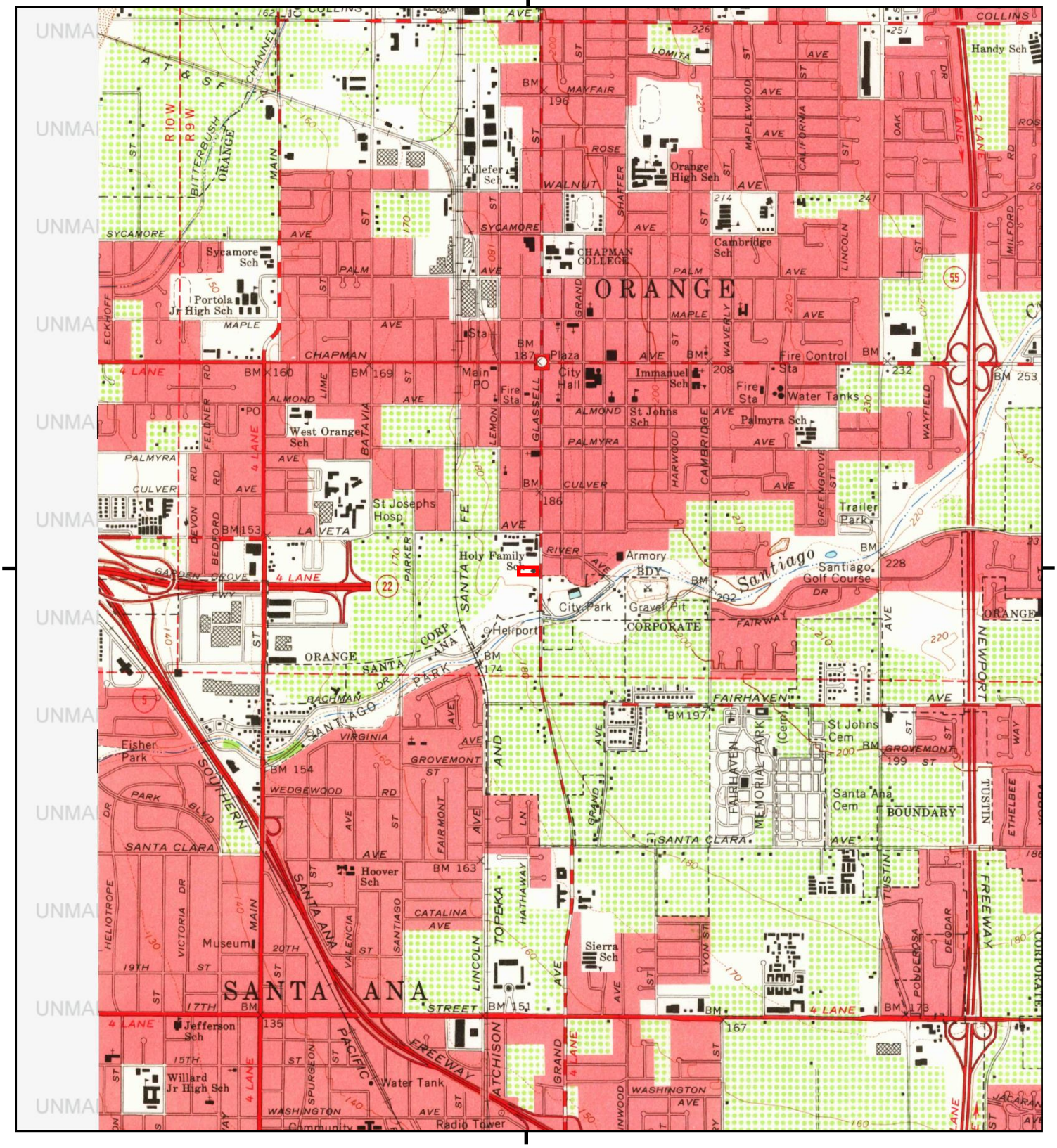

This report includes information from the following map sheet(s).

0 Miles 0.25 0.5 1 1.5

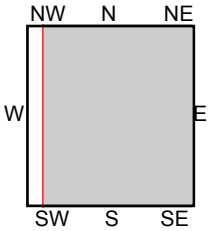

TP, Orange, 1964, 7.5-minute

SITE NAME: Kisco Glassell
ADDRESS: 574 S. Glassell Street
Orange, CA 92866
CLIENT: Leighton Consulting

N

Historical Topo Map

1950

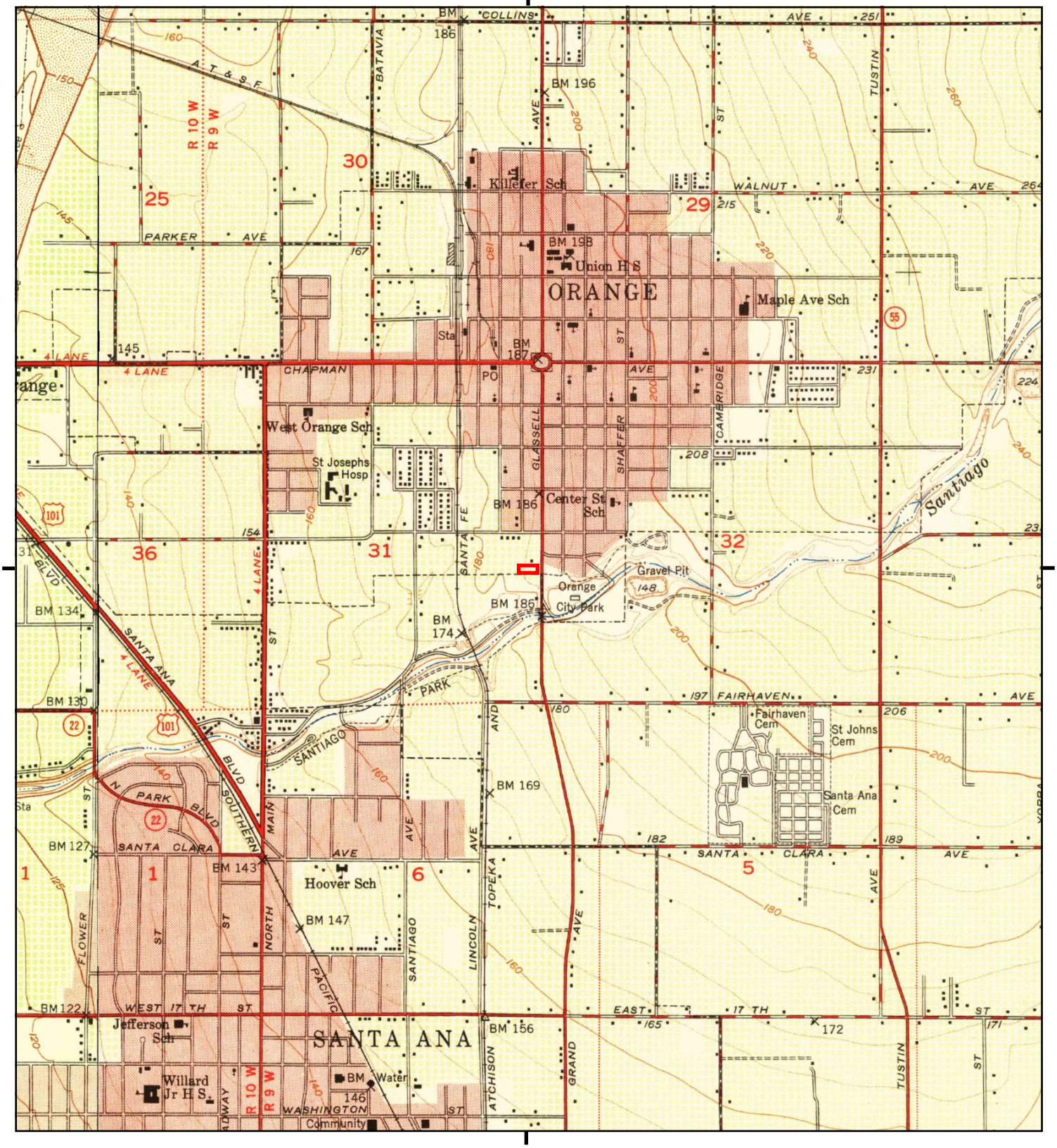

This report includes information from the following map sheet(s).

0 Miles 0.25 0.5 1 1.5

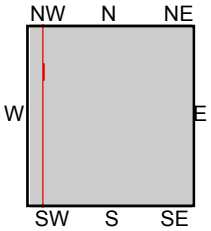

TP, Orange, 1950, 7.5-minute
NW, Anaheim, 1950, 7.5-minute

SITE NAME: Kisco Glassell
ADDRESS: 574 S. Glassell Street
Orange, CA 92866
CLIENT: Leighton Consulting

N

Historical Topo Map

1949

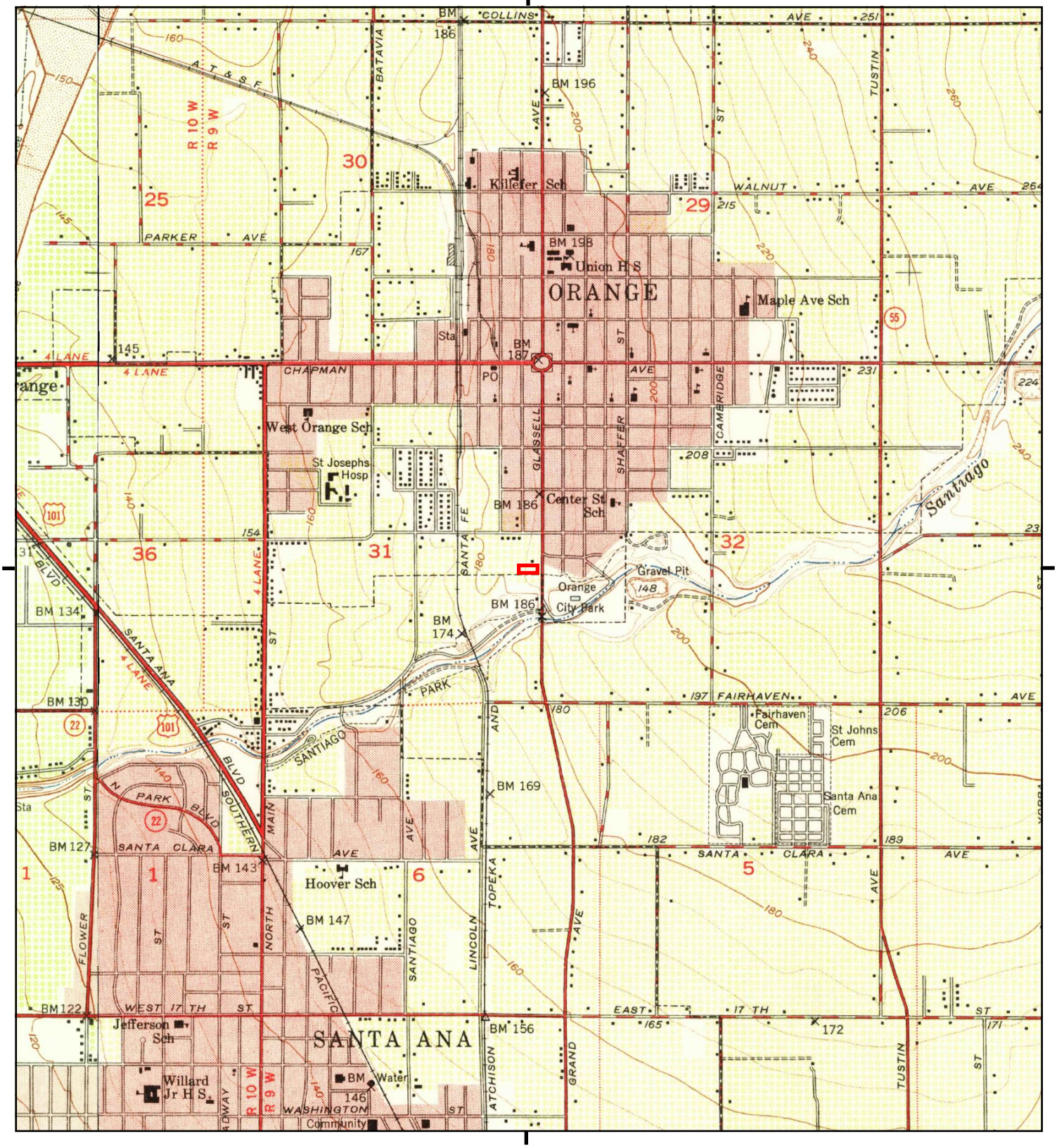

This report includes information from the following map sheet(s).

0 Miles 0.25 0.5 1 1.5

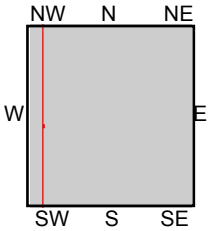

TP, Orange, 1949, 7.5-minute
NW, Anaheim, 1949, 7.5-minute

SITE NAME: Kisco Glassell
ADDRESS: 574 S. Glassell Street
Orange, CA 92866
CLIENT: Leighton Consulting

N

Historical Topo Map

1942

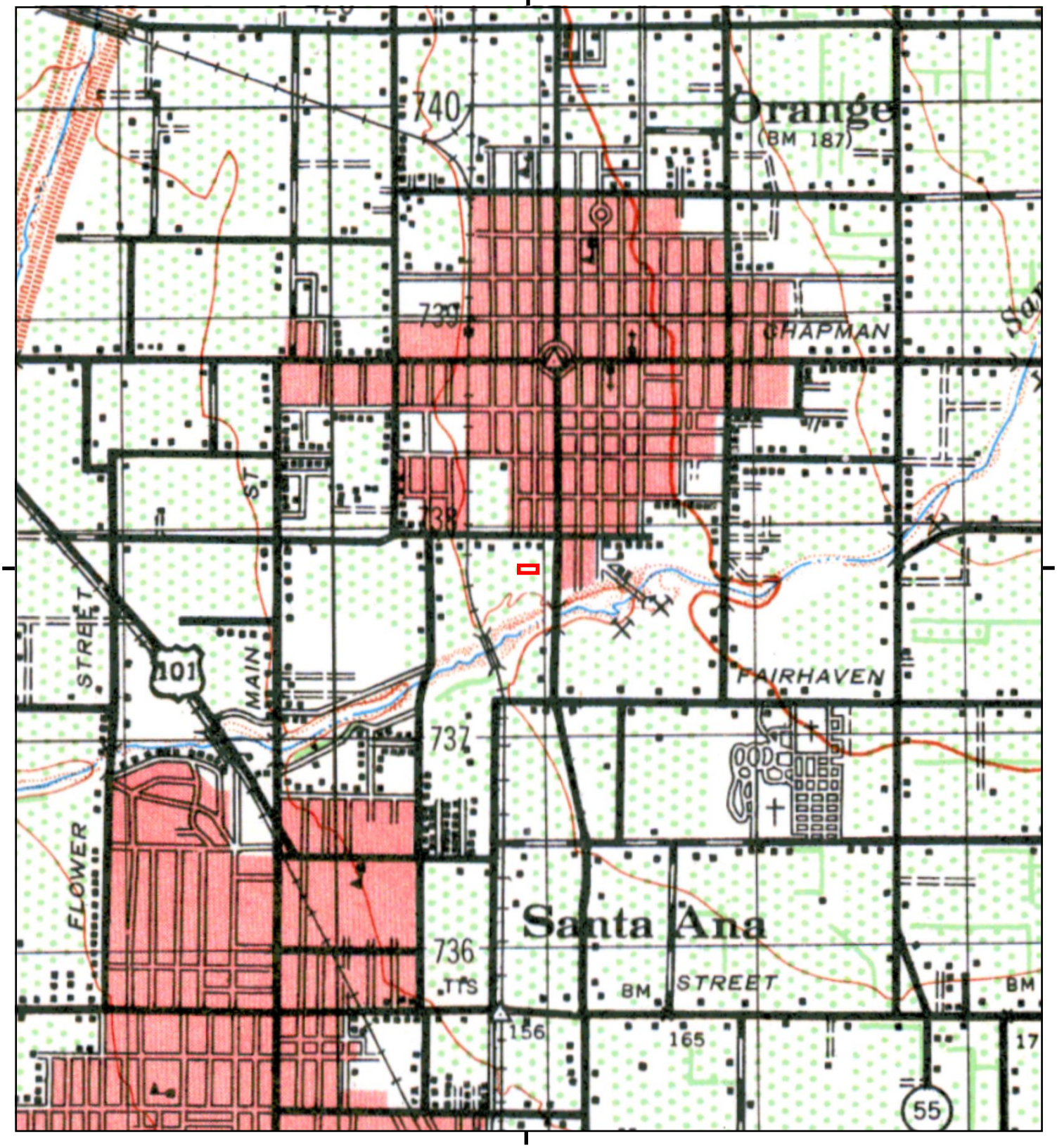

This report includes information from the following map sheet(s).

0 Miles 0.25 0.5 1 1.5

NW N NE
W E
SW S SE

TP, ANAHEIM, 1942, 15-minute

SITE NAME: Kisco Glassell
ADDRESS: 574 S. Glassell Street
Orange, CA 92866
CLIENT: Leighton Consulting

N

Historical Topo Map

1935

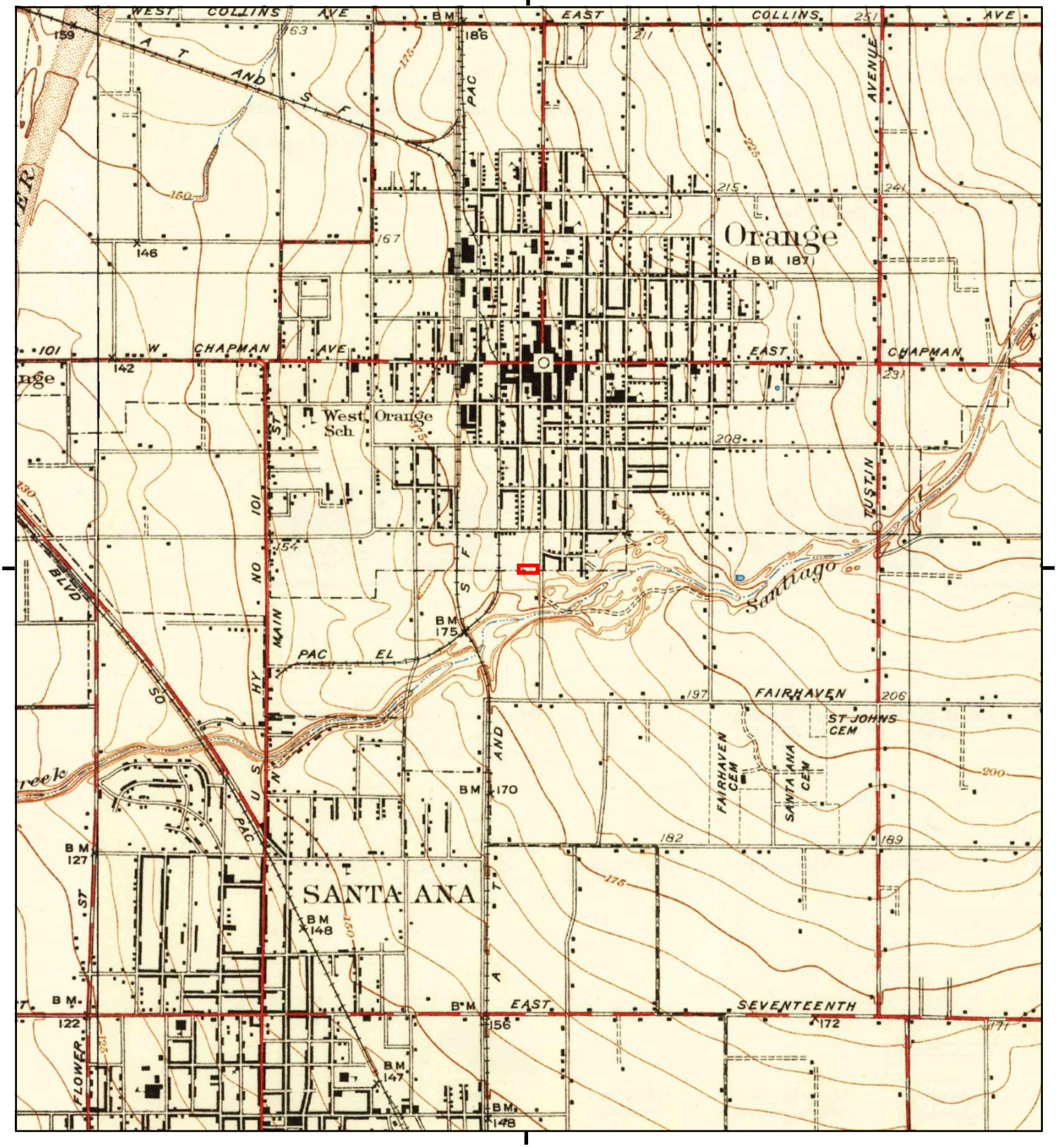

This report includes information from the following map sheet(s).

0 Miles 0.25 0.5 1 1.5

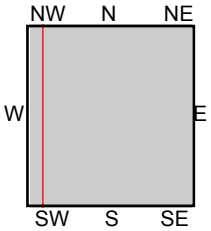

TP, Orange, 1935, 7.5-minute
NW, Garden Grove, 1935, 7.5-minute

SITE NAME: Kisco Glassell
ADDRESS: 574 S. Glassell Street
Orange, CA 92866
CLIENT: Leighton Consulting

N

Historical Topo Map

1932

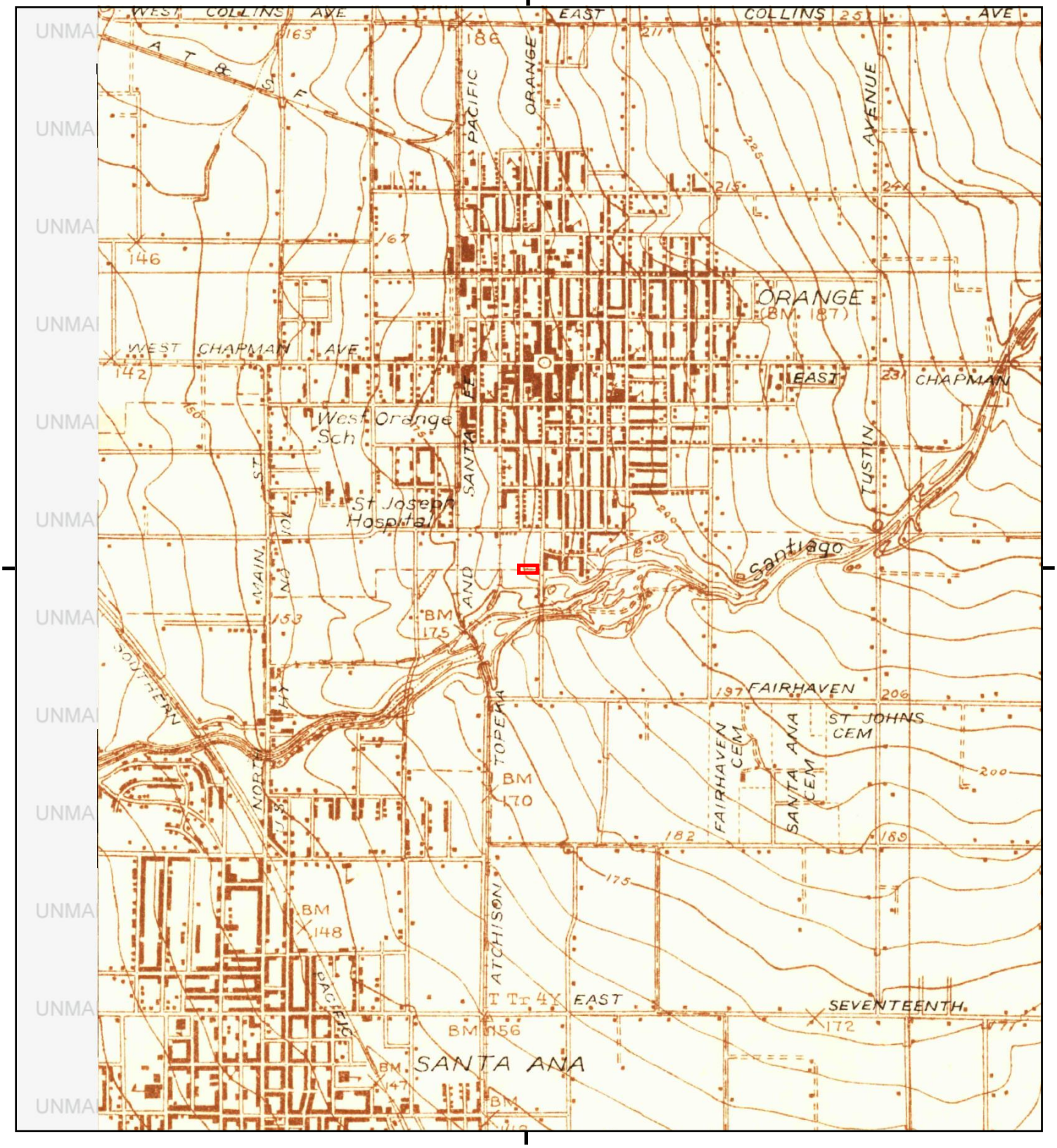

This report includes information from the following map sheet(s).

0 Miles 0.25 0.5 1 1.5

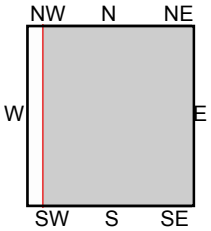

TP, Orange, 1932, 7.5-minute

SITE NAME: Kisco Glassell
ADDRESS: 574 S. Glassell Street
Orange, CA 92866
CLIENT: Leighton Consulting

N

Historical Topo Map

1902

This report includes information from the following map sheet(s).

0 Miles 0.25 0.5 1 1.5

NW N NE
W E
SW S SE

TP, Corona, 1902, 30-minute

SITE NAME: Kisco Glassell
ADDRESS: 574 S. Glassell Street
Orange, CA 92866
CLIENT: Leighton Consulting

N

Historical Topo Map

1901

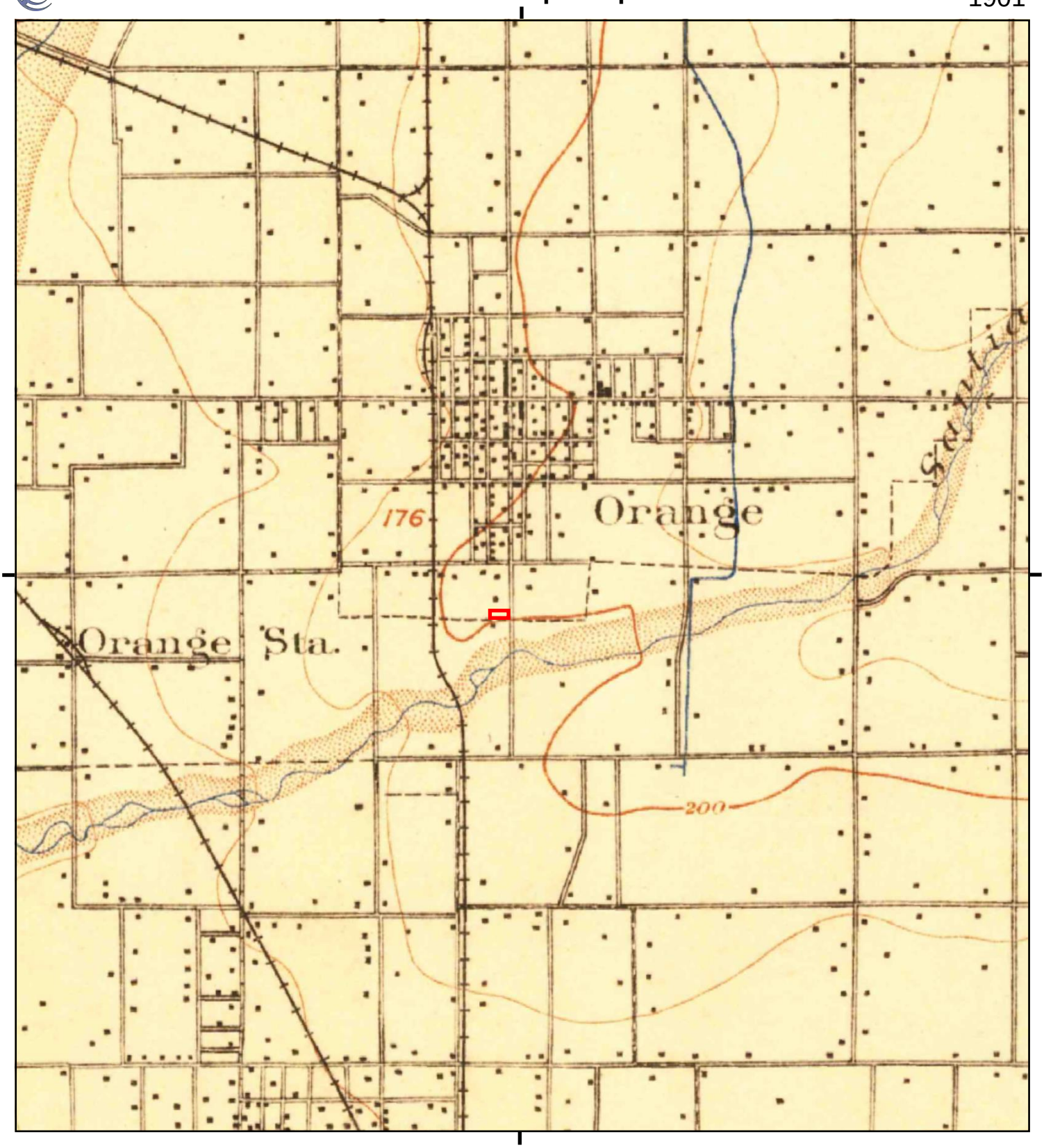

This report includes information from the following map sheet(s).

0 Miles 0.25 0.5 1 1.5

NW N NE
W E
SW S SE

TP, Anaheim, 1901, 15-minute

SITE NAME: Kisco Glassell
ADDRESS: 574 S. Glassell Street
Orange, CA 92866
CLIENT: Leighton Consulting

N

Historical Topo Map

1898

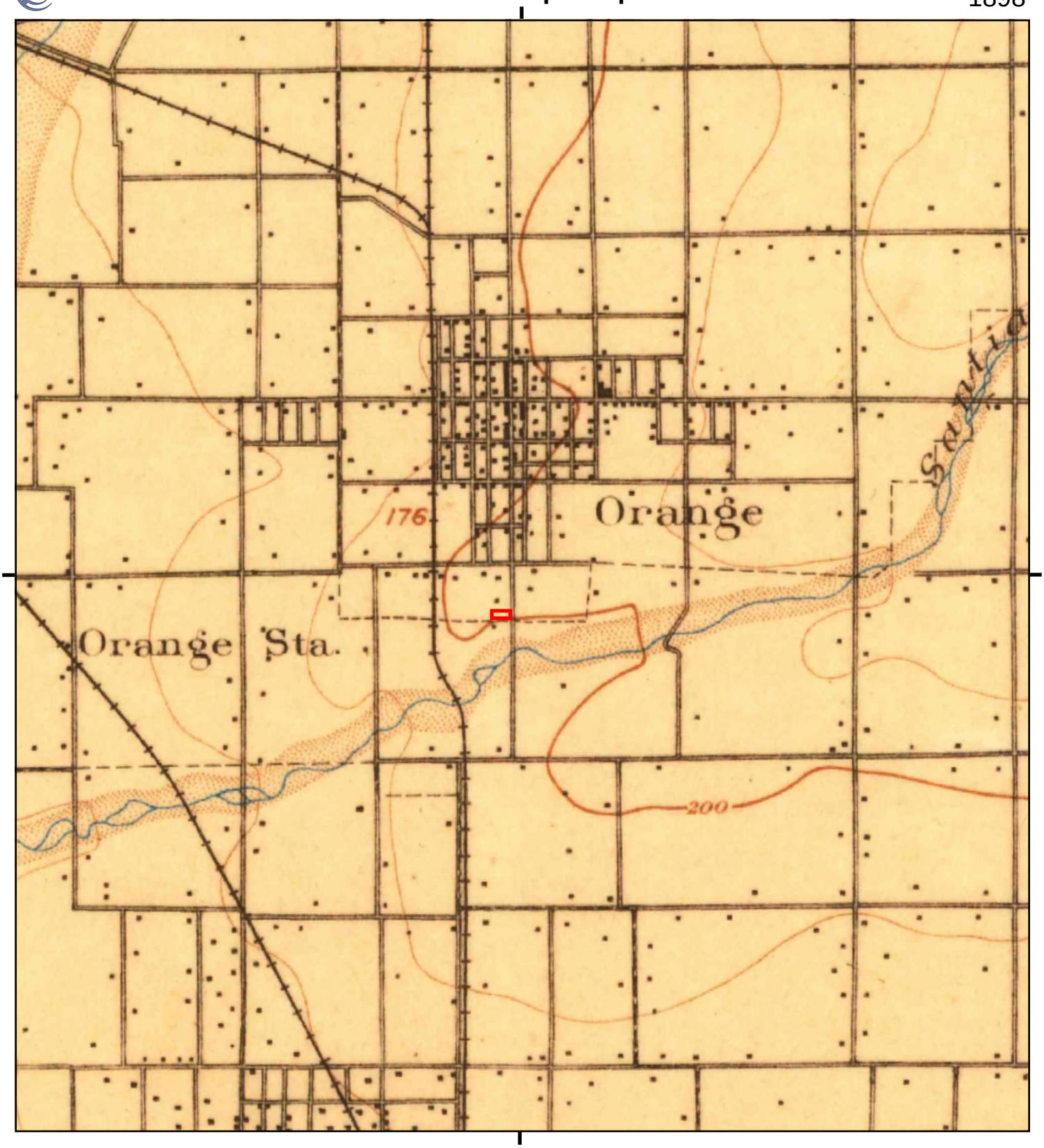

This report includes information from the following map sheet(s).

0 Miles 0.25 0.5 1 1.5

NW N NE
W E
SW S SE

TP, Anaheim, 1898, 15-minute

SITE NAME: Kisco Glassell
ADDRESS: 574 S. Glassell Street
Orange, CA 92866
CLIENT: Leighton Consulting

N

Historical Topo Map

1896

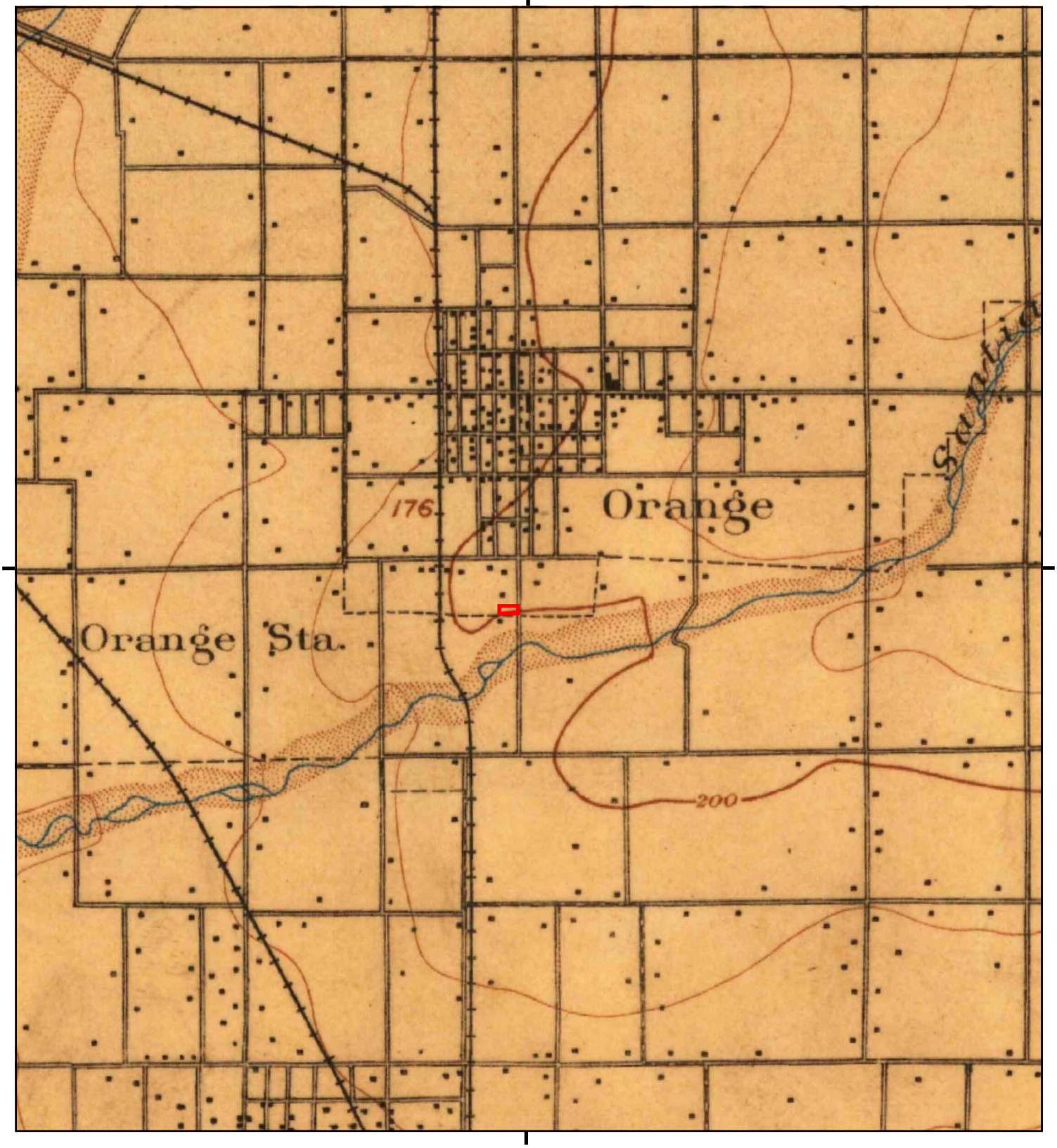

This report includes information from the following map sheet(s).

0 Miles 0.25 0.5 1 1.5

NW N NE
W E
SW S SE

TP, Anaheim, 1896, 15-minute

SITE NAME: Kisco Glassell
ADDRESS: 574 S. Glassell Street
Orange, CA 92866
CLIENT: Leighton Consulting

N

Kisco Glassell

574 S. Glassell Street

Orange, CA 92866

Inquiry Number: 5417961.3

September 10, 2018

Certified Sanborn® Map Report

6 Armstrong Road, 4th floor
Shelton, CT 06484
Toll Free: 800.352.0050
www.edrnet.com

Certified Sanborn® Map Report

09/10/18

Site Name:	Client Name:
Kisco Glassell	Leighton Consulting
574 S. Glassell Street	17781 Cowan
Orange, CA 92866	Irvine, CA 92614
EDR Inquiry # 5417961.3	Contact: Brynn Mcculloch

The Sanborn Library has been searched by EDR and maps covering the target property location as provided by Leighton Consulting were identified for the years listed below. The Sanborn Library is the largest, most complete collection of fire insurance maps. The collection includes maps from Sanborn, Bromley, Perris & Browne, Hopkins, Barlow, and others. Only Environmental Data Resources Inc. (EDR) is authorized to grant rights for commercial reproduction of maps by the Sanborn Library LLC, the copyright holder for the collection. Results can be authenticated by visiting www.edrnet.com/sanborn.

The Sanborn Library is continually enhanced with newly identified map archives. This report accesses all maps in the collection as of the day this report was generated.

Certified Sanborn Results:

Certification # 93BC-4EA4-9B4A

PO # 12137.001

Project Kisco Glassell

Maps Provided:

1954
1950
1929
1922

Sanborn® Library search results

Certification #: 93BC-4EA4-9B4A

The Sanborn Library includes more than 1.2 million fire insurance maps from Sanborn, Bromley, Perris & Browne, Hopkins, Barlow and others which track historical property usage in approximately 12,000 American cities and towns. Collections searched:

- ✔ Library of Congress
- ✔ University Publications of America
- ✔ EDR Private Collection

The Sanborn Library LLC Since 1866™

Limited Permission To Make Copies

Leighton Consulting (the client) is permitted to make up to FIVE photocopies of this Sanborn Map transmittal and each fire insurance map accompanying this report solely for the limited use of its customer. No one other than the client is authorized to make copies. Upon request made directly to an EDR Account Executive, the client may be permitted to make a limited number of additional photocopies. This permission is conditioned upon compliance by the client, its customer and their agents with EDR's copyright policy; a copy of which is available upon request.

Disclaimer - Copyright and Trademark Notice

This Report contains certain information obtained from a variety of public and other sources reasonably available to Environmental Data Resources, Inc. It cannot be concluded from this Report that coverage information for the target and surrounding properties does not exist from other sources. NO WARRANTY EXPRESSED OR IMPLIED, IS MADE WHATSOEVER IN CONNECTION WITH THIS REPORT. ENVIRONMENTAL DATA RESOURCES, INC. SPECIFICALLY DISCLAIMS THE MAKING OF ANY SUCH WARRANTIES, INCLUDING WITHOUT LIMITATION, MERCHANTABILITY OR FITNESS FOR A PARTICULAR USE OR PURPOSE. ALL RISK IS ASSUMED BY THE USER. IN NO EVENT SHALL ENVIRONMENTAL DATA RESOURCES, INC. BE LIABLE TO ANYONE, WHETHER ARISING OUT OF ERRORS OR OMISSIONS, NEGLIGENCE, ACCIDENT OR ANY OTHER CAUSE, FOR ANY LOSS OF DAMAGE, INCLUDING, WITHOUT LIMITATION, SPECIAL, INCIDENTAL, CONSEQUENTIAL, OR EXEMPLARY DAMAGES. ANY LIABILITY ON THE PART OF ENVIRONMENTAL DATA RESOURCES, INC. IS STRICTLY LIMITED TO A REFUND OF THE AMOUNT PAID FOR THIS REPORT. Purchaser accepts this Report "AS IS". Any analyses, estimates, ratings, environmental risk levels or risk codes provided in this Report are provided for illustrative purposes only, and are not intended to provide, nor should they be interpreted as providing any facts regarding, or prediction or forecast of, any environmental risk for any property. Only a Phase I Environmental Site Assessment performed by an environmental professional can provide information regarding the environmental risk for any property. Additionally, the information provided in this Report is not to be construed as legal advice.

Copyright 2018 by Environmental Data Resources, Inc. All rights reserved. Reproduction in any media or format, in whole or in part, of any report or map of Environmental Data Resources, Inc., or its affiliates, is prohibited without prior written permission.

EDR and its logos (including Sanborn and Sanborn Map) are trademarks of Environmental Data Resources, Inc. or its affiliates. All other trademarks used herein are the property of their respective owners.

Sanborn Sheet Key

This Certified Sanborn Map Report is based upon the following Sanborn Fire Insurance map sheets.

1954 Source Sheets

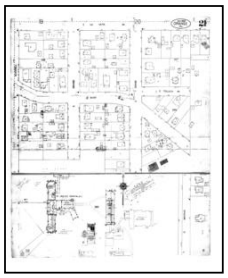

Volume 1, Sheet 21
1954

1950 Source Sheets

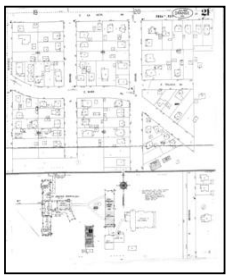

Volume 1, Sheet 21
1950

1929 Source Sheets

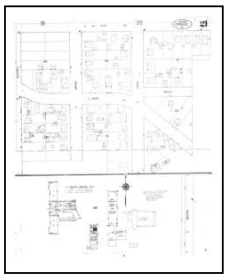

Volume 1, Sheet 21
1929

1922 Source Sheets

Volume 1, Sheet 21
1922

Certified Sanborn® Map

1954

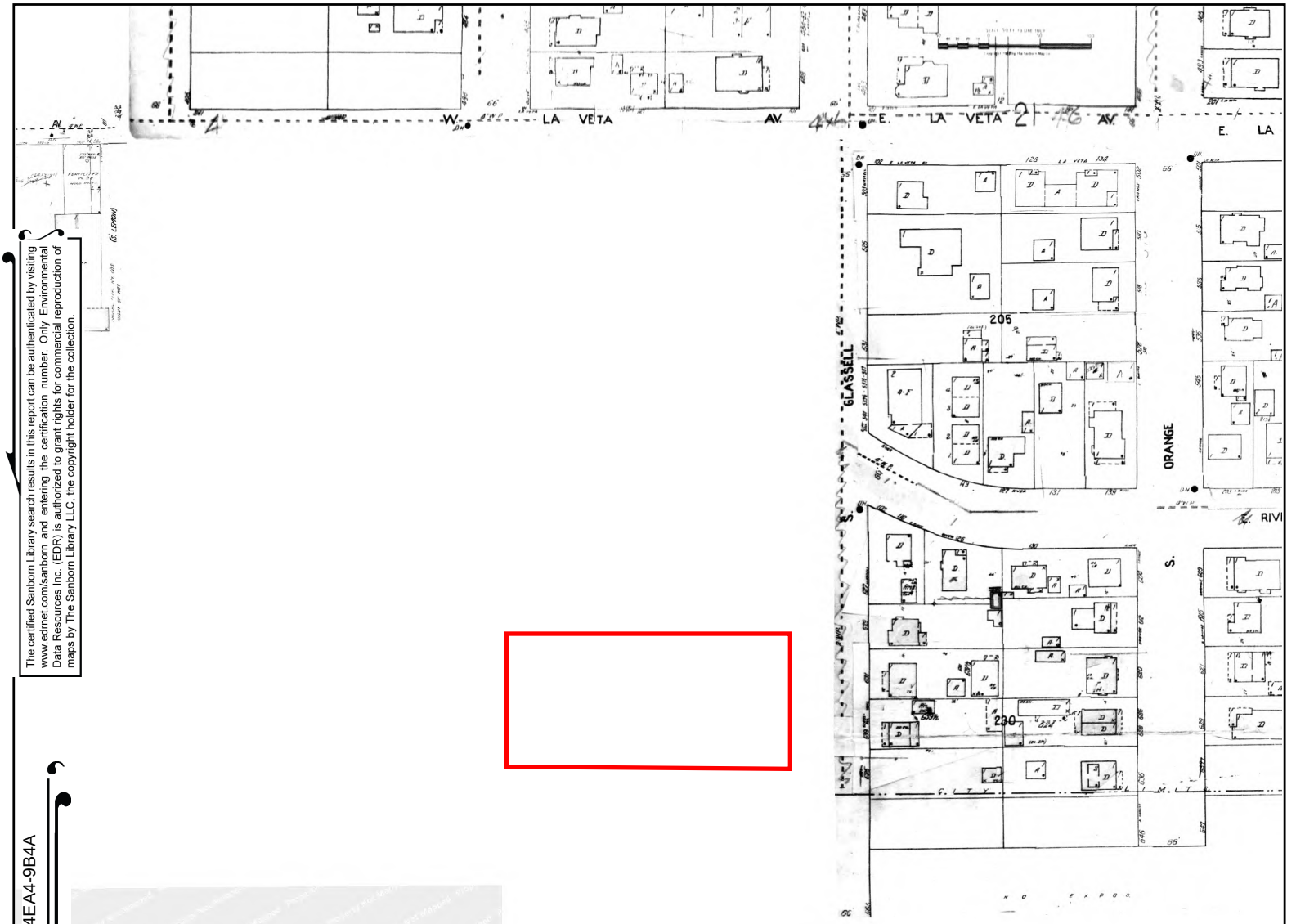

The certified Sanborn Library search results in this report can be authenticated by visiting www.edrnet.com/sanborn and entering the certification number. Only Environmental Data Resources Inc. (EDR) is authorized to grant rights for commercial reproduction of maps by The Sanborn Library LLC, the copyright holder for the collection.

Certification # 93BC-4EA4-9B4A

Site Name:	Kisco Glassell
Address:	574 S. Glassell Street
City, ST, ZIP:	Orange, CA 92866
Client:	Leighton Consulting
EDR Inquiry:	5417961.3
Order Date:	09/10/2018
Certification #	93BC-4EA4-9B4A
Copyright	1954

This Certified Sanborn Map combines the following sheets.
Outlined areas indicate map sheets within the collection.

0 Feet 150 300 600

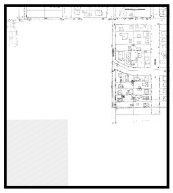

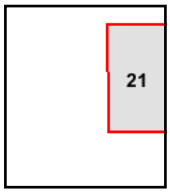

Volume 1, Sheet 21

N

Certified Sanborn® Map

1950

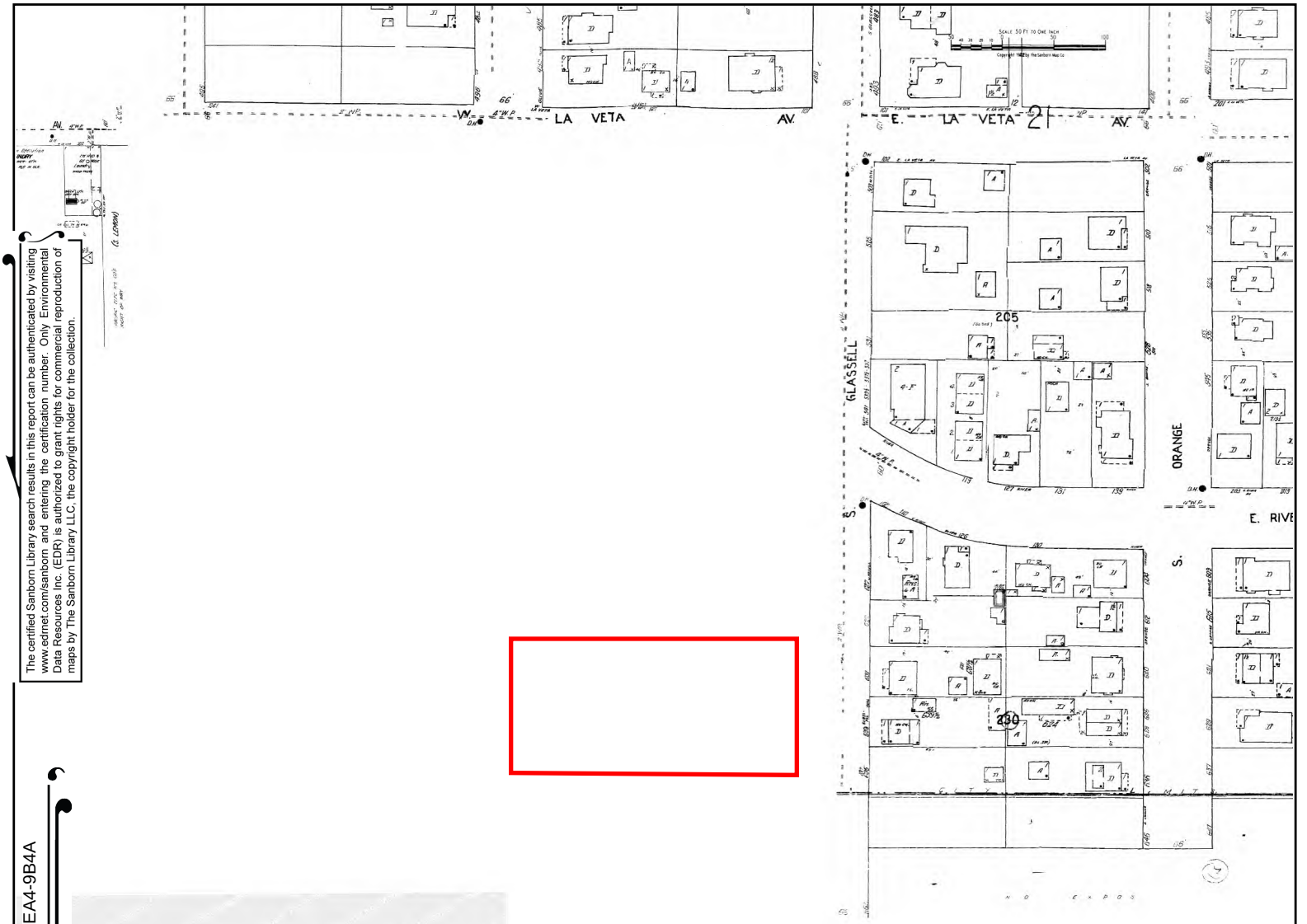

The certified Sanborn Library search results in this report can be authenticated by visiting www.edrnet.com/sanborn and entering the certification number. Only Environmental Data Resources Inc. (EDR) is authorized to grant rights for commercial reproduction of maps by The Sanborn Library LLC, the copyright holder for the collection.

Certification # 93BC-4EA4-9B4A

Site Name:	Kisco Glassell
Address:	574 S. Glassell Street
City, ST, ZIP:	Orange, CA 92866
Client:	Leighton Consulting
EDR Inquiry:	5417961.3
Order Date:	09/10/2018
Certification #	93BC-4EA4-9B4A
Copyright	1950

This Certified Sanborn Map combines the following sheets.
Outlined areas indicate map sheets within the collection.

0 Feet 150 300 600

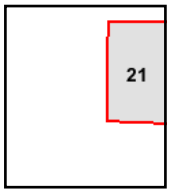

Volume 1, Sheet 21

N

Certified Sanborn® Map

1929

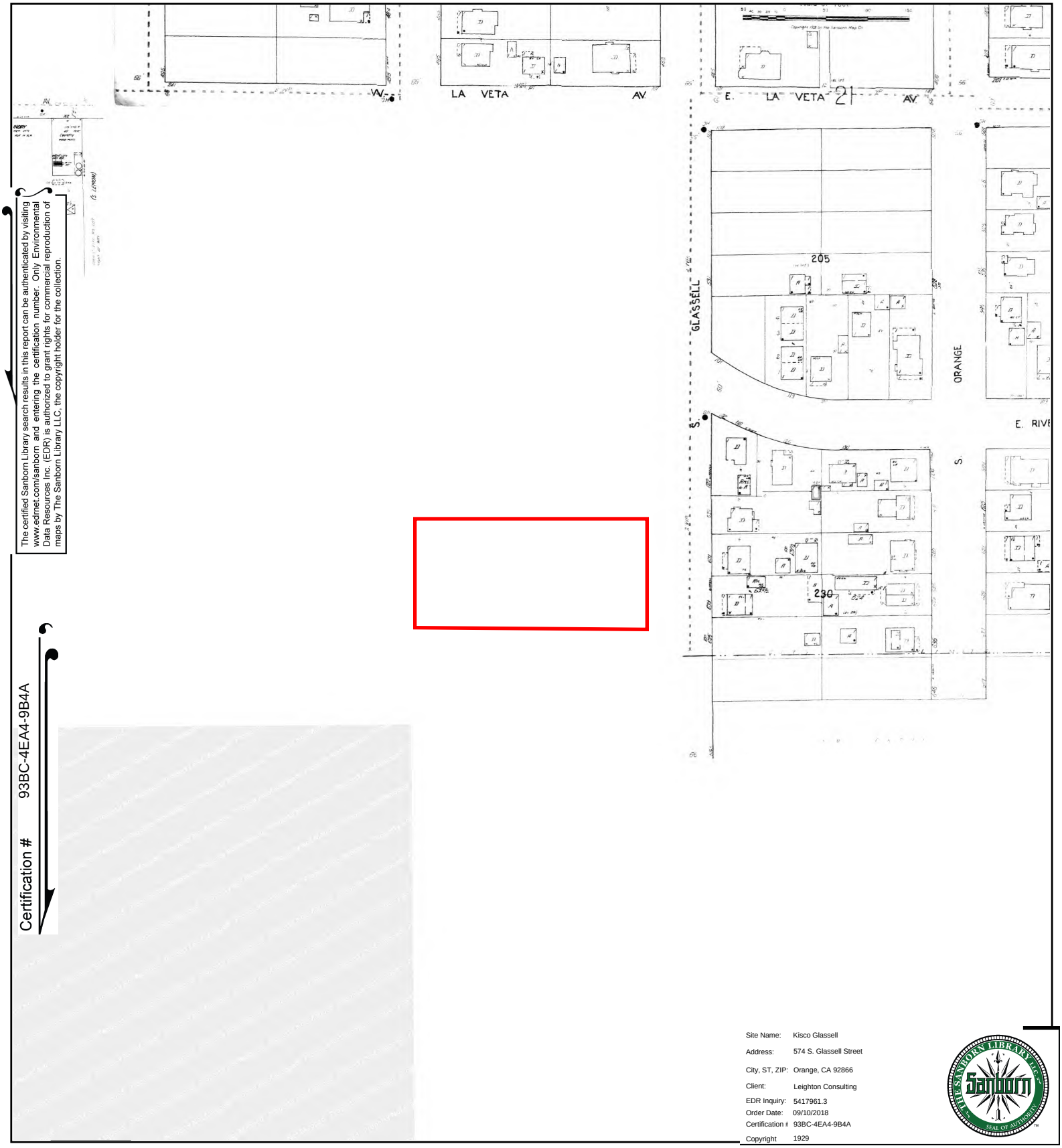

The certified Sanborn Library search results in this report can be authenticated by visiting www.edrnet.com/sanborn and entering the certification number. Only Environmental Data Resources Inc. (EDR) is authorized to grant rights for commercial reproduction of maps by The Sanborn Library LLC, the copyright holder for the collection.

Certification # 93BC-4EA4-9B4A

Site Name:	Kisco Glassell
Address:	574 S. Glassell Street
City, ST, ZIP:	Orange, CA 92866
Client:	Leighton Consulting
EDR Inquiry:	5417961.3
Order Date:	09/10/2018
Certification #	93BC-4EA4-9B4A
Copyright	1929

This Certified Sanborn Map combines the following sheets.
Outlined areas indicate map sheets within the collection.

0 Feet 150 300 600

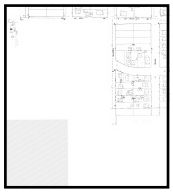

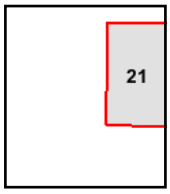

Volume 1, Sheet 21

N

Certified Sanborn® Map

1922

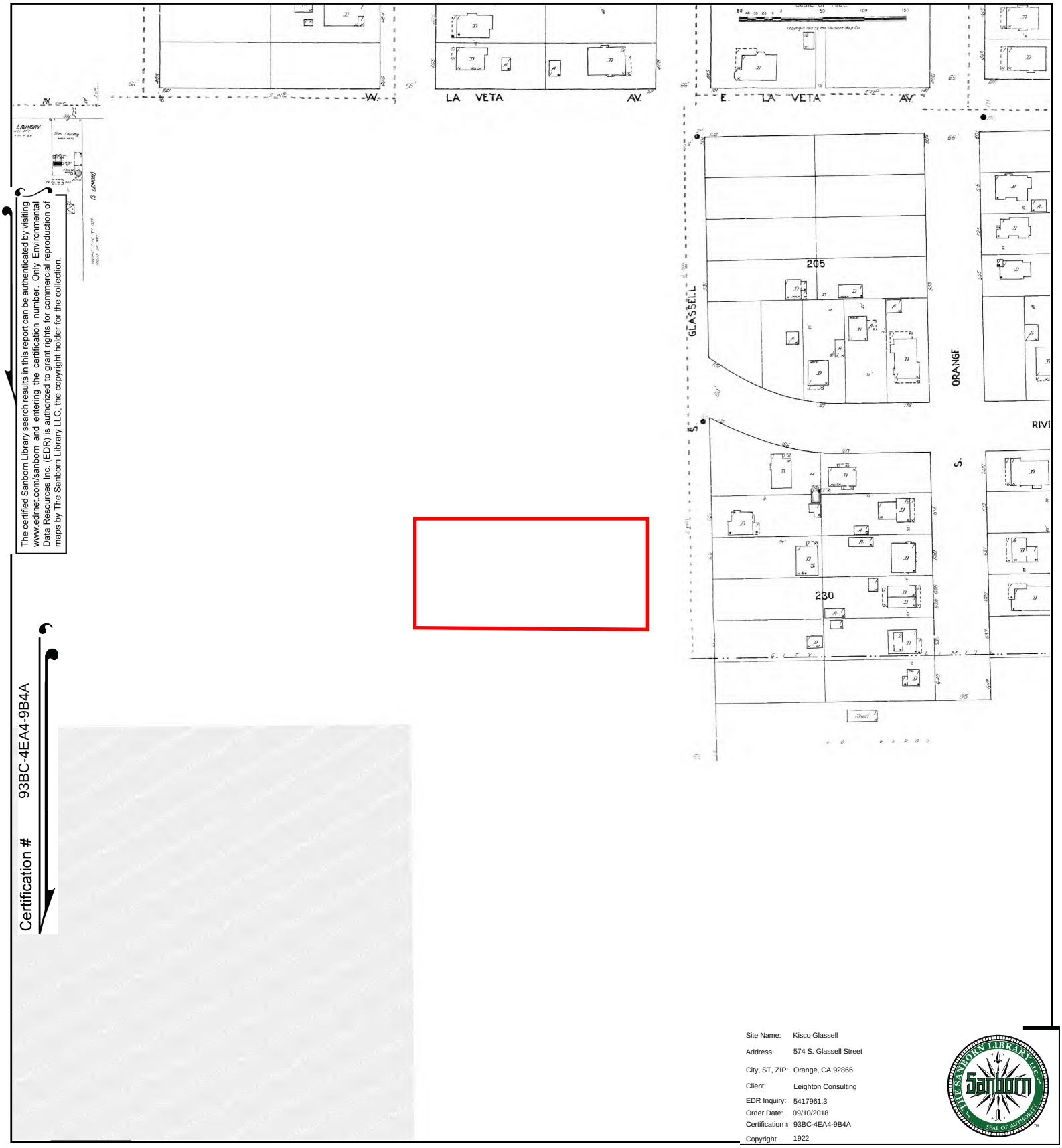

The certified Sanborn Library search results in this report can be authenticated by visiting www.edrnet.com/sanborn and entering the certification number. Only Environmental Data Resources Inc. (EDR) is authorized to grant rights for commercial reproduction of maps by The Sanborn Library LLC, the copyright holder for the collection.

Certification # 93BC-4EA4-9B4A

Site Name:	Kisco Glassell
Address:	574 S. Glassell Street
City, ST, ZIP:	Orange, CA 92866
Client:	Leighton Consulting
EDR Inquiry:	5417961.3
Order Date:	09/10/2018
Certification #	93BC-4EA4-9B4A
Copyright	1922

This Certified Sanborn Map combines the following sheets.
Outlined areas indicate map sheets within the collection.

0 Feet 150 300 600

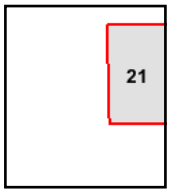

Volume 1, Sheet 21

N

Kisco Glassell
574 S. Glassell Street
Orange, CA 92866

Inquiry Number: 5417961.5
September 10, 2018

The EDR-City Directory Abstract

Environmental Data Resources Inc

6 Armstrong Road
Shelton, CT 06484
800.352.0050
www.edrnet.com

TABLE OF CONTENTS

SECTION

Executive Summary

Findings

City Directory Images

Thank you for your business.
Please contact EDR at 1-800-352-0050
with any questions or comments.

Disclaimer - Copyright and Trademark Notice

This Report contains certain information obtained from a variety of public and other sources reasonably available to Environmental Data Resources, Inc. It cannot be concluded from this Report that coverage information for the target and surrounding properties does not exist from other sources. **NO WARRANTY EXPRESSED OR IMPLIED, IS MADE WHATSOEVER IN CONNECTION WITH THIS REPORT. ENVIRONMENTAL DATA RESOURCES, INC. SPECIFICALLY DISCLAIMS THE MAKING OF ANY SUCH WARRANTIES, INCLUDING WITHOUT LIMITATION, MERCHANTABILITY OR FITNESS FOR A PARTICULAR USE OR PURPOSE. ALL RISK IS ASSUMED BY THE USER. IN NO EVENT SHALL ENVIRONMENTAL DATA RESOURCES, INC. BE LIABLE TO ANYONE, WHETHER ARISING OUT OF ERRORS OR OMISSIONS, NEGLIGENCE, ACCIDENT OR ANY OTHER CAUSE, FOR ANY LOSS OR DAMAGE, INCLUDING, WITHOUT LIMITATION, SPECIAL, INCIDENTAL, CONSEQUENTIAL, OR EXEMPLARY DAMAGES. ANY LIABILITY ON THE PART OF ENVIRONMENTAL DATA RESOURCES, INC. IS STRICTLY LIMITED TO A REFUND OF THE AMOUNT PAID FOR THIS REPORT.** Purchaser accepts this Report "AS IS". Any analyses, estimates, ratings, environmental risk levels or risk codes provided in this Report are provided for illustrative purposes only, and are not intended to provide, nor should they be interpreted as providing any facts regarding, or prediction orforecast of, any environmental risk for any property. Only a Phase I Environmental Site Assessment performed by an environmental professional can provide information regarding the environmental risk for any property. Additionally, the information provided in this Report is not to be construed as legal advice.

Copyright 2017 by Environmental Data Resources, Inc. All rights reserved. Reproduction in any media or format, in whole or in part, of any report or map of Environmental Data Resources, Inc. or its affiliates is prohibited without prior written permission.

EDR and its logos (including Sanborn and Sanborn Map) are trademarks of Environmental Data Resources, Inc. or its affiliates. All other trademarks used herein are the property of their respective owners.

EXECUTIVE SUMMARY

DESCRIPTION

Environmental Data Resources, Inc.'s (EDR) City Directory Abstract is a screening tool designed to assist environmental professionals in evaluating potential liability on a target property resulting from past activities. EDR's City Directory Abstract includes a search and abstract of available city directory data. For each address, the directory lists the name of the corresponding occupant at five year intervals.

Business directories including city, cross reference and telephone directories were reviewed, if available, at approximately five year intervals for the years spanning 1920 through 2014. This report compiles information gathered in this review by geocoding the latitude and longitude of properties identified and gathering information about properties within 660 feet of the target property.

A summary of the information obtained is provided in the text of this report.

RECORD SOURCES

EDR's Digital Archive combines historical directory listings from sources such as Cole Information and Dun & Bradstreet. These standard sources of property information complement and enhance each other to provide a more comprehensive report.

EDR is licensed to reproduce certain City Directory works by the copyright holders of those works. The purchaser of this EDR City Directory Report may include it in report(s) delivered to a customer. Reproduction of City Directories without permission of the publisher or licensed vendor may be a violation of copyright.

Data by infoUSA®

Copyright©2008
All Rights Reserved

RESEARCH SUMMARY

The following research sources were consulted in the preparation of this report. An "X" indicates where information was identified in the source and provided in this report.

Year	Source	TP	Adjoining	Text Abstract	Source Image
2014	EDR Digital Archive	-	X	X	-
	EDR Digital Archive	X	X	X	-
2010	EDR Digital Archive	-	X	X	-
	EDR Digital Archive	X	X	X	-
2005	EDR Digital Archive	-	X	X	-
	EDR Digital Archive	X	X	X	-
2002	Haines Company	-	X	X	-
2001	Pacific Telephone	-	-	-	-
1997	Pacific Telephone	-	-	-	-
1995	Pacific Bell	-	X	X	-
1992	Pacific Bell	-	-	-	-
1991	Pacific Bell	-	X	X	-

EXECUTIVE SUMMARY

Year	Source	TP	Adjoining	Text Abstract	Source Image
1991	Pacific Bell	X	X	X	-
1986	Pacific Bell	-	X	X	-
1980	Pacific Telephone	-	X	X	-
	Pacific Telephone	X	X	X	-
1975	Luskey Brothers & Co., Inc.	-	X	X	-
	Luskey Brothers & Co., Inc.	X	X	X	-
1971	Luskey Brothers Co., Inc.	-	-	-	-
1970	General Telephone Co., of California	-	X	X	-
1966	Pacific Telephone	-	X	X	-
	Pacific Telephone	X	X	X	-
1965	Luskey Brothers & Co., Inc.	-	X	X	-
	Luskey Brothers & Co., Inc.	X	X	X	-
	Ross Publications, Inc.,	-	X	X	-
	Ross Publications, Inc.,	X	X	X	-
1961	Luskey Brothers & Co.,	-	-	-	-
1960	Unknown	-	-	-	-
1956	Luskey Brothers & Co., Inc.	-	-	-	-
1955	The Pacific Telephone and Telegraph Co.	-	X	X	-
1952	Luskeys Directory Service Co.	-	X	X	-
1950	The Pacific Telephone and Telegraph Co.	-	X	X	-
1946	Southern California Telephone Co.	-	X	X	-
1945	Western Directory Co.	-	X	X	-
1941	Southern California Telephone Co.	-	X	X	-
1936	Western Directory Co.	-	X	X	-
1930	Western Directory Co.	-	X	X	-
1926	Pacific Telephone	-	-	-	-
1925	Western Directory Co.	-	X	X	-
1922	Western Directory Co.	-	X	X	-
1921	Western Directory Co.	-	-	-	-
1920	Santa Ana Directory Co.	-	-	-	-

FINDINGS

TARGET PROPERTY INFORMATION

ADDRESS

574 S. Glassell Street
Orange, CA 92866

FINDINGS DETAIL

Target Property research detail.

GLASSELL ST S

574 GLASSELL ST S

Year	Uses	Source
1965	Kims Fanily Restaurant	Luskey Brothers & Co., Inc.
	Mr K Restr & Buffeteria	Luskey Brothers & Co., Inc.

S Glassell St

574 S Glassell St

Year	Uses	Source
2014	YEN CHING RESTAURANT	EDR Digital Archive
2010	YEN CHING RESTAURANT	EDR Digital Archive
2005	YEN CHING RESTAURANT	EDR Digital Archive

S GLASSELL ST

574 S GLASSELL ST

Year	Uses	Source
1991	YEN CHING RESTAURANT	Pacific Bell
1980	Yen Ching Restaurant	Pacific Telephone
1975	VILLA SWEDEN RESTAURANT	Luskey Brothers & Co., Inc.
1966	MR T CLEANERS	Pacific Telephone
	Mr T Restaurant	Pacific Telephone

FINDINGS

ADJOINING PROPERTY DETAIL

The following Adjoining Property addresses were researched for this report. Detailed findings are provided for each address.

E FAIRWAY DR

141 E FAIRWAY DR

Year	Uses	Source
1970	Res I	General Telephone Co., of California
	Hess John B podtrst	General Telephone Co., of California

E LA PATHA AVE

125 E LA PATHA AVE

Year	Uses	Source
1980	Fords Nice & Clean	Pacific Telephone

E LA VETA AVE

101 E LA VETA AVE

Year	Uses	Source
1995	Arroyo Case Apartments	Pacific Bell

125 E LA VETA AVE

Year	Uses	Source
1986	Moody Ed	Pacific Bell

128 E LA VETA AVE

Year	Uses	Source
1991	Davis V S	Pacific Bell
1975	Atkins Nellie L	Luskey Brothers & Co., Inc.

150 E LA VETA AVE

Year	Uses	Source
1995	Winston D K	Pacific Bell

195 E LA VETA AVE

Year	Uses	Source
1980	Bates E E	Pacific Telephone

FINDINGS

222 E LA VETA AVE

Year	Uses	Source
1986	Cowan Jessie	Pacific Bell
1980	Cowan Jessie	Pacific Telephone
1975	Cowan Jessie	Luskey Brothers & Co., Inc.

226 E LA VETA AVE

Year	Uses	Source
1975	Kitselman Kent	Luskey Brothers & Co., Inc.

0101 E LA VETA AVE

Year	Uses	Source
1991	Dong Eugene K	Pacific Bell
	Dong Eric	Pacific Bell

E LA VETA DR

127 E LA VETA DR

Year	Uses	Source
1970	Paino SJa	General Telephone Co., of California
1966	Paino Jas	Pacific Telephone

128 E LA VETA DR

Year	Uses	Source
1970	Atkins Nellie L	General Telephone Co., of California
1966	Atkins Nellie L	Pacific Telephone
1955	Shuck Jay T	The Pacific Telephone and Telegraph Co.

134 E LA VETA DR

Year	Uses	Source
1966	Hall G W	Pacific Telephone

222 E LA VETA DR

Year	Uses	Source
1970	Cowan E R	General Telephone Co., of California
1966	Cowan E R	Pacific Telephone
1955	Cowan E R	The Pacific Telephone and Telegraph Co.

226 E LA VETA DR

Year	Uses	Source
1970	Hunt J Randall	General Telephone Co., of California
1955	Williamson Asia	The Pacific Telephone and Telegraph Co.

FINDINGS

233 E LA VETA DR

Year	Uses	Source
1970	Pollard Rosa M	General Telephone Co., of California
1966	Wimbush Michael R	Pacific Telephone

E RIVER

126 E RIVER

Year	Uses	Source
1966	Jones Stanley E	Pacific Telephone

139 E RIVER

Year	Uses	Source
1941	Harper Chas B r	Southern California Telephone Co.

213 E RIVER

Year	Uses	Source
1941	Wacker C F r	Southern California Telephone Co.

E RIVER AVE

110 E RIVER AVE

Year	Uses	Source
1950	De Long Anna r	The Pacific Telephone and Telegraph Co.
1936	R S Arguello	Western Directory Co.

119 E RIVER AVE

Year	Uses	Source
1991	Sydenstricker Ronald	Pacific Bell
1986	Cooper Tom	Pacific Bell
	Gilbert Frank W	Pacific Bell
	Htelb Ma Ik	Pacific Bell
1980	Bossia Doug A	Pacific Telephone
	Zimbelman Richard	Pacific Telephone
	Harris P C	Pacific Telephone
	Cooper Tom	Pacific Telephone
	Bossier K	Pacific Telephone
1950	Johnson Rosa F r	The Pacific Telephone and Telegraph Co.
1936	t John Wanco W L Bloomer	Western Directory Co.

FINDINGS

126 E RIVER AVE

Year	Uses	Source
1980	Taylor Mary	Pacific Telephone
1970	Jones Stanley E	General Telephone Co., of California
1950	Jones Stanley E r	The Pacific Telephone and Telegraph Co.
1936	J A Robinson	Western Directory Co.
1922	C B Harper	Western Directory Co.

127 E RIVER AVE

Year	Uses	Source
1995	Zimbelman Richard A	Pacific Bell
1991	Zimbelman Richard A	Pacific Bell
1936	J W Lutes	Western Directory Co.

129 E RIVER AVE

Year	Uses	Source
1922	In course of construction	Western Directory Co.

130 E RIVER AVE

Year	Uses	Source
1991	Reins John & Edith	Pacific Bell
1986	Renms John & Edith	Pacific Bell
1980	Reinis John & Edith	Pacific Telephone
1936	E M Sprinkle	Western Directory Co.
1922	0 M Jenkins	Western Directory Co.

131 E RIVER AVE

Year	Uses	Source
1955	Turek Norman J	The Pacific Telephone and Telegraph Co.
1950	Hall G W r	The Pacific Telephone and Telegraph Co.
1936	Martin Luther	Western Directory Co.
1922	W H Faerber	Western Directory Co.

133 E RIVER AVE

Year	Uses	Source
1991	Duke Carl D	Pacific Bell
1986	Duke Carl D	Pacific Bell
1980	Kuhl Misty	Pacific Telephone

FINDINGS

137 E RIVER AVE

Year	Uses	Source
1970	Moore Nelle	General Telephone Co., of California

139 E RIVER AVE

Year	Uses	Source
1950	Harper Chas B r	The Pacific Telephone and Telegraph Co.
1936	C B Harper	Western Directory Co.
1922	W 0 Hart	Western Directory Co.

205 E RIVER AVE

Year	Uses	Source
1995	Deshanes Raymond & Lorna	Pacific Bell
1991	Deshanes Raymond & Lorna	Pacific Bell
1986	Deshanes Raymond & Lorna	Pacific Bell
1950	Widdows Lyle E r	The Pacific Telephone and Telegraph Co.

210 E RIVER AVE

Year	Uses	Source
1991	Hendricks John A H	Pacific Bell
	Hendricks Joe L	Pacific Bell
	Hendricks Jerry	Pacific Bell

213 E RIVER AVE

Year	Uses	Source
1995	Spivey Mike	Pacific Bell
	Mc Candless Chas S	Pacific Bell
1991	Mc Candless Chas S	Pacific Bell
1986	Mc Candless Chas S	Pacific Bell
1936	C F Wacker	Western Directory Co.

225 E RIVER AVE

Year	Uses	Source
1995	Stevens Max G	Pacific Bell
1991	Stevens Max G	Pacific Bell
1986	Stevens Max G	Pacific Bell
1980	Stevens Max G	Pacific Telephone
1936	M J Bauer	Western Directory Co.
	G S Harper	Western Directory Co.
1922	G S Harper	Western Directory Co.

FINDINGS

FAIRWAY DR E

107 FAIRWAY DR E

Year	Uses	Source
1965	Vacant	Luskey Brothers & Co., Inc.

108 FAIRWAY DR E

Year	Uses	Source
1965	Kaplan EL	Luskey Brothers & Co., Inc.

109 FAIRWAY DR E

Year	Uses	Source
1965	Pinnon JN	Luskey Brothers & Co., Inc.

110 FAIRWAY DR E

Year	Uses	Source
1965	Carney June	Luskey Brothers & Co., Inc.

111 FAIRWAY DR E

Year	Uses	Source
1965	Borshum r SJ	Luskey Brothers & Co., Inc.

112 FAIRWAY DR E

Year	Uses	Source
1965	Audet DA	Luskey Brothers & Co., Inc.

113 FAIRWAY DR E

Year	Uses	Source
1965	Henderson JJ I	Luskey Brothers & Co., Inc.

114 FAIRWAY DR E

Year	Uses	Source
1965	Campbell RE	Luskey Brothers & Co., Inc.

115 FAIRWAY DR E

Year	Uses	Source
1965	Lambert Mary	Luskey Brothers & Co., Inc.

116 FAIRWAY DR E

Year	Uses	Source
1965	Konvalinka WJ	Luskey Brothers & Co., Inc.

FINDINGS

117 FAIRWAY DR E

Year	Uses	Source
1965	Vacant	Luskey Brothers & Co., Inc.

118 FAIRWAY DR E

Year	Uses	Source
1965	Vacant	Luskey Brothers & Co., Inc.

119 FAIRWAY DR E

Year	Uses	Source
1965	Vacant	Luskey Brothers & Co., Inc.

120 FAIRWAY DR E

Year	Uses	Source
1965	Martin HW	Luskey Brothers & Co., Inc.

121 FAIRWAY DR E

Year	Uses	Source
1965	Miller LE	Luskey Brothers & Co., Inc.

122 FAIRWAY DR E

Year	Uses	Source
1965	Maddox MEMrs	Luskey Brothers & Co., Inc.

123 FAIRWAY DR E

Year	Uses	Source
1965	Vacant	Luskey Brothers & Co., Inc.

124 FAIRWAY DR E

Year	Uses	Source
1965	Powell BEMrs	Luskey Brothers & Co., Inc.

FAIRWAY LN

110 FAIRWAY LN

Year	Uses	Source
1965	CDC PIPER	Ross Publications, Inc.,

FINDINGS

FAIRWAY PL

124 FAIRWAY PL

Year	Uses	Source
1970	Cox Patricia	General Telephone Co., of California

Fashion Park

563 Fashion Park

Year	Uses	Source
2005	ACTION AUTOMOTIVE CONCEPTS	EDR Digital Archive

607 Fashion Park

Year	Uses	Source
2005	BOOKCULTURE	EDR Digital Archive

617 Fashion Park

Year	Uses	Source
2005	JEREH MOBILE DETAIL	EDR Digital Archive

GLASSELL ST S

474 GLASSELL ST S

Year	Uses	Source
1965	Wise KR I	Luskey Brothers & Co., Inc.

477 GLASSELL ST S

Year	Uses	Source
1952	Carlson Elsie W	Luskeys Directory Service Co.
1945	Mrs H K Carlson	Western Directory Co.
1936	Mrs H K Carlson	Western Directory Co.
1925	Gustave Carlson	Western Directory Co.

482 GLASSELL ST S

Year	Uses	Source
1965	Wacker DD	Luskey Brothers & Co., Inc.

483 GLASSELL ST S

Year	Uses	Source
1952	Condon Margery 2103 a W	Luskeys Directory Service Co.

FINDINGS

484 GLASSELL ST S

Year	Uses	Source
1965	St Andre Elmira	Luskey Brothers & Co., Inc.

485 GLASSELL ST S

Year	Uses	Source
1965	Bobs Flying A	Luskey Brothers & Co., Inc.
1952	Fullerton Ellen Mrs 2103 a J	Luskeys Directory Service Co.

488 GLASSELL ST S

Year	Uses	Source
1965	Jones Van	Luskey Brothers & Co., Inc.
	Jones Van Serv Assoc tax	Luskey Brothers & Co., Inc.
1952	Vacant	Luskeys Directory Service Co.
1945	V W Baden	Western Directory Co.
1936	Mrs Mamie Kogler	Western Directory Co.
1925	W 3 Kogler	Western Directory Co.
1922	W J Kogler	Western Directory Co.

493 GLASSELL ST S

Year	Uses	Source
1952	Wilder R A 317 a W	Luskeys Directory Service Co.
1945	H A Graber	Western Directory Co.
1936	H A Graber	Western Directory Co.
1925	H A Graber	Western Directory Co.
1922	H A Graber	Western Directory Co.

503 GLASSELL ST S

Year	Uses	Source
1965	Orange Park Realty	Luskey Brothers & Co., Inc.
1952	Hampton R J 1798 a M	Luskeys Directory Service Co.

504 GLASSELL ST S

Year	Uses	Source
1925	Vacant	Western Directory Co.

505 GLASSELL ST S

Year	Uses	Source
1965	Moll Shirley	Luskey Brothers & Co., Inc.

FINDINGS

508 GLASSELL ST S

Year	Uses	Source
1965	Weingart SR	Luskey Brothers & Co., Inc.

509 GLASSELL ST S

Year	Uses	Source
1965	Medicz Edw	Luskey Brothers & Co., Inc.

514 GLASSELL ST S

Year	Uses	Source
1965	Kims Family Restr	Luskey Brothers & Co., Inc.

520 GLASSELL ST S

Year	Uses	Source
1965	Pomaville LH	Luskey Brothers & Co., Inc.

521 GLASSELL ST S

Year	Uses	Source
1965	Davis CC	Luskey Brothers & Co., Inc.

525 GLASSELL ST S

Year	Uses	Source
1965	Linnert RE	Luskey Brothers & Co., Inc.
1952	Welch R H 1475 a R	Luskeys Directory Service Co.
1945	R H Welch	Western Directory Co.

530 GLASSELL ST S

Year	Uses	Source
1965	lioly Family Catholic 538 48 T	Luskey Brothers & Co., Inc.
	Holy Family Catholic School	Luskey Brothers & Co., Inc.
	Holy Family Catholic Chwuch	Luskey Brothers & Co., Inc.
1952	Holy Family School	Luskeys Directory Service Co.

533 GLASSELL ST S

Year	Uses	Source
1965	Mac Farlane LK	Luskey Brothers & Co., Inc.

535 GLASSELL ST S

Year	Uses	Source
1922	Vacant	Western Directory Co.

FINDINGS

537 GLASSELL ST S

Year	Uses	Source
1965	Kandrac JJ	Luskey Brothers & Co., Inc.
	Russell RL	Luskey Brothers & Co., Inc.
1952	Lackey L F Mrs	Luskeys Directory Service Co.

539 GLASSELL ST S

Year	Uses	Source
1965	Bixby HS Mrs	Luskey Brothers & Co., Inc.

541 GLASSELL ST S

Year	Uses	Source
1965	Parsons Mary	Luskey Brothers & Co., Inc.
1952	Ahlmann J L Mrs 725 a J	Luskeys Directory Service Co.

545 GLASSELL ST S

Year	Uses	Source
1965	Demos GD	Luskey Brothers & Co., Inc.

550 GLASSELL ST S

Year	Uses	Source
1952	Hindman C C 225 a M	Luskeys Directory Service Co.
1945	W C Fallis	Western Directory Co.
	Mrs O G Devereaux	Western Directory Co.
1936	Mrs 0 G Deveraux	Western Directory Co.
	Margt Gardner	Western Directory Co.
1925	D R Gardner	Western Directory Co.
1922	D R Gardner	Western Directory Co.

576 GLASSELL ST S

Year	Uses	Source
1965	Holo Wai Miniature Golf Course	Luskey Brothers & Co., Inc.
	Holo Wai Mntr Golf	Luskey Brothers & Co., Inc.

601 GLASSELL ST S

Year	Uses	Source
1965	Smith AW	Luskey Brothers & Co., Inc.

605 GLASSELL ST S

Year	Uses	Source
1965	Kamber KT	Luskey Brothers & Co., Inc.

FINDINGS

611 GLASSELL ST S

Year	Uses	Source
1965	Wright JC	Luskey Brothers & Co., Inc.

615 GLASSELL ST S

Year	Uses	Source
1965	No Return	Luskey Brothers & Co., Inc.

618 GLASSELL ST S

Year	Uses	Source
1965	Allen CJ	Luskey Brothers & Co., Inc.

619 GLASSELL ST S

Year	Uses	Source
1965	Papalexis Anita	Luskey Brothers & Co., Inc.
	Brunell RP	Luskey Brothers & Co., Inc.

627 GLASSELL ST S

Year	Uses	Source
1952	Lichnouski M A Mrs	Luskeys Directory Service Co.
1945	H B Downey	Western Directory Co.
1936	Vacant	Western Directory Co.

629 GLASSELL ST S

Year	Uses	Source
1965	Brooks CL	Luskey Brothers & Co., Inc.
1952	Vickers H B Mrs 354 a J	Luskeys Directory Service Co.
1945	Wm Vickers	Western Directory Co.
1936	C W Pulley	Western Directory Co.
1925	A C Loomis	Western Directory Co.
1922	M T Turner	Western Directory Co.

631 GLASSELL ST S

Year	Uses	Source
1965	Keith RR	Luskey Brothers & Co., Inc.
	Smith AE	Luskey Brothers & Co., Inc.
	Westover TJ	Luskey Brothers & Co., Inc.
1952	Bullock T H 225 a R	Luskeys Directory Service Co.
1945	Mrs M G Deakins	Western Directory Co.
1936	S M Higgins	Western Directory Co.
	J G Stokes	Western Directory Co.

FINDINGS

Year	Uses	Source
1925	WV W Spurlock	Western Directory Co.
1922	B C Thayer	Western Directory Co.

632 GLASSELL ST S

Year	Uses	Source
1965	Armstrong AG	Luskey Brothers & Co., Inc.

633 GLASSELL ST S

Year	Uses	Source
1965	Vacant	Luskey Brothers & Co., Inc.
1952	Hudspeth H J Jr	Luskeys Directory Service Co.
1945	J P Ward	Western Directory Co.
1936	WM Fox	Western Directory Co.
1925	Vacant	Western Directory Co.

635 GLASSELL ST S

Year	Uses	Source
1965	No Return	Luskey Brothers & Co., Inc.
1936	Vacant	Western Directory Co.
	City Park	Western Directory Co.
	Orange Agricultural Pest	Western Directory Co.
	Control & Supply Assn	Western Directory Co.
	S J Botts	Western Directory Co.
	Henry Urban	Western Directory Co.
	Edwd Baker	Western Directory Co.
	Jack Kelly	Western Directory Co.
	W V Jeffries	Western Directory Co.
	Danl La Mont A H Kent	Western Directory Co.
1925	R J Fyffe	Western Directory Co.
1922	R J Fyfee	Western Directory Co.

639 GLASSELL ST S

Year	Uses	Source
1925	H I Sides	Western Directory Co.

641 GLASSELL ST S

Year	Uses	Source
1965	Curry IL	Luskey Brothers & Co., Inc.

FINDINGS

642 GLASSELL ST S

Year	Uses	Source
1965	Yates RG	Luskey Brothers & Co., Inc.

643 GLASSELL ST S

Year	Uses	Source
1965	Peralta Robt	Luskey Brothers & Co., Inc.
	Perez EF	Luskey Brothers & Co., Inc.

645 GLASSELL ST S

Year	Uses	Source
1965	Vacant	Luskey Brothers & Co., Inc.

647 GLASSELL ST S

Year	Uses	Source
1965	No Return	Luskey Brothers & Co., Inc.

655 GLASSELL ST S

Year	Uses	Source
1965	Watson KE	Luskey Brothers & Co., Inc.
1952	Watson K E	Luskeys Directory Service Co.
1945	K E Watson	Western Directory Co.

537 1/2 GLASSELL ST S

Year	Uses	Source
1952	Bixby Hallie Mrs 0959 a R	Luskeys Directory Service Co.

539 1/2 GLASSELL ST S

Year	Uses	Source
1952	Miller R R 959 a W	Luskeys Directory Service Co.

631 1/2 GLASSELL ST S

Year	Uses	Source
1952	Wilson M L Mrs	Luskeys Directory Service Co.
1945	Irvin Sherrill	Western Directory Co.

633 1/2 GLASSELL ST S

Year	Uses	Source
1952	Jaussaud A C	Luskeys Directory Service Co.
1945	Vacant	Western Directory Co.

FINDINGS

LA VETA AVE E

121 LA VETA AVE E

Year	Uses	Source
1952	Reiter Freda IV 1 1928 ac	Luskeys Directory Service Co.

127 LA VETA AVE E

Year	Uses	Source
1965	Paino Theresa	Luskey Brothers & Co., Inc.

128 LA VETA AVE E

Year	Uses	Source
1965	Atkins Nellie	Luskey Brothers & Co., Inc.

134 LA VETA AVE E

Year	Uses	Source
1965	Hall GW	Luskey Brothers & Co., Inc.

140 LA VETA AVE E

Year	Uses	Source
1952	Yardley F J 2025 a	Luskeys Directory Service Co.

202 LA VETA AVE E

Year	Uses	Source
1952	Parsons M 1 R a 747 a	Luskeys Directory Service Co.

206 LA VETA AVE E

Year	Uses	Source
1952	Hardisty H S 0577 a	Luskeys Directory Service Co.

214 LA VETA AVE E

Year	Uses	Source
1952	Moore E E 4 47 a	Luskeys Directory Service Co.

222 LA VETA AVE E

Year	Uses	Source
1965	Cowan ER	Luskey Brothers & Co., Inc.
1952	Cowan E R	Luskeys Directory Service Co.
	Shirley R N	Luskeys Directory Service Co.

226 LA VETA AVE E

Year	Uses	Source
1965	King EC	Luskey Brothers & Co., Inc.
1952	Williamson A MI Mrs	Luskeys Directory Service Co.

230 LA VETA AVE E

Year	Uses	Source
1952	Dowdy 11 H M	Luskeys Directory Service Co.

233 LA VETA AVE E

Year	Uses	Source
1965	Wimbush SJ	Luskey Brothers & Co., Inc.

LA VETA AVE W

121 LA VETA AVE W

Year	Uses	Source
1965	Heim Edna	Luskey Brothers & Co., Inc.

126 LA VETA AVE W

Year	Uses	Source
1965	Holy Family Convent	Luskey Brothers & Co., Inc.

200 LA VETA AVE W

Year	Uses	Source
1965	No Return	Luskey Brothers & Co., Inc.
	Strange DJ Rev	Luskey Brothers & Co., Inc.
	Holy Family Catholic	Luskey Brothers & Co., Inc.

205 LA VETA AVE W

Year	Uses	Source
1965	Cote W	Luskey Brothers & Co., Inc.

206 LA VETA AVE W

Year	Uses	Source
1965	Vacant	Luskey Brothers & Co., Inc.

207 LA VETA AVE W

Year	Uses	Source
1965	Essenpreis AM	Luskey Brothers & Co., Inc.

FINDINGS

209 LA VETA AVE W

Year	Uses	Source
1965	No Return	Luskey Brothers & Co., Inc.

215 LA VETA AVE W

Year	Uses	Source
1965	0e Bara Tony W 17 it BBte U T	Luskey Brothers & Co., Inc.

222 LA VETA AVE W

Year	Uses	Source
1965	Twa Va	Luskey Brothers & Co., Inc.

230 LA VETA AVE W

Year	Uses	Source
1965	Cruz Reggie	Luskey Brothers & Co., Inc.

233 LA VETA AVE W

Year	Uses	Source
1965	No Return	Luskey Brothers & Co., Inc.

235 LA VETA AVE W

Year	Uses	Source
1965	Cadmus CB	Luskey Brothers & Co., Inc.

OLIVE ST S

475 OLIVE ST S

Year	Uses	Source
1945	H M Clancy	Western Directory Co.

477 OLIVE ST S

Year	Uses	Source
1952	Hodgson D W	Luskeys Directory Service Co.

484 OLIVE ST S

Year	Uses	Source
1945	R N Pollock	Western Directory Co.

485 OLIVE ST S

Year	Uses	Source
1945	Edgar OConnell	Western Directory Co.

495 OLIVE ST S

Year	Uses	Source
1945	C O Dale	Western Directory Co.

ORANGE ST S

482 ORANGE ST S

Year	Uses	Source
1965	Moseley MM	Luskey Brothers & Co., Inc.

484 ORANGE ST S

Year	Uses	Source
1965	Spiering Agnes	Luskey Brothers & Co., Inc.

485 ORANGE ST S

Year	Uses	Source
1965	Cole EL	Luskey Brothers & Co., Inc.
1952	Graber R E 897 a R	Luskeys Directory Service Co.
1945	R E Graber	Western Directory Co.
1936	Mrs Ellen Utz	Western Directory Co.

486 ORANGE ST S

Year	Uses	Source
1965	No Return	Luskey Brothers & Co., Inc.

488 ORANGE ST S

Year	Uses	Source
1965	Jones EC Mrs	Luskey Brothers & Co., Inc.

492 ORANGE ST S

Year	Uses	Source
1965	Sohxe EH Mrs	Luskey Brothers & Co., Inc.

493 ORANGE ST S

Year	Uses	Source
1965	Neils COF	Luskey Brothers & Co., Inc.
1952	Potter G R 310 a J	Luskeys Directory Service Co.
1945	Mrs B W Potter	Western Directory Co.
1936	G W Whitsell	Western Directory Co.

FINDINGS

510 ORANGE ST S

Year	Uses	Source
1965	Meyer EL Mrs	Luskey Brothers & Co., Inc.
1952	Ahern Drennan Kl 3 a	Luskeys Directory Service Co.

515 ORANGE ST S

Year	Uses	Source
1965	Hopnran FA	Luskey Brothers & Co., Inc.
1952	Hopman F A	Luskeys Directory Service Co.
1945	Emma A A Thalheim	Western Directory Co.
1936	Frank Schoenheider	Western Directory Co.

518 ORANGE ST S

Year	Uses	Source
1965	Jahle GE	Luskey Brothers & Co., Inc.
1952	Parsons G S 1779 a W	Luskeys Directory Service Co.

525 ORANGE ST S

Year	Uses	Source
1965	Vacant	Luskey Brothers & Co., Inc.
1952	Linnert R E 2050 a R	Luskeys Directory Service Co.
1945	E D Bartlett	Western Directory Co.
1936	Mrs V C Erickson is A E Ralph	Western Directory Co.

528 ORANGE ST S

Year	Uses	Source
1965	Rowean JW	Luskey Brothers & Co., Inc.
1952	Stephan P J	Luskeys Directory Service Co.
1945	P P Turley	Western Directory Co.
1936	E W Berry	Western Directory Co.

535 ORANGE ST S

Year	Uses	Source
1965	8lgelow BL	Luskey Brothers & Co., Inc.
1952	Wood C A 1367 a J	Luskeys Directory Service Co.
1945	C A Wood	Western Directory Co.
1936	J C Adams	Western Directory Co.

544 ORANGE ST S

Year	Uses	Source
1952	Harper C B 444 a W	Luskeys Directory Service Co.

FINDINGS

Year	Uses	Source
1945	Leon Henderson	Western Directory Co.

545 ORANGE ST S

Year	Uses	Source
1965	Trowett JH 1 R	Luskey Brothers & Co., Inc.
1952	Bronkend Amelia Mrs	Luskeys Directory Service Co.
1945	Mrs Amelia Bronkend	Western Directory Co.
1936	N H Meuller	Western Directory Co.

604 ORANGE ST S

Year	Uses	Source
1965	Hohe ML Mrs	Luskey Brothers & Co., Inc.
1952	Mc Shaine J D 1042 a W	Luskeys Directory Service Co.
1945	H W Cathey	Western Directory Co.
1936	Robt Fernandez Oscar Klammer	Western Directory Co.

609 ORANGE ST S

Year	Uses	Source
1965	now Olive	Luskey Brothers & Co., Inc.
1952	Snow H J 2174 a J	Luskeys Directory Service Co.
1945	H J Snow	Western Directory Co.
1936	H J Snow	Western Directory Co.

612 ORANGE ST S

Year	Uses	Source
1965	Garrison RE	Luskey Brothers & Co., Inc.
1952	Garrison R E	Luskeys Directory Service Co.
1945	R E Garrison	Western Directory Co.
1936	F A Dowdy	Western Directory Co.

615 ORANGE ST S

Year	Uses	Source
1965	Barnrcs Artht	Luskey Brothers & Co., Inc.
1952	Reed H L 2193 a W	Luskeys Directory Service Co.
1945	C V Looney	Western Directory Co.
1936	W B Hampton	Western Directory Co.

620 ORANGE ST S

Year	Uses	Source
1965	Betschart F	Luskey Brothers & Co., Inc.

FINDINGS

Year	Uses	Source
1952	Havens M E Mrs 2174 a W	Luskeys Directory Service Co.
1945	Mrs M E Havens	Western Directory Co.
1936	Mrs M E Havens	Western Directory Co.

621 ORANGE ST S

Year	Uses	Source
1965	!2 Willidlms RG	Luskey Brothers & Co., Inc.
	i Mc Guirc U	Luskey Brothers & Co., Inc.
	Baokr AJ Mrs	Luskey Brothers & Co., Inc.
1952	Baker A J Mrs	Luskeys Directory Service Co.
1945	Mrs A J Baker	Western Directory Co.
1936	P H Baker	Western Directory Co.

622 ORANGE ST S

Year	Uses	Source
1965	Johnsun	Luskey Brothers & Co., Inc.

624 ORANGE ST S

Year	Uses	Source
1965	Elsrrr Russell	Luskey Brothers & Co., Inc.
1952	Draper E W Mrs 1766 a J	Luskeys Directory Service Co.
1936	L P Isaacs	Western Directory Co.

626 ORANGE ST S

Year	Uses	Source
1965	Frye IM Mrs	Luskey Brothers & Co., Inc.
1952	Frye I M Mrs 1042 a J	Luskeys Directory Service Co.
1945	Mrs I M Frye	Western Directory Co.
1936	R S Frye	Western Directory Co.

629 ORANGE ST S

Year	Uses	Source
1952	Intorf L H 444 a J	Luskeys Directory Service Co.
1945	L H Intorf	Western Directory Co.
1936	L H Intorf	Western Directory Co.

636 ORANGE ST S

Year	Uses	Source
1965	Vani Darro UT	Luskey Brothers & Co., Inc.
1952	Bouck W E 2193 a J	Luskeys Directory Service Co.

Year	Uses	Source
1945	W E Bouck	Western Directory Co.
1936	Mrs S M Davis beauty shop	Western Directory Co.
	H J Davis	Western Directory Co.

649 ORANGE ST S

Year	Uses	Source
1965	& 1 4 i S a i	Luskey Brothers & Co., Inc.
	Moses Carl	Luskey Brothers & Co., Inc.

621 1/2 ORANGE ST S

Year	Uses	Source
1952	Bennett J B	Luskeys Directory Service Co.
1945	Ethel L Helliwell	Western Directory Co.

RIVER

131 RIVER

Year	Uses	Source
1941	Luther M r	Southern California Telephone Co.

225 RIVER

Year	Uses	Source
1941	Harper Margaret Rowlands r	Southern California Telephone Co.

RIVER AVE

104 RIVER AVE

Year	Uses	Source
2002	PATRICKSIevpn	Haines Company

106 RIVER AVE

Year	Uses	Source
2002	SCHIERER T	Haines Company

109 RIVER AVE

Year	Uses	Source
2002	DELACRUZVelene	Haines Company
	Guyherme L DODDaved	Haines Company
	DEMOURANET	Haines Company

FINDINGS

110 RIVER AVE

Year	Uses	Source
1952	Henderson W F 1798 a	Luskeys Directory Service Co.

119 RIVER AVE

Year	Uses	Source
1975	McVeigh Flora F Mrs	Luskey Brothers & Co., Inc.
	Percival L	Luskey Brothers & Co., Inc.
	Powers Catherine Mrs	Luskey Brothers & Co., Inc.
1966	Percival L	Pacific Telephone
	Powers Catherine Mrs	Pacific Telephone
1965	Palm Sigrid	Luskey Brothers & Co., Inc.
	Aparbuents	Luskey Brothers & Co., Inc.
1952	Johnson R F Mrs 0883 a	Luskeys Directory Service Co.
	Clow Gladys Mrs 2211 a	Luskeys Directory Service Co.
	Stephan R V	Luskeys Directory Service Co.
	Hustedde H W	Luskeys Directory Service Co.
	APARTMENTS	Luskeys Directory Service Co.

126 RIVER AVE

Year	Uses	Source
1975	Angel John L	Luskey Brothers & Co., Inc.
1965	Jones SE	Luskey Brothers & Co., Inc.
1952	Jones S E piano turner 0963 a	Luskeys Directory Service Co.

127 RIVER AVE

Year	Uses	Source
1975	Bradney Leslie L	Luskey Brothers & Co., Inc.
1966	Bradney Leslie L	Pacific Telephone
1965	Bradney LL	Luskey Brothers & Co., Inc.
1952	Bradney L L	Luskeys Directory Service Co.

130 RIVER AVE

Year	Uses	Source
1975	Reinis John	Luskey Brothers & Co., Inc.
1966	Reinis John	Pacific Telephone
1965	Reinis John	Luskey Brothers & Co., Inc.
1952	Hertrick C J 1367 a}	Luskeys Directory Service Co.
1950	Hertrick Chas J r	The Pacific Telephone and Telegraph Co.

FINDINGS

131 RIVER AVE

Year	Uses	Source
1975	Dee Rick	Luskey Brothers & Co., Inc.
1966	Harper Frank E	Pacific Telephone
	Robinson Emma	Pacific Telephone
1965	Robinson Emma	Luskey Brothers & Co., Inc.
1952	Hall G W 2211 a}	Luskeys Directory Service Co.

133 RIVER AVE

Year	Uses	Source
1966	Hanmer Wm G	Pacific Telephone

137 RIVER AVE

Year	Uses	Source
1965	Moore Nell	Luskey Brothers & Co., Inc.
1952	Gammon Claude	Luskeys Directory Service Co.

139 RIVER AVE

Year	Uses	Source
1975	Foster Mary M	Luskey Brothers & Co., Inc.
	Foster Rod	Luskey Brothers & Co., Inc.
1966	Bullock Agnes R	Pacific Telephone
1965	Bullock VE	Luskey Brothers & Co., Inc.
1952	Astone T C	Luskeys Directory Service Co.

201 RIVER AVE

Year	Uses	Source
2002	KELLEY Gregory J	Haines Company
1980	Gutierrez Lynn S	Pacific Telephone
	Gutierrez	Pacific Telephone

205 RIVER AVE

Year	Uses	Source
1975	Leutzinger Mark	Luskey Brothers & Co., Inc.
1966	Dowling Edw J Jr	Pacific Telephone
1965	Mc Candless Fredrick	Luskey Brothers & Co., Inc.
1952	Wade W F 2211 a I	Luskeys Directory Service Co.

206 RIVER AVE

Year	Uses	Source
2002	LOHSERSIeve	Haines Company

FINDINGS

209 RIVER AVE

Year	Uses	Source
2002	AVERSAJoseph	Haines Company

210 RIVER AVE

Year	Uses	Source
1965	Morner Ada	Luskey Brothers & Co., Inc.
1952	Fertig H R 2125 a	Luskeys Directory Service Co.

212 RIVER AVE

Year	Uses	Source
1965	Larson Ruth	Luskey Brothers & Co., Inc.
1952	Larson Ruby P	Luskeys Directory Service Co.

213 RIVER AVE

Year	Uses	Source
2002	WOMACKWade Z	Haines Company
	WILLIAMSONMark	Haines Company
	TERASHIMANonyoshi	Haines Company
	SPARACINOBryan	Haines Company
1975	McCandless Chas S Jr	Luskey Brothers & Co., Inc.
	Francis John H	Luskey Brothers & Co., Inc.
1966	Stanley C W Jr	Pacific Telephone
1965	Mc Candless CS	Luskey Brothers & Co., Inc.
	Mc Candless CS tile contr	Luskey Brothers & Co., Inc.
1952	Mc Candless C S Jr tilecntr	Luskeys Directory Service Co.
1950	Mc Candless Chas S Jr tile contr	The Pacific Telephone and Telegraph Co.
1946	Mc Candless C S Jr r	Southern California Telephone Co.

218 RIVER AVE

Year	Uses	Source
2002	GREYCarla J	Haines Company
	HEARTWELLDamien	Haines Company

221 RIVER AVE

Year	Uses	Source
2002	MILLSJel	Haines Company
	MILLSMrlch	Haines Company

FINDINGS

222 RIVER AVE

Year	Uses	Source
2002	GRANT Margarelann	Haines Company
	ECONOMOSNok V	Haines Company

225 RIVER AVE

Year	Uses	Source
1975	Stevens Max G	Luskey Brothers & Co., Inc.
1966	Kendall Richard V First Methodist Church of Orange	Pacific Telephone
	Res	Pacific Telephone
1965	First Methodist Church	Luskey Brothers & Co., Inc.
	Kendall RV Rev	Luskey Brothers & Co., Inc.
1952	Harper G S 444 a	Luskeys Directory Service Co.
1950	Harper Geo S Mrs r	The Pacific Telephone and Telegraph Co.
1946	Trevorrow Raymond G r	Southern California Telephone Co.
	Harper Geo S Mrs r	Southern California Telephone Co.

213 1/2 RIVER AVE

Year	Uses	Source
1952	Spivey V L	Luskeys Directory Service Co.

RIVER AVE E

110 RIVER AVE E

Year	Uses	Source
1945	K K Killingsworth	Western Directory Co.

119 RIVER AVE E

Year	Uses	Source
1945	G H Hammontree	Western Directory Co.
	J A Johnson	Western Directory Co.
	R P Urban	Western Directory Co.
	Harold Wasco	Western Directory Co.
1925	M K Baessler H 0 Randal	Western Directory Co.

124 RIVER AVE E

Year	Uses	Source
1925	R S Arguello	Western Directory Co.

FINDINGS

126 RIVER AVE E

Year	Uses	Source
1945	N V Goodwin	Western Directory Co.
1925	David Hanson	Western Directory Co.

127 RIVER AVE E

Year	Uses	Source
1945	L L Bradney	Western Directory Co.
1925	T G Appel	Western Directory Co.

130 RIVER AVE E

Year	Uses	Source
1945	F H Abney	Western Directory Co.
1925	J F Williamson	Western Directory Co.

131 RIVER AVE E

Year	Uses	Source
1945	G W Hall	Western Directory Co.
1925	L H Charbonneau	Western Directory Co.

137 RIVER AVE E

Year	Uses	Source
1945	C E Ostrander	Western Directory Co.

139 RIVER AVE E

Year	Uses	Source
1945	C B Harper	Western Directory Co.
1925	C 13 Harper	Western Directory Co.

210 RIVER AVE E

Year	Uses	Source
1945	Ruth L Larson	Western Directory Co.

212 RIVER AVE E

Year	Uses	Source
1945	A G Pennita	Western Directory Co.

213 RIVER AVE E

Year	Uses	Source
1945	C S McCandless	Western Directory Co.
1925	R L Valentine	Western Directory Co.

FINDINGS

225 RIVER AVE E

Year	Uses	Source
1945	Mrs M R Harper	Western Directory Co.
1925	G S Harper	Western Directory Co.

S Fashion Park St

573 S Fashion Park St

Year	Uses	Source
2010	KITCHELL HEAT & A/C	EDR Digital Archive
2005	KITCHELL HEAT & A/C	EDR Digital Archive

585 S Fashion Park St

Year	Uses	Source
2010	ZARRILLI ZACK	EDR Digital Archive
	SUREFIRE CPR	EDR Digital Archive

607 S Fashion Park St

Year	Uses	Source
2010	BOOKCULTURE	EDR Digital Archive

617 S Fashion Park St

Year	Uses	Source
2014	JEREH MOBILE DETAIL	EDR Digital Archive
2010	JEREH MOBILE DETAIL	EDR Digital Archive

S GLASSELL ST

480 S GLASSELL ST

Year	Uses	Source
1995	Ontkean Mark J DC Glassell Chirprctc Centr	Pacific Bell
1991	Glassell Chiropractic Center	Pacific Bell
1986	Ontkean Mark Dr DC	Pacific Bell
1980	Schauer Jack	Pacific Telephone
1975	Ferraro Cosimo	Luskey Brothers & Co., Inc.
1970	Powell Lynda W	General Telephone Co., of California
	Powell John P	General Telephone Co., of California
1966	Mc Cluskey Kenneth M Jr	Pacific Telephone
1955	Morrison W J	The Pacific Telephone and Telegraph Co.

FINDINGS

481 S GLASSELL ST

Year	Uses	Source
1995	K&BMalrket	Pacific Bell
1980	Orange	Pacific Telephone

482 S GLASSELL ST

Year	Uses	Source
1980	Wright C Young III	Pacific Telephone
1975	Tye Marie	Luskey Brothers & Co., Inc.
1955	Phelps Warren H	The Pacific Telephone and Telegraph Co.

483 S GLASSELL ST

Year	Uses	Source
1955	Bailey Louis	The Pacific Telephone and Telegraph Co.

484 S GLASSELL ST

Year	Uses	Source
1986	J T C Productions	Pacific Bell
1955	Moore Walter F Dr	The Pacific Telephone and Telegraph Co.

485 S GLASSELL ST

Year	Uses	Source
1966	Glassell & La Veta	Pacific Telephone
	Phillips 66 Service Stations anaheim	Pacific Telephone
1955	Cole Ellen Mrs	The Pacific Telephone and Telegraph Co.
1950	Res	The Pacific Telephone and Telegraph Co.

488 S GLASSELL ST

Year	Uses	Source
1991	Jones L Van Service Associates	Pacific Bell
	Service Associates	Pacific Bell
	Van Jones Service Associates	Pacific Bell
1986	Service Associates	Pacific Bell
1980	Jones Van Service Associates	Pacific Telephone
	Service Associates	Pacific Telephone
1975	Jones Van Service Associates	Luskey Brothers & Co., Inc.
	Service Associates	Luskey Brothers & Co., Inc.
1970	Service Asher E Mrs	General Telephone Co., of California
	Stekc Associates	General Telephone Co., of California
	Jones Van Service Associates	General Telephone Co., of California
1966	Limb The	Pacific Telephone

Year	Uses	Source
1966	Jones Van Service Associate prntrs	Pacific Telephone
1955	Clark Cecil	The Pacific Telephone and Telegraph Co.
1950	Scott John O r	The Pacific Telephone and Telegraph Co.
1946	Baden V W r	Southern California Telephone Co.
1941	Katella Hatchery	Southern California Telephone Co.
	ogler Mamie Mrs r	Southern California Telephone Co.

493 S GLASSELL ST

Year	Uses	Source
1955	Rymer Helen Hope	The Pacific Telephone and Telegraph Co.
1950	Wilder R A r	The Pacific Telephone and Telegraph Co.

S Glassell St

503 S Glassell St

Year	Uses	Source
2014	SMITH GREG	EDR Digital Archive
	HAUCK PETER E	EDR Digital Archive
	BIDDLE JEFF A	EDR Digital Archive
	BRUCE E COLODNY LAW OFFICES	EDR Digital Archive
2010	HAUCK PETER E	EDR Digital Archive
	SMITH GREG	EDR Digital Archive
	BIDDLE JEFF A	EDR Digital Archive
2005	COLODNY BRUCE LAW OFFICE OF	EDR Digital Archive
	JUSTICE FOR FATHERS	EDR Digital Archive

S GLASSELL ST

503 S GLASSELL ST

Year	Uses	Source
1995	Jaquith Gary atty	Pacific Bell
1980	Medi Van Ambulette Corp	Pacific Telephone
	California Medical Transportation Association	Pacific Telephone
1975	Danner Paving Inc	Luskey Brothers & Co., Inc.
1970	Kirby Leo E	General Telephone Co., of California
	Schultz Lee ri est	General Telephone Co., of California
1966	Orange Park Realty	Pacific Telephone
	KIRBY LEO E Orange Park Realty	Pacific Telephone
1955	Hampton Bob J	The Pacific Telephone and Telegraph Co.

Year	Uses	Source
1950	Hampton Bob J r	The Pacific Telephone and Telegraph Co.

S Glassell St

525 S Glassell St

Year	Uses	Source
2010	LINNERT VEHICLE SERVICES	EDR Digital Archive
2005	LINNERT VEHICLE SERVICES	EDR Digital Archive

S GLASSELL ST

525 S GLASSELL ST

Year	Uses	Source
1995	Linnert Vehicle Services	Pacific Bell
1991	Linnert Vehicle Services	Pacific Bell
	Linnert Ralph E	Pacific Bell
1986	Linnert Ralph E	Pacific Bell
1975	Linnert Ralph E	Luskey Brothers & Co., Inc.
1970	Linnert Ralph E	General Telephone Co., of California
1966	Linnert Ralph E	Pacific Telephone
1955	Welch Ray H	The Pacific Telephone and Telegraph Co.
1950	Welch Ray H r	The Pacific Telephone and Telegraph Co.
1946	Welch Ray H r	Southern California Telephone Co.
1941	Welch Ray H r	Southern California Telephone Co.

S Glassell St

530 S Glassell St

Year	Uses	Source
2014	HOLY FAMILY CATHEDRAL SCHOOL	EDR Digital Archive
	ROMAN CTHLIC DIOCESE OF ORANGE	EDR Digital Archive
	PERFORMANCE TRAINING	EDR Digital Archive
2010	ROMAN CATHOLIC BISHP OF ORANGE	EDR Digital Archive
	DIRECTOR OF ADULT EDUCATION	EDR Digital Archive
	DIRECTOR OF MUSIC MINISTRIES	EDR Digital Archive
2005	DIRECTOR OF ADULT EDUCATION	EDR Digital Archive
	DIRECTOR OF MUSIC MINISTRIES	EDR Digital Archive
	ROMAN CATHOLIC BISHP OF ORANGE	EDR Digital Archive

S GLASSELL ST

530 S GLASSELL ST

Year	Uses	Source
1995	Catholic Deaf Community Voice	Pacific Bell
	Director Of Adult Education	Pacific Bell
	Director Of Music Ministries	Pacific Bell
	Holy Family Cathedral Catholic	Pacific Bell
	Parish Sister	Pacific Bell
1991	Parish Susan J	Pacific Bell
	Parish Sister	Pacific Bell
	Director Of Music Ministries	Pacific Bell
	Director Of Adult Education	Pacific Bell
	Catholic Deaf Outreach Service Voice	Pacific Bell
	Catholic Deaf Outreach Service Tdd	Pacific Bell
	Catholic Deaf Community Voice	Pacific Bell
	Parish Timothy & Colleen @Huntington Beach@	Pacific Bell
1980	Holy Family Director Religious Education	Pacific Telephone
	Holy Family Catholic School	Pacific Telephone
	Holy Family C CD	Pacific Telephone
1975	Holy Family School Health Room	Luskey Brothers & Co., Inc.
	Holy Family Catholic School	Luskey Brothers & Co., Inc.
1970	Holy Family School Health Room	General Telephone Co., of California
	Holy Family Catholic School	General Telephone Co., of California
1966	HOLY FAMILY CATHOLIC SCHOOL	Pacific Telephone
1955	Holy Family Catholic School	The Pacific Telephone and Telegraph Co.
1950	Holy Family Catholic School	The Pacific Telephone and Telegraph Co.

537 S GLASSELL ST

Year	Uses	Source
1975	Russell Raymond L	Luskey Brothers & Co., Inc.
	Loughrey Jas J	Luskey Brothers & Co., Inc.
1970	Loughrey Jas J	General Telephone Co., of California
1966	Russell Raymond L	Pacific Telephone
1955	Purcell Virginia A Dr	The Pacific Telephone and Telegraph Co.
	Bixby Hallie S Mrs	The Pacific Telephone and Telegraph Co.
1950	De Cloud John Capt r	The Pacific Telephone and Telegraph Co.

FINDINGS

S Glassell St

539 S Glassell St

Year	Uses	Source
2010	CATHYS LEATHER & SUEDES	EDR Digital Archive

S GLASSELL ST

539 S GLASSELL ST

Year	Uses	Source
1995	Hernandez Hector	Pacific Bell
1991	Hernandez Hector	Pacific Bell
1986	Hernandez Hector	Pacific Bell
1980	araves obt	Pacific Telephone
1975	Brick P R	Luskey Brothers & Co., Inc.
1970	Pflueger Emma C Mrs	General Telephone Co., of California
1955	Smith Stuart	The Pacific Telephone and Telegraph Co.
1950	Miller Richard R Lt r	The Pacific Telephone and Telegraph Co.

541 S GLASSELL ST

Year	Uses	Source
1970	Parsons Mary A	General Telephone Co., of California
1966	Parsons Mary A	Pacific Telephone
1955	Crossley W S	The Pacific Telephone and Telegraph Co.
1950	Ahlmann W C Mrs r	The Pacific Telephone and Telegraph Co.

550 S GLASSELL ST

Year	Uses	Source
1955	Whitford Geo W	The Pacific Telephone and Telegraph Co.
1950	Fallis W C r	The Pacific Telephone and Telegraph Co.
	Devereaux Orra r	The Pacific Telephone and Telegraph Co.
1946	Deveraux Orra r	Southern California Telephone Co.
1941	Devereaux Orra r	Southern California Telephone Co.

S Glassell St

566 S Glassell St

Year	Uses	Source
2014	HOLY FAMILY CATHEDRAL	EDR Digital Archive
2010	HOLY FAMILY CATHEDRAL	EDR Digital Archive
2005	HOLY CATHERRAL	EDR Digital Archive

S GLASSELL ST

566 S GLASSELL ST

Year	Uses	Source
1995	Holy Family Catholic Church	Pacific Bell
1991	Holy Family Catholic Church	Pacific Bell
	Holy Family Cathedral	Pacific Bell
	Holy Family Cathedral Catholic	Pacific Bell
1986	Holy Family Catholic Church	Pacific Bell
	Horan George E	Pacific Bell
1980	Holy Family Cathedral Catholic	Pacific Telephone
	Holy Family Catholic Church	Pacific Telephone
1975	Holy Family Catholic Church	Luskey Brothers & Co., Inc.
	ROMAN CATHOLIC CHURCH OF THE HOLY FAMILY	Luskey Brothers & Co., Inc.
	Holy Family C C D	Luskey Brothers & Co., Inc.
1970	Holy Family C C O	General Telephone Co., of California
	Holy Family Catholic Church	General Telephone Co., of California
	Lowell Katherin	General Telephone Co., of California
	ROMAN CATHOIUC CHURCH OF THE HOLY FAMILY	General Telephone Co., of California
1966	HOLY FAMILY CATHOLIC CHURCH	Pacific Telephone

576 S GLASSELL ST

Year	Uses	Source
1975	Orange Miniature Golf	Luskey Brothers & Co., Inc.
	Holo Wai Miniature Golf	Luskey Brothers & Co., Inc.
1970	Holo Wai Miniature Golf	General Telephone Co., of California
	Orange Miniature Golf	General Telephone Co., of California
1966	Orange Miniature Golf	Pacific Telephone
	Holo Wai Miniature Golf	Pacific Telephone

S Glassell St

603 S Glassell St

Year	Uses	Source
2005	FITOVERS EYEWEAR PTY LIMITED	EDR Digital Archive

S GLASSELL ST

615 S GLASSELL ST

Year	Uses	Source
1986	Reta Grace P	Pacific Bell
1975	Reta Grace P	Luskey Brothers & Co., Inc.

617 S GLASSELL ST

Year	Uses	Source
1975	Rosa Robt W	Luskey Brothers & Co., Inc.

S Glassell St

620 S Glassell St

Year	Uses	Source
2014	KISCO SENIOR LIVING LLC	EDR Digital Archive
	BETHS AT PARK PLAZA	EDR Digital Archive
2010	BETHS AT PARK PLAZA	EDR Digital Archive
	KISCO SENIOR LIVING LLC	EDR Digital Archive
2005	KISCO SENIOR LIVING LLC	EDR Digital Archive
	BETHS AT PARK PLAZA	EDR Digital Archive

S GLASSELL ST

620 S GLASSELL ST

Year	Uses	Source
1995	Ahern Martha A	Pacific Bell
	Beebe Irma A	Pacific Bell
	Bergen Berenice Mrs	Pacific Bell
	Beths At Park Plaza	Pacific Bell
	Buckmaster G E	Pacific Bell
	Consalvo Elsa	Pacific Bell
	Cook Fred	Pacific Bell
	De La Riva Gloria	Pacific Bell
	Eckel Marla J	Pacific Bell
	Erskine L	Pacific Bell
	Fowler V	Pacific Bell
	Fry Charles W	Pacific Bell
	Gabloffsky Heinz	Pacific Bell
	Gay F H	Pacific Bell
	Grant Mary B	Pacific Bell

FINDINGS

Year	Uses	Source
1995	Gulledge Jewel E	Pacific Bell
	Hanson Josephine	Pacific Bell
	Hardy Doyle	Pacific Bell
	Harrington M L	Pacific Bell
	Hartmann Maudell	Pacific Bell
	Hawkins F V	Pacific Bell
	Henry Jennie	Pacific Bell
	Holm Roy	Pacific Bell
	Horan Thomas P	Pacific Bell
	Houpt J Wm	Pacific Bell
	House Leland R	Pacific Bell
	Jefferies I E	Pacific Bell
	Johnson Warren C Sr	Pacific Bell
	Keske Amold W	Pacific Bell
	Miller MV	Pacific Bell
	Oliver Neva	Pacific Bell
	PARK PLAZA RETIREMENT RESIDENCE	Pacific Bell
	Pearson RR	Pacific Bell
	Pickel Iona A	Pacific Bell
	Piroli Fanny	Pacific Bell
	Pitcher Laurence	Pacific Bell
	Ritchie SB	Pacific Bell
	Seeds CE	Pacific Bell
	Sperling Jack MD	Pacific Bell
	Still GA & Mildred	Pacific Bell
	Taylor Ann	Pacific Bell
	Vanderlip Ted	Pacific Bell
	Wilkin Ruth E	Pacific Bell
	Zike Mary	Pacific Bell
1991	Barker Carl	Pacific Bell
	Biegler Elmer L	Pacific Bell
	Bradley Arlie	Pacific Bell
	Brooks FL	Pacific Bell
	Brown E	Pacific Bell
	Burgwald H M Jr	Pacific Bell
	Casino Frank	Pacific Bell
	Casino MJ	Pacific Bell
	Castillo Lillian D	Pacific Bell

FINDINGS

Year	Uses	Source
1991	Cohen G G	Pacific Bell
	Cohen Gary	Pacific Bell
	Consalvo Elsa	Pacific Bell
	Consalvo ID	Pacific Bell
	Consani David & Kimn	Pacific Bell
	Curtis Dale V	Pacific Bell
	Daly Howard	Pacific Bell
	di Tona Helen	Pacific Bell
	Forbes B R	Pacific Bell
	Godfrey Lois H	Pacific Bell
	Godfrey M	Pacific Bell
	Godfrey MS	Pacific Bell
	Guichet F L	Pacific Bell
	Gulledge Jewel E	Pacific Bell
	Hanson Josephine	Pacific Bell
	Harrison Louise W	Pacific Bell
	Hartmann Maudell	Pacific Bell
	Hawkins F V	Pacific Bell
	Henderson C A	Pacific Bell
	Henry Jennie	Pacific Bell
	Hersey S	Pacific Bell
	Houpt J Wm	Pacific Bell
	Johnson Aileen Jeisy	Pacific Bell
	Jolley G E	Pacific Bell
	Kanarek Gladys	Pacific Bell
	Kanarek M	Pacific Bell
	Kanarek Shepard S S	Pacific Bell
	Kordos Jennie	Pacific Bell
	Mc Caffrey Charles	Pacific Bell
	Merrtt L	Pacific Bell
	Miller Joseph M Jr	Pacific Bell
	Olson B V	Pacific Bell
	PARK PLAZA RETIREMENT RESIDENCE	Pacific Bell
	Phillips Joseph	Pacific Bell
	Piroli Fanny	Pacific Bell
	Pitcher Laurence	Pacific Bell
	Pitcher Michael	Pacific Bell
	Porter Dorothy M	Pacific Bell

Year	Uses	Source
1991	Rodriguez Jesus & Gay	Pacific Bell
	Ronk Isabelle	Pacific Bell
	Shamrehl Freda	Pacific Bell
	Shamrel J	Pacific Bell
	Smith Gwynavere Mrs	Pacific Bell
	Stern Ernest & Liza	Pacific Bell
	Stone L M	Pacific Bell
	Strickland James A	Pacific Bell
	Stuffler Frank N Cdr	Pacific Bell
	Teigan B L	Pacific Bell
	Teigen Edward & Tammy	Pacific Bell
	Webster Avis R	Pacific Bell
	Winning G M	Pacific Bell

S Glassell St

625 S Glassell St

Year	Uses	Source
2010	ZECHARIAHS	EDR Digital Archive
2005	ZECHARIAHS	EDR Digital Archive

S GLASSELL ST

628 S GLASSELL ST

Year	Uses	Source
1991	Beckett Leland R	Pacific Bell

629 S GLASSELL ST

Year	Uses	Source
1975	Fenner W L	Luskey Brothers & Co., Inc.
1955	Vickers Hattie B Mrs	The Pacific Telephone and Telegraph Co.
1950	Vickers Wm r	The Pacific Telephone and Telegraph Co.
1946	Vickers Wm r	Southern California Telephone Co.

S Glassell St

630 S Glassell St

Year	Uses	Source
2014	WOLVERINE ENVIRONMENTAL INC	EDR Digital Archive
	DENNISON & ASSOC	EDR Digital Archive

FINDINGS

Year	Uses	Source
2014	DINEEN PANATTONI	EDR Digital Archive
	PHILLIPS AUTOMOTIVE INC	EDR Digital Archive
	GEORGE N UJKIC DC INC	EDR Digital Archive
	ANGELA THERESE ARENDT MA LMFT	EDR Digital Archive
	HAPENNY LTD NUMBER 1 A CA	EDR Digital Archive
	BERNAL IRENE LCSW	EDR Digital Archive
	HERRMMAN ANGELA MD	EDR Digital Archive
	MARCUS ETTINGER DC	EDR Digital Archive
	JD SYSTEMS CONSULTING	EDR Digital Archive
	HERRMAN ANGELA MD	EDR Digital Archive
2010	HERRMAN ANGELA MD	EDR Digital Archive
	STANDARD DETOX GROUP INC	EDR Digital Archive
	ARKONA DIANOSTIC SERVICES	EDR Digital Archive
	JD SYSTEMS CONSULTING	EDR Digital Archive
	AREVALOS FRED	EDR Digital Archive
	HERRMMAN ANGELA MD	EDR Digital Archive
	HAPENNY LTD NUMBER 1 A CA	EDR Digital Archive
	BERNAL IRENE LCSW	EDR Digital Archive
	LITEHOUS INC	EDR Digital Archive
	INTERCORE INC	EDR Digital Archive
	LAW OFFICE OF JULIE L RESNER	EDR Digital Archive
	AMETHYST THERAPY	EDR Digital Archive
	ORANGE RANCH PHYSICAL THERAPY	EDR Digital Archive
	GEORGE N UJKIC DC INC	EDR Digital Archive
	M CANNON AND B CHLUPEK A CH	EDR Digital Archive
	MARKEN WORLDWIDE EXPRESS	EDR Digital Archive
	DENNISON & ASSOC	EDR Digital Archive
	WOLVERINE ENVIRONMENTAL INC	EDR Digital Archive
	MARK DROLLINGER	EDR Digital Archive
2005	CARRIAGE STOP INVESTMENTS INC	EDR Digital Archive
	LAWRENCE DELANO TRAN MD A MEDI	EDR Digital Archive
	MARK DROLLINGER	EDR Digital Archive
	LOPEZ & CO	EDR Digital Archive
	WOLVERINE ENVIRONMENTAL INC	EDR Digital Archive
	DENNISON & ASSOC	EDR Digital Archive
	CAPITAL CHARTERS ACQUISITIONS	EDR Digital Archive
	EXEL TRANSPORTATION SERVICES	EDR Digital Archive
	MILLENNIUM MEDICAL MANAGEMENT	EDR Digital Archive

FINDINGS

Year	Uses	Source
2005	ORANGE COUNTY BICYL COALITION	EDR Digital Archive
	HERRMMAN ANGELA MD	EDR Digital Archive
	CORMORANT ORTHAPAEDIC MEDICAL	EDR Digital Archive
	WALLACE PATTI MA ATR BC	EDR Digital Archive
	UJKIC GEORGE N DC	EDR Digital Archive
	M CANNON AND B CHLUPEK A CH	EDR Digital Archive
	MY CAR AGENT	EDR Digital Archive
	PRICE LAPTOPS LOW	EDR Digital Archive
	FINE FORM	EDR Digital Archive
	FASTRACK REMARKETING INC	EDR Digital Archive
	AREVALOS FRED	EDR Digital Archive
	PHYSICAL THERAPY REHAB CENTER	EDR Digital Archive
	FAMILY DEV COUNSELING CTR	EDR Digital Archive
	HERRMANN MD ANGELA INC	EDR Digital Archive

S GLASSELL ST

630 S GLASSELL ST

Year	Uses	Source
1995	U kic George N DC	Pacific Bell
	Sandoval Joseph A CPA	Pacific Bell
	Orange County Bicycle Coalition	Pacific Bell
	Lopez & Company	Pacific Bell
	Harvest Financial Group	Pacific Bell
	Diversion Intervention Centers	Pacific Bell
	Coast Leasing	Pacific Bell
	Capital Charters & Acquisition Inc	Pacific Bell
	Cannon Marah DC	Pacific Bell
	Business CDC Inc	Pacific Bell
	August Vollmer University	Pacific Bell
	Asset Tracking Systems	Pacific Bell
	A am Motors	Pacific Bell
1991	Norrell Health Care Services	Pacific Bell
	Coast Leasing	Pacific Bell
1986	Anaheim Plaza Building	Pacific Bell
	Camino Real Savings & Loan Assoc	Pacific Bell
	Phi Enterprises Inc	Pacific Bell
	Phelan Securities Inc	Pacific Bell
	Phelan Hotel Company	Pacific Bell

Year	Uses	Source
1986	Innkeepers Ltd	Pacific Bell
	HPI Management Co Inc	Pacific Bell
	H P I MAN AGE ME N T CO	Pacific Bell
1980	V I MAN AGE ME N T CO	Pacific Telephone
	V I Hotel Corp	Pacific Telephone
	Anaheim Plaza Building	Pacific Telephone

631 S GLASSELL ST

Year	Uses	Source
1995	Pelayo Alfredo	Pacific Bell
1991	Mendez Lucina	Pacific Bell
1986	Hams R	Pacific Bell
1966	Keith Ralph	Pacific Telephone
1955	Currie Wm J	The Pacific Telephone and Telegraph Co.
1950	Bullock Lawrence R r	The Pacific Telephone and Telegraph Co.
	Mc Cutcheon W C r	The Pacific Telephone and Telegraph Co.
1946	Field Fenn B r	Southern California Telephone Co.

633 S GLASSELL ST

Year	Uses	Source
1991	Salce Mar Io	Pacific Bell
1975	McCoy Danl	Luskey Brothers & Co., Inc.
1955	Carter Robt J	The Pacific Telephone and Telegraph Co.
1950	Wiese S M Mrs r	The Pacific Telephone and Telegraph Co.

S Glassell St

640 S Glassell St

Year	Uses	Source
2014	OCONNER DEBORAH SNELL	EDR Digital Archive
2010	OCONNER DEBORAH SNELL	EDR Digital Archive
2005	OCONNER DEBORAH SNELL	EDR Digital Archive

S GLASSELL ST

640 S GLASSELL ST

Year	Uses	Source
1995	Orange Outreach	Pacific Bell
	Flem Ing Lynne LCSW	Pacific Bell
1980	Iba Diiie	Pacific Telephone

641 S GLASSELL ST

Year	Uses	Source
1991	White R	Pacific Bell
1980	Jensen Wm R	Pacific Telephone
1966	Nielsen L E	Pacific Telephone

643 S GLASSELL ST

Year	Uses	Source
1975	Campbell Eric M	Luskey Brothers & Co., Inc.
1970	Forbess Douglas D	General Telephone Co., of California
1966	Greenberg W R	Pacific Telephone

645 S GLASSELL ST

Year	Uses	Source
1966	Ferris Kenneth	Pacific Telephone

647 S GLASSELL ST

Year	Uses	Source
1966	Heim Lawrence F	Pacific Telephone

655 S GLASSELL ST

Year	Uses	Source
1995	Watson Kellar E	Pacific Bell
1991	Watson Kellar E	Pacific Bell
	Watson Kelhe L	Pacific Bell
1980	Watson Kellar E	Pacific Telephone
1975	Watson Kellar E	Luskey Brothers & Co., Inc.
1970	Watson Kellar E	General Telephone Co., of California
1966	Watson Kellar E	Pacific Telephone
1955	Watson Kellar E Jr	The Pacific Telephone and Telegraph Co.
1950	Watson Kellar E Jr r	The Pacific Telephone and Telegraph Co.
1946	Watson Kellar E Jr r	Southern California Telephone Co.

S Glassell St

660 S Glassell St

Year	Uses	Source
2014	STERLING SECURITY SYSTEMS DALE	EDR Digital Archive
	P C AND LOGISTICS LLC	EDR Digital Archive
	CLEAN TERMITE CONTROL	EDR Digital Archive
	TEX-SKY PROPERTIES LLC	EDR Digital Archive

FINDINGS

Year	Uses	Source
2014	FOCUZ INTERPRETING	EDR Digital Archive
2010	FOCUZ INTERPRETING	EDR Digital Archive
	ROM TRANS	EDR Digital Archive
	PASCUCI CLAUDIU	EDR Digital Archive
	BIRD SONG MEDIA	EDR Digital Archive
	RENATO BARLES	EDR Digital Archive
	TEX-SKY PROPERTIES LLC	EDR Digital Archive
	PRO-CLEAN POWERWASH	EDR Digital Archive
	GREAT AMERICAN SUPERMARKET	EDR Digital Archive
	UNEMPLOYED	EDR Digital Archive
	CLEAN TERMITE CONTROL	EDR Digital Archive
	P C AND LOGISTICS LLC	EDR Digital Archive
	STERLING SECURITY SYSTEMS DALE	EDR Digital Archive
2005	SALCEDO GREGORY W	EDR Digital Archive
	DV8 GUITARS INC	EDR Digital Archive
	BRYAN KAYE IMPEX INC	EDR Digital Archive

S GLASSELL ST

660 S GLASSELL ST

Year	Uses	Source
1995	Anderson Dena	Pacific Bell
	Bouyer John R	Pacific Bell
	Buehler Matthew & Tara	Pacific Bell
	Burbank LD	Pacific Bell
	De Lay John	Pacific Bell
	Firchau Thad D	Pacific Bell
	Ida VF	Pacific Bell
	Kim Woo Jung	Pacific Bell
	Lee Scott	Pacific Bell
	Lopez Ruben	Pacific Bell
	Milner James W	Pacific Bell
	Mullenburg Cordell	Pacific Bell
	Murakami Fuyuko	Pacific Bell
	Rubin Martin	Pacific Bell
	Tamayoshi ANAHEIM	Pacific Bell
1991	Williams John	Pacific Bell
	Wooten R	Pacific Bell
	Barles Renato	Pacific Bell

FINDINGS

Year	Uses	Source
1991	Bellamy Randy & Masae	Pacific Bell
	Bellamy Ray W	Pacific Bell
	Blust C D	Pacific Bell
	Bresee Mark & Dawn	Pacific Bell
	Bresenoff Stanley W 7	Pacific Bell
	Brito John & Vycki	Pacific Bell
	Burbank LD	Pacific Bell
	Burns H L	Pacific Bell
	Christ Margie A	Pacific Bell
	Coen R J	Pacific Bell
	Freeman S	Pacific Bell
	Freeman SJ	Pacific Bell
	Guillen R	Pacific Bell
	Hendrickson Mark L	Pacific Bell
	Herrera Jose	Pacific Bell
	Ida VF	Pacific Bell
	Mcintyre M	Pacific Bell
	Milner James W	Pacific Bell
	Muilenburg Cordell	Pacific Bell
	Mullen R A	Pacific Bell
	Riccitelli Christina	Pacific Bell
	Rolph Stephen J	Pacific Bell
	Rolsen Lan	Pacific Bell
	Rolsheim Richard	Pacific Bell
	Rubln Martin	Pacific Bell
	Sansoucie T	Pacific Bell
	Shults Rg Uss	Pacific Bell
1986	Adams Wm E	Pacific Bell
	Ball Kathleen D	Pacific Bell
	Baskette John	Pacific Bell
	Bell David & Margaret	Pacific Bell
	Black M J	Pacific Bell
	Borland Jas R	Pacific Bell
	Cosgrove M	Pacific Bell
	Cox Jerry	Pacific Bell
	Dargatz Robt Rev	Pacific Bell
	Dilzer Jim	Pacific Bell
	Doney D K	Pacific Bell

FINDINGS

Year	Uses	Source
1986	Dorrington Frank R	Pacific Bell
	Dusenbury J N	Pacific Bell
	Emery Steven E	Pacific Bell
	Gray Danny	Pacific Bell
	Hamilton Steve	Pacific Bell
	Hemandez David	Pacific Bell
	Hughey Ken	Pacific Bell
	Ida VF	Pacific Bell
	Julian Joseph	Pacific Bell
	Loughlin Tom & K J	Pacific Bell
	Manchester Roc E	Pacific Bell
	Masterson J	Pacific Bell
	Mickelson Brian	Pacific Bell
	Miller Jon P	Pacific Bell
	Minor M	Pacific Bell
	Mullen R A	Pacific Bell
	OKeefe P	Pacific Bell
	Piraino Anthony	Pacific Bell
	Rubin Martin	Pacific Bell
	Sanders Alan D	Pacific Bell
	Scott Thomas A	Pacific Bell
	Shea James J Jr	Pacific Bell
	Sigalas Michael	Pacific Bell
	Spitler Richard	Pacific Bell
	Stiles Mike	Pacific Bell
	Stout Brad D	Pacific Bell
1980	Arnold A	Pacific Telephone
	Bardon Donald R	Pacific Telephone
	Bardon GL	Pacific Telephone
	Cedar F D	Pacific Telephone
	Doney DK	Pacific Telephone
	Gaylord Jon	Pacific Telephone
	Howard Donald J	Pacific Telephone
	Ida VF	Pacific Telephone
	Kennedy Linda	Pacific Telephone
	Konrad Stephen G	Pacific Telephone
	Lalpple William C	Pacific Telephone
	Lovret L A	Pacific Telephone

FINDINGS

Year	Uses	Source
1980	Lyie Jerry	Pacific Telephone
	Minor M	Pacific Telephone
	Nelson Rick A & Lisa	Pacific Telephone
	Olone Nil	Pacific Telephone
	Park Orleans Apartments	Pacific Telephone
	Park Orleans Association	Pacific Telephone
	Phill Ips Frank	Pacific Telephone
	Schamehorn Phil	Pacific Telephone
	Shea Jim J Jr	Pacific Telephone
	Wegier D	Pacific Telephone
1975	Devalle L C	Luskey Brothers & Co., Inc.
	Durham Carolyn L	Luskey Brothers & Co., Inc.
	Finnegan Denis	Luskey Brothers & Co., Inc.
	Gomez Osvaldo I	Luskey Brothers & Co., Inc.
	Guest Ruby	Luskey Brothers & Co., Inc.
	Gwin Leroy E	Luskey Brothers & Co., Inc.
	Haislett Theresa A	Luskey Brothers & Co., Inc.
	Hansen Courtney	Luskey Brothers & Co., Inc.
	Hatter Terry G	Luskey Brothers & Co., Inc.
	Holland Geo K	Luskey Brothers & Co., Inc.
	Holston Greg	Luskey Brothers & Co., Inc.
	Huizing Ron	Luskey Brothers & Co., Inc.
	Ida V F	Luskey Brothers & Co., Inc.
	Jennings W T M Sgt Ret	Luskey Brothers & Co., Inc.
	Jones Steven D	Luskey Brothers & Co., Inc.
	Kearney Michael	Luskey Brothers & Co., Inc.
	Kopf Hans Peter	Luskey Brothers & Co., Inc.
	Lack Robt	Luskey Brothers & Co., Inc.
	Leestma Peter G	Luskey Brothers & Co., Inc.
	Lyle Jerry	Luskey Brothers & Co., Inc.
	Madden Buddy W Jr	Luskey Brothers & Co., Inc.
	Mahon John	Luskey Brothers & Co., Inc.
	Martin Cyndi	Luskey Brothers & Co., Inc.
	Martin Jos T	Luskey Brothers & Co., Inc.
	McDaniel N J	Luskey Brothers & Co., Inc.
	McMahon Maureen	Luskey Brothers & Co., Inc.
	McMahon Sue	Luskey Brothers & Co., Inc.
	McMasters John J Jr	Luskey Brothers & Co., Inc.

FINDINGS

Year	Uses	Source
1975	Millen Wm Michael	Luskey Brothers & Co., Inc.
	Murakami Donald S	Luskey Brothers & Co., Inc.
	Nevins Frank E	Luskey Brothers & Co., Inc.
	Nieblas Alfred E	Luskey Brothers & Co., Inc.
	Park @Orange@ Apartments	Luskey Brothers & Co., Inc.
	Parratt Steve R	Luskey Brothers & Co., Inc.
	Pietrzak Wm J	Luskey Brothers & Co., Inc.
	Pressnall T M	Luskey Brothers & Co., Inc.
	Quistgard Mitchell P	Luskey Brothers & Co., Inc.
	Rainey Tom	Luskey Brothers & Co., Inc.
	Richardson David W	Luskey Brothers & Co., Inc.
	Rogers Sylvia	Luskey Brothers & Co., Inc.
	Rosen Burton J	Luskey Brothers & Co., Inc.
	Ross S	Luskey Brothers & Co., Inc.
	Rowland E J	Luskey Brothers & Co., Inc.
	Sakamoto J	Luskey Brothers & Co., Inc.
	Schillo Wm	Luskey Brothers & Co., Inc.
	Schlueter Karen	Luskey Brothers & Co., Inc.
	Shane A G	Luskey Brothers & Co., Inc.
	Sheldon Gregory Lee	Luskey Brothers & Co., Inc.
	Sherman Jeffrey R	Luskey Brothers & Co., Inc.
	Shoda Stephen M	Luskey Brothers & Co., Inc.
	Smith Larry	Luskey Brothers & Co., Inc.
	Stites Richard M	Luskey Brothers & Co., Inc.
	Stout Dennis	Luskey Brothers & Co., Inc.
	Stuart Danl	Luskey Brothers & Co., Inc.
	Tekada Barbara	Luskey Brothers & Co., Inc.
	Trabant Gary	Luskey Brothers & Co., Inc.
	Wallner Maurice C	Luskey Brothers & Co., Inc.
	Williams Robt E Jr	Luskey Brothers & Co., Inc.
	Aksland Clifford L Jr	Luskey Brothers & Co., Inc.
	Anderson Bruce L	Luskey Brothers & Co., Inc.
	Bandur Deborah J	Luskey Brothers & Co., Inc.
	Baugher Leonard W	Luskey Brothers & Co., Inc.
	Bennett Neil F	Luskey Brothers & Co., Inc.
	Benton Gregory J	Luskey Brothers & Co., Inc.
	Conway Kathy	Luskey Brothers & Co., Inc.
	Cowan J A	Luskey Brothers & Co., Inc.

FINDINGS

Year	Uses	Source
1975	Dean Robt M	Luskey Brothers & Co., Inc.
	Dehoff Rebecca	Luskey Brothers & Co., Inc.
	Dehoff Timothy	Luskey Brothers & Co., Inc.
	Dekal Edwin P	Luskey Brothers & Co., Inc.
1970	Hurzeler Donald J	General Telephone Co., of California
	Ida V F	General Telephone Co., of California
	Jacobs Norman G	General Telephone Co., of California
	Jamieson Douglas R	General Telephone Co., of California
	Jurek J S	General Telephone Co., of California
	Mac Hale Richard	General Telephone Co., of California
	Manning J R	General Telephone Co., of California
	Mc Clelland Kathie	General Telephone Co., of California
	Meyers Connie	General Telephone Co., of California
	Norton Kent L	General Telephone Co., of California
	Palmer Judy E	General Telephone Co., of California
	Park Orange	General Telephone Co., of California
	Prennance Art	General Telephone Co., of California
	Ratoike Wilbur H	General Telephone Co., of California
	Reed D Stephen	General Telephone Co., of California
	Robertson Steven	General Telephone Co., of California
	Samuel Judy K	General Telephone Co., of California
	Samuel Martin J	General Telephone Co., of California
	Saros Nick L	General Telephone Co., of California
	Schwartz K A	General Telephone Co., of California
	Shand Garth D	General Telephone Co., of California
	Smiaey Sue	General Telephone Co., of California
	Starner Bryan	General Telephone Co., of California
	Starner Christine A	General Telephone Co., of California
	Strelsky Richard A	General Telephone Co., of California
	Suglmoto Tsuyoslil	General Telephone Co., of California
	Swanson Kristine	General Telephone Co., of California
	Thomas Cathy	General Telephone Co., of California
	Van Uden Mark J	General Telephone Co., of California
	Vaught Robt J	General Telephone Co., of California
	Ward R N	General Telephone Co., of California
	Warner Kerry	General Telephone Co., of California
	Wendt MIDWAY CITY	General Telephone Co., of California
	Williams Gwilym III	General Telephone Co., of California

FINDINGS

Year	Uses	Source
1970	Woodard Nicholas S	General Telephone Co., of California
	Anderson Bruce K	General Telephone Co., of California
	Bell Michel	General Telephone Co., of California
	Blaskey Marion	General Telephone Co., of California
	Boals Barry	General Telephone Co., of California
	Brannan Jas R	General Telephone Co., of California
	Buckley David M	General Telephone Co., of California
	Bullock Harold R	General Telephone Co., of California
	Burbank Rudy	General Telephone Co., of California
	Cantwell Laraine L	General Telephone Co., of California
	Carrillo Walter L	General Telephone Co., of California
	Cartwright Curtis W	General Telephone Co., of California
	Cartwright Gail R	General Telephone Co., of California
	Cronkhiite Edw G	General Telephone Co., of California
	Davis Susan F	General Telephone Co., of California
	Dexter Steve D	General Telephone Co., of California
	Dick Robt W	General Telephone Co., of California
	Dobson Nancy L	General Telephone Co., of California
	Dufore Norman	General Telephone Co., of California
	Dumond Dale B	General Telephone Co., of California
	Feidt Barbara	General Telephone Co., of California
	Flanigan Michael W	General Telephone Co., of California
	Frost Roger F	General Telephone Co., of California
	Gabbard Bill R	General Telephone Co., of California
	Garrett Christine	General Telephone Co., of California
	Gibson COSTA MESA	General Telephone Co., of California
	Hamilton Patrick T	General Telephone Co., of California
	Hamilton Rick	General Telephone Co., of California
	Hart Jessie	General Telephone Co., of California
	Holt Martha	General Telephone Co., of California
	Hose W R	General Telephone Co., of California
	Hubbard Bruce W	General Telephone Co., of California
	Hungerford John A	General Telephone Co., of California
	Hungerford Margaret E	General Telephone Co., of California
	Hurst Suzanne	General Telephone Co., of California

S Glassell St

684 S Glassell St

Year	Uses	Source
2014	CADNICKS INC	EDR Digital Archive
2010	DANNY S UNION 76 SERVICE	EDR Digital Archive
	JEMS ORANGE 76	EDR Digital Archive
2005	JEMS ORANGE 76	EDR Digital Archive
	DANNY S UNION 76 SERVICE	EDR Digital Archive

S GLASSELL ST

684 S GLASSELL ST

Year	Uses	Source
1995	Dannys Union Service	Pacific Bell
	Dannys Union Service	Pacific Bell
	Unocal Dealers Service Stations Contd Laguna Beach	Pacific Bell
	Dannys Union Service	Pacific Bell
	Smog Check Stations Contd Orange	Pacific Bell
1991	Dannys Union Service	Pacific Bell
	Danny s Union Service	Pacific Bell
1986	Dannys Union Service	Pacific Bell
	Higgins Transfer Service	Pacific Bell
1980	Maurys Union Service	Pacific Telephone
1975	Maurys Union Service	Luskey Brothers & Co., Inc.
1966	Glenns Union Service	Pacific Telephone
	Glenns Union Service	Pacific Telephone

S OLIVE

495 S OLIVE

Year	Uses	Source
1941	Long G R Mrs r	Southern California Telephone Co.

S OLIVE ST

476 S OLIVE ST

Year	Uses	Source
1975	Barrett Elizabeth A	Luskey Brothers & Co., Inc.

FINDINGS

477 S OLIVE ST

Year	Uses	Source
1980	Cebrynski	Pacific Telephone
1975	DArcy S E	Luskey Brothers & Co., Inc.
1970	Smith Christopher A	General Telephone Co., of California
1966	Robbins Jas W	Pacific Telephone

480 S OLIVE ST

Year	Uses	Source
1991	Stuckey Olen	Pacific Bell
1986	Stuckey Olen	Pacific Bell
1980	Stuckey Olen	Pacific Telephone
1970	Sundquist John W	General Telephone Co., of California
1966	Golightly Chas T	Pacific Telephone

484 S OLIVE ST

Year	Uses	Source
1975	Papalexis A	Luskey Brothers & Co., Inc.
1970	Papalexis A	General Telephone Co., of California
1930	C C BENNETT	Western Directory Co.
1925	C C Bennett	Western Directory Co.
1922	C C Bennett	Western Directory Co.

485 S OLIVE ST

Year	Uses	Source
1975	Luqueno Luz	Luskey Brothers & Co., Inc.
1966	Nunez Francisco B	Pacific Telephone
	Nunez Alice F	Pacific Telephone
1930	H-ENRY DIESEL	Western Directory Co.
1925	Henry Diesel	Western Directory Co.

486 S OLIVE ST

Year	Uses	Source
1995	French Dolores	Pacific Bell
1991	French Dolores	Pacific Bell
1986	Knowles Martha I	Pacific Bell
1975	Malone C	Luskey Brothers & Co., Inc.
1966	Hood Jas I	Pacific Telephone

488 S OLIVE ST

Year	Uses	Source
1980	Jackson E	Pacific Telephone
1975	Jackson E	Luskey Brothers & Co., Inc.
1970	George Lee	General Telephone Co., of California

490 S OLIVE ST

Year	Uses	Source
1991	Young Richard A	Pacific Bell
1980	Young Richard A	Pacific Telephone
1970	Hood Jas$I	General Telephone Co., of California

495 S OLIVE ST

Year	Uses	Source
1980	Gonzales Roger & Terri	Pacific Telephone
1970	Nunez Francisco	General Telephone Co., of California
1966	Mortensen Sorn C	Pacific Telephone
1930	J T WILSON	Western Directory Co.
1925	Mrs Melissa Long	Western Directory Co.
1922	A J Eich	Western Directory Co.

S ORANGE

493 S ORANGE

Year	Uses	Source
1941	Whitsell G W r	Southern California Telephone Co.

525 S ORANGE

Year	Uses	Source
1941	Ralph A E r	Southern California Telephone Co.

544 S ORANGE

Year	Uses	Source
1941	Monroe Elizabeth T r	Southern California Telephone Co.

615 S ORANGE

Year	Uses	Source
1941	Wallin J D r	Southern California Telephone Co.

620 S ORANGE

Year	Uses	Source
1941	Havens A L r	Southern California Telephone Co.

621 S ORANGE

Year	Uses	Source
1941	Baker Artie Mrs r	Southern California Telephone Co.

629 S ORANGE

Year	Uses	Source
1941	Intorf L H r	Southern California Telephone Co.

S ORANGE AVE

604 S ORANGE AVE

Year	Uses	Source
1966	Hoke Monica D	Pacific Telephone

609 S ORANGE AVE

Year	Uses	Source
1966	Snow H J	Pacific Telephone
	Trussler A	Pacific Telephone

620 S ORANGE AVE

Year	Uses	Source
1966	Betschart F J	Pacific Telephone

621 S ORANGE AVE

Year	Uses	Source
1966	Read Barbara	Pacific Telephone
	Anderson Jacquelyne	Pacific Telephone
	Baker Artie Mrs	Pacific Telephone

622 S ORANGE AVE

Year	Uses	Source
1966	Slaten Donna	Pacific Telephone
	Slaten John W Jr	Pacific Telephone

624 S ORANGE AVE

Year	Uses	Source
1966	Trinkaus Earl	Pacific Telephone

626 S ORANGE AVE

Year	Uses	Source
1966	Frye Ilva M	Pacific Telephone

636 S ORANGE AVE

Year	Uses	Source
1966	Van Dame D T	Pacific Telephone

649 S ORANGE AVE

Year	Uses	Source
1966	Moses Carl	Pacific Telephone

S ORANGE ST

482 S ORANGE ST

Year	Uses	Source
1975	Moseley M M	Luskey Brothers & Co., Inc.

484 S ORANGE ST

Year	Uses	Source
1975	Coney B A	Luskey Brothers & Co., Inc.
1970	Spiering Agnes	General Telephone Co., of California

485 S ORANGE ST

Year	Uses	Source
1986	Rasch Philip & Karen	Pacific Bell
1975	Rasch Philip E	Luskey Brothers & Co., Inc.
1955	Stuurmans Gerrit	The Pacific Telephone and Telegraph Co.
1950	Graber Roy E r	The Pacific Telephone and Telegraph Co.
1925	John Utz	Western Directory Co.
1922	John UTtz	Western Directory Co.

488 S ORANGE ST

Year	Uses	Source
1975	Zink Bryan	Luskey Brothers & Co., Inc.

492 S ORANGE ST

Year	Uses	Source
1995	Reiber ML	Pacific Bell
1991	Reiber M L	Pacific Bell
1986	Reiber M L	Pacific Bell
1980	Reiber ML	Pacific Telephone
1975	Reiber M L	Luskey Brothers & Co., Inc.
1970	Sohre Elsie H	General Telephone Co., of California

FINDINGS

493 S ORANGE ST

Year	Uses	Source
1991	Nielsen Chas F	Pacific Bell
1986	Nielsen Chas F	Pacific Bell
1980	Nielsen Chas F	Pacific Telephone
1975	Nielsen Chas F	Luskey Brothers & Co., Inc.
1970	Nielsen Chas F	General Telephone Co., of California
1955	Potter Claude E Mrs	The Pacific Telephone and Telegraph Co.
1950	Potter Claude E Mrs r	The Pacific Telephone and Telegraph Co.
1946	Potter Claude E Mrs r	Southern California Telephone Co.
1925	G W Whitsell	Western Directory Co.
1922	G W Whitsell	Western Directory Co.

509 S ORANGE ST

Year	Uses	Source
1970	Capell Alfred L	General Telephone Co., of California

510 S ORANGE ST

Year	Uses	Source
1991	Angel John J	Pacific Bell
1980	Angel John J	Pacific Telephone
1975	Angel John J	Luskey Brothers & Co., Inc.
1970	Angel John J	General Telephone Co., of California
1955	Leininger Wm H	The Pacific Telephone and Telegraph Co.
1950	Ahern Drennan r	The Pacific Telephone and Telegraph Co.

515 S ORANGE ST

Year	Uses	Source
1970	Zwiener Margaret H	General Telephone Co., of California
	Flores E L	General Telephone Co., of California
1946	Hopman Elmer F r	Southern California Telephone Co.
1925	Frank Shoenheider	Western Directory Co.
1922	J L Ainsworth	Western Directory Co.

518 S ORANGE ST

Year	Uses	Source
1975	Aaron Harold W	Luskey Brothers & Co., Inc.
1950	Parsons G S r	The Pacific Telephone and Telegraph Co.

FINDINGS

525 S ORANGE ST

Year	Uses	Source
1991	Trebing Michael	Pacific Bell
1950	Linnert Ralph E r	The Pacific Telephone and Telegraph Co.
1946	Bartlett E D r	Southern California Telephone Co.
1925	Theo Erickson	Western Directory Co.
1922	R E Hostetler	Western Directory Co.

528 S ORANGE ST

Year	Uses	Source
1980	Welch Sharon A	Pacific Telephone
	Belton PHSr&IR	Pacific Telephone
	Betton Linda	Pacific Telephone
	Welch Mary B	Pacific Telephone
1975	Rowan Joe W	Luskey Brothers & Co., Inc.
1970	Rowan Joe W	General Telephone Co., of California
1955	Stephan Paul	The Pacific Telephone and Telegraph Co.
1925	G D Brown	Western Directory Co.

530 S ORANGE ST

Year	Uses	Source
1995	Jimenez Noemi	Pacific Bell
1991	Spaid Steve	Pacific Bell
1986	Spaid Steve	Pacific Bell
1980	Mc Leod Curtis J	Pacific Telephone

534 S ORANGE ST

Year	Uses	Source
1970	Bothum Margaret	General Telephone Co., of California

535 S ORANGE ST

Year	Uses	Source
1986	Bigelow Ben L	Pacific Bell
1975	Bigelow Ben L	Luskey Brothers & Co., Inc.
1970	Bigelow Ben L	General Telephone Co., of California
1955	Paulsell Sidney R	The Pacific Telephone and Telegraph Co.
1950	Wood C A r	The Pacific Telephone and Telegraph Co.
1946	Wood C A r	Southern California Telephone Co.

FINDINGS

540 S ORANGE ST

Year	Uses	Source
1970	Alexander Edgar	General Telephone Co., of California

544 S ORANGE ST

Year	Uses	Source
1995	Critchfleld Robert H III	Pacific Bell
1980	Zimbelman Richard A	Pacific Telephone
1975	Tucker D E	Luskey Brothers & Co., Inc.

545 S ORANGE ST

Year	Uses	Source
1980	Trewett Helen M	Pacific Telephone
1975	Trewett Helen M	Luskey Brothers & Co., Inc.
1970	Trewett John	General Telephone Co., of California
	Norman C A	General Telephone Co., of California
1925	J C Lindeman	Western Directory Co.

555 S ORANGE ST

Year	Uses	Source
1925	C A Wood	Western Directory Co.
1922	G C Bolm	Western Directory Co.

600 S ORANGE ST

Year	Uses	Source
1966	Graffius Ralph D	Pacific Telephone

601 S ORANGE ST

Year	Uses	Source
1970	Lloyd Mc Kinley M	General Telephone Co., of California
	Stuart Howard B	General Telephone Co., of California

604 S ORANGE ST

Year	Uses	Source
1991	Hoke Monica D	Pacific Bell
1986	Hoke Monica D	Pacific Bell
1980	Hoke Monica D	Pacific Telephone
1975	Hoke Monica D	Luskey Brothers & Co., Inc.
1970	Hoke Monica D	General Telephone Co., of California
1955	Capps Boyd R	The Pacific Telephone and Telegraph Co.
1950	Cathey H W r	The Pacific Telephone and Telegraph Co.

Year	Uses	Source
1946	Mc Shane A C r	Southern California Telephone Co.

609 S ORANGE ST

Year	Uses	Source
1986	Culpepper M	Pacific Bell
	Coffey Dwain E	Pacific Bell
1980	Snow HJ	Pacific Telephone
1975	Snow H J	Luskey Brothers & Co., Inc.
1970	Snow H J	General Telephone Co., of California
1955	Snow H J	The Pacific Telephone and Telegraph Co.
1950	Snow H J r	The Pacific Telephone and Telegraph Co.
1925	H J Snow	Western Directory Co.
1922	H J Snow	Western Directory Co.

610 S ORANGE ST

Year	Uses	Source
1970	Olson Elven	General Telephone Co., of California

611 S ORANGE ST

Year	Uses	Source
1970	Davis Jack D	General Telephone Co., of California

612 S ORANGE ST

Year	Uses	Source
1995	De Fazio Joseph	Pacific Bell
	De Fazio Robert R	Pacific Bell
1991	De Fazio Robert R	Pacific Bell
	Defalio T lag B	Pacific Bell
	De Fazio Joseph	Pacific Bell
1955	Garrison Robt E	The Pacific Telephone and Telegraph Co.
1925	H R Swafford	Western Directory Co.
1922	H R Swafford	Western Directory Co.

615 S ORANGE ST

Year	Uses	Source
1980	Barnes Lila B	Pacific Telephone
1975	Barnes Lila B	Luskey Brothers & Co., Inc.
1970	Barnes Lila B	General Telephone Co., of California
1955	Res	The Pacific Telephone and Telegraph Co.
1950	Fowler Jas G r	The Pacific Telephone and Telegraph Co.

Year	Uses	Source
1946	Looney Chas V r	Southern California Telephone Co.
1925	Holliday Runyon	Western Directory Co.
1922	W H Beck	Western Directory Co.

616 S ORANGE ST

Year	Uses	Source
1980	Bernhard Donald Jean	Pacific Telephone

619 S ORANGE ST

Year	Uses	Source
1970	Poole Maurice	General Telephone Co., of California

620 S ORANGE ST

Year	Uses	Source
1986	Blackmore Edwin	Pacific Bell
1975	Sears P	Luskey Brothers & Co., Inc.
1955	Havens A L	The Pacific Telephone and Telegraph Co.
1950	Havens A L r	The Pacific Telephone and Telegraph Co.
1946	Havens A L r	Southern California Telephone Co.
1925	A L Havens	Western Directory Co.
1922	A L Havens	Western Directory Co.

621 S ORANGE ST

Year	Uses	Source
1980	Lopez Simon A	Pacific Telephone
	Rodney	Pacific Telephone
	Montgomery Dixie	Pacific Telephone
1975	Lilienthal P	Luskey Brothers & Co., Inc.
	Kuhn Harold	Luskey Brothers & Co., Inc.
	Bowers F E	Luskey Brothers & Co., Inc.
1970	Baker Artie Mrs	General Telephone Co., of California
1955	Baker Artie Mrs	The Pacific Telephone and Telegraph Co.
1950	Baker Artie Mrs r	The Pacific Telephone and Telegraph Co.
	Helliwell Ethel r	The Pacific Telephone and Telegraph Co.
1946	Baker Artie Mrs r	Southern California Telephone Co.
	Helliwell Ethel r	Southern California Telephone Co.
1925	P H Baker	Western Directory Co.
1922	p H Baker	Western Directory Co.

FINDINGS

622 S ORANGE ST

Year	Uses	Source
1975	Montamble Phil III	Luskey Brothers & Co., Inc.
	Montamble Linda	Luskey Brothers & Co., Inc.

623 S ORANGE ST

Year	Uses	Source
1970	Pounds Kenneth	General Telephone Co., of California
	tyourler Cecil	General Telephone Co., of California

624 S ORANGE ST

Year	Uses	Source
1975	Olds Fred S	Luskey Brothers & Co., Inc.
1970	Jewell Marvin L	General Telephone Co., of California
1950	Draper Emma W r	The Pacific Telephone and Telegraph Co.
1925	W C Hanger	Western Directory Co.

625 S ORANGE ST

Year	Uses	Source
1980	Abalos Inez	Pacific Telephone
	Ambriz Adolfo	Pacific Telephone
1970	Ambriz Amalla	General Telephone Co., of California
	Ambriz Adolfo	General Telephone Co., of California

626 S ORANGE ST

Year	Uses	Source
1980	Hirano Seiji	Pacific Telephone
1975	Hawkins Michael W	Luskey Brothers & Co., Inc.
1970	Burnette Don	General Telephone Co., of California
	Beaman Aileene D	General Telephone Co., of California
	Beaman Floyd I	General Telephone Co., of California
1966	Beaman Aileene D	Pacific Telephone
	Beaman Floyd I	Pacific Telephone
1955	Frye Ilva M	The Pacific Telephone and Telegraph Co.
	Moring Martha	The Pacific Telephone and Telegraph Co.
1950	Frye Ilva M r	The Pacific Telephone and Telegraph Co.
1946	Frye Ilva M r	Southern California Telephone Co.
1925	R B Pearson	Western Directory Co.
1922	Chas Foster	Western Directory Co.

628 S ORANGE ST

Year	Uses	Source
1925	F H Rohde	Western Directory Co.
1922	Mrs M E Collins	Western Directory Co.

S Orange St

629 S Orange St

Year	Uses	Source
2014	LAUREL COLLECTION	EDR Digital Archive
	IRIS & ME	EDR Digital Archive
2010	LAUREL COLLECTION	EDR Digital Archive
	IRIS & ME	EDR Digital Archive
2005	LAUREL COLLECTION	EDR Digital Archive

S ORANGE ST

629 S ORANGE ST

Year	Uses	Source
1986	Lopez J	Pacific Bell
1970	Higgins W W	General Telephone Co., of California
1955	Intorf L H	The Pacific Telephone and Telegraph Co.
1950	Intorf L H r	The Pacific Telephone and Telegraph Co.
1946	Intorf L H r	Southern California Telephone Co.
1925	L H Jntorf	Western Directory Co.
1922	L H Intorf	Western Directory Co.

634 S ORANGE ST

Year	Uses	Source
1970	Owen Anna Mrs	General Telephone Co., of California

635 S ORANGE ST

Year	Uses	Source
1995	Workman Geneva M	Pacific Bell
1991	Workman Geneva M	Pacific Bell
1980	Workman Geneva M	Pacific Telephone
1975	Workman Geneva M	Luskey Brothers & Co., Inc.

636 S ORANGE ST

Year	Uses	Source
1995	Tollison Gary	Pacific Bell

Year	Uses	Source
1991	Van Dame DT	Pacific Bell
	Tollison Gary	Pacific Bell
	Meador Mike	Pacific Bell
1986	Starr Jack	Pacific Bell
	Meador Mike	Pacific Bell
1980	Van Dame D T	Pacific Telephone
	Van Dame Virgina	Pacific Telephone
1975	Van Dame Donald T	Luskey Brothers & Co., Inc.
	Van Dame D T	Luskey Brothers & Co., Inc.
1970	Van Dame Donald T	General Telephone Co., of California
	Van Dame D T	General Telephone Co., of California
1955	Van Dame D T	The Pacific Telephone and Telegraph Co.
1950	Bouck W E r	The Pacific Telephone and Telegraph Co.
1925	L A Duncan	Western Directory Co.
1922	I J Burd	Western Directory Co.

637 S ORANGE ST

Year	Uses	Source
1995	Cress B L	Pacific Bell
1991	Cress BL	Pacific Bell
	Cress Bob	Pacific Bell
	Cress Doris E	Pacific Bell
1986	Cress B L	Pacific Bell
1980	Cress BL	Pacific Telephone
1975	Cress B L	Luskey Brothers & Co., Inc.

640 S ORANGE ST

Year	Uses	Source
1925	Vacant	Western Directory Co.
1922	Edmund Laederich	Western Directory Co.

667 S ORANGE ST

Year	Uses	Source
1991	Robertson Julian V	Pacific Bell

SE FAIRWAY DR

162 SE FAIRWAY DR

Year	Uses	Source
1980	Castilian Park Apartments	Pacific Telephone

SE LA VETA AVE

192 SE LA VETA AVE

Year	Uses	Source
1980	Mc Glynn R J Investment Co	Pacific Telephone

W LA VETA AVE

100 W LA VETA AVE

Year	Uses	Source
1995	Davis Gary Vo DDS	Pacific Bell
	Stroschein Guilbert TDDS	Pacific Bell
	Micro MD	Pacific Bell
	Ullyott L W	Pacific Bell
1980	Hobbs Kenneth G Jr MD	Pacific Telephone
	Bergstrom Richard A MD	Pacific Telephone
	IKahn Bernard MD	Pacific Telephone
	Kravif Eward Mb	Pacific Telephone
	Oroiino Caesar F MD La Veta Orthopedic Medical GCroup Inc	Pacific Telephone
	S UTHW E S T ME ICAL TRAN S CRIBE RS	Pacific Telephone
1970	Smith Hobart H & Bartlett Wm L MDs	General Telephone Co., of California
	Moran E Terrence MD Moran Rowen & Dorsey Inc Mo Ds	General Telephone Co., of California

101 W LA VETA AVE

Year	Uses	Source
1995	Sandoval Irma	Pacific Bell
1991	Dodson LT	Pacific Bell
	Godson Kent	Pacific Bell

105 W LA VETA AVE

Year	Uses	Source
1995	Allen Francis PHD a	Pacific Bell

108 W LA VETA AVE

Year	Uses	Source
1995	Hathaway Philip E	Pacific Bell

FINDINGS

109 W LA VETA AVE

Year	Uses	Source
1970	COUNTY I	General Telephone Co., of California
	Myers Marilyn G MD I	General Telephone Co., of California

110 W LA VETA AVE

Year	Uses	Source
1991	Provincial Building Services Inc	Pacific Bell

112 W LA VETA AVE

Year	Uses	Source
1995	Wallach Stuart Latty	Pacific Bell

120 W LA VETA AVE

Year	Uses	Source
1995	Connors John	Pacific Bell
1986	Greene Jr Clarence S MD	Pacific Bell
	Luoan David S m d	Pacific Bell
1980	Poucher Russet L MD Diabetes & Endocrinology Medical Group Inc	Pacific Telephone
	Poucher Stacey	Pacific Telephone

121 W LA VETA AVE

Year	Uses	Source
1995	MACKIE G GARY MD U C I MEDICAL GROUP	Pacific Bell
1980	Pke obert E MD	Pacific Telephone
1966	Heim Edna	Pacific Telephone
1955	Reiter Freda Mae	The Pacific Telephone and Telegraph Co.
1950	Cartwright Shirley A r	The Pacific Telephone and Telegraph Co.
1946	Long G R Mrs r	Southern California Telephone Co.

126 W LA VETA AVE

Year	Uses	Source
1980	Deters Paulette Sister	Pacific Telephone
	Holy Family Convent	Pacific Telephone
1975	Holy Family Convent	Luskey Brothers & Co., Inc.
1970	Holy Family Convent	General Telephone Co., of California
1966	Holy Family Convent	Pacific Telephone

FINDINGS

140 W LA VETA AVE

Year	Uses	Source
1995	Gastrodiagnostics	Pacific Bell

190 W LA VETA AVE

Year	Uses	Source
1980	Aan MG	Pacific Telephone
	a MK	Pacific Telephone
1970	Wilburn S G	General Telephone Co., of California

191 W LA VETA AVE

Year	Uses	Source
1980	Potheir JM	Pacific Telephone
1970	Smith Chas E	General Telephone Co., of California
	Semith Chas E V	General Telephone Co., of California

200 W LA VETA AVE

Year	Uses	Source
1986	Stewart David A	Pacific Bell
1975	Society Devoted To The Sacred Heart	Luskey Brothers & Co., Inc.
1970	Society Devoted to The Sacred Heart	General Telephone Co., of California
1966	Helpers of the Holy Souls	Pacific Telephone
1955	Holy Family Catholic Church	The Pacific Telephone and Telegraph Co.

202 W LA VETA AVE

Year	Uses	Source
1970	Figueroa J B	General Telephone Co., of California
1966	Figueroa J B	Pacific Telephone
1955	Parsons Mary A	The Pacific Telephone and Telegraph Co.
1950	Parsons Mary A r	The Pacific Telephone and Telegraph Co.
1946	Parsons Mary A r	Southern California Telephone Co.

205 W LA VETA AVE

Year	Uses	Source
1970	Gilbert C C	General Telephone Co., of California
1955	Patterson Winifred	The Pacific Telephone and Telegraph Co.

206 W LA VETA AVE

Year	Uses	Source
1955	Summers Matthew P	The Pacific Telephone and Telegraph Co.
1950	Rodriguez Salvador r	The Pacific Telephone and Telegraph Co.

FINDINGS

214 W LA VETA AVE

Year	Uses	Source
1970	Bishop Henry G	General Telephone Co., of California
1966	Bishop Henry G	Pacific Telephone
1955	Moore E E	The Pacific Telephone and Telegraph Co.
1950	Moore E E r	The Pacific Telephone and Telegraph Co.
1946	Moore E E r	Southern California Telephone Co.

215 W LA VETA AVE

Year	Uses	Source
1980	Harris Coye	Pacific Telephone
1975	Croff C E	Luskey Brothers & Co., Inc.
1966	Tizzard L Douglas	Pacific Telephone
1955	De Weerd Jane	The Pacific Telephone and Telegraph Co.

217 W LA VETA AVE

Year	Uses	Source
1991	Desbrow Ed	Pacific Bell
1966	Cinkis Albert	Pacific Telephone
	CINI GUGLIELMO INC jwlry	Pacific Telephone
	Packard Ray	Pacific Telephone

222 W LA VETA AVE

Year	Uses	Source
1970	Tovar Sophie	General Telephone Co., of California
1966	Tovar Sophie	Pacific Telephone

223 W LA VETA AVE

Year	Uses	Source
1991	Ortiz Carmen	Pacific Bell
1986	Eddy H M	Pacific Bell
1980	Eddy H M	Pacific Telephone
1966	Anderson F E	Pacific Telephone

225 W LA VETA AVE

Year	Uses	Source
1995	Fraga Rafael	Pacific Bell
1986	Mac Donald W D	Pacific Bell
1970	Stinson Edith	General Telephone Co., of California

230 W LA VETA AVE

Year	Uses	Source
1955	Dowdy Hubert	The Pacific Telephone and Telegraph Co.
1941	Adams Agnes r	Southern California Telephone Co.

233 W LA VETA AVE

Year	Uses	Source
1970	Doyle Jas Edward	General Telephone Co., of California
1966	Crimmings M L	Pacific Telephone

235 W LA VETA AVE

Year	Uses	Source
1991	Mitchell C Neal	Pacific Bell
	Mitchell CW& Lorne @Taft@	Pacific Bell
1986	Mitchell C Neal	Pacific Bell
1980	Mitchell C Neal	Pacific Telephone

0100 W LA VETA AVE

Year	Uses	Source
1991	Conley John WMO	Pacific Bell

W W LA VETA AVE

121 W W LA VETA AVE

Year	Uses	Source
1980	Gozzonigo Alan B MD	Pacific Telephone

FINDINGS

TARGET PROPERTY: ADDRESS NOT IDENTIFIED IN RESEARCH SOURCE

The following Target Property addresses were researched for this report, and the addresses were not identified in the research source.

Address Researched	Address Not Identified in Research Source
574 S. Glassell Street	2002, 2001, 1997, 1995, 1992, 1986, 1971, 1970, 1961, 1960, 1956, 1955, 1952, 1950, 1946, 1945, 1941, 1936, 1930, 1926, 1925, 1922, 1921, 1920

ADJOINING PROPERTY: ADDRESSES NOT IDENTIFIED IN RESEARCH SOURCE

The following Adjoining Property addresses were researched for this report, and the addresses were not identified in research source.

Address Researched	Address Not Identified in Research Source
0100 W LA VETA AVE	2014, 2010, 2005, 2002, 2001, 1997, 1995, 1992, 1986, 1980, 1975, 1971, 1970, 1966, 1965, 1961, 1960, 1956, 1955, 1952, 1950, 1946, 1945, 1941, 1936, 1930, 1926, 1925, 1922, 1921, 1920
0101 E LA VETA AVE	2014, 2010, 2005, 2002, 2001, 1997, 1995, 1992, 1986, 1980, 1975, 1971, 1970, 1966, 1965, 1961, 1960, 1956, 1955, 1952, 1950, 1946, 1945, 1941, 1936, 1930, 1926, 1925, 1922, 1921, 1920
100 W LA VETA AVE	2014, 2010, 2005, 2002, 2001, 1997, 1992, 1991, 1986, 1975, 1971, 1966, 1965, 1961, 1960, 1956, 1955, 1952, 1950, 1946, 1945, 1941, 1936, 1930, 1926, 1925, 1922, 1921, 1920
101 E LA VETA AVE	2014, 2010, 2005, 2002, 2001, 1997, 1992, 1991, 1986, 1980, 1975, 1971, 1970, 1966, 1965, 1961, 1960, 1956, 1955, 1952, 1950, 1946, 1945, 1941, 1936, 1930, 1926, 1925, 1922, 1921, 1920
101 W LA VETA AVE	2014, 2010, 2005, 2002, 2001, 1997, 1992, 1986, 1980, 1975, 1971, 1970, 1966, 1965, 1961, 1960, 1956, 1955, 1952, 1950, 1946, 1945, 1941, 1936, 1930, 1926, 1925, 1922, 1921, 1920
104 RIVER AVE	2014, 2010, 2005, 2001, 1997, 1995, 1992, 1991, 1986, 1980, 1975, 1971, 1970, 1966, 1965, 1961, 1960, 1956, 1955, 1952, 1950, 1946, 1945, 1941, 1936, 1930, 1926, 1925, 1922, 1921, 1920
105 W LA VETA AVE	2014, 2010, 2005, 2002, 2001, 1997, 1992, 1991, 1986, 1980, 1975, 1971, 1970, 1966, 1965, 1961, 1960, 1956, 1955, 1952, 1950, 1946, 1945, 1941, 1936, 1930, 1926, 1925, 1922, 1921, 1920
106 RIVER AVE	2014, 2010, 2005, 2001, 1997, 1995, 1992, 1991, 1986, 1980, 1975, 1971, 1970, 1966, 1965, 1961, 1960, 1956, 1955, 1952, 1950, 1946, 1945, 1941, 1936, 1930, 1926, 1925, 1922, 1921, 1920
107 FAIRWAY DR E	2014, 2010, 2005, 2002, 2001, 1997, 1995, 1992, 1991, 1986, 1980, 1975, 1971, 1970, 1966, 1961, 1960, 1956, 1955, 1952, 1950, 1946, 1945, 1941, 1936, 1930, 1926, 1925, 1922, 1921, 1920
108 FAIRWAY DR E	2014, 2010, 2005, 2002, 2001, 1997, 1995, 1992, 1991, 1986, 1980, 1975, 1971, 1970, 1966, 1961, 1960, 1956, 1955, 1952, 1950, 1946, 1945, 1941, 1936, 1930, 1926, 1925, 1922, 1921, 1920
108 W LA VETA AVE	2014, 2010, 2005, 2002, 2001, 1997, 1992, 1991, 1986, 1980, 1975, 1971, 1970, 1966, 1965, 1961, 1960, 1956, 1955, 1952, 1950, 1946, 1945, 1941, 1936, 1930, 1926, 1925, 1922, 1921, 1920

FINDINGS

Address Researched	Address Not Identified in Research Source
109 FAIRWAY DR E	2014, 2010, 2005, 2002, 2001, 1997, 1995, 1992, 1991, 1986, 1980, 1975, 1971, 1970, 1966, 1961, 1960, 1956, 1955, 1952, 1950, 1946, 1945, 1941, 1936, 1930, 1926, 1925, 1922, 1921, 1920
109 RIVER AVE	2014, 2010, 2005, 2001, 1997, 1995, 1992, 1991, 1986, 1980, 1975, 1971, 1970, 1966, 1965, 1961, 1960, 1956, 1955, 1952, 1950, 1946, 1945, 1941, 1936, 1930, 1926, 1925, 1922, 1921, 1920
109 W LA VETA AVE	2014, 2010, 2005, 2002, 2001, 1997, 1995, 1992, 1991, 1986, 1980, 1975, 1971, 1966, 1965, 1961, 1960, 1956, 1955, 1952, 1950, 1946, 1945, 1941, 1936, 1930, 1926, 1925, 1922, 1921, 1920
110 E RIVER AVE	2014, 2010, 2005, 2002, 2001, 1997, 1995, 1992, 1991, 1986, 1980, 1975, 1971, 1970, 1966, 1965, 1961, 1960, 1956, 1955, 1952, 1946, 1945, 1941, 1930, 1926, 1925, 1922, 1921, 1920
110 FAIRWAY DR E	2014, 2010, 2005, 2002, 2001, 1997, 1995, 1992, 1991, 1986, 1980, 1975, 1971, 1970, 1966, 1961, 1960, 1956, 1955, 1952, 1950, 1946, 1945, 1941, 1936, 1930, 1926, 1925, 1922, 1921, 1920
110 FAIRWAY LN	2014, 2010, 2005, 2002, 2001, 1997, 1995, 1992, 1991, 1986, 1980, 1975, 1971, 1970, 1966, 1961, 1960, 1956, 1955, 1952, 1950, 1946, 1945, 1941, 1936, 1930, 1926, 1925, 1922, 1921, 1920
110 RIVER AVE	2014, 2010, 2005, 2002, 2001, 1997, 1995, 1992, 1991, 1986, 1980, 1975, 1971, 1970, 1966, 1965, 1961, 1960, 1956, 1955, 1950, 1946, 1945, 1941, 1936, 1930, 1926, 1925, 1922, 1921, 1920
110 RIVER AVE E	2014, 2010, 2005, 2002, 2001, 1997, 1995, 1992, 1991, 1986, 1980, 1975, 1971, 1970, 1966, 1965, 1961, 1960, 1956, 1955, 1952, 1950, 1946, 1941, 1936, 1930, 1926, 1925, 1922, 1921, 1920
110 W LA VETA AVE	2014, 2010, 2005, 2002, 2001, 1997, 1995, 1992, 1986, 1980, 1975, 1971, 1970, 1966, 1965, 1961, 1960, 1956, 1955, 1952, 1950, 1946, 1945, 1941, 1936, 1930, 1926, 1925, 1922, 1921, 1920
111 FAIRWAY DR E	2014, 2010, 2005, 2002, 2001, 1997, 1995, 1992, 1991, 1986, 1980, 1975, 1971, 1970, 1966, 1961, 1960, 1956, 1955, 1952, 1950, 1946, 1945, 1941, 1936, 1930, 1926, 1925, 1922, 1921, 1920
112 FAIRWAY DR E	2014, 2010, 2005, 2002, 2001, 1997, 1995, 1992, 1991, 1986, 1980, 1975, 1971, 1970, 1966, 1961, 1960, 1956, 1955, 1952, 1950, 1946, 1945, 1941, 1936, 1930, 1926, 1925, 1922, 1921, 1920
112 W LA VETA AVE	2014, 2010, 2005, 2002, 2001, 1997, 1992, 1991, 1986, 1980, 1975, 1971, 1970, 1966, 1965, 1961, 1960, 1956, 1955, 1952, 1950, 1946, 1945, 1941, 1936, 1930, 1926, 1925, 1922, 1921, 1920
113 FAIRWAY DR E	2014, 2010, 2005, 2002, 2001, 1997, 1995, 1992, 1991, 1986, 1980, 1975, 1971, 1970, 1966, 1961, 1960, 1956, 1955, 1952, 1950, 1946, 1945, 1941, 1936, 1930, 1926, 1925, 1922, 1921, 1920
114 FAIRWAY DR E	2014, 2010, 2005, 2002, 2001, 1997, 1995, 1992, 1991, 1986, 1980, 1975, 1971, 1970, 1966, 1961, 1960, 1956, 1955, 1952, 1950, 1946, 1945, 1941, 1936, 1930, 1926, 1925, 1922, 1921, 1920
115 FAIRWAY DR E	2014, 2010, 2005, 2002, 2001, 1997, 1995, 1992, 1991, 1986, 1980, 1975, 1971, 1970, 1966, 1961, 1960, 1956, 1955, 1952, 1950, 1946, 1945, 1941, 1936, 1930, 1926, 1925, 1922, 1921, 1920
116 FAIRWAY DR E	2014, 2010, 2005, 2002, 2001, 1997, 1995, 1992, 1991, 1986, 1980, 1975, 1971, 1970, 1966, 1961, 1960, 1956, 1955, 1952, 1950, 1946, 1945, 1941, 1936, 1930, 1926, 1925, 1922, 1921, 1920
117 FAIRWAY DR E	2014, 2010, 2005, 2002, 2001, 1997, 1995, 1992, 1991, 1986, 1980, 1975, 1971, 1970, 1966, 1961, 1960, 1956, 1955, 1952, 1950, 1946, 1945, 1941, 1936, 1930, 1926, 1925, 1922, 1921, 1920

FINDINGS

Address Researched	Address Not Identified in Research Source
118 FAIRWAY DR E	2014, 2010, 2005, 2002, 2001, 1997, 1995, 1992, 1991, 1986, 1980, 1975, 1971, 1970, 1966, 1961, 1960, 1956, 1955, 1952, 1950, 1946, 1945, 1941, 1936, 1930, 1926, 1925, 1922, 1921, 1920
119 E RIVER AVE	2014, 2010, 2005, 2002, 2001, 1997, 1995, 1992, 1975, 1971, 1970, 1966, 1965, 1961, 1960, 1956, 1955, 1952, 1946, 1945, 1941, 1930, 1926, 1925, 1922, 1921, 1920
119 FAIRWAY DR E	2014, 2010, 2005, 2002, 2001, 1997, 1995, 1992, 1991, 1986, 1980, 1975, 1971, 1970, 1966, 1961, 1960, 1956, 1955, 1952, 1950, 1946, 1945, 1941, 1936, 1930, 1926, 1925, 1922, 1921, 1920
119 RIVER AVE	2014, 2010, 2005, 2002, 2001, 1997, 1995, 1992, 1991, 1986, 1980, 1971, 1970, 1961, 1960, 1956, 1955, 1950, 1946, 1945, 1941, 1936, 1930, 1926, 1925, 1922, 1921, 1920
119 RIVER AVE E	2014, 2010, 2005, 2002, 2001, 1997, 1995, 1992, 1991, 1986, 1980, 1975, 1971, 1970, 1966, 1965, 1961, 1960, 1956, 1955, 1952, 1950, 1946, 1941, 1936, 1930, 1926, 1925, 1922, 1921, 1920
119 RIVER AVE E	2014, 2010, 2005, 2002, 2001, 1997, 1995, 1992, 1991, 1986, 1980, 1975, 1971, 1970, 1966, 1965, 1961, 1960, 1956, 1955, 1952, 1950, 1946, 1945, 1941, 1936, 1930, 1926, 1922, 1921, 1920
120 FAIRWAY DR E	2014, 2010, 2005, 2002, 2001, 1997, 1995, 1992, 1991, 1986, 1980, 1975, 1971, 1970, 1966, 1961, 1960, 1956, 1955, 1952, 1950, 1946, 1945, 1941, 1936, 1930, 1926, 1925, 1922, 1921, 1920
120 W LA VETA AVE	2014, 2010, 2005, 2002, 2001, 1997, 1992, 1991, 1975, 1971, 1970, 1966, 1965, 1961, 1960, 1956, 1955, 1952, 1950, 1946, 1945, 1941, 1936, 1930, 1926, 1925, 1922, 1921, 1920
121 FAIRWAY DR E	2014, 2010, 2005, 2002, 2001, 1997, 1995, 1992, 1991, 1986, 1980, 1975, 1971, 1970, 1966, 1961, 1960, 1956, 1955, 1952, 1950, 1946, 1945, 1941, 1936, 1930, 1926, 1925, 1922, 1921, 1920
121 LA VETA AVE E	2014, 2010, 2005, 2002, 2001, 1997, 1995, 1992, 1991, 1986, 1980, 1975, 1971, 1970, 1966, 1965, 1961, 1960, 1956, 1955, 1950, 1946, 1945, 1941, 1936, 1930, 1926, 1925, 1922, 1921, 1920
121 LA VETA AVE W	2014, 2010, 2005, 2002, 2001, 1997, 1995, 1992, 1991, 1986, 1980, 1975, 1971, 1970, 1966, 1961, 1960, 1956, 1955, 1952, 1950, 1946, 1945, 1941, 1936, 1930, 1926, 1925, 1922, 1921, 1920
121 W LA VETA AVE	2014, 2010, 2005, 2002, 2001, 1997, 1992, 1991, 1986, 1975, 1971, 1970, 1965, 1961, 1960, 1956, 1952, 1945, 1941, 1936, 1930, 1926, 1925, 1922, 1921, 1920
121 W W LA VETA AVE	2014, 2010, 2005, 2002, 2001, 1997, 1995, 1992, 1991, 1986, 1975, 1971, 1970, 1966, 1965, 1961, 1960, 1956, 1955, 1952, 1950, 1946, 1945, 1941, 1936, 1930, 1926, 1925, 1922, 1921, 1920
122 FAIRWAY DR E	2014, 2010, 2005, 2002, 2001, 1997, 1995, 1992, 1991, 1986, 1980, 1975, 1971, 1970, 1966, 1961, 1960, 1956, 1955, 1952, 1950, 1946, 1945, 1941, 1936, 1930, 1926, 1925, 1922, 1921, 1920
123 FAIRWAY DR E	2014, 2010, 2005, 2002, 2001, 1997, 1995, 1992, 1991, 1986, 1980, 1975, 1971, 1970, 1966, 1961, 1960, 1956, 1955, 1952, 1950, 1946, 1945, 1941, 1936, 1930, 1926, 1925, 1922, 1921, 1920
124 FAIRWAY DR E	2014, 2010, 2005, 2002, 2001, 1997, 1995, 1992, 1991, 1986, 1980, 1975, 1971, 1970, 1966, 1961, 1960, 1956, 1955, 1952, 1950, 1946, 1945, 1941, 1936, 1930, 1926, 1925, 1922, 1921, 1920
124 FAIRWAY PL	2014, 2010, 2005, 2002, 2001, 1997, 1995, 1992, 1991, 1986, 1980, 1975, 1971, 1966, 1965, 1961, 1960, 1956, 1955, 1952, 1950, 1946, 1945, 1941, 1936, 1930, 1926, 1925, 1922, 1921, 1920

FINDINGS

Address Researched	Address Not Identified in Research Source
124 RIVER AVE E	2014, 2010, 2005, 2002, 2001, 1997, 1995, 1992, 1991, 1986, 1980, 1975, 1971, 1970, 1966, 1965, 1961, 1960, 1956, 1955, 1952, 1950, 1946, 1945, 1941, 1936, 1930, 1926, 1922, 1921, 1920
125 E LA PATHA AVE	2014, 2010, 2005, 2002, 2001, 1997, 1995, 1992, 1991, 1986, 1975, 1971, 1970, 1966, 1965, 1961, 1960, 1956, 1955, 1952, 1950, 1946, 1945, 1941, 1936, 1930, 1926, 1925, 1922, 1921, 1920
125 E LA VETA AVE	2014, 2010, 2005, 2002, 2001, 1997, 1995, 1992, 1991, 1980, 1975, 1971, 1970, 1966, 1965, 1961, 1960, 1956, 1955, 1952, 1950, 1946, 1945, 1941, 1936, 1930, 1926, 1925, 1922, 1921, 1920
126 E RIVER	2014, 2010, 2005, 2002, 2001, 1997, 1995, 1992, 1991, 1986, 1980, 1975, 1971, 1970, 1965, 1961, 1960, 1956, 1955, 1952, 1950, 1946, 1945, 1941, 1936, 1930, 1926, 1925, 1922, 1921, 1920
126 E RIVER AVE	2014, 2010, 2005, 2002, 2001, 1997, 1995, 1992, 1991, 1986, 1975, 1971, 1966, 1965, 1961, 1960, 1956, 1955, 1952, 1946, 1945, 1941, 1930, 1926, 1925, 1921, 1920
126 LA VETA AVE W	2014, 2010, 2005, 2002, 2001, 1997, 1995, 1992, 1991, 1986, 1980, 1975, 1971, 1970, 1966, 1961, 1960, 1956, 1955, 1952, 1950, 1946, 1945, 1941, 1936, 1930, 1926, 1925, 1922, 1921, 1920
126 RIVER AVE	2014, 2010, 2005, 2002, 2001, 1997, 1995, 1992, 1991, 1986, 1980, 1971, 1970, 1966, 1961, 1960, 1956, 1955, 1950, 1946, 1945, 1941, 1936, 1930, 1926, 1925, 1922, 1921, 1920
126 RIVER AVE E	2014, 2010, 2005, 2002, 2001, 1997, 1995, 1992, 1991, 1986, 1980, 1975, 1971, 1970, 1966, 1965, 1961, 1960, 1956, 1955, 1952, 1950, 1946, 1945, 1941, 1936, 1930, 1926, 1922, 1921, 1920
126 RIVER AVE E	2014, 2010, 2005, 2002, 2001, 1997, 1995, 1992, 1991, 1986, 1980, 1975, 1971, 1970, 1966, 1965, 1961, 1960, 1956, 1955, 1952, 1950, 1946, 1941, 1936, 1930, 1926, 1925, 1922, 1921, 1920
126 W LA VETA AVE	2014, 2010, 2005, 2002, 2001, 1997, 1995, 1992, 1991, 1986, 1971, 1965, 1961, 1960, 1956, 1955, 1952, 1950, 1946, 1945, 1941, 1936, 1930, 1926, 1925, 1922, 1921, 1920
127 E LA VETA DR	2014, 2010, 2005, 2002, 2001, 1997, 1995, 1992, 1991, 1986, 1980, 1975, 1971, 1965, 1961, 1960, 1956, 1955, 1952, 1950, 1946, 1945, 1941, 1936, 1930, 1926, 1925, 1922, 1921, 1920
127 E RIVER AVE	2014, 2010, 2005, 2002, 2001, 1997, 1992, 1986, 1980, 1975, 1971, 1970, 1966, 1965, 1961, 1960, 1956, 1955, 1952, 1950, 1946, 1945, 1941, 1930, 1926, 1925, 1922, 1921, 1920
127 LA VETA AVE E	2014, 2010, 2005, 2002, 2001, 1997, 1995, 1992, 1991, 1986, 1980, 1975, 1971, 1970, 1966, 1961, 1960, 1956, 1955, 1952, 1950, 1946, 1945, 1941, 1936, 1930, 1926, 1925, 1922, 1921, 1920
127 RIVER AVE	2014, 2010, 2005, 2002, 2001, 1997, 1995, 1992, 1991, 1986, 1980, 1971, 1970, 1961, 1960, 1956, 1955, 1950, 1946, 1945, 1941, 1936, 1930, 1926, 1925, 1922, 1921, 1920
127 RIVER AVE E	2014, 2010, 2005, 2002, 2001, 1997, 1995, 1992, 1991, 1986, 1980, 1975, 1971, 1970, 1966, 1965, 1961, 1960, 1956, 1955, 1952, 1950, 1946, 1945, 1941, 1936, 1930, 1926, 1922, 1921, 1920
127 RIVER AVE E	2014, 2010, 2005, 2002, 2001, 1997, 1995, 1992, 1991, 1986, 1980, 1975, 1971, 1970, 1966, 1965, 1961, 1960, 1956, 1955, 1952, 1950, 1946, 1941, 1936, 1930, 1926, 1925, 1922, 1921, 1920
128 E LA VETA AVE	2014, 2010, 2005, 2002, 2001, 1997, 1995, 1992, 1986, 1980, 1971, 1970, 1966, 1965, 1961, 1960, 1956, 1955, 1952, 1950, 1946, 1945, 1941, 1936, 1930, 1926, 1925, 1922, 1921, 1920

FINDINGS

Address Researched	Address Not Identified in Research Source
128 E LA VETA DR	2014, 2010, 2005, 2002, 2001, 1997, 1995, 1992, 1991, 1986, 1980, 1975, 1971, 1965, 1961, 1960, 1956, 1952, 1950, 1946, 1945, 1941, 1936, 1930, 1926, 1925, 1922, 1921, 1920
128 LA VETA AVE E	2014, 2010, 2005, 2002, 2001, 1997, 1995, 1992, 1991, 1986, 1980, 1975, 1971, 1970, 1966, 1961, 1960, 1956, 1955, 1952, 1950, 1946, 1945, 1941, 1936, 1930, 1926, 1925, 1922, 1921, 1920
129 E RIVER AVE	2014, 2010, 2005, 2002, 2001, 1997, 1995, 1992, 1991, 1986, 1980, 1975, 1971, 1970, 1966, 1965, 1961, 1960, 1956, 1955, 1952, 1950, 1946, 1945, 1941, 1936, 1930, 1926, 1925, 1921, 1920
130 E RIVER AVE	2014, 2010, 2005, 2002, 2001, 1997, 1995, 1992, 1975, 1971, 1970, 1966, 1965, 1961, 1960, 1956, 1955, 1952, 1950, 1946, 1945, 1941, 1930, 1926, 1925, 1921, 1920
130 RIVER AVE	2014, 2010, 2005, 2002, 2001, 1997, 1995, 1992, 1991, 1986, 1980, 1971, 1970, 1961, 1960, 1956, 1955, 1946, 1945, 1941, 1936, 1930, 1926, 1925, 1922, 1921, 1920
130 RIVER AVE E	2014, 2010, 2005, 2002, 2001, 1997, 1995, 1992, 1991, 1986, 1980, 1975, 1971, 1970, 1966, 1965, 1961, 1960, 1956, 1955, 1952, 1950, 1946, 1945, 1941, 1936, 1930, 1926, 1922, 1921, 1920
130 RIVER AVE E	2014, 2010, 2005, 2002, 2001, 1997, 1995, 1992, 1991, 1986, 1980, 1975, 1971, 1970, 1966, 1965, 1961, 1960, 1956, 1955, 1952, 1950, 1946, 1941, 1936, 1930, 1926, 1925, 1922, 1921, 1920
131 E RIVER AVE	2014, 2010, 2005, 2002, 2001, 1997, 1995, 1992, 1991, 1986, 1980, 1975, 1971, 1970, 1966, 1965, 1961, 1960, 1956, 1952, 1946, 1945, 1941, 1930, 1926, 1925, 1921, 1920
131 RIVER	2014, 2010, 2005, 2002, 2001, 1997, 1995, 1992, 1991, 1986, 1980, 1975, 1971, 1970, 1966, 1965, 1961, 1960, 1956, 1955, 1952, 1950, 1946, 1945, 1936, 1930, 1926, 1925, 1922, 1921, 1920
131 RIVER AVE	2014, 2010, 2005, 2002, 2001, 1997, 1995, 1992, 1991, 1986, 1980, 1971, 1970, 1961, 1960, 1956, 1955, 1950, 1946, 1945, 1941, 1936, 1930, 1926, 1925, 1922, 1921, 1920
131 RIVER AVE E	2014, 2010, 2005, 2002, 2001, 1997, 1995, 1992, 1991, 1986, 1980, 1975, 1971, 1970, 1966, 1965, 1961, 1960, 1956, 1955, 1952, 1950, 1946, 1945, 1941, 1936, 1930, 1926, 1922, 1921, 1920
131 RIVER AVE E	2014, 2010, 2005, 2002, 2001, 1997, 1995, 1992, 1991, 1986, 1980, 1975, 1971, 1970, 1966, 1965, 1961, 1960, 1956, 1955, 1952, 1950, 1946, 1941, 1936, 1930, 1926, 1925, 1922, 1921, 1920
133 E RIVER AVE	2014, 2010, 2005, 2002, 2001, 1997, 1995, 1992, 1975, 1971, 1970, 1966, 1965, 1961, 1960, 1956, 1955, 1952, 1950, 1946, 1945, 1941, 1936, 1930, 1926, 1925, 1922, 1921, 1920
133 RIVER AVE	2014, 2010, 2005, 2002, 2001, 1997, 1995, 1992, 1991, 1986, 1980, 1975, 1971, 1970, 1965, 1961, 1960, 1956, 1955, 1952, 1950, 1946, 1945, 1941, 1936, 1930, 1926, 1925, 1922, 1921, 1920
134 E LA VETA DR	2014, 2010, 2005, 2002, 2001, 1997, 1995, 1992, 1991, 1986, 1980, 1975, 1971, 1970, 1965, 1961, 1960, 1956, 1955, 1952, 1950, 1946, 1945, 1941, 1936, 1930, 1926, 1925, 1922, 1921, 1920
134 LA VETA AVE E	2014, 2010, 2005, 2002, 2001, 1997, 1995, 1992, 1991, 1986, 1980, 1975, 1971, 1970, 1966, 1961, 1960, 1956, 1955, 1952, 1950, 1946, 1945, 1941, 1936, 1930, 1926, 1925, 1922, 1921, 1920
137 E RIVER AVE	2014, 2010, 2005, 2002, 2001, 1997, 1995, 1992, 1991, 1986, 1980, 1975, 1971, 1966, 1965, 1961, 1960, 1956, 1955, 1952, 1950, 1946, 1945, 1941, 1936, 1930, 1926, 1925, 1922, 1921, 1920

FINDINGS

Address Researched	Address Not Identified in Research Source
137 RIVER AVE	2014, 2010, 2005, 2002, 2001, 1997, 1995, 1992, 1991, 1986, 1980, 1975, 1971, 1970, 1966, 1961, 1960, 1956, 1955, 1950, 1946, 1945, 1941, 1936, 1930, 1926, 1925, 1922, 1921, 1920
137 RIVER AVE E	2014, 2010, 2005, 2002, 2001, 1997, 1995, 1992, 1991, 1986, 1980, 1975, 1971, 1970, 1966, 1965, 1961, 1960, 1956, 1955, 1952, 1950, 1946, 1941, 1936, 1930, 1926, 1925, 1922, 1921, 1920
139 E RIVER	2014, 2010, 2005, 2002, 2001, 1997, 1995, 1992, 1991, 1986, 1980, 1975, 1971, 1970, 1966, 1965, 1961, 1960, 1956, 1955, 1952, 1950, 1946, 1945, 1936, 1930, 1926, 1925, 1922, 1921, 1920
139 E RIVER AVE	2014, 2010, 2005, 2002, 2001, 1997, 1995, 1992, 1991, 1986, 1980, 1975, 1971, 1970, 1966, 1965, 1961, 1960, 1956, 1955, 1952, 1946, 1945, 1941, 1930, 1926, 1925, 1921, 1920
139 RIVER AVE	2014, 2010, 2005, 2002, 2001, 1997, 1995, 1992, 1991, 1986, 1980, 1971, 1970, 1961, 1960, 1956, 1955, 1950, 1946, 1945, 1941, 1936, 1930, 1926, 1925, 1922, 1921, 1920
139 RIVER AVE E	2014, 2010, 2005, 2002, 2001, 1997, 1995, 1992, 1991, 1986, 1980, 1975, 1971, 1970, 1966, 1965, 1961, 1960, 1956, 1955, 1952, 1950, 1946, 1945, 1941, 1936, 1930, 1926, 1922, 1921, 1920
139 RIVER AVE E	2014, 2010, 2005, 2002, 2001, 1997, 1995, 1992, 1991, 1986, 1980, 1975, 1971, 1970, 1966, 1965, 1961, 1960, 1956, 1955, 1952, 1950, 1946, 1941, 1936, 1930, 1926, 1925, 1922, 1921, 1920
140 LA VETA AVE E	2014, 2010, 2005, 2002, 2001, 1997, 1995, 1992, 1991, 1986, 1980, 1975, 1971, 1970, 1966, 1965, 1961, 1960, 1956, 1955, 1950, 1946, 1945, 1941, 1936, 1930, 1926, 1925, 1922, 1921, 1920
140 W LA VETA AVE	2014, 2010, 2005, 2002, 2001, 1997, 1992, 1991, 1986, 1980, 1975, 1971, 1970, 1966, 1965, 1961, 1960, 1956, 1955, 1952, 1950, 1946, 1945, 1941, 1936, 1930, 1926, 1925, 1922, 1921, 1920
141 E FAIRWAY DR	2014, 2010, 2005, 2002, 2001, 1997, 1995, 1992, 1991, 1986, 1980, 1975, 1971, 1966, 1965, 1961, 1960, 1956, 1955, 1952, 1950, 1946, 1945, 1941, 1936, 1930, 1926, 1925, 1922, 1921, 1920
150 E LA VETA AVE	2014, 2010, 2005, 2002, 2001, 1997, 1992, 1991, 1986, 1980, 1975, 1971, 1970, 1966, 1965, 1961, 1960, 1956, 1955, 1952, 1950, 1946, 1945, 1941, 1936, 1930, 1926, 1925, 1922, 1921, 1920
162 SE FAIRWAY DR	2014, 2010, 2005, 2002, 2001, 1997, 1995, 1992, 1991, 1986, 1975, 1971, 1970, 1966, 1965, 1961, 1960, 1956, 1955, 1952, 1950, 1946, 1945, 1941, 1936, 1930, 1926, 1925, 1922, 1921, 1920
190 W LA VETA AVE	2014, 2010, 2005, 2002, 2001, 1997, 1995, 1992, 1991, 1986, 1975, 1971, 1966, 1965, 1961, 1960, 1956, 1955, 1952, 1950, 1946, 1945, 1941, 1936, 1930, 1926, 1925, 1922, 1921, 1920
191 W LA VETA AVE	2014, 2010, 2005, 2002, 2001, 1997, 1995, 1992, 1991, 1986, 1975, 1971, 1966, 1965, 1961, 1960, 1956, 1955, 1952, 1950, 1946, 1945, 1941, 1936, 1930, 1926, 1925, 1922, 1921, 1920
192 SE LA VETA AVE	2014, 2010, 2005, 2002, 2001, 1997, 1995, 1992, 1991, 1986, 1975, 1971, 1970, 1966, 1965, 1961, 1960, 1956, 1955, 1952, 1950, 1946, 1945, 1941, 1936, 1930, 1926, 1925, 1922, 1921, 1920
195 E LA VETA AVE	2014, 2010, 2005, 2002, 2001, 1997, 1995, 1992, 1991, 1986, 1975, 1971, 1970, 1966, 1965, 1961, 1960, 1956, 1955, 1952, 1950, 1946, 1945, 1941, 1936, 1930, 1926, 1925, 1922, 1921, 1920
200 LA VETA AVE W	2014, 2010, 2005, 2002, 2001, 1997, 1995, 1992, 1991, 1986, 1980, 1975, 1971, 1970, 1966, 1961, 1960, 1956, 1955, 1952, 1950, 1946, 1945, 1941, 1936, 1930, 1926, 1925, 1922, 1921, 1920

FINDINGS

Address Researched	Address Not Identified in Research Source
200 W LA VETA AVE	2014, 2010, 2005, 2002, 2001, 1997, 1995, 1992, 1991, 1980, 1971, 1965, 1961, 1960, 1956, 1952, 1950, 1946, 1945, 1941, 1936, 1930, 1926, 1925, 1922, 1921, 1920
201 RIVER AVE	2014, 2010, 2005, 2001, 1997, 1995, 1992, 1991, 1986, 1975, 1971, 1970, 1966, 1965, 1961, 1960, 1956, 1955, 1952, 1950, 1946, 1945, 1941, 1936, 1930, 1926, 1925, 1922, 1921, 1920
202 LA VETA AVE E	2014, 2010, 2005, 2002, 2001, 1997, 1995, 1992, 1991, 1986, 1980, 1975, 1971, 1970, 1966, 1965, 1961, 1960, 1956, 1955, 1950, 1946, 1945, 1941, 1936, 1930, 1926, 1925, 1922, 1921, 1920
202 W LA VETA AVE	2014, 2010, 2005, 2002, 2001, 1997, 1995, 1992, 1991, 1986, 1980, 1975, 1971, 1965, 1961, 1960, 1956, 1952, 1945, 1941, 1936, 1930, 1926, 1925, 1922, 1921, 1920
205 E RIVER AVE	2014, 2010, 2005, 2002, 2001, 1997, 1992, 1980, 1975, 1971, 1970, 1966, 1965, 1961, 1960, 1956, 1955, 1952, 1946, 1945, 1941, 1936, 1930, 1926, 1925, 1922, 1921, 1920
205 LA VETA AVE W	2014, 2010, 2005, 2002, 2001, 1997, 1995, 1992, 1991, 1986, 1980, 1975, 1971, 1970, 1966, 1961, 1960, 1956, 1955, 1952, 1950, 1946, 1945, 1941, 1936, 1930, 1926, 1925, 1922, 1921, 1920
205 RIVER AVE	2014, 2010, 2005, 2002, 2001, 1997, 1995, 1992, 1991, 1986, 1980, 1971, 1970, 1961, 1960, 1956, 1955, 1950, 1946, 1945, 1941, 1936, 1930, 1926, 1925, 1922, 1921, 1920
205 W LA VETA AVE	2014, 2010, 2005, 2002, 2001, 1997, 1995, 1992, 1991, 1986, 1980, 1975, 1971, 1966, 1965, 1961, 1960, 1956, 1952, 1950, 1946, 1945, 1941, 1936, 1930, 1926, 1925, 1922, 1921, 1920
206 LA VETA AVE E	2014, 2010, 2005, 2002, 2001, 1997, 1995, 1992, 1991, 1986, 1980, 1975, 1971, 1970, 1966, 1965, 1961, 1960, 1956, 1955, 1950, 1946, 1945, 1941, 1936, 1930, 1926, 1925, 1922, 1921, 1920
206 LA VETA AVE W	2014, 2010, 2005, 2002, 2001, 1997, 1995, 1992, 1991, 1986, 1980, 1975, 1971, 1970, 1966, 1961, 1960, 1956, 1955, 1952, 1950, 1946, 1945, 1941, 1936, 1930, 1926, 1925, 1922, 1921, 1920
206 RIVER AVE	2014, 2010, 2005, 2001, 1997, 1995, 1992, 1991, 1986, 1980, 1975, 1971, 1970, 1966, 1965, 1961, 1960, 1956, 1955, 1952, 1950, 1946, 1945, 1941, 1936, 1930, 1926, 1925, 1922, 1921, 1920
206 W LA VETA AVE	2014, 2010, 2005, 2002, 2001, 1997, 1995, 1992, 1991, 1986, 1980, 1975, 1971, 1970, 1966, 1965, 1961, 1960, 1956, 1952, 1946, 1945, 1941, 1936, 1930, 1926, 1925, 1922, 1921, 1920
207 LA VETA AVE W	2014, 2010, 2005, 2002, 2001, 1997, 1995, 1992, 1991, 1986, 1980, 1975, 1971, 1970, 1966, 1961, 1960, 1956, 1955, 1952, 1950, 1946, 1945, 1941, 1936, 1930, 1926, 1925, 1922, 1921, 1920
209 LA VETA AVE W	2014, 2010, 2005, 2002, 2001, 1997, 1995, 1992, 1991, 1986, 1980, 1975, 1971, 1970, 1966, 1961, 1960, 1956, 1955, 1952, 1950, 1946, 1945, 1941, 1936, 1930, 1926, 1925, 1922, 1921, 1920
209 RIVER AVE	2014, 2010, 2005, 2001, 1997, 1995, 1992, 1991, 1986, 1980, 1975, 1971, 1970, 1966, 1965, 1961, 1960, 1956, 1955, 1952, 1950, 1946, 1945, 1941, 1936, 1930, 1926, 1925, 1922, 1921, 1920
210 E RIVER AVE	2014, 2010, 2005, 2002, 2001, 1997, 1995, 1992, 1986, 1980, 1975, 1971, 1970, 1966, 1965, 1961, 1960, 1956, 1955, 1952, 1950, 1946, 1945, 1941, 1936, 1930, 1926, 1925, 1922, 1921, 1920
210 RIVER AVE	2014, 2010, 2005, 2002, 2001, 1997, 1995, 1992, 1991, 1986, 1980, 1975, 1971, 1970, 1966, 1961, 1960, 1956, 1955, 1950, 1946, 1945, 1941, 1936, 1930, 1926, 1925, 1922, 1921, 1920

FINDINGS

Address Researched	Address Not Identified in Research Source
210 RIVER AVE E	2014, 2010, 2005, 2002, 2001, 1997, 1995, 1992, 1991, 1986, 1980, 1975, 1971, 1970, 1966, 1965, 1961, 1960, 1956, 1955, 1952, 1950, 1946, 1941, 1936, 1930, 1926, 1925, 1922, 1921, 1920
212 RIVER AVE	2014, 2010, 2005, 2002, 2001, 1997, 1995, 1992, 1991, 1986, 1980, 1975, 1971, 1970, 1966, 1961, 1960, 1956, 1955, 1950, 1946, 1945, 1941, 1936, 1930, 1926, 1925, 1922, 1921, 1920
212 RIVER AVE E	2014, 2010, 2005, 2002, 2001, 1997, 1995, 1992, 1991, 1986, 1980, 1975, 1971, 1970, 1966, 1965, 1961, 1960, 1956, 1955, 1952, 1950, 1946, 1941, 1936, 1930, 1926, 1925, 1922, 1921, 1920
213 1/2 RIVER AVE	2014, 2010, 2005, 2002, 2001, 1997, 1995, 1992, 1991, 1986, 1980, 1975, 1971, 1970, 1966, 1965, 1961, 1960, 1956, 1955, 1950, 1946, 1945, 1941, 1936, 1930, 1926, 1925, 1922, 1921, 1920
213 E RIVER	2014, 2010, 2005, 2002, 2001, 1997, 1995, 1992, 1991, 1986, 1980, 1975, 1971, 1970, 1966, 1965, 1961, 1960, 1956, 1955, 1952, 1950, 1946, 1945, 1936, 1930, 1926, 1925, 1922, 1921, 1920
213 E RIVER AVE	2014, 2010, 2005, 2002, 2001, 1997, 1992, 1980, 1975, 1971, 1970, 1966, 1965, 1961, 1960, 1956, 1955, 1952, 1950, 1946, 1945, 1941, 1930, 1926, 1925, 1922, 1921, 1920
213 RIVER AVE	2014, 2010, 2005, 2001, 1997, 1995, 1992, 1991, 1986, 1980, 1971, 1970, 1961, 1960, 1956, 1955, 1945, 1941, 1936, 1930, 1926, 1925, 1922, 1921, 1920
213 RIVER AVE E	2014, 2010, 2005, 2002, 2001, 1997, 1995, 1992, 1991, 1986, 1980, 1975, 1971, 1970, 1966, 1965, 1961, 1960, 1956, 1955, 1952, 1950, 1946, 1945, 1941, 1936, 1930, 1926, 1922, 1921, 1920
213 RIVER AVE E	2014, 2010, 2005, 2002, 2001, 1997, 1995, 1992, 1991, 1986, 1980, 1975, 1971, 1970, 1966, 1965, 1961, 1960, 1956, 1955, 1952, 1950, 1946, 1941, 1936, 1930, 1926, 1925, 1922, 1921, 1920
214 LA VETA AVE E	2014, 2010, 2005, 2002, 2001, 1997, 1995, 1992, 1991, 1986, 1980, 1975, 1971, 1970, 1966, 1965, 1961, 1960, 1956, 1955, 1950, 1946, 1945, 1941, 1936, 1930, 1926, 1925, 1922, 1921, 1920
214 W LA VETA AVE	2014, 2010, 2005, 2002, 2001, 1997, 1995, 1992, 1991, 1986, 1980, 1975, 1971, 1965, 1961, 1960, 1956, 1952, 1945, 1941, 1936, 1930, 1926, 1925, 1922, 1921, 1920
215 LA VETA AVE W	2014, 2010, 2005, 2002, 2001, 1997, 1995, 1992, 1991, 1986, 1980, 1975, 1971, 1970, 1966, 1961, 1960, 1956, 1955, 1952, 1950, 1946, 1945, 1941, 1936, 1930, 1926, 1925, 1922, 1921, 1920
215 W LA VETA AVE	2014, 2010, 2005, 2002, 2001, 1997, 1995, 1992, 1991, 1986, 1971, 1970, 1965, 1961, 1960, 1956, 1952, 1950, 1946, 1945, 1941, 1936, 1930, 1926, 1925, 1922, 1921, 1920
217 W LA VETA AVE	2014, 2010, 2005, 2002, 2001, 1997, 1995, 1992, 1986, 1980, 1975, 1971, 1970, 1965, 1961, 1960, 1956, 1955, 1952, 1950, 1946, 1945, 1941, 1936, 1930, 1926, 1925, 1922, 1921, 1920
218 RIVER AVE	2014, 2010, 2005, 2001, 1997, 1995, 1992, 1991, 1986, 1980, 1975, 1971, 1970, 1966, 1965, 1961, 1960, 1956, 1955, 1952, 1950, 1946, 1945, 1941, 1936, 1930, 1926, 1925, 1922, 1921, 1920
221 RIVER AVE	2014, 2010, 2005, 2001, 1997, 1995, 1992, 1991, 1986, 1980, 1975, 1971, 1970, 1966, 1965, 1961, 1960, 1956, 1955, 1952, 1950, 1946, 1945, 1941, 1936, 1930, 1926, 1925, 1922, 1921, 1920
222 E LA VETA AVE	2014, 2010, 2005, 2002, 2001, 1997, 1995, 1992, 1991, 1971, 1970, 1966, 1965, 1961, 1960, 1956, 1955, 1952, 1950, 1946, 1945, 1941, 1936, 1930, 1926, 1925, 1922, 1921, 1920

FINDINGS

Address Researched	Address Not Identified in Research Source
222 E LA VETA DR	2014, 2010, 2005, 2002, 2001, 1997, 1995, 1992, 1991, 1986, 1980, 1975, 1971, 1965, 1961, 1960, 1956, 1952, 1950, 1946, 1945, 1941, 1936, 1930, 1926, 1925, 1922, 1921, 1920
222 LA VETA AVE E	2014, 2010, 2005, 2002, 2001, 1997, 1995, 1992, 1991, 1986, 1980, 1975, 1971, 1970, 1966, 1961, 1960, 1956, 1955, 1950, 1946, 1945, 1941, 1936, 1930, 1926, 1925, 1922, 1921, 1920
222 LA VETA AVE W	2014, 2010, 2005, 2002, 2001, 1997, 1995, 1992, 1991, 1986, 1980, 1975, 1971, 1970, 1966, 1961, 1960, 1956, 1955, 1952, 1950, 1946, 1945, 1941, 1936, 1930, 1926, 1925, 1922, 1921, 1920
222 RIVER AVE	2014, 2010, 2005, 2001, 1997, 1995, 1992, 1991, 1986, 1980, 1975, 1971, 1970, 1966, 1965, 1961, 1960, 1956, 1955, 1952, 1950, 1946, 1945, 1941, 1936, 1930, 1926, 1925, 1922, 1921, 1920
222 W LA VETA AVE	2014, 2010, 2005, 2002, 2001, 1997, 1995, 1992, 1991, 1986, 1980, 1975, 1971, 1965, 1961, 1960, 1956, 1955, 1952, 1950, 1946, 1945, 1941, 1936, 1930, 1926, 1925, 1922, 1921, 1920
223 W LA VETA AVE	2014, 2010, 2005, 2002, 2001, 1997, 1995, 1992, 1975, 1971, 1970, 1965, 1961, 1960, 1956, 1955, 1952, 1950, 1946, 1945, 1941, 1936, 1930, 1926, 1925, 1922, 1921, 1920
225 E RIVER AVE	2014, 2010, 2005, 2002, 2001, 1997, 1992, 1975, 1971, 1970, 1966, 1965, 1961, 1960, 1956, 1955, 1952, 1950, 1946, 1945, 1941, 1930, 1926, 1925, 1921, 1920
225 RIVER	2014, 2010, 2005, 2002, 2001, 1997, 1995, 1992, 1991, 1986, 1980, 1975, 1971, 1970, 1966, 1965, 1961, 1960, 1956, 1955, 1952, 1950, 1946, 1945, 1936, 1930, 1926, 1925, 1922, 1921, 1920
225 RIVER AVE	2014, 2010, 2005, 2002, 2001, 1997, 1995, 1992, 1991, 1986, 1980, 1971, 1970, 1961, 1960, 1956, 1955, 1945, 1941, 1936, 1930, 1926, 1925, 1922, 1921, 1920
225 RIVER AVE E	2014, 2010, 2005, 2002, 2001, 1997, 1995, 1992, 1991, 1986, 1980, 1975, 1971, 1970, 1966, 1965, 1961, 1960, 1956, 1955, 1952, 1950, 1946, 1945, 1941, 1936, 1930, 1926, 1922, 1921, 1920
225 RIVER AVE E	2014, 2010, 2005, 2002, 2001, 1997, 1995, 1992, 1991, 1986, 1980, 1975, 1971, 1970, 1966, 1965, 1961, 1960, 1956, 1955, 1952, 1950, 1946, 1941, 1936, 1930, 1926, 1925, 1922, 1921, 1920
225 W LA VETA AVE	2014, 2010, 2005, 2002, 2001, 1997, 1992, 1991, 1980, 1975, 1971, 1966, 1965, 1961, 1960, 1956, 1955, 1952, 1950, 1946, 1945, 1941, 1936, 1930, 1926, 1925, 1922, 1921, 1920
226 E LA VETA AVE	2014, 2010, 2005, 2002, 2001, 1997, 1995, 1992, 1991, 1986, 1980, 1971, 1970, 1966, 1965, 1961, 1960, 1956, 1955, 1952, 1950, 1946, 1945, 1941, 1936, 1930, 1926, 1925, 1922, 1921, 1920
226 E LA VETA DR	2014, 2010, 2005, 2002, 2001, 1997, 1995, 1992, 1991, 1986, 1980, 1975, 1971, 1966, 1965, 1961, 1960, 1956, 1952, 1950, 1946, 1945, 1941, 1936, 1930, 1926, 1925, 1922, 1921, 1920
226 LA VETA AVE E	2014, 2010, 2005, 2002, 2001, 1997, 1995, 1992, 1991, 1986, 1980, 1975, 1971, 1970, 1966, 1961, 1960, 1956, 1955, 1950, 1946, 1945, 1941, 1936, 1930, 1926, 1925, 1922, 1921, 1920
230 LA VETA AVE E	2014, 2010, 2005, 2002, 2001, 1997, 1995, 1992, 1991, 1986, 1980, 1975, 1971, 1970, 1966, 1965, 1961, 1960, 1956, 1955, 1950, 1946, 1945, 1941, 1936, 1930, 1926, 1925, 1922, 1921, 1920
230 LA VETA AVE W	2014, 2010, 2005, 2002, 2001, 1997, 1995, 1992, 1991, 1986, 1980, 1975, 1971, 1970, 1966, 1961, 1960, 1956, 1955, 1952, 1950, 1946, 1945, 1941, 1936, 1930, 1926, 1925, 1922, 1921, 1920
230 W LA VETA AVE	2014, 2010, 2005, 2002, 2001, 1997, 1995, 1992, 1991, 1986, 1980, 1975, 1971, 1970, 1966, 1965, 1961, 1960, 1956, 1952, 1950, 1946, 1945, 1936, 1930, 1926, 1925, 1922, 1921, 1920

FINDINGS

Address Researched	Address Not Identified in Research Source
233 E LA VETA DR	2014, 2010, 2005, 2002, 2001, 1997, 1995, 1992, 1991, 1986, 1980, 1975, 1971, 1965, 1961, 1960, 1956, 1955, 1952, 1950, 1946, 1945, 1941, 1936, 1930, 1926, 1925, 1922, 1921, 1920
233 LA VETA AVE E	2014, 2010, 2005, 2002, 2001, 1997, 1995, 1992, 1991, 1986, 1980, 1975, 1971, 1970, 1966, 1961, 1960, 1956, 1955, 1952, 1950, 1946, 1945, 1941, 1936, 1930, 1926, 1925, 1922, 1921, 1920
233 LA VETA AVE W	2014, 2010, 2005, 2002, 2001, 1997, 1995, 1992, 1991, 1986, 1980, 1975, 1971, 1970, 1966, 1961, 1960, 1956, 1955, 1952, 1950, 1946, 1945, 1941, 1936, 1930, 1926, 1925, 1922, 1921, 1920
233 W LA VETA AVE	2014, 2010, 2005, 2002, 2001, 1997, 1995, 1992, 1991, 1986, 1980, 1975, 1971, 1965, 1961, 1960, 1956, 1955, 1952, 1950, 1946, 1945, 1941, 1936, 1930, 1926, 1925, 1922, 1921, 1920
235 LA VETA AVE W	2014, 2010, 2005, 2002, 2001, 1997, 1995, 1992, 1991, 1986, 1980, 1975, 1971, 1970, 1966, 1961, 1960, 1956, 1955, 1952, 1950, 1946, 1945, 1941, 1936, 1930, 1926, 1925, 1922, 1921, 1920
235 W LA VETA AVE	2014, 2010, 2005, 2002, 2001, 1997, 1995, 1992, 1975, 1971, 1970, 1966, 1965, 1961, 1960, 1956, 1955, 1952, 1950, 1946, 1945, 1941, 1936, 1930, 1926, 1925, 1922, 1921, 1920
474 GLASSELL ST S	2014, 2010, 2005, 2002, 2001, 1997, 1995, 1992, 1991, 1986, 1980, 1975, 1971, 1970, 1966, 1961, 1960, 1956, 1955, 1952, 1950, 1946, 1945, 1941, 1936, 1930, 1926, 1925, 1922, 1921, 1920
475 OLIVE ST S	2014, 2010, 2005, 2002, 2001, 1997, 1995, 1992, 1991, 1986, 1980, 1975, 1971, 1970, 1966, 1965, 1961, 1960, 1956, 1955, 1952, 1950, 1946, 1941, 1936, 1930, 1926, 1925, 1922, 1921, 1920
476 S OLIVE ST	2014, 2010, 2005, 2002, 2001, 1997, 1995, 1992, 1991, 1986, 1980, 1971, 1970, 1966, 1965, 1961, 1960, 1956, 1955, 1952, 1950, 1946, 1945, 1941, 1936, 1930, 1926, 1925, 1922, 1921, 1920
477 GLASSELL ST S	2014, 2010, 2005, 2002, 2001, 1997, 1995, 1992, 1991, 1986, 1980, 1975, 1971, 1970, 1966, 1965, 1961, 1960, 1956, 1955, 1950, 1946, 1945, 1941, 1930, 1926, 1922, 1921, 1920
477 GLASSELL ST S	2014, 2010, 2005, 2002, 2001, 1997, 1995, 1992, 1991, 1986, 1980, 1975, 1971, 1970, 1966, 1965, 1961, 1960, 1956, 1955, 1952, 1950, 1946, 1941, 1936, 1930, 1926, 1925, 1922, 1921, 1920
477 OLIVE ST S	2014, 2010, 2005, 2002, 2001, 1997, 1995, 1992, 1991, 1986, 1980, 1975, 1971, 1970, 1966, 1965, 1961, 1960, 1956, 1955, 1950, 1946, 1945, 1941, 1936, 1930, 1926, 1925, 1922, 1921, 1920
477 S OLIVE ST	2014, 2010, 2005, 2002, 2001, 1997, 1995, 1992, 1991, 1986, 1971, 1965, 1961, 1960, 1956, 1955, 1952, 1950, 1946, 1945, 1941, 1936, 1930, 1926, 1925, 1922, 1921, 1920
480 S GLASSELL ST	2014, 2010, 2005, 2002, 2001, 1997, 1992, 1971, 1965, 1961, 1960, 1956, 1952, 1950, 1946, 1945, 1941, 1936, 1930, 1926, 1925, 1922, 1921, 1920
480 S OLIVE ST	2014, 2010, 2005, 2002, 2001, 1997, 1995, 1992, 1975, 1971, 1965, 1961, 1960, 1956, 1955, 1952, 1950, 1946, 1945, 1941, 1936, 1930, 1926, 1925, 1922, 1921, 1920
481 S GLASSELL ST	2014, 2010, 2005, 2002, 2001, 1997, 1992, 1991, 1986, 1975, 1971, 1970, 1966, 1965, 1961, 1960, 1956, 1955, 1952, 1950, 1946, 1945, 1941, 1936, 1930, 1926, 1925, 1922, 1921, 1920
482 GLASSELL ST S	2014, 2010, 2005, 2002, 2001, 1997, 1995, 1992, 1991, 1986, 1980, 1975, 1971, 1970, 1966, 1961, 1960, 1956, 1955, 1952, 1950, 1946, 1945, 1941, 1936, 1930, 1926, 1925, 1922, 1921, 1920

FINDINGS

Address Researched	Address Not Identified in Research Source
482 ORANGE ST S	2014, 2010, 2005, 2002, 2001, 1997, 1995, 1992, 1991, 1986, 1980, 1975, 1971, 1970, 1966, 1961, 1960, 1956, 1955, 1952, 1950, 1946, 1945, 1941, 1936, 1930, 1926, 1925, 1922, 1921, 1920
482 S GLASSELL ST	2014, 2010, 2005, 2002, 2001, 1997, 1995, 1992, 1991, 1986, 1971, 1970, 1966, 1965, 1961, 1960, 1956, 1952, 1950, 1946, 1945, 1941, 1936, 1930, 1926, 1925, 1922, 1921, 1920
482 S ORANGE ST	2014, 2010, 2005, 2002, 2001, 1997, 1995, 1992, 1991, 1986, 1980, 1971, 1970, 1966, 1965, 1961, 1960, 1956, 1955, 1952, 1950, 1946, 1945, 1941, 1936, 1930, 1926, 1925, 1922, 1921, 1920
483 GLASSELL ST S	2014, 2010, 2005, 2002, 2001, 1997, 1995, 1992, 1991, 1986, 1980, 1975, 1971, 1970, 1966, 1965, 1961, 1960, 1956, 1955, 1950, 1946, 1945, 1941, 1936, 1930, 1926, 1925, 1922, 1921, 1920
483 S GLASSELL ST	2014, 2010, 2005, 2002, 2001, 1997, 1995, 1992, 1991, 1986, 1980, 1975, 1971, 1970, 1966, 1965, 1961, 1960, 1956, 1952, 1950, 1946, 1945, 1941, 1936, 1930, 1926, 1925, 1922, 1921, 1920
484 GLASSELL ST S	2014, 2010, 2005, 2002, 2001, 1997, 1995, 1992, 1991, 1986, 1980, 1975, 1971, 1970, 1966, 1961, 1960, 1956, 1955, 1952, 1950, 1946, 1945, 1941, 1936, 1930, 1926, 1925, 1922, 1921, 1920
484 OLIVE ST S	2014, 2010, 2005, 2002, 2001, 1997, 1995, 1992, 1991, 1986, 1980, 1975, 1971, 1970, 1966, 1965, 1961, 1960, 1956, 1955, 1952, 1950, 1946, 1941, 1936, 1930, 1926, 1925, 1922, 1921, 1920
484 ORANGE ST S	2014, 2010, 2005, 2002, 2001, 1997, 1995, 1992, 1991, 1986, 1980, 1975, 1971, 1970, 1966, 1961, 1960, 1956, 1955, 1952, 1950, 1946, 1945, 1941, 1936, 1930, 1926, 1925, 1922, 1921, 1920
484 S GLASSELL ST	2014, 2010, 2005, 2002, 2001, 1997, 1995, 1992, 1991, 1980, 1975, 1971, 1970, 1966, 1965, 1961, 1960, 1956, 1952, 1950, 1946, 1945, 1941, 1936, 1930, 1926, 1925, 1922, 1921, 1920
484 S OLIVE ST	2014, 2010, 2005, 2002, 2001, 1997, 1995, 1992, 1991, 1986, 1980, 1971, 1966, 1965, 1961, 1960, 1956, 1955, 1952, 1950, 1946, 1945, 1941, 1936, 1926, 1921, 1920
484 S ORANGE ST	2014, 2010, 2005, 2002, 2001, 1997, 1995, 1992, 1991, 1986, 1980, 1971, 1966, 1965, 1961, 1960, 1956, 1955, 1952, 1950, 1946, 1945, 1941, 1936, 1930, 1926, 1925, 1922, 1921, 1920
485 GLASSELL ST S	2014, 2010, 2005, 2002, 2001, 1997, 1995, 1992, 1991, 1986, 1980, 1975, 1971, 1970, 1966, 1961, 1960, 1956, 1955, 1950, 1946, 1945, 1941, 1936, 1930, 1926, 1925, 1922, 1921, 1920
485 OLIVE ST S	2014, 2010, 2005, 2002, 2001, 1997, 1995, 1992, 1991, 1986, 1980, 1975, 1971, 1970, 1966, 1965, 1961, 1960, 1956, 1955, 1952, 1950, 1946, 1941, 1936, 1930, 1926, 1925, 1922, 1921, 1920
485 ORANGE ST S	2014, 2010, 2005, 2002, 2001, 1997, 1995, 1992, 1991, 1986, 1980, 1975, 1971, 1970, 1966, 1965, 1961, 1960, 1956, 1955, 1952, 1950, 1946, 1941, 1936, 1930, 1926, 1925, 1922, 1921, 1920
485 ORANGE ST S	2014, 2010, 2005, 2002, 2001, 1997, 1995, 1992, 1991, 1986, 1980, 1975, 1971, 1970, 1966, 1961, 1960, 1956, 1955, 1950, 1946, 1945, 1941, 1930, 1926, 1925, 1922, 1921, 1920
485 S GLASSELL ST	2014, 2010, 2005, 2002, 2001, 1997, 1995, 1992, 1991, 1986, 1980, 1975, 1971, 1970, 1965, 1961, 1960, 1956, 1952, 1946, 1945, 1941, 1936, 1930, 1926, 1925, 1922, 1921, 1920
485 S OLIVE ST	2014, 2010, 2005, 2002, 2001, 1997, 1995, 1992, 1991, 1986, 1980, 1971, 1970, 1965, 1961, 1960, 1956, 1955, 1952, 1950, 1946, 1945, 1941, 1936, 1926, 1922, 1921, 1920

FINDINGS

Address Researched	Address Not Identified in Research Source
485 S ORANGE ST	2014, 2010, 2005, 2002, 2001, 1997, 1995, 1992, 1991, 1980, 1971, 1970, 1966, 1965, 1961, 1960, 1956, 1952, 1946, 1945, 1941, 1936, 1930, 1926, 1921, 1920
486 ORANGE ST S	2014, 2010, 2005, 2002, 2001, 1997, 1995, 1992, 1991, 1986, 1980, 1975, 1971, 1970, 1966, 1961, 1960, 1956, 1955, 1952, 1950, 1946, 1945, 1941, 1936, 1930, 1926, 1925, 1922, 1921, 1920
486 S OLIVE ST	2014, 2010, 2005, 2002, 2001, 1997, 1992, 1980, 1971, 1970, 1965, 1961, 1960, 1956, 1955, 1952, 1950, 1946, 1945, 1941, 1936, 1930, 1926, 1925, 1922, 1921, 1920
488 GLASSELL ST S	2014, 2010, 2005, 2002, 2001, 1997, 1995, 1992, 1991, 1986, 1980, 1975, 1971, 1970, 1966, 1961, 1960, 1956, 1955, 1950, 1946, 1945, 1941, 1930, 1926, 1921, 1920
488 GLASSELL ST S	2014, 2010, 2005, 2002, 2001, 1997, 1995, 1992, 1991, 1986, 1980, 1975, 1971, 1970, 1966, 1965, 1961, 1960, 1956, 1955, 1952, 1950, 1946, 1941, 1936, 1930, 1926, 1925, 1922, 1921, 1920
488 ORANGE ST S	2014, 2010, 2005, 2002, 2001, 1997, 1995, 1992, 1991, 1986, 1980, 1975, 1971, 1970, 1966, 1961, 1960, 1956, 1955, 1952, 1950, 1946, 1945, 1941, 1936, 1930, 1926, 1925, 1922, 1921, 1920
488 S GLASSELL ST	2014, 2010, 2005, 2002, 2001, 1997, 1995, 1992, 1971, 1965, 1961, 1960, 1956, 1952, 1945, 1936, 1930, 1926, 1925, 1922, 1921, 1920
488 S OLIVE ST	2014, 2010, 2005, 2002, 2001, 1997, 1995, 1992, 1991, 1986, 1971, 1966, 1965, 1961, 1960, 1956, 1955, 1952, 1950, 1946, 1945, 1941, 1936, 1930, 1926, 1925, 1922, 1921, 1920
488 S ORANGE ST	2014, 2010, 2005, 2002, 2001, 1997, 1995, 1992, 1991, 1986, 1980, 1971, 1970, 1966, 1965, 1961, 1960, 1956, 1955, 1952, 1950, 1946, 1945, 1941, 1936, 1930, 1926, 1925, 1922, 1921, 1920
490 S OLIVE ST	2014, 2010, 2005, 2002, 2001, 1997, 1995, 1992, 1986, 1975, 1971, 1966, 1965, 1961, 1960, 1956, 1955, 1952, 1950, 1946, 1945, 1941, 1936, 1930, 1926, 1925, 1922, 1921, 1920
492 ORANGE ST S	2014, 2010, 2005, 2002, 2001, 1997, 1995, 1992, 1991, 1986, 1980, 1975, 1971, 1970, 1966, 1961, 1960, 1956, 1955, 1952, 1950, 1946, 1945, 1941, 1936, 1930, 1926, 1925, 1922, 1921, 1920
492 S ORANGE ST	2014, 2010, 2005, 2002, 2001, 1997, 1992, 1971, 1966, 1965, 1961, 1960, 1956, 1955, 1952, 1950, 1946, 1945, 1941, 1936, 1930, 1926, 1925, 1922, 1921, 1920
493 GLASSELL ST S	2014, 2010, 2005, 2002, 2001, 1997, 1995, 1992, 1991, 1986, 1980, 1975, 1971, 1970, 1966, 1965, 1961, 1960, 1956, 1955, 1950, 1946, 1945, 1941, 1930, 1926, 1921, 1920
493 GLASSELL ST S	2014, 2010, 2005, 2002, 2001, 1997, 1995, 1992, 1991, 1986, 1980, 1975, 1971, 1970, 1966, 1965, 1961, 1960, 1956, 1955, 1952, 1950, 1946, 1941, 1936, 1930, 1926, 1925, 1922, 1921, 1920
493 ORANGE ST S	2014, 2010, 2005, 2002, 2001, 1997, 1995, 1992, 1991, 1986, 1980, 1975, 1971, 1970, 1966, 1965, 1961, 1960, 1956, 1955, 1952, 1950, 1946, 1941, 1936, 1930, 1926, 1925, 1922, 1921, 1920
493 ORANGE ST S	2014, 2010, 2005, 2002, 2001, 1997, 1995, 1992, 1991, 1986, 1980, 1975, 1971, 1970, 1966, 1961, 1960, 1956, 1955, 1950, 1946, 1945, 1941, 1930, 1926, 1925, 1922, 1921, 1920
493 S GLASSELL ST	2014, 2010, 2005, 2002, 2001, 1997, 1995, 1992, 1991, 1986, 1980, 1975, 1971, 1970, 1966, 1965, 1961, 1960, 1956, 1952, 1946, 1945, 1941, 1936, 1930, 1926, 1925, 1922, 1921, 1920
493 S ORANGE	2014, 2010, 2005, 2002, 2001, 1997, 1995, 1992, 1991, 1986, 1980, 1975, 1971, 1970, 1966, 1965, 1961, 1960, 1956, 1955, 1952, 1950, 1946, 1945, 1936, 1930, 1926, 1925, 1922, 1921, 1920

FINDINGS

Address Researched	Address Not Identified in Research Source
493 S ORANGE ST	2014, 2010, 2005, 2002, 2001, 1997, 1995, 1992, 1971, 1966, 1965, 1961, 1960, 1956, 1952, 1945, 1941, 1936, 1930, 1926, 1921, 1920
495 OLIVE ST S	2014, 2010, 2005, 2002, 2001, 1997, 1995, 1992, 1991, 1986, 1980, 1975, 1971, 1970, 1966, 1965, 1961, 1960, 1956, 1955, 1952, 1950, 1946, 1941, 1936, 1930, 1926, 1925, 1922, 1921, 1920
495 S OLIVE	2014, 2010, 2005, 2002, 2001, 1997, 1995, 1992, 1991, 1986, 1980, 1975, 1971, 1970, 1966, 1965, 1961, 1960, 1956, 1955, 1952, 1950, 1946, 1945, 1936, 1930, 1926, 1925, 1922, 1921, 1920
495 S OLIVE ST	2014, 2010, 2005, 2002, 2001, 1997, 1995, 1992, 1991, 1986, 1975, 1971, 1965, 1961, 1960, 1956, 1955, 1952, 1950, 1946, 1945, 1941, 1936, 1926, 1921, 1920
503 GLASSELL ST S	2014, 2010, 2005, 2002, 2001, 1997, 1995, 1992, 1991, 1986, 1980, 1975, 1971, 1970, 1966, 1961, 1960, 1956, 1955, 1950, 1946, 1945, 1941, 1936, 1930, 1926, 1925, 1922, 1921, 1920
503 S GLASSELL ST	2014, 2010, 2005, 2002, 2001, 1997, 1992, 1991, 1986, 1971, 1965, 1961, 1960, 1956, 1952, 1946, 1945, 1941, 1936, 1930, 1926, 1925, 1922, 1921, 1920
503 S Glassell St	2002, 2001, 1997, 1995, 1992, 1991, 1986, 1980, 1975, 1971, 1970, 1966, 1965, 1961, 1960, 1956, 1955, 1952, 1950, 1946, 1945, 1941, 1936, 1930, 1926, 1925, 1922, 1921, 1920
504 GLASSELL ST S	2014, 2010, 2005, 2002, 2001, 1997, 1995, 1992, 1991, 1986, 1980, 1975, 1971, 1970, 1966, 1965, 1961, 1960, 1956, 1955, 1952, 1950, 1946, 1945, 1941, 1936, 1930, 1926, 1922, 1921, 1920
505 GLASSELL ST S	2014, 2010, 2005, 2002, 2001, 1997, 1995, 1992, 1991, 1986, 1980, 1975, 1971, 1970, 1966, 1961, 1960, 1956, 1955, 1952, 1950, 1946, 1945, 1941, 1936, 1930, 1926, 1925, 1922, 1921, 1920
508 GLASSELL ST S	2014, 2010, 2005, 2002, 2001, 1997, 1995, 1992, 1991, 1986, 1980, 1975, 1971, 1970, 1966, 1961, 1960, 1956, 1955, 1952, 1950, 1946, 1945, 1941, 1936, 1930, 1926, 1925, 1922, 1921, 1920
509 GLASSELL ST S	2014, 2010, 2005, 2002, 2001, 1997, 1995, 1992, 1991, 1986, 1980, 1975, 1971, 1970, 1966, 1961, 1960, 1956, 1955, 1952, 1950, 1946, 1945, 1941, 1936, 1930, 1926, 1925, 1922, 1921, 1920
509 S ORANGE ST	2014, 2010, 2005, 2002, 2001, 1997, 1995, 1992, 1991, 1986, 1980, 1975, 1971, 1966, 1965, 1961, 1960, 1956, 1955, 1952, 1950, 1946, 1945, 1941, 1936, 1930, 1926, 1925, 1922, 1921, 1920
510 ORANGE ST S	2014, 2010, 2005, 2002, 2001, 1997, 1995, 1992, 1991, 1986, 1980, 1975, 1971, 1970, 1966, 1961, 1960, 1956, 1955, 1950, 1946, 1945, 1941, 1936, 1930, 1926, 1925, 1922, 1921, 1920
510 S ORANGE ST	2014, 2010, 2005, 2002, 2001, 1997, 1995, 1992, 1986, 1971, 1966, 1965, 1961, 1960, 1956, 1952, 1946, 1945, 1941, 1936, 1930, 1926, 1925, 1922, 1921, 1920
514 GLASSELL ST S	2014, 2010, 2005, 2002, 2001, 1997, 1995, 1992, 1991, 1986, 1980, 1975, 1971, 1970, 1966, 1961, 1960, 1956, 1955, 1952, 1950, 1946, 1945, 1941, 1936, 1930, 1926, 1925, 1922, 1921, 1920
515 ORANGE ST S	2014, 2010, 2005, 2002, 2001, 1997, 1995, 1992, 1991, 1986, 1980, 1975, 1971, 1970, 1966, 1961, 1960, 1956, 1955, 1950, 1946, 1945, 1941, 1930, 1926, 1925, 1922, 1921, 1920
515 ORANGE ST S	2014, 2010, 2005, 2002, 2001, 1997, 1995, 1992, 1991, 1986, 1980, 1975, 1971, 1970, 1966, 1965, 1961, 1960, 1956, 1955, 1952, 1950, 1946, 1941, 1936, 1930, 1926, 1925, 1922, 1921, 1920
515 S ORANGE ST	2014, 2010, 2005, 2002, 2001, 1997, 1995, 1992, 1991, 1986, 1980, 1975, 1971, 1966, 1965, 1961, 1960, 1956, 1955, 1952, 1950, 1945, 1941, 1936, 1930, 1926, 1921, 1920

FINDINGS

Address Researched	Address Not Identified in Research Source
518 ORANGE ST S	2014, 2010, 2005, 2002, 2001, 1997, 1995, 1992, 1991, 1986, 1980, 1975, 1971, 1970, 1966, 1961, 1960, 1956, 1955, 1950, 1946, 1945, 1941, 1936, 1930, 1926, 1925, 1922, 1921, 1920
518 S ORANGE ST	2014, 2010, 2005, 2002, 2001, 1997, 1995, 1992, 1991, 1986, 1980, 1971, 1970, 1966, 1965, 1961, 1960, 1956, 1955, 1952, 1946, 1945, 1941, 1936, 1930, 1926, 1925, 1922, 1921, 1920
520 GLASSELL ST S	2014, 2010, 2005, 2002, 2001, 1997, 1995, 1992, 1991, 1986, 1980, 1975, 1971, 1970, 1966, 1961, 1960, 1956, 1955, 1952, 1950, 1946, 1945, 1941, 1936, 1930, 1926, 1925, 1922, 1921, 1920
521 GLASSELL ST S	2014, 2010, 2005, 2002, 2001, 1997, 1995, 1992, 1991, 1986, 1980, 1975, 1971, 1970, 1966, 1961, 1960, 1956, 1955, 1952, 1950, 1946, 1945, 1941, 1936, 1930, 1926, 1925, 1922, 1921, 1920
525 GLASSELL ST S	2014, 2010, 2005, 2002, 2001, 1997, 1995, 1992, 1991, 1986, 1980, 1975, 1971, 1970, 1966, 1961, 1960, 1956, 1955, 1950, 1946, 1945, 1941, 1936, 1930, 1926, 1925, 1922, 1921, 1920
525 GLASSELL ST S	2014, 2010, 2005, 2002, 2001, 1997, 1995, 1992, 1991, 1986, 1980, 1975, 1971, 1970, 1966, 1965, 1961, 1960, 1956, 1955, 1952, 1950, 1946, 1941, 1936, 1930, 1926, 1925, 1922, 1921, 1920
525 ORANGE ST S	2014, 2010, 2005, 2002, 2001, 1997, 1995, 1992, 1991, 1986, 1980, 1975, 1971, 1970, 1966, 1965, 1961, 1960, 1956, 1955, 1952, 1950, 1946, 1941, 1936, 1930, 1926, 1925, 1922, 1921, 1920
525 ORANGE ST S	2014, 2010, 2005, 2002, 2001, 1997, 1995, 1992, 1991, 1986, 1980, 1975, 1971, 1970, 1966, 1961, 1960, 1956, 1955, 1950, 1946, 1945, 1941, 1930, 1926, 1925, 1922, 1921, 1920
525 S GLASSELL ST	2014, 2010, 2005, 2002, 2001, 1997, 1992, 1980, 1971, 1965, 1961, 1960, 1956, 1952, 1945, 1936, 1930, 1926, 1925, 1922, 1921, 1920
525 S Glassell St	2014, 2002, 2001, 1997, 1995, 1992, 1991, 1986, 1980, 1975, 1971, 1970, 1966, 1965, 1961, 1960, 1956, 1955, 1952, 1950, 1946, 1945, 1941, 1936, 1930, 1926, 1925, 1922, 1921, 1920
525 S ORANGE	2014, 2010, 2005, 2002, 2001, 1997, 1995, 1992, 1991, 1986, 1980, 1975, 1971, 1970, 1966, 1965, 1961, 1960, 1956, 1955, 1952, 1950, 1946, 1945, 1936, 1930, 1926, 1925, 1922, 1921, 1920
525 S ORANGE ST	2014, 2010, 2005, 2002, 2001, 1997, 1995, 1992, 1986, 1980, 1975, 1971, 1970, 1966, 1965, 1961, 1960, 1956, 1955, 1952, 1945, 1941, 1936, 1930, 1926, 1921, 1920
528 ORANGE ST S	2014, 2010, 2005, 2002, 2001, 1997, 1995, 1992, 1991, 1986, 1980, 1975, 1971, 1970, 1966, 1961, 1960, 1956, 1955, 1950, 1946, 1945, 1941, 1930, 1926, 1925, 1922, 1921, 1920
528 ORANGE ST S	2014, 2010, 2005, 2002, 2001, 1997, 1995, 1992, 1991, 1986, 1980, 1975, 1971, 1970, 1966, 1965, 1961, 1960, 1956, 1955, 1952, 1950, 1946, 1941, 1936, 1930, 1926, 1925, 1922, 1921, 1920
528 S ORANGE ST	2014, 2010, 2005, 2002, 2001, 1997, 1995, 1992, 1991, 1986, 1971, 1966, 1965, 1961, 1960, 1956, 1952, 1950, 1946, 1945, 1941, 1936, 1930, 1926, 1922, 1921, 1920
530 GLASSELL ST S	2014, 2010, 2005, 2002, 2001, 1997, 1995, 1992, 1991, 1986, 1980, 1975, 1971, 1970, 1966, 1961, 1960, 1956, 1955, 1950, 1946, 1945, 1941, 1936, 1930, 1926, 1925, 1922, 1921, 1920
530 S GLASSELL ST	2014, 2010, 2005, 2002, 2001, 1997, 1992, 1986, 1971, 1965, 1961, 1960, 1956, 1952, 1946, 1945, 1941, 1936, 1930, 1926, 1925, 1922, 1921, 1920
530 S Glassell St	2002, 2001, 1997, 1995, 1992, 1991, 1986, 1980, 1975, 1971, 1970, 1966, 1965, 1961, 1960, 1956, 1955, 1952, 1950, 1946, 1945, 1941, 1936, 1930, 1926, 1925, 1922, 1921, 1920

FINDINGS

Address Researched	Address Not Identified in Research Source
530 S ORANGE ST	2014, 2010, 2005, 2002, 2001, 1997, 1992, 1975, 1971, 1970, 1966, 1965, 1961, 1960, 1956, 1955, 1952, 1950, 1946, 1945, 1941, 1936, 1930, 1926, 1925, 1922, 1921, 1920
533 GLASSELL ST S	2014, 2010, 2005, 2002, 2001, 1997, 1995, 1992, 1991, 1986, 1980, 1975, 1971, 1970, 1966, 1961, 1960, 1956, 1955, 1952, 1950, 1946, 1945, 1941, 1936, 1930, 1926, 1925, 1922, 1921, 1920
534 S ORANGE ST	2014, 2010, 2005, 2002, 2001, 1997, 1995, 1992, 1991, 1986, 1980, 1975, 1971, 1966, 1965, 1961, 1960, 1956, 1955, 1952, 1950, 1946, 1945, 1941, 1936, 1930, 1926, 1925, 1922, 1921, 1920
535 GLASSELL ST S	2014, 2010, 2005, 2002, 2001, 1997, 1995, 1992, 1991, 1986, 1980, 1975, 1971, 1970, 1966, 1965, 1961, 1960, 1956, 1955, 1952, 1950, 1946, 1945, 1941, 1936, 1930, 1926, 1925, 1921, 1920
535 ORANGE ST S	2014, 2010, 2005, 2002, 2001, 1997, 1995, 1992, 1991, 1986, 1980, 1975, 1971, 1970, 1966, 1961, 1960, 1956, 1955, 1950, 1946, 1945, 1941, 1930, 1926, 1925, 1922, 1921, 1920
535 ORANGE ST S	2014, 2010, 2005, 2002, 2001, 1997, 1995, 1992, 1991, 1986, 1980, 1975, 1971, 1970, 1966, 1965, 1961, 1960, 1956, 1955, 1952, 1950, 1946, 1941, 1936, 1930, 1926, 1925, 1922, 1921, 1920
535 S ORANGE ST	2014, 2010, 2005, 2002, 2001, 1997, 1995, 1992, 1991, 1980, 1971, 1966, 1965, 1961, 1960, 1956, 1952, 1945, 1941, 1936, 1930, 1926, 1925, 1922, 1921, 1920
537 1/2 GLASSELL ST S	2014, 2010, 2005, 2002, 2001, 1997, 1995, 1992, 1991, 1986, 1980, 1975, 1971, 1970, 1966, 1965, 1961, 1960, 1956, 1955, 1950, 1946, 1945, 1941, 1936, 1930, 1926, 1925, 1922, 1921, 1920
537 GLASSELL ST S	2014, 2010, 2005, 2002, 2001, 1997, 1995, 1992, 1991, 1986, 1980, 1975, 1971, 1970, 1966, 1961, 1960, 1956, 1955, 1950, 1946, 1945, 1941, 1936, 1930, 1926, 1925, 1922, 1921, 1920
537 S GLASSELL ST	2014, 2010, 2005, 2002, 2001, 1997, 1995, 1992, 1991, 1986, 1980, 1971, 1965, 1961, 1960, 1956, 1952, 1946, 1945, 1941, 1936, 1930, 1926, 1925, 1922, 1921, 1920
539 1/2 GLASSELL ST S	2014, 2010, 2005, 2002, 2001, 1997, 1995, 1992, 1991, 1986, 1980, 1975, 1971, 1970, 1966, 1965, 1961, 1960, 1956, 1955, 1950, 1946, 1945, 1941, 1936, 1930, 1926, 1925, 1922, 1921, 1920
539 GLASSELL ST S	2014, 2010, 2005, 2002, 2001, 1997, 1995, 1992, 1991, 1986, 1980, 1975, 1971, 1970, 1966, 1961, 1960, 1956, 1955, 1952, 1950, 1946, 1945, 1941, 1936, 1930, 1926, 1925, 1922, 1921, 1920
539 S GLASSELL ST	2014, 2010, 2005, 2002, 2001, 1997, 1992, 1971, 1966, 1965, 1961, 1960, 1956, 1952, 1946, 1945, 1941, 1936, 1930, 1926, 1925, 1922, 1921, 1920
539 S Glassell St	2014, 2005, 2002, 2001, 1997, 1995, 1992, 1991, 1986, 1980, 1975, 1971, 1970, 1966, 1965, 1961, 1960, 1956, 1955, 1952, 1950, 1946, 1945, 1941, 1936, 1930, 1926, 1925, 1922, 1921, 1920
540 S ORANGE ST	2014, 2010, 2005, 2002, 2001, 1997, 1995, 1992, 1991, 1986, 1980, 1975, 1971, 1966, 1965, 1961, 1960, 1956, 1955, 1952, 1950, 1946, 1945, 1941, 1936, 1930, 1926, 1925, 1922, 1921, 1920
541 GLASSELL ST S	2014, 2010, 2005, 2002, 2001, 1997, 1995, 1992, 1991, 1986, 1980, 1975, 1971, 1970, 1966, 1961, 1960, 1956, 1955, 1950, 1946, 1945, 1941, 1936, 1930, 1926, 1925, 1922, 1921, 1920
541 S GLASSELL ST	2014, 2010, 2005, 2002, 2001, 1997, 1995, 1992, 1991, 1986, 1980, 1975, 1971, 1965, 1961, 1960, 1956, 1952, 1946, 1945, 1941, 1936, 1930, 1926, 1925, 1922, 1921, 1920
544 ORANGE ST S	2014, 2010, 2005, 2002, 2001, 1997, 1995, 1992, 1991, 1986, 1980, 1975, 1971, 1970, 1966, 1965, 1961, 1960, 1956, 1955, 1950, 1946, 1945, 1941, 1936, 1930, 1926, 1925, 1922, 1921, 1920

FINDINGS

Address Researched	Address Not Identified in Research Source
544 ORANGE ST S	2014, 2010, 2005, 2002, 2001, 1997, 1995, 1992, 1991, 1986, 1980, 1975, 1971, 1970, 1966, 1965, 1961, 1960, 1956, 1955, 1952, 1950, 1946, 1941, 1936, 1930, 1926, 1925, 1922, 1921, 1920
544 S ORANGE	2014, 2010, 2005, 2002, 2001, 1997, 1995, 1992, 1991, 1986, 1980, 1975, 1971, 1970, 1966, 1965, 1961, 1960, 1956, 1955, 1952, 1950, 1946, 1945, 1936, 1930, 1926, 1925, 1922, 1921, 1920
544 S ORANGE ST	2014, 2010, 2005, 2002, 2001, 1997, 1992, 1991, 1986, 1971, 1970, 1966, 1965, 1961, 1960, 1956, 1955, 1952, 1950, 1946, 1945, 1941, 1936, 1930, 1926, 1925, 1922, 1921, 1920
545 GLASSELL ST S	2014, 2010, 2005, 2002, 2001, 1997, 1995, 1992, 1991, 1986, 1980, 1975, 1971, 1970, 1966, 1961, 1960, 1956, 1955, 1952, 1950, 1946, 1945, 1941, 1936, 1930, 1926, 1925, 1922, 1921, 1920
545 ORANGE ST S	2014, 2010, 2005, 2002, 2001, 1997, 1995, 1992, 1991, 1986, 1980, 1975, 1971, 1970, 1966, 1961, 1960, 1956, 1955, 1950, 1946, 1945, 1941, 1930, 1926, 1925, 1922, 1921, 1920
545 ORANGE ST S	2014, 2010, 2005, 2002, 2001, 1997, 1995, 1992, 1991, 1986, 1980, 1975, 1971, 1970, 1966, 1965, 1961, 1960, 1956, 1955, 1952, 1950, 1946, 1941, 1936, 1930, 1926, 1925, 1922, 1921, 1920
545 S ORANGE ST	2014, 2010, 2005, 2002, 2001, 1997, 1995, 1992, 1991, 1986, 1971, 1966, 1965, 1961, 1960, 1956, 1955, 1952, 1950, 1946, 1945, 1941, 1936, 1930, 1926, 1922, 1921, 1920
550 GLASSELL ST S	2014, 2010, 2005, 2002, 2001, 1997, 1995, 1992, 1991, 1986, 1980, 1975, 1971, 1970, 1966, 1965, 1961, 1960, 1956, 1955, 1950, 1946, 1945, 1941, 1930, 1926, 1921, 1920
550 GLASSELL ST S	2014, 2010, 2005, 2002, 2001, 1997, 1995, 1992, 1991, 1986, 1980, 1975, 1971, 1970, 1966, 1965, 1961, 1960, 1956, 1955, 1952, 1950, 1946, 1941, 1936, 1930, 1926, 1925, 1922, 1921, 1920
550 S GLASSELL ST	2014, 2010, 2005, 2002, 2001, 1997, 1995, 1992, 1991, 1986, 1980, 1975, 1971, 1970, 1966, 1965, 1961, 1960, 1956, 1952, 1945, 1936, 1930, 1926, 1925, 1922, 1921, 1920
555 S ORANGE ST	2014, 2010, 2005, 2002, 2001, 1997, 1995, 1992, 1991, 1986, 1980, 1975, 1971, 1970, 1966, 1965, 1961, 1960, 1956, 1955, 1952, 1950, 1946, 1945, 1941, 1936, 1930, 1926, 1921, 1920
563 Fashion Park	2014, 2010, 2002, 2001, 1997, 1995, 1992, 1991, 1986, 1980, 1975, 1971, 1970, 1966, 1965, 1961, 1960, 1956, 1955, 1952, 1950, 1946, 1945, 1941, 1936, 1930, 1926, 1925, 1922, 1921, 1920
566 S Glassell St	2002, 2001, 1997, 1995, 1992, 1991, 1986, 1980, 1975, 1971, 1970, 1966, 1965, 1961, 1960, 1956, 1955, 1952, 1950, 1946, 1945, 1941, 1936, 1930, 1926, 1925, 1922, 1921, 1920
566 S GLASSELL ST	2014, 2010, 2005, 2002, 2001, 1997, 1992, 1971, 1965, 1961, 1960, 1956, 1955, 1952, 1950, 1946, 1945, 1941, 1936, 1930, 1926, 1925, 1922, 1921, 1920
573 S Fashion Park St	2014, 2002, 2001, 1997, 1995, 1992, 1991, 1986, 1980, 1975, 1971, 1970, 1966, 1965, 1961, 1960, 1956, 1955, 1952, 1950, 1946, 1945, 1941, 1936, 1930, 1926, 1925, 1922, 1921, 1920
576 GLASSELL ST S	2014, 2010, 2005, 2002, 2001, 1997, 1995, 1992, 1991, 1986, 1980, 1975, 1971, 1970, 1966, 1961, 1960, 1956, 1955, 1952, 1950, 1946, 1945, 1941, 1936, 1930, 1926, 1925, 1922, 1921, 1920
576 S GLASSELL ST	2014, 2010, 2005, 2002, 2001, 1997, 1995, 1992, 1991, 1986, 1980, 1971, 1965, 1961, 1960, 1956, 1955, 1952, 1950, 1946, 1945, 1941, 1936, 1930, 1926, 1925, 1922, 1921, 1920

FINDINGS

Address Researched	Address Not Identified in Research Source
585 S Fashion Park St	2014, 2005, 2002, 2001, 1997, 1995, 1992, 1991, 1986, 1980, 1975, 1971, 1970, 1966, 1965, 1961, 1960, 1956, 1955, 1952, 1950, 1946, 1945, 1941, 1936, 1930, 1926, 1925, 1922, 1921, 1920
600 S ORANGE ST	2014, 2010, 2005, 2002, 2001, 1997, 1995, 1992, 1991, 1986, 1980, 1975, 1971, 1970, 1965, 1961, 1960, 1956, 1955, 1952, 1950, 1946, 1945, 1941, 1936, 1930, 1926, 1925, 1922, 1921, 1920
601 GLASSELL ST S	2014, 2010, 2005, 2002, 2001, 1997, 1995, 1992, 1991, 1986, 1980, 1975, 1971, 1970, 1966, 1961, 1960, 1956, 1955, 1952, 1950, 1946, 1945, 1941, 1936, 1930, 1926, 1925, 1922, 1921, 1920
601 S ORANGE ST	2014, 2010, 2005, 2002, 2001, 1997, 1995, 1992, 1991, 1986, 1980, 1975, 1971, 1966, 1965, 1961, 1960, 1956, 1955, 1952, 1950, 1946, 1945, 1941, 1936, 1930, 1926, 1925, 1922, 1921, 1920
603 S Glassell St	2014, 2010, 2002, 2001, 1997, 1995, 1992, 1991, 1986, 1980, 1975, 1971, 1970, 1966, 1965, 1961, 1960, 1956, 1955, 1952, 1950, 1946, 1945, 1941, 1936, 1930, 1926, 1925, 1922, 1921, 1920
604 ORANGE ST S	2014, 2010, 2005, 2002, 2001, 1997, 1995, 1992, 1991, 1986, 1980, 1975, 1971, 1970, 1966, 1961, 1960, 1956, 1955, 1950, 1946, 1945, 1941, 1930, 1926, 1925, 1922, 1921, 1920
604 ORANGE ST S	2014, 2010, 2005, 2002, 2001, 1997, 1995, 1992, 1991, 1986, 1980, 1975, 1971, 1970, 1966, 1965, 1961, 1960, 1956, 1955, 1952, 1950, 1946, 1941, 1936, 1930, 1926, 1925, 1922, 1921, 1920
604 S ORANGE AVE	2014, 2010, 2005, 2002, 2001, 1997, 1995, 1992, 1991, 1986, 1980, 1975, 1971, 1970, 1965, 1961, 1960, 1956, 1955, 1952, 1950, 1946, 1945, 1941, 1936, 1930, 1926, 1925, 1922, 1921, 1920
604 S ORANGE ST	2014, 2010, 2005, 2002, 2001, 1997, 1995, 1992, 1971, 1966, 1965, 1961, 1960, 1956, 1952, 1945, 1941, 1936, 1930, 1926, 1925, 1922, 1921, 1920
605 GLASSELL ST S	2014, 2010, 2005, 2002, 2001, 1997, 1995, 1992, 1991, 1986, 1980, 1975, 1971, 1970, 1966, 1961, 1960, 1956, 1955, 1952, 1950, 1946, 1945, 1941, 1936, 1930, 1926, 1925, 1922, 1921, 1920
607 Fashion Park	2014, 2010, 2002, 2001, 1997, 1995, 1992, 1991, 1986, 1980, 1975, 1971, 1970, 1966, 1965, 1961, 1960, 1956, 1955, 1952, 1950, 1946, 1945, 1941, 1936, 1930, 1926, 1925, 1922, 1921, 1920
607 S Fashion Park St	2014, 2005, 2002, 2001, 1997, 1995, 1992, 1991, 1986, 1980, 1975, 1971, 1970, 1966, 1965, 1961, 1960, 1956, 1955, 1952, 1950, 1946, 1945, 1941, 1936, 1930, 1926, 1925, 1922, 1921, 1920
609 ORANGE ST S	2014, 2010, 2005, 2002, 2001, 1997, 1995, 1992, 1991, 1986, 1980, 1975, 1971, 1970, 1966, 1961, 1960, 1956, 1955, 1950, 1946, 1945, 1941, 1930, 1926, 1925, 1922, 1921, 1920
609 ORANGE ST S	2014, 2010, 2005, 2002, 2001, 1997, 1995, 1992, 1991, 1986, 1980, 1975, 1971, 1970, 1966, 1965, 1961, 1960, 1956, 1955, 1952, 1950, 1946, 1941, 1936, 1930, 1926, 1925, 1922, 1921, 1920
609 S ORANGE AVE	2014, 2010, 2005, 2002, 2001, 1997, 1995, 1992, 1991, 1986, 1980, 1975, 1971, 1970, 1965, 1961, 1960, 1956, 1955, 1952, 1950, 1946, 1945, 1941, 1936, 1930, 1926, 1925, 1922, 1921, 1920
609 S ORANGE ST	2014, 2010, 2005, 2002, 2001, 1997, 1995, 1992, 1991, 1971, 1966, 1965, 1961, 1960, 1956, 1952, 1946, 1945, 1941, 1936, 1930, 1926, 1921, 1920
610 S ORANGE ST	2014, 2010, 2005, 2002, 2001, 1997, 1995, 1992, 1991, 1986, 1980, 1975, 1971, 1966, 1965, 1961, 1960, 1956, 1955, 1952, 1950, 1946, 1945, 1941, 1936, 1930, 1926, 1925, 1922, 1921, 1920
611 GLASSELL ST S	2014, 2010, 2005, 2002, 2001, 1997, 1995, 1992, 1991, 1986, 1980, 1975, 1971, 1970, 1966, 1961, 1960, 1956, 1955, 1952, 1950, 1946, 1945, 1941, 1936, 1930, 1926, 1925, 1922, 1921, 1920

FINDINGS

Address Researched	Address Not Identified in Research Source
611 S ORANGE ST	2014, 2010, 2005, 2002, 2001, 1997, 1995, 1992, 1991, 1986, 1980, 1975, 1971, 1966, 1965, 1961, 1960, 1956, 1955, 1952, 1950, 1946, 1945, 1941, 1936, 1930, 1926, 1925, 1922, 1921, 1920
612 ORANGE ST S	2014, 2010, 2005, 2002, 2001, 1997, 1995, 1992, 1991, 1986, 1980, 1975, 1971, 1970, 1966, 1961, 1960, 1956, 1955, 1950, 1946, 1945, 1941, 1930, 1926, 1925, 1922, 1921, 1920
612 ORANGE ST S	2014, 2010, 2005, 2002, 2001, 1997, 1995, 1992, 1991, 1986, 1980, 1975, 1971, 1970, 1966, 1965, 1961, 1960, 1956, 1955, 1952, 1950, 1946, 1941, 1936, 1930, 1926, 1925, 1922, 1921, 1920
612 S ORANGE ST	2014, 2010, 2005, 2002, 2001, 1997, 1992, 1986, 1980, 1975, 1971, 1970, 1966, 1965, 1961, 1960, 1956, 1952, 1950, 1946, 1945, 1941, 1936, 1930, 1926, 1921, 1920
615 GLASSELL ST S	2014, 2010, 2005, 2002, 2001, 1997, 1995, 1992, 1991, 1986, 1980, 1975, 1971, 1970, 1966, 1961, 1960, 1956, 1955, 1952, 1950, 1946, 1945, 1941, 1936, 1930, 1926, 1925, 1922, 1921, 1920
615 ORANGE ST S	2014, 2010, 2005, 2002, 2001, 1997, 1995, 1992, 1991, 1986, 1980, 1975, 1971, 1970, 1966, 1961, 1960, 1956, 1955, 1950, 1946, 1945, 1941, 1930, 1926, 1925, 1922, 1921, 1920
615 ORANGE ST S	2014, 2010, 2005, 2002, 2001, 1997, 1995, 1992, 1991, 1986, 1980, 1975, 1971, 1970, 1966, 1965, 1961, 1960, 1956, 1955, 1952, 1950, 1946, 1941, 1936, 1930, 1926, 1925, 1922, 1921, 1920
615 S GLASSELL ST	2014, 2010, 2005, 2002, 2001, 1997, 1995, 1992, 1991, 1980, 1971, 1970, 1966, 1965, 1961, 1960, 1956, 1955, 1952, 1950, 1946, 1945, 1941, 1936, 1930, 1926, 1925, 1922, 1921, 1920
615 S ORANGE	2014, 2010, 2005, 2002, 2001, 1997, 1995, 1992, 1991, 1986, 1980, 1975, 1971, 1970, 1966, 1965, 1961, 1960, 1956, 1955, 1952, 1950, 1946, 1945, 1936, 1930, 1926, 1925, 1922, 1921, 1920
615 S ORANGE ST	2014, 2010, 2005, 2002, 2001, 1997, 1995, 1992, 1991, 1986, 1971, 1966, 1965, 1961, 1960, 1956, 1952, 1945, 1941, 1936, 1930, 1926, 1921, 1920
616 S ORANGE ST	2014, 2010, 2005, 2002, 2001, 1997, 1995, 1992, 1991, 1986, 1975, 1971, 1970, 1966, 1965, 1961, 1960, 1956, 1955, 1952, 1950, 1946, 1945, 1941, 1936, 1930, 1926, 1925, 1922, 1921, 1920
617 Fashion Park	2014, 2010, 2002, 2001, 1997, 1995, 1992, 1991, 1986, 1980, 1975, 1971, 1970, 1966, 1965, 1961, 1960, 1956, 1955, 1952, 1950, 1946, 1945, 1941, 1936, 1930, 1926, 1925, 1922, 1921, 1920
617 S Fashion Park St	2005, 2002, 2001, 1997, 1995, 1992, 1991, 1986, 1980, 1975, 1971, 1970, 1966, 1965, 1961, 1960, 1956, 1955, 1952, 1950, 1946, 1945, 1941, 1936, 1930, 1926, 1925, 1922, 1921, 1920
617 S GLASSELL ST	2014, 2010, 2005, 2002, 2001, 1997, 1995, 1992, 1991, 1986, 1980, 1971, 1970, 1966, 1965, 1961, 1960, 1956, 1955, 1952, 1950, 1946, 1945, 1941, 1936, 1930, 1926, 1925, 1922, 1921, 1920
618 GLASSELL ST S	2014, 2010, 2005, 2002, 2001, 1997, 1995, 1992, 1991, 1986, 1980, 1975, 1971, 1970, 1966, 1961, 1960, 1956, 1955, 1952, 1950, 1946, 1945, 1941, 1936, 1930, 1926, 1925, 1922, 1921, 1920
619 GLASSELL ST S	2014, 2010, 2005, 2002, 2001, 1997, 1995, 1992, 1991, 1986, 1980, 1975, 1971, 1970, 1966, 1961, 1960, 1956, 1955, 1952, 1950, 1946, 1945, 1941, 1936, 1930, 1926, 1925, 1922, 1921, 1920
619 S ORANGE ST	2014, 2010, 2005, 2002, 2001, 1997, 1995, 1992, 1991, 1986, 1980, 1975, 1971, 1966, 1965, 1961, 1960, 1956, 1955, 1952, 1950, 1946, 1945, 1941, 1936, 1930, 1926, 1925, 1922, 1921, 1920

FINDINGS

Address Researched	Address Not Identified in Research Source
620 ORANGE ST S	2014, 2010, 2005, 2002, 2001, 1997, 1995, 1992, 1991, 1986, 1980, 1975, 1971, 1970, 1966, 1965, 1961, 1960, 1956, 1955, 1952, 1950, 1946, 1941, 1936, 1930, 1926, 1925, 1922, 1921, 1920
620 ORANGE ST S	2014, 2010, 2005, 2002, 2001, 1997, 1995, 1992, 1991, 1986, 1980, 1975, 1971, 1970, 1966, 1961, 1960, 1956, 1955, 1950, 1946, 1945, 1941, 1930, 1926, 1925, 1922, 1921, 1920
620 S Glassell St	2002, 2001, 1997, 1995, 1992, 1991, 1986, 1980, 1975, 1971, 1970, 1966, 1965, 1961, 1960, 1956, 1955, 1952, 1950, 1946, 1945, 1941, 1936, 1930, 1926, 1925, 1922, 1921, 1920
620 S GLASSELL ST	2014, 2010, 2005, 2002, 2001, 1997, 1992, 1986, 1980, 1975, 1971, 1970, 1966, 1965, 1961, 1960, 1956, 1955, 1952, 1950, 1946, 1945, 1941, 1936, 1930, 1926, 1925, 1922, 1921, 1920
620 S ORANGE	2014, 2010, 2005, 2002, 2001, 1997, 1995, 1992, 1991, 1986, 1980, 1975, 1971, 1970, 1966, 1965, 1961, 1960, 1956, 1955, 1952, 1950, 1946, 1945, 1936, 1930, 1926, 1925, 1922, 1921, 1920
620 S ORANGE AVE	2014, 2010, 2005, 2002, 2001, 1997, 1995, 1992, 1991, 1986, 1980, 1975, 1971, 1970, 1965, 1961, 1960, 1956, 1955, 1952, 1950, 1946, 1945, 1941, 1936, 1930, 1926, 1925, 1922, 1921, 1920
620 S ORANGE ST	2014, 2010, 2005, 2002, 2001, 1997, 1995, 1992, 1991, 1980, 1971, 1970, 1966, 1965, 1961, 1960, 1956, 1952, 1945, 1941, 1936, 1930, 1926, 1921, 1920
621 1/2 ORANGE ST S	2014, 2010, 2005, 2002, 2001, 1997, 1995, 1992, 1991, 1986, 1980, 1975, 1971, 1970, 1966, 1965, 1961, 1960, 1956, 1955, 1952, 1950, 1946, 1941, 1936, 1930, 1926, 1925, 1922, 1921, 1920
621 1/2 ORANGE ST S	2014, 2010, 2005, 2002, 2001, 1997, 1995, 1992, 1991, 1986, 1980, 1975, 1971, 1970, 1966, 1965, 1961, 1960, 1956, 1955, 1950, 1946, 1945, 1941, 1936, 1930, 1926, 1925, 1922, 1921, 1920
621 ORANGE ST S	2014, 2010, 2005, 2002, 2001, 1997, 1995, 1992, 1991, 1986, 1980, 1975, 1971, 1970, 1966, 1961, 1960, 1956, 1955, 1950, 1946, 1945, 1941, 1930, 1926, 1925, 1922, 1921, 1920
621 ORANGE ST S	2014, 2010, 2005, 2002, 2001, 1997, 1995, 1992, 1991, 1986, 1980, 1975, 1971, 1970, 1966, 1965, 1961, 1960, 1956, 1955, 1952, 1950, 1946, 1941, 1936, 1930, 1926, 1925, 1922, 1921, 1920
621 S ORANGE	2014, 2010, 2005, 2002, 2001, 1997, 1995, 1992, 1991, 1986, 1980, 1975, 1971, 1970, 1966, 1965, 1961, 1960, 1956, 1955, 1952, 1950, 1946, 1945, 1936, 1930, 1926, 1925, 1922, 1921, 1920
621 S ORANGE AVE	2014, 2010, 2005, 2002, 2001, 1997, 1995, 1992, 1991, 1986, 1980, 1975, 1971, 1970, 1965, 1961, 1960, 1956, 1955, 1952, 1950, 1946, 1945, 1941, 1936, 1930, 1926, 1925, 1922, 1921, 1920
621 S ORANGE ST	2014, 2010, 2005, 2002, 2001, 1997, 1995, 1992, 1991, 1986, 1971, 1966, 1965, 1961, 1960, 1956, 1952, 1945, 1941, 1936, 1930, 1926, 1921, 1920
622 ORANGE ST S	2014, 2010, 2005, 2002, 2001, 1997, 1995, 1992, 1991, 1986, 1980, 1975, 1971, 1970, 1966, 1961, 1960, 1956, 1955, 1952, 1950, 1946, 1945, 1941, 1936, 1930, 1926, 1925, 1922, 1921, 1920
622 S ORANGE AVE	2014, 2010, 2005, 2002, 2001, 1997, 1995, 1992, 1991, 1986, 1980, 1975, 1971, 1970, 1965, 1961, 1960, 1956, 1955, 1952, 1950, 1946, 1945, 1941, 1936, 1930, 1926, 1925, 1922, 1921, 1920
622 S ORANGE ST	2014, 2010, 2005, 2002, 2001, 1997, 1995, 1992, 1991, 1986, 1980, 1971, 1970, 1966, 1965, 1961, 1960, 1956, 1955, 1952, 1950, 1946, 1945, 1941, 1936, 1930, 1926, 1925, 1922, 1921, 1920
623 S ORANGE ST	2014, 2010, 2005, 2002, 2001, 1997, 1995, 1992, 1991, 1986, 1980, 1975, 1971, 1966, 1965, 1961, 1960, 1956, 1955, 1952, 1950, 1946, 1945, 1941, 1936, 1930, 1926, 1925, 1922, 1921, 1920

FINDINGS

Address Researched	Address Not Identified in Research Source
624 ORANGE ST S	2014, 2010, 2005, 2002, 2001, 1997, 1995, 1992, 1991, 1986, 1980, 1975, 1971, 1970, 1966, 1961, 1960, 1956, 1955, 1950, 1946, 1945, 1941, 1930, 1926, 1925, 1922, 1921, 1920
624 S ORANGE AVE	2014, 2010, 2005, 2002, 2001, 1997, 1995, 1992, 1991, 1986, 1980, 1975, 1971, 1970, 1965, 1961, 1960, 1956, 1955, 1952, 1950, 1946, 1945, 1941, 1936, 1930, 1926, 1925, 1922, 1921, 1920
624 S ORANGE ST	2014, 2010, 2005, 2002, 2001, 1997, 1995, 1992, 1991, 1986, 1980, 1971, 1966, 1965, 1961, 1960, 1956, 1955, 1952, 1946, 1945, 1941, 1936, 1930, 1926, 1922, 1921, 1920
625 S Glassell St	2014, 2002, 2001, 1997, 1995, 1992, 1991, 1986, 1980, 1975, 1971, 1970, 1966, 1965, 1961, 1960, 1956, 1955, 1952, 1950, 1946, 1945, 1941, 1936, 1930, 1926, 1925, 1922, 1921, 1920
625 S ORANGE ST	2014, 2010, 2005, 2002, 2001, 1997, 1995, 1992, 1991, 1986, 1975, 1971, 1966, 1965, 1961, 1960, 1956, 1955, 1952, 1950, 1946, 1945, 1941, 1936, 1930, 1926, 1925, 1922, 1921, 1920
626 ORANGE ST S	2014, 2010, 2005, 2002, 2001, 1997, 1995, 1992, 1991, 1986, 1980, 1975, 1971, 1970, 1966, 1961, 1960, 1956, 1955, 1950, 1946, 1945, 1941, 1930, 1926, 1925, 1922, 1921, 1920
626 ORANGE ST S	2014, 2010, 2005, 2002, 2001, 1997, 1995, 1992, 1991, 1986, 1980, 1975, 1971, 1970, 1966, 1965, 1961, 1960, 1956, 1955, 1952, 1950, 1946, 1941, 1936, 1930, 1926, 1925, 1922, 1921, 1920
626 S ORANGE AVE	2014, 2010, 2005, 2002, 2001, 1997, 1995, 1992, 1991, 1986, 1980, 1975, 1971, 1970, 1965, 1961, 1960, 1956, 1955, 1952, 1950, 1946, 1945, 1941, 1936, 1930, 1926, 1925, 1922, 1921, 1920
626 S ORANGE ST	2014, 2010, 2005, 2002, 2001, 1997, 1995, 1992, 1991, 1986, 1971, 1965, 1961, 1960, 1956, 1952, 1945, 1941, 1936, 1930, 1926, 1921, 1920
627 GLASSELL ST S	2014, 2010, 2005, 2002, 2001, 1997, 1995, 1992, 1991, 1986, 1980, 1975, 1971, 1970, 1966, 1965, 1961, 1960, 1956, 1955, 1950, 1946, 1945, 1941, 1930, 1926, 1925, 1922, 1921, 1920
627 GLASSELL ST S	2014, 2010, 2005, 2002, 2001, 1997, 1995, 1992, 1991, 1986, 1980, 1975, 1971, 1970, 1966, 1965, 1961, 1960, 1956, 1955, 1952, 1950, 1946, 1941, 1936, 1930, 1926, 1925, 1922, 1921, 1920
628 S GLASSELL ST	2014, 2010, 2005, 2002, 2001, 1997, 1995, 1992, 1986, 1980, 1975, 1971, 1970, 1966, 1965, 1961, 1960, 1956, 1955, 1952, 1950, 1946, 1945, 1941, 1936, 1930, 1926, 1925, 1922, 1921, 1920
628 S ORANGE ST	2014, 2010, 2005, 2002, 2001, 1997, 1995, 1992, 1991, 1986, 1980, 1975, 1971, 1970, 1966, 1965, 1961, 1960, 1956, 1955, 1952, 1950, 1946, 1945, 1941, 1936, 1930, 1926, 1921, 1920
629 GLASSELL ST S	2014, 2010, 2005, 2002, 2001, 1997, 1995, 1992, 1991, 1986, 1980, 1975, 1971, 1970, 1966, 1961, 1960, 1956, 1955, 1950, 1946, 1945, 1941, 1930, 1926, 1921, 1920
629 GLASSELL ST S	2014, 2010, 2005, 2002, 2001, 1997, 1995, 1992, 1991, 1986, 1980, 1975, 1971, 1970, 1966, 1965, 1961, 1960, 1956, 1955, 1952, 1950, 1946, 1941, 1936, 1930, 1926, 1925, 1922, 1921, 1920
629 ORANGE ST S	2014, 2010, 2005, 2002, 2001, 1997, 1995, 1992, 1991, 1986, 1980, 1975, 1971, 1970, 1966, 1965, 1961, 1960, 1956, 1955, 1952, 1950, 1946, 1941, 1936, 1930, 1926, 1925, 1922, 1921, 1920
629 ORANGE ST S	2014, 2010, 2005, 2002, 2001, 1997, 1995, 1992, 1991, 1986, 1980, 1975, 1971, 1970, 1966, 1965, 1961, 1960, 1956, 1955, 1950, 1946, 1945, 1941, 1930, 1926, 1925, 1922, 1921, 1920

FINDINGS

Address Researched	Address Not Identified in Research Source
629 S GLASSELL ST	2014, 2010, 2005, 2002, 2001, 1997, 1995, 1992, 1991, 1986, 1980, 1971, 1970, 1966, 1965, 1961, 1960, 1956, 1952, 1945, 1941, 1936, 1930, 1926, 1925, 1922, 1921, 1920
629 S ORANGE	2014, 2010, 2005, 2002, 2001, 1997, 1995, 1992, 1991, 1986, 1980, 1975, 1971, 1970, 1966, 1965, 1961, 1960, 1956, 1955, 1952, 1950, 1946, 1945, 1936, 1930, 1926, 1925, 1922, 1921, 1920
629 S ORANGE ST	2014, 2010, 2005, 2002, 2001, 1997, 1995, 1992, 1991, 1980, 1975, 1971, 1966, 1965, 1961, 1960, 1956, 1952, 1945, 1941, 1936, 1930, 1926, 1921, 1920
629 S Orange St	2002, 2001, 1997, 1995, 1992, 1991, 1986, 1980, 1975, 1971, 1970, 1966, 1965, 1961, 1960, 1956, 1955, 1952, 1950, 1946, 1945, 1941, 1936, 1930, 1926, 1925, 1922, 1921, 1920
630 S Glassell St	2002, 2001, 1997, 1995, 1992, 1991, 1986, 1980, 1975, 1971, 1970, 1966, 1965, 1961, 1960, 1956, 1955, 1952, 1950, 1946, 1945, 1941, 1936, 1930, 1926, 1925, 1922, 1921, 1920
630 S GLASSELL ST	2014, 2010, 2005, 2002, 2001, 1997, 1992, 1975, 1971, 1970, 1966, 1965, 1961, 1960, 1956, 1955, 1952, 1950, 1946, 1945, 1941, 1936, 1930, 1926, 1925, 1922, 1921, 1920
631 1/2 GLASSELL ST S	2014, 2010, 2005, 2002, 2001, 1997, 1995, 1992, 1991, 1986, 1980, 1975, 1971, 1970, 1966, 1965, 1961, 1960, 1956, 1955, 1950, 1946, 1945, 1941, 1936, 1930, 1926, 1925, 1922, 1921, 1920
631 1/2 GLASSELL ST S	2014, 2010, 2005, 2002, 2001, 1997, 1995, 1992, 1991, 1986, 1980, 1975, 1971, 1970, 1966, 1965, 1961, 1960, 1956, 1955, 1952, 1950, 1946, 1941, 1936, 1930, 1926, 1925, 1922, 1921, 1920
631 GLASSELL ST S	2014, 2010, 2005, 2002, 2001, 1997, 1995, 1992, 1991, 1986, 1980, 1975, 1971, 1970, 1966, 1965, 1961, 1960, 1956, 1955, 1952, 1950, 1946, 1941, 1936, 1930, 1926, 1925, 1922, 1921, 1920
631 GLASSELL ST S	2014, 2010, 2005, 2002, 2001, 1997, 1995, 1992, 1991, 1986, 1980, 1975, 1971, 1970, 1966, 1961, 1960, 1956, 1955, 1950, 1946, 1945, 1941, 1930, 1926, 1921, 1920
631 S GLASSELL ST	2014, 2010, 2005, 2002, 2001, 1997, 1992, 1980, 1975, 1971, 1970, 1965, 1961, 1960, 1956, 1952, 1945, 1941, 1936, 1930, 1926, 1925, 1922, 1921, 1920
632 GLASSELL ST S	2014, 2010, 2005, 2002, 2001, 1997, 1995, 1992, 1991, 1986, 1980, 1975, 1971, 1970, 1966, 1961, 1960, 1956, 1955, 1952, 1950, 1946, 1945, 1941, 1936, 1930, 1926, 1925, 1922, 1921, 1920
633 1/2 GLASSELL ST S	2014, 2010, 2005, 2002, 2001, 1997, 1995, 1992, 1991, 1986, 1980, 1975, 1971, 1970, 1966, 1965, 1961, 1960, 1956, 1955, 1950, 1946, 1945, 1941, 1936, 1930, 1926, 1925, 1922, 1921, 1920
633 1/2 GLASSELL ST S	2014, 2010, 2005, 2002, 2001, 1997, 1995, 1992, 1991, 1986, 1980, 1975, 1971, 1970, 1966, 1965, 1961, 1960, 1956, 1955, 1952, 1950, 1946, 1941, 1936, 1930, 1926, 1925, 1922, 1921, 1920
633 GLASSELL ST S	2014, 2010, 2005, 2002, 2001, 1997, 1995, 1992, 1991, 1986, 1980, 1975, 1971, 1970, 1966, 1965, 1961, 1960, 1956, 1955, 1952, 1950, 1946, 1941, 1936, 1930, 1926, 1925, 1922, 1921, 1920
633 GLASSELL ST S	2014, 2010, 2005, 2002, 2001, 1997, 1995, 1992, 1991, 1986, 1980, 1975, 1971, 1970, 1966, 1961, 1960, 1956, 1955, 1950, 1946, 1945, 1941, 1930, 1926, 1922, 1921, 1920
633 S GLASSELL ST	2014, 2010, 2005, 2002, 2001, 1997, 1995, 1992, 1986, 1980, 1971, 1970, 1966, 1965, 1961, 1960, 1956, 1952, 1946, 1945, 1941, 1936, 1930, 1926, 1925, 1922, 1921, 1920
634 S ORANGE ST	2014, 2010, 2005, 2002, 2001, 1997, 1995, 1992, 1991, 1986, 1980, 1975, 1971, 1966, 1965, 1961, 1960, 1956, 1955, 1952, 1950, 1946, 1945, 1941, 1936, 1930, 1926, 1925, 1922, 1921, 1920

FINDINGS

Address Researched	Address Not Identified in Research Source
635 GLASSELL ST S	2014, 2010, 2005, 2002, 2001, 1997, 1995, 1992, 1991, 1986, 1980, 1975, 1971, 1970, 1966, 1961, 1960, 1956, 1955, 1952, 1950, 1946, 1945, 1941, 1930, 1926, 1921, 1920
635 S ORANGE ST	2014, 2010, 2005, 2002, 2001, 1997, 1992, 1986, 1971, 1970, 1966, 1965, 1961, 1960, 1956, 1955, 1952, 1950, 1946, 1945, 1941, 1936, 1930, 1926, 1925, 1922, 1921, 1920
636 ORANGE ST S	2014, 2010, 2005, 2002, 2001, 1997, 1995, 1992, 1991, 1986, 1980, 1975, 1971, 1970, 1966, 1961, 1960, 1956, 1955, 1950, 1946, 1945, 1941, 1930, 1926, 1925, 1922, 1921, 1920
636 ORANGE ST S	2014, 2010, 2005, 2002, 2001, 1997, 1995, 1992, 1991, 1986, 1980, 1975, 1971, 1970, 1966, 1965, 1961, 1960, 1956, 1955, 1952, 1950, 1946, 1941, 1936, 1930, 1926, 1925, 1922, 1921, 1920
636 S ORANGE AVE	2014, 2010, 2005, 2002, 2001, 1997, 1995, 1992, 1991, 1986, 1980, 1975, 1971, 1970, 1965, 1961, 1960, 1956, 1955, 1952, 1950, 1946, 1945, 1941, 1936, 1930, 1926, 1925, 1922, 1921, 1920
636 S ORANGE ST	2014, 2010, 2005, 2002, 2001, 1997, 1992, 1971, 1966, 1965, 1961, 1960, 1956, 1952, 1946, 1945, 1941, 1936, 1930, 1926, 1921, 1920
637 S ORANGE ST	2014, 2010, 2005, 2002, 2001, 1997, 1992, 1971, 1970, 1966, 1965, 1961, 1960, 1956, 1955, 1952, 1950, 1946, 1945, 1941, 1936, 1930, 1926, 1925, 1922, 1921, 1920
639 GLASSELL ST S	2014, 2010, 2005, 2002, 2001, 1997, 1995, 1992, 1991, 1986, 1980, 1975, 1971, 1970, 1966, 1965, 1961, 1960, 1956, 1955, 1952, 1950, 1946, 1945, 1941, 1936, 1930, 1926, 1922, 1921, 1920
640 S GLASSELL ST	2014, 2010, 2005, 2002, 2001, 1997, 1992, 1991, 1986, 1975, 1971, 1970, 1966, 1965, 1961, 1960, 1956, 1955, 1952, 1950, 1946, 1945, 1941, 1936, 1930, 1926, 1925, 1922, 1921, 1920
640 S Glassell St	2002, 2001, 1997, 1995, 1992, 1991, 1986, 1980, 1975, 1971, 1970, 1966, 1965, 1961, 1960, 1956, 1955, 1952, 1950, 1946, 1945, 1941, 1936, 1930, 1926, 1925, 1922, 1921, 1920
640 S ORANGE ST	2014, 2010, 2005, 2002, 2001, 1997, 1995, 1992, 1991, 1986, 1980, 1975, 1971, 1970, 1966, 1965, 1961, 1960, 1956, 1955, 1952, 1950, 1946, 1945, 1941, 1936, 1930, 1926, 1921, 1920
641 GLASSELL ST S	2014, 2010, 2005, 2002, 2001, 1997, 1995, 1992, 1991, 1986, 1980, 1975, 1971, 1970, 1966, 1961, 1960, 1956, 1955, 1952, 1950, 1946, 1945, 1941, 1936, 1930, 1926, 1925, 1922, 1921, 1920
641 S GLASSELL ST	2014, 2010, 2005, 2002, 2001, 1997, 1995, 1992, 1986, 1975, 1971, 1970, 1965, 1961, 1960, 1956, 1955, 1952, 1950, 1946, 1945, 1941, 1936, 1930, 1926, 1925, 1922, 1921, 1920
642 GLASSELL ST S	2014, 2010, 2005, 2002, 2001, 1997, 1995, 1992, 1991, 1986, 1980, 1975, 1971, 1970, 1966, 1961, 1960, 1956, 1955, 1952, 1950, 1946, 1945, 1941, 1936, 1930, 1926, 1925, 1922, 1921, 1920
643 GLASSELL ST S	2014, 2010, 2005, 2002, 2001, 1997, 1995, 1992, 1991, 1986, 1980, 1975, 1971, 1970, 1966, 1961, 1960, 1956, 1955, 1952, 1950, 1946, 1945, 1941, 1936, 1930, 1926, 1925, 1922, 1921, 1920
643 S GLASSELL ST	2014, 2010, 2005, 2002, 2001, 1997, 1995, 1992, 1991, 1986, 1980, 1971, 1965, 1961, 1960, 1956, 1955, 1952, 1950, 1946, 1945, 1941, 1936, 1930, 1926, 1925, 1922, 1921, 1920
645 GLASSELL ST S	2014, 2010, 2005, 2002, 2001, 1997, 1995, 1992, 1991, 1986, 1980, 1975, 1971, 1970, 1966, 1961, 1960, 1956, 1955, 1952, 1950, 1946, 1945, 1941, 1936, 1930, 1926, 1925, 1922, 1921, 1920

FINDINGS

Address Researched	Address Not Identified in Research Source
645 S GLASSELL ST	2014, 2010, 2005, 2002, 2001, 1997, 1995, 1992, 1991, 1986, 1980, 1975, 1971, 1970, 1965, 1961, 1960, 1956, 1955, 1952, 1950, 1946, 1945, 1941, 1936, 1930, 1926, 1925, 1922, 1921, 1920
647 GLASSELL ST S	2014, 2010, 2005, 2002, 2001, 1997, 1995, 1992, 1991, 1986, 1980, 1975, 1971, 1970, 1966, 1961, 1960, 1956, 1955, 1952, 1950, 1946, 1945, 1941, 1936, 1930, 1926, 1925, 1922, 1921, 1920
647 S GLASSELL ST	2014, 2010, 2005, 2002, 2001, 1997, 1995, 1992, 1991, 1986, 1980, 1975, 1971, 1970, 1965, 1961, 1960, 1956, 1955, 1952, 1950, 1946, 1945, 1941, 1936, 1930, 1926, 1925, 1922, 1921, 1920
649 ORANGE ST S	2014, 2010, 2005, 2002, 2001, 1997, 1995, 1992, 1991, 1986, 1980, 1975, 1971, 1970, 1966, 1961, 1960, 1956, 1955, 1952, 1950, 1946, 1945, 1941, 1936, 1930, 1926, 1925, 1922, 1921, 1920
649 S ORANGE AVE	2014, 2010, 2005, 2002, 2001, 1997, 1995, 1992, 1991, 1986, 1980, 1975, 1971, 1970, 1965, 1961, 1960, 1956, 1955, 1952, 1950, 1946, 1945, 1941, 1936, 1930, 1926, 1925, 1922, 1921, 1920
655 GLASSELL ST S	2014, 2010, 2005, 2002, 2001, 1997, 1995, 1992, 1991, 1986, 1980, 1975, 1971, 1970, 1966, 1961, 1960, 1956, 1955, 1950, 1946, 1945, 1941, 1936, 1930, 1926, 1925, 1922, 1921, 1920
655 GLASSELL ST S	2014, 2010, 2005, 2002, 2001, 1997, 1995, 1992, 1991, 1986, 1980, 1975, 1971, 1970, 1966, 1965, 1961, 1960, 1956, 1955, 1952, 1950, 1946, 1941, 1936, 1930, 1926, 1925, 1922, 1921, 1920
655 S GLASSELL ST	2014, 2010, 2005, 2002, 2001, 1997, 1992, 1986, 1971, 1965, 1961, 1960, 1956, 1952, 1945, 1941, 1936, 1930, 1926, 1925, 1922, 1921, 1920
660 S GLASSELL ST	2014, 2010, 2005, 2002, 2001, 1997, 1992, 1971, 1966, 1965, 1961, 1960, 1956, 1955, 1952, 1950, 1946, 1945, 1941, 1936, 1930, 1926, 1925, 1922, 1921, 1920
660 S Glassell St	2002, 2001, 1997, 1995, 1992, 1991, 1986, 1980, 1975, 1971, 1970, 1966, 1965, 1961, 1960, 1956, 1955, 1952, 1950, 1946, 1945, 1941, 1936, 1930, 1926, 1925, 1922, 1921, 1920
667 S ORANGE ST	2014, 2010, 2005, 2002, 2001, 1997, 1995, 1992, 1986, 1980, 1975, 1971, 1970, 1966, 1965, 1961, 1960, 1956, 1955, 1952, 1950, 1946, 1945, 1941, 1936, 1930, 1926, 1925, 1922, 1921, 1920
684 S GLASSELL ST	2014, 2010, 2005, 2002, 2001, 1997, 1992, 1971, 1970, 1965, 1961, 1960, 1956, 1955, 1952, 1950, 1946, 1945, 1941, 1936, 1930, 1926, 1925, 1922, 1921, 1920
684 S Glassell St	2002, 2001, 1997, 1995, 1992, 1991, 1986, 1980, 1975, 1971, 1970, 1966, 1965, 1961, 1960, 1956, 1955, 1952, 1950, 1946, 1945, 1941, 1936, 1930, 1926, 1925, 1922, 1921, 1920

Kisco Glassell
574 S. Glassell Street
Orange, CA 92866

Inquiry Number: 5417961.8
September 10, 2018

EDR Building Permit Report

Target Property and Adjoining Properties

Environmental Data Resources Inc

6 Armstrong Road
Shelton, CT 06484
800.352.0050
www.edrnet.com

TABLE OF CONTENTS

SECTION

About This Report

Executive Summary

Findings

Glossary

Thank you for your business.
Please contact EDR at 1-800-352-0050
with any questions or comments.

Disclaimer - Copyright and Trademark Notice

This Report contains certain information obtained from a variety of public and other sources reasonably available to Environmental Data Resources, Inc. It cannot be concluded from this Report that coverage information for the target and surrounding properties does not exist from other sources. **NO WARRANTY EXPRESSED OR IMPLIED, IS MADE WHATSOEVER IN CONNECTION WITH THIS REPORT. ENVIRONMENTAL DATA RESOURCES, INC. SPECIFICALLY DISCLAIMS THE MAKING OF ANY SUCH WARRANTIES, INCLUDING WITHOUT LIMITATION, MERCHANTABILITY OR FITNESS FOR A PARTICULAR USE OR PURPOSE. ALL RISK IS ASSUMED BY THE USER. IN NO EVENT SHALL ENVIRONMENTAL DATA RESOURCES, INC. BE LIABLE TO ANYONE, WHETHER ARISING OUT OF ERRORS OR OMISSIONS, NEGLIGENCE, ACCIDENT OR ANY OTHER CAUSE, FOR ANY LOSS OR DAMAGE, INCLUDING, WITHOUT LIMITATION, SPECIAL, INCIDENTAL, CONSEQUENTIAL, OR EXEMPLARY DAMAGES. ANY LIABILITY ON THE PART OF ENVIRONMENTAL DATA RESOURCES, INC. IS STRICTLY LIMITED TO A REFUND OF THE AMOUNT PAID FOR THIS REPORT.** Purchaser accepts this Report "AS IS". Any analyses, estimates, ratings, environmental risk levels or risk codes provided in this Report are provided for illustrative purposes only, and are not intended to provide, nor should they be interpreted as providing any facts regarding, or prediction orforecast of, any environmental risk for any property. Only a Phase I Environmental Site Assessment performed by an environmental professional can provide information regarding the environmental risk for any property. Additionally, the information provided in this Report is not to be construed as legal advice.

Copyright 2017 by Environmental Data Resources, Inc. All rights reserved. Reproduction in any media or format, in whole or in part, of any report or map of Environmental Data Resources, Inc. or its affiliates is prohibited without prior written permission.

EDR and its logos (including Sanborn and Sanborn Map) are trademarks of Environmental Data Resources, Inc. or its affiliates. All other trademarks used herein are the property of their respective owners.

EDR BUILDING PERMIT REPORT

About This Report

The EDR Building Permit Report provides a practical and efficient method to search building department records for indications of environmental conditions. Generated via a search of municipal building permit records gathered from more than 1,600 cities nationwide, this report will assist you in meeting the search requirements of EPA's Standards and Practices for All Appropriate Inquiries (40 CFR Part 312), the ASTM Standard Practice for Environmental Site Assessments (E 1527-13), or custom requirements developed for the evaluation of environmental risk associated with a parcel of real estate.

Building permit data can be used to identify current and/or former operations and structures/features of environmental concern. The data can provide information on a target property and adjoining properties such as the presence of underground storage tanks, pump islands, sumps, drywells, etc., as well as information regarding water, sewer, natural gas, electrical connection dates, and current/former septic tanks.

ASTM and EPA Requirements

ASTM E 1527-13 lists building department records as a "standard historical source," as detailed in § 8.3.4.7: "Building Department Records - The term building department records means those records of the local government in which the property is located indicating permission of the local government to construct, alter, or demolish improvements on the property." ASTM also states that "Uses in the area surrounding the property shall be identified in the report, but this task is required only to the extent that this information is revealed in the course of researching the property itself."

EPA's Standards and Practices for All Appropriate Inquires (AAI) states: "§312.24: Reviews of historical sources of information. (a) Historical documents and records must be reviewed for the purposes of achieving the objectives and performance factors of §312.20(e) and (f). Historical documents and records may include, but are not limited to, aerial photographs, fire insurance maps, building department records, chain of title documents, and land use records."

Methodology

EDR has developed the EDR Building Permit Report through our partnership with BuildFax, the nation's largest repository of building department records. BuildFax collects, updates, and manages building department records from local municipal governments. The database now includes 30 million permits, on more than 10 million properties across 1,600 cities in the United States.

The EDR Building Permit Report comprises local municipal building permit records, gathered directly from local jurisdictions, including both target property and adjoining properties. Years of coverage vary by municipality. Data reported includes (where available): date of permit, permit type, permit number, status, valuation, contractor company, contractor name, and description.

Incoming permit data is checked at seven stages in a regimented quality control process, from initial data source interview, to data preparation, through final auditing. To ensure the building department is accurate, each of the seven quality control stages contains, on average, 15 additional quality checks, resulting in a process of approximately 105 quality control "touch points."

For more information about the EDR Building Permit Report, please contact your EDR Account Executive at (800) 352-0050.

EDR® Environmental Data Resources Inc

BUILD FAX® PROPERTY HISTORY

EXECUTIVE SUMMARY: SEARCH DOCUMENTATION

A search of building department records was conducted by Environmental Data Resources, Inc (EDR) on behalf of Leighton Consulting on Sep 10, 2018.

TARGET PROPERTY

574 S. Glassell Street
Orange, CA 92866

SEARCH METHODS

EDR searches available lists for both the Target Property and Surrounding Properties.

RESEARCH SUMMARY

Building permits identified: **YES**

The following research sources were consulted in the preparation of this report. An "X" indicates where information was identified in the source and provided in this report.

Orange

Year	*Source*	*TP*	*Adjoining*
2018	City of Orange, Community Development		X
2017	City of Orange, Community Development		X
2016	City of Orange, Community Development		X
2015	City of Orange, Community Development		X
2014	City of Orange, Community Development		X
	City of Orange, Community Development	X	
2013	City of Orange, Community Development		X
2012	City of Orange, Community Development		X
2011	City of Orange, Community Development		X
2010	City of Orange, Community Development		X
2009	City of Orange, Community Development		X
2008	City of Orange, Community Development		X
2007	City of Orange, Community Development		X
2006	City of Orange, Community Development		X
2005	City of Orange, Community Development		X
2004	City of Orange, Community Development		X
2003	City of Orange, Community Development		X
2002	City of Orange, Community Development		X
2001	City of Orange, Community Development		X
2000	City of Orange, Community Development		X
1999	City of Orange, Community Development		X
1998	City of Orange, Community Development		X
1997	City of Orange, Community Development		X
1996	City of Orange, Community Development		X
1995	City of Orange, Community Development		X
1994	City of Orange, Community Development		X
1993	City of Orange, Community Development		X
1992	City of Orange, Community Development		X

EXECUTIVE SUMMARY: SEARCH DOCUMENTATION

Year	Source	TP	Adjoining
1991	City of Orange, Community Development		X
1990	City of Orange, Community Development		X
1989	City of Orange, Community Development		X
	City of Orange, Community Development	X	
1988	City of Orange, Community Development		X

BUILDING DEPARTMENT RECORDS SEARCHED

Name: Orange
Years: 1988-2018
Source: City of Orange, Community Development, ORANGE, CA
Phone: (714) 744-7200

Name: Fresno County Unincorporated Area
Years: 1969-2017
Source: Fresno County, Public Works and Planning, CLOVIS, CA
Phone: (559) 600-4078

Name: Garden Grove
Years: 1960-2018
Source: City of Garden Grove, Community Development, GARDEN GROVE, CA
Phone: (714) 741-5000

Name: Orange County
Years: 1990-2018
Source: Orange County, Planning and Development Services, Santa Ana, CA
Phone: (714) 834-5238

Name: Redding
Years: 1987-2018
Source: City of Redding, Development Services, Building Division, Redding, CA
Phone: 530-225-4014

Name: Sacramento County
Years: 2013-2018
Source: Sacramento County, Planning and Community Development Department, FAIR OAKS, CA
Phone: (916) 874-6141

Name: Huntington Beach
Years: 1996-2018
Source: Huntington Beach, Dept. of Building and Safety, HUNTINGTON BEACH, CA
Phone: (714) 536-5241

TARGET PROPERTY FINDINGS

TARGET PROPERTY DETAIL

574 S. Glassell Street
Orange, CA 92866

574 S GLASSELL ST

Date:	**4/29/2014**
Permit Type:	**BUILDING**
Description:	**UPGRADE (E) KITCHEN HOOD FIRE SUPPRESSION SYSTEM**
Permit Description:	
Work Class:	FIRE
Proposed Use:	
Permit Number:	1403-239
Status:	FINALED
Valuation:	$0.00
Contractor Company:	
Contractor Name:	YEN CHING RESTAURANT

Date:	**11/15/1989**
Permit Type:	**PLUMBING**
Description:	
Permit Description:	
Work Class:	RES
Proposed Use:	
Permit Number:	8911-255
Status:	FINALED
Valuation:	$0.00
Contractor Company:	
Contractor Name:	MACK PLUMBING

ADJOINING PROPERTY FINDINGS

ADJOINING PROPERTY DETAIL

The following Adjoining Property addresses were researched for this report. Detailed findings are provided for each address.

E LA VETA AVE

134 E LA VETA AVE

Date:	**5/31/2017**
Permit Type:	**MECHANICAL**
Description:	**INSTALL NEW 2-TON A/C AND 6 DUCTS.**
Permit Description:	
Work Class:	
Proposed Use:	
Permit Number:	1705-371
Status:	APPROVED
Valuation:	$0.00
Contractor Company:	
Contractor Name:	SERVICE CHAMPIONS

Date:	**2/29/2016**
Permit Type:	**PLUMBING**
Description:	**CHANGE GARBAGE DISPOSAL**
Permit Description:	
Work Class:	
Proposed Use:	
Permit Number:	1602-322
Status:	ISSUED
Valuation:	$0.00
Contractor Company:	
Contractor Name:	J C PLUMBING INC

ADJOINING PROPERTY FINDINGS

Date: **11/7/1989**
Permit Type: **PLUMBING**
Description:

Permit Description:
Work Class: RES
Proposed Use:
Permit Number: 8911-135
Status: FINALED
Valuation: $0.00
Contractor Company:
Contractor Name:

222 E LA VETA AVE

Date: **1/10/2003**
Permit Type: **BUILDING**
Description:

Permit Description:
Work Class: REROOF
Proposed Use:
Permit Number: 0301-101
Status: FINALED
Valuation: $0.00
Contractor Company:
Contractor Name: SLATER DANIEL R, ORANGE REALTY

ADJOINING PROPERTY FINDINGS

224 E LA VETA AVE

Date:	**5/19/2009**
Permit Type:	**ELECTRICAL**
Description:	**METER PEDESTAL**
Permit Description:	
Work Class:	
Proposed Use:	
Permit Number:	0905-120
Status:	FINALED
Valuation:	$0.00
Contractor Company:	
Contractor Name:	A T & T CALIFORNIA

226 E LA VETA AVE

Date:	**12/20/2004**
Permit Type:	**PLUMBING**
Description:	
Permit Description:	
Work Class:	
Proposed Use:	
Permit Number:	0412-201
Status:	FINALED
Valuation:	$0.00
Contractor Company:	
Contractor Name:	BRECKINBRIDGE, EDWARD

ADJOINING PROPERTY FINDINGS

Date: **9/25/1996**
Permit Type: **BUILDING**
Description:

Permit Description:
Work Class: RES
Proposed Use:
Permit Number: 9609-495
Status: FINALED
Valuation: $0.00
Contractor Company:
Contractor Name: PHIL KILLEEN

Date: **5/7/1992**
Permit Type: **PLUMBING**
Description:

Permit Description:
Work Class: RES
Proposed Use:
Permit Number: 9205-134
Status: FINALED
Valuation: $0.00
Contractor Company:
Contractor Name:

233 E LA VETA AVE

Date: **3/6/2001**
Permit Type: **BUILDING**
Description: **ADD DOOR FROM GARAGE TO KITCHEN**

Permit Description:
Work Class: ADD/ALTER
Proposed Use:
Permit Number: 0103-036
Status: FINALED
Valuation: $0.00
Contractor Company:
Contractor Name: VP TRUST/DAVID, MARK BALTES

ADJOINING PROPERTY FINDINGS

Date: **8/15/1990**
Permit Type: **BUILDING**
Description:

Permit Description:
Work Class: RES
Proposed Use:
Permit Number: 9008-278
Status: FINALED
Valuation: $0.00
Contractor Company:
Contractor Name: VERL F. BALTES

Date: **4/12/1989**
Permit Type: **BUILDING**
Description:

Permit Description:
Work Class: RES
Proposed Use:
Permit Number: 8904-590
Status: FINALED
Valuation: $0.00
Contractor Company:
Contractor Name: VERL F BALTES

ADJOINING PROPERTY FINDINGS

E LA VETA AVENUE

128 E LA VETA AVENUE

Date:	**5/31/2017**
Permit Type:	**MECHANICAL**
Description:	**INSTALL NEW 2-TON A/C AND 6 DUCTS.**
Permit Description:	
Work Class:	
Proposed Use:	
Permit Number:	1705-359
Status:	ISSUED
Valuation:	$0.00
Contractor Company:	
Contractor Name:	SERVICE CHAMPIONS

Date:	**7/20/1992**
Permit Type:	**BUILDING**
Description:	
Permit Description:	
Work Class:	RES
Proposed Use:	
Permit Number:	9207-246
Status:	FINALED
Valuation:	$0.00
Contractor Company:	
Contractor Name:	MARGARET J DAVIS

ADJOINING PROPERTY FINDINGS

E RIVER

126 E RIVER

Date:	**12/21/1999**
Permit Type:	**BUILDING**
Description:	
Permit Description:	
Work Class:	REROOF
Proposed Use:	
Permit Number:	9912-188
Status:	FINALED
Valuation:	$0.00
Contractor Company:	
Contractor Name:	MARK UPTON

131 E RIVER

Date:	**7/31/2008**
Permit Type:	**ELECTRICAL**
Description:	**EXPIRED 8/31/09**
Permit Description:	
Work Class:	
Proposed Use:	
Permit Number:	0807-246
Status:	SUBMITTED
Valuation:	$0.00
Contractor Company:	
Contractor Name:	FRASER C/O RICCI REALTY

ADJOINING PROPERTY FINDINGS

E RIVER AVE

119 E RIVER AVE

Date: **12/4/2002**
Permit Type: **PLUMBING**
Description:

Permit Description:
Work Class:
Proposed Use:
Permit Number: 0212-036
Status: FINALED
Valuation: $0.00
Contractor Company:
Contractor Name: AL RICCI

Date: **8/13/2001**
Permit Type: **ELECTRICAL**
Description:

Permit Description:
Work Class:
Proposed Use:
Permit Number: 0108-114
Status: FINALED
Valuation: $0.00
Contractor Company:
Contractor Name: CAP ERNEST;FRANCES

ADJOINING PROPERTY FINDINGS

Date: **6/9/1997**
Permit Type: **BUILDING**
Description:

Permit Description:
Work Class: RES
Proposed Use:
Permit Number: 9706-094
Status: FINALED
Valuation: $0.00
Contractor Company:
Contractor Name: ADAM THORIN

133 E RIVER AVE

Date: **3/14/2005**
Permit Type: **BUILDING**
Description: **-**

Permit Description:
Work Class: REROOF
Proposed Use:
Permit Number: 0503-165
Status: FINALED
Valuation: $0.00
Contractor Company:
Contractor Name: RICCI, ALAN

ADJOINING PROPERTY FINDINGS

137 E RIVER AVE

Date:	**1/23/2014**
Permit Type:	**BUILDING**
Description:	**RECONSTRUCT 365 SF FIRE DAMAGED AREAS /DEMO UNPERMITTED BDRM**
Permit Description:	
Work Class:	ADD/ALTER RES
Proposed Use:	
Permit Number:	1311-193
Status:	FINALED
Valuation:	$0.00
Contractor Company:	
Contractor Name:	R C BUILDERS

Date:	**8/20/2013**
Permit Type:	**BUILDING**
Description:	**FIRE DAMAGE REPAIRS**
Permit Description:	
Work Class:	ADD/ALTER RES
Proposed Use:	
Permit Number:	1308-048
Status:	FINALED
Valuation:	$0.00
Contractor Company:	
Contractor Name:	STREETER JOHN R A TR

Date:	**7/11/2013**
Permit Type:	**BUILDING**
Description:	**DEMO FIRE DAMAGED UNITS**
Permit Description:	
Work Class:	DEMO RES
Proposed Use:	
Permit Number:	1307-071
Status:	FINALED
Valuation:	$0.00
Contractor Company:	
Contractor Name:	STREETER JOHN R A TR

ADJOINING PROPERTY FINDINGS

205 E RIVER AVE

Date:	**3/31/2015**
Permit Type:	**RESIDENTIAL**
Description:	**REROOF HOUSE ONLY**

Permit Description:	
Work Class:	REROOF
Proposed Use:	
Permit Number:	1503-320
Status:	FINALED
Valuation:	$0.00
Contractor Company:	
Contractor Name:	HOYT ROOFS INC

Date:	**1/26/1994**
Permit Type:	**ELECTRICAL**
Description:	

Permit Description:	
Work Class:	RES
Proposed Use:	
Permit Number:	9401-424
Status:	FINALED
Valuation:	$0.00
Contractor Company:	
Contractor Name:	

ADJOINING PROPERTY FINDINGS

225 E RIVER AVE

Date: **7/21/1999**
Permit Type: **BUILDING**
Description:

Permit Description:
Work Class: ADD/ALTER
Proposed Use:
Permit Number: 9907-200
Status: SUBMITTED
Valuation: $0.00
Contractor Company:
Contractor Name: STEVENS

Date: **11/27/1991**
Permit Type: **PLUMBING**
Description:

Permit Description:
Work Class: RES
Proposed Use:
Permit Number: 9111-450
Status: FINALED
Valuation: $0.00
Contractor Company:
Contractor Name: AIR PLUS

Date: **11/27/1991**
Permit Type: **MECHANICAL**
Description:

Permit Description:
Work Class: RES
Proposed Use:
Permit Number: 9111-451
Status: FINALED
Valuation: $0.00
Contractor Company:
Contractor Name: AIR PLUS

ADJOINING PROPERTY FINDINGS

E RIVER AVENUE

127 E RIVER AVENUE

Date:	**7/31/1995**
Permit Type:	**BUILDING**
Description:	
Permit Description:	
Work Class:	RES
Proposed Use:	
Permit Number:	9507-439
Status:	FINALED
Valuation:	$0.00
Contractor Company:	
Contractor Name:	GALLA-RINI CONSTRUCTION

N GLASSELL STREET

520 N GLASSELL STREET

Date:	**9/21/1995**
Permit Type:	**BUILDING**
Description:	
Permit Description:	
Work Class:	RES
Proposed Use:	
Permit Number:	9509-333
Status:	FINALED
Valuation:	$0.00
Contractor Company:	
Contractor Name:	HOLMES ROOFING CO. II

ADJOINING PROPERTY FINDINGS

Date: **8/24/1989**
Permit Type: **ELECTRICAL**
Description:

Permit Description:
Work Class: RES
Proposed Use:
Permit Number: 8908-576
Status: PO OPEN
Valuation: $0.00
Contractor Company:
Contractor Name: BUNCH ELECTRIC

S GLASSELL

565 S GLASSELL

Date: **5/31/2005**
Permit Type: **BUILDING**
Description:

Permit Description:
Work Class: SIGNS
Proposed Use:
Permit Number: 0505-342
Status: FINALED
Valuation: $0.00
Contractor Company:
Contractor Name: HOLY FAMILY CATHOLIC CHURCH

ADJOINING PROPERTY FINDINGS

566 S GLASSELL

Date:	**7/11/2018**
Permit Type:	**ELECTRICAL**
Description:	**TEMPORARY POWER FOR HOLY FAMILY FIESTA**
Permit Description:	
Work Class:	
Proposed Use:	
Permit Number:	1807-107
Status:	SUBMITTED
Valuation:	$0.00
Contractor Company:	
Contractor Name:	HOLY FAMILY CATHEDRAL

Date:	**7/11/2018**
Permit Type:	**COMMERCIAL**
Description:	**TEMPORARY STAGE FOR HOLY FAMILY CATHEDRAL FIESTA**
Permit Description:	
Work Class:	MISCELLANEOUS
Proposed Use:	
Permit Number:	1807-106
Status:	ISSUED
Valuation:	$0.00
Contractor Company:	
Contractor Name:	HOLY FAMILY CATHEDRAL

Date:	**7/3/2018**
Permit Type:	**COMMERCIAL**
Description:	**REPLACE (2) EXISTING SIDE EXIT DOORS W/NEW DOORS**
Permit Description:	
Work Class:	ALTERATION /REPAIR
Proposed Use:	
Permit Number:	1807-035
Status:	APPROVED
Valuation:	$0.00
Contractor Company:	
Contractor Name:	

ADJOINING PROPERTY FINDINGS

Date: **2/27/2018**
Permit Type: **MISCELLANEOUS**
Description: **ANNUAL PALM SUNDAY PROCESSION**

Permit Description:
Work Class: SPECIAL EVENTS
Proposed Use:
Permit Number: 1802-222
Status: UNDER REVIEW
Valuation: $0.00
Contractor Company:
Contractor Name: HOLY FAMILY CATHERDRAL

Date: **11/7/2017**
Permit Type: **ELECTRICAL**
Description: **(2) TEMPORARY GENERATORS FOR EVENT**

Permit Description:
Work Class: ELEC CHANGE-OUT
Proposed Use:
Permit Number: 1711-080
Status: FINALED
Valuation: $0.00
Contractor Company:
Contractor Name: RONALD ELECTRIC & CONSTRUCTION INC

Date: **10/12/2017**
Permit Type: **COMMERCIAL**
Description: **TEMPORARY STAGE FOR HOLY FAMILY CATHEDRAL FIESTA**

Permit Description:
Work Class: MISCELLANEOUS
Proposed Use:
Permit Number: 1710-108
Status: ISSUED
Valuation: $0.00
Contractor Company:
Contractor Name: HOLY FAMILY CATHEDRAL

ADJOINING PROPERTY FINDINGS

Date: **10/11/2017**
Permit Type: **ELECTRICAL**
Description: **TEMP. POWER FOR FOOD BOOTHS FOR ANNUAL FIESTA**

Permit Description:
Work Class:
Proposed Use:
Permit Number: 1710-100
Status: ISSUED
Valuation: $0.00
Contractor Company:
Contractor Name: SOUTHERN PACIFIC ELECTRIC

Date: **9/12/2017**
Permit Type: **MISCELLANEOUS**
Description: **SPECIAL EVENT**

Permit Description:
Work Class: SPECIAL EVENTS
Proposed Use:
Permit Number: 1709-114
Status: SUBMITTED
Valuation: $0.00
Contractor Company:
Contractor Name: HOLY FAMILY

Date: **3/16/2017**
Permit Type: **MISCELLANEOUS**
Description: **PALM SUNDAY PROCESSION- HOLY FAMILY**

Permit Description:
Work Class: SPECIAL EVENTS
Proposed Use:
Permit Number: 1703-183
Status: SUBMITTED
Valuation: $0.00
Contractor Company:
Contractor Name:

ADJOINING PROPERTY FINDINGS

Date: **10/10/2016**
Permit Type: **ELECTRICAL**
Description: **RELOCATE EXISTING UNDERGROUND ELECT. AROUND SEISMIC BRACING**

Permit Description:
Work Class:
Proposed Use:
Permit Number: 1610-085
Status: FINALED
Valuation: $0.00
Contractor Company:
Contractor Name: TIGHT LINES ELECTRIC INC

Date: **9/14/2016**
Permit Type: **ELECTRICAL**
Description: **TEMPORARY POWER FOR HOLY FAMILY CATHEDRAL EVENT**

Permit Description:
Work Class:
Proposed Use:
Permit Number: 1609-153
Status: ISSUED
Valuation: $0.00
Contractor Company:
Contractor Name: RONALD ELECTRIC & CONSTRUCTION INC

Date: **9/14/2016**
Permit Type: **COMMERCIAL**
Description: **TEMPORARY STAGE FOR HOLY FAMILY CATHEDRAL FIESTA**

Permit Description:
Work Class: MISCELLANEOUS
Proposed Use:
Permit Number: 1609-169
Status: FINALIZED
Valuation: $0.00
Contractor Company:
Contractor Name: JESSICA MC CLURE

ADJOINING PROPERTY FINDINGS

Date: **9/7/2016**
Permit Type: **MISCELLANEOUS**
Description: **SPECIAL EVENT PERMIT**

Permit Description:
Work Class: SPECIAL EVENTS
Proposed Use:
Permit Number: 1609-059
Status: SUBMITTED
Valuation: $0.00
Contractor Company:
Contractor Name:

Date: **5/11/2016**
Permit Type: **MISCELLANEOUS**
Description: **SPECIAL EVENT**

Permit Description:
Work Class: SPECIAL EVENTS
Proposed Use:
Permit Number: 1605-116
Status: ISSUED
Valuation: $0.00
Contractor Company:
Contractor Name: HOLY FAMILY CATHEDRAL

Date: **5/3/2016**
Permit Type: **COMMERCIAL**
Description: **VOLUNTARY SEISMIC UPGRADE OF THE EXISTING CHURCH BLDG.**

Permit Description:
Work Class: ALTERATION /REPAIR
Proposed Use:
Permit Number: 1512-128
Status: FINALIZED
Valuation: $0.00
Contractor Company:
Contractor Name: MARCELO CAIRO, SE

ADJOINING PROPERTY FINDINGS

Date: **3/10/2016**
Permit Type: **MISCELLANEOUS**
Description: **SPECIAL EVENT**

Permit Description:
Work Class: SPECIAL PROMO
Proposed Use:
Permit Number: 1603-129
Status: ISSUED
Valuation: $0.00
Contractor Company:
Contractor Name: HOLY FAMILY CATHEDRAL

Date: **9/24/2015**
Permit Type: **ELECTRICAL**
Description: **INSTALL GENERATORS FOR SPECIAL CHURCH EVENT**

Permit Description:
Work Class:
Proposed Use:
Permit Number: 1509-324
Status: ISSUED
Valuation: $0.00
Contractor Company:
Contractor Name: JESSICA MC CLURE

Date: **9/23/2015**
Permit Type: **COMMERCIAL**
Description: **TEMPORARY STAGE FOR HOLY FAMILY ANNUAL FIESTA**

Permit Description:
Work Class: MISCELLANEOUS
Proposed Use:
Permit Number: 1509-317
Status: FINALIZED
Valuation: $0.00
Contractor Company:
Contractor Name: JESSICA MC CLURE

ADJOINING PROPERTY FINDINGS

Date: **9/9/2015**
Permit Type: **ELECTRICAL**
Description: **TEMPORARY POWER FOR HOLY FAMILY FIESTA**

Permit Description:
Work Class:
Proposed Use:
Permit Number: 1509-119
Status: FINALED
Valuation: $0.00
Contractor Company:
Contractor Name: JESSICA MC CLURE

Date: **9/3/2015**
Permit Type: **MISCELLANEOUS**
Description: **SPECIAL EVENT**

Permit Description:
Work Class: SPECIAL EVENTS
Proposed Use:
Permit Number: 1509-063
Status: ISSUED
Valuation: $0.00
Contractor Company:
Contractor Name: HOLY FAMILY CATHEDRAL

Date: **6/3/2015**
Permit Type: **MISCELLANEOUS**
Description: **SPECIAL EVENT**

Permit Description:
Work Class: SPECIAL EVENTS
Proposed Use:
Permit Number: 1506-056
Status: ISSUED
Valuation: $0.00
Contractor Company:
Contractor Name: HOLY FAMILY CATHEDRAL

ADJOINING PROPERTY FINDINGS

Date: **3/4/2015**
Permit Type: **MISCELLANEOUS**
Description: **SPECIAL EVENT**

Permit Description:
Work Class: SPECIAL EVENTS
Proposed Use:
Permit Number: 1503-042
Status: ISSUED
Valuation: $0.00
Contractor Company:
Contractor Name: HOLY FAMILY CATHEDRAL

Date: **9/30/2014**
Permit Type: **ELECTRICAL**
Description: **REPLACE 1200 AMP METER SWITCHGEAR**

Permit Description:
Work Class:
Proposed Use:
Permit Number: 1409-363
Status: FINALED
Valuation: $0.00
Contractor Company:
Contractor Name: TIGHT LINES ELECTRIC INC

Date: **9/24/2014**
Permit Type: **COMMERCIAL**
Description: **TEMP STAGE/TENT + ELECT FOR HOLY FAMILY ANNUAL FIESTA**

Permit Description:
Work Class: MISCELLANEOUS
Proposed Use:
Permit Number: 1409-254
Status: FINALIZED
Valuation: $0.00
Contractor Company:
Contractor Name: JESSICA MC CLURE

ADJOINING PROPERTY FINDINGS

Date: **9/24/2014**
Permit Type: **ELECTRICAL**
Description: **GENERATOR FOR (12) RIDES FOR ANNUAL HOLY FAMILY FIESTA**

Permit Description:
Work Class:
Proposed Use:
Permit Number: 1409-282
Status: FINALED
Valuation: $0.00
Contractor Company:
Contractor Name: RONALD ELECTRIC & CONSTRUCTION

Date: **7/24/2014**
Permit Type: **MISCELLANEOUS**
Description: **SPECIAL EVENT**

Permit Description:
Work Class: SPECIAL EVENTS
Proposed Use:
Permit Number: 1407-267
Status: ISSUED
Valuation: $0.00
Contractor Company:
Contractor Name: HOLY FAMILY CATHEDRAL

Date: **6/9/2014**
Permit Type: **MISCELLANEOUS**
Description: **SPECIAL EVENT**

Permit Description:
Work Class: SPECIAL EVENTS
Proposed Use:
Permit Number: 1406-087
Status: ISSUED
Valuation: $0.00
Contractor Company:
Contractor Name: HOLY FAMILY HISPANIC MINISTRY

ADJOINING PROPERTY FINDINGS

Date: **3/26/2014**
Permit Type: **MISCELLANEOUS**
Description: **SPECIAL EVENT**

Permit Description:
Work Class: SPECIAL EVENTS
Proposed Use:
Permit Number: 1403-297
Status: ISSUED
Valuation: $0.00
Contractor Company:
Contractor Name:

Date: **9/25/2013**
Permit Type: **ELECTRICAL**
Description: **GENERATOR FOR RIDES AT HOLY FAMILY EVENT**

Permit Description:
Work Class:
Proposed Use:
Permit Number: 1309-247
Status: FINALED
Valuation: $0.00
Contractor Company:
Contractor Name: DAVIS ENTERPRISES

Date: **9/23/2013**
Permit Type: **BUILDING**
Description: **TEMP STAGE AND POWER**

Permit Description:
Work Class:
Proposed Use:
Permit Number: 1309-225
Status: FINALED
Valuation: $0.00
Contractor Company:
Contractor Name: HOLY FAMILY CATHEDRAL

ADJOINING PROPERTY FINDINGS

Date: **9/4/2013**
Permit Type: **MISCELLANEOUS**
Description: **SPECIAL EVENT**

Permit Description:
Work Class: SPECIAL EVENTS
Proposed Use:
Permit Number: MISC1309-002
Status: ISSUED
Valuation: $0.00
Contractor Company:
Contractor Name: HOLY FAMILY CATHEDRAL

Date: **5/30/2013**
Permit Type: **MISCELLANEOUS**
Description: **SPECIAL EVENT**

Permit Description:
Work Class: SPECIAL EVENTS
Proposed Use:
Permit Number: MISC1305-009
Status: ISSUED
Valuation: $0.00
Contractor Company:
Contractor Name: HOLY FAMILY CATHEDRAL

Date: **3/7/2013**
Permit Type: **MISCELLANEOUS**
Description: **SPECIAL EVENT**

Permit Description:
Work Class: SPECIAL EVENTS
Proposed Use:
Permit Number: MISC1303-002
Status: SUBMITTED
Valuation: $0.00
Contractor Company:
Contractor Name: HOLY FAMILY CATHEDRAL

ADJOINING PROPERTY FINDINGS

Date: **9/24/2012**
Permit Type: **ELECTRICAL**
Description: **TEMP POWER FOR BOOTHS**

Permit Description:
Work Class:
Proposed Use:
Permit Number: 1209-189
Status: FINALED
Valuation: $0.00
Contractor Company:
Contractor Name: TOMMY MARTINEZ

Date: **9/20/2012**
Permit Type: **BUILDING**
Description: **TEMP STAGE**

Permit Description:
Work Class: T.I.
Proposed Use:
Permit Number: 1209-158
Status: FINALED
Valuation: $0.00
Contractor Company:
Contractor Name: HOLY FAMILY CATHEDRAL

Date: **9/18/2012**
Permit Type: **ELECTRICAL**
Description: **GENERATOR**

Permit Description:
Work Class:
Proposed Use:
Permit Number: 1209-137
Status: FINALED
Valuation: $0.00
Contractor Company:
Contractor Name: JACKS ELECTRIC

ADJOINING PROPERTY FINDINGS

Date: **7/12/2012**
Permit Type: **MISCELLANEOUS**
Description: **SPECIAL EVENT**

Permit Description:
Work Class: SPECIAL EVENTS
Proposed Use:
Permit Number: MISC1207-002
Status: ISSUED
Valuation: $0.00
Contractor Company:
Contractor Name: HOLY FAMILY CATHEDRAL

Date: **5/30/2012**
Permit Type: **MISCELLANEOUS**
Description: **SPECIAL EVENT**

Permit Description:
Work Class: SPECIAL EVENTS
Proposed Use:
Permit Number: MISC1205-015
Status: ISSUED
Valuation: $0.00
Contractor Company:
Contractor Name: HOLY FAMILY CATHEDRAL

Date: **3/20/2012**
Permit Type: **MISCELLANEOUS**
Description: **SPECIAL EVENT**

Permit Description:
Work Class: SPECIAL EVENTS
Proposed Use:
Permit Number: MISC1203-012
Status: ISSUED
Valuation: $0.00
Contractor Company:
Contractor Name: HOLY FAMILY CATHEDRAL

ADJOINING PROPERTY FINDINGS

Date: **9/1/2011**
Permit Type: **MISCELLANEOUS**
Description: **SPECIAL EVENT**

Permit Description:
Work Class: SPECIAL EVENTS
Proposed Use:
Permit Number: MISC1109-001
Status: ISSUED
Valuation: $0.00
Contractor Company:
Contractor Name: HOLY FAMILY CATHEDRAL

Date: **8/31/2011**
Permit Type: **ELECTRICAL**
Description: **+HOLY FAMILY FIESTA**

Permit Description:
Work Class:
Proposed Use:
Permit Number: 1108-304
Status: FINALED
Valuation: $0.00
Contractor Company:
Contractor Name: HOLY FAMILY CATHEDRAL

Date: **6/7/2011**
Permit Type: **MISCELLANEOUS**
Description: **SPECIAL EVENT**

Permit Description:
Work Class: SPECIAL EVENTS
Proposed Use:
Permit Number: MISC1106-002
Status: ISSUED
Valuation: $0.00
Contractor Company:
Contractor Name: HOLY FAMILY CATHEDRAL

ADJOINING PROPERTY FINDINGS

Date: **4/4/2011**
Permit Type: **MISCELLANEOUS**
Description: **SPECIAL EVENT**

Permit Description:
Work Class: SPECIAL EVENTS
Proposed Use:
Permit Number: MISC1104-001
Status: ISSUED
Valuation: $0.00
Contractor Company:
Contractor Name: HOLY FAMILY CATHEDRAL

Date: **9/2/2010**
Permit Type: **ELECTRICAL**
Description: **HOLY FAMILY FIESTA**

Permit Description:
Work Class:
Proposed Use:
Permit Number: 1009-020
Status: FINALED
Valuation: $0.00
Contractor Company:
Contractor Name: HOLY FAMILY CATHEDRAL

Date: **2/25/2010**
Permit Type: **BUILDING**
Description: **INSTALL MARBLE STATUE**

Permit Description:
Work Class: T.I.
Proposed Use:
Permit Number: 1002-165
Status: APPROVED
Valuation: $0.00
Contractor Company:
Contractor Name: DIOCESE OF OF ORANGE

ADJOINING PROPERTY FINDINGS

Date: **9/24/2009**
Permit Type: **ELECTRICAL**
Description: **FIESTA**

Permit Description:
Work Class:
Proposed Use:
Permit Number: 0909-191
Status: FINALED
Valuation: $0.00
Contractor Company:
Contractor Name: HOLY FAMILY CATHEDRAL

Date: **9/9/2008**
Permit Type: **ELECTRICAL**
Description: **2 HOUR INSPECTION**

Permit Description:
Work Class:
Proposed Use:
Permit Number: 0809-034
Status: FINALED
Valuation: $0.00
Contractor Company:
Contractor Name: HOLY FAMILY CATHEDRAL

Date: **8/14/2007**
Permit Type: **ELECTRICAL**
Description:

Permit Description:
Work Class:
Proposed Use:
Permit Number: 0708-126
Status: FINALED
Valuation: $0.00
Contractor Company:
Contractor Name: HOLY FAMILY CATHEDRAL

ADJOINING PROPERTY FINDINGS

Date: **8/14/2006**
Permit Type: **ELECTRICAL**
Description:

Permit Description:
Work Class:
Proposed Use:
Permit Number: 0608-144
Status: SUBMITTED
Valuation: $0.00
Contractor Company:
Contractor Name: HOLY FAMILY CATHEDRAL

Date: **8/29/2005**
Permit Type: **ELECTRICAL**
Description:

Permit Description:
Work Class:
Proposed Use:
Permit Number: 0508-353
Status: FINALED
Valuation: $0.00
Contractor Company:
Contractor Name: HOLY FAMILY CATHEDRAL

Date: **5/2/2005**
Permit Type: **ELECTRICAL**
Description:

Permit Description:
Work Class:
Proposed Use:
Permit Number: 0505-007
Status: SUBMITTED
Valuation: $0.00
Contractor Company:
Contractor Name: ACTION ELECTRIC CORP

ADJOINING PROPERTY FINDINGS

Date: **10/6/2000**
Permit Type: **BUILDING**
Description:

Permit Description:
Work Class: T.I.
Proposed Use:
Permit Number: 0006-284
Status: SUBMITTED
Valuation: $0.00
Contractor Company:
Contractor Name: P.G.S. CONSTRUCTION CORP

Date: **8/3/1999**
Permit Type: **BUILDING**
Description: **CLASS-A GAF**

Permit Description:
Work Class: REROOF
Proposed Use:
Permit Number: 9908-024
Status: SUBMITTED
Valuation: $0.00
Contractor Company:
Contractor Name: Diocese of Orange

Date: **9/11/1997**
Permit Type: **BUILDING**
Description:

Permit Description:
Work Class: OUT/SCOPE
Proposed Use:
Permit Number: 9709-104
Status: SUBMITTED
Valuation: $0.00
Contractor Company:
Contractor Name: BRENNAN ELECTRIC

ADJOINING PROPERTY FINDINGS

Date: **9/11/1997**
Permit Type: **ELECTRIC**
Description:

Permit Description:
Work Class:
Proposed Use:
Permit Number: 9709-338
Status: SUBMITTED
Valuation: $0.00
Contractor Company:
Contractor Name: BRENNEN ELECTRIC

Date: **8/26/1992**
Permit Type: **BUILDING**
Description:

Permit Description:
Work Class: COMM
Proposed Use:
Permit Number: 9208-199
Status: PO OPEN
Valuation: $0.00
Contractor Company:
Contractor Name: HAMILTON ELECTRONIC SECURITY

Date: **5/28/1992**
Permit Type: **BUILDING**
Description:

Permit Description:
Work Class: COMM
Proposed Use:
Permit Number: 9203-396
Status: FINALED
Valuation: $0.00
Contractor Company:
Contractor Name: FIRECON

ADJOINING PROPERTY FINDINGS

Date: **4/22/1992**
Permit Type: **PLUMBING**
Description:

Permit Description:
Work Class: COMM
Proposed Use:
Permit Number: 9204-377
Status: FINALED
Valuation: $0.00
Contractor Company:
Contractor Name: BOOZELL PLUMBING

Date: **2/21/1992**
Permit Type: **PLUMBING**
Description:

Permit Description:
Work Class: COMM
Proposed Use:
Permit Number: 9202-244
Status: FINALED
Valuation: $0.00
Contractor Company:
Contractor Name:

Date: **2/18/1992**
Permit Type: **ELECTRICAL**
Description:

Permit Description:
Work Class: COMM
Proposed Use:
Permit Number: 9202-162
Status: FINALED
Valuation: $0.00
Contractor Company:
Contractor Name: BRANCO ELECTRIC

ADJOINING PROPERTY FINDINGS

Date: **1/31/1992**
Permit Type: **BUILDING**
Description:

Permit Description:
Work Class: COMM
Proposed Use:
Permit Number: 9111-312
Status: FINALED
Valuation: $0.00
Contractor Company:
Contractor Name: JOHN B ABELL ;INC. CATHY

Date: **1/31/1992**
Permit Type: **BUILDING**
Description:

Permit Description:
Work Class: COMM
Proposed Use:
Permit Number: 9201-384
Status: FINALED
Valuation: $0.00
Contractor Company:
Contractor Name: ROMAN CATHOLIC BISHOP OF

Date: **11/19/1991**
Permit Type: **MECHANICAL**
Description:

Permit Description:
Work Class: COMM
Proposed Use:
Permit Number: 9111-301
Status: FINALED
Valuation: $0.00
Contractor Company:
Contractor Name:

ADJOINING PROPERTY FINDINGS

Date: **6/14/1991**
Permit Type: **BUILDING**
Description:

Permit Description:
Work Class: RES
Proposed Use:
Permit Number: 9106-269
Status: FINALED
Valuation: $0.00
Contractor Company:
Contractor Name: LINNERT ROOFING

Date: **2/15/1991**
Permit Type: **PLUMBING**
Description:

Permit Description:
Work Class: COMM
Proposed Use:
Permit Number: 9102-195
Status: FINALED
Valuation: $0.00
Contractor Company:
Contractor Name: ROTO ROOTER

Date: **7/19/1989**
Permit Type: **ELECTRICAL**
Description:

Permit Description:
Work Class: RES
Proposed Use:
Permit Number: 8907-307
Status: PO OPEN
Valuation: $0.00
Contractor Company:
Contractor Name: BRANCO ELECTRIC ENT

ADJOINING PROPERTY FINDINGS

Date: **7/6/1989**
Permit Type: **BUILDING**
Description:

Permit Description:
Work Class: CHURCH
Proposed Use:
Permit Number: 8906-540
Status: PO OPEN
Valuation: $0.00
Contractor Company:
Contractor Name: BLUROCK PARTNERSHIP

Date: **7/6/1989**
Permit Type: **PLUMBING**
Description:

Permit Description:
Work Class: RES
Proposed Use:
Permit Number: 8907-064
Status: PO OPEN
Valuation: $0.00
Contractor Company:
Contractor Name: HOLLEY CONSTRUCTION

Date: **7/6/1989**
Permit Type: **ELECTRICAL**
Description:

Permit Description:
Work Class: COMM
Proposed Use:
Permit Number: 8907-071
Status: PO OPEN
Valuation: $0.00
Contractor Company:
Contractor Name: HOLLEY CONSTRUCTION

ADJOINING PROPERTY FINDINGS

649 S GLASSELL

Date:	**3/27/2001**
Permit Type:	**ELECTRICAL**
Description:	
Permit Description:	
Work Class:	
Proposed Use:	
Permit Number:	0103-273
Status:	FINALED
Valuation:	$0.00
Contractor Company:	
Contractor Name:	TRU GREEN LANDSCAPE

683 S GLASSELL

Date:	**4/19/2001**
Permit Type:	**BUILDING**
Description:	
Permit Description:	
Work Class:	FIRE
Proposed Use:	
Permit Number:	0104-153
Status:	SUBMITTED
Valuation:	$0.00
Contractor Company:	
Contractor Name:	TOSCO

ADJOINING PROPERTY FINDINGS

701 S GLASSELL

Date:	**1/13/2016**
Permit Type:	**ELECTRICAL**
Description:	**ADD 3 ELECTRICAL CIRCUITS, LIGHTS & SWITCHES FOR NEW STORAGE**
Permit Description:	
Work Class:	
Proposed Use:	
Permit Number:	1601-098
Status:	FINALED
Valuation:	$0.00
Contractor Company:	
Contractor Name:	K D C CONSTRUCTION

Date:	**2/5/2015**
Permit Type:	**COMMERCIAL**
Description:	**DEMOLISH "SNACK SHACK" STRUCTURE**
Permit Description:	
Work Class:	DEMO /STRUCURE
Proposed Use:	
Permit Number:	1502-071
Status:	FINALIZED
Valuation:	$0.00
Contractor Company:	
Contractor Name:	MARK SAUER CONSTRUCTION INC

Date:	**3/27/2014**
Permit Type:	**BUILDING**
Description:	**REPAIR LUNCH SHELTER STRUCTURE.**
Permit Description:	
Work Class:	T.I.
Proposed Use:	
Permit Number:	1310-280
Status:	FINALED
Valuation:	$0.00
Contractor Company:	
Contractor Name:	GRANGER CONST

ADJOINING PROPERTY FINDINGS

Date: **10/30/2013**
Permit Type: **BUILDING**
Description: **875 SQ FT PATIO COVER - HART PARK**

Permit Description:
Work Class: PATIOCVR
Proposed Use:
Permit Number: 1308-116
Status: FINALED
Valuation: $0.00
Contractor Company:
Contractor Name: HART PARK

Date: **8/29/2013**
Permit Type: **BUILDING**
Description: **APPLICATION EXPIRED AND PLANS DISCARDED**

Permit Description:
Work Class: T.I.
Proposed Use:
Permit Number: 1308-237
Status: EXPIRED
Valuation: $0.00
Contractor Company:
Contractor Name: HART PARK

Date: **4/1/2010**
Permit Type: **ELECTRICAL**
Description:

Permit Description:
Work Class:
Proposed Use:
Permit Number: 1004-013
Status: FINALED
Valuation: $0.00
Contractor Company:
Contractor Name: MAGNETIC ELECTRIC INC

ADJOINING PROPERTY FINDINGS

Date: **11/10/2009**
Permit Type: **BUILDING**
Description: **REROOF- HART PARK**

Permit Description:
Work Class: REROOF
Proposed Use:
Permit Number: 0911-076
Status: FINALED
Valuation: $0.00
Contractor Company:
Contractor Name: J W ROOFING

Date: **1/20/2009**
Permit Type: **BUILDING**
Description:

Permit Description:
Work Class: T.I.
Proposed Use:
Permit Number: 0803-253
Status: FINALED
Valuation: $0.00
Contractor Company:
Contractor Name: HEISLER LANDSCAPE

Date: **6/2/2008**
Permit Type: **BUILDING**
Description:

Permit Description:
Work Class: FIRE
Proposed Use:
Permit Number: 0806-011
Status: FINALED
Valuation: $0.00
Contractor Company:
Contractor Name: QUALCO FIRE PROTECTION INC.

ADJOINING PROPERTY FINDINGS

Date: **9/28/2007**
Permit Type: **BUILDING**
Description:

Permit Description:
Work Class: T.I.
Proposed Use:
Permit Number: 0706-104
Status: FINALED
Valuation: $0.00
Contractor Company:
Contractor Name: RENGEL + CO. ARCHITECTS

Date: **5/29/2007**
Permit Type: **BUILDING**
Description:

Permit Description:
Work Class: REROOF
Proposed Use:
Permit Number: 0705-297
Status: FINALED
Valuation: $0.00
Contractor Company:
Contractor Name: CENTRAL ROOFING COMPANY

Date: **1/16/2007**
Permit Type: **BUILDING**
Description:

Permit Description:
Work Class: FIRE
Proposed Use:
Permit Number: 0612-221
Status: FINALED
Valuation: $0.00
Contractor Company:
Contractor Name: FIREBALL ALARM

ADJOINING PROPERTY FINDINGS

Date: **10/3/2006**
Permit Type: **BUILDING**
Description:

Permit Description:
Work Class: T.I.
Proposed Use:
Permit Number: 0603-118
Status: FINALED
Valuation: $0.00
Contractor Company:
Contractor Name: CITY OF ORANGE- HART PARK

Date: **5/22/2006**
Permit Type: **BUILDING**
Description:

Permit Description:
Work Class: FIRE
Proposed Use:
Permit Number: 0604-053
Status: FINALED
Valuation: $0.00
Contractor Company:
Contractor Name: QUALCO FIRE PROTECTION INC.

Date: **2/13/2006**
Permit Type: **BUILDING**
Description:

Permit Description:
Work Class: T.I.
Proposed Use:
Permit Number: 0501-206
Status: FINALED
Valuation: $0.00
Contractor Company:
Contractor Name: BEAM CONSTRUCTION INC:A

ADJOINING PROPERTY FINDINGS

Date: **12/22/2005**
Permit Type: **BUILDING**
Description:

Permit Description:
Work Class: T.I.
Proposed Use:
Permit Number: 0512-223
Status: FINALED
Valuation: $0.00
Contractor Company:
Contractor Name: GATES DEVELOPMENT CO

Date: **3/14/2005**
Permit Type: **BUILDING**
Description:

Permit Description:
Work Class: T.I.
Proposed Use:
Permit Number: 0404-146
Status: SUBMITTED
Valuation: $0.00
Contractor Company:
Contractor Name: CALIFORNIA COMMERCIAL POOLS IN

Date: **11/10/2004**
Permit Type: **BUILDING**
Description:

Permit Description:
Work Class: ADD/ALTER
Proposed Use:
Permit Number: 0405-277
Status: FINALED
Valuation: $0.00
Contractor Company:
Contractor Name: CITY OF ORANGE -

ADJOINING PROPERTY FINDINGS

Date: **7/27/2004**
Permit Type: **BUILDING**
Description:

Permit Description:
Work Class: T.I.
Proposed Use:
Permit Number: 0404-145
Status: FINALED
Valuation: $0.00
Contractor Company:
Contractor Name: ADNAN FARHAT CONSTRUCTION

Date: **7/12/2001**
Permit Type: **BUILDING**
Description:

Permit Description:
Work Class: T.I.
Proposed Use:
Permit Number: 0107-123
Status: FINALED
Valuation: $0.00
Contractor Company:
Contractor Name: CITY OF ORANGE-HART PARK

Date: **5/15/2001**
Permit Type: **PLUMBING**
Description:

Permit Description:
Work Class:
Proposed Use:
Permit Number: 0105-163
Status: SUBMITTED
Valuation: $0.00
Contractor Company:
Contractor Name: SPAR PLUMBING & HEATING

ADJOINING PROPERTY FINDINGS

Date: **5/15/2001**
Permit Type: **ELECTRICAL**
Description:

Permit Description:
Work Class:
Proposed Use:
Permit Number: 0105-160
Status: SUBMITTED
Valuation: $0.00
Contractor Company:
Contractor Name: SOUTHWEST ELECTRICAL CONTRACT

Date: **5/14/2001**
Permit Type: **MECHANICAL**
Description:

Permit Description:
Work Class:
Proposed Use:
Permit Number: 0105-142
Status: SUBMITTED
Valuation: $0.00
Contractor Company:
Contractor Name: G W AIR CONDITIONING INC

Date: **8/10/2000**
Permit Type: **BUILDING**
Description:

Permit Description:
Work Class: T.I.
Proposed Use:
Permit Number: 0004-170
Status: FINALED
Valuation: $0.00
Contractor Company:
Contractor Name: CITY OF ORANGE-HART PARK

ADJOINING PROPERTY FINDINGS

Date: **6/29/2000**
Permit Type: **ELECTRICAL**
Description:

Permit Description:
Work Class:
Proposed Use:
Permit Number: 0006-420
Status: SUBMITTED
Valuation: $0.00
Contractor Company:
Contractor Name: BUILDING ENERGY CONSULTANTS

Date: **3/13/2000**
Permit Type: **ELECTRICAL**
Description:

Permit Description:
Work Class:
Proposed Use:
Permit Number: 0003-085
Status: SUBMITTED
Valuation: $0.00
Contractor Company:
Contractor Name: CITY OF ORANGE / COMMUNITY SER

Date: **12/15/1994**
Permit Type: **BUILDING**
Description:

Permit Description:
Work Class: COMM
Proposed Use:
Permit Number: 9411-107
Status: FINALED
Valuation: $0.00
Contractor Company:
Contractor Name: RCB ARCHITECT

ADJOINING PROPERTY FINDINGS

Date: **12/15/1994**
Permit Type: **ELECTRICAL**
Description:

Permit Description:
Work Class: COMM
Proposed Use:
Permit Number: 9412-203
Status: FINALED
Valuation: $0.00
Contractor Company:
Contractor Name: UNITED BUILDERS

Date: **12/15/1994**
Permit Type: **PLUMBING**
Description:

Permit Description:
Work Class: COMM
Proposed Use:
Permit Number: 9412-191
Status: FINALED
Valuation: $0.00
Contractor Company:
Contractor Name: UNITED BUILDERS

Date: **11/22/1994**
Permit Type: **PLUMBING**
Description:

Permit Description:
Work Class: COMM
Proposed Use:
Permit Number: 9411-356
Status: FINALED
Valuation: $0.00
Contractor Company:
Contractor Name:

ADJOINING PROPERTY FINDINGS

Date: **11/22/1994**
Permit Type: **ELECTRICAL**
Description:

Permit Description:
Work Class: COMM
Proposed Use:
Permit Number: 9411-359
Status: FINALED
Valuation: $0.00
Contractor Company:
Contractor Name:

Date: **5/20/1991**
Permit Type: **ELECTRICAL**
Description:

Permit Description:
Work Class: COMM
Proposed Use:
Permit Number: 9105-254
Status: FINALED
Valuation: $0.00
Contractor Company:
Contractor Name: THE ELECTRIC CONNECTION

Date: **2/25/1991**
Permit Type: **ELECTRICAL**
Description:

Permit Description:
Work Class: RES
Proposed Use:
Permit Number: 9102-305
Status: FINALED
Valuation: $0.00
Contractor Company:
Contractor Name: PACIFIC GENERAL CONTRACTORS

ADJOINING PROPERTY FINDINGS

Date: **4/26/1990**
Permit Type: **ELECTRICAL**
Description:

Permit Description:
Work Class: COM
Proposed Use:
Permit Number: 9004-659
Status: FINALED
Valuation: $0.00
Contractor Company:
Contractor Name: ORANGE JAY CEES

Date: **2/6/1990**
Permit Type: **ELECTRICAL**
Description:

Permit Description:
Work Class: TENT
Proposed Use:
Permit Number: 9002-077
Status: FINALED
Valuation: $0.00
Contractor Company:
Contractor Name: THE ELECTRIC CONNECTION

Date: **5/4/1989**
Permit Type: **ELECTRICAL**
Description:

Permit Description:
Work Class: COMM
Proposed Use:
Permit Number: 8905-153
Status: PO OPEN
Valuation: $0.00
Contractor Company:
Contractor Name: B&B AMUSEMENTS INC

ADJOINING PROPERTY FINDINGS

Date: **1/31/1989**
Permit Type: **ELECTRICAL**
Description:

Permit Description:
Work Class: COMM
Proposed Use:
Permit Number: 8901-699
Status: PO OPEN
Valuation: $0.00
Contractor Company:
Contractor Name: ELECTRIC CONNECTION

Date: **11/30/1988**
Permit Type: **BUILDING**
Description:

Permit Description:
Work Class: STAGE
Proposed Use:
Permit Number: 8811-892
Status: PO OPEN
Valuation: $0.00
Contractor Company:
Contractor Name: BRUGMAN MGMT & DEVELOPMENT

Date: **11/30/1988**
Permit Type: **ELECTRICAL**
Description:

Permit Description:
Work Class: STAGE
Proposed Use:
Permit Number: 8811-897
Status: PO OPEN
Valuation: $0.00
Contractor Company:
Contractor Name: BRUGMAN MGMT & DEVELOPMENT

ADJOINING PROPERTY FINDINGS

S GLASSELL 1-16

660 S GLASSELL 1-16

Date:	**2/15/2018**
Permit Type:	**RESIDENTIAL**
Description:	**BATHROOM REMODEL**

Permit Description:	
Work Class:	ALTERATION /REPAIR
Proposed Use:	
Permit Number:	1802-122
Status:	ISSUED
Valuation:	$0.00
Contractor Company:	
Contractor Name:	HI-TECH BUILDERS INC

Date:	**10/3/2016**
Permit Type:	**RESIDENTIAL**
Description:	**ADMIN. PERMIT TO FINALIZE EXPIRED PERMIT 0512-089**

Permit Description:	
Work Class:	ADMINISTRATIVE
Proposed Use:	
Permit Number:	1610-010
Status:	FINALED
Valuation:	$0.00
Contractor Company:	
Contractor Name:	OWNER

ADJOINING PROPERTY FINDINGS

Date: **6/3/2013**
Permit Type: **PLUMBING**
Description: **REPIPING**

Permit Description:
Work Class: PLUB CHANGE-OUT
Proposed Use:
Permit Number: 1306-004
Status: FINALED
Valuation: $0.00
Contractor Company:
Contractor Name: PARK ORLEANS

Date: **6/20/2012**
Permit Type: **BUILDING**
Description: **REPLACE 4 WINDOWS AND 1 PATIO DOOR**

Permit Description:
Work Class: WINDOWS
Proposed Use:
Permit Number: 1206-165
Status: FINALED
Valuation: $0.00
Contractor Company:
Contractor Name: DELAY JOHN E & DENA J

Date: **1/9/2012**
Permit Type: **PLUMBING**
Description: **COPPER RE-PIPE**

Permit Description:
Work Class:
Proposed Use:
Permit Number: 1201-065
Status: ISSUED
Valuation: $0.00
Contractor Company:
Contractor Name: PARK ORLEANS

ADJOINING PROPERTY FINDINGS

Date: **1/9/2012**
Permit Type: **PLUMBING**
Description: **COPPER RE-PIPE**

Permit Description:
Work Class:
Proposed Use:
Permit Number: 1201-067
Status: FINALED
Valuation: $0.00
Contractor Company:
Contractor Name: PARK ORLEANS

Date: **1/9/2012**
Permit Type: **PLUMBING**
Description: **COPPER RE-PIPE**

Permit Description:
Work Class:
Proposed Use:
Permit Number: 1201-068
Status: FINALED
Valuation: $0.00
Contractor Company:
Contractor Name: PARK ORLEANS

Date: **6/7/2011**
Permit Type: **PLUMBING**
Description: **WATERLINE REPLACEMENT**

Permit Description:
Work Class:
Proposed Use:
Permit Number: 1106-060
Status: FINALED
Valuation: $0.00
Contractor Company:
Contractor Name: PARK ORLEANS H.O. ASSOC

ADJOINING PROPERTY FINDINGS

Date: **2/7/2011**
Permit Type: **PLUMBING**
Description: **COPPER RE-PIPE**

Permit Description:
Work Class:
Proposed Use:
Permit Number: 1102-041
Status: FINALED
Valuation: $0.00
Contractor Company:
Contractor Name: PARK ORLEANS

Date: **8/18/2009**
Permit Type: **PLUMBING**
Description: **COPPER REPIPE UNITS 33-40**

Permit Description:
Work Class:
Proposed Use:
Permit Number: 0908-140
Status: FINALED
Valuation: $0.00
Contractor Company:
Contractor Name: PARK ORLEANS HOA

Date: **8/18/2009**
Permit Type: **PLUMBING**
Description: **COPPER REPIPE UNITS 81-92**

Permit Description:
Work Class:
Proposed Use:
Permit Number: 0908-141
Status: FINALED
Valuation: $0.00
Contractor Company:
Contractor Name: PARK ORLEANS HOA

ADJOINING PROPERTY FINDINGS

Date: **12/15/2008**
Permit Type: **MECHANICAL**
Description: **REPLACE WALL FURNACE**

Permit Description:
Work Class:
Proposed Use:
Permit Number: 0812-126
Status: SUBMITTED
Valuation: $0.00
Contractor Company:
Contractor Name: TONY TRABUCCO

Date: **8/14/2008**
Permit Type: **PLUMBING**
Description: **COPPER REPIPE**

Permit Description:
Work Class:
Proposed Use:
Permit Number: 0808-095
Status: SUBMITTED
Valuation: $0.00
Contractor Company:
Contractor Name: ALL PRO COPPER REPIPE

Date: **9/14/2007**
Permit Type: **BUILDING**
Description: **REPAIR WATER DAMAGE AND DRY ROT**

Permit Description:
Work Class: ADD/ALTER
Proposed Use:
Permit Number: 0709-096
Status: SUBMITTED
Valuation: $0.00
Contractor Company:
Contractor Name: KAYE BRYAN E

ADJOINING PROPERTY FINDINGS

Date: **12/9/2005**
Permit Type: **BUILDING**
Description:

Permit Description:
Work Class: ADD/ALTER
Proposed Use:
Permit Number: 0512-089
Status: SUBMITTED
Valuation: $0.00
Contractor Company:
Contractor Name: RONALD LUBIN

Date: **12/15/2003**
Permit Type: **BUILDING**
Description:

Permit Description:
Work Class: BLOCK WAL
Proposed Use:
Permit Number: 0312-173
Status: FINALED
Valuation: $0.00
Contractor Company:
Contractor Name: COLONIAL GROUP

Date: **11/25/2003**
Permit Type: **BUILDING**
Description:

Permit Description:
Work Class: ADD/ALTER
Proposed Use:
Permit Number: 0311-251
Status: FINALED
Valuation: $0.00
Contractor Company:
Contractor Name: THOMAS CONSTRUCTION

ADJOINING PROPERTY FINDINGS

Date: **9/25/2003**
Permit Type: **BUILDING**
Description:

Permit Description:
Work Class: BLOCK WAL
Proposed Use:
Permit Number: 0304-331
Status: FINALED
Valuation: $0.00
Contractor Company:
Contractor Name: PARK ORLEANS HOA

Date: **9/25/2003**
Permit Type: **BUILDING**
Description:

Permit Description:
Work Class: BLOCK WAL
Proposed Use:
Permit Number: 0312-172
Status: FINALED
Valuation: $0.00
Contractor Company:
Contractor Name: PARK ORLEANS HOA

Date: **9/15/2003**
Permit Type: **PLUMBING**
Description:

Permit Description:
Work Class:
Proposed Use:
Permit Number: 0309-163
Status: SUBMITTED
Valuation: $0.00
Contractor Company:
Contractor Name: TEAM PROPERTY MGMT

ADJOINING PROPERTY FINDINGS

Date: **1/4/2001**
Permit Type: **BUILDING**
Description:

Permit Description:
Work Class: BLOCK WAL
Proposed Use:
Permit Number: 0101-050
Status: FINALED
Valuation: $0.00
Contractor Company:
Contractor Name: ACTEC EMGINEERING

Date: **4/15/1999**
Permit Type: **BUILDING**
Description:

Permit Description:
Work Class: BLOCK WAL
Proposed Use:
Permit Number: 9904-186
Status: SUBMITTED
Valuation: $0.00
Contractor Company:
Contractor Name: PARK ORLEANS/TCB PROPERTY MGMT

Date: **10/23/1998**
Permit Type: **ELECTRICAL**
Description:

Permit Description:
Work Class:
Proposed Use:
Permit Number: 9810-419
Status: SUBMITTED
Valuation: $0.00
Contractor Company:
Contractor Name: BEEBE ELECTRIC

ADJOINING PROPERTY FINDINGS

Date: **9/30/1997**
Permit Type: **BUILDING**
Description:

Permit Description:
Work Class: OUT/SCOPE
Proposed Use:
Permit Number: 9709-795
Status: SUBMITTED
Valuation: $0.00
Contractor Company:
Contractor Name: GANNON DESIGN

Date: **11/20/1995**
Permit Type: **PLUMBING**
Description:

Permit Description:
Work Class: RES
Proposed Use:
Permit Number: 9511-527
Status: FINALED
Valuation: $0.00
Contractor Company:
Contractor Name: NOCK PLUMBING

Date: **10/4/1995**
Permit Type: **PLUMBING**
Description:

Permit Description:
Work Class: RES
Proposed Use:
Permit Number: 9510-089
Status: FINALED
Valuation: $0.00
Contractor Company:
Contractor Name: NOCK PLUMBING

ADJOINING PROPERTY FINDINGS

Date: **8/7/1995**
Permit Type: **PLUMBING**
Description:

Permit Description:
Work Class: RES
Proposed Use:
Permit Number: 9508-132
Status: FINALED
Valuation: $0.00
Contractor Company:
Contractor Name: D.P. PLUMBING

Date: **4/3/1995**
Permit Type: **ELECTRICAL**
Description:

Permit Description:
Work Class: RES
Proposed Use:
Permit Number: 9504-024
Status: FINALED
Valuation: $0.00
Contractor Company:
Contractor Name: R.L. ELECTRIC

Date: **3/28/1995**
Permit Type: **BUILDING**
Description:

Permit Description:
Work Class: RES
Proposed Use:
Permit Number: 9503-375
Status: FINALED
Valuation: $0.00
Contractor Company:
Contractor Name: TOTAL ACCESS DOOR SYSTEMS

ADJOINING PROPERTY FINDINGS

Date: **10/21/1991**
Permit Type: **BUILDING**
Description:

Permit Description:
Work Class: RES
Proposed Use:
Permit Number: 9110-388
Status: VOID
Valuation: $0.00
Contractor Company:
Contractor Name: CANYON ROOFING, INC.

Date: **10/21/1991**
Permit Type: **BUILDING**
Description:

Permit Description:
Work Class: RES
Proposed Use:
Permit Number: 9110-409
Status: FINALED
Valuation: $0.00
Contractor Company:
Contractor Name: CANYON ROOFING, INC.

Date: **10/21/1991**
Permit Type: **BUILDING**
Description:

Permit Description:
Work Class: RES
Proposed Use:
Permit Number: 9110-406
Status: FINALED
Valuation: $0.00
Contractor Company:
Contractor Name: CANYON ROOFING

ADJOINING PROPERTY FINDINGS

Date: **10/21/1991**
Permit Type: **BUILDING**
Description:

Permit Description:
Work Class: RES
Proposed Use:
Permit Number: 9110-394
Status: FINALED
Valuation: $0.00
Contractor Company:
Contractor Name: CANYON ROOFING, INCC.

Date: **10/21/1991**
Permit Type: **BUILDING**
Description:

Permit Description:
Work Class: RES
Proposed Use:
Permit Number: 9110-391
Status: FINALED
Valuation: $0.00
Contractor Company:
Contractor Name: CANYON ROOFING, INC.

Date: **10/21/1991**
Permit Type: **BUILDING**
Description:

Permit Description:
Work Class: RES
Proposed Use:
Permit Number: 9110-393
Status: FINALED
Valuation: $0.00
Contractor Company:
Contractor Name: CANYON ROOFING, INC.

ADJOINING PROPERTY FINDINGS

Date: **10/21/1991**
Permit Type: **BUILDING**
Description:

Permit Description:
Work Class: RES
Proposed Use:
Permit Number: 9110-398
Status: FINALED
Valuation: $0.00
Contractor Company:
Contractor Name: CANYON ROOFING, INCC.

Date: **10/21/1991**
Permit Type: **BUILDING**
Description:

Permit Description:
Work Class: RES
Proposed Use:
Permit Number: 9110-399
Status: FINALED
Valuation: $0.00
Contractor Company:
Contractor Name: CANYON ROOFING, INCC.

Date: **10/21/1991**
Permit Type: **BUILDING**
Description:

Permit Description:
Work Class: RES
Proposed Use:
Permit Number: 9110-400
Status: FINALED
Valuation: $0.00
Contractor Company:
Contractor Name: CANYON ROOFING, INC.

ADJOINING PROPERTY FINDINGS

Date: **10/21/1991**
Permit Type: **BUILDING**
Description:

Permit Description:
Work Class: RES
Proposed Use:
Permit Number: 9110-404
Status: FINALED
Valuation: $0.00
Contractor Company:
Contractor Name: CANYON ROOFING, INC.

Date: **10/21/1991**
Permit Type: **BUILDING**
Description:

Permit Description:
Work Class: RES
Proposed Use:
Permit Number: 9110-405
Status: FINALED
Valuation: $0.00
Contractor Company:
Contractor Name: CANYON ROOFING, INC.

Date: **10/21/1991**
Permit Type: **BUILDING**
Description:

Permit Description:
Work Class: RES
Proposed Use:
Permit Number: 9110-407
Status: FINALED
Valuation: $0.00
Contractor Company:
Contractor Name: CANYON ROOFING, INCC.

ADJOINING PROPERTY FINDINGS

Date: **10/21/1991**
Permit Type: **BUILDING**
Description:

Permit Description:
Work Class: RES
Proposed Use:
Permit Number: 9110-411
Status: FINALED
Valuation: $0.00
Contractor Company:
Contractor Name: CANYON ROOFING, INC.

Date: **10/21/1991**
Permit Type: **BUILDING**
Description:

Permit Description:
Work Class: RES
Proposed Use:
Permit Number: 9110-384
Status: FINALED
Valuation: $0.00
Contractor Company:
Contractor Name: CANYON ROOFING, INC.

Date: **10/21/1991**
Permit Type: **BUILDING**
Description:

Permit Description:
Work Class: RES
Proposed Use:
Permit Number: 9110-381
Status: FINALED
Valuation: $0.00
Contractor Company:
Contractor Name: CANYON ROOFING, INC.

ADJOINING PROPERTY FINDINGS

Date: **10/21/1991**
Permit Type: **BUILDING**
Description:

Permit Description:
Work Class: RES
Proposed Use:
Permit Number: 9110-396
Status: FINALED
Valuation: $0.00
Contractor Company:
Contractor Name: CANYON ROOFING, INC.

Date: **10/21/1991**
Permit Type: **BUILDING**
Description:

Permit Description:
Work Class: RES
Proposed Use:
Permit Number: 9110-408
Status: FINALED
Valuation: $0.00
Contractor Company:
Contractor Name: CANYON ROOFING, INC.

Date: **10/21/1991**
Permit Type: **BUILDING**
Description:

Permit Description:
Work Class: RES
Proposed Use:
Permit Number: 9110-410
Status: FINALED
Valuation: $0.00
Contractor Company:
Contractor Name: CANYON ROOFING INC

ADJOINING PROPERTY FINDINGS

Date: **10/21/1991**
Permit Type: **BUILDING**
Description:

Permit Description:
Work Class: RES
Proposed Use:
Permit Number: 9110-412
Status: FINALED
Valuation: $0.00
Contractor Company:
Contractor Name: CANYON ROOFING INC

Date: **10/21/1991**
Permit Type: **BUILDING**
Description:

Permit Description:
Work Class: RES
Proposed Use:
Permit Number: 9110-413
Status: FINALED
Valuation: $0.00
Contractor Company:
Contractor Name: CANYON ROOFING, INC.

Date: **10/21/1991**
Permit Type: **BUILDING**
Description:

Permit Description:
Work Class: RES
Proposed Use:
Permit Number: 9110-414
Status: FINALED
Valuation: $0.00
Contractor Company:
Contractor Name: CANYON ROOFING INC

ADJOINING PROPERTY FINDINGS

Date: **10/21/1991**
Permit Type: **BUILDING**
Description:

Permit Description:
Work Class: RES
Proposed Use:
Permit Number: 9110-415
Status: FINALED
Valuation: $0.00
Contractor Company:
Contractor Name: CANYON ROOFING INC

Date: **10/21/1991**
Permit Type: **BUILDING**
Description:

Permit Description:
Work Class: RES
Proposed Use:
Permit Number: 9110-416
Status: FINALED
Valuation: $0.00
Contractor Company:
Contractor Name: CANYON ROOFING, INC.

Date: **10/21/1991**
Permit Type: **BUILDING**
Description:

Permit Description:
Work Class: RES
Proposed Use:
Permit Number: 9110-419
Status: FINALED
Valuation: $0.00
Contractor Company:
Contractor Name: CANYON ROOFING INC

ADJOINING PROPERTY FINDINGS

Date: **10/21/1991**
Permit Type: **BUILDING**
Description:

Permit Description:
Work Class: RES
Proposed Use:
Permit Number: 9110-421
Status: FINALED
Valuation: $0.00
Contractor Company:
Contractor Name: CANYON ROOFING INC

Date: **10/21/1991**
Permit Type: **BUILDING**
Description:

Permit Description:
Work Class: RES
Proposed Use:
Permit Number: 9110-422
Status: FINALED
Valuation: $0.00
Contractor Company:
Contractor Name: CANYON ROOFING, INC.

Date: **10/21/1991**
Permit Type: **BUILDING**
Description:

Permit Description:
Work Class: RES
Proposed Use:
Permit Number: 9110-424
Status: FINALED
Valuation: $0.00
Contractor Company:
Contractor Name: CANYON ROOFING, INC.

ADJOINING PROPERTY FINDINGS

Date: **3/28/1990**
Permit Type: **ELECTRICAL**
Description:

Permit Description:
Work Class: CONDOS
Proposed Use:
Permit Number: 9003-701
Status: FINALED
Valuation: $0.00
Contractor Company:
Contractor Name: LEASURE ENTERPRISES

Date: **3/13/1990**
Permit Type: **BUILDING**
Description:

Permit Description:
Work Class: CONDOS
Proposed Use:
Permit Number: 9003-140
Status: FINALED
Valuation: $0.00
Contractor Company:
Contractor Name: KARL FRIESS CONSTRUCTION

Date: **9/26/1989**
Permit Type: **BUILDING**
Description:

Permit Description:
Work Class: RES
Proposed Use:
Permit Number: 8909-538
Status: FINALED
Valuation: $0.00
Contractor Company:
Contractor Name: MACHELLE HAMILTON

ADJOINING PROPERTY FINDINGS

Date: **8/15/1989**
Permit Type: **BUILDING**
Description:

Permit Description:
Work Class: RES
Proposed Use:
Permit Number: 8908-371
Status: FINALED
Valuation: $0.00
Contractor Company:
Contractor Name: MACHELLE HAMILTON

Date: **6/28/1989**
Permit Type: **BUILDING**
Description:

Permit Description:
Work Class: RES
Proposed Use:
Permit Number: 8906-781
Status: PO OPEN
Valuation: $0.00
Contractor Company:
Contractor Name: HELAINE GAWRONSKI

Date: **6/26/1989**
Permit Type: **BUILDING**
Description:

Permit Description:
Work Class: RES
Proposed Use:
Permit Number: 8906-723
Status: PO OPEN
Valuation: $0.00
Contractor Company:
Contractor Name: HELAINE GAWRONSKI

ADJOINING PROPERTY FINDINGS

S GLASSELL ST

480 S GLASSELL ST

Date:	**11/24/2014**
Permit Type:	**PLUMBING**
Description:	**REPLACE WATER LINE FROM METER TO HOUSE**

Permit Description:	
Work Class:	
Proposed Use:	
Permit Number:	1411-241
Status:	FINALED
Valuation:	$0.00
Contractor Company:	
Contractor Name:	ROTO-ROOTER SERV & PLUMBING CO

Date:	**10/12/1998**
Permit Type:	**BUILDING**
Description:	

Permit Description:	
Work Class:	SIGNS
Proposed Use:	
Permit Number:	9810-171
Status:	SUBMITTED
Valuation:	$0.00
Contractor Company:	
Contractor Name:	NENDEL LIBERTAD

Date: **10/27/1993**
Permit Type: **BUILDING**
Description:

Permit Description:
Work Class: RES
Proposed Use:
Permit Number: 9310-346
Status: FINALED
Valuation: $0.00
Contractor Company:
Contractor Name: MR. ROOFER

Date: **2/25/1991**
Permit Type: **ELECTRICAL**
Description:

Permit Description:
Work Class: RES
Proposed Use:
Permit Number: 9102-335
Status: FINALED
Valuation: $0.00
Contractor Company:
Contractor Name: PACIFIC GENERAL CONTRACTORS

481 S GLASSELL ST

Date: **1/20/2009**
Permit Type: **ELECTRICAL**
Description: **ELECRTRICAL FOR PERMIT 0811-125**

Permit Description:
Work Class:
Proposed Use:
Permit Number: 0901-149
Status: FINALED
Valuation: $0.00
Contractor Company:
Contractor Name: O.R. REFRIGERATION

ADJOINING PROPERTY FINDINGS

Date: **1/13/2009**
Permit Type: **BUILDING**
Description:

Permit Description:
Work Class: T.I.
Proposed Use:
Permit Number: 0811-125
Status: FINALED
Valuation: $0.00
Contractor Company:
Contractor Name: J.E. ARMSTRONG ARCHITECT

Date: **7/8/2002**
Permit Type: **BUILDING**
Description: **EXPIRED 10/01/04**

Permit Description:
Work Class: REROOF
Proposed Use:
Permit Number: 0207-051
Status: EXPIRED
Valuation: $0.00
Contractor Company:
Contractor Name: K & B MARKET

503 S GLASSELL ST

Date: **5/9/2013**
Permit Type: **BUILDING**
Description: **SIGN**

Permit Description:
Work Class: SIGNS
Proposed Use:
Permit Number: 1305-072
Status: ISSUED
Valuation: $0.00
Contractor Company:
Contractor Name: JAQUITH LAURA

ADJOINING PROPERTY FINDINGS

525 S GLASSELL ST

Date: **3/30/2018**
Permit Type: **RESIDENTIAL**
Description: **FIRE DAMAGE REPAIRS, INTERIOR REMODEL**

Permit Description:
Work Class: ALTERATION /REPAIR
Proposed Use:
Permit Number: 1803-304
Status: SUBMITTED
Valuation: $0.00
Contractor Company:
Contractor Name: JWB CONSTRUCTION

Date: **3/7/2018**
Permit Type: **RESIDENTIAL**
Description: **NON-STRUCT. INTERIOR DEMO OF FIRE DAMAGED AREAS**

Permit Description:
Work Class: DEMO /MISCELLANEOUS
Proposed Use:
Permit Number: 1803-078
Status: ISSUED
Valuation: $0.00
Contractor Company:
Contractor Name: JWB CONSTRUCTION

Date: **2/21/2017**
Permit Type: **ELECTRICAL**
Description: **RESTORE POWER TO 100 AMP. MAIN PANEL, INSTALL 2 OUTLETS**

Permit Description:
Work Class:
Proposed Use:
Permit Number: 1702-233
Status: ISSUED
Valuation: $0.00
Contractor Company:
Contractor Name: ROWE ELECTRIC INC

ADJOINING PROPERTY FINDINGS

530 S GLASSELL ST

Date: **5/1/2018**
Permit Type: **MISCELLANEOUS**
Description: **SPECIAL EVENT-BODY OF CHRIST PROCESSION**

Permit Description:
Work Class: SPECIAL EVENTS
Proposed Use:
Permit Number: 1805-002
Status: SUBMITTED
Valuation: $0.00
Contractor Company:
Contractor Name:

Date: **4/13/2017**
Permit Type: **COMMERCIAL**
Description: **(2) 9' 4" & (22) 7' PILASTERS W/660 LF OF 6' STEEL FENCING**

Permit Description:
Work Class: WALL /FENCE
Proposed Use:
Permit Number: 1704-186
Status: APPROVED
Valuation: $0.00
Contractor Company:
Contractor Name: MIKE HENNESSEY

Date: **3/6/2015**
Permit Type: **MISCELLANEOUS**
Description: **SPECIAL EVENT**

Permit Description:
Work Class: SPECIAL EVENTS
Proposed Use:
Permit Number: 1503-066
Status: ISSUED
Valuation: $0.00
Contractor Company:
Contractor Name: HOLY FAMILY CATHEDRAL SCHOOL

ADJOINING PROPERTY FINDINGS

Date: **4/10/2012**
Permit Type: **MISCELLANEOUS**
Description: **SPECIAL EVENT**

Permit Description:
Work Class: SPECIAL EVENTS
Proposed Use:
Permit Number: MISC1204-009
Status: ISSUED
Valuation: $0.00
Contractor Company:
Contractor Name: HOLY FAMILY SCHOOL

Date: **1/30/2012**
Permit Type: **PLUMBING**
Description: **REPLACE EXISTING GAS LINE**

Permit Description:
Work Class:
Proposed Use:
Permit Number: 1201-222
Status: ISSUED
Valuation: $0.00
Contractor Company:
Contractor Name: DIOCESE OF ORANGE ED

Date: **8/3/2011**
Permit Type: **BUILDING**
Description: **FIRE LIFE SAFETY UPGRADE**

Permit Description:
Work Class: FIRE
Proposed Use:
Permit Number: 1106-191
Status: FINALED
Valuation: $0.00
Contractor Company:
Contractor Name: HOLY FAMILY CATHEDRAL SCHOOL

ADJOINING PROPERTY FINDINGS

Date: **7/7/2010**
Permit Type: **BUILDING**
Description: **INSTALL 2 NEW SMOKE DETECTORS AND 1 HEAT DETECTOR**

Permit Description:
Work Class: FIRE
Proposed Use:
Permit Number: 1006-191
Status: ISSUED
Valuation: $0.00
Contractor Company:
Contractor Name: WENDT'S ENTERPRISES

Date: **2/25/2010**
Permit Type: **ELECTRICAL**
Description: **GENERATOR FOR SPECIAL EVENT**

Permit Description:
Work Class:
Proposed Use:
Permit Number: 1002-164
Status: FINALED
Valuation: $0.00
Contractor Company:
Contractor Name: GARY ECCLESTON

Date: **2/23/2010**
Permit Type: **BUILDING**
Description: **TEMPORARY TENT**

Permit Description:
Work Class: T.I.
Proposed Use:
Permit Number: 1002-154
Status: FINALED
Valuation: $0.00
Contractor Company:
Contractor Name: HOLY FAMILY CATHEDRAL

ADJOINING PROPERTY FINDINGS

Date: **8/12/2009**
Permit Type: **BUILDING**
Description: **FIRE ALARM SYSTEM**

Permit Description:
Work Class: FIRE
Proposed Use:
Permit Number: 0907-231
Status: FINALED
Valuation: $0.00
Contractor Company:
Contractor Name: WENDT'S ENTERPRISES

Date: **6/5/2000**
Permit Type: **BUILDING**
Description:

Permit Description:
Work Class: T.I.
Proposed Use:
Permit Number: 9905-141
Status: FINALED
Valuation: $0.00
Contractor Company:
Contractor Name: MICHAEL KRAKOWER

Date: **8/21/1995**
Permit Type: **MECHANICAL**
Description:

Permit Description:
Work Class: COMM
Proposed Use:
Permit Number: 9508-431
Status: FINALED
Valuation: $0.00
Contractor Company:
Contractor Name: FRANKLIN & SON

ADJOINING PROPERTY FINDINGS

Date: **8/1/1995**
Permit Type: **ELECTRICAL**
Description:

Permit Description:
Work Class: COMM
Proposed Use:
Permit Number: 9508-038
Status: FINALED
Valuation: $0.00
Contractor Company:
Contractor Name: WILLIAMS & MAHER INC

Date: **7/13/1995**
Permit Type: **BUILDING**
Description:

Permit Description:
Work Class: COMM
Proposed Use:
Permit Number: 9507-218
Status: FINALED
Valuation: $0.00
Contractor Company:
Contractor Name: AHERN ARCHITECTS

Date: **6/20/1994**
Permit Type: **ELECTRICAL**
Description:

Permit Description:
Work Class: COMM
Proposed Use:
Permit Number: 9406-290
Status: FINALED
Valuation: $0.00
Contractor Company:
Contractor Name:

ADJOINING PROPERTY FINDINGS

Date: **7/9/1992**
Permit Type: **ELECTRICAL**
Description:

Permit Description:
Work Class: COMM
Proposed Use:
Permit Number: 9207-120
Status: FINALED
Valuation: $0.00
Contractor Company:
Contractor Name: WEST COAST ELECTRIC

Date: **7/9/1992**
Permit Type: **ELECTRICAL**
Description:

Permit Description:
Work Class: COMM
Proposed Use:
Permit Number: 9207-123
Status: FINALED
Valuation: $0.00
Contractor Company:
Contractor Name: WEST COAST ELECTRIC

Date: **6/16/1992**
Permit Type: **BUILDING**
Description:

Permit Description:
Work Class: COMM
Proposed Use:
Permit Number: 9202-307
Status: FINALED
Valuation: $0.00
Contractor Company:
Contractor Name: LEONARD SOUTH & SON INC

ADJOINING PROPERTY FINDINGS

Date: **6/16/1992**
Permit Type: **BUILDING**
Description:

Permit Description:
Work Class: COMM
Proposed Use:
Permit Number: 9202-314
Status: FINALED
Valuation: $0.00
Contractor Company:
Contractor Name: LEONARD SOUTH & SON INC

Date: **6/14/1991**
Permit Type: **BUILDING**
Description:

Permit Description:
Work Class: RES
Proposed Use:
Permit Number: 9106-271
Status: FINALED
Valuation: $0.00
Contractor Company:
Contractor Name: LINNERT ROOFING

Date: **3/13/1989**
Permit Type: **MECHANICAL**
Description:

Permit Description:
Work Class: SCHOOL
Proposed Use:
Permit Number: 8903-276
Status: PO OPEN
Valuation: $0.00
Contractor Company:
Contractor Name: ALLIED PLBG/HTG INC

ADJOINING PROPERTY FINDINGS

533 S GLASSELL ST

Date:	**6/3/2010**
Permit Type:	**PLUMBING**
Description:	**WATER HEATER**

Permit Description:	
Work Class:	PLUB CHANGE-OUT
Proposed Use:	
Permit Number:	1006-040
Status:	FINALED
Valuation:	$0.00
Contractor Company:	
Contractor Name:	KARASEK DAISY T

Date:	**2/25/1991**
Permit Type:	**ELECTRICAL**
Description:	

Permit Description:	
Work Class:	RES
Proposed Use:	
Permit Number:	9102-345
Status:	FINALED
Valuation:	$0.00
Contractor Company:	
Contractor Name:	PACIFIC GENERAL CONTRACTORS

ADJOINING PROPERTY FINDINGS

620 S GLASSELL ST

Date:	**8/2/2017**
Permit Type:	**COMMERCIAL**
Description:	**FIRE ALARM SYSTEM EMERGENCY REPLACEMENT**

Permit Description:	
Work Class:	FIRE
Proposed Use:	
Permit Number:	1707-188
Status:	ISSUED
Valuation:	$0.00
Contractor Company:	
Contractor Name:	CAL BUILDING SYSTEMS

Date:	**12/19/2016**
Permit Type:	**COMMERCIAL**
Description:	**FIRE SPRINKLERS FOR T.I.**

Permit Description:	
Work Class:	FIRE
Proposed Use:	
Permit Number:	1612-197
Status:	SUBMITTED
Valuation:	$0.00
Contractor Company:	
Contractor Name:	APEX FIRE SYSTEMS INC

Date:	**11/1/2016**
Permit Type:	**COMMERCIAL**
Description:	**651 sq ft TENANT IMPROVEMENT**

Permit Description:	
Work Class:	TENANT IMPROVEMENT
Proposed Use:	
Permit Number:	1605-367
Status:	FINALED
Valuation:	$0.00
Contractor Company:	
Contractor Name:	SHELTER LLP

ADJOINING PROPERTY FINDINGS

Date: **7/2/2015**
Permit Type: **COMMERCIAL**
Description: **INSTALL OUTDOOR FIREPLACE WITH 22' LF X 3' HIGH LOW WALL**

Permit Description:
Work Class: ALTERATION /REPAIR
Proposed Use:
Permit Number: 1506-330
Status: FINALIZED
Valuation: $0.00
Contractor Company:
Contractor Name: MICHAEL SAVAGE

Date: **1/28/2015**
Permit Type: **COMMERCIAL**
Description: **DOOR HOLDERS**

Permit Description:
Work Class: FIRE
Proposed Use:
Permit Number: 1501-149
Status: FINALIZED
Valuation: $0.00
Contractor Company:
Contractor Name: CAL BUILDING SYSTEMS

Date: **12/10/2014**
Permit Type: **ELECTRICAL**
Description: **REPLACE ELECTRICAL INVERTER USED FOR EMERGENCY LIGHTING**

Permit Description:
Work Class:
Proposed Use:
Permit Number: 1412-103
Status: FINALED
Valuation: $0.00
Contractor Company:
Contractor Name: A-1 ELECTRIC SERVICE COMPANY I

ADJOINING PROPERTY FINDINGS

Date: **12/16/2011**
Permit Type: **BUILDING**
Description: **MONUMENT SIGN**

Permit Description:
Work Class: SIGNS
Proposed Use:
Permit Number: 1112-120
Status: FINALED
Valuation: $0.00
Contractor Company:
Contractor Name: HBA INCORPORATED

Date: **6/9/2005**
Permit Type: **BUILDING**
Description:

Permit Description:
Work Class: T.I.
Proposed Use:
Permit Number: 0506-100
Status: FINALED
Valuation: $0.00
Contractor Company:
Contractor Name: PARK PLAZA ASSISTED LIVING

Date: **4/25/2005**
Permit Type: **BUILDING**
Description:

Permit Description:
Work Class: DEMO COMM
Proposed Use:
Permit Number: 0504-228
Status: FINALED
Valuation: $0.00
Contractor Company:
Contractor Name: KISCO (PARK PLAZA)

ADJOINING PROPERTY FINDINGS

Date: **9/15/2003**
Permit Type: **BUILDING**
Description:

Permit Description:
Work Class: FIRE
Proposed Use:
Permit Number: 0308-214
Status: FINALED
Valuation: $0.00
Contractor Company:
Contractor Name: PARK PLAZA

Date: **8/11/2003**
Permit Type: **BUILDING**
Description:

Permit Description:
Work Class: REROOF
Proposed Use:
Permit Number: 0308-125
Status: FINALED
Valuation: $0.00
Contractor Company:
Contractor Name: PARK PLAZA

Date: **8/27/1998**
Permit Type: **ELECTRICAL**
Description:

Permit Description:
Work Class:
Proposed Use:
Permit Number: 9808-366
Status: SUBMITTED
Valuation: $0.00
Contractor Company:
Contractor Name: PARK PLAZA

ADJOINING PROPERTY FINDINGS

Date: **10/7/1996**
Permit Type: **ELECTRICAL**
Description:

Permit Description:
Work Class: RES
Proposed Use:
Permit Number: 9610-073
Status: FINALED
Valuation: $0.00
Contractor Company:
Contractor Name: I.L.G. ELECTRIC

Date: **9/9/1996**
Permit Type: **BUILDING**
Description:

Permit Description:
Work Class: RES
Proposed Use:
Permit Number: 9602-335
Status: FINALED
Valuation: $0.00
Contractor Company:
Contractor Name: IRWIN ARCHITECTURAL GROUP

630 S GLASSELL ST

Date: **3/15/2016**
Permit Type: **COMMERCIAL**
Description: **4,000 SQ FT REROOF**

Permit Description:
Work Class: REROOF
Proposed Use:
Permit Number: 1603-160
Status: FINALIZED
Valuation: $0.00
Contractor Company:
Contractor Name: SUPERIOR ROOFING SYSTEMS

ADJOINING PROPERTY FINDINGS

Date: **8/17/2006**
Permit Type: **BUILDING**
Description:

Permit Description:
Work Class: REROOF
Proposed Use:
Permit Number: 0608-187
Status: FINALED
Valuation: $0.00
Contractor Company:
Contractor Name: HEIDI WINKLER

Date: **6/12/1995**
Permit Type: **BUILDING**
Description:

Permit Description:
Work Class: COMM
Proposed Use:
Permit Number: 9506-194
Status: FINALED
Valuation: $0.00
Contractor Company:
Contractor Name: DR HEIDI WINKLER

Date: **8/10/1994**
Permit Type: **BUILDING**
Description:

Permit Description:
Work Class: COMM
Proposed Use:
Permit Number: 9407-344
Status: PO OPEN
Valuation: $0.00
Contractor Company:
Contractor Name: ORANGE COUNTY FIRE PROTECTION

ADJOINING PROPERTY FINDINGS

Date: **10/28/1992**
Permit Type: **BUILDING**
Description:

Permit Description:
Work Class: COMM
Proposed Use:
Permit Number: 9210-360
Status: FINALED
Valuation: $0.00
Contractor Company:
Contractor Name: BLIGH PACIFIC

Date: **1/16/1992**
Permit Type: **BUILDING**
Description:

Permit Description:
Work Class: COMM
Proposed Use:
Permit Number: 9201-195
Status: FINALED
Valuation: $0.00
Contractor Company:
Contractor Name: BLIGH PACIFIC

633 S GLASSELL ST

Date: **11/23/1998**
Permit Type: **BUILDING**
Description:

Permit Description:
Work Class: REROOF
Proposed Use:
Permit Number: 9811-389
Status: SUBMITTED
Valuation: $0.00
Contractor Company:
Contractor Name: HENRY PALOMINO

Date: **2/25/1991**
Permit Type: **ELECTRICAL**
Description:

Permit Description:
Work Class: RES
Proposed Use:
Permit Number: 9102-311
Status: FINALED
Valuation: $0.00
Contractor Company:
Contractor Name: PACIFIC GENERAL CONTRACTORS

Date: **1/2/1991**
Permit Type: **BUILDING**
Description:

Permit Description:
Work Class: RES
Proposed Use:
Permit Number: 9101-010
Status: FINALED
Valuation: $0.00
Contractor Company:
Contractor Name: HENRY M. PALOMINO

641 S GLASSELL ST

Date: **10/2/2017**
Permit Type: **PLUMBING**
Description: **REPAIR WATER LINE FROM METER TO BLDG. & INSTALL SWER CLEAN O**

Permit Description:
Work Class:
Proposed Use:
Permit Number: 1710-008
Status: ISSUED
Valuation: $0.00
Contractor Company:
Contractor Name: ROTO ROOTER SERVICE AND PLUMBING CO.

ADJOINING PROPERTY FINDINGS

Date: **3/17/2003**
Permit Type: **BUILDING**
Description:

Permit Description:
Work Class: REROOF
Proposed Use:
Permit Number: 0303-184
Status: SUBMITTED
Valuation: $0.00
Contractor Company:
Contractor Name: MIKE BEECHER

Date: **3/17/2003**
Permit Type: **BUILDING**
Description:

Permit Description:
Work Class: REROOF
Proposed Use:
Permit Number: 0303-182
Status: FINALED
Valuation: $0.00
Contractor Company:
Contractor Name: MIKE BEECHER

Date: **2/25/1991**
Permit Type: **ELECTRICAL**
Description:

Permit Description:
Work Class: RES
Proposed Use:
Permit Number: 9102-306
Status: FINALED
Valuation: $0.00
Contractor Company:
Contractor Name: PACIFIC GENERAL CONTRACTORS

ADJOINING PROPERTY FINDINGS

655 S GLASSELL ST

Date: **6/10/2010**
Permit Type: **BUILDING**
Description: **REPLACE 15 WINDOWS (140 SQ FT) AND 6 DOORS**

Permit Description:
Work Class: ADD/ALTER
Proposed Use:
Permit Number: 1006-091
Status: SUBMITTED
Valuation: $0.00
Contractor Company:
Contractor Name: ELI HOME INC

Date: **1/31/2007**
Permit Type: **PLUMBING**
Description:

Permit Description:
Work Class:
Proposed Use:
Permit Number: 0701-261
Status: FINALED
Valuation: $0.00
Contractor Company:
Contractor Name: TECH ONE

Date: **9/27/2004**
Permit Type: **MECHANICAL**
Description:

Permit Description:
Work Class:
Proposed Use:
Permit Number: 0409-216
Status: FINALED
Valuation: $0.00
Contractor Company:
Contractor Name: LOGAN MECHANICAL INC

ADJOINING PROPERTY FINDINGS

Date: **4/2/2001**
Permit Type: **BUILDING**
Description: **DEMO POOL**

Permit Description:
Work Class: DEMO POOL
Proposed Use:
Permit Number: 0104-003
Status: EXPIRED
Valuation: $0.00
Contractor Company:
Contractor Name: ELI HOME

Date: **7/10/2000**
Permit Type: **BUILDING**
Description:

Permit Description:
Work Class: REROOF
Proposed Use:
Permit Number: 0007-058
Status: SUBMITTED
Valuation: $0.00
Contractor Company:
Contractor Name: ELI HOME INC.

660 S GLASSELL ST

Date: **2/15/2018**
Permit Type: **RESIDENTIAL**
Description: **BATHROOM REMODEL**

Permit Description:
Work Class: ALTERATION /REPAIR
Proposed Use:
Permit Number: 1802-122
Status: ISSUED
Valuation: $0.00
Contractor Company:
Contractor Name: HI-TECH BUILDERS INC

ADJOINING PROPERTY FINDINGS

Date: **10/3/2016**
Permit Type: **RESIDENTIAL**
Description: **ADMIN. PERMIT TO FINALIZE EXPIRED PERMIT 0512-089**

Permit Description:
Work Class: ADMINISTRATIVE
Proposed Use:
Permit Number: 1610-010
Status: FINALED
Valuation: $0.00
Contractor Company:
Contractor Name: OWNER

Date: **6/3/2013**
Permit Type: **PLUMBING**
Description: **REPIPING**

Permit Description:
Work Class: PLUB CHANGE-OUT
Proposed Use:
Permit Number: 1306-004
Status: FINALED
Valuation: $0.00
Contractor Company:
Contractor Name: PARK ORLEANS

Date: **6/20/2012**
Permit Type: **BUILDING**
Description: **REPLACE 4 WINDOWS AND 1 PATIO DOOR**

Permit Description:
Work Class: WINDOWS
Proposed Use:
Permit Number: 1206-165
Status: FINALED
Valuation: $0.00
Contractor Company:
Contractor Name: DELAY JOHN E & DENA J

ADJOINING PROPERTY FINDINGS

Date: **1/9/2012**
Permit Type: **PLUMBING**
Description: **COPPER RE-PIPE**

Permit Description:
Work Class:
Proposed Use:
Permit Number: 1201-065
Status: ISSUED
Valuation: $0.00
Contractor Company:
Contractor Name: PARK ORLEANS

Date: **1/9/2012**
Permit Type: **PLUMBING**
Description: **COPPER RE-PIPE**

Permit Description:
Work Class:
Proposed Use:
Permit Number: 1201-067
Status: FINALED
Valuation: $0.00
Contractor Company:
Contractor Name: PARK ORLEANS

Date: **1/9/2012**
Permit Type: **PLUMBING**
Description: **COPPER RE-PIPE**

Permit Description:
Work Class:
Proposed Use:
Permit Number: 1201-068
Status: FINALED
Valuation: $0.00
Contractor Company:
Contractor Name: PARK ORLEANS

ADJOINING PROPERTY FINDINGS

Date: **6/7/2011**
Permit Type: **PLUMBING**
Description: **WATERLINE REPLACEMENT**

Permit Description:
Work Class:
Proposed Use:
Permit Number: 1106-060
Status: FINALED
Valuation: $0.00
Contractor Company:
Contractor Name: PARK ORLEANS H.O. ASSOC

Date: **2/7/2011**
Permit Type: **PLUMBING**
Description: **COPPER RE-PIPE**

Permit Description:
Work Class:
Proposed Use:
Permit Number: 1102-041
Status: FINALED
Valuation: $0.00
Contractor Company:
Contractor Name: PARK ORLEANS

Date: **8/18/2009**
Permit Type: **PLUMBING**
Description: **COPPER REPIPE UNITS 33-40**

Permit Description:
Work Class:
Proposed Use:
Permit Number: 0908-140
Status: FINALED
Valuation: $0.00
Contractor Company:
Contractor Name: PARK ORLEANS HOA

ADJOINING PROPERTY FINDINGS

Date: **8/18/2009**
Permit Type: **PLUMBING**
Description: **COPPER REPIPE UNITS 81-92**

Permit Description:
Work Class:
Proposed Use:
Permit Number: 0908-141
Status: FINALED
Valuation: $0.00
Contractor Company:
Contractor Name: PARK ORLEANS HOA

Date: **12/15/2008**
Permit Type: **MECHANICAL**
Description: **REPLACE WALL FURNACE**

Permit Description:
Work Class:
Proposed Use:
Permit Number: 0812-126
Status: SUBMITTED
Valuation: $0.00
Contractor Company:
Contractor Name: TONY TRABUCCO

Date: **8/14/2008**
Permit Type: **PLUMBING**
Description: **COPPER REPIPE**

Permit Description:
Work Class:
Proposed Use:
Permit Number: 0808-095
Status: SUBMITTED
Valuation: $0.00
Contractor Company:
Contractor Name: ALL PRO COPPER REPIPE

ADJOINING PROPERTY FINDINGS

Date: **9/14/2007**
Permit Type: **BUILDING**
Description: **REPAIR WATER DAMAGE AND DRY ROT**

Permit Description:
Work Class: ADD/ALTER
Proposed Use:
Permit Number: 0709-096
Status: SUBMITTED
Valuation: $0.00
Contractor Company:
Contractor Name: KAYE BRYAN E

Date: **12/9/2005**
Permit Type: **BUILDING**
Description:

Permit Description:
Work Class: ADD/ALTER
Proposed Use:
Permit Number: 0512-089
Status: SUBMITTED
Valuation: $0.00
Contractor Company:
Contractor Name: RONALD LUBIN

Date: **12/15/2003**
Permit Type: **BUILDING**
Description:

Permit Description:
Work Class: BLOCK WAL
Proposed Use:
Permit Number: 0312-173
Status: FINALED
Valuation: $0.00
Contractor Company:
Contractor Name: COLONIAL GROUP

ADJOINING PROPERTY FINDINGS

Date: **11/25/2003**
Permit Type: **BUILDING**
Description:

Permit Description:
Work Class: ADD/ALTER
Proposed Use:
Permit Number: 0311-251
Status: FINALED
Valuation: $0.00
Contractor Company:
Contractor Name: THOMAS CONSTRUCTION

Date: **9/25/2003**
Permit Type: **BUILDING**
Description:

Permit Description:
Work Class: BLOCK WAL
Proposed Use:
Permit Number: 0304-331
Status: FINALED
Valuation: $0.00
Contractor Company:
Contractor Name: PARK ORLEANS HOA

Date: **9/25/2003**
Permit Type: **BUILDING**
Description:

Permit Description:
Work Class: BLOCK WAL
Proposed Use:
Permit Number: 0312-172
Status: FINALED
Valuation: $0.00
Contractor Company:
Contractor Name: PARK ORLEANS HOA

ADJOINING PROPERTY FINDINGS

Date: **9/15/2003**
Permit Type: **PLUMBING**
Description:

Permit Description:
Work Class:
Proposed Use:
Permit Number: 0309-163
Status: SUBMITTED
Valuation: $0.00
Contractor Company:
Contractor Name: TEAM PROPERTY MGMT

Date: **1/4/2001**
Permit Type: **BUILDING**
Description:

Permit Description:
Work Class: BLOCK WAL
Proposed Use:
Permit Number: 0101-050
Status: FINALED
Valuation: $0.00
Contractor Company:
Contractor Name: ACTEC EMGINEERING

Date: **4/15/1999**
Permit Type: **BUILDING**
Description:

Permit Description:
Work Class: BLOCK WAL
Proposed Use:
Permit Number: 9904-186
Status: SUBMITTED
Valuation: $0.00
Contractor Company:
Contractor Name: PARK ORLEANS/TCB PROPERTY MGMT

ADJOINING PROPERTY FINDINGS

Date: **10/23/1998**
Permit Type: **ELECTRICAL**
Description:

Permit Description:
Work Class:
Proposed Use:
Permit Number: 9810-419
Status: SUBMITTED
Valuation: $0.00
Contractor Company:
Contractor Name: BEEBE ELECTRIC

Date: **9/30/1997**
Permit Type: **BUILDING**
Description:

Permit Description:
Work Class: OUT/SCOPE
Proposed Use:
Permit Number: 9709-795
Status: SUBMITTED
Valuation: $0.00
Contractor Company:
Contractor Name: GANNON DESIGN

Date: **11/20/1995**
Permit Type: **PLUMBING**
Description:

Permit Description:
Work Class: RES
Proposed Use:
Permit Number: 9511-527
Status: FINALED
Valuation: $0.00
Contractor Company:
Contractor Name: NOCK PLUMBING

ADJOINING PROPERTY FINDINGS

Date: **10/4/1995**
Permit Type: **PLUMBING**
Description:

Permit Description:
Work Class: RES
Proposed Use:
Permit Number: 9510-089
Status: FINALED
Valuation: $0.00
Contractor Company:
Contractor Name: NOCK PLUMBING

Date: **8/7/1995**
Permit Type: **PLUMBING**
Description:

Permit Description:
Work Class: RES
Proposed Use:
Permit Number: 9508-132
Status: FINALED
Valuation: $0.00
Contractor Company:
Contractor Name: D.P. PLUMBING

Date: **4/3/1995**
Permit Type: **ELECTRICAL**
Description:

Permit Description:
Work Class: RES
Proposed Use:
Permit Number: 9504-024
Status: FINALED
Valuation: $0.00
Contractor Company:
Contractor Name: R.L. ELECTRIC

ADJOINING PROPERTY FINDINGS

Date: **3/28/1995**
Permit Type: **BUILDING**
Description:

Permit Description:
Work Class: RES
Proposed Use:
Permit Number: 9503-375
Status: FINALED
Valuation: $0.00
Contractor Company:
Contractor Name: TOTAL ACCESS DOOR SYSTEMS

Date: **10/21/1991**
Permit Type: **BUILDING**
Description:

Permit Description:
Work Class: RES
Proposed Use:
Permit Number: 9110-388
Status: VOID
Valuation: $0.00
Contractor Company:
Contractor Name: CANYON ROOFING, INC.

Date: **10/21/1991**
Permit Type: **BUILDING**
Description:

Permit Description:
Work Class: RES
Proposed Use:
Permit Number: 9110-409
Status: FINALED
Valuation: $0.00
Contractor Company:
Contractor Name: CANYON ROOFING, INC.

ADJOINING PROPERTY FINDINGS

Date: **10/21/1991**
Permit Type: **BUILDING**
Description:

Permit Description:
Work Class: RES
Proposed Use:
Permit Number: 9110-406
Status: FINALED
Valuation: $0.00
Contractor Company:
Contractor Name: CANYON ROOFING

Date: **10/21/1991**
Permit Type: **BUILDING**
Description:

Permit Description:
Work Class: RES
Proposed Use:
Permit Number: 9110-394
Status: FINALED
Valuation: $0.00
Contractor Company:
Contractor Name: CANYON ROOFING, INCC.

Date: **10/21/1991**
Permit Type: **BUILDING**
Description:

Permit Description:
Work Class: RES
Proposed Use:
Permit Number: 9110-391
Status: FINALED
Valuation: $0.00
Contractor Company:
Contractor Name: CANYON ROOFING, INC.

ADJOINING PROPERTY FINDINGS

Date: **10/21/1991**
Permit Type: **BUILDING**
Description:

Permit Description:
Work Class: RES
Proposed Use:
Permit Number: 9110-393
Status: FINALED
Valuation: $0.00
Contractor Company:
Contractor Name: CANYON ROOFING, INC.

Date: **10/21/1991**
Permit Type: **BUILDING**
Description:

Permit Description:
Work Class: RES
Proposed Use:
Permit Number: 9110-398
Status: FINALED
Valuation: $0.00
Contractor Company:
Contractor Name: CANYON ROOFING, INCC.

Date: **10/21/1991**
Permit Type: **BUILDING**
Description:

Permit Description:
Work Class: RES
Proposed Use:
Permit Number: 9110-399
Status: FINALED
Valuation: $0.00
Contractor Company:
Contractor Name: CANYON ROOFING, INCC.

ADJOINING PROPERTY FINDINGS

Date: **10/21/1991**
Permit Type: **BUILDING**
Description:

Permit Description:
Work Class: RES
Proposed Use:
Permit Number: 9110-400
Status: FINALED
Valuation: $0.00
Contractor Company:
Contractor Name: CANYON ROOFING, INC.

Date: **10/21/1991**
Permit Type: **BUILDING**
Description:

Permit Description:
Work Class: RES
Proposed Use:
Permit Number: 9110-404
Status: FINALED
Valuation: $0.00
Contractor Company:
Contractor Name: CANYON ROOFING, INC.

Date: **10/21/1991**
Permit Type: **BUILDING**
Description:

Permit Description:
Work Class: RES
Proposed Use:
Permit Number: 9110-405
Status: FINALED
Valuation: $0.00
Contractor Company:
Contractor Name: CANYON ROOFING, INC.

ADJOINING PROPERTY FINDINGS

Date: **10/21/1991**
Permit Type: **BUILDING**
Description:

Permit Description:
Work Class: RES
Proposed Use:
Permit Number: 9110-407
Status: FINALED
Valuation: $0.00
Contractor Company:
Contractor Name: CANYON ROOFING, INCC.

Date: **10/21/1991**
Permit Type: **BUILDING**
Description:

Permit Description:
Work Class: RES
Proposed Use:
Permit Number: 9110-411
Status: FINALED
Valuation: $0.00
Contractor Company:
Contractor Name: CANYON ROOFING, INC.

Date: **10/21/1991**
Permit Type: **BUILDING**
Description:

Permit Description:
Work Class: RES
Proposed Use:
Permit Number: 9110-384
Status: FINALED
Valuation: $0.00
Contractor Company:
Contractor Name: CANYON ROOFING, INC.

ADJOINING PROPERTY FINDINGS

Date: **10/21/1991**
Permit Type: **BUILDING**
Description:

Permit Description:
Work Class: RES
Proposed Use:
Permit Number: 9110-381
Status: FINALED
Valuation: $0.00
Contractor Company:
Contractor Name: CANYON ROOFING, INC.

Date: **10/21/1991**
Permit Type: **BUILDING**
Description:

Permit Description:
Work Class: RES
Proposed Use:
Permit Number: 9110-396
Status: FINALED
Valuation: $0.00
Contractor Company:
Contractor Name: CANYON ROOFING, INC.

Date: **10/21/1991**
Permit Type: **BUILDING**
Description:

Permit Description:
Work Class: RES
Proposed Use:
Permit Number: 9110-408
Status: FINALED
Valuation: $0.00
Contractor Company:
Contractor Name: CANYON ROOFING, INC.

ADJOINING PROPERTY FINDINGS

Date: **10/21/1991**
Permit Type: **BUILDING**
Description:

Permit Description:
Work Class: RES
Proposed Use:
Permit Number: 9110-410
Status: FINALED
Valuation: $0.00
Contractor Company:
Contractor Name: CANYON ROOFING INC

Date: **10/21/1991**
Permit Type: **BUILDING**
Description:

Permit Description:
Work Class: RES
Proposed Use:
Permit Number: 9110-412
Status: FINALED
Valuation: $0.00
Contractor Company:
Contractor Name: CANYON ROOFING INC

Date: **10/21/1991**
Permit Type: **BUILDING**
Description:

Permit Description:
Work Class: RES
Proposed Use:
Permit Number: 9110-413
Status: FINALED
Valuation: $0.00
Contractor Company:
Contractor Name: CANYON ROOFING, INC.

ADJOINING PROPERTY FINDINGS

Date: **10/21/1991**
Permit Type: **BUILDING**
Description:

Permit Description:
Work Class: RES
Proposed Use:
Permit Number: 9110-414
Status: FINALED
Valuation: $0.00
Contractor Company:
Contractor Name: CANYON ROOFING INC

Date: **10/21/1991**
Permit Type: **BUILDING**
Description:

Permit Description:
Work Class: RES
Proposed Use:
Permit Number: 9110-415
Status: FINALED
Valuation: $0.00
Contractor Company:
Contractor Name: CANYON ROOFING INC

Date: **10/21/1991**
Permit Type: **BUILDING**
Description:

Permit Description:
Work Class: RES
Proposed Use:
Permit Number: 9110-416
Status: FINALED
Valuation: $0.00
Contractor Company:
Contractor Name: CANYON ROOFING, INC.

ADJOINING PROPERTY FINDINGS

Date: **10/21/1991**
Permit Type: **BUILDING**
Description:

Permit Description:
Work Class: RES
Proposed Use:
Permit Number: 9110-419
Status: FINALED
Valuation: $0.00
Contractor Company:
Contractor Name: CANYON ROOFING INC

Date: **10/21/1991**
Permit Type: **BUILDING**
Description:

Permit Description:
Work Class: RES
Proposed Use:
Permit Number: 9110-421
Status: FINALED
Valuation: $0.00
Contractor Company:
Contractor Name: CANYON ROOFING INC

Date: **10/21/1991**
Permit Type: **BUILDING**
Description:

Permit Description:
Work Class: RES
Proposed Use:
Permit Number: 9110-422
Status: FINALED
Valuation: $0.00
Contractor Company:
Contractor Name: CANYON ROOFING, INC.

ADJOINING PROPERTY FINDINGS

Date: **10/21/1991**
Permit Type: **BUILDING**
Description:

Permit Description:
Work Class: RES
Proposed Use:
Permit Number: 9110-424
Status: FINALED
Valuation: $0.00
Contractor Company:
Contractor Name: CANYON ROOFING, INC.

Date: **3/28/1990**
Permit Type: **ELECTRICAL**
Description:

Permit Description:
Work Class: CONDOS
Proposed Use:
Permit Number: 9003-701
Status: FINALED
Valuation: $0.00
Contractor Company:
Contractor Name: LEASURE ENTERPRISES

Date: **3/13/1990**
Permit Type: **BUILDING**
Description:

Permit Description:
Work Class: CONDOS
Proposed Use:
Permit Number: 9003-140
Status: FINALED
Valuation: $0.00
Contractor Company:
Contractor Name: KARL FRIESS CONSTRUCTION

ADJOINING PROPERTY FINDINGS

Date: **9/26/1989**
Permit Type: **BUILDING**
Description:

Permit Description:
Work Class: RES
Proposed Use:
Permit Number: 8909-538
Status: FINALED
Valuation: $0.00
Contractor Company:
Contractor Name: MACHELLE HAMILTON

Date: **8/15/1989**
Permit Type: **BUILDING**
Description:

Permit Description:
Work Class: RES
Proposed Use:
Permit Number: 8908-371
Status: FINALED
Valuation: $0.00
Contractor Company:
Contractor Name: MACHELLE HAMILTON

Date: **6/28/1989**
Permit Type: **BUILDING**
Description:

Permit Description:
Work Class: RES
Proposed Use:
Permit Number: 8906-781
Status: PO OPEN
Valuation: $0.00
Contractor Company:
Contractor Name: HELAINE GAWRONSKI

ADJOINING PROPERTY FINDINGS

Date: **6/26/1989**
Permit Type: **BUILDING**
Description:

Permit Description:
Work Class: RES
Proposed Use:
Permit Number: 8906-723
Status: PO OPEN
Valuation: $0.00
Contractor Company:
Contractor Name: HELAINE GAWRONSKI

684 S GLASSELL ST

Date: **4/16/2018**
Permit Type: **COMMERCIAL**
Description: **ILLUMINATED SIGNS**

Permit Description:
Work Class: SIGNS
Proposed Use:
Permit Number: 1804-141
Status: ISSUED
Valuation: $0.00
Contractor Company:
Contractor Name: DONCO & SONS INC

Date: **2/2/2018**
Permit Type: **ELECTRICAL**
Description: **TEMP POWER**

Permit Description:
Work Class:
Proposed Use:
Permit Number: 1802-018
Status: FINALED
Valuation: $0.00
Contractor Company:
Contractor Name: WESTERN STATES CONSTRUCTION INC

ADJOINING PROPERTY FINDINGS

Date: **1/31/2018**
Permit Type: **COMMERCIAL**
Description: **RELOCATE UNDERGROUND STORAGE TANK /VENT LINES, NEW DISP.**

Permit Description:
Work Class: FIRE
Proposed Use:
Permit Number: 1801-290
Status: SUBMITTED
Valuation: $0.00
Contractor Company:
Contractor Name: CALIFORNIA MAINTENANCE & ENV.

Date: **1/3/2017**
Permit Type: **COMMERCIAL**
Description: **NEW GAS STATION STORE**

Permit Description:
Work Class: NEW BLDG.
Proposed Use:
Permit Number: 1701-024
Status: SUBMITTED
Valuation: $0.00
Contractor Company:
Contractor Name: WESTERN STATES CONSTRUCTION INC

Date: **10/28/2008**
Permit Type: **BUILDING**
Description: **HEALY TANK**

Permit Description:
Work Class: T.I.
Proposed Use:
Permit Number: 0809-161
Status: SUBMITTED
Valuation: $0.00
Contractor Company:
Contractor Name: JEMS ORANGE INC

ADJOINING PROPERTY FINDINGS

Date: **2/14/2008**
Permit Type: **BUILDING**
Description: **UNDERGROUND TANK**

Permit Description:
Work Class: FIRE
Proposed Use:
Permit Number: 0801-156
Status: FINALED
Valuation: $0.00
Contractor Company:
Contractor Name: HARVEY

Date: **12/20/2006**
Permit Type: **BUILDING**
Description:

Permit Description:
Work Class: SIGNS
Proposed Use:
Permit Number: 0612-230
Status: FINALED
Valuation: $0.00
Contractor Company:
Contractor Name: JAVIER VICENCIO

Date: **1/10/2005**
Permit Type: **BUILDING**
Description:

Permit Description:
Work Class: FIRE
Proposed Use:
Permit Number: 0412-233
Status: SUBMITTED
Valuation: $0.00
Contractor Company:
Contractor Name: CONOCO PHILLIPS # 255299

ADJOINING PROPERTY FINDINGS

Date: **11/17/2004**
Permit Type: **BUILDING**
Description:

Permit Description:
Work Class: FIRE
Proposed Use:
Permit Number: 0410-060
Status: SUBMITTED
Valuation: $0.00
Contractor Company:
Contractor Name: 76 SERVICE STATION # 255299

Date: **5/20/2003**
Permit Type: **BUILDING**
Description:

Permit Description:
Work Class: FIRE
Proposed Use:
Permit Number: 0305-180
Status: SUBMITTED
Valuation: $0.00
Contractor Company:
Contractor Name: CONOCO PHILLIPS

Date: **11/26/2002**
Permit Type: **BUILDING**
Description:

Permit Description:
Work Class: FIRE
Proposed Use:
Permit Number: 0211-090
Status: SUBMITTED
Valuation: $0.00
Contractor Company:
Contractor Name: RIZWAN

ADJOINING PROPERTY FINDINGS

Date: **5/7/2001**
Permit Type: **BUILDING**
Description:

Permit Description:
Work Class: FIRE
Proposed Use:
Permit Number: 0104-198
Status: FINALED
Valuation: $0.00
Contractor Company:
Contractor Name: TOSCO

Date: **10/13/1993**
Permit Type: **ELECTRICAL**
Description:

Permit Description:
Work Class: COMM
Proposed Use:
Permit Number: 9310-141
Status: FINALED
Valuation: $0.00
Contractor Company:
Contractor Name: SANDERS SERVICES

Date: **9/15/1993**
Permit Type: **BUILDING**
Description:

Permit Description:
Work Class: COMM
Proposed Use:
Permit Number: 9308-203
Status: FINALED
Valuation: $0.00
Contractor Company:
Contractor Name: AMERIGAS PROPANE, INC

ADJOINING PROPERTY FINDINGS

Date: **7/19/1993**
Permit Type: **MECHANICAL**
Description:

Permit Description:
Work Class: COMM
Proposed Use:
Permit Number: 9307-279
Status: FINALED
Valuation: $0.00
Contractor Company:
Contractor Name: PETCON INC

Date: **7/12/1993**
Permit Type: **BUILDING**
Description:

Permit Description:
Work Class: COMM
Proposed Use:
Permit Number: 9302-285
Status: FINALED
Valuation: $0.00
Contractor Company:
Contractor Name: PETCON INC

Date: **7/12/1993**
Permit Type: **BUILDING**
Description:

Permit Description:
Work Class: COMM
Proposed Use:
Permit Number: 9307-143
Status: FINALED
Valuation: $0.00
Contractor Company:
Contractor Name: PETCON INC

ADJOINING PROPERTY FINDINGS

Date: **5/4/1992**
Permit Type: **BUILDING**
Description:

Permit Description:
Work Class: COMM
Proposed Use:
Permit Number: 9205-023
Status: PC OPEN
Valuation: $0.00
Contractor Company:
Contractor Name: SUBURBAN PR OPANE

Date: **3/14/1990**
Permit Type: **BUILDING**
Description:

Permit Description:
Work Class: GAS STATION
Proposed Use:
Permit Number: 9002-171
Status: FINALED
Valuation: $0.00
Contractor Company:
Contractor Name: CARSE COMPANY

Date: **5/19/1989**
Permit Type: **BUILDING**
Description:

Permit Description:
Work Class: COMM
Proposed Use:
Permit Number: 8903-643
Status: FINALED
Valuation: $0.00
Contractor Company:
Contractor Name: JOE RHOADES MAINTENANCE

ADJOINING PROPERTY FINDINGS

S GLASSELL STREET

488 S GLASSELL STREET

Date: **11/15/1993**
Permit Type: **BUILDING**
Description:

Permit Description:
Work Class: RES
Proposed Use:
Permit Number: 9311-162
Status: FINALED
Valuation: $0.00
Contractor Company:
Contractor Name: BRENT OWENS ROOFING

Date: **10/18/1993**
Permit Type: **BUILDING**
Description:

Permit Description:
Work Class: RES
Proposed Use:
Permit Number: 9310-203
Status: FINALED
Valuation: $0.00
Contractor Company:
Contractor Name: CITY OF ORANGE

ADJOINING PROPERTY FINDINGS

537 S GLASSELL STREET

Date:	**7/20/2018**
Permit Type:	**RESIDENTIAL**
Description:	**REROOF MULTI-FAMILY BLDG. & ATTACHED CARPORT**

Permit Description:	
Work Class:	REROOF
Proposed Use:	
Permit Number:	1807-202
Status:	ISSUED
Valuation:	$0.00
Contractor Company:	
Contractor Name:	ADAM'S ROOFING INC

Date:	**2/25/1991**
Permit Type:	**ELECTRICAL**
Description:	

Permit Description:	
Work Class:	RES
Proposed Use:	
Permit Number:	9102-334
Status:	FINALED
Valuation:	$0.00
Contractor Company:	
Contractor Name:	PACIFIC GENERAL CONTRACTORS

ADJOINING PROPERTY FINDINGS

556 S GLASSELL STREET

Date: **6/22/1992**
Permit Type: **MECHANICAL**
Description:

Permit Description:
Work Class: COMM
Proposed Use:
Permit Number: 9206-395
Status: FINALED
Valuation: $0.00
Contractor Company:
Contractor Name: LEISURE AIRE INC

Date: **5/7/1990**
Permit Type: **ELECTRICAL**
Description:

Permit Description:
Work Class: COMM
Proposed Use:
Permit Number: 9005-177
Status: FINALED
Valuation: $0.00
Contractor Company:
Contractor Name: BRANCO ELECTRIC

Date: **4/9/1990**
Permit Type: **BUILDING**
Description:

Permit Description:
Work Class: COMML
Proposed Use:
Permit Number: 9003-827
Status: FINALED
Valuation: $0.00
Contractor Company:
Contractor Name: HOLLEY CONSTRUCTION

ADJOINING PROPERTY FINDINGS

Date: **4/9/1990**
Permit Type: **BUILDING**
Description:

Permit Description:
Work Class: COMML
Proposed Use:
Permit Number: 9003-831
Status: FINALED
Valuation: $0.00
Contractor Company:
Contractor Name: HOLLEY CONSTRUCTION

Date: **3/30/1990**
Permit Type: **BUILDING**
Description:

Permit Description:
Work Class: RES
Proposed Use:
Permit Number: 8910-403
Status: PO OPEN
Valuation: $0.00
Contractor Company:
Contractor Name: BARTLETT ASSOC ARCH

Date: **3/30/1990**
Permit Type: **BUILDING**
Description:

Permit Description:
Work Class: RES
Proposed Use:
Permit Number: 8910-406
Status: PO OPEN
Valuation: $0.00
Contractor Company:
Contractor Name: ROMAN CATHOLIC BISHOP OF ORAN

ADJOINING PROPERTY FINDINGS

615 S GLASSELL STREET

Date:	**2/25/1991**
Permit Type:	**ELECTRICAL**
Description:	
Permit Description:	
Work Class:	RES
Proposed Use:	
Permit Number:	9102-342
Status:	FINALED
Valuation:	$0.00
Contractor Company:	
Contractor Name:	PACIFIC GENERAL CONTRACTORS

629 S GLASSELL STREET

Date:	**2/27/1995**
Permit Type:	**ELECTRICAL**
Description:	
Permit Description:	
Work Class:	RES
Proposed Use:	
Permit Number:	9502-335
Status:	FINALED
Valuation:	$0.00
Contractor Company:	
Contractor Name:	WESTERN ELECTRIC

ADJOINING PROPERTY FINDINGS

Date: **2/23/1995**
Permit Type: **PLUMBING**
Description:

Permit Description:
Work Class: RES
Proposed Use:
Permit Number: 9502-318
Status: FINALED
Valuation: $0.00
Contractor Company:
Contractor Name: M.D. BUILDERS

Date: **2/13/1995**
Permit Type: **BUILDING**
Description:

Permit Description:
Work Class: RES
Proposed Use:
Permit Number: 9411-248
Status: FINALED
Valuation: $0.00
Contractor Company:
Contractor Name: ROBERT COULSON

Date: **2/13/1995**
Permit Type: **ELECTRICAL**
Description:

Permit Description:
Work Class: RES
Proposed Use:
Permit Number: 9502-179
Status: FINALED
Valuation: $0.00
Contractor Company:
Contractor Name:

ADJOINING PROPERTY FINDINGS

Date: **2/13/1995**
Permit Type: **MECHANICAL**
Description:

Permit Description:
Work Class: RES
Proposed Use:
Permit Number: 9502-180
Status: FINALED
Valuation: $0.00
Contractor Company:
Contractor Name:

Date: **1/26/1995**
Permit Type: **BUILDING**
Description:

Permit Description:
Work Class: RES
Proposed Use:
Permit Number: 9501-375
Status: FINALED
Valuation: $0.00
Contractor Company:
Contractor Name: LARRY HAUPERT

Date: **2/25/1991**
Permit Type: **ELECTRICAL**
Description:

Permit Description:
Work Class: RES
Proposed Use:
Permit Number: 9102-326
Status: FINALED
Valuation: $0.00
Contractor Company:
Contractor Name: PACIFIC GENERAL CONTRACTORS

ADJOINING PROPERTY FINDINGS

Date: **9/22/1989**
Permit Type: **BUILDING**
Description:

Permit Description:
Work Class: RES
Proposed Use:
Permit Number: 8909-492
Status: PC OPEN
Valuation: $0.00
Contractor Company:
Contractor Name: ROBERT MENSICK

631 S GLASSELL STREET

Date: **1/26/1995**
Permit Type: **BUILDING**
Description:

Permit Description:
Work Class: RES
Proposed Use:
Permit Number: 9501-368
Status: FINALED
Valuation: $0.00
Contractor Company:
Contractor Name: LARRY HAUPERT

Date: **2/25/1991**
Permit Type: **ELECTRICAL**
Description:

Permit Description:
Work Class: RES
Proposed Use:
Permit Number: 9102-337
Status: FINALED
Valuation: $0.00
Contractor Company:
Contractor Name: PACIFIC GENERAL CONTRACTORS

ADJOINING PROPERTY FINDINGS

Date: **9/22/1989**
Permit Type: **BUILDING**
Description:

Permit Description:
Work Class: RES
Proposed Use:
Permit Number: 8909-491
Status: CANCEL
Valuation: $0.00
Contractor Company:
Contractor Name: ROBERT MENSICK

S GRAND

610 S GRAND

Date: **5/12/1998**
Permit Type: **ELECTRICAL**
Description:

Permit Description:
Work Class:
Proposed Use:
Permit Number: 9805-132
Status: SUBMITTED
Valuation: $0.00
Contractor Company:
Contractor Name: DANNA ELECTRIC

Date: **4/23/1998**
Permit Type: **PLUMBING**
Description:

Permit Description:
Work Class:
Proposed Use:
Permit Number: 9804-236
Status: SUBMITTED
Valuation: $0.00
Contractor Company:
Contractor Name: HESS CONSTRUCTION

Date: **4/23/1998**
Permit Type: **BUILDING**
Description:

Permit Description:
Work Class: REROOF
Proposed Use:
Permit Number: 9804-235
Status: SUBMITTED
Valuation: $0.00
Contractor Company:
Contractor Name: HESS CONSTRUCTION

614 S GRAND

Date: **5/12/1998**
Permit Type: **ELECTRICAL**
Description:

Permit Description:
Work Class:
Proposed Use:
Permit Number: 9805-134
Status: SUBMITTED
Valuation: $0.00
Contractor Company:
Contractor Name: DANNA ELECTRIC

ADJOINING PROPERTY FINDINGS

S GRAND ST

504 S GRAND ST

Date:	**11/16/2000**
Permit Type:	**BUILDING**
Description:	
Permit Description:	
Work Class:	ADD/ALTER
Proposed Use:	
Permit Number:	0010-298
Status:	FINALED
Valuation:	$0.00
Contractor Company:	
Contractor Name:	M3 DESIGN

Date:	**11/22/1988**
Permit Type:	**MECHANICAL**
Description:	
Permit Description:	
Work Class:	RES
Proposed Use:	
Permit Number:	8811-654
Status:	PO OPEN
Valuation:	$0.00
Contractor Company:	
Contractor Name:	

ADJOINING PROPERTY FINDINGS

520 S GRAND ST

Date:	**2/18/2016**
Permit Type:	**RESIDENTIAL**
Description:	**REROOF HOUSE ONLY**

Permit Description:	
Work Class:	REROOF
Proposed Use:	
Permit Number:	1602-234
Status:	FINALED
Valuation:	$0.00
Contractor Company:	
Contractor Name:	GUARDIAN ROOFS ENERGY SOLUTIONS

Date:	**1/7/2016**
Permit Type:	**MECHANICAL**
Description:	**HVAC CHANGE OUT & DUCTS**

Permit Description:	
Work Class:	MECH CHANGE-OUT
Proposed Use:	
Permit Number:	1601-077
Status:	FINALED
Valuation:	$0.00
Contractor Company:	
Contractor Name:	ALPS AIR CONDITIONING & HEATING

ADJOINING PROPERTY FINDINGS

528 S GRAND ST

Date:	**3/21/2005**
Permit Type:	**ELECTRICAL**
Description:	
Permit Description:	
Work Class:	
Proposed Use:	
Permit Number:	0503-220
Status:	SUBMITTED
Valuation:	$0.00
Contractor Company:	
Contractor Name:	BRAD BEYER

Date:	**11/12/1997**
Permit Type:	**BUILDING**
Description:	**REROOF**
Permit Description:	
Work Class:	REROOF
Proposed Use:	
Permit Number:	9711-147
Status:	SUBMITTED
Valuation:	$0.00
Contractor Company:	
Contractor Name:	LOIS BEYER

ADJOINING PROPERTY FINDINGS

552 S GRAND ST

Date: **9/20/2017**
Permit Type: **PLUMBING**
Description: **SEWER REPAIRS**

Permit Description:
Work Class:
Proposed Use:
Permit Number: 1709-213
Status: ISSUED
Valuation: $0.00
Contractor Company:
Contractor Name: RESCUE ROOTER

Date: **10/22/2001**
Permit Type: **BUILDING**
Description:

Permit Description:
Work Class: REROOF
Proposed Use:
Permit Number: 0110-255
Status: FINALED
Valuation: $0.00
Contractor Company:
Contractor Name: DORIS HARRINGTON

Date: **10/7/1991**
Permit Type: **BUILDING**
Description:

Permit Description:
Work Class: RES
Proposed Use:
Permit Number: 9110-123
Status: FINALED
Valuation: $0.00
Contractor Company:
Contractor Name: ARMSTRONG ROOFING

Date: **3/6/1991**
Permit Type: **ELECTRICAL**
Description:

Permit Description:
Work Class: RES
Proposed Use:
Permit Number: 9103-041
Status: FINALED
Valuation: $0.00
Contractor Company:
Contractor Name: LINS ELECTRIC

604 S GRAND ST

Date: **11/24/2010**
Permit Type: **MECHANICAL**
Description: **CHANGEOUT HEATER AND A/C**

Permit Description:
Work Class: MECH CHANGE-OUT
Proposed Use:
Permit Number: 1011-200
Status: FINALED
Valuation: $0.00
Contractor Company:
Contractor Name: BOWIE MARK T & SARA P

Date: **12/5/1991**
Permit Type: **ELECTRICAL**
Description:

Permit Description:
Work Class: RES
Proposed Use:
Permit Number: 9112-071
Status: FINALED
Valuation: $0.00
Contractor Company:
Contractor Name:

ADJOINING PROPERTY FINDINGS

Date: **12/5/1991**
Permit Type: **MECHANICAL**
Description:

Permit Description:
Work Class: RES
Proposed Use:
Permit Number: 9112-073
Status: FINALED
Valuation: $0.00
Contractor Company:
Contractor Name:

Date: **7/29/1991**
Permit Type: **PLUMBING**
Description:

Permit Description:
Work Class: RES
Proposed Use:
Permit Number: 9107-430
Status: FINALED
Valuation: $0.00
Contractor Company:
Contractor Name: OLIVIAS MECHANICAL CORP

Date: **7/17/1991**
Permit Type: **BUILDING**
Description:

Permit Description:
Work Class: RES
Proposed Use:
Permit Number: 9106-296
Status: PO OPEN
Valuation: $0.00
Contractor Company:
Contractor Name: M/M BOB GOEHLE

ADJOINING PROPERTY FINDINGS

Date: **7/5/1989**
Permit Type: **BUILDING**
Description:

Permit Description:
Work Class: RES
Proposed Use:
Permit Number: 8907-024
Status: PO OPEN
Valuation: $0.00
Contractor Company:
Contractor Name: CORNERSTONE ROOFING CO

Date: **6/20/1989**
Permit Type: **ELECTRICAL**
Description:

Permit Description:
Work Class: SFD
Proposed Use:
Permit Number: 8906-570
Status: PO OPEN
Valuation: $0.00
Contractor Company:
Contractor Name: IRVINE WEST HEATING AIR

Date: **6/20/1989**
Permit Type: **MECHANICAL**
Description:

Permit Description:
Work Class: SFD
Proposed Use:
Permit Number: 8906-579
Status: PO OPEN
Valuation: $0.00
Contractor Company:
Contractor Name: IRVINE WEST HEATING AIR

ADJOINING PROPERTY FINDINGS

640 S GRAND ST

Date:	**10/16/2001**
Permit Type:	**BUILDING**
Description:	
Permit Description:	
Work Class:	REROOF
Proposed Use:	
Permit Number:	0110-189
Status:	FINALED
Valuation:	$0.00
Contractor Company:	
Contractor Name:	BUD AUST

644 S GRAND ST

Date:	**4/7/2015**
Permit Type:	**RESIDENTIAL**
Description:	**NEW CHIMNEY**
Permit Description:	
Work Class:	ALTERATION /REPAIR
Proposed Use:	
Permit Number:	1502-085
Status:	ISSUED
Valuation:	$0.00
Contractor Company:	
Contractor Name:	RED HOT ENTERPRISES

ADJOINING PROPERTY FINDINGS

Date: **9/13/2012**
Permit Type: **BUILDING**
Description: **SHOWER REPLACEMENT**

Permit Description:
Work Class: ADD/ALTER RES
Proposed Use:
Permit Number: 1209-095
Status: FINALED
Valuation: $0.00
Contractor Company:
Contractor Name: RODRIGUEZ PERRY T & KATHLEEN A

Date: **3/20/2006**
Permit Type: **PLUMBING**
Description:

Permit Description:
Work Class:
Proposed Use:
Permit Number: 0603-151
Status: FINALED
Valuation: $0.00
Contractor Company:
Contractor Name: COAST WATER & POWER

Date: **1/17/2006**
Permit Type: **BUILDING**
Description:

Permit Description:
Work Class: ADD/ALTER
Proposed Use:
Permit Number: 0601-170
Status: SUBMITTED
Valuation: $0.00
Contractor Company:
Contractor Name: KATHLEEN RODRIGUEZ

ADJOINING PROPERTY FINDINGS

Date: **3/7/2005**
Permit Type: **BUILDING**
Description:

Permit Description:
Work Class: ADD/ALTER
Proposed Use:
Permit Number: 0503-077
Status: FINALED
Valuation: $0.00
Contractor Company:
Contractor Name: KATHY & PERRY RODRIQUEZ

Date: **7/21/2004**
Permit Type: **BUILDING**
Description:

Permit Description:
Work Class: REROOF
Proposed Use:
Permit Number: 0407-239
Status: SUBMITTED
Valuation: $0.00
Contractor Company:
Contractor Name: GAUSTAD FLORENCE P

ADJOINING PROPERTY FINDINGS

S GRAND STREET

512 S GRAND STREET

Date: **12/27/1988**
Permit Type: **MECHANICAL**
Description:

Permit Description:
Work Class: RES
Proposed Use:
Permit Number: 8812-470
Status: PO OPEN
Valuation: $0.00
Contractor Company:
Contractor Name: VILLA VISTA DEV CORP

536 S GRAND STREET

Date: **9/16/1997**
Permit Type: **BUILDING**
Description:

Permit Description:
Work Class: OUT/SCOPE
Proposed Use:
Permit Number: 9709-416
Status: SUBMITTED
Valuation: $0.00
Contractor Company:
Contractor Name: SHOWCASE BUILDERS INC

ADJOINING PROPERTY FINDINGS

636 S GRAND STREET

Date: **5/15/1992**
Permit Type: **ELECTRICAL**
Description:

Permit Description:
Work Class: RES
Proposed Use:
Permit Number: 9205-282
Status: FINALED
Valuation: $0.00
Contractor Company:
Contractor Name:

Date: **5/15/1992**
Permit Type: **PLUMBING**
Description:

Permit Description:
Work Class: RES
Proposed Use:
Permit Number: 9205-284
Status: FINALED
Valuation: $0.00
Contractor Company:
Contractor Name:

Date: **5/15/1992**
Permit Type: **MECHANICAL**
Description:

Permit Description:
Work Class: RES
Proposed Use:
Permit Number: 9205-279
Status: FINALED
Valuation: $0.00
Contractor Company:
Contractor Name:

ADJOINING PROPERTY FINDINGS

Date: **5/15/1992**
Permit Type: **BUILDING**
Description:

Permit Description:
Work Class: RES
Proposed Use:
Permit Number: 9205-280
Status: FINALED
Valuation: $0.00
Contractor Company:
Contractor Name: RICHARD W ZEILER

Date: **4/30/1992**
Permit Type: **MECHANICAL**
Description:

Permit Description:
Work Class: RES
Proposed Use:
Permit Number: 9204-528
Status: FINALED
Valuation: $0.00
Contractor Company:
Contractor Name:

Date: **4/30/1992**
Permit Type: **ELECTRICAL**
Description:

Permit Description:
Work Class: RES
Proposed Use:
Permit Number: 9204-532
Status: FINALED
Valuation: $0.00
Contractor Company:
Contractor Name:

ADJOINING PROPERTY FINDINGS

Date: **10/30/1989**
Permit Type: **BUILDING**
Description:

Permit Description:
Work Class: RES
Proposed Use:
Permit Number: 8910-683
Status: PO OPEN
Valuation: $0.00
Contractor Company:
Contractor Name: RICHARD W. ZEILER

Date: **10/11/1989**
Permit Type: **ELECTRICAL**
Description:

Permit Description:
Work Class: RES
Proposed Use:
Permit Number: 8910-336
Status: PO OPEN
Valuation: $0.00
Contractor Company:
Contractor Name:

646 S GRAND STREET

Date: **4/29/1996**
Permit Type: **BUILDING**
Description:

Permit Description:
Work Class: ARES
Proposed Use:
Permit Number: 9604-444
Status: FINALED
Valuation: $0.00
Contractor Company:
Contractor Name: CUSTOM RECOVER ROOFING

ADJOINING PROPERTY FINDINGS

Date: **4/24/1989**
Permit Type: **MECHANICAL**
Description:

Permit Description:
Work Class: RES
Proposed Use:
Permit Number: 8904-933
Status: PO OPEN
Valuation: $0.00
Contractor Company:
Contractor Name:

S OLIVE

495 S OLIVE

Date: **12/15/1997**
Permit Type: **BUILDING**
Description:

Permit Description:
Work Class: DEMO RES
Proposed Use:
Permit Number: 9712-188
Status: SUBMITTED
Valuation: $0.00
Contractor Company:
Contractor Name: AUSTIN COURT

ADJOINING PROPERTY FINDINGS

Date: **11/1/1993**
Permit Type: **BUILDING**
Description:

Permit Description:
Work Class: RES
Proposed Use:
Permit Number: 9311-006
Status: FINALED
Valuation: $0.00
Contractor Company:
Contractor Name: LINNERT ROOFING

S OLIVE ST

475 S OLIVE ST

Date: **3/17/2011**
Permit Type: **BUILDING**
Description: **DEMO ILLEGAL ADDITION .**

Permit Description:
Work Class: ADD/ALTER RES
Proposed Use:
Permit Number: 1103-142
Status: FINALED
Valuation: $0.00
Contractor Company:
Contractor Name: ALAMAN GRISELDA

ADJOINING PROPERTY FINDINGS

Date: **12/8/2010**
Permit Type: **PLUMBING**
Description: **WATER HEATER CHAGE OUT**

Permit Description:
Work Class: PLUB CHANGE-OUT
Proposed Use:
Permit Number: 1012-061
Status: FINALED
Valuation: $0.00
Contractor Company:
Contractor Name: ALAMAN GRISELDA

Date: **10/10/1997**
Permit Type: **BUILDING**
Description:

Permit Description:
Work Class: OUT/SCOPE
Proposed Use:
Permit Number: 9710-181
Status: SUBMITTED
Valuation: $0.00
Contractor Company:
Contractor Name: GRISELDA M. ALAMAN

Date: **10/5/1993**
Permit Type: **BUILDING**
Description:

Permit Description:
Work Class: RES
Proposed Use:
Permit Number: 9310-036
Status: FINALED
Valuation: $0.00
Contractor Company:
Contractor Name: CASEY JURADO

ADJOINING PROPERTY FINDINGS

485 S OLIVE ST

Date: **9/12/2013**
Permit Type: **BUILDING**
Description: **REPLACE EXTERIOR WOOD STAIRCASE**

Permit Description:
Work Class: ADD/ALTER RES
Proposed Use:
Permit Number: 1309-113
Status: FINALED
Valuation: $0.00
Contractor Company:
Contractor Name: ADRAY'S-VP HANDYMAN CONSTRUCTI

Date: **8/29/2013**
Permit Type: **BUILDING**
Description: **REPLACE EXTERIOR STAIRS**

Permit Description:
Work Class: ADD/ALTER RES
Proposed Use:
Permit Number: 1308-236
Status: SUBMITTED
Valuation: $0.00
Contractor Company:
Contractor Name: ADRAY'S-VP HANDYMAN CONSTRUCTI

Date: **4/16/2012**
Permit Type: **MECHANICAL**
Description: **2 NEW FURNACES**

Permit Description:
Work Class:
Proposed Use:
Permit Number: 1204-107
Status: FINALED
Valuation: $0.00
Contractor Company:
Contractor Name: DEMALLEN DELIA

ADJOINING PROPERTY FINDINGS

Date: **4/16/2012**
Permit Type: **BUILDING**
Description: **REROOF**

Permit Description:
Work Class: REROOF
Proposed Use:
Permit Number: 1204-104
Status: FINALED
Valuation: $0.00
Contractor Company:
Contractor Name: DEMALLEN DELIA

Date: **10/10/1997**
Permit Type: **BUILDING**
Description:

Permit Description:
Work Class: OUT/SCOPE
Proposed Use:
Permit Number: 9710-180
Status: SUBMITTED
Valuation: $0.00
Contractor Company:
Contractor Name: DELIA GARCIA DEMALLEN

ADJOINING PROPERTY FINDINGS

S OLIVE STREET

477 S OLIVE STREET

Date:	**10/10/1997**
Permit Type:	**BUILDING**
Description:	
Permit Description:	
Work Class:	OUT/SCOPE
Proposed Use:	
Permit Number:	9710-182
Status:	SUBMITTED
Valuation:	$0.00
Contractor Company:	
Contractor Name:	GRISELDA M. ALAMAN

S ORANGE

492 S ORANGE

Date:	**5/9/2018**
Permit Type:	**RESIDENTIAL**
Description:	**CONVERT 476 SF GARAGE TO ACCESSORY UNIT, ADD 516 SF GARAGE**
Permit Description:	
Work Class:	NEW SINGLE FAMILY
Proposed Use:	
Permit Number:	1805-074
Status:	SUBMITTED
Valuation:	$0.00
Contractor Company:	
Contractor Name:	BRIAN SCOTT

ADJOINING PROPERTY FINDINGS

Date: **2/7/2018**
Permit Type: **RESIDENTIAL**
Description: **950 SF REROOF HOUSE ONLY**

Permit Description:
Work Class: REROOF
Proposed Use:
Permit Number: 1802-054
Status: FINALED
Valuation: $0.00
Contractor Company:
Contractor Name: OWNER/BUILDER

Date: **11/7/1997**
Permit Type: **ELECTRICAL**
Description:

Permit Description:
Work Class:
Proposed Use:
Permit Number: 9711-088
Status: expired
Valuation: $0.00
Contractor Company:
Contractor Name: MED-TOX, INC.

Date: **9/10/1997**
Permit Type: **BUILDING**
Description:

Permit Description:
Work Class: DEMO RES
Proposed Use:
Permit Number: 9709-311
Status: SUBMITTED
Valuation: $0.00
Contractor Company:
Contractor Name: JOHN DALY

ADJOINING PROPERTY FINDINGS

545 S ORANGE

Date:	**11/19/1998**
Permit Type:	**BUILDING**
Description:	

Permit Description:	
Work Class:	ADD/ALTER
Proposed Use:	
Permit Number:	9811-362
Status:	SUBMITTED
Valuation:	$0.00
Contractor Company:	
Contractor Name:	JOHN THAWLEY

Date:	**1/6/1998**
Permit Type:	**BUILDING**
Description:	

Permit Description:	
Work Class:	REROOF
Proposed Use:	
Permit Number:	9801-027
Status:	SUBMITTED
Valuation:	$0.00
Contractor Company:	
Contractor Name:	JOHN THAWLEY

ADJOINING PROPERTY FINDINGS

609 S ORANGE

Date:	**1/25/1999**
Permit Type:	**ELECTRICAL**
Description:	
Permit Description:	
Work Class:	
Proposed Use:	
Permit Number:	9901-225
Status:	SUBMITTED
Valuation:	$0.00
Contractor Company:	
Contractor Name:	MARK BROWN

S ORANGE AVENUE

535 S ORANGE AVENUE

Date:	**10/29/2013**
Permit Type:	**PLUMBING**
Description:	**MINOR BATHROOM REMODEL**
Permit Description:	
Work Class:	
Proposed Use:	
Permit Number:	1310-251
Status:	FINALED
Valuation:	$0.00
Contractor Company:	
Contractor Name:	HUDNALL CARRIE MARIE

ADJOINING PROPERTY FINDINGS

Date: **12/5/2006**
Permit Type: **PLUMBING**
Description: **COPPER REPIPE, WATER HEATER CHANGE OUT**

Permit Description:
Work Class:
Proposed Use:
Permit Number: 0612-019
Status: FINALED
Valuation: $0.00
Contractor Company:
Contractor Name: NORMAN CARTER

Date: **4/30/1992**
Permit Type: **MECHANICAL**
Description:

Permit Description:
Work Class: RES
Proposed Use:
Permit Number: 9204-524
Status: FINALED
Valuation: $0.00
Contractor Company:
Contractor Name: PRO HEATING & AIR

Date: **3/5/1992**
Permit Type: **BUILDING**
Description:

Permit Description:
Work Class: RES
Proposed Use:
Permit Number: 9203-076
Status: CANCEL
Valuation: $0.00
Contractor Company:
Contractor Name: ALAN R. CHAMBERS

ADJOINING PROPERTY FINDINGS

Date: **3/5/1992**
Permit Type: **BUILDING**
Description:

Permit Description:
Work Class: RES
Proposed Use:
Permit Number: 9107-212
Status: FINALED
Valuation: $0.00
Contractor Company:
Contractor Name: DAVID & LAUREL WOLFE

Date: **3/5/1992**
Permit Type: **PLUMBING**
Description:

Permit Description:
Work Class: RES
Proposed Use:
Permit Number: 9203-066
Status: FINALED
Valuation: $0.00
Contractor Company:
Contractor Name: THE CHAMBERS COMPANY

Date: **3/5/1992**
Permit Type: **ELECTRICAL**
Description:

Permit Description:
Work Class: RES
Proposed Use:
Permit Number: 9203-060
Status: FINALED
Valuation: $0.00
Contractor Company:
Contractor Name: THE CHAMBERS COMPANY

ADJOINING PROPERTY FINDINGS

S ORANGE ST

476 S ORANGE ST

Date:	**8/23/1999**
Permit Type:	**BUILDING**
Description:	
Permit Description:	
Work Class:	REROOF
Proposed Use:	
Permit Number:	9908-223
Status:	SUBMITTED
Valuation:	$0.00
Contractor Company:	
Contractor Name:	ARMIDA MAGARRO

Date:	**12/23/1996**
Permit Type:	**MECHANICAL**
Description:	
Permit Description:	
Work Class:	RES
Proposed Use:	
Permit Number:	9612-294
Status:	FINALED
Valuation:	$0.00
Contractor Company:	
Contractor Name:	PRO HEATING & AIR

ADJOINING PROPERTY FINDINGS

Date: **12/23/1996**
Permit Type: **ELECTRICAL**
Description:

Permit Description:
Work Class: RES
Proposed Use:
Permit Number: 9612-302
Status: FINALED
Valuation: $0.00
Contractor Company:
Contractor Name: PRO HEATING & AIR

Date: **10/11/1989**
Permit Type: **BUILDING**
Description:

Permit Description:
Work Class: RES
Proposed Use:
Permit Number: 8908-525
Status: FINALED
Valuation: $0.00
Contractor Company:
Contractor Name: LEO FITZSIMON

Date: **10/11/1989**
Permit Type: **ELECTRICAL**
Description:

Permit Description:
Work Class: SFR
Proposed Use:
Permit Number: 8910-274
Status: FINALED
Valuation: $0.00
Contractor Company:
Contractor Name:

ADJOINING PROPERTY FINDINGS

Date: **10/11/1989**
Permit Type: **PLUMBING**
Description:

Permit Description:
Work Class: SFR
Proposed Use:
Permit Number: 8910-283
Status: FINALED
Valuation: $0.00
Contractor Company:
Contractor Name:

Date: **10/11/1989**
Permit Type: **MECHANICAL**
Description:

Permit Description:
Work Class: SFR
Proposed Use:
Permit Number: 8910-286
Status: FINALED
Valuation: $0.00
Contractor Company:
Contractor Name:

Date: **9/7/1989**
Permit Type: **BUILDING**
Description:

Permit Description:
Work Class: RES
Proposed Use:
Permit Number: 8909-143
Status: FINALED
Valuation: $0.00
Contractor Company:
Contractor Name: LEO FITZSIMON

ADJOINING PROPERTY FINDINGS

478 S ORANGE ST

Date:	**4/16/2013**
Permit Type:	**BUILDING**
Description:	**RECONSTRUCT EXTERIOR STAIRS**

Permit Description:	
Work Class:	ADD/ALTER RES
Proposed Use:	
Permit Number:	1304-112
Status:	ISSUED
Valuation:	$0.00
Contractor Company:	
Contractor Name:	MAGARRO ARMIDA G

482 S ORANGE ST

Date:	**8/13/2015**
Permit Type:	**RESIDENTIAL**
Description:	**REROOF**

Permit Description:	
Work Class:	REROOF
Proposed Use:	
Permit Number:	1508-160
Status:	FINALED
Valuation:	$0.00
Contractor Company:	
Contractor Name:	LUKE ROOFING INC

ADJOINING PROPERTY FINDINGS

493 S ORANGE ST

Date: **11/21/2016**
Permit Type: **RESIDENTIAL**
Description: **PHOTOVOLTAIC SYSTEM**

Permit Description:
Work Class: PHOTOVOLTAIC /SOLAR
Proposed Use:
Permit Number: 1611-255
Status: ISSUED
Valuation: $0.00
Contractor Company:
Contractor Name: SOLARCITY CORPORATION

Date: **9/9/2015**
Permit Type: **RESIDENTIAL**
Description: **FOUNDATION BOLTING RETROFIT.**

Permit Description:
Work Class: ALTERATION /REPAIR
Proposed Use:
Permit Number: 1509-106
Status: FINALED
Valuation: $0.00
Contractor Company:
Contractor Name: N R CONSTRUCTION INC

Date: **9/5/2012**
Permit Type: **MECHANICAL**
Description: **MECHANICAL CHANGEOUT**

Permit Description:
Work Class:
Proposed Use:
Permit Number: 1209-015
Status: ISSUED
Valuation: $0.00
Contractor Company:
Contractor Name: OVESON JAMES C & SHANNON N

ADJOINING PROPERTY FINDINGS

Date: **11/22/2006**
Permit Type: **BUILDING**
Description:

Permit Description:
Work Class: ADD/ALTER
Proposed Use:
Permit Number: 0611-209
Status: FINALED
Valuation: $0.00
Contractor Company:
Contractor Name: JAMES OVESON

Date: **3/7/2003**
Permit Type: **BUILDING**
Description:

Permit Description:
Work Class: REROOF
Proposed Use:
Permit Number: 0303-091
Status: EXPIRED
Valuation: $0.00
Contractor Company:
Contractor Name: OVESON JAMES C & SHANNON N

Date: **5/7/1999**
Permit Type: **BUILDING**
Description:

Permit Description:
Work Class: ADD/ALTER
Proposed Use:
Permit Number: 9905-085
Status: SUBMITTED
Valuation: $0.00
Contractor Company:
Contractor Name: LYNDA W. WHITMIRE

ADJOINING PROPERTY FINDINGS

Date: **2/9/1998**
Permit Type: **BUILDING**
Description:

Permit Description:
Work Class: ADD/ALTER
Proposed Use:
Permit Number: 9802-042
Status: SUBMITTED
Valuation: $0.00
Contractor Company:
Contractor Name: LYNDA W. WHITMIRE

510 S ORANGE ST

Date: **8/9/2013**
Permit Type: **BUILDING**
Description: **NEW HVAC SYSTEM. UPGRADE PANEL.**

Permit Description:
Work Class: ADD/ALTER RES
Proposed Use:
Permit Number: 1308-064
Status: FINALED
Valuation: $0.00
Contractor Company:
Contractor Name: ALL CITY SERVICE COMPANY

Date: **7/11/2013**
Permit Type: **BUILDING**
Description: **280 S.F. OPEN LATICE PATIO COVER**

Permit Description:
Work Class: ADD/ALTER RES
Proposed Use:
Permit Number: 1307-070
Status: FINALED
Valuation: $0.00
Contractor Company:
Contractor Name: COLE PEGGY L

ADJOINING PROPERTY FINDINGS

Date: **3/22/1999**
Permit Type: **PLUMBING**
Description:

Permit Description:
Work Class:
Proposed Use:
Permit Number: 9903-183
Status: SUBMITTED
Valuation: $0.00
Contractor Company:
Contractor Name: PEGGY COLE

515 S ORANGE ST

Date: **10/10/2017**
Permit Type: **PLUMBING**
Description: **REPLACE SEWER PIPE**

Permit Description:
Work Class:
Proposed Use:
Permit Number: 1710-089
Status: ISSUED
Valuation: $0.00
Contractor Company:
Contractor Name: WISE CHOICE PLUMBING & ROOTER INC

Date: **12/22/2011**
Permit Type: **MECHANICAL**
Description: **MECHANICAL CHANGEOUT**

Permit Description:
Work Class: MECH CHANGE-OUT
Proposed Use:
Permit Number: 1112-179
Status: FINALED
Valuation: $0.00
Contractor Company:
Contractor Name: EBERHARDT WARREN P JR

ADJOINING PROPERTY FINDINGS

Date: **8/27/1997**
Permit Type: **BUILDING**
Description:

Permit Description:
Work Class: OUT/SCOPE
Proposed Use:
Permit Number: 9708-406
Status: SUBMITTED
Valuation: $0.00
Contractor Company:
Contractor Name: WEATHERLINE ROOFING INC

Date: **10/24/1991**
Permit Type: **BUILDING**
Description:

Permit Description:
Work Class: RES
Proposed Use:
Permit Number: 9110-487
Status: CANCEL
Valuation: $0.00
Contractor Company:
Contractor Name: RAINPROOF ROOFING

Date: **8/6/1991**
Permit Type: **BUILDING**
Description:

Permit Description:
Work Class: GARAGE
Proposed Use:
Permit Number: 9107-159
Status: FINALED
Valuation: $0.00
Contractor Company:
Contractor Name: WARREN PEBERHARDT

ADJOINING PROPERTY FINDINGS

518 S ORANGE ST

Date:	**9/21/2016**
Permit Type:	**ELECTRICAL**
Description:	**ELECTRICAL MAIN PANEL UPGRADE**

Permit Description:	
Work Class:	ELEC CHANGE-OUT
Proposed Use:	
Permit Number:	1609-202
Status:	FINALED
Valuation:	$0.00
Contractor Company:	
Contractor Name:	GANDZJUK ELECTRIC INCORPORATED

Date:	**9/21/1998**
Permit Type:	**BUILDING**
Description:	

Permit Description:	
Work Class:	REROOF
Proposed Use:	
Permit Number:	9809-274
Status:	SUBMITTED
Valuation:	$0.00
Contractor Company:	
Contractor Name:	H.W. AARON

ADJOINING PROPERTY FINDINGS

525 S ORANGE ST

Date: **11/21/2017**
Permit Type: **RESIDENTIAL**
Description: **REROOF FRONT HOUSE ONLY**

Permit Description:
Work Class: REROOF
Proposed Use:
Permit Number: 1711-237
Status: ISSUED
Valuation: $0.00
Contractor Company:
Contractor Name: GALLA-RINI CONSTRUCTION

Date: **4/25/2008**
Permit Type: **PLUMBING**
Description: **ON THE HOUSE**

Permit Description:
Work Class:
Proposed Use:
Permit Number: 0804-217
Status: FINALED
Valuation: $0.00
Contractor Company:
Contractor Name: BEARD ROBERT MARK & THERESA MA

Date: **5/10/1994**
Permit Type: **BUILDING**
Description:

Permit Description:
Work Class: RES
Proposed Use:
Permit Number: 9402-207
Status: FINALED
Valuation: $0.00
Contractor Company:
Contractor Name: ROBERT M BEARD

ADJOINING PROPERTY FINDINGS

Date: **5/10/1994**
Permit Type: **PLUMBING**
Description:

Permit Description:
Work Class: RES
Proposed Use:
Permit Number: 9405-200
Status: FINALED
Valuation: $0.00
Contractor Company:
Contractor Name:

Date: **5/10/1994**
Permit Type: **ELECTRICAL**
Description:

Permit Description:
Work Class: RES
Proposed Use:
Permit Number: 9405-202
Status: FINALED
Valuation: $0.00
Contractor Company:
Contractor Name:

Date: **5/10/1994**
Permit Type: **MECHANICAL**
Description:

Permit Description:
Work Class: RES
Proposed Use:
Permit Number: 9405-204
Status: FINALED
Valuation: $0.00
Contractor Company:
Contractor Name:

ADJOINING PROPERTY FINDINGS

Date: **3/24/1992**
Permit Type: **MECHANICAL**
Description:

Permit Description:
Work Class: GAR
Proposed Use:
Permit Number: 9203-320
Status: FINALED
Valuation: $0.00
Contractor Company:
Contractor Name:

535 S ORANGE ST

Date: **10/29/2013**
Permit Type: **PLUMBING**
Description: **MINOR BATHROOM REMODEL**

Permit Description:
Work Class:
Proposed Use:
Permit Number: 1310-251
Status: FINALED
Valuation: $0.00
Contractor Company:
Contractor Name: HUDNALL CARRIE MARIE

Date: **12/5/2006**
Permit Type: **PLUMBING**
Description: **COPPER REPIPE, WATER HEATER CHANGE OUT**

Permit Description:
Work Class:
Proposed Use:
Permit Number: 0612-019
Status: FINALED
Valuation: $0.00
Contractor Company:
Contractor Name: NORMAN CARTER

ADJOINING PROPERTY FINDINGS

Date: **4/30/1992**
Permit Type: **MECHANICAL**
Description:

Permit Description:
Work Class: RES
Proposed Use:
Permit Number: 9204-524
Status: FINALED
Valuation: $0.00
Contractor Company:
Contractor Name: PRO HEATING & AIR

Date: **3/5/1992**
Permit Type: **BUILDING**
Description:

Permit Description:
Work Class: RES
Proposed Use:
Permit Number: 9203-076
Status: CANCEL
Valuation: $0.00
Contractor Company:
Contractor Name: ALAN R. CHAMBERS

Date: **3/5/1992**
Permit Type: **BUILDING**
Description:

Permit Description:
Work Class: RES
Proposed Use:
Permit Number: 9107-212
Status: FINALED
Valuation: $0.00
Contractor Company:
Contractor Name: DAVID & LAUREL WOLFE

ADJOINING PROPERTY FINDINGS

Date: **3/5/1992**
Permit Type: **PLUMBING**
Description:

Permit Description:
Work Class: RES
Proposed Use:
Permit Number: 9203-066
Status: FINALED
Valuation: $0.00
Contractor Company:
Contractor Name: THE CHAMBERS COMPANY

Date: **3/5/1992**
Permit Type: **ELECTRICAL**
Description:

Permit Description:
Work Class: RES
Proposed Use:
Permit Number: 9203-060
Status: FINALED
Valuation: $0.00
Contractor Company:
Contractor Name: THE CHAMBERS COMPANY

604 S ORANGE ST

Date: **12/1/1997**
Permit Type: **BUILDING**
Description: **REROOF**

Permit Description:
Work Class: REROOF
Proposed Use:
Permit Number: 9712-022
Status: SUBMITTED
Valuation: $0.00
Contractor Company:
Contractor Name: HOKE

ADJOINING PROPERTY FINDINGS

Date: **8/14/1992**
Permit Type: **ELECTRICAL**
Description:

Permit Description:
Work Class: RES
Proposed Use:
Permit Number: 9208-179
Status: FINALED
Valuation: $0.00
Contractor Company:
Contractor Name:

615 S ORANGE ST

Date: **6/28/2004**
Permit Type: **BUILDING**
Description:

Permit Description:
Work Class: REROOF
Proposed Use:
Permit Number: 0406-369
Status: FINALED
Valuation: $0.00
Contractor Company:
Contractor Name: ARMSTRONG EDWARD L

Date: **3/14/2001**
Permit Type: **ELECTRICAL**
Description:

Permit Description:
Work Class:
Proposed Use:
Permit Number: 0103-140
Status: SUBMITTED
Valuation: $0.00
Contractor Company:
Contractor Name: BARNES ARTHUR;ARMSTRONG EDWARD

ADJOINING PROPERTY FINDINGS

622 S ORANGE ST

Date:	**10/24/2012**
Permit Type:	**BUILDING**
Description:	**REROOF REAR HOUSE AND CARPORT**

Permit Description:	
Work Class:	REROOF
Proposed Use:	
Permit Number:	1210-208
Status:	ISSUED
Valuation:	$0.00
Contractor Company:	
Contractor Name:	GRAND PACIFIC

629 S ORANGE ST

Date:	**10/31/2013**
Permit Type:	**ELECTRICAL**
Description:	**ELECTRICAL SERVICE PANEL UPGRADE**

Permit Description:	
Work Class:	ELEC CHANGE-OUT
Proposed Use:	
Permit Number:	1310-279
Status:	FINALED
Valuation:	$0.00
Contractor Company:	
Contractor Name:	RORY ELECTRIC INC

ADJOINING PROPERTY FINDINGS

Date: **9/26/2011**
Permit Type: **BUILDING**
Description: **REROOF**

Permit Description:
Work Class: REROOF
Proposed Use:
Permit Number: 1109-215
Status: ISSUED
Valuation: $0.00
Contractor Company:
Contractor Name: LOPEZ LAREE E

Date: **10/5/1992**
Permit Type: **BUILDING**
Description:

Permit Description:
Work Class: RES
Proposed Use:
Permit Number: 9210-035
Status: FINALED
Valuation: $0.00
Contractor Company:
Contractor Name: ARMSTRONG ROOFING

636 S ORANGE ST

Date: **5/21/2015**
Permit Type: **RESIDENTIAL**
Description: **RESIDENTIAL REMODEL**

Permit Description:
Work Class: ADDITION
Proposed Use:
Permit Number: 1504-333
Status: FINALED
Valuation: $0.00
Contractor Company:
Contractor Name: DONNA

ADJOINING PROPERTY FINDINGS

649 S ORANGE ST

Date: **7/20/2009**
Permit Type: **BUILDING**
Description: **BATHROOM REMODEL**

Permit Description:
Work Class: ADD/ALTER
Proposed Use:
Permit Number: 0907-113
Status: FINALED
Valuation: $0.00
Contractor Company:
Contractor Name: ONE WEEK BATH

Date: **4/14/2005**
Permit Type: **ELECTRICAL**
Description:

Permit Description:
Work Class:
Proposed Use:
Permit Number: 0504-136
Status: SUBMITTED
Valuation: $0.00
Contractor Company:
Contractor Name: STASTNY MICHAEL J & LORRIE J

Date: **4/1/2005**
Permit Type: **PLUMBING**
Description:

Permit Description:
Work Class:
Proposed Use:
Permit Number: 0504-001
Status: FINALED
Valuation: $0.00
Contractor Company:
Contractor Name: STASTNY MICHAEL J & LORRIE J

ADJOINING PROPERTY FINDINGS

Date: **3/24/2005**
Permit Type: **PLUMBING**
Description:

Permit Description:
Work Class:
Proposed Use:
Permit Number: 0503-286
Status: FINALED
Valuation: $0.00
Contractor Company:
Contractor Name: STASTNY MICHAEL J & LORRIE J

Date: **3/7/2005**
Permit Type: **ELECTRICAL**
Description:

Permit Description:
Work Class:
Proposed Use:
Permit Number: 0503-083
Status: FINALED
Valuation: $0.00
Contractor Company:
Contractor Name: MICHAEL STASTNY

Date: **10/29/2001**
Permit Type: **BUILDING**
Description:

Permit Description:
Work Class: REROOF
Proposed Use:
Permit Number: 0110-298
Status: SUBMITTED
Valuation: $0.00
Contractor Company:
Contractor Name: MIKE STASTNY

ADJOINING PROPERTY FINDINGS

Date: **4/21/1994**
Permit Type: **MECHANICAL**
Description:

Permit Description:
Work Class: RES
Proposed Use:
Permit Number: 9404-225
Status: FINALED
Valuation: $0.00
Contractor Company:
Contractor Name: PACIFIC AIR COMFORT

Date: **4/21/1994**
Permit Type: **ELECTRICAL**
Description:

Permit Description:
Work Class: RES
Proposed Use:
Permit Number: 9404-226
Status: FINALED
Valuation: $0.00
Contractor Company:
Contractor Name: PACIFIC AIR COMFORT

Date: **5/17/1989**
Permit Type: **BUILDING**
Description:

Permit Description:
Work Class: RES
Proposed Use:
Permit Number: 8905-314
Status: PO OPEN
Valuation: $0.00
Contractor Company:
Contractor Name: STASTNY

ADJOINING PROPERTY FINDINGS

S ORANGE STREET

479 S ORANGE STREET

Date: **7/20/1994**
Permit Type: **BUILDING**
Description:

Permit Description:
Work Class: RES
Proposed Use:
Permit Number: 9406-489
Status: FINALED
Valuation: $0.00
Contractor Company:
Contractor Name: RICH ROBERTSON

Date: **7/20/1994**
Permit Type: **MECHANICAL**
Description:

Permit Description:
Work Class: RES
Proposed Use:
Permit Number: 9407-278
Status: FINALED
Valuation: $0.00
Contractor Company:
Contractor Name:

ADJOINING PROPERTY FINDINGS

Date: **7/20/1994**
Permit Type: **PLUMBING**
Description:

Permit Description:
Work Class: RES
Proposed Use:
Permit Number: 9407-279
Status: FINALED
Valuation: $0.00
Contractor Company:
Contractor Name:

Date: **7/20/1994**
Permit Type: **ELECTRICAL**
Description:

Permit Description:
Work Class: RES
Proposed Use:
Permit Number: 9407-285
Status: FINALED
Valuation: $0.00
Contractor Company:
Contractor Name:

485 S ORANGE STREET

Date: **11/2/1993**
Permit Type: **ELECTRICAL**
Description:

Permit Description:
Work Class: RES
Proposed Use:
Permit Number: 9311-039
Status: FINALED
Valuation: $0.00
Contractor Company:
Contractor Name:

ADJOINING PROPERTY FINDINGS

Date: **11/2/1993**
Permit Type: **PLUMBING**
Description:

Permit Description:
Work Class: RES
Proposed Use:
Permit Number: 9311-041
Status: FINALED
Valuation: $0.00
Contractor Company:
Contractor Name:

Date: **10/21/1993**
Permit Type: **BUILDING**
Description:

Permit Description:
Work Class: RES
Proposed Use:
Permit Number: 9310-267
Status: FINALED
Valuation: $0.00
Contractor Company:
Contractor Name: STEVEN G. MCHARRIS

Date: **9/22/1993**
Permit Type: **BUILDING**
Description:

Permit Description:
Work Class: RES
Proposed Use:
Permit Number: 9309-322
Status: FINALED
Valuation: $0.00
Contractor Company:
Contractor Name: PREMIUM CONSTRUCTION

ADJOINING PROPERTY FINDINGS

Date: **3/29/1993**
Permit Type: **BUILDING**
Description:

Permit Description:
Work Class: RES
Proposed Use:
Permit Number: 9303-379
Status: FINALED
Valuation: $0.00
Contractor Company:
Contractor Name: STEVEN G. MCHARRIS

528 S ORANGE STREET

Date: **5/8/2018**
Permit Type: **RESIDENTIAL**
Description: **3,000 SF REROOF DUPLEX & ATTACHED GARAGE**

Permit Description:
Work Class: REROOF
Proposed Use:
Permit Number: 1805-061
Status: FINALED
Valuation: $0.00
Contractor Company:
Contractor Name: PREMIER ROOFING

Date: **1/9/2018**
Permit Type: **MECHANICAL**
Description: **HVAC CHANGEOUT**

Permit Description:
Work Class:
Proposed Use:
Permit Number: 1801-091
Status: ISSUED
Valuation: $0.00
Contractor Company:
Contractor Name: YAEGER SERVICES INC

Date: **2/16/1995**
Permit Type: **MECHANICAL**
Description:

Permit Description:
Work Class: RES
Proposed Use:
Permit Number: 9502-247
Status: FINALED
Valuation: $0.00
Contractor Company:
Contractor Name: KEMITZ A/C & HEATING

Date: **8/4/1993**
Permit Type: **BUILDING**
Description:

Permit Description:
Work Class: RES
Proposed Use:
Permit Number: 9308-074
Status: FINALED
Valuation: $0.00
Contractor Company:
Contractor Name: NOLTE ROOFING

612 S ORANGE STREET

Date: **9/22/1989**
Permit Type: **PLUMBING**
Description:

Permit Description:
Work Class: RES
Proposed Use:
Permit Number: 8909-448
Status: FINALED
Valuation: $0.00
Contractor Company:
Contractor Name: A-AMES PLUMBING HEATING

ADJOINING PROPERTY FINDINGS

Date: **7/7/1989**
Permit Type: **BUILDING**
Description:

Permit Description:
Work Class: RES
Proposed Use:
Permit Number: 8907-092
Status: PO OPEN
Valuation: $0.00
Contractor Company:
Contractor Name: ARMSTRONG ROOFING

W LA VETA

121 W LA VETA

Date: **12/15/1997**
Permit Type: **BUILDING**
Description:

Permit Description:
Work Class: DEMO RES
Proposed Use:
Permit Number: 9712-190
Status: SUBMITTED
Valuation: $0.00
Contractor Company:
Contractor Name: AUSTIN COURT

ADJOINING PROPERTY FINDINGS

205 W LA VETA

Date: **10/1/1998**
Permit Type: **BUILDING**
Description:

Permit Description:
Work Class: DEMO RES
Proposed Use:
Permit Number: 9810-013
Status: SUBMITTED
Valuation: $0.00
Contractor Company:
Contractor Name: CITY OF ORANGE-FRANK SUN

Date: **5/16/1994**
Permit Type: **BUILDING**
Description:

Permit Description:
Work Class: RES
Proposed Use:
Permit Number: 9405-287
Status: FINALED
Valuation: $0.00
Contractor Company:
Contractor Name: GEORGE WALKER

Date: **6/26/1991**
Permit Type: **PLUMBING**
Description:

Permit Description:
Work Class: RES
Proposed Use:
Permit Number: 9106-475
Status: FINALED
Valuation: $0.00
Contractor Company:
Contractor Name: VIC BASCONE

ADJOINING PROPERTY FINDINGS

235 W LA VETA

Date: **7/1/2004**
Permit Type: **BUILDING**
Description:

Permit Description:
Work Class: SIGNS
Proposed Use:
Permit Number: 0407-004
Status: SUBMITTED
Valuation: $0.00
Contractor Company:
Contractor Name: ORANGE HOUSING DEV CORP

Date: **5/18/2004**
Permit Type: **BUILDING**
Description:

Permit Description:
Work Class: BLOCK WAL
Proposed Use:
Permit Number: 0405-178
Status: SUBMITTED
Valuation: $0.00
Contractor Company:
Contractor Name: ORANGE HOUSING DEVELOPMENT

Date: **8/26/2003**
Permit Type: **ELECTRICAL**
Description:

Permit Description:
Work Class:
Proposed Use:
Permit Number: 0308-311
Status: SUBMITTED
Valuation: $0.00
Contractor Company:
Contractor Name: ORANGE HOUSING DEVELOPMENT

ADJOINING PROPERTY FINDINGS

Date: **8/6/2003**
Permit Type: **BUILDING**
Description:

Permit Description:
Work Class: NEW MULTI
Proposed Use:
Permit Number: 0208-119
Status: FINALED
Valuation: $0.00
Contractor Company:
Contractor Name: RICHARD HANSON

Date: **8/6/2003**
Permit Type: **BUILDING**
Description:

Permit Description:
Work Class: NEW MULTI
Proposed Use:
Permit Number: 0208-120
Status: FINALED
Valuation: $0.00
Contractor Company:
Contractor Name: RICHARD HANSON

Date: **5/16/1994**
Permit Type: **BUILDING**
Description:

Permit Description:
Work Class: RES
Proposed Use:
Permit Number: 9405-281
Status: FINALED
Valuation: $0.00
Contractor Company:
Contractor Name: GEORGE WALKER

ADJOINING PROPERTY FINDINGS

302 W LA VETA

Date: **1/16/2008**
Permit Type: **BUILDING**
Description:

Permit Description:
Work Class: T.I.
Proposed Use:
Permit Number: 0801-112
Status: FINALED
Valuation: $0.00
Contractor Company:
Contractor Name: OC REGIONAL SURGERY CENTER

Date: **2/16/2007**
Permit Type: **BUILDING**
Description:

Permit Description:
Work Class: SIGNS
Proposed Use:
Permit Number: 0702-194
Status: FINALED
Valuation: $0.00
Contractor Company:
Contractor Name: MARK CANTI

Date: **9/13/2006**
Permit Type: **BUILDING**
Description:

Permit Description:
Work Class: SIGNS
Proposed Use:
Permit Number: 0609-140
Status: FINALED
Valuation: $0.00
Contractor Company:
Contractor Name: HOLY FAMILY CHURCH

ADJOINING PROPERTY FINDINGS

Date: **9/1/2005**
Permit Type: **BUILDING**
Description:

Permit Description:
Work Class: REROOF
Proposed Use:
Permit Number: 0509-004
Status: FINALED
Valuation: $0.00
Contractor Company:
Contractor Name: ROMAN CATHOLIC BISHOP OF ORANG

Date: **11/30/2004**
Permit Type: **BUILDING**
Description:

Permit Description:
Work Class: FIRE
Proposed Use:
Permit Number: 0411-056
Status: FINALED
Valuation: $0.00
Contractor Company:
Contractor Name: SPERRY VAN NESS

Date: **8/17/2000**
Permit Type: **ELECTRICAL**
Description:

Permit Description:
Work Class:
Proposed Use:
Permit Number: 0008-177
Status: FINALED
Valuation: $0.00
Contractor Company:
Contractor Name: O.C. SPORTS MEDICINE

ADJOINING PROPERTY FINDINGS

Date: **10/9/1996**
Permit Type: **BUILDING**
Description:

Permit Description:
Work Class: OUT/SCOPE
Proposed Use:
Permit Number: 9610-124
Status: SUBMITTED
Valuation: $0.00
Contractor Company:
Contractor Name: G.M. SIGNS

Date: **9/13/1993**
Permit Type: **BUILDING**
Description:

Permit Description:
Work Class: COMM
Proposed Use:
Permit Number: 9308-407
Status: FINALED
Valuation: $0.00
Contractor Company:
Contractor Name: JB SERVICES

Date: **5/6/1993**
Permit Type: **BUILDING**
Description:

Permit Description:
Work Class: COMM
Proposed Use:
Permit Number: 9305-091
Status: PO OPEN
Valuation: $0.00
Contractor Company:
Contractor Name: FIRE PROTECTION BY GUARDIAN

ADJOINING PROPERTY FINDINGS

Date: **3/24/1993**
Permit Type: **ELECTRICAL**
Description:

Permit Description:
Work Class: COMM
Proposed Use:
Permit Number: 9303-356
Status: FINALED
Valuation: $0.00
Contractor Company:
Contractor Name: MCCABE DEVELOPMENT

Date: **3/24/1993**
Permit Type: **BUILDING**
Description:

Permit Description:
Work Class: COMM
Proposed Use:
Permit Number: 9303-355
Status: FINALED
Valuation: $0.00
Contractor Company:
Contractor Name: MCCABE DEVELOPMENT

Date: **10/5/1992**
Permit Type: **PLUMBING**
Description:

Permit Description:
Work Class: COMM
Proposed Use:
Permit Number: 9210-048
Status: FINALED
Valuation: $0.00
Contractor Company:
Contractor Name:

ADJOINING PROPERTY FINDINGS

Date: **10/5/1992**
Permit Type: **ELECTRICAL**
Description:

Permit Description:
Work Class: COMM
Proposed Use:
Permit Number: 9210-062
Status: FINALED
Valuation: $0.00
Contractor Company:
Contractor Name:

Date: **1/29/1992**
Permit Type: **BUILDING**
Description:

Permit Description:
Work Class: COMM
Proposed Use:
Permit Number: 9201-350
Status: PO OPEN
Valuation: $0.00
Contractor Company:
Contractor Name: LEE MENDORA

Date: **1/17/1992**
Permit Type: **MECHANICAL**
Description:

Permit Description:
Work Class: COMM
Proposed Use:
Permit Number: 9201-211
Status: FINALED
Valuation: $0.00
Contractor Company:
Contractor Name:

ADJOINING PROPERTY FINDINGS

Date: **1/16/1992**
Permit Type: **MECHANICAL**
Description:

Permit Description:
Work Class: COMM
Proposed Use:
Permit Number: 9201-194
Status: PO OPEN
Valuation: $0.00
Contractor Company:
Contractor Name:

Date: **1/10/1992**
Permit Type: **MECHANICAL**
Description:

Permit Description:
Work Class: COMM
Proposed Use:
Permit Number: 9201-108
Status: FINALED
Valuation: $0.00
Contractor Company:
Contractor Name: IRVINE WEST HEATING & A/C

Date: **11/13/1991**
Permit Type: **BUILDING**
Description:

Permit Description:
Work Class: COMML
Proposed Use:
Permit Number: 9111-194
Status: FINALED
Valuation: $0.00
Contractor Company:
Contractor Name: ARCHITECTS ORANBGE

ADJOINING PROPERTY FINDINGS

W LA VETA AVE

200 W LA VETA AVE

Date:	**9/26/2012**
Permit Type:	**BUILDING**
Description:	**VOLUNTARY STRUCTURAL UPGRADE**
Permit Description:	
Work Class:	T.I.
Proposed Use:	
Permit Number:	1208-046
Status:	FINALED
Valuation:	$0.00
Contractor Company:	
Contractor Name:	CREATIVE CONSTRUCTION SERV

Date:	**5/10/2012**
Permit Type:	**ELECTRICAL**
Description:	**ELECTRICAL FOR PERMIT #1112-089**
Permit Description:	
Work Class:	
Proposed Use:	
Permit Number:	1205-102
Status:	FINALED
Valuation:	$0.00
Contractor Company:	
Contractor Name:	NORTH AMERICA POWER & LIGHTING

ADJOINING PROPERTY FINDINGS

Date: **1/24/2012**
Permit Type: **BUILDING**
Description: **REMODEL RECTORY**

Permit Description:
Work Class: ADD/ALTER RES
Proposed Use:
Permit Number: 1112-089
Status: FINALED
Valuation: $0.00
Contractor Company:
Contractor Name: DBA CREATIVE CONSTRUCTION SERV

Date: **11/23/2011**
Permit Type: **BUILDING**
Description: **MINOR INTERIOR DEMO**

Permit Description:
Work Class: T.I.
Proposed Use:
Permit Number: 1111-186
Status: FINALED
Valuation: $0.00
Contractor Company:
Contractor Name: DBA CREATIVE CONSTRUCTION SERV

Date: **11/16/2011**
Permit Type: **PLUMBING**
Description: **COPPER REPIPE/GAS REPIPE**

Permit Description:
Work Class:
Proposed Use:
Permit Number: 1111-136
Status: FINALED
Valuation: $0.00
Contractor Company:
Contractor Name: ROMAN CATHOLIC BISHOP OF ORANG

ADJOINING PROPERTY FINDINGS

Date: **3/16/2011**
Permit Type: **MISCELLANEOUS**
Description: **SPECIAL EVENT**

Permit Description:
Work Class: SPECIAL EVENTS
Proposed Use:
Permit Number: MISC1103-009
Status: ISSUED
Valuation: $0.00
Contractor Company:
Contractor Name: MICHAEL PRATER

Date: **6/25/1990**
Permit Type: **BUILDING**
Description:

Permit Description:
Work Class: RES
Proposed Use:
Permit Number: 9005-587
Status: FINALED
Valuation: $0.00
Contractor Company:
Contractor Name: JOHN BARTLETT

202 W LA VETA AVE

Date: **1/8/2015**
Permit Type: **COMMERCIAL**
Description: **FIRE DAMAGE REPAIRS + REMODEL EXISTING FLOOR AREAS**

Permit Description:
Work Class: TENANT IMPROVEMENT
Proposed Use:
Permit Number: 1501-090
Status: FINALIZED
Valuation: $0.00
Contractor Company:
Contractor Name: CREATIVE CONSTRUCTION SERVICES

ADJOINING PROPERTY FINDINGS

W LA VETA AVENUE

126 W LA VETA AVENUE

Date:	**6/14/1991**
Permit Type:	**BUILDING**
Description:	
Permit Description:	
Work Class:	RES
Proposed Use:	
Permit Number:	9106-266
Status:	FINALED
Valuation:	$0.00
Contractor Company:	
Contractor Name:	LINNERT ROOFING

208 W LA VETA AVENUE

Date:	**3/16/1989**
Permit Type:	**MECHANICAL**
Description:	
Permit Description:	
Work Class:	COMM
Proposed Use:	
Permit Number:	8903-413
Status:	PO OPEN
Valuation:	$0.00
Contractor Company:	
Contractor Name:	ANDERSON AIR CONDITIONING,INC

ADJOINING PROPERTY FINDINGS

Date:	**3/16/1989**
Permit Type:	**MECHANICAL**
Description:	
Permit Description:	
Work Class:	COMM
Proposed Use:	
Permit Number:	8903-420
Status:	PO OPEN
Valuation:	$0.00
Contractor Company:	
Contractor Name:	ANDERSON AIR CONDITIONING,INC

GLOSSARY

General Building Department concepts

- **ICC:** The International Code Council. The governing body for the building/development codes used by all jurisdictions who've adopted the ICC guidelines. MOST of the US has done this. Canada, Mexico, and other countries use ICC codes books and guides as well. There are a few states who have added guidelines to the ICC codes to better fit their needs. For example, California has added seismic retrofit requirements for most commercial structures.
- **Building Department (Permitting Authority, Building Codes, Inspections Department, Building and Inspections):** This is the department in a jurisdiction where an owner or contractor goes to obtain permits and inspections for building, tearing down, remodeling, adding to, re-roofing, moving or otherwise making changes to any structure, Residential or Commercial.
- **Jurisdiction:** This is the geographic area representing the properties over which a Permitting Authority has responsibility.
- **GC:** General Contractor. Usually the primary contractor hired for any Residential or Commercial construction work.
- **Sub:** Subordinate contracting companies or subcontractors. Usually a "trades" contractor working for the GC. These contractors generally have an area of expertise in which they are licensed like Plumbing, Electrical, Heating and Air systems, Gas Systems, Pools etc. (called "trades").
- **Journeymen:** Sub contractors who have their own personal licenses in one or more trades and work for different contracting companies, wherever they are needed or there is work.
- **HVAC (Mechanical, Heating & Air companies):** HVAC = Heating, Ventilation, and Air Conditioning.
- **ELEC (Electrical, TempPole, TPole, TPower, Temporary Power, Panel, AMP Change, Power Release):** Electrical permits can be pulled for many reasons. The most common reason is to increase the AMPs of power in an electrical power panel. This requires a permit in almost every jurisdiction. Other commons reason for Electrical permits is to insert a temporary power pole at a new construction site. Construction requires electricity, and in a new development, power has yet to be run to the lot. The temporary power pole is usually the very first permit pulled for new development. The power is released to the home owner when construction is complete and this sometimes takes the form of a Power Release permit or inspection.
- **"Pull" a permit:** To obtain and pay for a building permit.
- **CBO:** Chief Building Official
- **Planning Department:** The department in the development process where the building /structural plans are reviewed for their completeness and compliance with building codes
- **Zoning Department:** The department in the development process where the site plans are reviewed for their compliance with the regulations associated with the zoning district in which they are situated.
- **Zoning District:** A pre-determined geographic boundary within a jurisdiction where certain types of structures are permitted / prohibited. Examples are Residential structure, Commercial/Retail structures, Industrial/Manufacturing structures etc. Each zoning district has regulations associated with it like the sizes of the lots, the density of the structures on the lots, the number of parking spaces required for certain types of structures on the lots etc.
- **PIN (TMS, GIS ID, Parcel#):** Property Identification Number and Tax Map System number.
- **State Card (Business license):** A license card issued to a contractor to conduct business.
- **Building Inspector (Inspector):** The inspector is a building department employee that inspects building construction for compliance to codes.
- **C.O.:** Certificate of Occupancy. This is the end of the construction process and designates that the owners now have permission to occupy a structure after its building is complete. Sometimes also referred to as a Certificate of Compliance.

GLOSSARY

Permit Content Definitions

- Permit Number: The alphanumerical designation assigned to a permit for tracking within the building department system. Sometimes the permit number gives clues to its role, e.g. a "PL" prefix may designate a plumbing permit.
- Description: A field on the permit form that allows the building department to give a brief description of the work being done. More often than not, this is the most important field for EP's to find clues to the prior use(s) of the property.
- Permit Type: Generally a brief designation of the type of job being done. For example BLDG-RES, BLDG-COM, ELEC, MECH etc.

Sample Building Permit Data

Date: Nov 09, 2000
Permit Type: Bldg -
New Permit Number: 101000000405
Status: Valuation: $1,000,000.00
Contractor Company: OWNER-BUILDER
Contractor Name:

Description: New one store retail (SAV-ON) with drive-thru pharmacy. Certificate of Occupancy.

APPENDIX G

Important Information about This

Geoenvironmental Report

Geoenvironmental studies are commissioned to gain information about environmental conditions on and beneath the surface of a site. The more comprehensive the study, the more reliable the assessment is likely to be. But remember: Any such assessment is to a greater or lesser extent based on professional opinions about conditions that cannot be seen or tested. Accordingly, no matter how many data are developed, risks created by unanticipated conditions will always remain. *Have realistic expectations.* Work with your geoenvironmental consultant to manage known and unknown risks. Part of that process should already have been accomplished, through the risk allocation provisions you and your geoenvironmental professional discussed and included in your contract's general terms and conditions. This document is intended to explain some of the concepts that may be included in your agreement, and to pass along information and suggestions to help you manage your risk.

Beware of Change; Keep Your Geoenvironmental Professional Advised

The design of a geoenvironmental study considers a variety of factors that are subject to change. Changes can undermine the applicability of a report's findings, conclusions, and recommendations. *Advise your geoenvironmental professional about any changes you become aware of.* Geoenvironmental professionals cannot accept responsibility or liability for problems that occur because a report fails to consider conditions that did not exist when the study was designed. Ask your geoenvironmental professional about the types of changes you should be particularly alert to. Some of the most common include:

- modification of the proposed development or ownership group,
- sale or other property transfer,
- replacement of or additions to the financing entity,
- amendment of existing regulations or introduction of new ones, or
- changes in the use or condition of adjacent property.

Should you become aware of any change, *do not rely on a geoenvironmental report.* Advise your geoenvironmental professional immediately; follow the professional's advice.

Recognize the Impact of Time

A geoenvironmental professional's findings, recommendations, and conclusions cannot remain valid indefinitely. The more time that passes, the more likely it is that important latent changes will occur. *Do not rely on a geoenvironmental report if too much time has elapsed since it was completed.* Ask your environmental professional to define "too much time." In the case of Phase I Environmental Site Assessments (ESAs), for example, more than 180 days after submission is generally considered "too much."

Prepare To Deal with Unanticipated Conditions

The findings, recommendations, and conclusions of a Phase I ESA report typically are based on a review of historical information, interviews, a site "walkover," and other forms of noninvasive research. When site subsurface conditions are not sampled in any way, the risk of unanticipated conditions is higher than it would otherwise be.

While borings, installation of monitoring wells, and similar invasive test methods can help reduce the risk of unanticipated conditions, *do not overvalue the effectiveness of testing.* Testing provides information about actual conditions only at the precise locations where samples are taken, and only when they are taken. Your geoenvironmental

professional has applied that specific information to develop a general opinion about environmental conditions. *Actual conditions in areas not sampled may differ (sometimes sharply) from those predicted in a report.* For example, a site may contain an unregistered underground storage tank that shows no surface trace of its existence. *Even conditions in areas that were tested can change*, sometimes suddenly, due to any number of events, not the least of which include occurrences at adjacent sites. Recognize, too, that *even some conditions in tested areas may go undiscovered,* because the tests or analytical methods used were designed to detect only those conditions assumed to exist.

Manage your risks by retaining your geoenvironmental professional to work with you as the project proceeds. Establish a contingency fund or other means to enable your geoenvironmental professional to respond rapidly, in order to limit the impact of unforeseen conditions. And to help prevent any misunderstanding, identify those empowered to authorize changes and the administrative procedures that should be followed.

Do Not Permit Any Other Party To Rely on the Report

Geoenvironmental professionals design their studies and prepare their reports to meet the specific needs of the clients who retain them, in light of the risk management methods that the client and geoenvironmental professional agree to, and the statutory, regulatory, or other requirements that apply. The study designed for a developer may differ sharply from one designed for a lender, insurer, public agency...or even another developer. *Unless the report specifically states otherwise, it was developed for you and only you.* Do not unilaterally permit any other party to rely on it. The report and the study underlying it may not be adequate for another party's needs, and you could be held liable for shortcomings your geoenvironmental professional was powerless to prevent or anticipate. Inform your geoenvironmental professional when you know or expect that someone else—a third-party—will want to use or rely on the report. *Do not permit third-party use or reliance until you first confer with the geoenvironmental professional who prepared the report.* Additional testing, analysis, or study may be required and, in any event, appropriate terms and conditions should be agreed to so both you and your geoenvironmental professional are protected from third-party risks. *Any party who relies on a geoenvironmental report without the express written permission of the professional who prepared it and the client for whom it was prepared may be solely liable for any problems that arise.*

Avoid Misinterpretation of the Report

Design professionals and other parties may want to rely on the report in developing plans and specifications. They need to be advised, in writing, that their needs may not have been considered when the study's scope was developed, and, even if their needs were considered, they might misinterpret geoenvironmental findings, conclusions, and recommendations. *Commission your geoenvironmental professional to explain pertinent elements of the report to others who are permitted to rely on it, and to review any plans, specifications or other instruments of professional service that incorporate any of the report's findings, conclusions, or recommendations.* Your geoenvironmental professional has the best understanding of the issues involved, including the fundamental assumptions that underpinned the study's scope.

Give Contractors Access to the Report

Reduce the risk of delays, claims, and disputes by giving contractors access to the full report, *providing that it is accompanied by a letter of transmittal that can protect you* by making it unquestionably clear that: 1) the study was not conducted and the report was not prepared for purposes of bid development, and 2) the findings, conclusions, and recommendations included in the report are based on a variety of opinions, inferences, and assumptions and are subject to interpretation. Use the letter to also advise contractors to consult with your geoenvironmental professional to obtain clarifications, interpretations, and guidance (a fee may be required for this service), and that—in any event—they should conduct additional studies to obtain the specific type and extent of information each prefers for preparing a bid or cost estimate. Providing access to the full report, with the appropriate caveats, helps prevent formation of adversarial attitudes and claims of concealed or differing conditions. If a contractor elects to ignore the warnings and advice in the letter of transmittal, it would do so at its own risk. Your geoenvironmental professional should be able to help you prepare an effective letter.

Do Not Separate Documentation from the Report

Geoenvironmental reports often include supplemental documentation, such as maps and copies of regulatory files, permits, registrations, citations, and correspondence with regulatory agencies. If subsurface explorations were performed, the report may contain final boring logs and copies of laboratory data. If remediation activities occurred on site, the report may include: copies of daily field reports; waste manifests; and information about the disturbance of subsurface materials, the type and thickness of any fill placed on site, and fill placement practices, among other types of documentation. *Do not separate supplemental documentation from the report. Do not, and do not permit any other party to redraw or modify any of the supplemental documentation for incorporation into other professionals' instruments of service.*

Understand the Role of Standards

Unless they are incorporated into statutes or regulations, standard practices and standard guides developed by the American Society for Testing and Materials (ASTM) and other recognized standards-developing organizations (SDOs) are little more than aspirational methods agreed to by a consensus of a committee. The committees that develop standards may not comprise those best-qualified to establish methods and, no matter what, no standard method can possibly consider the infinite client- and project-specific variables that fly in the face of the theoretical "standard conditions" to which standard practices and standard guides apply. In fact, these variables can be so pronounced that geoenvironmental professionals who comply with every directive of an ASTM or other standard procedure could run afoul of local custom and practice, thus violating the standard of care. Accordingly, when geoenvironmental professionals indicate in their reports that they have performed a service "in general compliance" with one standard or another, it means they have applied professional judgement in creating and implementing a scope of service designed for the specific client and project involved, and which follows some of the general precepts laid out in the referenced standard. To the extent that a report indicates "general compliance" with a standard, you may wish to speak with your geoenvironmental professional to learn more about what was and was not done. *Do not assume a given standard was followed to the letter.* Research indicates that that seldom is the case.

Realize That Recommendations May Not Be Final

The technical recommendations included in a geoenvironmental report are based on assumptions about actual conditions, and so are preliminary or tentative. Final recommendations can be prepared only by observing actual conditions as they are exposed. For that reason, you should retain the geoenvironmental professional of record to observe construction and/or remediation activities on site, to permit rapid response to unanticipated conditions. *The geoenvironmental professional who prepared the report cannot assume responsibility or liability for the report's recommendations if that professional is not retained to observe relevant site operations.*

Understand That Geotechnical Issues Have Not Been Addressed

Unless geotechnical engineering was specifically included in the scope of professional service, a report is not likely to relate any findings, conclusions, or recommendations about the suitability of subsurface materials for construction purposes, especially when site remediation has been accomplished through the removal, replacement, encapsulation, or chemical treatment of on-site soils. The equipment, techniques, and testing used by geotechnical engineers differ markedly from those used by geoenvironmental professionals; their education, training, and experience are also significantly different. If you plan to build on the subject site, but have not yet had a geotechnical engineering study conducted, your geoenvironmental professional should be able to provide guidance about the next steps you should take. The same firm may provide the services you need.

Read Responsibility Provisions Closely

Geoenvironmental studies cannot be exact; they are based on professional judgement and opinion. Nonetheless, some clients, contractors, and others assume geoenvironmental reports are or certainly should be unerringly precise. Such assumptions have created unrealistic expectations that have led to wholly unwarranted claims and disputes. To help prevent such problems, geoenvironmental professionals have developed a number of report provisions and contract terms that explain who is responsible for what, and how risks are to be allocated. Some people mistake these for "exculpatory clauses," that is, provisions whose purpose is to transfer one party's rightful responsibilities and liabilities to someone else. Read the responsibility provisions included in a report and in the contract you and your geoenvironmental professional agreed to. *Responsibility provisions are not "boilerplate."* They are important.

Rely on Your Geoenvironmental Professional for Additional Assistance

Membership in the Geoprofessional Business Association exposes geoenvironmental professionals to a wide array of risk management techniques that can be of genuine benefit for everyone involved with a geoenvironmental project. Confer with your GBA-member geoenvironmental professional for more information.

GEOPROFESSIONAL BUSINESS ASSOCIATION

8811 Colesville Road/Suite G106, Silver Spring, MD 20910
Telephone: 301/565-2733 Facsimile: 301/589-2017
e-mail: info@geoprofessional.org www.geoprofessional.org

Copyright 2015 by the Geoprofessional Business Association (GBA). Duplication, reproduction, copying, or storage of this document, in whole or in part, by any means whatsoever, is strictly prohibited, except with GBA's specific written permission. Excerpting, quoting, or otherwise extracting wording from this document is permitted only with the express written permission of GBA, and only for purposes of scholarly research or book review. Only GBA-Member Firms may use this document as a complement to or as an element of a geoenvironmental report. Any other firm, individual, or entity that so uses this document without being a GBA-Member Firm could be committing negligent or intentional (fraudulent) misrepresentation.

LIMITED PHASE II ENVIRONMENTAL SITE ASSESSMENT 574 SOUTH GLASSELL STREET, ORANGE, CALIFORNIA

Prepared for

KC ORANGE II, L.P.

5791 Fleet Street, Suite 300
Carlsbad, California 92008

Project No. 12137.003

September 6, 2019

Leighton Consulting, Inc.

A LEIGHTON GROUP COMPANY

Leighton Consulting, Inc.
A LEIGHTON GROUP COMPANY

September 6, 2019

Project No. 12137.003

KC Orange II, L.P.
5791 Fleet Street, Suite 300
Carlsbad, California 92008

Attention: Mr. Axel Guerra

Subject: Limited Phase II Environmental Site Assessment
574 South Glassell Street, Orange, California

INTRODUCTION

Leighton Consulting, Inc. (Leighton) is pleased to present this report summarizing the Limited Phase II Environmental Site Assessment (ESA) activities completed for the proposed assisted living facility development located at 574 South Glassell Street in the city of Orange, California (site, Figure 1).

BACKGROUND

The site is a 0.85-acre rectangular lot, located west of South Glassell Street and bounded by Holy Family Cathedral Church and School to the north and west, Park Plaza (an existing senior assisted living center) to the south, and South Glassell Street, followed by residential properties, to the west. The site is currently occupied by an approximately 5,900-square foot building that is used as a restaurant and an asphalt-paved parking lot.

17781 Cowan ▪ Irvine, CA 92614-6009
949.250.1421 ▪ 949.250.1114 Fax

Based on information obtained during our Phase I ESA prepared for the site (September 2018), the site was utilized as orchards from at least 1938 until approximately 1960, when the present-day building was constructed onsite. The structure housed a restaurant and the clubhouse associated with the adjacent Holo Wai Miniature Golf Course, located to the south of the site. The adjacent miniature golf course closed in the mid-1980s, and the site remained a restaurant and parking lot. The historic use of the site as an orchard was considered a REC and additional assessment was recommended.

OBJECTIVE

The purpose of the Limited Phase II ESA was to determine what, if any, environmental impacts are present in the near surface soil as a result of the historic use of the site, which could affect the future redevelopment of the site.

SCOPE OF WORK

The scope of work included the following:

- Advancement of 8 initial soil borings (LB1 through LB8) to a total depth of 5 feet below ground surface (bgs) and collection of soil samples for chemical analysis;
- Advancement of 15 step-out soil borings around initial borings LB1 and LB4, and collection of soil samples for chemical analysis; and
- Preparation of this report summarizing our findings and conclusions, including tables, illustrations, and appendices.

PHASE II ESA

Health and Safety Plan

Prior to starting work, Leighton prepared a site-specific Health and Safety Plan (HSP) to include safety aspects of the work performed at the site. The HSP was in compliance with the Occupational Safety and Health and Administration (OSHA) regulation 29 CFR 1910.120. The HSP was onsite with Leighton personnel at all times. The HSP outlined site procedures, potential hazards, and contains a hospital location map. All onsite Leighton personnel signed the HSP acknowledging acceptance.

Utility Clearance

Underground Service Alert (USA) was contacted at least 48 hours prior to the commencement of fieldwork to mark underground utility locations originating off-site from public utilities. Each proposed boring location was clearly marked in white paint prior to contacting USA.

Field Activities

Soil Sampling

On August 14, 2019, Leighton directed the advancement of 8 soil borings to a depth of 5 feet bgs throughout the site (Figure 2). The borings were advanced using direct push and hand auger drilling equipment operated by Strongarm Environmental (Strongarm), a State of California licensed drilling contractor. Soil samples were collected at depths of 0.5, 2.5, and 5.0 feet bgs, for lithologic description and chemical analysis. Soil samples were logged and described under direct supervision of a licensed California Professional Geologist (PG) and were retained in either 6-inch acetate sleeves capped with Teflon® paper and plastic end caps or 8-ounce laboratory-supplied glass jars. The containers were clearly marked with sample identification, placed in an ice-cooled chest for temporary storage, and transported to Advanced Technology Laboratories, Inc. (ATL) of Signal Hill, California for chemical analysis. Chain-of-custody protocol was followed throughout all phases of the sample handling process. Boring logs are included in Appendix B.

On August 30, 2019, Leighton directed the advancement of 15 step-out soil borings, located a distance of approximately 5 and 15 feet laterally from initial borings LB1 and LB4, based on the results of chemical analyses completed on soil samples collected from those borings (Figure 2). Seven borings were advanced around LB1 and eight borings were advanced around LB4 to a total depth of 2.5 feet bgs. The borings were advanced using direct push and hand auger drilling equipment operated by Strongarm. Soil samples were collected at depths of 0.5 and 2.5 feet bgs from each boring for lithologic description and chemical analysis. The sampling protocol listed above for the initial soil sampling activities was followed for the step-out soil sampling activities.

Laboratory Analysis

The 0.5 and 2.5 foot soil samples collected from the site on August 14, 2019 were analyzed for organochlorine pesticides (OCPs) by Environmental Protection Agency (EPA) Method 8081 and arsenic by EPA Method 6010B.

The step-out soil samples collected in the vicinity of boring LB1 on August 29, 2019 were analyzed for OCPs by EPA Method 8081. The step-out soil samples collected in the vicinity of boring LB4 on August 29, 2019 were analyzed for arsenic by EPA Method 6010B.

Copies of the chain of custody forms and complete analytical reports are included in Appendix C.

RESULTS

Soil Analytical Results

The soil analytical results were compared to one or more of the following regulatory screening criteria:

- The EPA Region IX Residential Regional Screening Levels (RSLs, April 2019);
- The DTSC Office of Human and Ecological Risk (HERO) Note Number 3 (April 2019); and
- The DTSC Southern California Background concentration of 12 milligram per kilogram (mg/kg) for arsenic.

A summary of laboratory results are presented in Tables 1 and 2 and below.

Initial Soil Borings

OCPs

Three OCPs were detected in soil samples collected from the site.

- Dieldrin was detected in two of the 16 initial soil samples at concentrations of 24 micrograms per kilogram (µg/kg) in sample LB3-0.5 and 170 µg/kg in sample LB1-

0.5. The detection of dieldrin in sample LB1-0.5 **exceeded** the residential RSL of 34 µg/kg.

- 4-4'-DDE was detected in six of the 16 soil samples analyzed during this investigation at concentrations ranging from 2.9 µg/kg (LB6-0.5) to 340 µg/kg (LB3-0.5). The detections of 4-4'-DDE did not exceed the residential RSL of 2,000 µg/kg.

- 4-4'-DDT was detected in four of the 16 soil samples analyzed during this investigation at concentrations ranging from 2.6 µg/kg (LB5-0.5) to 170 µg/kg (LB3-0.5). The detections of 4-4'-DDT did not exceed the residential RSL of 1,900 µg/kg.

Arsenic

Arsenic was detected in each of the initial soil samples analyzed during this investigation. Arsenic was detected in four soil samples (LB4-0.5, LB5-0.5, LB6-0.5, and LB7-0.5) at concentrations **exceeding** the DTSC-accepted Southern California Background Concentration for arsenic of 12 mg/kg. The maximum detected concentration of arsenic was 19 mg/kg in sample LB4- 0.5.

Step-out Soil Borings

Due to the exceedances of OCP and arsenic screening limits in soil samples collected from initial borings LB1 and LB4, step-out soil borings were advanced in the vicinity of these borings in an effort to determine the extent of the contamination in near surface soil.

OCPs

Three OCPs were detected in step-out soil samples collected in the vicinity of initial boring LB1.

- Dieldrin was detected in eight of the 14 step-out soil samples at concentrations ranging from 3.8 µg/kg (LB1-SW2-2.5) to 160 µg/kg (LB1-SW2-0.5). Seven of the eight detections of dieldrin **exceeded** the residential RSL of 34 µg/kg.

- 4-4'-DDE was detected in six of the 14 step-out soil samples at concentrations ranging from 26 µg/kg (LB1-NE2-0.5) to 170 µg/kg (LB1-SW2-0.5). The detections of 4-4'-DDE did not exceed the residential RSL of 2,000 µg/kg.

- 4-4'-DDT was detected in four of the 16 soil samples analyzed during this investigation at concentrations ranging from 12 µg/kg (LB1-SW1-2.5) to 28 µg/kg (LB1-SW2-0.5). The detections of 4-4'-DDT did not exceed the residential RSL of 1,900 µg/kg.

Arsenic

Arsenic was detected in each of the step-out soil samples analyzed during this investigation. Arsenic was detected in four step-out soil samples (LB4-E2-0.5, LB4-N1-0.5, LB4-N2-0.5, and LB4-W2-0.5) at concentrations **exceeding** the DTSC-accepted Southern California Background Concentrations for arsenic of 12 mg/kg. The maximum detected concentration of arsenic was 19 mg/kg in sample LB4-W2-0.5.

Statistical Analysis

The United States Environmental Protection Agency (EPA)'s statistical program, ProUCL, version 5.1, was used to evaluate the concentrations of arsenic detected in soil samples collected during the field activities. Arsenic exceeded the respective DTSC-accepted Southern California Background Concentration in eight of the total soil samples collected from the subject site. However, because the maximum detected concentration of arsenic was 19 mg/kg and still within the upper end of naturally occurring arsenic levels in Southern California, a statistical evaluation of the arsenic dataset was completed to determine if arsenic would be considered a contaminant of concern and would require remediation (removal) prior to redevelopment of the site. It should be noted that due to elevated levels of dieldrin (an OCP), removals will be required in the upper 2 feet in the vicinity of boring LB1 and as such the arsenic data collected from this boring at a depth of 0.5 feet bgs was removed from the dataset prior to calculation of the 95% UCL.

The 95% UCL of the population mean for arsenic was calculated to be 11.22 mg/kg, which is below the screening value of 12 mg/kg for arsenic. Assuming the upper 2 feet of soil in the vicinity of boring LB1 is removed prior to redevelopment of the site; arsenic in near surface soil at the site is not anticipated to pose a significant health risk to future residents.

Statistical analysis spreadsheets are included in Appendix D, following the laboratory reports.

CONCLUSIONS

Soil sample analytical results indicate that soil in the southwest portion of the site, in the vicinity of boring LB1, contains dieldrin at concentrations exceeding the RSL for residential land use. The exceedances of dieldrin are primarily limited to soil samples collected at a depth of 0.5 feet bgs, with the exception of LB1-SW1-2.5 at 2.5 feet bgs. The northwestern lateral extent of the dieldrin-impacted soil is not well defined due to limitations posed by the current onsite structure; however, borings LB2, LB7, and LB8 provide a rough estimate of lateral delineation and indicate that the dieldrin-impacted soil is confined to the southeast portion of the site.

Arsenic was detected in near surface soil samples throughout the site at concentrations ranging from 1.9 mg/kg to 19 m/kg. Excluding arsenic data collected from boring LB1 (which is recommended for removal based on co-located elevated dieldrin concentrations), the 95% UCL of the population mean for arsenic was calculated to be 11.22 mg/kg. Based on the results of statistical analysis, arsenic in near surface soil at the site is not considered a contaminant of concern and not anticipated to pose a significant health risk to future residents.

RECOMMENDATIONS

To address the exceedances of dieldrin in near surface soil samples collected from the southeast portion of the site, Leighton recommends the excavation and offsite disposal of soil to a depth of approximately 2 feet bgs. Deeper removals may be necessary in the vicinity of step-out boring LB1-SW2 and can be confirmed during removal activities. Upon completion of removal activities, confirmation soil samples should be collected from the resulting excavation area to ensure that the dieldrin-impacted soil has been effectively removed. All work should be completed under the oversight of a California-registered Professional Geologist or Engineer with environmental consulting experience.

In general, observations should be made during any future site redevelopment for areas of possible contamination such as, but not limited to, the presence of underground facilities, buried debris, waste drums, tanks, stained soil or odorous soils. Should such materials be encountered, further investigation and analysis may be necessary at that time.

LIMITATIONS

This investigation was conducted in a manner consistent with the level of care and skill ordinarily exercised by members of the profession currently practicing in the same locality under similar conditions.

The observations and conclusions presented in this report are professional opinions based on the scope of activities, work schedule, and information obtained through the activities described herein, and are limited to the portion of the site investigated. Opinions presented herein apply to property conditions existing at the time of our study and cannot necessarily be taken to apply to property conditions outside of the area investigated or changes that we are not aware of or have not had the opportunity to evaluate. It must be recognized that conclusions drawn from these data are limited to the portion of the site investigated, and the amount, type, distribution, and integrity of the information collected at the time of the investigation, and the methods utilized to collect and evaluate the data. Although Leighton has taken steps to obtain true copies of available information, we make no representation or warranty with respect to the accuracy or completeness of the information provided by others.

CLOSING

We appreciate the opportunity to work with you on this project. If you have any questions regarding this report, please call us at your convenience.

Respectfully submitted,

LEIGHTON CONSULTING, INC.

Brynn McCulloch, PG
Principal Geologist

BFM

Attachments: Table 1 – Soil Analytical Results for Arsenic
Table 2 – Soil Analytical Results for OCPs

Figure 1 – Site Location Map
Figure 2 – Site Plan

Appendix A – References
Appendix B – Boring Logs
Appendix C – Laboratory Reports and Chain-of-Custody Records
Appendix D – ProUCL Output

Distribution: (1) Addressee

Project: 12137.001	Eng/Geol: BFM
Scale: 1 " = 2,000 '	Date: September 2018

Base Map: ESRI ArcGIS Online 2018
Thematic Information: Leighton
Author: Leighton Geomatics (mmurphy)

SITE LOCATION MAP

574 South Glassell Street
Orange, California

Figure 1

Leighton

Map Saved as P:\Drafting\12137\001\Maps\12137-001_F01_SLM_2018-09-20.mxd on 9/20/2018 1:28:08 PM

LEGEND

- Approximate Subject Site Boundary
- LB8 Approximate Boring Location and ID
- LB4-W2 Approximate Step-out Boring Location and ID
- Approximate Excavation Area

SITE PLAN

574 South Glassell Street
Orange, California

Project No.	12137.003
Scale	Approx. 1" = 20'
Engr./Geol.	BFM
Drafted By	BFM
Date	September 2019

Figure 2

APPENDIX A

REFERENCES

APPENDIX A

References

Department of Toxic Substances Control, Human and Ecological Risk Office, Human Health Risk Assessment Note Number 3, dated April 2019.

United States Environmental Protection Agency, 2019, Region 9 Residential Regional Screening Levels, April 2019.

APPENDIX B

BORING LOGS

SOIL BORING LOG

PROJECT NUMBER	12137.003	**BORING/WELL NUMBER**	LB1
PROJECT NAME	KSL Communities	**DATE DRILLED**	8/14/2019
LOCATION	574 South Glassel Street, Orange, CA	**CASING TYPE/DIAMETER**	N/A / N/A
DRILLING METHOD	Hand Auger	**SCREEN TYPE/SLOT**	N/A / N/A
SAMPLING METHOD	Grab Sample	**FILTER PACK TYPE**	N/A
GROUND ELEVATION		**GROUT TYPE**	N/A
TOP OF CASING ELEV.	N/A	**DEPTH TO WATER**	
LOGGED BY	RAL	**TOTAL DRILL DEPTH**	5 ft.
REMARKS			

DEPTH (ft. BGL)	BLOW COUNTS	RECOVERY (inches)	SAMPLE ID.	EXTENT	PID (ppm)	U.S.C.S.	LITHOLOGIC DESCRIPTION
							@Surface: Top soil.
			LB1-1.0			ML	@0.5': SILT, brown, slightly moist, trace sand, no odor or staining.
			LB1-2.5			SM	@2.5': Sandy SILT, light brown, dry, fine to medium grained, no odor or staining.
			LB1-5.0			SP	@3.5': SAND, greyish brown, fine to medium grained, no odor or staining.
5						ML	@5': Clayey SILT, brown, dry soft, no odor or staining.
10							

Notes:
Total Depth of Boring: 5 feet bgs
No groundwater encountered
Backfilled with native soil.

SOIL BORING LOG

PROJECT NUMBER	12137.003	**BORING/WELL NUMBER**	LB2
PROJECT NAME	KSL Communities	**DATE DRILLED**	8/14/2019
LOCATION	574 South Glassel Street, Orange, CA	**CASING TYPE/DIAMETER**	N/A / N/A
DRILLING METHOD	GeoProbe Direct Push	**SCREEN TYPE/SLOT**	N/A / N/A
SAMPLING METHOD	Tephlon Sleeve	**FILTER PACK TYPE**	N/A
GROUND ELEVATION		**GROUT TYPE**	N/A
TOP OF CASING ELEV.	N/A	**DEPTH TO WATER**	
LOGGED BY	RAL	**TOTAL DRILL DEPTH**	5 ft.
REMARKS			

DEPTH (ft. BGL)	BLOW COUNTS	RECOVERY (inches)	SAMPLE ID.	EXTENT	PID (ppm)	U.S.C.S.	LITHOLOGIC DESCRIPTION
							@Surface: Top soil.
			LB2-1.0			ML	@0.5': SILT, brown, slightly moist, trace sand, no odor or staining.
			LB2-2.5			SM	@2.5': Sandy SILT, light brown, dry, fine to medium grained, no odor or staining.
			LB2-5.0			SP	@3.5': SAND, greyish brown, fine to medium grained, no odor or staining.
5						ML	@5': Clayey SILT, brown, dry soft, no odor or staining.
10							

Notes:
Total Depth of Boring: 5 feet bgs
No groundwater encountered
Backfilled with native soil.

SOIL BORING LOG

PROJECT NUMBER	12137.003	**BORING/WELL NUMBER**	LB3
PROJECT NAME	KSL Communities	**DATE DRILLED**	8/14/2019
LOCATION	574 South Glassel Street, Orange, CA	**CASING TYPE/DIAMETER**	
DRILLING METHOD	GeoProbe Direct Push	**SCREEN TYPE/SLOT**	
SAMPLING METHOD	Tephlon Sleeve	**FILTER PACK TYPE**	
GROUND ELEVATION		**GROUT TYPE**	
TOP OF CASING ELEV.		**DEPTH TO WATER**	
LOGGED BY	RAL	**TOTAL DRILL DEPTH**	5 ft.
REMARKS			

DEPTH (ft. BGL)	BLOW COUNTS	RECOVERY (inches)	SAMPLE ID.	EXTENT	PID (ppm)	U.S.C.S.	LITHOLOGIC DESCRIPTION
							@Surface: Top soil.
			LB3-1.0			ML	@0.5': SILT, brown, slightly moist, trace sand, no odor or staining.
			LB3-2.5			SM	@2.5': Sandy SILT, light brown, dry, fine to medium grained, no odor or staining.
			LB3-5.0			SP	@3.5': SAND, greyish brown, fine to medium grained, no odor or staining.
5						ML	@5': Clayey SILT, brown, dry soft, no odor or staining.
10							

Notes:
Total Depth of Boring: 5 feet bgs
No groundwater encountered
Backfilled with native soil.

SOIL BORING LOG

PROJECT NUMBER	12137.003	**BORING/WELL NUMBER**	LB4
PROJECT NAME	KSL Communities	**DATE DRILLED**	8/14/2019
LOCATION	574 South Glassel Street, Orange, CA	**CASING TYPE/DIAMETER**	
DRILLING METHOD	GeoProbe Direct Push	**SCREEN TYPE/SLOT**	
SAMPLING METHOD	Tephlon Sleeve	**FILTER PACK TYPE**	
GROUND ELEVATION		**GROUT TYPE**	
TOP OF CASING ELEV.		**DEPTH TO WATER**	
LOGGED BY	RAL	**TOTAL DRILL DEPTH**	5 ft.
REMARKS			

DEPTH (ft. BGL)	BLOW COUNTS	RECOVERY (inches)	SAMPLE ID.	EXTENT	PID (ppm)	U.S.C.S.	LITHOLOGIC DESCRIPTION
							@Surface: Top soil.
			LB4-1.0			ML	@0.5': SILT, brown, slightly moist, trace sand, no odor or staining.
			LB4-2.5			SM	@2.5': Sandy SILT, light brown, dry, fine to medium grained, no odor or staining.
			LB4-5.0			SP	@3.5': SAND, greyish brown, fine to medium grained, no odor or staining.
5						ML	@5': Clayey SILT, brown, dry soft, no odor or staining.
10							

Notes:
Total Depth of Boring: 5 feet bgs
No groundwater encountered
Backfilled with native soil.

SOIL BORING LOG

PROJECT NUMBER	12137.003	**BORING/WELL NUMBER**	LB5
PROJECT NAME	KSL Communities	**DATE DRILLED**	8/14/2019
LOCATION	574 South Glassel Street, Orange, CA	**CASING TYPE/DIAMETER**	
DRILLING METHOD	GeoProbe Direct Push	**SCREEN TYPE/SLOT**	
SAMPLING METHOD	Tephlon Sleeve	**FILTER PACK TYPE**	
GROUND ELEVATION		**GROUT TYPE**	
TOP OF CASING ELEV.		**DEPTH TO WATER**	
LOGGED BY	RAL	**TOTAL DRILL DEPTH**	5 ft.
REMARKS			

DEPTH (ft. BGL)	BLOW COUNTS	RECOVERY (inches)	SAMPLE ID.	EXTENT	PID (ppm)	U.S.C.S.	LITHOLOGIC DESCRIPTION
							@Surface: Top soil.
			LB5-1.0			ML	@0.5': SILT, brown, slightly moist, trace sand, no odor or staining.
			LB5-2.5			SM	@2.5': Sandy SILT, light brown, dry, fine to medium grained, no odor or staining.
			LB5-5.0			SP	@3.5': SAND, greyish brown, fine to medium grained, no odor or staining.
5						ML	@5': Clayey SILT, brown, dry soft, no odor or staining.
10							

Notes:
Total Depth of Boring: 5 feet bgs
No groundwater encountered
Backfilled with native soil.

SOIL BORING LOG

PROJECT NUMBER	12137.003	**BORING/WELL NUMBER**	LB6
PROJECT NAME	KSL Communities	**DATE DRILLED**	8/14/2019
LOCATION	574 South Glassel Street, Orange, CA	**CASING TYPE/DIAMETER**	
DRILLING METHOD	GeoProbe Direct Push	**SCREEN TYPE/SLOT**	
SAMPLING METHOD	Tephlon Sleeve	**FILTER PACK TYPE**	
GROUND ELEVATION		**GROUT TYPE**	
TOP OF CASING ELEV.		**DEPTH TO WATER**	
LOGGED BY	RAL	**TOTAL DRILL DEPTH**	5 ft.
REMARKS			

DEPTH (ft. BGL)	BLOW COUNTS	RECOVERY (inches)	SAMPLE ID.	EXTENT	PID (ppm)	U.S.C.S.	LITHOLOGIC DESCRIPTION
							@Surface: Top soil.
			LB6-1.0			ML	@0.5': SILT, brown, slightly moist, trace sand, no odor or staining.
			LB6-2.5			SM	@2.5': Sandy SILT, light brown, dry, fine to medium grained, no odor or staining.
			LB6-5.0			SP	@3.5': SAND, greyish brown, fine to medium grained, no odor or staining.
5						ML	@5': Clayey SILT, brown, dry soft, no odor or staining.
10							

Notes:
Total Depth of Boring: 5 feet bgs
No groundwater encountered
Backfilled with native soil.

SOIL BORING LOG

PROJECT NUMBER	12137.003	**BORING/WELL NUMBER**	LB7
PROJECT NAME	KSL Communities	**DATE DRILLED**	8/14/2019
LOCATION	574 South Glassel Street, Orange, CA	**CASING TYPE/DIAMETER**	
DRILLING METHOD	GeoProbe Direct Push	**SCREEN TYPE/SLOT**	
SAMPLING METHOD	Tephlon Sleeve	**FILTER PACK TYPE**	
GROUND ELEVATION		**GROUT TYPE**	
TOP OF CASING ELEV.		**DEPTH TO WATER**	
LOGGED BY	RAL	**TOTAL DRILL DEPTH**	5 ft.
REMARKS			

DEPTH (ft. BGL)	BLOW COUNTS	RECOVERY (inches)	SAMPLE ID.	EXTENT	PID (ppm)	U.S.C.S.	LITHOLOGIC DESCRIPTION
							@Surface: Top soil.
			LB7-1.0			ML	@0.5': SILT, brown, slightly moist, trace sand, no odor or staining.
			LB7-2.5			SM	@2.5': Sandy SILT, light brown, dry, fine to medium grained, no odor or staining.
			LB7-5.0			SP	@3.5': SAND, greyish brown, fine to medium grained, no odor or staining.
5						ML	@5': Clayey SILT, brown, dry soft, no odor or staining.
10							

Notes:
Total Depth of Boring: 5 feet bgs
No groundwater encountered
Backfilled with native soil.

SOIL BORING LOG

PROJECT NUMBER	12137.003	**BORING/WELL NUMBER**	LB8
PROJECT NAME	KSL Communities	**DATE DRILLED**	8/14/2019
LOCATION	574 South Glassel Street, Orange, CA	**CASING TYPE/DIAMETER**	
DRILLING METHOD	GeoProbe Direct Push	**SCREEN TYPE/SLOT**	
SAMPLING METHOD	Tephlon Sleeve	**FILTER PACK TYPE**	
GROUND ELEVATION		**GROUT TYPE**	
TOP OF CASING ELEV.		**DEPTH TO WATER**	
LOGGED BY	RAL	**TOTAL DRILL DEPTH**	5 ft.
REMARKS			

DEPTH (ft. BGL)	BLOW COUNTS	RECOVERY (inches)	SAMPLE ID.	EXTENT	PID (ppm)	U.S.C.S.	LITHOLOGIC DESCRIPTION
							@Surface: Top soil.
			LB8-1.0			ML	@0.5': SILT, brown, slightly moist, trace sand, no odor or staining.
			LB8-2.5			SM	@2.5': Sandy SILT, light brown, dry, fine to medium grained, no odor or staining.
			LB8-5.0			SP	@3.5': SAND, greyish brown, fine to medium grained, no odor or staining.
5						ML	@5': Clayey SILT, brown, dry soft, no odor or staining.
10							

Notes:
Total Depth of Boring: 5 feet bgs
No groundwater encountered
Backfilled with native soil.

APPENDIX C

LABORATORY REPORTS
AND CHAIN-OF-CUSTODY RECORDS

August 19, 2019

Brynn McCulloch
Leighton Consulting, Inc.
17781 Cowan Street
Irvine, CA 92614
Tel: (949) 681-4287
Fax:(949) 250-1114

ELAP No.: 1838
CSDLAC No.: 10196
ORELAP No.: CA300003

RE: ATL Work Order Number : 1903032
Client Reference : 574 South Glassell, 12137.003

Enclosed are the results for sample(s) received on August, 14 2019 by Advanced Technology Laboratories. The sample(s) are tested for the parameters as indicated on the enclosed chain of custody in accordance with applicable laboratory certifications. The laboratory results contained in this report specifically pertains to the sample(s) submitted.

Thank you for the opportunity to serve the needs of your company. If you have any questions, please feel free to contact me or your Project Manager.

Sincerely,

Edgar Caballero
President & Laboratory Director

The cover letter and the case narrative are an integral part of this analytical report and its absence renders the report invalid. Test results contained within this data package meet the requirements of applicable state-specific certification programs. The report cannot be reproduced without written permission from the client and Advanced Technology Laboratories.

Certificate of Analysis

Leighton Consulting, Inc.		Project Number :	574 South Glassell, 12137.003
17781 Cowan Street		Report To :	Brynn McCulloch
Irvine , CA 92614		Reported :	08/19/2019

SUMMARY OF SAMPLES

Sample ID	Laboratory ID	Matrix	Date Sampled	Date Received
LB1-0.5	1903032-01	Soil	8/14/19 7:10	8/14/19 12:52
LB1-2.5	1903032-02	Soil	8/14/19 7:13	8/14/19 12:52
LB2-0.5	1903032-04	Soil	8/14/19 7:28	8/14/19 12:52
LB2-2.5	1903032-05	Soil	8/14/19 7:30	8/14/19 12:52
LB3-0.5	1903032-07	Soil	8/14/19 7:40	8/14/19 12:52
LB3-2.5	1903032-08	Soil	8/14/19 7:42	8/14/19 12:52
LB4-0.5	1903032-10	Soil	8/14/19 7:50	8/14/19 12:52
LB4-2.5	1903032-11	Soil	8/14/19 7:52	8/14/19 12:52
LB5-0.5	1903032-13	Soil	8/14/19 8:00	8/14/19 12:52
LB5-2.5	1903032-14	Soil	8/14/19 8:02	8/14/19 12:52
LB6-0.5	1903032-16	Soil	8/14/19 8:10	8/14/19 12:52
LB6-2.5	1903032-17	Soil	8/14/19 8:12	8/14/19 12:52
LB7-0.5	1903032-19	Soil	8/14/19 8:20	8/14/19 12:52
LB7-2.5	1903032-20	Soil	8/14/19 8:22	8/14/19 12:52
LB8-0.5	1903032-22	Soil	8/14/19 8:30	8/14/19 12:52
LB8-2.5	1903032-23	Soil	8/14/19 8:32	8/14/19 12:52

Certificate of Analysis

Leighton Consulting, Inc.		Project Number :	574 South Glassell, 12137.003
17781 Cowan Street		Report To :	Brynn McCulloch
Irvine , CA 92614		Reported :	08/19/2019

DETECTION SUMMARY

Client Sample ID LB1-0.5

Lab ID: 1903032-01

Total Metals by ICP-AES EPA 6010B

Analyst: VV

Analyte	Result (mg/kg)	PQL (mg/kg)	MDL (mg/kg)	Dilution	Batch	Prepared	Date/Time Analyzed	Notes
Arsenic	**4.6**	1.0	0.12	1	B9H0329	08/14/19 16:07	08/16/19 13:00	

Organochlorine Pesticides by EPA 8081

Analyst: BL

Analyte	Result (ug/kg)	PQL (ug/kg)	MDL (ug/kg)	Dilution	Batch	Prepared	Date/Time Analyzed	Notes
4,4´-DDE [2C]	**67**	10	0.54	5	B9H0359	08/15/19 08:30	08/16/19 18:51	
4,4´-DDT [2C]	**25**	10	0.50	5	B9H0359	08/15/19 08:30	08/16/19 18:51	
Dieldrin [2C]	**170**	10	1.3	5	B9H0359	08/15/19 08:30	08/16/19 18:51	

Certificate of Analysis

Leighton Consulting, Inc.		Project Number :	574 South Glassell, 12137.003
17781 Cowan Street		Report To :	Brynn McCulloch
Irvine , CA 92614		Reported :	08/19/2019

DETECTION SUMMARY

Client Sample ID LB1-2.5

Lab ID: 1903032-02

Total Metals by ICP-AES EPA 6010B **Analyst: VV**

Analyte	Result (mg/kg)	PQL (mg/kg)	MDL (mg/kg)	Dilution	Batch	Prepared	Date/Time Analyzed	Notes
Arsenic	**5.6**	1.0	0.12	1	B9H0329	08/14/19 16:07	08/16/19 13:04	

Certificate of Analysis

Leighton Consulting, Inc.		Project Number :	574 South Glassell, 12137.003
17781 Cowan Street		Report To :	Brynn McCulloch
Irvine , CA 92614		Reported :	08/19/2019

DETECTION SUMMARY

Client Sample ID LB2-0.5

Lab ID: 1903032-04

Total Metals by ICP-AES EPA 6010B

Analyst: VV

Analyte	Result (mg/kg)	PQL (mg/kg)	MDL (mg/kg)	Dilution	Batch	Prepared	Date/Time Analyzed	Notes
Arsenic	**10**	1.0	0.12	1	B9H0329	08/14/19 16:07	08/16/19 13:05	

Organochlorine Pesticides by EPA 8081

Analyst: BL

Analyte	Result (ug/kg)	PQL (ug/kg)	MDL (ug/kg)	Dilution	Batch	Prepared	Date/Time Analyzed	Notes
4,4´-DDE [2C]	**330**	10	0.54	5	B9H0359	08/15/19 08:30	08/16/19 19:13	
4,4´-DDT [2C]	**18**	10	0.50	5	B9H0359	08/15/19 08:30	08/16/19 19:13	

Certificate of Analysis

Leighton Consulting, Inc.		Project Number :	574 South Glassell, 12137.003
17781 Cowan Street		Report To :	Brynn McCulloch
Irvine , CA 92614		Reported :	08/19/2019

DETECTION SUMMARY

Client Sample ID LB2-2.5

Lab ID: 1903032-05

Total Metals by ICP-AES EPA 6010B **Analyst: VV**

Analyte	Result (mg/kg)	PQL (mg/kg)	MDL (mg/kg)	Dilution	Batch	Prepared	Date/Time Analyzed	Notes
Arsenic	**7.4**	1.0	0.12	1	B9H0329	08/14/19 16:07	08/16/19 13:06	

Certificate of Analysis

Leighton Consulting, Inc.		Project Number :	574 South Glassell, 12137.003
17781 Cowan Street		Report To :	Brynn McCulloch
Irvine , CA 92614		Reported :	08/19/2019

DETECTION SUMMARY

Client Sample ID LB3-0.5

Lab ID: 1903032-07

Total Metals by ICP-AES EPA 6010B

Analyst: VV

Analyte	Result (mg/kg)	PQL (mg/kg)	MDL (mg/kg)	Dilution	Batch	Prepared	Date/Time Analyzed	Notes
Arsenic	**4.4**	1.0	0.12	1	B9H0329	08/14/19 16:07	08/16/19 13:07	

Organochlorine Pesticides by EPA 8081

Analyst: BL

Analyte	Result (ug/kg)	PQL (ug/kg)	MDL (ug/kg)	Dilution	Batch	Prepared	Date/Time Analyzed	Notes
4,4´-DDE [2C]	**340**	20	1.1	10	B9H0359	08/15/19 08:30	08/17/19 11:54	
4,4´-DDT [2C]	**170**	10	0.50	5	B9H0359	08/15/19 08:30	08/16/19 19:46	
Dieldrin [2C]	**24**	10	1.3	5	B9H0359	08/15/19 08:30	08/16/19 19:46	

Certificate of Analysis

Leighton Consulting, Inc.		Project Number :	574 South Glassell, 12137.003
17781 Cowan Street		Report To :	Brynn McCulloch
Irvine , CA 92614		Reported :	08/19/2019

DETECTION SUMMARY

Client Sample ID LB3-2.5

Lab ID: 1903032-08

Total Metals by ICP-AES EPA 6010B **Analyst: VV**

Analyte	Result (mg/kg)	PQL (mg/kg)	MDL (mg/kg)	Dilution	Batch	Prepared	Date/Time Analyzed	Notes
Arsenic	**11**	1.0	0.12	1	B9H0329	08/14/19 16:07	08/16/19 13:08	

Certificate of Analysis

Leighton Consulting, Inc.		Project Number :	574 South Glassell, 12137.003
17781 Cowan Street		Report To :	Brynn McCulloch
Irvine , CA 92614		Reported :	08/19/2019

DETECTION SUMMARY

Client Sample ID LB4-0.5

Lab ID: 1903032-10

Total Metals by ICP-AES EPA 6010B

Analyst: VV

Analyte	Result (mg/kg)	PQL (mg/kg)	MDL (mg/kg)	Dilution	Batch	Prepared	Date/Time Analyzed	Notes
Arsenic	**19**	1.0	0.12	1	B9H0329	08/14/19 16:07	08/16/19 13:12	

Organochlorine Pesticides by EPA 8081

Analyst: BL

Analyte	Result (ug/kg)	PQL (ug/kg)	MDL (ug/kg)	Dilution	Batch	Prepared	Date/Time Analyzed	Notes
4,4´-DDE [2C]	**15**	4.0	0.22	2	B9H0359	08/15/19 08:30	08/16/19 20:08	

Certificate of Analysis

Leighton Consulting, Inc.		Project Number :	574 South Glassell, 12137.003
17781 Cowan Street		Report To :	Brynn McCulloch
Irvine , CA 92614		Reported :	08/19/2019

DETECTION SUMMARY

Client Sample ID LB4-2.5

Lab ID: 1903032-11

Total Metals by ICP-AES EPA 6010B **Analyst: VV**

Analyte	Result (mg/kg)	PQL (mg/kg)	MDL (mg/kg)	Dilution	Batch	Prepared	Date/Time Analyzed	Notes
Arsenic	**9.5**	1.0	0.12	1	B9H0329	08/14/19 16:07	08/16/19 13:13	

Certificate of Analysis

Leighton Consulting, Inc.		Project Number :	574 South Glassell, 12137.003
17781 Cowan Street		Report To :	Brynn McCulloch
Irvine , CA 92614		Reported :	08/19/2019

DETECTION SUMMARY

Client Sample ID LB5-0.5

Lab ID: 1903032-13

Total Metals by ICP-AES EPA 6010B

Analyst: VV

Analyte	Result (mg/kg)	PQL (mg/kg)	MDL (mg/kg)	Dilution	Batch	Prepared	Date/Time Analyzed	Notes
Arsenic	**18**	1.0	0.12	1	B9H0329	08/14/19 16:07	08/16/19 13:14	

Organochlorine Pesticides by EPA 8081

Analyst: BL

Analyte	Result (ug/kg)	PQL (ug/kg)	MDL (ug/kg)	Dilution	Batch	Prepared	Date/Time Analyzed	Notes
4,4´-DDE [2C]	**88**	4.0	0.22	2	B9H0359	08/15/19 08:30	08/17/19 11:43	
4,4´-DDT [2C]	**2.6**	2.0	0.10	1	B9H0359	08/15/19 08:30	08/16/19 20:30	

Certificate of Analysis

Leighton Consulting, Inc.		Project Number :	574 South Glassell, 12137.003
17781 Cowan Street		Report To :	Brynn McCulloch
Irvine , CA 92614		Reported :	08/19/2019

DETECTION SUMMARY

Client Sample ID LB5-2.5

Lab ID: 1903032-14

Total Metals by ICP-AES EPA 6010B **Analyst: VV**

Analyte	Result (mg/kg)	PQL (mg/kg)	MDL (mg/kg)	Dilution	Batch	Prepared	Date/Time Analyzed	Notes
Arsenic	**4.9**	1.0	0.12	1	B9H0329	08/14/19 16:07	08/16/19 13:15	

Certificate of Analysis

Leighton Consulting, Inc.		Project Number :	574 South Glassell, 12137.003
17781 Cowan Street		Report To :	Brynn McCulloch
Irvine , CA 92614		Reported :	08/19/2019

DETECTION SUMMARY

Client Sample ID LB6-0.5

Lab ID: 1903032-16

Total Metals by ICP-AES EPA 6010B — **Analyst: VV**

Analyte	Result (mg/kg)	PQL (mg/kg)	MDL (mg/kg)	Dilution	Batch	Prepared	Date/Time Analyzed	Notes
Arsenic	**17**	1.0	0.12	1	B9H0329	08/14/19 16:07	08/16/19 13:16	

Organochlorine Pesticides by EPA 8081 — **Analyst: BL**

Analyte	Result (ug/kg)	PQL (ug/kg)	MDL (ug/kg)	Dilution	Batch	Prepared	Date/Time Analyzed	Notes
4,4´-DDE [2C]	**2.9**	2.0	0.11	1	B9H0359	08/15/19 08:30	08/16/19 21:02	

Certificate of Analysis

Leighton Consulting, Inc.		Project Number :	574 South Glassell, 12137.003
17781 Cowan Street		Report To :	Brynn McCulloch
Irvine , CA 92614		Reported :	08/19/2019

DETECTION SUMMARY

Client Sample ID LB6-2.5

Lab ID: 1903032-17

Total Metals by ICP-AES EPA 6010B **Analyst: VV**

Analyte	Result (mg/kg)	PQL (mg/kg)	MDL (mg/kg)	Dilution	Batch	Prepared	Date/Time Analyzed	Notes
Arsenic	**5.1**	1.0	0.12	1	B9H0329	08/14/19 16:07	08/16/19 13:17	

Certificate of Analysis

Leighton Consulting, Inc.		Project Number :	574 South Glassell, 12137.003
17781 Cowan Street		Report To :	Brynn McCulloch
Irvine , CA 92614		Reported :	08/19/2019

DETECTION SUMMARY

Client Sample ID LB7-0.5

Lab ID: 1903032-19

Total Metals by ICP-AES EPA 6010B **Analyst: VV**

Analyte	Result (mg/kg)	PQL (mg/kg)	MDL (mg/kg)	Dilution	Batch	Prepared	Date/Time Analyzed	Notes
Arsenic	**15**	1.0	0.12	1	B9H0329	08/14/19 16:07	08/16/19 13:18	

Certificate of Analysis

Leighton Consulting, Inc.		Project Number :	574 South Glassell, 12137.003
17781 Cowan Street		Report To :	Brynn McCulloch
Irvine , CA 92614		Reported :	08/19/2019

DETECTION SUMMARY

Client Sample ID LB7-2.5

Lab ID: 1903032-20

Total Metals by ICP-AES EPA 6010B **Analyst: VV**

Analyte	Result (mg/kg)	PQL (mg/kg)	MDL (mg/kg)	Dilution	Batch	Prepared	Date/Time Analyzed	Notes
Arsenic	**5.3**	1.0	0.12	1	B9H0329	08/14/19 16:07	08/16/19 13:20	

Certificate of Analysis

Leighton Consulting, Inc.		Project Number :	574 South Glassell, 12137.003
17781 Cowan Street		Report To :	Brynn McCulloch
Irvine , CA 92614		Reported :	08/19/2019

DETECTION SUMMARY

Client Sample ID LB8-0.5

Lab ID: 1903032-22

Total Metals by ICP-AES EPA 6010B **Analyst: VV**

Analyte	Result (mg/kg)	PQL (mg/kg)	MDL (mg/kg)	Dilution	Batch	Prepared	Date/Time Analyzed	Notes
Arsenic	**1.9**	1.0	0.12	1	B9H0329	08/14/19 16:07	08/16/19 13:21	

Certificate of Analysis

Leighton Consulting, Inc.		Project Number :	574 South Glassell, 12137.003
17781 Cowan Street		Report To :	Brynn McCulloch
Irvine , CA 92614		Reported :	08/19/2019

DETECTION SUMMARY

Client Sample ID LB8-2.5

Lab ID: 1903032-23

Total Metals by ICP-AES EPA 6010B **Analyst: VV**

Analyte	Result (mg/kg)	PQL (mg/kg)	MDL (mg/kg)	Dilution	Batch	Prepared	Date/Time Analyzed	Notes
Arsenic	**4.8**	1.0	0.12	1	B9H0329	08/14/19 16:07	08/16/19 13:22	

Certificate of Analysis

Leighton Consulting, Inc.		Project Number :	574 South Glassell, 12137.003
17781 Cowan Street		Report To :	Brynn McCulloch
Irvine , CA 92614		Reported :	08/19/2019

Client Sample ID LB1-0.5
Lab ID: 1903032-01

Total Metals by ICP-AES EPA 6010B

Analyst: VV

Analyte	Result (mg/kg)	PQL (mg/kg)	Dilution	Batch	Prepared	Date/Time Analyzed	Notes
Arsenic	**4.6**	1.0	1	B9H0329	08/14/2019	08/16/19 13:00	

Organochlorine Pesticides by EPA 8081

Analyst: BL

Analyte	Result (ug/kg)	PQL (ug/kg)	Dilution	Batch	Prepared	Date/Time Analyzed	Notes
4,4´-DDD	ND	10	5	B9H0359	08/15/2019	08/16/19 18:51	D1
4,4´-DDE [2C]	**67**	10	5	B9H0359	08/15/2019	08/16/19 18:51	
4,4´-DDT [2C]	**25**	10	5	B9H0359	08/15/2019	08/16/19 18:51	
Aldrin	ND	5.0	5	B9H0359	08/15/2019	08/16/19 18:51	D1
alpha-BHC	ND	5.0	5	B9H0359	08/15/2019	08/16/19 18:51	D1
alpha-Chlordane	ND	5.0	5	B9H0359	08/15/2019	08/16/19 18:51	D1
beta-BHC	ND	5.0	5	B9H0359	08/15/2019	08/16/19 18:51	D1
Chlordane	ND	42	5	B9H0359	08/15/2019	08/16/19 18:51	D1
delta-BHC	ND	5.0	5	B9H0359	08/15/2019	08/16/19 18:51	D1
Dieldrin [2C]	**170**	10	5	B9H0359	08/15/2019	08/16/19 18:51	
Endosulfan I	ND	5.0	5	B9H0359	08/15/2019	08/16/19 18:51	D1
Endosulfan II	ND	10	5	B9H0359	08/15/2019	08/16/19 18:51	D1
Endosulfan sulfate	ND	10	5	B9H0359	08/15/2019	08/16/19 18:51	D1
Endrin	ND	10	5	B9H0359	08/15/2019	08/16/19 18:51	D1
Endrin aldehyde	ND	10	5	B9H0359	08/15/2019	08/16/19 18:51	D1
Endrin ketone	ND	10	5	B9H0359	08/15/2019	08/16/19 18:51	D1
gamma-BHC	ND	5.0	5	B9H0359	08/15/2019	08/16/19 18:51	D1
gamma-Chlordane	ND	5.0	5	B9H0359	08/15/2019	08/16/19 18:51	D1
Heptachlor	ND	5.0	5	B9H0359	08/15/2019	08/16/19 18:51	D1
Heptachlor epoxide	ND	5.0	5	B9H0359	08/15/2019	08/16/19 18:51	D1
Methoxychlor	ND	25	5	B9H0359	08/15/2019	08/16/19 18:51	D1
Toxaphene	ND	250	5	B9H0359	08/15/2019	08/16/19 18:51	D1
Surrogate: Decachlorobiphenyl	*70.1 %*	*32 - 91*		B9H0359	08/15/2019	*08/16/19 18:51*	
Surrogate: Tetrachloro-m-xylene	*72.5 %*	*38 - 93*		B9H0359	08/15/2019	*08/16/19 18:51*	

Certificate of Analysis

Leighton Consulting, Inc.		Project Number :	574 South Glassell, 12137.003
17781 Cowan Street		Report To :	Brynn McCulloch
Irvine , CA 92614		Reported :	08/19/2019

Client Sample ID LB1-2.5
Lab ID: 1903032-02

Total Metals by ICP-AES EPA 6010B

Analyst: VV

Analyte	Result (mg/kg)	PQL (mg/kg)	Dilution	Batch	Prepared	Date/Time Analyzed	Notes
Arsenic	**5.6**	1.0	1	B9H0329	08/14/2019	08/16/19 13:04	

Organochlorine Pesticides by EPA 8081

Analyst: BL

Analyte	Result (ug/kg)	PQL (ug/kg)	Dilution	Batch	Prepared	Date/Time Analyzed	Notes
4,4´-DDD	ND	2.0	1	B9H0359	08/15/2019	08/16/19 19:02	
4,4´-DDE	ND	2.0	1	B9H0359	08/15/2019	08/16/19 19:02	
4,4´-DDT	ND	2.0	1	B9H0359	08/15/2019	08/16/19 19:02	
Aldrin	ND	1.0	1	B9H0359	08/15/2019	08/16/19 19:02	
alpha-BHC	ND	1.0	1	B9H0359	08/15/2019	08/16/19 19:02	
alpha-Chlordane	ND	1.0	1	B9H0359	08/15/2019	08/16/19 19:02	
beta-BHC	ND	1.0	1	B9H0359	08/15/2019	08/16/19 19:02	
Chlordane	ND	8.5	1	B9H0359	08/15/2019	08/16/19 19:02	
delta-BHC	ND	1.0	1	B9H0359	08/15/2019	08/16/19 19:02	
Dieldrin	ND	2.0	1	B9H0359	08/15/2019	08/16/19 19:02	
Endosulfan I	ND	1.0	1	B9H0359	08/15/2019	08/16/19 19:02	
Endosulfan II	ND	2.0	1	B9H0359	08/15/2019	08/16/19 19:02	
Endosulfan sulfate	ND	2.0	1	B9H0359	08/15/2019	08/16/19 19:02	
Endrin	ND	2.0	1	B9H0359	08/15/2019	08/16/19 19:02	
Endrin aldehyde	ND	2.0	1	B9H0359	08/15/2019	08/16/19 19:02	
Endrin ketone	ND	2.0	1	B9H0359	08/15/2019	08/16/19 19:02	
gamma-BHC	ND	1.0	1	B9H0359	08/15/2019	08/16/19 19:02	
gamma-Chlordane	ND	1.0	1	B9H0359	08/15/2019	08/16/19 19:02	
Heptachlor	ND	1.0	1	B9H0359	08/15/2019	08/16/19 19:02	
Heptachlor epoxide	ND	1.0	1	B9H0359	08/15/2019	08/16/19 19:02	
Methoxychlor	ND	5.0	1	B9H0359	08/15/2019	08/16/19 19:02	
Toxaphene	ND	50	1	B9H0359	08/15/2019	08/16/19 19:02	
Surrogate: Decachlorobiphenyl	*72.2 %*	*32 - 91*		B9H0359	08/15/2019	*08/16/19 19:02*	
Surrogate: Tetrachloro-m-xylene	*71.8 %*	*38 - 93*		B9H0359	08/15/2019	*08/16/19 19:02*	

Certificate of Analysis

Leighton Consulting, Inc.		Project Number :	574 South Glassell, 12137.003
17781 Cowan Street		Report To :	Brynn McCulloch
Irvine , CA 92614		Reported :	08/19/2019

Client Sample ID LB2-0.5
Lab ID: 1903032-04

Total Metals by ICP-AES EPA 6010B

Analyst: VV

Analyte	Result (mg/kg)	PQL (mg/kg)	Dilution	Batch	Prepared	Date/Time Analyzed	Notes
Arsenic	**10**	1.0	1	B9H0329	08/14/2019	08/16/19 13:05	

Organochlorine Pesticides by EPA 8081

Analyst: BL

Analyte	Result (ug/kg)	PQL (ug/kg)	Dilution	Batch	Prepared	Date/Time Analyzed	Notes
4,4´-DDD	ND	10	5	B9H0359	08/15/2019	08/16/19 19:13	D1
4,4´-DDE [2C]	**330**	10	5	B9H0359	08/15/2019	08/16/19 19:13	
4,4´-DDT [2C]	**18**	10	5	B9H0359	08/15/2019	08/16/19 19:13	
Aldrin	ND	5.0	5	B9H0359	08/15/2019	08/16/19 19:13	D1
alpha-BHC	ND	5.0	5	B9H0359	08/15/2019	08/16/19 19:13	D1
alpha-Chlordane	ND	5.0	5	B9H0359	08/15/2019	08/16/19 19:13	D1
beta-BHC	ND	5.0	5	B9H0359	08/15/2019	08/16/19 19:13	D1
Chlordane	ND	42	5	B9H0359	08/15/2019	08/16/19 19:13	D1
delta-BHC	ND	5.0	5	B9H0359	08/15/2019	08/16/19 19:13	D1
Dieldrin	ND	10	5	B9H0359	08/15/2019	08/16/19 19:13	D1
Endosulfan I	ND	5.0	5	B9H0359	08/15/2019	08/16/19 19:13	D1
Endosulfan II	ND	10	5	B9H0359	08/15/2019	08/16/19 19:13	D1
Endosulfan sulfate	ND	10	5	B9H0359	08/15/2019	08/16/19 19:13	D1
Endrin	ND	10	5	B9H0359	08/15/2019	08/16/19 19:13	D1
Endrin aldehyde	ND	10	5	B9H0359	08/15/2019	08/16/19 19:13	D1
Endrin ketone	ND	10	5	B9H0359	08/15/2019	08/16/19 19:13	D1
gamma-BHC	ND	5.0	5	B9H0359	08/15/2019	08/16/19 19:13	D1
gamma-Chlordane	ND	5.0	5	B9H0359	08/15/2019	08/16/19 19:13	D1
Heptachlor	ND	5.0	5	B9H0359	08/15/2019	08/16/19 19:13	D1
Heptachlor epoxide	ND	5.0	5	B9H0359	08/15/2019	08/16/19 19:13	D1
Methoxychlor	ND	25	5	B9H0359	08/15/2019	08/16/19 19:13	D1
Toxaphene	ND	250	5	B9H0359	08/15/2019	08/16/19 19:13	D1
Surrogate: Decachlorobiphenyl	*70.9 %*	*32 - 91*		B9H0359	08/15/2019	*08/16/19 19:13*	
Surrogate: Tetrachloro-m-xylene	*80.3 %*	*38 - 93*		B9H0359	08/15/2019	*08/16/19 19:13*	

Certificate of Analysis

Leighton Consulting, Inc.		Project Number :	574 South Glassell, 12137.003
17781 Cowan Street		Report To :	Brynn McCulloch
Irvine , CA 92614		Reported :	08/19/2019

Client Sample ID LB2-2.5
Lab ID: 1903032-05

Total Metals by ICP-AES EPA 6010B

Analyst: VV

Analyte	Result (mg/kg)	PQL (mg/kg)	Dilution	Batch	Prepared	Date/Time Analyzed	Notes
Arsenic	**7.4**	1.0	1	B9H0329	08/14/2019	08/16/19 13:06	

Organochlorine Pesticides by EPA 8081

Analyst: BL

Analyte	Result (ug/kg)	PQL (ug/kg)	Dilution	Batch	Prepared	Date/Time Analyzed	Notes
4,4´-DDD	ND	2.0	1	B9H0359	08/15/2019	08/16/19 19:24	
4,4´-DDE	ND	2.0	1	B9H0359	08/15/2019	08/16/19 19:24	
4,4´-DDT	ND	2.0	1	B9H0359	08/15/2019	08/16/19 19:24	
Aldrin	ND	1.0	1	B9H0359	08/15/2019	08/16/19 19:24	
alpha-BHC	ND	1.0	1	B9H0359	08/15/2019	08/16/19 19:24	
alpha-Chlordane	ND	1.0	1	B9H0359	08/15/2019	08/16/19 19:24	
beta-BHC	ND	1.0	1	B9H0359	08/15/2019	08/16/19 19:24	
Chlordane	ND	8.5	1	B9H0359	08/15/2019	08/16/19 19:24	
delta-BHC	ND	1.0	1	B9H0359	08/15/2019	08/16/19 19:24	
Dieldrin	ND	2.0	1	B9H0359	08/15/2019	08/16/19 19:24	
Endosulfan I	ND	1.0	1	B9H0359	08/15/2019	08/16/19 19:24	
Endosulfan II	ND	2.0	1	B9H0359	08/15/2019	08/16/19 19:24	
Endosulfan sulfate	ND	2.0	1	B9H0359	08/15/2019	08/16/19 19:24	
Endrin	ND	2.0	1	B9H0359	08/15/2019	08/16/19 19:24	
Endrin aldehyde	ND	2.0	1	B9H0359	08/15/2019	08/16/19 19:24	
Endrin ketone	ND	2.0	1	B9H0359	08/15/2019	08/16/19 19:24	
gamma-BHC	ND	1.0	1	B9H0359	08/15/2019	08/16/19 19:24	
gamma-Chlordane	ND	1.0	1	B9H0359	08/15/2019	08/16/19 19:24	
Heptachlor	ND	1.0	1	B9H0359	08/15/2019	08/16/19 19:24	
Heptachlor epoxide	ND	1.0	1	B9H0359	08/15/2019	08/16/19 19:24	
Methoxychlor	ND	5.0	1	B9H0359	08/15/2019	08/16/19 19:24	
Toxaphene	ND	50	1	B9H0359	08/15/2019	08/16/19 19:24	
Surrogate: Decachlorobiphenyl	*67.8 %*	*32 - 91*		B9H0359	08/15/2019	*08/16/19 19:24*	
Surrogate: Tetrachloro-m-xylene	*70.8 %*	*38 - 93*		B9H0359	08/15/2019	*08/16/19 19:24*	

Certificate of Analysis

Leighton Consulting, Inc.		Project Number :	574 South Glassell, 12137.003
17781 Cowan Street		Report To :	Brynn McCulloch
Irvine , CA 92614		Reported :	08/19/2019

Client Sample ID LB3-0.5
Lab ID: 1903032-07

Total Metals by ICP-AES EPA 6010B

Analyst: VV

Analyte	Result (mg/kg)	PQL (mg/kg)	Dilution	Batch	Prepared	Date/Time Analyzed	Notes
Arsenic	**4.4**	1.0	1	B9H0329	08/14/2019	08/16/19 13:07	

Organochlorine Pesticides by EPA 8081

Analyst: BL

Analyte	Result (ug/kg)	PQL (ug/kg)	Dilution	Batch	Prepared	Date/Time Analyzed	Notes
4,4´-DDD [2C]	ND	10	5	B9H0359	08/15/2019	08/16/19 19:46	D1
4,4´-DDE [2C]	**340**	20	10	B9H0359	08/15/2019	08/17/19 11:54	
4,4´-DDT [2C]	**170**	10	5	B9H0359	08/15/2019	08/16/19 19:46	
Aldrin	ND	5.0	5	B9H0359	08/15/2019	08/16/19 19:46	D1
alpha-BHC	ND	5.0	5	B9H0359	08/15/2019	08/16/19 19:46	D1
alpha-Chlordane	ND	5.0	5	B9H0359	08/15/2019	08/16/19 19:46	D1
beta-BHC	ND	5.0	5	B9H0359	08/15/2019	08/16/19 19:46	D1
Chlordane	ND	42	5	B9H0359	08/15/2019	08/16/19 19:46	D1
delta-BHC	ND	5.0	5	B9H0359	08/15/2019	08/16/19 19:46	D1
Dieldrin [2C]	**24**	10	5	B9H0359	08/15/2019	08/16/19 19:46	
Endosulfan I	ND	5.0	5	B9H0359	08/15/2019	08/16/19 19:46	D1
Endosulfan II	ND	10	5	B9H0359	08/15/2019	08/16/19 19:46	D1
Endosulfan sulfate	ND	10	5	B9H0359	08/15/2019	08/16/19 19:46	D1
Endrin	ND	10	5	B9H0359	08/15/2019	08/16/19 19:46	D1
Endrin aldehyde	ND	10	5	B9H0359	08/15/2019	08/16/19 19:46	D1
Endrin ketone	ND	10	5	B9H0359	08/15/2019	08/16/19 19:46	D1
gamma-BHC	ND	5.0	5	B9H0359	08/15/2019	08/16/19 19:46	D1
gamma-Chlordane	ND	5.0	5	B9H0359	08/15/2019	08/16/19 19:46	D1
Heptachlor	ND	5.0	5	B9H0359	08/15/2019	08/16/19 19:46	D1
Heptachlor epoxide	ND	5.0	5	B9H0359	08/15/2019	08/16/19 19:46	D1
Methoxychlor	ND	25	5	B9H0359	08/15/2019	08/16/19 19:46	D1
Toxaphene	ND	250	5	B9H0359	08/15/2019	08/16/19 19:46	D1
Surrogate: Decachlorobiphenyl	*71.9 %*	*32 - 91*		B9H0359	08/15/2019	*08/17/19 11:54*	
Surrogate: Decachlorobiphenyl	*74.3 %*	*32 - 91*		B9H0359	08/15/2019	*08/16/19 19:46*	
Surrogate: Tetrachloro-m-xylene	*71.6 %*	*38 - 93*		B9H0359	08/15/2019	*08/16/19 19:46*	
Surrogate: Tetrachloro-m-xylene	*67.0 %*	*38 - 93*		B9H0359	08/15/2019	*08/17/19 11:54*	

Certificate of Analysis

Leighton Consulting, Inc.		Project Number :	574 South Glassell, 12137.003
17781 Cowan Street		Report To :	Brynn McCulloch
Irvine , CA 92614		Reported :	08/19/2019

Client Sample ID LB3-2.5
Lab ID: 1903032-08

Total Metals by ICP-AES EPA 6010B

Analyst: VV

Analyte	Result (mg/kg)	PQL (mg/kg)	Dilution	Batch	Prepared	Date/Time Analyzed	Notes
Arsenic	**11**	1.0	1	B9H0329	08/14/2019	08/16/19 13:08	

Organochlorine Pesticides by EPA 8081

Analyst: BL

Analyte	Result (ug/kg)	PQL (ug/kg)	Dilution	Batch	Prepared	Date/Time Analyzed	Notes
4,4´-DDD	ND	2.0	1	B9H0359	08/15/2019	08/16/19 19:57	
4,4´-DDE	ND	2.0	1	B9H0359	08/15/2019	08/16/19 19:57	
4,4´-DDT	ND	2.0	1	B9H0359	08/15/2019	08/16/19 19:57	
Aldrin	ND	1.0	1	B9H0359	08/15/2019	08/16/19 19:57	
alpha-BHC	ND	1.0	1	B9H0359	08/15/2019	08/16/19 19:57	
alpha-Chlordane	ND	1.0	1	B9H0359	08/15/2019	08/16/19 19:57	
beta-BHC	ND	1.0	1	B9H0359	08/15/2019	08/16/19 19:57	
Chlordane	ND	8.5	1	B9H0359	08/15/2019	08/16/19 19:57	
delta-BHC	ND	1.0	1	B9H0359	08/15/2019	08/16/19 19:57	
Dieldrin	ND	2.0	1	B9H0359	08/15/2019	08/16/19 19:57	
Endosulfan I	ND	1.0	1	B9H0359	08/15/2019	08/16/19 19:57	
Endosulfan II	ND	2.0	1	B9H0359	08/15/2019	08/16/19 19:57	
Endosulfan sulfate	ND	2.0	1	B9H0359	08/15/2019	08/16/19 19:57	
Endrin	ND	2.0	1	B9H0359	08/15/2019	08/16/19 19:57	
Endrin aldehyde	ND	2.0	1	B9H0359	08/15/2019	08/16/19 19:57	
Endrin ketone	ND	2.0	1	B9H0359	08/15/2019	08/16/19 19:57	
gamma-BHC	ND	1.0	1	B9H0359	08/15/2019	08/16/19 19:57	
gamma-Chlordane	ND	1.0	1	B9H0359	08/15/2019	08/16/19 19:57	
Heptachlor	ND	1.0	1	B9H0359	08/15/2019	08/16/19 19:57	
Heptachlor epoxide	ND	1.0	1	B9H0359	08/15/2019	08/16/19 19:57	
Methoxychlor	ND	5.0	1	B9H0359	08/15/2019	08/16/19 19:57	
Toxaphene	ND	50	1	B9H0359	08/15/2019	08/16/19 19:57	
Surrogate: Decachlorobiphenyl	*67.2 %*	*32 - 91*		B9H0359	08/15/2019	*08/16/19 19:57*	
Surrogate: Tetrachloro-m-xylene	*69.1 %*	*38 - 93*		B9H0359	08/15/2019	*08/16/19 19:57*	

Certificate of Analysis

Leighton Consulting, Inc.		Project Number :	574 South Glassell, 12137.003
17781 Cowan Street		Report To :	Brynn McCulloch
Irvine , CA 92614		Reported :	08/19/2019

Client Sample ID LB4-0.5
Lab ID: 1903032-10

Total Metals by ICP-AES EPA 6010B

Analyst: VV

Analyte	Result (mg/kg)	PQL (mg/kg)	Dilution	Batch	Prepared	Date/Time Analyzed	Notes
Arsenic	**19**	1.0	1	B9H0329	08/14/2019	08/16/19 13:12	

Organochlorine Pesticides by EPA 8081

Analyst: BL

Analyte	Result (ug/kg)	PQL (ug/kg)	Dilution	Batch	Prepared	Date/Time Analyzed	Notes
4,4´-DDD	ND	4.0	2	B9H0359	08/15/2019	08/16/19 20:08	D1
4,4´-DDE [2C]	**15**	4.0	2	B9H0359	08/15/2019	08/16/19 20:08	
4,4´-DDT	ND	4.0	2	B9H0359	08/15/2019	08/16/19 20:08	D1
Aldrin	ND	2.0	2	B9H0359	08/15/2019	08/16/19 20:08	D1
alpha-BHC	ND	2.0	2	B9H0359	08/15/2019	08/16/19 20:08	D1
alpha-Chlordane	ND	2.0	2	B9H0359	08/15/2019	08/16/19 20:08	D1
beta-BHC	ND	2.0	2	B9H0359	08/15/2019	08/16/19 20:08	D1
Chlordane	ND	17	2	B9H0359	08/15/2019	08/16/19 20:08	D1
delta-BHC	ND	2.0	2	B9H0359	08/15/2019	08/16/19 20:08	D1
Dieldrin	ND	4.0	2	B9H0359	08/15/2019	08/16/19 20:08	D1
Endosulfan I	ND	2.0	2	B9H0359	08/15/2019	08/16/19 20:08	D1
Endosulfan II	ND	4.0	2	B9H0359	08/15/2019	08/16/19 20:08	D1
Endosulfan sulfate	ND	4.0	2	B9H0359	08/15/2019	08/16/19 20:08	D1
Endrin	ND	4.0	2	B9H0359	08/15/2019	08/16/19 20:08	D1
Endrin aldehyde	ND	4.0	2	B9H0359	08/15/2019	08/16/19 20:08	D1
Endrin ketone	ND	4.0	2	B9H0359	08/15/2019	08/16/19 20:08	D1
gamma-BHC	ND	2.0	2	B9H0359	08/15/2019	08/16/19 20:08	D1
gamma-Chlordane	ND	2.0	2	B9H0359	08/15/2019	08/16/19 20:08	D1
Heptachlor	ND	2.0	2	B9H0359	08/15/2019	08/16/19 20:08	D1
Heptachlor epoxide	ND	2.0	2	B9H0359	08/15/2019	08/16/19 20:08	D1
Methoxychlor	ND	10	2	B9H0359	08/15/2019	08/16/19 20:08	D1
Toxaphene	ND	100	2	B9H0359	08/15/2019	08/16/19 20:08	D1
Surrogate: Decachlorobiphenyl	*62.3 %*	*32 - 91*		B9H0359	08/15/2019	*08/16/19 20:08*	
Surrogate: Tetrachloro-m-xylene	*71.2 %*	*38 - 93*		B9H0359	08/15/2019	*08/16/19 20:08*	

Certificate of Analysis

Leighton Consulting, Inc.		Project Number :	574 South Glassell, 12137.003
17781 Cowan Street		Report To :	Brynn McCulloch
Irvine , CA 92614		Reported :	08/19/2019

Client Sample ID LB4-2.5
Lab ID: 1903032-11

Total Metals by ICP-AES EPA 6010B

Analyst: VV

Analyte	Result (mg/kg)	PQL (mg/kg)	Dilution	Batch	Prepared	Date/Time Analyzed	Notes
Arsenic	**9.5**	1.0	1	B9H0329	08/14/2019	08/16/19 13:13	

Organochlorine Pesticides by EPA 8081

Analyst: BL

Analyte	Result (ug/kg)	PQL (ug/kg)	Dilution	Batch	Prepared	Date/Time Analyzed	Notes
4,4´-DDD	ND	2.0	1	B9H0359	08/15/2019	08/16/19 20:19	
4,4´-DDE	ND	2.0	1	B9H0359	08/15/2019	08/16/19 20:19	
4,4´-DDT	ND	2.0	1	B9H0359	08/15/2019	08/16/19 20:19	
Aldrin	ND	1.0	1	B9H0359	08/15/2019	08/16/19 20:19	
alpha-BHC	ND	1.0	1	B9H0359	08/15/2019	08/16/19 20:19	
alpha-Chlordane	ND	1.0	1	B9H0359	08/15/2019	08/16/19 20:19	
beta-BHC	ND	1.0	1	B9H0359	08/15/2019	08/16/19 20:19	
Chlordane	ND	8.5	1	B9H0359	08/15/2019	08/16/19 20:19	
delta-BHC	ND	1.0	1	B9H0359	08/15/2019	08/16/19 20:19	
Dieldrin	ND	2.0	1	B9H0359	08/15/2019	08/16/19 20:19	
Endosulfan I	ND	1.0	1	B9H0359	08/15/2019	08/16/19 20:19	
Endosulfan II	ND	2.0	1	B9H0359	08/15/2019	08/16/19 20:19	
Endosulfan sulfate	ND	2.0	1	B9H0359	08/15/2019	08/16/19 20:19	
Endrin	ND	2.0	1	B9H0359	08/15/2019	08/16/19 20:19	
Endrin aldehyde	ND	2.0	1	B9H0359	08/15/2019	08/16/19 20:19	
Endrin ketone	ND	2.0	1	B9H0359	08/15/2019	08/16/19 20:19	
gamma-BHC	ND	1.0	1	B9H0359	08/15/2019	08/16/19 20:19	
gamma-Chlordane	ND	1.0	1	B9H0359	08/15/2019	08/16/19 20:19	
Heptachlor	ND	1.0	1	B9H0359	08/15/2019	08/16/19 20:19	
Heptachlor epoxide	ND	1.0	1	B9H0359	08/15/2019	08/16/19 20:19	
Methoxychlor	ND	5.0	1	B9H0359	08/15/2019	08/16/19 20:19	
Toxaphene	ND	50	1	B9H0359	08/15/2019	08/16/19 20:19	
Surrogate: Decachlorobiphenyl	*69.9 %*	*32 - 91*		B9H0359	08/15/2019	*08/16/19 20:19*	
Surrogate: Tetrachloro-m-xylene	*78.8 %*	*38 - 93*		B9H0359	08/15/2019	*08/16/19 20:19*	

Certificate of Analysis

Leighton Consulting, Inc.		Project Number :	574 South Glassell, 12137.003
17781 Cowan Street		Report To :	Brynn McCulloch
Irvine , CA 92614		Reported :	08/19/2019

Client Sample ID LB5-0.5
Lab ID: 1903032-13

Total Metals by ICP-AES EPA 6010B

Analyst: VV

Analyte	Result (mg/kg)	PQL (mg/kg)	Dilution	Batch	Prepared	Date/Time Analyzed	Notes
Arsenic	**18**	1.0	1	B9H0329	08/14/2019	08/16/19 13:14	

Organochlorine Pesticides by EPA 8081

Analyst: BL

Analyte	Result (ug/kg)	PQL (ug/kg)	Dilution	Batch	Prepared	Date/Time Analyzed	Notes
4,4´-DDD	ND	2.0	1	B9H0359	08/15/2019	08/16/19 20:30	
4,4´-DDE [2C]	**88**	4.0	2	B9H0359	08/15/2019	08/17/19 11:43	
4,4´-DDT [2C]	**2.6**	2.0	1	B9H0359	08/15/2019	08/16/19 20:30	
Aldrin	ND	1.0	1	B9H0359	08/15/2019	08/16/19 20:30	
alpha-BHC	ND	1.0	1	B9H0359	08/15/2019	08/16/19 20:30	
alpha-Chlordane	ND	1.0	1	B9H0359	08/15/2019	08/16/19 20:30	
beta-BHC	ND	1.0	1	B9H0359	08/15/2019	08/16/19 20:30	
Chlordane	ND	8.5	1	B9H0359	08/15/2019	08/16/19 20:30	
delta-BHC	ND	1.0	1	B9H0359	08/15/2019	08/16/19 20:30	
Dieldrin	ND	2.0	1	B9H0359	08/15/2019	08/16/19 20:30	
Endosulfan I	ND	1.0	1	B9H0359	08/15/2019	08/16/19 20:30	
Endosulfan II	ND	2.0	1	B9H0359	08/15/2019	08/16/19 20:30	
Endosulfan sulfate	ND	2.0	1	B9H0359	08/15/2019	08/16/19 20:30	
Endrin	ND	2.0	1	B9H0359	08/15/2019	08/16/19 20:30	
Endrin aldehyde	ND	2.0	1	B9H0359	08/15/2019	08/16/19 20:30	
Endrin ketone	ND	2.0	1	B9H0359	08/15/2019	08/16/19 20:30	
gamma-BHC	ND	1.0	1	B9H0359	08/15/2019	08/16/19 20:30	
gamma-Chlordane	ND	1.0	1	B9H0359	08/15/2019	08/16/19 20:30	
Heptachlor	ND	1.0	1	B9H0359	08/15/2019	08/16/19 20:30	
Heptachlor epoxide	ND	1.0	1	B9H0359	08/15/2019	08/16/19 20:30	
Methoxychlor	ND	5.0	1	B9H0359	08/15/2019	08/16/19 20:30	
Toxaphene	ND	50	1	B9H0359	08/15/2019	08/16/19 20:30	
Surrogate: Decachlorobiphenyl	*78.1 %*	*32 - 91*		B9H0359	08/15/2019	*08/17/19 11:43*	
Surrogate: Decachlorobiphenyl	*68.1 %*	*32 - 91*		B9H0359	08/15/2019	*08/16/19 20:30*	
Surrogate: Tetrachloro-m-xylene	*81.9 %*	*38 - 93*		B9H0359	08/15/2019	*08/17/19 11:43*	
Surrogate: Tetrachloro-m-xylene	*77.3 %*	*38 - 93*		B9H0359	08/15/2019	*08/16/19 20:30*	

Certificate of Analysis

Leighton Consulting, Inc.		Project Number :	574 South Glassell, 12137.003
17781 Cowan Street		Report To :	Brynn McCulloch
Irvine , CA 92614		Reported :	08/19/2019

Client Sample ID LB5-2.5
Lab ID: 1903032-14

Total Metals by ICP-AES EPA 6010B

Analyst: VV

Analyte	Result (mg/kg)	PQL (mg/kg)	Dilution	Batch	Prepared	Date/Time Analyzed	Notes
Arsenic	**4.9**	1.0	1	B9H0329	08/14/2019	08/16/19 13:15	

Organochlorine Pesticides by EPA 8081

Analyst: BL

Analyte	Result (ug/kg)	PQL (ug/kg)	Dilution	Batch	Prepared	Date/Time Analyzed	Notes
4,4´-DDD	ND	2.0	1	B9H0359	08/15/2019	08/16/19 20:51	
4,4´-DDE	ND	2.0	1	B9H0359	08/15/2019	08/16/19 20:51	
4,4´-DDT	ND	2.0	1	B9H0359	08/15/2019	08/16/19 20:51	
Aldrin	ND	1.0	1	B9H0359	08/15/2019	08/16/19 20:51	
alpha-BHC	ND	1.0	1	B9H0359	08/15/2019	08/16/19 20:51	
alpha-Chlordane	ND	1.0	1	B9H0359	08/15/2019	08/16/19 20:51	
beta-BHC	ND	1.0	1	B9H0359	08/15/2019	08/16/19 20:51	
Chlordane	ND	8.5	1	B9H0359	08/15/2019	08/16/19 20:51	
delta-BHC	ND	1.0	1	B9H0359	08/15/2019	08/16/19 20:51	
Dieldrin	ND	2.0	1	B9H0359	08/15/2019	08/16/19 20:51	
Endosulfan I	ND	1.0	1	B9H0359	08/15/2019	08/16/19 20:51	
Endosulfan II	ND	2.0	1	B9H0359	08/15/2019	08/16/19 20:51	
Endosulfan sulfate	ND	2.0	1	B9H0359	08/15/2019	08/16/19 20:51	
Endrin	ND	2.0	1	B9H0359	08/15/2019	08/16/19 20:51	
Endrin aldehyde	ND	2.0	1	B9H0359	08/15/2019	08/16/19 20:51	
Endrin ketone	ND	2.0	1	B9H0359	08/15/2019	08/16/19 20:51	
gamma-BHC	ND	1.0	1	B9H0359	08/15/2019	08/16/19 20:51	
gamma-Chlordane	ND	1.0	1	B9H0359	08/15/2019	08/16/19 20:51	
Heptachlor	ND	1.0	1	B9H0359	08/15/2019	08/16/19 20:51	
Heptachlor epoxide	ND	1.0	1	B9H0359	08/15/2019	08/16/19 20:51	
Methoxychlor	ND	5.0	1	B9H0359	08/15/2019	08/16/19 20:51	
Toxaphene	ND	50	1	B9H0359	08/15/2019	08/16/19 20:51	
Surrogate: Decachlorobiphenyl	*59.0 %*	*32 - 91*		B9H0359	08/15/2019	*08/16/19 20:51*	
Surrogate: Tetrachloro-m-xylene	*66.9 %*	*38 - 93*		B9H0359	08/15/2019	*08/16/19 20:51*	

Certificate of Analysis

Leighton Consulting, Inc.		Project Number :	574 South Glassell, 12137.003
17781 Cowan Street		Report To :	Brynn McCulloch
Irvine , CA 92614		Reported :	08/19/2019

Client Sample ID LB6-0.5
Lab ID: 1903032-16

Total Metals by ICP-AES EPA 6010B

Analyst: VV

Analyte	Result (mg/kg)	PQL (mg/kg)	Dilution	Batch	Prepared	Date/Time Analyzed	Notes
Arsenic	**17**	1.0	1	B9H0329	08/14/2019	08/16/19 13:16	

Organochlorine Pesticides by EPA 8081

Analyst: BL

Analyte	Result (ug/kg)	PQL (ug/kg)	Dilution	Batch	Prepared	Date/Time Analyzed	Notes
4,4´-DDD	ND	2.0	1	B9H0359	08/15/2019	08/16/19 21:02	
4,4´-DDE [2C]	**2.9**	2.0	1	B9H0359	08/15/2019	08/16/19 21:02	
4,4´-DDT	ND	2.0	1	B9H0359	08/15/2019	08/16/19 21:02	
Aldrin	ND	1.0	1	B9H0359	08/15/2019	08/16/19 21:02	
alpha-BHC	ND	1.0	1	B9H0359	08/15/2019	08/16/19 21:02	
alpha-Chlordane	ND	1.0	1	B9H0359	08/15/2019	08/16/19 21:02	
beta-BHC	ND	1.0	1	B9H0359	08/15/2019	08/16/19 21:02	
Chlordane	ND	8.5	1	B9H0359	08/15/2019	08/16/19 21:02	
delta-BHC	ND	1.0	1	B9H0359	08/15/2019	08/16/19 21:02	
Dieldrin	ND	2.0	1	B9H0359	08/15/2019	08/16/19 21:02	
Endosulfan I	ND	1.0	1	B9H0359	08/15/2019	08/16/19 21:02	
Endosulfan II	ND	2.0	1	B9H0359	08/15/2019	08/16/19 21:02	
Endosulfan sulfate	ND	2.0	1	B9H0359	08/15/2019	08/16/19 21:02	
Endrin	ND	2.0	1	B9H0359	08/15/2019	08/16/19 21:02	
Endrin aldehyde	ND	2.0	1	B9H0359	08/15/2019	08/16/19 21:02	
Endrin ketone	ND	2.0	1	B9H0359	08/15/2019	08/16/19 21:02	
gamma-BHC	ND	1.0	1	B9H0359	08/15/2019	08/16/19 21:02	
gamma-Chlordane	ND	1.0	1	B9H0359	08/15/2019	08/16/19 21:02	
Heptachlor	ND	1.0	1	B9H0359	08/15/2019	08/16/19 21:02	
Heptachlor epoxide	ND	1.0	1	B9H0359	08/15/2019	08/16/19 21:02	
Methoxychlor	ND	5.0	1	B9H0359	08/15/2019	08/16/19 21:02	
Toxaphene	ND	50	1	B9H0359	08/15/2019	08/16/19 21:02	
Surrogate: Decachlorobiphenyl	*61.2 %*	*32 - 91*		B9H0359	08/15/2019	*08/16/19 21:02*	
Surrogate: Tetrachloro-m-xylene	*65.0 %*	*38 - 93*		B9H0359	08/15/2019	*08/16/19 21:02*	

Certificate of Analysis

Leighton Consulting, Inc.		Project Number :	574 South Glassell, 12137.003
17781 Cowan Street		Report To :	Brynn McCulloch
Irvine , CA 92614		Reported :	08/19/2019

Client Sample ID LB6-2.5
Lab ID: 1903032-17

Total Metals by ICP-AES EPA 6010B

Analyst: VV

Analyte	Result (mg/kg)	PQL (mg/kg)	Dilution	Batch	Prepared	Date/Time Analyzed	Notes
Arsenic	**5.1**	1.0	1	B9H0329	08/14/2019	08/16/19 13:17	

Organochlorine Pesticides by EPA 8081

Analyst: BL

Analyte	Result (ug/kg)	PQL (ug/kg)	Dilution	Batch	Prepared	Date/Time Analyzed	Notes
4,4´-DDD	ND	2.0	1	B9H0359	08/15/2019	08/16/19 21:13	
4,4´-DDE	ND	2.0	1	B9H0359	08/15/2019	08/16/19 21:13	
4,4´-DDT	ND	2.0	1	B9H0359	08/15/2019	08/16/19 21:13	
Aldrin	ND	1.0	1	B9H0359	08/15/2019	08/16/19 21:13	
alpha-BHC	ND	1.0	1	B9H0359	08/15/2019	08/16/19 21:13	
alpha-Chlordane	ND	1.0	1	B9H0359	08/15/2019	08/16/19 21:13	
beta-BHC	ND	1.0	1	B9H0359	08/15/2019	08/16/19 21:13	
Chlordane	ND	8.5	1	B9H0359	08/15/2019	08/16/19 21:13	
delta-BHC	ND	1.0	1	B9H0359	08/15/2019	08/16/19 21:13	
Dieldrin	ND	2.0	1	B9H0359	08/15/2019	08/16/19 21:13	
Endosulfan I	ND	1.0	1	B9H0359	08/15/2019	08/16/19 21:13	
Endosulfan II	ND	2.0	1	B9H0359	08/15/2019	08/16/19 21:13	
Endosulfan sulfate	ND	2.0	1	B9H0359	08/15/2019	08/16/19 21:13	
Endrin	ND	2.0	1	B9H0359	08/15/2019	08/16/19 21:13	
Endrin aldehyde	ND	2.0	1	B9H0359	08/15/2019	08/16/19 21:13	
Endrin ketone	ND	2.0	1	B9H0359	08/15/2019	08/16/19 21:13	
gamma-BHC	ND	1.0	1	B9H0359	08/15/2019	08/16/19 21:13	
gamma-Chlordane	ND	1.0	1	B9H0359	08/15/2019	08/16/19 21:13	
Heptachlor	ND	1.0	1	B9H0359	08/15/2019	08/16/19 21:13	
Heptachlor epoxide	ND	1.0	1	B9H0359	08/15/2019	08/16/19 21:13	
Methoxychlor	ND	5.0	1	B9H0359	08/15/2019	08/16/19 21:13	
Toxaphene	ND	50	1	B9H0359	08/15/2019	08/16/19 21:13	
Surrogate: Decachlorobiphenyl	*59.2 %*	*32 - 91*		B9H0359	08/15/2019	*08/16/19 21:13*	
Surrogate: Tetrachloro-m-xylene	*68.9 %*	*38 - 93*		B9H0359	08/15/2019	*08/16/19 21:13*	

Certificate of Analysis

Leighton Consulting, Inc.		Project Number :	574 South Glassell, 12137.003
17781 Cowan Street		Report To :	Brynn McCulloch
Irvine , CA 92614		Reported :	08/19/2019

Client Sample ID LB7-0.5
Lab ID: 1903032-19

Total Metals by ICP-AES EPA 6010B

Analyst: VV

Analyte	Result (mg/kg)	PQL (mg/kg)	Dilution	Batch	Prepared	Date/Time Analyzed	Notes
Arsenic	**15**	1.0	1	B9H0329	08/14/2019	08/16/19 13:18	

Organochlorine Pesticides by EPA 8081

Analyst: BL

Analyte	Result (ug/kg)	PQL (ug/kg)	Dilution	Batch	Prepared	Date/Time Analyzed	Notes
4,4´-DDD	ND	2.0	1	B9H0359	08/15/2019	08/16/19 21:24	
4,4´-DDE	ND	2.0	1	B9H0359	08/15/2019	08/16/19 21:24	
4,4´-DDT	ND	2.0	1	B9H0359	08/15/2019	08/16/19 21:24	
Aldrin	ND	1.0	1	B9H0359	08/15/2019	08/16/19 21:24	
alpha-BHC	ND	1.0	1	B9H0359	08/15/2019	08/16/19 21:24	
alpha-Chlordane	ND	1.0	1	B9H0359	08/15/2019	08/16/19 21:24	
beta-BHC	ND	1.0	1	B9H0359	08/15/2019	08/16/19 21:24	
Chlordane	ND	8.5	1	B9H0359	08/15/2019	08/16/19 21:24	
delta-BHC	ND	1.0	1	B9H0359	08/15/2019	08/16/19 21:24	
Dieldrin	ND	2.0	1	B9H0359	08/15/2019	08/16/19 21:24	
Endosulfan I	ND	1.0	1	B9H0359	08/15/2019	08/16/19 21:24	
Endosulfan II	ND	2.0	1	B9H0359	08/15/2019	08/16/19 21:24	
Endosulfan sulfate	ND	2.0	1	B9H0359	08/15/2019	08/16/19 21:24	
Endrin	ND	2.0	1	B9H0359	08/15/2019	08/16/19 21:24	
Endrin aldehyde	ND	2.0	1	B9H0359	08/15/2019	08/16/19 21:24	
Endrin ketone	ND	2.0	1	B9H0359	08/15/2019	08/16/19 21:24	
gamma-BHC	ND	1.0	1	B9H0359	08/15/2019	08/16/19 21:24	
gamma-Chlordane	ND	1.0	1	B9H0359	08/15/2019	08/16/19 21:24	
Heptachlor	ND	1.0	1	B9H0359	08/15/2019	08/16/19 21:24	
Heptachlor epoxide	ND	1.0	1	B9H0359	08/15/2019	08/16/19 21:24	
Methoxychlor	ND	5.0	1	B9H0359	08/15/2019	08/16/19 21:24	
Toxaphene	ND	50	1	B9H0359	08/15/2019	08/16/19 21:24	
Surrogate: Decachlorobiphenyl	*51.0 %*	*32 - 91*		B9H0359	08/15/2019	*08/16/19 21:24*	
Surrogate: Tetrachloro-m-xylene	*55.7 %*	*38 - 93*		B9H0359	08/15/2019	*08/16/19 21:24*	

Certificate of Analysis

Leighton Consulting, Inc.		Project Number :	574 South Glassell, 12137.003
17781 Cowan Street		Report To :	Brynn McCulloch
Irvine , CA 92614		Reported :	08/19/2019

Client Sample ID LB7-2.5
Lab ID: 1903032-20

Total Metals by ICP-AES EPA 6010B

Analyst: VV

Analyte	Result (mg/kg)	PQL (mg/kg)	Dilution	Batch	Prepared	Date/Time Analyzed	Notes
Arsenic	**5.3**	1.0	1	B9H0329	08/14/2019	08/16/19 13:20	

Organochlorine Pesticides by EPA 8081

Analyst: BL

Analyte	Result (ug/kg)	PQL (ug/kg)	Dilution	Batch	Prepared	Date/Time Analyzed	Notes
4,4´-DDD	ND	2.0	1	B9H0359	08/15/2019	08/16/19 21:35	
4,4´-DDE	ND	2.0	1	B9H0359	08/15/2019	08/16/19 21:35	
4,4´-DDT	ND	2.0	1	B9H0359	08/15/2019	08/16/19 21:35	
Aldrin	ND	1.0	1	B9H0359	08/15/2019	08/16/19 21:35	
alpha-BHC	ND	1.0	1	B9H0359	08/15/2019	08/16/19 21:35	
alpha-Chlordane	ND	1.0	1	B9H0359	08/15/2019	08/16/19 21:35	
beta-BHC	ND	1.0	1	B9H0359	08/15/2019	08/16/19 21:35	
Chlordane	ND	8.5	1	B9H0359	08/15/2019	08/16/19 21:35	
delta-BHC	ND	1.0	1	B9H0359	08/15/2019	08/16/19 21:35	
Dieldrin	ND	2.0	1	B9H0359	08/15/2019	08/16/19 21:35	
Endosulfan I	ND	1.0	1	B9H0359	08/15/2019	08/16/19 21:35	
Endosulfan II	ND	2.0	1	B9H0359	08/15/2019	08/16/19 21:35	
Endosulfan sulfate	ND	2.0	1	B9H0359	08/15/2019	08/16/19 21:35	
Endrin	ND	2.0	1	B9H0359	08/15/2019	08/16/19 21:35	
Endrin aldehyde	ND	2.0	1	B9H0359	08/15/2019	08/16/19 21:35	
Endrin ketone	ND	2.0	1	B9H0359	08/15/2019	08/16/19 21:35	
gamma-BHC	ND	1.0	1	B9H0359	08/15/2019	08/16/19 21:35	
gamma-Chlordane	ND	1.0	1	B9H0359	08/15/2019	08/16/19 21:35	
Heptachlor	ND	1.0	1	B9H0359	08/15/2019	08/16/19 21:35	
Heptachlor epoxide	ND	1.0	1	B9H0359	08/15/2019	08/16/19 21:35	
Methoxychlor	ND	5.0	1	B9H0359	08/15/2019	08/16/19 21:35	
Toxaphene	ND	50	1	B9H0359	08/15/2019	08/16/19 21:35	
Surrogate: Decachlorobiphenyl	*62.9 %*	*32 - 91*		B9H0359	08/15/2019	*08/16/19 21:35*	
Surrogate: Tetrachloro-m-xylene	*71.5 %*	*38 - 93*		B9H0359	08/15/2019	*08/16/19 21:35*	

Certificate of Analysis

Leighton Consulting, Inc.		Project Number :	574 South Glassell, 12137.003
17781 Cowan Street		Report To :	Brynn McCulloch
Irvine , CA 92614		Reported :	08/19/2019

Client Sample ID LB8-0.5
Lab ID: 1903032-22

Total Metals by ICP-AES EPA 6010B

Analyst: VV

Analyte	Result (mg/kg)	PQL (mg/kg)	Dilution	Batch	Prepared	Date/Time Analyzed	Notes
Arsenic	**1.9**	1.0	1	B9H0329	08/14/2019	08/16/19 13:21	

Organochlorine Pesticides by EPA 8081

Analyst: BL

Analyte	Result (ug/kg)	PQL (ug/kg)	Dilution	Batch	Prepared	Date/Time Analyzed	Notes
4,4´-DDD	ND	4.0	2	B9H0359	08/15/2019	08/16/19 21:46	D1
4,4´-DDE	ND	4.0	2	B9H0359	08/15/2019	08/16/19 21:46	D1
4,4´-DDT	ND	4.0	2	B9H0359	08/15/2019	08/16/19 21:46	D1
Aldrin	ND	2.0	2	B9H0359	08/15/2019	08/16/19 21:46	D1
alpha-BHC	ND	2.0	2	B9H0359	08/15/2019	08/16/19 21:46	D1
alpha-Chlordane	ND	2.0	2	B9H0359	08/15/2019	08/16/19 21:46	D1
beta-BHC	ND	2.0	2	B9H0359	08/15/2019	08/16/19 21:46	D1
Chlordane	ND	17	2	B9H0359	08/15/2019	08/16/19 21:46	D1
delta-BHC	ND	2.0	2	B9H0359	08/15/2019	08/16/19 21:46	D1
Dieldrin	ND	4.0	2	B9H0359	08/15/2019	08/16/19 21:46	D1
Endosulfan I	ND	2.0	2	B9H0359	08/15/2019	08/16/19 21:46	D1
Endosulfan II	ND	4.0	2	B9H0359	08/15/2019	08/16/19 21:46	D1
Endosulfan sulfate	ND	4.0	2	B9H0359	08/15/2019	08/16/19 21:46	D1
Endrin	ND	4.0	2	B9H0359	08/15/2019	08/16/19 21:46	D1
Endrin aldehyde	ND	4.0	2	B9H0359	08/15/2019	08/16/19 21:46	D1
Endrin ketone	ND	4.0	2	B9H0359	08/15/2019	08/16/19 21:46	D1
gamma-BHC	ND	2.0	2	B9H0359	08/15/2019	08/16/19 21:46	D1
gamma-Chlordane	ND	2.0	2	B9H0359	08/15/2019	08/16/19 21:46	D1
Heptachlor	ND	2.0	2	B9H0359	08/15/2019	08/16/19 21:46	D1
Heptachlor epoxide	ND	2.0	2	B9H0359	08/15/2019	08/16/19 21:46	D1
Methoxychlor	ND	10	2	B9H0359	08/15/2019	08/16/19 21:46	D1
Toxaphene	ND	100	2	B9H0359	08/15/2019	08/16/19 21:46	D1
Surrogate: Decachlorobiphenyl	*72.3 %*	*32 - 91*		B9H0359	08/15/2019	*08/16/19 21:46*	
Surrogate: Tetrachloro-m-xylene	*76.3 %*	*38 - 93*		B9H0359	08/15/2019	*08/16/19 21:46*	

Certificate of Analysis

Leighton Consulting, Inc.		Project Number :	574 South Glassell, 12137.003
17781 Cowan Street		Report To :	Brynn McCulloch
Irvine , CA 92614		Reported :	08/19/2019

Client Sample ID LB8-2.5
Lab ID: 1903032-23

Total Metals by ICP-AES EPA 6010B

Analyst: VV

Analyte	Result (mg/kg)	PQL (mg/kg)	Dilution	Batch	Prepared	Date/Time Analyzed	Notes
Arsenic	**4.8**	1.0	1	B9H0329	08/14/2019	08/16/19 13:22	

Organochlorine Pesticides by EPA 8081

Analyst: BL

Analyte	Result (ug/kg)	PQL (ug/kg)	Dilution	Batch	Prepared	Date/Time Analyzed	Notes
4,4´-DDD	ND	2.0	1	B9H0359	08/15/2019	08/16/19 21:57	
4,4´-DDE	ND	2.0	1	B9H0359	08/15/2019	08/16/19 21:57	
4,4´-DDT	ND	2.0	1	B9H0359	08/15/2019	08/16/19 21:57	
Aldrin	ND	1.0	1	B9H0359	08/15/2019	08/16/19 21:57	
alpha-BHC	ND	1.0	1	B9H0359	08/15/2019	08/16/19 21:57	
alpha-Chlordane	ND	1.0	1	B9H0359	08/15/2019	08/16/19 21:57	
beta-BHC	ND	1.0	1	B9H0359	08/15/2019	08/16/19 21:57	
Chlordane	ND	8.5	1	B9H0359	08/15/2019	08/16/19 21:57	
delta-BHC	ND	1.0	1	B9H0359	08/15/2019	08/16/19 21:57	
Dieldrin	ND	2.0	1	B9H0359	08/15/2019	08/16/19 21:57	
Endosulfan I	ND	1.0	1	B9H0359	08/15/2019	08/16/19 21:57	
Endosulfan II	ND	2.0	1	B9H0359	08/15/2019	08/16/19 21:57	
Endosulfan sulfate	ND	2.0	1	B9H0359	08/15/2019	08/16/19 21:57	
Endrin	ND	2.0	1	B9H0359	08/15/2019	08/16/19 21:57	
Endrin aldehyde	ND	2.0	1	B9H0359	08/15/2019	08/16/19 21:57	
Endrin ketone	ND	2.0	1	B9H0359	08/15/2019	08/16/19 21:57	
gamma-BHC	ND	1.0	1	B9H0359	08/15/2019	08/16/19 21:57	
gamma-Chlordane	ND	1.0	1	B9H0359	08/15/2019	08/16/19 21:57	
Heptachlor	ND	1.0	1	B9H0359	08/15/2019	08/16/19 21:57	
Heptachlor epoxide	ND	1.0	1	B9H0359	08/15/2019	08/16/19 21:57	
Methoxychlor	ND	5.0	1	B9H0359	08/15/2019	08/16/19 21:57	
Toxaphene	ND	50	1	B9H0359	08/15/2019	08/16/19 21:57	
Surrogate: Decachlorobiphenyl	*73.2 %*	*32 - 91*		B9H0359	08/15/2019	*08/16/19 21:57*	
Surrogate: Tetrachloro-m-xylene	*78.5 %*	*38 - 93*		B9H0359	08/15/2019	*08/16/19 21:57*	

Certificate of Analysis

Leighton Consulting, Inc.		Project Number :	574 South Glassell, 12137.003
17781 Cowan Street		Report To :	Brynn McCulloch
Irvine , CA 92614		Reported :	08/19/2019

QUALITY CONTROL SECTION

Total Metals by ICP-AES EPA 6010B - Quality Control

Analyte	Result (mg/kg)	PQL (mg/kg)	MDL (mg/kg)	Spike Level	Source Result	% Rec	% Rec Limits	RPD	RPD Limit	Notes
Batch B9H0329 - EPA 3050B_S										
Blank (B9H0329-BLK1)					Prepared: 8/14/2019 Analyzed: 8/16/2019					
Arsenic	ND	1.0	0.12							
LCS (B9H0329-BS1)					Prepared: 8/14/2019 Analyzed: 8/16/2019					
Arsenic	45.1344	1.0	0.12	50.0000		90.3	80 - 120			
Matrix Spike (B9H0329-MS1)			**Source: 1903032-01**		Prepared: 8/14/2019 Analyzed: 8/16/2019					
Arsenic	97.6794	1.0	0.12	125.000	4.56534	74.5	46 - 97			
Matrix Spike Dup (B9H0329-MSD1)			**Source: 1903032-01**		Prepared: 8/14/2019 Analyzed: 8/16/2019					
Arsenic	100.082	1.0	0.12	125.000	4.56534	76.4	46 - 97	2.43	20	

Certificate of Analysis

Leighton Consulting, Inc.		Project Number :	574 South Glassell, 12137.003
17781 Cowan Street		Report To :	Brynn McCulloch
Irvine , CA 92614		Reported :	08/19/2019

Organochlorine Pesticides by EPA 8081 - Quality Control

Analyte	Result (ug/kg)	PQL (ug/kg)	MDL (ug/kg)	Spike Level	Source Result	% Rec	% Rec Limits	RPD	RPD Limit	Notes
Batch B9H0359 - GCSEMI_PCB/PEST_S										
Blank (B9H0359-BLK1)							Prepared: 8/15/2019 Analyzed: 8/16/2019			
4,4´-DDD	ND	2.0	0.07							
4,4´-DDD [2C]	ND	2.0	0.07							
4,4´-DDE	ND	2.0	0.11							
4,4´-DDE [2C]	ND	2.0	0.11							
4,4´-DDT	ND	2.0	0.10							
4,4´-DDT [2C]	ND	2.0	0.10							
Aldrin	ND	1.0	0.12							
Aldrin [2C]	ND	1.0	0.12							
alpha-BHC	ND	1.0	0.11							
alpha-BHC [2C]	ND	1.0	0.11							
alpha-Chlordane	ND	1.0	0.12							
alpha-Chlordane [2C]	ND	1.0	0.12							
beta-BHC	ND	1.0	0.06							
beta-BHC [2C]	ND	1.0	0.06							
Chlordane	ND	8.5	1.1							
Chlordane [2C]	ND	8.5	1.1							
delta-BHC	ND	1.0	0.12							
delta-BHC [2C]	ND	1.0	0.12							
Dieldrin	ND	2.0	0.26							
Dieldrin [2C]	ND	2.0	0.26							
Endosulfan I	ND	1.0	0.10							
Endosulfan I [2C]	ND	1.0	0.10							
Endosulfan II	ND	2.0	0.15							
Endosulfan II [2C]	ND	2.0	0.15							
Endosulfan sulfate	ND	2.0	0.16							
Endosulfan Sulfate [2C]	ND	2.0	0.16							
Endrin	ND	2.0	0.14							
Endrin [2C]	ND	2.0	0.14							
Endrin aldehyde	ND	2.0	0.31							
Endrin aldehyde [2C]	ND	2.0	0.31							
Endrin ketone	ND	2.0	0.13							
Endrin ketone [2C]	ND	2.0	0.13							
gamma-BHC	ND	1.0	0.10							
gamma-BHC [2C]	ND	1.0	0.10							
gamma-Chlordane	ND	1.0	0.89							
gamma-Chlordane [2C]	ND	1.0	0.89							
Heptachlor	ND	1.0	0.12							
Heptachlor [2C]	ND	1.0	0.12							
Heptachlor epoxide	ND	1.0	0.09							
Heptachlor epoxide [2C]	ND	1.0	0.09							
Methoxychlor	ND	5.0	0.18							

Certificate of Analysis

Leighton Consulting, Inc.	Project Number :	574 South Glassell, 12137.003
17781 Cowan Street	Report To :	Brynn McCulloch
Irvine , CA 92614	Reported :	08/19/2019

Organochlorine Pesticides by EPA 8081 - Quality Control (cont'd)

Analyte	Result (ug/kg)	PQL (ug/kg)	MDL (ug/kg)	Spike Level	Source Result	% Rec	% Rec Limits	RPD	RPD Limit	Notes
Batch B9H0359 - GCSEMI_PCB/PEST_S (continued)										
Blank (B9H0359-BLK1) - Continued					Prepared: 8/15/2019 Analyzed: 8/16/2019					
Methoxychlor [2C]	ND	5.0	0.18							
Toxaphene	ND	50	4.7							
Toxaphene [2C]	ND	50	4.7							
Surrogate: Decachlorobiphenyl	*12.17*			*16.6667*		*73.0*	*32 - 91*			
Surrogate: Decachlorobiphenyl [2	*12.61*			*16.6667*		*75.7*	*32 - 91*			
Surrogate: Tetrachloro-m-xylene	*12.32*			*16.6667*		*73.9*	*38 - 93*			
Surrogate: Tetrachloro-m-xylene [	*12.64*			*16.6667*		*75.8*	*38 - 93*			
LCS (B9H0359-BS1)					Prepared: 8/15/2019 Analyzed: 8/16/2019					
4,4´-DDD	14.7977	2.0	0.07	16.6667		88.8	66 - 112			
4,4´-DDD [2C]	17.2483	2.0	0.07	16.6667		103	66 - 112			
4,4´-DDE	14.1175	2.0	0.11	16.6667		84.7	62 - 112			
4,4´-DDE [2C]	15.2837	2.0	0.11	16.6667		91.7	62 - 112			
4,4´-DDT	12.8788	2.0	0.10	16.6667		77.3	48 - 90			
4,4´-DDT [2C]	14.3430	2.0	0.10	16.6667		86.1	48 - 90			
Aldrin	13.8368	1.0	0.12	16.6667		83.0	58 - 104			
Aldrin [2C]	15.4180	1.0	0.12	16.6667		92.5	58 - 104			
alpha-BHC	13.1013	1.0	0.11	16.6667		78.6	57 - 105			
alpha-BHC [2C]	14.4353	1.0	0.11	16.6667		86.6	57 - 105			
alpha-Chlordane	14.0605	1.0	0.12	16.6667		84.4	62 - 108			
alpha-Chlordane [2C]	15.6607	1.0	0.12	16.6667		94.0	62 - 108			
beta-BHC	13.8307	1.0	0.06	16.6667		83.0	59 - 106			
beta-BHC [2C]	15.3072	1.0	0.06	16.6667		91.8	59 - 106			
delta-BHC	10.5218	1.0	0.12	16.6667		63.1	63 - 115			
delta-BHC [2C]	11.3793	1.0	0.12	16.6667		68.3	63 - 115			
Dieldrin	13.5813	2.0	0.26	16.6667		81.5	59 - 102			
Dieldrin [2C]	14.9907	2.0	0.26	16.6667		89.9	59 - 102			
Endosulfan I	12.8417	1.0	0.10	16.6667		77.1	61 - 99			
Endosulfan I [2C]	14.6685	1.0	0.10	16.6667		88.0	61 - 99			
Endosulfan II	14.1708	2.0	0.15	16.6667		85.0	65 - 105			
Endosulfan II [2C]	15.9623	2.0	0.15	16.6667		95.8	65 - 105			
Endosulfan sulfate	12.8973	2.0	0.16	16.6667		77.4	59 - 107			
Endosulfan Sulfate [2C]	14.9992	2.0	0.16	16.6667		90.0	59 - 107			
Endrin	15.0547	2.0	0.14	16.6667		90.3	65 - 113			
Endrin [2C]	17.1022	2.0	0.14	16.6667		103	65 - 113			
Endrin aldehyde	13.8740	2.0	0.31	16.6667		83.2	61 - 109			
Endrin aldehyde [2C]	15.8988	2.0	0.31	16.6667		95.4	61 - 109			
Endrin ketone	13.3815	2.0	0.13	16.6667		80.3	56 - 97			
Endrin ketone [2C]	16.5282	2.0	0.13	16.6667		99.2	56 - 97			L3
gamma-BHC	13.5413	1.0	0.10	16.6667		81.2	57 - 101			
gamma-BHC [2C]	15.1270	1.0	0.10	16.6667		90.8	57 - 101			

Certificate of Analysis

Leighton Consulting, Inc.	Project Number :	574 South Glassell, 12137.003
17781 Cowan Street	Report To :	Brynn McCulloch
Irvine , CA 92614	Reported :	08/19/2019

Organochlorine Pesticides by EPA 8081 - Quality Control (cont'd)

Analyte	Result (ug/kg)	PQL (ug/kg)	MDL (ug/kg)	Spike Level	Source Result	% Rec	% Rec Limits	RPD	RPD Limit	Notes
Batch B9H0359 - GCSEMI_PCB/PEST_S (continued)										
LCS (B9H0359-BS1) - Continued					Prepared: 8/15/2019 Analyzed: 8/16/2019					
gamma-Chlordane	13.6070	1.0	0.89	16.6667		81.6	56 - 125			
gamma-Chlordane [2C]	15.8502	1.0	0.89	16.6667		95.1	56 - 125			
Heptachlor	14.1095	1.0	0.12	16.6667		84.7	61 - 105			
Heptachlor [2C]	17.4882	1.0	0.12	16.6667		105	61 - 105			
Heptachlor epoxide	13.0805	1.0	0.09	16.6667		78.5	59 - 97			
Heptachlor epoxide [2C]	15.2162	1.0	0.09	16.6667		91.3	59 - 97			
Methoxychlor	13.2317	5.0	0.18	16.6667		79.4	68 - 118			
Methoxychlor [2C]	20.2058	5.0	0.18	16.6667		121	68 - 118			L3
Surrogate: Decachlorobiphenyl	*13.12*			*16.6667*		*78.7*	*32 - 91*			
Surrogate: Decachlorobiphenyl [2	*13.46*			*16.6667*		*80.7*	*32 - 91*			
Surrogate: Tetrachloro-m-xylene	*13.23*			*16.6667*		*79.4*	*38 - 93*			
Surrogate: Tetrachloro-m-xylene [	*13.71*			*16.6667*		*82.3*	*38 - 93*			
Matrix Spike (B9H0359-MS1)			**Source: 1903032-23**		Prepared: 8/15/2019 Analyzed: 8/16/2019					
4,4´-DDD	13.8617	2.0	0.07	16.6667	ND	83.2	33 - 116			
4,4´-DDD [2C]	16.0177	2.0	0.07	16.6667	ND	96.1	33 - 116			
4,4´-DDE	13.3630	2.0	0.11	16.6667	ND	80.2	29 - 128			
4,4´-DDE [2C]	14.2300	2.0	0.11	16.6667	ND	85.4	29 - 128			
4,4´-DDT	12.7310	2.0	0.10	16.6667	ND	76.4	27 - 109			
4,4´-DDT [2C]	15.9003	2.0	0.10	16.6667	ND	95.4	27 - 109			
Aldrin	12.9092	1.0	0.12	16.6667	ND	77.5	34 - 110			
Aldrin [2C]	14.3618	1.0	0.12	16.6667	ND	86.2	34 - 110			
alpha-BHC	12.4797	1.0	0.11	16.6667	ND	74.9	39 - 107			
alpha-BHC [2C]	13.5832	1.0	0.11	16.6667	ND	81.5	39 - 107			
alpha-Chlordane	13.3102	1.0	0.12	16.6667	ND	79.9	37 - 111			
alpha-Chlordane [2C]	14.6798	1.0	0.12	16.6667	ND	88.1	37 - 111			
beta-BHC	13.3142	1.0	0.06	16.6667	ND	79.9	33 - 111			
beta-BHC [2C]	14.5035	1.0	0.06	16.6667	ND	87.0	33 - 111			
delta-BHC	10.0313	1.0	0.12	16.6667	ND	60.2	25 - 122			
delta-BHC [2C]	10.7442	1.0	0.12	16.6667	ND	64.5	25 - 122			
Dieldrin	12.9533	2.0	0.26	16.6667	ND	77.7	28 - 114			
Dieldrin [2C]	13.9987	2.0	0.26	16.6667	ND	84.0	28 - 114			
Endosulfan I	12.0872	1.0	0.10	16.6667	ND	72.5	35 - 107			
Endosulfan I [2C]	13.7297	1.0	0.10	16.6667	ND	82.4	35 - 107			
Endosulfan II	13.5202	2.0	0.15	16.6667	ND	81.1	13 - 122			
Endosulfan II [2C]	14.9895	2.0	0.15	16.6667	ND	89.9	13 - 122			
Endosulfan sulfate	12.3768	2.0	0.16	16.6667	ND	74.3	13 - 120			
Endosulfan Sulfate [2C]	13.9483	2.0	0.16	16.6667	ND	83.7	13 - 120			
Endrin	14.5110	2.0	0.14	16.6667	ND	87.1	31 - 121			
Endrin [2C]	16.3973	2.0	0.14	16.6667	ND	98.4	31 - 121			
Endrin aldehyde	12.9552	2.0	0.31	16.6667	ND	77.7	18 - 129			

Certificate of Analysis

Leighton Consulting, Inc.	Project Number :	574 South Glassell, 12137.003
17781 Cowan Street	Report To :	Brynn McCulloch
Irvine , CA 92614	Reported :	08/19/2019

Organochlorine Pesticides by EPA 8081 - Quality Control (cont'd)

Analyte	Result (ug/kg)	PQL (ug/kg)	MDL (ug/kg)	Spike Level	Source Result	% Rec	% Rec Limits	RPD	RPD Limit	Notes
Batch B9H0359 - GCSEMI_PCB/PEST_S (continued)										
Matrix Spike (B9H0359-MS1) - Continued			**Source: 1903032-23**		Prepared: 8/15/2019 Analyzed: 8/16/2019					
Endrin aldehyde [2C]	13.3975	2.0	0.31	16.6667	ND	80.4	18 - 129			
Endrin ketone	13.3295	2.0	0.13	16.6667	ND	80.0	14 - 113			
Endrin ketone [2C]	16.0425	2.0	0.13	16.6667	ND	96.3	14 - 113			
gamma-BHC	12.9550	1.0	0.10	16.6667	ND	77.7	34 - 104			
gamma-BHC [2C]	14.2202	1.0	0.10	16.6667	ND	85.3	34 - 104			
gamma-Chlordane	12.9588	1.0	0.89	16.6667	ND	77.8	35 - 121			
gamma-Chlordane [2C]	15.0465	1.0	0.89	16.6667	ND	90.3	35 - 121			
Heptachlor	13.5515	1.0	0.12	16.6667	ND	81.3	35 - 110			
Heptachlor [2C]	17.1880	1.0	0.12	16.6667	ND	103	35 - 110			
Heptachlor epoxide	12.6845	1.0	0.09	16.6667	ND	76.1	31 - 106			
Heptachlor epoxide [2C]	14.4327	1.0	0.09	16.6667	ND	86.6	31 - 106			
Methoxychlor	15.0033	5.0	0.18	16.6667	ND	90.0	21 - 128			
Methoxychlor [2C]	21.5465	5.0	0.18	16.6667	ND	129	21 - 128			M1
Surrogate: Decachlorobiphenyl	*11.85*			*16.6667*		*71.1*	*32 - 91*			
Surrogate: Decachlorobiphenyl [2	*11.99*			*16.6667*		*71.9*	*32 - 91*			
Surrogate: Tetrachloro-m-xylene	*12.51*			*16.6667*		*75.0*	*38 - 93*			
Surrogate: Tetrachloro-m-xylene [	*12.82*			*16.6667*		*76.9*	*38 - 93*			
Matrix Spike Dup (B9H0359-MSD1)			**Source: 1903032-23**		Prepared: 8/15/2019 Analyzed: 8/16/2019					
4,4´-DDD	14.3495	2.0	0.07	16.6667	ND	86.1	33 - 116	3.46	20	
4,4´-DDD [2C]	16.4715	2.0	0.07	16.6667	ND	98.8	33 - 116	2.79	20	
4,4´-DDE	13.8257	2.0	0.11	16.6667	ND	83.0	29 - 128	3.40	20	
4,4´-DDE [2C]	14.6657	2.0	0.11	16.6667	ND	88.0	29 - 128	3.02	20	
4,4´-DDT	13.3385	2.0	0.10	16.6667	ND	80.0	27 - 109	4.66	20	
4,4´-DDT [2C]	16.5845	2.0	0.10	16.6667	ND	99.5	27 - 109	4.21	20	
Aldrin	13.2935	1.0	0.12	16.6667	ND	79.8	34 - 110	2.93	20	
Aldrin [2C]	14.7613	1.0	0.12	16.6667	ND	88.6	34 - 110	2.74	20	
alpha-BHC	12.6990	1.0	0.11	16.6667	ND	76.2	39 - 107	1.74	20	
alpha-BHC [2C]	13.6883	1.0	0.11	16.6667	ND	82.1	39 - 107	0.771	20	
alpha-Chlordane	13.6220	1.0	0.12	16.6667	ND	81.7	37 - 111	2.32	20	
alpha-Chlordane [2C]	15.0865	1.0	0.12	16.6667	ND	90.5	37 - 111	2.73	20	
beta-BHC	13.7093	1.0	0.06	16.6667	ND	82.3	33 - 111	2.92	20	
beta-BHC [2C]	14.9012	1.0	0.06	16.6667	ND	89.4	33 - 111	2.70	20	
delta-BHC	10.2957	1.0	0.12	16.6667	ND	61.8	25 - 122	2.60	20	
delta-BHC [2C]	11.0483	1.0	0.12	16.6667	ND	66.3	25 - 122	2.79	20	
Dieldrin	13.4335	2.0	0.26	16.6667	ND	80.6	28 - 114	3.64	20	
Dieldrin [2C]	14.4320	2.0	0.26	16.6667	ND	86.6	28 - 114	3.05	20	
Endosulfan I	12.4652	1.0	0.10	16.6667	ND	74.8	35 - 107	3.08	20	
Endosulfan I [2C]	14.1562	1.0	0.10	16.6667	ND	84.9	35 - 107	3.06	20	
Endosulfan II	13.9570	2.0	0.15	16.6667	ND	83.7	13 - 122	3.18	20	
Endosulfan II [2C]	15.4757	2.0	0.15	16.6667	ND	92.9	13 - 122	3.19	20	

Certificate of Analysis

Leighton Consulting, Inc.	Project Number :	574 South Glassell, 12137.003
17781 Cowan Street	Report To :	Brynn McCulloch
Irvine , CA 92614	Reported :	08/19/2019

Organochlorine Pesticides by EPA 8081 - Quality Control (cont'd)

Analyte	Result (ug/kg)	PQL (ug/kg)	MDL (ug/kg)	Spike Level	Source Result	% Rec	% Rec Limits	RPD	RPD Limit	Notes
Batch B9H0359 - GCSEMI_PCB/PEST_S (continued)										
Matrix Spike Dup (B9H0359-MSD1) - Continued			**Source: 1903032-23**		Prepared: 8/15/2019 Analyzed: 8/16/2019					
Endosulfan sulfate	12.8638	2.0	0.16	16.6667	ND	77.2	13 - 120	3.86	20	
Endosulfan Sulfate [2C]	14.2647	2.0	0.16	16.6667	ND	85.6	13 - 120	2.24	20	
Endrin	15.0465	2.0	0.14	16.6667	ND	90.3	31 - 121	3.62	20	
Endrin [2C]	16.9948	2.0	0.14	16.6667	ND	102	31 - 121	3.58	20	
Endrin aldehyde	13.4240	2.0	0.31	16.6667	ND	80.5	18 - 129	3.55	20	
Endrin aldehyde [2C]	13.8263	2.0	0.31	16.6667	ND	83.0	18 - 129	3.15	20	
Endrin ketone	13.8932	2.0	0.13	16.6667	ND	83.4	14 - 113	4.14	20	
Endrin ketone [2C]	16.6202	2.0	0.13	16.6667	ND	99.7	14 - 113	3.54	20	
gamma-BHC	13.2717	1.0	0.10	16.6667	ND	79.6	34 - 104	2.41	20	
gamma-BHC [2C]	14.5850	1.0	0.10	16.6667	ND	87.5	34 - 104	2.53	20	
gamma-Chlordane	13.2575	1.0	0.89	16.6667	ND	79.5	35 - 121	2.28	20	
gamma-Chlordane [2C]	15.4335	1.0	0.89	16.6667	ND	92.6	35 - 121	2.54	20	
Heptachlor	13.9577	1.0	0.12	16.6667	ND	83.7	35 - 110	2.95	20	
Heptachlor [2C]	17.7563	1.0	0.12	16.6667	ND	107	35 - 110	3.25	20	
Heptachlor epoxide	12.8362	1.0	0.09	16.6667	ND	77.0	31 - 106	1.19	20	
Heptachlor epoxide [2C]	14.8443	1.0	0.09	16.6667	ND	89.1	31 - 106	2.81	20	
Methoxychlor	15.7442	5.0	0.18	16.6667	ND	94.5	21 - 128	4.82	20	
Methoxychlor [2C]	21.6853	5.0	0.18	16.6667	ND	130	21 - 128	0.642	20	M1
Surrogate: Decachlorobiphenyl	*12.37*			*16.6667*		*74.2*	*32 - 91*			
Surrogate: Decachlorobiphenyl [2	*12.45*			*16.6667*		*74.7*	*32 - 91*			
Surrogate: Tetrachloro-m-xylene	*12.54*			*16.6667*		*75.2*	*38 - 93*			
Surrogate: Tetrachloro-m-xylene [	*12.99*			*16.6667*		*77.9*	*38 - 93*			

Certificate of Analysis

Leighton Consulting, Inc.		Project Number :	574 South Glassell, 12137.003
17781 Cowan Street		Report To :	Brynn McCulloch
Irvine , CA 92614		Reported :	08/19/2019

Notes and Definitions

M1	Matrix spike recovery outside of acceptance limit. The analytical batch was validated by the laboratory control sample.
L3	Laboratory control sample outside in-house established limits but within method criteria.
D1	Sample required dilution due to possible matrix interference.
ND	Analyte is not detected at or above the Practical Quantitation Limit (PQL). When client requests quantitation against MDL, analyte is not detected at or above the Method Detection Limit (MDL)
PQL	Practical Quantitation Limit
MDL	Method Detection Limit
NR	Not Reported
RPD	Relative Percent Difference
CA2	CA-ELAP (CDPH)
OR1	OR-NELAP (OSPHL)

Notes:
(1) The reported MDL and PQL are based on prep ratio variation and analytical dilution.
(2) The suffix [2C] of specific analytes signifies that the reported result is taken from the instrument's second column.
(3) Results are wet unless otherwise specified.

ADVANCED TECHNOLOGY LABORATORIES

3275 Walnut Ave., Signal Hill, CA 90755
Tel: (562) 989-4045 • Fax: (562) 989-4040

CHAIN OF CUSTODY RECORD

Page 1 of 3

Instruction: Complete all shaded areas.

For Laboratory Use Only — ATLCOC Ver: 20130715

Method of Transport	Sample Conditions Upon Receipt: Condition	Y	N	Condition	Y	N
☐ Client ☐ ATL	1. CHILLED	☑	☐	5. # OF SAMPLES MATCH COC	☐	☐
☐ FedEx ☐ OnTrac	2. HEADSPACE (VOA)	☐	☐	6. PRESERVED	☐	☑
☐ GSO	3. CONTAINER INTACT	☑	☐	7. COOLER TEMP, deg C: TCB		
☑ Other: DCS	4. SEALED	☐	☑	4.8		

CUSTOMER

Company: Leighton Consulting, Inc. (LCI)
Address: 17781 Cowan
City: Irvine State: CA Zip: 92614
Tel:
Fax:

SEND REPORT TO:
Attn: Brynn McCulloch Email: bmcculloch@leightongroup.com
Company: LCI
Address: See Above
City: State: Zip:

SEND INVOICE TO: ☐ same as SEND REPORT TO
Attn: Accounts Payable Email: acctpayable@leightongroup.com
Company: LCI
Address: See Above
City: State: Zip:

PROJECT SAMPLES

Project Name: 574 South Glassell
Project No.: 12137.003
Sampler: R. Lovdahl
Quote No:
PO #: 12137.003
Special Instructions/Comments:

Encircle or Write Requested Analysis: 8260 / 624 (Volatiles); 8015(GRO); 8015(DRO); 8270(Semi-volatiles); 8081(Organochlorine Pesticides); 8082(PCBs); 6010 / 7000(Title 22 Metals); TO-15; Arsenic-EPA 6010; HOLD

Encircle Sample Matrix: SOIL / SEDIMENT / SLUDGE; SOLIDS / WIPE/ FILTER; WATER - DRINKING / GROUND; WATER - STORM / WASTE; AQUEOUS / LAYERED - OIL

TAT: RUSH 48-Hr

Container: # / Type: 1=Tube; 2=VOA; 3=Liter; 4=Pint; 5=Jar; 6=Tedlar; 7 = Canister / Material: 1=Glass; 2=Plastic; 3=Metal / Preservative: 1=HCl; 2=HNO3; 3=H2SO4; 4 = 4C; 5=Zn (Ac)2; 6=NaOH; 7=NA2S2O3

QA/QC: ☑ Routine ☐ Caltrans ☐ Legal ☐ RWQCB ☐ Level IV

ITEM	Lab No.	Sample ID / Location	Date	Time	8260 / 624 (Volatiles)	8015(GRO)	8015(DRO)	8270(Semi-volatiles)	8081(Organochlorine Pesticides)	8082(PCBs)	6010 / 7000(Title 22 Metals)	TO-15	Arsenic-EPA 6010	HOLD	SOIL / SEDIMENT / SLUDGE	SOLIDS / WIPE/ FILTER	WATER - DRINKING / GROUND	WATER - STORM / WASTE	AQUEOUS / LAYERED - OIL	TAT	#	Type	Material	Preservative	REMARKS
1	1903032-01	LB1-0.5	8/14/19	0710					X				X		X					2	1	5	1	4	
2	-02	LB1-2.5		0713					X				X							2		5	1		
3	-03	LB1-5.0		0715										X						—		5	1		
4	-04	LB2-0.5		0728					X				X							2		1	2		
5	-05	LB2-2.5		0730					X				X							2					
6	-06	LB2-5.0		0732										X						—					
7	-07	LB3-0.5		0740					X				X							2					
8	-08	LB3-2.5		0742					X				X							2					
9	-09	LB3-5.0		0744										X						—					
10	-10	LB4-0.5	✓	0750					X				X							2					

1. Sample receiving hours: 7:30 AM to 7:30 PM Monday - Friday; Saturday 8:00 AM to 12:00 PM.
2. Samples Submitted AFTER 3:00 PM, are considered received the following Business day at 8:00 AM.
3. The following turnaround time conditions apply:
   TAT = 0 : 300% Surcharge SAME BUSINESS DAY if received by 9:00 AM
   TAT = 1 : 100% Surcharge NEXT BUSINESS DAY (COB 5:00 PM)
   TAT = 2 : 50% Surcharge 2ND BUSINESS DAY (COB 5:00 PM)
   TAT = 3 : 30% Surcharge 3RD BUSINESS DAY (COB 5:00 PM)
   TAT = 4 : 20% Surcharge 4TH BUSINESS DAY (COB 5:00 PM)
   TAT = 5 : NO SURCHARGE 5th BUSINESS DAY (COB 5:00 PM)
4. Weekend, holiday, after-hours work - ask for quote.
5. Subcontract TAT is 10 - 15 business days. Projects requiring shorter TATs will incur a surcharge respective to the subcontract lab --- ask for quote.
6. Liquid and solid samples will be disposed of after 45 calendar days from receipt of samples; air samples will be disposed of after 14 calendar days after receipt of samples.
7. Electronic records maintained for fi ve (5) years from report date.
8. Hard copy reports will be disposed of after 45 calendar days from report date.
9. Storage and Report Fees:
   - Liquid & solid samples: Complimentary storage for forty-fi ve (45) calendar days from receipt of samples; $2/sample/month if extended storage or hold is requested.
   - Air samples: Complimentary storage for ten (10) calendar days from receipt of samples; $20/ sample/week if extended storage is requested.
   - Hard copy and regenerated reports/EDDs: $17.50 per hard copy report requested; $50.00 per regenerated/reforma? ed report; $35 per reprocessed EDD.
10. Rush TCLP/STLC samples: add 2 days to analysis TAT for extraction on procedure.
11. Unanalyzed samples will incur a disposal fee of $7 per sample.

As the authorized agent of the company above, I hereby purchase laboratory services from ATL as shown above and hereby guarantee payment as quoted.

Robert Lovdahl — Submitter Print Name
Signature

Relinquished by: (Signature and Printed Name)	Date:	Time:	Received by: (Signature and Printed Name)	Date:	Time:
Rob Lovdahl	8/14/19	1252	Bryan	8/14/19	1252
Bryan Taylor	8/14/19	1505		8-14-19	1505
Relinquished by: (Signature and Printed Name)	Date:	Time:	Received by: (Signature and Printed Name)	Date:	Time:

ADVANCED TECHNOLOGY LABORATORIES

3275 Walnut Ave., Signal Hill, CA 90755
Tel: (562) 989-4045 • Fax: (562) 989-4040

CHAIN OF CUSTODY RECORD

Instruction: Complete all shaded areas.

For Laboratory Use Only — ATLCOC Ver: 20130715

Method of Transport	Sample Conditions Upon Receipt: Condition	Y	N	Condition	Y	N
☐ Client ☐ ATL	1. CHILLED	☐	☐	5. # OF SAMPLES MATCH COC	☐	☐
☐ FedEx ☐ OnTrac	2. HEADSPACE (VOA)	☐	☐	6. PRESERVED	☐	☐
☐ GSO	3. CONTAINER INTACT	☐	☐	7. COOLER TEMP, deg C:		
☐ Other: _____	4. SEALED	☐	☐			

CUSTOMER

Company: Leighton Consulting, Inc (LCI)
Address: 17781 Cowan
City: Irvine
State: CA
Zip: 92614
Tel:
Fax:

SEND REPORT TO:
Attn: Brynn McCulloch
Email: bmcculloch@leightongroup.com
Company: LCI
Address: See Above
City:
State:
Zip:

SEND INVOICE TO: ☐ same as SEND REPORT TO
Attn: Accounts Payable
Email: acctpayable@leightongroup.com
Company: LCI
Address: See Above
City:
State:
Zip:

PROJECT SAMPLES

Project Name: 574 South Glassell
Project No.: 12137.003
Sampler: R. Lovdahl
Quote No:
PO #: 12137.003 ~~12137~~ BR
Special Instructions/Comments:

Encircle or Write Requested Analysis: 8260 / 624 (Volatiles); 8015(GRO); 8015(DRO); 8270(Semi-volatiles); 8081(Organochlorine Pesticides); 8082(PCBs); 6010 / 7000(Title 22 Metals); TO-15; Arsenic (6010); HOLD

Encircle Sample Matrix: SOIL / SEDIMENT / SLUDGE; SOLIDS / WIPE/ FILTER; WATER - DRINKING / GROUND; WATER - STORM / WASTE; AQUEOUS / LAYERED - OIL

TAT: RUSH 48-Hr

Container: # ; Type: 1=Tube; 2=VOA; 3=Liter; 4=Pint; 5=Jar; 6=Tedlar; 7 = Canister; Material: 1=Glass; 2=Plastic; 3=Metal; Preservative: 1=HCl; 2=HNO3; 3=H2SO4; 4 = 4C; 5=Zn ((Ac)2; 6=NaOH; 7=NA2S2O3

QA/QC: ☑ Routine ☐ Caltrans ☐ Legal ☐ RWQCB ☐ Level IV

ITEM	Lab No.	Sample ID / Location	Date	Time	8260 / 624	8015(GRO)	8015(DRO)	8270(Semi-volatiles)	8081(Organochlorine Pesticides)	8082(PCBs)	6010 / 7000(Title 22 Metals)	TO-15	Arsenic (6010)						HOLD						TAT	#	Type	Material	Preservative	REMARKS
1	1903032-11	LB4-2.5	8/14/19	0752					X				X							X					2	1	1	2	4	
2	-12	LB4-5.0		0754															X						-					
3	-13	LB5-0.5		0800					X				X												2					
4	-14	LB5-2.5		0802					X				X												2					
5	-15	LB5-5.0		0804															X						-					
6	-16	LB6-0.5		0810					X				X												2					
7	-17	LB6-2.5		0812					X				X												2					
8	-18	LB6-5.0		0814															X						-					
9	-19	LB7-0.5		0820					X				X												2					
10	-20	LB7-2.5		0822					X				X												2					

1. Sample receiving hours: 7:30 AM to 7:30 PM Monday - Friday; Saturday 8:00 AM to 12:00 PM.
2. Samples Submitted AFTER 3:00 PM, are considered received the following Business day at 8:00 AM.
3. The following turnaround time conditions apply:
   TAT = 0 : 300% Surcharge SAME BUSINESS DAY if received by 9:00 AM
   TAT = 1 : 100% Surcharge NEXT BUSINESS DAY (COB 5:00 PM)
   TAT = 2 : 50% Surcharge 2ND BUSINESS DAY (COB 5:00 PM)
   TAT = 3 : 30% Surcharge 3RD BUSINESS DAY (COB 5:00 PM)
   TAT = 4 : 20% Surcharge 4TH BUSINESS DAY (COB 5:00 PM)
   TAT = 5 : NO SURCHARGE 5th BUSINESS DAY (COB 5:00 PM)
4. Weekend, holiday, after-hours work - ask for quote.
5. Subcontract TAT is 10 - 15 business days. Projects requiring shorter TATs will incur a surcharge respective to the subcontract lab --- ask for quote.
6. Liquid and solid samples will be disposed of after 45 calendar days from receipt of samples; air samples will be disposed of after 14 calendar days after receipt of samples.
7. Electronic records maintained for fi ve (5) years from report date.
8. Hard copy reports will be disposed of after 45 calendar days from report date.
9. Storage and Report Fees:
   - Liquid & solid samples: Complimentary storage for forty-fi ve (45) calendar days from receipt of samples; $2/sample/month if extended storage or hold is requested.
   - Air samples: Complimentary storage for ten (10) calendar days from receipt of samples; $20/ sample/week if extended storage is requested.
   - Hard copy and regenerated reports/EDDs: $17.50 per hard copy report requested; $50.00 per regenerated/reforma? ed report; $35 per reprocessed EDD.
10. Rush TCLP/STLC samples: add 2 days to analysis TAT for extraction on procedure.
11. Unanalyzed samples will incur a disposal fee of $7 per sample.

As the authorized agent of the company above, I hereby purchase laboratory services from ATL as shown above and hereby guarantee payment as quoted.

Robert Lovdahl — Submitter Print Name
Signature

Relinquished by: (Signature and Printed Name)	Date:	Time:	Received by: (Signature and Printed Name)	Date:	Time:
Rob Lovdahl	8/14/19	1252	Evan Taylor	8/14/19	1252
Relinquished by: (Signature and Printed Name)	Date:	Time:	Received by: (Signature and Printed Name)	Date:	Time:
Brynn McCulloch	8/14/19	1505		8/14/19	1505
Relinquished by: (Signature and Printed Name)	Date:	Time:	Received by: (Signature and Printed Name)	Date:	Time:

ADVANCED TECHNOLOGY LABORATORIES
3275 Walnut Ave., Signal Hill, CA 90755
Tel: (562) 989-4045 • Fax: (562) 989-4040

CHAIN OF CUSTODY RECORD

Instruction: Complete all shaded areas.

For Laboratory Use Only — ATLCOC Ver: 20130715

Method of Transport	Sample Conditions Upon Receipt					
	Condition	Y	N	Condition	Y	N
☐ Client ☐ ATL	1. CHILLED	☐	☐	5. # OF SAMPLES MATCH COC	☐	☐
☐ FedEx ☐ OnTrac	2. HEADSPACE (VOA)	☐	☐	6. PRESERVED	☐	☐
☐ GSO	3. CONTAINER INTACT	☐	☐	7. COOLER TEMP, deg C:		
☐ Other: _____	4. SEALED	☐	☐			

CUSTOMER

Company: Leighton Consulting, Inc. (LCI)
Address: 17781 Cowan
City: Irvine State: CA Zip: 92614
Tel:
Fax:

SEND REPORT TO:
Attn: Brynn McCullach Email: bmccullach@leightongroup.com
Company: LCI
Address: See Above
City: State: Zip:

SEND INVOICE TO: ☐ same as SEND REPORT TO
Attn: Accounts Payable Email: acctpayable@leightongroup.com
Company: LCI
Address: See Above
City: State: Zip:

PROJECT SAMPLES

Project Name: 574 South Glassell
Project No.: 12137.003
Sampler: R. Lovdahl
Quote No:
PO #: 12137.003
Special Instructions/Comments:

QA/QC: ☑ Routine ☐ Caltrans ☐ Legal ☐ RWQCB ☐ Level IV

ITEM	Lab No.	Sample Description: Sample ID / Location	Date	Time	8260 / 624 (Volatiles)	8015(GRO)	8015(DRO)	8270(Semi-volatiles)	8081(Organochlorine Pesticides)	8082(PCBs)	6010 / 7000(Title 22 Metals)	TO-15	Arsenic (6010)							HOLD	SOIL / SEDIMENT / SLUDGE	SOLIDS / WIPE/ FILTER	WATER - DRINKING / GROUND	WATER - STORM / WASTE	AQUEOUS / LAYERED - OIL	TAT (48 HR / RUSH)	Container #	Type: 1=Tube; 2=VOA; 3=Liter; 4=Pint; 5=Jar; 6=Tedlar; 7 = Canister	Material: 1=Glass; 2=Plastic; 3=Metal	Preservative: 1=HCl; 2=HNO3; 3=H2SO4; 4 = 4C; 5=Zn ((Ac)2; 6=NaOH; 7=NAZS2O3	REMARKS
1	1903032-21	LB7-5.0	8/14/19	0824																X	X					-	1	1	2	4	
2	-22	LB8-0.5	↓	0830					X				X								↓					2	↓	↓	↓	↓	
3	-23	LB8-2.5		0832					X				X													2					
4	-24	LB8-5.0		0834																X						-					
5																															
6																															
7																															
8																															
9																															
10																															

1. Sample receiving hours: 7:30 AM to 7:30 PM Monday - Friday; Saturday 8:00 AM to 12:00 PM.
2. Samples Submitted AFTER 3:00 PM, are considered received the following Business day at 8:00 AM.
3. The following turnaround time conditions apply:
   TAT = 0 : 300% Surcharge SAME BUSINESS DAY if received by 9:00 AM
   TAT = 1 : 100% Surcharge NEXT BUSINESS DAY (COB 5:00 PM)
   TAT = 2 : 50% Surcharge 2ND BUSINESS DAY (COB 5:00 PM)
   TAT = 3 : 30% Surcharge 3RD BUSINESS DAY (COB 5:00 PM)
   TAT = 4 : 20% Surcharge 4TH BUSINESS DAY (COB 5:00 PM)
   TAT = 5 : NO SURCHARGE 5th BUSINESS DAY (COB 5:00 PM)
4. Weekend, holiday, after-hours work - ask for quote.
5. Subcontract TAT is 10 - 15 business days. Projects requiring shorter TATs will incur a surcharge respective to the subcontract lab --- ask for quote.
6. Liquid and solid samples will be disposed of after 45 calendar days from receipt of samples; air samples will be disposed of after 14 calendar days after receipt of samples.
7. Electronic records maintained for five (5) years from report date.
8. Hard copy reports will be disposed of after 45 calendar days from report date.
9. Storage and Report Fees:
   - Liquid & solid samples: Complimentary storage for forty-five (45) calendar days from receipt of samples; $2/sample/month if extended storage or hold is requested.
   - Air samples: Complimentary storage for ten (10) calendar days from receipt of samples; $20/ sample/week if extended storage is requested.
   - Hard copy and regenerated reports/EDDs: $17.50 per hard copy report requested; $50.00 per regenerated/reformat ed report; $35 per reprocessed EDD.
10. Rush TCLP/STLC samples: add 2 days to analysis TAT for extraction on procedure.
11. Unanalyzed samples will incur a disposal fee of $7 per sample.

As the authorized agent of the company above, I hereby purchase laboratory services from ATL as shown above and hereby guarantee payment as quoted.

Robert Lovdahl — Submitter Print Name
Signature

Relinquished by: (Signature and Printed Name)	Date:	Time:	Received by: (Signature and Printed Name)	Date:	Time:
Rob Lovdahl	8/14/19	1252	Bryan Tayuk	8/14/19	1252
Bryan Tayuk	8/14/19	1505		8-14-19	1505

September 03, 2019

Brynn McCulloch
Leighton Consulting, Inc.
17781 Cowan Street
Irvine, CA 92614
Tel: (949) 681-4287
Fax:(949) 250-1114

ELAP No.: 1838
CSDLAC No.: 10196
ORELAP No.: CA300003

Re: ATL Work Order Number : 1903209
Client Reference : Park Plaza, 12137.003

Enclosed are the results for sample(s) received on August 29, 2019 by Advanced Technology Laboratories. The sample(s) are tested for the parameters as indicated on the enclosed chain of custody in accordance with applicable laboratory certifications. The laboratory results contained in this report specifically pertains to the sample(s) submitted.

Thank you for the opportunity to serve the needs of your company. If you have any questions, please feel free to contact me or your Project Manager.

Sincerely,

Edgar Caballero
President & Laboratory Director

The cover letter and the case narrative are an integral part of this analytical report and its absence renders the report invalid. Test results contained within this data package meet the requirements of applicable state-specific certification programs. The report cannot be reproduced without written permission from the client and Advanced Technology Laboratories.

Certificate of Analysis

Leighton Consulting, Inc.		Project Number :	Park Plaza, 12137.003
17781 Cowan Street		Report To :	Brynn McCulloch
Irvine , CA 92614		Reported :	09/03/2019

SUMMARY OF SAMPLES

Sample ID	Laboratory ID	Matrix	Date Sampled	Date Received
LB4-S2-0.5	1903209-01	Soil	8/29/19 7:24	8/29/19 15:03
LB4-S2-2.5	1903209-02	Soil	8/29/19 7:25	8/29/19 15:03
LB4-E2-0.5	1903209-03	Soil	8/29/19 7:35	8/29/19 15:03
LB4-E2-2.5	1903209-04	Soil	8/29/19 7:37	8/29/19 15:03
LB4-E1-0.5	1903209-05	Soil	8/29/19 7:43	8/29/19 15:03
LB4-E1-2.5	1903209-06	Soil	8/29/19 7:45	8/29/19 15:03
LB4-S1-0.5	1903209-07	Soil	8/29/19 7:51	8/29/19 15:03
LB4-S1-2.5	1903209-08	Soil	8/29/19 7:53	8/29/19 15:03
LB4-W1-0.5	1903209-09	Soil	8/29/19 7:59	8/29/19 15:03
LB4-W1-2.5	1903209-10	Soil	8/29/19 8:00	8/29/19 15:03
LB4-N1-0.5	1903209-11	Soil	8/29/19 8:04	8/29/19 15:03
LB4-N1-2.5	1903209-12	Soil	8/29/19 8:07	8/29/19 15:03
LB4-W2-0.5	1903209-13	Soil	8/29/19 8:20	8/29/19 15:03
LB4-W2-2.5	1903209-14	Soil	8/29/19 8:22	8/29/19 15:03
LB4-N2-0.5	1903209-15	Soil	8/29/19 8:37	8/29/19 15:03
LB4-N2-2.5	1903209-16	Soil	8/29/19 8:40	8/29/19 15:03
LB1-NW1-0.5	1903209-17	Soil	8/29/19 7:15	8/29/19 15:03
LB1-NW1-2.5	1903209-18	Soil	8/29/19 7:16	8/29/19 15:03
LB1-NE1-0.5	1903209-19	Soil	8/29/19 7:26	8/29/19 15:03
LB1-NE1-2.5	1903209-20	Soil	8/29/19 7:27	8/29/19 15:03
LB1-NE2-0.5	1903209-21	Soil	8/29/19 7:39	8/29/19 15:03
LB1-NE2-2.5	1903209-22	Soil	8/29/19 7:41	8/29/19 15:03
LB1-SE1-0.5	1903209-23	Soil	8/29/19 7:47	8/29/19 15:03
LB1-SE1-2.5	1903209-24	Soil	8/29/19 7:49	8/29/19 15:03
LB1-SE2-0.5	1903209-25	Soil	8/29/19 7:55	8/29/19 15:03
LB1-SE2-2.5	1903209-26	Soil	8/29/19 7:57	8/29/19 15:03
LB1-SW1-0.5	1903209-27	Soil	8/29/19 8:09	8/29/19 15:03
LB1-SW1-2.5	1903209-28	Soil	8/29/19 8:12	8/29/19 15:03
LB1-SW2-0.5	1903209-29	Soil	8/29/19 8:24	8/29/19 15:03
LB1-SW2-2.5	1903209-30	Soil	8/29/19 8:27	8/29/19 15:03

Certificate of Analysis

Leighton Consulting, Inc.		Project Number :	Park Plaza, 12137.003
17781 Cowan Street		Report To :	Brynn McCulloch
Irvine , CA 92614		Reported :	09/03/2019

DETECTION SUMMARY

Client Sample ID LB4-S2-0.5

Lab ID: 1903209-01

Total Metals by ICP-AES EPA 6010B **Analyst: KEK**

Analyte	Result (mg/kg)	PQL (mg/kg)	Dilution	Batch	Prepared	Date/Time Analyzed	Notes
Arsenic	**7.1**	1.0	1	B9H0741	08/30/2019	08/30/19 17:06	

Client Sample ID LB4-S2-2.5

Lab ID: 1903209-02

Total Metals by ICP-AES EPA 6010B **Analyst: KEK**

Analyte	Result (mg/kg)	PQL (mg/kg)	Dilution	Batch	Prepared	Date/Time Analyzed	Notes
Arsenic	**12**	1.0	1	B9H0741	08/30/2019	08/30/19 17:07	

Client Sample ID LB4-E2-0.5

Lab ID: 1903209-03

Total Metals by ICP-AES EPA 6010B **Analyst: KEK**

Analyte	Result (mg/kg)	PQL (mg/kg)	Dilution	Batch	Prepared	Date/Time Analyzed	Notes
Arsenic	**14**	1.0	1	B9H0741	08/30/2019	08/30/19 17:08	

Client Sample ID LB4-E2-2.5

Lab ID: 1903209-04

Total Metals by ICP-AES EPA 6010B **Analyst: KEK**

Analyte	Result (mg/kg)	PQL (mg/kg)	Dilution	Batch	Prepared	Date/Time Analyzed	Notes
Arsenic	**4.8**	1.0	1	B9H0741	08/30/2019	08/30/19 17:09	

Certificate of Analysis

Leighton Consulting, Inc.		Project Number :	Park Plaza, 12137.003
17781 Cowan Street		Report To :	Brynn McCulloch
Irvine , CA 92614		Reported :	09/03/2019

DETECTION SUMMARY

Client Sample ID LB4-E1-0.5

Lab ID: 1903209-05

Total Metals by ICP-AES EPA 6010B **Analyst: KEK**

Analyte	Result (mg/kg)	PQL (mg/kg)	Dilution	Batch	Prepared	Date/Time Analyzed	Notes
Arsenic	**11**	1.0	1	B9H0741	08/30/2019	08/30/19 17:14	

Client Sample ID LB4-E1-2.5

Lab ID: 1903209-06

Total Metals by ICP-AES EPA 6010B **Analyst: KEK**

Analyte	Result (mg/kg)	PQL (mg/kg)	Dilution	Batch	Prepared	Date/Time Analyzed	Notes
Arsenic	**5.2**	1.0	1	B9H0741	08/30/2019	08/30/19 17:15	

Client Sample ID LB4-S1-0.5

Lab ID: 1903209-07

Total Metals by ICP-AES EPA 6010B **Analyst: KEK**

Analyte	Result (mg/kg)	PQL (mg/kg)	Dilution	Batch	Prepared	Date/Time Analyzed	Notes
Arsenic	**5.5**	1.0	1	B9H0741	08/30/2019	08/30/19 17:16	

Client Sample ID LB4-S1-2.5

Lab ID: 1903209-08

Total Metals by ICP-AES EPA 6010B **Analyst: KEK**

Analyte	Result (mg/kg)	PQL (mg/kg)	Dilution	Batch	Prepared	Date/Time Analyzed	Notes
Arsenic	**5.5**	1.0	1	B9H0741	08/30/2019	08/30/19 17:17	

Certificate of Analysis

Leighton Consulting, Inc.		Project Number :	Park Plaza, 12137.003
17781 Cowan Street		Report To :	Brynn McCulloch
Irvine , CA 92614		Reported :	09/03/2019

DETECTION SUMMARY

Client Sample ID LB4-W1-0.5

Lab ID: 1903209-09

Total Metals by ICP-AES EPA 6010B **Analyst: KEK**

Analyte	Result (mg/kg)	PQL (mg/kg)	Dilution	Batch	Prepared	Date/Time Analyzed	Notes
Arsenic	**2.5**	1.0	1	B9H0741	08/30/2019	08/30/19 17:19	

Client Sample ID LB4-W1-2.5

Lab ID: 1903209-10

Total Metals by ICP-AES EPA 6010B **Analyst: KEK**

Analyte	Result (mg/kg)	PQL (mg/kg)	Dilution	Batch	Prepared	Date/Time Analyzed	Notes
Arsenic	**5.6**	1.0	1	B9H0741	08/30/2019	08/30/19 17:20	

Client Sample ID LB4-N1-0.5

Lab ID: 1903209-11

Total Metals by ICP-AES EPA 6010B **Analyst: KEK**

Analyte	Result (mg/kg)	PQL (mg/kg)	Dilution	Batch	Prepared	Date/Time Analyzed	Notes
Arsenic	**14**	1.0	1	B9H0741	08/30/2019	08/30/19 17:21	

Client Sample ID LB4-N1-2.5

Lab ID: 1903209-12

Total Metals by ICP-AES EPA 6010B **Analyst: KEK**

Analyte	Result (mg/kg)	PQL (mg/kg)	Dilution	Batch	Prepared	Date/Time Analyzed	Notes
Arsenic	**4.2**	1.0	1	B9H0741	08/30/2019	08/30/19 17:22	

Certificate of Analysis

Leighton Consulting, Inc.		Project Number :	Park Plaza, 12137.003
17781 Cowan Street		Report To :	Brynn McCulloch
Irvine , CA 92614		Reported :	09/03/2019

DETECTION SUMMARY

Client Sample ID LB4-W2-0.5

Lab ID: 1903209-13

Total Metals by ICP-AES EPA 6010B **Analyst: KEK**

Analyte	Result (mg/kg)	PQL (mg/kg)	Dilution	Batch	Prepared	Date/Time Analyzed	Notes
Arsenic	**19**	1.0	1	B9H0741	08/30/2019	08/30/19 17:24	

Client Sample ID LB4-W2-2.5

Lab ID: 1903209-14

Total Metals by ICP-AES EPA 6010B **Analyst: KEK**

Analyte	Result (mg/kg)	PQL (mg/kg)	Dilution	Batch	Prepared	Date/Time Analyzed	Notes
Arsenic	**5.7**	1.0	1	B9H0741	08/30/2019	08/30/19 17:25	

Client Sample ID LB4-N2-0.5

Lab ID: 1903209-15

Total Metals by ICP-AES EPA 6010B **Analyst: KEK**

Analyte	Result (mg/kg)	PQL (mg/kg)	Dilution	Batch	Prepared	Date/Time Analyzed	Notes
Arsenic	**15**	1.0	1	B9H0741	08/30/2019	08/30/19 17:29	

Client Sample ID LB4-N2-2.5

Lab ID: 1903209-16

Total Metals by ICP-AES EPA 6010B **Analyst: KEK**

Analyte	Result (mg/kg)	PQL (mg/kg)	Dilution	Batch	Prepared	Date/Time Analyzed	Notes
Arsenic	**5.6**	1.0	1	B9H0741	08/30/2019	08/30/19 17:30	

Certificate of Analysis

Leighton Consulting, Inc.		Project Number :	Park Plaza, 12137.003
17781 Cowan Street		Report To :	Brynn McCulloch
Irvine , CA 92614		Reported :	09/03/2019

DETECTION SUMMARY

Client Sample ID LB1-NW1-0.5

Lab ID: 1903209-17

Organochlorine Pesticides by EPA 8081 **Analyst: BL**

Analyte	Result (ug/kg)	PQL (ug/kg)	Dilution	Batch	Prepared	Date/Time Analyzed	Notes
4,4´-DDE	**73**	10	5	B9H0753	08/30/2019	08/30/19 18:26	
4,4´-DDT	**16**	10	5	B9H0753	08/30/2019	08/30/19 18:26	
Dieldrin	**99**	10	5	B9H0753	08/30/2019	08/30/19 18:26	

Client Sample ID LB1-NE1-0.5

Lab ID: 1903209-19

Organochlorine Pesticides by EPA 8081 **Analyst: BL**

Analyte	Result (ug/kg)	PQL (ug/kg)	Dilution	Batch	Prepared	Date/Time Analyzed	Notes
4,4´-DDE	**46**	10	5	B9H0753	08/30/2019	08/30/19 18:47	
Dieldrin	**150**	10	5	B9H0753	08/30/2019	08/30/19 18:47	

Client Sample ID LB1-NE2-0.5

Lab ID: 1903209-21

Organochlorine Pesticides by EPA 8081 **Analyst: BL**

Analyte	Result (ug/kg)	PQL (ug/kg)	Dilution	Batch	Prepared	Date/Time Analyzed	Notes
4,4´-DDE	**26**	10	5	B9H0753	08/30/2019	08/30/19 19:08	
Dieldrin	**48**	10	5	B9H0753	08/30/2019	08/30/19 19:08	

Client Sample ID LB1-SE1-0.5

Lab ID: 1903209-23

Organochlorine Pesticides by EPA 8081 **Analyst: BL**

Analyte	Result (ug/kg)	PQL (ug/kg)	Dilution	Batch	Prepared	Date/Time Analyzed	Notes
Dieldrin	**75**	40	20	B9H0753	08/30/2019	08/30/19 19:29	

Certificate of Analysis

Leighton Consulting, Inc.		Project Number :	Park Plaza, 12137.003
17781 Cowan Street		Report To :	Brynn McCulloch
Irvine , CA 92614		Reported :	09/03/2019

DETECTION SUMMARY

Client Sample ID LB1-SE2-0.5

Lab ID: 1903209-25

Organochlorine Pesticides by EPA 8081 **Analyst: BL**

Analyte	Result (ug/kg)	PQL (ug/kg)	Dilution	Batch	Prepared	Date/Time Analyzed	Notes
4,4´-DDE	**88**	10	5	B9H0753	08/30/2019	08/30/19 19:50	
4,4´-DDT	**23**	10	5	B9H0753	08/30/2019	08/30/19 19:50	
Dieldrin	**80**	10	5	B9H0753	08/30/2019	08/30/19 19:50	

Client Sample ID LB1-SW1-2.5

Lab ID: 1903209-28

Organochlorine Pesticides by EPA 8081 **Analyst: BL**

Analyte	Result (ug/kg)	PQL (ug/kg)	Dilution	Batch	Prepared	Date/Time Analyzed	Notes
4,4´-DDE	**65**	10	5	B9H0753	08/30/2019	08/30/19 20:21	
4,4´-DDT [2C]	**12**	10	5	B9H0753	08/30/2019	08/30/19 20:21	
Dieldrin	**78**	10	5	B9H0753	08/30/2019	08/30/19 20:21	

Client Sample ID LB1-SW2-0.5

Lab ID: 1903209-29

Organochlorine Pesticides by EPA 8081 **Analyst: BL**

Analyte	Result (ug/kg)	PQL (ug/kg)	Dilution	Batch	Prepared	Date/Time Analyzed	Notes
4,4´-DDE	**170**	10	5	B9H0753	08/30/2019	08/30/19 20:32	
4,4´-DDT [2C]	**28**	10	5	B9H0753	08/30/2019	08/30/19 20:32	
Dieldrin	**160**	10	5	B9H0753	08/30/2019	08/30/19 20:32	

Certificate of Analysis

Leighton Consulting, Inc.		Project Number :	Park Plaza, 12137.003
17781 Cowan Street		Report To :	Brynn McCulloch
Irvine , CA 92614		Reported :	09/03/2019

DETECTION SUMMARY

Client Sample ID LB1-SW2-2.5

Lab ID: 1903209-30

Organochlorine Pesticides by EPA 8081 **Analyst: BL**

Analyte	Result (ug/kg)	PQL (ug/kg)	Dilution	Batch	Prepared	Date/Time Analyzed	Notes
Dieldrin	**3.8**	2.0	1	B9H0753	08/30/2019	08/30/19 20:42	

Certificate of Analysis

Leighton Consulting, Inc.		Project Number :	Park Plaza, 12137.003
17781 Cowan Street		Report To :	Brynn McCulloch
Irvine , CA 92614		Reported :	09/03/2019

Client Sample ID: LB4-S2-0.5

Lab ID: 1903209-01

Total Metals by ICP-AES EPA 6010B **Analyst: KEK**

Analyte	Result (mg/kg)	PQL (mg/kg)	Dilution	Batch	Prepared	Date/Time Analyzed	Notes
Arsenic	**7.1**	1.0	1	B9H0741	08/30/2019	08/30/19 17:06	

Certificate of Analysis

Leighton Consulting, Inc.		Project Number :	Park Plaza, 12137.003
17781 Cowan Street		Report To :	Brynn McCulloch
Irvine , CA 92614		Reported :	09/03/2019

Client Sample ID: LB4-S2-2.5

Lab ID: 1903209-02

Total Metals by ICP-AES EPA 6010B **Analyst: KEK**

Analyte	Result (mg/kg)	PQL (mg/kg)	Dilution	Batch	Prepared	Date/Time Analyzed	Notes
Arsenic	**12**	1.0	1	B9H0741	08/30/2019	08/30/19 17:07	

Certificate of Analysis

Leighton Consulting, Inc.		Project Number :	Park Plaza, 12137.003
17781 Cowan Street		Report To :	Brynn McCulloch
Irvine , CA 92614		Reported :	09/03/2019

Client Sample ID: LB4-E2-0.5

Lab ID: 1903209-03

Total Metals by ICP-AES EPA 6010B **Analyst: KEK**

Analyte	Result (mg/kg)	PQL (mg/kg)	Dilution	Batch	Prepared	Date/Time Analyzed	Notes
Arsenic	**14**	1.0	1	B9H0741	08/30/2019	08/30/19 17:08	

Certificate of Analysis

Leighton Consulting, Inc.		Project Number :	Park Plaza, 12137.003
17781 Cowan Street		Report To :	Brynn McCulloch
Irvine , CA 92614		Reported :	09/03/2019

Client Sample ID: LB4-E2-2.5

Lab ID: 1903209-04

Total Metals by ICP-AES EPA 6010B **Analyst: KEK**

Analyte	Result (mg/kg)	PQL (mg/kg)	Dilution	Batch	Prepared	Date/Time Analyzed	Notes
Arsenic	**4.8**	1.0	1	B9H0741	08/30/2019	08/30/19 17:09	

Certificate of Analysis

Leighton Consulting, Inc.		Project Number :	Park Plaza, 12137.003
17781 Cowan Street		Report To :	Brynn McCulloch
Irvine , CA 92614		Reported :	09/03/2019

Client Sample ID: LB4-E1-0.5

Lab ID: 1903209-05

Total Metals by ICP-AES EPA 6010B **Analyst: KEK**

Analyte	Result (mg/kg)	PQL (mg/kg)	Dilution	Batch	Prepared	Date/Time Analyzed	Notes
Arsenic	**11**	1.0	1	B9H0741	08/30/2019	08/30/19 17:14	

Certificate of Analysis

Leighton Consulting, Inc.		Project Number :	Park Plaza, 12137.003
17781 Cowan Street		Report To :	Brynn McCulloch
Irvine , CA 92614		Reported :	09/03/2019

Client Sample ID: LB4-E1-2.5

Lab ID: 1903209-06

Total Metals by ICP-AES EPA 6010B **Analyst: KEK**

Analyte	Result (mg/kg)	PQL (mg/kg)	Dilution	Batch	Prepared	Date/Time Analyzed	Notes
Arsenic	**5.2**	1.0	1	B9H0741	08/30/2019	08/30/19 17:15	

Certificate of Analysis

Leighton Consulting, Inc.		Project Number :	Park Plaza, 12137.003
17781 Cowan Street		Report To :	Brynn McCulloch
Irvine , CA 92614		Reported :	09/03/2019

Client Sample ID: LB4-S1-0.5

Lab ID: 1903209-07

Total Metals by ICP-AES EPA 6010B **Analyst: KEK**

Analyte	Result (mg/kg)	PQL (mg/kg)	Dilution	Batch	Prepared	Date/Time Analyzed	Notes
Arsenic	**5.5**	1.0	1	B9H0741	08/30/2019	08/30/19 17:16	

Certificate of Analysis

Leighton Consulting, Inc.		Project Number :	Park Plaza, 12137.003
17781 Cowan Street		Report To :	Brynn McCulloch
Irvine , CA 92614		Reported :	09/03/2019

Client Sample ID: LB4-S1-2.5

Lab ID: 1903209-08

Total Metals by ICP-AES EPA 6010B **Analyst: KEK**

Analyte	Result (mg/kg)	PQL (mg/kg)	Dilution	Batch	Prepared	Date/Time Analyzed	Notes
Arsenic	**5.5**	1.0	1	B9H0741	08/30/2019	08/30/19 17:17	

Certificate of Analysis

Leighton Consulting, Inc.		Project Number :	Park Plaza, 12137.003
17781 Cowan Street		Report To :	Brynn McCulloch
Irvine , CA 92614		Reported :	09/03/2019

Client Sample ID: LB4-W1-0.5

Lab ID: 1903209-09

Total Metals by ICP-AES EPA 6010B **Analyst: KEK**

Analyte	Result (mg/kg)	PQL (mg/kg)	Dilution	Batch	Prepared	Date/Time Analyzed	Notes
Arsenic	**2.5**	1.0	1	B9H0741	08/30/2019	08/30/19 17:19	

Certificate of Analysis

Leighton Consulting, Inc.		Project Number :	Park Plaza, 12137.003
17781 Cowan Street		Report To :	Brynn McCulloch
Irvine , CA 92614		Reported :	09/03/2019

Client Sample ID: LB4-W1-2.5

Lab ID: 1903209-10

Total Metals by ICP-AES EPA 6010B **Analyst: KEK**

Analyte	Result (mg/kg)	PQL (mg/kg)	Dilution	Batch	Prepared	Date/Time Analyzed	Notes
Arsenic	**5.6**	1.0	1	B9H0741	08/30/2019	08/30/19 17:20	

Certificate of Analysis

Leighton Consulting, Inc.		Project Number :	Park Plaza, 12137.003
17781 Cowan Street		Report To :	Brynn McCulloch
Irvine , CA 92614		Reported :	09/03/2019

Client Sample ID: LB4-N1-0.5

Lab ID: 1903209-11

Total Metals by ICP-AES EPA 6010B **Analyst: KEK**

Analyte	Result (mg/kg)	PQL (mg/kg)	Dilution	Batch	Prepared	Date/Time Analyzed	Notes
Arsenic	**14**	1.0	1	B9H0741	08/30/2019	08/30/19 17:21	

Certificate of Analysis

Leighton Consulting, Inc.		Project Number :	Park Plaza, 12137.003
17781 Cowan Street		Report To :	Brynn McCulloch
Irvine , CA 92614		Reported :	09/03/2019

Client Sample ID: LB4-N1-2.5

Lab ID: 1903209-12

Total Metals by ICP-AES EPA 6010B **Analyst: KEK**

Analyte	Result (mg/kg)	PQL (mg/kg)	Dilution	Batch	Prepared	Date/Time Analyzed	Notes
Arsenic	**4.2**	1.0	1	B9H0741	08/30/2019	08/30/19 17:22	

Certificate of Analysis

Leighton Consulting, Inc.		Project Number :	Park Plaza, 12137.003
17781 Cowan Street		Report To :	Brynn McCulloch
Irvine , CA 92614		Reported :	09/03/2019

Client Sample ID: LB4-W2-0.5

Lab ID: 1903209-13

Total Metals by ICP-AES EPA 6010B **Analyst: KEK**

Analyte	Result (mg/kg)	PQL (mg/kg)	Dilution	Batch	Prepared	Date/Time Analyzed	Notes
Arsenic	**19**	1.0	1	B9H0741	08/30/2019	08/30/19 17:24	

Certificate of Analysis

Leighton Consulting, Inc.		Project Number :	Park Plaza, 12137.003
17781 Cowan Street		Report To :	Brynn McCulloch
Irvine , CA 92614		Reported :	09/03/2019

Client Sample ID: LB4-W2-2.5

Lab ID: 1903209-14

Total Metals by ICP-AES EPA 6010B **Analyst: KEK**

Analyte	Result (mg/kg)	PQL (mg/kg)	Dilution	Batch	Prepared	Date/Time Analyzed	Notes
Arsenic	**5.7**	1.0	1	B9H0741	08/30/2019	08/30/19 17:25	

Certificate of Analysis

Leighton Consulting, Inc.		Project Number :	Park Plaza, 12137.003
17781 Cowan Street		Report To :	Brynn McCulloch
Irvine , CA 92614		Reported :	09/03/2019

Client Sample ID: LB4-N2-0.5

Lab ID: 1903209-15

Total Metals by ICP-AES EPA 6010B **Analyst: KEK**

Analyte	Result (mg/kg)	PQL (mg/kg)	Dilution	Batch	Prepared	Date/Time Analyzed	Notes
Arsenic	**15**	1.0	1	B9H0741	08/30/2019	08/30/19 17:29	

Certificate of Analysis

Leighton Consulting, Inc.		Project Number :	Park Plaza, 12137.003
17781 Cowan Street		Report To :	Brynn McCulloch
Irvine , CA 92614		Reported :	09/03/2019

Client Sample ID: LB4-N2-2.5

Lab ID: 1903209-16

Total Metals by ICP-AES EPA 6010B **Analyst: KEK**

Analyte	Result (mg/kg)	PQL (mg/kg)	Dilution	Batch	Prepared	Date/Time Analyzed	Notes
Arsenic	**5.6**	1.0	1	B9H0741	08/30/2019	08/30/19 17:30	

Certificate of Analysis

Leighton Consulting, Inc.		Project Number :	Park Plaza, 12137.003
17781 Cowan Street		Report To :	Brynn McCulloch
Irvine , CA 92614		Reported :	09/03/2019

Client Sample ID: LB1-NW1-0.5

Lab ID: 1903209-17

Organochlorine Pesticides by EPA 8081 **Analyst: BL**

Analyte	Result (ug/kg)	PQL (ug/kg)	Dilution	Batch	Prepared	Date/Time Analyzed	Notes
4,4´-DDD	ND	10	5	B9H0753	08/30/2019	08/30/19 18:26	D1
4,4´-DDE	**73**	10	5	B9H0753	08/30/2019	08/30/19 18:26	
4,4´-DDT	**16**	10	5	B9H0753	08/30/2019	08/30/19 18:26	
Aldrin	ND	5.0	5	B9H0753	08/30/2019	08/30/19 18:26	D1
alpha-BHC	ND	5.0	5	B9H0753	08/30/2019	08/30/19 18:26	D1
alpha-Chlordane	ND	5.0	5	B9H0753	08/30/2019	08/30/19 18:26	D1
beta-BHC	ND	5.0	5	B9H0753	08/30/2019	08/30/19 18:26	D1
Chlordane	ND	42	5	B9H0753	08/30/2019	08/30/19 18:26	D1
delta-BHC	ND	5.0	5	B9H0753	08/30/2019	08/30/19 18:26	D1
Dieldrin	**99**	10	5	B9H0753	08/30/2019	08/30/19 18:26	
Endosulfan I	ND	5.0	5	B9H0753	08/30/2019	08/30/19 18:26	D1
Endosulfan II	ND	10	5	B9H0753	08/30/2019	08/30/19 18:26	D1
Endosulfan sulfate	ND	10	5	B9H0753	08/30/2019	08/30/19 18:26	D1
Endrin	ND	10	5	B9H0753	08/30/2019	08/30/19 18:26	D1
Endrin aldehyde	ND	10	5	B9H0753	08/30/2019	08/30/19 18:26	D1
Endrin ketone	ND	10	5	B9H0753	08/30/2019	08/30/19 18:26	D1
gamma-BHC	ND	5.0	5	B9H0753	08/30/2019	08/30/19 18:26	D1
gamma-Chlordane	ND	5.0	5	B9H0753	08/30/2019	08/30/19 18:26	D1
Heptachlor	ND	5.0	5	B9H0753	08/30/2019	08/30/19 18:26	D1
Heptachlor epoxide	ND	5.0	5	B9H0753	08/30/2019	08/30/19 18:26	D1
Methoxychlor	ND	25	5	B9H0753	08/30/2019	08/30/19 18:26	D1
Toxaphene	ND	250	5	B9H0753	08/30/2019	08/30/19 18:26	D1
Surrogate: Decachlorobiphenyl	*72.1 %*	*32 - 91*		B9H0753	08/30/2019	*08/30/19 18:26*	
Surrogate: Tetrachloro-m-xylene	*76.0 %*	*38 - 93*		B9H0753	08/30/2019	*08/30/19 18:26*	

Certificate of Analysis

Leighton Consulting, Inc.		Project Number :	Park Plaza, 12137.003
17781 Cowan Street		Report To :	Brynn McCulloch
Irvine , CA 92614		Reported :	09/03/2019

Client Sample ID: LB1-NW1-2.5

Lab ID: 1903209-18

Organochlorine Pesticides by EPA 8081 **Analyst: BL**

Analyte	Result (ug/kg)	PQL (ug/kg)	Dilution	Batch	Prepared	Date/Time Analyzed	Notes
4,4´-DDD	ND	2.0	1	B9H0753	08/30/2019	08/30/19 18:36	
4,4´-DDE	ND	2.0	1	B9H0753	08/30/2019	08/30/19 18:36	
4,4´-DDT	ND	2.0	1	B9H0753	08/30/2019	08/30/19 18:36	
Aldrin	ND	1.0	1	B9H0753	08/30/2019	08/30/19 18:36	
alpha-BHC	ND	1.0	1	B9H0753	08/30/2019	08/30/19 18:36	
alpha-Chlordane	ND	1.0	1	B9H0753	08/30/2019	08/30/19 18:36	
beta-BHC	ND	1.0	1	B9H0753	08/30/2019	08/30/19 18:36	
Chlordane	ND	8.5	1	B9H0753	08/30/2019	08/30/19 18:36	
delta-BHC	ND	1.0	1	B9H0753	08/30/2019	08/30/19 18:36	
Dieldrin	ND	2.0	1	B9H0753	08/30/2019	08/30/19 18:36	
Endosulfan I	ND	1.0	1	B9H0753	08/30/2019	08/30/19 18:36	
Endosulfan II	ND	2.0	1	B9H0753	08/30/2019	08/30/19 18:36	
Endosulfan sulfate	ND	2.0	1	B9H0753	08/30/2019	08/30/19 18:36	
Endrin	ND	2.0	1	B9H0753	08/30/2019	08/30/19 18:36	
Endrin aldehyde	ND	2.0	1	B9H0753	08/30/2019	08/30/19 18:36	
Endrin ketone	ND	2.0	1	B9H0753	08/30/2019	08/30/19 18:36	
gamma-BHC	ND	1.0	1	B9H0753	08/30/2019	08/30/19 18:36	
gamma-Chlordane	ND	1.0	1	B9H0753	08/30/2019	08/30/19 18:36	
Heptachlor	ND	1.0	1	B9H0753	08/30/2019	08/30/19 18:36	
Heptachlor epoxide	ND	1.0	1	B9H0753	08/30/2019	08/30/19 18:36	
Methoxychlor	ND	5.0	1	B9H0753	08/30/2019	08/30/19 18:36	
Toxaphene	ND	50	1	B9H0753	08/30/2019	08/30/19 18:36	
Surrogate: Decachlorobiphenyl	*77.1 %*	*32 - 91*		B9H0753	08/30/2019	*08/30/19 18:36*	
Surrogate: Tetrachloro-m-xylene	*78.2 %*	*38 - 93*		B9H0753	08/30/2019	*08/30/19 18:36*	

Certificate of Analysis

Leighton Consulting, Inc.		Project Number :	Park Plaza, 12137.003
17781 Cowan Street		Report To :	Brynn McCulloch
Irvine , CA 92614		Reported :	09/03/2019

Client Sample ID: LB1-NE1-0.5

Lab ID: 1903209-19

Organochlorine Pesticides by EPA 8081 **Analyst: BL**

Analyte	Result (ug/kg)	PQL (ug/kg)	Dilution	Batch	Prepared	Date/Time Analyzed	Notes
4,4´-DDD	ND	10	5	B9H0753	08/30/2019	08/30/19 18:47	D1
4,4´-DDE	**46**	10	5	B9H0753	08/30/2019	08/30/19 18:47	
4,4´-DDT [2C]	ND	10	5	B9H0753	08/30/2019	08/30/19 18:47	D1
Aldrin	ND	5.0	5	B9H0753	08/30/2019	08/30/19 18:47	D1
alpha-BHC	ND	5.0	5	B9H0753	08/30/2019	08/30/19 18:47	D1
alpha-Chlordane	ND	5.0	5	B9H0753	08/30/2019	08/30/19 18:47	D1
beta-BHC	ND	5.0	5	B9H0753	08/30/2019	08/30/19 18:47	D1
Chlordane	ND	42	5	B9H0753	08/30/2019	08/30/19 18:47	D1
delta-BHC	ND	5.0	5	B9H0753	08/30/2019	08/30/19 18:47	D1
Dieldrin	**150**	10	5	B9H0753	08/30/2019	08/30/19 18:47	
Endosulfan I	ND	5.0	5	B9H0753	08/30/2019	08/30/19 18:47	D1
Endosulfan II	ND	10	5	B9H0753	08/30/2019	08/30/19 18:47	D1
Endosulfan sulfate	ND	10	5	B9H0753	08/30/2019	08/30/19 18:47	D1
Endrin	ND	10	5	B9H0753	08/30/2019	08/30/19 18:47	D1
Endrin aldehyde	ND	10	5	B9H0753	08/30/2019	08/30/19 18:47	D1
Endrin ketone	ND	10	5	B9H0753	08/30/2019	08/30/19 18:47	D1
gamma-BHC	ND	5.0	5	B9H0753	08/30/2019	08/30/19 18:47	D1
gamma-Chlordane	ND	5.0	5	B9H0753	08/30/2019	08/30/19 18:47	D1
Heptachlor	ND	5.0	5	B9H0753	08/30/2019	08/30/19 18:47	D1
Heptachlor epoxide	ND	5.0	5	B9H0753	08/30/2019	08/30/19 18:47	D1
Methoxychlor	ND	25	5	B9H0753	08/30/2019	08/30/19 18:47	D1
Toxaphene	ND	250	5	B9H0753	08/30/2019	08/30/19 18:47	D1
Surrogate: Decachlorobiphenyl	*83.4 %*	*32 - 91*		B9H0753	08/30/2019	*08/30/19 18:47*	
Surrogate: Tetrachloro-m-xylene	*79.3 %*	*38 - 93*		B9H0753	08/30/2019	*08/30/19 18:47*	

Certificate of Analysis

Leighton Consulting, Inc.		Project Number :	Park Plaza, 12137.003
17781 Cowan Street		Report To :	Brynn McCulloch
Irvine , CA 92614		Reported :	09/03/2019

Client Sample ID: LB1-NE1-2.5

Lab ID: 1903209-20

Organochlorine Pesticides by EPA 8081 **Analyst: BL**

Analyte	Result (ug/kg)	PQL (ug/kg)	Dilution	Batch	Prepared	Date/Time Analyzed	Notes
4,4´-DDD	ND	2.0	1	B9H0753	08/30/2019	08/30/19 18:57	
4,4´-DDE	ND	2.0	1	B9H0753	08/30/2019	08/30/19 18:57	
4,4´-DDT	ND	2.0	1	B9H0753	08/30/2019	08/30/19 18:57	
Aldrin	ND	1.0	1	B9H0753	08/30/2019	08/30/19 18:57	
alpha-BHC	ND	1.0	1	B9H0753	08/30/2019	08/30/19 18:57	
alpha-Chlordane	ND	1.0	1	B9H0753	08/30/2019	08/30/19 18:57	
beta-BHC	ND	1.0	1	B9H0753	08/30/2019	08/30/19 18:57	
Chlordane	ND	8.5	1	B9H0753	08/30/2019	08/30/19 18:57	
delta-BHC	ND	1.0	1	B9H0753	08/30/2019	08/30/19 18:57	
Dieldrin	ND	2.0	1	B9H0753	08/30/2019	08/30/19 18:57	
Endosulfan I	ND	1.0	1	B9H0753	08/30/2019	08/30/19 18:57	
Endosulfan II	ND	2.0	1	B9H0753	08/30/2019	08/30/19 18:57	
Endosulfan sulfate	ND	2.0	1	B9H0753	08/30/2019	08/30/19 18:57	
Endrin	ND	2.0	1	B9H0753	08/30/2019	08/30/19 18:57	
Endrin aldehyde	ND	2.0	1	B9H0753	08/30/2019	08/30/19 18:57	
Endrin ketone	ND	2.0	1	B9H0753	08/30/2019	08/30/19 18:57	
gamma-BHC	ND	1.0	1	B9H0753	08/30/2019	08/30/19 18:57	
gamma-Chlordane	ND	1.0	1	B9H0753	08/30/2019	08/30/19 18:57	
Heptachlor	ND	1.0	1	B9H0753	08/30/2019	08/30/19 18:57	
Heptachlor epoxide	ND	1.0	1	B9H0753	08/30/2019	08/30/19 18:57	
Methoxychlor	ND	5.0	1	B9H0753	08/30/2019	08/30/19 18:57	
Toxaphene	ND	50	1	B9H0753	08/30/2019	08/30/19 18:57	
Surrogate: Decachlorobiphenyl	*72.2 %*	*32 - 91*		B9H0753	08/30/2019	*08/30/19 18:57*	
Surrogate: Tetrachloro-m-xylene	*72.3 %*	*38 - 93*		B9H0753	08/30/2019	*08/30/19 18:57*	

Certificate of Analysis

Leighton Consulting, Inc.		Project Number :	Park Plaza, 12137.003
17781 Cowan Street		Report To :	Brynn McCulloch
Irvine , CA 92614		Reported :	09/03/2019

Client Sample ID: LB1-NE2-0.5

Lab ID: 1903209-21

Organochlorine Pesticides by EPA 8081 **Analyst: BL**

Analyte	Result (ug/kg)	PQL (ug/kg)	Dilution	Batch	Prepared	Date/Time Analyzed	Notes
4,4´-DDD	ND	10	5	B9H0753	08/30/2019	08/30/19 19:08	D1
4,4´-DDE	**26**	10	5	B9H0753	08/30/2019	08/30/19 19:08	
4,4´-DDT	ND	10	5	B9H0753	08/30/2019	08/30/19 19:08	D1
Aldrin	ND	5.0	5	B9H0753	08/30/2019	08/30/19 19:08	D1
alpha-BHC	ND	5.0	5	B9H0753	08/30/2019	08/30/19 19:08	D1
alpha-Chlordane	ND	5.0	5	B9H0753	08/30/2019	08/30/19 19:08	D1
beta-BHC	ND	5.0	5	B9H0753	08/30/2019	08/30/19 19:08	D1
Chlordane [2C]	ND	42	5	B9H0753	08/30/2019	08/30/19 19:08	D1
delta-BHC	ND	5.0	5	B9H0753	08/30/2019	08/30/19 19:08	D1
Dieldrin	**48**	10	5	B9H0753	08/30/2019	08/30/19 19:08	
Endosulfan I	ND	5.0	5	B9H0753	08/30/2019	08/30/19 19:08	D1
Endosulfan II	ND	10	5	B9H0753	08/30/2019	08/30/19 19:08	D1
Endosulfan sulfate	ND	10	5	B9H0753	08/30/2019	08/30/19 19:08	D1
Endrin	ND	10	5	B9H0753	08/30/2019	08/30/19 19:08	D1
Endrin aldehyde	ND	10	5	B9H0753	08/30/2019	08/30/19 19:08	D1
Endrin ketone	ND	10	5	B9H0753	08/30/2019	08/30/19 19:08	D1
gamma-BHC	ND	5.0	5	B9H0753	08/30/2019	08/30/19 19:08	D1
gamma-Chlordane [2C]	ND	5.0	5	B9H0753	08/30/2019	08/30/19 19:08	D1
Heptachlor	ND	5.0	5	B9H0753	08/30/2019	08/30/19 19:08	D1
Heptachlor epoxide	ND	5.0	5	B9H0753	08/30/2019	08/30/19 19:08	D1
Methoxychlor	ND	25	5	B9H0753	08/30/2019	08/30/19 19:08	D1
Toxaphene	ND	250	5	B9H0753	08/30/2019	08/30/19 19:08	D1
Surrogate: Decachlorobiphenyl	*83.7 %*	*32 - 91*		B9H0753	08/30/2019	*08/30/19 19:08*	
Surrogate: Tetrachloro-m-xylene	*77.4 %*	*38 - 93*		B9H0753	08/30/2019	*08/30/19 19:08*	

Certificate of Analysis

Leighton Consulting, Inc.		Project Number :	Park Plaza, 12137.003
17781 Cowan Street		Report To :	Brynn McCulloch
Irvine , CA 92614		Reported :	09/03/2019

Client Sample ID: LB1-NE2-2.5

Lab ID: 1903209-22

Organochlorine Pesticides by EPA 8081 **Analyst: BL**

Analyte	Result (ug/kg)	PQL (ug/kg)	Dilution	Batch	Prepared	Date/Time Analyzed	Notes
4,4´-DDD [2C]	ND	2.0	1	B9H0753	08/30/2019	08/30/19 19:18	
4,4´-DDE	ND	2.0	1	B9H0753	08/30/2019	08/30/19 19:18	
4,4´-DDT	ND	2.0	1	B9H0753	08/30/2019	08/30/19 19:18	
Aldrin	ND	1.0	1	B9H0753	08/30/2019	08/30/19 19:18	
alpha-BHC	ND	1.0	1	B9H0753	08/30/2019	08/30/19 19:18	
alpha-Chlordane	ND	1.0	1	B9H0753	08/30/2019	08/30/19 19:18	
beta-BHC	ND	1.0	1	B9H0753	08/30/2019	08/30/19 19:18	
Chlordane	ND	8.5	1	B9H0753	08/30/2019	08/30/19 19:18	
delta-BHC	ND	1.0	1	B9H0753	08/30/2019	08/30/19 19:18	
Dieldrin [2C]	ND	2.0	1	B9H0753	08/30/2019	08/30/19 19:18	
Endosulfan I	ND	1.0	1	B9H0753	08/30/2019	08/30/19 19:18	
Endosulfan II	ND	2.0	1	B9H0753	08/30/2019	08/30/19 19:18	
Endosulfan sulfate	ND	2.0	1	B9H0753	08/30/2019	08/30/19 19:18	
Endrin	ND	2.0	1	B9H0753	08/30/2019	08/30/19 19:18	
Endrin aldehyde	ND	2.0	1	B9H0753	08/30/2019	08/30/19 19:18	
Endrin ketone	ND	2.0	1	B9H0753	08/30/2019	08/30/19 19:18	
gamma-BHC	ND	1.0	1	B9H0753	08/30/2019	08/30/19 19:18	
gamma-Chlordane	ND	1.0	1	B9H0753	08/30/2019	08/30/19 19:18	
Heptachlor	ND	1.0	1	B9H0753	08/30/2019	08/30/19 19:18	
Heptachlor epoxide	ND	1.0	1	B9H0753	08/30/2019	08/30/19 19:18	
Methoxychlor	ND	5.0	1	B9H0753	08/30/2019	08/30/19 19:18	
Toxaphene	ND	50	1	B9H0753	08/30/2019	08/30/19 19:18	
Surrogate: Decachlorobiphenyl	*70.7 %*	*32 - 91*		B9H0753	08/30/2019	*08/30/19 19:18*	
Surrogate: Tetrachloro-m-xylene	*71.1 %*	*38 - 93*		B9H0753	08/30/2019	*08/30/19 19:18*	

Certificate of Analysis

Leighton Consulting, Inc.		Project Number :	Park Plaza, 12137.003
17781 Cowan Street		Report To :	Brynn McCulloch
Irvine , CA 92614		Reported :	09/03/2019

Client Sample ID: LB1-SE1-0.5

Lab ID: 1903209-23

Organochlorine Pesticides by EPA 8081 **Analyst: BL**

Analyte	Result (ug/kg)	PQL (ug/kg)	Dilution	Batch	Prepared	Date/Time Analyzed	Notes
4,4´-DDD	ND	40	20	B9H0753	08/30/2019	08/30/19 19:29	D1
4,4´-DDE	ND	40	20	B9H0753	08/30/2019	08/30/19 19:29	D1
4,4´-DDT [2C]	ND	40	20	B9H0753	08/30/2019	08/30/19 19:29	D1
Aldrin	ND	20	20	B9H0753	08/30/2019	08/30/19 19:29	D1
alpha-BHC	ND	20	20	B9H0753	08/30/2019	08/30/19 19:29	D1
alpha-Chlordane	ND	20	20	B9H0753	08/30/2019	08/30/19 19:29	D1
beta-BHC	ND	20	20	B9H0753	08/30/2019	08/30/19 19:29	D1
Chlordane	ND	170	20	B9H0753	08/30/2019	08/30/19 19:29	D1
delta-BHC	ND	20	20	B9H0753	08/30/2019	08/30/19 19:29	D1
Dieldrin	**75**	40	20	B9H0753	08/30/2019	08/30/19 19:29	
Endosulfan I	ND	20	20	B9H0753	08/30/2019	08/30/19 19:29	D1
Endosulfan II	ND	40	20	B9H0753	08/30/2019	08/30/19 19:29	D1
Endosulfan sulfate	ND	40	20	B9H0753	08/30/2019	08/30/19 19:29	D1
Endrin	ND	40	20	B9H0753	08/30/2019	08/30/19 19:29	D1
Endrin aldehyde	ND	40	20	B9H0753	08/30/2019	08/30/19 19:29	D1
Endrin ketone	ND	40	20	B9H0753	08/30/2019	08/30/19 19:29	D1
gamma-BHC	ND	20	20	B9H0753	08/30/2019	08/30/19 19:29	D1
gamma-Chlordane	ND	20	20	B9H0753	08/30/2019	08/30/19 19:29	D1
Heptachlor	ND	20	20	B9H0753	08/30/2019	08/30/19 19:29	D1
Heptachlor epoxide	ND	20	20	B9H0753	08/30/2019	08/30/19 19:29	D1
Methoxychlor	ND	100	20	B9H0753	08/30/2019	08/30/19 19:29	D1
Toxaphene	ND	1000	20	B9H0753	08/30/2019	08/30/19 19:29	D1
Surrogate: Decachlorobiphenyl	*49.7 %*	*32 - 91*		B9H0753	08/30/2019	*08/30/19 19:29*	
Surrogate: Tetrachloro-m-xylene	*51.3 %*	*38 - 93*		B9H0753	08/30/2019	*08/30/19 19:29*	

Certificate of Analysis

Leighton Consulting, Inc.		Project Number :	Park Plaza, 12137.003
17781 Cowan Street		Report To :	Brynn McCulloch
Irvine , CA 92614		Reported :	09/03/2019

Client Sample ID: LB1-SE1-2.5

Lab ID: 1903209-24

Organochlorine Pesticides by EPA 8081 **Analyst: BL**

Analyte	Result (ug/kg)	PQL (ug/kg)	Dilution	Batch	Prepared	Date/Time Analyzed	Notes
4,4´-DDD	ND	2.0	1	B9H0753	08/30/2019	08/30/19 19:39	
4,4´-DDE	ND	2.0	1	B9H0753	08/30/2019	08/30/19 19:39	
4,4´-DDT	ND	2.0	1	B9H0753	08/30/2019	08/30/19 19:39	
Aldrin	ND	1.0	1	B9H0753	08/30/2019	08/30/19 19:39	
alpha-BHC	ND	1.0	1	B9H0753	08/30/2019	08/30/19 19:39	
alpha-Chlordane	ND	1.0	1	B9H0753	08/30/2019	08/30/19 19:39	
beta-BHC	ND	1.0	1	B9H0753	08/30/2019	08/30/19 19:39	
Chlordane	ND	8.5	1	B9H0753	08/30/2019	08/30/19 19:39	
delta-BHC	ND	1.0	1	B9H0753	08/30/2019	08/30/19 19:39	
Dieldrin [2C]	ND	2.0	1	B9H0753	08/30/2019	08/30/19 19:39	
Endosulfan I	ND	1.0	1	B9H0753	08/30/2019	08/30/19 19:39	
Endosulfan II	ND	2.0	1	B9H0753	08/30/2019	08/30/19 19:39	
Endosulfan sulfate	ND	2.0	1	B9H0753	08/30/2019	08/30/19 19:39	
Endrin	ND	2.0	1	B9H0753	08/30/2019	08/30/19 19:39	
Endrin aldehyde	ND	2.0	1	B9H0753	08/30/2019	08/30/19 19:39	
Endrin ketone	ND	2.0	1	B9H0753	08/30/2019	08/30/19 19:39	
gamma-BHC	ND	1.0	1	B9H0753	08/30/2019	08/30/19 19:39	
gamma-Chlordane	ND	1.0	1	B9H0753	08/30/2019	08/30/19 19:39	
Heptachlor	ND	1.0	1	B9H0753	08/30/2019	08/30/19 19:39	
Heptachlor epoxide	ND	1.0	1	B9H0753	08/30/2019	08/30/19 19:39	
Methoxychlor	ND	5.0	1	B9H0753	08/30/2019	08/30/19 19:39	
Toxaphene	ND	50	1	B9H0753	08/30/2019	08/30/19 19:39	
Surrogate: Decachlorobiphenyl	*71.5 %*	*32 - 91*		B9H0753	08/30/2019	*08/30/19 19:39*	
Surrogate: Tetrachloro-m-xylene	*74.0 %*	*38 - 93*		B9H0753	08/30/2019	*08/30/19 19:39*	

Certificate of Analysis

Leighton Consulting, Inc.		Project Number :	Park Plaza, 12137.003
17781 Cowan Street		Report To :	Brynn McCulloch
Irvine , CA 92614		Reported :	09/03/2019

Client Sample ID: LB1-SE2-0.5

Lab ID: 1903209-25

Organochlorine Pesticides by EPA 8081 **Analyst: BL**

Analyte	Result (ug/kg)	PQL (ug/kg)	Dilution	Batch	Prepared	Date/Time Analyzed	Notes
4,4´-DDD	ND	10	5	B9H0753	08/30/2019	08/30/19 19:50	D1
4,4´-DDE	**88**	10	5	B9H0753	08/30/2019	08/30/19 19:50	
4,4´-DDT	**23**	10	5	B9H0753	08/30/2019	08/30/19 19:50	
Aldrin	ND	5.0	5	B9H0753	08/30/2019	08/30/19 19:50	D1
alpha-BHC	ND	5.0	5	B9H0753	08/30/2019	08/30/19 19:50	D1
alpha-Chlordane	ND	5.0	5	B9H0753	08/30/2019	08/30/19 19:50	D1
beta-BHC	ND	5.0	5	B9H0753	08/30/2019	08/30/19 19:50	D1
Chlordane	ND	42	5	B9H0753	08/30/2019	08/30/19 19:50	D1
delta-BHC	ND	5.0	5	B9H0753	08/30/2019	08/30/19 19:50	D1
Dieldrin	**80**	10	5	B9H0753	08/30/2019	08/30/19 19:50	
Endosulfan I	ND	5.0	5	B9H0753	08/30/2019	08/30/19 19:50	D1
Endosulfan II	ND	10	5	B9H0753	08/30/2019	08/30/19 19:50	D1
Endosulfan sulfate	ND	10	5	B9H0753	08/30/2019	08/30/19 19:50	D1
Endrin	ND	10	5	B9H0753	08/30/2019	08/30/19 19:50	D1
Endrin aldehyde	ND	10	5	B9H0753	08/30/2019	08/30/19 19:50	D1
Endrin ketone	ND	10	5	B9H0753	08/30/2019	08/30/19 19:50	D1
gamma-BHC	ND	5.0	5	B9H0753	08/30/2019	08/30/19 19:50	D1
gamma-Chlordane	ND	5.0	5	B9H0753	08/30/2019	08/30/19 19:50	D1
Heptachlor	ND	5.0	5	B9H0753	08/30/2019	08/30/19 19:50	D1
Heptachlor epoxide	ND	5.0	5	B9H0753	08/30/2019	08/30/19 19:50	D1
Methoxychlor	ND	25	5	B9H0753	08/30/2019	08/30/19 19:50	D1
Toxaphene	ND	250	5	B9H0753	08/30/2019	08/30/19 19:50	D1
Surrogate: Decachlorobiphenyl	*81.7 %*	*32 - 91*		B9H0753	08/30/2019	*08/30/19 19:50*	
Surrogate: Tetrachloro-m-xylene	*87.0 %*	*38 - 93*		B9H0753	08/30/2019	*08/30/19 19:50*	

Certificate of Analysis

Leighton Consulting, Inc.		Project Number :	Park Plaza, 12137.003
17781 Cowan Street		Report To :	Brynn McCulloch
Irvine , CA 92614		Reported :	09/03/2019

Client Sample ID: LB1-SE2-2.5

Lab ID: 1903209-26

Organochlorine Pesticides by EPA 8081 **Analyst: BL**

Analyte	Result (ug/kg)	PQL (ug/kg)	Dilution	Batch	Prepared	Date/Time Analyzed	Notes
4,4´-DDD	ND	2.0	1	B9H0753	08/30/2019	08/30/19 20:00	
4,4´-DDE	ND	2.0	1	B9H0753	08/30/2019	08/30/19 20:00	
4,4´-DDT	ND	2.0	1	B9H0753	08/30/2019	08/30/19 20:00	
Aldrin	ND	1.0	1	B9H0753	08/30/2019	08/30/19 20:00	
alpha-BHC	ND	1.0	1	B9H0753	08/30/2019	08/30/19 20:00	
alpha-Chlordane	ND	1.0	1	B9H0753	08/30/2019	08/30/19 20:00	
beta-BHC	ND	1.0	1	B9H0753	08/30/2019	08/30/19 20:00	
Chlordane	ND	8.5	1	B9H0753	08/30/2019	08/30/19 20:00	
delta-BHC	ND	1.0	1	B9H0753	08/30/2019	08/30/19 20:00	
Dieldrin	ND	2.0	1	B9H0753	08/30/2019	08/30/19 20:00	
Endosulfan I	ND	1.0	1	B9H0753	08/30/2019	08/30/19 20:00	
Endosulfan II	ND	2.0	1	B9H0753	08/30/2019	08/30/19 20:00	
Endosulfan sulfate	ND	2.0	1	B9H0753	08/30/2019	08/30/19 20:00	
Endrin	ND	2.0	1	B9H0753	08/30/2019	08/30/19 20:00	
Endrin aldehyde	ND	2.0	1	B9H0753	08/30/2019	08/30/19 20:00	
Endrin ketone	ND	2.0	1	B9H0753	08/30/2019	08/30/19 20:00	
gamma-BHC	ND	1.0	1	B9H0753	08/30/2019	08/30/19 20:00	
gamma-Chlordane	ND	1.0	1	B9H0753	08/30/2019	08/30/19 20:00	
Heptachlor	ND	1.0	1	B9H0753	08/30/2019	08/30/19 20:00	
Heptachlor epoxide	ND	1.0	1	B9H0753	08/30/2019	08/30/19 20:00	
Methoxychlor	ND	5.0	1	B9H0753	08/30/2019	08/30/19 20:00	
Toxaphene	ND	50	1	B9H0753	08/30/2019	08/30/19 20:00	
Surrogate: Decachlorobiphenyl	*66.4 %*	*32 - 91*		B9H0753	08/30/2019	*08/30/19 20:00*	
Surrogate: Tetrachloro-m-xylene	*73.5 %*	*38 - 93*		B9H0753	08/30/2019	*08/30/19 20:00*	

Certificate of Analysis

Leighton Consulting, Inc.		Project Number :	Park Plaza, 12137.003
17781 Cowan Street		Report To :	Brynn McCulloch
Irvine , CA 92614		Reported :	09/03/2019

Client Sample ID: LB1-SW1-0.5

Lab ID: 1903209-27

Organochlorine Pesticides by EPA 8081 **Analyst: BL**

Analyte	Result (ug/kg)	PQL (ug/kg)	Dilution	Batch	Prepared	Date/Time Analyzed	Notes
4,4´-DDD	ND	2.0	1	B9H0753	08/30/2019	08/30/19 20:11	
4,4´-DDE	ND	2.0	1	B9H0753	08/30/2019	08/30/19 20:11	
4,4´-DDT	ND	2.0	1	B9H0753	08/30/2019	08/30/19 20:11	
Aldrin	ND	1.0	1	B9H0753	08/30/2019	08/30/19 20:11	
alpha-BHC	ND	1.0	1	B9H0753	08/30/2019	08/30/19 20:11	
alpha-Chlordane	ND	1.0	1	B9H0753	08/30/2019	08/30/19 20:11	
beta-BHC	ND	1.0	1	B9H0753	08/30/2019	08/30/19 20:11	
Chlordane	ND	8.5	1	B9H0753	08/30/2019	08/30/19 20:11	
delta-BHC	ND	1.0	1	B9H0753	08/30/2019	08/30/19 20:11	
Dieldrin	ND	2.0	1	B9H0753	08/30/2019	08/30/19 20:11	
Endosulfan I	ND	1.0	1	B9H0753	08/30/2019	08/30/19 20:11	
Endosulfan II	ND	2.0	1	B9H0753	08/30/2019	08/30/19 20:11	
Endosulfan sulfate	ND	2.0	1	B9H0753	08/30/2019	08/30/19 20:11	
Endrin	ND	2.0	1	B9H0753	08/30/2019	08/30/19 20:11	
Endrin aldehyde	ND	2.0	1	B9H0753	08/30/2019	08/30/19 20:11	
Endrin ketone	ND	2.0	1	B9H0753	08/30/2019	08/30/19 20:11	
gamma-BHC	ND	1.0	1	B9H0753	08/30/2019	08/30/19 20:11	
gamma-Chlordane	ND	1.0	1	B9H0753	08/30/2019	08/30/19 20:11	
Heptachlor	ND	1.0	1	B9H0753	08/30/2019	08/30/19 20:11	
Heptachlor epoxide	ND	1.0	1	B9H0753	08/30/2019	08/30/19 20:11	
Methoxychlor	ND	5.0	1	B9H0753	08/30/2019	08/30/19 20:11	
Toxaphene	ND	50	1	B9H0753	08/30/2019	08/30/19 20:11	
Surrogate: Decachlorobiphenyl	*68.1 %*	*32 - 91*		B9H0753	08/30/2019	*08/30/19 20:11*	
Surrogate: Tetrachloro-m-xylene	*69.7 %*	*38 - 93*		B9H0753	08/30/2019	*08/30/19 20:11*	

Certificate of Analysis

Leighton Consulting, Inc.		Project Number :	Park Plaza, 12137.003
17781 Cowan Street		Report To :	Brynn McCulloch
Irvine , CA 92614		Reported :	09/03/2019

Client Sample ID: LB1-SW1-2.5

Lab ID: 1903209-28

Organochlorine Pesticides by EPA 8081 **Analyst: BL**

Analyte	Result (ug/kg)	PQL (ug/kg)	Dilution	Batch	Prepared	Date/Time Analyzed	Notes
4,4´-DDD [2C]	ND	10	5	B9H0753	08/30/2019	08/30/19 20:21	D1
4,4´-DDE	**65**	10	5	B9H0753	08/30/2019	08/30/19 20:21	
4,4´-DDT [2C]	**12**	10	5	B9H0753	08/30/2019	08/30/19 20:21	
Aldrin	ND	5.0	5	B9H0753	08/30/2019	08/30/19 20:21	D1
alpha-BHC	ND	5.0	5	B9H0753	08/30/2019	08/30/19 20:21	D1
alpha-Chlordane	ND	5.0	5	B9H0753	08/30/2019	08/30/19 20:21	D1
beta-BHC	ND	5.0	5	B9H0753	08/30/2019	08/30/19 20:21	D1
Chlordane	ND	42	5	B9H0753	08/30/2019	08/30/19 20:21	D1
delta-BHC	ND	5.0	5	B9H0753	08/30/2019	08/30/19 20:21	D1
Dieldrin	**78**	10	5	B9H0753	08/30/2019	08/30/19 20:21	
Endosulfan I	ND	5.0	5	B9H0753	08/30/2019	08/30/19 20:21	D1
Endosulfan II	ND	10	5	B9H0753	08/30/2019	08/30/19 20:21	D1
Endosulfan sulfate	ND	10	5	B9H0753	08/30/2019	08/30/19 20:21	D1
Endrin	ND	10	5	B9H0753	08/30/2019	08/30/19 20:21	D1
Endrin aldehyde	ND	10	5	B9H0753	08/30/2019	08/30/19 20:21	D1
Endrin ketone	ND	10	5	B9H0753	08/30/2019	08/30/19 20:21	D1
gamma-BHC	ND	5.0	5	B9H0753	08/30/2019	08/30/19 20:21	D1
gamma-Chlordane	ND	5.0	5	B9H0753	08/30/2019	08/30/19 20:21	D1
Heptachlor	ND	5.0	5	B9H0753	08/30/2019	08/30/19 20:21	D1
Heptachlor epoxide	ND	5.0	5	B9H0753	08/30/2019	08/30/19 20:21	D1
Methoxychlor	ND	25	5	B9H0753	08/30/2019	08/30/19 20:21	D1
Toxaphene	ND	250	5	B9H0753	08/30/2019	08/30/19 20:21	D1
Surrogate: Decachlorobiphenyl	*79.0 %*	*32 - 91*		B9H0753	08/30/2019	*08/30/19 20:21*	
Surrogate: Tetrachloro-m-xylene	*79.0 %*	*38 - 93*		B9H0753	08/30/2019	*08/30/19 20:21*	

Certificate of Analysis

Leighton Consulting, Inc.		Project Number :	Park Plaza, 12137.003
17781 Cowan Street		Report To :	Brynn McCulloch
Irvine , CA 92614		Reported :	09/03/2019

Client Sample ID: LB1-SW2-0.5

Lab ID: 1903209-29

Organochlorine Pesticides by EPA 8081 **Analyst: BL**

Analyte	Result (ug/kg)	PQL (ug/kg)	Dilution	Batch	Prepared	Date/Time Analyzed	Notes
4,4´-DDD	ND	10	5	B9H0753	08/30/2019	08/30/19 20:32	D1
4,4´-DDE	**170**	10	5	B9H0753	08/30/2019	08/30/19 20:32	
4,4´-DDT [2C]	**28**	10	5	B9H0753	08/30/2019	08/30/19 20:32	
Aldrin	ND	5.0	5	B9H0753	08/30/2019	08/30/19 20:32	D1
alpha-BHC	ND	5.0	5	B9H0753	08/30/2019	08/30/19 20:32	D1
alpha-Chlordane	ND	5.0	5	B9H0753	08/30/2019	08/30/19 20:32	D1
beta-BHC	ND	5.0	5	B9H0753	08/30/2019	08/30/19 20:32	D1
Chlordane	ND	42	5	B9H0753	08/30/2019	08/30/19 20:32	D1
delta-BHC	ND	5.0	5	B9H0753	08/30/2019	08/30/19 20:32	D1
Dieldrin	**160**	10	5	B9H0753	08/30/2019	08/30/19 20:32	
Endosulfan I	ND	5.0	5	B9H0753	08/30/2019	08/30/19 20:32	D1
Endosulfan II	ND	10	5	B9H0753	08/30/2019	08/30/19 20:32	D1
Endosulfan sulfate	ND	10	5	B9H0753	08/30/2019	08/30/19 20:32	D1
Endrin	ND	10	5	B9H0753	08/30/2019	08/30/19 20:32	D1
Endrin aldehyde	ND	10	5	B9H0753	08/30/2019	08/30/19 20:32	D1
Endrin ketone	ND	10	5	B9H0753	08/30/2019	08/30/19 20:32	D1
gamma-BHC	ND	5.0	5	B9H0753	08/30/2019	08/30/19 20:32	D1
gamma-Chlordane	ND	5.0	5	B9H0753	08/30/2019	08/30/19 20:32	D1
Heptachlor	ND	5.0	5	B9H0753	08/30/2019	08/30/19 20:32	D1
Heptachlor epoxide	ND	5.0	5	B9H0753	08/30/2019	08/30/19 20:32	D1
Methoxychlor	ND	25	5	B9H0753	08/30/2019	08/30/19 20:32	D1
Toxaphene	ND	250	5	B9H0753	08/30/2019	08/30/19 20:32	D1
Surrogate: Decachlorobiphenyl	*43.8 %*	*32 - 91*		B9H0753	08/30/2019	*08/30/19 20:32*	
Surrogate: Tetrachloro-m-xylene	*62.0 %*	*38 - 93*		B9H0753	08/30/2019	*08/30/19 20:32*	

Certificate of Analysis

Leighton Consulting, Inc.		Project Number :	Park Plaza, 12137.003
17781 Cowan Street		Report To :	Brynn McCulloch
Irvine , CA 92614		Reported :	09/03/2019

Client Sample ID: LB1-SW2-2.5

Lab ID: 1903209-30

Organochlorine Pesticides by EPA 8081 **Analyst: BL**

Analyte	Result (ug/kg)	PQL (ug/kg)	Dilution	Batch	Prepared	Date/Time Analyzed	Notes
4,4´-DDD	ND	2.0	1	B9H0753	08/30/2019	08/30/19 20:42	
4,4´-DDE	ND	2.0	1	B9H0753	08/30/2019	08/30/19 20:42	
4,4´-DDT	ND	2.0	1	B9H0753	08/30/2019	08/30/19 20:42	
Aldrin	ND	1.0	1	B9H0753	08/30/2019	08/30/19 20:42	
alpha-BHC	ND	1.0	1	B9H0753	08/30/2019	08/30/19 20:42	
alpha-Chlordane	ND	1.0	1	B9H0753	08/30/2019	08/30/19 20:42	
beta-BHC	ND	1.0	1	B9H0753	08/30/2019	08/30/19 20:42	
Chlordane	ND	8.5	1	B9H0753	08/30/2019	08/30/19 20:42	
delta-BHC	ND	1.0	1	B9H0753	08/30/2019	08/30/19 20:42	
Dieldrin	**3.8**	2.0	1	B9H0753	08/30/2019	08/30/19 20:42	
Endosulfan I	ND	1.0	1	B9H0753	08/30/2019	08/30/19 20:42	
Endosulfan II	ND	2.0	1	B9H0753	08/30/2019	08/30/19 20:42	
Endosulfan sulfate	ND	2.0	1	B9H0753	08/30/2019	08/30/19 20:42	
Endrin	ND	2.0	1	B9H0753	08/30/2019	08/30/19 20:42	
Endrin aldehyde	ND	2.0	1	B9H0753	08/30/2019	08/30/19 20:42	
Endrin ketone	ND	2.0	1	B9H0753	08/30/2019	08/30/19 20:42	
gamma-BHC	ND	1.0	1	B9H0753	08/30/2019	08/30/19 20:42	
gamma-Chlordane	ND	1.0	1	B9H0753	08/30/2019	08/30/19 20:42	
Heptachlor	ND	1.0	1	B9H0753	08/30/2019	08/30/19 20:42	
Heptachlor epoxide	ND	1.0	1	B9H0753	08/30/2019	08/30/19 20:42	
Methoxychlor	ND	5.0	1	B9H0753	08/30/2019	08/30/19 20:42	
Toxaphene	ND	50	1	B9H0753	08/30/2019	08/30/19 20:42	
Surrogate: Decachlorobiphenyl	*69.6 %*	*32 - 91*		B9H0753	08/30/2019	*08/30/19 20:42*	
Surrogate: Tetrachloro-m-xylene	*70.7 %*	*38 - 93*		B9H0753	08/30/2019	*08/30/19 20:42*	

Certificate of Analysis

Leighton Consulting, Inc.		Project Number :	Park Plaza, 12137.003
17781 Cowan Street		Report To :	Brynn McCulloch
Irvine , CA 92614		Reported :	09/03/2019

QUALITY CONTROL SECTION

Total Metals by ICP-AES EPA 6010B - Quality Control

Analyte	Result (mg/kg)	PQL (mg/kg)	MDL (mg/kg)	Spike Level	Source Result	% Rec	% Rec Limits	RPD	RPD Limit	Notes
Batch B9H0741 - EPA 3050B_S										
Blank (B9H0741-BLK1)					Prepared: 8/30/2019 Analyzed: 8/30/2019					
Arsenic	ND	1.0	0.12							
LCS (B9H0741-BS1)					Prepared: 8/30/2019 Analyzed: 8/30/2019					
Arsenic	45.2976	1.0	0.12	50.0000		90.6	80 - 120			
Matrix Spike (B9H0741-MS1)			**Source: 1903202-04**		Prepared: 8/30/2019 Analyzed: 8/30/2019					
Arsenic	114.490	1.0	0.12	125.000	27.3958	69.7	46 - 97			
Matrix Spike Dup (B9H0741-MSD1)			**Source: 1903202-04**		Prepared: 8/30/2019 Analyzed: 8/30/2019					
Arsenic	113.330	1.0	0.12	125.000	27.3958	68.7	46 - 97	1.02	20	

Certificate of Analysis

Leighton Consulting, Inc.		Project Number :	Park Plaza, 12137.003
17781 Cowan Street		Report To :	Brynn McCulloch
Irvine , CA 92614		Reported :	09/03/2019

Organochlorine Pesticides by EPA 8081 - Quality Control

Analyte	Result (ug/kg)	PQL (ug/kg)	MDL (ug/kg)	Spike Level	Source Result	% Rec	% Rec Limits	RPD	RPD Limit	Notes
Batch B9H0753 - GCSEMI_PCB/PEST_S										
Blank (B9H0753-BLK1)							Prepared: 8/30/2019 Analyzed: 8/30/2019			
4,4´-DDD	ND	2.0	0.07							
4,4´-DDD [2C]	ND	2.0	0.07							
4,4´-DDE	ND	2.0	0.11							
4,4´-DDE [2C]	ND	2.0	0.11							
4,4´-DDT	ND	2.0	0.10							
4,4´-DDT [2C]	ND	2.0	0.10							
Aldrin	ND	1.0	0.12							
Aldrin [2C]	ND	1.0	0.12							
alpha-BHC	ND	1.0	0.11							
alpha-BHC [2C]	ND	1.0	0.11							
alpha-Chlordane	ND	1.0	0.12							
alpha-Chlordane [2C]	ND	1.0	0.12							
beta-BHC	ND	1.0	0.06							
beta-BHC [2C]	ND	1.0	0.06							
Chlordane	ND	8.5	1.1							
Chlordane [2C]	ND	8.5	1.1							
delta-BHC	ND	1.0	0.12							
delta-BHC [2C]	ND	1.0	0.12							
Dieldrin	ND	2.0	0.26							
Dieldrin [2C]	ND	2.0	0.26							
Endosulfan I	ND	1.0	0.10							
Endosulfan I [2C]	ND	1.0	0.10							
Endosulfan II	ND	2.0	0.15							
Endosulfan II [2C]	ND	2.0	0.15							
Endosulfan sulfate	ND	2.0	0.16							
Endosulfan Sulfate [2C]	ND	2.0	0.16							
Endrin	ND	2.0	0.14							
Endrin [2C]	ND	2.0	0.14							
Endrin aldehyde	ND	2.0	0.31							
Endrin aldehyde [2C]	ND	2.0	0.31							
Endrin ketone	ND	2.0	0.13							
Endrin ketone [2C]	ND	2.0	0.13							
gamma-BHC	ND	1.0	0.10							
gamma-BHC [2C]	ND	1.0	0.10							
gamma-Chlordane	ND	1.0	0.89							
gamma-Chlordane [2C]	ND	1.0	0.89							
Heptachlor	ND	1.0	0.12							
Heptachlor [2C]	ND	1.0	0.12							
Heptachlor epoxide	ND	1.0	0.09							
Heptachlor epoxide [2C]	ND	1.0	0.09							
Methoxychlor	ND	5.0	0.18							

Certificate of Analysis

Leighton Consulting, Inc.		Project Number :	Park Plaza, 12137.003
17781 Cowan Street		Report To :	Brynn McCulloch
Irvine , CA 92614		Reported :	09/03/2019

Organochlorine Pesticides by EPA 8081 - Quality Control (cont'd)

Analyte	Result (ug/kg)	PQL (ug/kg)	MDL (ug/kg)	Spike Level	Source Result	% Rec	% Rec Limits	RPD	RPD Limit	Notes
Batch B9H0753 - GCSEMI_PCB/PEST_S (continued)										
Blank (B9H0753-BLK1) - Continued					Prepared: 8/30/2019 Analyzed: 8/30/2019					
Methoxychlor [2C]	ND	5.0	0.18							
Toxaphene	ND	50	4.7							
Toxaphene [2C]	ND	50	4.7							
Surrogate: Decachlorobiphenyl	*13.34*			*16.6667*		*80.0*	*32 - 91*			
Surrogate: Decachlorobiphenyl [	*13.98*			*16.6667*		*83.9*	*32 - 91*			
Surrogate: Tetrachloro-m-xylene	*11.74*			*16.6667*		*70.4*	*38 - 93*			
Surrogate: Tetrachloro-m-xylene	*11.83*			*16.6667*		*71.0*	*38 - 93*			
LCS (B9H0753-BS1)					Prepared: 8/30/2019 Analyzed: 8/30/2019					
4,4´-DDD	14.1282	2.0	0.07	16.6667		84.8	66 - 112			
4,4´-DDD [2C]	13.3010	2.0	0.07	16.6667		79.8	66 - 112			
4,4´-DDE	13.9623	2.0	0.11	16.6667		83.8	62 - 112			
4,4´-DDE [2C]	13.1290	2.0	0.11	16.6667		78.8	62 - 112			
4,4´-DDT	13.2297	2.0	0.10	16.6667		79.4	48 - 90			
4,4´-DDT [2C]	12.3988	2.0	0.10	16.6667		74.4	48 - 90			
Aldrin	13.1092	1.0	0.12	16.6667		78.7	58 - 104			
Aldrin [2C]	12.3412	1.0	0.12	16.6667		74.0	58 - 104			
alpha-BHC	12.8460	1.0	0.11	16.6667		77.1	57 - 105			
alpha-BHC [2C]	12.3663	1.0	0.11	16.6667		74.2	57 - 105			
alpha-Chlordane	12.4018	1.0	0.12	16.6667		74.4	62 - 108			
alpha-Chlordane [2C]	12.5465	1.0	0.12	16.6667		75.3	62 - 108			
beta-BHC	13.0945	1.0	0.06	16.6667		78.6	59 - 106			
beta-BHC [2C]	12.5100	1.0	0.06	16.6667		75.1	59 - 106			
delta-BHC	12.6673	1.0	0.12	16.6667		76.0	63 - 115			
delta-BHC [2C]	12.0468	1.0	0.12	16.6667		72.3	63 - 115			
Dieldrin	12.6760	2.0	0.26	16.6667		76.1	59 - 102			
Dieldrin [2C]	12.5780	2.0	0.26	16.6667		75.5	59 - 102			
Endosulfan I	10.6377	1.0	0.10	16.6667		63.8	61 - 99			
Endosulfan I [2C]	11.0252	1.0	0.10	16.6667		66.2	61 - 99			
Endosulfan II	13.1492	2.0	0.15	16.6667		78.9	65 - 105			
Endosulfan II [2C]	12.8458	2.0	0.15	16.6667		77.1	65 - 105			
Endosulfan sulfate	12.3345	2.0	0.16	16.6667		74.0	59 - 107			
Endosulfan Sulfate [2C]	12.3187	2.0	0.16	16.6667		73.9	59 - 107			
Endrin	13.8432	2.0	0.14	16.6667		83.1	65 - 113			
Endrin [2C]	13.6380	2.0	0.14	16.6667		81.8	65 - 113			
Endrin aldehyde	13.0580	2.0	0.31	16.6667		78.3	61 - 109			
Endrin aldehyde [2C]	12.9907	2.0	0.31	16.6667		77.9	61 - 109			
Endrin ketone	12.7762	2.0	0.13	16.6667		76.7	56 - 97			
Endrin ketone [2C]	12.7795	2.0	0.13	16.6667		76.7	56 - 97			
gamma-BHC	13.5025	1.0	0.10	16.6667		81.0	57 - 101			
gamma-BHC [2C]	12.8470	1.0	0.10	16.6667		77.1	57 - 101			

Certificate of Analysis

Leighton Consulting, Inc.		Project Number :	Park Plaza, 12137.003
17781 Cowan Street		Report To :	Brynn McCulloch
Irvine , CA 92614		Reported :	09/03/2019

Organochlorine Pesticides by EPA 8081 - Quality Control (cont'd)

Analyte	Result (ug/kg)	PQL (ug/kg)	MDL (ug/kg)	Spike Level	Source Result	% Rec	% Rec Limits	RPD	RPD Limit	Notes
Batch B9H0753 - GCSEMI_PCB/PEST_S (continued)										
LCS (B9H0753-BS1) - Continued					Prepared: 8/30/2019 Analyzed: 8/30/2019					
gamma-Chlordane	13.3342	1.0	0.89	16.6667		80.0	56 - 125			
gamma-Chlordane [2C]	12.3627	1.0	0.89	16.6667		74.2	56 - 125			
Heptachlor	13.4952	1.0	0.12	16.6667		81.0	61 - 105			
Heptachlor [2C]	12.3568	1.0	0.12	16.6667		74.1	61 - 105			
Heptachlor epoxide	12.6338	1.0	0.09	16.6667		75.8	59 - 97			
Heptachlor epoxide [2C]	11.7360	1.0	0.09	16.6667		70.4	59 - 97			
Methoxychlor	12.8362	5.0	0.18	16.6667		77.0	68 - 118			
Methoxychlor [2C]	12.6437	5.0	0.18	16.6667		75.9	68 - 118			
Surrogate: Decachlorobiphenyl	*15.06*			*16.6667*		*90.4*	*32 - 91*			
Surrogate: Decachlorobiphenyl [	*14.94*			*16.6667*		*89.7*	*32 - 91*			
Surrogate: Tetrachloro-m-xylene	*13.54*			*16.6667*		*81.3*	*38 - 93*			
Surrogate: Tetrachloro-m-xylene	*13.31*			*16.6667*		*79.8*	*38 - 93*			
Duplicate (B9H0753-DUP1)			**Source: 1903191-15**		Prepared: 8/30/2019 Analyzed: 8/30/2019					
4,4´-DDD	12.2692	10	0.35		ND			NR	20	
4,4´-DDD [2C]	10.9950	10	0.35		ND			NR	20	
4,4´-DDE	23.2825	10	0.54		23.3683			0.368	20	
4,4´-DDE [2C]	22.8792	10	0.54		22.9600			0.353	20	
4,4´-DDT	34.6208	10	0.50		33.2183			4.13	20	
4,4´-DDT [2C]	18.9383	10	0.50		21.0908			10.8	20	
Aldrin	ND	5.0	0.62		ND				20	
Aldrin [2C]	ND	5.0	0.62		ND				20	
alpha-BHC	ND	5.0	0.53		ND				20	
alpha-BHC [2C]	ND	5.0	0.53		ND				20	
alpha-Chlordane	2.95417	5.0	0.59		2.96750			0.450	20	
alpha-Chlordane [2C]	5.05500	5.0	0.59		5.10417			0.968	20	
beta-BHC	0.318333	5.0	0.30		0.414167			26.2	20	R
beta-BHC [2C]	0.392500	5.0	0.30		0.451667			14.0	20	
delta-BHC	ND	5.0	0.62		ND				20	
delta-BHC [2C]	ND	5.0	0.62		ND				20	
Dieldrin	ND	10	1.3		ND				20	
Dieldrin [2C]	ND	10	1.3		ND				20	
Endosulfan I	ND	5.0	0.50		ND				20	
Endosulfan I [2C]	ND	5.0	0.50		ND				20	
Endosulfan II	ND	10	0.77		ND				20	
Endosulfan II [2C]	ND	10	0.77		ND				20	
Endosulfan sulfate	ND	10	0.80		ND				20	
Endosulfan Sulfate [2C]	ND	10	0.80		ND				20	
Endrin	ND	10	0.68		ND				20	
Endrin [2C]	ND	10	0.68		ND				20	
Endrin aldehyde	ND	10	1.6		ND				20	

Certificate of Analysis

Leighton Consulting, Inc.		Project Number :	Park Plaza, 12137.003
17781 Cowan Street		Report To :	Brynn McCulloch
Irvine , CA 92614		Reported :	09/03/2019

Organochlorine Pesticides by EPA 8081 - Quality Control (cont'd)

Analyte	Result (ug/kg)	PQL (ug/kg)	MDL (ug/kg)	Spike Level	Source Result	% Rec	% Rec Limits	RPD	RPD Limit	Notes
Batch B9H0753 - GCSEMI_PCB/PEST_S (continued)										
Duplicate (B9H0753-DUP1) - Continued			**Source: 1903191-15**		Prepared: 8/30/2019 Analyzed: 8/30/2019					
Endrin aldehyde [2C]	ND	10	1.6		ND				20	
Endrin ketone	ND	10	0.63		ND				20	
Endrin ketone [2C]	ND	10	0.63		ND				20	
gamma-BHC	ND	5.0	0.52		ND				20	
gamma-BHC [2C]	ND	5.0	0.52		ND				20	
gamma-Chlordane	ND	5.0	4.4		ND			NR	20	
gamma-Chlordane [2C]	ND	5.0	4.4		ND			NR	20	
Heptachlor	ND	5.0	0.59		ND				20	
Heptachlor [2C]	ND	5.0	0.59		ND				20	
Heptachlor epoxide	ND	5.0	0.44		ND				20	
Heptachlor epoxide [2C]	ND	5.0	0.44		ND				20	
Methoxychlor	ND	25	0.89		ND				20	
Methoxychlor [2C]	ND	25	0.89		ND				20	
Surrogate: Decachlorobiphenyl	*11.45*			*16.6667*		*68.7*	*32 - 91*			
Surrogate: Decachlorobiphenyl [	*10.68*			*16.6667*		*64.1*	*32 - 91*			
Surrogate: Tetrachloro-m-xylene	*13.26*			*16.6667*		*79.6*	*38 - 93*			
Surrogate: Tetrachloro-m-xylene	*12.59*			*16.6667*		*75.5*	*38 - 93*			
Matrix Spike (B9H0753-MS1)			**Source: 1903191-15**		Prepared: 8/30/2019 Analyzed: 8/30/2019					
4,4´-DDD	14.0575	10	0.35	16.6667	ND	84.3	33 - 116			
4,4´-DDD [2C]	15.6283	10	0.35	16.6667	ND	93.8	33 - 116			
4,4´-DDE	25.7800	10	0.54	16.6667	23.3683	14.5	29 - 128			M1
4,4´-DDE [2C]	24.8233	10	0.54	16.6667	22.9600	11.2	29 - 128			M1
4,4´-DDT	41.7950	10	0.50	16.6667	33.2183	51.5	27 - 109			
4,4´-DDT [2C]	25.3450	10	0.50	16.6667	21.0908	25.5	27 - 109			M1
Aldrin	12.4700	5.0	0.62	16.6667	ND	74.8	34 - 110			
Aldrin [2C]	12.0275	5.0	0.62	16.6667	ND	72.2	34 - 110			
alpha-BHC	13.0158	5.0	0.53	16.6667	ND	78.1	39 - 107			
alpha-BHC [2C]	12.7892	5.0	0.53	16.6667	ND	76.7	39 - 107			
alpha-Chlordane	14.3450	5.0	0.59	16.6667	2.96750	68.3	37 - 111			
alpha-Chlordane [2C]	15.6433	5.0	0.59	16.6667	5.10417	63.2	37 - 111			
beta-BHC	10.9942	5.0	0.30	16.6667	0.414167	63.5	33 - 111			
beta-BHC [2C]	10.6200	5.0	0.30	16.6667	0.451667	61.0	33 - 111			
delta-BHC	10.4967	5.0	0.62	16.6667	ND	63.0	25 - 122			
delta-BHC [2C]	10.1992	5.0	0.62	16.6667	ND	61.2	25 - 122			
Dieldrin	17.6250	10	1.3	16.6667	ND	106	28 - 114			
Dieldrin [2C]	20.8058	10	1.3	16.6667	ND	125	28 - 114			M1
Endosulfan I	10.4975	5.0	0.50	16.6667	ND	63.0	35 - 107			
Endosulfan I [2C]	10.4633	5.0	0.50	16.6667	ND	62.8	35 - 107			
Endosulfan II	13.3383	10	0.77	16.6667	ND	80.0	13 - 122			
Endosulfan II [2C]	11.3158	10	0.77	16.6667	ND	67.9	13 - 122			

Certificate of Analysis

Leighton Consulting, Inc.		Project Number :	Park Plaza, 12137.003
17781 Cowan Street		Report To :	Brynn McCulloch
Irvine , CA 92614		Reported :	09/03/2019

Organochlorine Pesticides by EPA 8081 - Quality Control (cont'd)

Analyte	Result (ug/kg)	PQL (ug/kg)	MDL (ug/kg)	Spike Level	Source Result	% Rec	% Rec Limits	RPD	RPD Limit	Notes
Batch B9H0753 - GCSEMI_PCB/PEST_S (continued)										
Matrix Spike (B9H0753-MS1) - Continued			**Source: 1903191-15**		Prepared: 8/30/2019 Analyzed: 8/30/2019					
Endosulfan sulfate	17.2575	10	0.80	16.6667	ND	104	13 - 120			
Endosulfan Sulfate [2C]	9.95667	10	0.80	16.6667	ND	59.7	13 - 120			
Endrin	14.4675	10	0.68	16.6667	ND	86.8	31 - 121			
Endrin [2C]	15.3500	10	0.68	16.6667	ND	92.1	31 - 121			
Endrin aldehyde	22.4583	10	1.6	16.6667	ND	135	18 - 129			M1
Endrin aldehyde [2C]	10.9158	10	1.6	16.6667	ND	65.5	18 - 129			
Endrin ketone	12.0983	10	0.63	16.6667	ND	72.6	14 - 113			
Endrin ketone [2C]	12.8133	10	0.63	16.6667	ND	76.9	14 - 113			
gamma-BHC	14.1392	5.0	0.52	16.6667	ND	84.8	34 - 104			
gamma-BHC [2C]	13.4717	5.0	0.52	16.6667	ND	80.8	34 - 104			
gamma-Chlordane	16.5342	5.0	4.4	16.6667	ND	99.2	35 - 121			
gamma-Chlordane [2C]	14.1967	5.0	4.4	16.6667	ND	85.2	35 - 121			
Heptachlor	13.5433	5.0	0.59	16.6667	ND	81.3	35 - 110			
Heptachlor [2C]	12.8200	5.0	0.59	16.6667	ND	76.9	35 - 110			
Heptachlor epoxide	14.8475	5.0	0.44	16.6667	ND	89.1	31 - 106			
Heptachlor epoxide [2C]	11.3267	5.0	0.44	16.6667	ND	68.0	31 - 106			
Methoxychlor	13.7608	25	0.89	16.6667	ND	82.6	21 - 128			
Methoxychlor [2C]	14.7942	25	0.89	16.6667	ND	88.8	21 - 128			
Surrogate: Decachlorobiphenyl	*13.22*			*16.6667*		*79.3*	*32 - 91*			
Surrogate: Decachlorobiphenyl [	*12.23*			*16.6667*		*73.4*	*32 - 91*			
Surrogate: Tetrachloro-m-xylene	*12.80*			*16.6667*		*76.8*	*38 - 93*			
Surrogate: Tetrachloro-m-xylene	*12.62*			*16.6667*		*75.7*	*38 - 93*			
Matrix Spike Dup (B9H0753-MSD1)			**Source: 1903191-15**		Prepared: 8/30/2019 Analyzed: 8/30/2019					
4,4´-DDD	11.9742	10	0.35	16.6667	ND	71.8	33 - 116	16.0	20	
4,4´-DDD [2C]	15.3358	10	0.35	16.6667	ND	92.0	33 - 116	1.89	20	
4,4´-DDE	25.8458	10	0.54	16.6667	23.3683	14.9	29 - 128	0.255	20	M1
4,4´-DDE [2C]	25.0733	10	0.54	16.6667	22.9600	12.7	29 - 128	1.00	20	M1
4,4´-DDT	40.8942	10	0.50	16.6667	33.2183	46.1	27 - 109	2.18	20	
4,4´-DDT [2C]	23.9417	10	0.50	16.6667	21.0908	17.1	27 - 109	5.69	20	M1
Aldrin	12.7083	5.0	0.62	16.6667	ND	76.2	34 - 110	1.89	20	
Aldrin [2C]	12.3725	5.0	0.62	16.6667	ND	74.2	34 - 110	2.83	20	
alpha-BHC	13.5300	5.0	0.53	16.6667	ND	81.2	39 - 107	3.87	20	
alpha-BHC [2C]	13.3825	5.0	0.53	16.6667	ND	80.3	39 - 107	4.53	20	
alpha-Chlordane	14.5125	5.0	0.59	16.6667	2.96750	69.3	37 - 111	1.16	20	
alpha-Chlordane [2C]	15.7658	5.0	0.59	16.6667	5.10417	64.0	37 - 111	0.780	20	
beta-BHC	11.4483	5.0	0.30	16.6667	0.414167	66.2	33 - 111	4.05	20	
beta-BHC [2C]	11.0683	5.0	0.30	16.6667	0.451667	63.7	33 - 111	4.13	20	
delta-BHC	10.9625	5.0	0.62	16.6667	ND	65.8	25 - 122	4.34	20	
delta-BHC [2C]	10.6125	5.0	0.62	16.6667	ND	63.7	25 - 122	3.97	20	
Dieldrin	17.6558	10	1.3	16.6667	ND	106	28 - 114	0.175	20	

Certificate of Analysis

Leighton Consulting, Inc.		Project Number :	Park Plaza, 12137.003
17781 Cowan Street		Report To :	Brynn McCulloch
Irvine , CA 92614		Reported :	09/03/2019

Organochlorine Pesticides by EPA 8081 - Quality Control (cont'd)

Analyte	Result (ug/kg)	PQL (ug/kg)	MDL (ug/kg)	Spike Level	Source Result	% Rec	% Rec Limits	RPD	RPD Limit	Notes
Batch B9H0753 - GCSEMI_PCB/PEST_S (continued)										
Matrix Spike Dup (B9H0753-MSD1) - Continued			**Source: 1903191-15**		Prepared: 8/30/2019 Analyzed: 8/30/2019					
Dieldrin [2C]	20.5942	10	1.3	16.6667	ND	124	28 - 114	1.02	20	M1
Endosulfan I	10.8075	5.0	0.50	16.6667	ND	64.8	35 - 107	2.91	20	
Endosulfan I [2C]	10.4933	5.0	0.50	16.6667	ND	63.0	35 - 107	0.286	20	
Endosulfan II	13.9800	10	0.77	16.6667	ND	83.9	13 - 122	4.70	20	
Endosulfan II [2C]	11.0717	10	0.77	16.6667	ND	66.4	13 - 122	2.18	20	
Endosulfan sulfate	16.9708	10	0.80	16.6667	ND	102	13 - 120	1.68	20	
Endosulfan Sulfate [2C]	9.42417	10	0.80	16.6667	ND	56.5	13 - 120	5.50	20	
Endrin	14.3383	10	0.68	16.6667	ND	86.0	31 - 121	0.897	20	
Endrin [2C]	14.2683	10	0.68	16.6667	ND	85.6	31 - 121	7.30	20	
Endrin aldehyde	21.9600	10	1.6	16.6667	ND	132	18 - 129	2.24	20	M1
Endrin aldehyde [2C]	11.4425	10	1.6	16.6667	ND	68.7	18 - 129	4.71	20	
Endrin ketone	10.2067	10	0.63	16.6667	ND	61.2	14 - 113	17.0	20	
Endrin ketone [2C]	12.3967	10	0.63	16.6667	ND	74.4	14 - 113	3.31	20	
gamma-BHC	14.7300	5.0	0.52	16.6667	ND	88.4	34 - 104	4.09	20	
gamma-BHC [2C]	14.0842	5.0	0.52	16.6667	ND	84.5	34 - 104	4.45	20	
gamma-Chlordane	16.8317	5.0	4.4	16.6667	ND	101	35 - 121	1.78	20	
gamma-Chlordane [2C]	14.3342	5.0	4.4	16.6667	ND	86.0	35 - 121	0.964	20	
Heptachlor	14.1358	5.0	0.59	16.6667	ND	84.8	35 - 110	4.28	20	
Heptachlor [2C]	13.1992	5.0	0.59	16.6667	ND	79.2	35 - 110	2.91	20	
Heptachlor epoxide	15.1000	5.0	0.44	16.6667	ND	90.6	31 - 106	1.69	20	
Heptachlor epoxide [2C]	11.5000	5.0	0.44	16.6667	ND	69.0	31 - 106	1.52	20	
Methoxychlor	13.6558	25	0.89	16.6667	ND	81.9	21 - 128	0.766	20	
Methoxychlor [2C]	14.1950	25	0.89	16.6667	ND	85.2	21 - 128	4.13	20	
Surrogate: Decachlorobiphenyl	*12.68*			*16.6667*		*76.0*	*32 - 91*			
Surrogate: Decachlorobiphenyl [	*12.28*			*16.6667*		*73.7*	*32 - 91*			
Surrogate: Tetrachloro-m-xylene	*13.22*			*16.6667*		*79.3*	*38 - 93*			
Surrogate: Tetrachloro-m-xylene	*13.09*			*16.6667*		*78.5*	*38 - 93*			

Certificate of Analysis

Leighton Consulting, Inc.		Project Number :	Park Plaza, 12137.003
17781 Cowan Street		Report To :	Brynn McCulloch
Irvine , CA 92614		Reported :	09/03/2019

Notes and Definitions

R	RPD value outside acceptance criteria. Calculation is based on raw values.
M1	Matrix spike recovery outside of acceptance limit. The analytical batch was validated by the laboratory control sample.
D1	Sample required dilution due to possible matrix interference.
ND	Analyte is not detected at or above the Practical Quantitation Limit (PQL). When client requests quantitation against MDL, analyte is not detected at or above the Method Detection Limit (MDL)
PQL	Practical Quantitation Limit
MDL	Method Detection Limit
NR	Not Reported
RPD	Relative Percent Difference
CA2	CA-ELAP (CDPH)
OR1	OR-NELAP (OSPHL)

Notes:
(1) The reported MDL and PQL are based on prep ratio variation and analytical dilution.
(2) The suffix [2C] of specific analytes signifies that the reported result is taken from the instrument's second column.
(3) Results are wet unless otherwise specified.

ADVANCED TECHNOLOGY LABORATORIES

3275 Walnut Ave., Signal Hill, CA 90755
Tel: (562) 989-4045 • Fax: (562) 989-4040

CHAIN OF CUSTODY RECORD

Page 1 of 3

Instruction: Complete all shaded areas.

For Laboratory Use Only — ATLCOC Ver:20190413

Method of Transport	Sample Conditions Upon Receipt					
	Condition	Y	N	Condition	Y	N
☐ Client ☑ ATL	1. CHILLED	☑	☐	5. # OF SAMPLES MATCH COC	☑	☐
☐ FedEx ☐ OnTrac	2. HEADSPACE (VOA)	☐	☐	6. PRESERVED	☐	☑
☐ GSO	3. CONTAINER INTACT	☑	☐	7. COOLER TEMP, deg C:	2.Y	
☐ Other: _____	4. SEALED	☐	☐			

CUSTOMER

Company: Leighton Consulting Inc
Address:
City:
State:
Zip:
Tel:
Fax:

SEND REPORT TO:
Attn: Brynn McCulloch
Email: bmcculloch@leightongroup.com
Company: Leighton Consulting Inc
Address: 17781 Cowan
City: Irvine
State: CA
Zip: 92614

SEND INVOICE TO: ☑ same as SEND REPORT TO
Attn:
Email:
Company:
Address:
City:
State:
Zip:

EDD: ☐ Excel ☐ EDF ☐ Equis ☐ _____

QA/QC: ☐ Routine ☐ Caltrans ☐ Legal ☐ RWQCB ☐ Level IV ☐ _____

PROJECT SAMPLES

Project Name: Park Plaza
Project No.: 12137.003
Sampler: SAG
Quote #:
PO #:
Special Instructions/Comments: 48 hour TAT

ITEM	Laboratory ID (For Lab Use Only)	Sample ID / Location	Date	Time	8260 / 624 (Volatiles)	8015 (GRO)	8015 (DRO)	8081 (Organochlorine Pesticides)	8082 (PCBs)	8270 (Semi-volatiles)	6010 / 7000 (Title 22 Metals)	TO-15	Arsenic EPA 6020B	OCPs EPA 8081A	SOIL	SOLID	GROUNDWATER	WASTEWATER	OIL	Turnaround Time (TAT)	Quantity	Type: 1=Tube; 2=VOA; 3=Liter; 4=Pint; 5=Jar; 6=Tedlar; 7=Canister	Material: 1=Glass; 2=Plastic; 3=Metal	Preservative: 1=HCl; 2=HNO3; 3=H2SO4; 4=4C; 5=Zn(Ac)2; 6=NaOH; 7=NH4Cl; 8=Na2S2O3	Remarks
1	1903209-01	LBU-S2-0.5	8-29-19	0724									X		X					2	1				
2	-02	LBU-S2-2.5		0725																					
3	-03	LBU-E2-0.5		0735																					
4	-04	LBU-E2-2.5		0737																					
5	-05	LBU-E1-0.5		0743																					
6	-06	LBU-E1-2.5		0745																					
7	-07	LBU-S1-0.5		0751																					
8	-08	LBU-S1-2.5		0753																					
9	-09	LBU-W1-0.5		0759																					
10	-10	LBU-W1-2.5		0800																					

TERMS

1. Sample receiving hours: 7:30 AM to 7:30 PM Monday - Friday; Saturday 8:00 AM to 12:00 PM.
2. Samples submitted AFTER 5:00 PM are considered received the following business day at 8:00 AM.
3. The following turnaround time conditions apply:
   - TAT = 0 : 300% Surcharge SAME BUSINESS DAY if received by 9:00 AM
   - TAT = 1 : 100% Surcharge NEXT BUSINESS DAY (COB 5:00 PM)
   - TAT = 2 : 50% Surcharge 2ND BUSINESS DAY (COB 5:00 PM)
   - TAT = 3 : 30% Surcharge 3RD BUSINESS DAY (COB 5:00 PM)
   - TAT = 4 : 20% Surcharge 4TH BUSINESS DAY (COB 5:00 PM)
   - TAT = 5 : NO SURCHARGE 5th BUSINESS DAY (COB 5:00 PM)
4. Weekend, holiday, after-hours work --- ask for quote.
5. Subcontract TAT is 10 - 15 business days. Projects requiring shorter TATs will incur a surcharge respective to the subcontract lab --- ask for quote.
6. Liquid and solid samples will be disposed of after 45 calendar days from receipt of samples; air samples will be disposed of after 14 calendar days after receipt of samples.
7. Electronic records maintained for five (5) years from report date.
8. Hard copy reports will be disposed of after 45 calendar days from report date.
9. Storage and Report Fees:
   - Liquid & solid samples: Complimentary storage for forty-five (45) calendar days from receipt of samples; $2/sample/month if extended storage or hold is requested.
   - Air samples: Complimentary storage for ten (10) calendar days from receipt of samples; $20 sample/week if extended storage is requested.
   - Hard copy and regenerated reports/EDDs: $17.50 per hard copy report requested; $50.00 per regenerated/reformatted report; $35 per reprocessed EDD.
10. Rush TCLP/STLC samples: add 2 days to analysis TAT for extraction procedure.
11. Unanalyzed samples will incur a disposal fee of $7 per sample.
12. The laboratory will randomly select from all QC samples received the sample to spike for Matrix Spike/ Matrix Spike Duplicate (MS/MSD) at no cost. However, if you want the laboratory to additionally perform MS/MSD on your sample, a charge will be assessed for the specific sample used.

Relinquished by: (Signature and Printed Name)	Date:	Time:	Received by: (Signature and Printed Name)	Date:	Time:
Sabrina Gonzalez	8-29-19	1503		8-29-19	1503
Relinquished by: (Signature and Printed Name)	Date:	Time:	Received by: (Signature and Printed Name)	Date:	Time:
	8-29-19	1620		8/29/19	1620
Relinquished by: (Signature and Printed Name)	Date:	Time:	Received by: (Signature and Printed Name)	Date:	Time:

As the authorized agent of the company above, I hereby purchase laboratory services from ATL as shown above and hereby guarantee payment as quoted.

Sabrina Gonzalez
Printed Name

Signature

ADVANCED TECHNOLOGY LABORATORIES

3275 Walnut Ave., Signal Hill, CA 90755
Tel: (562) 989-4045 • Fax: (562) 989-4040

CHAIN OF CUSTODY RECORD

Page 2 of 3

Instruction: Complete all shaded areas.

For Laboratory Use Only — ATLCOC Ver:20190413

Method of Transport	Sample Conditions Upon Receipt					
	Condition	Y	N	Condition	Y	N
☐ Client ☑ ATL	1. CHILLED	☑	☐	5. # OF SAMPLES MATCH COC	☑	☐
☐ FedEx ☐ OnTrac	2. HEADSPACE (VOA)	☐	☐	6. PRESERVED	☐	☑
☐ GSO	3. CONTAINER INTACT	☑	☐	7. COOLER TEMP, deg C:		
☐ Other: _____	4. SEALED	☐	☑			

CUSTOMER

Company: Leighton Consulting Inc
Address:
City:
State:
Zip:
Tel:
Fax:

SEND REPORT TO:
Attn: Brynn McCulloch
Email: bmcculloch@leightongroup.com
Company: Leighton Consulting Inc
Address: 17781 Cowan
City: Irvine
State: CA
Zip: 92614

SEND INVOICE TO: ☑ same as SEND REPORT TO
Attn:
Email:
Company:
Address:
City:
State:
Zip:

EDD: ☐ Excel ☐ EDF ☐ Equis ☐ _____

QA/QC: ☐ Routine ☐ Caltrans ☐ Legal ☐ RWQCB ☐ Level IV ☐ _____

PROJECT SAMPLES

Project Name: Park Plaza
Project No.: 12137.003
Sampler: SAG
Quote #:
PO #:
Special Instructions/Comments: 48 hour TAT

ITEM	Laboratory ID (For Lab Use Only)	Sample ID / Location	Date	Time	8260 / 624 (Volatiles)	8015 (GRO)	8015 (DRO)	8081 (Organochlorine Pesticides)	8082 (PCBs)	8270 (Semi-volatiles)	6010 / 7000 (Title 22 Metals)	TO-15	Arsenic EPA 6020	OCDS EPA 8081A	SOIL	SOLID	GROUNDWATER	WASTEWATER	OIL	Turnaround Time (TAT)	Quantity	Type: 1=Tube; 2=VOA; 3=Liter; 4=Pint; 5=Jar; 6=Tedlar; 7 = Canister	Material: 1=Glass; 2=Plastic; 3=Metal	Preservative: 1=HCl; 2=HNO3; 3=H2SO4; 4 =4C; 5=Zn(Ac)2; 6=NaOH; 7=NA2S2O3	Remarks
1	1903209-11	LB4-N1-0.5	8-29-19	0804									X		X					2	1				
2	-12	LB4-N1-2.5		0807																					
3	-13	LB4-W2-0.5		0820																					
4	-14	LB4-W2-2.5		0822																					
5	-15	LB4-N2-0.5		0837																					
6	-16	LB4-N2-2.5		0840																					
7	-17	LB1-NW1-0.5		0715										X											
8	-18	LB1-NW1-2.5		0716																					
9	-19	LB1-NE1-0.5		0726																					
10	-20	LB1-NE1-2.5		0727																					

TERMS

1. Sample receiving hours: 7:30 AM to 7:30 PM Monday - Friday; Saturday 8:00 AM to 12:00 PM.
2. Samples submitted AFTER 5:00 PM are considered received the following business day at 8:00 AM.
3. The following turnaround time conditions apply:
   - TAT = 0 : 300% Surcharge SAME BUSINESS DAY if received by 9:00 AM
   - TAT = 1 : 100% Surcharge NEXT BUSINESS DAY (COB 5:00 PM)
   - TAT = 2 : 50% Surcharge 2ND BUSINESS DAY (COB 5:00 PM)
   - TAT = 3 : 30% Surcharge 3RD BUSINESS DAY (COB 5:00 PM)
   - TAT = 4 : 20% Surcharge 4TH BUSINESS DAY (COB 5:00 PM)
   - TAT = 5 : NO SURCHARGE 5th BUSINESS DAY (COB 5:00 PM)
4. Weekend, holiday, after-hours work --- ask for quote.
5. Subcontract TAT is 10 - 15 business days. Projects requiring shorter TATs will incur a surcharge respective to the subcontract lab --- ask for quote.
6. Liquid and solid samples will be disposed of after 45 calendar days from receipt of samples; air samples will be disposed of after 14 calendar days after receipt of samples.
7. Electronic records maintained for five (5) years from report date.
8. Hard copy reports will be disposed of after 45 calendar days from report date.
9. Storage and Report Fees:
   - Liquid & solid samples: Complimentary storage for forty-five (45) calendar days from receipt of samples; $2/sample/month if extended storage or hold is requested.
   - Air samples: Complimentary storage for ten (10) calendar days from receipt of samples; $20 sample/week if extended storage is requested.
   - Hard copy and regenerated reports/EDDs: $17.50 per hard copy report requested; $50.00 per regenerated/reformatted report; $35 per reprocessed EDD.
10. Rush TCLP/STLC samples: add 2 days to analysis TAT for extraction procedure.
11. Unanalyzed samples will incur a disposal fee of $7 per sample.
12. The laboratory will randomly select from all QC samples received the sample to spike for Matrix Spike/ Matrix Spike Duplicate (MS/MSD) at no cost. However, if you want the laboratory to additionally perform MS/MSD on your sample, a charge will be assessed for the specific sample used.

Relinquished by: (Signature and Printed Name)	Date:	Time:	Received by: (Signature and Printed Name)	Date:	Time:
Sakmen Gonzalez	8-29-19	1503		8-29-19	1503
Relinquished by: (Signature and Printed Name)	Date:	Time:	Received by: (Signature and Printed Name)	Date:	Time:
	8-29-19	1620	Fedex	8/29/19	1620
Relinquished by: (Signature and Printed Name)	Date:	Time:	Received by: (Signature and Printed Name)	Date:	Time:

As the authorized agent of the company above, I hereby purchase laboratory services from ATL as shown above and hereby guarantee payment as quoted.

Sakmen Gonzalez
Printed Name

Signature

ADVANCED TECHNOLOGY LABORATORIES
3275 Walnut Ave., Signal Hill, CA 90755
Tel: (562) 989-4045 • Fax: (562) 989-4040

CHAIN OF CUSTODY RECORD

Page 3 of 3

Instruction: Complete all shaded areas.

For Laboratory Use Only — ATLCOC Ver:20190413

Method of Transport	Sample Conditions Upon Receipt					
	Condition	Y	N	Condition	Y	N
☐ Client ☑ ATL	1. CHILLED	☑	☐	5. # OF SAMPLES MATCH COC	☑	☐
☐ FedEx ☐ OnTrac	2. HEADSPACE (VOA)	☐	☐	6. PRESERVED	☐	☑
☐ GSO	3. CONTAINER INTACT	☑	☐	7. COOLER TEMP, deg C:		
☐ Other: _____	4. SEALED	☐	☑			

CUSTOMER

Company: Leighton Consulting Inc
Address: 17781 Cowan
City: Irvine State: CA Zip: 92614
Tel: Fax:

SEND REPORT TO:
Attn: Brynn McCulloch Email: bmcculloch@leightongroup.com
Company: Leighton Consulting Inc

SEND INVOICE TO: ☒ Same as SEND REPORT TO
Attn: Email:
Company:
Address:
City: State: Zip:

EDD: ☐ Excel ☐ EDF ☐ Equis ☐ _____

QA/QC: ☐ Routine ☐ Caltrans ☐ Legal ☐ RWQCB ☐ Level IV ☐ _____

PROJECT SAMPLES

Project Name: Park plaza
Project No.: 12137.003
Sampler: SAG
Quote #:
PO #:
Special Instructions/Comments: 48 hour TAT

ITEM	Laboratory ID (For Lab Use Only)	Sample Description: Sample ID / Location	Date	Time	8260 / 624 (Volatiles)	8015 (GRO)	8015 (DRO)	8081 (Organochlorine Pesticides)	8082 (PCBs)	8270 (Semi-volatiles)	6010 / 7000 (Title 22 Metals)	TO-15	Arsenic EPA 6010B	OCPs EPA 8081A	SOIL	SOLID	GROUNDWATER	WASTEWATER	OIL	Turnaround Time (TAT)	Quantity	Type: 1=Tube; 2=VOA; 3=Liter; 4=Pint; 5=Jar; 6=Tedlar; 7 = Canister	Material: 1=Glass; 2=Plastic; 3=Metal	Preservative: 1=HCl; 2=HNO3; 3=H2SO4; 4=4C; 5=Zn(Ac)2; 6=NaOH; 7=NAS2O3	Remarks
1	1903209-21	LB1-NE2-0.5	8-29-19	0739										X	X					2	1				
2	-22	LB1-NE2-2.5		0741																					
3	-23	LB1-SE1-0.5		0747																					
4	-24	LB1-SE1-2.5		0749																					
5	-25	LB1-SE2-0.5		0755																					
6	-26	LB1-SE2-2.5		0757																					
7	-27	LB1-SW1-0.5		0809																					
8	-28	LB1-SW1-2.5		0812																					
9	-29	LB1-SW2-0.5		0824																					
10	-30	LB1-SW2-2.5		0827																					

TERMS

1. Sample receiving hours: 7:30 AM to 7:30 PM Monday - Friday; Saturday 8:00 AM to 12:00 PM.
2. Samples submitted AFTER 5:00 PM are considered received the following business day at 8:00 AM.
3. The following turnaround time conditions apply:
   - TAT = 0 : 300% Surcharge SAME BUSINESS DAY if received by 9:00 AM
   - TAT = 1 : 100% Surcharge NEXT BUSINESS DAY (COB 5:00 PM)
   - TAT = 2 : 50% Surcharge 2ND BUSINESS DAY (COB 5:00 PM)
   - TAT = 3 : 30% Surcharge 3RD BUSINESS DAY (COB 5:00 PM)
   - TAT = 4 : 20% Surcharge 4TH BUSINESS DAY (COB 5:00 PM)
   - TAT = 5 : NO SURCHARGE 5th BUSINESS DAY (COB 5:00 PM)
4. Weekend, holiday, after-hours work --- ask for quote.
5. Subcontract TAT is 10 - 15 business days. Projects requiring shorter TATs will incur a surcharge respective to the subcontract lab --- ask for quote.
6. Liquid and solid samples will be disposed of after 45 calendar days from receipt of samples; air samples will be disposed of after 14 calendar days after receipt of samples.
7. Electronic records maintained for five (5) years from report date.
8. Hard copy reports will be disposed of after 45 calendar days from report date.
9. Storage and Report Fees:
   - Liquid & solid samples: Complimentary storage for forty-five (45) calendar days from receipt of samples; $2/sample/month if extended storage or hold is requested.
   - Air samples: Complimentary storage for ten (10) calendar days from receipt of samples; $20 sample/week if extended storage is requested.
   - Hard copy and regenerated reports/EDDs: $17.50 per hard copy report requested; $50.00 per regenerated/reformatted report; $35 per reprocessed EDD.
10. Rush TCLP/STLC samples: add 2 days to analysis TAT for extraction procedure.
11. Unanalyzed samples will incur a disposal fee of $7 per sample.
12. The laboratory will randomly select from all QC samples received the sample to spike for Matrix Spike/ Matrix Spike Duplicate (MS/MSD) at no cost. However, if you want the laboratory to additionally perform MS/MSD on your sample, a charge will be assessed for the specific sample used.

Relinquished by: (Signature and Printed Name)	Date:	Time:	Received by: (Signature and Printed Name)	Date:	Time:
Sabrina Gonzalez	8-29-19	1503		8.29.19	1503
	8.29.19	1620	FEDEX	8/29/19	1620

As the authorized agent of the company above, I hereby purchase laboratory services from ATL as shown above and hereby guarantee payment as quoted.

Sabrina Gonzalez — Printed Name
Signature

APPENDIX D

PROUCL OUTPUT

	A	B	C	D	E	F	G	H	I	J	K	L
1	**UCL Statistics for Data Sets with Non-Detects**											
2												
3	User Selected Options											
4	Date/Time of Computation			ProUCL 5.19/6/2019 1:38:31 PM								
5	From File			Arsenic UCL Input_a.xls								
6	Full Precision			OFF								
7	Confidence Coefficient			95%								
8	Number of Bootstrap Operations			2000								
9												
10												
11	**Arsenic**											
12												
13	**General Statistics**											
14	Total Number of Observations					31	Number of Distinct Observations					23
15							Number of Missing Observations					0
16	Minimum					1.9	Mean					8.89
17	Maximum					19	Median					5.7
18	SD					5.143	Std. Error of Mean					0.924
19	Coefficient of Variation					0.578	Skewness					0.722
20												
21	**Normal GOF Test**											
22	Shapiro Wilk Test Statistic					0.872	**Shapiro Wilk GOF Test**					
23	5% Shapiro Wilk Critical Value					0.929	Data Not Normal at 5% Significance Level					
24	Lilliefors Test Statistic					0.249	**Lilliefors GOF Test**					
25	5% Lilliefors Critical Value					0.156	Data Not Normal at 5% Significance Level					
26	**Data Not Normal at 5% Significance Level**											
27												
28	**Assuming Normal Distribution**											
29	**95% Normal UCL**						**95% UCLs (Adjusted for Skewness)**					
30	95% Student's-t UCL					10.46	95% Adjusted-CLT UCL (Chen-1995)					10.54
31							95% Modified-t UCL (Johnson-1978)					10.48
32												
33	**Gamma GOF Test**											
34	A-D Test Statistic					1.067	**Anderson-Darling Gamma GOF Test**					
35	5% A-D Critical Value					0.752	Data Not Gamma Distributed at 5% Significance Level					
36	K-S Test Statistic					0.222	**Kolmogorov-Smirnov Gamma GOF Test**					
37	5% K-S Critical Value					0.159	Data Not Gamma Distributed at 5% Significance Level					
38	**Data Not Gamma Distributed at 5% Significance Level**											
39												
40	**Gamma Statistics**											
41	k hat (MLE)					3.157	k star (bias corrected MLE)					2.873
42	Theta hat (MLE)					2.816	Theta star (bias corrected MLE)					3.094
43	nu hat (MLE)					195.8	nu star (bias corrected)					178.1
44	MLE Mean (bias corrected)					8.89	MLE Sd (bias corrected)					5.245
45							Approximate Chi Square Value (0.05)					148.3
46	Adjusted Level of Significance					0.0413	Adjusted Chi Square Value					146.8
47												
48	**Assuming Gamma Distribution**											
49	95% Approximate Gamma UCL (use when n>=50))					10.68	95% Adjusted Gamma UCL (use when n<50)					10.79
50												

	A	B	C	D	E	F	G	H	I	J	K	L
51	**Lognormal GOF Test**											
52					Shapiro Wilk Test Statistic	0.93	**Shapiro Wilk Lognormal GOF Test**					
53					5% Shapiro Wilk Critical Value	0.929	Data appear Lognormal at 5% Significance Level					
54					Lilliefors Test Statistic	0.195	**Lilliefors Lognormal GOF Test**					
55					5% Lilliefors Critical Value	0.156	Data Not Lognormal at 5% Significance Level					
56	**Data appear Approximate Lognormal at 5% Significance Level**											
57												
58	**Lognormal Statistics**											
59					Minimum of Logged Data	0.642			Mean of logged Data			2.018
60					Maximum of Logged Data	2.944			SD of logged Data			0.599
61												
62	**Assuming Lognormal Distribution**											
63					95% H-UCL	11.22			90% Chebyshev (MVUE) UCL			12.02
64					95% Chebyshev (MVUE) UCL	13.41			97.5% Chebyshev (MVUE) UCL			15.34
65					99% Chebyshev (MVUE) UCL	19.13						
66												
67	**Nonparametric Distribution Free UCL Statistics**											
68	**Data appear to follow a Discernible Distribution at 5% Significance Level**											
69												
70	**Nonparametric Distribution Free UCLs**											
71					95% CLT UCL	10.41			95% Jackknife UCL			10.46
72					95% Standard Bootstrap UCL	10.36			95% Bootstrap-t UCL			10.63
73					95% Hall's Bootstrap UCL	10.57			95% Percentile Bootstrap UCL			10.39
74					95% BCA Bootstrap UCL	10.42						
75					90% Chebyshev(Mean, Sd) UCL	11.66			95% Chebyshev(Mean, Sd) UCL			12.92
76					97.5% Chebyshev(Mean, Sd) UCL	14.66			99% Chebyshev(Mean, Sd) UCL			18.08
77												
78	**Suggested UCL to Use**											
79					95% H-UCL	11.22						
80												
81	Note: Suggestions regarding the selection of a 95% UCL are provided to help the user to select the most appropriate 95% UCL.											
82	Recommendations are based upon data size, data distribution, and skewness.											
83	These recommendations are based upon the results of the simulation studies summarized in Singh, Maichle, and Lee (2006).											
84	However, simulations results will not cover all Real World data sets; for additional insight the user may want to consult a statistician.											
85												
86	**ProUCL computes and outputs H-statistic based UCLs for historical reasons only.**											
87	**H-statistic often results in unstable (both high and low) values of UCL95 as shown in examples in the Technical Guide.**											
88	**It is therefore recommended to avoid the use of H-statistic based 95% UCLs.**											
89	**Use of nonparametric methods are preferred to compute UCL95 for skewed data sets which do not follow a gamma distribution.**											

APPENDIX G

- Preliminary WQMP

PRELIMINARY PRIORITY WATER QUALITY MANAGEMENT PLAN (WQMP)

For:

Park Plaza Expansion

574 South Glassell Street
Orange, CA 92866
Parcel Map 101-29 / Tract No. 10803 / Parcel 1

Prepared for:
KC Orange II, L.P.
5790 Fleet Street, Suite 300
Carlsbad, CA 92008
(760) 804-5900

Prepared by:
Pasco Laret Suiter & Associates, Inc.
William J. Suiter, P.E. RCE 68964
27127 Calle Arroyo, Suite 1904
San Juan Capistrano, CA 92675
(949) 661-6695

February 2019
Revised: May 2019

_____ _____
Public Works Director **Date**

_____ _____
City Engineer **Date**

OWNER'S CERTIFICATION

WATER QUALITY MANAGEMENT PLAN

FOR

PARK PLAZA EXPANSION

This Water Quality Management Plan (WQMP) for the Park Plaza Expansion has been prepared for KC Orange II, L.P. This WQMP is intended to comply with the requirements of the City of Orange's [Minor Site Plan # 0963-18) requiring the preparation of a Water Quality Management Plan.

The undersigned, while it owns the subject property, is responsible for the implementation of the provisions of this plan and will ensure that this plan is amended as appropriate to reflect up-to-date conditions on the site consistent with the City of Orange Local Implementation Plan (LIP), and the intent of NPDES Permit and Waste Discharge Requirements for the City of Orange, County of Orange, Orange County Flood Control District and the incorporated Cities of Orange County within the Santa Ana Region.

This WQMP will be reviewed with the facility operator, facility supervisors, employees, tenants, maintenance and service contractors, or any other party having responsibility for implementing portions of this WQMP. Maintenance requirements within Section V and Appendix D will be adhered to with particular emphasis on maintaining the BMPs described within Sections IV and V. The Owner's Annual Self Certification Statement along with a BMP maintenance implementation table will be submitted by June 30th every year following project completion. At least one copy of the approved WQMP shall be available on the subject property in perpetuity.

Once the undersigned transfers its interest in the property, its successors-in-interest shall bear the aforementioned responsibility to implement and amend the WQMP. The City of Orange will be notified of the change of ownership and the new owner will submit a new certification.

Signature: _____ Date: _____

Name: Axel Guerra

Title: Acquisition and Development Manager

Company: KC Orange II LP

Address: 5790 Fleet Street, Suite 300, Carlsbad, CA 92008

Telephone Number: 760-804-7065

Notice of Transfer of Responsibility

Water Quality Management Plan (WQMP)

WQMP Number – As assigned by the City of Orange:_____

Submission of this Notice of Transfer of Responsibility constitutes notice to the City that responsibility for the Water Quality Management Plan (WQMP) for the subject property identified below, and implementation of that plan, is being transferred from the Previous Owner (and his/her agent) of the site (or portion thereof) to the New Owner, as further described below.

I. Owner/ Responsible Party Information

Company/ Individual: KC Orange II LP_____ Contact Person: Axel Guerra

Title: Acquisition and Development Manager

Street Address: 5790 Fleet Street, Suite 300, Carlsbad, CA 92008

City Carlsbad___State CA__ Zip 92008 Phone: 760-804-7065

II. Information about Site Relevant to WQMP

Name of Project: Park Plaza Expansion_____
Title of WQMP applicable to site: Kisco Senior Living – Park Plaza Expansion
Street Address of the site: 574 South Glassell Street, Orange, CA 92866
Date of Transfer of Responsibility: _____

III. New Owner (Upon Transfer)/ Responsible Party Information

Company/ Individual:_____ Contact Person:_____

Street Address:_____ Title:_____

City _____State____ Zip_____ Phone:_____

Table of Contents

I. Discretionary Permit Number(s), Water Quality Condition Number(s) and Conditions…….. 1

II. Project Description…… 2

III. Site Description……. 4

IV. Best Management Practices…… 6

IV.1 Site Design BMPs……. 6
IV.2 Source Control BMPs…… 7
IV.3 Low Impact Development BMP Selection……. 11
IV.6 Vector Control…… 15
IV.7 Drainage Management Areas……. 15
IV.8 Calculations…… 16

V. Implementation, Maintenance and Inspection Responsibility for BMPs (O&M Plan)……..…… 17

VI. Location Map, Site Plan, and BMP Details…….…… 24

VII. Educational Materials……. 25

Appendices

A. Conditions of Approval, Resolution Number _____ dated _____
B. Educational Material
C. BMP Details
D. BMP Maintenance Information
E. Geotechnical Infiltration Testing (for reference only)
F. Hydrology Information (Q2 – Two-year frequency storm evaluation)

List of Tables

Table 1 Site Design BMPs……... 6
Table 2 Routine Non-Structural BMPs…… 7
Table 3 Routine Structural BMPs…… 9
Table 4 Hydrologic Source Control BMPs……. 11
Table 5 Infiltration BMPs…….. …… 12
Table 6 Evapotranspiration, Rainwater Harvesting…….. 13
Table 7 Biotreatment BMPs…….. 14
Table 8 Frequency Inspection Matrix……..……. 17

I. Discretionary Permit Number(s), Water Quality Condition Number(s) and Conditions of Approval

Tract No. 10803 Lot No. 19

GPS Coordinates: 33.7800443 -117.853015

Water Quality Conditions (WQMP conditions listed below)
Once issued, a complete copy of the signed Conditions of Approval, Resolution Number _____ dated _____ will be included as Appendix A

Conditions of Approval:
To be provided in the Final WQMP upon issuance by the City of Orange.

II. Project Description

Planning Area (Location): Historic District and adjacent Planning Areas

Project Site Area (ac): 0.848

Project Disturbed Area (ac): 0.848

Percent Change in Impermeable Surfaces: - 5.8%

SIC Code: 5812

Project Description
The project proposes to construct a 36-unit assisted senior living center consisting of a 2-story building, a driveway on the east edge of the site for main entry and fire truck access, an existing gate entrance at the southwest corner of the site for shared access to the existing senior living center to the south, private drives, parking stalls, associated utilities, a courtyard, associated hardscape and landscape improvements throughout the project site. The project will consist of approximately 32,100 s.f. of building footprint, 8,650 s.f. of drive aisle, 3,200 s.f. of parking stalls, 3,950 s.f. of sidewalks, and 4,725 s.f. of landscaping.

Project Purpose and Activities
The purpose of the project is to redevelop the existing site from a restaurant building and parking lot into a senior assisted living community. The redevelopment will serve as an expansion to the existing senior assisted living community to the south of the project site. Proposed sidewalks, drive aisles and common spaces will ensure a unified integration with the existing senior community and an overall improved experience for current and future residents.

Potential Storm Water Pollutants
Expected pollutants include suspended-solid/sediment, nutrients, heavy metals, pathogens (bacteria/virus), pesticides, oil and grease, toxic organic compounds, and trash and debris.

Hydrologic Conditions of Concern
Runoff from the project discharges to Santiago Creek Channel which flows to the Santa Ana River which discharges to the Pacific Ocean. At the location where the project discharges to the Santiago Creek Channel and confluences with the Santa Ana River, both channels are stabilized per Appendix XVI.3 Figure 3 of the TGD. However, Figure 3 shows the project is located within an area of potential erosion, habitat and physical structure susceptibility, therefore the hydrologic conditions or concern were analyzed. Refer to the summary table below and Appendix F for calculations.

2-YEAR STORM EVENT INFORMATION			
	Volume (ac-ft)	Velocity (ft/s)	Time of Concentration (min)
Pre-Development	0.11	1.16	7.94
Post-Development	0.09	1.13	8.37

Post Development Drainage Characteristics
In the proposed condition, storm water runoff from the majority of the project site will be collected in a proposed cross gutter and conveyed to a storm water BMP facility consisting of a Modular Wetland System pretreatment unit and underground perforated storage infiltration tank located in the western portion of the site. Runoff from the courtyard area along the south side of the building will be collected and conveyed in proposed storm drain to the same BMP facility. The BMP facility will provide water quality treatment and retention via infiltration for the project DCV. In larger storm events, overflow will discharge from the pretreatment unit via a secondary storm drain which will convey overflow to a pop-up drain emitter located on the neighboring property. When pressurized, the pop-up drain will allow overflow to drain out and sheet flow southerly as it does in the existing condition.

A small planter area along the southeastern boundary will not drain to the BMP facility. Instead, the small planter area is considered “self-treating” and will drain easterly to Glassell Street.

Commercial Projects
The proposed project includes a kitchen, two dining areas, housekeeping storage room, and maintenance storage room all of which are indoors and not exposed to storm water. There is an outdoor trash area proposed which will be designed to preclude precipitation. The project will install a gravity grease interceptor in order to remove fats, oils and grease (FOG) from the building’s kitchen waste before entering the sewer system.

Site Ownership and any Easements
The property is owned by KC Orange II, L.P. No infrastructure will be transferred to public agencies. A homeowner’s association (HOA) will be formed and will be responsible for the long-term maintenance of the project’s storm water BMPs.
In the event of a change in ownership, a “Notice of Transfer of Responsibility” form shall be filed with the City of Orange Public Works Department. A copy of the form is included in the front of this report.

III. Site Description

Reference Location Map: Page 799, Grid G5

Site Address: 574 South Glassell Street, Orange, CA 92866

Zoning: Limited Business (C-1)

Predominant Soil type: A

Pre-project percent pervious: 8 **Post-project percent pervious:** 14

Pre-project percent impervious: 92 **Post-project percent impervious:** 86

Site Characteristics

The existing site is currently developed and has a restaurant building with a parking lot. In the existing conditions, the site is very flat with an approximate average slope of 1.0%.

According to a geotechnical study performed by Albus-Keefe & Associates, Inc in April 2016, soils consisted of artificial fill of approximately 4-5 feet and consisted of silty sand/sandy silt that was damp to moist and loose/very soft to soft. Below the artificial fill was alluvium that typically consisted of both fine and coarse-grained soils. The fine-grain soils generally consisted of brown, olive brown and red brown sandy silt and were damp to moist and ranged from very soft to stiff. The coarse-grained deposits consisted of various shades of brown silty sand, silty sand with gravel, gravel with sand and silt, and sand with gravel. These deposits were dry to moist and ranged from very loose to very dense. Groundwater was not encountered during subsurface exploration to a maximum of 51.5 feet bgs. According to the study, the historical high groundwater level for the general area in which the project resides is approximately 45 feet or more below the existing ground surface.

An additional geotechnical study was performed by Leighton Consulting, Inc. to test the percolation rates at the proposed infiltration location. Two boring holes were drilled on April 18, 2019 at the proposed infiltration tank location. Testing was performed in accordance with the Orange County TGD. Based on the results of percolation testing, the design infiltration rate at the proposed infiltration location is 3.2 inches per hour which includes a safety factor of 2.

Glassell Street, on the east side of the project site, has several existing utility lines and mains that the existing restaurant building utilizes for its sewer, water, electrical, and gas services. Although the existing project site does not drain into it, there is an existing

66” RCP storm drainage pipe on the east half of Glassell Street that drains southerly towards the Santiago Creek.

Watershed Characteristics

Watershed: Santa Ana River

Downstream Receiving Waters: Santiago Creek, Reach 2, Reach 1 of Lower Santa Ana River, Pacific Ocean

Water Quality Impairments (if applicable): Reach 2 was 303d listed per indicator bacteria in 2010 and was subsequently de-listed in 2016.

Identify hydromodification susceptibility: Runoff from the project discharges to Santiago Creek which flows to the Santa Ana River which discharges to the Pacific Ocean. At the location where the project discharges to Santiago Creek and confluences with the Santa Ana River, both channels are stabilized per Appendix XVI.3 Figure 3 of the TGD. However, Figure 3 shows the project is located within an area of potential erosion, habitat and physical structure susceptibility, therefore the hydrologic conditions or concern were analyzed. (See Section II, 2-Year Storm Event Information table)

Identify watershed management priorities: Not applicable.

IV. Best Management Practices

IV.1 Site Design and Drainage Characteristics

Table 1

Site Design BMPs

Technique	Included?		If no, state justification.
	Yes	No	
Minimize Directly Connected Impervious Areas (DCIAs) (C-Factor Reduction)	✓		
Create Reduced or "Zero Discharge" Areas (Runoff Volume Reduction)[1]		✓	Runoff will drain to a proposed drywell for water quality treatment and retention through infiltration.
Minimize Impervious Area/Maximize Permeability (C-Factor Reduction)[2]	✓		
Conserve Natural Areas (C-Factor Reduction)		✓	No natural areas to protect exist on the project site

1 Detention and retention areas incorporated into landscape design provide areas for retaining and detaining stormwater flows, resulting in lower runoff rates and reductions in volume due to limited infiltration and evaporation. Such Site Design BMPs may reduce the size of Treatment Control BMPs.

2 The "C Factor" is a representation of the ability of a surface to produce runoff. Surfaces that produce higher volumes of runoff are represented by higher C Factors. By incorporating more pervious, lower C Factor surfaces into a development, lower volumes of runoff will be produced. Lower volumes and rates of runoff translate directly to lowering treatment requirements.

Minimize Directly Connected Impervious Areas
The project site proposes landscaped areas adjacent to the proposed building, sidewalks, curbs and gutters to ensure vegetated buffers between impervious areas. This will allow the opportunity for infiltration into the soil to occur within areas throughout the site not just one isolated location.

Minimize Impervious Area/ Maximize Permeability
In the proposed condition the impervious area will be reduced from the existing condition. Several landscaped areas are located throughout the site including areas adjacent to the proposed building, sidewalks, curb and gutters.

IV.2 Source Control BMPs

IV.2.1 Routine Non-Structural BMPs

Table 2

Routine Non-Structural BMPs

BMP No.	Name	Check One		If not applicable, state brief reason.
		Included	Not Applicable	
N1	Education for Property Owners, Tenants and Occupants	X		
N2	Activity Restriction	X		
N3	Common Area Landscape Management	X		
N4	BMP Maintenance	X		
N5	Title 22 CCR Compliance		X	No hazardous waste on site
N6	Local Water Quality Permit Compliance		X	Not applicable. The City of Orange does not issue water quality permits.
N7	Spill Contingency Plan		X	No hazardous waste on site
N8	Underground Storage Tank Compliance		X	No underground storage on site
N9	Hazardous Materials Disclosure Compliance		X	No hazardous waste or materials on site
N10	Uniform Fire Code Implementation		X	Not applicable. Not an industrial development.
N11	Common Area Litter Control	X		
N12	Employee Training	X		
N13	Housekeeping of Loading Docks		X	No loading docks on site
N14	Common Area Catch Basin Inspection	X		
N15	Street Sweeping Private Streets and Parking Lots	X		

N1 – Education for Property Owners, Tenants and Occupants
Educational materials such as brochures and information on how to reduce pollutants from reaching the storm drain system shall be distributed to owners, tenants and occupants. Refer to Section VII for a list of materials available.

N2 – Activity Restrictions
The property owner shall develop restrictions on activities that have the potential to create adverse impacts on water quality. Activities include but are not limited to: use of pesticides and fertilizers consistent with City and County guidelines, prohibiting washing

of walkways and driveways, prohibiting vehicle maintenance activities, and prohibiting vehicle washings.

N3 – Common Area Landscape Management
Landscape management including but not limited to water-efficient irrigation systems and proper disposal of waste shall be consistent with City requirements, and fertilizer/pesticide use shall be consistent with County Management Guidelines for Use of Fertilizers (OC DAMP Section 5.5) and City of Orange LIP.

N4 – BMP Maintenance
Maintenance of BMPs shall be performed at the frequency prescribed in this WQMP. Records of inspections and maintenance shall be maintained by the owner and be available for review upon request.

N11 – Common Area Litter Control
Litter control activities such as visual inspections, performing trash pickup and sweeping, and proper disposal shall be performed at a minimum of weekly or more often, as needed.

N12 – Employee Training
Training of all employees and any contractors shall be performed to ensure maintenance activities will not impact water quality. Training shall include at a minimum: spill cleanup procedures, proper waste disposal, proper housekeeping practices, etc.

N14 – Common Area Catch Basin Inspection
Catch basin inlets shall be inspected and cleaned prior to the start of the rainy season, by October 1st each year.

N15 – Street Sweeping Private Streets and Parking Lots
Parking areas and private drive aisles must be swept at a minimum of every two weeks (weekly preferred) or more often if trash and debris is present, including prior to the start of the rainy season, by October 1st each year.

IV.2.2 Routine Structural BMPs

Table 3

Routine Structural BMPs

Name	Check One		If not applicable, state brief reason
	Included	Not Applicable	
Provide storm drain system stenciling and signage- "No Dumping – Drains to Ocean"	X		
Design and construct outdoor material storage areas to reduce pollution introduction		X	No outdoor material storage areas on site
Design and construct trash and waste storage areas to reduce pollution introduction	X		
Use efficient irrigation systems & landscape design	X		
Protect slopes and channels and provide energy dissipation		X	No slopes or channels on site
Incorporate requirements applicable to individual project features			
a. Dock areas		X	No loading docks on site
b. Maintenance bays		X	No maintenance bays on site
c. Vehicle or community wash areas		X	No vehicle wash areas on site
d. Outdoor processing areas		X	No outdoor processing areas on site
e. Equipment wash areas		X	No equipment wash areas on site
f. Fueling areas		X	No fueling areas on site
g. Hillside landscaping		X	No hillside areas on site
h. Wash water control for food preparation areas	X		

Provide storm drain stenciling
Storm drain inlets shall be stenciled to read "No Dumping – Drains to Ocean". Stenciling shall be annually inspected and re-stenciled for legibility.

Design and construct trash and waste storage areas to reduce pollution introduction
Trash and waste storage areas shall be designed to prevent direct contact with precipitation and collection of storm water within the areas. Any storm water retained within the area shall not be discharged to the street or storm drain system.

Use efficient irrigation systems and landscape design
Irrigation systems and landscape shall be designed to eliminate overspray and excess runoff. Watering timing and cycle lengths shall be adjusted in accordance with water demands, time of year, weather, and temperatures. The landscape areas shall be slightly recessed (approximately 1") from adjacent finished surface.

Wash water control for food preparation areas
Food preparation areas shall be designed to meet all applicable health and safety regulations including installation of a gravity grease interceptor meeting the UPC requirements. Areas shall be designed to properly contain and discharge wash water to the sanitary sewer. All drains near the grease generating equipment areas, the three-compartment sink, janitorial sink, etc. shall drain to the gravity grease interceptor designed to meet all applicable plumbing design standards.

IV.3 Low Impact Development BMP Selection

IV.3.1 Hydrologic Source Controls

Table 4

Hydrologic Source Control BMPs

Name	Check If Used
Localized on-lot infiltration	☐
Impervious area dispersion (e.g. roof top disconnection)	☒
Street trees (canopy interception)	☐
Residential rain barrels (not actively managed)	☐
Green roofs/Brown roofs	☐
Blue roofs	☐
Other:	☐
Other:	☐
Other:	☐
Other:	☐
Other:	☐
Other:	☐
Other:	☐
Other:	☐

There is a planter area proposed along the southeastern project boundary comprised mainly of landscape with a minor amount of impervious area. Per Worksheet A and HSC-2 Fact Sheet, 80% capture efficiency is achieved. Refer to the calculations provided in Section IV.8.

IV.3.2 Infiltration BMPs

Table 5

Infiltration BMPs

Name	Check If Used
Bioretention without underdrains	☐
Rain gardens	☐
Porous landscaping	☐
Infiltration planters	☐
Retention swales	☐
Infiltration trenches	☐
Infiltration basins	☐
Drywells	☐
Subsurface infiltration galleries	☒
French drains	☐
Permeable asphalt	☐
Permeable concrete	☐
Permeable concrete pavers	☐
Other:	☐
Other:	☐

The full LID Design Storm Capture Volume will be met with the use of a storm water BMP facility consisting of a Modular Wetland System pretreatment unit and underground perforated storage infiltration tank. Storm water runoff will flow to the Modular Wetland System for pretreatment and continue to the underground perforated storage tank for infiltration. Refer to the calculations provided in Section IV.8.

IV.3.3 Evapotranspiration, Rainwater Harvesting BMPs

Table 6

Evapotranspiration, Rainwater Harvesting BMP

Name	Check If Used
All HSCs; *See Section IV.3.1*	☐
Surface-based infiltration BMPs	☐
Biotreatment BMPs	☐
Above-ground cisterns and basins	☐
Underground detention	☐
Other:	☐
Other:	☐
Other:	☐

The full LID Design Storm Capture Volume will be met with an infiltration BMP, therefore evapotranspiration and rainwater harvesting BMPs are not proposed for the project.

IV.3.4 Biotreatment BMPs

Table 7
Biotreatment BMPs

Bioretention with underdrains	☐
Storm water planter boxes with underdrains	☐
Rain gardens with underdrains	☐
Constructed wetlands	☐
Vegetated swales	☐
Vegetated filter strips	☐
Proprietary vegetated biotreatment systems	☒
Wet extended detention basin	☐
Dry extended detention basins	☐
Other:	☐
Other:	☐

The full LID Design Storm Capture Volume will be met with an infiltration BMP, however a Modular Wetland System is proposed as pretreatment for the infiltration tank. Refer to the calculations provided in Section IV.8.

IV.3.5 Hydromodification Control BMPs

Not applicable. See discussion in Sections II & III.

IV.3.6 Treatment Control BMPs

Not applicable.

IV.6 Vector Control

All BMPs will be designed to allow for full drawdown of storm water within 96 hours preventing mosquito breeding habitat.

IV.7 Drainage Management Area (DMA)

DMA Number	BMPs	Area Treated
1	Pre-treatment (Mod. Wet.) INF-5 (Perforated storage tank)	0.802 ac
2	HSC-2 (Self-treating)	0.046 ac
3		
4		
5		
6		
Total Area		0.848 ac

Total Project Area= 0.848 ac
(Note if all project design storm volume is captured by these BMPs).

IV.8 Calculations

TECHNICAL GUIDANCE DOCUMENT APPENDICES

Worksheet B: Simple Design Capture Volume Sizing Method

Step 1: Determine the design capture storm depth used for calculating volume					
1	Enter design capture storm depth from Figure III.1, *d* (inches)	d=	0.8	0.8	inches
2	Enter the effect of provided HSCs, d_{HSC} (inches) (Worksheet A)	d_{HSC}=	0	0	inches
3	Calculate the remainder of the design capture storm depth, $d_{remainder}$ (inches) (Line 1 – Line 2)	$d_{remainder}$=	0.8	0.8	inches
Step 2: Calculate the DCV					
1	Enter Project area tributary to BMP (s), *A* (acres)	A=	0.802	0.046	acres
2	Enter Project Imperviousness, *imp* (unitless)	imp=	0.896	0.210	
3	Calculate runoff coefficient, *C= (0.75 x imp) + 0.15*	C=	0.8220	0.3075	
4	Calculate runoff volume, $V_{design} = (C \times d_{remainder} \times A \times 43560 \times (1/12))$	V_{design}=	1914	41	cu-ft
Step 3: Design BMPs to ensure full retention of the DCV					
Step 3a: Determine design infiltration rate NA					
1	Enter measured infiltration rate, $K_{observed}$ [1] (in/hr)	$K_{observed}$=	3.2	3.2	In/hr
2	Enter combined safety factor from Worksheet H, S_{total} (unitless)	S_{total}=	3.5	3.5	
3	Calculate design infiltration rate, $K_{design} = K_{observed} / S_{total}$	K_{design}=	0.91	0.91	In/hr
Step 3b: Determine minimum BMP footprint NA					
4	Enter drawdown time, *T* (max 48 hours)	T=	Refer to Worksheets B and C in Section IV.8	HSC used. Refer to Worksheet A in Section IV.8	Hours
5	Calculate max retention depth that can be drawn down within the drawdown time (feet), $D_{max} = K_{design} \times T \times (1/12)$	D_{max}=			feet
6	Calculate minimum area required for BMP (sq-ft), $A_{min} = V_{design} / d_{max}$	A_{min}=			sq-ft

[1] $K_{observed}$ is the vertical infiltration measured in the field, before applying a factor of safety. If field testing measures a rate that is different than the vertical infiltration rate (for example, three-dimensional borehole percolation rate), then this rate must be adjusted by an acceptable method (for example, Porchet method) to yield the field estimate of vertical infiltration rate, $K_{observed}$. See Appendix VII.

Worksheet C: Capture Efficiency Method for Volume-Based, Constant Drawdown BMPs

Step 1: Determine the design capture storm depth used for calculating volume				
1	Enter design capture storm depth from **Figure III.1**, *d* (inches)	d=	0.8	inches
2	Enter calculated drawdown time of the proposed BMP based on equation provided in applicable BMP Fact Sheet, *T* (hours)	T=	48	hours
3	Using **Figure III.2**, determine the "fraction of design capture storm depth" at which the BMP drawdown time (T) line achieves 80% capture efficiency, X_1	X_1=	1.05	
4	Enter the effective depth of provided HSCs upstream, d_{HSC} (inches) (**Worksheet A**)	d_{HSC}=	0	inches
5	Enter capture efficiency corresponding to d_{HSC}, Y_2 (**Worksheet A**)	Y_2=	0	%
6	Using **Figure III.2**, determine the fraction of "design capture storm depth" at which the drawdown time (T) achieves the equivalent of the upstream capture efficiency(Y_2), X_2	X_2=	0	
7	Calculate the fraction of design volume that must be provided by BMP, *fraction* = $X_1 - X_2$	fraction=	1.05	
8	Calculate the resultant design capture storm depth (inches), $d_{fraction}$ = *fraction* × *d*	$d_{fraction}$=	0.84	inches
9	SOC Only: When using this method for biofiltration sizing, check that the resulting volume in pre-filter detention volume plus pore spaces is at least 0.75 of the remaining DCV (See Section III.7 and Worksheet SOC-1).		Y / N / NA	
Step 2: Calculate the DCV				
1	Enter Project area tributary to BMP (s), *A* (acres)	A=	0.802	acres
2	Enter Project Imperviousness, *imp* (unitless)	imp=	0.896	
3	Calculate runoff coefficient, *C= (0.75 x imp) + 0.15*	C=	0.8220	
4	Calculate runoff volume, V_{design} = *(C x* $d_{rfraction}$ *x A x 43560 x (1/12))*	V_{design}=	2010	cu-ft
Supporting Calculations				
Describe system: Refer to the calculations in Section IV.8.				

Worksheet B: Simple Design Capture Volume Sizing Method

Step 1: Determine the design capture storm depth used for calculating volume				
1	Enter design capture storm depth from Figure III.1, *d* (inches)	d=	0.84	inches
2	Enter the effect of provided HSCs, d_{HSC} (inches) (Worksheet A)	d_{HSC}=	0	inches
3	Calculate the remainder of the design capture storm depth, $d_{remainder}$ (inches) (Line 1 – Line 2)	$d_{remainder}$=	0.84	inches
Step 2: Calculate the DCV				
1	Enter Project area tributary to BMP (s), *A* (acres)	A=	0.802	acres
2	Enter Project Imperviousness, *imp* (unitless)	imp=	0.896	
3	Calculate runoff coefficient, *C= (0.75 x imp) + 0.15*	C=	0.8220	
4	Calculate runoff volume, $V_{design} = (C \times d_{remainder} \times A \times 43560 \times (1/12))$	V_{design}=	2010	cu-ft
Step 3: Design BMPs to ensure full retention of the DCV				
Step 3a: Determine design infiltration rate				
1	Enter measured infiltration rate, $K_{observed}$[1] (in/hr) (**Appendix VII**)	$K_{observed}$=	3.2	In/hr
2	Enter combined safety factor from Worksheet H, S_{total} (unitless)	S_{total}=	3.5	
3	Calculate design infiltration rate, $K_{design} = K_{observed} / S_{total}$	K_{design}=	0.91	In/hr
Step 3b: Determine minimum BMP footprint				
4	Enter drawdown time, *T* (max 48 hours)	T=	48	Hours
5	Calculate max retention depth that can be drawn down within the drawdown time (feet), $D_{max} = K_{design} \times T \times (1/12)$	D_{max}=	3.64	feet
6	Calculate minimum area required for BMP (sq-ft), $A_{min} = V_{design} / d_{max}$	A_{min}=	552	sq-ft

Table 2.7: Infiltration BMP Feasibility Worksheet

	Infeasibility Criteria	*Yes*	*No*
1	**Would Infiltration BMPs pose significant risk for groundwater related concerns?** Refer to Appendix VII (Worksheet I) for guidance on groundwater-related infiltration feasibility criteria.		X
Provide basis: Summarize findings of studies provide reference to studies, calculations, maps, data sources, etc. Provide narrative discussion of study/data source applicability.			
2	Would Infiltration BMPs **pose significant risk of increasing risk of geotechnical hazards that cannot be mitigated to an acceptable level**? (Yes if the answer to any of the following questions is yes, as established by a geotechnical expert): The BMP can only be located less than 50 feet away from slopes steeper than 15 percent The BMP can only be located less than eight feet from building foundations or an alternative setback. A study prepared by a geotechnical professional or an available watershed study substantiates that stormwater infiltration would potentially result in significantly increased risks of geotechnical hazards that cannot be mitigated to an acceptable level.		X
Provide basis: Summarize findings of studies provide reference to studies, calculations, maps, data sources, etc. Provide narrative discussion of study/data source applicability.			
3	Would infiltration of the DCV from drainage area **violate downstream water rights**?		X
Provide basis: Summarize findings of studies provide reference to studies, calculations, maps, data sources, etc. Provide narrative discussion of study/data source applicability.			

Table 2.7: Infiltration BMP Feasibility Worksheet (continued)

	Partial Infeasibility Criteria	***Yes***	***No***
4	Is proposed infiltration facility **located on HSG D soils** or the site geotechnical investigation identifies presence of soil characteristics which support categorization as D soils?		X
Provide basis: Summarize findings of studies provide reference to studies, calculations, maps, data sources, etc. Provide narrative discussion of study/data source applicability.			
5	Is **measured infiltration rate below proposed facility less than 0.3 inches per hour**? This calculation shall be based on the methods described in Appendix VII.		X
Provide basis: Summarize findings of studies provide reference to studies, calculations, maps, data sources, etc. Provide narrative discussion of study/data source applicability.			
6	Would **reduction of over predeveloped conditions cause impairments to downstream beneficial uses, such as change of seasonality of ephemeral washes or increased discharge of contaminated groundwater to surface waters?**		X
Provide citation to applicable study and summarize findings relative to the amount of infiltration that is permissible: Summarize findings of studies provide reference to studies, calculations, maps, data sources, etc. Provide narrative discussion of study/data source applicability.			
7	Would **an increase in infiltration over predeveloped conditions cause impairments to downstream beneficial uses, such as change of seasonality of ephemeral washes or increased discharge of contaminated groundwater to surface waters?**		X
Provide citation to applicable study and summarize findings relative to the amount of infiltration that is permissible: Summarize findings of studies provide reference to studies, calculations, maps, data sources, etc. Provide narrative discussion of study/data source applicability.			

Table 2.7: Infiltration BMP Feasibility Worksheet (continued)

Infiltration Screening Results (check box corresponding to result):		
8	Is there substantial evidence that infiltration from the project would result in a significant increase in I&I to the sanitary sewer that cannot be sufficiently mitigated? (See Appendix XVII) Provide narrative discussion and supporting evidence: Summarize findings of studies provide reference to studies, calculations, maps, data sources, etc. Provide narrative discussion of study/data source applicability.	
9	If any answer from row 1-3 is yes: infiltration of any volume is **not feasible** within the DMA or equivalent. Provide basis: Summarize findings of infeasibility screening	
10	If any answer from row 4-7 is yes, infiltration is **permissible but is not presumed to be feasible for the entire DCV.** Criteria for designing biotreatment BMPs to achieve the maximum feasible infiltration and ET shall apply. Provide basis: Summarize findings of infeasibility screening	
11	If all answers to rows 1 through 11 are no, infiltration of the full DCV is potentially feasible, BMPs must be designed to infiltrate the full DCV to the maximum extent practicable.	X

Worksheet H: Factor of Safety and Design Infiltration Rate and Worksheet

Factor Category		Factor Description	Assigned Weight (w)	Factor Value (v)	Product (p) p = w x v	
A	Suitability Assessment	Soil assessment methods	0.25			
		Predominant soil texture	0.25			
		Site soil variability	0.25			
		Depth to groundwater / impervious layer	0.25			
		Suitability Assessment Safety Factor, $S_A = \Sigma p$			**2**	(per geotech)
B	Design	Tributary area size	0.25		**0.25**	
		Level of pretreatment/ expected sediment loads	0.25		**0.25**	
		Redundancy	0.25		**0.75**	
		Compaction during construction	0.25		**0.5**	
		Design Safety Factor, $S_B = \Sigma p$			**1.75**	
Combined Safety Factor, $S_{Total} = S_A \times S_B$					**3.5**	
Observed Infiltration Rate, inch/hr, $K_{observed}$ (corrected for test-specific bias)					**3.2**	
Design Infiltration Rate, in/hr, $K_{DESIGN} = K_{Observed} / S_{Total}$					**0.91**	

Supporting Data

Briefly describe infiltration test and provide reference to test forms:

Note: The minimum combined adjustment factor shall not be less than 2.0 and the maximum combined adjustment factor shall not exceed 9.0.

Capture Efficiency Method for Underground Infiltration Facility

Step 1: Determine the drawdown time associated with the selected facility geometry

$DD = (d_P / K_{DESIGN}) \times 12$

$DD = (3.64 \text{ ft} / 0.91 \text{ in/hr}) \times 12 \text{ in}$

$DD = 48 \text{ hr}$

Where:

DD = time to completely drain infiltration facility depth, hours

d_P = depth below overflow device, ft

K_{DESIGN} = basin design infiltration rate, in/hr

Step 2: Determine the Required Adjusted DCV for this Drawdown Time

Per Worksheet C adjusted DCV for 48 hr drawdown time = 2,010 cf

Step 3: Determine Underground Infiltration Facility Storage

Adjusted DCV = 2,010 cf at 3.64 ft depth

Infiltration Facility is 3.5-ft diameter perforated pipe embedded in gravel. Total pipe and gravel storage provided = 2,170 cf

Worksheet A: Hydrologic Source Control Calculation Form

	Drainage area ID	**DMA-2**		
	Total drainage area	0.034	acres	
	Total drainage area Impervious Area (IAtotal)	0.0026	acres	
HSC ID	HSC Type/ Description/ Reference BMP Fact Sheet	Effect of individual HSC_i per criteria in **BMP Fact Sheets (XIV.1)** $(d_{HSCi})_1$	Impervious Area Tributary to HSC_i (IA_i)	$d_i \times IA_i$
DMA-2	HSC-2 Impervious Area Dispersion Ratio Pervious to Impervious > 2	1	0.0026	0.0026
	Box 1:	$\Sigma d_i \times IA_i =$		0.0026
	Box 2:	$IA_{total} =$		0.0026
	[Box 1]/[Box 2]:	$d_{HSC\ total} =$		1
		Percent Capture Provided by HSCs (Table III.1)		80%

TECHNICAL GUIDANCE DOCUMENT APPENDICES

Worksheet D: Capture Efficiency Method for Flow-Based BMPs

Step 1: Determine the design capture storm depth used for calculating volume				
1	Enter the time of concentration, T_c (min) (See **Appendix IV.2**)	Tc=	8.37	
2	Using **Figure III.4**, determine the design intensity at which the estimated time of concentration (T_c) achieves 80% capture efficiency, I_1	I1=	0.24	in/hr
3	Enter the effect depth of provided HSCs upstream, d_{HSC} (inches) (**Worksheet A**)	dHSC=	0	inches
4	Enter capture efficiency corresponding to d_{HSC}, Y_2 (**Worksheet A**)	Y2=	0	%
5	Using **Figure III.4**, determine the design intensity at which the time of concentration (T_c) achieves the upstream capture efficiency(Y_2), I_2	I2=	0	
6	Determine the design intensity that must be provided by BMP, $I_{design} = I_1 - I_2$	Idesign=	0.24	
Step 2: Calculate the design flowrate				
1	Enter Project area tributary to BMP (s), *A* (acres)	A=	0.802	acres
2	Enter Project Imperviousness, *imp* (unitless)	imp=	0.896	
3	Calculate runoff coefficient, $C = (0.75 \times imp) + 0.15$	C=	0.8220	
4	Calculate design flowrate, $Q_{design} = (C \times i_{design} \times A)$	Qdesign=	0.158	cfs
Supporting Calculations				

Describe system:

Modular Wetland System utilized for pretreatment:

Model = MWS-L-4-15
Treatment Capacity = 0.175 cfs

Provide time of concentration assumptions:

Tc per 2-year proposed hydrology calculations.

V. Implementation, Maintenance and Inspection Responsibility for BMPs (O&M Plan)

Responsible Party Information (Local Contact Information)

Name: Alex Santana Title: Environmental Services Director

Company: Park Plaza Phone Number: (714) 997-5355 ext. 3611

Table 8 - Frequency Inspection Matrix

BMP	Responsible Party	*Maintenance Activity	*Inspection/Maintenance Frequency
Source Control BMPs (Structural and Non-structural)			
N1 – Education for Property Owners, Tenants and Occupants	KC Orange II LP	Provide educational materials to owners, tenants and occupants.	Initially at lease signing, Annually
N2 – Activity Restrictions	KC Orange II LP	Restrict activities that potentially have adverse impacts on water quality (vehicle maintenance, washing, etc.) The site shall remain in compliance with the Orange Municipal Code at all times.	Daily
N3 – Common Area Landscape Management	KC Orange II LP	Maintain landscape, restrict fertilizer and pesticide use, dispose of landscape waste properly.	Every two weeks at minimum
N4 – BMP Maintenance	KC Orange II LP	Maintain BMPs in accordance with Section V and Appendix D.	Ongoing
N11 – Common Area Litter Control	KC Orange II LP	Monitor, pick up litter and dispose of properly.	Daily inspection, Weekly bin collection
N12 – Employee Training	KC Orange II LP	Educate all employees and managers on storm	Initially upon hire, annually thereafter

		water pollution prevention practices.	
N14 – Common Area Catch Basin Inspection	KC Orange II LP	Maintain, inspect and clean drains as necessary.	Before/after rain events and annually prior to rainy season (October 1st)
N15 – Street Sweeping Private Streets and Parking Lots	KC Orange II LP	Sweep (vacuum or mechanical broom) parking areas and drive aisles to prevent accumulation of litter and debris.	Weekly
S1 – Provide storm drain system stenciling and signage	KC Orange II LP	Mark all inlets, maintain, inspect and re-mark as necessary for legibility with the message "No Dumping – Drains to Ocean"	Annually
S3 – Design and construct trash and waste storage areas to reduce pollution introduction	KC Orange II LP	Outdoor refuse receptacles shall be covered, graded and paved to prevent run-on. Inspect, sweep and maintain area.	Weekly
S4 – Use efficient irrigation systems and landscape design, water conservation, smart controllers, and source control	KC Orange II LP	Design irrigation system to eliminate overspray to hardscape areas and minimize irrigation runoff. Adjust timing and frequency as necessary.	Every two weeks and maintain when needed to prevent nuisance conditions
S13 – Wash water control for food preparation areas	KC Orange II LP	Maintain area using dry methods (i.e., sweeping), properly stock spill kits, store and properly dispose of used oil, and discharge wash water to sanitary sewer. Clean mats indoors or with dry cleaning methods only.	Daily

Low Impact Development and Treatment BMPs			
Modular Wetland System	KC Orange II LP	Inspect for trash, sediment and ponded water. Properly remove and dispose of trash and sediment. Additional information provided in Appendix D, following manufacturer's recommendations.	Monthly inspection, Prior to rainy season (October 1st), Annually
Storage and Infiltration	KC Orange II LP	Inspect for trash, sediment and ponded water. Properly remove and dispose of trash and sediment. Additional information provided in Appendix D, following manufacturer's recommendations. Flush and vacuum to remove sediment accumulated within chambers.	Prior to rainy season (October 1st), Flush and vacuum as needed to prevent clogging

*Attach in appendix additional inspection, maintenance and operations information if required.

Regulatory Permits

None applicable.

Funding

Long-term funding for the installation and on-going maintenance for all BMPs will be provided by KC Orange II LP through the standard operating budget.

OWNER SELF CERTIFICATION STATEMENT

As the owner representative of the Park Plaza Expansion for which a Water Quality Management Plan (WQMP) was approved by the City, I hereby certify under penalty of law that all Best Management Practices contained within the approved Project WQMP have been maintained and inspected in accordance with the schedule and frequency outlined in the approved WQMP Maintenance Table.

The maintenance activities and inspections conducted are shown in the attached table and have been performed by qualified and knowledgeable individuals. Structural Treatment BMPs have been inspected and certified by a licensed professional engineer.

To the best of my knowledge, the information submitted is true and accurate and complete. I am aware that there are significant penalties for submitting false information, including the possibility of fines and citations for violating water quality regulations.

Signed: _____

Name: Axel Guerra

Title: Acquisition and Development Manager

Company: KC Orange II LP

Address: 5790 Fleet Street, Suite 300, Carlsbad, CA 92008

Telephone Number: 760-804-7065

Date: _____

BMP Implementation Tracking Table

BMP	Activity	Completion Dates or Frequency	Initial
Source Control BMPs (Structural and Nonstructural)			
N1 – Education for Property Owners, Tenants and Occupants	Provide educational materials to owners, tenants and occupants.		
N2 – Activity Restrictions	Restrict activities that potentially have adverse impacts on water quality (vehicle maintenance, washing, etc.) The site shall remain in compliance with the Orange Municipal Code at all times.		
N3 – Common Area Landscape Management	Maintain landscape, restrict fertilizer and pesticide use, dispose of landscape waste properly.		
N4 – BMP Maintenance	Maintain BMPs in accordance with Section V and Appendix D.		
N11 – Common Area Litter Control	Monitor, pick up litter and dispose of properly.		
N12 – Employee Training	Educate all employees and managers on storm water pollution prevention practices.		
N14 – Common Area Catch Basin Inspection	Maintain, inspect and clean drains.		
N15 – Street Sweeping Private Streets and Parking Lots	Sweep (vacuum or mechanical broom) parking areas and drive aisles to prevent accumulation of litter and debris.		
S1 – Provide storm drain system stenciling and signage	Mark all inlets, maintain, inspect and re-mark as necessary for legibility with the message “No Dumping – Drains to Ocean”		
S3 – Design and construct trash and waste storage areas to reduce pollution introduction	Outdoor refuse receptacles shall be covered, graded and paved to prevent run-on. Inspect, sweep and maintain area.		

S4 – Use efficient irrigation systems and landscape design, water conservation, smart controllers, and source control	Design irrigation system to eliminate overspray to hardscape areas and minimize irrigation runoff. Adjust timing and frequency as necessary.		
S13 – Properly design wash water control for food preparation areas	Maintain area using dry methods (i.e., sweeping), properly stock spill kits, store and properly dispose of used oil, and discharge wash water to sanitary sewer. Clean mats indoors or with dry cleaning methods only.		
Low Impact Development and Treatment BMPs			
Modular Wetland System	Inspect for trash, sediment and ponded water. Properly remove and dispose of trash and sediment. Additional information provided in Appendix D, following manufacturer's recommendations.		
Storage and Infiltration	Inspect for trash, sediment and ponded water. Properly remove and dispose of trash and sediment. Additional information provided in Appendix D, following manufacturer's recommendations. Flush and vacuum to remove sediment accumulated within chambers.		

* This sheet is to be submitted annually with the Owner Self Certification Statement.
** Structural Treatment BMPs should be certified by a Licensed Professional Engineer.

VI. Location Map, Site Plan, and BMP Details

Include a location map that identifies project location and proximity to nearby water bodies. In an 11X17 sheet Identify land use, cover, feasibility constraints, structures, buildings, number of units, landscape areas, storm drain inlets, storm drain facilities, drainage flow direction, structural and treatment BMP locations, dumpsters, trash enclosures, wash areas, etc.

Delineate drainage management areas showing limits (acreage) of each drainage area for all structural, treatment and Low Impact Development BMPs used and provide BMP details on plan or in Appendix C.

Location Map

Bureau of Land Management, Esri, HERE, Garmin, INCREMENT P, NGA, USGS

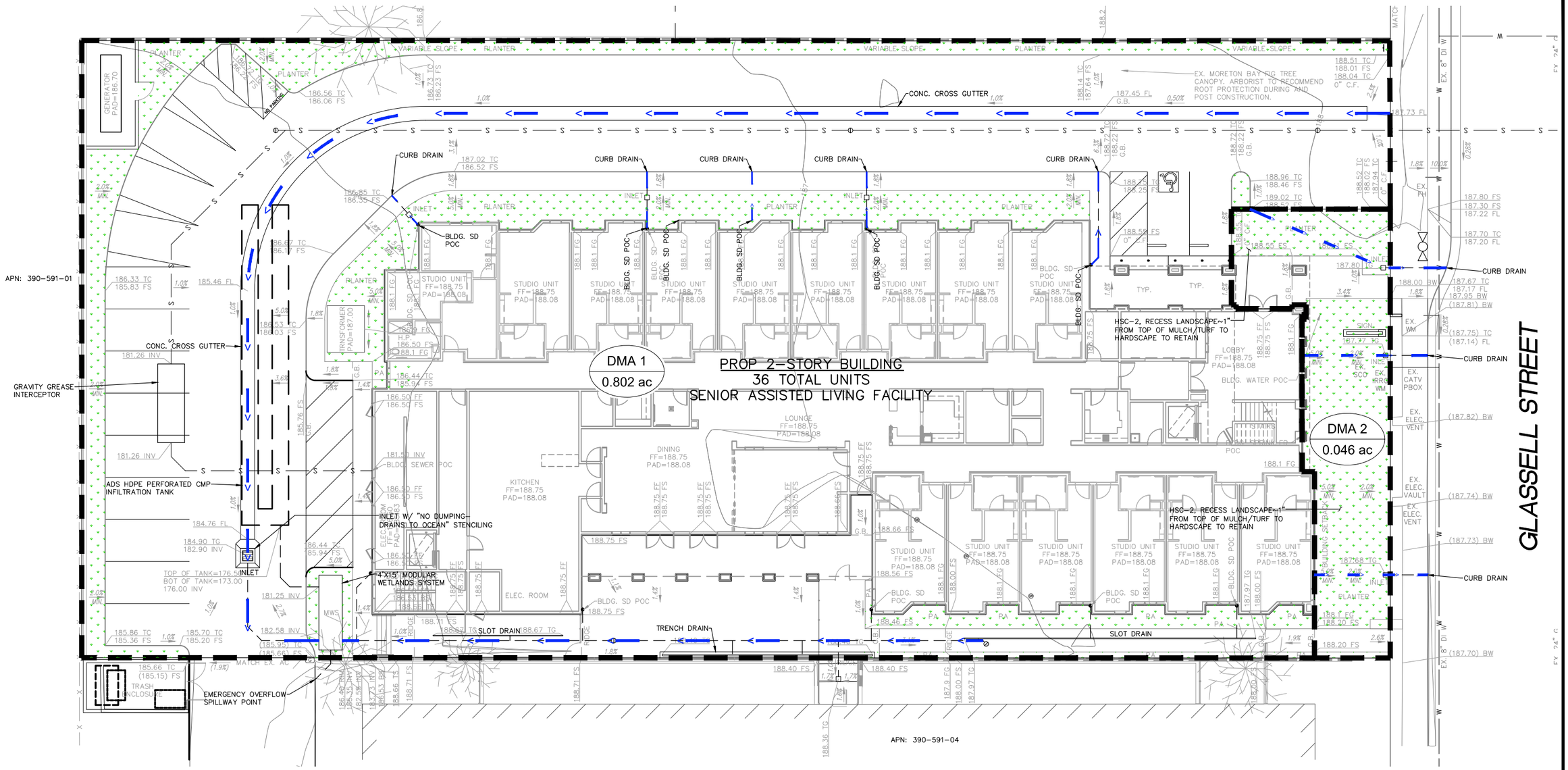

PREPARED BY:

PASCO LARET SUITER & ASSOCIATES
27127 Calle Arroyo, Ste 1904, San Juan Capistrano, CA 92675
ph 949.661.6695 | fx 949. 661.6674 | plsaengineering.com

WQMP SITE PLAN

PARK PLAZA EXPANSION
574 S. GLASSELL STREET

5/30/19

DRAWING:
SHEET 1 OF 1

SAVE DATE: 5/30/2019 ~ PLOT DATE: 5/30/2019 ~ FILE NAME: J:\Active Jobs\3034 Park Plaza\CIVIL\REPORTS\WQMP\Preliminary WQMP\3034 - DMA, WQMP Site Plan.dwg

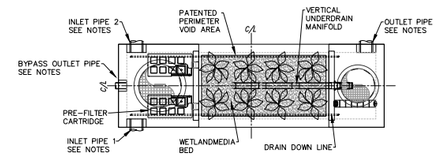

PLAN VIEW

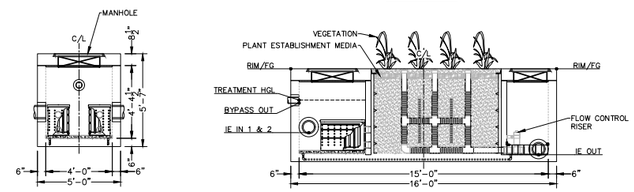

ELEVATION VIEW

LEFT END VIEW

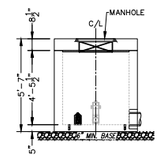

RIGHT END VIEW

TYPICAL LINEAR MODULAR WETLANDS SYSTEM (1)

(FOR REFERENCE ONLY–SEE MANUFACTURER'S DETAILS FOR MORE INFO)
SCALE: NTS

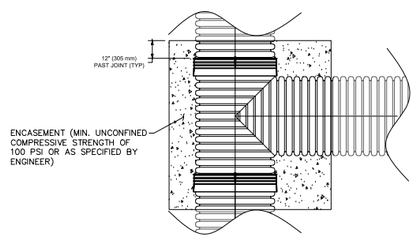

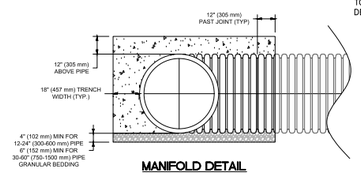

MANIFOLD DETAIL

NOTE:
CLSM/SLURRY/FLOWABLE FILL MUST EXTEND 12" (305 MM) MINIMUM PAST ALL JOINTS AND FITTINGS TO BE ENCASED.

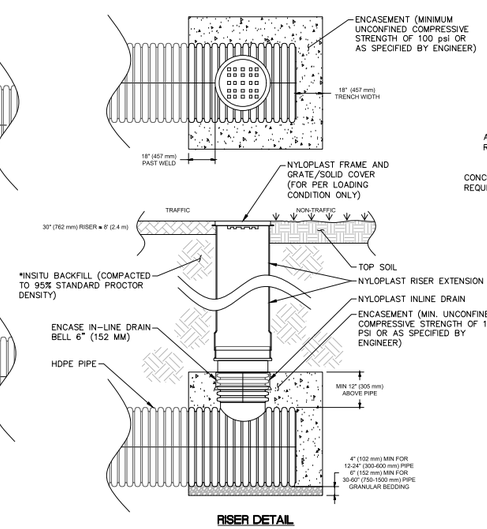

RISER DETAIL

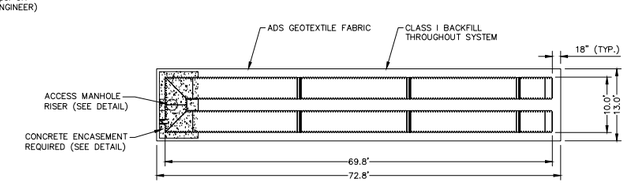

PLAN VIEW

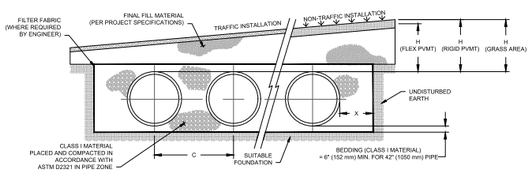

NOMINAL DIAMETER	NOMINAL O.D.	TYPICAL SPACING "C"	TYPICAL SIDE WALL "X"	MIN. H (NON-TRAFFIC)	MIN. H (TRAFFIC)	MAX. H*
42" (1050 mm)	48" (1219 mm)	72" (1829 mm)	16" (457 mm)	12" (305 mm)	24" (610 mm)	8' (2.4 m)

BEDDING/COVER DETAIL

TYPICAL 42-INCH ADS HDPE PERFORATED INFILTRATION SYSTEM (2)

(FOR REFERENCE ONLY–SEE MANUFACTURER'S DETAILS FOR MORE INFO)
SCALE: NTS

Shelter ARCHITECTS

OWNER
KC Orange II, LP
5760 Fleet Street, Suite 300
Carlsbad, CA 92008
Contact: Axel Guerra, 760.804.7065

ARCHITECT
Shelter LLP
87 N Raymond Ave #217
Pasadena, CA 91103
Contact: Gladys Maldonado-Bowen, 626.437.6846

CIVIL ENGINEER
PLSA
27127 Calle Arroyo, Ste 1904
San Juan Capistrano, CA 92675

LANDSCAPE ARCHITECT
SGLA, Inc
2669 Saturn Street
Brea, CA 92821

STRUCTURAL ENGINEER
Paul Rohrer Structural Engineers
17291 Irvine Blvd #152
Tustin, CA 92780

MECHANICAL, ELECTRICAL, & PLUMBING ENGINEER
Southwest Group Engineers, Inc.
9201 Research Drive
Irvine, CA 92618

WATERPROOFING
Applied Materials & Engineering, Inc.
980 41st. Street
Oakland, CA 94608

ARBORIST
Evergreen Arborist Consultants
5670 Wilshire Blvd #1800
Los Angeles, CA 90036

PASCO LARET SUITER & ASSOCIATES
27127 Calle Arroyo, Ste 1904, San Juan Capistrano, CA 92675
ph 949.661.6695 | fx 949.661.6674 | plsaengineering.com

REV DATE ISSUE

REGISTERED PROFESSIONAL ENGINEER
WILLIAM J. SUITER
No. RCE 68964
EXP. 12-31-19
Civil
STATE OF CALIFORNIA

Park Plaza
Memory Care

574 S Glassell St
Orange, CA 92866

DETAILS

PROJECT #:
DATE: 7 May 2019

C-2

Copyright 2019 Shelter LLP. All Rights Reserved. – These Plans and/or Specifications are intended for the sole benefit of Shelter LLP's client and may not be used, reused, copied, or reproduced in any form without the express written consent of Shelter LLP. ///

Plotted Monday June 03, 2019 11:15am by pepeh J:\active Jobs\2014 Park Plaza\CIVIL\DRAWING\BORE\TENANT PLANS\C24-PRELIM-GRAD-02-DETS.dwg

VII. Educational Materials

Education Materials			
Residential Material (http://www.ocwatersheds.com)	**Check If Applicable**	**Business Material (http://www.ocwatersheds.com)**	**Check If Applicable**
The Ocean Begins at Your Front Door	☒	Tips for the Automotive Industry	☐
Tips for Car Wash Fund-raisers	☐	Tips for Using Concrete and Mortar	☐
Tips for the Home Mechanic	☐	Tips for the Food Service Industry	☒
Homeowners Guide for Sustainable Water Use	☒	Proper Maintenance Practices for Your Business	☒
Household Tips	☒	**Other Material**	**Check If Attached**
Proper Disposal of Household Hazardous Waste	☒		
Recycle at Your Local Used Oil Collection Center (North County)	☐		☐
Recycle at Your Local Used Oil Collection Center (Central County)	☒		☐
Recycle at Your Local Used Oil Collection Center (South County)	☐		☐
Tips for Maintaining a Septic Tank System	☐		☐
Responsible Pest Control	☒		☐
Sewer Spill Response	☒		☐
Tips for the Home Improvement Projects	☐		☐
Tips for Horse Care	☐		☐
Tips for Landscaping and Gardening	☒		☐
Tips for Pet Care	☐		☐
Tips for Pool Maintenance	☐		☐
Tips for Residential Pool, Landscape and Hardscape Drains	☐		☐
Tips for Projects Using Paint	☐		☐

Appendix A:

Conditions of Approval

Resolution Number_____ dated_____

Appendix B:

Educational Material

The Ocean Begins at Your Front Door

Even if you live miles from the Pacific Ocean, you may be unknowingly polluting it.

Dumping one quart of motor oil into a storm drain can contaminate 250,000 gallons of water.

Did You Know?

- Most people believe that the largest source of water pollution in urban areas comes from specific sources such as factories and sewage treatment plants. In fact, the largest source of water pollution comes from city streets, neighborhoods, construction sites and parking lots. This type of pollution is sometimes called "non-point source" pollution.
- There are two types of non-point source pollution: stormwater and urban runoff pollution.
- Stormwater runoff results from rainfall. When rainstorms cause large volumes of water to rinse the urban landscape, picking up pollutants along the way.
- Urban runoff can happen any time of the year when excessive water use from irrigation, vehicle washing and other sources carries trash, lawn clippings and other urban pollutants into storm drains.

Where Does It Go?

- Anything we use outside homes, vehicles and businesses – like motor oil, paint, pesticides, fertilizers and cleaners – can be blown or washed into storm drains.
- A little water from a garden hose or rain can also send materials into storm drains.
- Storm drains are separate from our sanitary sewer systems; unlike water in sanitary sewers (from sinks or toilets), water in storm drains is not treated before entering our waterways.

Sources of Non-Point Source Pollution

- Automotive leaks and spills.
- Improper disposal of used oil and other engine fluids.
- Metals found in vehicle exhaust, weathered paint, rust, metal plating and tires.
- Pesticides and fertilizers from lawns, gardens and farms.
- Improper disposal of cleaners, paint and paint removers.
- Soil erosion and dust debris from landscape and construction activities.
- Litter, lawn clippings, animal waste, and other organic matter.
- Oil stains on parking lots and paved surfaces.

The Effect on the Ocean

Non-point source pollution can have a serious impact on water quality in Orange County. Pollutants from the storm drain system can harm marine life as well as coastal and wetland habitats. They can also degrade recreation areas such as beaches, harbors and bays.

Stormwater quality management programs have been developed throughout Orange County to educate and encourage the public to protect water quality, monitor runoff in the storm drain system, investigate illegal dumping and maintain storm drains.

Support from Orange County residents and businesses is needed to improve water quality and reduce urban runoff pollution. Proper use and disposal of materials will help stop pollution before it reaches the storm drain and the ocean.

For More Information

California Environmental Protection Agency
www.calepa.ca.gov

- **Air Resources Board**
  www.arb.ca.gov
- **Department of Pesticide Regulation**
  www.cdpr.ca.gov
- **Department of Toxic Substances Control**
  www.dtsc.ca.gov
- **Integrated Waste Management Board**
  www.ciwmb.ca.gov
- **Office of Environmental Health Hazard Assessment**
  www.oehha.ca.gov
- **State Water Resources Control Board**
  www.waterboards.ca.gov

Earth 911 - Community-Specific Environmental Information 1-800-cleanup or visit www.1800cleanup.org

Health Care Agency's Ocean and Bay Water Closure and Posting Hotline
(714) 433-6400 or visit www.ocbeachinfo.com

Integrated Waste Management Dept. of Orange County (714) 834-6752 or visit www.oclandfills.com for information on household hazardous waste collection centers, recycling centers and solid waste collection

O.C. Agriculture Commissioner
(714) 447-7100 or visit www.ocagcomm.com

Stormwater Best Management Practice Handbook
Visit www.cabmphandbooks.com

UC Master Gardener Hotline
(714) 708-1646 or visit www.uccemg.com

The Orange County Stormwater Program has created and moderates an electronic mailing list to facilitate communications, take questions and exchange ideas among its users about issues and topics related to stormwater and urban runoff and the implementation of program elements. To join the list, please send an email to ocstormwaterinfo-join@list.ocwatersheds.com

Orange County Stormwater Program

Aliso Viejo	(949)	425-2535
Anaheim Public Works Operations	(714)	765-6860
Brea Engineering	(714)	990-7666
Buena Park Public Works	(714)	562-3655
Costa Mesa Public Services	(714)	754-5323
Cypress Public Works	(714)	229-6740
Dana Point Public Works	(949)	248-3584
Fountain Valley Public Works	(714)	593-4441
Fullerton Engineering Dept.	(714)	738-6853
Garden Grove Public Works	(714)	741-5956
Huntington Beach Public Works	(714)	536-5431
Irvine Public Works	(949)	724-6315
La Habra Public Services	(562)	905-9792
La Palma Public Works	(714)	690-3310
Laguna Beach Water Quality	(949)	497-0378
Laguna Hills Public Services	(949)	707-2650
Laguna Niguel Public Works	(949)	362-4337
Laguna Woods Public Works	(949)	639-0500
Lake Forest Public Works	(949)	461-3480
Los Alamitos Community Dev.	(562)	431-3538
Mission Viejo Public Works	(949)	470-3056
Newport Beach, Code & Water Quality Enforcement	(949)	644-3215
Orange Public Works	(714)	532-6480
Placentia Public Works	(714)	993-8245
Rancho Santa Margarita	(949)	635-1800
San Clemente Environmental Programs	(949)	361-6143
San Juan Capistrano Engineering	(949)	234-4413
Santa Ana Public Works	(714)	647-3380
Seal Beach Engineering	(562)	431-2527 x317
Stanton Public Works	(714)	379-9222 x204
Tustin Public Works/Engineering	(714)	573-3150
Villa Park Engineering	(714)	998-1500
Westminster Public Works/Engineering	(714)	898-3311 x446
Yorba Linda Engineering	(714)	961-7138
Orange County Stormwater Program	(877)	897-7455

Orange County 24-Hour
Water Pollution Problem Reporting Hotline
1-877-89-SPILL (1-877-897-7455)

On-line Water Pollution Problem Reporting Form
www.ocwatersheds.com

Printed on Recycled Paper

The Ocean Begins at Your Front Door

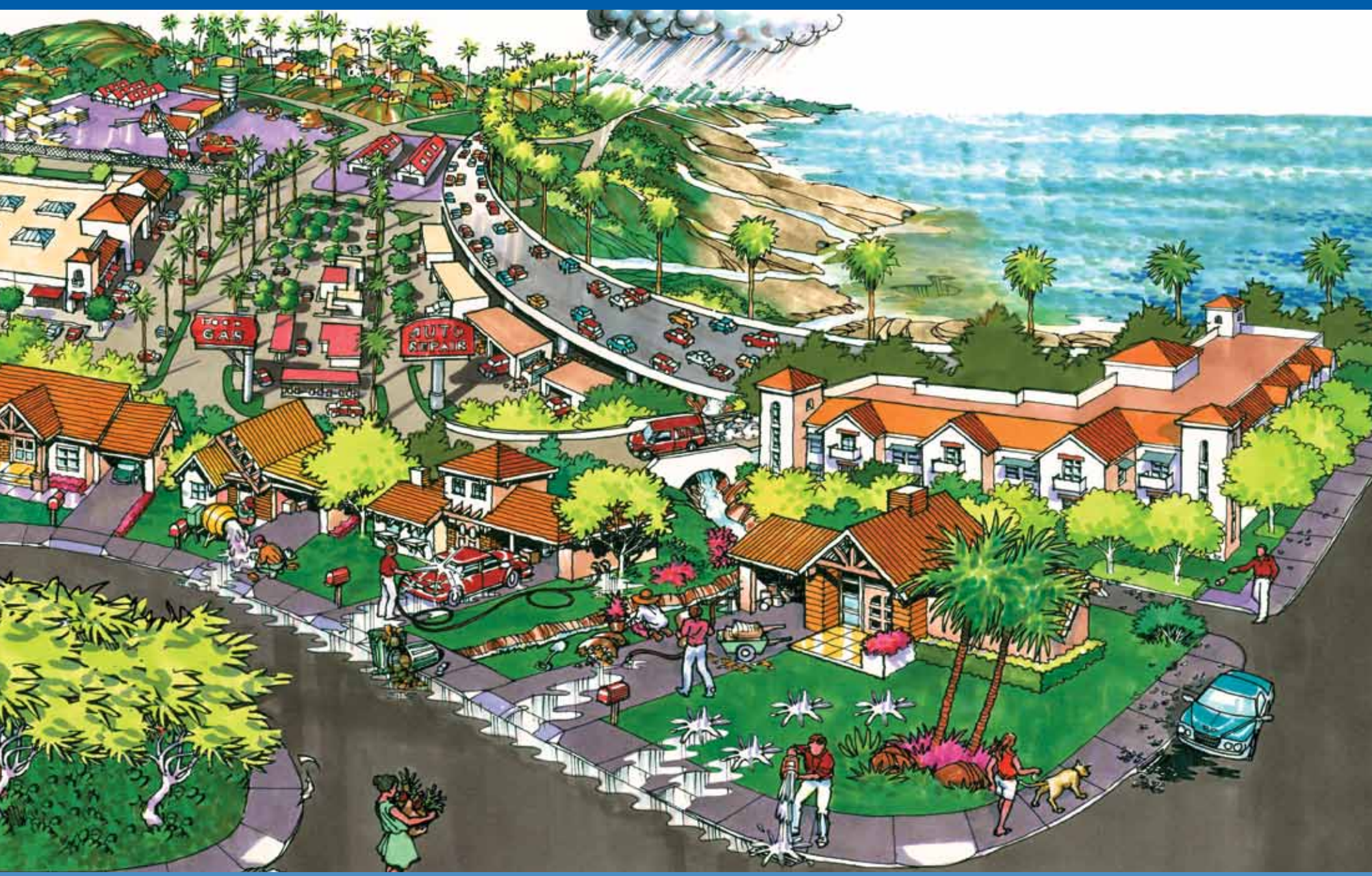

Never allow pollutants to enter the street, gutter or storm drain!

Follow these simple steps to help reduce water pollution:

Household Activities

- Do not rinse spills with water. Use dry cleanup methods such as applying cat litter or another absorbent material, sweep and dispose of in the trash. Take items such as used or excess batteries, oven cleaners, automotive fluids, painting products and cathode ray tubes, like TVs and computer monitors, to a Household Hazardous Waste Collection Center (HHWCC).
- For a HHWCC near you call (714) 834-6752 or visit www.oclandfills.com.
- Do not hose down your driveway, sidewalk or patio to the street, gutter or storm drain. Sweep up debris and dispose of it in the trash.

Automotive

- Take your vehicle to a commercial car wash whenever possible. If you wash your vehicle at home, choose soaps, cleaners, or detergents labeled non-toxic, phosphate- free or biodegradable. Vegetable and citrus-based products are typically safest for the environment.
- Do not allow washwater from vehicle washing to drain into the street, gutter or storm drain. Excess washwater should be disposed of in the sanitary sewer (through a sink or toilet) or onto an absorbent surface like your lawn.
- Monitor your vehicles for leaks and place a pan under leaks. Keep your vehicles well maintained to stop and prevent leaks.
- Never pour oil or antifreeze in the street, gutter or storm drain. Recycle these substances at a service station, a waste oil collection center or used oil recycling center. For the nearest Used Oil Collection Center call 1-800-CLEANUP or visit www.1800cleanup.org.

Pool Maintenance

- Pool and spa water must be dechlorinated and free of excess acid, alkali or color to be allowed in the street, gutter or storm drain.
- When it is not raining, drain dechlorinated pool and spa water directly into the sanitary sewer.
- Some cities may have ordinances that do not allow pool water to be disposed of in the storm drain. Check with your city.

Landscape and Gardening

- Do not over-water. Water your lawn and garden by hand to control the amount of water you use or set irrigation systems to reflect seasonal water needs. If water flows off your yard onto your driveway or sidewalk, your system is over-watering. Periodically inspect and fix leaks and misdirected sprinklers.
- Do not rake or blow leaves, clippings or pruning waste into the street, gutter or storm drain. Instead, dispose of waste by composting, hauling it to a permitted landfill, or as green waste through your city's recycling program.
- Follow directions on pesticides and fertilizer, (measure, do not estimate amounts) and do not use if rain is predicted within 48 hours.
- Take unwanted pesticides to a HHWCC to be recycled. For locations and hours of HHWCC, call (714) 834-6752 or visit www.oclandfills.com.

Trash

- Place trash and litter that cannot be recycled in securely covered trash cans.
- Whenever possible, buy recycled products.
- Remember: Reduce, Reuse, Recycle.

Pet Care

- Always pick up after your pet. Flush waste down the toilet or dispose of it in the trash. Pet waste, if left outdoors, can wash into the street, gutter or storm drain.
- If possible, bathe your pets indoors. If you must bathe your pet outside, wash it on your lawn or another absorbent/permeable surface to keep the washwater from entering the street, gutter or storm drain.
- Follow directions for use of pet care products and dispose of any unused products at a HHWCC.

Common Pollutants

Home Maintenance
- Detergents, cleaners and solvents
- Oil and latex paint
- Swimming pool chemicals
- Outdoor trash and litter

Lawn and Garden
- Pet and animal waste
- Pesticides
- Clippings, leaves and soil
- Fertilizer

Automobile
- Oil and grease
- Radiator fluids and antifreeze
- Cleaning chemicals
- Brake pad dust

The Pollution Solution

Several residential activities can result in water pollution. Among these activities are car washing and hosing off driveways and sidewalks. Both activities can waste water and result in excess runoff. Water conservation methods described in this pamphlet can prevent considerable amounts of runoff and conserve water. By taking your car to a commercial car wash and by sweeping driveways and sidewalks, you can further prevent the transport of pollutants to Orange County waterways. Here are some of the common pollutants for which you can be part of the solution:

1 Pesticides and Fertilizer

- **Pollution:** The same pesticides that are designed to be toxic to pests can have an equally lethal impact on our marine life. The same fertilizer that promotes plant growth in lawns and gardens can also create nuisance algae blooms, which remove oxygen from the water and clog waterways when it decomposes.
- **Solution:** Never use pesticides or fertilizer within 48 hours of an anticipated rainstorm. Use only as much as is directed on the label and keep it off driveways and sidewalks.

2 Dirt and Sediment

- **Pollution:** Dirt or sediment can impede the flow of the stormwater and negatively impact stream habitat as it travels through waterways and deposits downstream. Pollutants can attach to sediment, which can then be transported through our waterways.
- **Solution:** Protect dirt stockpiles by covering them with tarps or secure plastic sheets to prevent wind or rain from allowing dirt or sediment to enter the storm drain system.

3 Metals

- **Pollution:** Metals and other toxins present in car wash water can harm important plankton, which forms the base of the aquatic food chain.
- **Solution:** Take your car to a commercial car wash where the wash water is captured and treated at a local wastewater treatment plant.

DID YOU KNOW?

Did you know that most of the pollution found in our waterways is not from a single source, but from a "non-point" source meaning the accumulation of pollution from residents and businesses throughout the community.

4 Pet Waste

- **Pollution:** Pet waste carries bacteria through our watersheds and eventually will be washed out to the ocean. This can pose a health risk to swimmers and surfers.
- **Solution:** Pick up after your pets!

5 Trash and Debris

- **Pollution:** Trash and debris can enter waterways by wind, littering and careless maintenance of trash receptacles. Street sweeping collects some of this trash; however, much of what isn't captured ends up in our storm drain system where it flows untreated out to the ocean.
- **Solution:** Don't litter and make sure trash containers are properly covered. It is far more expensive to clean up the litter and trash that ends up in our waterways than it is to prevent it in the first place. Come out to one of Orange County's many locations for Coastal and Inner-Coastal Cleanup Day, which is held in September.

6 Motor Oil / Vehicle Fluids

- **Pollution:** Oil and petroleum products from our vehicles are toxic to people, wildlife and plants.

- **Solution:** Fix any leaks from your vehicle and keep the maintenance up on your car. Use absorbent material such as cat litter on oil spills, then sweep it up and dispose of it in the trash. Recycle used motor oil at a local Household Hazardous Waste Collection Center.

A TEAM EFFORT

The Orange County Stormwater Program has teamed with the Municipal Water District of Orange County (MWDOC) and the University of California Cooperative Extension Program (UCCE) to develop this pamphlet.

Low Impact Development (LID) and sustainable water use prevents water pollution and conserves water for drinking and reuse. Reducing your water use and the amount of water flowing from your home protects the environment and saves you money.

Thank you for making water protection a priority!

For more information, please visit

Orange County Stormwater Program
www.ocwatersheds.com/publiced/

Municipal Water District of Orange County
www.mwdoc.com

University of California Master Gardeners of Orange County
www.uccemg.com

UC Cooperative Extension OC Water Quality and Water Resources
www.ucanr.org/sites/urbanwatermgmt/

To report a spill, call the Orange County 24-Hour Water Pollution Prevention Reporting Hotline at 1-877-89-SPILL \ (1-877-897-7455)

Special Thanks to
The City of Los Angeles Stormwater Program for the use of its artwork

The Metropolitan Water District of Southern California for the use of the California-Friendly Plant and Native Habitat photos

Homeowners Guide for Sustainable Water Use

Low Impact Development, Water Conservation & Pollution Prevention

The Ocean Begins at Your Front Door

RUNOFF, RAINWATER AND REUSE

Where Does Water Runoff Go?

Stormwater, or water from rainfall events, and runoff from outdoor water use such as sprinklers and hoses flows from homes directly into catch basins and the storm drain system. After entering the storm drain, the water flows untreated into streams, rivers, bays and ultimately the Pacific Ocean. Runoff can come from lawns, gardens, driveways, sidewalks and roofs. As it flows over hard, impervious surfaces, it picks up pollutants. Some pollutants carried by the water runoff include trash, pet waste, pesticides, fertilizer, motor oil and more.

Water Conservation

Pollution not only impairs the water quality for habitat and recreation, it can also reduce the water available for reuse. Runoff allowed to soak into the ground is cleaned as it percolates through the soil, replenishing depleted groundwater supplies. Groundwater provides at least 50% of the total water for drinking and other indoor household activities in north and central Orange County. When land is covered with roads, parking lots, homes, etc., there is less land to take in the water and more hard surfaces over which the water can flow.

In Orange County, 60-70% of water used by residents and businesses goes to irrigation and other outdoor uses. Reusing rainwater to irrigate our lawn not only reduces the impact of water pollution from runoff, but it also is a great way to conserve our precious water resources and replenish our groundwater basin.

What is Low Impact Development (LID)?

Low Impact Development (LID) is a method of development that seeks to maintain the natural hydrologic character of an area. LID provides a more sustainable and pollution-preventative approach to water management.

New water quality regulations require implementation of LID in larger new developments and encourage implementation of LID and other sustainable practices in existing residential areas. Implementing modifications to your lawn or garden can reduce pollution in our environment, conserve water and reduce your water bill.

Permeable pavement allows water runoff to infiltrate through the soil and prevents most pollutants from reaching the storm drain system.

OPTIONS FOR RAINWATER HARVESTING AND REUSE

Rainwater harvesting is a great way to save money, prevent pollution and reduce potable water use. To harvest your rainwater, simply redirect the runoff from roofs and downspouts to rain barrels. Rain gardens are another option; these reduce runoff as well as encourage infiltration.

Downspout Disconnection/Redirection

Disconnecting downspouts from pipes running to the gutter prevents runoff from transporting pollutants to the storm drain. Once disconnected, downspouts can be redirected to rain gardens or other vegetated areas, or be connected to a rain barrel.

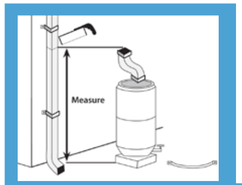

Rain Barrels

Rain barrels capture rainwater flow from roofs for reuse in landscape irrigation. Capacity of rain barrels needed for your home will depend on the amount of roof area and rainfall received. When purchasing your rain barrel, make sure it includes a screen, a spigot to siphon water for use, an overflow tube to allow for excess water to run out and a connector if you wish to connect multiple barrels to add capacity of water storage.

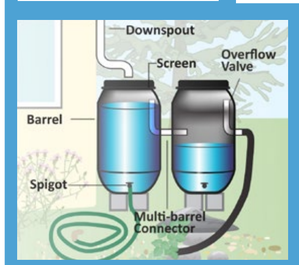

Mosquito growth prevention is very important when installing a rain barrel. The best way to prevent mosquito breeding is to eliminate entry points by ensuring all openings are sealed tightly. If these methods are unsuccessful, products are available to kill mosquito larvae, but that are harmless to animals and humans. Regular application of these products is essential. Please visit the Orange County Vector Control website for more information at www.ocvcd.org/mosquitoes3.php.

Rain Gardens

Rain gardens allow runoff to be directed from your roof downspout into a landscaped area. Vegetation and rocks in the garden will slow the flow of water to allow for infiltration into the soil. Plants and soil particles will absorb pollutants from the roof runoff. By utilizing a native plant palate, rain gardens can be maintained all year with minimal additional irrigation. These plants are adapted to the semi-arid climate of Southern California, require less water and can reduce your water bill.

Before modifying your yard to install a rain garden, please consult your local building and/or planning departments to ensure your garden plan follows pertinent building codes and ordinances. Besides codes and ordinances, some home owner associations also have guidelines for yard modifications. If your property is in hill areas or includes engineered slopes, please seek professional advice before proceeding with changes.

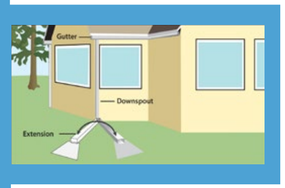

For information on how to disconnect a downspout or to install and maintain a rain barrel or rain garden at your home, please see the Los Angeles Rainwater Harvesting Program, A Homeowner's "How-To" Guide, November 2009 at www.larainwaterharvesting.org/

OTHER WATER CONSERVATION AND POLLUTION PREVENTION TECHNIQUES

Native Vegetation and Maintenance

"California Friendly" plants or native vegetation can significantly reduce water use. These plants often require far less fertilizers and pesticides, which are two significant pollutants found in Orange County waterways. Replacing water "thirsty" plants and grass types with water efficient natives is a great way to save water and reduce the need for potentially harmful pesticides and fertilizer.

Please see the California Friendly Garden Guide produced by the Metropolitan Water District of Southern California and associated Southern California Water Agencies for a catalog of California friendly plants and other garden resources at www.bewaterwise.com/Gardensoft.

Weed Free Yards

Weeds are water thieves. They often reproduce quickly and rob your yard of both water and nutrients. Weed your yard by hand if possible. If you use herbicides to control the weeds, use only the amount recommended on the label and never use it if rain is forecast within the next 48 hours.

Soil Amendments

Soil amendments such as green waste (e.g. grass clippings, compost, etc.) can be a significant source of nutrients and can help keep the soil near the roots of plants moist. However, they can cause algal booms if they get into our waterways, which reduces the amount of oxygen in the water and impacts most aquatic organisms. It is important to apply soil amendments more than 48 hours prior to predicted rainfall.

IRRIGATE EFFICIENTLY

Water runoff from sprinklers left on too long will carry pollutants into our waterways.

Smart Irrigation Controllers

Smart Irrigation Controllers have internal clocks as well as sensors that will turn off the sprinklers in response to environmental changes. If it is raining, too windy or too cold, the smart irrigation control sprinklers will automatically shut off.

Check with your local water agency for available rebates on irrigation controllers and smart timers.

- Aim your sprinklers at your lawn, not the sidewalk – By simply adjusting the direction of your sprinklers you can save water, prevent water pollution from runoff, keep your lawn healthy and save money.
- **Set a timer for your sprinklers** – lawns absorb the water they need to stay healthy within a few minutes of turning on the sprinklers. Time your sprinklers; when water begins running off your lawn, you can turn them off. Your timer can be set to water your lawn for this duration every time.
- **Water at Sunrise** – Watering early in the morning will reduce water loss due to evaporation. Additionally, winds tend to die down in the early morning so the water will get to the lawn as intended.
- **Water by hand** – Instead of using sprinklers, consider watering your yard by hand. Hand-watering ensures that all plants get the proper amount of water and you will prevent any water runoff, which wastes water and carries pollutants into our waterways.
- **Fix leaks** - Nationwide, households waste one trillion gallons of water a year to leaks – that is enough water to serve the entire state of Texas for a year. If your garden hose is leaking, replace the nylon or rubber hose washer and ensure a tight connection. Fix broken sprinklers immediately.

Do your part to prevent water pollution in our creeks, rivers, bays and ocean.

Clean beaches and healthy creeks, rivers, bays, and ocean are important to Orange County. However, many common household activities can lead to water pollution if you're not careful.

REMEMBER THE WATER IN YOUR STORM DRAIN IS NOT TREATED BEFORE IT ENTERS OUR WATERWAYS

Litter, oil, chemicals and other substances that are left on your yard or driveway can be blown or washed into storm drains that flow to the ocean. Over-watering your lawn and washing your car can also flush materials into the storm drains. Unlike water in sanitary sewers (from sinks and toilets), water in storm drains is not treated.

You would never pour soap, fertilizers or oil into the ocean, so don't let them enter streets, gutters or storm drains. Follow the easy tips in this brochure to help prevent water pollution.

For more information,
please call the
Orange County Stormwater Program
at **1-877-89-SPILL** (1-877-897-7455)
or visit
www.ocwatersheds.com

To report a spill,
call the
Orange County 24-Hour Water Pollution Problem Reporting Hotline
1-877-89-SPILL (1-877-897-7455).

For emergencies, dial 911.

The tips contained in this brochure provide useful information to help prevent water pollution while performing everyday household activities. If you have other suggestions, please contact your city's stormwater representatives or call the Orange County Stormwater Program.

GENUINE RECYCLED PAPER
50% PRE-CONSUMER AND 15% POST-CONSUMER

RECYCLE USED OIL

Help Prevent Ocean Pollution:

Household Tips

The Ocean Begins at Your Front Door

PROJECT Pollution PREVENTION

Pollution Prevention

Household Activities

- **Do not rinse spills with water!** Sweep outdoor spills and dispose of in the trash. For wet spills like oil, apply cat litter or another absorbent material, then sweep and bring to a household hazardous waste collection center (HHWCC).
- Securely cover trash cans.
- Take household hazardous waste to a household hazardous waste collection center.
- Store household hazardous waste in closed, labeled containers inside or under a cover.
- Do not hose down your driveway, sidewalk or patio. Sweep up debris and dispose of in trash.
- Always pick up after your pet. Flush waste down the toilet or dispose of in the trash.
- Bathe pets indoors or have them professionally groomed.

Household Hazardous Wastes include:

- ▲ **Batteries**
- ▲ **Paint thinners, paint strippers and removers**
- ▲ **Adhesives**
- ▲ **Drain openers**
- ▲ **Oven cleaners**
- ▲ **Wood and metal cleaners and polishes**
- ▲ **Herbicides and pesticides**
- ▲ **Fungicides/wood preservatives**
- ▲ **Automotive fluids and products**
- ▲ **Grease and rust solvents**
- ▲ **Thermometers and other products containing mercury**
- ▲ **Fluorescent lamps**
- ▲ **Cathode ray tubes, e.g. TVs, computer monitors**
- ▲ **Pool and spa chemicals**

Gardening Activities

- Follow directions on pesticides and fertilizers, (measure, do not estimate amounts) and do not use if rain is predicted within 48 hours.
- Water your lawn and garden by hand to control the amount of water you use. Set irrigation systems to reflect seasonal water needs. If water flows off your yard and onto your driveway or sidewalk, your system is over-watering.
- Mulch clippings or leave them on the lawn. If necessary, dispose in a green waste container.
- Cultivate your garden often to control weeds.

Washing and Maintaining Your Car

- Take your car to a commercial car wash whenever possible.
- Choose soaps, cleaners, or detergents labeled "non-toxic," "phosphate free" or "biodegradable." Vegetable and citrus-based products are typically safest for the environment, **but even these should not be allowed into the storm drain.**
- Shake floor mats into a trash can or vacuum to clean.
- Do not use acid-based wheel cleaners and "hose off" engine degreasers at home. They can be used at a commercial facility, which can properly process the washwater.
- **Do not dump washwater onto your driveway, sidewalk, street, gutter or storm drain.** Excess washwater should be disposed of in the sanitary sewers (through a sink, or toilet) or onto an absorbent surface like your lawn.
- Use a nozzle to turn off water when not actively washing down automobile.
- Monitor vehicles for leaks and place pans under leaks. Keep your car well maintained to stop and prevent leaks.
- Use cat litter or other absorbents and sweep to remove any materials deposited by vehicles. Contain sweepings and dispose of at a HHWCC.
- Perform automobile repair and maintenance under a covered area and use drip pans or plastic sheeting to keep spills and waste material from reaching storm drains.
- **Never pour oil or antifreeze in the street, gutter or storm drains.** Recycle these substances at a service station, HHWCC, or used oil recycling center. For the nearest Used Oil Collection Center call 1-800-CLEANUP or visit www.ciwmb.ca.gov/UsedOil.

For locations and hours of Household Hazardous Waste Collection Centers in Anaheim, Huntington Beach, Irvine and San Juan Capistrano, call (714)834-6752 or visit www.oclandfills.com.

Do your part to prevent water pollution in our creeks, rivers, bays and ocean.

Clean beaches and healthy creeks, rivers, bays and ocean are important to Orange County. However, not properly disposing of household hazardous waste can lead to water pollution. Batteries, electronics, paint, oil, gardening chemicals, cleaners and other hazardous materials cannot be thrown in the trash. They also must never be poured or thrown into yards, sidewalks, driveways, gutters or streets. Rain or other water could wash the materials into the storm drain and eventually into our waterways and the ocean. In addition, hazardous waste must not be poured in the sanitary sewers (sinks and toilets).

NEVER DISPOSE OF HOUSEHOLD HAZARDOUS WASTE IN THE TRASH, STREET, GUTTER, STORM DRAIN OR SEWER.

For more information,
please call the
Orange County Stormwater Program
at **1-877-89-SPILL** (1-877-897-7455)
or visit
www.ocwatersheds.com

To Report Illegal Dumping of Household Hazardous Waste call 1-800-69-TOXIC

To report a spill,
call the
Orange County 24-Hour Water Pollution Problem Reporting Hotline
1-877-89-SPILL (1-877-897-7455).

For emergencies, dial 911.

RECYCLE USED OIL

Printed on Recycled Paper

Help Prevent Ocean Pollution:

Proper Disposal of Household Hazardous Waste

The Ocean Begins at Your Front Door

PROJECT Pollution PREVENTION

ORANGE COUNTY

Pollution Prevention

Leftover household products that contain corrosive, toxic, ignitable, or reactive ingredients are considered to be "household hazardous waste" or "HHW." HHW can be found throughout your home, including the bathroom, kitchen, laundry room and garage.

WHEN POSSIBLE, USE NON-HAZARDOUS OR LESS-HAZARDOUS PRODUCTS.

Disposal of HHW down the drain, on the ground, into storm drains, or in the trash is illegal and unsafe.

Proper disposal of HHW is actually easy. Simply drop them off at a Household Hazardous Waste Collection Center (HHWCC) for free disposal and recycling. Many materials including anti-freeze, latex-based paint, motor oil and batteries can be recycled. Some centers have a "Stop & Swap" program that lets you take partially used home, garden, and automobile products free of charge. There are four HHWCCs in Orange County:

Anaheim:.....1071 N. Blue Gum St
Huntington Beach:.....17121 Nichols St
Irvine:..... 6411 Oak Canyon
San Juan Capistrano:... 32250 La Pata Ave

Centers are open Tuesday-Saturday, 9 a.m.-3 p.m. Centers are closed on rainy days and major holidays. For more information, call **(714) 834-6752** or visit **www.oclandfills.com.**

Common household hazardous wastes

- Batteries
- Paint and paint products
- Adhesives
- Drain openers
- Household cleaning products
- Wood and metal cleaners and polishes
- Pesticides
- Fungicides/wood preservatives
- Automotive products (antifreeze, motor oil, fluids)
- Grease and rust solvents
- Fluorescent lamps
- Mercury (thermometers & thermostats)
- All forms of electronic waste including computers and microwaves
- Pool & spa chemicals
- Cleaners
- Medications
- Propane (camping & BBQ)
- Mercury-containing lamps
- Television & monitors (CRTs, flatscreens)

Tips for household hazardous waste

- Never dispose of HHW in the trash, street, gutter, storm drain or sewer.
- Keep these materials in closed, labeled containers and store materials indoors or under a cover.
- When possible, use non-hazardous products.
- Reuse products whenever possible or share with family and friends.
- Purchase only as much of a product as you'll need. Empty containers may be disposed of in the trash.
- HHW can be harmful to humans, pets and the environment. Report emergencies to 911.

Did you know that just one quart of oil can pollute 250,000 gallons of water?

A clean ocean and healthy creeks, rivers, bays and beaches are important to Orange County. However, not properly disposing of used oil can lead to water pollution. If you pour or drain oil onto driveways, sidewalks or streets, it can be washed into the storm drain. Unlike water in sanitary sewers (from sinks and toilets), water in storm drains is not treated before entering the ocean. Help prevent water pollution by taking your used oil to a used oil collection center.

Included in this brochure is a list of locations that will accept up to five gallons of used motor oil at no cost. Many also accept used oil filters. Please contact the facility before delivering your used oil. This listing of companies is for your reference and does not constitute a recommendation or endorsement of the company.

Please note that used oil filters may not be disposed of with regular household trash. They must be taken to a household hazardous waste collection or recycling center in Anaheim, Huntington Beach, Irvine or San Juan Capistrano. For information about these centers, visit www.oclandfills.com.

Please do not mix your oil with other substances!

For more information, please call the Orange County Stormwater Program at 1-877-89-SPILL (1-877-897-7455) or visit www.watersheds.com.

For information about the proper disposal of household hazardous waste, call the Household Waste Hotline at (714) 834-6752 or visit www.oclandfills.com.

RECYCLE USED OIL

For additional information about the nearest oil recycling center, call the Used Oil Program at 1-800-CLEANUP or visit www.cleanup.org.

DTP113 Rev 8/03
printed on recycled paper

Help Prevent Ocean Pollution:

Recycle at Your Local Used Oil Collection Center

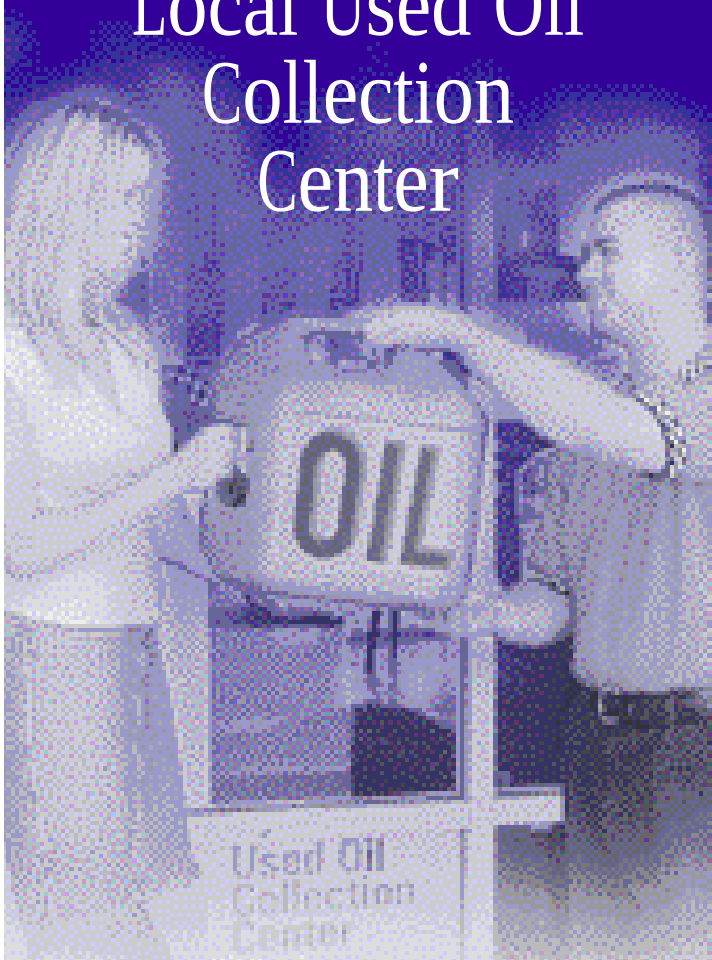

The Ocean Begins at Your Front Door

PROJECT Pollution PREVENTION

CENTRAL COUNTY

Used Oil Collection Centers

Balboa

Hill's Boat Service
814 E Bay Ave., Balboa, CA 92661
(949)675-0740( )
CIWMB#: 30-C-03538

Balboa Island

Island Marine Fuel
406 S Bay Front, Balboa Island, CA 92662
(949)673-1103( )
CIWMB#: 30-C-03728

Corona Del Mar

Corona Del Mar 76
2201 E. Pacific Coast Hwy., Corona Del Mar, CA 92625
(949)673-3320( )
CIWMB#: 30-C-06620

Corona Del Mar Chevron
2546 E. Coast Hwy., Corona Del Mar, CA 92625
(949)495-0774(14)
CIWMB#: 30-C-06424

Mobil (Harbor View)
2500 San Joaquin Hills Rd., Corona Del Mar, CA 92625
(949)640-4759( )
CIWMB#: 30-C-03363

Costa Mesa

AutoZone #5520
744 W. 19th St., Costa Mesa, CA 92627
(901)495-7159( )
CIWMB#: 30-C-05992

Big O Tires #5571
3181 Harbor Blvd., Costa Mesa, CA 92626
(949)443-4155( )
CIWMB#: 30-C-04676

Big O Tires #694
322 E. 17th St., Costa Mesa, CA 92627
(949)642-4131( )
CIWMB#: 30-C-05811

Coast General Performance
2855 Harbor Blvd., Costa Mesa, CA 92626
(714)540-5710( )
CIWMB#: 30-C-05916

Connell Chevrolet
2828 Harbor Blvd., Costa Mesa, CA 92626
(714)546-1200( )
CIWMB#: 30-C-06286

EZ Lube Inc #15
3599 Harbor Blvd., Costa Mesa, CA 92626
(714)966-1647( )
CIWMB#: 30-C-03137

EZ Lube Inc #46
400 E 17th St., Costa Mesa, CA 92627
(714)556-1312( )
CIWMB#: 30-C-05779

EZ Lube Inc. #44
2248 Harbor Blvd., Costa Mesa, CA 92627
(714)556-1312( )
CIWMB#: 30-C-05737

Firestone Store #71T7
475 E 17th St., Costa Mesa, CA 92627
(949)646-2444( )
CIWMB#: 30-C-02120

Jiffy Lube #1969
300 E 17th St., Costa Mesa, CA 92627
(949)548-2505( )
CIWMB#: 30-C-05553

Jiffy Lube #1970
2175 Newport Blvd., Costa Mesa, CA 92627
(949)548-4150( )
CIWMB#: 30-C-05554

Jiffy Lube #607
2255 Fairview Rd., Costa Mesa, CA 92627
(949)650-5823( )
CIWMB#: 30-C-05551

Jiffy Lube #861
375 Bristol St., Costa Mesa, CA 92626
(714)557-5823( )
CIWMB#: 30-C-05552

Kragen Auto Parts #0725
1739 Superior Ave., Costa Mesa, CA 92627
(949)642-3384( )
CIWMB#: 30-C-02624

Kragen Auto Parts #0796
1175 Baker Blvd., Unit E, Costa Mesa, CA 92626
(714)662-2005( )
CIWMB#: 30-C-02664

Nabers Cadillac
2600 Harbor Blvd., Costa Mesa, CA 92626
(714)444-5200( )
CIWMB#: 30-C-05051

Oil Stop Inc.
Oil Stop Inc. Costa Mesa, CA 92626
(714)434-8350( )
CIWMB#: 30-C-06293

Pep Boys #660
2946 Bristol St., Costa Mesa, CA 92626
(714)549-1533( )
CIWMB#: 30-C-03416

Plaza Chevron Service Center
3048 Bristol Costa Mesa, CA 92626
(714)545-4257( )
CIWMB#: 30-C-01123

Scher Tire Inc #15 dba Goodyear Tire
1596 Newport Blvd., Costa Mesa, CA 92627
(949)548-9384( )
CIWMB#: 30-C-03034

Fountain Valley

Firestone Store #7147
17975 Magnolia Ave., Fountain Valley, CA 92708
(714)842-3341( )
CIWMB#: 30-C-01219

Golden Shell
8520 Warner Ave., Fountain Valley, CA 92708
(714)842-7150( )
CIWMB#: 30-P-05002

Kragen Auto Parts #0734
9880 Warner Ave., Fountain Valley, CA 92708
(714)964-6427( )
CIWMB#: 30-C-02609

Kragen Auto Parts #1505
16147 Harbor Blvd., Fountain Valley, CA 92708
(714)531-8525( )
CIWMB#: 30-C-04125

Oil Can Henry's
9525 Warner Ave., Fountain Valley, CA 92708
(714)473-7705( )
CIWMB#: 30-C-05843

Purrfect Auto Service #10
16780 Harbor Blvd., Fountain Valley, CA 92708
(714)839-3899( )
CIWMB#: 30-C-01380

Huntington Beach

AutoZone #5528
6800 Warner Ave., Huntington Beach, CA 92647
(714)891-8211( )
CIWMB#: 30-C-04777

Bella Terra Car Wash
16061 Beach Blvd., Huntington Beach, CA 92647
(714)847-4924( )
CIWMB#: 30-C-06195

Big O Tires #553
19411 Beach Blvd., Huntington Beach, CA 92648
(714)536-7571( )
CIWMB#: 30-C-00970

Econo Lube N' Tune #26
19961 Beach Blvd., Huntington Beach, CA 92648
(714)536-6519( )
CIWMB#: 30-C-06117

Expertec Automotive
7680 Talbert Ave Suite A & B, Huntington Beach, CA 92648
(714)848-9222( )
CIWMB#: 30-C-05914

EZ Lube Inc #16
7361 Edinger Ave., Huntington Beach, CA 92647
(714)899-3600( )
CIWMB#: 30-C-03289

EZ Lube Inc. #79
9862 Adams St., Huntington Beach, CA 92647
(714)556-1312( )
CIWMB#: 30-C-06547

Firestone Store #71T5
16171 Beach Blvd., Huntington Beach, CA 92647
(714)847-6081( )
CIWMB#: 30-C-02118

Huntington Beach Car Wash
18971 Beach Blvd., Huntington Beach, CA 92648
(714)847-4924( )
CIWMB#: 30-C-05303

Jiffy Lube #1857
8971 Warner Ave., Huntington Beach, CA 92647
(714)596-7213( )
CIWMB#: 30-C-05053

Kragen Auto Parts #1468
10072 Adams Ave., Huntington Beach, CA 92646
(714)593-6156( )
CIWMB#: 30-C-04284

Kragen Auto Parts #1511
7171 Warner Ave., Huntington Beach, CA 92647
(714)842-4531( )
CIWMB#: 30-C-04129

Kragen Auto Parts #1633
18888 Beach Blvd., Huntington Beach, CA 92648
(714)965-2353( )
CIWMB#: 30-C-02645

Oilmax 10 Minute Lube/Wash
9862 Adams Ave., Huntington Beach, CA 92646
(714)964-7110( )
CIWMB#: 30-C-03219

Pep Boys #799
19122 Brookhurst St., Huntington Beach, CA 92646
(714)964-0777( )
CIWMB#: 30-C-03439

Quik Change Lube & Oil
5841 Warner Ave., Huntington Beach, CA 92649
(714)840-2331( )
CIWMB#: 30-C-03208

R Kids Tire and Service #6
5062 Warner Ave., Huntington Beach, CA 92647
(714)846-1189( )
CIWMB#: 30-C-05691

Saturn of Huntington Beach
18801 Beach Blvd., Huntington Beach, CA 92648
(714)841-5428( )
CIWMB#: 30-C-05221

USA Express Tire & Service Inc
7232 Edinger Ave., Huntington Beach, CA 92647
(714)842-0717( )
CIWMB#: 30-C-04429

Zito's Auto Care
19002 Magnolia St., Huntington Beach, CA 92646
(714)968-8788( )
CIWMB#: 30-C-03251

Irvine

Firestone Store #71W4
51 Auto Center Dr., Irvine, CA 92618
(949)829-8710( )
CIWMB#: 30-C-03689

Irvine City Auto Parts
14427 Culver Dr., Irvine, CA 92604
(949)551-5588( )
CIWMB#: 30-C-02186

Jiffy Lube #1856 Irvine Spectrum
8777 Irvine Center Dr., Irvine, CA 92618
(949)753-0485( )
CIWMB#: 30-C-06094

Jiffy Lube #1988
3080 Main St., Irvine, CA 92614
(714)961-5491(27)
CIWMB#: 30-C-04450

Kragen Auto Parts #4174
15315 Culver Dr., Ste.#170, Irvine, CA 92604
(602)631-7115( )
CIWMB#: 30-C-06417

Newport Beach

Jiffy Lube #2811
1520 W Coast Hwy., Newport Beach, CA 92663
(949)764-9255( )
CIWMB#: 30-C-05629

Newport Landing Fuel Dock
503 E Edgewater Newport Beach, CA 92661
(949)673-7878( )
CIWMB#: 30-C-03628

Orange

AutoZone #5942
1330 N. Glassell Orange, CA 92867
(714)538-4551( )
CIWMB#: 30-C-04553

Big O Tires #570
1825 E Katella Ave., Orange, CA 92867
(714)538-0016( )
CIWMB#: 30-C-00974

David Wilsons Ford of Orange
1350 W Katella Ave., Orange, CA 92867
(714)633-6731( )
CIWMB#: 30-C-02341

EZ Lube #74
3232 Chapman Ave. #E, Orange, CA 92869
(714)556-1312(106)
CIWMB#: 30-C-06627

Firestone Store #7185
1690 N Tustin Ave., Orange, CA 92867
(714)282-8144( )
CIWMB#: 30-C-0122

Jiffy Lube #1457
433 W. Katella Ave., Orange, CA 92867
(714)720-5757( )
CIWMB#: 30-C-06280

Kragen Auto Parts #1764
910 Tustin St., Orange, CA 92867
(714)771-3000( )
CIWMB#: 30-C-02625

Managed Mobile, Inc.
1030 N Batavia St., #B, Orange, CA 92867
(714)400-0250( )
CIWMB#: 30-C-05776

Pep Boys #806
215 E Katella Ave., Orange, CA 92867
(714)997-1540( )
CIWMB#: 30-C-01759

Santiago Hills Car Care
8544 East Chapman Ave., Orange, CA 92869
(714)919-1060( )
CIWMB#: 30-C-05622

Scher Tire #33
1821 E. Katella Ave., Orange, CA 92867
(909)343-3100( )
CIWMB#: 30-C-06324

Tabassi Shell Service Station
830 E Katella Ave., Orange, CA 92867
(714)771-6990( )
CIWMB#: 30-C-00552

The Tune-up Center
193 S Main St., Orange, CA 92868
(714)633-1876( )
CIWMB#: 30-C-02091

Tony's Fuel and Towing
1650 W La Veta Ave., Orange, CA 92868
(714)953-7676( )
CIWMB#: 30-C-00868

Truck Lubrication Company
143 S. Pixley Orange, CA 92868
(714)997-7730( )
CIWMB#: 30-C-06001

Santa Ana

All Phase Environmental
910 E. Fourth St., Santa Ana, CA 92701
(714)731-5995( )
CIWMB#: 30-C-06116

Archie's Tire & Towing
4518 Westminster Ave., Santa Ana, CA 92703
(714)636-4518( )
CIWMB#: 30-C-02058

AutoZone #3320
2007 S. Main St., Santa Ana, CA 92707
(901)495-7217( )
CIWMB#: 30-C-06508

AutoZone #5232
430 W 17th Santa Ana, CA 92706
(714)547-7003( )
CIWMB#: 30-C-04609

AutoZone #5538
1101 S Bristol Santa Ana, CA 92704
(714)241-0335( )
CIWMB#: 30-C-00829

Big O Tires
1211 W. Warner Ave., Santa Ana, CA 92707
(714)540-8646( )
CIWMB#: 30-C-04679

Big O Tires #712
1302 E. 17th St., Santa Ana, CA 92705
(714)541-6811( )
CIWMB#: 30-C-05813

Firestone Store #7175
3733 S Bristol Santa Ana, CA 92704
(714)549-4015( )
CIWMB#: 30-C-01223

Firestone Store #71TA
101 S Main St., Santa Ana, CA 92701
(714)542-8857( )
CIWMB#: 30-C-02123

Firestone Store #71W6
2005 N Tustin Ave., Ste A, Santa Ana, CA 92705
(714)541-7977( )
CIWMB#: 30-C-03688

Guaranty Chevrolet Motors Inc.
711 E 17th St., Santa Ana, CA 92701
(714)973-1711(277)
CIWMB#: 30-C-06506

Jiffy Lube #1303
2025 N. Tustin Santa Ana, CA 92701
(714)720-5757( )
CIWMB#: 30-C-06283

John's Mobil
1465 S Main St., Santa Ana, CA 92707
(714)835-3266( )
CIWMB#: 30-C-00578

Kragen Auto Parts #0736
1302 E 17th St., Santa Ana, CA 92705
(714)953-6061( )
CIWMB#: 30-C-02610

Kragen Auto Parts #1253
1400 W Edinger Ave., Santa Ana, CA 92704
(714)754-1432( )
CIWMB#: 30-C-02627

Kragen Auto Parts #1376
521 W 17th St., Santa Ana, CA 92706
(714)543-4492( )
CIWMB#: 30-C-03901

Kragen Auto Parts #1516
2337 S Bristol Ave., Santa Ana, CA 92704
(714)557-0787( )
CIWMB#: 30-C-04106

Kragen Auto Parts #1648
1015 S Main St., Santa Ana, CA 92701
(714)568-1570( )
CIWMB#: 30-C-05664

Pep Boys #609
120 E 1st St., Santa Ana, CA 92701
(714)547-7477( )
CIWMB#: 30-C-01738

Pep Boys #802
1107 S Harbor Blvd., Santa Ana, CA 92704
(714)775-0828( )
CIWMB#: 30-C-01739

Purrfect Auto Service
2519 S Main St., Santa Ana, CA 92707
(714)549-7900( )
CIWMB#: 30-C-02085

Saturn of Santa Ana
1350 Auto Mall Dr., Santa Ana, CA 92705
(714)648-2444( )
CIWMB#: 30-C-05222

Scher Tire #28
1805 N Grand Ave., Santa Ana, CA 92705
(714)558-8644( )
CIWMB#: 30-C-03225

Tustin

Big O Tires #555
131 E 1st St., Tustin, CA 92780
(714)544-9431( )
CIWMB#: 30-C-00972

EZ Lube #42
12972 Newport Ave., Tustin, CA 92780
(714)556-1312( )
CIWMB#: 30-C-06408

Jiffy Lube #1406
3087 Edinger Ave., Tustin, CA 92780
(949)651-8814( )
CIWMB#: 30-C-03778

Kragen Auto Parts #1533
502 B E 1st St., Tustin, CA 92780
(714)544-9249( )
CIWMB#: 30-C-04128

Scher Tire Inc #17 dba Goodyear Tire
14511 Redhill Ave., Tustin, CA 92780
(714)832-6011( )
CIWMB#: 30-C-03035

Villa Park

Phil's Villa Park 76
17771 Santiago Blvd., Villa Park, CA 92861
(714)637-0854( )
CIWMB#: 30-C-06579

This information was provided by the County of Orange Integrated Waste Management Department and the California Integrated Waste Management Board (CIWMB).

Clean beaches and healthy creeks, rivers, bays and ocean are important to Orange County. However, many common activities such as pest control can lead to water pollution if you're not careful. Pesticide treatments must be planned and applied properly to ensure that pesticides do not enter the street, gutter or storm drain. Unlike water in sanitary sewers (from sinks and toilets), water in storm drains is not treated before entering our waterways.

You would never dump pesticides into the ocean, so don't let it enter the storm drains. Pesticides can cause significant damage to our environment if used improperly. If you are thinking of using a pesticide to control a pest, there are some important things to consider.

For more information,
please call
University of California Cooperative
Extension Master Gardeners at
(714) 708-1646
or visit these Web sites:
www.uccemg.org
www.ipm.ucdavis.edu

For instructions on collecting a specimen sample visit the Orange County Agriculture Commissioner's website at:
http://www.ocagcomm.com/ser_lab.asp

To report a spill, call the
Orange County 24-Hour Water Pollution Problem Reporting Hotline at 1-877-89-SPILL (1-877-897-7455).

For emergencies, dial 911.

Information From:
Cheryl Wilen, Area IPM Advisor; Darren Haver, Watershed Management Advisor; Mary Louise Flint, IPM Education and Publication Director; Pamela M. Geisel, Environmental Horticulture Advisor; Carolyn L. Unruh, University of California Cooperative Extension staff writer. Photos courtesy of the UC Statewide IPM Program and Darren Haver.

Funding for this brochure has been provided in full or in part through an agreement with the State Water Resources Control Board (SWRCB) pursuant to the Costa-Machado Water Act of 2000 (Prop. 13).

Printed on Recycled Paper

Help Prevent Ocean Pollution:

Responsible Pest Control

Tips for Pest Control

Key Steps to Follow:

Step 1: **Correctly identify the pest (insect, weed, rodent, or disease) and verify that it is actually causing the problem.**

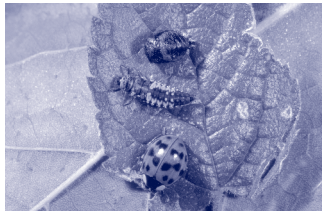

Three life stages of the common lady beetle, a beneficial insect.

This is important because beneficial insects are often mistaken for pests and sprayed with pesticides needlessly.

Consult with a Certified Nursery Professional at a local nursery or garden center or send a sample of the pest to the Orange County Agricultural Commissioner's Office.

Determine if the pest is still present – even though you see damage, the pest may have left.

Step 2: **Determine how many pests are present and causing damage.**

Small pest populations may be controlled more safely using non-pesticide techniques. These include removing food sources, washing off leaves with a strong stream of water, blocking entry into the home using caulking and replacing problem plants with ones less susceptible to pests.

Integrated Pest Management (IPM) usually combines several least toxic pest control methods for long-term prevention and management of pest problems without harming you, your family, or the environment.

UC CE University of California Cooperative Extension

Step 3: **If a pesticide must be used, choose the least toxic chemical.**

Obtain information on the least toxic pesticides that are effective at controlling the target pest from the UC Statewide Integrated Pest Management (IPM) Program's Web site at www.ipm.ucdavis.edu.

Seek out the assistance of a Certified Nursery Professional at a local nursery or garden center when selecting a pesticide. Purchase the smallest amount of pesticide available.

Apply the pesticide to the pest during its most vulnerable life stage. This information can be found on the pesticide label.

Step 4: **Wear appropriate protective clothing.**

Follow pesticide labels regarding specific types of protective equipment you should wear. Protective clothing should always be washed separately from other clothing.

Step 5: **Continuously monitor external conditions when applying pesticides such as weather, irrigation, and the presence of children and animals.**

Never apply pesticides when rain is predicted within the next 48 hours. Also, do not water after applying pesticides unless the directions say it is necessary.

Apply pesticides when the air is still; breezy conditions may cause the spray or dust to drift away from your targeted area.

In case of an emergency call 911 and/or the regional poison control number at (714) 634-5988 or (800) 544-4404 (CA only).

For general questions you may also visit www.calpoison.org.

Step 6: **In the event of accidental spills, sweep up or use an absorbent agent to remove any excess pesticides. Avoid the use of water.**

Be prepared. Have a broom, dust pan, or dry absorbent material, such as cat litter, newspapers or paper towels, ready to assist in cleaning up spills.

Contain and clean up the spill right away. Place contaminated materials in a doubled plastic bag. All materials used to clean up the spill should be properly disposed of according to your local Household Hazardous Waste Disposal site.

Step 7: **Properly store and dispose of unused pesticides.**

Purchase Ready-To-Use (RTU) products to avoid storing large concentrated quantities of pesticides.

Store unused chemicals in a locked cabinet.

Unused pesticide chemicals may be disposed of at a Household Hazardous Waste Collection Center.

Empty pesticide containers should be triple rinsed prior to disposing of them in the trash.

Household Hazardous Waste Collection Center
(714) 834-6752
www.oclandfills.com

PROJECT Pollution PREVENTION

Sewage Spill Regulatory Requirements

Allowing sewage to discharge to a gutter or storm drain may subject you to penalties and/or out-of-pocket costs to reimburse cities or public agencies for clean-up efforts.

Here are the pertinent codes, fines, and agency contact information that apply.

Orange County Stormwater Program

24 Hour Water Pollution Reporting Hotline
1-877-89-SPILL (1-877-897-7455)

- County and city water quality ordinances prohibit discharges containing pollutants.

Orange County Health Care Agency Environmental Health

(714) 433-6419

California Health and Safety Code, Sections 5410-5416

- No person shall discharge raw or treated sewage or other waste in a manner that results in contamination, pollution or a nuisance.
- Any person who causes or permits a sewage discharge to any state waters:
  - must immediately notify the local health agency of the discharge.
  - shall reimburse the local health agency for services that protect the public's health and safety (water-contact receiving waters).
  - who fails to provide the required notice to the local health agency is guilty of a misdemeanor and shall be punished by a fine (between $500–$1,000) and/or imprisonment for less than one year.

Regional Water Quality Control Board

Santa Ana Region (951) 782-4130
San Diego Region (858) 467-2952

- Requires the prevention, mitigation, response to and reporting of sewage spills.

California Office of Emergency Services

(800) 852-7550

California Water Code, Article 4, Chapter 4, Sections 13268-13271
California Code of Regulations, Title 23, Division 3, Chapter 9.2, Article 2, Sections 2250-2260

- Any person who causes or permits sewage in excess of 1,000 gallons to be discharged to state waters **shall immediately notify the Office of Emergency Services.**
- Any person who fails to provide the notice required by this section is **guilty of a misdemeanor** and shall be punished by a fine (less than $20,000) and/or imprisonment for not more than one year.

DTP113 Rev 4/06
printed on recycled paper

Sewage Spill

Reference Guide

Your Responsibilities as a Private Property Owner

Residences
Businesses
Homeowner/Condominium Associations
Federal and State Complexes
Military Facilities

Orange County Sanitation District

Health Care Agency
Environmental Health

PROJECT Pollution PREVENTION
www.ocwatersheds.com

This brochure was designed courtesy of the Orange County Sanitation District (OCSD).
For additional information, call (714) 962-2411, or visit their website at www.ocsd.com

What is a Sewage Spill?

Sewage spills occur when the wastewater being transported via underground pipes overflows through a manhole, cleanout or broken pipe. Sewage spills can cause health hazards, damage to homes and businesses, and threaten the environment, local waterways and beaches.

Common Causes of Sewage Spills

Grease builds up inside and eventually blocks sewer pipes. Grease gets into the sewer from food establishments, household drains, as well as from poorly maintained commercial grease traps and interceptors.

Structure problems caused by tree roots in the lines, broken/cracked pipes, missing or broken cleanout caps or undersized sewers can cause blockages.

Infiltration and inflow (I/I) impacts pipe capacity and is caused when groundwater or rainwater enters the sewer system through pipe defects and illegal connections.

You Are Responsible for a Sewage Spill Caused by a Blockage or Break in Your Sewer Lines!

Time is of the essence in dealing with sewage spills. You are required to **immediately**:

Control and minimize the spill. Keep spills contained on private property and out of gutters, storm drains and public waterways by shutting off or not using the water.

Use sandbags, dirt and/or plastic sheeting to prevent sewage from entering the storm drain system.

Clear the sewer blockage. Always wear gloves and wash your hands. It is recommended that a plumbing professional be called for clearing blockages and making necessary repairs.

Always notify your city sewer/public works department or public sewer district of sewage spills. If the spill enters the storm drains also notify the Health Care Agency. In addition, if it exceeds 1,000 gallons notify the Office of Emergency Services. Refer to the numbers listed in this brochure.

Overflowing cleanout pipe located on private property

You Could Be Liable

Allowing sewage from your home, business or property to discharge to a gutter or storm drain may subject you to penalties and/or out-of-pocket costs to reimburse cities or public agencies for clean-up and enforcement efforts. See Regulatory Codes & Fines section for pertinent codes and fines that apply.

What to Look For

Sewage spills can be a very noticeable gushing of water from a manhole or a slow water leak that may take time to be noticed. Don't dismiss unaccounted-for wet areas.

Look for:

- Drain backups inside the building.
- Wet ground and water leaking around manhole lids onto your street.
- Leaking water from cleanouts or outside drains.
- Unusual odorous wet areas: sidewalks, external walls or ground/landscape around a building.

Caution

Keep people and pets away from the affected area. Untreated sewage has high levels of disease-causing viruses and bacteria. Call your local health care agency listed on the back for more information.

If You See a Sewage Spill Occurring, Notify Your City Sewer/Public Works Department or Public Sewer District IMMEDIATELY!

How a Sewer System Works

A property owner's sewer pipes are called service laterals and are connected to larger local main and regional trunk lines. Service laterals run from the connection at the home to the connection with the public sewer (including the area under the street). These laterals are the responsibility of the property owner and must be maintained by the property owner. Many city agencies have adopted ordinances requiring maintenance of service laterals. Check with your city sewer/local public works department for more information.

Operation and maintenance of **local and regional sewer lines** are the responsibility of the city sewer/public works departments and public sewer districts.

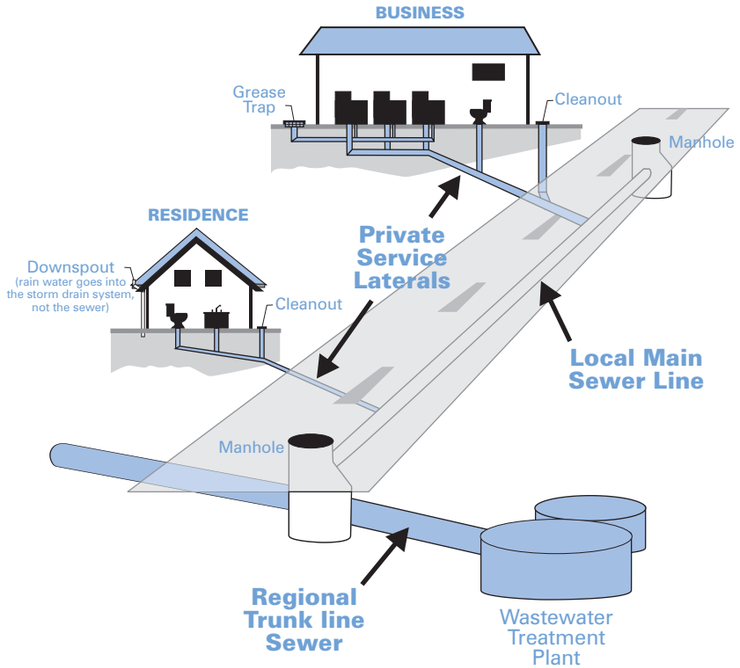

How You Can Prevent Sewage Spills

1. **Never put grease down garbage disposals, drains or toilets.**
2. **Perform periodic cleaning to eliminate grease, debris and roots in your service laterals.**
3. **Repair any structural problems in your sewer system and eliminate any rainwater infiltration/inflow leaks into your service laterals.**

Preventing Grease Blockages

The drain is not a dump! Recycle or dispose of grease properly and never pour grease down the drain.

Homeowners should mix fats, oils and grease with absorbent waste materials such as paper, coffee grounds, or kitty litter and place it in the trash. Wipe food scraps from plates and pans and dump them in the trash.

Restaurants and commercial food service establishments should always use "Kitchen Best Management Practices." These include:

- Collecting all cooking grease and liquid oil from pots, pans and fryers in covered grease containers for recycling.
- Scraping or dry-wiping excess food and grease from dishes, pots, pans and fryers into the trash.
- Installing drain screens on all kitchen drains.
- Having spill kits readily available for cleaning up spills.
- Properly maintaining grease traps or interceptors by having them serviced regularly. Check your local city codes.

Orange County Agency Responsibilites

- **City Sewer/Public Works Departments—** Responsible for protecting city property and streets, the local storm drain system, sewage collection system and other public areas.
- **Public Sewer/Sanitation District—** Responsible for collecting, treating and disposing of wastewater.
- **County of Orange Health Care Agency—** Responsible for protecting public health by closing ocean/bay waters and may close food-service businesses if a spill poses a threat to public health.
- **Regional Water Quality Control Boards—** Responsible for protecting State waters.
- **Orange County Stormwater Program—** Responsible for preventing harmful pollutants from being discharged or washed by stormwater runoff into the municipal storm drain system, creeks, bays and the ocean.

You Could Be Liable for Not Protecting the Environment

Local and state agencies have legal jurisdiction and enforcement authority to ensure that sewage spills are remedied.

They may respond and assist with containment, relieving pipe blockages, and/or clean-up of the sewage spill, especially if the spill is flowing into storm drains or onto public property.

A property owner may be charged for costs incurred by these agencies responding to spills from private properties.

Report Sewage Spills!

City Sewer/Public Works Departments

Aliso Viejo	(949) 425-2500
Anaheim	(714) 765-6860
Brea	(714) 990-7691
Buena Park	(714) 562-3655
Costa Mesa	(949) 645-8400
Cypress	(714) 229-6760
Dana Point	(949) 248-3562
Fountain Valley	(714) 593-4600
Fullerton	(714) 738-6897
Garden Grove	(714) 741-5375
Huntington Beach	(714) 536-5921
Irvine	(949) 453-5300
Laguna Beach	(949) 497-0765
Laguna Hills	(949) 707-2650
Laguna Niguel	(949) 362-4337
Laguna Woods	(949) 639-0500
La Habra	(562) 905-9792
Lake Forest	(949) 461-3480
La Palma	(714) 690-3310
Los Alamitos	(562) 431-3538
Mission Viejo	(949) 831-2500
Newport Beach	(949) 644-3011
Orange	(714) 532-6480
Orange County	(714) 567-6363
Placentia	(714) 993-8245
Rancho Santa Margarita	(949) 635-1800
San Clemente	(949) 366-1553
San Juan Capistrano	(949) 443-6363
Santa Ana	(714) 647-3380
Seal Beach	(562) 431-2527
Stanton	(714) 379-9222
Tustin	(714) 962-2411
Villa Park	(714) 998-1500
Westminster	(714) 893-3553
Yorba Linda	(714) 961-7170

Public Sewer/Water Districts

Costa Mesa Sanitary District	(714) 393-4433/ (949) 645-8400
El Toro Water District	(949) 837-0660
Emerald Bay Service District	(949) 494-8571
Garden Grove Sanitary District	(714) 741-5375
Irvine Ranch Water District	(949) 453-5300
Los Alamitos/Rossmoor Sewer District	(562) 431-2223
Midway City Sanitary District (Westminster)	(714) 893-3553
Moulton Niguel Water District	(949) 831-2500
Orange County Sanitation District	(714) 962-2411
Santa Margarita Water District	(949) 459-6420
South Coast Water District	(949) 499-4555
South Orange County Wastewater Authority	(949) 234-5400
Sunset Beach Sanitary District	(562) 493-9932
Trabuco Canyon Sanitary District	(949) 858-0277
Yorba Linda Water District	(714) 777-3018

Other Agencies

Orange County Health Care Agency	(714) 433-6419
Office of Emergency Services	(800) 852-7550

Clean beaches and healthy creeks, rivers, bays and ocean are important to Orange County. However, many common activities can lead to water pollution if you're not careful. Fertilizers, pesticides and other chemicals that are left on yards or driveways can be blown or washed into storm drains that flow to the ocean. Overwatering lawns can also send materials into storm drains. Unlike water in sanitary sewers (from sinks and toilets), water in storm drains is not treated before entering our waterways.

You would never pour gardening products into the ocean, so don't let them enter the storm drains. Follow these easy tips to help prevent water pollution.

For more information,
please call the
Orange County Stormwater Program
at **1-877-89-SPILL** (1-877-897-7455)
or visit
www.ocwatersheds.com

UCCE Master Gardener Hotline:
(714) 708-1646

To report a spill,
call the
Orange County 24-Hour
Water Pollution Problem
Reporting Hotline
1-877-89-SPILL (1-877-897-7455).

For emergencies, dial 911.

The tips contained in this brochure provide useful information to help prevent water pollution while landscaping or gardening. If you have other suggestions, please contact your city's stormwater representatives or call the Orange County Stormwater Program.

Printed on Recycled Paper

Help Prevent Ocean Pollution:

Tips for Landscape & Gardening

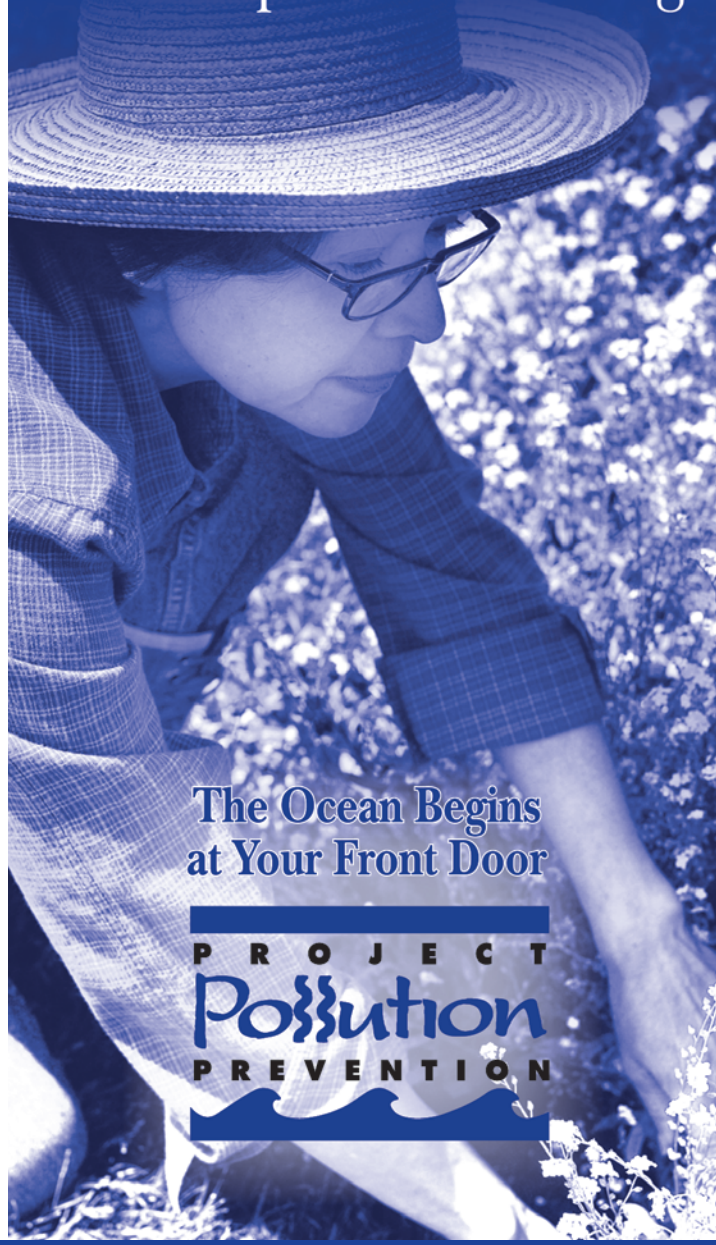

The Ocean Begins at Your Front Door

PROJECT Pollution PREVENTION

Tips for Landscape & Gardening

Never allow gardening products or polluted water to enter the street, gutter or storm drain.

General Landscaping Tips

- Protect stockpiles and materials from wind and rain by storing them under tarps or secured plastic sheeting.

- Prevent erosion of slopes by planting fast-growing, dense ground covering plants. These will shield and bind the soil.

- Plant native vegetation to reduce the amount of water, fertilizers, and pesticide applied to the landscape.

- Never apply pesticides or fertilizers when rain is predicted within the next 48 hours.

Garden & Lawn Maintenance

- Do not overwater. Use irrigation practices such as drip irrigation, soaker hoses or micro spray systems. Periodically inspect and fix leaks and misdirected sprinklers.

- Do not rake or blow leaves, clippings or pruning waste into the street, gutter or storm drain. Instead, dispose of green waste by composting, hauling it to a permitted landfill, or recycling it through your city's program.

- Use slow-release fertilizers to minimize leaching, and use organic fertilizers.

- Read labels and use only as directed. Do not over-apply pesticides or fertilizers. Apply to spots as needed, rather than blanketing an entire area.

- Store pesticides, fertilizers and other chemicals in a dry covered area to prevent exposure that may result in the deterioration of containers and packaging.

- Rinse empty pesticide containers and re-use rinse water as you would use the product. Do not dump rinse water down storm drains. Dispose of empty containers in the trash.

- When available, use non-toxic alternatives to traditional pesticides, and use pesticides specifically designed to control the pest you are targeting. For more information, visit **www.ipm.ucdavis.edu**.

- If fertilizer is spilled, sweep up the spill before irrigating. If the spill is liquid, apply an absorbent material such as cat litter, and then sweep it up and dispose of it in the trash.

- Take unwanted pesticides to a Household Hazardous Waste Collection Center to be recycled. Locations are provided below.

Household Hazardous Waste Collection Centers

Anaheim:	1071 N. Blue Gum St.
Huntington Beach:	17121 Nichols St.
Irvine:	6411 Oak Canyon
San Juan Capistrano:	32250 La Pata Ave.

For more information, call (714) 834-6752 or visit www.oclandfills.com

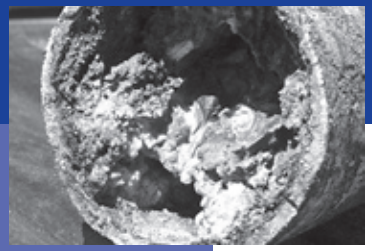

Clean beaches and healthy creeks, rivers, bays and ocean are important to Orange County. Fats, oils and grease from restaurants and food service facilities can cause sewer line blockages that may result in sewage overflow into your facility and into storm drains. Unlike water in sanitary sewers (from sinks and toilets), water in storm drains is not treated before entering our waterways and should never contain washwater, trash, grease or other materials.

You would never dump oil and trash into the ocean, so don't let it enter the storm drains. Follow these tips to help prevent water pollution.

For more information, please call the **Orange County Stormwater Program** at **1-877-89-SPILL** (1-877-897-7455) or visit **www.ocwatersheds.com**

Report sewage spills and discharges that are not contained to your site to the **Orange County 24-Hour Water Pollution Problem Reporting Hotline** at **1-877-89-SPILL** (1-877-897-7455)

For emergencies, dial 911.

CALIFORNIA Restaurant ASSOCIATION SINCE 1906

Printed on Recycled Paper

Help Prevent Ocean Pollution:

Tips for the Food Service Industry

The Ocean Begins at Your Front Door

PROJECT Pollution PREVENTION

Best Kitchen Practices

Food Waste Disposal

- Scrape food waste off of plates, utensils, pots, food preparation and cooking areas and dispose of it in the trash.
- Never put food waste down the drain. Food scraps often contain grease, which can clog sewer pipes and result in sewage backups and overflows.

Grease & Oil Disposal

- Never put oil or grease down the drain. Contain grease and oil by using covered grease storage containers or installing a grease interceptor.
- Never overfill your grease storage container or transport it without a cover.
- Grease control devices must be emptied and cleaned by permitted companies.
- Keep maintenance records on site.

- For a list of oil/grease recycling companies, contact the CIWMB at **www.ciwmb.ca.gov/foodwaste/render.htm** or contact your local sanitation district.

Minor Spill Cleanup

- Always use dry cleanup methods, such as a rag, damp mop or broom.
- Never hose a spill into the street, gutter or storm drain.

Major Spill Cleanup

- Have spill containment and clean-up kits readily available, and train all employees on how to use them.
- Immediately contain and clean the spill using dry methods.
- If the spill leaves your site, call **1-877-897-7455**.

Dumpster Cleanup

- Pick up all debris around the dumpster.
- Always keep the lid on the dumpster closed.
- Never pour liquids into the dumpster or hose it out.

Floor Mat Cleaning

- Sweep the floor mats regularly, discarding the debris into the trash.
- Hose off the mats in a mop sink, at a floor drain, or in an outdoor area that can contain the water.
- Never hose the mats in an area where the wastewater can flow to the street, gutter or storm drain.

Washwater Disposal

- Dispose of washwater in a mop sink or an area with a floor drain.
- Never dispose of washwater in the street, gutter or storm drain.

PROJECT Pollution PREVENTION

Preventing water pollution at your commercial/industrial site

Clean beaches and healthy creeks, rivers, bays and ocean are important to Orange County. However, many landscape and building maintenance activities can lead to water pollution if you're not careful. Paint, chemicals, plant clippings and other materials can be blown or washed into storm drains that flow to the ocean. Unlike water in sanitary sewers (from sinks and toilets), water in storm drains is not treated before entering our waterways.

You would never pour soap or fertilizers into the ocean, so why would you let them enter the storm drains? Follow these easy tips to help prevent water pollution.

Some types of industrial facilities are required to obtain coverage under the State General Industrial Permit. For more information visit: **www.swrcb.ca.gov/stormwater/industrial.html**

For more information, please call the **Orange County Stormwater Program** at **1-877-89-SPILL** (1-877-897-7455) or visit **www.ocwatersheds.com**

To report a spill, call the **Orange County 24-Hour Water Pollution Problem Reporting Hotline** at **1-877-89-SPILL** (1-877-897-7455).

For emergencies, dial 911.

RECYCLE USED OIL

Printed on Recycled Paper

Help Prevent Ocean Pollution:

Proper Maintenance Practices for Your Business

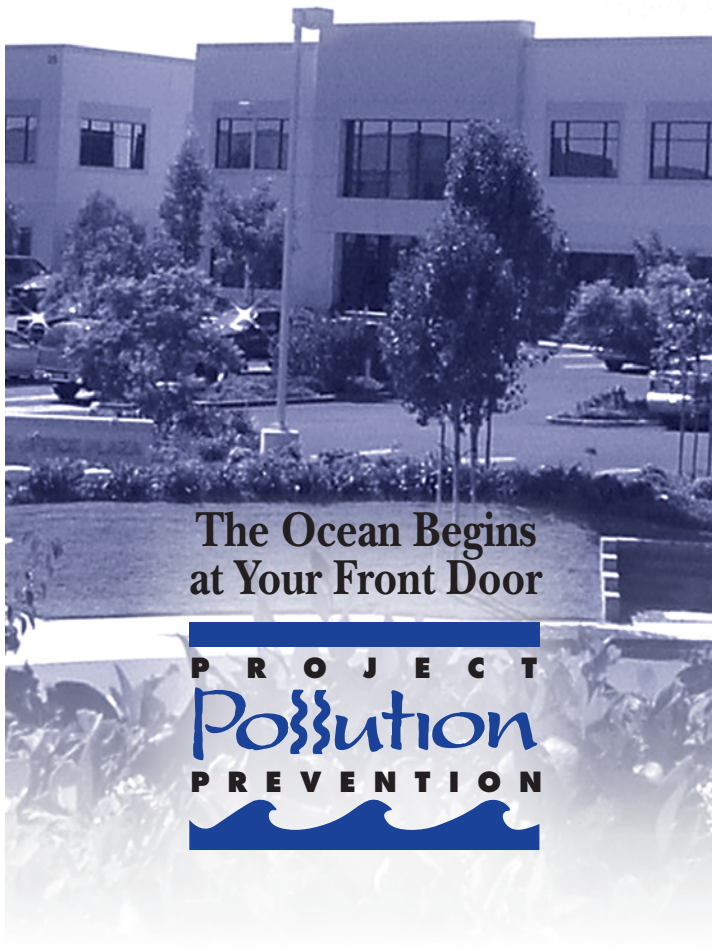

The Ocean Begins at Your Front Door

PROJECT Pollution PREVENTION

Proper Maintenance Practices for your Business

Landscape Maintenance

- Compost grass clippings, leaves, sticks and other vegetation, or dispose of it at a permitted landfill or in green waste containers. Do not dispose of these materials in the street, gutter or storm drain.
- Irrigate slowly and inspect the system for leaks, overspraying and runoff. Adjust automatic timers to avoid overwatering.
- Follow label directions for the use and disposal of fertilizers and pesticides.
- Do not apply pesticides or fertilizers if rain is expected within 48 hours or if wind speeds are above 5 mph.
- Do not spray pesticides within 100 feet of waterways.
- Fertilizers should be worked into the soil rather than dumped onto the surface.
- If fertilizer is spilled on the pavement or sidewalk, sweep it up immediately and place it back in the container.

Building Maintenance

- Never allow washwater, sweepings or sediment to enter the storm drain.
- Sweep up dry spills and use cat litter, towels or similar materials to absorb wet spills. Dispose of it in the trash.
- If you wash your building, sidewalk or parking lot, you **must** contain the water. Use a shop vac to collect the water and contact your city or sanitation agency for proper disposal information. Do not let water enter the street, gutter or storm drain.
- Use drop cloths underneath outdoor painting, scraping, and sandblasting work, and properly dispose of materials in the trash.
- Use a ground cloth or oversized tub for mixing paint and cleaning tools.
- Use a damp mop or broom to clean floors.
- Cover dumpsters to keep insects, animals, rainwater and sand from entering. Keep the area around the dumpster clear of trash and debris. Do not overfill the dumpster.
- Call your trash hauler to replace leaking dumpsters.
- Do not dump any toxic substance or liquid waste on the pavement, the ground, or near a storm drain. Even materials that seem harmless such as latex paint or biodegradable cleaners can damage the environment.

NEVER DISPOSE OF ANYTHING IN THE STORM DRAIN.

- Recycle paints, solvents and other materials. For more information about recycling and collection centers, visit **www.oclandfills.com**.
- Store materials indoors or under cover and away from storm drains.
- Use a construction and demolition recycling company to recycle lumber, paper, cardboard, metals, masonry, carpet, plastic, pipes, drywall, rocks, dirt, and green waste. For a listing of construction and demolition recycling locations in your area, visit **www.ciwmb.ca.gov/recycle.**
- Properly label materials. Familiarize employees with Material Safety Data Sheets.

PROJECT Pollution PREVENTION

Appendix C:

BMP Details

PROJECT INFORMATION	
ENGINEERED PRODUCT MANAGER	TERENCE ZHAO 626-425-2874 TERENCE.ZHAO@ADS-PIPE.COM
ADS SALES REP	ALLAN WARBRICK 760-330-0746 ALLAN.WARBRICK@ADS-PIPE.COM
PROJECT NO.	S134619

ADVANCED DRAINAGE SYSTEMS, INC.

PARK PLAZA

ORANGE, CALIFORNIA

ADS RETENTION/DETENTION PIPE SYSTEM SPECIFICATION

SCOPE

THIS SPECIFICATION DESCRIBES ADS RETENTION/DETENTION PIPE SYSTEMS FOR USE IN NON-PRESSURE GRAVITY-FLOW STORM WATER COLLECTION SYSTEMS UTILIZING A CONTINUOUS OUTFALL STRUCTURE.

PIPE REQUIREMENTS

ADS RETENTION/DETENTION SYSTEMS MAY UTILIZE ANY OF THE VARIOUS PIPE PRODUCTS BELOW:

- N-12® STIB PIPE (PER AASHTO) SHALL MEET AASHTO M 294, TYPE S OR ASTM F2306
- N-12® STIB PIPE (PER ASTM F2648) SHALL MEET ASTM F2648
- N-12® MEGA GREEN™ STIB SHALL MEET ASTM F2648

ALL PRODUCTS SHALL HAVE A SMOOTH INTERIOR AND ANNULAR EXTERIOR CORRUGATIONS. ALL STIB PIPE PRODUCTS ARE AVAILABLE AS PERFORATED OR NON-PERFORATED. WTIB PIPE PRODUCTS ARE ONLY AVAILABLE AS NON-PERFORATED. PRODUCT-SPECIFIC PIPE SPECIFICATIONS ARE AVAILABLE IN THE DRAINAGE HANDBOOK SECTION 1 "SPECIFICATIONS".

JOINT PERFORMANCE

PLAIN END / SOIL-TIGHT (STIB):
STIB PIPE SHALL BE JOINED USING A BELL AND SPIGOT JOINT. THE BELL AND SPIGOT JOINT SHALL MEET THE SOIL-TIGHT REQUIREMENTS OF ASTM F2306 AND GASKETS SHALL MEET THE REQUIREMENTS OF ASTM F477.

PLAIN END PIPE AND FITTINGS CONNECTIONS SHALL BE JOINED WITH COUPLING BANDS COVERING AT LEAST TWO FULL CORRUGATIONS ON EACH END OF THE PIPE. GASKETED SOIL-TIGHT COUPLING BAND CONNECTIONS SHALL INCORPORATE A CLOSED-CELL SYNTHETIC EXPANDED RUBBER GASKET MEETING THE REQUIREMENTS OF ASTM D1056 GRADE 2A2. GASKETS, WHEN APPLICABLE, SHALL BE INSTALLED BY THE PIPE MANUFACTURER.

FITTINGS

FITTINGS SHALL CONFORM TO ASTM F2306 AND MEET JOINT PERFORMANCE INDICATED ABOVE FOR FITTINGS CONNECTIONS. CUSTOM FITTINGS ARE AVAILABLE AND MAY REQUIRE SPECIAL INSTALLATION CRITERION.

INSTALLATION

INSTALLATION SHALL BE IN ACCORDANCE WITH ASTM D2321 AND ADS RECOMMENDED INSTALLATION GUIDELINES, WITH THE EXCEPTION THAT MINIMUM COVER IN NON-TRAFFIC AREAS FOR 12-60 INCH (300-1500 mm) DIAMETERS SHALL BE 1 FT (0.3 m). MINIMUM COVER IN TRAFFICKED AREAS FOR 12-36 INCH (300-900 mm) DIAMETERS SHALL BE 1 FT (0.3 m) AND FOR 42-60 INCH (1050-1500 mm) DIAMETERS, THE MINIMUM COVER SHALL BE 2 FT (0.6 m). BACKFILL SHALL CONSIST OF CLASS I (COMPACTED) OR CLASS II (MINIMUM 95% SPD) MATERIAL, WITH THE EXCEPTION THAT 60 INCH (1500 mm) SYSTEMS SHALL USE CLASS I MATERIAL ONLY. MINIMUM COVER HEIGHTS DO NOT ACCOUNT FOR PIPE BUOYANCY. REFER TO ADS TECHNICAL NOTE 5.05 "PIPE FLOTATION" FOR BUOYANCY DESIGN CONSIDERATIONS. MAXIMUM COVER OVER SYSTEM USING STANDARD BACKFILL IS 8 FT (2.4 m); CONTACT A REPRESENTATIVE WHEN MAXIMUM FILL HEIGHT MAY BE EXCEEDED. ADDITIONAL INSTALLATION REQUIREMENTS ARE PROVIDED IN THE DRAINAGE HANDBOOK SECTION 6 "RETENTION/DETENTION".

ADS RECOMMENDS THE USE OF "FLEXSTORM CATCH IT" INSERTS DURING CONSTRUCTION FOR ALL INLETS TO PROTECT THE SUBSURFACE STORMWATER MANAGEMENT SYSTEM FROM CONSTRUCTION SITE RUNOFF.

NOTES:

1) ALL ELEVATIONS, DIMENSIONS AND LOCATIONS OF RISERS, INLETS AND OUTLETS, SHALL BE VERIFIED BY THE ENGINEER PRIOR TO RELEASING FOR FABRICATION.

2) IN SITUATIONS WHERE A FINE-GRAINED BACKFILL MATERIAL IS USED ADJACENT TO THE PIPE SYSTEM, AND ESPECIALLY INVOLVING GROUND WATER CONDITIONS, CONSIDERATION SHOULD BE GIVEN TO THE USE OF GASKETED PIPE JOINTS. AT THE VERY LEAST THE PIPE JOINTS SHOULD BE WRAPPED IN A SUITABLE, NON-WOVEN GEOTEXTILE FABRIC TO PREVENT INFILTRATION OF FINES INTO THE PIPE SYSTEM.

3) CONSIDERATION FOR CONSTRUCTION EQUIPMENT LOADS MUST BE TAKEN INTO ACCOUNT.

4) ALL PIPE DIMENSIONS ARE SUBJECT TO MANUFACTURERS TOLERANCES.

5) ALL RISERS TO BE FIELD EXTENDED OR TRIMMED TO FINAL GRADE.

THE UNDERSIGNED HERBY APPROVES THE ATTACHED PAGES.

CUSTOMER DATE

©2013 ADS, INC.

ITEM	QTY	ALT. QTY	PART #	DESCRIPTION	STAN.	VENDOR	NOTE
1	1		4298ANC-1	42".MANIFOLD 90 DEG BEND	COMP	ADS	SEE DETAIL
1-1	1		0806AN	8".FAB STUB	STAN	ADS	COMPONENT
2	1		4298AN	42".MANIFOLD 90 DEG BEND	STAN	ADS	SEE DETAIL
3	2		CAP-1	42".END CAP	CUST	ADS	SEE DETAIL
4	4 STICKS	79 LF	42810020IB	42".N12 HWY.STIB.PERF.20'	STAN	ADS	AS SHOWN
5	3 STICKS	49 LF	42810020IB	42".N12 HWY.STIB.PERF.20'	STAN	ADS	FIELD CUT
6	5		4265AA	42".SPLIT COUPLER.(50/PALLET)	STAN	ADS	NOT SHOWN
7	1 ROLLS	356 SY	0601TG	601.15' X 300'.(500 SY).(NTPEP SCAN) (20% OVERAGE)	STAN	ADS	SEE DETAIL
8	177 TONS	126 CY	BY OTHERS	STONE (0% OVERAGE)	NA	BY OTHERS	NOT SHOWN
9	4695 CF	174 CY	NA	EXCAVATION	NA	NA	NOT SHOWN

NOTES

- THE SITE DESIGN ENGINEER MUST REVIEW ELEVATIONS AND IF NECESSARY ADJUST GRADING TO ENSURE THE PIPE COVER REQUIREMENTS ARE MET.
- STUB SIZES AND INVERTS TO BE VERIFIED BY THE SITE DESIGN ENGINEER PRIOR TO FABRICATION.
- THE SITE DESIGN ENGINEER MUST REVIEW THE PROXIMITY OF THE PIPE TO THE BUILDING/STRUCTURE. NO FOUNDATION LOADS SHALL BE TRANSMITTED TO THE PIPE. THE SITE DESIGN ENGINEER MUST CONSIDER EFFECTS OF POSSIBLE SATURATED SOILS ON BEARING CAPACITY OF SOILS AND SEEPAGE INTO BASEMENTS.
- **NOT FOR CONSTRUCTION**: THIS LAYOUT IS FOR DIMENSIONAL PURPOSES ONLY TO PROVE CONCEPT & THE REQUIRED STORAGE VOLUME CAN BE ACHIEVED ON SITE.

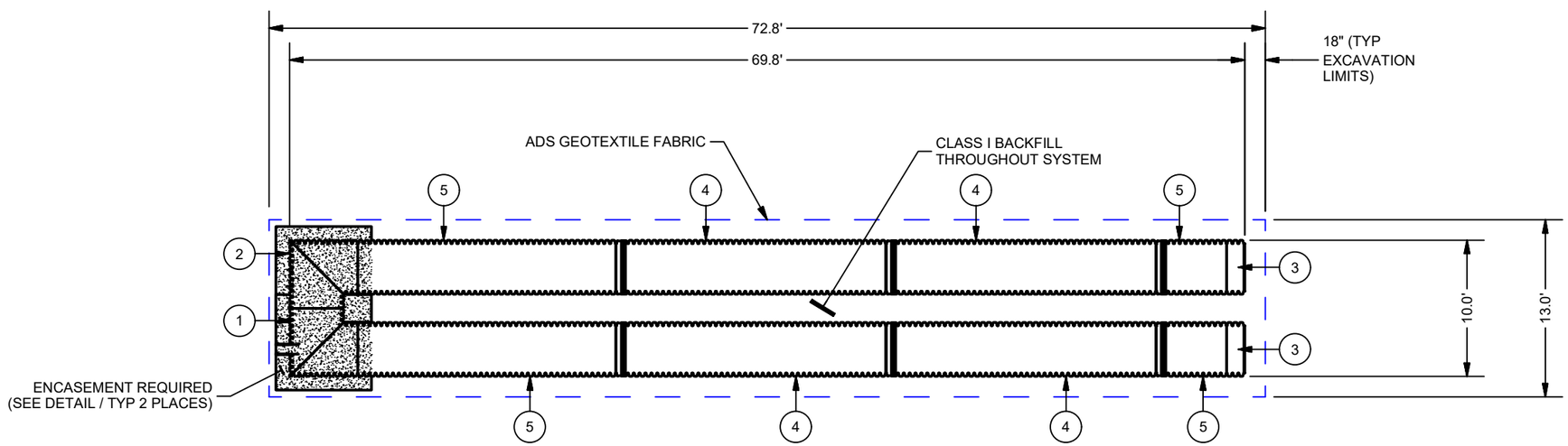

PARK PLAZA
ORANGE, CALIFORNIA

DATE: 05-30-19
DRAWN: KR
PROJECT #: S134619
CHECKED: WCM

REV	DRW	CHK	DESCRIPTION

42" STIB PERF
RETENTION SYSTEM

HDPE N-12

ADS
ADVANCED DRAINAGE SYSTEMS, INC.
4640 TRUEMAN BLVD
HILLIARD, OH 43026
1-800-733-7473

0 10' 20'

SHEET
2 OF 5

THIS DRAWING HAS BEEN PREPARED BASED ON INFORMATION PROVIDED TO ADS UNDER THE DIRECTION OF THE SITE DESIGN ENGINEER OR OTHER PROJECT REPRESENTATIVE. THE SITE DESIGN ENGINEER SHALL REVIEW THIS DRAWING PRIOR TO CONSTRUCTION. IT IS THE ULTIMATE RESPONSIBILITY OF THE SITE DESIGN ENGINEER TO ENSURE THAT THE PRODUCT(S) DEPICTED AND ALL ASSOCIATED DETAILS MEET ALL APPLICABLE LAWS, REGULATIONS, AND PROJECT REQUIREMENTS.

42" X 90° MANIFOLD BEND [4298AN] W/ 8" STUB [0806AN]

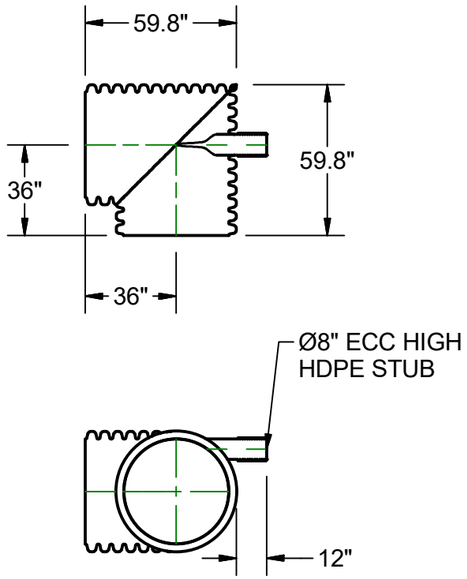

ITEM #: 1
QTY: 1
4298ANC-1

42" CAP

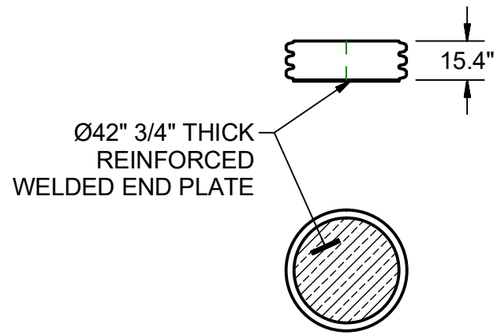

ITEM #: 3
QTY: 2
CAP-1

42" X 90° MANIFOLD BEND [4298AN]

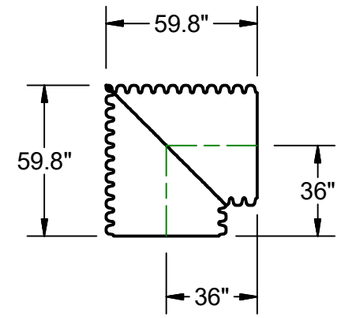

ITEM #: 2
QTY: 1
4298AN

PARK PLAZA
ORANGE, CALIFORNIA

DATE: 05-30-19
DRAWN: KR
PROJECT #: S134619
CHECKED: WCM

REV	DRW	CHK	DESCRIPTION

42" STIB PERF
RETENTION SYSTEM

HDPE N-12

ADS®
ADVANCED DRAINAGE SYSTEMS, INC.
4640 TRUEMAN BLVD
HILLIARD, OH 43026
1-800-733-7473

THIS DRAWING HAS BEEN PREPARED BASED ON INFORMATION PROVIDED TO ADS UNDER THE DIRECTION OF THE SITE DESIGN ENGINEER OR OTHER PROJECT REPRESENTATIVE. THE SITE DESIGN ENGINEER SHALL REVIEW THIS DRAWING PRIOR TO CONSTRUCTION. IT IS THE ULTIMATE RESPONSIBILITY OF THE SITE DESIGN ENGINEER TO ENSURE THAT THE PRODUCT(S) DEPICTED AND ALL ASSOCIATED DETAILS MEET ALL APPLICABLE LAWS, REGULATIONS, AND PROJECT REQUIREMENTS.

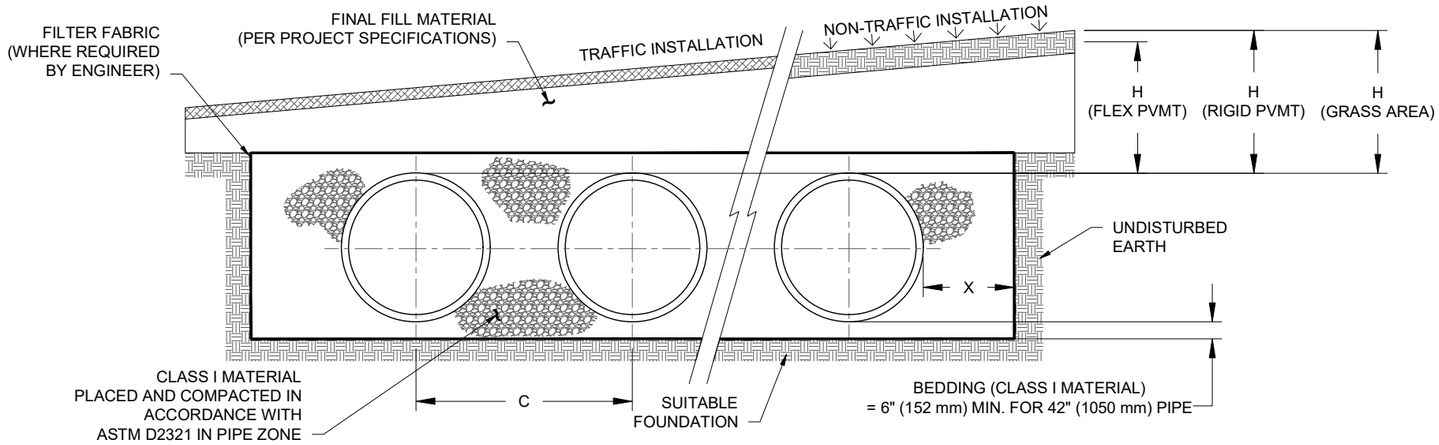

NOMINAL DIAMETER	NOMINAL O.D.	TYPICAL SPACING "C"	TYPICAL SIDE WALL "X"	MIN. H (NON-TRAFFIC)	MIN. H (TRAFFIC)	MAX. H*
42" (1050 mm)	48" (1219 mm)	72" (1829 mm)	18" (457 mm)	12" (305 mm)	24" (610 mm)	8' (2.4 m)

* MAXIMUM FILL HEIGHTS OVER MANIFOLD FITTINGS. CONTACT MANUFACTURER'S REPRESENTATIVE FOR INSTALLATION CONSIDERATIONS WHEN COVER EXCEEDS 8 FT (2.4 m).

NOTES:

1. ALL REFERENCES TO CLASS I MATERIAL ARE PER ASTM D2321 "STANDARD PRACTICE FOR UNDERGROUND INSTALLATION OF THERMOPLASTIC PIPE FOR SEWERS AND OTHER GRAVITY FLOW APPLICATIONS", LATEST EDITION.
2. ALL RETENTION AND DETENTION SYSTEMS SHALL BE INSTALLED IN ACCORDANCE WITH ASTM D2321, LATEST EDITION AND THE MANUFACTURER'S PUBLISHED INSTALLATION GUIDELINES.
3. MEASURES SHOULD BE TAKEN TO PREVENT THE MIGRATION OF NATIVE FINES INTO THE BACKFILL MATERIAL, WHEN REQUIRED. SEE ASTM D2321.
4. FILTER FABRIC: A GEOTEXTILE FABRIC MAY BE USED AS SPECIFIED BY THE ENGINEER TO PREVENT THE MIGRATION OF FINES FROM THE NATIVE SOIL INTO THE SELECT BACKFILL MATERIAL.
5. FOUNDATION: WHERE THE TRENCH BOTTOM IS UNSTABLE. THE CONTRACTOR SHALL EXCAVATE TO A DEPTH REQUIRED BY THE ENGINEER AND REPLACE WITH SUITABLE MATERIAL AS SPECIFIED BY THE ENGINEER. AS AN ALTERNATIVE AND AT THE DISCRETION OF THE DESIGN ENGINEER, THE TRENCH BOTTOM MAY BE STABILIZED USING A GEOTEXTILE MATERIAL.
6. BEDDING: SUITABLE MATERIAL SHALL BE CLASS I. THE CONTRACTOR SHALL PROVIDE DOCUMENTATION FOR MATERIAL SPECIFICATION TO ENGINEER. UNLESS OTHERWISE NOTED BY THE ENGINEER, MINIMUM BEDDING THICKNESS SHALL BE 4" (102 mm) FOR 4"-24" (100-600 mm); 6" (152 mm) FOR 30-60" (750-900 mm).
7. INITIAL BACKFILL: SUITABLE MATERIAL SHALL BE CLASS I IN THE PIPE ZONE EXTENDING NOT LESS THAN 6" (152 mm) ABOVE CROWN OF PIPE. THE CONTRACTOR SHALL PROVIDE DOCUMENTATION FOR MATERIAL SPECIFICATION TO ENGINEER. MATERIAL SHALL BE INSTALLED AS REQUIRED IN ASTM D2321, LATEST EDITION.
8. COVER: MINIMUM COVER OVER ALL RETENTION/DETENTION SYSTEMS IN NON-TRAFFIC APPLICATIONS (GRASS OR LANDSCAPE AREAS) IS 12" (305 mm) FROM TOP OF PIPE TO GROUND SURFACE. ADDITIONAL COVER MAY BE REQUIRED TO PREVENT FLOATATION. FOR TRAFFIC APPLICATIONS, MINIMUM COVER IS 12" (305 mm) UP TO 36" (900 mm) DIAMETER PIPE AND 24" (610 mm) OF COVER FOR 42-60" (1050-1500 mm) DIAMETER PIPE, MEASURED FROM TOP OF PIPE TO BOTTOM OF FLEXIBLE PAVEMENT OR TO TOP OF RIGID PAVEMENT. MAXIMUM FILL HEIGHT LIMITED TO 8 FT (2.4 m) OVER FITTINGS FOR STANDARD INSTALLATIONS. CONTACT A SALES REPRESENTATIVE WHEN MAXIMUM FILL HEIGHTS EXCEED 8 FT (2.4 m) FOR INSTALLATION CONSIDERATIONS.

PARK PLAZA
ORANGE, CALIFORNIA

DATE: 05-30-19 | DRAWN: KR
PROJECT #: S134619 | CHECKED: WCM

REV	DRW	CHK	DESCRIPTION

42" STIB PERF
RETENTION SYSTEM

HDPE N-12

ADS®
ADVANCED DRAINAGE SYSTEMS, INC.
4640 TRUEMAN BLVD
HILLIARD, OH 43026
1-800-733-7473

THIS DRAWING HAS BEEN PREPARED BASED ON INFORMATION PROVIDED TO ADS UNDER THE DIRECTION OF THE SITE DESIGN ENGINEER OR OTHER PROJECT REPRESENTATIVE. THE SITE DESIGN ENGINEER SHALL REVIEW THIS DRAWING PRIOR TO CONSTRUCTION. IT IS THE ULTIMATE RESPONSIBILITY OF THE SITE DESIGN ENGINEER TO ENSURE THAT THE PRODUCT(S) DEPICTED AND ALL ASSOCIATED DETAILS MEET ALL APPLICABLE LAWS, REGULATIONS, AND PROJECT REQUIREMENTS.

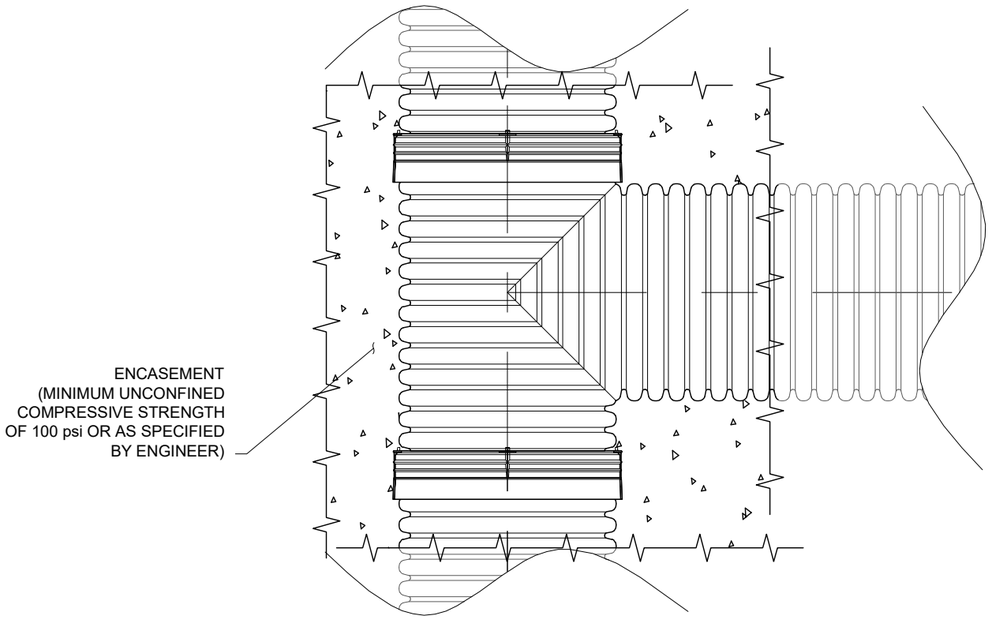

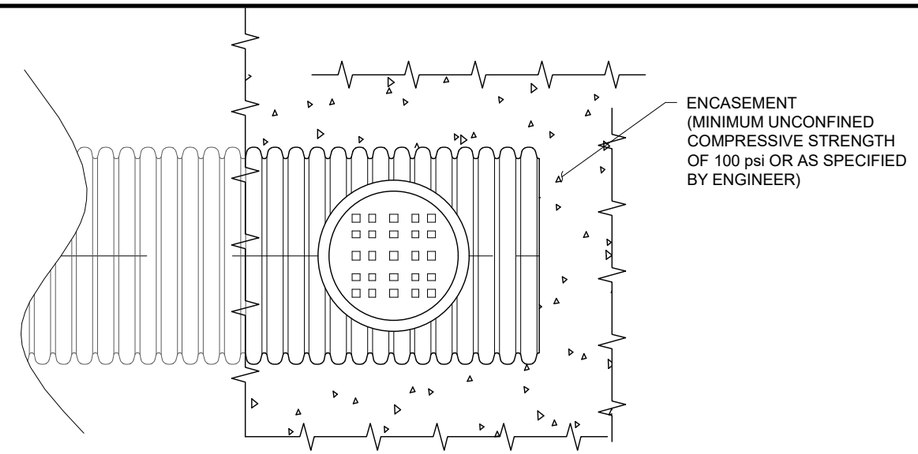

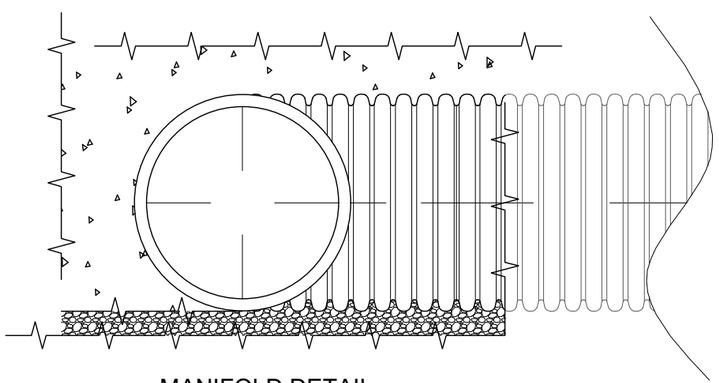

MANIFOLD DETAIL

NOTE:
CLSM/SLURRY/FLOWABLE FILL MUST EXTEND 12"
(305 mm) MINIMUM PAST ALL JOINTS AND FITTINGS
TO BE ENCASED.

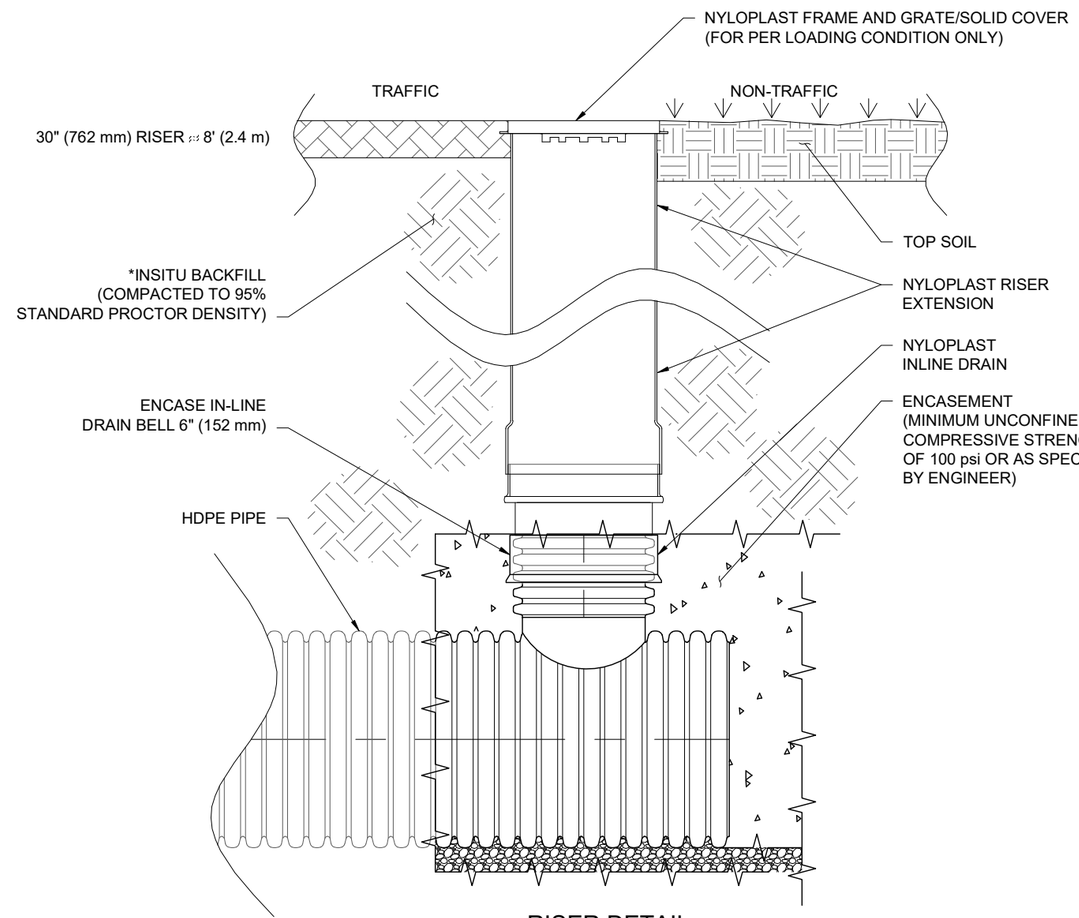

RISER DETAIL

PARK PLAZA
ORANGE, CALIFORNIA

DATE: 05-30-19
DRAWN: KR
PROJECT #: S134619
CHECKED: WCM

REV	DRW	CHK	DESCRIPTION

42" STIB PERF
RETENTION SYSTEM

HDPE N-12

ADS®
ADVANCED DRAINAGE SYSTEMS, INC.
4640 TRUEMAN BLVD
HILLIARD, OH 43026
1-800-733-7473

THIS DRAWING HAS BEEN PREPARED BASED ON INFORMATION PROVIDED TO ADS UNDER THE DIRECTION OF THE SITE DESIGN ENGINEER OR OTHER PROJECT REPRESENTATIVE. THE SITE DESIGN ENGINEER SHALL REVIEW THIS DRAWING PRIOR TO CONSTRUCTION. IT IS THE ULTIMATE RESPONSIBILITY OF THE SITE DESIGN ENGINEER TO ENSURE THAT THE PRODUCT(S) DEPICTED AND ALL ASSOCIATED DETAILS MEET ALL APPLICABLE LAWS, REGULATIONS, AND PROJECT REQUIREMENTS.

SITE SPECIFIC DATA			
PROJECT NUMBER		8480	
PROJECT NAME		PARK PLAZA EXPANSION	
PROJECT LOCATION		ORANGE, CA	
STRUCTURE ID		----	
TREATMENT REQUIRED			
VOLUME BASED (CF)		FLOW BASED (CFS)	
N/A		0.162	
TREATMENT HGL AVAILABLE (FT)			3.2
PEAK BYPASS REQUIRED (CFS) – IF APPLICABLE			2.60
PIPE DATA	I.E.	MATERIAL	DIAMETER
INLET PIPE 1	182.58	PVC	8"
INLET PIPE 2	182.58	PVC	8"
OUTLET PIPE	181.25	PVC	8"
BYPASS OUTLET	185.35	PVC	4"
	PRETREATMENT	BIOFILTRATION	DISCHARGE
RIM ELEVATION	186.40	186.40	186.40
SURFACE LOAD	PEDESTRIAN	N/A	PEDESTRIAN
FRAME & COVER	ø30"	OPEN PLANTER	ø24"
WETLANDMEDIA VOLUME (CY)			5.17
ORIFICE SIZE (DIA. INCHES)			ø1.85"
NOTES: PRELIMINARY. NOT FOR CONSTRUCTION.			

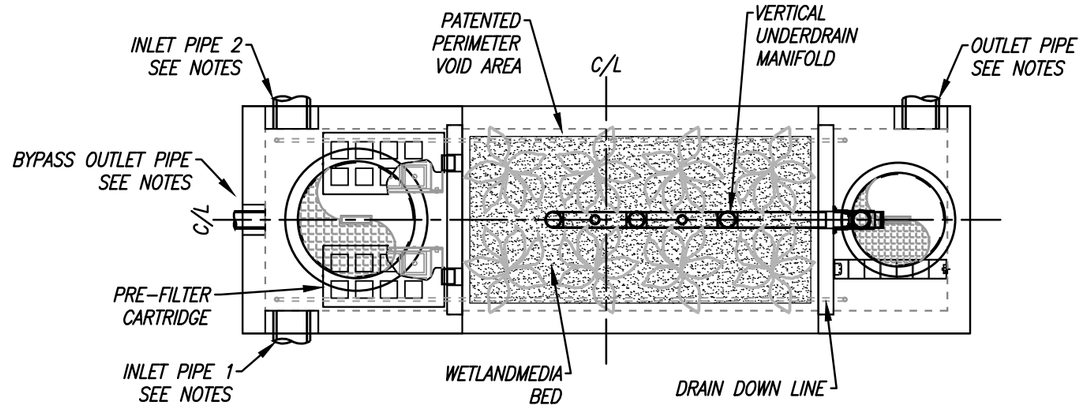

PLAN VIEW

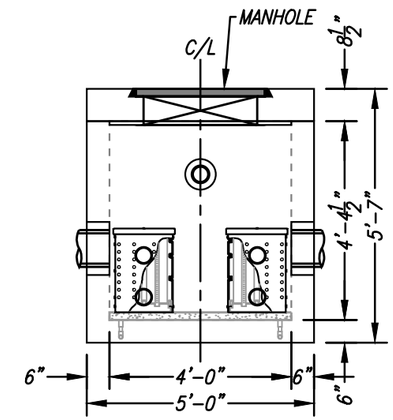

LEFT END VIEW

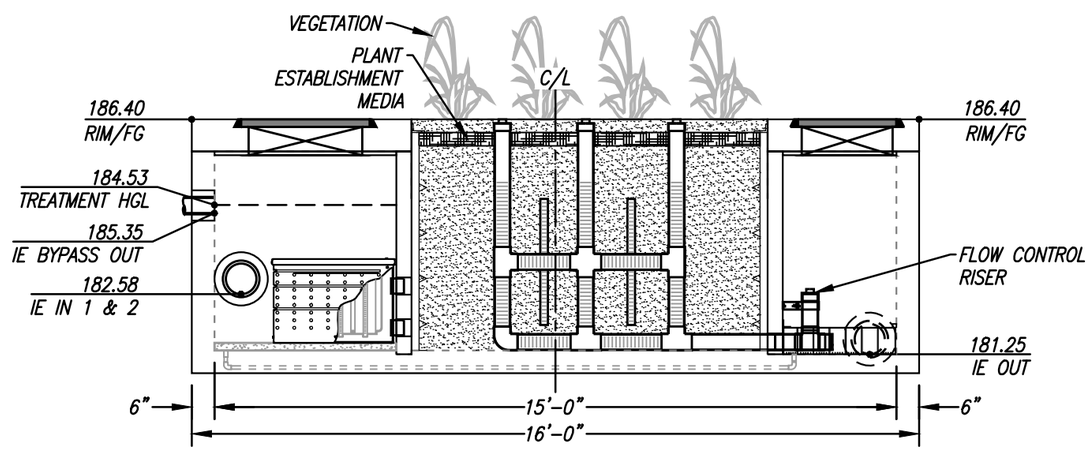

ELEVATION VIEW

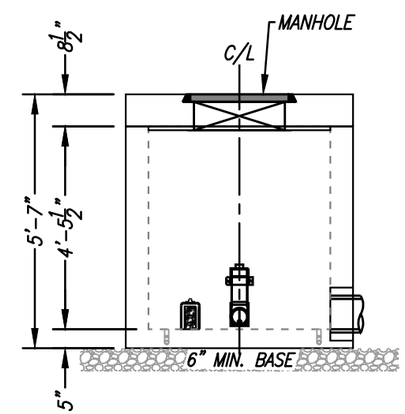

RIGHT END VIEW

INSTALLATION NOTES

1. CONTRACTOR TO PROVIDE ALL LABOR, EQUIPMENT, MATERIALS AND INCIDENTALS REQUIRED TO OFFLOAD AND INSTALL THE SYSTEM AND APPURTENANCES IN ACCORDANCE WITH THIS DRAWING AND THE MANUFACTURERS SPECIFICATIONS, UNLESS OTHERWISE STATED IN MANUFACTURERS CONTRACT.
2. UNIT MUST BE INSTALLED ON LEVEL BASE. MANUFACTURER RECOMMENDS A MINIMUM 6" LEVEL ROCK BASE UNLESS SPECIFIED BY THE PROJECT ENGINEER. CONTRACTOR IS RESPONSIBLE TO VERIFY PROJECT ENGINEERS RECOMMENDED BASE SPECIFICATIONS.
3. ALL PIPES MUST BE FLUSH WITH INSIDE SURFACE OF CONCRETE. (PIPES CANNOT INTRUDE BEYOND FLUSH). INVERT OF OUTFLOW PIPE MUST BE FLUSH WITH DISCHARGE CHAMBER FLOOR. ALL GAPS AROUND PIPES SHALL BE SEALED WATER TIGHT WITH A NON-SHRINK GROUT PER MANUFACTURERS STANDARD CONNECTION DETAIL AND SHALL MEET OR EXCEED REGIONAL PIPE CONNECTION STANDARDS.
4. CONTRACTOR TO SUPPLY AND INSTALL ALL EXTERNAL CONNECTING PIPES.
5. CONTRACTOR RESPONSIBLE FOR INSTALLATION OF ALL RISERS, MANHOLES, AND HATCHES. CONTRACTOR TO GROUT ALL MANHOLES AND HATCHES TO MATCH FINISHED SURFACE UNLESS SPECIFIED OTHERWISE.
6. DRIP OR SPRAY IRRIGATION REQUIRED ON ALL UNITS WITH VEGETATION.
7. CONTRACTOR RESPONSIBLE FOR CONTACTING MODULAR WETLANDS FOR ACTIVATION OF UNIT. MANUFACTURES WARRANTY IS VOID WITH OUT PROPER ACTIVATION BY A MODULAR WETLANDS REPRESENTATIVE.

GENERAL NOTES

1. MANUFACTURER TO PROVIDE ALL MATERIALS UNLESS OTHERWISE NOTED.
2. ALL DIMENSIONS, ELEVATIONS, SPECIFICATIONS AND CAPACITIES ARE SUBJECT TO CHANGE. FOR PROJECT SPECIFIC DRAWINGS DETAILING EXACT DIMENSIONS, WEIGHTS AND ACCESSORIES PLEASE CONTACT MANUFACTURER.

INTERNAL BYPASS DISCLOSURE:

THE DESIGN AND CAPACITY OF THE PEAK CONVEYANCE METHOD TO BE REVIEWED AND APPROVED BY THE ENGINEER OF RECORD. HGL(S) AT PEAK FLOW SHALL BE ASSESSED TO ENSURE NO UPSTREAM FLOODING. PEAK HGL AND BYPASS CAPACITY SHOWN ON DRAWING ARE USED FOR GUIDANCE ONLY.

TREATMENT FLOW (CFS)	0.162
OPERATING HEAD (FT)	3.2
PRETREATMENT LOADING RATE (GPM/SF)	1.4
WETLAND MEDIA LOADING RATE (GPM/SF)	1.0

MODULAR WETLANDS

THIS PRODUCT MAY BE PROTECTED BY ONE OR MORE OF THE FOLLOWING US PATENTS: 7,425,262; 7,470,362; 7,674,378; 8,303,816; RELATED FOREIGN PATENTS OR OTHER PATENTS PENDING

PROPRIETARY AND CONFIDENTIAL:

THE INFORMATION CONTAINED IN THIS DRAWING IS THE SOLE PROPERTY OF MODULAR WETLANDS SYSTEMS. ANY REPRODUCTION IN PART OR AS A WHOLE WITHOUT THE WRITTEN PERMISSION OF MODULAR WETLANDS SYSTEMS IS PROHIBITED.

BioClean
A Forterra Company

MWS-L-4-15-5'-1"-V
STORMWATER BIOFILTRATION SYSTEM
STANDARD DETAIL

5/28/19DSMITH

HSC-2: Impervious Area Dispersion

Impervious area dispersion refers to the practice of routing runoff from impervious areas, such as rooftops, walkways, and patios onto the surface of adjacent pervious areas. Runoff is dispersed uniformly via splash block or dispersion trench and soaks into the ground as it move slowly across the surface of pervious areas. Minor ponding may occur, but it is not the intent of this practice to actively promote localized on-lot storage (See HSC-1: Localized On-Lot Infiltration).

Also known as:

- *Downspout disconnection*
- *Impervious area disconnection*
- *Sheet flow dispersion*

Simple Downspout Dispersion
Source: toronto.ca/environment/water.htm

Feasibility Screening Considerations

- Impervious area dispersion can be used where infiltration would otherwise be infeasible, however dispersion depth over landscaped areas should be limited by site-specific conditions to prevent standing water or geotechnical issues.

Opportunity Criteria

- Rooftops and other low traffic impervious surface present in drainage area.
- Soils are adequate for infiltration. If not, soils can be amended to improve capacity to absorb dispersed water (see MISC-2: Amended Soils).
- Significant pervious area present in drainage area with shallow slope
- Overflow from pervious area can be safely managed.

OC-Specific Design Criteria and Considerations

- ☐ Soils should be preserved from their natural condition or restored via soil amendments to meet minimum criteria described in Section .
- ☐ A minimum of 1 part pervious area capable of receiving flow should be provided for every 2 parts of impervious area disconnected.
- ☐ The pervious area receiving flow should have a slope ≤ 2 percent and path lengths of ≥ 20 feet per 1000 sf of impervious area.
- ☐ Dispersion areas should be maintained to remove trash and debris, loose vegetation, and protect any areas of bare soil from erosion.
- ☐ Velocity of dispersed flow should not be greater than 0.5 ft per second to avoid scour.

Calculating HSC Retention Volume

- The retention volume provided by downspout dispersion is a function of the ratio of impervious to pervious area and the condition of soils in the pervious area.
- Determine flow patterns in pervious area and estimate footprint of pervious area receiving dispersed flow. Calculate the ratio of pervious to impervious area.
- Check soil conditions using the soil condition design criteria below; amend if necessary.
- Look up the storm retention depth, d_{HSC} from the chart below.

- The max d_{HSC} is equal to the design storm depth for the project site.

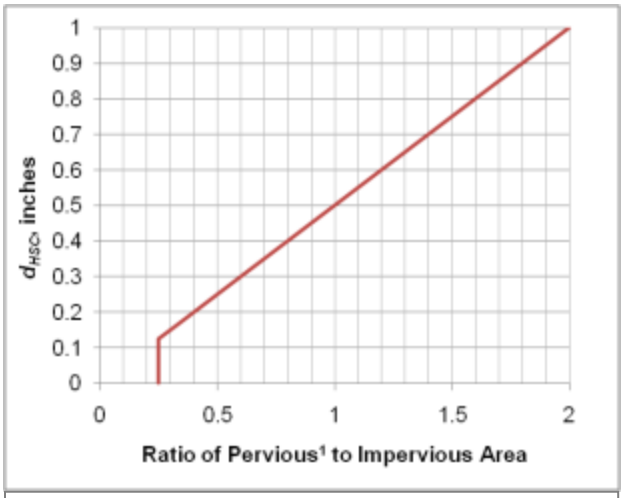

[1] Pervious area used in calculation should only include the pervious area receiving flow, not pervious area receiving only direct rainfall or upslope pervious drainage.

Soil Condition Design Criteria

- ☐ Maximum slope of 2 percent
- ☐ Well-established lawn or landscaping
- ☐ Minimum soil amendments per criteria in MISC-2: Amended Soils.

Configuration for Use in a Treatment Train

- Impervious area disconnection is an HSC that may be used as the first element in any treatment train
- The use of impervious area disconnection reduces the sizing requirement for downstream LID and/or treatment control BMPs

Additional References for Design Guidance

- SMC LID Manual (pp 131) http://www.lowimpactdevelopment.org/guest75/pub/All_Projects/SoCal_LID_Manual/SoCalLID_Manual_FINAL_040910.pdf
- City of Portland Bureau of Environmental Services. 2010. How to manage stormwater – Disconnect Downspouts. http://www.portlandonline.com/bes/index.cfm?c=43081&a=177702
- Seattle Public Utility: http://www.cityofseattle.org/util/stellent/groups/public/@spu/@usm/documents/webcontent/spu01_006395.pdf
- Thurston County, Washington State (pp 10): http://www.co.thurston.wa.us/stormwater/manual/docs-faqs/DG-5-Roof-Runoff-Control_Rev11Jan24.pdf

Appendix D:

BMP Maintenance Information

MAINTENANCE

MWS – Linear

Hybrid Stormwater Filtration System

Modular Wetland Systems, Inc.
P.O. Box 869
Oceanside, CA 92049

www.modularwetlands.com
P 760-433-7640
F 760-433-3179

MAINTENANCE

Maintenance Summary –

- **<u>Clean Bio Clean® Catch Basin Filter</u> – average maintenance interval is 3 to 6 months.**
  - ***(15 minute service time).***
- **<u>Clean Separation (sediment) Chamber</u> – average maintenance interval is 6 to 18 months.**
  - ***(30 minute service time).***
- **<u>Replace Cartridge Filter Media (BioMediaGREEN™)</u> – average maintenance interval 6 – 12 months.**
  - ***(45 minute service time).***
- **<u>Replace Drain Down Filter Media (BioMediaGREEN™)</u> – average maintenance interval is 6 to 12 months.**
  - ***(5 minute service time).***
- **<u>Trim Vegetations</u> – average maintenance interval is 3 to 6 months.**
  - ***(15 minute service time).***
- **<u>Evaluate Wetland Media Flow Hydraulic Conductivity</u> – average inspection interval is once per year.**
  - ***(5 minute inspection time).***
- **<u>Wetland Media Replacement</u> – average maintenance interval is 5 to 20 years.**
  - ***(6 hours).***

For more information on maintenance procedures, to order replacement media or find an authorized service company please contact:

Modular Wetland Systems, Inc
2972 San Luis Rey Road
Oceanside, CA 92058

Phone: 760-433-7640
Fax: 760-433-3176
Email: info@modularwetlands.com

System Diagram –

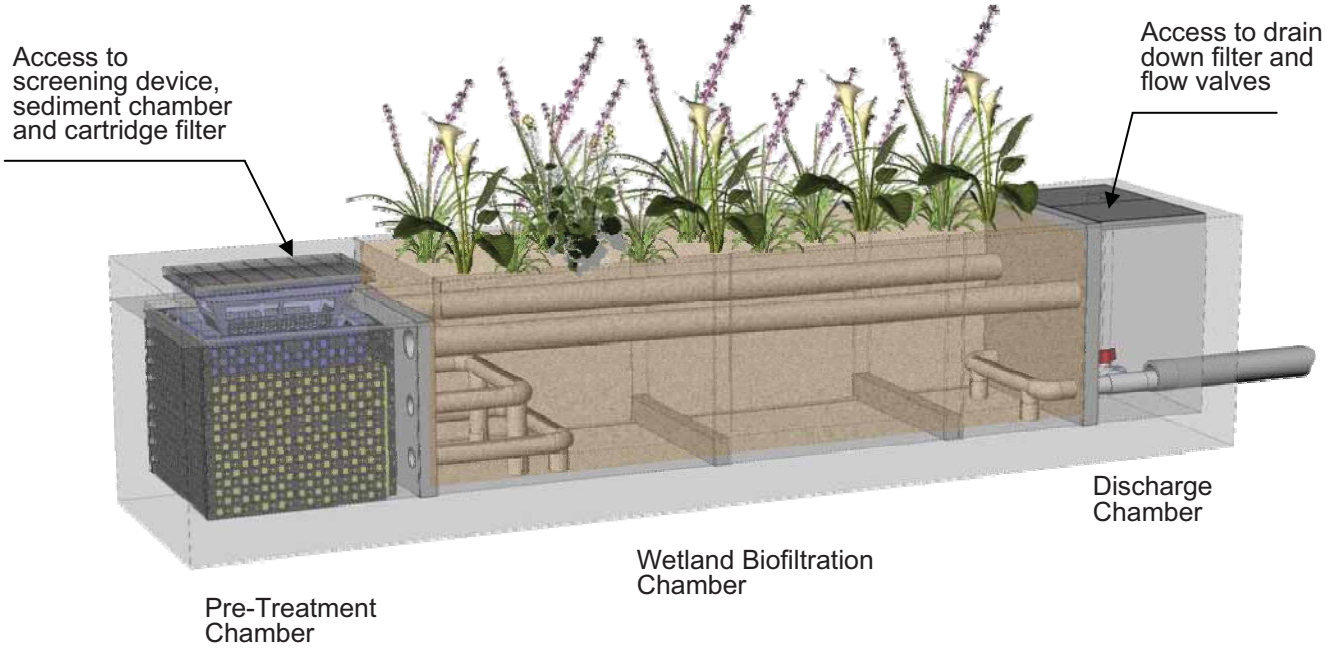

Maintenance Overview –

A. Every installed MWS – Linear unit is to be maintained by the Supplier, or a Supplier approved contractor. The cost of this service varies among providers.

B. The MWS – Linear is a multi-stage self-contained treatment train for stormwater treatment. Each stage protects subsequent stages from clogging. Stages include: screening, separation, cartridge media filtration, and biofiltration. The biofiltration stage contains various types of vegetation which will require annual evaluation and trimming.

1. <u>Clean Bio Clean® Catch Basin Filter</u> – Screening is provided by well proven catch basin filter. The filter has a trash and sediment capacity of 2 (curb type) and 4 (grate type) cubic feet. The filter removes gross solids, including litter, and sediments greater than 200 microns. This procedure is easily done by hand or with a small industrial vacuum device. This filter is located directly under the manhole or grate access cover.

2. <u>Clean Separation (sediment) Chamber</u> – separation occurs in the pre-treatment chamber located directly under the curb or grated inlet. This chamber has a capacity of approximately 21 cubic feet for trash, debris and sediments. This chamber targets TSS, and particulate metals and nutrients. This procedure can be performed with a standard vacuum truck. This chamber is located directly under the manhole or grate access cover.

3. <u>Replace Cartridge Filter Media (BioMediaGREEN™)</u> – Primary filtration is provided by a horizontal flow cartridge filter utilizing BioMediaGREEN blocks. Each cartridge has a media surface area of 35 square feet. The large surface area will insure long term operation without clogging. The cartridge filter with BioMediaGREEN targets fine TSS, metals, nutrients, hydrocarbons, turbidity and bacteria. Media life depends on local loading conditions and can easily be replaced and disposed of without any equipment. The filters are located in the pre-treatment chamber. Entry into chamber required to replace BioMediaGREEN blocks. Each cartridge contain 14 pieces of 20" tall BioMediaGREEN.

4. <u>Replace Drain Down Filter Media (BioMediaGREEN™)</u> – A drain down filter, similar in function to the perimeter filter is located in the discharge chamber. This filter allows standing water to be drained and filtered out of the separation chamber. This addresses any vector issues, by eliminating all standing water within this system. Replacement of media takes approximately 5 minutes and is performed without any equipment.

5. <u>Trim Vegetations</u> – The system utilizes multiple plants in the biofiltration chamber to provide enhanced treatment for dissolved pollutants including nutrients and metals. The vegetation will need to be maintained (trimmed) as needed. This can be done as part of the project normal landscape maintenance. **NO FERTILIZER SHALL BE USED IN THIS CHAMBER.**

<u>6. Evaluate Wetland Media Flow Hydraulic Conductivity</u> – The systems flow can be assessed from the discharge chamber. This should be done during a rain event. By viewing into the discharge chamber the flow out of the system can be observed. If little to know flow is observed from the lower valve or orifice plate this is a sign of potential wetland media (biofiltration) maintenance needs.

<u>7. Wetland Media Replacement</u> – biofiltration is provided by an advance horizontal flow vegetated wetland. This natural filter contains a mix of sorptive media that supports abundant plant life. This biofilter targets the finest TSS, dissolved nutrients, dissolved metals, organics, pesticides, oxygen demanding substances and bacteria. This filter provides the final polishing step of treatment. If prior treatment stages are properly maintained, the life of this media can be up to 20 years. Replacement of the media is simple. Removal of spent media can be done with a shovel of a vacuum truck.

C. The MWS – Linear catch basin filter, separation chamber, cartridge filter media and wetland media are designed to allow for the use of vacuum removal of captured pollutants and spent filter media by centrifugal compressor vacuum units without causing damage to the filter or during normal cleaning and maintenance. Filter and chambers can be cleaned from finish surface through standard manhole or grate access.

Maintenance Procedures –

1. <u>Clean Bio Clean® Catch Basin Filter</u> – Modular Wetland Systems, Inc. recommends the **catch basin filter** be inspected and cleaned a minimum of once every six months and replacement of hydrocarbon booms once a year. The procedure is easily done with the use of any standard vacuum truck. *This procedure takes approximately 15 minutes.*

1. Remove grate or manhole to gain access to catch basin filter insert. Remove the deflector shield (grate type only) with the hydrocarbon boom attached. Where possible the maintenance should be performed from the ground surface. Note: entry into an underground stormwater vault such as an inlet vault requires certification in confined space training.
2. Remove all trash, debris, organics, and sediments collected by the inlet filter insert. Removal of the trash and debris can be done manually or with the use of a vacuum truck. The hose of the vacuum truck will not damage the screen of the filter.
3. Evaluation of the hydrocarbon boom shall be performed at each cleaning. If the boom is filled with hydrocarbons and oils it should be replaced. Attach new boom to basket with plastic ties through pre-drilled holes in basket. Place the deflector shield (grate type only) back into the filter.
4. Transport all debris, trash, organics and sediments to approved facility for disposal in accordance with local and state requirements.
5. The hydrocarbon boom may be classified as hazardous material and will have to be picked up and disposed of as hazardous waste. Hazardous material can only be handled by a certified hazardous waste trained person (minimum 24-hour hazwoper).

2. <u>Clean Separation (sediment) Chamber</u> – Modular Wetland Systems, Inc. recommends the **separation chamber** be inspected and cleaned a minimum of once a year. The procedure is easily done with the use of any standard vacuum truck. *This procedure takes approximately 30 minutes.*

1. Remove grate or manhole to gain access to the catch basin filter.
2. Remove catch basin filter. Where possible the maintenance should be performed from the ground surface. Note: entry into an underground stormwater vault such as an inlet vault requires certification in confined space training.
3. With a pressure washer spray down pollutants accumulated on walls and cartridge filters.
4. Vacuum out separation chamber and remove all accumulated debris and sediments.
5. Replace catch basin filter, replace grate or manhole cover.
6. Transport all debris, trash, organics and sediments to approved facility for disposal in accordance with local and state requirements.

3. <u>Replace Cartridge Filter Media (BioMediaGREEN™)</u> – Modular Wetland Systems, Inc. recommends the **cartridge filters** media be inspected and cleaned a minimum of once a year. The procedure will require prior maintenance of separation chamber. *Replacement of media takes approximately 45 minutes.*

1. Remove grate or manhole to gain access to the catch basin filter.
2. Remove catch basin filter. Where possible the maintenance should be performed from the ground surface. Note: entry into an underground stormwater vault such as an inlet vault requires certification in confined space training.
3. Enter separation chamber.
4. Unscrew the two ½" diameter bolts holding the lid on each cartridge filter and remove lid and place outside of unit.
5. Remove each of the 14 BioMediaGREEN filter blocks in each cartridge and remove from chamber for disposal.
6. Spray down the outside and inside of the cartridge filter to remove any accumulated sediments.
7. Replace with new BioMediaGREEN filter blocks insuring the blocks are properly lined up and seated in the bottom.
8. Replace the lid and tighten down bolts.
9. Replace catch basin filter, replace grate or manhole cover.
10. Transport all debris, trash, organics, spent media and sediments to approved facility for disposal in accordance with local and state requirements.

4. <u>Replace Drain Down Filter Media (BioMediaGREEN™)</u> – Modular Wetland Systems, Inc. recommends the **drain down filter** be inspected and maintained a minimum of once a year. *Replacement of media takes approximately 5 minutes.*

1. Open hatch of discharge chamber
2. Enter chamber, unlatch drain down filter cover.
3. Remove BioMediaGREEN filter block
4. Replace with new block, replace and latch cover.
5. Exit chamber, close and lock down the hatch.
6. Transport spent media to approved facility for disposal in accordance with local and state requirements.

5. <u>Trim Vegetations</u> – Modular Wetland Systems, Inc. recommends the plants/vegetation be inspected and maintained a minimum of once a year. It is also recommended that the plants receive the same care as other landscaped areas. **Note: No fertilizer is to be used on this area.** *Trimming of vegetation takes approximately 15 minutes.*

<u>6. Evaluate Wetland Media Flow Hydraulic Conductivity</u> – Modular Wetland Systems, Inc. recommends system flow be inspected and observed a minimum of once a year. This needs to be done during a rain event. *Inspection and Observation takes approximately 5 minutes.*

1. Open hatch of discharge chamber
2. Observe the level of flow from the bottom valve or orifice plate.
3. If flow is steady and high the system is operating normally.

4. If little or no flow is observed exiting the valve possible maintenance to the biofiltration wetland chamber may be needed. Contact Modular Wetlands for further assistance.
5. Exit chamber, close and lock down the hatch.

<u>7. Wetland Media Replacement</u> – Modular Wetland Systems, Inc. recommends the wetland media be replaced a minimum of one every 20 years. *Inspection takes approximately 15 minutes. Replacement of rock media takes approximately 6 hours and requires a vacuum truck.*

1. Remove plants from the wetland chamber.
2. Use a vacuum truck or shovel to remove all wetland media.
3. Spray down the walls and floor of the chamber and vacuum out any accumulated pollutants.
4. Spray down perforated piping and netting of flow matrix and the inflow and outflow end to remove any accumulated pollutants.
5. Vacuum out any standing water from the media removal and insure the chamber is cleaning.
6. Use a small backhoe to fill chamber with new media. Call Modular Wetland Systems, Inc. for media delivery information.
7. Install BioMediaGREEN filter blocks across over the entire filter bed. Fill with media until 9” from top. The install filter blocks which are 3” thick. Fill the top 6” inches with wetland media.
8. Plant new vegetation in the same configuration and quantity as old vegetation. Dig down until the BioMediaGREEN is exposed. Cut out a small circle of the BioMediaGREEN. Remove plant from container including soil ball and place in the whole cut out of the BioMediaGREEN. Cover up with wetland media.
9. Spray down the plants and media with water to saturate.
10. Continue supplemental irrigation (spray or drip) for at lest 90 days.

7. Other Maintenance Notes –

1. Following maintenance and/or inspection, the maintenance operator shall prepare a maintenance/inspection record. The record shall include any maintenance activities performed, amount and description of debris collected, and condition of the system and its various filter mechanism. .
2. The owner shall retain the maintenance/inspection record for a minimum of five years from the date of maintenance. These records shall be made available to the governing municipality for inspection upon request at any time.
3. Any person performing maintenance activities must have completed a minimum of OSHA 24-hour hazardous waste worker (hazwoper) training.
4. Remove access manhole lid or grate to gain access to filter screens and sediment chambers. Where possible the maintenance should be performed from the ground surface. Note: entry into an underground stormwater vault such as an inlet vault requires certification in confined space training.
5. Transport all debris, trash, organics and sediments to approved facility for disposal in accordance with local and state requirements.
6. The hydrocarbon boom is classified as hazardous material and will have to be picked up and disposed of as hazardous waste. Hazardous material can only be handled by a certified hazardous waste trained person (minimum 24-hour hazwoper).

Maintenance Sequence –

Access Pre-Treatment Chamber by Removing Manhole or Grate Cover

Assess Pollutant Loading in Catch Basin Filter and Sediment Chamber

Vacuum Catch Basin Filter

Remove Catch Basin Filter

Vacuum out the Sediment Chamber

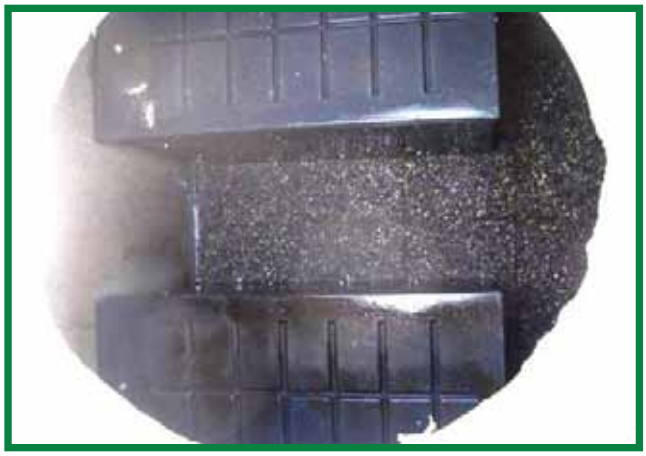

Enter Chamber Remove Lids of Cartridge Filters

Remove Spent BioMediaGREEN Filter Blocks

Spray Down and Clean Cartridge Filter Housing

Replace with New BioMediaGREEN Filter Blocks and Replace Lid, then Catch Basin Filter and Replace Manhole or Grate

Open Discharge Chamber Lid to Asses Wetland Media Flow Rate and Replace Drain Down Filter Near Bottom

Evaluate Vegetation and Trim if Needed. Maintenance Complete.

Please Contact Modular Wetland Systems, Inc. for More Information:

760-433-7640

info@modularwetlands.com

TECHNICAL NOTE

Retention/Detention System Maintenance

TN 6.01
February 2007

This document is provided for informational purposes only and is meant only to be a guide. Individuals using this information should make their own decisions as to suitability of this guideline for their individual projects and adjust accordingly.

Introduction

A retention/detention system is comprised of a series of pipes and fittings that form an underground storage area, which retains or detains storm water runoff from a given area. As sediment and debris settle out of the detained stormwater, build up occurs that requires the system to be regularly inspected and cleaned in order for the system to perform as originally designed. The following provides the available fittings and guidelines for inspection and maintenance of an HDPE underground storage system.

System Accessories and Fittings

Concentric Reducers

Concentric Reducers are fittings that transition between two pipes, either in line with one another or at perpendicular angles. The centerlines of the two pipes are at the same elevation. When a concentric reducer is used to connect the manifold pipe to the lateral pipes, most debris will be trapped in the manifold pipe.

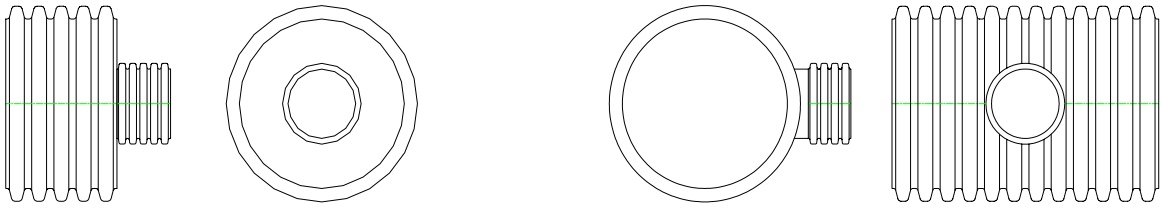

SIDE VIEW SECTION VIEW SIDE VIEW SECTION VIEW

Eccentric Reducers

Eccentric Reducers are fittings that transition between two pipes, either in line with one another or at perpendicular angles. The inverts of the two pipes are at the same elevations. When an eccentric reducer is used to connect the manifold pipe to the lateral pipes, most debris will follow the flow of the storm water into the lateral pipes.

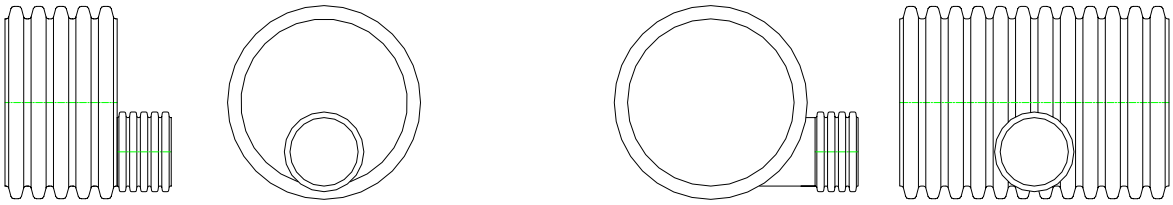

SIDE VIEW SECTION VIEW SIDE VIEW SECTION VIEW

©ADS 2007

Riser

Each retention/detention system typically has risers strategically placed for maintenance and inspection of the system. These risers are typically 24” in diameter or larger and are placed on the manifold fittings.

Cleanouts

Cleanout ports are usually 4-, 6-, or 8-in diameter pipe and are placed on the manifold fittings. They are used for entrance of a pipe from a vacuum truck or a water-jetting device.

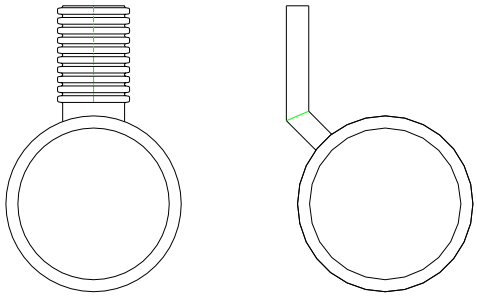

RISER
CROSS-SECTION VIEW

CLEANOUT
CROSS-SECTION VIEW

For a complete listing of available fittings and components please refer to the *ADS Fittings Manual*.

Maintenance Overview of a Retention/Detention System

Maintaining a clean and obstruction-free retention/detention system helps to ensure the system performs the intended function of the primary design. Build up of debris may obstruct flow through the laterals in a retention system or block the entranceway of the outlet pipe in a detention system. This may result in ineffective operation or complete failure of the system . Additionally, surrounding areas may potentially run the risk of damage due to flooding or other similar issues.

Inspection/Maintenance Frequency

All retention/detention systems must be cleaned and maintained. Underground systems may be maintained more cost effectively if these simple guidelines are followed. Inspection should be performed at a minimum of once per year. Cleaning should be done at the discretion of individuals responsible to maintain proper storage and flow. While maintenance can generally be performed year round, it should be scheduled during a relatively dry season.

Pre-Inspection

A post-installation inspection should be performed to allow the owner to measure the invert prior to accumulation of sediment. This survey will allow the monitoring of sediment build-up without requiring access to the retention/detention system.

The following is the recommended procedure for pre-inspections:

1) Locate the riser section or cleanouts of the retention/detention system. The riser will typically be 24” in diameter or larger and the cleanouts are usually 4”, 6” or 8” in diameter.
2) Remove the lid of the riser or clean outs.
3) Insert a measuring device into the opening and make note to a point of reference on the stick or string. (This is done so that sediment build up can be determined in the future without having to enter the system.)

Inspection/Maintenance

A retention/detention system should be inspected at a minimum of one time a year or after major rain events if necessary.

The following is the recommended procedure to inspect system in service:

1) Locate the riser section of the retention/detention system. The riser will typically be 24” in diameter or larger.
2) Remove the lid from the riser.
3) Measure the sediment buildup at each riser and cleanout location. Only certified confined space entry personnel having appropriate equipment should be permitted to enter the retention/detention System.
4) Inspect each manifold, all laterals, and outlet pipes for sediment build up, obstructions, or other problems. Obstructions should be removed at this time.
5) If measured sediment build up is between 5% - 20% of the pipe diameter, cleaning should be considered; if sediment build up exceeds 20%, cleaning should be performed at the earliest opportunity. A thorough cleaning of the system (manifolds and laterals) shall be performed by either manual methods or by a vacuum truck.

Appendix E:

Geotechnical Information

(Storm water infiltration BMP evaluation)

FIELD PERCOLATION TESTING
PARK PLAZA MEMORY CARE EXPANSION
574 SOUTH GLASSELL STREET
CITY OF ORANGE, CALIFORNIA

Prepared for:

KC Orange II, L.P.

5790 Fleet Street, Suite 300
Carlsbad, California 92008

Project No. 12137.002

May 8, 2019

Leighton Consulting, Inc.

A LEIGHTON GROUP COMPANY

Leighton Consulting, Inc.
A LEIGHTON GROUP COMPANY

May 8, 2019

Project No. 12137.002

KC Orange II, L.P.
5790 Fleet Street, Suite 300
Carlsbad, California 92008

Attention: Mr. Axel Guerra

Subject: **Field Percolation Testing**
Park Plaza Memory Care Expansion
574 South Glassell Street
City of Orange, California

Reference: Leighton Consulting, Inc., 2019, *Geotechnical Exploration Report, Park Plaza Memory Care Expansion, 574 South Glassell Street, City of Orange, California*, Project No. 12317.002, dated January 29, 2019.

Introduction

In accordance with your request and authorization, Leighton Consulting, Inc. has performed percolation testing to aid in the design of an onsite stormwater infiltration system for the Park Plaza Memory Care Expansion at 574 South Glassell Street in the city of Orange, California. Our field percolation testing was based on our proposal dated April 12, 2019, and the conceptual site plan prepared by PLSA Engineering. We understand that the proposed stormwater infiltration system will consist of a corrugated metal pipe (CMP) tank with an invert depth of approximately 12 feet. The CMP tank will be located on the western portion of the site.

Scope of Work

The purpose of our study was to evaluate infiltration rate of the onsite soils to aid in the design of a stormwater infiltration system. The scope of work included the following tasks:

17781 Cowan ▪ Irvine, CA 92614-6009
949.250.1421 ▪ 949.250.1114 Fax

- *Field Exploration* – Our field exploration was performed on April 18, 2019, and consisted of two hollow-stem auger borings (P-1 and P-2) drilled to a depth of 12 feet below existing grade. Approximate boring/percolation test locations are shown on Figure 1, *Percolation Test Location Map*. The borings were geotechnically logged and sampled using Standard Penetration Test (SPT) at selected intervals. The SPT samplers were driven into the soil with a 140-pound hammer, free falling 30 inches. The number of blows was noted for every 6 inches of sampler penetration. Each soil sample collected was described in general conformance with the United Soil Classification System (USCS). The samples were sealed and packaged for transportation to our laboratory. Logs of borings are presented in Appendix A, *Boring Logs*.

- *Field Percolation Tests* – Borings P-1 and P-2 were converted to temporary percolation test wells and pre-soaked for testing upon completion of drilling. In-situ percolation testing was performed in general accordance with County of Orange *Technical Guidance Document for the Preparation of Conceptual/Preliminary and/or Project Water Quality Management Plans (WQMPs)*, dated December 20, 2013. A 2-inch-diameter polyvinyl chloride (PVC) section of perforated pipe (.020 slotted screen) was placed in the borehole and the annulus was filled with clean sand (No. 3 Monterey Sand).

  After pre-soaking, the test wells were filled to a water level at least five times the boring radius above the bottom of the boring to determine the standard time interval for the percolation test. Once the standard time interval was established for each well, the wells were filled to the initial water level used to determine the standard time interval. The water drop was then measured at the standard time interval using a manual water sounder. At the end of the time interval, the wells were refilled approximately to the initial water level and the procedure repeated until the test was completed. Field data and calculated infiltration rate for each well is presented in Appendix C, *Percolation Test Results*. After the conclusion of percolation testing, the PVC pipes were removed from the test well. The test wells were backfilled with the soil cuttings and capped with cold asphalt.

- *Laboratory Testing* - Laboratory tests were performed on representative soil samples to evaluate their physical characteristics. The laboratory testing consisted of Passing No. 200 Sieve (ASTM D 1140). The test results are presented in Appendix B, *Laboratory Test Results.*

- *Engineering Analysis* - The data obtained from our background review, field exploration, and in-situ percolation testing program were evaluated and analyzed to

provide infiltration rates at each tested location.

- *Report Preparation* - The results of the exploration and in-situ percolation testing are summarized in this report presenting our findings and conclusions.

Subsurface Conditions

Based on our exploration, the subsurface soils at the CMP tank location consisted mainly of clayey sand to a depth of 10 feet below existing grade. Below the clayey sand, poorly-graded sand with gravel was encountered to the explored depth of 12 feet below existing grade. Detailed descriptions of the soils encountered in our borings are presented in the boring logs (Appendix A).

Based on the previous investigation (Leighton Consulting, 2019), the site is underlain by a thin layer of man-made fill associated with construction of the existing improvements at the site and quaternary-age alluvial fan deposits. The fill is up to 4 to 5 feet thick and consisted mainly of silty sand. Below the fill, the alluvium generally consisted of dense to very dense sand and stiff to very stiff sandy clay.

Groundwater

Groundwater was not encountered in our explorations excavated to the maximum depth of 12 feet. Groundwater was not encountered in the previous explorations (Leighton Consulting, 2019) drilled to a maximum depth of 33 feet below the existing grade. The historically high groundwater level for this area, according to the California Geologic Survey (1997), is on the order of 40 feet below the existing ground surface. Groundwater is not anticipated to adversely impact construction of the proposed improvements.

Fluctuations of the groundwater level, localized zones of perched water, and an increase in soil moisture should be anticipated during and following the rainy seasons or periods of locally intense rainfall or storm water runoff.

Infiltration Rates

The percolation test at each test well was performed using the falling-head method which records the drop of water level inside the test well over the specified time interval, and is then repeated several times until consistent measurements are achieved. The measured infiltration rate for each percolation test was calculated by dividing the rate of discharge (i.e. volume of water discharged from the well during the test) by the infiltration surface area or flow area. A porosity reduction factor was applied to account for the filter pack

material installed in the annulus of each test well. The flow area was determined based on the average height of water within the test well during each time interval. Detailed results of the field testing data and measured infiltration rate for the test wells are presented in Appendix C, *Percolation Test Data*.

As per the guidelines by County of Orange (2013), the measured infiltration rates should be reduced by the design professional with a correction factor to determine design values that will represent long-term performance of the proposed infiltration system. Based on the type of test and number of tests performed, site variability, and long-term performance of the proposed infiltration system, a correction factor of 2 is used. Results of the percolation testing are summarized in Table 1.

Table 1 – Measured Infiltration Rate

Boring-Percolation Test Well Designation	Target Interval Depth (feet)	Measured Infiltration Rate (inches per hour)	Design Infiltration Rate (inches per hour)
P-1	9 to 12	7.6	3.8
P-2		6.4	3.2

It should be emphasized that the infiltration rate is only representative of the tested location and depth where they are performed. Varying subsurface conditions will exist outside of the test locations, which could alter the calculated infiltration rates indicated above. The infiltration test was performed using relatively clean water free of particulates and silt. The infiltration rates will decline over time between maintenance cycles as the infiltration surface becomes occluded and particulates accumulate in the infiltrative layer.

Prior to construction of any infiltration device intended for the site, the WQMP plan should be reviewed by the geotechnical consultant to verify that the geotechnical recommendations have been appropriately incorporated into the plans and not compromised by the addition of an infiltration system to the site. The designer of any infiltration system should contact the geotechnical consultant for geotechnical input during the design process as they feel necessary.

Design Considerations

The following recommendation should be considered minimal from a geotechnical viewpoint as there may be more restrictive requirements of the governing agencies. As a minimum, we recommend the following setbacks of the stormwater infiltration system.

Table 2 – Stormwater infiltration System Setbacks

Setback from	Distance
Property lines and public right-of-way	10 feet
Any foundation	15 feet or a 1:1 plane drawn up from the bottom of foundation, whichever is greater
Private water wells used for drinking water	100 feet

In general, a vast majority of geotechnical distress issues are related to improper drainage. Distress in the form of foundation movement could occur. Soil saturation could lead to a loss of soil support of foundations and pavements, settlement or collapse, internal erosion (piping) and expansion. Offsite properties could be affected and those improvements may become subjected to seeps, springs, foundation movement or other geotechnical issues related to infiltration and water migration. Additionally, infiltration water can migrate along pipe backfill (typically sand or gravel bedding), thereby impacting improvements away from the point of infiltration. Any proposed infiltration system should not be located near existing or proposed improvements in order to reduce the geotechnical distress issues related to infiltration. Where sufficient distance from improvements cannot be achieved, additional recommendations may need to be provided.

As with all systems that are designed to concentrate surface flow and direct water into the subsurface soils, some type of nuisance water and other geotechnical water related issues should be anticipated. We recommend sufficient distances between infiltration devices and sensitive improvements be maintained. Routine maintenance should be required of any infiltration system.

Construction Considerations

Infiltration of stormwater may result in a temporary rise in the groundwater elevation. This rise in groundwater could change the soil structure by dissolving or deteriorating the intergranular contacts between the sand particles, resulting in a sudden collapse, referred to as hydrocollapse. This collapse phenomenon generally occurs during the first saturation episode after deposition of the soil, and repeated cycles of saturation are not likely to result in additional collapse. Based on our current and previous explorations, the potential for hydrocollapse is low. However, as a precautionary measure, the excavated trench for the proposed CMP tank should be inundated with water prior to installation of the tank, in order to densify the sand particles.

Conclusion

The percolation tests performed indicate a measured infiltration rate that meets the minimum requirement for stormwater infiltration feasibility (0.3 inches per hour) per the guidelines by County of Orange (2013).

Limitations

This report was based on data obtained from limited number of observations, site visits, soil excavations, samples, and tests. Such information is, by necessity, incomplete. The nature of many sites is such that differing soil or geologic conditions will be present within small distances and under varying climatic conditions. Changes in subsurface conditions can and do occur over time. Therefore, the findings presented in this report are only valid if Leighton Consulting has the opportunity to observe subsurface conditions during grading and construction of sustainable design elements to confirm that our preliminary data are representative for the site. Leighton Consulting should review the construction plans and project specifications, when available, to comment on the geotechnical aspects.

This report was prepared using the degree of care and skill ordinarily exercised, under similar circumstances, by reputable geotechnical consultants practicing in this or similar localities. The findings included in this report are considered preliminary and are subject to verification. We do not make any warranty, either expressed or implied.

Closing

We appreciate the opportunity to be of continued service. If you have any questions regarding this report, please do not hesitate to contact us.

Respectfully submitted,

LEIGHTON CONSULTING, INC.

Djan Chandra, PE, GE 2376
Senior Principal Engineer

CD/DJC/lr

Attachments: Figure 1 – Percolation Test Location Map
Appendix A – Boring Logs
Appendix B – Laboratory Test Results
Appendix C – Percolation Test Results

Distribution: (1) Addressee (PDF via email)

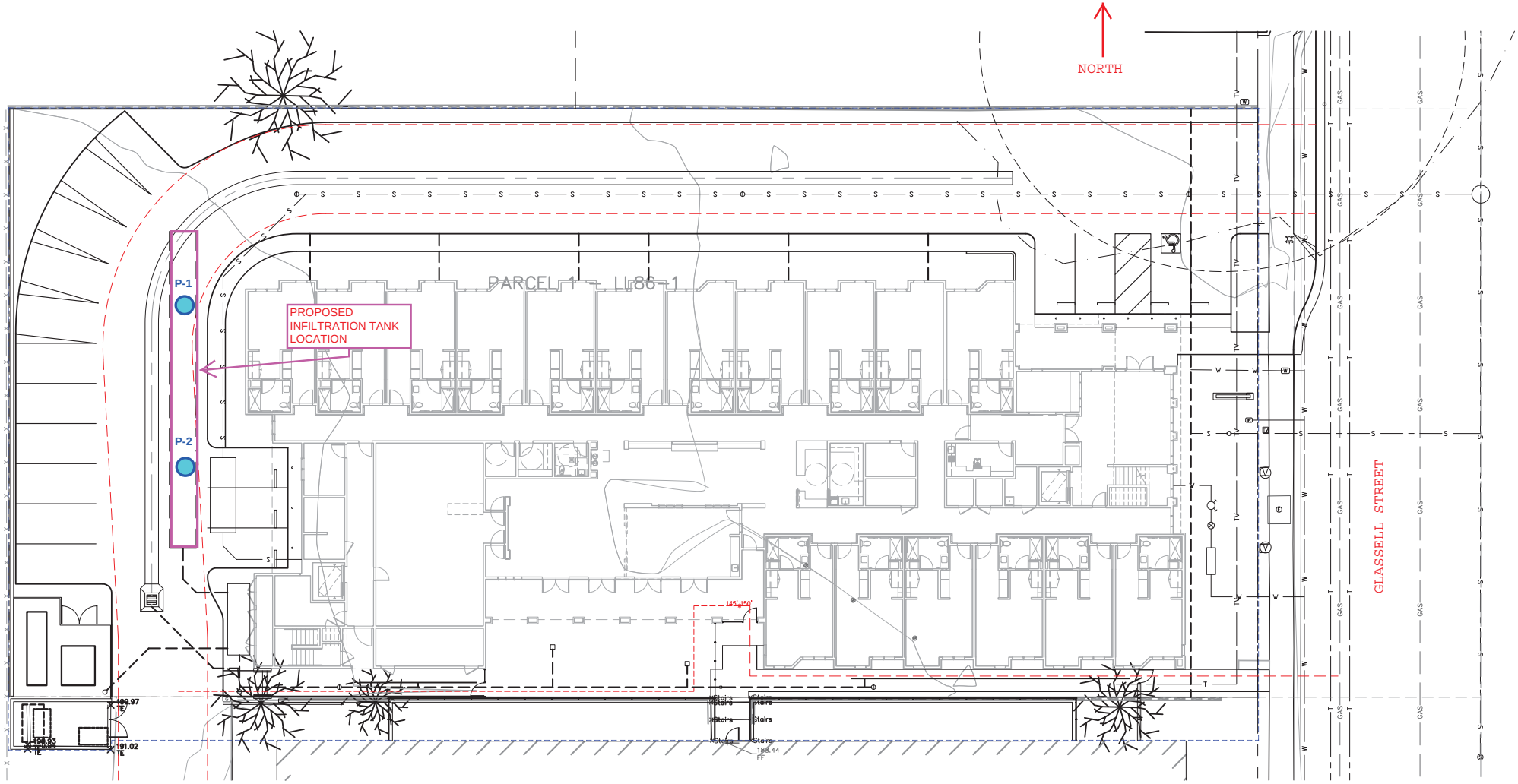

LEGEND

P-2 Approximate Location of Percolation Test Well.
Total Depth=12 Feet.
Groundwater Not Encountered.

FIGURE 1 - PERCOLATION TEST LOCATION MAP
Park Plaza Memory Care Expansion
574 South Glassell Street
City of Orange, California

Project No.: 12137.002
Date: May 2019
Engineer: DJC

APPENDIX A

BORING LOGS

Leighton

GEOTECHNICAL BORING LOG P-1

Project No.	12137.002	**Date Drilled**	4-18-19
Project	Park Plaza Memory Care Expansion	**Logged By**	CD
Drilling Co.	2R Drilling, Inc.	**Hole Diameter**	8"
Drilling Method	Hollow Stem Auger - 140lb - Autohammer - 30" Drop	**Ground Elevation**	'
Location	See Figure 1 - *Percolation Test Location Map*	**Sampled By**	CD

Elevation Feet	Depth Feet	Graphic Log (N / S)	Attitudes	Sample No.	Blows Per 6 Inches	Dry Density pcf	Moisture Content, %	Soil Class. (U.S.C.S.)	SOIL DESCRIPTION *This Soil Description applies only to a location of the exploration at the time of sampling. Subsurface conditions may differ at other locations and may change with time. The description is a simplification of the actual conditions encountered. Transitions between soil types may be gradual.*	Type of Tests
	0							SC	Surface: 4 inches of asphalt concrete @ 0.3': Clayey SAND, yellowish brown, slightly moist, low plasticity, fine sand, some subangular gravel	
	5			S-1	1 2 2				@ 5': Loose, some subrounded gravel	
				S-2	3 2 3			ML	@ 7.5': Sandy SILT, loose, olive brown, moist, fine sand, nonplastic	
	10			S-3	15 20 19			SP	@ 10.5': Poorly-graded SAND with Gravel, very dense, olive brown, slightly moist, fine to medium sand, subangular gravel	-200
	15								Total Depth of Boring: 12 feet. No free groundwater encountered during drilling. Boring converted into a percolation test well, screen interval from 7 to 12 feet. Percolation testing performed on 4/18/2019. Percolation test well removed and boring backfilled with soil cuttings and patched with cold asphalt.	
	20									

SAMPLE TYPES:
- B BULK SAMPLE
- C CORE SAMPLE
- G GRAB SAMPLE
- R RING SAMPLE
- S SPLIT SPOON SAMPLE
- T TUBE SAMPLE

TYPE OF TESTS:
- -200 % FINES PASSING
- AL ATTERBERG LIMITS
- CN CONSOLIDATION
- CO COLLAPSE
- CR CORROSION
- CU UNDRAINED TRIAXIAL
- DS DIRECT SHEAR
- EI EXPANSION INDEX
- H HYDROMETER
- MD MAXIMUM DENSITY
- PP POCKET PENETROMETER
- RV R VALUE
- SA SIEVE ANALYSIS
- SE SAND EQUIVALENT
- SG SPECIFIC GRAVITY
- UC UNCONFINED COMPRESSIVE STRENGTH

*** * * This log is a part of a report by Leighton and should not be used as a stand-alone document. * * ***

GEOTECHNICAL BORING LOG P-2

Project No.	12137.002	**Date Drilled**	4-18-19
Project	Park Plaza Memory Care Expansion	**Logged By**	CD
Drilling Co.	2R Drilling, Inc.	**Hole Diameter**	8"
Drilling Method	Hollow Stem Auger - 140lb - Autohammer - 30" Drop	**Ground Elevation**	'
Location	See Figure 1 - *Percolation Test Location Map*	**Sampled By**	CD

Elevation Feet	Depth Feet	Graphic Log (N S)	Attitudes	Sample No.	Blows Per 6 Inches	Dry Density pcf	Moisture Content, %	Soil Class. (U.S.C.S.)	SOIL DESCRIPTION *This Soil Description applies only to a location of the exploration at the time of sampling. Subsurface conditions may differ at other locations and may change with time. The description is a simplification of the actual conditions encountered. Transitions between soil types may be gradual.*	Type of Tests
	0							SC	Surface: 4 inches of asphalt concrete @ 0.3': Clayey SAND, yellowish brown, slightly moist, low plasticity, fine sand	
	5			S-1	2 2 2				@ 5': Loose, some subrounded gravel	
				S-2	2 4 6			SC-CL	@ 7.5': Sandy CLAY to Clayey SAND, medium stiff to medium dense, olive brown, moist, fine sand, low plastic, trace subrounded gravel	
	10			S-3	7 15 12			SP	@ 10.5': Poorly-graded SAND with Gravel, dense, olive brown, slightly moist, fine to medium sand, subangular gravel	-200
	15								Total Depth of Boring: 12 feet. No free groundwater encountered during drilling. Boring converted into a percolation test well, screen interval from 7 to 12 feet. Percolation testing performed on 4/18/2019. Percolation test well removed and boring backfilled with soil cuttings and patched with cold asphalt.	
	20									

SAMPLE TYPES:
- B BULK SAMPLE
- C CORE SAMPLE
- G GRAB SAMPLE
- R RING SAMPLE
- S SPLIT SPOON SAMPLE
- T TUBE SAMPLE

TYPE OF TESTS:
- -200 % FINES PASSING
- AL ATTERBERG LIMITS
- CN CONSOLIDATION
- CO COLLAPSE
- CR CORROSION
- CU UNDRAINED TRIAXIAL
- DS DIRECT SHEAR
- EI EXPANSION INDEX
- H HYDROMETER
- MD MAXIMUM DENSITY
- PP POCKET PENETROMETER
- RV R VALUE
- SA SIEVE ANALYSIS
- SE SAND EQUIVALENT
- SG SPECIFIC GRAVITY
- UC UNCONFINED COMPRESSIVE STRENGTH

*** * * This log is a part of a report by Leighton and should not be used as a stand-alone document. * * ***

APPENDIX B

LABORATORY TEST RESULTS

Leighton

Boring No.	P-1	P-2						
Sample No.	S-3	S-3						
Depth (ft.)	10.5	10.5						
Sample Type	Small Bag	Small Bag						
Soil Identification	Olive poorly-graded sand with gravel (SP)g	Olive poorly-graded sand with gravel (SP)g						
Moisture Correction								
Wet Weight of Soil + Container (g)	0.0	0.0						
Dry Weight of Soil + Container (g)	0.0	0.0						
Weight of Container (g)	1.0	1.0						
Moisture Content (%)	0.0	0.0						
Sample Dry Weight Determination								
Weight of Sample + Container (g)	494.9	642.5						
Weight of Container (g)	214.9	206.3						
Weight of Dry Sample (g)	280.0	436.2						
Container No.:								
After Wash								
Method (A or B)	A	A						
Dry Weight of Sample + Cont. (g)	481.2	620.0						
Weight of Container (g)	214.9	206.3						
Dry Weight of Sample (g)	266.3	413.7						
% Passing No. 200 Sieve	**4.9**	**5.2**						
% Retained No. 200 Sieve	95.1	94.8						

Leighton

PERCENT PASSING
No. 200 SIEVE
ASTM D 1140

Project Name: Park Plaza Memory Care Expansion
Project No.: 12137.002

Tested By: ACS/OHF Date: 04/19/19

APPENDIX C

PERCOLATION TEST DATA

Leighton

Boring Percolation Test Data Sheet

Project Number:	12137.002	**Test Hole Number:**	P-1
Project Name:	KSL Park Plaza	**Date Excavated:**	4/18/2019
Earth Description:	Alluvium	**Date Tested:**	4/18/2019
Liquid Description:	Tap water	**Depth of boring (ft):**	12
Tested By:	CD	**Radius of boring (in):**	4
Time Interval Standard		**Radius of casing (in):**	1
Start Time for Pre-Soak:	4/18/2019 8:00	**Length of slotted of casing (ft):**	5
Start Time for Standard:	4/18/2019 9:00		
Standard Time Interval		**Porosity of Annulus Material, *n* :**	0.35
Between Readings, mins:	10	**Bentonite Plug at Bottom:** No	

Percolation Data

Reading	Time	Time Interval, Δt (min.)	Initial/Final Depth to Water (ft.)	Initial/Final Water Height, H_0/H_f (in.)	Total Water Drop, Δd (in.)	Percolation Rate (min./in.)	Infiltration Rate (in./hr.)
1	9:00	10	8.50	42.0	42.0	0.24	8.56
	9:10		12.00	0.0			
2	9:11	10	8.50	42.0	42.0	0.24	8.56
	9:21		12.00	0.0			
3	9:21	10	9.00	36.0	36.0	0.28	8.44
	9:31		12.00	0.0			
4	9:32	5	9.00	36.0	36.0	0.14	16.88
	9:37		12.00	0.0			
5	9:38	3	9.00	36.0	32.5	0.09	23.37
	9:41		11.71	3.5			
6	9:42	3	9.00	36.0	30.4	0.10	20.79
	9:45		11.53	5.6			
7	9:46	3	9.00	36.0	28.9	0.10	19.20
	9:49		11.41	7.1			
8	9:50	3	9.00	36.0	26.4	0.11	16.63
	9:53		11.20	9.6			
9	9:54	3	9.00	36.0	25.8	0.12	16.06
	9:57		11.15	10.2			
10	9:58	3	9.00	36.0	24.6	0.12	14.96
	10:01		11.05	11.4			
11	10:02	3	9.00	36.0	25.0	0.12	15.28
	10:05		11.08	11.0			
12	10:06	3	9.00	36.0	24.8	0.12	15.17
	10:09		11.07	11.2			

Infiltration Rate (I) = Flow Volume/Flow Area/Δt

Tested Infiltration Rate, I (Last Reading) = 15.2 in./hr.

Measured Infiltration Rate = I/2 = 7.6 in./hr.

Boring Percolation Test Data Sheet

Project Number:	12137.002	**Test Hole Number:**	P-2
Project Name:	KSL Park Plaza	**Date Excavated:**	4/18/2019
Earth Description:	Alluvium	**Date Tested:**	4/18/2019
Liquid Description:	Tap water	**Depth of boring (ft):**	12
Tested By:	CD	**Radius of boring (in):**	4
Time Interval Standard		**Radius of casing (in):**	1
Start Time for Pre-Soak:	4/18/2019 8:30	**Length of slotted of casing (ft):**	5
Start Time for Standard:	4/18/2019 10:10		
Standard Time Interval		**Porosity of Annulus Material, *n* :**	0.35
Between Readings, mins:	10	**Bentonite Plug at Bottom:** No	

Percolation Data

Reading	Time	Time Interval, Δt (min.)	Initial/Final Depth to Water (ft.)	Initial/Final Water Height, H_0/H_f (in.)	Total Water Drop, Δd (in.)	Percolation Rate (min./in.)	Infiltration Rate (in./hr.)
1	10:10	10	8.50	42.0	42.0	0.24	8.56
	10:20		12.00	0.0			
2	10:20	10	8.50	42.0	42.0	0.24	8.56
	10:30		12.00	0.0			
3	10:31	10	9.00	36.0	36.0	0.28	8.44
	10:41		12.00	0.0			
4	10:42	5	9.00	36.0	36.0	0.14	16.88
	10:47		12.00	0.0			
5	10:48	3	9.00	36.0	26.8	0.11	16.98
	10:51		11.23	9.2			
6	10:52	3	9.00	36.0	25.3	0.12	15.61
	10:55		11.11	10.7			
7	10:56	3	9.00	36.0	24.8	0.12	15.17
	10:59		11.07	11.2			
8	11:00	3	9.00	36.0	22.6	0.13	13.19
	11:03		10.88	13.4			
9	11:04	3	9.00	36.0	22.0	0.14	12.70
	11:07		10.83	14.0			
10	11:08	3	9.00	36.0	22.2	0.14	12.89
	11:11		10.85	13.8			
11	11:12	3	9.00	36.0	22.3	0.13	12.99
	11:15		10.86	13.7			
12	11:16	3	9.00	36.0	22.1	0.14	12.80
	11:19		10.84	13.9			

Infiltration Rate (I) = Flow Volume/Flow Area/Δt

Tested Infiltration Rate, I (Last Reading) = 12.8 in./hr.

Measured Infiltration Rate = I/2 = 6.4 in./hr.

Appendix F:

Hydrology Information

(Q2 – Two-year frequency storm evaluation)

```
****************************************************************************
             RATIONAL METHOD HYDROLOGY COMPUTER PROGRAM PACKAGE
            (Reference: 1986 ORANGE COUNTY HYDROLOGY CRITERION)
         (c) Copyright 1983-2016 Advanced Engineering Software (aes)
             Ver. 23.0  Release Date: 07/01/2016  License ID 1452

                           Analysis prepared by:

                      PASCO LARET SUITER & ASSOCIATES
       27127 Calle Arroyo, Suite 1904, San Juan Capistrano, CA 92675
                            ph 949.661.6695
                          plsaengineering.com


 ************************* DESCRIPTION OF STUDY *************************
* PARK PLAZA EXPANSION                                                   *
* 2-YR PRE-DEVELOPMENT                                                   *
*                                                                        *
 ************************************************************************

  FILE NAME: 2PRE.DAT
  TIME/DATE OF STUDY: 17:30 02/21/2019
============================================================================
  USER SPECIFIED HYDROLOGY AND HYDRAULIC MODEL INFORMATION:
============================================================================
                    --*TIME-OF-CONCENTRATION MODEL*--

  USER SPECIFIED STORM EVENT(YEAR) =    2.00
  SPECIFIED MINIMUM PIPE SIZE(INCH) =   6.00
  SPECIFIED PERCENT OF GRADIENTS(DECIMAL) TO USE FOR FRICTION SLOPE = 0.90
  *DATA BANK RAINFALL USED*
  *ANTECEDENT MOISTURE CONDITION (AMC) I ASSUMED FOR RATIONAL METHOD*

  *USER-DEFINED STREET-SECTIONS FOR COUPLED PIPEFLOW AND STREETFLOW MODEL*
     HALF-  CROWN TO   STREET-CROSSFALL:   CURB  GUTTER-GEOMETRIES:  MANNING
     WIDTH  CROSSFALL  IN-  / OUT-/PARK-  HEIGHT  WIDTH  LIP   HIKE  FACTOR
NO.   (FT)     (FT)    SIDE / SIDE/ WAY    (FT)    (FT)  (FT)  (FT)    (n)
===  =====  =========  =================  ======  ===== ====== ===== =======
  1   30.0     20.0    0.018/0.018/0.020   0.67    2.00 0.0312 0.167 0.0150

  GLOBAL STREET FLOW-DEPTH CONSTRAINTS:
    1. Relative Flow-Depth =  0.00 FEET
       as (Maximum Allowable Street Flow Depth) - (Top-of-Curb)
    2. (Depth)*(Velocity) Constraint =  6.0 (FT*FT/S)
  *SIZE PIPE WITH A FLOW CAPACITY GREATER THAN
   OR EQUAL TO THE UPSTREAM TRIBUTARY PIPE.*
  *USER-SPECIFIED MINIMUM TOPOGRAPHIC SLOPE ADJUSTMENT NOT SELECTED

****************************************************************************
```

```
  FLOW PROCESS FROM NODE    100.00 TO NODE    110.00 IS CODE =  21
----------------------------------------------------------------------------
  >>>>>RATIONAL METHOD INITIAL SUBAREA ANALYSIS<<<<<
  >>USE TIME-OF-CONCENTRATION NOMOGRAPH FOR INITIAL SUBAREA<<
============================================================================
  INITIAL SUBAREA FLOW-LENGTH(FEET) =   324.00
  ELEVATION DATA: UPSTREAM(FEET) =    188.00  DOWNSTREAM(FEET) =    185.20

  Tc = K*[(LENGTH** 3.00)/(ELEVATION CHANGE)]**0.20
  SUBAREA ANALYSIS USED MINIMUM Tc(MIN.) =    7.939
  *   2 YEAR RAINFALL INTENSITY(INCH/HR) =  1.736
  SUBAREA Tc AND LOSS RATE DATA(AMC  I ):
   DEVELOPMENT TYPE/      SCS SOIL   AREA      Fp         Ap     SCS   Tc
       LAND USE            GROUP   (ACRES)  (INCH/HR)  (DECIMAL)  CN  (MIN.)
  COMMERCIAL                 A        0.85      0.40     0.100    17    7.94
  SUBAREA AVERAGE PERVIOUS LOSS RATE, Fp(INCH/HR) =  0.40
  SUBAREA AVERAGE PERVIOUS AREA FRACTION, Ap =  0.100
  SUBAREA RUNOFF(CFS) =      1.30
  TOTAL AREA(ACRES) =      0.85   PEAK FLOW RATE(CFS) =      1.30
============================================================================
  END OF STUDY SUMMARY:
  TOTAL AREA(ACRES)     =        0.9  TC(MIN.) =      7.94
  EFFECTIVE AREA(ACRES) =      0.85  AREA-AVERAGED Fm(INCH/HR)=  0.04
  AREA-AVERAGED Fp(INCH/HR) =  0.40  AREA-AVERAGED Ap = 0.100
  PEAK FLOW RATE(CFS)   =       1.30
============================================================================
============================================================================
  END OF RATIONAL METHOD ANALYSIS
```

↑

****

NON-HOMOGENEOUS WATERSHED AREA-AVERAGED LOSS RATE (Fm)

AND LOW LOSS FRACTION ESTIMATIONS

==========

(C) Copyright 1989-2008 Advanced Engineering Software (aes)

Ver. 15.0 Release Date: 04/01/2008 License ID 1452

Analysis prepared by:

PASCO LARET SUITER & ASSOCIATES

535 N Coast Highway 101 Ste A, Solana Beach, CA 92075

ph 858.259.8212

plsaengineering.com

****

3034 Park Plaza

2-Yr Existing Condition

==========

NON-HOMOGENEOUS WATERSHED AREA-AVERAGED LOSS RATE (Fm) AND LOW LOSS FRACTION ESTIMATIONS FOR AMC I:

TOTAL 24-HOUR DURATION RAINFALL DEPTH = 2.05 (inches)

SOIL-COVER TYPE	AREA (Acres)	PERCENT OF PERVIOUS AREA	SCS CURVE NUMBER	LOSS RATE Fp(in./hr.)	YIELD
1	0.85	10.00	32.(AMC II)	0.400	0.801

TOTAL AREA (Acres) = 0.85

AREA-AVERAGED LOSS RATE, Fm (in./hr.) = 0.040

AREA-AVERAGED LOW LOSS FRACTION, Y = 0.199

==========

```
_____________________________________________________________________________
*****************************************************************************
                          SMALL AREA UNIT HYDROGRAPH MODEL
=============================================================================
                (C) Copyright 1989-2008 Advanced Engineering Software (aes)
                      Ver. 15.0 Release Date: 04/01/2008 License ID 1452
                                Analysis prepared by:
                          PASCO LARET SUITER & ASSOCIATES
                   535 N Coast Highway 101 Ste A, Solana Beach, CA 92075
                                   ph 858.259.8212
                                  plsaengineering.com
*****************************************************************************

  3034 Park Plaza

  2-Yr Existing Condition

=============================================================================


 RATIONAL METHOD CALIBRATION COEFFICIENT = 0.90
 TOTAL CATCHMENT AREA(ACRES) =    0.85
 SOIL-LOSS RATE, Fm,(INCH/HR) =  0.040
 LOW LOSS FRACTION = 0.199
 TIME OF CONCENTRATION(MIN.) =  7.94
 SMALL AREA PEAK Q COMPUTED USING PEAK FLOW RATE FORMULA
 ORANGE COUNTY "VALLEY" RAINFALL VALUES ARE USED
 RETURN FREQUENCY(YEARS) =   2
   5-MINUTE POINT RAINFALL VALUE(INCHES) =  0.19
  30-MINUTE POINT RAINFALL VALUE(INCHES) =  0.40
   1-HOUR   POINT RAINFALL VALUE(INCHES) =  0.53
   3-HOUR   POINT RAINFALL VALUE(INCHES) =  0.89
   6-HOUR   POINT RAINFALL VALUE(INCHES) =  1.22
  24-HOUR   POINT RAINFALL VALUE(INCHES) =  2.05

----------------------------------------------------------------------------

 TOTAL CATCHMENT   RUNOFF  VOLUME(ACRE-FEET) =    0.11
 TOTAL CATCHMENT SOIL-LOSS VOLUME(ACRE-FEET) =    0.04

*****************************************************************************
  TIME     VOLUME      Q   0.       2.5      5.0      7.5     10.0
 (HOURS)   (AF)      (CFS)
----------------------------------------------------------------------------
  0.12     0.0001     0.02  Q       .        .        .        .
  0.25     0.0003     0.02  Q       .        .        .        .
  0.38     0.0005     0.02  Q       .        .        .        .
  0.52     0.0008     0.02  Q       .        .        .        .
  0.65     0.0010     0.02  Q       .        .        .        .
```

0.78	0.0012	0.02	Q	.	.	.	.
0.91	0.0014	0.02	Q	.	.	.	.
1.05	0.0016	0.02	Q	.	.	.	.
1.18	0.0019	0.02	Q	.	.	.	.
1.31	0.0021	0.02	Q	.	.	.	.
1.44	0.0023	0.02	Q	.	.	.	.
1.58	0.0025	0.02	Q	.	.	.	.
1.71	0.0028	0.02	Q	.	.	.	.
1.84	0.0030	0.02	Q	.	.	.	.
1.97	0.0032	0.02	Q	.	.	.	.
2.11	0.0035	0.02	Q	.	.	.	.
2.24	0.0037	0.02	Q	.	.	.	.
2.37	0.0039	0.02	Q	.	.	.	.
2.50	0.0042	0.02	Q	.	.	.	.
2.63	0.0044	0.02	Q	.	.	.	.
2.77	0.0046	0.02	Q	.	.	.	.
2.90	0.0049	0.02	Q	.	.	.	.
3.03	0.0051	0.02	Q	.	.	.	.
3.16	0.0054	0.02	Q	.	.	.	.
3.30	0.0056	0.02	Q	.	.	.	.
3.43	0.0059	0.02	Q	.	.	.	.
3.56	0.0061	0.02	Q	.	.	.	.
3.69	0.0064	0.02	Q	.	.	.	.
3.83	0.0066	0.02	Q	.	.	.	.
3.96	0.0069	0.02	Q	.	.	.	.
4.09	0.0071	0.02	Q	.	.	.	.
4.22	0.0074	0.02	Q	.	.	.	.
4.35	0.0076	0.02	Q	.	.	.	.
4.49	0.0079	0.02	Q	.	.	.	.
4.62	0.0082	0.02	Q	.	.	.	.
4.75	0.0084	0.02	Q	.	.	.	.
4.88	0.0087	0.02	Q	.	.	.	.
5.02	0.0090	0.02	Q	.	.	.	.
5.15	0.0092	0.02	Q	.	.	.	.
5.28	0.0095	0.03	Q	.	.	.	.
5.41	0.0098	0.03	Q	.	.	.	.
5.55	0.0101	0.03	Q	.	.	.	.
5.68	0.0103	0.03	Q	.	.	.	.
5.81	0.0106	0.03	Q	.	.	.	.
5.94	0.0109	0.03	Q	.	.	.	.
6.07	0.0112	0.03	Q	.	.	.	.
6.21	0.0115	0.03	Q	.	.	.	.
6.34	0.0118	0.03	Q	.	.	.	.
6.47	0.0121	0.03	Q	.	.	.	.
6.60	0.0123	0.03	Q	.	.	.	.
6.74	0.0126	0.03	Q	.	.	.	.
6.87	0.0129	0.03	Q	.	.	.	.
7.00	0.0133	0.03	Q	.	.	.	.

7.13	0.0136	0.03	Q	.	.	.	.
7.27	0.0139	0.03	Q	.	.	.	.
7.40	0.0142	0.03	Q	.	.	.	.
7.53	0.0145	0.03	Q	.	.	.	.
7.66	0.0148	0.03	Q	.	.	.	.
7.80	0.0151	0.03	Q	.	.	.	.
7.93	0.0155	0.03	Q	.	.	.	.
8.06	0.0158	0.03	Q	.	.	.	.
8.19	0.0161	0.03	Q	.	.	.	.
8.32	0.0165	0.03	Q	.	.	.	.
8.46	0.0168	0.03	Q	.	.	.	.
8.59	0.0171	0.03	Q	.	.	.	.
8.72	0.0175	0.03	Q	.	.	.	.
8.85	0.0178	0.03	Q	.	.	.	.
8.99	0.0182	0.03	Q	.	.	.	.
9.12	0.0185	0.03	Q	.	.	.	.
9.25	0.0189	0.03	Q	.	.	.	.
9.38	0.0193	0.03	Q	.	.	.	.
9.52	0.0196	0.03	Q	.	.	.	.
9.65	0.0200	0.03	Q	.	.	.	.
9.78	0.0204	0.04	Q	.	.	.	.
9.91	0.0208	0.04	Q	.	.	.	.
10.05	0.0212	0.04	Q	.	.	.	.
10.18	0.0216	0.04	Q	.	.	.	.
10.31	0.0220	0.04	Q	.	.	.	.
10.44	0.0224	0.04	Q	.	.	.	.
10.57	0.0228	0.04	Q	.	.	.	.
10.71	0.0232	0.04	Q	.	.	.	.
10.84	0.0236	0.04	Q	.	.	.	.
10.97	0.0241	0.04	Q	.	.	.	.
11.10	0.0245	0.04	Q	.	.	.	.
11.24	0.0250	0.04	Q	.	.	.	.
11.37	0.0254	0.04	Q	.	.	.	.
11.50	0.0259	0.04	Q	.	.	.	.
11.63	0.0263	0.04	Q	.	.	.	.
11.77	0.0268	0.04	Q	.	.	.	.
11.90	0.0273	0.05	Q	.	.	.	.
12.03	0.0278	0.05	Q	.	.	.	.
12.16	0.0284	0.06	Q	.	.	.	.
12.29	0.0290	0.06	Q	.	.	.	.
12.43	0.0296	0.06	Q	.	.	.	.
12.56	0.0303	0.06	Q	.	.	.	.
12.69	0.0310	0.06	Q	.	.	.	.
12.82	0.0317	0.06	Q	.	.	.	.
12.96	0.0323	0.06	Q	.	.	.	.
13.09	0.0331	0.07	Q	.	.	.	.
13.22	0.0338	0.07	Q	.	.	.	.
13.35	0.0345	0.07	Q	.	.	.	.

13.49	0.0353	0.07	Q	.	.	.	.
13.62	0.0361	0.07	Q	.	.	.	.
13.75	0.0369	0.08	Q	.	.	.	.
13.88	0.0378	0.08	Q	.	.	.	.
14.02	0.0386	0.08	Q	.	.	.	.
14.15	0.0395	0.09	Q	.	.	.	.
14.28	0.0405	0.09	Q	.	.	.	.
14.41	0.0415	0.09	Q	.	.	.	.
14.54	0.0425	0.10	Q	.	.	.	.
14.68	0.0436	0.10	Q	.	.	.	.
14.81	0.0448	0.11	Q	.	.	.	.
14.94	0.0460	0.11	Q	.	.	.	.
15.07	0.0473	0.12	Q	.	.	.	.
15.21	0.0487	0.13	Q	.	.	.	.
15.34	0.0502	0.15	Q	.	.	.	.
15.47	0.0518	0.15	Q	.	.	.	.
15.60	0.0535	0.17	Q	.	.	.	.
15.74	0.0555	0.19	Q	.	.	.	.
15.87	0.0582	0.30	.Q	.	.	.	.
16.00	0.0621	0.41	.Q	.	.	.	.
16.13	0.0714	1.30	. Q	.	.	.	.
16.26	0.0798	0.23	Q	.	.	.	.
16.40	0.0819	0.15	Q	.	.	.	.
16.53	0.0835	0.14	Q	.	.	.	.
16.66	0.0849	0.12	Q	.	.	.	.
16.79	0.0861	0.10	Q	.	.	.	.
16.93	0.0872	0.10	Q	.	.	.	.
17.06	0.0882	0.09	Q	.	.	.	.
17.19	0.0892	0.08	Q	.	.	.	.
17.32	0.0900	0.07	Q	.	.	.	.
17.46	0.0908	0.07	Q	.	.	.	.
17.59	0.0915	0.07	Q	.	.	.	.
17.72	0.0922	0.06	Q	.	.	.	.
17.85	0.0929	0.06	Q	.	.	.	.
17.98	0.0936	0.06	Q	.	.	.	.
18.12	0.0942	0.05	Q	.	.	.	.
18.25	0.0947	0.04	Q	.	.	.	.
18.38	0.0952	0.04	Q	.	.	.	.
18.51	0.0956	0.04	Q	.	.	.	.
18.65	0.0961	0.04	Q	.	.	.	.
18.78	0.0965	0.04	Q	.	.	.	.
18.91	0.0969	0.04	Q	.	.	.	.
19.04	0.0973	0.04	Q	.	.	.	.
19.18	0.0977	0.04	Q	.	.	.	.
19.31	0.0981	0.03	Q	.	.	.	.
19.44	0.0985	0.03	Q	.	.	.	.
19.57	0.0989	0.03	Q	.	.	.	.
19.71	0.0992	0.03	Q	.	.	.	.

19.84	0.0996	0.03	Q	.	.	.	.
19.97	0.0999	0.03	Q	.	.	.	.
20.10	0.1003	0.03	Q	.	.	.	.
20.23	0.1006	0.03	Q	.	.	.	.
20.37	0.1009	0.03	Q	.	.	.	.
20.50	0.1012	0.03	Q	.	.	.	.
20.63	0.1015	0.03	Q	.	.	.	.
20.76	0.1018	0.03	Q	.	.	.	.
20.90	0.1021	0.03	Q	.	.	.	.
21.03	0.1024	0.03	Q	.	.	.	.
21.16	0.1027	0.03	Q	.	.	.	.
21.29	0.1030	0.03	Q	.	.	.	.
21.43	0.1033	0.03	Q	.	.	.	.
21.56	0.1035	0.02	Q	.	.	.	.
21.69	0.1038	0.02	Q	.	.	.	.
21.82	0.1041	0.02	Q	.	.	.	.
21.95	0.1043	0.02	Q	.	.	.	.
22.09	0.1046	0.02	Q	.	.	.	.
22.22	0.1049	0.02	Q	.	.	.	.
22.35	0.1051	0.02	Q	.	.	.	.
22.48	0.1054	0.02	Q	.	.	.	.
22.62	0.1056	0.02	Q	.	.	.	.
22.75	0.1059	0.02	Q	.	.	.	.
22.88	0.1061	0.02	Q	.	.	.	.
23.01	0.1063	0.02	Q	.	.	.	.
23.15	0.1066	0.02	Q	.	.	.	.
23.28	0.1068	0.02	Q	.	.	.	.
23.41	0.1070	0.02	Q	.	.	.	.
23.54	0.1072	0.02	Q	.	.	.	.
23.68	0.1075	0.02	Q	.	.	.	.
23.81	0.1077	0.02	Q	.	.	.	.
23.94	0.1079	0.02	Q	.	.	.	.
24.07	0.1081	0.02	Q	.	.	.	.
24.20	0.1082	0.00	Q	.	.	.	.

TIME DURATION(minutes) OF PERCENTILES OF ESTIMATED PEAK FLOW RATE:
(Note: 100% of Peak Flow Rate estimate assumed to have
an instantaneous time duration)

Percentile of Estimated Peak Flow Rate	Duration (minutes)
0%	1445.1
10%	87.3
20%	23.8
30%	15.9
40%	7.9
50%	7.9

60%	7.9
70%	7.9
80%	7.9
90%	7.9

Hydraulic Analysis Report

Project Data

Project Title: 3034 Park Plaza

Channel Analysis: Pre-Project

Input Parameters

Channel Type: Rectangular

Channel Width: 27.6000 ft

Longitudinal Slope: 0.0100 ft/ft

Manning's n: 0.0150

Flow: 1.3000 cfs

Result Parameters

Depth: 0.0405 ft

Area of Flow: 1.1177 ft^2

Wetted Perimeter: 27.6810 ft

Hydraulic Radius: 0.0404 ft

Average Velocity: 1.1631 ft/s

Top Width: 27.6000 ft

Froude Number: 1.0185

Critical Depth: 0.0410 ft

Critical Velocity: 1.1489 ft/s

Critical Slope: 0.0096 ft/ft

Critical Top Width: 27.60 ft

Calculated Max Shear Stress: 0.0253 lb/ft^2

Calculated Avg Shear Stress: 0.0252 lb/ft^2

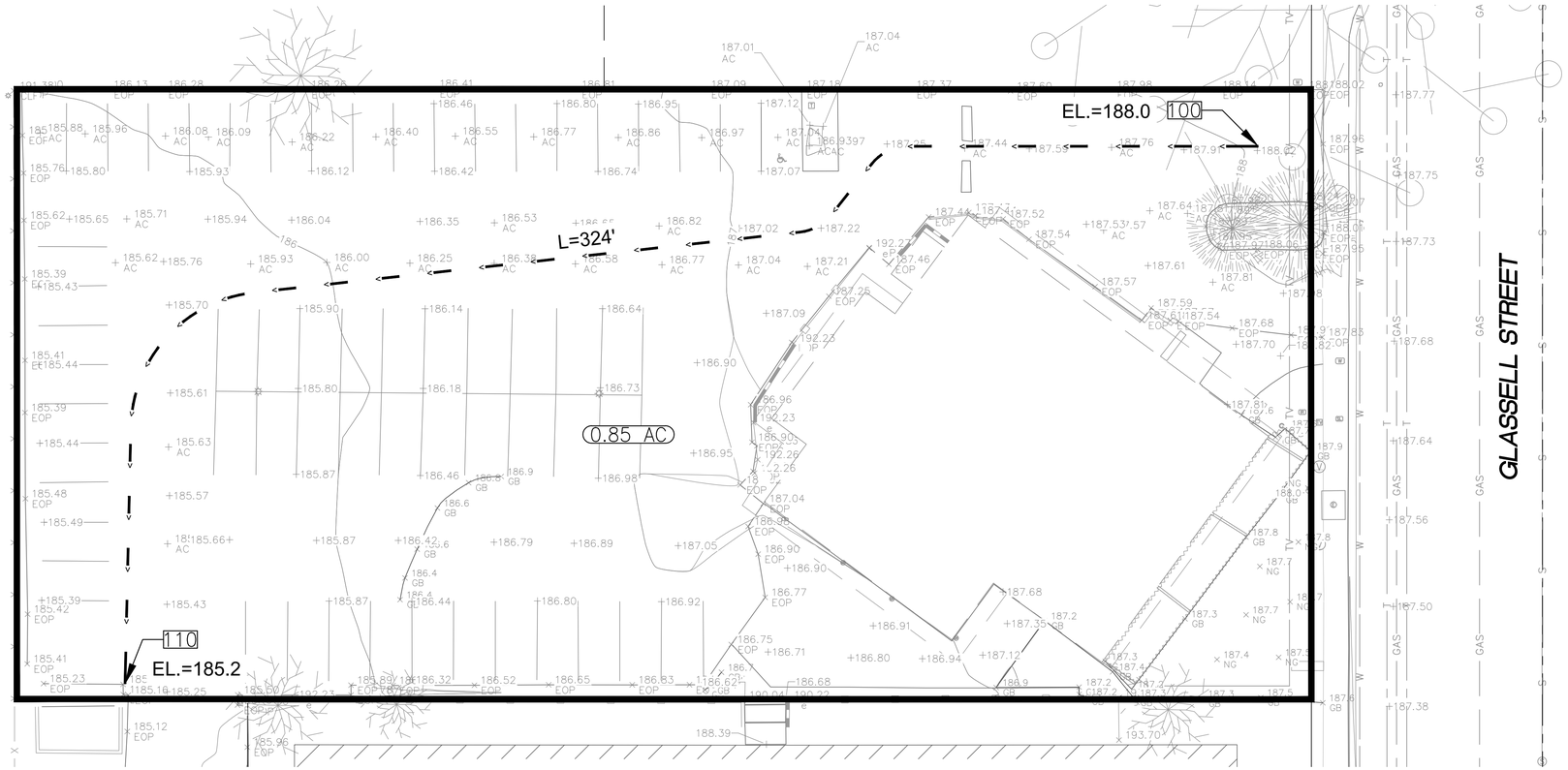

LEGEND:

▬▬▬	MAJOR-BASIN BOUNDARY
— <—	FLOW PATH
100	HYDROLOGIC NODE
1.0 AC	HYDROLOGIC AREA
EL.=1555.0	ELEVATION AT NODE

N

15' 7.5' 0 15' 30' 45'

SCALE: 1"=15'

PREPARED BY:

PASCO LARET SUITER & ASSOCIATES
CIVIL ENGINEERING + LAND PLANNING + LAND SURVEYING
535 North Highway 101, Ste A, Solana Beach, CA 92075
ph 858.259.8212 | fx 858.259.4812 | plsaengineering.com

TRACT NO. 10803/PARCEL 1

PARK PLAZA EXPANSION DRAINAGE PRE-PROJECT

2/20/19

DRAWING:

SHEET 1 OF 1

```
****************************************************************************
             RATIONAL METHOD HYDROLOGY COMPUTER PROGRAM PACKAGE
            (Reference: 1986 ORANGE COUNTY HYDROLOGY CRITERION)
         (c) Copyright 1983-2016 Advanced Engineering Software (aes)
             Ver. 23.0  Release Date: 07/01/2016  License ID 1452

                          Analysis prepared by:




 ************************* DESCRIPTION OF STUDY *************************
* PARK PLAZA EXPANSION                                                 *
* 2-YR POST DEVELOPMENT                                                *
*                                                                      *
 ************************************************************************

  FILE NAME: 2POST.DAT
  TIME/DATE OF STUDY: 15:34 05/09/2019
============================================================================
  USER SPECIFIED HYDROLOGY AND HYDRAULIC MODEL INFORMATION:
============================================================================
                    --*TIME-OF-CONCENTRATION MODEL*--

  USER SPECIFIED STORM EVENT(YEAR) =    2.00
  SPECIFIED MINIMUM PIPE SIZE(INCH) =   6.00
  SPECIFIED PERCENT OF GRADIENTS(DECIMAL) TO USE FOR FRICTION SLOPE = 0.90
  *DATA BANK RAINFALL USED*
  *ANTECEDENT MOISTURE CONDITION (AMC) I ASSUMED FOR RATIONAL METHOD*

  *USER-DEFINED STREET-SECTIONS FOR COUPLED PIPEFLOW AND STREETFLOW MODEL*
     HALF-  CROWN TO   STREET-CROSSFALL:   CURB  GUTTER-GEOMETRIES:  MANNING
     WIDTH  CROSSFALL  IN-  / OUT-/PARK-  HEIGHT  WIDTH  LIP   HIKE  FACTOR
NO.   (FT)     (FT)    SIDE / SIDE/ WAY    (FT)    (FT)  (FT)  (FT)    (n)
===  =====  =========  =================  ======  ===== ====== ===== =======
  1   30.0     20.0    0.018/0.018/0.020   0.67    2.00 0.0312 0.167 0.0150

  GLOBAL STREET FLOW-DEPTH CONSTRAINTS:
    1. Relative Flow-Depth =  0.00 FEET
       as (Maximum Allowable Street Flow Depth) - (Top-of-Curb)
    2. (Depth)*(Velocity) Constraint =  6.0 (FT*FT/S)
  *SIZE PIPE WITH A FLOW CAPACITY GREATER THAN
   OR EQUAL TO THE UPSTREAM TRIBUTARY PIPE.*
  *USER-SPECIFIED MINIMUM TOPOGRAPHIC SLOPE ADJUSTMENT NOT SELECTED

****************************************************************************
  FLOW PROCESS FROM NODE    100.00 TO NODE    102.00 IS CODE =  21
```

```
----------------------------------------------------------------------------
  >>>>>RATIONAL METHOD INITIAL SUBAREA ANALYSIS<<<<<
  >>USE TIME-OF-CONCENTRATION NOMOGRAPH FOR INITIAL SUBAREA<<
============================================================================
  INITIAL SUBAREA FLOW-LENGTH(FEET) =   323.00
  ELEVATION DATA: UPSTREAM(FEET) =    188.00  DOWNSTREAM(FEET) =    184.90

  Tc = K*[(LENGTH** 3.00)/(ELEVATION CHANGE)]**0.20
  SUBAREA ANALYSIS USED MINIMUM Tc(MIN.) =    8.275
  *   2 YEAR RAINFALL INTENSITY(INCH/HR) =  1.695
  SUBAREA Tc AND LOSS RATE DATA(AMC  I ):
   DEVELOPMENT TYPE/      SCS SOIL   AREA      Fp         Ap     SCS   Tc
       LAND USE            GROUP   (ACRES)  (INCH/HR)  (DECIMAL)  CN  (MIN.)
  RESIDENTIAL
  "11+ DWELLINGS/ACRE"       A        0.57      0.40     0.200    17    8.28
  SUBAREA AVERAGE PERVIOUS LOSS RATE, Fp(INCH/HR) =  0.40
  SUBAREA AVERAGE PERVIOUS AREA FRACTION, Ap =  0.200
  SUBAREA RUNOFF(CFS) =      0.83
  TOTAL AREA(ACRES) =      0.57   PEAK FLOW RATE(CFS) =      0.83

****************************************************************************
  FLOW PROCESS FROM NODE    102.00 TO NODE    400.00 IS CODE =  31
----------------------------------------------------------------------------
  >>>>>COMPUTE PIPE-FLOW TRAVEL TIME THRU SUBAREA<<<<<
  >>>>>USING COMPUTER-ESTIMATED PIPESIZE (NON-PRESSURE FLOW)<<<<<
============================================================================
  ELEVATION DATA: UPSTREAM(FEET) =   182.90  DOWNSTREAM(FEET) =   182.80
  FLOW LENGTH(FEET) =    20.00   MANNING'S N =  0.009
  DEPTH OF FLOW IN   9.0 INCH PIPE IS   4.6 INCHES
  PIPE-FLOW VELOCITY(FEET/SEC.) =   3.65
  ESTIMATED PIPE DIAMETER(INCH) =   9.00    NUMBER OF PIPES =   1
  PIPE-FLOW(CFS) =       0.83
  PIPE TRAVEL TIME(MIN.) =   0.09    Tc(MIN.) =    8.37
  LONGEST FLOWPATH FROM NODE    100.00 TO NODE    400.00 =     343.00 FEET.

****************************************************************************
  FLOW PROCESS FROM NODE    400.00 TO NODE    400.00 IS CODE =   1
----------------------------------------------------------------------------
  >>>>>DESIGNATE INDEPENDENT STREAM FOR CONFLUENCE<<<<<
============================================================================
  TOTAL NUMBER OF STREAMS =  2
  CONFLUENCE VALUES USED FOR INDEPENDENT STREAM  1 ARE:
  TIME OF CONCENTRATION(MIN.) =    8.37
  RAINFALL INTENSITY(INCH/HR) =   1.68
  AREA-AVERAGED Fm(INCH/HR) =  0.08
  AREA-AVERAGED Fp(INCH/HR) =  0.40
  AREA-AVERAGED Ap =  0.20
  EFFECTIVE STREAM AREA(ACRES) =       0.57
  TOTAL STREAM AREA(ACRES) =       0.57
  PEAK FLOW RATE(CFS) AT CONFLUENCE =       0.83
```

```
****************************************************************************
  FLOW PROCESS FROM NODE    200.00 TO NODE    202.00 IS CODE =  21
----------------------------------------------------------------------------
  >>>>>RATIONAL METHOD INITIAL SUBAREA ANALYSIS<<<<<
  >>USE TIME-OF-CONCENTRATION NOMOGRAPH FOR INITIAL SUBAREA<<
============================================================================
  INITIAL SUBAREA FLOW-LENGTH(FEET) =   193.00
  ELEVATION DATA: UPSTREAM(FEET) =    188.20  DOWNSTREAM(FEET) =    187.24

  Tc = K*[(LENGTH** 3.00)/(ELEVATION CHANGE)]**0.20
  SUBAREA ANALYSIS USED MINIMUM Tc(MIN.) =    7.681
  *   2 YEAR RAINFALL INTENSITY(INCH/HR) =  1.769
  SUBAREA Tc AND LOSS RATE DATA(AMC  I ):
   DEVELOPMENT TYPE/      SCS SOIL   AREA      Fp         Ap     SCS   Tc
       LAND USE            GROUP   (ACRES)  (INCH/HR)  (DECIMAL)  CN  (MIN.)
  RESIDENTIAL
  "11+ DWELLINGS/ACRE"       A        0.23      0.40     0.200    17    7.68
  SUBAREA AVERAGE PERVIOUS LOSS RATE, Fp(INCH/HR) =  0.40
  SUBAREA AVERAGE PERVIOUS AREA FRACTION, Ap =  0.200
  SUBAREA RUNOFF(CFS) =      0.35
  TOTAL AREA(ACRES) =      0.23   PEAK FLOW RATE(CFS) =      0.35

****************************************************************************
  FLOW PROCESS FROM NODE    202.00 TO NODE    400.00 IS CODE =  31
----------------------------------------------------------------------------
  >>>>>COMPUTE PIPE-FLOW TRAVEL TIME THRU SUBAREA<<<<<
  >>>>>USING COMPUTER-ESTIMATED PIPESIZE (NON-PRESSURE FLOW)<<<<<
============================================================================
  ELEVATION DATA: UPSTREAM(FEET) =   183.90  DOWNSTREAM(FEET) =   182.80
  FLOW LENGTH(FEET) =    33.00   MANNING'S N =  0.009
  DEPTH OF FLOW IN   6.0 INCH PIPE IS   2.0 INCHES
  PIPE-FLOW VELOCITY(FEET/SEC.) =   5.92
  ESTIMATED PIPE DIAMETER(INCH) =   6.00    NUMBER OF PIPES =   1
  PIPE-FLOW(CFS) =       0.35
  PIPE TRAVEL TIME(MIN.) =   0.09    Tc(MIN.) =    7.77
  LONGEST FLOWPATH FROM NODE    200.00 TO NODE    400.00 =     226.00 FEET.

****************************************************************************
  FLOW PROCESS FROM NODE    400.00 TO NODE    400.00 IS CODE =   1
----------------------------------------------------------------------------
  >>>>>DESIGNATE INDEPENDENT STREAM FOR CONFLUENCE<<<<<
  >>>>>AND COMPUTE VARIOUS CONFLUENCED STREAM VALUES<<<<<
============================================================================
  TOTAL NUMBER OF STREAMS =  2
  CONFLUENCE VALUES USED FOR INDEPENDENT STREAM  2 ARE:
  TIME OF CONCENTRATION(MIN.) =    7.77
  RAINFALL INTENSITY(INCH/HR) =   1.76
  AREA-AVERAGED Fm(INCH/HR) =  0.08
  AREA-AVERAGED Fp(INCH/HR) =  0.40
```

```
  AREA-AVERAGED Ap =  0.20
  EFFECTIVE STREAM AREA(ACRES) =       0.23
  TOTAL STREAM AREA(ACRES) =       0.23
  PEAK FLOW RATE(CFS) AT CONFLUENCE =       0.35

  ** CONFLUENCE DATA **
   STREAM       Q      Tc   Intensity   Fp(Fm)     Ap     Ae     HEADWATER
   NUMBER     (CFS)  (MIN.) (INCH/HR) (INCH/HR)         (ACRES)    NODE
      1        0.83    8.37    1.685  0.40( 0.08) 0.20       0.6     100.00
      2        0.35    7.77    1.757  0.40( 0.08) 0.20       0.2     200.00

  RAINFALL INTENSITY AND TIME OF CONCENTRATION RATIO
  CONFLUENCE FORMULA USED FOR  2 STREAMS.

  ** PEAK FLOW RATE TABLE **
   STREAM       Q      Tc   Intensity   Fp(Fm)     Ap     Ae     HEADWATER
   NUMBER     (CFS)  (MIN.) (INCH/HR) (INCH/HR)         (ACRES)    NODE
      1        1.15    7.77    1.757  0.40( 0.08) 0.20       0.8     200.00
      2        1.16    8.37    1.685  0.40( 0.08) 0.20       0.8     100.00

  COMPUTED CONFLUENCE ESTIMATES ARE AS FOLLOWS:
  PEAK FLOW RATE(CFS) =       1.16    Tc(MIN.) =     8.37
  EFFECTIVE AREA(ACRES) =       0.80   AREA-AVERAGED Fm(INCH/HR) =  0.08
  AREA-AVERAGED Fp(INCH/HR) =  0.40  AREA-AVERAGED Ap =  0.20
  TOTAL AREA(ACRES) =        0.8
  LONGEST FLOWPATH FROM NODE    100.00 TO NODE    400.00 =     343.00 FEET.

****************************************************************************
  FLOW PROCESS FROM NODE    300.00 TO NODE    302.00 IS CODE =  21
----------------------------------------------------------------------------
  >>>>>RATIONAL METHOD INITIAL SUBAREA ANALYSIS<<<<<
  >>USE TIME-OF-CONCENTRATION NOMOGRAPH FOR INITIAL SUBAREA<<
============================================================================
  INITIAL SUBAREA FLOW-LENGTH(FEET) =    19.00
  ELEVATION DATA: UPSTREAM(FEET) =    188.20  DOWNSTREAM(FEET) =    187.90

  Tc = K*[(LENGTH** 3.00)/(ELEVATION CHANGE)]**0.20
  SUBAREA ANALYSIS USED MINIMUM Tc(MIN.) =    5.000
  *   2 YEAR RAINFALL INTENSITY(INCH/HR) =  2.264
  SUBAREA Tc AND LOSS RATE DATA(AMC  I ):
   DEVELOPMENT TYPE/      SCS SOIL   AREA      Fp         Ap     SCS   Tc
       LAND USE            GROUP   (ACRES)  (INCH/HR)  (DECIMAL)  CN  (MIN.)
  RESIDENTIAL
  "11+ DWELLINGS/ACRE"       A        0.05      0.40     0.200    17    5.00
  SUBAREA AVERAGE PERVIOUS LOSS RATE, Fp(INCH/HR) =  0.40
  SUBAREA AVERAGE PERVIOUS AREA FRACTION, Ap =  0.200
  SUBAREA RUNOFF(CFS) =      0.10
  TOTAL AREA(ACRES) =      0.05   PEAK FLOW RATE(CFS) =      0.10
============================================================================
  END OF STUDY SUMMARY:
```

```
  TOTAL AREA(ACRES)     =        0.1  TC(MIN.) =      5.00
  EFFECTIVE AREA(ACRES) =      0.05  AREA-AVERAGED Fm(INCH/HR)=  0.08
  AREA-AVERAGED Fp(INCH/HR) =  0.40  AREA-AVERAGED Ap = 0.200
  PEAK FLOW RATE(CFS)   =       0.10
============================================================================
============================================================================
  END OF RATIONAL METHOD ANALYSIS
```

🡅

****

NON-HOMOGENEOUS WATERSHED AREA-AVERAGED LOSS RATE (Fm)

AND LOW LOSS FRACTION ESTIMATIONS

==========

(C) Copyright 1989-2008 Advanced Engineering Software (aes)

Ver. 15.0 Release Date: 04/01/2008 License ID 1452

Analysis prepared by:

PASCO LARET SUITER & ASSOCIATES

535 N Coast Highway 101 Ste A, Solana Beach, CA 92075

ph 858.259.8212

plsaengineering.com

****

3034 Park Plaza

2-Yr Post Project

==========

NON-HOMOGENEOUS WATERSHED AREA-AVERAGED LOSS RATE (Fm) AND LOW LOSS FRACTION ESTIMATIONS FOR AMC I:

TOTAL 24-HOUR DURATION RAINFALL DEPTH = 2.05 (inches)

SOIL-COVER TYPE	AREA (Acres)	PERCENT OF PERVIOUS AREA	SCS CURVE NUMBER	LOSS RATE Fp(in./hr.)	YIELD
1	0.80	20.00	32.(AMC II)	0.400	0.712

TOTAL AREA (Acres) = 0.80

AREA-AVERAGED LOSS RATE, Fm (in./hr.) = 0.080

AREA-AVERAGED LOW LOSS FRACTION, Y = 0.288

==========

```
____________________________________________________________________________
****************************************************************************
                        SMALL AREA UNIT HYDROGRAPH MODEL
============================================================================
              (C) Copyright 1989-2008 Advanced Engineering Software (aes)
                    Ver. 15.0 Release Date: 04/01/2008 License ID 1452
                                Analysis prepared by:
                          PASCO LARET SUITER & ASSOCIATES
                   535 N Coast Highway 101 Ste A, Solana Beach, CA 92075
                                   ph 858.259.8212
                                  plsaengineering.com
****************************************************************************

  3034 Park Plaza

  2-Yr Post Project

============================================================================

RATIONAL METHOD CALIBRATION COEFFICIENT = 0.90
   TOTAL CATCHMENT AREA(ACRES) =    0.80
   SOIL-LOSS RATE, Fm,(INCH/HR) =  0.080
   LOW LOSS FRACTION = 0.288
   TIME OF CONCENTRATION(MIN.) =  8.37
   SMALL AREA PEAK Q COMPUTED USING PEAK FLOW RATE FORMULA
   ORANGE COUNTY "VALLEY" RAINFALL VALUES ARE USED
   RETURN FREQUENCY(YEARS) =   2
     5-MINUTE POINT RAINFALL VALUE(INCHES) =  0.19
    30-MINUTE POINT RAINFALL VALUE(INCHES) =  0.40
     1-HOUR   POINT RAINFALL VALUE(INCHES) =  0.53
     3-HOUR   POINT RAINFALL VALUE(INCHES) =  0.89
     6-HOUR   POINT RAINFALL VALUE(INCHES) =  1.22
    24-HOUR   POINT RAINFALL VALUE(INCHES) =  2.05

----------------------------------------------------------------------------

   TOTAL CATCHMENT   RUNOFF  VOLUME(ACRE-FEET) =     0.09
   TOTAL CATCHMENT SOIL-LOSS VOLUME(ACRE-FEET) =     0.05

****************************************************************************
  TIME     VOLUME      Q   0.       2.5      5.0      7.5     10.0
 (HOURS)    (AF)     (CFS)
----------------------------------------------------------------------------
  0.10     0.0001     0.02  Q       .        .        .        .
  0.24     0.0003     0.02  Q       .        .        .        .
  0.38     0.0005     0.02  Q       .        .        .        .
  0.52     0.0007     0.02  Q       .        .        .        .
  0.66     0.0009     0.02  Q       .        .        .        .
  0.79     0.0011     0.02  Q       .        .        .        .
```

0.93	0.0013	0.02	Q	.	.	.	.
1.07	0.0014	0.02	Q	.	.	.	.
1.21	0.0016	0.02	Q	.	.	.	.
1.35	0.0018	0.02	Q	.	.	.	.
1.49	0.0020	0.02	Q	.	.	.	.
1.63	0.0022	0.02	Q	.	.	.	.
1.77	0.0024	0.02	Q	.	.	.	.
1.91	0.0026	0.02	Q	.	.	.	.
2.05	0.0029	0.02	Q	.	.	.	.
2.19	0.0031	0.02	Q	.	.	.	.
2.33	0.0033	0.02	Q	.	.	.	.
2.47	0.0035	0.02	Q	.	.	.	.
2.61	0.0037	0.02	Q	.	.	.	.
2.75	0.0039	0.02	Q	.	.	.	.
2.89	0.0041	0.02	Q	.	.	.	.
3.03	0.0043	0.02	Q	.	.	.	.
3.17	0.0045	0.02	Q	.	.	.	.
3.31	0.0048	0.02	Q	.	.	.	.
3.45	0.0050	0.02	Q	.	.	.	.
3.58	0.0052	0.02	Q	.	.	.	.
3.72	0.0054	0.02	Q	.	.	.	.
3.86	0.0056	0.02	Q	.	.	.	.
4.00	0.0059	0.02	Q	.	.	.	.
4.14	0.0061	0.02	Q	.	.	.	.
4.28	0.0063	0.02	Q	.	.	.	.
4.42	0.0065	0.02	Q	.	.	.	.
4.56	0.0068	0.02	Q	.	.	.	.
4.70	0.0070	0.02	Q	.	.	.	.
4.84	0.0072	0.02	Q	.	.	.	.
4.98	0.0075	0.02	Q	.	.	.	.
5.12	0.0077	0.02	Q	.	.	.	.
5.26	0.0080	0.02	Q	.	.	.	.
5.40	0.0082	0.02	Q	.	.	.	.
5.54	0.0085	0.02	Q	.	.	.	.
5.68	0.0087	0.02	Q	.	.	.	.
5.82	0.0089	0.02	Q	.	.	.	.
5.96	0.0092	0.02	Q	.	.	.	.
6.10	0.0094	0.02	Q	.	.	.	.
6.24	0.0097	0.02	Q	.	.	.	.
6.37	0.0100	0.02	Q	.	.	.	.
6.51	0.0102	0.02	Q	.	.	.	.
6.65	0.0105	0.02	Q	.	.	.	.
6.79	0.0107	0.02	Q	.	.	.	.
6.93	0.0110	0.02	Q	.	.	.	.
7.07	0.0113	0.02	Q	.	.	.	.
7.21	0.0116	0.02	Q	.	.	.	.
7.35	0.0118	0.02	Q	.	.	.	.
7.49	0.0121	0.02	Q	.	.	.	.

7.63	0.0124	0.02	Q	.	.	.	.
7.77	0.0127	0.02	Q	.	.	.	.
7.91	0.0130	0.02	Q	.	.	.	.
8.05	0.0132	0.03	Q	.	.	.	.
8.19	0.0135	0.03	Q	.	.	.	.
8.33	0.0138	0.03	Q	.	.	.	.
8.47	0.0141	0.03	Q	.	.	.	.
8.61	0.0144	0.03	Q	.	.	.	.
8.75	0.0147	0.03	Q	.	.	.	.
8.89	0.0151	0.03	Q	.	.	.	.
9.02	0.0154	0.03	Q	.	.	.	.
9.16	0.0157	0.03	Q	.	.	.	.
9.30	0.0160	0.03	Q	.	.	.	.
9.44	0.0163	0.03	Q	.	.	.	.
9.58	0.0167	0.03	Q	.	.	.	.
9.72	0.0170	0.03	Q	.	.	.	.
9.86	0.0173	0.03	Q	.	.	.	.
10.00	0.0177	0.03	Q	.	.	.	.
10.14	0.0180	0.03	Q	.	.	.	.
10.28	0.0184	0.03	Q	.	.	.	.
10.42	0.0187	0.03	Q	.	.	.	.
10.56	0.0191	0.03	Q	.	.	.	.
10.70	0.0195	0.03	Q	.	.	.	.
10.84	0.0198	0.03	Q	.	.	.	.
10.98	0.0202	0.03	Q	.	.	.	.
11.12	0.0206	0.03	Q	.	.	.	.
11.26	0.0210	0.03	Q	.	.	.	.
11.40	0.0214	0.04	Q	.	.	.	.
11.54	0.0218	0.04	Q	.	.	.	.
11.68	0.0222	0.04	Q	.	.	.	.
11.82	0.0227	0.04	Q	.	.	.	.
11.95	0.0231	0.04	Q	.	.	.	.
12.09	0.0236	0.04	Q	.	.	.	.
12.23	0.0241	0.05	Q	.	.	.	.
12.37	0.0246	0.05	Q	.	.	.	.
12.51	0.0252	0.05	Q	.	.	.	.
12.65	0.0258	0.05	Q	.	.	.	.
12.79	0.0264	0.05	Q	.	.	.	.
12.93	0.0270	0.05	Q	.	.	.	.
13.07	0.0276	0.06	Q	.	.	.	.
13.21	0.0283	0.06	Q	.	.	.	.
13.35	0.0289	0.06	Q	.	.	.	.
13.49	0.0296	0.06	Q	.	.	.	.
13.63	0.0303	0.06	Q	.	.	.	.
13.77	0.0310	0.06	Q	.	.	.	.
13.91	0.0318	0.07	Q	.	.	.	.
14.05	0.0325	0.07	Q	.	.	.	.
14.19	0.0334	0.07	Q	.	.	.	.

14.33	0.0342	0.08	Q	.	.	.	.
14.47	0.0351	0.08	Q	.	.	.	.
14.60	0.0361	0.08	Q	.	.	.	.
14.74	0.0370	0.09	Q	.	.	.	.
14.88	0.0381	0.09	Q	.	.	.	.
15.02	0.0392	0.10	Q	.	.	.	.
15.16	0.0404	0.11	Q	.	.	.	.
15.30	0.0417	0.12	Q	.	.	.	.
15.44	0.0430	0.12	Q	.	.	.	.
15.58	0.0445	0.13	Q	.	.	.	.
15.72	0.0461	0.15	Q	.	.	.	.
15.86	0.0483	0.24	Q	.	.	.	.
16.00	0.0517	0.35	.Q	.	.	.	.
16.14	0.0604	1.16	. Q	.	.	.	.
16.28	0.0682	0.18	Q	.	.	.	.
16.42	0.0699	0.12	Q	.	.	.	.
16.56	0.0712	0.11	Q	.	.	.	.
16.70	0.0724	0.10	Q	.	.	.	.
16.84	0.0735	0.09	Q	.	.	.	.
16.98	0.0744	0.08	Q	.	.	.	.
17.12	0.0753	0.07	Q	.	.	.	.
17.26	0.0760	0.06	Q	.	.	.	.
17.39	0.0768	0.06	Q	.	.	.	.
17.53	0.0774	0.06	Q	.	.	.	.
17.67	0.0781	0.05	Q	.	.	.	.
17.81	0.0787	0.05	Q	.	.	.	.
17.95	0.0793	0.05	Q	.	.	.	.
18.09	0.0798	0.05	Q	.	.	.	.
18.23	0.0803	0.04	Q	.	.	.	.
18.37	0.0808	0.04	Q	.	.	.	.
18.51	0.0812	0.03	Q	.	.	.	.
18.65	0.0816	0.03	Q	.	.	.	.
18.79	0.0820	0.03	Q	.	.	.	.
18.93	0.0823	0.03	Q	.	.	.	.
19.07	0.0827	0.03	Q	.	.	.	.
19.21	0.0830	0.03	Q	.	.	.	.
19.35	0.0834	0.03	Q	.	.	.	.
19.49	0.0837	0.03	Q	.	.	.	.
19.63	0.0840	0.03	Q	.	.	.	.
19.77	0.0843	0.03	Q	.	.	.	.
19.91	0.0846	0.03	Q	.	.	.	.
20.05	0.0849	0.03	Q	.	.	.	.
20.18	0.0852	0.03	Q	.	.	.	.
20.32	0.0855	0.02	Q	.	.	.	.
20.46	0.0858	0.02	Q	.	.	.	.
20.60	0.0861	0.02	Q	.	.	.	.
20.74	0.0863	0.02	Q	.	.	.	.
20.88	0.0866	0.02	Q	.	.	.	.

21.02	0.0869	0.02	Q	.	.	.	.
21.16	0.0871	0.02	Q	.	.	.	.
21.30	0.0874	0.02	Q	.	.	.	.
21.44	0.0876	0.02	Q	.	.	.	.
21.58	0.0879	0.02	Q	.	.	.	.
21.72	0.0881	0.02	Q	.	.	.	.
21.86	0.0883	0.02	Q	.	.	.	.
22.00	0.0886	0.02	Q	.	.	.	.
22.14	0.0888	0.02	Q	.	.	.	.
22.28	0.0890	0.02	Q	.	.	.	.
22.42	0.0892	0.02	Q	.	.	.	.
22.56	0.0895	0.02	Q	.	.	.	.
22.70	0.0897	0.02	Q	.	.	.	.
22.84	0.0899	0.02	Q	.	.	.	.
22.98	0.0901	0.02	Q	.	.	.	.
23.11	0.0903	0.02	Q	.	.	.	.
23.25	0.0905	0.02	Q	.	.	.	.
23.39	0.0907	0.02	Q	.	.	.	.
23.53	0.0909	0.02	Q	.	.	.	.
23.67	0.0911	0.02	Q	.	.	.	.
23.81	0.0913	0.02	Q	.	.	.	.
23.95	0.0915	0.02	Q	.	.	.	.
24.09	0.0917	0.02	Q	.	.	.	.
24.23	0.0918	0.00	Q	.	.	.	.

TIME DURATION(minutes) OF PERCENTILES OF ESTIMATED PEAK FLOW RATE:
(Note: 100% of Peak Flow Rate estimate assumed to have
an instantaneous time duration)

Percentile of Estimated Peak Flow Rate	Duration (minutes)
0%	1448.0
10%	75.3
20%	25.1
30%	16.7
40%	8.4
50%	8.4
60%	8.4
70%	8.4
80%	8.4
90%	8.4

Channel Analysis: Post-Project

Input Parameters

Channel Type: Rectangular

Channel Width: 27.0000 ft

Longitudinal Slope: 0.0100 ft/ft

Manning's n: 0.0150

Flow: 1.1600 cfs

Result Parameters

Depth: 0.0381 ft

Area of Flow: 1.0274 ft^2

Wetted Perimeter: 27.0761 ft

Hydraulic Radius: 0.0379 ft

Average Velocity: 1.1290 ft/s

Top Width: 27.0000 ft

Froude Number: 1.0200

Critical Depth: 0.0386 ft

Critical Velocity: 1.1143 ft/s

Critical Slope: 0.0097 ft/ft

Critical Top Width: 27.00 ft

Calculated Max Shear Stress: 0.0237 lb/ft^2

Calculated Avg Shear Stress: 0.0237 lb/ft^2

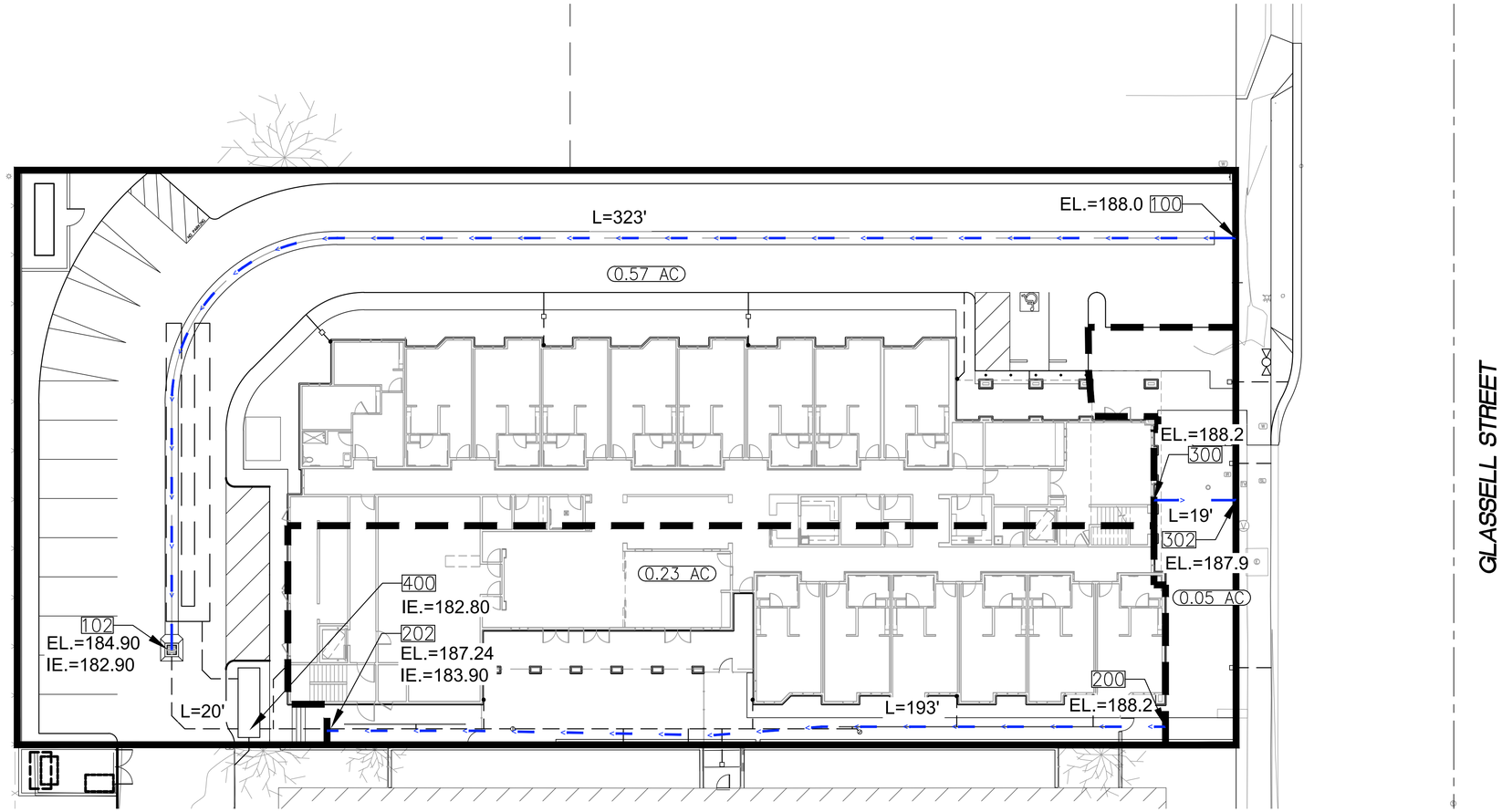

LEGEND:

- MAJOR–BASIN BOUNDARY
- SUB–BASIN BOUNDARY
- FLOW PATH
- 100 — HYDROLOGIC NODE
- 1.0 AC — HYDROLOGIC AREA
- EL.=1555.0 — ELEVATION AT NODE
- PROPOSED MODULAR WETLAND SYSTEM
- PROPOSED STORM DRAIN
- PROPOSED STORAGE TANK

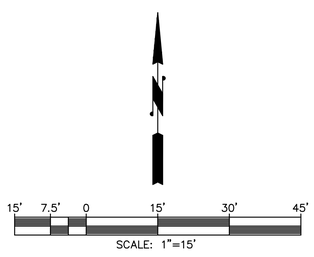

PREPARED BY:

PASCO LARET SUITER & ASSOCIATES
27127 Calle Arroyo, Ste 1904, San Juan Capistrano, CA 92675
ph 949.661.6695 | fx 949. 661.6674 | plsaengineering.com

TRACT NO. 10803/PARCEL 1

PARK PLAZA EXPANSION DRAINAGE POST-PROJECT

5/30/19

DRAWING:

SHEET 1 OF 1

APPENDIX H

- Noise Modeling Results

NOISE RECEPTOR & MONITORING LOCATION MAP

Park Plaza Memory Care Project

Imagery via Google

noah tanski environmental consulting

1. Fashion Park Street

Noise Report

Summary

Date	Thursday, March 14, 2019
Start Time	9:51aam
End Time	10:06am
File Name	831_Data.008
Device Model	Larson Davis Model 831
Weighting	A
Response	Slow

Results

Description	Value	Description	Value
L_{eq}	58.9dB	L_{10}	62.9dB
L_{max}	73.7dB	L_{50}	54.3dB
L_{min}	50.0dB	L_{90}	52.0dB

Statistics Chart

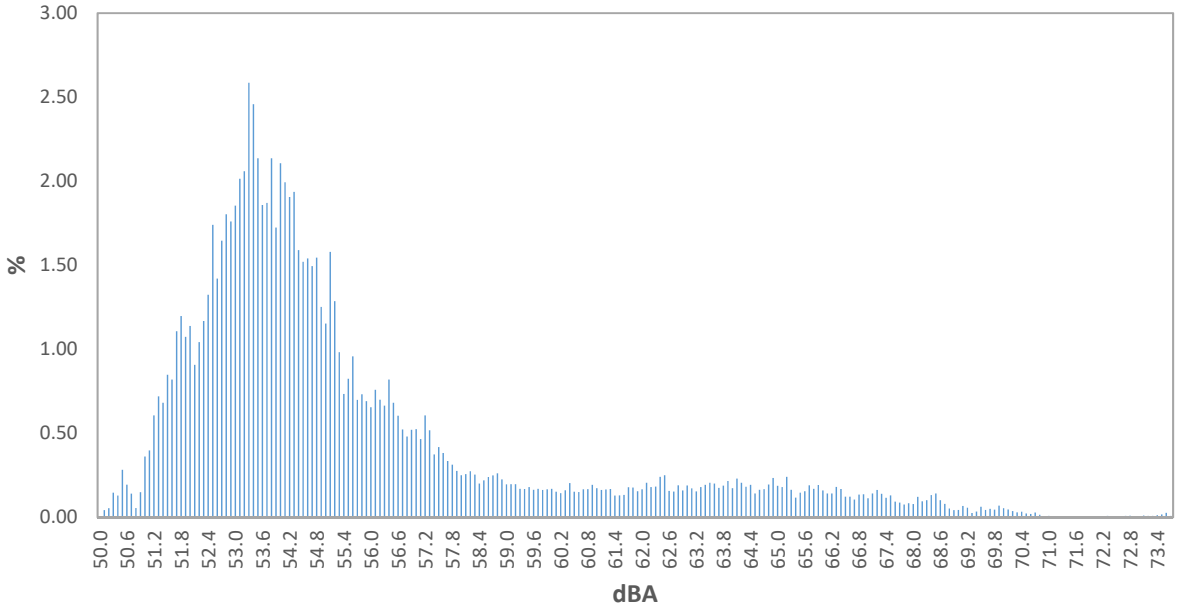

Statistics Table

dB	0.0	0.1	0.2	0.3	0.4	0.5	0.6	0.7	0.8	0.9	%
50.0	0.00	0.04	0.05	0.15	0.13	0.28	0.19	0.14	0.05	0.15	1.2
51.0	0.36	0.40	0.61	0.72	0.68	0.85	0.82	1.11	1.20	1.07	7.8
52.0	1.14	0.91	1.04	1.17	1.32	1.74	1.42	1.65	1.80	1.76	13.95
53.0	1.85	2.01	2.06	2.59	2.46	2.14	1.86	1.87	2.14	1.72	20.69
54.0	2.11	1.99	1.91	1.94	1.59	1.52	1.54	1.49	1.54	1.25	16.88
55.0	1.15	1.58	1.29	0.98	0.73	0.82	0.96	0.70	0.73	0.69	9.63
56.0	0.65	0.76	0.70	0.66	0.82	0.68	0.60	0.52	0.48	0.52	6.40
57.0	0.52	0.46	0.61	0.52	0.37	0.42	0.38	0.33	0.31	0.28	4.20
58.0	0.25	0.26	0.27	0.25	0.20	0.22	0.24	0.25	0.26	0.22	2.43
59.0	0.20	0.20	0.20	0.17	0.17	0.18	0.16	0.17	0.16	0.17	1.76
60.0	0.17	0.15	0.14	0.16	0.20	0.15	0.15	0.17	0.17	0.19	1.65
61.0	0.17	0.16	0.16	0.17	0.13	0.13	0.13	0.18	0.18	0.15	1.57
62.0	0.17	0.20	0.18	0.18	0.24	0.25	0.16	0.15	0.19	0.16	1.88
63.0	0.19	0.17	0.15	0.18	0.19	0.20	0.20	0.17	0.19	0.22	1.87
64.0	0.17	0.23	0.20	0.18	0.19	0.14	0.16	0.17	0.19	0.23	1.88
65.0	0.19	0.18	0.24	0.16	0.12	0.15	0.15	0.19	0.17	0.19	1.74
66.0	0.16	0.14	0.14	0.18	0.17	0.12	0.12	0.10	0.13	0.14	1.41
67.0	0.11	0.14	0.16	0.14	0.12	0.13	0.09	0.09	0.08	0.08	1.14
68.0	0.08	0.12	0.09	0.10	0.13	0.14	0.10	0.08	0.05	0.04	0.94
69.0	0.04	0.07	0.06	0.02	0.03	0.06	0.04	0.05	0.04	0.07	0.49
70.0	0.05	0.05	0.04	0.03	0.03	0.02	0.02	0.03	0.01	0.01	0.29
71.0	0.01	0.01	0.01	0.00	0.00	0.01	0.00	0.01	0.01	0.00	0.06
72.0	0.00	0.01	0.01	0.01	0.01	0.01	0.01	0.01	0.01	0.01	0.07
73.0	0.01	0.01	0.01	0.01	0.01	0.02	0.03	0.01	0.00	0.00	0.09

Logged Data Chart

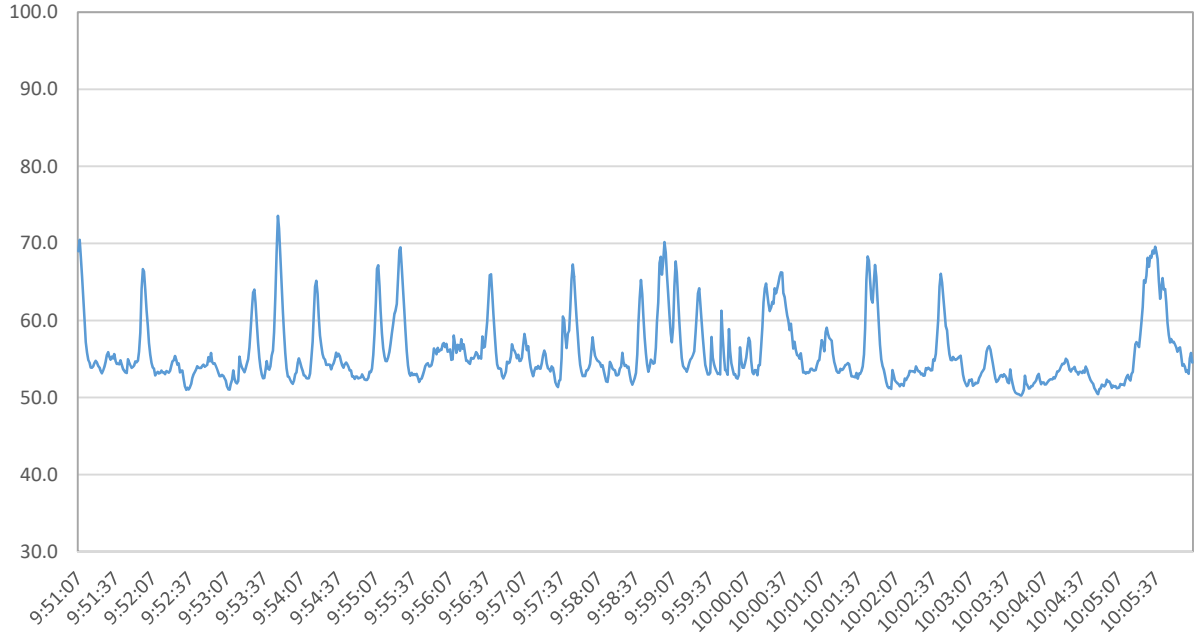

2. Glassell St. Near Holy Family Cathedral

Noise Report

Summary

Date	Thursday, March 14, 2019
Start Time	10:10am
End Time	10:25am
File Name	831_Data.009
Device Model	Larson Davis Model 831
Weighting	A
Response	Slow

Results

Description	Value	Description	Value
L_{eq}	73.1dB	L_{10}	76.6dB
L_{max}	82.5dB	L_{50}	73.6dB
L_{min}	52.0dB	L_{90}	64.2dB

Statistics Chart

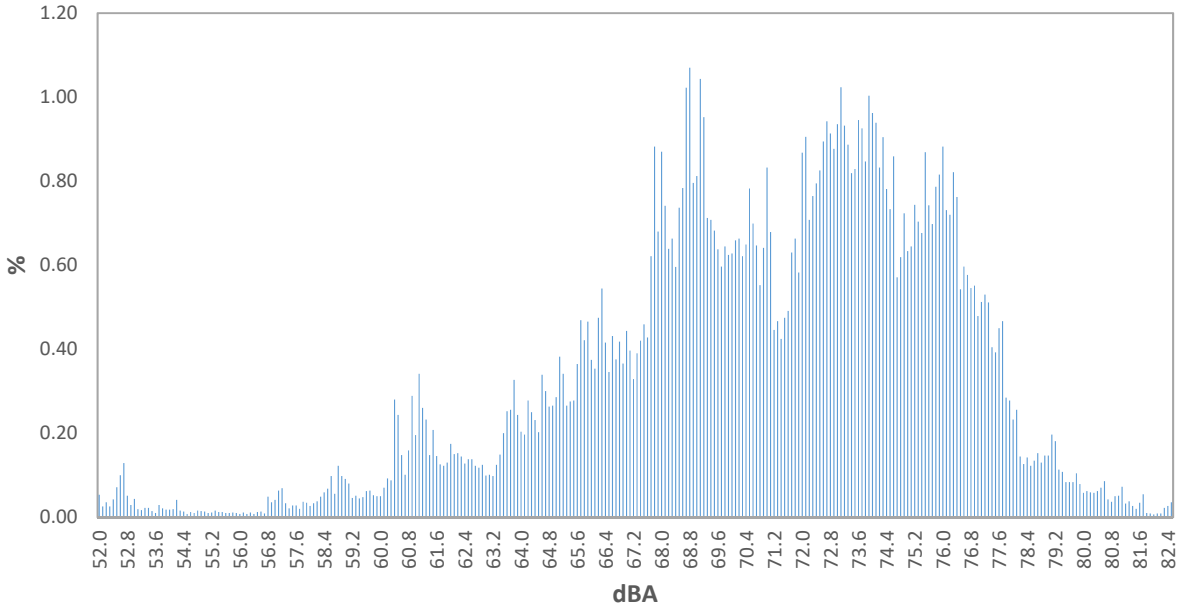

Statistics Table

dB	0.0	0.1	0.2	0.3	0.4	0.5	0.6	0.7	0.8	0.9	%
52.0	0.05	0.03	0.04	0.03	0.04	0.07	0.10	0.13	0.05	0.03	0.6
53.0	0.04	0.02	0.02	0.02	0.02	0.01	0.01	0.03	0.02	0.02	0.2
54.0	0.02	0.02	0.04	0.02	0.01	0.01	0.01	0.01	0.02	0.01	0.17
55.0	0.01	0.01	0.01	0.02	0.01	0.01	0.01	0.01	0.01	0.01	0.12
56.0	0.01	0.01	0.01	0.01	0.01	0.01	0.01	0.01	0.05	0.04	0.16
57.0	0.04	0.06	0.07	0.03	0.02	0.03	0.03	0.02	0.04	0.03	0.37
58.0	0.03	0.03	0.04	0.05	0.06	0.07	0.10	0.06	0.12	0.10	0.65
59.0	0.09	0.08	0.05	0.05	0.04	0.05	0.06	0.06	0.05	0.05	0.59
60.0	0.05	0.07	0.09	0.09	0.28	0.24	0.15	0.10	0.16	0.29	1.52
61.0	0.20	0.34	0.26	0.23	0.15	0.21	0.15	0.13	0.12	0.13	1.91
62.0	0.17	0.15	0.15	0.14	0.13	0.14	0.14	0.12	0.12	0.12	1.39
63.0	0.10	0.10	0.10	0.12	0.15	0.20	0.25	0.26	0.33	0.24	1.85
64.0	0.20	0.20	0.28	0.25	0.23	0.20	0.34	0.30	0.26	0.27	2.53
65.0	0.29	0.38	0.34	0.27	0.28	0.28	0.36	0.47	0.42	0.47	3.55
66.0	0.37	0.35	0.47	0.54	0.42	0.35	0.43	0.38	0.42	0.37	4.10
67.0	0.44	0.40	0.33	0.39	0.42	0.46	0.43	0.62	0.88	0.68	5.05
68.0	0.87	0.74	0.64	0.66	0.60	0.74	0.78	1.02	1.07	0.80	7.92
69.0	0.81	1.04	0.95	0.71	0.71	0.68	0.64	0.60	0.64	0.62	7.41
70.0	0.63	0.66	0.66	0.62	0.65	0.78	0.70	0.65	0.55	0.64	6.54
71.0	0.83	0.68	0.45	0.47	0.42	0.47	0.49	0.63	0.66	0.58	5.69
72.0	0.87	0.91	0.71	0.76	0.79	0.83	0.89	0.94	0.91	0.88	8.49
73.0	0.94	1.02	0.93	0.89	0.82	0.83	0.95	0.93	0.85	1.00	9.15
74.0	0.96	0.94	0.83	0.90	0.78	0.73	0.86	0.57	0.62	0.72	7.92
75.0	0.63	0.64	0.74	0.70	0.68	0.87	0.74	0.70	0.79	0.82	7.31
76.0	0.88	0.73	0.72	0.82	0.76	0.54	0.60	0.58	0.55	0.55	6.73
77.0	0.48	0.51	0.53	0.51	0.40	0.39	0.45	0.47	0.28	0.28	4.31
78.0	0.23	0.26	0.14	0.13	0.14	0.12	0.13	0.15	0.13	0.15	1.59
79.0	0.15	0.20	0.18	0.11	0.11	0.08	0.08	0.08	0.10	0.08	1.18
80.0	0.06	0.06	0.06	0.06	0.06	0.07	0.09	0.04	0.04	0.05	0.58
81.0	0.05	0.07	0.03	0.04	0.03	0.02	0.03	0.05	0.01	0.01	0.35
82.0	0.01	0.01	0.01	0.02	0.03	0.04	0.00	0.00	0.00	0.00	0.11

Logged Data Chart

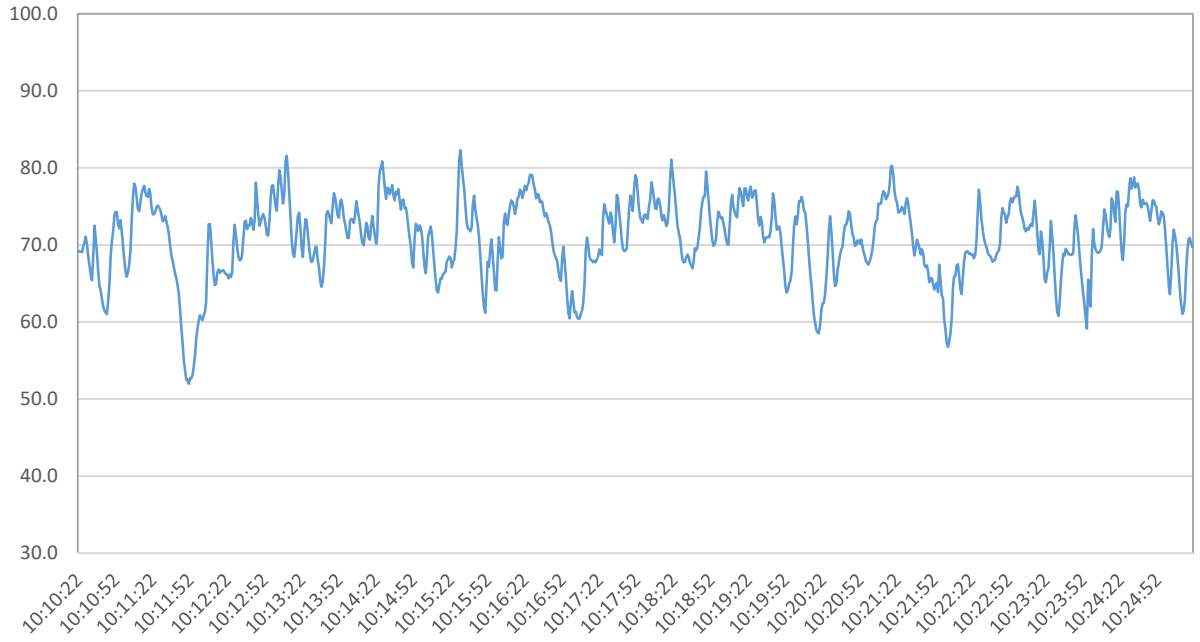

3. Glassell St. Near Glassell St. Residences

Noise Report

Summary

Date	Thursday, March 14, 2019
Start Time	10:28am
End Time	10:43am
File Name	831_Data.010
Device Model	Larson Davis Model 831
Weighting	A
Response	Slow

Results

Description	Value	Description	Value
L_{eq}	66.8dB	L_{10}	69.0dB
L_{max}	84.7dB	L_{50}	57.3dB
L_{min}	48.1dB	L_{90}	52.0dB

Statistics Chart

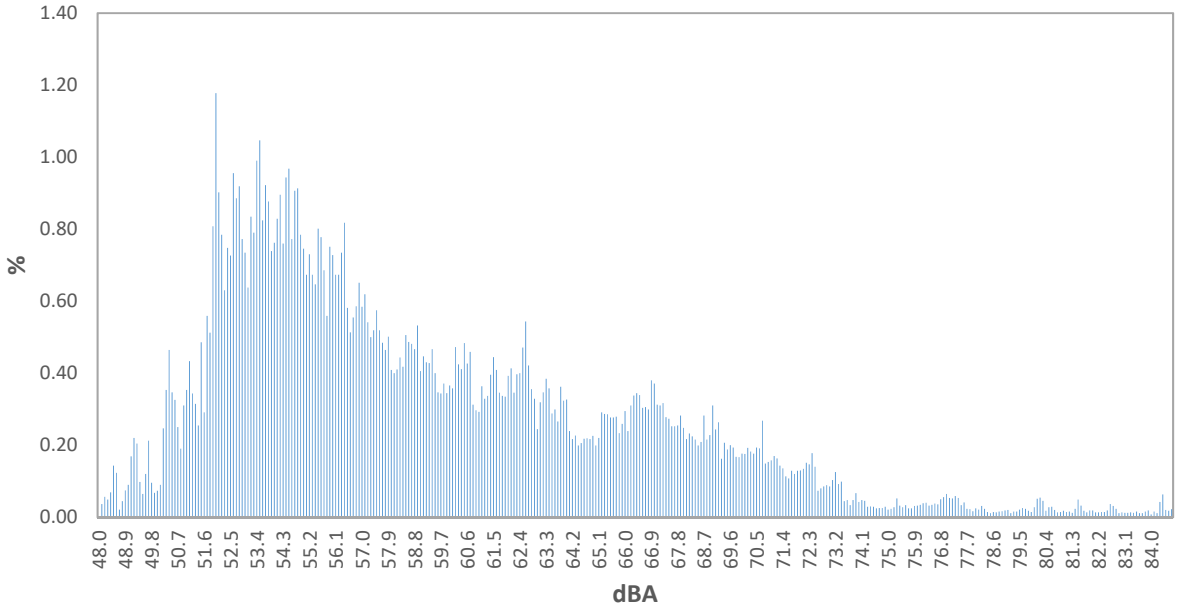

Statistics Table

dB	0.0	0.1	0.2	0.3	0.4	0.5	0.6	0.7	0.8	0.9	%
48.0	0.00	0.04	0.06	0.05	0.07	0.14	0.12	0.02	0.04	0.07	0.6
49.0	0.09	0.17	0.22	0.20	0.10	0.06	0.12	0.21	0.10	0.07	1.3
50.0	0.07	0.09	0.25	0.35	0.46	0.35	0.33	0.25	0.19	0.31	2.65
51.0	0.35	0.43	0.34	0.31	0.25	0.49	0.29	0.56	0.51	0.81	4.35
52.0	1.18	0.90	0.78	0.63	0.75	0.73	0.96	0.89	0.92	0.77	8.50
53.0	0.73	0.64	0.83	0.79	0.99	1.05	0.82	0.92	0.88	0.74	8.40
54.0	0.76	0.83	0.90	0.76	0.94	0.97	0.77	0.91	0.91	0.78	8.53
55.0	0.75	0.67	0.73	0.67	0.65	0.80	0.78	0.69	0.56	0.75	7.04
56.0	0.73	0.67	0.67	0.73	0.82	0.58	0.51	0.55	0.59	0.65	6.51
57.0	0.58	0.62	0.54	0.50	0.52	0.57	0.52	0.48	0.46	0.50	5.31
58.0	0.41	0.40	0.41	0.44	0.42	0.51	0.49	0.48	0.47	0.53	4.55
59.0	0.41	0.45	0.43	0.43	0.47	0.40	0.35	0.34	0.37	0.34	3.98
60.0	0.37	0.36	0.47	0.42	0.41	0.48	0.43	0.46	0.31	0.30	4.01
61.0	0.29	0.36	0.33	0.34	0.40	0.44	0.41	0.35	0.34	0.33	3.59
62.0	0.39	0.41	0.35	0.40	0.40	0.47	0.54	0.42	0.36	0.33	4.07
63.0	0.24	0.32	0.35	0.38	0.36	0.29	0.30	0.27	0.36	0.32	3.19
64.0	0.33	0.24	0.22	0.23	0.20	0.21	0.22	0.22	0.22	0.23	2.29
65.0	0.20	0.22	0.29	0.29	0.29	0.28	0.28	0.28	0.23	0.26	2.61
66.0	0.29	0.24	0.31	0.34	0.34	0.34	0.30	0.31	0.30	0.38	3.15
67.0	0.37	0.31	0.31	0.32	0.28	0.27	0.25	0.25	0.25	0.28	2.90
68.0	0.25	0.22	0.23	0.22	0.22	0.20	0.21	0.28	0.22	0.23	2.27
69.0	0.31	0.24	0.26	0.16	0.21	0.19	0.20	0.19	0.17	0.17	2.10
70.0	0.18	0.18	0.19	0.18	0.18	0.19	0.19	0.27	0.15	0.15	1.86
71.0	0.16	0.17	0.16	0.14	0.14	0.11	0.11	0.13	0.12	0.13	1.37
72.0	0.13	0.13	0.15	0.15	0.18	0.14	0.07	0.08	0.09	0.09	1.21
73.0	0.09	0.10	0.13	0.09	0.10	0.04	0.05	0.03	0.05	0.07	0.75
74.0	0.04	0.05	0.05	0.03	0.03	0.03	0.02	0.03	0.03	0.03	0.33
75.0	0.02	0.02	0.03	0.05	0.03	0.03	0.03	0.02	0.02	0.03	0.30
76.0	0.03	0.03	0.04	0.04	0.03	0.03	0.04	0.04	0.05	0.06	0.39
77.0	0.06	0.05	0.05	0.06	0.05	0.03	0.04	0.02	0.02	0.02	0.42
78.0	0.02	0.02	0.03	0.02	0.01	0.01	0.01	0.01	0.02	0.02	0.19
79.0	0.02	0.02	0.01	0.02	0.02	0.02	0.03	0.02	0.02	0.01	0.18
80.0	0.03	0.05	0.05	0.05	0.02	0.03	0.03	0.02	0.01	0.01	0.30
81.0	0.02	0.01	0.02	0.01	0.02	0.05	0.03	0.02	0.01	0.02	0.21
82.0	0.02	0.01	0.01	0.01	0.01	0.02	0.04	0.03	0.02	0.01	0.20
83.0	0.01	0.01	0.01	0.01	0.01	0.02	0.01	0.01	0.02	0.74	0.86
84.0	0.01	0.02	0.01	0.04	0.06	0.02	0.02	0.02	0.00	0.00	0.20

Logged Data Chart

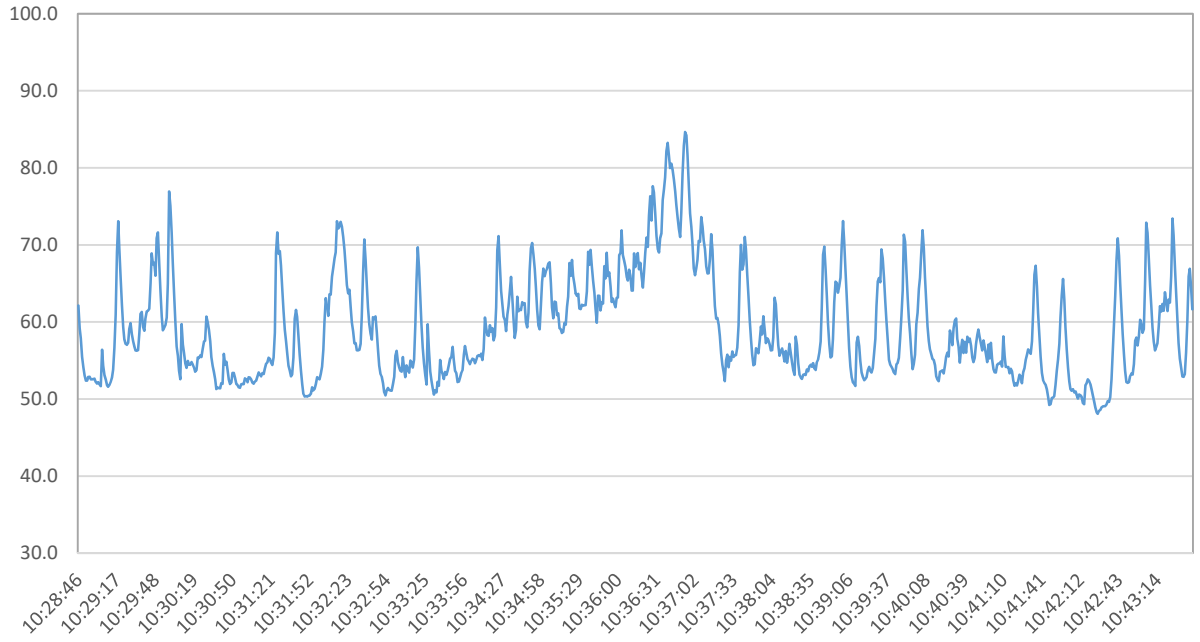

NTEC
Noah Tanski

29 July 2019
TNM 2.5
Calculated with TNM 2.5

RESULTS: SOUND LEVELS

PROJECT/CONTRACT: Park Plaza Memory Care
RUN: Grader: North Receptors
BARRIER DESIGN: INPUT HEIGHTS
ATMOSPHERICS: 68 deg F, 50% RH

Average pavement type shall be used unless a State highway agency substantiates the use of a different type with approval of FHWA.

Receiver												
Name	No.	#DUs	Existing LAeq1h	No Barrier LAeq1h Calculated	Crit'n	Increase over existing Calculated	Crit'n Sub'l Inc	Type Impact	With Barrier Calculated LAeq1h	Noise Reduction Calculated	Noise Reduction Goal	Calculated minus Goal
			dBA	dBA	dBA	dB	dB		dBA	dB	dB	dB
Holy Family Cathedral Residences	1	1	0.0	63.9	66	63.9	10	----	63.9	0.0	8	-8.0
Holy Family Cathedral	2	1	0.0	63.4	66	63.4	10	----	63.4	0.0	8	-8.0
Holy Family Cathedral Classrooms	3	1	0.0	57.3	66	57.3	10	----	57.3	0.0	8	-8.0
Glassell Street Residences	5	1	0.0	63.7	66	63.7	10	----	63.7	0.0	8	-8.0

Dwelling Units	# DUs	Noise Reduction Min	Avg	Max
		dB	dB	dB
All Selected	4	0.0	0.0	0.0
All Impacted	0	0.0	0.0	0.0
All that meet NR Goal	0	0.0	0.0	0.0

NTEC
Noah Tanski

29 July 2019
TNM 2.5
Calculated with TNM 2.5

RESULTS: SOUND LEVELS

PROJECT/CONTRACT: Park Plaza Memory Care
RUN: Grader: South Receptors
BARRIER DESIGN: INPUT HEIGHTS
ATMOSPHERICS: 68 deg F, 50% RH

Average pavement type shall be used unless a State highway agency substantiates the use of a different type with approval of FHWA.

Receiver Name	No.	#DUs	Existing LAeq1h	No Barrier LAeq1h Calculated	Crit'n	Increase over existing Calculated	Crit'n Sub'l Inc	Type Impact	With Barrier Calculated LAeq1h	Noise Reduction Calculated	Noise Reduction Goal	Calculated minus Goal
			dBA	dBA	dBA	dB	dB		dBA	dB	dB	dB
Holy Family Cathedral Outdoors	1	1	0.0	50.3	66	50.3	10	----	50.3	0.0	8	-8.0
Park Plaza Existing - 1st	2	1	0.0	59.4	66	59.4	10	----	59.4	0.0	8	-8.0
Park Plaza Existing - 2nd	4	1	0.0	67.3	66	67.3	10	Snd Lvl	67.3	0.0	8	-8.0
Park Plaza Existing - 3rd	5	1	0.0	69.0	66	69.0	10	Snd Lvl	69.0	0.0	8	-8.0
Fashion Park St Residences	6	1	0.0	42.9	66	42.9	10	----	42.9	0.0	8	-8.0

Dwelling Units	# DUs	Noise Reduction Min	Avg	Max
		dB	dB	dB
All Selected	5	0.0	0.0	0.0
All Impacted	2	0.0	0.0	0.0
All that meet NR Goal	0	0.0	0.0	0.0

NTEC
Noah Tanski

29 July 2019
TNM 2.5
Calculated with TNM 2.5

RESULTS: SOUND LEVELS
PROJECT/CONTRACT: Park Plaza Memory Care
RUN: Trucks: Glassell Street
BARRIER DESIGN: INPUT HEIGHTS
ATMOSPHERICS: 68 deg F, 50% RH

Average pavement type shall be used unless a State highway agency substantiates the use of a different type with approval of FHWA.

Receiver												
Name	No.	#DUs	Existing LAeq1h	No Barrier LAeq1h Calculated	Crit'n	Increase over existing Calculated	Crit'n Sub'l Inc	Type Impact	With Barrier Calculated LAeq1h	Noise Reduction Calculated	Noise Reduction Goal	Calculated minus Goal
			dBA	dBA	dBA	dB	dB		dBA	dB	dB	dB
45ft E of centerline	1	1	0.0	60.3	66	60.3	10	----	60.3	0.0	8	-8.0
70ft W of centerline	2	1	0.0	57.6	66	57.6	10	----	57.6	0.0	8	-8.0

Dwelling Units	# DUs	Noise Reduction Min dB	Avg dB	Max dB
All Selected	2	0.0	0.0	0.0
All Impacted	0	0.0	0.0	0.0
All that meet NR Goal	0	0.0	0.0	0.0

Construction Vibration - PPV

Ground Factor (N):	1.5
Equipment:	Large Dozer
Equipment PPV (in/sec):	0.089
Reference Distance (ft):	25

Unmitigated

Receptor	Distance (ft)	Vibration Level (in/sec PPV)
Holy Family Cathedral Residences	15	0.191
Holy Family Cathedral	100	0.011
Glassell Street Residences	95	0.012
Park Plaza Assisted Living Facility	10	0.352

APPENDIX I

- Traffic Impact Analysis

LINSCOTT
LAW &
GREENSPAN
engineers

TRAFFIC IMPACT ANALYSIS

PARK PLAZA MEMORY CARE PROJECT

Orange, California

August 12, 2019

Prepared for:

KISCO SENIOR LIVING
5790 Fleet Street, Suite 300
Carlsbad, CA 92008

LLG Ref. 2-18-4075-2

Prepared by:

Jeremy Mempin
Transportation Engineer I

Under the Supervision of:

Trissa de Jesus Allen, P.E.
Senior Transportation Engineer

Linscott, Law & Greenspan, Engineers
2 Executive Circle
Suite 250
Irvine, CA 92614
949.825.6175 T
949.825.6173 F
www.llgengineers.com

TABLE OF CONTENTS

SECTION	PAGE
1.0 Introduction	**1**
1.1 Study Area	2
2.0 Project Description	**3**
2.1 Site Access	3
3.0 Existing Conditions	**4**
3.1 Existing Street System	4
3.2 Existing Traffic Volumes	4
3.3 Existing Intersection Conditions	4
3.3.1 Intersection Capacity Utilization (ICU) Method of Analysis (Signalized Intersections)	5
3.3.2 Highway Capacity Manual (HCM) Method of Analysis (Unsignalized Intersections)	5
3.3.2.1 Two-Way Stop-Controlled Intersections	5
3.4 Level of Service Criteria	5
3.5 Existing Level of Service Results	6
4.0 Traffic Forecasting Methodology	**10**
5.0 Project Traffic Characteristics	**11**
5.1 Project Traffic Generation	11
5.2 Project Traffic Distribution and Assignment	11
5.3 Existing Plus Project Traffic Conditions	12
6.0 Year 2021 Cumulative Forecasts	**14**
6.1 Ambient Traffic Growth	14
6.2 Cumulative Projects Traffic Characteristics	14
6.3 Year 2021 Cumulative Base Traffic Volumes	15
6.4 Year 2021 Cumulative Plus Project Traffic Volumes	15
7.0 Traffic Impact Analysis Methodology	**17**
7.1 Impact Criteria and Thresholds	17
8.0 Existing Plus Project Analysis	**18**
8.1.1 Existing Plus Project Traffic Conditions	18
9.0 Year 2021 Plus Project Analysis	**20**
9.1.1 Year 2021 Cumulative Base Traffic Conditions	20
9.1.2 Year 2021 Cumulative Plus Project Traffic Conditions	20
10.0 Recommended Improvements	**22**

TABLE OF CONTENTS (CONTINUED)

SECTION		PAGE
10.1	Existing Plus Project Traffic Conditions	22
10.2	Year 2021 Plus Project Traffic Conditions	22
11.0	**Summary Of Findings And Conclusions**	**23**

APPENDICES

APPENDIX	
A.	Traffic Study Scope of Work
B.	Existing Traffic Count Data
C.	Intersection Level of Service Calculation Worksheets

LIST OF FIGURES

SECTION—FIGURE #		FOLLOWING PAGE
1–1	Vicinity Map	2
2–1	Existing Site Aerial Photograph	3
2–2	Proposed Site Plan	3
3–1	Existing Roadway Conditions and Intersection Controls	6
3–2	Existing (2019) AM Peak Hour Traffic Volumes	6
3–3	Existing (2019) PM Peak Hour Traffic Volumes	6
5–1	Project Traffic Distribution Pattern	13
5–2	AM Peak Hour Project-Generated Traffic Volumes	13
5–3	PM Peak Hour Project-Generated Traffic Volumes	13
5–4	Existing (2019) Plus Project AM Peak Hour Traffic Volumes	13
5–5	Existing (2019) Plus Project PM Peak Hour Traffic Volumes	13
6–1	Location of Cumulative Projects	16
6–2	Year 2021 Cumulative Project Only AM Peak Hour Traffic Volumes	16
6–3	Year 2021 Cumulative Project Only PM Peak Hour Traffic Volumes	16
6–4	Year 2021 Cumulative Base AM Peak Hour Traffic Volumes	16
6–5	Year 2021 Cumulative Base PM Peak Hour Traffic Volumes	16
6–6	Year 2021 Cumulative Plus Project AM Peak Hour Traffic Volumes	16
6–7	Year 2021 Cumulative Plus Project PM Peak Hour Traffic Volumes	16

LIST OF TABLES

SECTION—TABLE #		PAGE
3–1	Level of Service Criteria for Signalized Intersections	7
3–2	Level of Service Criteria for Unsignalized Intersections (HCM 6 Methodology)	8
3–3	Existing (Year 2019) Peak Hour Levels of Service	9
5–1	Project Traffic Generation Forecast	13
6–1	Cumulative Projects Description and Trip Generation Estimates	16
8–1	Existing (Year 2019) Plus Project Peak Hour Intersection Capacity Analysis	19
9–1	Year 2021 Peak Hour Intersection Capacity Analysis	21

TRAFFIC IMPACT ANALYSIS

PARK PLAZA MEMORY CARE PROJECT

Orange, California

August 12, 2019

1.0 INTRODUCTION

This traffic impact analysis addresses the potential traffic impacts and circulation needs associated with the proposed Park Plaza Memory Care Project (hereinafter referred to as Project). The proposed project consists of expanding the existing Park Plaza Senior Living facility and developing 30,113 square feet (SF) of gross floor area, with 36 beds in 28 studio units and 4 two-bedroom units, for a two-story memory care/assisted living community to provide care for residents impacted by Alzheimer's and other dementia-related disorders. The Project site is currently vacant and located at 620 S. Glassell Street in the City of Orange, California.

This report documents the findings and recommendations of a traffic impact analysis conducted by Linscott, Law & Greenspan, Engineers (LLG) to determine the potential impacts associated with the Project. The traffic analysis evaluates the existing operating conditions at four (4) key study intersections within the project vicinity, estimates the trip generation potential of the Project, and forecasts future operating conditions without and with the proposed Project. Where necessary, intersection improvements/mitigation measures are identified.

This traffic report satisfies the *City of Orange Traffic Impact Analysis Guidelines, dated August 15, 2007*, and is consistent with the requirements and procedures outlined in the most current *Congestion Management Program (CMP) for Orange County.* The Scope of Work for this traffic study, which is included in ***Appendix A***, was developed in conjunction with City of Orange Traffic Engineering staff.

The project site has been visited and an inventory of adjacent area roadways and intersections was performed. Existing traffic information has been collected at four (4) key study intersections on a "typical" weekday for use in the preparation of intersection level of service calculations. Information concerning cumulative projects (planned and/or approved) in the vicinity of the proposed Project has been researched at the City of Orange and City of Santa Ana. Based on our research, there are four (4) cumulative projects in the City of Orange and one (1) cumulative projects in the City of Santa Ana within the vicinity of the subject site. These five (5) planned and/or approved cumulative projects were considered in the cumulative traffic analysis for this project.

This traffic report analyzes existing and future weekday AM peak hour and PM peak hour traffic conditions for a near-term (Year 2021) traffic setting upon completion of the proposed Project. Traffic forecasts for the Year 2021 horizon year have been projected by increasing existing traffic volumes by an annual growth rate of one percent (1.0%) per year and adding traffic volumes generated by five (5) cumulative projects.

1.1 Study Area

The four (4) key study intersections selected for evaluation were determined based on coordination with City of Orange Traffic Engineering staff and application of the "51 or more peak hour trip threshold" criteria outlined in the *City of Orange Traffic Impact Analysis Guidelines*, dated August 15, 2007. The intersections listed below provide local access to the study area and define the extent of the boundaries for this traffic impact investigation. It should be noted that each key study intersection is located within the City of Orange.

Key Study Intersections
1. Glassell Street at La Veta Avenue
2. Glassell Street at East River Avenue
3. Glassell Street at Park Plaza Driveway 1
4. Glassell Street at Park Plaza Driveway 2

Figure 1-1 presents a Vicinity Map, which illustrates the general location of the proposed Project and depicts the study locations and surrounding street system. The Level of Service (LOS) investigations at these key locations were used to evaluate the potential traffic-related impacts associated with area growth, cumulative projects and the proposed Project. When necessary, this report recommends intersection improvements that may be required to accommodate future traffic volumes and restore/maintain an acceptable Level of Service and/or mitigate the impact of the project.

The following four traffic scenarios are addressed in the study:

- **Existing (2019)** - The analysis of existing traffic conditions is intended to provide a base of analysis for the remainder of the study. The existing conditions analysis includes an assessment of the streets in the area, current traffic volumes, and operating conditions.

- **Existing (2019) Plus Project** - This phase of analysis adds project-generated forecasts to existing conditions. Any potential traffic impacts will be determined, and additional improvement measures to address the deficiencies will be identified.

- **Year 2021 Cumulative Base** - This phase of analysis projects future traffic growth and operating conditions in the Year 2021 which could be expected to result from regional growth and related projects <u>without</u> the addition of project traffic.

- **Year 2021 Cumulative plus Project** - This is an analysis of future traffic conditions in the Year 2021 <u>with</u> the addition of project-generated traffic. Any potential traffic impacts will be determined, and mitigation measures developed.

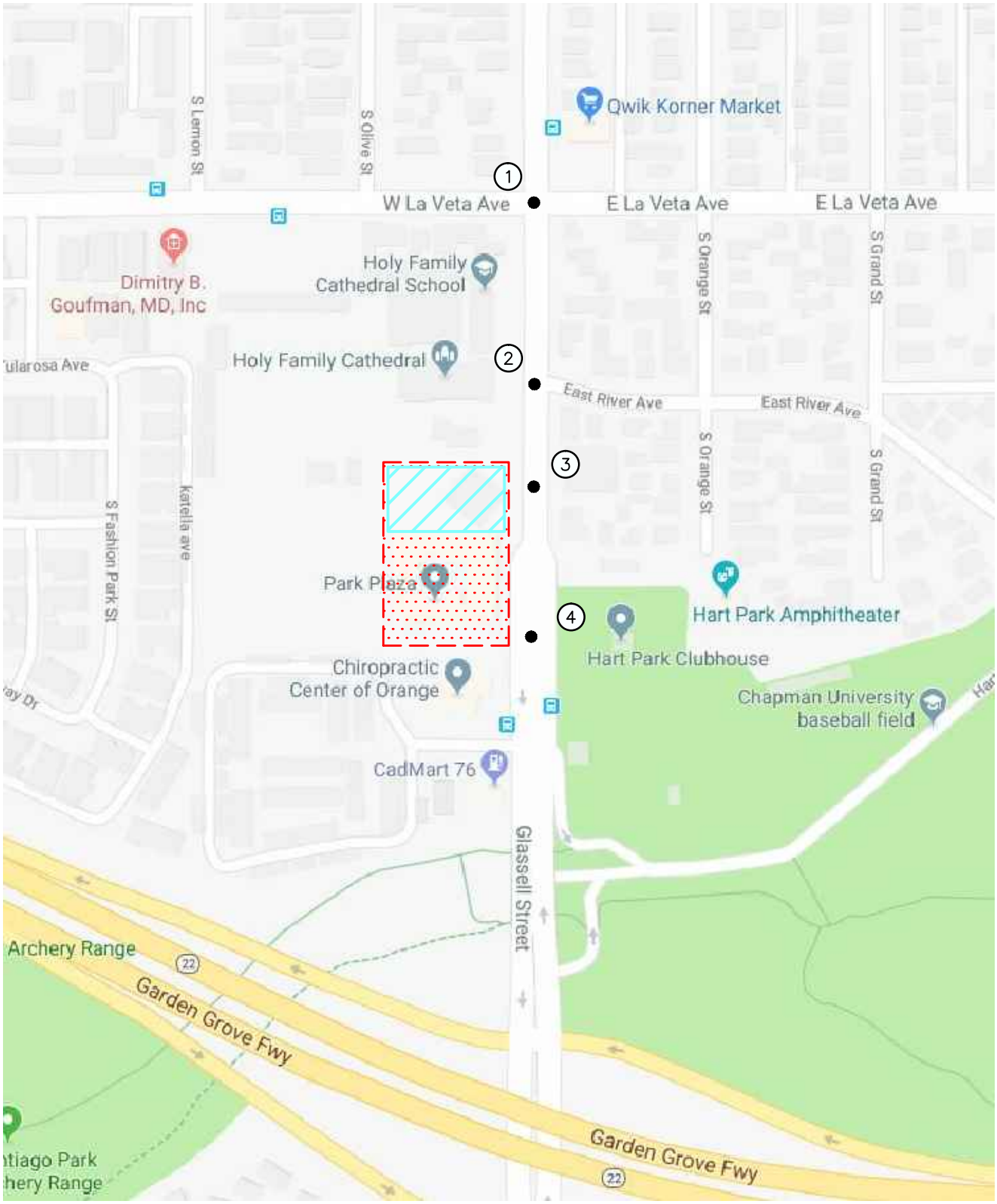

n:\4000\2184075-2 - park plaza memory care tia, orange\dwg\4075-2 f1-1.dwg LDP 17:31:39 05-14-2019 mempin

LINSCOTT LAW & GREENSPAN engineers

N NO SCALE

SOURCE: GOOGLE

KEY

(#) = STUDY INTERSECTION

= PROJECT SITE

= PROPOSED MEMORY CARE

FIGURE 1-1

VICINITY MAP

PARK PLAZA MEMORY CARE TIA, ORANGE

2.0 PROJECT DESCRIPTION

The proposed Project site is located at 620 S. Glassell Street in the City of Orange, California and is directly north of the existing Park Plaza Senior Living facility. It should be noted that the existing 5,595 SF vacant building (previously restaurant) will be demolished to construct the proposed Project. ***Figure 2-1*** presents an aerial depiction of the existing site, which shows the existing vacant restaurant building to be demolished.

Figure 2-2 presents the proposed site plan for the proposed Project, prepared by Shelter Architects. The proposed project consists of developing 30,113 square feet (SF) of gross floor area, with 36 beds in 28 studio units and 4 two-bedroom units, for a two-story memory care/assisted living community to provide care for residents impacted by Alzheimer's and other dementia-related disorders. The proposed Project is expected to be constructed and fully occupied by the Year 2021.

2.1 Site Access

As shown in *Figure 2-2*, access to the proposed Project will be provided via one full access unsignalized driveway (i.e. Park Plaza Driveway 1) and one existing unsignalized right-turn in/out only driveway (i.e. Park Plaza Driveway 2) located along Glassell Street.

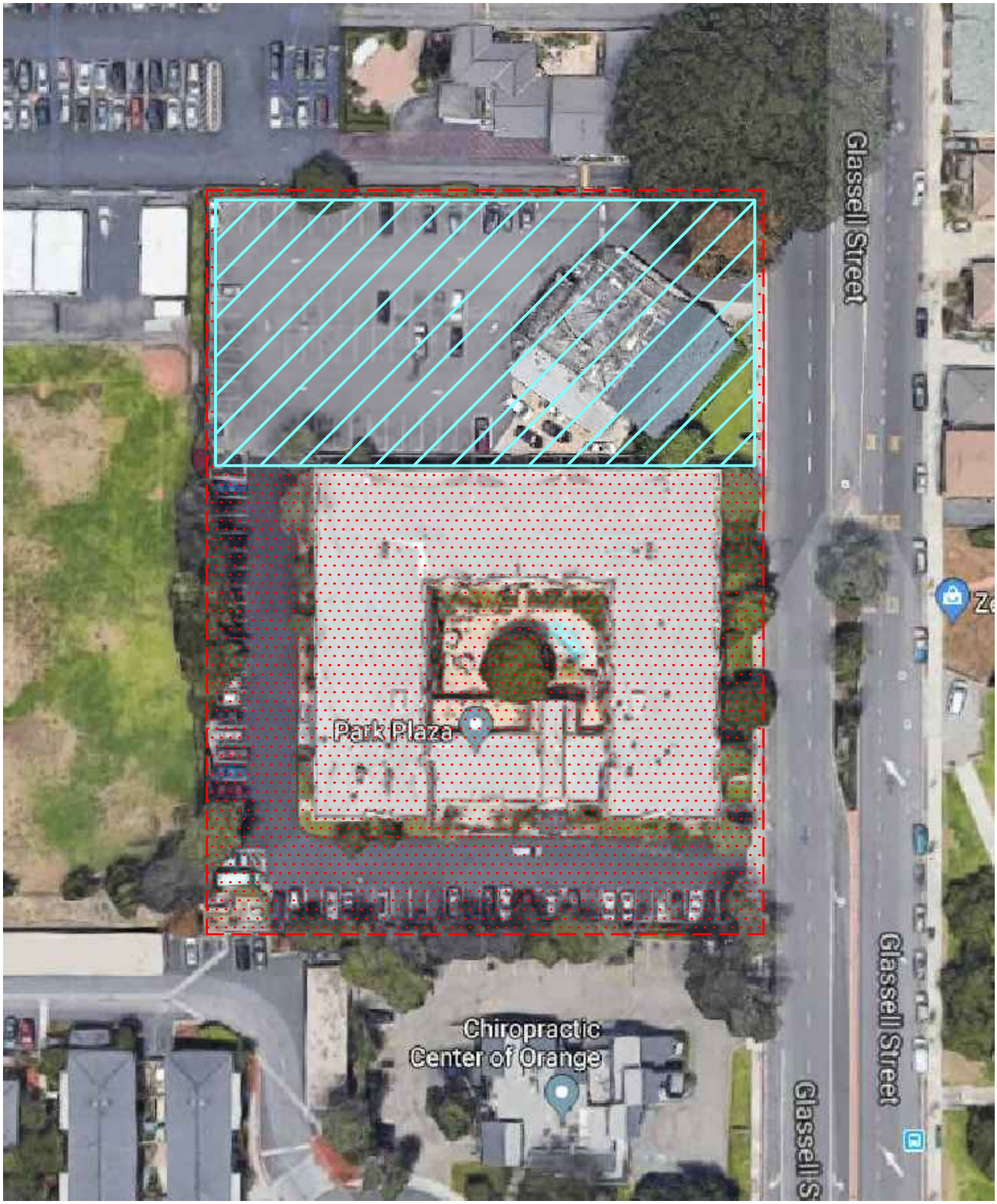

n:\4000\2184075-2 - park plaza memory care tia, orange\dwg\4075-2 f2-1.dwg LDP 17:38:54 05-14-2019 mempin

LINSCOTT LAW & GREENSPAN engineers

N NO SCALE

SOURCE: GOOGLE

KEY

= PROJECT SITE

= PROPOSED MEMORY CARE

FIGURE 2-1

EXISTING SITE AERIAL

PARK PLAZA MEMORY CARE TIA, ORANGE

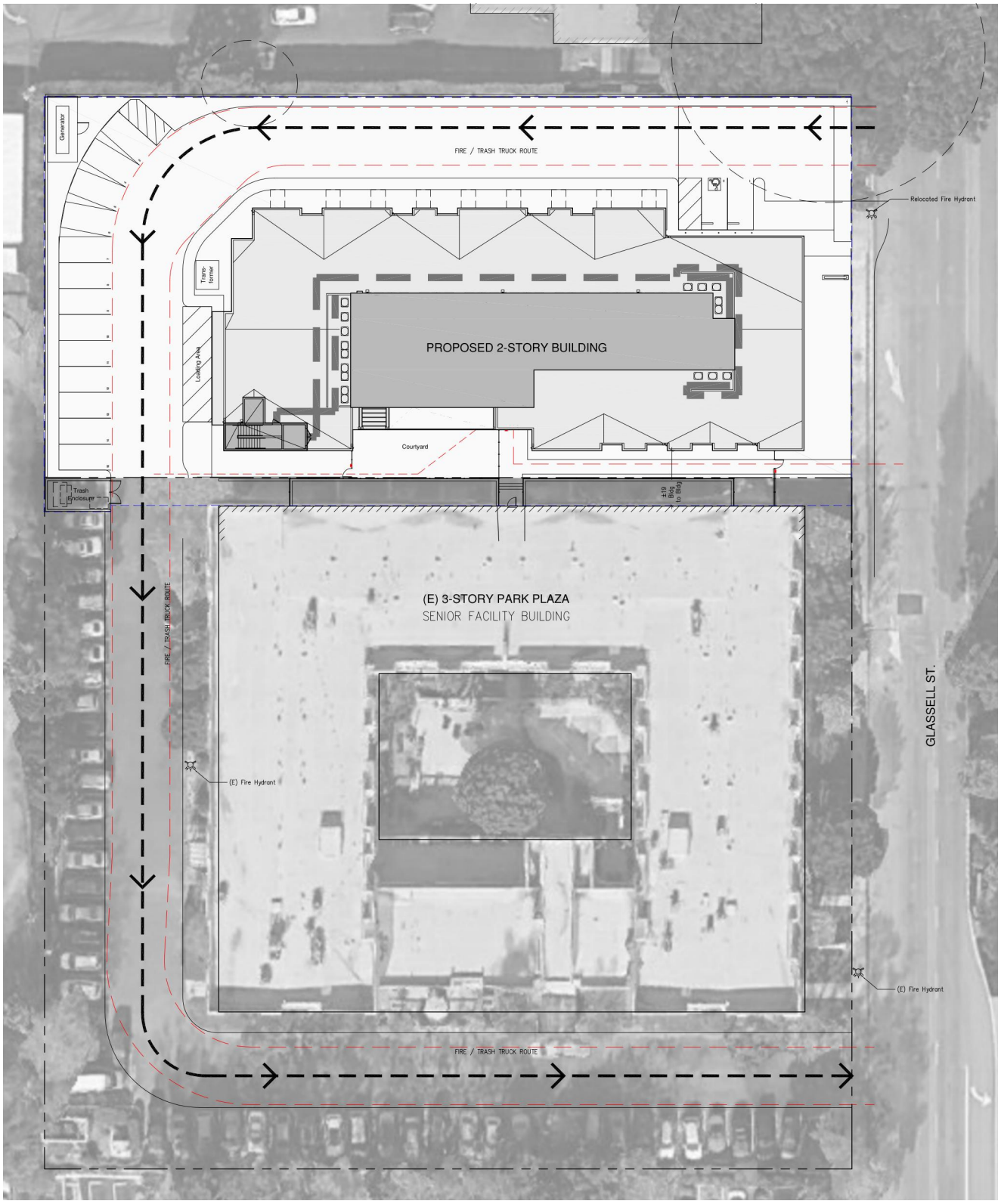

SOURCE: SHELTER ARCHITECTS

LINSCOTT LAW & GREENSPAN engineers

N NO SCALE

FIGURE 2-2

PROPOSED SITE PLAN

PARK PLAZA MEMORY CARE TIA, ORANGE

3.0 EXISTING CONDITIONS

3.1 Existing Street System

The principal local network of streets serving the proposed Project includes Glassell Street and La Veta Avenue. The following discussion provides a brief synopsis of these key area streets. The descriptions are based on an inventory of existing roadway conditions.

Glassell Street is generally a four-lane, divided roadway oriented in the north-south direction and borders the Project site to the east. Glassell Street transitions to a two-lane, undivided roadway north of La Veta Avenue. On-street parking is not permitted on the west side of Glassell Street south of East River Avenue and not permitted on the east side of Glassell Street north of East River Avenue. The posted speed limit on Glassell Street is 35 miles per hour (mph) south of La Veta Avenue and 30 mph north of La Veta Avenue. A traffic signal controls the study intersection of Glassell Street at La Veta Avenue. The study intersections of Glassell Street at East River Avenue, Park Plaza Driveway 1 and Park Plaza Driveway 2 are stop-controlled.

La Veta Avenue is generally a four-lane, divided roadway west of Glassell Street and a two-lane undivided roadway east of Orange Street oriented in the east-west direction. On-street parking is generally not permitted along this roadway west of La Veta Avenue and on-street parking is permitted east of Orange Street within the vicinity of the project. The posted speed limit on La Veta Avenue is 35 mph west of Glassell Street and 30 mph east of Glassell Street.

Figure 3-1 presents an inventory of the existing roadway conditions for the arterials and intersections evaluated in this report. This figure identifies the number of travel lanes for key arterials, as well as intersection configurations and controls for the key area study intersections.

3.2 Existing Traffic Volumes

Four (4) key study intersections have been identified as the locations at which to evaluate existing and future traffic operating conditions. Some portion of potential project-related traffic will pass through each of these intersections, and their analysis will reveal the expected relative impacts of the project. These key intersections were selected for evaluation based on coordination with City of Orange Traffic Engineering staff and application of the "51 or more peak hour trip threshold" criteria outlined in the *City of Orange Traffic Impact Analysis Guidelines*, dated August 15, 2007.

Existing AM peak hour and PM peak hour traffic volumes for the four (4) key study intersections evaluated in this report were conducted by AimTD LLC in May 2019. ***Figures 3-2*** and ***3-3*** illustrate the existing AM and PM peak hour traffic volumes at the four (4) key study intersections.

Appendix B contains the detailed peak hour count sheets for the key intersections evaluated in this report.

3.3 Existing Intersection Conditions

Existing AM and PM peak hour operating conditions for the four (4) key study intersections were evaluated using the *Intersection Capacity Utilization* (ICU) methodology for signalized intersections

and the methodology outlined in *Chapter 20 of the HCM 6* for two-way stop-controlled intersections.

3.3.1 Intersection Capacity Utilization (ICU) Method of Analysis (Signalized Intersections)

In conformance with City of Orange requirements, existing AM and PM peak hour operating conditions for the key signalized study intersections were evaluated using the Intersection Capacity Utilization (ICU) method. The ICU technique is intended for signalized intersection analysis and estimates the volume to capacity (V/C) relationship for an intersection based on the individual V/C ratios for key conflicting traffic movements. The ICU numerical value represents the percent signal (green) time and thus capacity, required by existing and/or future traffic. It should be noted that the ICU methodology assumes uniform traffic distribution per intersection approach lane and optimal signal timing.

Per City of Orange requirements, the ICU calculations use a lane capacity of 1,700 vehicles per hour (vph) for through and all turn lanes. A clearance adjustment factor of 0.05 was added to each Level of Service calculation.

The ICU value translates to a Level of Service (LOS) estimate, which is a relative measure of the intersection performance. The ICU value is the sum of the critical volume to capacity ratios at an intersection; it is not intended to be indicative of the LOS of each of the individual turning movements. The six qualitative categories of Level of Service have been defined along with the corresponding ICU value range and are shown in ***Table 3-1***.

3.3.2 Highway Capacity Manual (HCM) Method of Analysis (Unsignalized Intersections)

The HCM unsignalized methodology for stop-controlled intersections was utilized for the analysis of the unsignalized intersections. LOS criteria for unsignalized intersections differ from LOS criteria for signalized intersections as signalized intersections are designed for heavier traffic and therefore a greater delay.

3.3.2.1 Two-Way Stop-Controlled Intersections

Two-way stop-controlled intersections are comprised of a major street, which is uncontrolled, and a minor street, which is controlled by stop signs. Level of service for a two-way stop-controlled intersection is determined by the computed or measured control delay. The control delay by movement, by approach, and for the intersection as a whole is estimated by the computed capacity for each movement. LOS is determined for each minor-street movement (or shared movement) as well as major-street left turns. The worst side street approach delay is reported. LOS is not defined for the intersection as a whole or for major-street approaches, as it is assumed that major-street through vehicles experience zero delay. The HCM control delay value range for two-way stop-controlled intersections is shown in ***Table 3-2***.

3.4 Level of Service Criteria

According to the City of Orange General Plan Circulation Element and stated in the *City of Orange Traffic Impact Analysis Guidelines, dated August 15, 2007,* LOS D is the minimum acceptable

condition that should be maintained during the morning and evening peak commute hours on all intersections.

3.5 Existing Level of Service Results

Table 3-3 summarizes the existing peak hour service level calculations for the four (4) key study intersections based on existing traffic volumes and current street geometry. Review of *Table 3-3* indicates that all key study intersections currently operate at acceptable levels of service (LOS D or better).

Appendix C presents the ICU/LOS and Delay/LOS calculations for the four (4) key study intersections for the AM peak hour and PM peak hour.

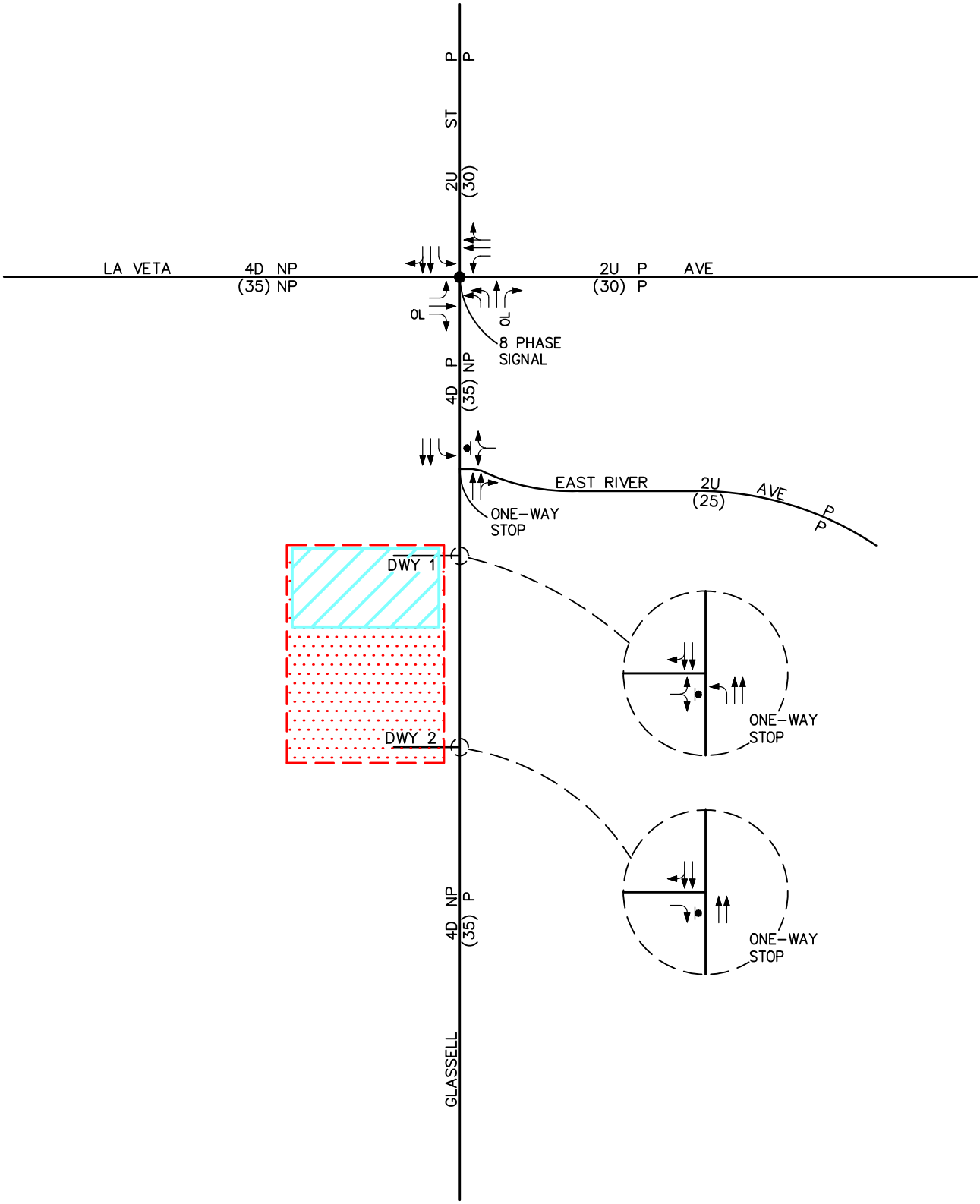

n:\4000\2184075-2 - park plaza memory care tia, orange\dwg\4075-2 f3-1.dwg LDP 09:59:54 06-19-2019 co

LINSCOTT LAW & GREENSPAN engineers

NO SCALE

KEY

- ← = APPROACH LANE ASSIGNMENT
- ● = TRAFFIC SIGNAL, ▼ = STOP SIGN
- P = PARKING, NP = NO PARKING
- U = UNDIVIDED, D = DIVIDED, OL = OVERLAP
- 2 = NUMBER OF TRAVEL LANES
- (XX) = POSTED SPEED LIMIT (MPH)
- = PROJECT SITE
- = PROPOSED MEMORY CARE

FIGURE 3-1

EXISTING ROADWAY CONDITIONS AND INTERSECTION CONTROLS

PARK PLAZA MEMORY CARE TIA, ORANGE

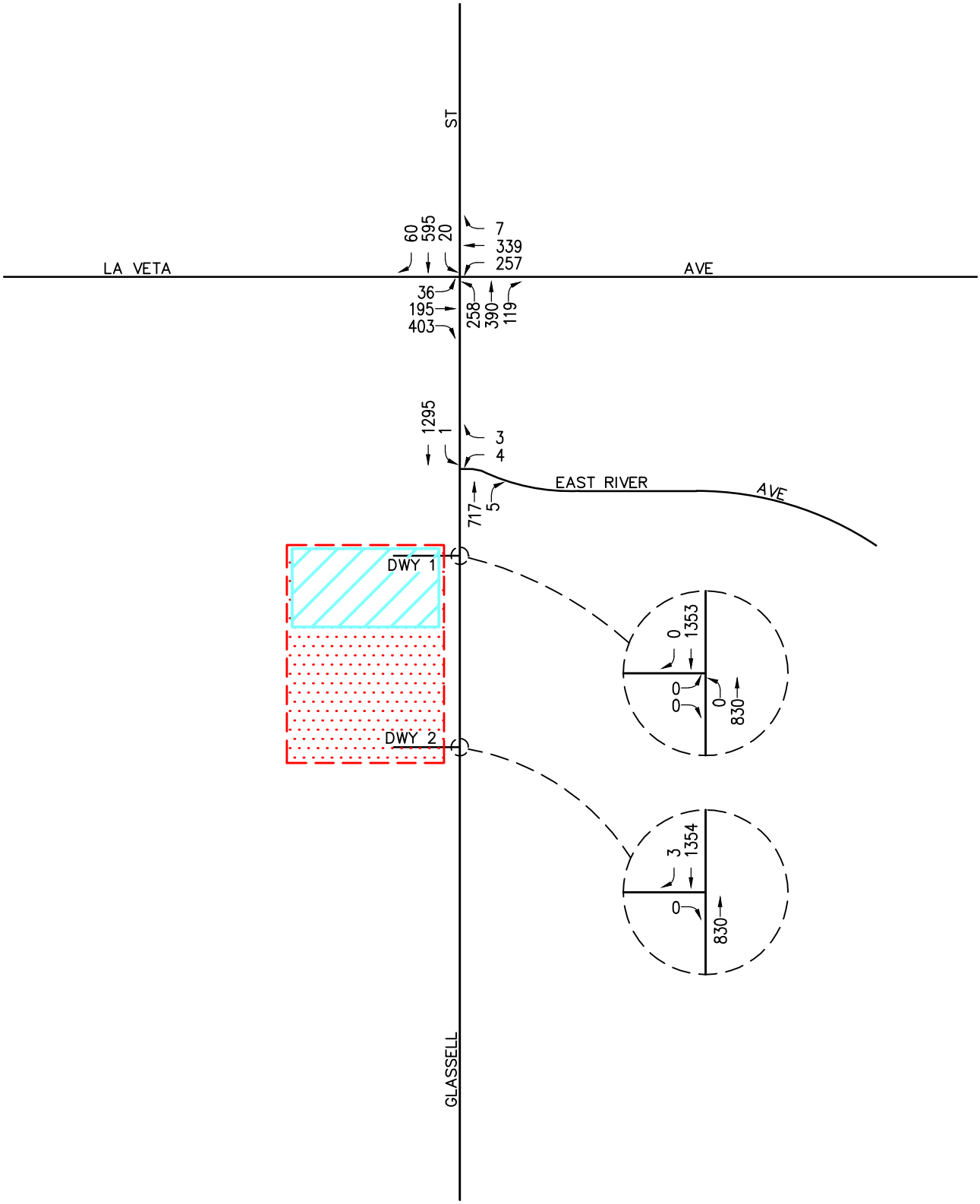

LINSCOTT LAW & GREENSPAN engineers

N NO SCALE

KEY

= PROJECT SITE

= PROPOSED MEMORY CARE

FIGURE 3-2

EXISTING (2019) AM PEAK HOUR TRAFFIC VOLUMES

PARK PLAZA MEMORY CARE TIA, ORANGE

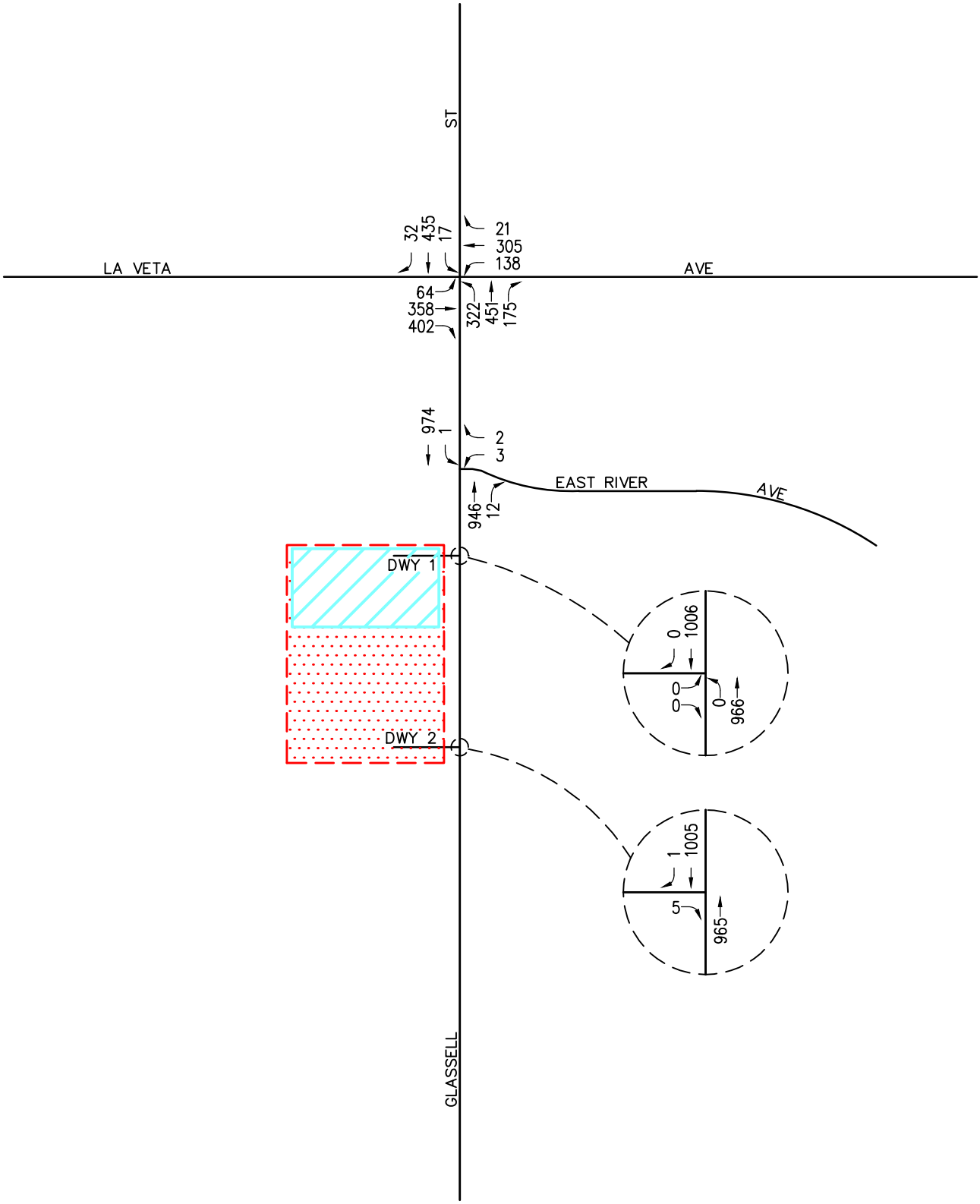

n:\4000\2184075-2 - park plaza memory care tia, orange\dwg\4075-2 f3-3.dwg LDP 09:52:24 06-19-2019 co

LINSCOTT LAW & GREENSPAN engineers

N NO SCALE

KEY

= PROJECT SITE

= PROPOSED MEMORY CARE

FIGURE 3-3

EXISTING (2019) PM PEAK HOUR TRAFFIC VOLUMES

PARK PLAZA MEMORY CARE TIA, ORANGE

TABLE 3-1
LEVEL OF SERVICE CRITERIA FOR SIGNALIZED INTERSECTIONS[1]

Level of Service (LOS)	Intersection Capacity Utilization Value (V/C)	Level of Service Description
A	≤ 0.60	EXCELLENT. No vehicle waits longer than one red light, and no approach phase is fully used.
B	0.61 – 0.70	VERY GOOD. An occasional approach phase is fully utilized; many drivers begin to feel somewhat restricted within groups of vehicles.
C	0.71 – 0.80	GOOD. Occasionally drivers may have to wait through more than one red light; backups may develop behind turning vehicles.
D	0.81 – 0.90	FAIR. Delays may be substantial during portions of the rush hours, but enough lower volume periods occur to permit clearing of developing lines, preventing excessive backups.
E	0.91 – 1.00	POOR. Represents the most vehicles intersection approaches can accommodate; may be long lines of waiting vehicles through several signal cycles.
F	> 1.00	FAILURE. Backups from nearby locations or on cross streets may restrict or prevent movement of vehicles out of the intersection approaches. Potentially very long delays with continuously increasing queue lengths.

[1] Source: *Transportation Research Board Circular 212 – Interim Materials on Highway Capacity*.

TABLE 3-2

LEVEL OF SERVICE CRITERIA FOR UNSIGNALIZED INTERSECTIONS (HCM 6 METHODOLOGY)[2,3]

Level of Service (LOS)	Highway Capacity Manual (HCM) Delay Per Vehicle (seconds/vehicle)	Level of Service Description
A	≤ 10.0	Little or no delay
B	> 10.0 and ≤ 15.0	Short traffic delays
C	> 15.0 and ≤ 25.0	Average traffic delays
D	> 25.0 and ≤ 35.0	Long traffic delays
E	> 35.0 and ≤ 50.0	Very long traffic delays
F	> 50.0	Severe congestion

2 Source: *Highway Capacity Manual 6*, Chapter 20: Two-Way Stop-Controlled Intersections. The LOS criteria apply to each lane on a given approach and to each approach on the minor street. LOS is not calculated for major-street approaches or for the intersection as a whole.

3 Source: *Highway Capacity Manual 6*, Chapter 21: All-Way Stop-Controlled Intersections. For approaches and intersection-wide assessment, LOS is defined solely by control delay.

TABLE 3-3
EXISTING (YEAR 2019) INTERSECTION PEAK HOUR LEVELS OF SERVICE

#	Key Intersection	Jurisdiction	Minimum Acceptable LOS	Control Type	Time Period	ICU	Delay (s/v)	LOS	Poor LOS?
1	Glassell Street at	Orange	D	8Φ Traffic	AM	0.631	--	B	No
	La Veta Avenue			Signal	PM	0.617	--	B	No
2	Glassell Street at	Orange	D	One-Way	AM	--	13.7	B	No
	East River Avenue			Stop	PM	--	15.2	C	No
3	Glassell Street at	Orange	D	One-Way	AM	--	0.0 [a]	A	No
	Park Plaza Driveway 1			Stop	PM	--	0.0 [a]	A	No
4	Glassell Street at	Orange	D	One-Way	AM	--	0.0 [b]	A	No
	Park Plaza Driveway 2			Stop	PM	--	12.1	B	No

Notes:

LOS = Level of Service, please refer to *Tables 3-1* and *3-2* for the LOS definitions

ICU = Intersection Capacity Utilization

s/v = seconds per vehicle (delay)

Φ = Phase

[a] The existing site of the proposed Project is currently vacant and there is no existing volume coming out of Driveway 1. Therefore, zero delay is reported for this intersection.

[b] There is no existing outbound volume coming out of Driveway 2 during the AM Peak Hour. Therefore, zero delay is reported for this intersection.

4.0 TRAFFIC FORECASTING METHODOLOGY

In order to estimate the traffic impact characteristics of the proposed Project, a multi-step process has been utilized. The first step is trip generation, which estimates the total arriving and departing traffic on a peak hour and daily basis. The traffic generation potential is forecast by applying the appropriate vehicle trip generation equations or rates to the project development tabulation.

The second step of the forecasting process is trip distribution, which identifies the origins and destinations of inbound and outbound project traffic. These origins and destinations are typically based on demographics and existing/anticipated travel patterns in the study area.

The third step is traffic assignment, which involves the allocation of project traffic to study area streets and intersections. Traffic assignment is typically based on minimization of travel time, which may or may not involve the shortest route, depending on prevailing operating conditions and travel speeds. Traffic distribution patterns are indicated by general percentage orientation, while traffic assignment allocates specific volume forecasts to individual roadway links and intersection turning movements throughout the study area.

With the forecasting process complete and project traffic assignments developed, the impact of the proposed Project is isolated by comparing operational (LOS) conditions at selected key intersections using expected future traffic volumes with and without forecast project traffic. The need for site-specific and/or cumulative local area traffic improvements can then be evaluated and the significance of the project's impacts identified.

5.0 PROJECT TRAFFIC CHARACTERISTICS

5.1 Project Traffic Generation

Traffic generation is expressed in vehicle trip ends, defined as one-way vehicular movements, either entering or exiting the generating land use. Generation equations and/or rates used in the traffic forecasting procedure are found in the 10th Edition of *Trip Generation*, published by the Institute of Transportation Engineers (ITE) [Washington D.C., 2017].

Table 5-1 summarizes the trip generation rates used in forecasting the vehicular trips generated by the proposed Project and the existing land use (i.e. existing vacant restaurant building) and also presents the project's forecast peak hour and daily traffic volumes. For this analysis, the trip generation potential of the existing land use was estimated using ITE Land Use 931: Quality Restaurant trip rates and the trip generation potential of the proposed Project was estimated using ITE Land Use 254: Assisted Living trip rates.

As shown at the bottom of *Table 5-1,* the proposed Project will generate 320 less "net" daily trips (one half arriving and one half departing), with 2 greater "net" trips (0 inbound, 2 outbound) produced in the AM peak hour and 34 less "net" trips (-24 inbound, -10 outbound) produced in the PM peak hour on a "typical" weekday compared to the existing use.

It should be noted that the existing 5,595 SF Chinese Restaurant is currently non-operational. Therefore, the Proposed Project's gross trip generation of 149 daily trips (one half arriving and one half departing), with 6 trips (4 inbound, 2 outbound) produced in the AM peak hour and 10 trips (5 inbound, 5 outbound) produced in the PM peak hour was utilized in this traffic impact analysis to provide the most conservative assessment.

5.2 Project Traffic Distribution and Assignment

Figure 5-1 illustrates the general, directional traffic distribution pattern for the proposed Project. Project traffic volumes both entering and exiting the project site have been distributed and assigned to the adjacent street system based on the following considerations:

- directional flows on the freeways in the immediate vicinity of the project site (i.e. SR-22 Freeway, etc.),
- the site's proximity to major traffic carriers (i.e. Glassell Street),
- expected localized traffic flow patterns based on adjacent street channelization and presence of traffic signals, and
- ingress/egress availability at the project site.

The anticipated AM and PM peak hour project traffic volumes associated with the Project are presented in ***Figures 5-2*** and ***5-3***, respectively. The traffic volume assignments presented in *Figures 5-2* and *5-3* reflect the traffic distribution characteristics shown in *Figure 5-1* and the traffic generation forecast presented in *Table 5-1.*

5.3 Existing Plus Project Traffic Conditions

The existing plus project traffic conditions have been generated based upon existing conditions and the estimated project traffic. These forecast traffic conditions have been prepared pursuant to the California Environmental Quality Act (CEQA) guidelines, which require that the potential impacts of a Project be evaluated upon the circulation system as it currently exists. This traffic volume scenario and the related intersection capacity analyses will identify the roadway improvements necessary to mitigate the direct traffic impacts of the Project, if any.

Figures 5-4 and ***5-5*** present projected AM and PM peak hour traffic volumes at the four (4) key study intersections with the addition of the trips generated by the proposed Project to existing traffic volumes, respectively. It should be noted that an assumption was made to account for a portion of existing outbound volume from the southernmost driveway (i.e. Park Plaza Driveway 2) that would utilize the full-access northernmost driveway (i.e. Park Plaza Driveway 1) to go northbound on Glassell Street.

TABLE 5-1
PROJECT TRAFFIC GENERATION FORECAST[4]

ITE Land Use Code / Project Description	Daily 2-Way	AM Peak Hour			PM Peak Hour		
		Enter	Exit	Total	Enter	Exit	Total
Generation Rates:							
▪ ITE 254: Assisted Living (TE/Occupied Beds)	4.14	68%	32%	0.18	50%	50%	0.29
▪ ITE 931: Quality Restaurant (TE/TSF)	83.84	90%[5]	10%[5]	0.73	67%	33%	7.80
Generation Forecasts:							
[A]. Proposed Project							
▪ ***Park Plaza Expansion – Memory Care Facility (36 Beds)***	***149***	***4***	***2***	***6***	***5***	***5***	***10***
[B]. Existing Land Use							
▪ Chinese Restaurant (5,595 SF)	469	4	0	4	29	15	44
Total "Net Increase" Project Trip Generation: Proposed Project Minus Existing Land Use [A] – [B]	*-320*	*0*	*2*	*2*	*-24*	*-10*	*-34*

Notes:
- TE/Occupied Beds = Trip End per Occupied Beds
- TE/TSF = Trip End per Thousand Square Feet

4 Source: *Trip Generation*, 10th Edition, Institute of Transportation Engineers (ITE), Washington, D.C. (2017).

5 ITE does not provide enter/exit splits for the AM Peak Hour, therefore 90% entering and 10% exiting was assumed.

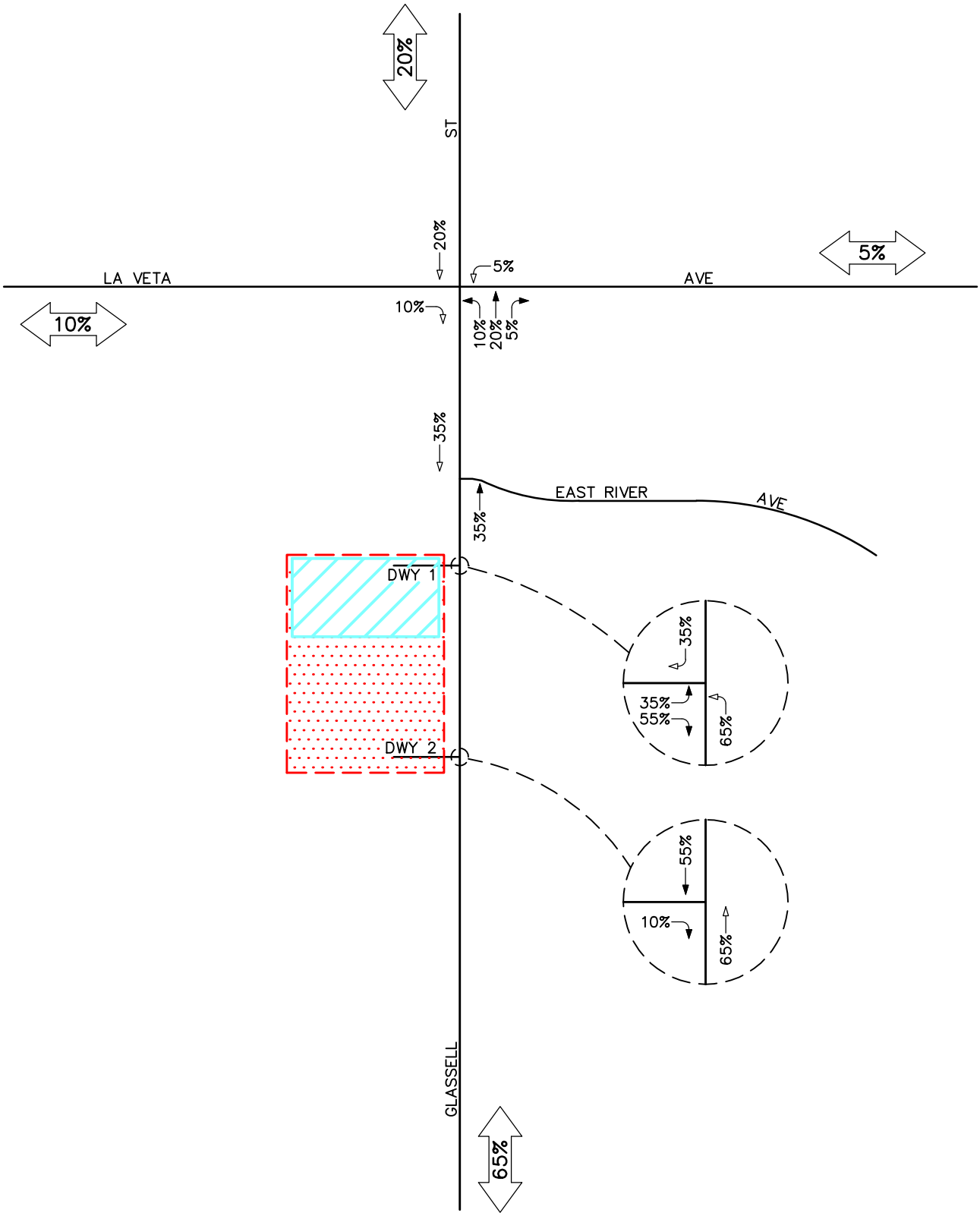

LINSCOTT LAW & GREENSPAN engineers

N NO SCALE

KEY

= PROJECT SITE

= PROPOSED MEMORY CARE

= INBOUND PERCENTAGE

= OUTBOUND PERCENTAGE

FIGURE 5-1

PROJECT TRAFFIC DISTRIBUTION PATTERN

PARK PLAZA MEMORY CARE TIA, ORANGE

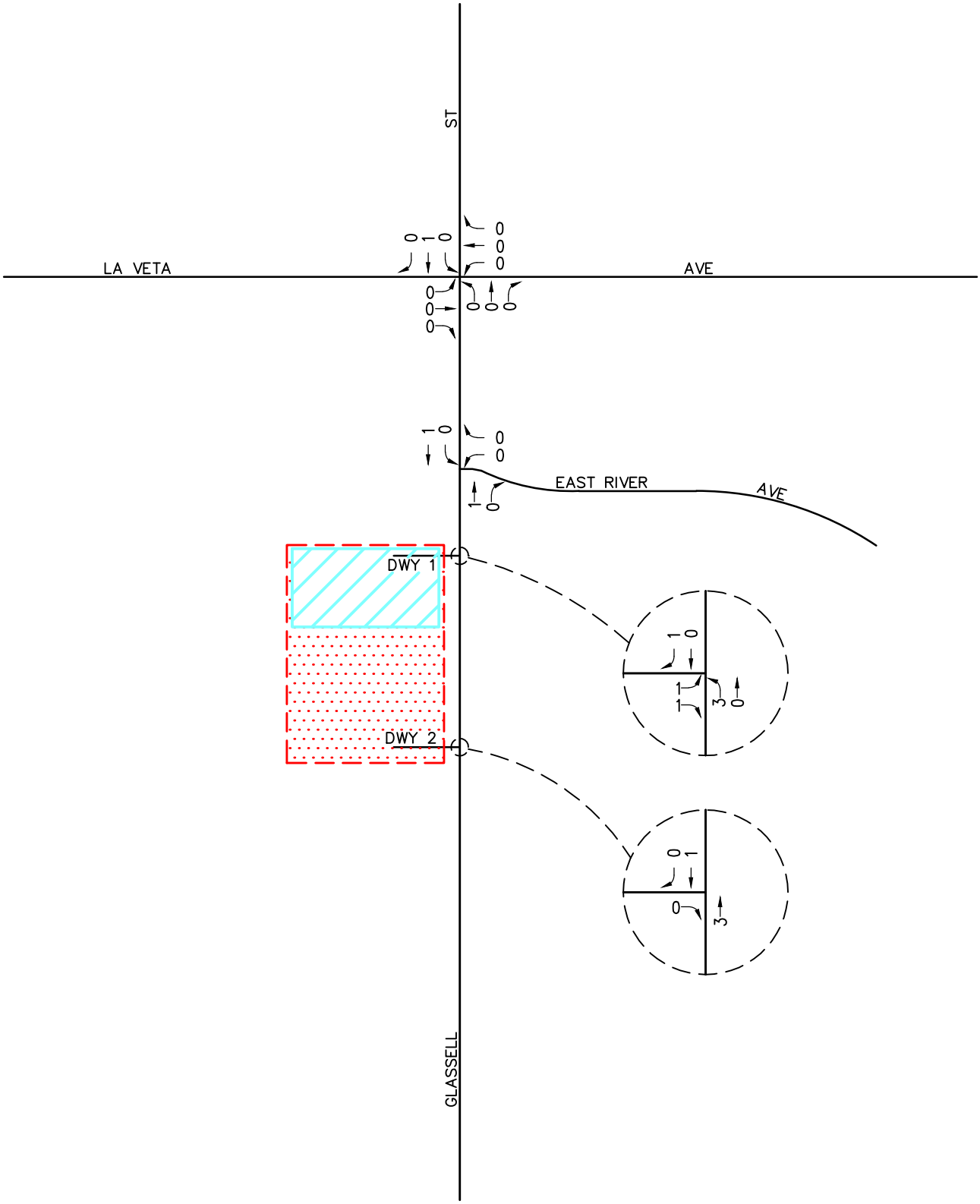

LINSCOTT LAW & GREENSPAN engineers

N NO SCALE

KEY

= PROJECT SITE

= PROPOSED MEMORY CARE

FIGURE 5-2

AM PEAK HOUR PROJECT-GENERATED TRAFFIC VOLUMES

PARK PLAZA MEMORY CARE TIA, ORANGE

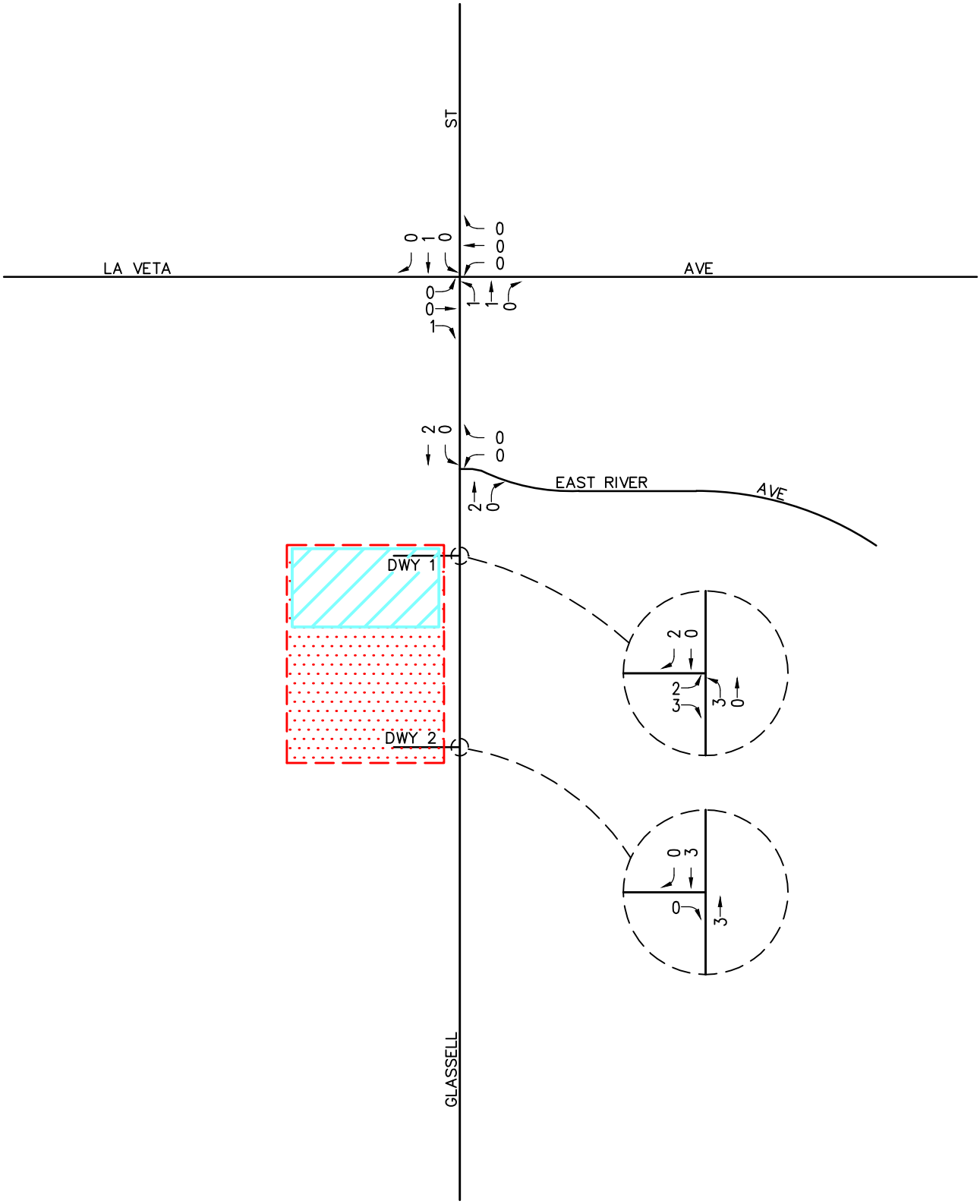

n:\4000\2184075-2 - park plaza memory care tia, orange\dwg\4075-2 f5-3.dwg LDP 09:26:17 06-21-2019 mempin

LINSCOTT LAW & GREENSPAN engineers

N NO SCALE

KEY

= PROJECT SITE

= PROPOSED MEMORY CARE

FIGURE 5-3

PM PEAK HOUR PROJECT-GENERATED TRAFFIC VOLUMES

PARK PLAZA MEMORY CARE TIA, ORANGE

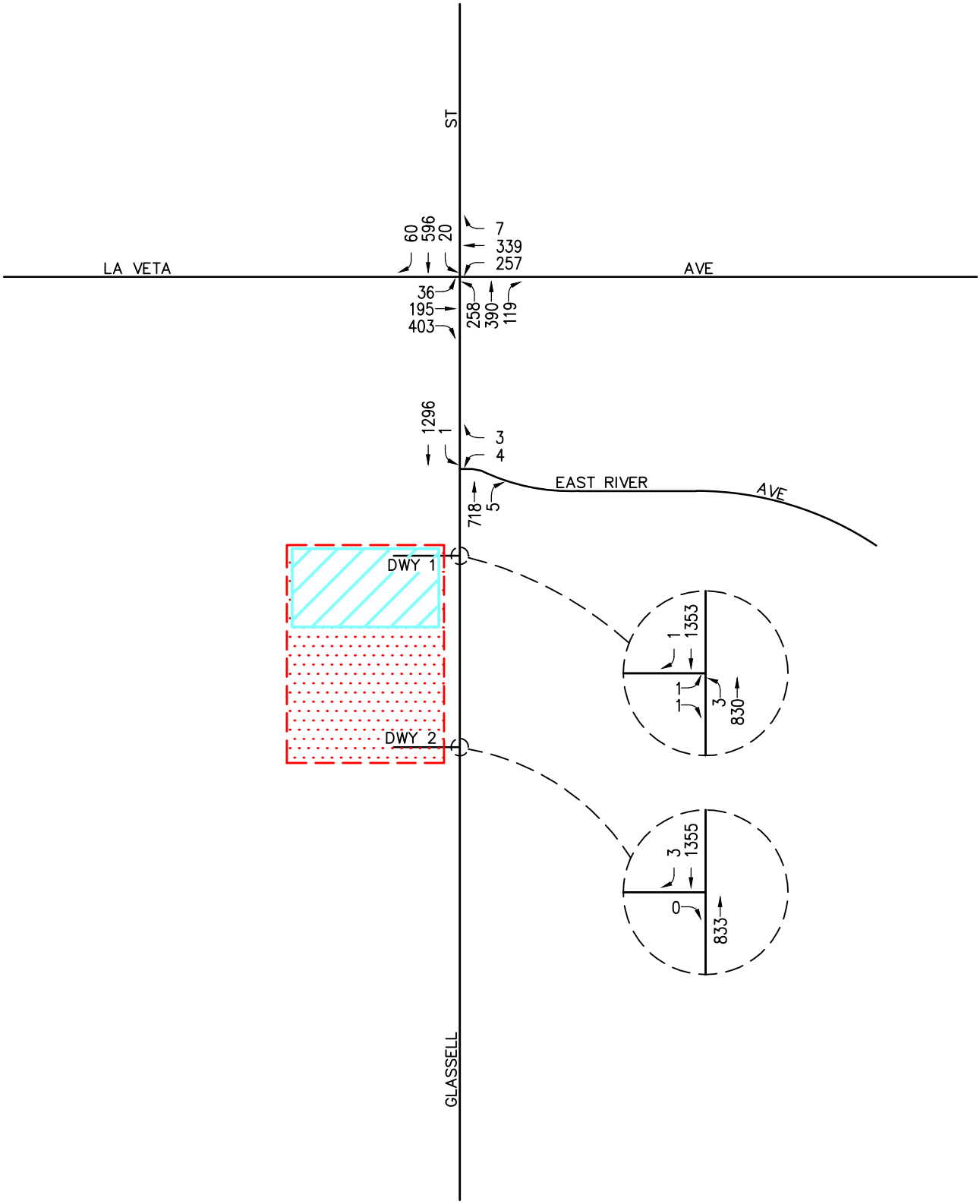

n:\4000\2184075-2 - park plaza memory care tia, orange\dwg\4075-2 f5-4.dwg LDP 10:08:45 06-21-2019 mempin

LINSCOTT LAW & GREENSPAN engineers

N NO SCALE

KEY

= PROJECT SITE

= PROPOSED MEMORY CARE

FIGURE 5-4

EXISTING (2019) PLUS PROJECT AM PEAK HOUR TRAFFIC VOLUMES

PARK PLAZA MEMORY CARE TIA, ORANGE

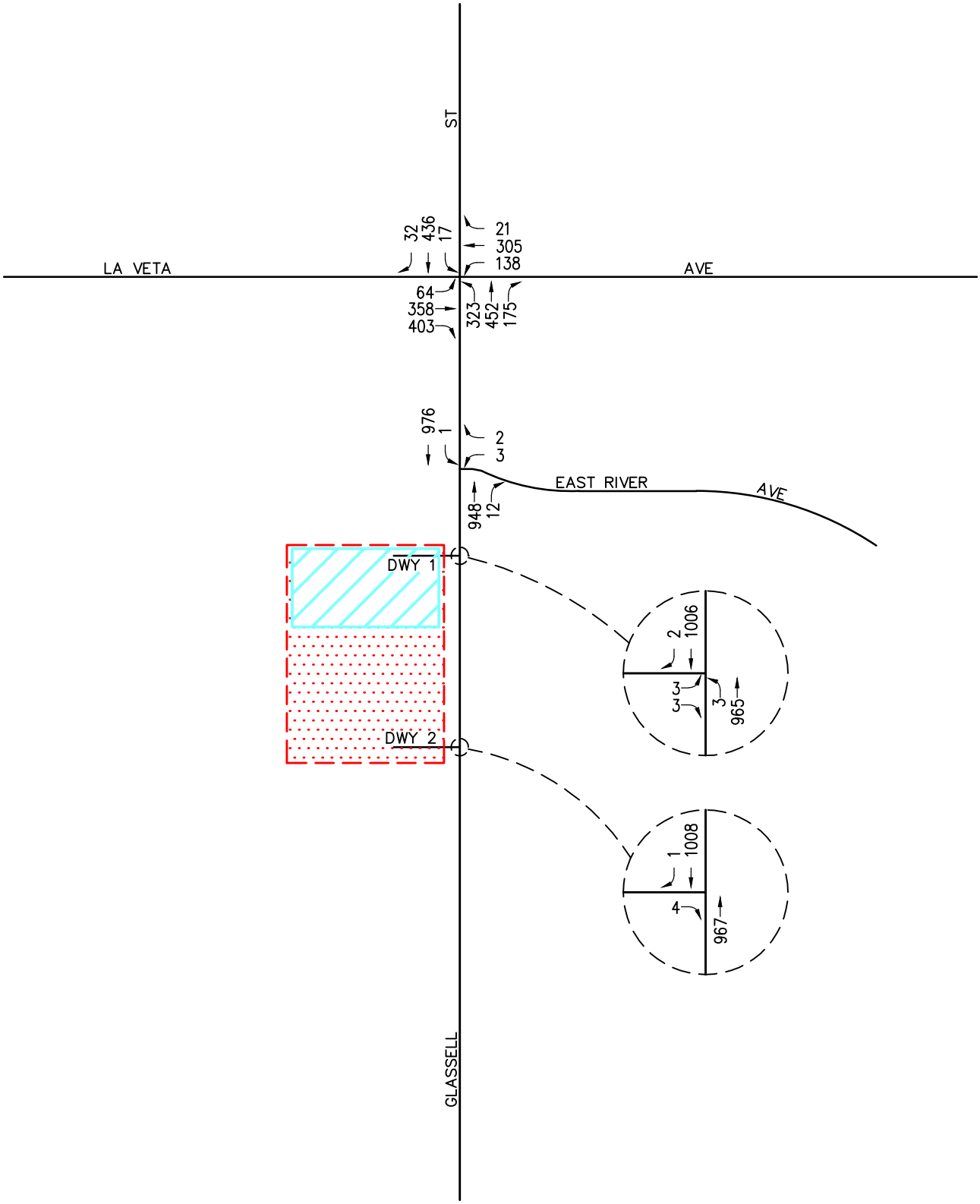

n:\4000\2184075-2 - park plaza memory care tia, orange\dwg\4075-2 f5-5.dwg LDP 10:09:27 06-21-2019 mempin

LINSCOTT LAW & GREENSPAN engineers

N NO SCALE

KEY

= PROJECT SITE

= PROPOSED MEMORY CARE

FIGURE 5-5

EXISTING (2019) PLUS PROJECT PM PEAK HOUR TRAFFIC VOLUMES

PARK PLAZA MEMORY CARE TIA, ORANGE

6.0 YEAR 2021 CUMULATIVE FORECASTS

The Cumulative Base or "background" traffic projections account for existing traffic volumes, and include two growth elements over existing traffic volumes: (1) increase in the existing traffic volumes due to overall regional growth; and, (2) traffic generated by specific developments expected to be constructed by Year 2021 in the vicinity of the Project study area. The following sections describe these two growth elements in existing traffic volumes.

No physical, capacity-enhancing improvements to intersection geometry or roadway segments have been assumed under Year 2021 Cumulative Base conditions because no transportation system projects within the study area are expected to be fully developed/completed by Year 2021.

6.1 Ambient Traffic Growth

Horizon year, background traffic growth estimates have been calculated using an ambient traffic growth factor. The ambient traffic growth factor is intended to include unknown and future cumulative projects in the study area, as well as account for regular growth in traffic volumes due to the development of projects outside the study area. The future growth in traffic volumes has been calculated at one percent (1.0%) per year. Applied to the Year 2019 existing traffic volumes, this factor results in a 2.0% growth in existing volumes to the near-term horizon Year 2021.

6.2 Cumulative Projects Traffic Characteristics

In order to make a realistic estimate of future on-street conditions prior to implementation of the proposed Project, the status of other known development projects (cumulative projects) in the vicinity of the proposed Project has been researched at the City of Orange and City of Santa Ana. With this information, the potential impact of the proposed Project can be evaluated within the context of the cumulative impact of all ongoing development.

Based on our research, there are four (4) cumulative projects in the City of Orange and one (1) cumulative project in the City of Santa Ana within the vicinity of the subject site that have either been built, but not yet fully occupied, or are being processed for approval. These five (5) cumulative projects have been included as part of the cumulative background setting.

Figure 6-1 graphically illustrates the location of the cumulative projects. These cumulative projects are expected to generate vehicular traffic, which may affect the operating conditions of the key study intersections.

Table 6-1 provides a brief description and presents the trip generation for the five (5) cumulative projects. As shown in *Table 6-1*, the five (5) cumulative projects are forecast to generate a combined total of 7,233 daily trips, with 549 trips (123 inbound and 426 outbound) forecast during the AM peak hour and 649 trips (416 inbound and 233 outbound) forecast during the PM peak hour. ***Figures 6-2*** and ***6-3*** present the Cumulative Projects Only AM and PM peak hour traffic volumes, respectively.

6.3 Year 2021 Cumulative Base Traffic Volumes

Figures 6-4 and ***6-5*** present the AM and PM peak hour Year 2021 Cumulative Base traffic volumes (existing traffic + ambient growth traffic + cumulative project traffic) at the four (4) key study intersections, respectively.

6.4 Year 2021 Cumulative Plus Project Traffic Volumes

Figures 6-6 and ***6-7*** illustrate the Year 2021 Cumulative Plus Project AM and PM peak hour traffic volumes, respectively.

TABLE 6-1

CUMULATIVE PROJECTS DESCRIPTION AND TRIP GENERATION ESTIMATES

Cumulative Project / Location	Land Use	Size	Weekday Daily	AM Peak Hour In	AM Peak Hour Out	AM Peak Hour Total	PM Peak Hour In	PM Peak Hour Out	PM Peak Hour Total
1 Ronald McDonald House Expansion ***383 and 389 South Batavia Street,*** ***802 West Culver Avenue*** (City of Orange)	Assisted Living	23 Beds	95	3	1	4	4	3	7
2 Dang Residences ***655 South Glassell Street*** (City of Orange)	Single Family Detached Housing	7 DU	66	1	4	5	4	3	7
3 999 Town and Country Apartments ***999 Town and Country road*** (City of Orange)	Apartments	262 DU [b]	1,742	26	108	134	105	58	163
4 Town and Country	Apartments	653 DU [c]	4,342	67	266	333	263	142	405
Apartments and Townhomes	Townhomes	74 DU [c]	430	6	27	33	25	13	38
702 West Town and Country Road (City of Orange)		**Sub-total:**	**4,772**	**73**	**293**	**366**	**288**	**155**	**443**
5 Starbucks	Coffee Donut Shop with Drive-Through Window	0.907 TSF	744	41	40	81	20	19	39
2701 North Grand Avenue	*Pass-by Reduction*		*-186*	*-21*	*-20*	*-41*	*-5*	*-5*	*-10*
(City of Santa Ana)		**Sub-total:**	**558**	**20**	**20**	**40**	**15**	**14**	**29**
Cumulative Projects Trip Generation Potential			**7,233**	**123**	**426**	**549**	**416**	**233**	**649**

Note:

[a] Source: *Trip Generation, 10th Edition, Institue of Transportation Engineers (ITE), Washington, D.C. (2017)* , unless otherwise noted.

[b] Source: *999 Town & Country Apartments Project Traffic Impact Analylsis* , prepared by LLG Engineers.

[c] Source: *Town and Country Apartments and Townhomes Project Traffic Impact Analylsis* , prepared by LLG Engineers.

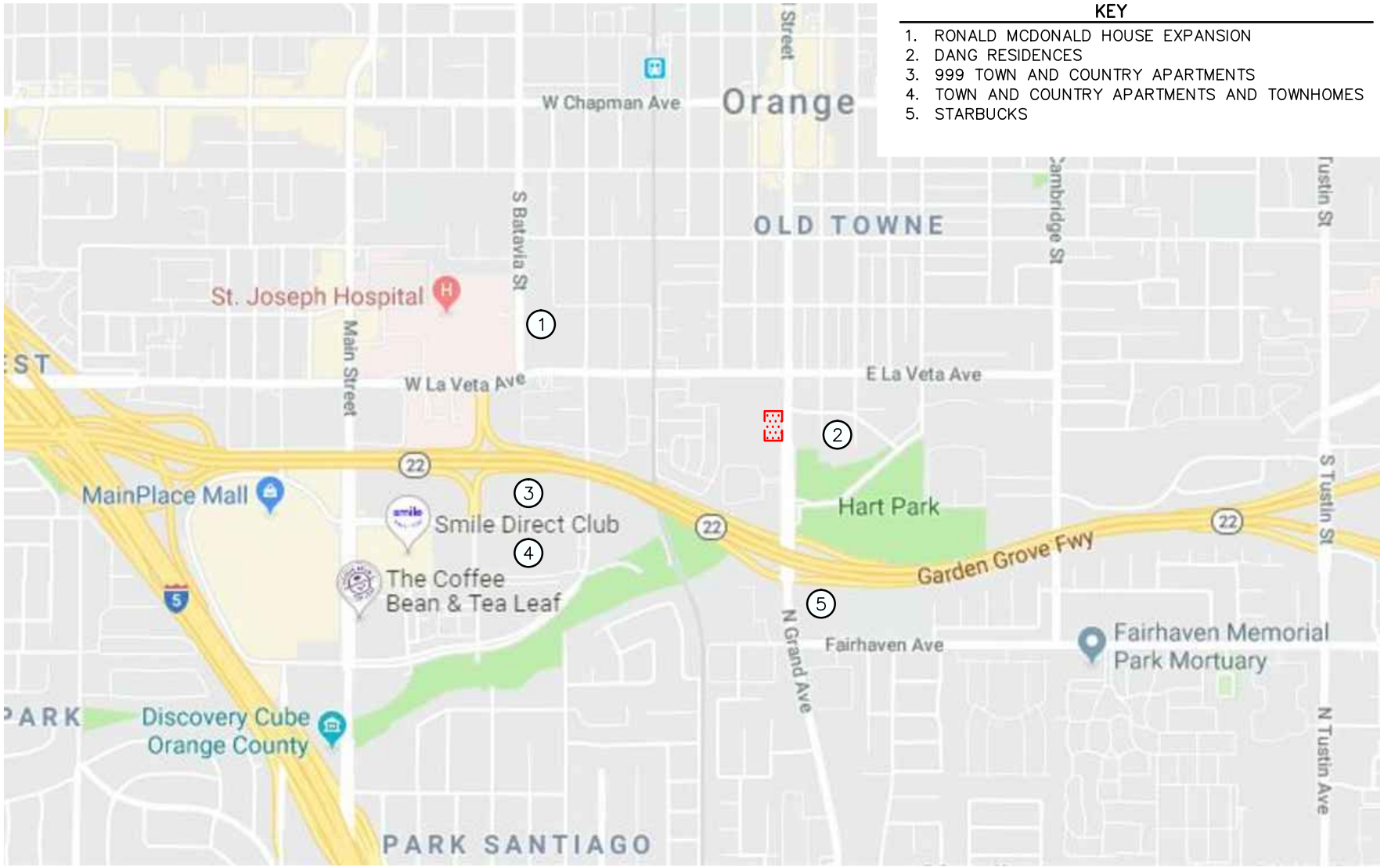

KEY

1. RONALD MCDONALD HOUSE EXPANSION
2. DANG RESIDENCES
3. 999 TOWN AND COUNTRY APARTMENTS
4. TOWN AND COUNTRY APARTMENTS AND TOWNHOMES
5. STARBUCKS

n:\4000\2184075-2 - park plaza memory care tia, orange\dwg\4075-2 f6-1.dwg LDP 10:17:10 06-19-2019 co

LINSCOTT LAW & GREENSPAN engineers

N NO SCALE

SOURCE: GOOGLE

KEY

(#) = CUMULATIVE PROJECT LOCATION

= PROJECT SITE

FIGURE 6-1

LOCATION OF CUMULATIVE PROJECTS

PARK PLAZA MEMORY CARE TIA, ORANGE

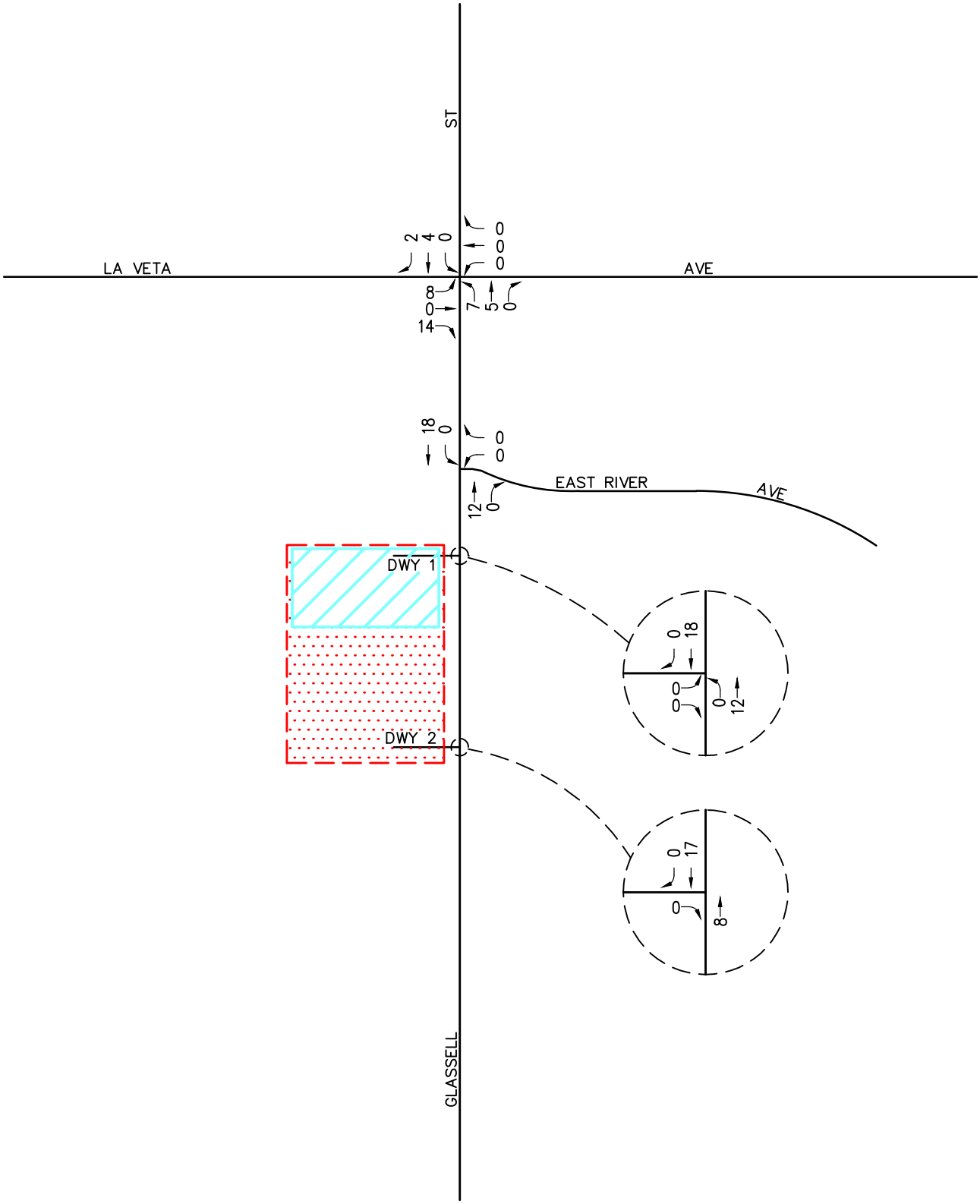

n:\4000\2184075-2 - park plaza memory care tia, orange\dwg\4075-2 f6-2.dwg LDP 19:07:42 08-12-2019 mempin

LINSCOTT LAW & GREENSPAN engineers

N NO SCALE

KEY

= PROJECT SITE

= PROPOSED MEMORY CARE

FIGURE 6-2

AM PEAK HOUR CUMULATIVE PROJECT ONLY TRAFFIC VOLUMES

PARK PLAZA MEMORY CARE TIA, ORANGE

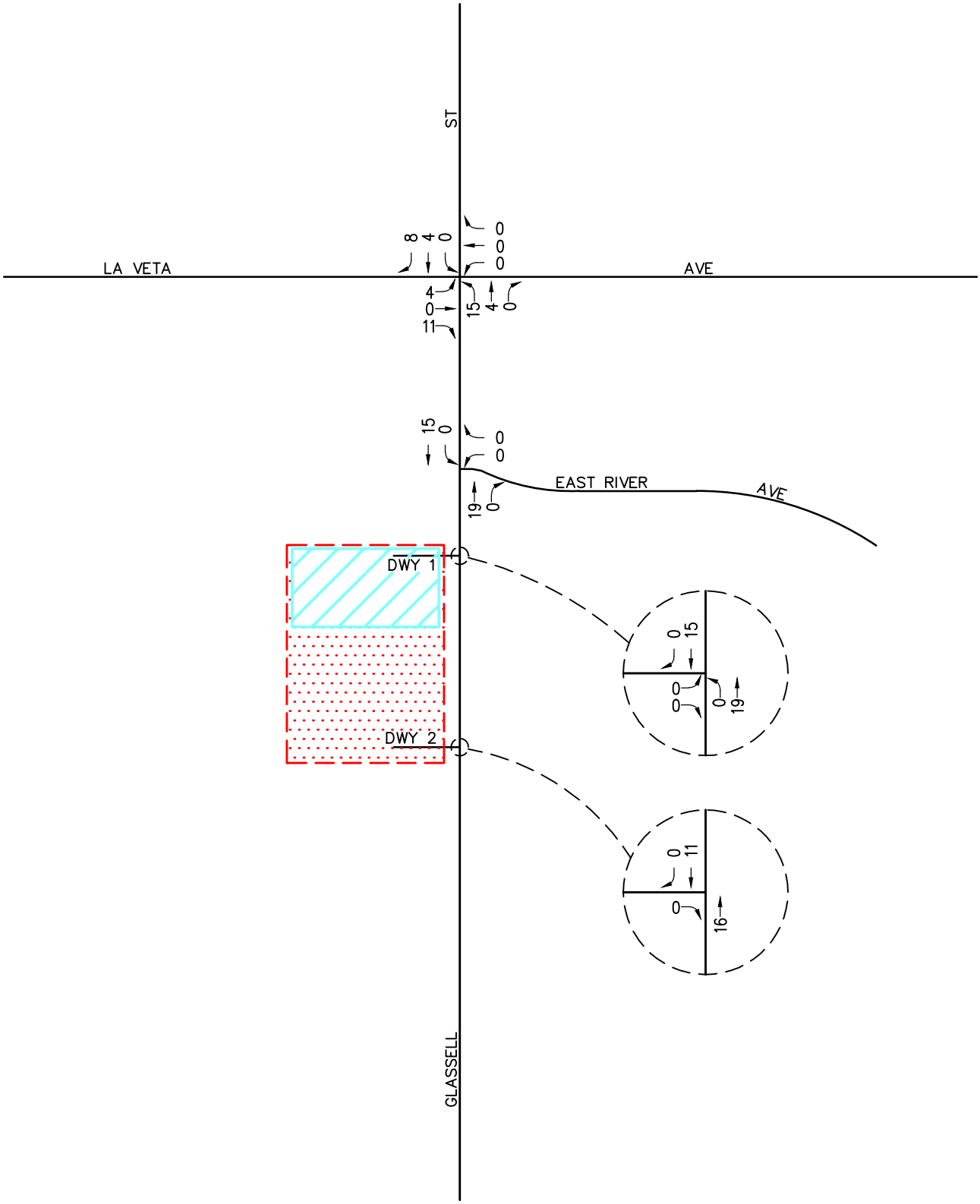

LINSCOTT LAW & GREENSPAN engineers

N NO SCALE

KEY

= PROJECT SITE

= PROPOSED MEMORY CARE

FIGURE 6-3

PM PEAK HOUR CUMULATIVE PROJECT ONLY TRAFFIC VOLUMES

PARK PLAZA MEMORY CARE TIA, ORANGE

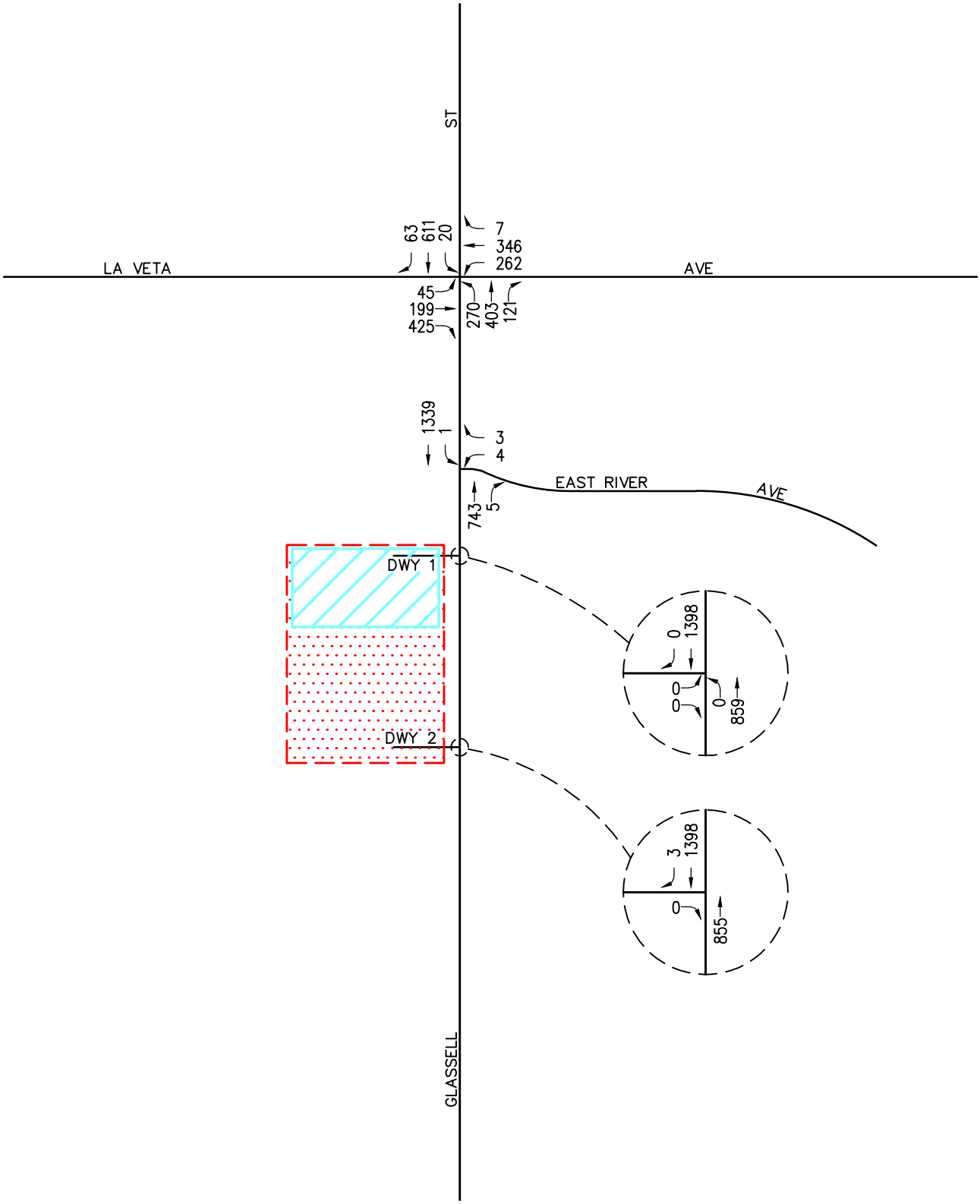

n:\4000\2184075-2 - park plaza memory care tia, orange\dwg\4075-2 f6-4.dwg LDP 19:08:30 08-12-2019 mempin

LINSCOTT LAW & GREENSPAN engineers

N NO SCALE

KEY

= PROJECT SITE

= PROPOSED MEMORY CARE

FIGURE 6-4

YEAR 2021 CUMULATIVE BASE AM PEAK HOUR TRAFFIC VOLUMES

PARK PLAZA MEMORY CARE TIA, ORANGE

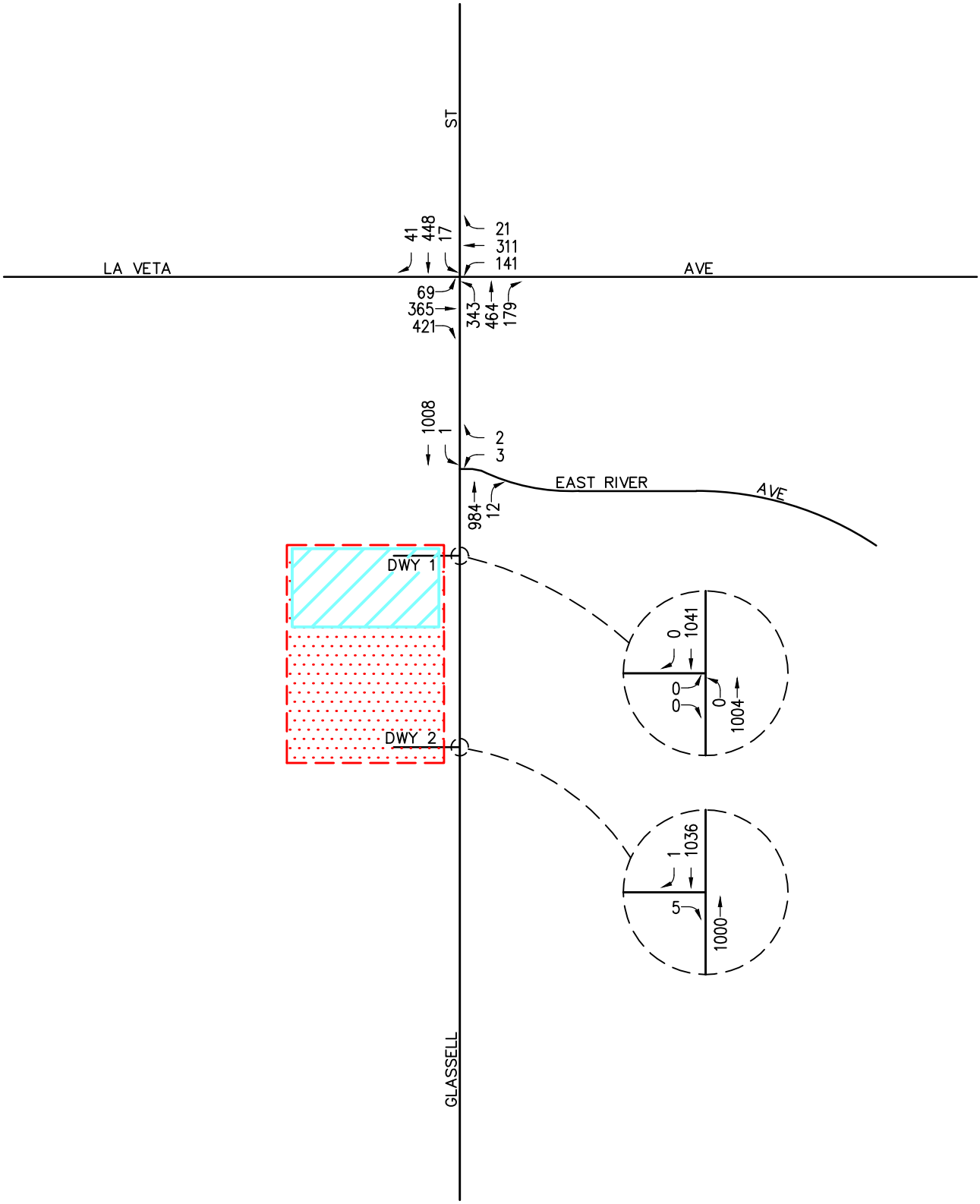

LINSCOTT LAW & GREENSPAN engineers

NO SCALE

KEY

= PROJECT SITE

= PROPOSED MEMORY CARE

FIGURE 6-5

YEAR 2021 CUMULATIVE BASE PM PEAK HOUR TRAFFIC VOLUMES

PARK PLAZA MEMORY CARE TIA, ORANGE

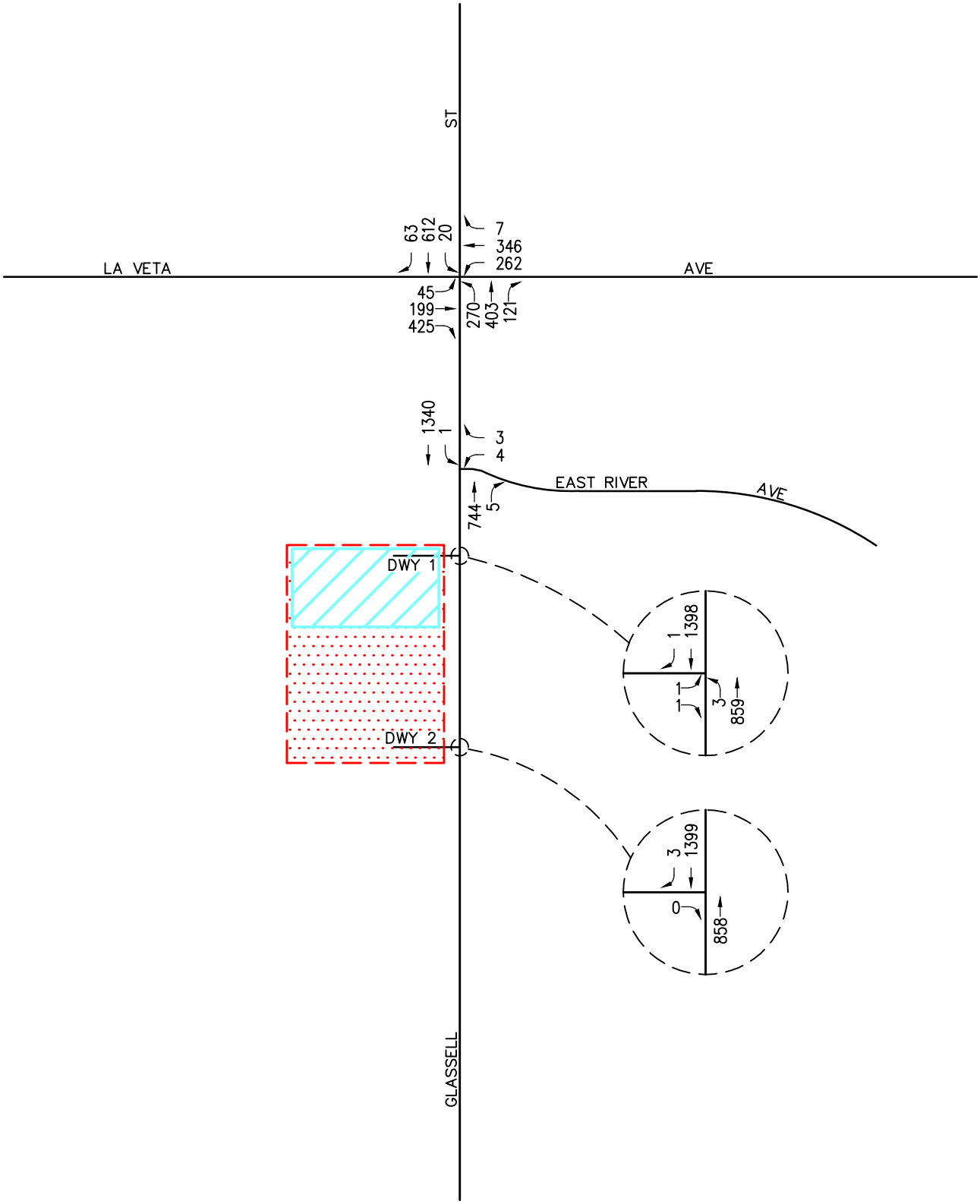

n:\4000\2184075-2 - park plaza memory care tia, orange\dwg\4075-2 f6-6.dwg LDP 19:09:03 08-12-2019 mempin

LINSCOTT LAW & GREENSPAN engineers

N NO SCALE

KEY

= PROJECT SITE

= PROPOSED MEMORY CARE

FIGURE 6-6

YEAR 2021 CUMULATIVE PLUS PROJECT AM PEAK HOUR TRAFFIC VOLUMES

PARK PLAZA MEMORY CARE TIA, ORANGE

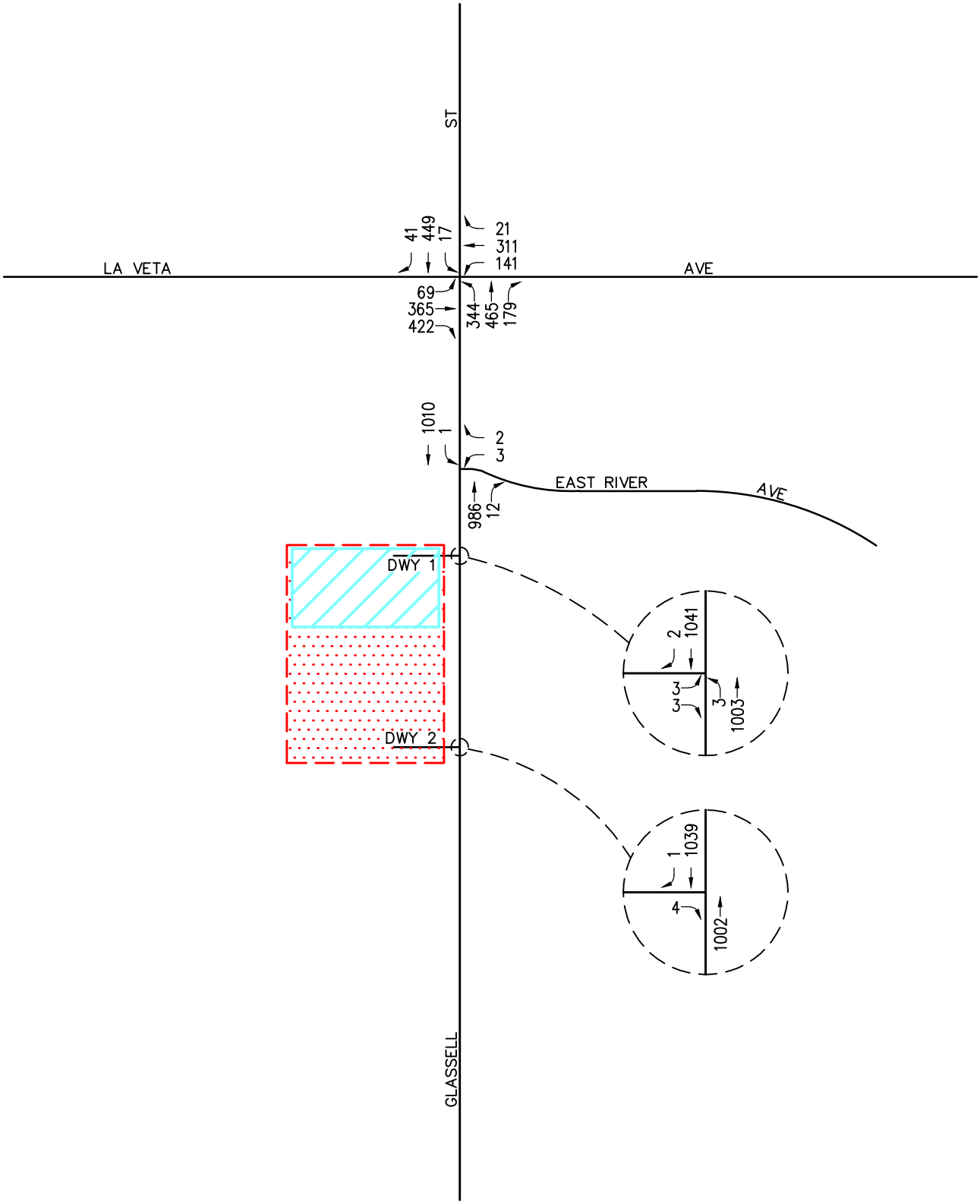

n:\4000\2184075-2 - park plaza memory care tia, orange\dwg\4075-2 f6-7.dwg LDP 19:09:29 08-12-2019 mempin

LINSCOTT LAW & GREENSPAN engineers

N NO SCALE

KEY

= PROJECT SITE

= PROPOSED MEMORY CARE

FIGURE 6-7

YEAR 2021 CUMULATIVE PLUS PROJECT PM PEAK HOUR TRAFFIC VOLUMES

PARK PLAZA MEMORY CARE TIA, ORANGE

7.0 TRAFFIC IMPACT ANALYSIS METHODOLOGY

The relative impact of the proposed Project during the AM peak hour/PM peak hour was evaluated based on analysis of future operating conditions at the four (4) key study intersections, without, then with the proposed Project. The previously discussed capacity analysis procedures were utilized to investigate the future volume-to-capacity relationships and service level characteristics at each study intersections. The significance of the potential impacts of the Project at each key intersection was then evaluated using the following traffic impact criteria.

7.1 Impact Criteria and Thresholds

Impacts to local and regional transportation systems located in the City of Orange are considered significant if:

Intersections:

- An unacceptable peak hour Level of Service (LOS) at any of the key intersections is projected. According to the City's Circulation Element and stated in the *City of Orange Traffic Impact Analysis Guidelines, dated August 15, 2007,* LOS D is the minimum acceptable condition that should be maintained during the morning and evening peak hours on all intersections; and

- The project increases traffic demand at the study intersection by 1% of capacity (ICU increase ≥ 0.010), causing or worsening LOS E or LOS F (ICU > 0.900).

- An unsignalized intersection impact is considered to be significant if the project causes an intersection operating at LOS D or better to degrade to LOS E or LOS F, and the traffic signal warrant analysis determines that a traffic signal is justified.

8.0 EXISTING PLUS PROJECT ANALYSIS

Table 8-1 summarizes the peak hour level of service results at the four (4) key study intersections for existing plus project traffic conditions. The first column (1) of ICU/LOS and Delay/LOS values in *Table 8-1* presents a summary of existing AM and PM peak hour traffic conditions (which were also presented in *Table 3-3*). The second column (2) lists existing plus project traffic conditions. The second column (2) also shows the increase in ICU and/or Delay value due to the added peak hour project trips and indicates whether the traffic associated with the Project will have a significant impact based on the LOS standards and significant impact criteria defined in this report.

8.1.1 Existing Plus Project Traffic Conditions

Review of Column (2) of *Table 8-1* indicates that traffic associated with the proposed Project ***will not*** significantly impact any of the four (4) key study intersections, when compared to the LOS standards and significant impact criteria specified in this report. All four (4) key study intersections currently operate and are forecast to continue to operate at an acceptable LOS during the AM and PM peak hours with the addition of Project generated traffic to existing traffic.

Appendix C also presents the existing plus project ICU/LOS and Delay/LOS calculations for the four (4) key study intersections for the AM peak hour and PM peak hour.

TABLE 8-1

EXISTING (YEAR 2019) PLUS PROJECT PEAK HOUR INTERSECTION CAPACITY ANALYSIS

#	Key Intersection	Time Period	(1) Existing (Year 2019) ICU	Delay (s/v)	LOS	Deficient?	(2) Existing plus Project (Year 2019) ICU	Delay (s/v)	LOS	ICU or Delay Change (2) - (1)	Significant Impact?
1	Glassell Street at	AM	0.631	--	B	No	0.632	--	B	0.001	No
	La Veta Avenue	PM	0.617	--	B	No	0.618	--	B	0.001	No
2	Glassell Street at	AM	--	13.7	B	No	--	13.7	B	0.0	No
	East River Avenue	PM	--	15.2	C	No	--	15.3	C	0.1	No
3	Glassell Street at	AM	--	0.0 [a]	A	No	--	19.2	C	19.2	No
	Park Plaza Driveway 1	PM	--	0.0 [a]	A	No	--	15.2	C	15.2	No
4	Glassell Street at	AM	--	0.0 [b]	A	No	--	0.0 [b]	A	0.0	No
	Park Plaza Driveway 2	PM	--	12.1	B	No	--	12.1	B	0.0	No

Notes:

LOS = Level of Service, please refer to *Tables 3-1* and 3-*2* for the LOS definitions

ICU = Intersection Capacity Utilization

s/v = seconds per vehicle (delay)

[a] The existing site of the proposed Project is currently vacant and there is no existing volume coming out of Driveway 1. Therefore, zero delay is reported for this intersection.

[b] There is no existing outbound volume coming out of Driveway 2 during the AM Peak Hour. Therefore, zero delay is reported for this intersection.

9.0 YEAR 2021 PLUS PROJECT ANALYSIS

Table 9-1 summarizes the peak hour level of service results at the four (4) key study intersections for Year 2021 traffic conditions. The first column (1) of ICU/LOS and Delay/LOS values in *Table 9-1* presents a summary of existing AM and PM peak hour traffic conditions (which were also presented in *Table 3-3*). The second column (2) lists projected cumulative traffic conditions (existing plus ambient traffic plus cumulative project traffic) based on existing intersection geometry, but without any traffic generated from the proposed Project. The third column (3) presents forecast Year 2021 near-term traffic conditions with the addition of Project traffic. The third column (3) also shows the increase in ICU and/or Delay value due to the added peak hour project trips and indicates whether the traffic associated with the Project will have a significant impact based on the LOS standards and significant impact criteria defined in this report.

9.1.1 Year 2021 Cumulative Base Traffic Conditions

An analysis of future (Year 2021) cumulative traffic conditions indicates that all four (4) key study intersections are forecast to continue to operate at acceptable levels of service during the AM and PM peak hours with the addition of ambient traffic growth and cumulative project traffic.

9.1.2 Year 2021 Cumulative Plus Project Traffic Conditions

Review of Column (3) of *Table 9-1* indicates that traffic associated with the proposed Project ***will not*** significantly impact any of the four (4) key study intersections, when compared to the LOS standards and significant impact criteria specified in this report. All four (4) key study intersections currently operate and are forecast to continue to operate at an acceptable LOS during the AM and PM peak hours with the addition of Project generated traffic to Year 2021 cumulative traffic.

Appendix C also presents the Year 2021 (without and with project) ICU/LOS and Delay/LOS calculations for the four (4) key study intersections.

TABLE 9-1

YEAR 2021 CUMULATIVE PEAK HOUR INTERSECTION CAPACITY ANALYSIS

#	Key Intersection	Time Period	(1) Existing (Year 2019)				(2) Year 2021 Cumulative Baseline				(3) Year 2021 plus Project				
			ICU	Delay (s/v)	LOS	Deficient?	ICU	Delay (s/v)	LOS	Deficient?	ICU	Delay (s/v)	LOS	ICU or Delay Change (3) - (2)	Significant Impact?
1	Glassell Street at	AM	0.631	--	B	No	0.652	--	B	No	0.653	--	B	0.001	No
	La Veta Avenue	PM	0.617	--	B	No	0.631	--	B	No	0.631	--	B	0.000	No
2	Glassell Street at	AM	--	13.7	B	No	--	14.0	B	No	--	14.0	B	0.0	No
	East River Avenue	PM	--	15.2	C	No	--	15.7	C	No	--	15.7	C	0.0	No
3	Glassell Street at	AM	--	0.0 [a]	A	No	--	0.0 [a]	A	No	--	19.9	C	19.9	No
	Park Plaza Driveway 1	PM	--	0.0 [a]	A	No	--	0.0 [a]	A	No	--	15.6	C	15.6	No
4	Glassell Street at	AM	--	0.0 [b]	A	No	--	0.0 [b]	A	No	--	0.0 [b]	A	0.0	No
	Park Plaza Driveway 2	PM	--	12.1	B	No	--	12.2	B	No	--	12.2	B	0.0	No

Notes:

LOS = Level of Service, please refer to *Tables 3-1* and 3-*2* for the LOS definitions

ICU = Intersection Capacity Utilization

s/v = seconds per vehicle (delay)

[a] The existing site of the proposed Project is currently vacant and there is no existing volume coming out of Driveway 1. Therefore, zero delay is reported for this intersection.

[b] There is no existing outbound volume coming out of Driveway 2 during the AM Peak Hour. Therefore, zero delay is reported for this intersection.

10.0 RECOMMENDED IMPROVEMENTS

For those intersections where projected traffic volumes are expected to result in significant cumulative impacts, this report recommends traffic improvements that change the intersection and/or roadway segment geometry to increase capacity. These capacity improvements involve roadway widening and/or re-striping to reconfigure (add lanes) roadways to specific approaches of a key intersection and/or roadway segment. The identified improvements are expected to:

- Address the impact of existing traffic, Project traffic and future non-project (ambient traffic growth and Cumulative) traffic, and
- Improve Levels of Service to an acceptable range and/or to pre-project conditions.

10.1 Existing Plus Project Traffic Conditions

The results of the "Existing Plus Project" intersection capacity analysis presented previously in *Table 8-1* indicates that the proposed Project will not significantly impact any of the four (4) key study intersections. Given that there are no significant project impacts, no improvements are required under Existing Plus Project traffic conditions.

10.2 Year 2021 Plus Project Traffic Conditions

The results of the "Year 2021 Cumulative Plus Project" intersection capacity analysis presented previously in *Table 9-1* indicates that the proposed Project will not significantly impact any of the four (4) key study intersections. Given that there are no significant project impacts, no improvements are required under Year 2021 Cumulative Plus Project traffic conditions.

11.0 SUMMARY OF FINDINGS AND CONCLUSIONS

- ***Project Description*** – The proposed Project site is located at 620 S. Glassell Street in the City of Orange, California and is directly north of the existing Park Plaza Senior Living facility. It should be noted that the existing 5,595 SF vacant building (previously restaurant) will be demolished to construct the proposed Project. The proposed project consists of developing 30,113 square feet (SF) of gross floor area, with 36 beds in 28 studio units and 4 two-bedroom units, for a two-story memory care/assisted living community to provide care for residents impacted by Alzheimer's and other dementia-related disorders. The proposed Project is expected to be constructed and fully occupied by the Year 2021.

  Access to the proposed Project will be provided via one full access unsignalized driveway (i.e. Park Plaza Driveway 1) and one existing unsignalized right-turn in/out only driveway (i.e. Park Plaza Driveway 2) located along Glassell Street.

- ***Study Scope*** – The four (4) key study intersections selected for evaluation were determined based on coordination with City of Orange Traffic Engineering staff and application of the "51 or more peak hour trip threshold" criteria outlined in the *City of Orange Traffic Impact Analysis Guidelines*, dated August 15, 2007. The intersections listed below provide local access to the study area and define the extent of the boundaries for this traffic impact investigation. It should be noted that each key study intersection is located within the City of Orange.

Key Study Intersections
1. Glassell Street at La Veta Avenue
2. Glassell Street at East River Avenue
3. Glassell Street at Park Plaza Driveway 1
4. Glassell Street at Park Plaza Driveway 2

  Detailed peak hour level of service analyses were prepared for Existing Traffic Conditions, Existing Plus Project Traffic Conditions, Year 2021 Cumulative Base Traffic Conditions, and Year 2021 Cumulative Plus Project Traffic Conditions at these locations.

- ***Existing Traffic Conditions*** – All key study intersections currently operate at acceptable levels of service (LOS D or better).

- ***Project Trip Generation*** – The proposed Project will generate 320 less "net" daily trips (one half arriving and one half departing), with 2 greater "net" trips (0 inbound, 2 outbound) produced in the AM peak hour and 34 less "net" trips (-24 inbound, -10 outbound) produced in the PM peak hour on a "typical" weekday compared to the existing use.

  It should be noted that the existing 5,595 SF Chinese Restaurant is currently non-operational. Therefore, the Proposed Project's gross trip generation of 149 daily trips (one half arriving and one half departing), with 6 trips (4 inbound, 2 outbound) produced in the AM peak hour and 10 trips (5 inbound, 5 outbound) produced in the PM peak hour was utilized in this traffic impact analysis to provide the most conservative assessment.

- ***Cumulative Projects Traffic Characteristics*** – The five (5) cumulative projects are forecast to generate a combined total of 7,233 daily trips, with 549 trips (123 inbound and 426 outbound) forecast during the AM peak hour and 649 trips (416 inbound and 233 outbound) forecast during the PM peak hour.

- ***Existing Plus Project Traffic Conditions*** – The proposed Project ***will not*** significantly impact any of the four (4) key study intersections, when compared to the LOS standards and significant impact criteria specified in this report. All four (4) key study intersections currently operate and are forecast to continue to operate at an acceptable LOS during the AM and PM peak hours with the addition of Project generated traffic to existing traffic.

- ***Year 2021 Cumulative Plus Project Traffic Conditions*** – The proposed Project ***will not*** significantly any of the four (4) key study intersections, when compared to the LOS standards and significant impact criteria specified in this report. All four (4) key study intersections currently operate and are forecast to continue to operate at an acceptable LOS during the AM and PM peak hours with the addition of Project generated traffic to Year 2021 cumulative traffic.

- ***Existing Plus Project Recommended Improvements*** **–** The proposed Project will not significantly impact any of the four (4) key study intersections. Given that there are no significant project impacts, no improvements are required under Existing Plus Project traffic conditions.

- ***Year 2021 Cumulative Plus Project Recommended Improvements*** **–** The proposed Project will not significantly impact any of the four (4) key study intersections. Given that there are no significant project impacts, no improvements are required under Year 2021 Cumulative Plus Project traffic conditions.

APPENDIX A

TRAFFIC STUDY SCOPE OF WORK

MEMORANDUM

To:	Mr. Doug Keys City of Orange	Date:	May 22, 2019
From:	Trissa de Jesus Allen, P.E. Jeremy Mempin Linscott, Law & Greenspan, Engineers	LLG Ref:	2.18.4075.2
Subject:	TIA Scope of Work for the Park Plaza Expansion – Memory Care Facility Orange, California		

LINSCOTT LAW & GREENSPAN engineers

Engineers & Planners
Traffic
Transportation
Parking

Linscott, Law & Greenspan, Engineers
2 Executive Circle
Suite 250
Irvine, CA 92614
949.825.6175 T
949.825.6173 F
www.llgengineers.com

Pasadena
Irvine
San Diego
Las Vegas

Linscott, Law & Greenspan, Engineers (LLG) is pleased to submit the following Traffic Study Scope of Work for the proposed Park Plaza Expansion – Memory Care Facility for your review and approval.

Traffic Study Scope of Work

The Traffic Impact Analysis for the proposed Park Plaza Expansion – Memory Care Facility Project will satisfy the traffic impact requirements of the City of Orange and will be consistent with the requirements and procedures outlined in the most current *Congestion Management Program (CMP) for Orange County*.

A. Project Location: The proposed expansion of the existing Park Plaza Senior Living development is located at 620 S. Glassell Street in the City of Orange, California. See the attached vicinity map and existing site aerial photograph of the Project site – ***Figure 1-1*** and ***Figure 2-1***.

B. Project Description: The proposed project consists of developing 32,100 square feet (SF) of gross floor area, with 37 beds in 36 studio units, for a two-story memory care/assisted living community to provide care for residents impacted by Alzheimer's and other dementia-related disorders. The project will provide a total of 18 spaces on site. See the attached Proposed Site Plan – ***Figure 2-2***.

C. Project Study Area: The following four (4) key study intersections have been selected for evaluation based on our discussions and based on application of the "51 or more peak hour trip threshold" criteria outlined in the *City of Orange Traffic Impact Analysis Guidelines*, dated August 15, 2007.

Potential Key Study Intersections

1. Glassell Street at La Veta Avenue (City of Orange)
2. Glassell Street at East River Avenue (City of Orange)
3. Glassell Street at Park Plaza Driveway 1 (City of Orange)
4. Glassell Street at Park Plaza Driveway 2 (City of Orange)

LINSCOTT LAW & GREENSPAN engineers

D. Traffic Counts: The traffic counts for the above listed intersections will be conducted on a Tuesday (5/21/19), Wednesday (5/22/19) or Thursday (5/23/19).

E. Project Traffic Generation: See the attached project traffic generation forecast – ***Table 5-1***. As shown in the upper portion of *Table 5-1*, the trip generation potential of the existing land use will be estimated using ITE Land Use 931: Quality Restaurant trip rates and the trip generation potential of the proposed Project will be estimated using ITE Land Use 254: Assisted Living trip rates contained in the 10th Edition of *Trip Generation*, published by the Institute of Transportation Engineers (ITE), [Washington, D.C., 2017]. As shown at the bottom of *Table 5-1*, the proposed Project will generate 316 less "net" daily trips (one half arriving and one half departing), with 3 greater "net" trips (1 inbound, 2 outbound) produced in the AM peak hour and 33 less "net" trips (-23 inbound, -10 outbound) produced in the PM peak hour on a "typical" weekday compared to the existing use.

It should be noted that the existing 5,595 SF Chinese Restaurant is currently non-operational. Therefore, the Proposed Project's gross trip generation of 153 daily trips (one half arriving and one half departing), with 7 trips (5 inbound, 2 outbound) produced in the AM peak hour and 11 trips (6 inbound, 5 outbound) produced in the PM peak hour will be utilized in this traffic impact analysis to provide the most conservative assessment.

F. Project Trip Distribution Pattern: See the attached project traffic distribution pattern – ***Figure 5-1***. The project trip distribution pattern was developed based on the following considerations:

- directional flows on the freeways in the immediate vicinity of the project site,
- the site's proximity to major traffic carriers,
- expected localized traffic flow patterns based on adjacent street channelization and presence of traffic signals, and
- ingress/egress availability at the project site.

G. Year 2021 Cumulative Traffic:

- Ambient Growth Rate: 1.0% per year.
- Cumulative Projects: Obtain information regarding cumulative projects in the vicinity of the proposed project (i.e. 2-mile radius) from the City of Orange and City of Santa Ana.

LINSCOTT LAW & GREENSPAN engineers

H. Analysis Scenarios: The following traffic analysis scenarios will be prepared for the proposed Project.

(a) Existing Traffic Conditions;
(b) Existing Plus Project Traffic Conditions;
(c) Scenario (b) with Mitigation, if necessary;
(d) Year 2021 Cumulative Traffic Conditions (Existing plus Ambient Growth plus Cumulative Projects);
(e) Year 2021 Cumulative Plus Project Traffic Conditions; and
(f) Scenario (e) with Mitigation, if necessary.

The LOS calculations will be based on the ICU methodology for signalized intersections and the Highway Capacity Manual (HCM) methodology for unsignalized intersections. The Project's potential impact will be based on the significant impact criteria outlined in the *City of Orange Traffic Impact Analysis Guidelines*, dated August 15, 2007.

I. Other Issues:

- An assumption will be made for Existing Driveway volumes at Project Driveway 2 that are going northbound, will be re-routed to the proposed Driveway 1.
- Traffic Signal Warrants, as needed.

We appreciate the opportunity to provide this scope of work. Should you have any questions, please call us at (949) 825-6175. Thank you.

Approved by:

_____ _____

City of Orange Date

LINSCOTT LAW & GREENSPAN engineers

TABLE 5-1

PROJECT TRAFFIC GENERATION FORECAST[1]

ITE Land Use Code / Project Description	Daily 2-Way	AM Peak Hour			PM Peak Hour		
		Enter	Exit	Total	Enter	Exit	Total
Generation Rates:							
▪ ITE 254: Assisted Living (TE/Occupied Beds)	4.14	68%	32%	0.18	50%	50%	0.29
▪ ITE 931: Quality Restaurant (TE/TSF)	83.84	90%[2]	10%[2]	0.73	67%	33%	7.80
Generation Forecasts:							
[A]. Proposed Project							
▪ ***Park Plaza Expansion – Memory Care Facility (37 Beds)***	***153***	***5***	***2***	***7***	***6***	***5***	***11***
[B]. Existing Land Use							
▪ Chinese Restaurant (5,595 SF)	469	4	0	4	29	15	44
Total "Net Increase" Project Trip Generation: Proposed Project Minus Existing Land Use [A] – [B]	*-316*	*1*	*2*	*3*	*-23*	*-10*	*-33*

Notes:
- TE/Occupied Beds = Trip End per Occupied Beds
- TE/TSF = Trip End per Thousand Square Feet

1 Source: *Trip Generation*, 10th Edition, Institute of Transportation Engineers (ITE), Washington, D.C. (2017).

2 ITE does not provide enter/exit splits for the AM Peak Hour, therefore 90% entering and 10% exiting was assumed.

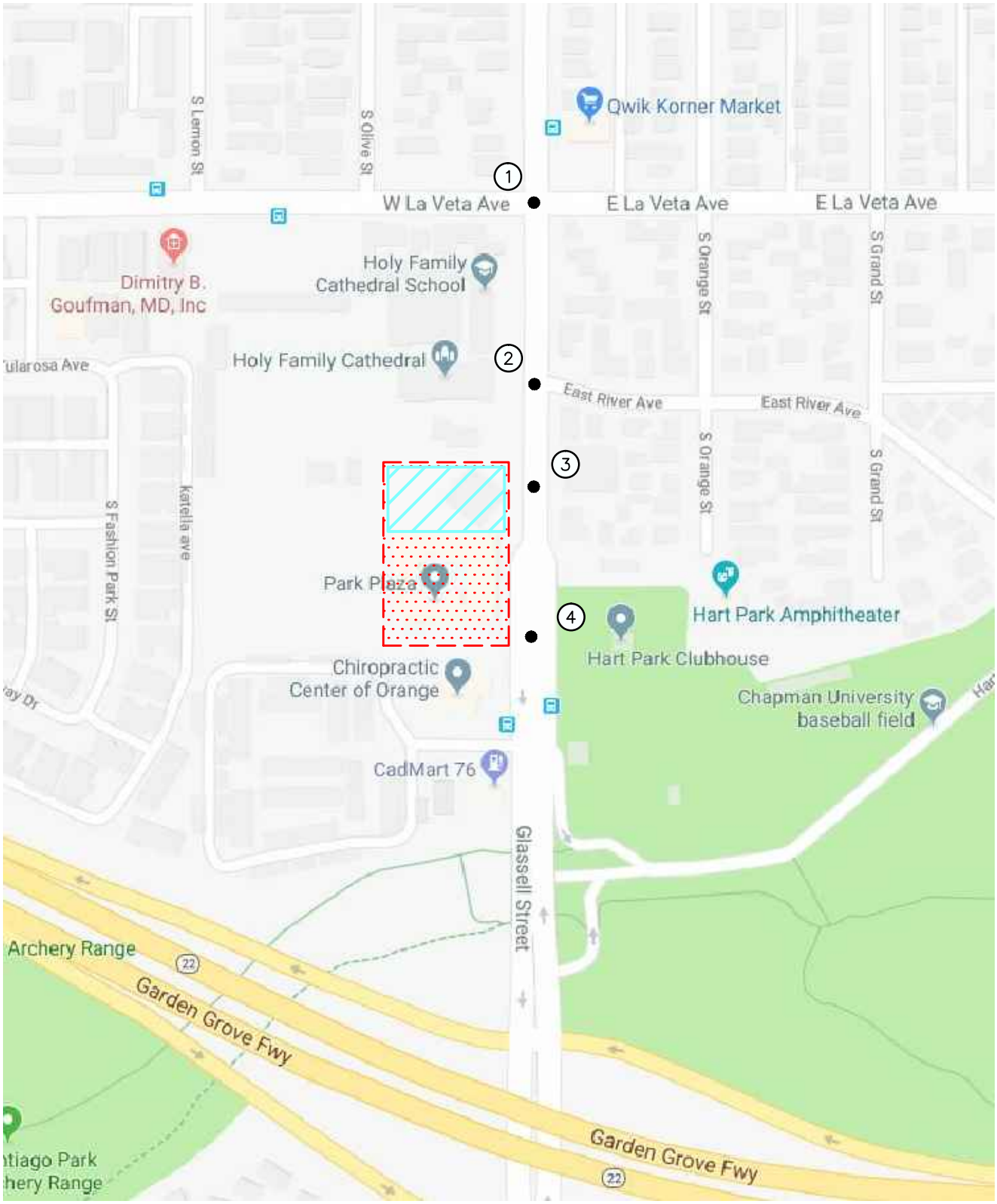

n:\4000\2184075-2 - park plaza memory care tia, orange\dwg\4075-2 f1-1.dwg LDP 17:31:39 05-14-2019 mempin

LINSCOTT LAW & GREENSPAN engineers

N NO SCALE

SOURCE: GOOGLE

KEY

(#) = STUDY INTERSECTION

= PROJECT SITE

= PROPOSED MEMORY CARE

FIGURE 1-1

VICINITY MAP

PARK PLAZA MEMORY CARE TIA, ORANGE

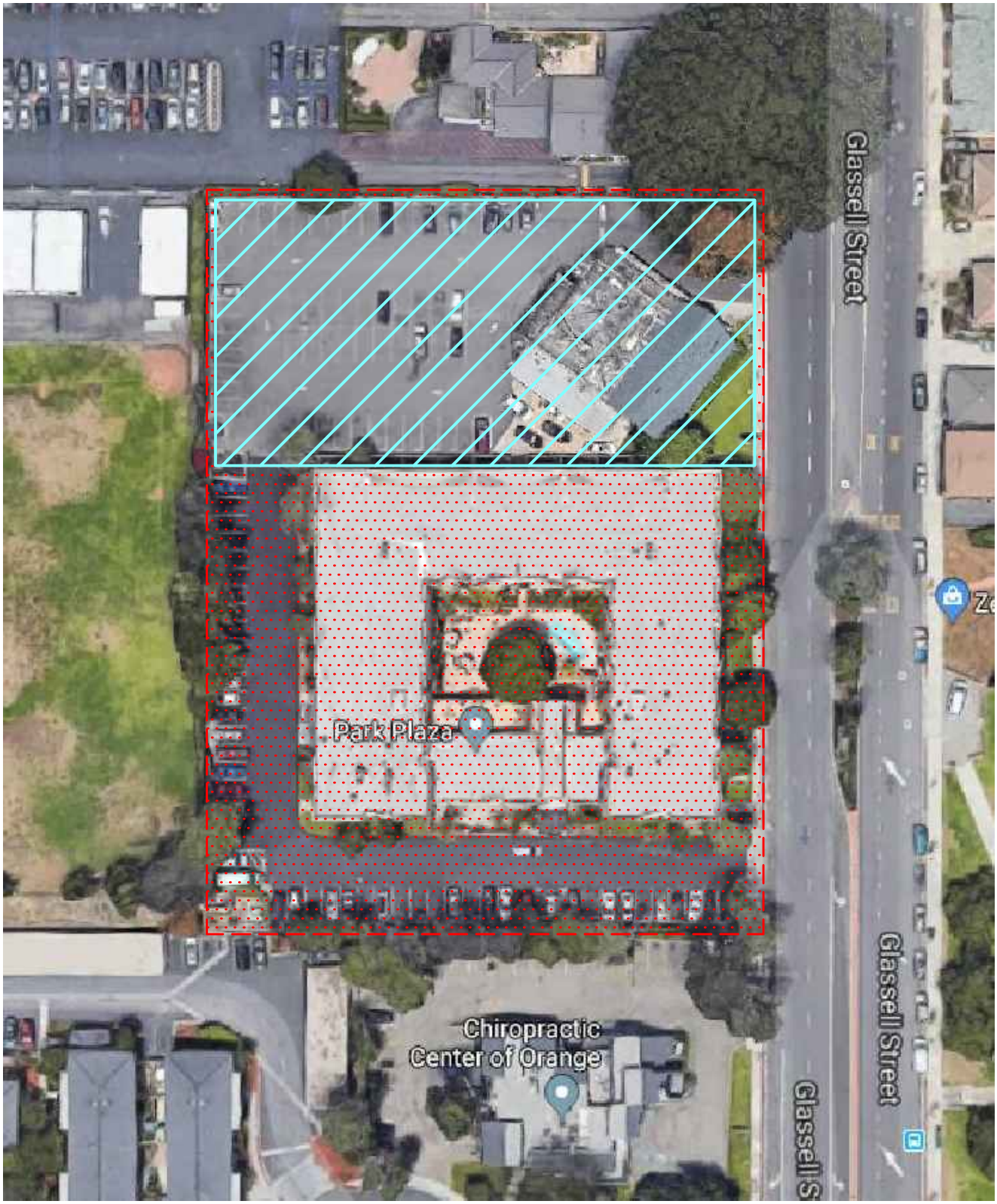

n:\4000\2184075-2 - park plaza memory care tia, orange\dwg\4075-2 f2-1.dwg LDP 17:38:54 05-14-2019 mempin

LINSCOTT LAW & GREENSPAN engineers

N NO SCALE

SOURCE: GOOGLE

KEY

= PROJECT SITE

= PROPOSED MEMORY CARE

FIGURE 2-1

EXISTING SITE AERIAL

PARK PLAZA MEMORY CARE TIA, ORANGE

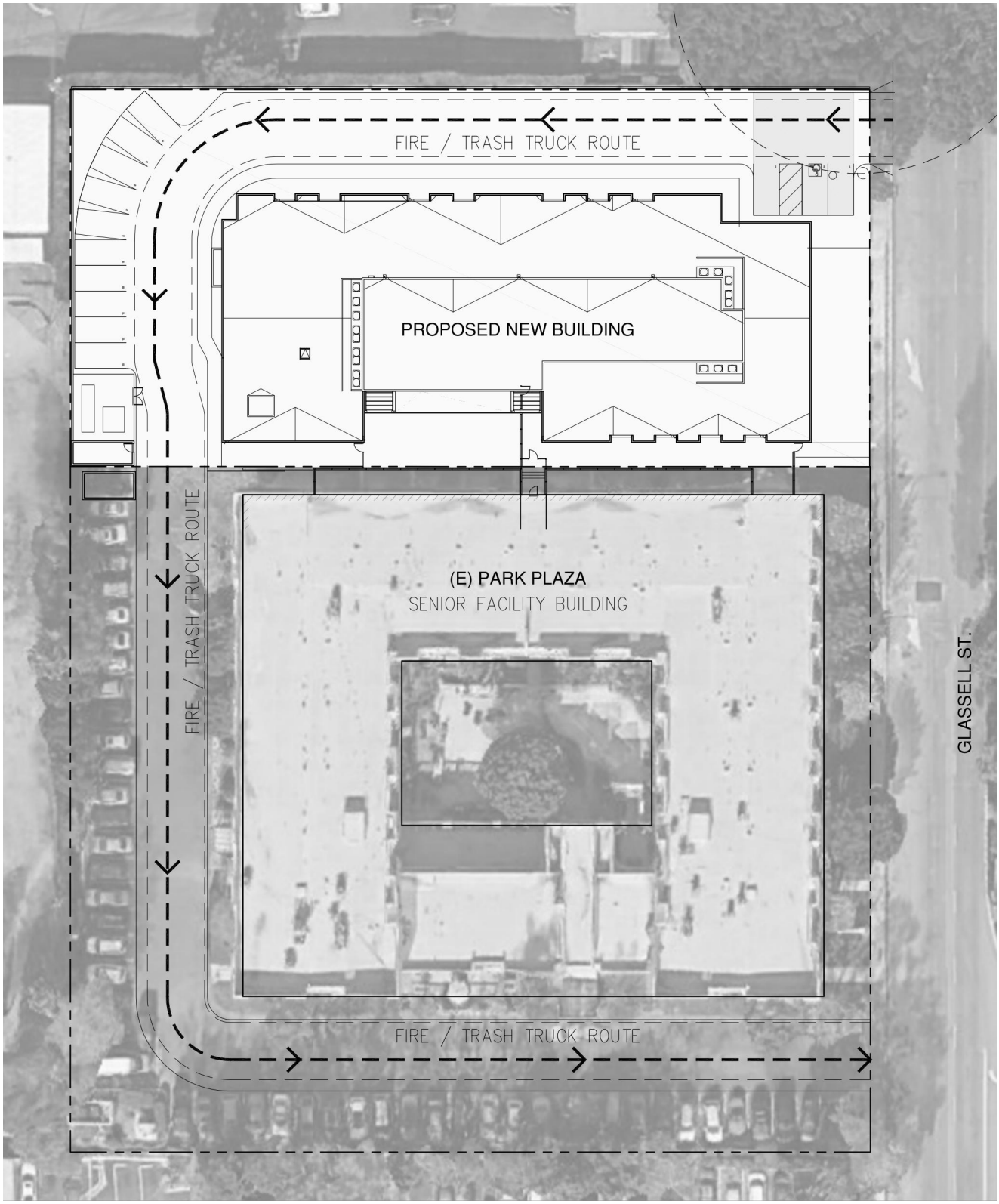

SOURCE: SHELTER ARCHITECTS

LINSCOTT LAW & GREENSPAN engineers

N NO SCALE

FIGURE 2-2

PROPOSED SITE PLAN

PARK PLAZA MEMORY CARE TIA, ORANGE

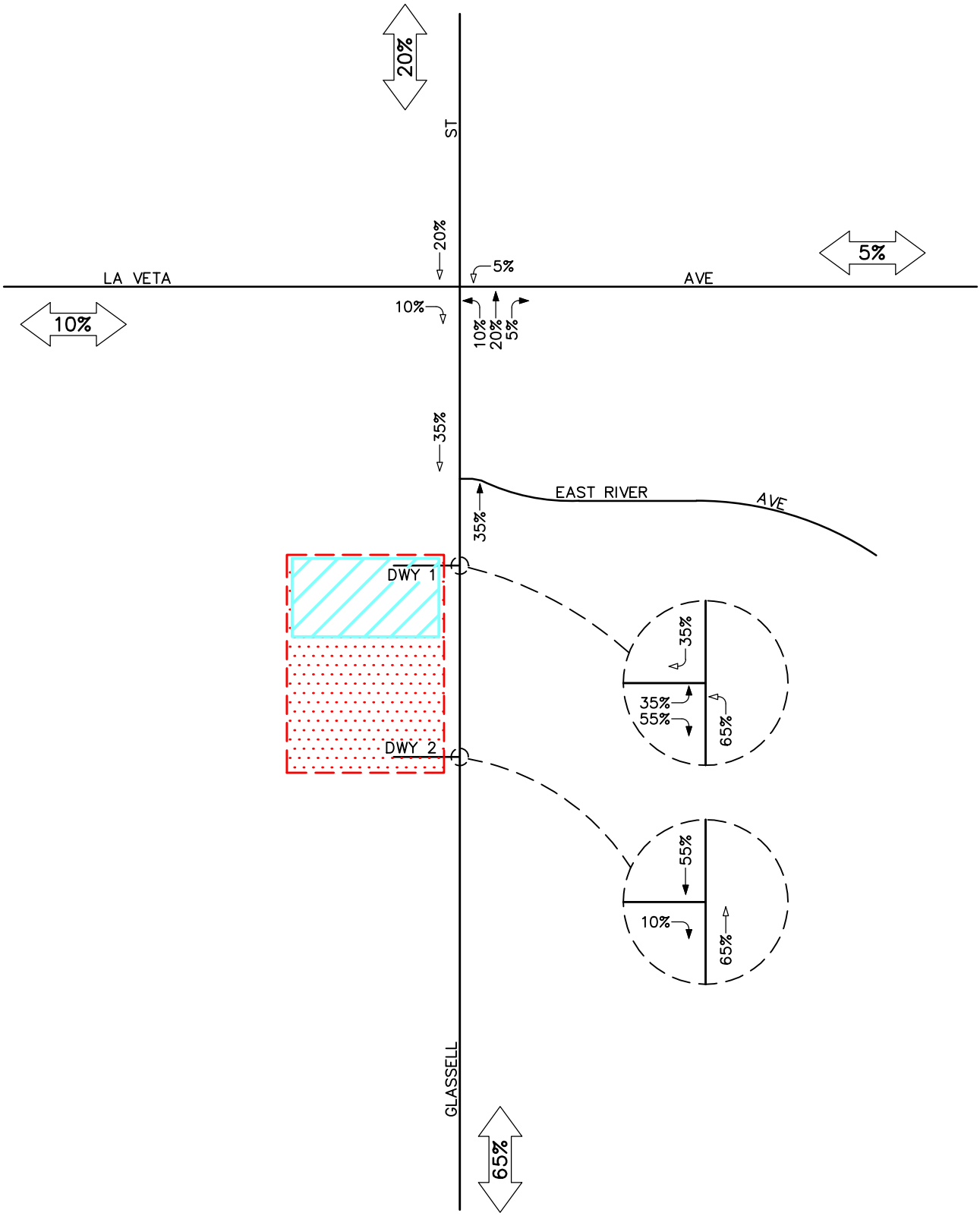

LINSCOTT LAW & GREENSPAN engineers

N NO SCALE

KEY

= PROJECT SITE

= PROPOSED MEMORY CARE

= INBOUND PERCENTAGE

= OUTBOUND PERCENTAGE

FIGURE 5-1

PROJECT TRAFFIC DISTRIBUTION PATTERN

PARK PLAZA MEMORY CARE TIA, ORANGE

APPENDIX B

EXISTING TRAFFIC COUNT DATA

INTERSECTION TURNING MOVEMENT COUNTS

T218

PREPARED BY: AimTD LLC. tel: 714 253 7888 cs@aimtd.com

DATE:				
Tue, May 21, 19	LOCATION:	Orange	PROJECT #:	SC2220
	NORTH & SOUTH:	Glassell	LOCATION #:	1
	EAST & WEST:	La Veta	CONTROL:	SIGNAL

NOTES:

AM		▲	
PM		N	
MD	◄ W		E ►
OTHER		S	
OTHER		▼	

☑ Add U-Turns to Left Turns

		NORTHBOUND Glassell			SOUTHBOUND Glassell			EASTBOUND La Veta			WESTBOUND La Veta				U-TURNS				
	LANES:	NL 2	NT 1	NR 1	SL 1	ST 2	SR 0	EL 1	ET 1	ER 1	WL 1	WT 2	WR 0	TOTAL	NB 0	SB 0	EB 0	WB 0	TTL
AM	7:00 AM	30	67	15	2	116	6	8	23	90	46	40	3	446	0	0	0	0	0
	7:15 AM	29	68	27	3	141	14	6	42	92	61	68	1	552	0	0	0	0	0
	7:30 AM	65	84	24	4	175	15	8	48	108	79	80	1	691	0	0	0	0	0
	7:45 AM	67	97	31	8	138	12	13	61	128	68	94	1	718	0	0	0	0	0
	8:00 AM	65	111	43	6	161	17	7	43	90	70	89	4	706	0	0	0	0	0
	8:15 AM	61	98	21	2	121	16	8	43	77	40	76	1	564	0	0	0	0	0
	8:30 AM	43	89	26	3	115	16	6	42	76	37	55	4	512	0	0	0	0	0
	8:45 AM	52	121	32	6	81	11	8	27	63	43	48	2	494	0	0	0	0	0
	VOLUMES	412	735	219	34	1,048	107	64	329	724	444	550	17	4,683	0	0	0	0	0
	APPROACH %	30%	54%	16%	3%	88%	9%	6%	29%	65%	44%	54%	2%						
	APP/DEPART	1,366	/	816	1,189	/	2,216	1,117	/	582	1,011	/	1,069	0					
	BEGIN PEAK HR		7:30 AM																
	VOLUMES	258	390	119	20	595	60	36	195	403	257	339	7	2,679					
	APPROACH %	34%	51%	16%	3%	88%	9%	6%	31%	64%	43%	56%	1%						
	PEAK HR FACTOR		0.876			0.870			0.785			0.925		0.933					
	APP/DEPART	767	/	433	675	/	1,255	634	/	334	603	/	657	0					
PM	4:00 PM	67	121	47	7	113	8	15	57	70	30	65	5	605	0	0	0	0	0
	4:15 PM	89	118	44	3	106	9	23	87	83	30	57	0	649	0	0	0	0	0
	4:30 PM	75	109	50	3	116	12	10	59	91	24	57	5	611	0	0	0	0	0
	4:45 PM	82	114	48	3	95	10	19	81	101	30	68	5	656	0	0	0	0	0
	5:00 PM	69	106	36	3	107	10	18	102	117	39	82	5	694	0	0	0	0	0
	5:15 PM	91	97	42	6	124	5	14	98	101	36	77	5	696	0	0	0	0	0
	5:30 PM	80	134	49	5	109	7	13	77	83	33	78	6	674	0	0	0	0	0
	5:45 PM	58	115	60	6	89	12	14	71	97	37	69	4	632	0	0	0	0	0
	VOLUMES	611	914	376	36	859	73	126	632	743	259	553	35	5,217	0	0	0	0	0
	APPROACH %	32%	48%	20%	4%	89%	8%	8%	42%	50%	31%	65%	4%						
	APP/DEPART	1,901	/	1,075	968	/	1,861	1,501	/	1,044	847	/	1,237	0					
	BEGIN PEAK HR		4:45 PM																
	VOLUMES	322	451	175	17	435	32	64	358	402	138	305	21	2,720					
	APPROACH %	34%	48%	18%	4%	90%	7%	8%	43%	49%	30%	66%	5%						
	PEAK HR FACTOR		0.901			0.896			0.869			0.921		0.977					
	APP/DEPART	948	/	536	484	/	975	824	/	550	464	/	659	0					

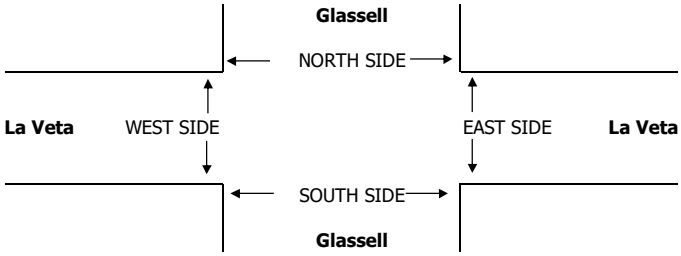

		PEDESTRIAN + BIKE CROSSINGS					PEDESTRIAN CROSSINGS					BICYCLE CROSSINGS				
		N SIDE	S SIDE	E SIDE	W SIDE	TOTAL	N SIDE	S SIDE	E SIDE	W SIDE	TOTAL	NS	SS	ES	WS	TOTAL
AM	7:00 AM	0	0	0	0	0	0	0	0	0	0	0	0	0	0	0
	7:15 AM	0	0	0	0	0	0	0	0	0	0	0	0	0	0	0
	7:30 AM	0	0	0	0	0	0	0	0	0	0	0	0	0	0	0
	7:45 AM	0	0	0	0	0	0	0	0	0	0	0	0	0	0	0
	8:00 AM	0	0	0	0	0	0	0	0	0	0	0	0	0	0	0
	8:15 AM	0	0	0	0	0	0	0	0	0	0	0	0	0	0	0
	8:30 AM	0	0	0	0	0	0	0	0	0	0	0	0	0	0	0
	8:45 AM	0	0	0	0	0	0	0	0	0	0	0	0	0	0	0
	TOTAL	0	0	0	0	0	0	0	0	0	0	0	0	0	0	0
	AM BEGIN PEAK HR			7:30 AM			0	0	0	0	0					
PM	4:00 PM	0	0	0	0	0	0	0	0	0	0	0	0	0	0	0
	4:15 PM	0	0	0	0	0	0	0	0	0	0	0	0	0	0	0
	4:30 PM	0	0	0	0	0	0	0	0	0	0	0	0	0	0	0
	4:45 PM	0	0	0	0	0	0	0	0	0	0	0	0	0	0	0
	5:00 PM	0	0	0	0	0	0	0	0	0	0	0	0	0	0	0
	5:15 PM	0	0	0	0	0	0	0	0	0	0	0	0	0	0	0
	5:30 PM	0	0	0	0	0	0	0	0	0	0	0	0	0	0	0
	5:45 PM	0	0	0	0	0	0	0	0	0	0	0	0	0	0	0
	TOTAL	0	0	0	0	0	0	0	0	0	0	0	0	0	0	0
	PM BEGIN PEAK HR			4:45 PM			0	0	0	0	0					

INTERSECTION TURNING MOVEMENT COUNTS

PREPARED BY: AimTD LLC. tel: 714 253 7888 cs@aimtd.com

DATE:				
Tue, May 21, 19	LOCATION:	Orange	PROJECT #:	SC2220
	NORTH & SOUTH:	Glassell	LOCATION #:	2
	EAST & WEST:	East River	CONTROL:	STOP W

NOTES:

Queue AM/PM NB

AM / PM / MD / OTHER / OTHER — ▲ N ◄ W E ► S ▼

☐ Add U-Turns to Left Turns

		NORTHBOUND Glassell			SOUTHBOUND Glassell			EASTBOUND East River			WESTBOUND East River				U-TURNS				
	LANES:	NL X	NT 2	NR 1	SL 1	ST 2	SR X	EL X	ET X	ER X	WL 0	WT X	WR 0	TOTAL	NB 0	SB 0	EB 0	WB 0	TTL
AM	7:00 AM	0	110	1	1	248	0	0	0	0	3	0	3	366	0	1	0	0	1
	7:15 AM	0	128	0	0	297	0	0	0	0	2	0	0	427	0	0	0	0	0
	7:30 AM	0	175	1	0	348	0	0	0	0	2	0	2	528	0	0	0	0	0
	7:45 AM	0	188	2	1	341	0	0	0	0	0	0	0	532	0	0	0	0	0
	8:00 AM	0	226	2	0	309	0	0	0	0	0	0	1	538	0	0	0	0	0
	8:15 AM	0	170	0	0	253	0	0	0	0	3	0	0	426	0	0	0	0	0
	8:30 AM	0	158	4	0	219	0	0	0	0	1	0	1	383	0	0	0	0	0
	8:45 AM	0	201	0	0	199	0	0	0	0	2	0	0	402	0	0	0	0	0
	VOLUMES	0	1,356	10	2	2,214	0	0	0	0	13	0	7	3,603	0	1	0	0	1
	APPROACH %	0%	99%	1%	0%	100%	0%	0%	0%	0%	65%	0%	35%						
	APP/DEPART	1,366	/	1,364	2,217	/	2,227	0	/	12	20	/	0	0					
	BEGIN PEAK HR		7:15 AM																
	VOLUMES	0	717	5	1	1,295	0	0	0	0	4	0	3	2,025					
	APPROACH %	0%	99%	1%	0%	100%	0%	0%	0%	0%	57%	0%	43%						
	PEAK HR FACTOR		0.792			0.931			0.000			0.438		0.941					
	APP/DEPART	722	/	720	1,296	/	1,299	0	/	6	7	/	0	0					
PM	4:00 PM	0	231	6	1	224	0	0	0	0	1	0	2	465	0	0	0	0	0
	4:15 PM	0	245	2	0	210	0	0	0	0	0	0	0	457	1	0	0	0	1
	4:30 PM	0	236	4	1	216	0	0	0	0	0	0	0	457	0	0	0	0	0
	4:45 PM	0	245	2	0	227	0	0	0	0	1	0	1	476	0	0	0	0	0
	5:00 PM	0	230	4	1	261	0	0	0	0	1	0	1	498	0	0	0	0	0
	5:15 PM	0	221	3	0	272	0	0	0	0	0	0	0	496	0	0	0	0	0
	5:30 PM	0	250	3	0	214	0	0	0	0	1	0	0	468	0	0	0	0	0
	5:45 PM	0	234	3	0	235	0	0	0	0	1	0	0	473	0	0	0	0	0
	VOLUMES	0	1,892	27	3	1,859	0	0	0	0	5	0	4	3,791	1	0	0	0	1
	APPROACH %	0%	99%	1%	0%	100%	0%	0%	0%	0%	56%	0%	44%						
	APP/DEPART	1,920	/	1,896	1,862	/	1,865	0	/	30	9	/	0	0					
	BEGIN PEAK HR		4:45 PM																
	VOLUMES	0	946	12	1	974	0	0	0	0	3	0	2	1,938					
	APPROACH %	0%	99%	1%	0%	100%	0%	0%	0%	0%	60%	0%	40%						
	PEAK HR FACTOR		0.947			0.896			0.000			0.625		0.973					
	APP/DEPART	958	/	948	975	/	977	0	/	13	5	/	0	0					

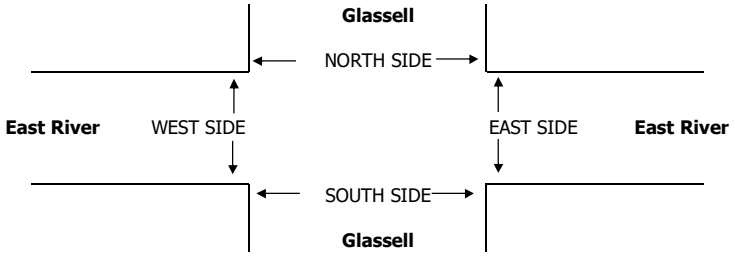

		PEDESTRIAN + BIKE CROSSINGS					PEDESTRIAN CROSSINGS					BICYCLE CROSSINGS				
		N SIDE	S SIDE	E SIDE	W SIDE	TOTAL	N SIDE	S SIDE	E SIDE	W SIDE	TOTAL	NS	SS	ES	WS	TOTAL
AM	7:00 AM	0	0	0	0	0	0	0	0	0	0	0	0	0	0	0
	7:15 AM	0	0	0	0	0	0	0	0	0	0	0	0	0	0	0
	7:30 AM	0	0	0	0	0	0	0	0	0	0	0	0	0	0	0
	7:45 AM	0	0	0	0	0	0	0	0	0	0	0	0	0	0	0
	8:00 AM	0	0	0	0	0	0	0	0	0	0	0	0	0	0	0
	8:15 AM	0	0	0	0	0	0	0	0	0	0	0	0	0	0	0
	8:30 AM	0	0	0	0	0	0	0	0	0	0	0	0	0	0	0
	8:45 AM	0	0	0	0	0	0	0	0	0	0	0	0	0	0	0
	TOTAL	0	0	0	0	0	0	0	0	0	0	0	0	0	0	0
	AM BEGIN PEAK HR			7:15 AM			0	0	0	0	0					
PM	4:00 PM	0	0	0	0	0	0	0	0	0	0	0	0	0	0	0
	4:15 PM	0	0	0	0	0	0	0	0	0	0	0	0	0	0	0
	4:30 PM	0	0	0	0	0	0	0	0	0	0	0	0	0	0	0
	4:45 PM	0	0	0	0	0	0	0	0	0	0	0	0	0	0	0
	5:00 PM	0	0	0	0	0	0	0	0	0	0	0	0	0	0	0
	5:15 PM	0	0	0	0	0	0	0	0	0	0	0	0	0	0	0
	5:30 PM	0	0	0	0	0	0	0	0	0	0	0	0	0	0	0
	5:45 PM	0	0	0	0	0	0	0	0	0	0	0	0	0	0	0
	TOTAL	0	0	0	0	0	0	0	0	0	0	0	0	0	0	0
	PM BEGIN PEAK HR			4:45 PM			0	0	0	0	0					

INTERSECTION TURNING MOVEMENT COUNTS

T218

PREPARED BY: AimTD LLC. tel: 714 253 7888 cs@aimtd.com

DATE:				
Tue, May 21, 19	LOCATION:	Orange	PROJECT #:	SC2220
	NORTH & SOUTH:	Glassell	LOCATION #:	3
	EAST & WEST:	Park Plaza Driveway 1	CONTROL:	STOP E

NOTES:

Queue AM NB

AM / PM / MD / OTHER / OTHER

▲ N ◄ W E ► S ▼

☑ Add U-Turns to Left Turns

		NORTHBOUND Glassell			SOUTHBOUND Glassell			EASTBOUND Park Plaza Driveway 1			WESTBOUND Park Plaza Driveway 1				U-TURNS				
	LANES:	NL 0	NT 2	NR 0	SL 0	ST 2	SR 0	EL 0	ET 1	ER 0	WL 0	WT 1	WR 0	TOTAL	NB 0	SB 0	EB 0	WB 0	TTL
AM	7:00 AM	0	121	0	0	249	0	3	0	0	0	0	0	373	0	0	0	0	0
	7:15 AM	0	139	0	0	335	0	0	0	0	0	0	0	474	0	0	0	0	0
	7:30 AM	0	215	0	0	356	0	0	0	0	0	0	0	571	0	0	0	0	0
	7:45 AM	0	244	0	0	333	0	0	0	0	0	0	0	577	0	0	0	0	0
	8:00 AM	0	232	0	0	329	0	0	0	0	0	0	0	561	0	0	0	0	0
	8:15 AM	0	182	0	0	255	0	0	0	0	1	0	0	438	0	0	0	0	0
	8:30 AM	0	170	0	0	230	0	0	0	0	0	0	0	400	0	0	0	0	0
	8:45 AM	0	189	0	0	230	0	0	0	0	1	0	0	420	0	0	0	0	0
	VOLUMES	0	1,492	0	0	2,317	0	3	0	0	2	0	0	3,814	0	0	0	0	0
	APPROACH %	0%	100%	0%	0%	100%	0%	100%	0%	0%	100%	0%	0%						
	APP/DEPART	1,492	/	1,495	2,317	/	2,319	3	/	0	2	/	0	0					
	BEGIN PEAK HR		7:15 AM																
	VOLUMES	0	830	0	0	1,353	0	0	0	0	0	0	0	2,183					
	APPROACH %	0%	100%	0%	0%	100%	0%	0%	0%	0%	0%	0%	0%						
	PEAK HR FACTOR		0.850			0.950			0.000			0.000		0.946					
	APP/DEPART	830	/	830	1,353	/	1,353	0	/	0	0	/	0	0					
PM	4:00 PM	0	224	0	0	207	0	0	0	0	0	0	0	431	0	0	0	0	0
	4:15 PM	0	245	0	0	211	0	0	0	0	0	0	0	456	0	0	0	0	0
	4:30 PM	0	238	0	0	218	0	0	0	0	0	0	0	456	0	0	0	0	0
	4:45 PM	0	257	0	0	243	0	0	0	0	0	0	0	500	0	0	0	0	0
	5:00 PM	0	237	0	0	245	0	0	0	0	0	0	0	482	0	0	0	0	0
	5:15 PM	0	213	0	0	279	0	0	0	0	0	0	0	492	0	0	0	0	0
	5:30 PM	0	259	0	0	239	0	0	0	0	0	0	0	498	0	0	0	0	0
	5:45 PM	0	238	0	0	242	0	0	0	0	0	0	0	480	0	0	0	0	0
	VOLUMES	0	1,911	0	0	1,884	0	0	0	0	0	0	0	3,795	0	0	0	0	0
	APPROACH %	0%	100%	0%	0%	100%	0%	0%	0%	0%	0%	0%	0%						
	APP/DEPART	1,911	/	1,911	1,884	/	1,884	0	/	0	0	/	0	0					
	BEGIN PEAK HR		4:45 PM																
	VOLUMES	0	966	0	0	1,006	0	0	0	0	0	0	0	1,972					
	APPROACH %	0%	100%	0%	0%	100%	0%	0%	0%	0%	0%	0%	0%						
	PEAK HR FACTOR		0.932			0.898			0.000			0.000		0.984					
	APP/DEPART	966	/	966	1,006	/	1,006	0	/	0	0	/	0	0					

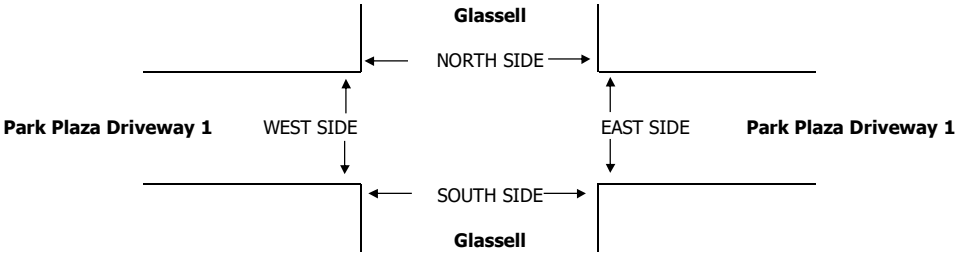

		PEDESTRIAN + BIKE CROSSINGS					PEDESTRIAN CROSSINGS					BICYCLE CROSSINGS				
		N SIDE	S SIDE	E SIDE	W SIDE	TOTAL	N SIDE	S SIDE	E SIDE	W SIDE	TOTAL	NS	SS	ES	WS	TOTAL
AM	7:00 AM	0	0	0	0	0	0	0	0	0	0	0	0	0	0	0
	7:15 AM	0	0	0	0	0	0	0	0	0	0	0	0	0	0	0
	7:30 AM	0	0	0	0	0	0	0	0	0	0	0	0	0	0	0
	7:45 AM	0	0	0	0	0	0	0	0	0	0	0	0	0	0	0
	8:00 AM	0	0	0	0	0	0	0	0	0	0	0	0	0	0	0
	8:15 AM	0	0	0	0	0	0	0	0	0	0	0	0	0	0	0
	8:30 AM	0	0	0	0	0	0	0	0	0	0	0	0	0	0	0
	8:45 AM	0	0	0	0	0	0	0	0	0	0	0	0	0	0	0
	TOTAL	0	0	0	0	0	0	0	0	0	0	0	0	0	0	0
	AM BEGIN PEAK HR			7:15 AM			0	0	0	0	0					
PM	4:00 PM	0	0	0	0	0	0	0	0	0	0	0	0	0	0	0
	4:15 PM	0	0	0	0	0	0	0	0	0	0	0	0	0	0	0
	4:30 PM	0	0	0	0	0	0	0	0	0	0	0	0	0	0	0
	4:45 PM	0	0	0	0	0	0	0	0	0	0	0	0	0	0	0
	5:00 PM	0	0	0	0	0	0	0	0	0	0	0	0	0	0	0
	5:15 PM	0	0	0	0	0	0	0	0	0	0	0	0	0	0	0
	5:30 PM	0	0	0	0	0	0	0	0	0	0	0	0	0	0	0
	5:45 PM	0	0	0	0	0	0	0	0	0	0	0	0	0	0	0
	TOTAL	0	0	0	0	0	0	0	0	0	0	0	0	0	0	0
	PM BEGIN PEAK HR			4:45 PM			0	0	0	0	0					

INTERSECTION TURNING MOVEMENT COUNTS

PREPARED BY: AimTD LLC. tel: 714 253 7888 cs@aimtd.com

DATE:				
Tue, May 21, 19	LOCATION:	Orange	PROJECT #:	SC2220
	NORTH & SOUTH:	Glassell	LOCATION #:	4
	EAST & WEST:	Park Plaza Driveway 2	CONTROL:	STOP E

NOTES:

AM ▲ N
PM
MD ◄ W E ►
OTHER S
OTHER ▼

☑ Add U-Turns to Left Turns

		NORTHBOUND Glassell			SOUTHBOUND Glassell			EASTBOUND Park Plaza Driveway 2			WESTBOUND Park Plaza Driveway 2				U-TURNS				
	LANES:	NL X	NT 2	NR X	SL X	ST 2	SR 0	EL X	ET X	ER 0	WL X	WT X	WR X	TOTAL	NB 0	SB 0	EB 0	WB 0	TTL
AM	7:00 AM	0	121	0	0	242	1	0	0	2	0	0	0	366	0	0	0	0	0
	7:15 AM	0	136	0	0	298	1	0	0	0	0	0	0	435	0	0	0	0	0
	7:30 AM	0	214	0	0	356	0	0	0	0	0	0	0	570	0	0	0	0	0
	7:45 AM	0	243	0	0	373	1	0	0	0	0	0	0	617	0	0	0	0	0
	8:00 AM	0	237	0	0	327	1	0	0	0	0	0	0	565	0	0	0	0	0
	8:15 AM	0	183	0	0	243	1	0	0	0	0	0	0	427	0	0	0	0	0
	8:30 AM	0	172	0	0	215	0	0	0	1	0	0	0	388	0	0	0	0	0
	8:45 AM	0	194	0	0	264	1	0	0	0	0	0	0	459	0	0	0	0	0
	VOLUMES	0	1,500	0	0	2,318	6	0	0	3	0	0	0	3,827	0	0	0	0	0
	APPROACH %	0%	100%	0%	0%	100%	0%	0%	0%	100%	0%	0%	0%						
	APP/DEPART	1,500	/	1,500	2,324	/	2,321	3	/	0	0	/	6	0					
	BEGIN PEAK HR		7:15 AM																
	VOLUMES	0	830	0	0	1,354	3	0	0	0	0	0	0	2,187					
	APPROACH %	0%	100%	0%	0%	100%	0%	0%	0%	0%	0%	0%	0%						
	PEAK HR FACTOR		0.854			0.907			0.000			0.000		0.886					
	APP/DEPART	830	/	830	1,357	/	1,354	0	/	0	0	/	3	0					
PM	4:00 PM	0	241	0	0	213	0	0	0	0	0	0	0	454	0	0	0	0	0
	4:15 PM	0	246	0	0	210	1	0	0	4	0	0	0	461	0	0	0	0	0
	4:30 PM	0	237	0	0	220	0	0	0	1	0	0	0	458	0	0	0	0	0
	4:45 PM	0	232	0	0	244	0	0	0	3	0	0	0	479	0	0	0	0	0
	5:00 PM	0	244	0	0	246	0	0	0	3	0	0	0	493	0	0	0	0	0
	5:15 PM	0	220	0	0	278	0	0	0	2	0	0	0	500	0	0	0	0	0
	5:30 PM	0	264	0	0	239	0	0	0	0	0	0	0	503	0	0	0	0	0
	5:45 PM	0	237	0	0	242	1	0	0	0	0	0	0	480	0	0	0	0	0
	VOLUMES	0	1,921	0	0	1,892	2	0	0	13	0	0	0	3,828	0	0	0	0	0
	APPROACH %	0%	100%	0%	0%	100%	0%	0%	0%	100%	0%	0%	0%						
	APP/DEPART	1,921	/	1,921	1,894	/	1,905	13	/	0	0	/	2	0					
	BEGIN PEAK HR		5:00 PM																
	VOLUMES	0	965	0	0	1,005	1	0	0	5	0	0	0	1,976					
	APPROACH %	0%	100%	0%	0%	100%	0%	0%	0%	100%	0%	0%	0%						
	PEAK HR FACTOR		0.914			0.905			0.417			0.000		0.982					
	APP/DEPART	965	/	965	1,006	/	1,010	5	/	0	0	/	1	0					

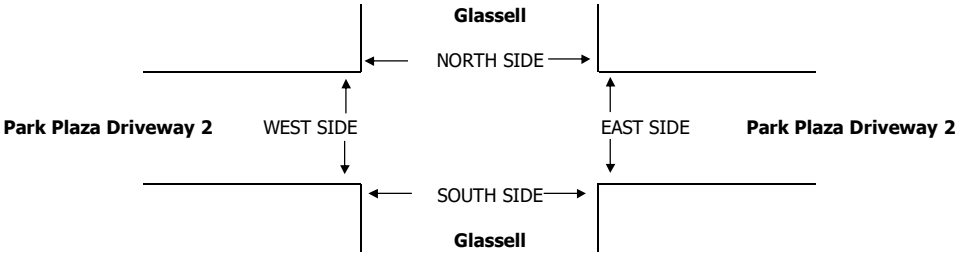

		PEDESTRIAN + BIKE CROSSINGS					PEDESTRIAN CROSSINGS					BICYCLE CROSSINGS				
		N SIDE	S SIDE	E SIDE	W SIDE	TOTAL	N SIDE	S SIDE	E SIDE	W SIDE	TOTAL	NS	SS	ES	WS	TOTAL
AM	7:00 AM	0	0	0	0	0	0	0	0	0	0	0	0	0	0	0
	7:15 AM	0	0	0	0	0	0	0	0	0	0	0	0	0	0	0
	7:30 AM	0	0	0	0	0	0	0	0	0	0	0	0	0	0	0
	7:45 AM	0	0	0	0	0	0	0	0	0	0	0	0	0	0	0
	8:00 AM	0	0	0	0	0	0	0	0	0	0	0	0	0	0	0
	8:15 AM	0	0	0	0	0	0	0	0	0	0	0	0	0	0	0
	8:30 AM	0	0	0	0	0	0	0	0	0	0	0	0	0	0	0
	8:45 AM	0	0	0	0	0	0	0	0	0	0	0	0	0	0	0
	TOTAL	0	0	0	0	0	0	0	0	0	0	0	0	0	0	0
	AM BEGIN PEAK HR			7:15 AM			0	0	0	0	0					
PM	4:00 PM	0	0	0	0	0	0	0	0	0	0	0	0	0	0	0
	4:15 PM	0	0	0	0	0	0	0	0	0	0	0	0	0	0	0
	4:30 PM	0	0	0	0	0	0	0	0	0	0	0	0	0	0	0
	4:45 PM	0	0	0	0	0	0	0	0	0	0	0	0	0	0	0
	5:00 PM	0	0	0	0	0	0	0	0	0	0	0	0	0	0	0
	5:15 PM	0	0	0	0	0	0	0	0	0	0	0	0	0	0	0
	5:30 PM	0	0	0	0	0	0	0	0	0	0	0	0	0	0	0
	5:45 PM	0	0	0	0	0	0	0	0	0	0	0	0	0	0	0
	TOTAL	0	0	0	0	0	0	0	0	0	0	0	0	0	0	0
	PM BEGIN PEAK HR			5:00 PM			0	0	0	0	0					

APPENDIX C

INTERSECTION LEVEL OF SERVICE CALCULATION WORKSHEETS

APPENDIX C-I

EXISTING (YEAR 2019) TRAFFIC CONDITIONS

Intersection Level Of Service Report
Intersection 1: Glassell Street at La Veta Avenue

Control Type:	Signalized	Delay (sec / veh):	-
Analysis Method:	ICU 1	Level Of Service:	B
Analysis Period:	15 minutes	Volume to Capacity (v/c):	0.631

Intersection Setup

Name	Glassell St			Glassell St			La Veta Ave			La Veta Ave		
Approach	Northbound			Southbound			Eastbound			Westbound		
Lane Configuration												
Turning Movement	Left	Thru	Right	Left	Thru	Right	Left	Thru	Right	Left	Thru	Right
Lane Width [ft]	12.00	12.00	12.00	12.00	12.00	12.00	12.00	12.00	12.00	12.00	12.00	12.00
No. of Lanes in Pocket	1	0	1	1	0	0	1	0	1	1	0	0
Pocket Length [ft]	100.00	100.00	100.00	100.00	100.00	100.00	100.00	100.00	100.00	100.00	100.00	100.00
Speed [mph]	30.00			30.00			30.00			30.00		
Grade [%]	0.00			0.00			0.00			0.00		
Crosswalk	Yes			Yes			Yes			Yes		

Volumes

Name	Glassell St			Glassell St			La Veta Ave			La Veta Ave		
Base Volume Input [veh/h]	258	390	119	20	595	60	36	195	403	257	339	7
Base Volume Adjustment Factor	1.0000	1.0000	1.0000	1.0000	1.0000	1.0000	1.0000	1.0000	1.0000	1.0000	1.0000	1.0000
Heavy Vehicles Percentage [%]	2.00	2.00	2.00	2.00	2.00	2.00	2.00	2.00	2.00	2.00	2.00	2.00
Growth Factor	1.0000	1.0000	1.0000	1.0000	1.0000	1.0000	1.0000	1.0000	1.0000	1.0000	1.0000	1.0000
In-Process Volume [veh/h]	0	0	0	0	0	0	0	0	0	0	0	0
Site-Generated Trips [veh/h]	0	0	0	0	0	0	0	0	0	0	0	0
Diverted Trips [veh/h]	0	0	0	0	0	0	0	0	0	0	0	0
Pass-by Trips [veh/h]	0	0	0	0	0	0	0	0	0	0	0	0
Existing Site Adjustment Volume [veh/h]	0	0	0	0	0	0	0	0	0	0	0	0
Other Volume [veh/h]	0	0	0	0	0	0	0	0	0	0	0	0
Total Hourly Volume [veh/h]	258	390	119	20	595	60	36	195	403	257	339	7
Peak Hour Factor	1.0000	1.0000	1.0000	1.0000	1.0000	1.0000	1.0000	1.0000	1.0000	1.0000	1.0000	1.0000
Other Adjustment Factor	1.0000	1.0000	1.0000	1.0000	1.0000	1.0000	1.0000	1.0000	1.0000	1.0000	1.0000	1.0000
Total 15-Minute Volume [veh/h]	65	98	30	5	149	15	9	49	101	64	85	2
Total Analysis Volume [veh/h]	258	390	119	20	595	60	36	195	403	257	339	7
Pedestrian Volume [ped/h]	0			0			0			0		
Bicycle Volume [bicycles/h]	0			0			0			0		

Intersection Settings

Cycle Length [s]	100
Lost time [s]	5.00

Phasing & Timing

Control Type	Protecte	Permiss	Overlap	Protecte	Permiss	Permiss	Protecte	Permiss	Overlap	Protecte	Permiss	Permiss
Signal Group	1	6	6	5	2	0	3	8	8	7	4	0
Auxiliary Signal Groups			6,7						1,8			
Lead / Lag	Lead	-	-	Lead	-	-	Lead	-	-	Lead	-	-

Movement, Approach, & Intersection Results

V/C, Movement V/C Ratio	0.08	0.23	0.00	0.01	0.19	0.19	0.02	0.11	0.16	0.15	0.10	0.10
Intersection LOS	B											
Intersection V/C	0.631											

Intersection Level Of Service Report
Intersection 2: Glassell Street at East River Avenue

Control Type:	Two-way stop	Delay (sec / veh):	15.9
Analysis Method:	HCM 6th Edition	Level Of Service:	C
Analysis Period:	15 minutes	Volume to Capacity (v/c):	0.012

Intersection Setup

Name	Glassell St		Glassell St		East River Ave	
Approach	Northbound		Southbound		Westbound	
Lane Configuration						
Turning Movement	Thru	Right	Left	Thru	Left	Right
Lane Width [ft]	12.00	12.00	12.00	12.00	12.00	12.00
No. of Lanes in Pocket	0	0	1	0	0	0
Pocket Length [ft]	100.00	100.00	100.00	100.00	100.00	100.00
Speed [mph]	30.00		30.00		30.00	
Grade [%]	0.00		0.00		0.00	
Crosswalk	No		Yes		Yes	

Volumes

Name	Glassell St		Glassell St		East River Ave	
Base Volume Input [veh/h]	717	5	1	1295	4	3
Base Volume Adjustment Factor	1.0000	1.0000	1.0000	1.0000	1.0000	1.0000
Heavy Vehicles Percentage [%]	2.00	2.00	2.00	2.00	2.00	2.00
Growth Factor	1.0000	1.0000	1.0000	1.0000	1.0000	1.0000
In-Process Volume [veh/h]	0	0	0	0	0	0
Site-Generated Trips [veh/h]	0	0	0	0	0	0
Diverted Trips [veh/h]	0	0	0	0	0	0
Pass-by Trips [veh/h]	0	0	0	0	0	0
Existing Site Adjustment Volume [veh/h]	0	0	0	0	0	0
Other Volume [veh/h]	0	0	0	0	0	0
Total Hourly Volume [veh/h]	717	5	1	1295	4	3
Peak Hour Factor	1.0000	1.0000	1.0000	1.0000	1.0000	1.0000
Other Adjustment Factor	1.0000	1.0000	1.0000	1.0000	1.0000	1.0000
Total 15-Minute Volume [veh/h]	179	1	0	324	1	1
Total Analysis Volume [veh/h]	717	5	1	1295	4	3
Pedestrian Volume [ped/h]	0		0		0	

Intersection Settings

Priority Scheme	Free	Free	Stop
Flared Lane			No
Storage Area [veh]	0	0	0
Two-Stage Gap Acceptance			Yes
Number of Storage Spaces in Median	0	0	2

Movement, Approach, & Intersection Results

V/C, Movement V/C Ratio	0.01	0.00	0.00	0.01	0.01	0.00
d_M, Delay for Movement [s/veh]	0.00	0.00	9.11	0.00	15.89	10.81
Movement LOS	A	A	A	A	C	B
95th-Percentile Queue Length [veh/ln]	0.00	0.00	0.00	0.00	0.05	0.05
95th-Percentile Queue Length [ft/ln]	0.00	0.00	0.09	0.00	1.27	1.27
d_A, Approach Delay [s/veh]	0.00		0.01		13.71	
Approach LOS	A		A		B	
d_I, Intersection Delay [s/veh]	0.05					
Intersection LOS	C					

Intersection Level Of Service Report
Intersection 3: Glassell Street at Park Plaza Driveway 1

Control Type:	Two-way stop	Delay (sec / veh):	0.0
Analysis Method:	HCM 6th Edition	Level Of Service:	A
Analysis Period:	15 minutes	Volume to Capacity (v/c):	0.014

Intersection Setup

Name	Glassell St		Glassell St		Park Plaza Dwy 1	
Approach	Northbound		Southbound		Eastbound	
Lane Configuration						
Turning Movement	Left	Thru	Thru	Right	Left	Right
Lane Width [ft]	12.00	12.00	12.00	12.00	12.00	12.00
No. of Lanes in Pocket	1	0	0	0	0	0
Pocket Length [ft]	100.00	100.00	100.00	100.00	100.00	100.00
Speed [mph]	30.00		30.00		30.00	
Grade [%]	0.00		0.00		0.00	
Crosswalk	No		No		Yes	

Volumes

Name	Glassell St		Glassell St		Park Plaza Dwy 1	
Base Volume Input [veh/h]	0	830	1353	0	0	0
Base Volume Adjustment Factor	1.0000	1.0000	1.0000	1.0000	1.0000	1.0000
Heavy Vehicles Percentage [%]	2.00	2.00	2.00	2.00	2.00	2.00
Growth Factor	1.0000	1.0000	1.0000	1.0000	1.0000	1.0000
In-Process Volume [veh/h]	0	0	0	0	0	0
Site-Generated Trips [veh/h]	0	0	0	0	0	0
Diverted Trips [veh/h]	0	0	0	0	0	0
Pass-by Trips [veh/h]	0	0	0	0	0	0
Existing Site Adjustment Volume [veh/h]	0	0	0	0	0	0
Other Volume [veh/h]	0	0	0	0	0	0
Total Hourly Volume [veh/h]	0	830	1353	0	0	0
Peak Hour Factor	1.0000	1.0000	1.0000	1.0000	1.0000	1.0000
Other Adjustment Factor	1.0000	1.0000	1.0000	1.0000	1.0000	1.0000
Total 15-Minute Volume [veh/h]	0	208	338	0	0	0
Total Analysis Volume [veh/h]	0	830	1353	0	0	0
Pedestrian Volume [ped/h]	0		0		0	

Intersection Settings

Priority Scheme	Free	Free	Stop
Flared Lane			No
Storage Area [veh]	0	0	0
Two-Stage Gap Acceptance			Yes
Number of Storage Spaces in Median	0	0	2

Movement, Approach, & Intersection Results

V/C, Movement V/C Ratio	0.00	0.01	0.01	0.00	0.00	0.00
d_M, Delay for Movement [s/veh]	12.14	0.00	0.00	0.00	23.98	14.10
Movement LOS	B	A	A	A	C	B
95th-Percentile Queue Length [veh/ln]	0.00	0.00	0.00	0.00	0.00	0.00
95th-Percentile Queue Length [ft/ln]	0.00	0.00	0.00	0.00	0.00	0.00
d_A, Approach Delay [s/veh]	0.00		0.00		19.04	
Approach LOS	A		A		C	
d_I, Intersection Delay [s/veh]	0.00					
Intersection LOS	A					

Intersection Level Of Service Report
Intersection 4: Glassell Street at Park Plaza Driveway 2

Control Type:	Two-way stop	Delay (sec / veh):	0.0
Analysis Method:	HCM 6th Edition	Level Of Service:	A
Analysis Period:	15 minutes	Volume to Capacity (v/c):	0.014

Intersection Setup

Name	Glassell St		Glassell St		Park Plaza Dwy 2	
Approach	Northbound		Southbound		Eastbound	
Lane Configuration						
Turning Movement	Left	Thru	Thru	Right	Left	Right
Lane Width [ft]	12.00	12.00	12.00	12.00	12.00	12.00
No. of Lanes in Pocket	0	0	0	0	0	0
Pocket Length [ft]	100.00	100.00	100.00	100.00	100.00	100.00
Speed [mph]	30.00		30.00		30.00	
Grade [%]	0.00		0.00		0.00	
Crosswalk	No		No		Yes	

Volumes

Name	Glassell St		Glassell St		Park Plaza Dwy 2	
Base Volume Input [veh/h]	0	830	1354	3	0	0
Base Volume Adjustment Factor	1.0000	1.0000	1.0000	1.0000	1.0000	1.0000
Heavy Vehicles Percentage [%]	2.00	2.00	2.00	2.00	2.00	2.00
Growth Factor	1.0000	1.0000	1.0000	1.0000	1.0000	1.0000
In-Process Volume [veh/h]	0	0	0	0	0	0
Site-Generated Trips [veh/h]	0	0	0	0	0	0
Diverted Trips [veh/h]	0	0	0	0	0	0
Pass-by Trips [veh/h]	0	0	0	0	0	0
Existing Site Adjustment Volume [veh/h]	0	0	0	0	0	0
Other Volume [veh/h]	0	0	0	0	0	0
Total Hourly Volume [veh/h]	0	830	1354	3	0	0
Peak Hour Factor	1.0000	1.0000	1.0000	1.0000	1.0000	1.0000
Other Adjustment Factor	1.0000	1.0000	1.0000	1.0000	1.0000	1.0000
Total 15-Minute Volume [veh/h]	0	208	339	1	0	0
Total Analysis Volume [veh/h]	0	830	1354	3	0	0
Pedestrian Volume [ped/h]	0		0		0	

Intersection Settings

Priority Scheme	Free	Free	Stop
Flared Lane			
Storage Area [veh]	0	0	0
Two-Stage Gap Acceptance			No
Number of Storage Spaces in Median	0	0	0

Movement, Approach, & Intersection Results

V/C, Movement V/C Ratio	0.00	0.01	0.01	0.00	0.00	0.00
d_M, Delay for Movement [s/veh]	0.00	0.00	0.00	0.00	0.00	14.13
Movement LOS		A	A	A		B
95th-Percentile Queue Length [veh/ln]	0.00	0.00	0.00	0.00	0.00	0.00
95th-Percentile Queue Length [ft/ln]	0.00	0.00	0.00	0.00	0.00	0.00
d_A, Approach Delay [s/veh]	0.00		0.00		14.13	
Approach LOS	A		A		B	
d_I, Intersection Delay [s/veh]	0.00					
Intersection LOS	A					

Intersection Level Of Service Report
Intersection 1: Glassell Street at La Veta Avenue

Control Type:	Signalized	Delay (sec / veh):	-
Analysis Method:	ICU 1	Level Of Service:	B
Analysis Period:	15 minutes	Volume to Capacity (v/c):	0.617

Intersection Setup

Name	Glassell St			Glassell St			La Veta Ave			La Veta Ave		
Approach	Northbound			Southbound			Eastbound			Westbound		
Lane Configuration												
Turning Movement	Left	Thru	Right	Left	Thru	Right	Left	Thru	Right	Left	Thru	Right
Lane Width [ft]	12.00	12.00	12.00	12.00	12.00	12.00	12.00	12.00	12.00	12.00	12.00	12.00
No. of Lanes in Pocket	1	0	1	1	0	0	1	0	1	1	0	0
Pocket Length [ft]	100.00	100.00	100.00	100.00	100.00	100.00	100.00	100.00	100.00	100.00	100.00	100.00
Speed [mph]	30.00			30.00			30.00			30.00		
Grade [%]	0.00			0.00			0.00			0.00		
Crosswalk	Yes			Yes			Yes			Yes		

Volumes

Name	Glassell St			Glassell St			La Veta Ave			La Veta Ave		
Base Volume Input [veh/h]	322	451	175	17	435	32	64	358	402	138	305	21
Base Volume Adjustment Factor	1.0000	1.0000	1.0000	1.0000	1.0000	1.0000	1.0000	1.0000	1.0000	1.0000	1.0000	1.0000
Heavy Vehicles Percentage [%]	2.00	2.00	2.00	2.00	2.00	2.00	2.00	2.00	2.00	2.00	2.00	2.00
Growth Factor	1.0000	1.0000	1.0000	1.0000	1.0000	1.0000	1.0000	1.0000	1.0000	1.0000	1.0000	1.0000
In-Process Volume [veh/h]	0	0	0	0	0	0	0	0	0	0	0	0
Site-Generated Trips [veh/h]	0	0	0	0	0	0	0	0	0	0	0	0
Diverted Trips [veh/h]	0	0	0	0	0	0	0	0	0	0	0	0
Pass-by Trips [veh/h]	0	0	0	0	0	0	0	0	0	0	0	0
Existing Site Adjustment Volume [veh/h]	0	0	0	0	0	0	0	0	0	0	0	0
Other Volume [veh/h]	0	0	0	0	0	0	0	0	0	0	0	0
Total Hourly Volume [veh/h]	322	451	175	17	435	32	64	358	402	138	305	21
Peak Hour Factor	1.0000	1.0000	1.0000	1.0000	1.0000	1.0000	1.0000	1.0000	1.0000	1.0000	1.0000	1.0000
Other Adjustment Factor	1.0000	1.0000	1.0000	1.0000	1.0000	1.0000	1.0000	1.0000	1.0000	1.0000	1.0000	1.0000
Total 15-Minute Volume [veh/h]	81	113	44	4	109	8	16	90	101	35	76	5
Total Analysis Volume [veh/h]	322	451	175	17	435	32	64	358	402	138	305	21
Pedestrian Volume [ped/h]	0			0			0			0		
Bicycle Volume [bicycles/h]	0			0			0			0		

Intersection Settings

Cycle Length [s]	100
Lost time [s]	5.00

Phasing & Timing

Control Type	Protecte	Permiss	Overlap	Protecte	Permiss	Permiss	Protecte	Permiss	Overlap	Protecte	Permiss	Permiss
Signal Group	1	6	6	5	2	0	3	8	8	7	4	0
Auxiliary Signal Groups			6,7						1,8			
Lead / Lag	Lead	-	-	Lead	-	-	Lead	-	-	Lead	-	-

Movement, Approach, & Intersection Results

V/C, Movement V/C Ratio	0.09	0.27	0.02	0.01	0.14	0.14	0.04	0.21	0.14	0.08	0.10	0.10
Intersection LOS	B											
Intersection V/C	0.617											

Intersection Level Of Service Report
Intersection 2: Glassell Street at East River Avenue

Control Type:	Two-way stop	Delay (sec / veh):	17.4
Analysis Method:	HCM 6th Edition	Level Of Service:	C
Analysis Period:	15 minutes	Volume to Capacity (v/c):	0.010

Intersection Setup

Name	Glassell St		Glassell St		East River Ave	
Approach	Northbound		Southbound		Westbound	
Lane Configuration						
Turning Movement	Thru	Right	Left	Thru	Left	Right
Lane Width [ft]	12.00	12.00	12.00	12.00	12.00	12.00
No. of Lanes in Pocket	0	0	1	0	0	0
Pocket Length [ft]	100.00	100.00	100.00	100.00	100.00	100.00
Speed [mph]	30.00		30.00		30.00	
Grade [%]	0.00		0.00		0.00	
Crosswalk	No		Yes		Yes	

Volumes

Name	Glassell St		Glassell St		East River Ave	
Base Volume Input [veh/h]	946	12	1	974	3	2
Base Volume Adjustment Factor	1.0000	1.0000	1.0000	1.0000	1.0000	1.0000
Heavy Vehicles Percentage [%]	2.00	2.00	2.00	2.00	2.00	2.00
Growth Factor	1.0000	1.0000	1.0000	1.0000	1.0000	1.0000
In-Process Volume [veh/h]	0	0	0	0	0	0
Site-Generated Trips [veh/h]	0	0	0	0	0	0
Diverted Trips [veh/h]	0	0	0	0	0	0
Pass-by Trips [veh/h]	0	0	0	0	0	0
Existing Site Adjustment Volume [veh/h]	0	0	0	0	0	0
Other Volume [veh/h]	0	0	0	0	0	0
Total Hourly Volume [veh/h]	946	12	1	974	3	2
Peak Hour Factor	1.0000	1.0000	1.0000	1.0000	1.0000	1.0000
Other Adjustment Factor	1.0000	1.0000	1.0000	1.0000	1.0000	1.0000
Total 15-Minute Volume [veh/h]	237	3	0	244	1	1
Total Analysis Volume [veh/h]	946	12	1	974	3	2
Pedestrian Volume [ped/h]	0		0		0	

Intersection Settings

Priority Scheme	Free	Free	Stop
Flared Lane			No
Storage Area [veh]	0	0	0
Two-Stage Gap Acceptance			Yes
Number of Storage Spaces in Median	0	0	2

Movement, Approach, & Intersection Results

V/C, Movement V/C Ratio	0.01	0.00	0.00	0.01	0.01	0.00
d_M, Delay for Movement [s/veh]	0.00	0.00	10.05	0.00	17.45	11.90
Movement LOS	A	A	B	A	C	B
95th-Percentile Queue Length [veh/ln]	0.00	0.00	0.00	0.00	0.04	0.04
95th-Percentile Queue Length [ft/ln]	0.00	0.00	0.11	0.00	1.06	1.06
d_A, Approach Delay [s/veh]	0.00		0.01		15.23	
Approach LOS	A		A		C	
d_I, Intersection Delay [s/veh]	0.04					
Intersection LOS	C					

Intersection Level Of Service Report
Intersection 3: Glassell Street at Park Plaza Driveway 1

Control Type:	Two-way stop	Delay (sec / veh):	0.0
Analysis Method:	HCM 6th Edition	Level Of Service:	A
Analysis Period:	15 minutes	Volume to Capacity (v/c):	0.010

Intersection Setup

Name	Glassell St		Glassell St		Park Plaza Dwy 1	
Approach	Northbound		Southbound		Eastbound	
Lane Configuration						
Turning Movement	Left	Thru	Thru	Right	Left	Right
Lane Width [ft]	12.00	12.00	12.00	12.00	12.00	12.00
No. of Lanes in Pocket	1	0	0	0	0	0
Pocket Length [ft]	100.00	100.00	100.00	100.00	100.00	100.00
Speed [mph]	30.00		30.00		30.00	
Grade [%]	0.00		0.00		0.00	
Crosswalk	No		No		Yes	

Volumes

Name	Glassell St		Glassell St		Park Plaza Dwy 1	
Base Volume Input [veh/h]	0	966	1006	0	0	0
Base Volume Adjustment Factor	1.0000	1.0000	1.0000	1.0000	1.0000	1.0000
Heavy Vehicles Percentage [%]	2.00	2.00	2.00	2.00	2.00	2.00
Growth Factor	1.0000	1.0000	1.0000	1.0000	1.0000	1.0000
In-Process Volume [veh/h]	0	0	0	0	0	0
Site-Generated Trips [veh/h]	0	0	0	0	0	0
Diverted Trips [veh/h]	0	0	0	0	0	0
Pass-by Trips [veh/h]	0	0	0	0	0	0
Existing Site Adjustment Volume [veh/h]	0	0	0	0	0	0
Other Volume [veh/h]	0	0	0	0	0	0
Total Hourly Volume [veh/h]	0	966	1006	0	0	0
Peak Hour Factor	1.0000	1.0000	1.0000	1.0000	1.0000	1.0000
Other Adjustment Factor	1.0000	1.0000	1.0000	1.0000	1.0000	1.0000
Total 15-Minute Volume [veh/h]	0	242	252	0	0	0
Total Analysis Volume [veh/h]	0	966	1006	0	0	0
Pedestrian Volume [ped/h]	0		0		0	

Intersection Settings

Priority Scheme	Free	Free	Stop
Flared Lane			No
Storage Area [veh]	0	0	0
Two-Stage Gap Acceptance			Yes
Number of Storage Spaces in Median	0	0	2

Movement, Approach, & Intersection Results

V/C, Movement V/C Ratio	0.00	0.01	0.01	0.00	0.00	0.00
d_M, Delay for Movement [s/veh]	10.26	0.00	0.00	0.00	17.99	12.01
Movement LOS	B	A	A	A	C	B
95th-Percentile Queue Length [veh/ln]	0.00	0.00	0.00	0.00	0.00	0.00
95th-Percentile Queue Length [ft/ln]	0.00	0.00	0.00	0.00	0.00	0.00
d_A, Approach Delay [s/veh]	0.00		0.00		15.00	
Approach LOS	A		A		B	
d_I, Intersection Delay [s/veh]	0.00					
Intersection LOS	A					

Intersection Level Of Service Report
Intersection 4: Glassell Street at Park Plaza Driveway 2

Control Type:	Two-way stop	Delay (sec / veh):	12.1
Analysis Method:	HCM 6th Edition	Level Of Service:	B
Analysis Period:	15 minutes	Volume to Capacity (v/c):	0.010

Intersection Setup

Name	Glassell St		Glassell St		Park Plaza Dwy 2	
Approach	Northbound		Southbound		Eastbound	
Lane Configuration						
Turning Movement	Left	Thru	Thru	Right	Left	Right
Lane Width [ft]	12.00	12.00	12.00	12.00	12.00	12.00
No. of Lanes in Pocket	0	0	0	0	0	0
Pocket Length [ft]	100.00	100.00	100.00	100.00	100.00	100.00
Speed [mph]	30.00		30.00		30.00	
Grade [%]	0.00		0.00		0.00	
Crosswalk	No		No		Yes	

Volumes

Name	Glassell St		Glassell St		Park Plaza Dwy 2	
Base Volume Input [veh/h]	0	965	1005	1	0	5
Base Volume Adjustment Factor	1.0000	1.0000	1.0000	1.0000	1.0000	1.0000
Heavy Vehicles Percentage [%]	2.00	2.00	2.00	2.00	2.00	2.00
Growth Factor	1.0000	1.0000	1.0000	1.0000	1.0000	1.0000
In-Process Volume [veh/h]	0	0	0	0	0	0
Site-Generated Trips [veh/h]	0	0	0	0	0	0
Diverted Trips [veh/h]	0	0	0	0	0	0
Pass-by Trips [veh/h]	0	0	0	0	0	0
Existing Site Adjustment Volume [veh/h]	0	0	0	0	0	0
Other Volume [veh/h]	0	0	0	0	0	0
Total Hourly Volume [veh/h]	0	965	1005	1	0	5
Peak Hour Factor	1.0000	1.0000	1.0000	1.0000	1.0000	1.0000
Other Adjustment Factor	1.0000	1.0000	1.0000	1.0000	1.0000	1.0000
Total 15-Minute Volume [veh/h]	0	241	251	0	0	1
Total Analysis Volume [veh/h]	0	965	1005	1	0	5
Pedestrian Volume [ped/h]	0		0		0	

Intersection Settings

Priority Scheme	Free	Free	Stop
Flared Lane			
Storage Area [veh]	0	0	0
Two-Stage Gap Acceptance			No
Number of Storage Spaces in Median	0	0	0

Movement, Approach, & Intersection Results

V/C, Movement V/C Ratio	0.00	0.01	0.01	0.00	0.00	0.01
d_M, Delay for Movement [s/veh]	0.00	0.00	0.00	0.00	0.00	12.07
Movement LOS		A	A	A		B
95th-Percentile Queue Length [veh/ln]	0.00	0.00	0.00	0.00	0.00	0.03
95th-Percentile Queue Length [ft/ln]	0.00	0.00	0.00	0.00	0.00	0.74
d_A, Approach Delay [s/veh]	0.00		0.00		12.07	
Approach LOS	A		A		B	
d_I, Intersection Delay [s/veh]	0.03					
Intersection LOS	B					

APPENDIX C-II

EXISTING (YEAR 2019) WITH PROJECT TRAFFIC CONDITIONS

Intersection Level Of Service Report
Intersection 1: Glassell Street at La Veta Avenue

Control Type:	Signalized	Delay (sec / veh):	-
Analysis Method:	ICU 1	Level Of Service:	B
Analysis Period:	15 minutes	Volume to Capacity (v/c):	0.632

Intersection Setup

Name	Glassell St			Glassell St			La Veta Ave			La Veta Ave		
Approach	Northbound			Southbound			Eastbound			Westbound		
Lane Configuration												
Turning Movement	Left	Thru	Right	Left	Thru	Right	Left	Thru	Right	Left	Thru	Right
Lane Width [ft]	12.00	12.00	12.00	12.00	12.00	12.00	12.00	12.00	12.00	12.00	12.00	12.00
No. of Lanes in Pocket	1	0	1	1	0	0	1	0	1	1	0	0
Pocket Length [ft]	100.00	100.00	100.00	100.00	100.00	100.00	100.00	100.00	100.00	100.00	100.00	100.00
Speed [mph]	30.00			30.00			30.00			30.00		
Grade [%]	0.00			0.00			0.00			0.00		
Crosswalk	Yes			Yes			Yes			Yes		

Volumes

Name	Glassell St			Glassell St			La Veta Ave			La Veta Ave		
Base Volume Input [veh/h]	258	390	119	20	596	60	36	195	404	257	339	7
Base Volume Adjustment Factor	1.0000	1.0000	1.0000	1.0000	1.0000	1.0000	1.0000	1.0000	1.0000	1.0000	1.0000	1.0000
Heavy Vehicles Percentage [%]	2.00	2.00	2.00	2.00	2.00	2.00	2.00	2.00	2.00	2.00	2.00	2.00
Growth Factor	1.0000	1.0000	1.0000	1.0000	1.0000	1.0000	1.0000	1.0000	1.0000	1.0000	1.0000	1.0000
In-Process Volume [veh/h]	0	0	0	0	0	0	0	0	0	0	0	0
Site-Generated Trips [veh/h]	0	0	0	0	0	0	0	0	0	0	0	0
Diverted Trips [veh/h]	0	0	0	0	0	0	0	0	0	0	0	0
Pass-by Trips [veh/h]	0	0	0	0	0	0	0	0	0	0	0	0
Existing Site Adjustment Volume [veh/h]	0	0	0	0	0	0	0	0	0	0	0	0
Other Volume [veh/h]	0	0	0	0	0	0	0	0	0	0	0	0
Total Hourly Volume [veh/h]	258	390	119	20	596	60	36	195	404	257	339	7
Peak Hour Factor	1.0000	1.0000	1.0000	1.0000	1.0000	1.0000	1.0000	1.0000	1.0000	1.0000	1.0000	1.0000
Other Adjustment Factor	1.0000	1.0000	1.0000	1.0000	1.0000	1.0000	1.0000	1.0000	1.0000	1.0000	1.0000	1.0000
Total 15-Minute Volume [veh/h]	65	98	30	5	149	15	9	49	101	64	85	2
Total Analysis Volume [veh/h]	258	390	119	20	596	60	36	195	404	257	339	7
Pedestrian Volume [ped/h]	0			0			0			0		
Bicycle Volume [bicycles/h]	0			0			0			0		

Intersection Settings

Cycle Length [s]	100
Lost time [s]	5.00

Phasing & Timing

Control Type	Protecte	Permiss	Overlap	Protecte	Permiss	Permiss	Protecte	Permiss	Overlap	Protecte	Permiss	Permiss
Signal Group	1	6	6	5	2	0	3	8	8	7	4	0
Auxiliary Signal Groups			6,7						1,8			
Lead / Lag	Lead	-	-	Lead	-	-	Lead	-	-	Lead	-	-

Movement, Approach, & Intersection Results

V/C, Movement V/C Ratio	0.08	0.23	0.00	0.01	0.19	0.19	0.02	0.11	0.16	0.15	0.10	0.10
Intersection LOS	B											
Intersection V/C	0.632											

Intersection Level Of Service Report
Intersection 2: Glassell Street at East River Avenue

Control Type:	Two-way stop	Delay (sec / veh):	15.9
Analysis Method:	HCM 6th Edition	Level Of Service:	C
Analysis Period:	15 minutes	Volume to Capacity (v/c):	0.012

Intersection Setup

Name	Glassell St		Glassell St		East River Ave	
Approach	Northbound		Southbound		Westbound	
Lane Configuration						
Turning Movement	Thru	Right	Left	Thru	Left	Right
Lane Width [ft]	12.00	12.00	12.00	12.00	12.00	12.00
No. of Lanes in Pocket	0	0	1	0	0	0
Pocket Length [ft]	100.00	100.00	100.00	100.00	100.00	100.00
Speed [mph]	30.00		30.00		30.00	
Grade [%]	0.00		0.00		0.00	
Crosswalk	No		Yes		Yes	

Volumes

Name	Glassell St		Glassell St		East River Ave	
Base Volume Input [veh/h]	718	5	1	1297	4	3
Base Volume Adjustment Factor	1.0000	1.0000	1.0000	1.0000	1.0000	1.0000
Heavy Vehicles Percentage [%]	2.00	2.00	2.00	2.00	2.00	2.00
Growth Factor	1.0000	1.0000	1.0000	1.0000	1.0000	1.0000
In-Process Volume [veh/h]	0	0	0	0	0	0
Site-Generated Trips [veh/h]	0	0	0	0	0	0
Diverted Trips [veh/h]	0	0	0	0	0	0
Pass-by Trips [veh/h]	0	0	0	0	0	0
Existing Site Adjustment Volume [veh/h]	0	0	0	0	0	0
Other Volume [veh/h]	0	0	0	0	0	0
Total Hourly Volume [veh/h]	718	5	1	1297	4	3
Peak Hour Factor	1.0000	1.0000	1.0000	1.0000	1.0000	1.0000
Other Adjustment Factor	1.0000	1.0000	1.0000	1.0000	1.0000	1.0000
Total 15-Minute Volume [veh/h]	180	1	0	324	1	1
Total Analysis Volume [veh/h]	718	5	1	1297	4	3
Pedestrian Volume [ped/h]	0		0		0	

Intersection Settings

Priority Scheme	Free	Free	Stop
Flared Lane			No
Storage Area [veh]	0	0	0
Two-Stage Gap Acceptance			Yes
Number of Storage Spaces in Median	0	0	2

Movement, Approach, & Intersection Results

V/C, Movement V/C Ratio	0.01	0.00	0.00	0.01	0.01	0.00
d_M, Delay for Movement [s/veh]	0.00	0.00	9.12	0.00	15.91	10.81
Movement LOS	A	A	A	A	C	B
95th-Percentile Queue Length [veh/ln]	0.00	0.00	0.00	0.00	0.05	0.05
95th-Percentile Queue Length [ft/ln]	0.00	0.00	0.09	0.00	1.27	1.27
d_A, Approach Delay [s/veh]	0.00		0.01		13.72	
Approach LOS	A		A		B	
d_I, Intersection Delay [s/veh]	0.05					
Intersection LOS	C					

Intersection Level Of Service Report
Intersection 3: Glassell Street at Park Plaza Driveway 1

Control Type:	Two-way stop	Delay (sec / veh):	24.1
Analysis Method:	HCM 6th Edition	Level Of Service:	C
Analysis Period:	15 minutes	Volume to Capacity (v/c):	0.005

Intersection Setup

Name	Glassell St		Glassell St		Park Plaza Dwy 1	
Approach	Northbound		Southbound		Eastbound	
Lane Configuration						
Turning Movement	Left	Thru	Thru	Right	Left	Right
Lane Width [ft]	12.00	12.00	12.00	12.00	12.00	12.00
No. of Lanes in Pocket	1	0	0	0	0	0
Pocket Length [ft]	100.00	100.00	100.00	100.00	100.00	100.00
Speed [mph]	30.00		30.00		30.00	
Grade [%]	0.00		0.00		0.00	
Crosswalk	No		No		Yes	

Volumes

Name	Glassell St		Glassell St		Park Plaza Dwy 1	
Base Volume Input [veh/h]	3	830	1353	2	1	1
Base Volume Adjustment Factor	1.0000	1.0000	1.0000	1.0000	1.0000	1.0000
Heavy Vehicles Percentage [%]	2.00	2.00	2.00	2.00	2.00	2.00
Growth Factor	1.0000	1.0000	1.0000	1.0000	1.0000	1.0000
In-Process Volume [veh/h]	0	0	0	0	0	0
Site-Generated Trips [veh/h]	0	0	0	0	0	0
Diverted Trips [veh/h]	0	0	0	0	0	0
Pass-by Trips [veh/h]	0	0	0	0	0	0
Existing Site Adjustment Volume [veh/h]	0	0	0	0	0	0
Other Volume [veh/h]	0	0	0	0	0	0
Total Hourly Volume [veh/h]	3	830	1353	2	1	1
Peak Hour Factor	1.0000	1.0000	1.0000	1.0000	1.0000	1.0000
Other Adjustment Factor	1.0000	1.0000	1.0000	1.0000	1.0000	1.0000
Total 15-Minute Volume [veh/h]	1	208	338	1	0	0
Total Analysis Volume [veh/h]	3	830	1353	2	1	1
Pedestrian Volume [ped/h]	0		0		0	

Intersection Settings

Priority Scheme	Free	Free	Stop
Flared Lane			No
Storage Area [veh]	0	0	0
Two-Stage Gap Acceptance			Yes
Number of Storage Spaces in Median	0	0	2

Movement, Approach, & Intersection Results

V/C, Movement V/C Ratio	0.01	0.01	0.01	0.00	0.01	0.00
d_M, Delay for Movement [s/veh]	12.19	0.00	0.00	0.00	24.14	14.23
Movement LOS	B	A	A	A	C	B
95th-Percentile Queue Length [veh/ln]	0.02	0.00	0.00	0.00	0.02	0.02
95th-Percentile Queue Length [ft/ln]	0.45	0.00	0.00	0.00	0.59	0.59
d_A, Approach Delay [s/veh]	0.04		0.00		19.18	
Approach LOS	A		A		C	
d_I, Intersection Delay [s/veh]	0.03					
Intersection LOS	C					

Intersection Level Of Service Report
Intersection 4: Glassell Street at Park Plaza Driveway 2

Control Type:	Two-way stop	Delay (sec / veh):	0.0
Analysis Method:	HCM 6th Edition	Level Of Service:	A
Analysis Period:	15 minutes	Volume to Capacity (v/c):	0.014

Intersection Setup

Name	Glassell St		Glassell St		Park Plaza Dwy 2	
Approach	Northbound		Southbound		Eastbound	
Lane Configuration						
Turning Movement	Left	Thru	Thru	Right	Left	Right
Lane Width [ft]	12.00	12.00	12.00	12.00	12.00	12.00
No. of Lanes in Pocket	0	0	0	0	0	0
Pocket Length [ft]	100.00	100.00	100.00	100.00	100.00	100.00
Speed [mph]	30.00		30.00		30.00	
Grade [%]	0.00		0.00		0.00	
Crosswalk	No		No		Yes	

Volumes

Name	Glassell St		Glassell St		Park Plaza Dwy 2	
Base Volume Input [veh/h]	0	833	1355	3	0	0
Base Volume Adjustment Factor	1.0000	1.0000	1.0000	1.0000	1.0000	1.0000
Heavy Vehicles Percentage [%]	2.00	2.00	2.00	2.00	2.00	2.00
Growth Factor	1.0000	1.0000	1.0000	1.0000	1.0000	1.0000
In-Process Volume [veh/h]	0	0	0	0	0	0
Site-Generated Trips [veh/h]	0	0	0	0	0	0
Diverted Trips [veh/h]	0	0	0	0	0	0
Pass-by Trips [veh/h]	0	0	0	0	0	0
Existing Site Adjustment Volume [veh/h]	0	0	0	0	0	0
Other Volume [veh/h]	0	0	0	0	0	0
Total Hourly Volume [veh/h]	0	833	1355	3	0	0
Peak Hour Factor	1.0000	1.0000	1.0000	1.0000	1.0000	1.0000
Other Adjustment Factor	1.0000	1.0000	1.0000	1.0000	1.0000	1.0000
Total 15-Minute Volume [veh/h]	0	208	339	1	0	0
Total Analysis Volume [veh/h]	0	833	1355	3	0	0
Pedestrian Volume [ped/h]	0		0		0	

Intersection Settings

Priority Scheme	Free	Free	Stop
Flared Lane			
Storage Area [veh]	0	0	0
Two-Stage Gap Acceptance			No
Number of Storage Spaces in Median	0	0	0

Movement, Approach, & Intersection Results

V/C, Movement V/C Ratio	0.00	0.01	0.01	0.00	0.00	0.00
d_M, Delay for Movement [s/veh]	0.00	0.00	0.00	0.00	0.00	14.14
Movement LOS		A	A	A		B
95th-Percentile Queue Length [veh/ln]	0.00	0.00	0.00	0.00	0.00	0.00
95th-Percentile Queue Length [ft/ln]	0.00	0.00	0.00	0.00	0.00	0.00
d_A, Approach Delay [s/veh]	0.00		0.00		14.14	
Approach LOS	A		A		B	
d_I, Intersection Delay [s/veh]	0.00					
Intersection LOS	A					

Intersection Level Of Service Report
Intersection 1: Glassell Street at La Veta Avenue

Control Type:	Signalized	Delay (sec / veh):	-
Analysis Method:	ICU 1	Level Of Service:	B
Analysis Period:	15 minutes	Volume to Capacity (v/c):	0.618

Intersection Setup

Name	Glassell St			Glassell St			La Veta Ave			La Veta Ave		
Approach	Northbound			Southbound			Eastbound			Westbound		
Lane Configuration												
Turning Movement	Left	Thru	Right	Left	Thru	Right	Left	Thru	Right	Left	Thru	Right
Lane Width [ft]	12.00	12.00	12.00	12.00	12.00	12.00	12.00	12.00	12.00	12.00	12.00	12.00
No. of Lanes in Pocket	1	0	1	1	0	0	1	0	1	1	0	0
Pocket Length [ft]	100.00	100.00	100.00	100.00	100.00	100.00	100.00	100.00	100.00	100.00	100.00	100.00
Speed [mph]	30.00			30.00			30.00			30.00		
Grade [%]	0.00			0.00			0.00			0.00		
Crosswalk	Yes			Yes			Yes			Yes		

Volumes

Name	Glassell St			Glassell St			La Veta Ave			La Veta Ave		
Base Volume Input [veh/h]	323	452	175	17	436	32	64	358	403	138	305	21
Base Volume Adjustment Factor	1.0000	1.0000	1.0000	1.0000	1.0000	1.0000	1.0000	1.0000	1.0000	1.0000	1.0000	1.0000
Heavy Vehicles Percentage [%]	2.00	2.00	2.00	2.00	2.00	2.00	2.00	2.00	2.00	2.00	2.00	2.00
Growth Factor	1.0000	1.0000	1.0000	1.0000	1.0000	1.0000	1.0000	1.0000	1.0000	1.0000	1.0000	1.0000
In-Process Volume [veh/h]	0	0	0	0	0	0	0	0	0	0	0	0
Site-Generated Trips [veh/h]	0	0	0	0	0	0	0	0	0	0	0	0
Diverted Trips [veh/h]	0	0	0	0	0	0	0	0	0	0	0	0
Pass-by Trips [veh/h]	0	0	0	0	0	0	0	0	0	0	0	0
Existing Site Adjustment Volume [veh/h]	0	0	0	0	0	0	0	0	0	0	0	0
Other Volume [veh/h]	0	0	0	0	0	0	0	0	0	0	0	0
Total Hourly Volume [veh/h]	323	452	175	17	436	32	64	358	403	138	305	21
Peak Hour Factor	1.0000	1.0000	1.0000	1.0000	1.0000	1.0000	1.0000	1.0000	1.0000	1.0000	1.0000	1.0000
Other Adjustment Factor	1.0000	1.0000	1.0000	1.0000	1.0000	1.0000	1.0000	1.0000	1.0000	1.0000	1.0000	1.0000
Total 15-Minute Volume [veh/h]	81	113	44	4	109	8	16	90	101	35	76	5
Total Analysis Volume [veh/h]	323	452	175	17	436	32	64	358	403	138	305	21
Pedestrian Volume [ped/h]	0			0			0			0		
Bicycle Volume [bicycles/h]	0			0			0			0		

Intersection Settings

Cycle Length [s]	100
Lost time [s]	5.00

Phasing & Timing

Control Type	Protecte	Permiss	Overlap	Protecte	Permiss	Permiss	Protecte	Permiss	Overlap	Protecte	Permiss	Permiss
Signal Group	1	6	6	5	2	0	3	8	8	7	4	0
Auxiliary Signal Groups			6,7						1,8			
Lead / Lag	Lead	-	-	Lead	-	-	Lead	-	-	Lead	-	-

Movement, Approach, & Intersection Results

V/C, Movement V/C Ratio	0.10	0.27	0.02	0.01	0.14	0.14	0.04	0.21	0.14	0.08	0.10	0.10
Intersection LOS	B											
Intersection V/C	0.618											

Intersection Level Of Service Report
Intersection 2: Glassell Street at East River Avenue

Control Type:	Two-way stop	Delay (sec / veh):	17.5
Analysis Method:	HCM 6th Edition	Level Of Service:	C
Analysis Period:	15 minutes	Volume to Capacity (v/c):	0.010

Intersection Setup

Name	Glassell St		Glassell St		East River Ave	
Approach	Northbound		Southbound		Westbound	
Lane Configuration						
Turning Movement	Thru	Right	Left	Thru	Left	Right
Lane Width [ft]	12.00	12.00	12.00	12.00	12.00	12.00
No. of Lanes in Pocket	0	0	1	0	0	0
Pocket Length [ft]	100.00	100.00	100.00	100.00	100.00	100.00
Speed [mph]	30.00		30.00		30.00	
Grade [%]	0.00		0.00		0.00	
Crosswalk	No		Yes		Yes	

Volumes

Name	Glassell St		Glassell St		East River Ave	
Base Volume Input [veh/h]	948	12	1	976	3	2
Base Volume Adjustment Factor	1.0000	1.0000	1.0000	1.0000	1.0000	1.0000
Heavy Vehicles Percentage [%]	2.00	2.00	2.00	2.00	2.00	2.00
Growth Factor	1.0000	1.0000	1.0000	1.0000	1.0000	1.0000
In-Process Volume [veh/h]	0	0	0	0	0	0
Site-Generated Trips [veh/h]	0	0	0	0	0	0
Diverted Trips [veh/h]	0	0	0	0	0	0
Pass-by Trips [veh/h]	0	0	0	0	0	0
Existing Site Adjustment Volume [veh/h]	0	0	0	0	0	0
Other Volume [veh/h]	0	0	0	0	0	0
Total Hourly Volume [veh/h]	948	12	1	976	3	2
Peak Hour Factor	1.0000	1.0000	1.0000	1.0000	1.0000	1.0000
Other Adjustment Factor	1.0000	1.0000	1.0000	1.0000	1.0000	1.0000
Total 15-Minute Volume [veh/h]	237	3	0	244	1	1
Total Analysis Volume [veh/h]	948	12	1	976	3	2
Pedestrian Volume [ped/h]	0		0		0	

Intersection Settings

Priority Scheme	Free	Free	Stop
Flared Lane			No
Storage Area [veh]	0	0	0
Two-Stage Gap Acceptance			Yes
Number of Storage Spaces in Median	0	0	2

Movement, Approach, & Intersection Results

V/C, Movement V/C Ratio	0.01	0.00	0.00	0.01	0.01	0.00
d_M, Delay for Movement [s/veh]	0.00	0.00	10.06	0.00	17.48	11.91
Movement LOS	A	A	B	A	C	B
95th-Percentile Queue Length [veh/ln]	0.00	0.00	0.00	0.00	0.04	0.04
95th-Percentile Queue Length [ft/ln]	0.00	0.00	0.11	0.00	1.07	1.07
d_A, Approach Delay [s/veh]	0.00		0.01		15.25	
Approach LOS	A		A		C	
d_I, Intersection Delay [s/veh]	0.04					
Intersection LOS	C					

Intersection Level Of Service Report
Intersection 3: Glassell Street at Park Plaza Driveway 1

Control Type:	Two-way stop	Delay (sec / veh):	18.2
Analysis Method:	HCM 6th Edition	Level Of Service:	C
Analysis Period:	15 minutes	Volume to Capacity (v/c):	0.011

Intersection Setup

Name	Glassell St		Glassell St		Park Plaza Dwy 1	
Approach	Northbound		Southbound		Eastbound	
Lane Configuration						
Turning Movement	Left	Thru	Thru	Right	Left	Right
Lane Width [ft]	12.00	12.00	12.00	12.00	12.00	12.00
No. of Lanes in Pocket	1	0	0	0	0	0
Pocket Length [ft]	100.00	100.00	100.00	100.00	100.00	100.00
Speed [mph]	30.00		30.00		30.00	
Grade [%]	0.00		0.00		0.00	
Crosswalk	No		No		Yes	

Volumes

Name	Glassell St		Glassell St		Park Plaza Dwy 1	
Base Volume Input [veh/h]	4	965	1006	2	3	3
Base Volume Adjustment Factor	1.0000	1.0000	1.0000	1.0000	1.0000	1.0000
Heavy Vehicles Percentage [%]	2.00	2.00	2.00	2.00	2.00	2.00
Growth Factor	1.0000	1.0000	1.0000	1.0000	1.0000	1.0000
In-Process Volume [veh/h]	0	0	0	0	0	0
Site-Generated Trips [veh/h]	0	0	0	0	0	0
Diverted Trips [veh/h]	0	0	0	0	0	0
Pass-by Trips [veh/h]	0	0	0	0	0	0
Existing Site Adjustment Volume [veh/h]	0	0	0	0	0	0
Other Volume [veh/h]	0	0	0	0	0	0
Total Hourly Volume [veh/h]	4	965	1006	2	3	3
Peak Hour Factor	1.0000	1.0000	1.0000	1.0000	1.0000	1.0000
Other Adjustment Factor	1.0000	1.0000	1.0000	1.0000	1.0000	1.0000
Total 15-Minute Volume [veh/h]	1	241	252	1	1	1
Total Analysis Volume [veh/h]	4	965	1006	2	3	3
Pedestrian Volume [ped/h]	0		0		0	

Intersection Settings

Priority Scheme	Free	Free	Stop
Flared Lane			No
Storage Area [veh]	0	0	0
Two-Stage Gap Acceptance			Yes
Number of Storage Spaces in Median	0	0	2

Movement, Approach, & Intersection Results

V/C, Movement V/C Ratio	0.01	0.01	0.01	0.00	0.01	0.01
d_M, Delay for Movement [s/veh]	10.30	0.00	0.00	0.00	18.22	12.19
Movement LOS	B	A	A	A	C	B
95th-Percentile Queue Length [veh/ln]	0.02	0.00	0.00	0.00	0.05	0.05
95th-Percentile Queue Length [ft/ln]	0.44	0.00	0.00	0.00	1.27	1.27
d_A, Approach Delay [s/veh]	0.04		0.00		15.21	
Approach LOS	A		A		C	
d_I, Intersection Delay [s/veh]	0.07					
Intersection LOS	C					

Intersection Level Of Service Report
Intersection 4: Glassell Street at Park Plaza Driveway 2

Control Type:	Two-way stop	Delay (sec / veh):	12.1
Analysis Method:	HCM 6th Edition	Level Of Service:	B
Analysis Period:	15 minutes	Volume to Capacity (v/c):	0.008

Intersection Setup

Name	Glassell St		Glassell St		Park Plaza Dwy 2	
Approach	Northbound		Southbound		Eastbound	
Lane Configuration						
Turning Movement	Left	Thru	Thru	Right	Left	Right
Lane Width [ft]	12.00	12.00	12.00	12.00	12.00	12.00
No. of Lanes in Pocket	0	0	0	0	0	0
Pocket Length [ft]	100.00	100.00	100.00	100.00	100.00	100.00
Speed [mph]	30.00		30.00		30.00	
Grade [%]	0.00		0.00		0.00	
Crosswalk	No		No		Yes	

Volumes

Name	Glassell St		Glassell St		Park Plaza Dwy 2	
Base Volume Input [veh/h]	0	968	1008	1	0	4
Base Volume Adjustment Factor	1.0000	1.0000	1.0000	1.0000	1.0000	1.0000
Heavy Vehicles Percentage [%]	2.00	2.00	2.00	2.00	2.00	2.00
Growth Factor	1.0000	1.0000	1.0000	1.0000	1.0000	1.0000
In-Process Volume [veh/h]	0	0	0	0	0	0
Site-Generated Trips [veh/h]	0	0	0	0	0	0
Diverted Trips [veh/h]	0	0	0	0	0	0
Pass-by Trips [veh/h]	0	0	0	0	0	0
Existing Site Adjustment Volume [veh/h]	0	0	0	0	0	0
Other Volume [veh/h]	0	0	0	0	0	0
Total Hourly Volume [veh/h]	0	968	1008	1	0	4
Peak Hour Factor	1.0000	1.0000	1.0000	1.0000	1.0000	1.0000
Other Adjustment Factor	1.0000	1.0000	1.0000	1.0000	1.0000	1.0000
Total 15-Minute Volume [veh/h]	0	242	252	0	0	1
Total Analysis Volume [veh/h]	0	968	1008	1	0	4
Pedestrian Volume [ped/h]	0		0		0	

Intersection Settings

Priority Scheme	Free	Free	Stop
Flared Lane			
Storage Area [veh]	0	0	0
Two-Stage Gap Acceptance			No
Number of Storage Spaces in Median	0	0	0

Movement, Approach, & Intersection Results

V/C, Movement V/C Ratio	0.00	0.01	0.01	0.00	0.00	0.01
d_M, Delay for Movement [s/veh]	0.00	0.00	0.00	0.00	0.00	12.08
Movement LOS		A	A	A		B
95th-Percentile Queue Length [veh/ln]	0.00	0.00	0.00	0.00	0.00	0.02
95th-Percentile Queue Length [ft/ln]	0.00	0.00	0.00	0.00	0.00	0.59
d_A, Approach Delay [s/veh]	0.00		0.00		12.08	
Approach LOS	A		A		B	
d_I, Intersection Delay [s/veh]	0.02					
Intersection LOS	B					

APPENDIX C-III

YEAR 2021 CUMULATIVE BASE TRAFFIC CONDITIONS

Intersection Level Of Service Report
Intersection 1: Glassell Street at La Veta Avenue

Control Type:	Signalized	Delay (sec / veh):	-
Analysis Method:	ICU 1	Level Of Service:	B
Analysis Period:	15 minutes	Volume to Capacity (v/c):	0.652

Intersection Setup

Name	Glassell St			Glassell St			La Veta Ave			La Veta Ave		
Approach	Northbound			Southbound			Eastbound			Westbound		
Lane Configuration												
Turning Movement	Left	Thru	Right	Left	Thru	Right	Left	Thru	Right	Left	Thru	Right
Lane Width [ft]	12.00	12.00	12.00	12.00	12.00	12.00	12.00	12.00	12.00	12.00	12.00	12.00
No. of Lanes in Pocket	1	0	1	1	0	0	1	0	1	1	0	0
Pocket Length [ft]	100.00	100.00	100.00	100.00	100.00	100.00	100.00	100.00	100.00	100.00	100.00	100.00
Speed [mph]	30.00			30.00			30.00			30.00		
Grade [%]	0.00			0.00			0.00			0.00		
Crosswalk	Yes			Yes			Yes			Yes		

Volumes

Name	Glassell St			Glassell St			La Veta Ave			La Veta Ave		
Base Volume Input [veh/h]	270	403	121	20	611	63	45	199	425	262	346	7
Base Volume Adjustment Factor	1.0000	1.0000	1.0000	1.0000	1.0000	1.0000	1.0000	1.0000	1.0000	1.0000	1.0000	1.0000
Heavy Vehicles Percentage [%]	2.00	2.00	2.00	2.00	2.00	2.00	2.00	2.00	2.00	2.00	2.00	2.00
Growth Factor	1.0000	1.0000	1.0000	1.0000	1.0000	1.0000	1.0000	1.0000	1.0000	1.0000	1.0000	1.0000
In-Process Volume [veh/h]	0	0	0	0	0	0	0	0	0	0	0	0
Site-Generated Trips [veh/h]	0	0	0	0	0	0	0	0	0	0	0	0
Diverted Trips [veh/h]	0	0	0	0	0	0	0	0	0	0	0	0
Pass-by Trips [veh/h]	0	0	0	0	0	0	0	0	0	0	0	0
Existing Site Adjustment Volume [veh/h]	0	0	0	0	0	0	0	0	0	0	0	0
Other Volume [veh/h]	0	0	0	0	0	0	0	0	0	0	0	0
Total Hourly Volume [veh/h]	270	403	121	20	611	63	45	199	425	262	346	7
Peak Hour Factor	1.0000	1.0000	1.0000	1.0000	1.0000	1.0000	1.0000	1.0000	1.0000	1.0000	1.0000	1.0000
Other Adjustment Factor	1.0000	1.0000	1.0000	1.0000	1.0000	1.0000	1.0000	1.0000	1.0000	1.0000	1.0000	1.0000
Total 15-Minute Volume [veh/h]	68	101	30	5	153	16	11	50	106	66	87	2
Total Analysis Volume [veh/h]	270	403	121	20	611	63	45	199	425	262	346	7
Pedestrian Volume [ped/h]	0			0			0			0		
Bicycle Volume [bicycles/h]	0			0			0			0		

Intersection Settings

Cycle Length [s]	100
Lost time [s]	5.00

Phasing & Timing

Control Type	Protecte	Permiss	Overlap	Protecte	Permiss	Permiss	Protecte	Permiss	Overlap	Protecte	Permiss	Permiss
Signal Group	1	6	6	5	2	0	3	8	8	7	4	0
Auxiliary Signal Groups			6,7						1,8			
Lead / Lag	Lead	-	-	Lead	-	-	Lead	-	-	Lead	-	-

Movement, Approach, & Intersection Results

V/C, Movement V/C Ratio	0.08	0.24	0.00	0.01	0.20	0.20	0.03	0.12	0.17	0.15	0.10	0.10
Intersection LOS	B											
Intersection V/C	0.652											

Intersection Level Of Service Report
Intersection 2: Glassell Street at East River Avenue

Control Type:	Two-way stop	Delay (sec / veh):	16.3
Analysis Method:	HCM 6th Edition	Level Of Service:	C
Analysis Period:	15 minutes	Volume to Capacity (v/c):	0.012

Intersection Setup

Name	Glassell St		Glassell St		East River Ave	
Approach	Northbound		Southbound		Westbound	
Lane Configuration						
Turning Movement	Thru	Right	Left	Thru	Left	Right
Lane Width [ft]	12.00	12.00	12.00	12.00	12.00	12.00
No. of Lanes in Pocket	0	0	1	0	0	0
Pocket Length [ft]	100.00	100.00	100.00	100.00	100.00	100.00
Speed [mph]	30.00		30.00		30.00	
Grade [%]	0.00		0.00		0.00	
Crosswalk	No		Yes		Yes	

Volumes

Name	Glassell St		Glassell St		East River Ave	
Base Volume Input [veh/h]	743	5	1	1339	4	3
Base Volume Adjustment Factor	1.0000	1.0000	1.0000	1.0000	1.0000	1.0000
Heavy Vehicles Percentage [%]	2.00	2.00	2.00	2.00	2.00	2.00
Growth Factor	1.0000	1.0000	1.0000	1.0000	1.0000	1.0000
In-Process Volume [veh/h]	0	0	0	0	0	0
Site-Generated Trips [veh/h]	0	0	0	0	0	0
Diverted Trips [veh/h]	0	0	0	0	0	0
Pass-by Trips [veh/h]	0	0	0	0	0	0
Existing Site Adjustment Volume [veh/h]	0	0	0	0	0	0
Other Volume [veh/h]	0	0	0	0	0	0
Total Hourly Volume [veh/h]	743	5	1	1339	4	3
Peak Hour Factor	1.0000	1.0000	1.0000	1.0000	1.0000	1.0000
Other Adjustment Factor	1.0000	1.0000	1.0000	1.0000	1.0000	1.0000
Total 15-Minute Volume [veh/h]	186	1	0	335	1	1
Total Analysis Volume [veh/h]	743	5	1	1339	4	3
Pedestrian Volume [ped/h]	0		0		0	

Intersection Settings

Priority Scheme	Free	Free	Stop
Flared Lane			No
Storage Area [veh]	0	0	0
Two-Stage Gap Acceptance			Yes
Number of Storage Spaces in Median	0	0	2

Movement, Approach, & Intersection Results

V/C, Movement V/C Ratio	0.01	0.00	0.00	0.01	0.01	0.00
d_M, Delay for Movement [s/veh]	0.00	0.00	9.21	0.00	16.27	10.93
Movement LOS	A	A	A	A	C	B
95th-Percentile Queue Length [veh/ln]	0.00	0.00	0.00	0.00	0.05	0.05
95th-Percentile Queue Length [ft/ln]	0.00	0.00	0.09	0.00	1.31	1.31
d_A, Approach Delay [s/veh]	0.00		0.01		13.98	
Approach LOS	A		A		B	
d_I, Intersection Delay [s/veh]	0.05					
Intersection LOS	C					

Intersection Level Of Service Report
Intersection 3: Glassell Street at Park Plaza Driveway 1

Control Type:	Two-way stop	Delay (sec / veh):	0.0
Analysis Method:	HCM 6th Edition	Level Of Service:	A
Analysis Period:	15 minutes	Volume to Capacity (v/c):	0.014

Intersection Setup

Name	Glassell St		Glassell St		Park Plaza Dwy 1	
Approach	Northbound		Southbound		Eastbound	
Lane Configuration						
Turning Movement	Left	Thru	Thru	Right	Left	Right
Lane Width [ft]	12.00	12.00	12.00	12.00	12.00	12.00
No. of Lanes in Pocket	1	0	0	0	0	0
Pocket Length [ft]	100.00	100.00	100.00	100.00	100.00	100.00
Speed [mph]	30.00		30.00		30.00	
Grade [%]	0.00		0.00		0.00	
Crosswalk	No		No		Yes	

Volumes

Name	Glassell St		Glassell St		Park Plaza Dwy 1	
Base Volume Input [veh/h]	0	859	1398	0	0	0
Base Volume Adjustment Factor	1.0000	1.0000	1.0000	1.0000	1.0000	1.0000
Heavy Vehicles Percentage [%]	2.00	2.00	2.00	2.00	2.00	2.00
Growth Factor	1.0000	1.0000	1.0000	1.0000	1.0000	1.0000
In-Process Volume [veh/h]	0	0	0	0	0	0
Site-Generated Trips [veh/h]	0	0	0	0	0	0
Diverted Trips [veh/h]	0	0	0	0	0	0
Pass-by Trips [veh/h]	0	0	0	0	0	0
Existing Site Adjustment Volume [veh/h]	0	0	0	0	0	0
Other Volume [veh/h]	0	0	0	0	0	0
Total Hourly Volume [veh/h]	0	859	1398	0	0	0
Peak Hour Factor	1.0000	1.0000	1.0000	1.0000	1.0000	1.0000
Other Adjustment Factor	1.0000	1.0000	1.0000	1.0000	1.0000	1.0000
Total 15-Minute Volume [veh/h]	0	215	350	0	0	0
Total Analysis Volume [veh/h]	0	859	1398	0	0	0
Pedestrian Volume [ped/h]	0		0		0	

Intersection Settings

Priority Scheme	Free	Free	Stop
Flared Lane			No
Storage Area [veh]	0	0	0
Two-Stage Gap Acceptance			Yes
Number of Storage Spaces in Median	0	0	2

Movement, Approach, & Intersection Results

V/C, Movement V/C Ratio	0.00	0.01	0.01	0.00	0.00	0.00
d_M, Delay for Movement [s/veh]	12.43	0.00	0.00	0.00	25.05	14.42
Movement LOS	B	A	A	A	D	B
95th-Percentile Queue Length [veh/ln]	0.00	0.00	0.00	0.00	0.00	0.00
95th-Percentile Queue Length [ft/ln]	0.00	0.00	0.00	0.00	0.00	0.00
d_A, Approach Delay [s/veh]	0.00		0.00		19.73	
Approach LOS	A		A		C	
d_I, Intersection Delay [s/veh]	0.00					
Intersection LOS	A					

Intersection Level Of Service Report
Intersection 4: Glassell Street at Park Plaza Driveway 2

Control Type:	Two-way stop	Delay (sec / veh):	0.0
Analysis Method:	HCM 6th Edition	Level Of Service:	A
Analysis Period:	15 minutes	Volume to Capacity (v/c):	0.014

Intersection Setup

Name	Glassell St		Glassell St		Park Plaza Dwy 2	
Approach	Northbound		Southbound		Eastbound	
Lane Configuration						
Turning Movement	Left	Thru	Thru	Right	Left	Right
Lane Width [ft]	12.00	12.00	12.00	12.00	12.00	12.00
No. of Lanes in Pocket	0	0	0	0	0	0
Pocket Length [ft]	100.00	100.00	100.00	100.00	100.00	100.00
Speed [mph]	30.00		30.00		30.00	
Grade [%]	0.00		0.00		0.00	
Crosswalk	No		No		Yes	

Volumes

Name	Glassell St		Glassell St		Park Plaza Dwy 2	
Base Volume Input [veh/h]	0	855	1398	3	0	0
Base Volume Adjustment Factor	1.0000	1.0000	1.0000	1.0000	1.0000	1.0000
Heavy Vehicles Percentage [%]	2.00	2.00	2.00	2.00	2.00	2.00
Growth Factor	1.0000	1.0000	1.0000	1.0000	1.0000	1.0000
In-Process Volume [veh/h]	0	0	0	0	0	0
Site-Generated Trips [veh/h]	0	0	0	0	0	0
Diverted Trips [veh/h]	0	0	0	0	0	0
Pass-by Trips [veh/h]	0	0	0	0	0	0
Existing Site Adjustment Volume [veh/h]	0	0	0	0	0	0
Other Volume [veh/h]	0	0	0	0	0	0
Total Hourly Volume [veh/h]	0	855	1398	3	0	0
Peak Hour Factor	1.0000	1.0000	1.0000	1.0000	1.0000	1.0000
Other Adjustment Factor	1.0000	1.0000	1.0000	1.0000	1.0000	1.0000
Total 15-Minute Volume [veh/h]	0	214	350	1	0	0
Total Analysis Volume [veh/h]	0	855	1398	3	0	0
Pedestrian Volume [ped/h]	0		0		0	

Intersection Settings

Priority Scheme	Free	Free	Stop
Flared Lane			
Storage Area [veh]	0	0	0
Two-Stage Gap Acceptance			No
Number of Storage Spaces in Median	0	0	0

Movement, Approach, & Intersection Results

V/C, Movement V/C Ratio	0.00	0.01	0.01	0.00	0.00	0.00
d_M, Delay for Movement [s/veh]	0.00	0.00	0.00	0.00	0.00	14.44
Movement LOS		A	A	A		B
95th-Percentile Queue Length [veh/ln]	0.00	0.00	0.00	0.00	0.00	0.00
95th-Percentile Queue Length [ft/ln]	0.00	0.00	0.00	0.00	0.00	0.00
d_A, Approach Delay [s/veh]	0.00		0.00		14.44	
Approach LOS	A		A		B	
d_I, Intersection Delay [s/veh]	0.00					
Intersection LOS	A					

Intersection Level Of Service Report
Intersection 1: Glassell Street at La Veta Avenue

Control Type:	Signalized	Delay (sec / veh):	-
Analysis Method:	ICU 1	Level Of Service:	B
Analysis Period:	15 minutes	Volume to Capacity (v/c):	0.631

Intersection Setup

Name	Glassell St			Glassell St			La Veta Ave			La Veta Ave		
Approach	Northbound			Southbound			Eastbound			Westbound		
Lane Configuration												
Turning Movement	Left	Thru	Right	Left	Thru	Right	Left	Thru	Right	Left	Thru	Right
Lane Width [ft]	12.00	12.00	12.00	12.00	12.00	12.00	12.00	12.00	12.00	12.00	12.00	12.00
No. of Lanes in Pocket	1	0	1	1	0	0	1	0	1	1	0	0
Pocket Length [ft]	100.00	100.00	100.00	100.00	100.00	100.00	100.00	100.00	100.00	100.00	100.00	100.00
Speed [mph]	30.00			30.00			30.00			30.00		
Grade [%]	0.00			0.00			0.00			0.00		
Crosswalk	Yes			Yes			Yes			Yes		

Volumes

Name	Glassell St			Glassell St			La Veta Ave			La Veta Ave		
Base Volume Input [veh/h]	343	464	179	17	448	41	69	365	421	141	311	21
Base Volume Adjustment Factor	1.0000	1.0000	1.0000	1.0000	1.0000	1.0000	1.0000	1.0000	1.0000	1.0000	1.0000	1.0000
Heavy Vehicles Percentage [%]	2.00	2.00	2.00	2.00	2.00	2.00	2.00	2.00	2.00	2.00	2.00	2.00
Growth Factor	1.0000	1.0000	1.0000	1.0000	1.0000	1.0000	1.0000	1.0000	1.0000	1.0000	1.0000	1.0000
In-Process Volume [veh/h]	0	0	0	0	0	0	0	0	0	0	0	0
Site-Generated Trips [veh/h]	0	0	0	0	0	0	0	0	0	0	0	0
Diverted Trips [veh/h]	0	0	0	0	0	0	0	0	0	0	0	0
Pass-by Trips [veh/h]	0	0	0	0	0	0	0	0	0	0	0	0
Existing Site Adjustment Volume [veh/h]	0	0	0	0	0	0	0	0	0	0	0	0
Other Volume [veh/h]	0	0	0	0	0	0	0	0	0	0	0	0
Total Hourly Volume [veh/h]	343	464	179	17	448	41	69	365	421	141	311	21
Peak Hour Factor	1.0000	1.0000	1.0000	1.0000	1.0000	1.0000	1.0000	1.0000	1.0000	1.0000	1.0000	1.0000
Other Adjustment Factor	1.0000	1.0000	1.0000	1.0000	1.0000	1.0000	1.0000	1.0000	1.0000	1.0000	1.0000	1.0000
Total 15-Minute Volume [veh/h]	86	116	45	4	112	10	17	91	105	35	78	5
Total Analysis Volume [veh/h]	343	464	179	17	448	41	69	365	421	141	311	21
Pedestrian Volume [ped/h]	0			0			0			0		
Bicycle Volume [bicycles/h]	0			0			0			0		

Intersection Settings

Cycle Length [s]	100
Lost time [s]	5.00

Phasing & Timing

Control Type	Protecte	Permiss	Overlap	Protecte	Permiss	Permiss	Protecte	Permiss	Overlap	Protecte	Permiss	Permiss
Signal Group	1	6	6	5	2	0	3	8	8	7	4	0
Auxiliary Signal Groups			6,7						1,8			
Lead / Lag	Lead	-	-	Lead	-	-	Lead	-	-	Lead	-	-

Movement, Approach, & Intersection Results

V/C, Movement V/C Ratio	0.10	0.27	0.02	0.01	0.14	0.14	0.04	0.21	0.15	0.08	0.10	0.10
Intersection LOS	B											
Intersection V/C	0.631											

Intersection Level Of Service Report
Intersection 2: Glassell Street at East River Avenue

Control Type:	Two-way stop	Delay (sec / veh):	18.0
Analysis Method:	HCM 6th Edition	Level Of Service:	C
Analysis Period:	15 minutes	Volume to Capacity (v/c):	0.011

Intersection Setup

Name	Glassell St		Glassell St		East River Ave	
Approach	Northbound		Southbound		Westbound	
Lane Configuration						
Turning Movement	Thru	Right	Left	Thru	Left	Right
Lane Width [ft]	12.00	12.00	12.00	12.00	12.00	12.00
No. of Lanes in Pocket	0	0	1	0	0	0
Pocket Length [ft]	100.00	100.00	100.00	100.00	100.00	100.00
Speed [mph]	30.00		30.00		30.00	
Grade [%]	0.00		0.00		0.00	
Crosswalk	No		Yes		Yes	

Volumes

Name	Glassell St		Glassell St		East River Ave	
Base Volume Input [veh/h]	984	12	1	1008	3	2
Base Volume Adjustment Factor	1.0000	1.0000	1.0000	1.0000	1.0000	1.0000
Heavy Vehicles Percentage [%]	2.00	2.00	2.00	2.00	2.00	2.00
Growth Factor	1.0000	1.0000	1.0000	1.0000	1.0000	1.0000
In-Process Volume [veh/h]	0	0	0	0	0	0
Site-Generated Trips [veh/h]	0	0	0	0	0	0
Diverted Trips [veh/h]	0	0	0	0	0	0
Pass-by Trips [veh/h]	0	0	0	0	0	0
Existing Site Adjustment Volume [veh/h]	0	0	0	0	0	0
Other Volume [veh/h]	0	0	0	0	0	0
Total Hourly Volume [veh/h]	984	12	1	1008	3	2
Peak Hour Factor	1.0000	1.0000	1.0000	1.0000	1.0000	1.0000
Other Adjustment Factor	1.0000	1.0000	1.0000	1.0000	1.0000	1.0000
Total 15-Minute Volume [veh/h]	246	3	0	252	1	1
Total Analysis Volume [veh/h]	984	12	1	1008	3	2
Pedestrian Volume [ped/h]	0		0		0	

Intersection Settings

Priority Scheme	Free	Free	Stop
Flared Lane			No
Storage Area [veh]	0	0	0
Two-Stage Gap Acceptance			Yes
Number of Storage Spaces in Median	0	0	2

Movement, Approach, & Intersection Results

V/C, Movement V/C Ratio	0.01	0.00	0.00	0.01	0.01	0.00
d_M, Delay for Movement [s/veh]	0.00	0.00	10.22	0.00	18.03	12.11
Movement LOS	A	A	B	A	C	B
95th-Percentile Queue Length [veh/ln]	0.00	0.00	0.00	0.00	0.04	0.04
95th-Percentile Queue Length [ft/ln]	0.00	0.00	0.11	0.00	1.11	1.11
d_A, Approach Delay [s/veh]	0.00		0.01		15.66	
Approach LOS	A		A		C	
d_I, Intersection Delay [s/veh]	0.04					
Intersection LOS	C					

Intersection Level Of Service Report
Intersection 3: Glassell Street at Park Plaza Driveway 1

Control Type:	Two-way stop	Delay (sec / veh):	0.0
Analysis Method:	HCM 6th Edition	Level Of Service:	A
Analysis Period:	15 minutes	Volume to Capacity (v/c):	0.010

Intersection Setup

Name	Glassell St		Glassell St		Park Plaza Dwy 1	
Approach	Northbound		Southbound		Eastbound	
Lane Configuration						
Turning Movement	Left	Thru	Thru	Right	Left	Right
Lane Width [ft]	12.00	12.00	12.00	12.00	12.00	12.00
No. of Lanes in Pocket	1	0	0	0	0	0
Pocket Length [ft]	100.00	100.00	100.00	100.00	100.00	100.00
Speed [mph]	30.00		30.00		30.00	
Grade [%]	0.00		0.00		0.00	
Crosswalk	No		No		Yes	

Volumes

Name	Glassell St		Glassell St		Park Plaza Dwy 1	
Base Volume Input [veh/h]	0	1004	1041	0	0	0
Base Volume Adjustment Factor	1.0000	1.0000	1.0000	1.0000	1.0000	1.0000
Heavy Vehicles Percentage [%]	2.00	2.00	2.00	2.00	2.00	2.00
Growth Factor	1.0000	1.0000	1.0000	1.0000	1.0000	1.0000
In-Process Volume [veh/h]	0	0	0	0	0	0
Site-Generated Trips [veh/h]	0	0	0	0	0	0
Diverted Trips [veh/h]	0	0	0	0	0	0
Pass-by Trips [veh/h]	0	0	0	0	0	0
Existing Site Adjustment Volume [veh/h]	0	0	0	0	0	0
Other Volume [veh/h]	0	0	0	0	0	0
Total Hourly Volume [veh/h]	0	1004	1041	0	0	0
Peak Hour Factor	1.0000	1.0000	1.0000	1.0000	1.0000	1.0000
Other Adjustment Factor	1.0000	1.0000	1.0000	1.0000	1.0000	1.0000
Total 15-Minute Volume [veh/h]	0	251	260	0	0	0
Total Analysis Volume [veh/h]	0	1004	1041	0	0	0
Pedestrian Volume [ped/h]	0		0		0	

Intersection Settings

Priority Scheme	Free	Free	Stop
Flared Lane			No
Storage Area [veh]	0	0	0
Two-Stage Gap Acceptance			Yes
Number of Storage Spaces in Median	0	0	2

Movement, Approach, & Intersection Results

V/C, Movement V/C Ratio	0.00	0.01	0.01	0.00	0.00	0.00
d_M, Delay for Movement [s/veh]	10.42	0.00	0.00	0.00	18.56	12.19
Movement LOS	B	A	A	A	C	B
95th-Percentile Queue Length [veh/ln]	0.00	0.00	0.00	0.00	0.00	0.00
95th-Percentile Queue Length [ft/ln]	0.00	0.00	0.00	0.00	0.00	0.00
d_A, Approach Delay [s/veh]	0.00		0.00		15.38	
Approach LOS	A		A		C	
d_I, Intersection Delay [s/veh]	0.00					
Intersection LOS	A					

Intersection Level Of Service Report
Intersection 4: Glassell Street at Park Plaza Driveway 2

Control Type:	Two-way stop	Delay (sec / veh):	12.2
Analysis Method:	HCM 6th Edition	Level Of Service:	B
Analysis Period:	15 minutes	Volume to Capacity (v/c):	0.010

Intersection Setup

Name	Glassell St		Glassell St		Park Plaza Dwy 2	
Approach	Northbound		Southbound		Eastbound	
Lane Configuration						
Turning Movement	Left	Thru	Thru	Right	Left	Right
Lane Width [ft]	12.00	12.00	12.00	12.00	12.00	12.00
No. of Lanes in Pocket	0	0	0	0	0	0
Pocket Length [ft]	100.00	100.00	100.00	100.00	100.00	100.00
Speed [mph]	30.00		30.00		30.00	
Grade [%]	0.00		0.00		0.00	
Crosswalk	No		No		Yes	

Volumes

Name	Glassell St		Glassell St		Park Plaza Dwy 2	
Base Volume Input [veh/h]	0	1000	1036	1	0	5
Base Volume Adjustment Factor	1.0000	1.0000	1.0000	1.0000	1.0000	1.0000
Heavy Vehicles Percentage [%]	2.00	2.00	2.00	2.00	2.00	2.00
Growth Factor	1.0000	1.0000	1.0000	1.0000	1.0000	1.0000
In-Process Volume [veh/h]	0	0	0	0	0	0
Site-Generated Trips [veh/h]	0	0	0	0	0	0
Diverted Trips [veh/h]	0	0	0	0	0	0
Pass-by Trips [veh/h]	0	0	0	0	0	0
Existing Site Adjustment Volume [veh/h]	0	0	0	0	0	0
Other Volume [veh/h]	0	0	0	0	0	0
Total Hourly Volume [veh/h]	0	1000	1036	1	0	5
Peak Hour Factor	1.0000	1.0000	1.0000	1.0000	1.0000	1.0000
Other Adjustment Factor	1.0000	1.0000	1.0000	1.0000	1.0000	1.0000
Total 15-Minute Volume [veh/h]	0	250	259	0	0	1
Total Analysis Volume [veh/h]	0	1000	1036	1	0	5
Pedestrian Volume [ped/h]	0		0		0	

Intersection Settings

Priority Scheme	Free	Free	Stop
Flared Lane			
Storage Area [veh]	0	0	0
Two-Stage Gap Acceptance			No
Number of Storage Spaces in Median	0	0	0

Movement, Approach, & Intersection Results

V/C, Movement V/C Ratio	0.00	0.01	0.01	0.00	0.00	0.01
d_M, Delay for Movement [s/veh]	0.00	0.00	0.00	0.00	0.00	12.24
Movement LOS		A	A	A		B
95th-Percentile Queue Length [veh/ln]	0.00	0.00	0.00	0.00	0.00	0.03
95th-Percentile Queue Length [ft/ln]	0.00	0.00	0.00	0.00	0.00	0.75
d_A, Approach Delay [s/veh]	0.00		0.00		12.24	
Approach LOS	A		A		B	
d_I, Intersection Delay [s/veh]	0.03					
Intersection LOS	B					

APPENDIX C-IV

YEAR 2021 CUMULATIVE WITH PROJECT TRAFFIC CONDITIONS

Intersection Level Of Service Report
Intersection 1: Glassell Street at La Veta Avenue

Control Type:	Signalized	Delay (sec / veh):	-
Analysis Method:	ICU 1	Level Of Service:	B
Analysis Period:	15 minutes	Volume to Capacity (v/c):	0.653

Intersection Setup

Name	Glassell St			Glassell St			La Veta Ave			La Veta Ave		
Approach	Northbound			Southbound			Eastbound			Westbound		
Lane Configuration												
Turning Movement	Left	Thru	Right	Left	Thru	Right	Left	Thru	Right	Left	Thru	Right
Lane Width [ft]	12.00	12.00	12.00	12.00	12.00	12.00	12.00	12.00	12.00	12.00	12.00	12.00
No. of Lanes in Pocket	1	0	1	1	0	0	1	0	1	1	0	0
Pocket Length [ft]	100.00	100.00	100.00	100.00	100.00	100.00	100.00	100.00	100.00	100.00	100.00	100.00
Speed [mph]	30.00			30.00			30.00			30.00		
Grade [%]	0.00			0.00			0.00			0.00		
Crosswalk	Yes			Yes			Yes			Yes		

Volumes

Name	Glassell St			Glassell St			La Veta Ave			La Veta Ave		
Base Volume Input [veh/h]	270	403	121	20	612	63	45	199	426	262	346	7
Base Volume Adjustment Factor	1.0000	1.0000	1.0000	1.0000	1.0000	1.0000	1.0000	1.0000	1.0000	1.0000	1.0000	1.0000
Heavy Vehicles Percentage [%]	2.00	2.00	2.00	2.00	2.00	2.00	2.00	2.00	2.00	2.00	2.00	2.00
Growth Factor	1.0000	1.0000	1.0000	1.0000	1.0000	1.0000	1.0000	1.0000	1.0000	1.0000	1.0000	1.0000
In-Process Volume [veh/h]	0	0	0	0	0	0	0	0	0	0	0	0
Site-Generated Trips [veh/h]	0	0	0	0	0	0	0	0	0	0	0	0
Diverted Trips [veh/h]	0	0	0	0	0	0	0	0	0	0	0	0
Pass-by Trips [veh/h]	0	0	0	0	0	0	0	0	0	0	0	0
Existing Site Adjustment Volume [veh/h]	0	0	0	0	0	0	0	0	0	0	0	0
Other Volume [veh/h]	0	0	0	0	0	0	0	0	0	0	0	0
Total Hourly Volume [veh/h]	270	403	121	20	612	63	45	199	426	262	346	7
Peak Hour Factor	1.0000	1.0000	1.0000	1.0000	1.0000	1.0000	1.0000	1.0000	1.0000	1.0000	1.0000	1.0000
Other Adjustment Factor	1.0000	1.0000	1.0000	1.0000	1.0000	1.0000	1.0000	1.0000	1.0000	1.0000	1.0000	1.0000
Total 15-Minute Volume [veh/h]	68	101	30	5	153	16	11	50	107	66	87	2
Total Analysis Volume [veh/h]	270	403	121	20	612	63	45	199	426	262	346	7
Pedestrian Volume [ped/h]	0			0			0			0		
Bicycle Volume [bicycles/h]	0			0			0			0		

Intersection Settings

Cycle Length [s]	100
Lost time [s]	5.00

Phasing & Timing

Control Type	Protecte	Permiss	Overlap	Protecte	Permiss	Permiss	Protecte	Permiss	Overlap	Protecte	Permiss	Permiss
Signal Group	1	6	6	5	2	0	3	8	8	7	4	0
Auxiliary Signal Groups			6,7						1,8			
Lead / Lag	Lead	-	-	Lead	-	-	Lead	-	-	Lead	-	-

Movement, Approach, & Intersection Results

V/C, Movement V/C Ratio	0.08	0.24	0.00	0.01	0.20	0.20	0.03	0.12	0.17	0.15	0.10	0.10
Intersection LOS	B											
Intersection V/C	0.653											

Intersection Level Of Service Report
Intersection 2: Glassell Street at East River Avenue

Control Type:	Two-way stop	Delay (sec / veh):	16.3
Analysis Method:	HCM 6th Edition	Level Of Service:	C
Analysis Period:	15 minutes	Volume to Capacity (v/c):	0.012

Intersection Setup

Name	Glassell St		Glassell St		East River Ave	
Approach	Northbound		Southbound		Westbound	
Lane Configuration						
Turning Movement	Thru	Right	Left	Thru	Left	Right
Lane Width [ft]	12.00	12.00	12.00	12.00	12.00	12.00
No. of Lanes in Pocket	0	0	1	0	0	0
Pocket Length [ft]	100.00	100.00	100.00	100.00	100.00	100.00
Speed [mph]	30.00		30.00		30.00	
Grade [%]	0.00		0.00		0.00	
Crosswalk	No		Yes		Yes	

Volumes

Name	Glassell St		Glassell St		East River Ave	
Base Volume Input [veh/h]	744	5	1	1341	4	3
Base Volume Adjustment Factor	1.0000	1.0000	1.0000	1.0000	1.0000	1.0000
Heavy Vehicles Percentage [%]	2.00	2.00	2.00	2.00	2.00	2.00
Growth Factor	1.0000	1.0000	1.0000	1.0000	1.0000	1.0000
In-Process Volume [veh/h]	0	0	0	0	0	0
Site-Generated Trips [veh/h]	0	0	0	0	0	0
Diverted Trips [veh/h]	0	0	0	0	0	0
Pass-by Trips [veh/h]	0	0	0	0	0	0
Existing Site Adjustment Volume [veh/h]	0	0	0	0	0	0
Other Volume [veh/h]	0	0	0	0	0	0
Total Hourly Volume [veh/h]	744	5	1	1341	4	3
Peak Hour Factor	1.0000	1.0000	1.0000	1.0000	1.0000	1.0000
Other Adjustment Factor	1.0000	1.0000	1.0000	1.0000	1.0000	1.0000
Total 15-Minute Volume [veh/h]	186	1	0	335	1	1
Total Analysis Volume [veh/h]	744	5	1	1341	4	3
Pedestrian Volume [ped/h]	0		0		0	

Intersection Settings

Priority Scheme	Free	Free	Stop
Flared Lane			No
Storage Area [veh]	0	0	0
Two-Stage Gap Acceptance			Yes
Number of Storage Spaces in Median	0	0	2

Movement, Approach, & Intersection Results

V/C, Movement V/C Ratio	0.01	0.00	0.00	0.01	0.01	0.00
d_M, Delay for Movement [s/veh]	0.00	0.00	9.21	0.00	16.29	10.93
Movement LOS	A	A	A	A	C	B
95th-Percentile Queue Length [veh/ln]	0.00	0.00	0.00	0.00	0.05	0.05
95th-Percentile Queue Length [ft/ln]	0.00	0.00	0.09	0.00	1.31	1.31
d_A, Approach Delay [s/veh]	0.00		0.01		13.99	
Approach LOS	A		A		B	
d_I, Intersection Delay [s/veh]	0.05					
Intersection LOS	C					

Intersection Level Of Service Report
Intersection 3: Glassell Street at Park Plaza Driveway 1

Control Type:	Two-way stop	Delay (sec / veh):	25.2
Analysis Method:	HCM 6th Edition	Level Of Service:	D
Analysis Period:	15 minutes	Volume to Capacity (v/c):	0.006

Intersection Setup

Name	Glassell St		Glassell St		Park Plaza Dwy 1	
Approach	Northbound		Southbound		Eastbound	
Lane Configuration						
Turning Movement	Left	Thru	Thru	Right	Left	Right
Lane Width [ft]	12.00	12.00	12.00	12.00	12.00	12.00
No. of Lanes in Pocket	1	0	0	0	0	0
Pocket Length [ft]	100.00	100.00	100.00	100.00	100.00	100.00
Speed [mph]	30.00		30.00		30.00	
Grade [%]	0.00		0.00		0.00	
Crosswalk	No		No		Yes	

Volumes

Name	Glassell St		Glassell St		Park Plaza Dwy 1	
Base Volume Input [veh/h]	3	859	1398	2	1	1
Base Volume Adjustment Factor	1.0000	1.0000	1.0000	1.0000	1.0000	1.0000
Heavy Vehicles Percentage [%]	2.00	2.00	2.00	2.00	2.00	2.00
Growth Factor	1.0000	1.0000	1.0000	1.0000	1.0000	1.0000
In-Process Volume [veh/h]	0	0	0	0	0	0
Site-Generated Trips [veh/h]	0	0	0	0	0	0
Diverted Trips [veh/h]	0	0	0	0	0	0
Pass-by Trips [veh/h]	0	0	0	0	0	0
Existing Site Adjustment Volume [veh/h]	0	0	0	0	0	0
Other Volume [veh/h]	0	0	0	0	0	0
Total Hourly Volume [veh/h]	3	859	1398	2	1	1
Peak Hour Factor	1.0000	1.0000	1.0000	1.0000	1.0000	1.0000
Other Adjustment Factor	1.0000	1.0000	1.0000	1.0000	1.0000	1.0000
Total 15-Minute Volume [veh/h]	1	215	350	1	0	0
Total Analysis Volume [veh/h]	3	859	1398	2	1	1
Pedestrian Volume [ped/h]	0		0		0	

Intersection Settings

Priority Scheme	Free	Free	Stop
Flared Lane			No
Storage Area [veh]	0	0	0
Two-Stage Gap Acceptance			Yes
Number of Storage Spaces in Median	0	0	2

Movement, Approach, & Intersection Results

V/C, Movement V/C Ratio	0.01	0.01	0.01	0.00	0.01	0.00
d_M, Delay for Movement [s/veh]	12.49	0.00	0.00	0.00	25.22	14.55
Movement LOS	B	A	A	A	D	B
95th-Percentile Queue Length [veh/ln]	0.02	0.00	0.00	0.00	0.02	0.02
95th-Percentile Queue Length [ft/ln]	0.47	0.00	0.00	0.00	0.62	0.62
d_A, Approach Delay [s/veh]	0.04		0.00		19.89	
Approach LOS	A		A		C	
d_I, Intersection Delay [s/veh]	0.03					
Intersection LOS	D					

Intersection Level Of Service Report
Intersection 4: Glassell Street at Park Plaza Driveway 2

Control Type:	Two-way stop	Delay (sec / veh):	0.0
Analysis Method:	HCM 6th Edition	Level Of Service:	A
Analysis Period:	15 minutes	Volume to Capacity (v/c):	0.014

Intersection Setup

Name	Glassell St		Glassell St		Park Plaza Dwy 2	
Approach	Northbound		Southbound		Eastbound	
Lane Configuration						
Turning Movement	Left	Thru	Thru	Right	Left	Right
Lane Width [ft]	12.00	12.00	12.00	12.00	12.00	12.00
No. of Lanes in Pocket	0	0	0	0	0	0
Pocket Length [ft]	100.00	100.00	100.00	100.00	100.00	100.00
Speed [mph]	30.00		30.00		30.00	
Grade [%]	0.00		0.00		0.00	
Crosswalk	No		No		Yes	

Volumes

Name	Glassell St		Glassell St		Park Plaza Dwy 2	
Base Volume Input [veh/h]	0	858	1399	3	0	0
Base Volume Adjustment Factor	1.0000	1.0000	1.0000	1.0000	1.0000	1.0000
Heavy Vehicles Percentage [%]	2.00	2.00	2.00	2.00	2.00	2.00
Growth Factor	1.0000	1.0000	1.0000	1.0000	1.0000	1.0000
In-Process Volume [veh/h]	0	0	0	0	0	0
Site-Generated Trips [veh/h]	0	0	0	0	0	0
Diverted Trips [veh/h]	0	0	0	0	0	0
Pass-by Trips [veh/h]	0	0	0	0	0	0
Existing Site Adjustment Volume [veh/h]	0	0	0	0	0	0
Other Volume [veh/h]	0	0	0	0	0	0
Total Hourly Volume [veh/h]	0	858	1399	3	0	0
Peak Hour Factor	1.0000	1.0000	1.0000	1.0000	1.0000	1.0000
Other Adjustment Factor	1.0000	1.0000	1.0000	1.0000	1.0000	1.0000
Total 15-Minute Volume [veh/h]	0	215	350	1	0	0
Total Analysis Volume [veh/h]	0	858	1399	3	0	0
Pedestrian Volume [ped/h]	0		0		0	

Intersection Settings

Priority Scheme	Free	Free	Stop
Flared Lane			
Storage Area [veh]	0	0	0
Two-Stage Gap Acceptance			No
Number of Storage Spaces in Median	0	0	0

Movement, Approach, & Intersection Results

V/C, Movement V/C Ratio	0.00	0.01	0.01	0.00	0.00	0.00
d_M, Delay for Movement [s/veh]	0.00	0.00	0.00	0.00	0.00	14.44
Movement LOS		A	A	A		B
95th-Percentile Queue Length [veh/ln]	0.00	0.00	0.00	0.00	0.00	0.00
95th-Percentile Queue Length [ft/ln]	0.00	0.00	0.00	0.00	0.00	0.00
d_A, Approach Delay [s/veh]	0.00		0.00		14.44	
Approach LOS	A		A		B	
d_I, Intersection Delay [s/veh]	0.00					
Intersection LOS	A					

Intersection Level Of Service Report
Intersection 1: Glassell Street at La Veta Avenue

Control Type:	Signalized	Delay (sec / veh):	-
Analysis Method:	ICU 1	Level Of Service:	B
Analysis Period:	15 minutes	Volume to Capacity (v/c):	0.631

Intersection Setup

Name	Glassell St			Glassell St			La Veta Ave			La Veta Ave		
Approach	Northbound			Southbound			Eastbound			Westbound		
Lane Configuration												
Turning Movement	Left	Thru	Right	Left	Thru	Right	Left	Thru	Right	Left	Thru	Right
Lane Width [ft]	12.00	12.00	12.00	12.00	12.00	12.00	12.00	12.00	12.00	12.00	12.00	12.00
No. of Lanes in Pocket	1	0	1	1	0	0	1	0	1	1	0	0
Pocket Length [ft]	100.00	100.00	100.00	100.00	100.00	100.00	100.00	100.00	100.00	100.00	100.00	100.00
Speed [mph]	30.00			30.00			30.00			30.00		
Grade [%]	0.00			0.00			0.00			0.00		
Crosswalk	Yes			Yes			Yes			Yes		

Volumes

Name	Glassell St			Glassell St			La Veta Ave			La Veta Ave		
Base Volume Input [veh/h]	344	465	179	17	449	41	69	365	422	141	311	21
Base Volume Adjustment Factor	1.0000	1.0000	1.0000	1.0000	1.0000	1.0000	1.0000	1.0000	1.0000	1.0000	1.0000	1.0000
Heavy Vehicles Percentage [%]	2.00	2.00	2.00	2.00	2.00	2.00	2.00	2.00	2.00	2.00	2.00	2.00
Growth Factor	1.0000	1.0000	1.0000	1.0000	1.0000	1.0000	1.0000	1.0000	1.0000	1.0000	1.0000	1.0000
In-Process Volume [veh/h]	0	0	0	0	0	0	0	0	0	0	0	0
Site-Generated Trips [veh/h]	0	0	0	0	0	0	0	0	0	0	0	0
Diverted Trips [veh/h]	0	0	0	0	0	0	0	0	0	0	0	0
Pass-by Trips [veh/h]	0	0	0	0	0	0	0	0	0	0	0	0
Existing Site Adjustment Volume [veh/h]	0	0	0	0	0	0	0	0	0	0	0	0
Other Volume [veh/h]	0	0	0	0	0	0	0	0	0	0	0	0
Total Hourly Volume [veh/h]	344	465	179	17	449	41	69	365	422	141	311	21
Peak Hour Factor	1.0000	1.0000	1.0000	1.0000	1.0000	1.0000	1.0000	1.0000	1.0000	1.0000	1.0000	1.0000
Other Adjustment Factor	1.0000	1.0000	1.0000	1.0000	1.0000	1.0000	1.0000	1.0000	1.0000	1.0000	1.0000	1.0000
Total 15-Minute Volume [veh/h]	86	116	45	4	112	10	17	91	106	35	78	5
Total Analysis Volume [veh/h]	344	465	179	17	449	41	69	365	422	141	311	21
Pedestrian Volume [ped/h]	0			0			0			0		
Bicycle Volume [bicycles/h]	0			0			0			0		

Intersection Settings

Cycle Length [s]	100
Lost time [s]	5.00

Phasing & Timing

Control Type	Protecte	Permiss	Overlap	Protecte	Permiss	Permiss	Protecte	Permiss	Overlap	Protecte	Permiss	Permiss
Signal Group	1	6	6	5	2	0	3	8	8	7	4	0
Auxiliary Signal Groups			6,7						1,8			
Lead / Lag	Lead	-	-	Lead	-	-	Lead	-	-	Lead	-	-

Movement, Approach, & Intersection Results

V/C, Movement V/C Ratio	0.10	0.27	0.02	0.01	0.14	0.14	0.04	0.21	0.15	0.08	0.10	0.10
Intersection LOS	B											
Intersection V/C	0.631											

Intersection Level Of Service Report
Intersection 2: Glassell Street at East River Avenue

Control Type:	Two-way stop	Delay (sec / veh):	18.1
Analysis Method:	HCM 6th Edition	Level Of Service:	C
Analysis Period:	15 minutes	Volume to Capacity (v/c):	0.011

Intersection Setup

Name	Glassell St		Glassell St		East River Ave	
Approach	Northbound		Southbound		Westbound	
Lane Configuration						
Turning Movement	Thru	Right	Left	Thru	Left	Right
Lane Width [ft]	12.00	12.00	12.00	12.00	12.00	12.00
No. of Lanes in Pocket	0	0	1	0	0	0
Pocket Length [ft]	100.00	100.00	100.00	100.00	100.00	100.00
Speed [mph]	30.00		30.00		30.00	
Grade [%]	0.00		0.00		0.00	
Crosswalk	No		Yes		Yes	

Volumes

Name	Glassell St		Glassell St		East River Ave	
Base Volume Input [veh/h]	986	12	1	1010	3	2
Base Volume Adjustment Factor	1.0000	1.0000	1.0000	1.0000	1.0000	1.0000
Heavy Vehicles Percentage [%]	2.00	2.00	2.00	2.00	2.00	2.00
Growth Factor	1.0000	1.0000	1.0000	1.0000	1.0000	1.0000
In-Process Volume [veh/h]	0	0	0	0	0	0
Site-Generated Trips [veh/h]	0	0	0	0	0	0
Diverted Trips [veh/h]	0	0	0	0	0	0
Pass-by Trips [veh/h]	0	0	0	0	0	0
Existing Site Adjustment Volume [veh/h]	0	0	0	0	0	0
Other Volume [veh/h]	0	0	0	0	0	0
Total Hourly Volume [veh/h]	986	12	1	1010	3	2
Peak Hour Factor	1.0000	1.0000	1.0000	1.0000	1.0000	1.0000
Other Adjustment Factor	1.0000	1.0000	1.0000	1.0000	1.0000	1.0000
Total 15-Minute Volume [veh/h]	247	3	0	253	1	1
Total Analysis Volume [veh/h]	986	12	1	1010	3	2
Pedestrian Volume [ped/h]	0		0		0	

Intersection Settings

Priority Scheme	Free	Free	Stop
Flared Lane			No
Storage Area [veh]	0	0	0
Two-Stage Gap Acceptance			Yes
Number of Storage Spaces in Median	0	0	2

Movement, Approach, & Intersection Results

V/C, Movement V/C Ratio	0.01	0.00	0.00	0.01	0.01	0.00
d_M, Delay for Movement [s/veh]	0.00	0.00	10.23	0.00	18.06	12.12
Movement LOS	A	A	B	A	C	B
95th-Percentile Queue Length [veh/ln]	0.00	0.00	0.00	0.00	0.04	0.04
95th-Percentile Queue Length [ft/ln]	0.00	0.00	0.11	0.00	1.11	1.11
d_A, Approach Delay [s/veh]	0.00		0.01		15.68	
Approach LOS	A		A		C	
d_I, Intersection Delay [s/veh]	0.04					
Intersection LOS	C					

Intersection Level Of Service Report
Intersection 3: Glassell Street at Park Plaza Driveway 1

Control Type:	Two-way stop	Delay (sec / veh):	18.8
Analysis Method:	HCM 6th Edition	Level Of Service:	C
Analysis Period:	15 minutes	Volume to Capacity (v/c):	0.011

Intersection Setup

Name	Glassell St		Glassell St		Park Plaza Dwy 1	
Approach	Northbound		Southbound		Eastbound	
Lane Configuration						
Turning Movement	Left	Thru	Thru	Right	Left	Right
Lane Width [ft]	12.00	12.00	12.00	12.00	12.00	12.00
No. of Lanes in Pocket	1	0	0	0	0	0
Pocket Length [ft]	100.00	100.00	100.00	100.00	100.00	100.00
Speed [mph]	30.00		30.00		30.00	
Grade [%]	0.00		0.00		0.00	
Crosswalk	No		No		Yes	

Volumes

Name	Glassell St		Glassell St		Park Plaza Dwy 1	
Base Volume Input [veh/h]	4	1003	1041	2	3	3
Base Volume Adjustment Factor	1.0000	1.0000	1.0000	1.0000	1.0000	1.0000
Heavy Vehicles Percentage [%]	2.00	2.00	2.00	2.00	2.00	2.00
Growth Factor	1.0000	1.0000	1.0000	1.0000	1.0000	1.0000
In-Process Volume [veh/h]	0	0	0	0	0	0
Site-Generated Trips [veh/h]	0	0	0	0	0	0
Diverted Trips [veh/h]	0	0	0	0	0	0
Pass-by Trips [veh/h]	0	0	0	0	0	0
Existing Site Adjustment Volume [veh/h]	0	0	0	0	0	0
Other Volume [veh/h]	0	0	0	0	0	0
Total Hourly Volume [veh/h]	4	1003	1041	2	3	3
Peak Hour Factor	1.0000	1.0000	1.0000	1.0000	1.0000	1.0000
Other Adjustment Factor	1.0000	1.0000	1.0000	1.0000	1.0000	1.0000
Total 15-Minute Volume [veh/h]	1	251	260	1	1	1
Total Analysis Volume [veh/h]	4	1003	1041	2	3	3
Pedestrian Volume [ped/h]	0		0		0	

Intersection Settings

Priority Scheme	Free	Free	Stop
Flared Lane			No
Storage Area [veh]	0	0	0
Two-Stage Gap Acceptance			Yes
Number of Storage Spaces in Median	0	0	2

Movement, Approach, & Intersection Results

V/C, Movement V/C Ratio	0.01	0.01	0.01	0.00	0.01	0.01
d_M, Delay for Movement [s/veh]	10.47	0.00	0.00	0.00	18.81	12.39
Movement LOS	B	A	A	A	C	B
95th-Percentile Queue Length [veh/ln]	0.02	0.00	0.00	0.00	0.05	0.05
95th-Percentile Queue Length [ft/ln]	0.46	0.00	0.00	0.00	1.32	1.32
d_A, Approach Delay [s/veh]	0.04		0.00		15.60	
Approach LOS	A		A		C	
d_I, Intersection Delay [s/veh]	0.07					
Intersection LOS	C					

Intersection Level Of Service Report
Intersection 4: Glassell Street at Park Plaza Driveway 2

Control Type:	Two-way stop	Delay (sec / veh):	12.2
Analysis Method:	HCM 6th Edition	Level Of Service:	B
Analysis Period:	15 minutes	Volume to Capacity (v/c):	0.008

Intersection Setup

Name	Glassell St		Glassell St		Park Plaza Dwy 2	
Approach	Northbound		Southbound		Eastbound	
Lane Configuration						
Turning Movement	Left	Thru	Thru	Right	Left	Right
Lane Width [ft]	12.00	12.00	12.00	12.00	12.00	12.00
No. of Lanes in Pocket	0	0	0	0	0	0
Pocket Length [ft]	100.00	100.00	100.00	100.00	100.00	100.00
Speed [mph]	30.00		30.00		30.00	
Grade [%]	0.00		0.00		0.00	
Crosswalk	No		No		Yes	

Volumes

Name	Glassell St		Glassell St		Park Plaza Dwy 2	
Base Volume Input [veh/h]	0	1003	1039	1	0	4
Base Volume Adjustment Factor	1.0000	1.0000	1.0000	1.0000	1.0000	1.0000
Heavy Vehicles Percentage [%]	2.00	2.00	2.00	2.00	2.00	2.00
Growth Factor	1.0000	1.0000	1.0000	1.0000	1.0000	1.0000
In-Process Volume [veh/h]	0	0	0	0	0	0
Site-Generated Trips [veh/h]	0	0	0	0	0	0
Diverted Trips [veh/h]	0	0	0	0	0	0
Pass-by Trips [veh/h]	0	0	0	0	0	0
Existing Site Adjustment Volume [veh/h]	0	0	0	0	0	0
Other Volume [veh/h]	0	0	0	0	0	0
Total Hourly Volume [veh/h]	0	1003	1039	1	0	4
Peak Hour Factor	1.0000	1.0000	1.0000	1.0000	1.0000	1.0000
Other Adjustment Factor	1.0000	1.0000	1.0000	1.0000	1.0000	1.0000
Total 15-Minute Volume [veh/h]	0	251	260	0	0	1
Total Analysis Volume [veh/h]	0	1003	1039	1	0	4
Pedestrian Volume [ped/h]	0		0		0	

Intersection Settings

Priority Scheme	Free	Free	Stop
Flared Lane			
Storage Area [veh]	0	0	0
Two-Stage Gap Acceptance			No
Number of Storage Spaces in Median	0	0	0

Movement, Approach, & Intersection Results

V/C, Movement V/C Ratio	0.00	0.01	0.01	0.00	0.00	0.01
d_M, Delay for Movement [s/veh]	0.00	0.00	0.00	0.00	0.00	12.24
Movement LOS		A	A	A		B
95th-Percentile Queue Length [veh/ln]	0.00	0.00	0.00	0.00	0.00	0.02
95th-Percentile Queue Length [ft/ln]	0.00	0.00	0.00	0.00	0.00	0.60
d_A, Approach Delay [s/veh]	0.00		0.00		12.24	
Approach LOS	A		A		B	
d_I, Intersection Delay [s/veh]	0.02					
Intersection LOS	B					