APPENDIX S

Stormwater Quality Management Plan
(Part 2)

Attachments

A – Hydromodification Management Exhibit

B – Project Critical Coarse Sediment Yield Area Exhibit

C – SWMM Model w/ Subcatchment Schematics

D – SWMM Output – Existing Condition

E – SWMM Output – Proposed Conditions

F – Flow Frequency Statistical Analysis results

G – Flow Duration Curves

ATTACHMENT A

Hydromodification Management Exhibit

DMA/BMP TABLE					
DMA#	DMA TYPE	BMP#	BMP TYPE	DMA TRIBUTARY DRAINAGE AREA (AC)	BMP BOTTOM AREA (SQFT)
1	DRAINS TO BMP 1	BASIN 1	BIOFILTRATION (BF-1)/ HYDROMODIFICATION	8.5	7614
2	DRAINS TO BMP 2	BASIN 2	BIOFILTRATION (BF-1)/ HYDROMODIFICATION	8.6	7784
5	DRAINS TO BMP 5	BASIN 5	BIOFILTRATION (BF-1)/ HYDROMODIFICATION	2.6	4045
6	DRAINS TO BMP 6	BASIN 6	BIOFILTRATION (BF-1)/ HYDROMODIFICATION	7.2	5834
7	SELF-MITIGATING	N/A	N/A	5.3	N/A
8	DRAINS TO BMP 8	BASIN 8	BIOFILTRATION (BF-1)/ HYDROMODIFICATION	10.8	9529
9A	DRAINS TO BMP 9	BASIN 9	BIOFILTRATION (BF-1)/ HYDROMODIFICATION	6.6	8914
9B	DRAINS TO BMP 9	BASIN 9	BIOFILTRATION (BF-1)/ HYDROMODIFICATION	0.4	8914
9C	SELF-MITIGATING	N/A	N/A	2.4	N/A
11	DRAINS TO BMP 11	BASIN 11	BIOFILTRATION (BF-1)/ HYDROMODIFICATION	14.9	14666
13	SELF-MITIGATING	N/A	N/A	1.3	N/A
15	SELF-MITIGATING	N/A	N/A	3.3	N/A
16	DRAINS TO BMP 16	BASIN 16	BIOFILTRATION (BF-1)/ HYDROMODIFICATION	5.7	5614
17	DRAINS TO BMP 17	BASIN 17	BIOFILTRATION (BF-1)/ HYDROMODIFICATION	5.6	5449
18A	DRAINS TO BMP 18	BASIN 18	BIOFILTRATION (BF-1)/ HYDROMODIFICATION	4.7	4914
18B	SELF-MITIGATING	N/A	N/A	4.7	N/A
SUM				92.8	

BIOFILTRATION BF-1 POLLUTANT CONTROL/ HYDROMODIFICATION/DETENTION BASIN (TYP.)

NOT TO SCALE

BIOFILTRATION ORIFICE DESIGN									
BIOFILTRATION BMP#	UNDERDRAIN ORIFICE (IN)	LOW FLOW ORIFICE		MID FLOW ORIFICE		HIGH FLOW ORIFICE		OVERFLOW WEIR/RISER	
		DIA. (IN)	OFFSET (FT)*	DIA. (IN)	OFFSET (FT)*	DIA. (IN)	OFFSET (FT)*	DIA. (IN) OR SIZE (FTXFT)	OFFSET (FT)*
1	3	2.0	0.50	2.0	2.00	–	–	4.75X4.75	4.50
2	3	3.0	0.50	2–4IN	2.50	–	–	4.75X4.75	4.50
5	2	1.0	1.00	1.0	2.00	–	–	4.75X4.75	3.00
6	4.5	4.0	0.50	3–3IN	2.00	–	–	4.75X4.75	3.75
8	3	3.0	0.50	4.0	2.00	–	–	4.75X4.75	4.25
9	4	4.0	0.50	3–3IN	2.00	–	–	4.75X4.75	3.50
11	3	1.5	0.50	3.0	3.00	3.0	5.00	4.75X4.75	6.00
16	3	3.0	0.50	–	–	–	–	4.75X4.75	4.25
17	3	3.0	0.50	4.0	2.50	–	–	4.75X4.75	4.50
18	4	2.0	0.50	3.0	2.50	–	–	4.75X4.75	3.75

*OFFSET DIMENSIONS ARE DISTANCE FROM ORIFICE IE/WEIR TOP TO THE BOTTOM OF BASIN SURFACE LAYER (MULCH BOTTOM)

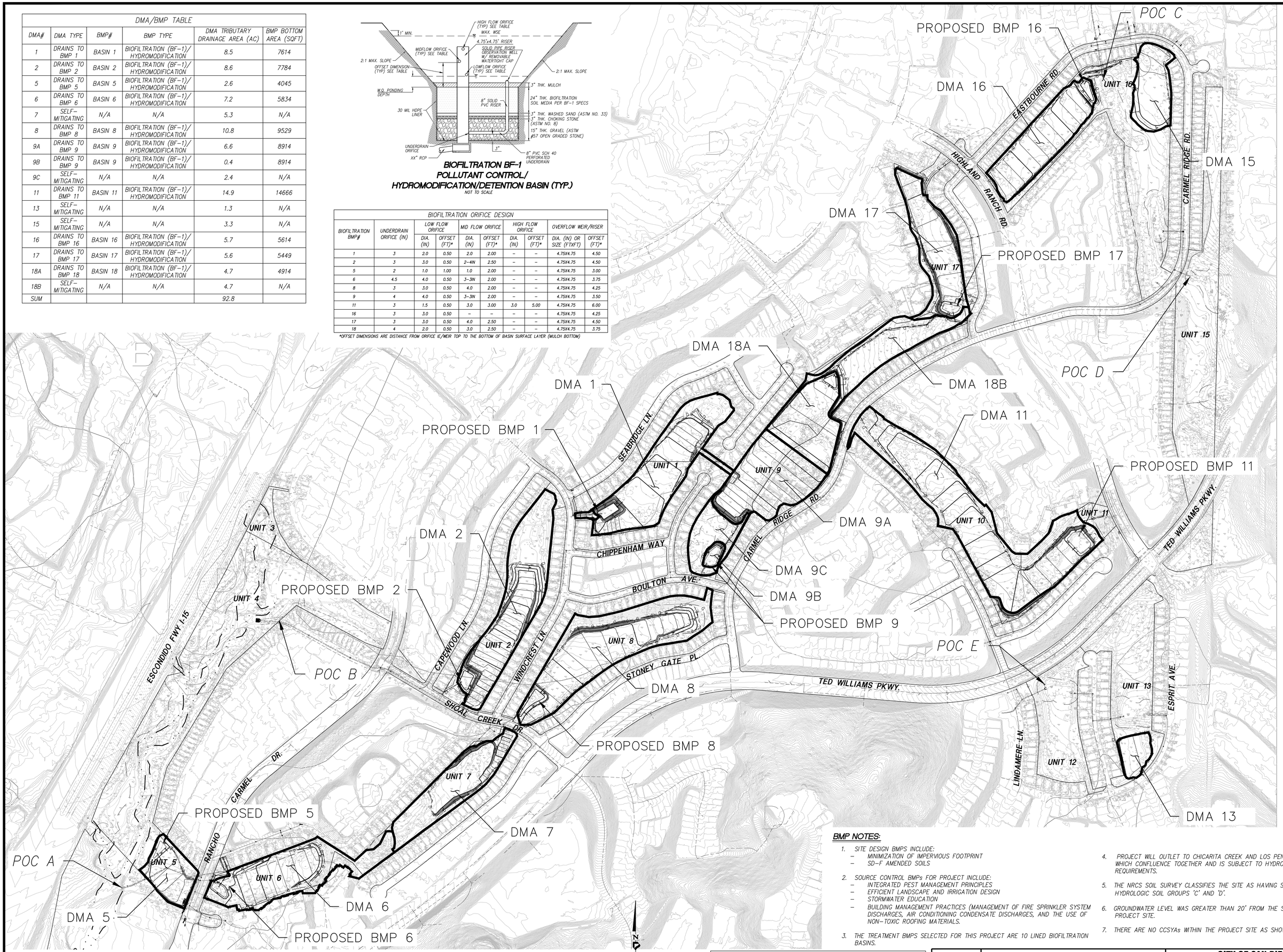

BMP NOTES:

1. SITE DESIGN BMPS INCLUDE:
   - MINIMIZATION OF IMPERVIOUS FOOTPRINT
   - SD-F AMENDED SOILS
2. SOURCE CONTROL BMPs FOR PROJECT INCLUDE:
   - INTEGRATED PEST MANAGEMENT PRINCIPLES
   - EFFICIENT LANDSCAPE AND IRRIGATION DESIGN
   - STORMWATER EDUCATION
   - BUILDING MANAGEMENT PRACTICES (MANAGEMENT OF FIRE SPRINKLER SYSTEM DISCHARGES, AIR CONDITIONING CONDENSATE DISCHARGES, AND THE USE OF NON-TOXIC ROOFING MATERIALS.
3. THE TREATMENT BMPS SELECTED FOR THIS PROJECT ARE 10 LINED BIOFILTRATION BASINS.
4. PROJECT WILL OUTLET TO CHICARITA CREEK AND LOS PENASQUITOS CREEK WHICH CONFLUENCE TOGETHER AND IS SUBJECT TO HYDROMODIFICATION REQUIREMENTS.
5. THE NRCS SOIL SURVEY CLASSIFIES THE SITE AS HAVING SOILS OF THE HYDROLOGIC SOIL GROUPS 'C' AND 'D'.
6. GROUNDWATER LEVEL WAS GREATER THAN 20' FROM THE SURFACE AT THE PROJECT SITE.
7. THERE ARE NO CCSYAs WITHIN THE PROJECT SITE AS SHOWN ON CCYSA MAP.

LEGEND:

DRAINAGE MANAGEMENT AREA (DMA)

SCALE: 1"=200'

JOB #: 4394.00

CREATED: 8/22/19

PREPARED BY:

PROJECT DESIGN CONSULTANTS
Planning | Landscape Architecture | Engineering | Survey
701 B Street, Suite 800
San Diego, CA 92101
619.235.6471 Tel
619.234.0349 Fax

CITY OF SAN DIEGO

THE TRAILS AT CMR

HYDROMODIFICATION MAP
PROPOSED CONDITIONS
ATTACHMENT A

P:\4394.00\Eng\Reports\Hydrology\EXH\4394.00 Hydromod Exhibit.dwg 4/8/2020 12:28:31 PM

ATTACHMENT B

Project Critical Coarse Sediment Yield Area Exhibit

VICINITY MAP
NO SCALE

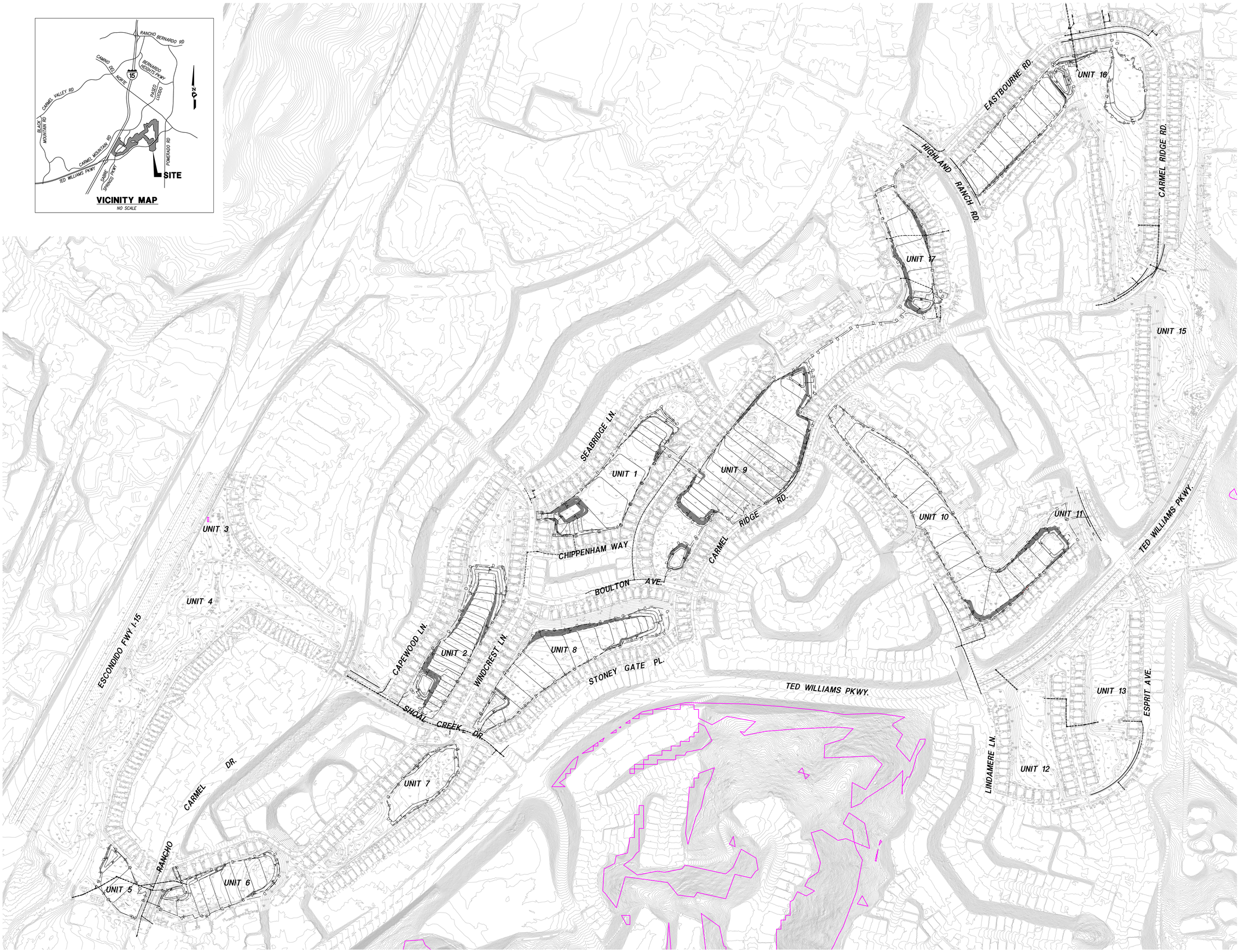

200 100 0 200 400 600
SCALE: 1"=200'

LEGEND

WMAA PCCSYA (NONE WITHIN PROJECT SITE)

SCALE:	1"=200'
JOB #:	4394.00
CREATED:	8/26/19

PREPARED BY:

PROJECT DESIGN CONSULTANTS
Planning | Landscape Architecture | Engineering | Survey

701 B Street, Suite 800
San Diego, CA 92101
619.235.6471 Tel
619.234.0349 Fax

CITY OF SAN DIEGO
THE TRAILS AT CMR

CCSYA MAP
PROPOSED CONDITIONS
ATTACHMENT B

P:\4394.00\Eng\Reports\Hydrology\EDR\4394.00 CCSYA Exhibit.dwg 10/28/2019 4:37:18 PM

ATTACHMENT C

SWMM Model with

Sub-catchment Parameters and Schematic

Existing Conditions

POC A

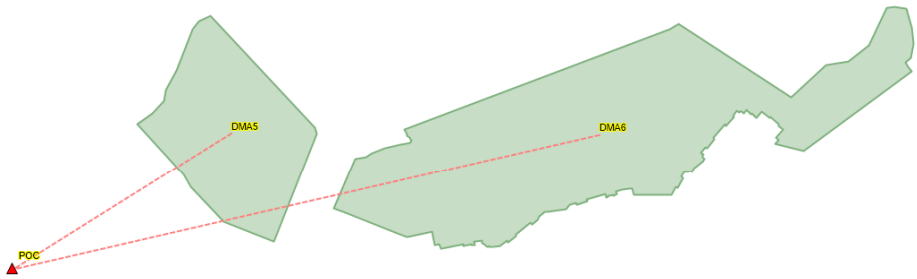

Name	Rain Gage	Outlet	Area (ac)	Width (ft)	Flow Length (ft)	Slope (%)	Imperv. (%)	N Imperv	N Perv	Dstore Imperv (in)	Dstore Perv (in)	Zero Imperv (%)	Suction Head (in)	Conductivity (in/hr)	Initial Deficit (frac.)
DMA5	Poway	POC	2.62	300	380.424	7.8	0	0.012	0.1	0.05	0.1	25	6	0.075	0.31
DMA6	Poway	POC	7.24	280	1126.337	9.5	0	0.012	0.1	0.05	0.1	25	6.8	0.06	0.31

DMA 6 Soil Type Calculations

Soil Type	Area	% of DMA
C	230671	73.7%
D	82147	26.3%

Total Area (SF)=	312818
Total Area (AC)=	7.2

POC B

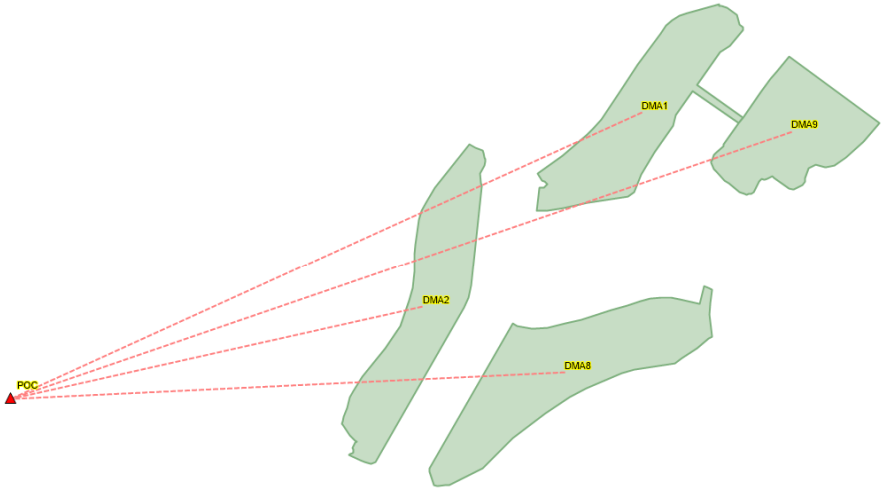

Name	Rain Gage	Outlet	Area (ac)	Width (ft)	Flow Length (ft)	Slope (%)	Imperv. (%)	N Imperv	N Perv	Dstore Imperv (in)	Dstore Perv (in)	Zero Imperv (%)	Suction Head (in)	Conductivity (in/hr)	Initial Deficit (frac.)
DMA2	Poway	POC	8.64	275	1368.576	6.1	0	0.012	0.1	0.05	0.1	25	8.7	0.024	0.3
DMA8	Poway	POC	10.8	300	1568.16	5.8	0	0.012	0.1	0.05	0.1	25	8.42	0.03	0.3
DMA1	Poway	POC	8.47	300	1229.844	5.3	0	0.012	0.1	0.05	0.1	25	8.86	0.021	0.3
DMA9	Poway	POC	6.96	350	866.222	5	0	0.012	0.1	0.05	0.1	25	8.8	0.022	0.3

DMA 1 Soil Type Calculations

Soil Type	Area	% of DMA
C	16961	4.6%
D	352379	95.4%

Total Area (SF)=	369341
Total Area (AC)=	8.5

DMA 2 Soil Type Calculations

Soil Type	Area	% of DMA
C	38067	10.1%
D	338414	89.9%

Total Area (SF)=	376482
Total Area (AC)=	8.6

DMA 8 Soil Type Calculations

Soil Type	Area	% of DMA
C	112748	19.3%
D	470539	80.7%

Total Area (SF)=	583287
Total Area (AC)=	13.4

DMA 9 Soil Type Calculations

Soil Type	Area	% of DMA
C	19822	6.5%
D	283262	93.5%

Total Area (SF)=	303084
Total Area (AC)=	7.0

POC C

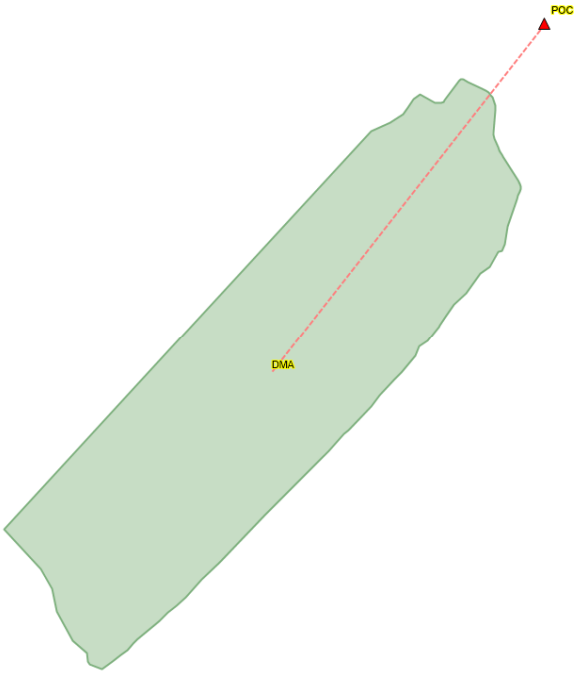

Name	Rain Gage	Outlet	Area (ac)	Width (ft)	Flow Length (ft)	Slope (%)	Imperv. (%)	N Imperv	N Perv	Dstore Imperv (in)	Dstore Perv (in)	Snow Pack	Zero Imperv (%)	Suction Head (in)	Conductivity (in/hr)	Initial Deficit (frac.)
DMA	Poway	POC	5.75	270	927.667	3.8	0	0.012	0.1	0.05	0.1		25	9	0.019	0.3

POC D

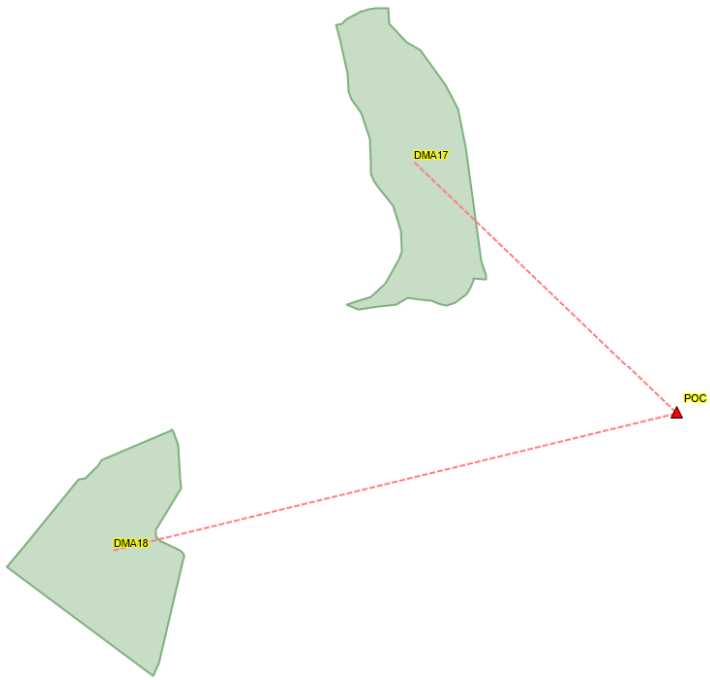

Name	Rain Gage	Outlet	Area (ac)	Width (ft)	Flow Length (ft)	Slope (%)	Imperv. (%)	N Imperv	N Perv	Dstore Imperv (in)	Dstore Perv (in)	Zero Imperv (%)	Suction Head (in)	Conductivity (in/hr)	Initial Deficit (frac.)
DMA17	Poway	POC	5.57	250	970.517	0.9	0	0.012	0.1	0.05	0.1	25	9	0.019	0.3
DMA18	Poway	POC	4.72	300	685.344	2.2	0	0.012	0.1	0.05	0.1	25	9	0.019	0.3

POC E

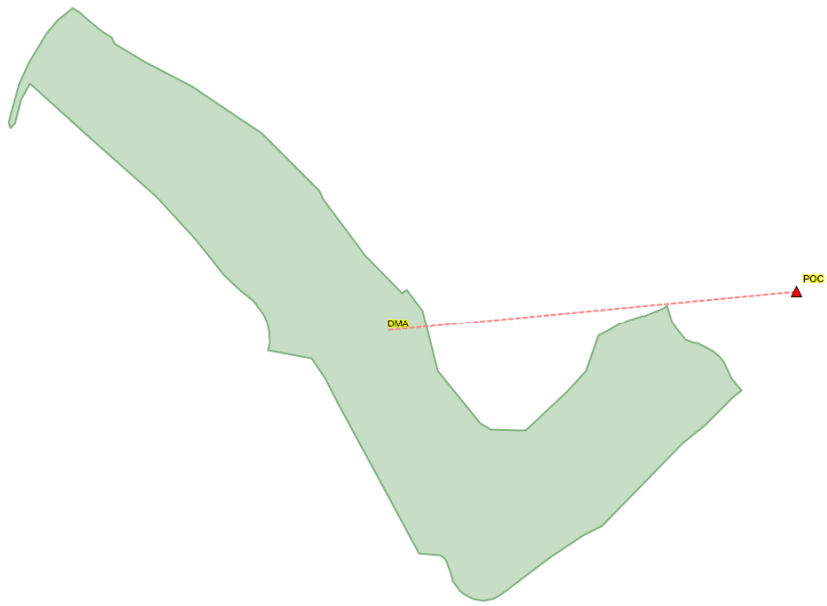

Name	Rain Gage	Outlet	Area (ac)	Width (ft)	Flow Length (ft)	Slope (%)	Imperv. (%)	N Imperv	N Perv	Dstore Imperv (in)	Dstore Perv (in)	Zero Imperv (%)	Suction Head (in)	Conductivity (in/hr)	Initial Deficit (frac.)
DMA	Poway	POC	14.93	290	2242.589	7.9	0	0.012	0.1	0.05	0.1	25	7.25	0.051	0.31

DMA 11 Soil Type Calculations

Soil Type	Area	% of DMA
C	378365	58.2%
D	272102	41.8%

Total Area (SF) =	650467
Total Area (AC) =	14.9

Proposed Conditions

POC A

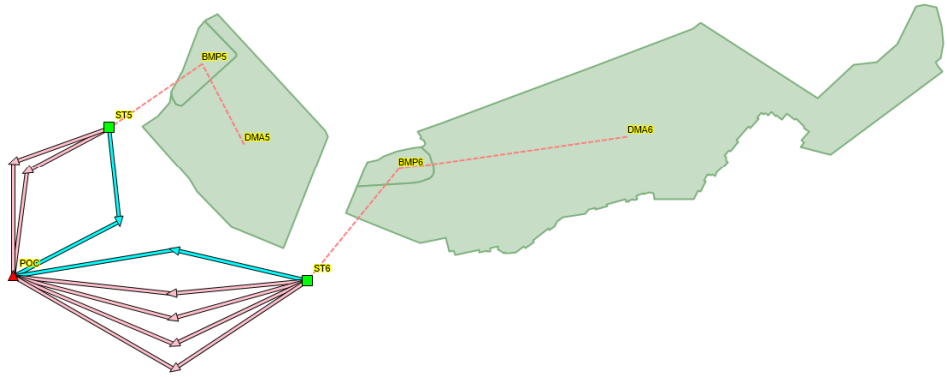

Name				Rain Gage	Outlet	Area (ac)	Width (ft)	Flow Length (ft)	Slope (%)	Imperv. (%)	N Imperv	N Perv	Dstore Imperv (in)	Dstore Perv (in)	Zero Imperv (%)								Suction Head (in)	Conductivity (in/hr)	Initial Deficit (frac.)
BMP5				Poway	ST5	0.28	75	162.624	0.5	0	0.012	0.1	0.05	0.1	25								6	0.075	0.31
DMA5				Poway	BMP5	2.34	300	339.768	4	85	0.012	0.1	0.05	0.1	25								6	0.075	0.31
BMP6				Poway	ST6	0.23	60	166.98	0.5	0	0.012	0.1	0.05	0.1	25								6.8	0.06	0.31
DMA6				Poway	BMP6	6.95	280	1081.221	9.2	57	0.012	0.1	0.05	0.1	25								6.8	0.06	0.31

DMA 6 Soil Type Calculations

Soil Type	Area	% of DMA
C	230671	73.7%
D	82147	26.3%

Total Area (SF)=	312818
Total Area (AC)=	7.2

POC B

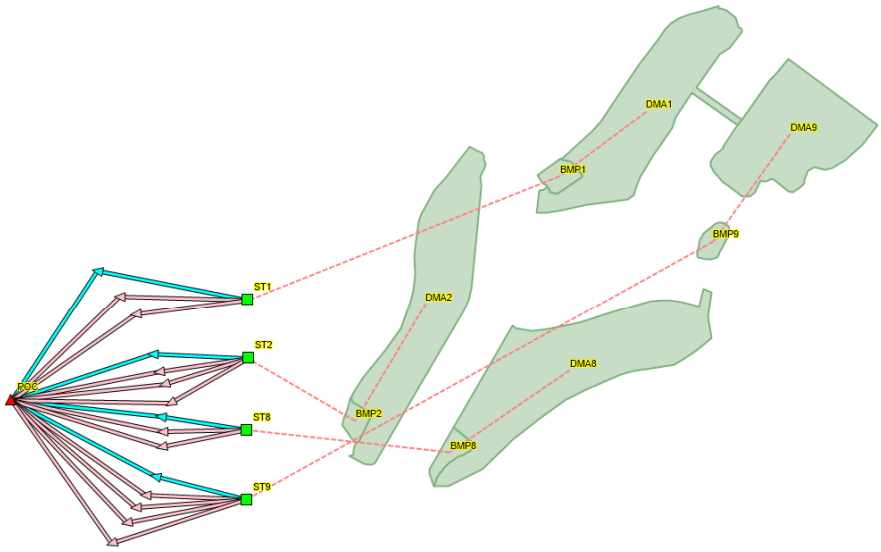

Name	Rain Gage	Outlet	Area (ac)	Width (ft)	Flow Length (ft)	Slope (%)	Imperv. (%)	N Imperv	N Perv	Dstore Imperv (in)	Dstore Perv (in)	Zero Imperv (%)	Suction Head (in)	Conductivity (in/hr)	Initial Deficit (frac.)
BMP9	Poway	ST9	0.42	80	228.69	0.5	0	0.012	0.1	0.05	0.1	25	8.8	0.022	0.3
DMA9	Poway	BMP9	6.54	350	813.95	6.2	85	0.012	0.1	0.05	0.1	25	8.8	0.022	0.3
BMP8	Poway	ST8	0.5	90	242	0.5	0	0.012	0.1	0.05	0.1	25	8.42	0.03	0.3
DMA8	Poway	BMP8	10.3	300	1495.56	5.6	63	0.012	0.1	0.05	0.1	25	8.42	0.03	0.3
BMP2	Poway	ST2	0.38	100	165.528	0.5	0	0.012	0.1	0.05	0.1	25	8.7	0.024	0.3
DMA2	Poway	BMP2	8.26	275	1308.384	6.1	58	0.012	0.1	0.05	0.1	25	8.7	0.024	0.3
BMP1	Poway	ST1	0.48	100	209.088	0.5	0	0.012	0.1	0.05	0.1	25	8.86	0.021	0.3
DMA1	Poway	BMP1	7.99	300	1160.148	6.6	69	0.012	0.1	0.05	0.1	25	8.86	0.021	0.3

DMA 1 Soil Type Calculations

Soil Type	Area	% of DMA
C	16961	4.6%
D	352379	95.4%

Total Area (SF)=	369341
Total Area (AC)=	8.5

DMA 2 Soil Type Calculations

Soil Type	Area	% of DMA
C	38067	10.1%
D	338414	89.9%

Total Area (SF)=	376482
Total Area (AC)=	8.6

DMA 8 Soil Type Calculations

Soil Type	Area	% of DMA
C	112748	19.3%
D	470539	80.7%

Total Area (SF)=	583287
Total Area (AC)=	13.4

DMA 9 Soil Type Calculations

Soil Type	Area	% of DMA
C	19822	6.5%
D	283262	93.5%

Total Area (SF)=	303084
Total Area (AC)=	7.0

POC C

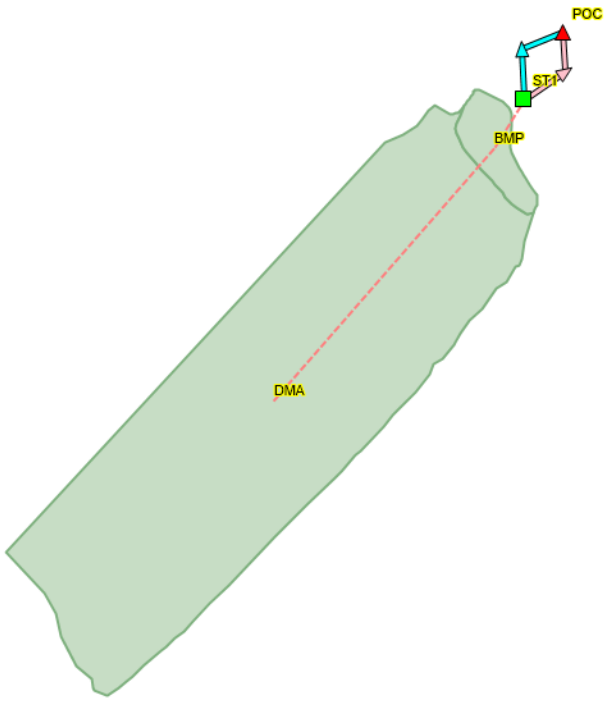

Name	Rain Gage	Outlet	Area (ac)	Width (ft)	Flow Length (ft)	Slope (%)	Imperv. (%)	N Imperv	N Perv	Dstore Imperv (in)	Dstore Perv (in)	Zero Imperv (%)	Suction Head (in)	Conductivity (in/hr)	Initial Deficit (frac.)
DMA	Poway	BMP	5.47	270	882.493	3.1	85	0.012	0.1	0.05	0.1	25	9	0.019	0.3
BMP	Poway	ST1	0.27	100	117.612	0.5	0	0.012	0.1	0.05	0.1	25	9	0.019	0.3

POC D

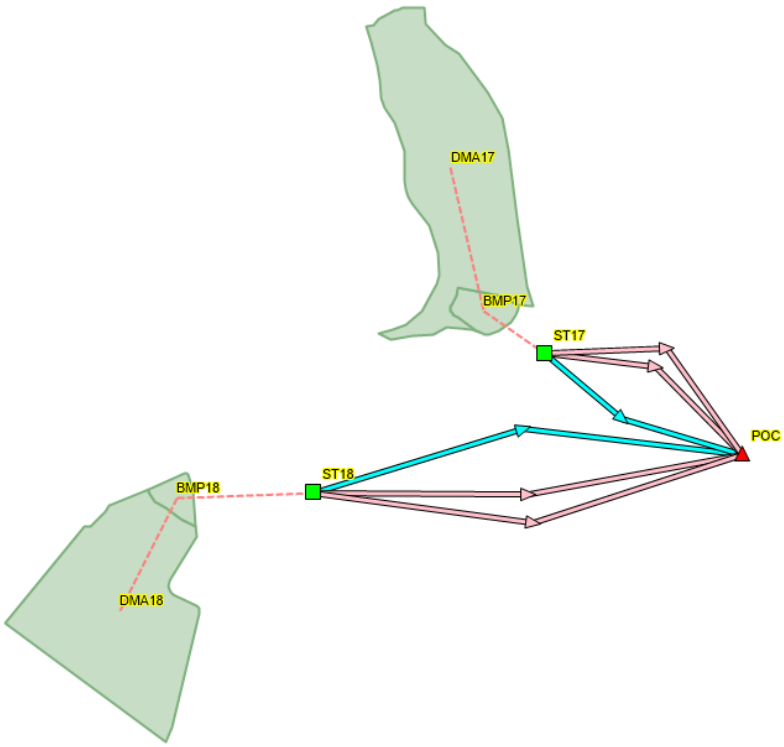

Name				Rain Gage	Outlet	Area (ac)	Width (ft)	Flow Length (ft)	Slope (%)	Imperv. (%)	N Imperv	N Perv	Dstore Imperv (in)	Dstore Perv (in)	Zero mperv (%)							Suction Head (in)	Conductivity (in/hr)	Initial Deficit (frac.)
BMP17				Poway	ST17	0.39	75	226.5...	0.5	0	0.012	0.1	0.05	0.1	25							9	0.019	0.3
DMA17				Poway	BMP17	5.17	250	900.8...	1.38	85	0.012	0.1	0.05	0.1	25							9	0.019	0.3
BMP18				Poway	ST18	0.24	60	174.24	0.5	0	0.012	0.1	0.05	0.1	25							9	0.019	0.3
DMA18				Poway	BMP18	4.48	300	650.4...	1.4	85	0.012	0.1	0.05	0.1	25							9	0.019	0.3

POC E

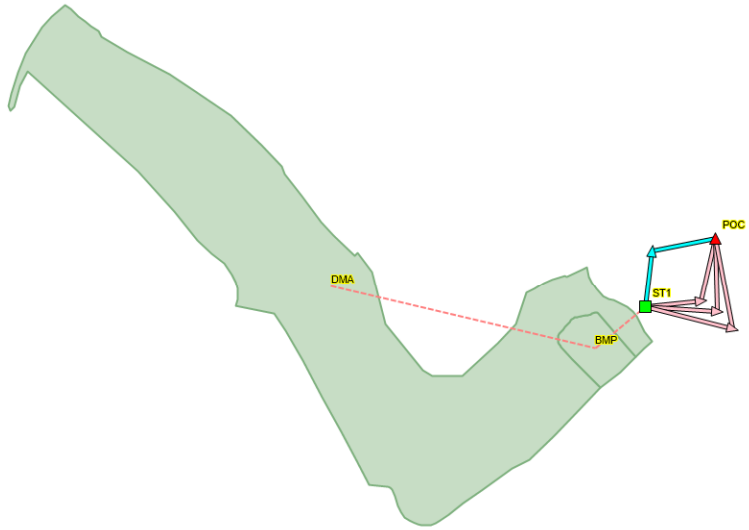

Name	Rain Gage	Outlet	Area (ac)	Width (ft)	Flow Length (ft)	Slope (%)	Imperv. (%)	N Imperv	N Perv	Dstore Imperv (in)	Dstore Perv (in)	Zero Imperv (%)	Suction Head (in)	Conductivity (in/hr)	Initial Deficit (frac.)
BMP	Poway	ST1	0.58	130	194.345	0.5	0	0.012	0.1	0.05	0.1	25	7.25	0.051	0.31
DMA	Poway	BMP	14.35	290	2155.469	5.7	70	0.012	0.1	0.05	0.1	25	7.25	0.051	0.31

DMA 11 Soil Type Calculations

Soil Type	Area	% of DMA
C	378365	58.2%
D	272102	41.8%

Total Area (SF) =	650467
Total Area (AC) =	14.9

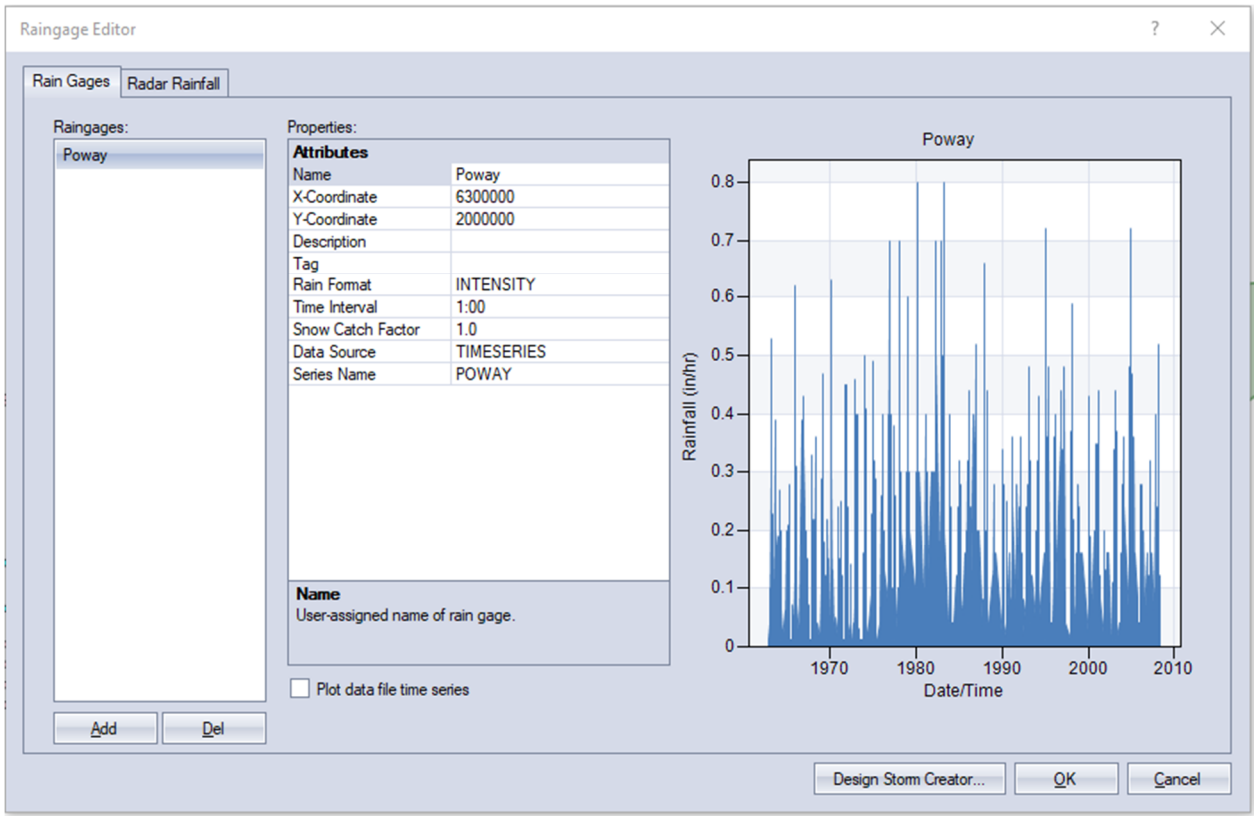
Raingage Editor
Rain Gages
Radar Rainfall
Raingages:
Poway
Properties:
Attributes
Name Poway
X-Coordinate 6300000
Y-Coordinate 2000000
Description
Tag
Rain Format INTENSITY
Time Interval 1:00
Snow Catch Factor 1.0
Data Source TIMESERIES
Series Name POWAY
Name
User-assigned name of rain gage.
Plot data file time series
Add
Del
Poway
Rainfall (in/hr)
0.8
0.7
0.6
0.5
0.4
0.3
0.2
0.1
0
1970
1980
1990
2000
2010
Date/Time
Design Storm Creator...
OK
Cancel

SWMM Model Flow Coefficient Calculation

BMP 1

PARAMETER	ABBREV.	Bio-Retention Cell LID BMP	
Ponding Depth	PD	6	in
Bioretention Soil Layer	S	27	in
Gravel Layer	G	12	in
TOTAL		3.8	ft
		45	in
Orifice Coefficient	cg	0.6	--
Low Flow Orifice Diameter	D	3	in
Drain exponent	n	0.5	--
Flow Rate (volumetric)	Q	0.450	cfs
Ponding Depth Surface Area	APD	7994	ft2
Bioretention Surface Area	AS, AG	7614	ft2
	AS, AG	0.1748	ac
Porosity of Bioretention Soil	n	1.00	-
Flow Rate (per unit area)	q	2.553	in/hr
Effective Ponding Depth	PDeff	**6.15**	in
Flow Coefficient	C	**0.3871**	--

SWMM Model Flow Coefficient Calculation

BMP 2

PARAMETER	ABBREV.	Bio-Retention Cell LID BMP	
Ponding Depth	PD	6	in
Bioretention Soil Layer	S	27	in
Gravel Layer	G	12	in
TOTAL		3.8	ft
		45	in
Orifice Coefficient	cg	0.6	--
Low Flow Orifice Diameter	D	3	in
Drain exponent	n	0.5	--
Flow Rate (volumetric)	Q	0.450	cfs
Ponding Depth Surface Area	APD	8135	ft2
Bioretention Surface Area	AS, AG	7784	ft2
	AS, AG	0.1787	ac
Porosity of Bioretention Soil	n	1.00	-
Flow Rate (per unit area)	q	2.497	in/hr
Effective Ponding Depth	PDeff	**6.14**	in
Flow Coefficient	C	**0.3787**	--

SWMM Model Flow Coefficient Calculation

BMP 5

PARAMETER	ABBREV.	Bio-Retention Cell LID BMP	
Ponding Depth	PD	12	in
Bioretention Soil Layer	S	27	in
Gravel Layer	G	12	in
TOTAL		4.3	ft
		51	in
Orifice Coefficient	cg	0.6	--
Low Flow Orifice Diameter	D	2	in
Drain exponent	n	0.5	--
Flow Rate (volumetric)	Q	0.214	cfs
Ponding Depth Surface Area	APD	4356	ft2
Bioretention Surface Area	AS, AG	4045	ft2
	AS, AG	0.0929	ac
Porosity of Bioretention Soil	n	1.00	-
Flow Rate (per unit area)	q	2.290	in/hr
Effective Ponding Depth	PDeff	**12.46**	in
Flow Coefficient	C	**0.3238**	--

SWMM Model Flow Coefficient Calculation

BMP 6

PARAMETER	ABBREV.	Bio-Retention Cell LID BMP	
Ponding Depth	PD	6	in
Bioretention Soil Layer	S	27	in
Gravel Layer	G	12	in
TOTAL		3.8	ft
		45	in
Orifice Coefficient	cg	0.6	--
Low Flow Orifice Diameter	D	4.5	in
Drain exponent	n	0.5	--
Flow Rate (volumetric)	Q	1.004	cfs
Ponding Depth Surface Area	APD	6157	ft2
Bioretention Surface Area	AS, AG	5834	ft2
	AS, AG	0.1339	ac
Porosity of Bioretention Soil	n	1.00	-
Flow Rate (per unit area)	q	5.000	in/hr
Effective Ponding Depth	PDeff	**6.17**	in
Flow Coefficient	C	**0.7647**	--

SWMM Model Flow Coefficient Calculation

BMP 8

PARAMETER	ABBREV.	Bio-Retention Cell LID BMP	
Ponding Depth	PD	6	in
Bioretention Soil Layer	S	27	in
Gravel Layer	G	12	in
TOTAL		3.8	ft
		45	in
Orifice Coefficient	cg	0.6	--
Low Flow Orifice Diameter	D	3	in
Drain exponent	n	0.5	--
Flow Rate (volumetric)	Q	0.450	cfs
Ponding Depth Surface Area	APD	10070	ft2
Bioretention Surface Area	AS, AG	9529	ft2
	AS, AG	0.2188	ac
Porosity of Bioretention Soil	n	1.00	-
Flow Rate (per unit area)	q	2.040	in/hr
Effective Ponding Depth	PDeff	**6.17**	in
Flow Coefficient	C	**0.3093**	--

SWMM Model Flow Coefficient Calculation

BMP 9

PARAMETER	ABBREV.	Bio-Retention Cell LID BMP	
Ponding Depth	PD	6	in
Bioretention Soil Layer	S	27	in
Gravel Layer	G	12	in
TOTAL		3.8	ft
		45	in
Orifice Coefficient	cg	0.6	--
Low Flow Orifice Diameter	D	4	in
Drain exponent	n	0.5	--
Flow Rate (volumetric)	Q	0.795	cfs
Ponding Depth Surface Area	APD	9294	ft2
Bioretention Surface Area	AS, AG	8914	ft2
	AS, AG	0.2046	ac
Porosity of Bioretention Soil	n	1.00	-
Flow Rate (per unit area)	q	3.855	in/hr
Effective Ponding Depth	PDeff	**6.13**	in
Flow Coefficient	C	**0.5879**	--

SWMM Model Flow Coefficient Calculation

BMP 11

PARAMETER	ABBREV.	Bio-Retention Cell LID BMP	
Ponding Depth	PD	6	in
Bioretention Soil Layer	S	27	in
Gravel Layer	G	12	in
TOTAL		3.8	ft
		45	in
Orifice Coefficient	cg	0.6	--
Low Flow Orifice Diameter	D	3	in
Drain exponent	n	0.5	--
Flow Rate (volumetric)	Q	0.450	cfs
Ponding Depth Surface Area	APD	15131	ft2
Bioretention Surface Area	AS, AG	14666	ft2
	AS, AG	0.3367	ac
Porosity of Bioretention Soil	n	1.00	-
Flow Rate (per unit area)	q	1.326	in/hr
Effective Ponding Depth	PDeff	**6.10**	in
Flow Coefficient	C	**0.2010**	--

SWMM Model Flow Coefficient Calculation

BMP 16

PARAMETER	ABBREV.	Bio-Retention Cell LID BMP	
Ponding Depth	PD	6	in
Bioretention Soil Layer	S	27	in
Gravel Layer	G	12	in
TOTAL		3.8	ft
		45	in
Orifice Coefficient	cg	0.6	--
Low Flow Orifice Diameter	D	3	in
Drain exponent	n	0.5	--
Flow Rate (volumetric)	Q	0.450	cfs
Ponding Depth Surface Area	APD	5969	ft2
Bioretention Surface Area	AS, AG	5615	ft2
	AS, AG	0.1289	ac
Porosity of Bioretention Soil	n	1.00	-
Flow Rate (per unit area)	q	3.462	in/hr
Effective Ponding Depth	PDeff	**6.19**	in
Flow Coefficient	C	**0.5250**	--

SWMM Model Flow Coefficient Calculation

BMP 17

PARAMETER	ABBREV.	Bio-Retention Cell LID BMP	
Ponding Depth	PD	6	in
Bioretention Soil Layer	S	27	in
Gravel Layer	G	12	in
TOTAL		3.8	ft
		45	in
Orifice Coefficient	cg	0.6	--
Low Flow Orifice Diameter	D	3	in
Drain exponent	n	0.5	--
Flow Rate (volumetric)	Q	0.450	cfs
Ponding Depth Surface Area	APD	5753	ft2
Bioretention Surface Area	AS, AG	5449	ft2
	AS, AG	0.1251	ac
Porosity of Bioretention Soil	n	1.00	-
Flow Rate (per unit area)	q	3.568	in/hr
Effective Ponding Depth	PDeff	**6.17**	in
Flow Coefficient	C	**0.5409**	--

SWMM Model Flow Coefficient Calculation

BMP 18

PARAMETER	ABBREV.	Bio-Retention Cell LID BMP	
Ponding Depth	PD	6	in
Bioretention Soil Layer	S	27	in
Gravel Layer	G	12	in
TOTAL		3.8	ft
		45	in
Orifice Coefficient	cg	0.6	--
Low Flow Orifice Diameter	D	4	in
Drain exponent	n	0.5	--
Flow Rate (volumetric)	Q	0.795	cfs
Ponding Depth Surface Area	APD	5203	ft2
Bioretention Surface Area	AS, AG	4914	ft2
	AS, AG	0.1128	ac
Porosity of Bioretention Soil	n	1.00	-
Flow Rate (per unit area)	q	5.000	in/hr
Effective Ponding Depth	PDeff	**6.18**	in
Flow Coefficient	C	**0.7625**	--

PROJECT DESIGN CONSULTANTS

PLANNING | LANDSCAPE ARCHITECTURE
ENGINEERING | SURVEY

WWW.PROJECTDESIGN.COM

PROJECT The Trails at CMR
SUBJECT BMP Basin 1
PAGE : _____ OF _____ JOB NO. : 4394.00
DRAWN BY : G. Anderson DATE : _____
CHECKED BY : _____ DATE : _____

$Q_{max\,in}$ = 24.9 cfs

Q_{out} = 6.44 cfs

WS_{max} = 722.73

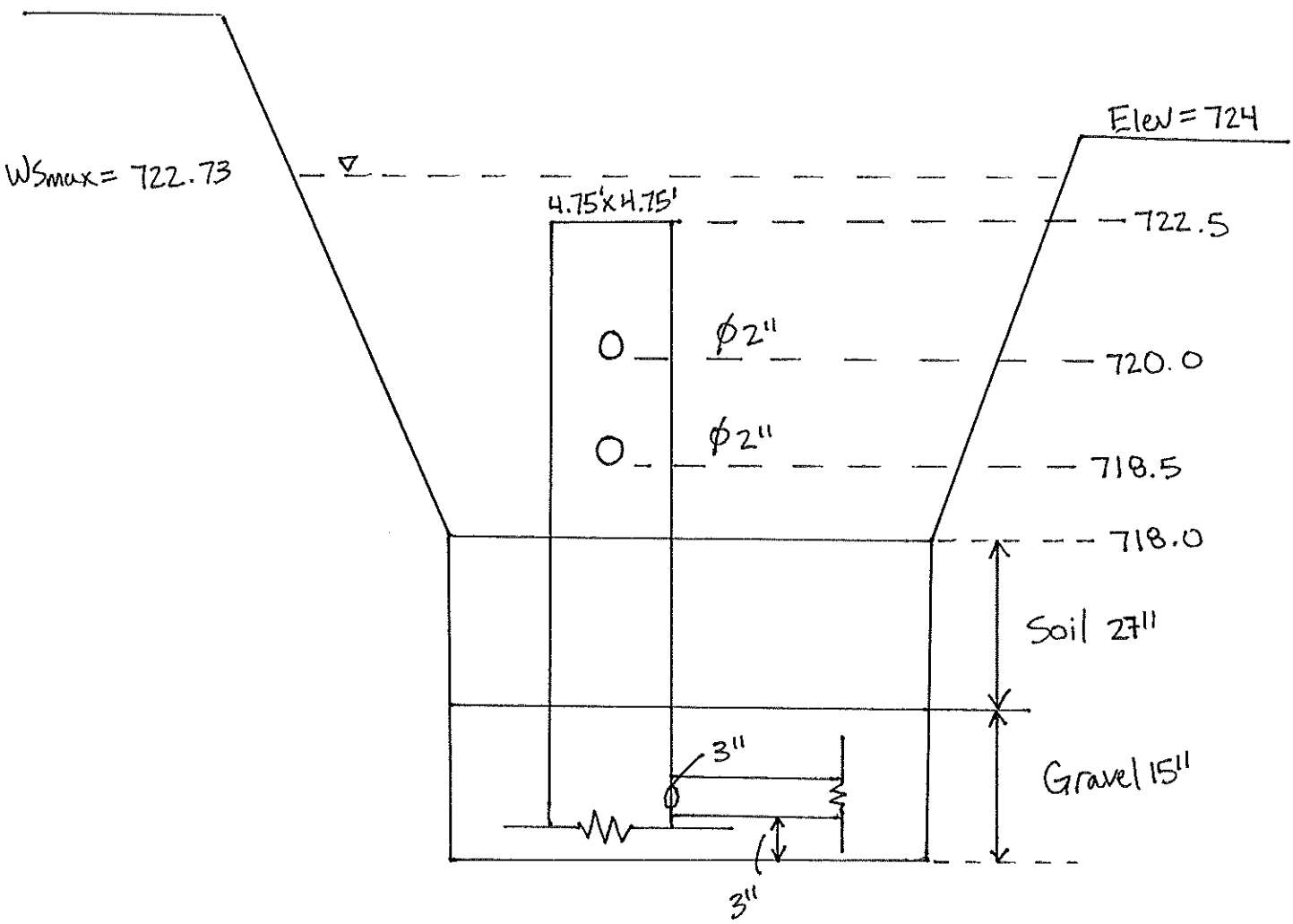

PROJECT DESIGN CONSULTANTS

PLANNING | LANDSCAPE ARCHITECTURE
ENGINEERING | SURVEY

WWW.PROJECTDESIGN.COM

PROJECT The Trails at CMR
SUBJECT BMP Basin 2
PAGE : _____ OF _____ JOB NO. : 4394.00
DRAWN BY : G. Anderson DATE : _____
CHECKED BY : _____ DATE : _____

$Q_{max\,in}$ = 19.0 cfs

Q_{out} = 3.65 cfs

WS_{max} = 614.59

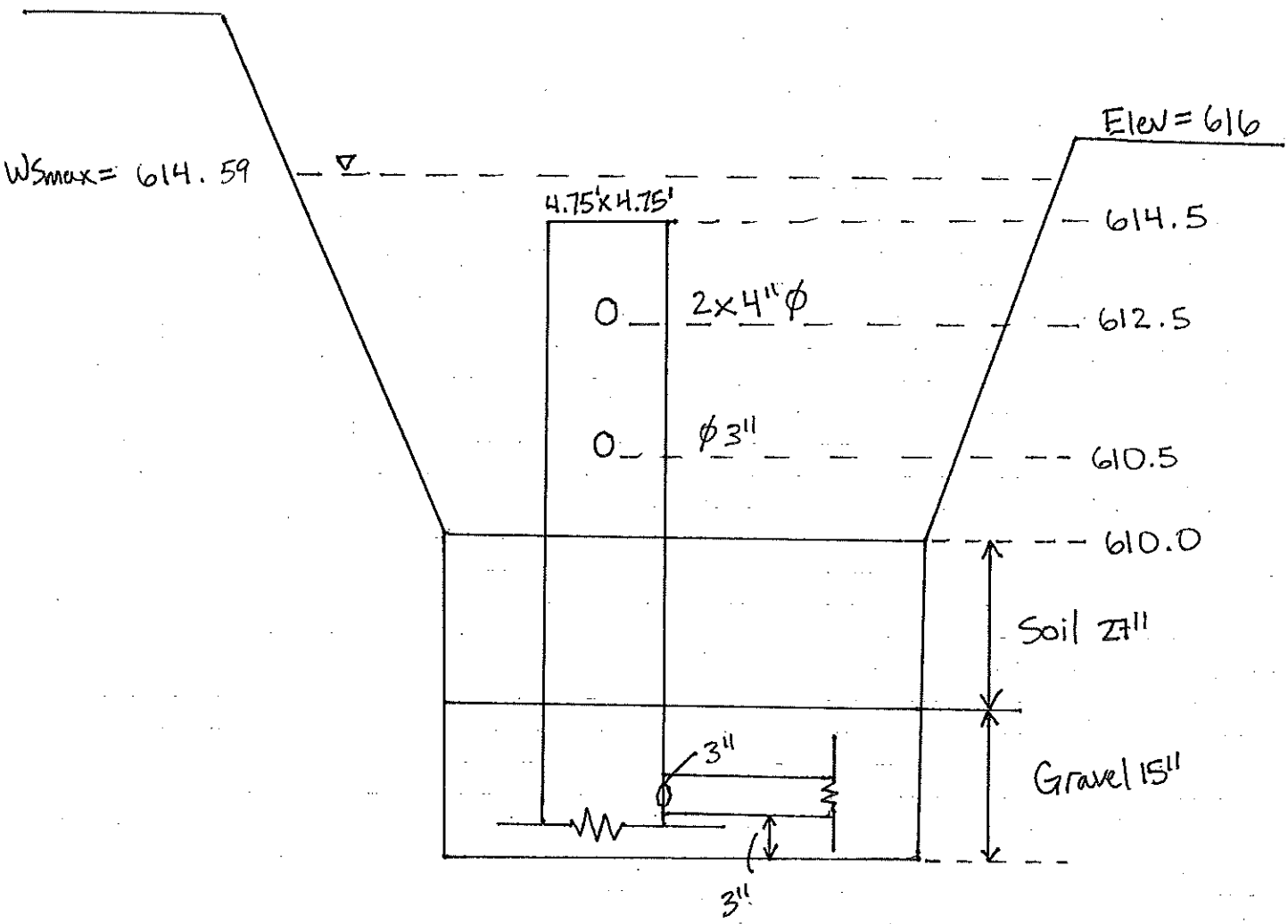

PROJECT DESIGN CONSULTANTS

PLANNING | LANDSCAPE ARCHITECTURE
ENGINEERING | SURVEY

WWW.PROJECTDESIGN.COM

PROJECT The Trails at CMR
SUBJECT BMP Basin 5
PAGE : _____ OF _____ JOB NO. : 4394.00
DRAWN BY : G. Anderson DATE : _____
CHECKED BY : _____ DATE : _____

$Q_{max\,in}$ = 8.5 cfs

Q_{out} = 0.94 cfs

WS_{max} = 545.04

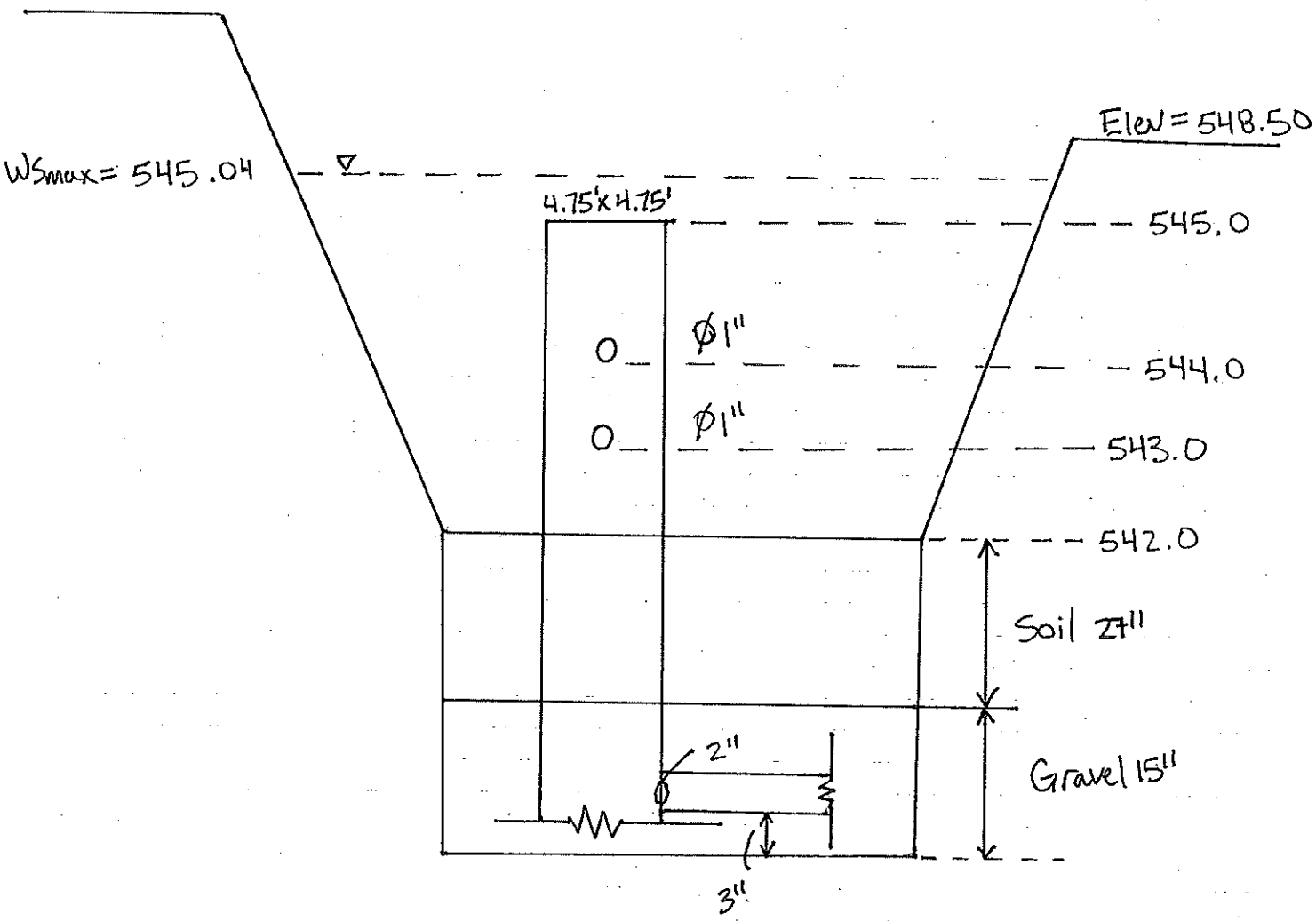

PROJECT DESIGN CONSULTANTS

PLANNING | LANDSCAPE ARCHITECTURE
ENGINEERING | SURVEY

WWW.PROJECTDESIGN.COM

PROJECT The Trails at CMR
SUBJECT BMP Basin 6
PAGE : _____ OF _____ JOB NO. : 4394.00
DRAWN BY : G. Anderson DATE : _____
CHECKED BY : _____ DATE : _____

$Q_{max\,in} = 15.1$ cfs

$Q_{out} = 3.84$ cfs

$WS_{max} = 558.81$

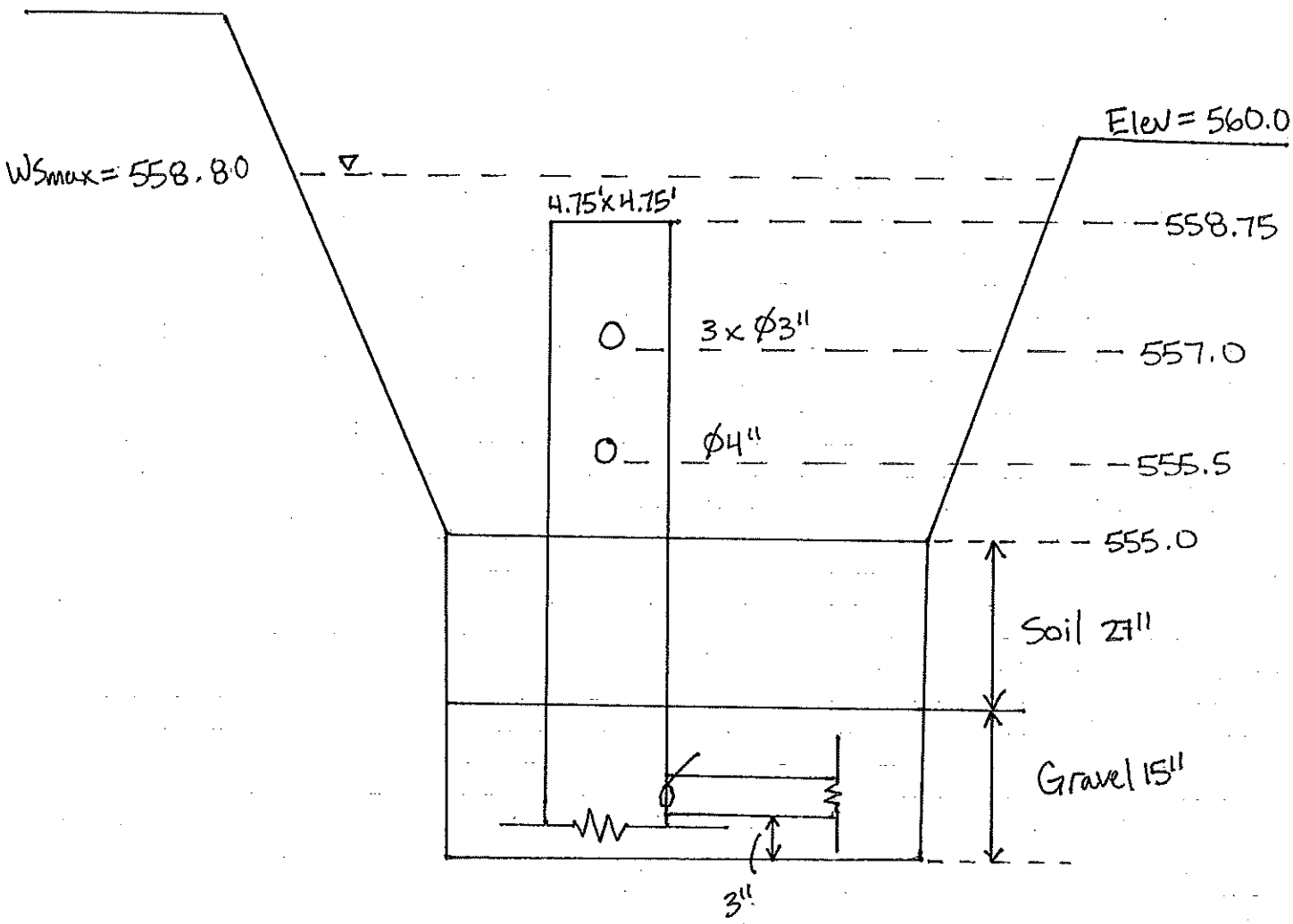

PROJECT DESIGN CONSULTANTS

PLANNING | LANDSCAPE ARCHITECTURE
ENGINEERING | SURVEY

WWW.PROJECTDESIGN.COM

PROJECT The Trails at CMR
SUBJECT BMP Basin 8
PAGE : _____ OF _____ JOB NO. : 4394.00
DRAWN BY : G. Anderson DATE : _____
CHECKED BY : _____ DATE : _____

$Q_{max\,in}$ = 29.1 cfs

Q_{out} = 10.47 cfs

WS_{max} = 634.56

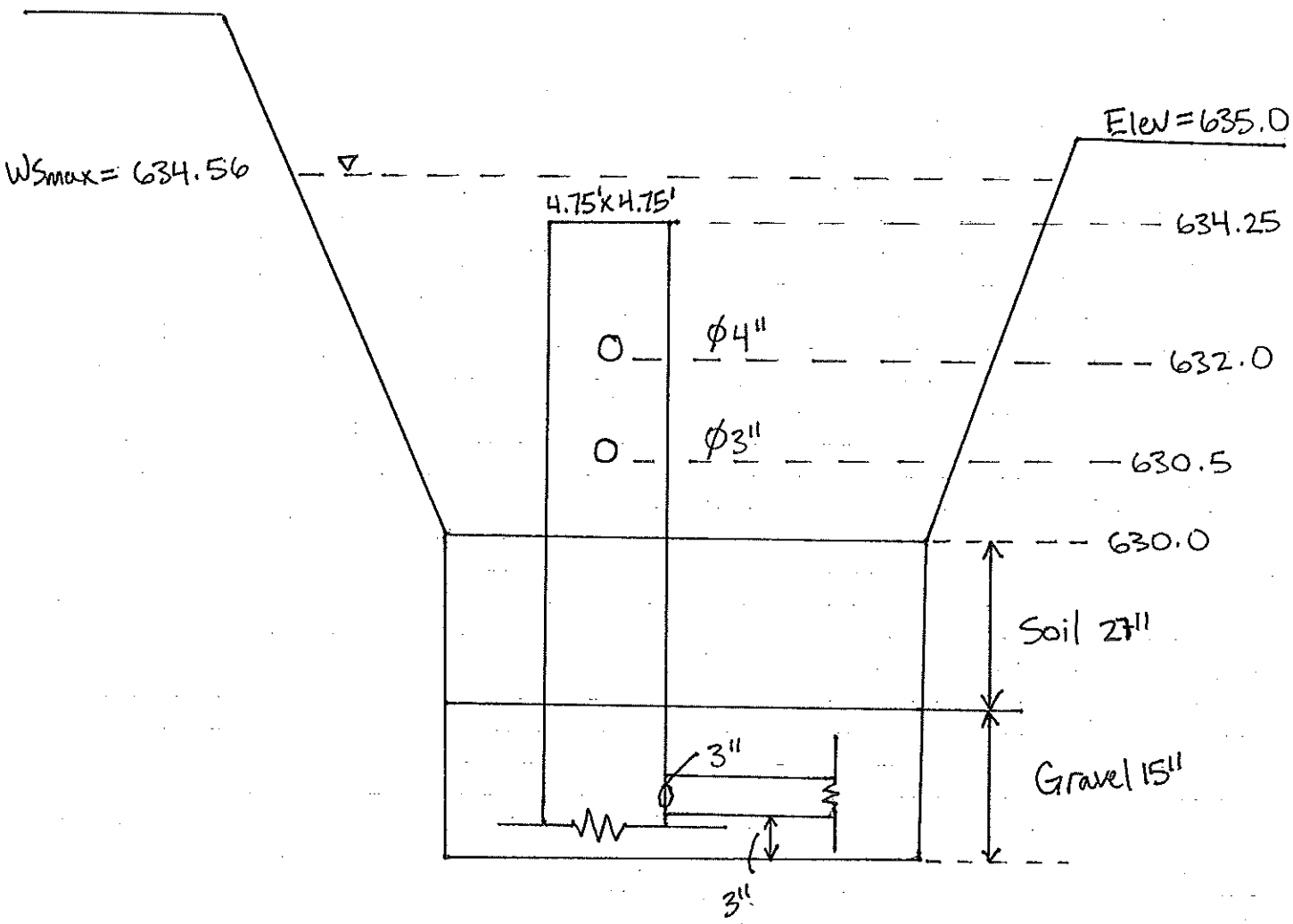

PROJECT DESIGN CONSULTANTS

PLANNING | LANDSCAPE ARCHITECTURE
ENGINEERING | SURVEY

WWW.PROJECTDESIGN.COM

PROJECT The Hills at CMR
SUBJECT BMP Basin 9
PAGE : _____ OF _____ JOB NO. : 4394.00
DRAWN BY : G. Anderson DATE : _____
CHECKED BY : _____ DATE : _____

$Q_{max\ in} = 23.0$ cfs

$Q_{out} = 2.93$ cfs

$WS_{max} = 738.52$

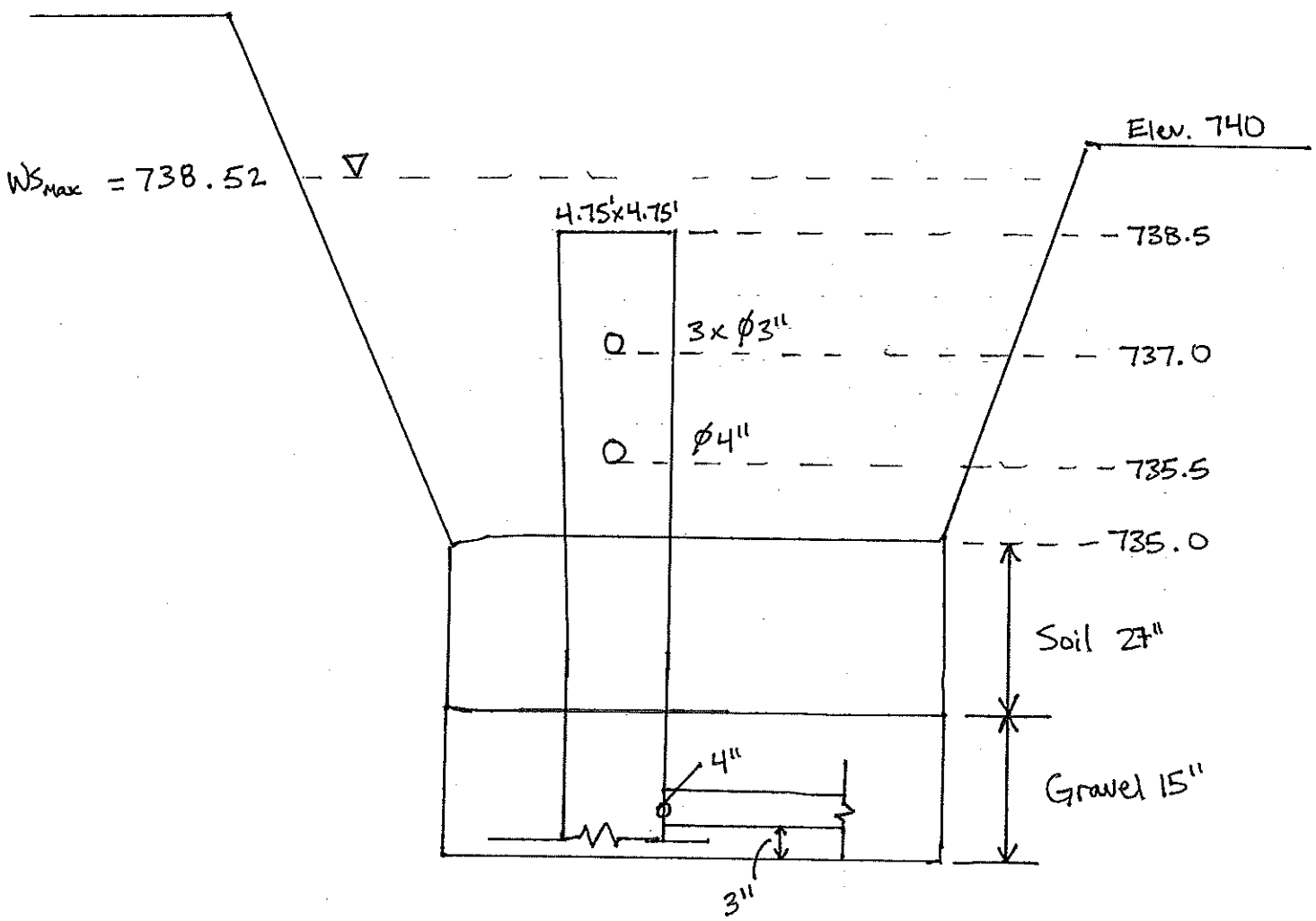

PROJECT DESIGN CONSULTANTS

PLANNING | LANDSCAPE ARCHITECTURE
ENGINEERING | SURVEY

WWW.PROJECTDESIGN.COM

PROJECT The Hills at CMR
SUBJECT BMP Basin 11
PAGE : _____ OF _____ JOB NO. : 4394.00
DRAWN BY : G. Anderson DATE : _____
CHECKED BY : _____ DATE : _____

$Q_{max\ in} = 39.6$ cfs

$Q_{out} = 1.90$ cfs

$WS_{max} = 648.03$

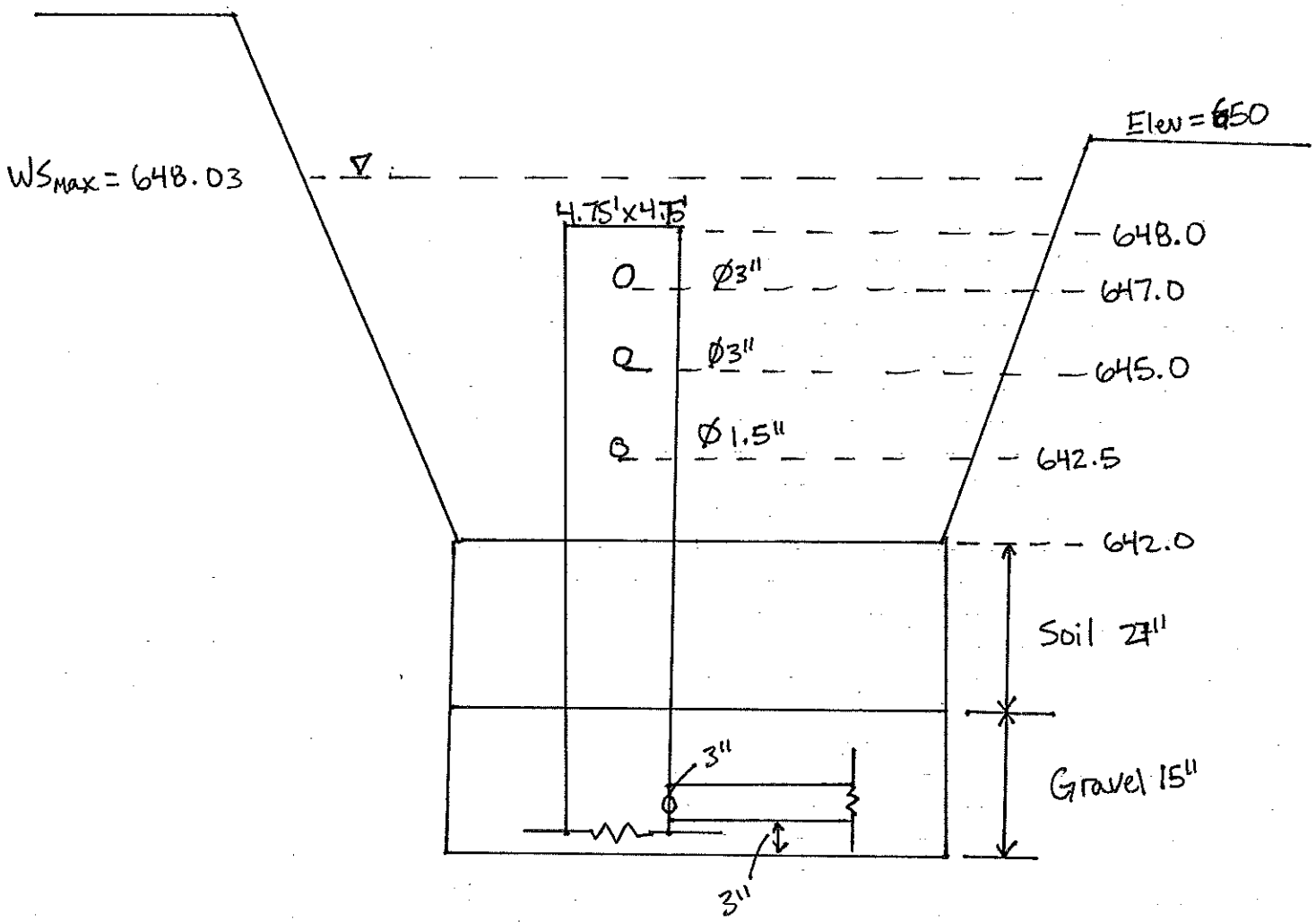

PROJECT DESIGN CONSULTANTS

PLANNING | LANDSCAPE ARCHITECTURE
ENGINEERING | SURVEY

WWW.PROJECTDESIGN.COM

PROJECT The Trails at CMR
SUBJECT BMP Basin 16
PAGE : _____ OF _____ JOB NO. : 4394.00
DRAWN BY : G. Anderson DATE : _____
CHECKED BY : _____ DATE : _____

$Q_{max\,in}$ = 18.0 cfs

Q_{out} = 2.63 cfs

WS_{max} = 634.33

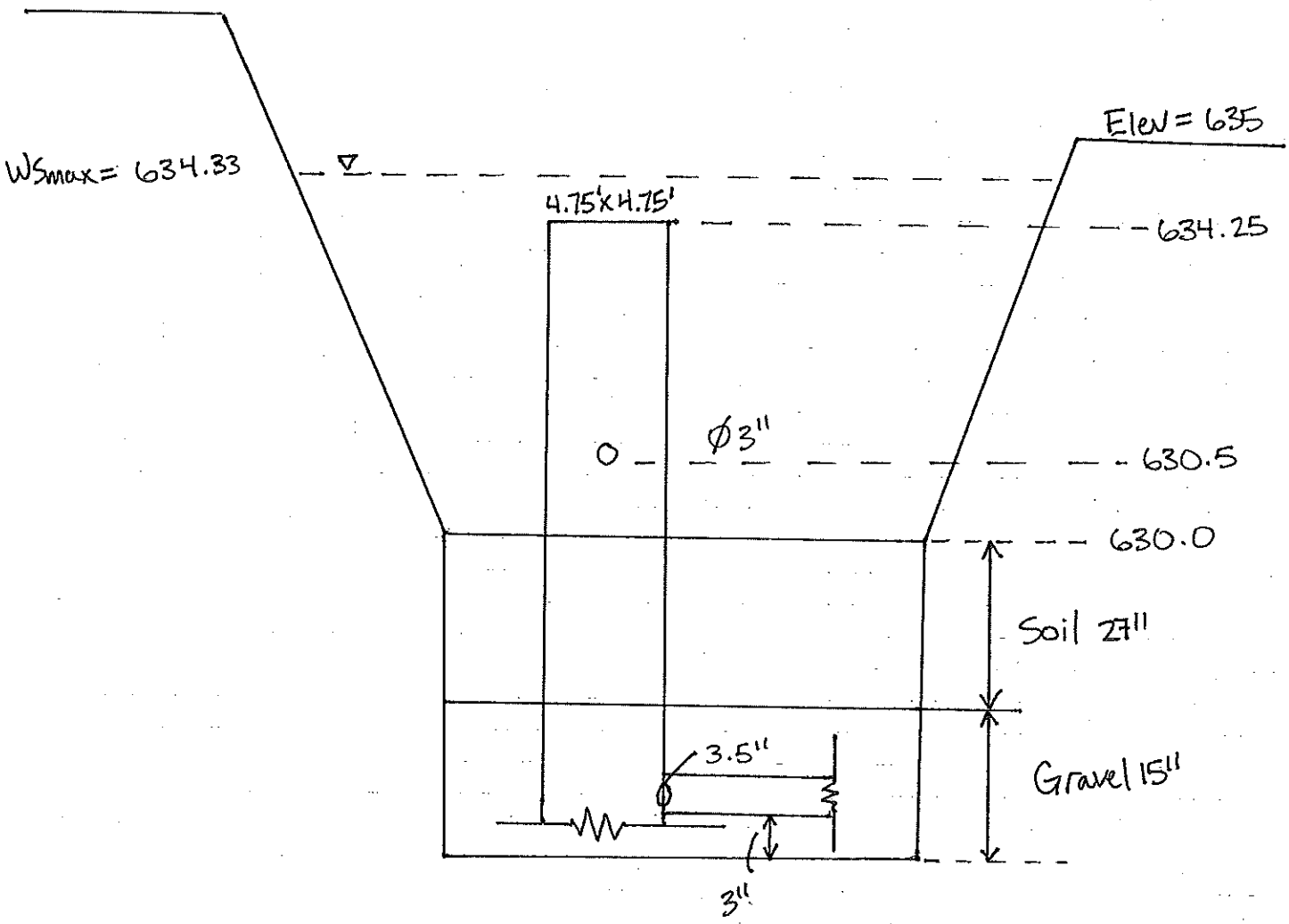

PROJECT DESIGN CONSULTANTS

PLANNING | LANDSCAPE ARCHITECTURE
ENGINEERING | SURVEY

WWW.PROJECTDESIGN.COM

PROJECT The Trails at CMR
SUBJECT BMP Basin 17
PAGE : _____ OF _____ JOB NO. : 4394.00
DRAWN BY : G. Anderson DATE : _____
CHECKED BY : _____ DATE : _____

$Q_{max\,in} = 14.8$ cfs

$Q_{out} = 2.59$ cfs

$WS_{max} = 686.56$

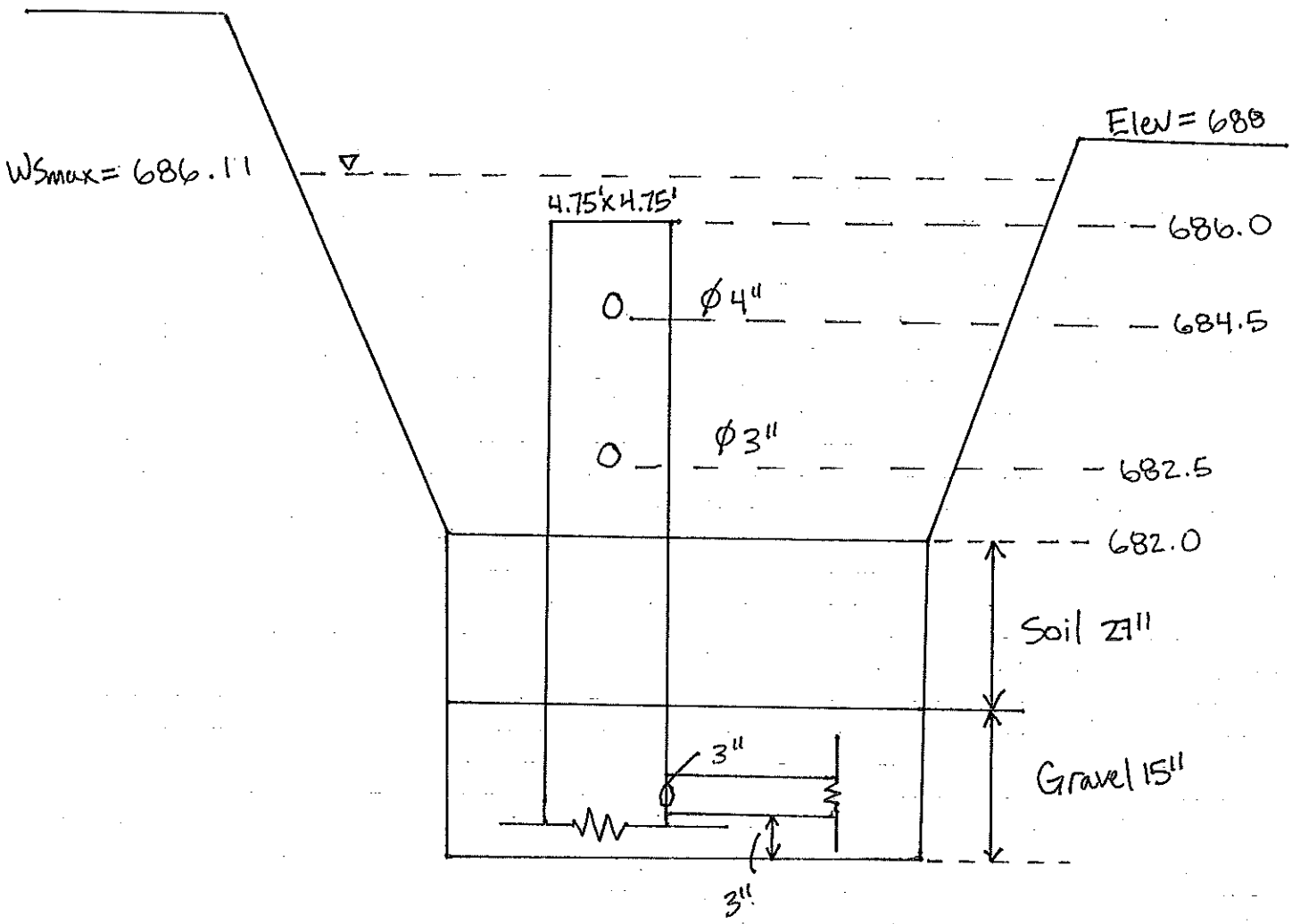

PROJECT DESIGN CONSULTANTS

PLANNING | LANDSCAPE ARCHITECTURE
ENGINEERING | SURVEY

WWW.PROJECTDESIGN.COM

PROJECT The Trails at CMR
SUBJECT BMP Basin 18
PAGE : _____ OF _____ JOB NO. : 4394.00
DRAWN BY : G. Anderson DATE : _____
CHECKED BY : _____ DATE : _____

$Q_{max\,in} = 15.1$ cfs

$Q_{out} = 1.54$ cfs

$WS_{max} = 793.75$

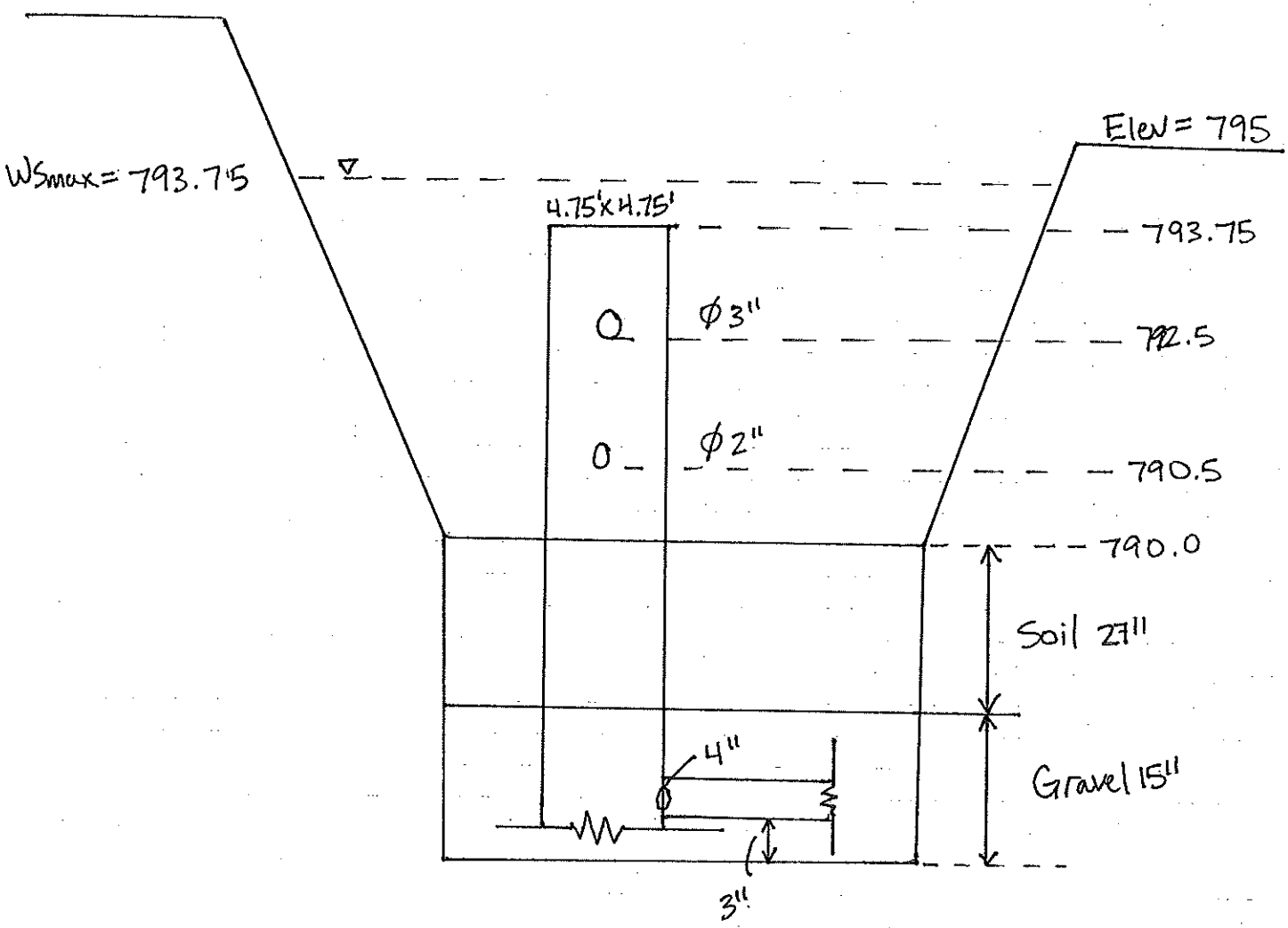

ATTACHMENT D

SWMM Output – Existing Conditions

EPA STORM WATER MANAGEMENT MODEL - VERSION 5.1 (Build 5.1.013)

POC A PRE

****
Element Count
****
Number of rain gages 1
Number of subcatchments ... 2
Number of nodes 1
Number of links 0
Number of pollutants 0
Number of land uses 0

****
Raingage Summary
****

Name	Data Source	Data Type	Recording Interval
Poway	POWAY	INTENSITY	60 min.

****
Subcatchment Summary
****

Name	Area	Width	%Imperv	%Slope	Rain Gage	Outlet
DMA5	2.62	300.00	0.00	7.8000	Poway	POC
DMA6	7.24	280.00	0.00	9.5000	Poway	POC

****
Node Summary
****

Name	Type	Invert Elev.	Max. Depth	Ponded Area	External Inflow
POC	OUTFALL	0.00	0.00	0.0	

****
NOTE: The summary statistics displayed in this report are
based on results found at every computational time step,
not just on results from each reporting time step.
****

****
Analysis Options
****
Flow Units ..... CFS
Process Models:
  Rainfall/Runoff ..... YES
  RDII ..... NO
  Snowmelt ..... NO
  Groundwater ..... NO
  Flow Routing ..... NO
  Water Quality ..... NO
Infiltration Method ..... GREEN_AMPT
Starting Date 10/04/1962 15:00:00
Ending Date 05/23/2008 15:00:00
Antecedent Dry Days 0.0
Report Time Step 01:00:00
Wet Time Step 00:10:00
Dry Time Step 01:00:00

********** Runoff Quantity Continuity **********	Volume acre-feet	Depth inches
Total Precipitation	458.671	558.220
Evaporation Loss	6.710	8.167
Infiltration Loss	420.205	511.406
Surface Runoff	33.175	40.376
Final Storage	0.000	0.000
Continuity Error (%)	-0.310	

```
  **************************        Volume         Volume
  Flow Routing Continuity        acre-feet       10^6 gal
  **************************     ---------      ---------
  Dry Weather Inflow .......         0.000          0.000
  Wet Weather Inflow .......        33.175         10.811
  Groundwater Inflow .......         0.000          0.000
  RDII Inflow ..............         0.000          0.000
  External Inflow ..........         0.000          0.000
  External Outflow .........        33.175         10.811
  Flooding Loss ............         0.000          0.000
  Evaporation Loss .........         0.000          0.000
  Exfiltration Loss ........         0.000          0.000
  Initial Stored Volume ....         0.000          0.000
  Final Stored Volume ......         0.000          0.000
  Continuity Error (%) .....         0.000


  **************************
  Subcatchment Runoff Summary
  **************************

  ---------------------------------------------------------------------------------------------------------------
-------------------
                          Total      Total      Total      Total     Imperv       Perv      Total
Total     Peak  Runoff
                         Precip      Runon       Evap      Infil     Runoff     Runoff     Runoff
Runoff   Runoff   Coeff
  Subcatchment                in         in         in         in         in         in         in    10^6
gal      CFS
  ---------------------------------------------------------------------------------------------------------------
-------------------
  DMA5                    558.22       0.00       6.22     518.24       0.00      35.28      35.28
2.51     1.82   0.063
  DMA6                    558.22       0.00       8.87     508.93       0.00      42.22      42.22
8.30     4.26   0.076


  Analysis begun on:  Tue Oct 15 14:52:47 2019
  Analysis ended on:  Tue Oct 15 14:52:52 2019
  Total elapsed time: 00:00:05
```

EPA STORM WATER MANAGEMENT MODEL - VERSION 5.1 (Build 5.1.013)

POC B PRE

****
Element Count
****
Number of rain gages 1
Number of subcatchments ... 4
Number of nodes 1
Number of links 0
Number of pollutants 0
Number of land uses 0

****
Raingage Summary
****

Name	Data Source	Data Type	Recording Interval
Poway	POWAY	INTENSITY	60 min.

****
Subcatchment Summary
****

Name	Area	Width	%Imperv	%Slope	Rain Gage	Outlet
DMA1	8.47	300.00	0.00	5.3000	Poway	POC
DMA2	8.64	275.00	0.00	6.1000	Poway	POC
DMA8	10.80	300.00	0.00	5.8000	Poway	POC
DMA9	6.96	350.00	0.00	5.0000	Poway	POC

****
Node Summary
****

Name	Type	Invert Elev.	Max. Depth	Ponded Area	External Inflow
POC	OUTFALL	0.00	0.00	0.0	

****
NOTE: The summary statistics displayed in this report are
based on results found at every computational time step,
not just on results from each reporting time step.
****

****
Analysis Options
****
Flow Units ..... CFS
Process Models:
  Rainfall/Runoff ..... YES
  RDII ..... NO
  Snowmelt ..... NO
  Groundwater ..... NO
  Flow Routing ..... NO
  Water Quality ..... NO
Infiltration Method ..... GREEN_AMPT
Starting Date 10/04/1962 15:00:00
Ending Date 05/23/2008 15:00:00
Antecedent Dry Days 0.0
Report Time Step 01:00:00
Wet Time Step 00:10:00
Dry Time Step 01:00:00

********** Runoff Quantity Continuity	Volume acre-feet	Depth inches
Total Precipitation	1622.094	558.220
Evaporation Loss	62.551	21.526
Infiltration Loss	1301.168	447.778
Surface Runoff	266.831	91.826
Final Storage	0.000	0.000
Continuity Error (%)	-0.521	

```
  **************************        Volume         Volume
  Flow Routing Continuity        acre-feet       10^6 gal
  **************************     ---------      ---------
  Dry Weather Inflow .......         0.000          0.000
  Wet Weather Inflow .......       266.831         86.951
  Groundwater Inflow .......         0.000          0.000
  RDII Inflow ..............         0.000          0.000
  External Inflow ..........         0.000          0.000
  External Outflow .........       266.831         86.951
  Flooding Loss ............         0.000          0.000
  Evaporation Loss .........         0.000          0.000
  Exfiltration Loss ........         0.000          0.000
  Initial Stored Volume ....         0.000          0.000
  Final Stored Volume ......         0.000          0.000
  Continuity Error (%) .....         0.000


  ***************************
  Subcatchment Runoff Summary
  ***************************

  -------------------------------------------------------------------------------------------------------------------
-------------------
                            Total      Total      Total      Total     Imperv       Perv      Total
Total     Peak  Runoff
                           Precip      Runon       Evap      Infil     Runoff     Runoff     Runoff
Runoff   Runoff   Coeff
  Subcatchment                 in         in         in         in         in         in         in    10^6
gal      CFS
  -------------------------------------------------------------------------------------------------------------------
-------------------
  DMA1                     558.22       0.00      24.80     432.85       0.00     103.81     103.81
23.88     4.97   0.186
  DMA2                     558.22       0.00      21.71     447.95       0.00      91.50      91.50
21.47     4.95   0.164
  DMA8                     558.22       0.00      17.76     467.82       0.00      75.10      75.10
22.02     5.68   0.135
  DMA9                     558.22       0.00      23.17     434.63       0.00     103.61     103.61
19.58     4.47   0.186


  Analysis begun on:  Mon Oct 28 17:09:38 2019
  Analysis ended on:  Mon Oct 28 17:09:43 2019
  Total elapsed time: 00:00:05
```

```
EPA STORM WATER MANAGEMENT MODEL - VERSION 5.1 (Build 5.1.013)
--------------------------------------------------------------
POC C PRE

*************
Element Count
*************
Number of rain gages ...... 1
Number of subcatchments ... 1
Number of nodes ........... 1
Number of links ........... 0
Number of pollutants ...... 0
Number of land uses ....... 0


****************
Raingage Summary
****************
                                                   Data       Recording
Name                 Data Source                   Type       Interval
-----------------------------------------------------------------------
Poway                POWAY                         INTENSITY   60 min.


********************
Subcatchment Summary
********************
Name                        Area     Width   %Imperv    %Slope Rain Gage            Outlet
-----------------------------------------------------------------------------------------------------------
DMA                         5.75    270.00      0.00    3.8000 Poway                POC


************
Node Summary
************
                                          Invert      Max.    Ponded    External
Name                 Type                  Elev.     Depth      Area    Inflow
-----------------------------------------------------------------------------
POC                  OUTFALL                0.00      0.00       0.0


*********************************************************
NOTE: The summary statistics displayed in this report are
based on results found at every computational time step,
not just on results from each reporting time step.
*********************************************************

****************
Analysis Options
****************
Flow Units ............... CFS
Process Models:
  Rainfall/Runoff ........ YES
  RDII ................... NO
  Snowmelt ............... NO
  Groundwater ............ NO
  Flow Routing ........... NO
  Water Quality .......... NO
Infiltration Method ...... GREEN_AMPT
Starting Date ............ 10/04/1962 15:00:00
Ending Date .............. 05/23/2008 15:00:00
Antecedent Dry Days ...... 0.0
Report Time Step ......... 01:00:00
Wet Time Step ............ 00:10:00
Dry Time Step ............ 01:00:00


**************************        Volume         Depth
Runoff Quantity Continuity     acre-feet        inches
**************************     ---------       -------
Total Precipitation ......       267.480       558.220
Evaporation Loss .........        12.091        25.234
Infiltration Loss ........       204.555       426.898
Surface Runoff ...........        52.485       109.534
Final Storage ............         0.000         0.000
Continuity Error (%) .....        -0.617


**************************        Volume        Volume
```

```
  Flow Routing Continuity        acre-feet      10^6 gal
  *************************     ---------     ---------
  Dry Weather Inflow .......         0.000         0.000
  Wet Weather Inflow .......        52.485        17.103
  Groundwater Inflow .......         0.000         0.000
  RDII Inflow ..............         0.000         0.000
  External Inflow ..........         0.000         0.000
  External Outflow .........        52.485        17.103
  Flooding Loss ............         0.000         0.000
  Evaporation Loss .........         0.000         0.000
  Exfiltration Loss ........         0.000         0.000
  Initial Stored Volume ....         0.000         0.000
  Final Stored Volume ......         0.000         0.000
  Continuity Error (%) .....         0.000


  **************************
  Subcatchment Runoff Summary
  **************************

  ---------------------------------------------------------------------------------------------------------------
-------------------
                           Total      Total      Total      Total     Imperv       Perv      Total
Total     Peak  Runoff
                          Precip      Runon       Evap      Infil     Runoff     Runoff     Runoff
Runoff   Runoff   Coeff
  Subcatchment                in         in         in         in         in         in         in    10^6
gal      CFS
  ---------------------------------------------------------------------------------------------------------------
-------------------
  DMA                     558.22       0.00      25.23     426.90       0.00     109.53     109.53
17.10     3.53   0.196


  Analysis begun on:  Thu Sep 19 16:13:46 2019
  Analysis ended on:  Thu Sep 19 16:13:51 2019
  Total elapsed time: 00:00:05
```

EPA STORM WATER MANAGEMENT MODEL - VERSION 5.1 (Build 5.1.013)

POC D PRE

****
Element Count
****
Number of rain gages 1
Number of subcatchments ... 2
Number of nodes 1
Number of links 0
Number of pollutants 0
Number of land uses 0

****
Raingage Summary
****

Name	Data Source	Data Type	Recording Interval
Poway	POWAY	INTENSITY	60 min.

****
Subcatchment Summary
****

Name	Area	Width	%Imperv	%Slope	Rain Gage	Outlet
DMA17	5.57	250.00	0.00	0.9000	Poway	POC
DMA18	4.72	300.00	0.00	2.2000	Poway	POC

****
Node Summary
****

Name	Type	Invert Elev.	Max. Depth	Ponded Area	External Inflow
POC	OUTFALL	0.00	0.00	0.0	

****
NOTE: The summary statistics displayed in this report are
based on results found at every computational time step,
not just on results from each reporting time step.
****

****
Analysis Options
****
Flow Units ..... CFS
Process Models:
  Rainfall/Runoff ..... YES
  RDII ..... NO
  Snowmelt ..... NO
  Groundwater ..... NO
  Flow Routing ..... NO
  Water Quality ..... NO
Infiltration Method ..... GREEN_AMPT
Starting Date 10/04/1962 15:00:00
Ending Date 05/23/2008 15:00:00
Antecedent Dry Days 0.0
Report Time Step 01:00:00
Wet Time Step 00:10:00
Dry Time Step 01:00:00

********** Runoff Quantity Continuity **********	Volume acre-feet	Depth inches
Total Precipitation	478.674	558.220
Evaporation Loss	21.934	25.579
Infiltration Loss	371.245	432.938
Surface Runoff	88.349	103.031
Final Storage	0.000	0.000
Continuity Error (%)	-0.596	

```
  **************************        Volume         Volume
  Flow Routing Continuity        acre-feet       10^6 gal
  **************************     ---------      ---------
  Dry Weather Inflow .......         0.000          0.000
  Wet Weather Inflow .......        88.349         28.790
  Groundwater Inflow .......         0.000          0.000
  RDII Inflow ..............         0.000          0.000
  External Inflow ..........         0.000          0.000
  External Outflow .........        88.349         28.790
  Flooding Loss ............         0.000          0.000
  Evaporation Loss .........         0.000          0.000
  Exfiltration Loss ........         0.000          0.000
  Initial Stored Volume ....         0.000          0.000
  Final Stored Volume ......         0.000          0.000
  Continuity Error (%) .....         0.000


  ***************************
  Subcatchment Runoff Summary
  ***************************

  ---------------------------------------------------------------------------------------------------------------
-------------------
                          Total      Total      Total      Total     Imperv       Perv      Total
Total     Peak  Runoff
                         Precip      Runon       Evap      Infil     Runoff     Runoff     Runoff
Runoff   Runoff   Coeff
  Subcatchment                in         in         in         in         in         in         in    10^6
gal      CFS
  ---------------------------------------------------------------------------------------------------------------
-------------------
  DMA17                  558.22       0.00      26.19     437.03       0.00      98.23      98.23
14.86     2.59   0.176
  DMA18                  558.22       0.00      24.85     428.11       0.00     108.69     108.69
13.93     2.92   0.195


  Analysis begun on:  Fri Apr  3 11:42:44 2020
  Analysis ended on:  Fri Apr  3 11:42:49 2020
  Total elapsed time: 00:00:05
```

```
EPA STORM WATER MANAGEMENT MODEL - VERSION 5.1 (Build 5.1.013)
--------------------------------------------------------------
POC E PRE

*************
Element Count
*************
Number of rain gages ...... 1
Number of subcatchments ... 1
Number of nodes ........... 1
Number of links ........... 0
Number of pollutants ...... 0
Number of land uses ....... 0


****************
Raingage Summary
****************
                                                   Data       Recording
Name                 Data Source                   Type       Interval
-----------------------------------------------------------------------
Poway                POWAY                         INTENSITY   60 min.


********************
Subcatchment Summary
********************
Name                        Area     Width   %Imperv    %Slope Rain Gage            Outlet
-----------------------------------------------------------------------------------------------------------
DMA                        14.93    290.00      0.00    7.9000 Poway                POC


************
Node Summary
************
                                         Invert      Max.    Ponded    External
Name                 Type                 Elev.     Depth      Area    Inflow
-----------------------------------------------------------------------------
POC                  OUTFALL               0.00      0.00       0.0


*********************************************************
NOTE: The summary statistics displayed in this report are
based on results found at every computational time step,
not just on results from each reporting time step.
*********************************************************

****************
Analysis Options
****************
Flow Units ............... CFS
Process Models:
  Rainfall/Runoff ........ YES
  RDII ................... NO
  Snowmelt ............... NO
  Groundwater ............ NO
  Flow Routing ........... NO
  Water Quality .......... NO
Infiltration Method ...... GREEN_AMPT
Starting Date ............ 10/04/1962 15:00:00
Ending Date .............. 05/23/2008 15:00:00
Antecedent Dry Days ...... 0.0
Report Time Step ......... 01:00:00
Wet Time Step ............ 00:10:00
Dry Time Step ............ 01:00:00


**************************        Volume         Depth
Runoff Quantity Continuity     acre-feet        inches
**************************     ---------       -------
Total Precipitation ......       694.519       558.220
Evaporation Loss .........        13.752        11.053
Infiltration Loss ........       626.439       503.501
Surface Runoff ...........        56.803        45.655
Final Storage ............         0.000         0.000
Continuity Error (%) .....        -0.356


**************************        Volume        Volume
```

```
  Flow Routing Continuity        acre-feet      10^6 gal
  *************************     ---------     ---------
  Dry Weather Inflow .......         0.000         0.000
  Wet Weather Inflow .......        56.803        18.510
  Groundwater Inflow .......         0.000         0.000
  RDII Inflow ..............         0.000         0.000
  External Inflow ..........         0.000         0.000
  External Outflow .........        56.803        18.510
  Flooding Loss ............         0.000         0.000
  Evaporation Loss .........         0.000         0.000
  Exfiltration Loss ........         0.000         0.000
  Initial Stored Volume ....         0.000         0.000
  Final Stored Volume ......         0.000         0.000
  Continuity Error (%) .....         0.000


  **************************
  Subcatchment Runoff Summary
  **************************

  ---------------------------------------------------------------------------------------------------------------
-------------------
                           Total      Total      Total      Total     Imperv       Perv      Total
Total     Peak  Runoff
                          Precip      Runon       Evap      Infil     Runoff     Runoff     Runoff
Runoff   Runoff   Coeff
  Subcatchment                in         in         in         in         in         in         in    10^6
gal      CFS
  ---------------------------------------------------------------------------------------------------------------
-------------------
  DMA                     558.22       0.00      11.05     503.50       0.00      45.66      45.66
18.51     6.96   0.082


  Analysis begun on:  Wed Oct  2 16:31:58 2019
  Analysis ended on:  Wed Oct  2 16:32:03 2019
  Total elapsed time: 00:00:05
```

ATTACHMENT E

SWMM Output – Proposed Conditions

EPA STORM WATER MANAGEMENT MODEL - VERSION 5.1 (Build 5.1.013)

POC A POST

****
Element Count
****
Number of rain gages 1
Number of subcatchments ... 4
Number of nodes 3
Number of links 8
Number of pollutants 0
Number of land uses 0

****
Raingage Summary
****

Name	Data Source	Data Type	Recording Interval
Poway	POWAY	INTENSITY	60 min.

****
Subcatchment Summary
****

Name	Area	Width	%Imperv	%Slope	Rain Gage	Outlet
BMP5	0.28	75.00	0.00	0.5000	Poway	ST5
BMP6	0.23	60.00	0.00	0.5000	Poway	ST6
DMA5	2.34	300.00	85.00	4.0000	Poway	BMP5
DMA6	6.95	280.00	57.00	9.2000	Poway	BMP6

****
LID Control Summary
****

Subcatchment	LID Control	No. of Units	Unit Area	Unit Width	% Area Covered	% Imperv Treated	% Perv Treated
BMP5	LID5	1	4045.00	0.00	33.16	0.00	0.00
BMP6	LID6	1	5792.00	0.00	57.81	0.00	0.00

****
Node Summary
****

Name	Type	Invert Elev.	Max. Depth	Ponded Area	External Inflow
POC	OUTFALL	0.00	0.00	0.0	
ST5	STORAGE	0.00	5.50	0.0	
ST6	STORAGE	0.00	4.50	0.0	

****
Link Summary
****

Name	From Node	To Node	Type	Length	%Slope	Roughness
OR1	ST5	POC	ORIFICE			
OR2	ST5	POC	ORIFICE			
OR3	ST6	POC	ORIFICE			
OR4	ST6	POC	ORIFICE			
OR5	ST6	POC	ORIFICE			
OR6	ST6	POC	ORIFICE			
W1	ST5	POC	WEIR			
W2	ST6	POC	WEIR			

****
Cross Section Summary
****

Conduit	Shape	Full Depth	Full Area	Hyd. Rad.	Max. Width	No. of Barrels	Full Flow

```
*********************************************************
NOTE: The summary statistics displayed in this report are
based on results found at every computational time step,
not just on results from each reporting time step.
*********************************************************

****************
Analysis Options
****************
Flow Units ............... CFS
Process Models:
  Rainfall/Runoff ........ YES
  RDII ................... NO
  Snowmelt ............... NO
  Groundwater ............ NO
  Flow Routing ........... YES
  Ponding Allowed ........ NO
  Water Quality .......... NO
Infiltration Method ...... GREEN_AMPT
Flow Routing Method ...... KINWAVE
Starting Date ............ 10/04/1962 15:00:00
Ending Date .............. 05/23/2008 15:00:00
Antecedent Dry Days ...... 0.0
Report Time Step ......... 01:00:00
Wet Time Step ............ 00:10:00
Dry Time Step ............ 01:00:00
Routing Time Step ........ 60.00 sec


**************************        Volume         Depth
Runoff Quantity Continuity     acre-feet        inches
**************************     ---------       -------
Initial LID Storage ......         0.051         0.062
Total Precipitation ......       455.880       558.220
Evaporation Loss .........        59.970        73.432
Infiltration Loss ........       175.706       215.150
Surface Runoff ...........       221.238       270.903
LID Drainage .............         1.815         2.223
Final Storage ............         0.092         0.113
Continuity Error (%) .....        -0.634


**************************        Volume        Volume
Flow Routing Continuity        acre-feet      10^6 gal
**************************     ---------     ---------
Dry Weather Inflow .......         0.000         0.000
Wet Weather Inflow .......       223.050        72.684
Groundwater Inflow .......         0.000         0.000
RDII Inflow ..............         0.000         0.000
External Inflow ..........         0.000         0.000
External Outflow .........       223.003        72.669
Flooding Loss ............         0.000         0.000
Evaporation Loss .........         0.000         0.000
Exfiltration Loss ........         0.000         0.000
Initial Stored Volume ....         0.000         0.000
Final Stored Volume ......         0.005         0.002
Continuity Error (%) .....         0.019


********************************
Highest Flow Instability Indexes
********************************
All links are stable.


*************************
Routing Time Step Summary
*************************
Minimum Time Step           :    60.00 sec
Average Time Step           :    60.00 sec
Maximum Time Step           :    60.00 sec
Percent in Steady State     :     0.00
Average Iterations per Step :     1.00
Percent Not Converging      :     0.00


***************************
Subcatchment Runoff Summary
***************************
```

Subcatchment	Total Precip in	Total Runon in	Total Evap in	Total Infil in	Imperv Runoff in	Perv Runoff in	Total Runoff in	Total Runoff 10^6 gal	Peak Runoff CFS	Runoff Coeff
BMP5	558.22	3355.94	176.00	965.20	0.00	2755.97	2787.96	21.20	2.02	0.712
BMP6	558.22	8602.88	286.29	666.22	0.00	8187.74	8243.50	51.48	5.31	0.900
DMA5	558.22	0.00	82.88	77.04	395.50	6.08	401.58	25.52	1.85	0.719
DMA6	558.22	0.00	59.07	216.51	264.20	20.51	284.71	53.73	5.29	0.510

****
LID Performance Summary
****

Subcatchment	LID Control	Total Inflow in	Evap Loss in	Infil Loss in	Surface Outflow in	Drain Outflow in	Initial Storage in	Final Storage in	Continuity Error %
BMP5	LID5	558.22	461.62	0.00	0.00	96.48	2.70	2.80	0.00
BMP6	LID6	558.22	461.66	0.00	0.00	96.45	2.70	2.80	0.00

****
Node Depth Summary
****

Node	Type	Average Depth Feet	Maximum Depth Feet	Maximum HGL Feet	Time of Max Occurrence days hr:min	Reported Max Depth Feet
POC	OUTFALL	0.00	0.00	0.00	0 00:00	0.00
ST5	STORAGE	0.05	2.61	2.61	6348 09:01	2.61
ST6	STORAGE	0.01	3.35	3.35	6325 14:13	3.29

****
Node Inflow Summary
****

Node	Type	Maximum Lateral Inflow CFS	Maximum Total Inflow CFS	Time of Max Occurrence days hr:min	Lateral Inflow Volume 10^6 gal	Total Inflow Volume 10^6 gal	Flow Balance Error Percent
POC	OUTFALL	0.06	4.17	6325 14:13	0.591	72.7	0.000
ST5	STORAGE	1.99	1.99	6348 09:01	21	21	0.004
ST6	STORAGE	5.29	5.29	6348 09:11	51.1	51.1	0.025

****
Node Flooding Summary
****

No nodes were flooded.

****
Storage Volume Summary
****

	Average	Avg	Evap	Exfil	Maximum	Max	Time of Max	Maximum

Storage Unit	Volume 1000 ft3	Pcnt Full	Pcnt Loss	Pcnt Loss	Volume 1000 ft3	Pcnt Full	Occurrence days	hr:min	Outflow CFS
ST5	0.273	1	0	0	14.509	40	6348	09:01	1.99
ST6	0.086	0	0	0	24.619	70	6325	14:13	2.95

****
Outfall Loading Summary
****

Outfall Node	Flow Freq Pcnt	Avg Flow CFS	Max Flow CFS	Total Volume 10^6 gal
POC	14.79	0.05	4.17	72.664
System	14.79	0.05	4.17	72.664

****
Link Flow Summary
****

Link	Type	Maximum |Flow| CFS	Time of Max Occurrence days	hr:min	Maximum |Veloc| ft/sec	Max/ Full Flow	Max/ Full Depth
OR1	ORIFICE	0.04	6348	09:01			0.00
OR2	ORIFICE	0.03	6348	09:01			0.00
OR3	ORIFICE	0.75	6325	14:13			0.00
OR4	ORIFICE	0.20	6325	14:13			0.00
OR5	ORIFICE	0.20	6325	14:13			0.00
OR6	ORIFICE	0.20	6325	14:13			0.00
W1	WEIR	1.91	6348	09:01			0.00
W2	WEIR	1.60	6325	14:13			0.00

****
Conduit Surcharge Summary
****

No conduits were surcharged.

Analysis begun on: Mon Apr 6 11:09:51 2020
Analysis ended on: Mon Apr 6 11:11:30 2020
Total elapsed time: 00:01:39

EPA STORM WATER MANAGEMENT MODEL - VERSION 5.1 (Build 5.1.013)

POC B POST

****
Element Count
****
Number of rain gages 1
Number of subcatchments ... 8
Number of nodes 5
Number of links 15
Number of pollutants 0
Number of land uses 0

****
Raingage Summary
****

Name	Data Source	Data Type	Recording Interval
Poway	POWAY	INTENSITY	60 min.

****
Subcatchment Summary
****

Name	Area	Width	%Imperv	%Slope	Rain Gage	Outlet
BMP1	0.48	100.00	0.00	0.5000	Poway	ST1
BMP2	0.38	100.00	0.00	0.5000	Poway	ST2
BMP8	0.50	90.00	0.00	0.5000	Poway	ST8
BMP9	0.42	80.00	0.00	0.5000	Poway	ST9
DMA1	7.99	300.00	69.00	6.6000	Poway	BMP1
DMA2	8.26	275.00	58.00	6.1000	Poway	BMP2
DMA8	10.30	300.00	63.00	5.6000	Poway	BMP8
DMA9	6.54	350.00	85.00	6.2000	Poway	BMP9

****
LID Control Summary
****

Subcatchment	LID Control	No. of Units	Unit Area	Unit Width	% Area Covered	% Imperv Treated	% Perv Treated
BMP1	LID1	1	7614.00	0.00	36.41	0.00	0.00
BMP2	LID2	1	7784.00	0.00	47.02	0.00	0.00
BMP8	LID8	1	9529.00	0.00	43.75	0.00	0.00
BMP9	LID9	1	8914.00	0.00	48.72	0.00	0.00

****
Node Summary
****

Name	Type	Invert Elev.	Max. Depth	Ponded Area	External Inflow
POC	OUTFALL	0.00	0.00	0.0	
ST1	STORAGE	0.00	5.50	0.0	
ST2	STORAGE	0.00	5.50	0.0	
ST8	STORAGE	0.00	4.50	0.0	
ST9	STORAGE	0.00	4.50	0.0	

****
Link Summary
****

Name	From Node	To Node	Type	Length	%Slope	Roughness
OR1	ST1	POC	ORIFICE			
OR10	ST9	POC	ORIFICE			
OR11	ST9	POC	ORIFICE			
OR2	ST1	POC	ORIFICE			
OR3	ST2	POC	ORIFICE			
OR4	ST2	POC	ORIFICE			
OR5	ST2	POC	ORIFICE			
OR6	ST8	POC	ORIFICE			
OR7	ST8	POC	ORIFICE			
OR8	ST9	POC	ORIFICE			
OR9	ST9	POC	ORIFICE			

W1	ST1	POC	WEIR
W2	ST2	POC	WEIR
W3	ST8	POC	WEIR
W4	ST9	POC	WEIR

****
Cross Section Summary
****

Conduit	Shape	Full Depth	Full Area	Hyd. Rad.	Max. Width	No. of Barrels	Full Flow

****
NOTE: The summary statistics displayed in this report are
based on results found at every computational time step,
not just on results from each reporting time step.
****

****
Analysis Options
****

```
Flow Units ............... CFS
Process Models:
  Rainfall/Runoff ........ YES
  RDII ................... NO
  Snowmelt ............... NO
  Groundwater ............ NO
  Flow Routing ........... YES
  Ponding Allowed ........ NO
  Water Quality .......... NO
Infiltration Method ...... GREEN_AMPT
Flow Routing Method ...... KINWAVE
Starting Date ............ 10/04/1962 15:00:00
Ending Date .............. 05/23/2008 15:00:00
Antecedent Dry Days ...... 0.0
Report Time Step ......... 01:00:00
Wet Time Step ............ 00:10:00
Dry Time Step ............ 01:00:00
Routing Time Step ........ 60.00 sec
```

********** Runoff Quantity Continuity **********	Volume acre-feet	Depth inches
Initial LID Storage	0.175	0.060
Total Precipitation	1622.094	558.220
Evaporation Loss	237.424	81.706
Infiltration Loss	472.336	162.547
Surface Runoff	914.348	314.660
LID Drainage	6.244	2.149
Final Storage	0.353	0.122
Continuity Error (%)	-0.520	

********** Flow Routing Continuity **********	Volume acre-feet	Volume 10^6 gal
Dry Weather Inflow	0.000	0.000
Wet Weather Inflow	920.584	299.986
Groundwater Inflow	0.000	0.000
RDII Inflow	0.000	0.000
External Inflow	0.000	0.000
External Outflow	920.440	299.939
Flooding Loss	0.000	0.000
Evaporation Loss	0.000	0.000
Exfiltration Loss	0.000	0.000
Initial Stored Volume	0.000	0.000
Final Stored Volume	0.010	0.003
Continuity Error (%)	0.015	

****
Highest Flow Instability Indexes
****
All links are stable.

****

```
  Routing Time Step Summary
  *************************
  Minimum Time Step           :    60.00 sec
  Average Time Step           :    60.00 sec
  Maximum Time Step           :    60.00 sec
  Percent in Steady State     :     0.00
  Average Iterations per Step :     1.00
  Percent Not Converging      :     0.00


  ***************************
  Subcatchment Runoff Summary
  ***************************

  -----------------------------------------------------------------------------------------------------------
-------------------
                           Total      Total      Total      Total     Imperv       Perv      Total
Total     Peak  Runoff
                          Precip      Runon       Evap      Infil     Runoff     Runoff     Runoff
Runoff   Runoff   Coeff
  Subcatchment                in         in         in         in         in         in         in    10^6
gal      CFS
  -----------------------------------------------------------------------------------------------------------
-------------------
  BMP1                    558.22    5901.53     205.09     545.66       0.00    5691.66    5726.78
74.64     6.49   0.887
  BMP2                    558.22    6739.28     246.98     494.63       0.00    6531.83    6577.19
67.87     6.36   0.901
  BMP8                    558.22    6607.59     232.58     603.09       0.00    6306.39    6348.59
86.19     7.90   0.886
  BMP9                    558.22    6390.27     255.35     465.67       0.00    6202.12    6249.11
71.27     5.42   0.899
  DMA1                    558.22       0.00      75.54     130.18     318.11      36.43     354.55
76.92     6.30   0.635
  DMA2                    558.22       0.00      65.96     184.04     267.45      42.60     310.05
69.54     6.32   0.555
  DMA8                    558.22       0.00      69.34     169.75     289.48      31.28     320.77
89.71     7.85   0.575
  DMA9                    558.22       0.00      87.24      63.04     392.46      17.94     410.40
72.88     5.22   0.735


  **********************
  LID Performance Summary
  **********************

  -----------------------------------------------------------------------------------------------------------
---------
                                        Total      Evap     Infil   Surface    Drain    Initial     Final
Continuity
                                       Inflow      Loss      Loss   Outflow   Outflow   Storage   Storage
Error
  Subcatchment      LID Control            in        in        in        in        in        in        in
%
  -----------------------------------------------------------------------------------------------------------
---------
  BMP1              LID1               558.22    461.66      0.00      0.00     96.45      2.70      2.80
0.00
  BMP2              LID2               558.22    461.66      0.00      0.00     96.45      2.70      2.80
0.00
  BMP8              LID8               558.22    461.66      0.00      0.00     96.45      2.70      2.80
0.00
  BMP9              LID9               558.22    461.66      0.00      0.00     96.45      2.70      2.80
0.00

  *****************
  Node Depth Summary
  *****************

  -------------------------------------------------------------------------------
                                 Average  Maximum  Maximum  Time of Max    Reported
                                   Depth    Depth      HGL   Occurrence   Max Depth
  Node                 Type         Feet     Feet     Feet  days hr:min        Feet
  -------------------------------------------------------------------------------
  POC                  OUTFALL      0.00     0.00     0.00     0  00:00        0.00
  ST1                  STORAGE      0.06     4.25     4.25  6348  09:06        4.24
  ST2                  STORAGE      0.03     4.06     4.06  6325  14:27        4.02
  ST8                  STORAGE      0.03     3.93     3.93  6325  14:12        3.92
  ST9                  STORAGE      0.02     3.01     3.01  6325  14:30        2.99
```

****
Node Inflow Summary
****

Node	Type	Maximum Lateral Inflow CFS	Maximum Total Inflow CFS	Time of Max Occurrence days hr:min	Lateral Inflow Volume 10^6 gal	Total Inflow Volume 10^6 gal	Flow Balance Error Percent
POC	OUTFALL	0.16	12.14	6325 14:12	2.03	300	0.000
ST1	STORAGE	6.47	6.47	7475 13:01	74.2	74.2	0.010
ST2	STORAGE	6.33	6.33	7475 13:11	67.4	67.4	0.016
ST8	STORAGE	7.87	7.87	6348 09:11	85.6	85.6	0.014
ST9	STORAGE	5.39	5.39	6348 09:01	70.7	70.7	0.018

****
Node Flooding Summary
****

No nodes were flooded.

****
Storage Volume Summary
****

Storage Unit	Average Volume 1000 ft3	Avg Pcnt Full	Evap Pcnt Loss	Exfil Pcnt Loss	Maximum Volume 1000 ft3	Max Pcnt Full	Time of Max Occurrence days hr:min	Maximum Outflow CFS
ST1	0.525	1	0	0	41.173	73	6348 09:05	6.41
ST2	0.228	0	0	0	39.158	70	6325 14:26	2.34
ST8	0.352	1	0	0	48.263	85	6325 14:11	4.90
ST9	0.168	0	0	0	31.617	63	6325 14:29	1.62

****
Outfall Loading Summary
****

Outfall Node	Flow Freq Pcnt	Avg Flow CFS	Max Flow CFS	Total Volume 10^6 gal
POC	18.65	0.15	12.14	299.917
System	18.65	0.15	12.14	299.917

****
Link Flow Summary
****

Link	Type	Maximum |Flow| CFS	Time of Max Occurrence days hr:min	Maximum |Veloc| ft/sec	Max/ Full Flow	Max/ Full Depth
OR1	ORIFICE	0.22	6348 09:06			0.00
OR10	ORIFICE	0.28	6325 14:30			0.00
OR11	ORIFICE	0.28	6325 14:30			0.00
OR2	ORIFICE	0.17	6348 09:06			0.00
OR3	ORIFICE	0.47	6325 14:27			0.00
OR4	ORIFICE	0.58	6325 14:27			0.00
OR5	ORIFICE	0.58	6325 14:27			0.00
OR6	ORIFICE	0.46	6325 14:12			0.00
OR7	ORIFICE	0.62	6325 14:12			0.00
OR8	ORIFICE	0.71	6325 14:30			0.00
OR9	ORIFICE	0.28	6325 14:30			0.00
W1	WEIR	6.03	6348 09:06			0.00
W2	WEIR	0.72	6325 14:27			0.00
W3	WEIR	3.82	6325 14:12			0.00
W4	WEIR	0.08	6325 14:30			0.00

****
Conduit Surcharge Summary

```
*************************

No conduits were surcharged.


Analysis begun on:  Tue Jan 28 17:28:58 2020
Analysis ended on:  Tue Jan 28 17:31:32 2020
Total elapsed time: 00:02:34
```

EPA STORM WATER MANAGEMENT MODEL - VERSION 5.1 (Build 5.1.013)

POC C POST

****
Element Count
****
Number of rain gages 1
Number of subcatchments ... 2
Number of nodes 2
Number of links 2
Number of pollutants 0
Number of land uses 0

****
Raingage Summary
****

Name	Data Source	Data Type	Recording Interval
Poway	POWAY	INTENSITY	60 min.

****
Subcatchment Summary
****

Name	Area	Width	%Imperv	%Slope	Rain Gage	Outlet
BMP16	0.27	100.00	0.00	0.5000	Poway	ST1
DMA16	5.47	270.00	85.00	3.1000	Poway	BMP16

****
LID Control Summary
****

Subcatchment	LID Control	No. of Units	Unit Area	Unit Width	% Area Covered	% Imperv Treated	% Perv Treated
BMP16	LID	1	5615.00	0.00	47.74	0.00	0.00

****
Node Summary
****

Name	Type	Invert Elev.	Max. Depth	Ponded Area	External Inflow
POC	OUTFALL	0.00	0.00	0.0	
ST1	STORAGE	0.00	4.50	0.0	

****
Link Summary
****

Name	From Node	To Node	Type	Length	%Slope	Roughness
OR1	ST1	POC	ORIFICE			
W1	ST1	POC	WEIR			

****
Cross Section Summary
****

Conduit	Shape	Full Depth	Full Area	Hyd. Rad.	Max. Width	No. of Barrels	Full Flow

****
NOTE: The summary statistics displayed in this report are
based on results found at every computational time step,
not just on results from each reporting time step.
****

****
Analysis Options
****
Flow Units ..... CFS

```
  Process Models:
    Rainfall/Runoff ........ YES
    RDII ................... NO
    Snowmelt ............... NO
    Groundwater ............ NO
    Flow Routing ........... YES
    Ponding Allowed ........ NO
    Water Quality .......... NO
  Infiltration Method ...... GREEN_AMPT
  Flow Routing Method ...... KINWAVE
  Starting Date ............ 10/04/1962 15:00:00
  Ending Date .............. 05/23/2008 15:00:00
  Antecedent Dry Days ...... 0.0
  Report Time Step ......... 01:00:00
  Wet Time Step ............ 00:10:00
  Dry Time Step ............ 01:00:00
  Routing Time Step ........ 60.00 sec


  **************************        Volume         Depth
  Runoff Quantity Continuity     acre-feet        inches
  **************************     ---------       -------
  Initial LID Storage ......         0.029         0.061
  Total Precipitation ......       267.015       558.220
  Evaporation Loss .........        46.367        96.935
  Infiltration Loss ........        37.976        79.392
  Surface Runoff ...........       183.051       382.685
  LID Drainage .............         1.036         2.167
  Final Storage ............         0.065         0.137
  Continuity Error (%) .....        -0.544


  **************************        Volume        Volume
  Flow Routing Continuity        acre-feet      10^6 gal
  **************************     ---------     ---------
  Dry Weather Inflow .......         0.000         0.000
  Wet Weather Inflow .......       184.085        59.987
  Groundwater Inflow .......         0.000         0.000
  RDII Inflow ..............         0.000         0.000
  External Inflow ..........         0.000         0.000
  External Outflow .........       184.043        59.973
  Flooding Loss ............         0.000         0.000
  Evaporation Loss .........         0.000         0.000
  Exfiltration Loss ........         0.000         0.000
  Initial Stored Volume ....         0.000         0.000
  Final Stored Volume ......         0.004         0.001
  Continuity Error (%) .....         0.020


  *******************************
  Highest Flow Instability Indexes
  *******************************
  All links are stable.


  *************************
  Routing Time Step Summary
  *************************
  Minimum Time Step           :    60.00 sec
  Average Time Step           :    60.00 sec
  Maximum Time Step           :    60.00 sec
  Percent in Steady State     :     0.00
  Average Iterations per Step :     1.00
  Percent Not Converging      :     0.00


  ***************************
  Subcatchment Runoff Summary
  ***************************

  ---------------------------------------------------------------------------------------------------------------
-------------------
                          Total      Total      Total      Total     Imperv       Perv      Total
Total     Peak  Runoff
                         Precip      Runon       Evap      Infil     Runoff     Runoff     Runoff
Runoff   Runoff   Coeff
  Subcatchment                 in         in         in         in         in         in         in    10^6
gal      CFS
  ---------------------------------------------------------------------------------------------------------------
-------------------
```

```
  BMP16                    558.22    8293.89     252.93     441.75       0.00    8135.60    8181.66
59.98     4.53   0.924
  DMA16                    558.22       0.00      89.24      61.51     390.20      19.20     409.40
60.81     4.37   0.733


  **********************
  LID Performance Summary
  **********************

  ------------------------------------------------------------------------------------------------------
---------
                                        Total      Evap     Infil   Surface    Drain    Initial     Final
Continuity
                                       Inflow      Loss      Loss   Outflow   Outflow   Storage   Storage
Error
  Subcatchment      LID Control             in        in        in        in        in        in        in
%
  ------------------------------------------------------------------------------------------------------
---------
  BMP16             LID                 558.22    461.62      0.00      0.00     96.48      2.70      2.80
0.00

  ******************
  Node Depth Summary
  ******************

  -------------------------------------------------------------------------------
                                Average  Maximum  Maximum  Time of Max    Reported
                                  Depth    Depth      HGL   Occurrence   Max Depth
  Node                 Type        Feet     Feet     Feet  days hr:min        Feet
  -------------------------------------------------------------------------------
  POC                  OUTFALL     0.00     0.00     0.00     0  00:00        0.00
  ST1                  STORAGE     0.02     3.87     3.87  6325  14:14        3.80


  *******************
  Node Inflow Summary
  *******************

  ----------------------------------------------------------------------------------------------------
                                Maximum  Maximum                  Lateral       Total        Flow
                                Lateral    Total  Time of Max      Inflow      Inflow     Balance
                                 Inflow   Inflow   Occurrence      Volume      Volume       Error
  Node                 Type         CFS      CFS  days hr:min    10^6 gal    10^6 gal     Percent
  ----------------------------------------------------------------------------------------------------
  POC                  OUTFALL     0.07     2.61  6325  14:14       0.338          60       0.000
  ST1                  STORAGE     4.47     4.47  6348  09:01        59.6        59.6       0.021


  *********************
  Node Flooding Summary
  *********************

  No nodes were flooded.


  **********************
  Storage Volume Summary
  **********************

  ----------------------------------------------------------------------------------------------------
                        Average     Avg  Evap Exfil       Maximum     Max    Time of Max    Maximum
                         Volume    Pcnt  Pcnt  Pcnt        Volume    Pcnt     Occurrence    Outflow
  Storage Unit          1000 ft3    Full  Loss  Loss      1000 ft3    Full    days hr:min        CFS
  ----------------------------------------------------------------------------------------------------
  ST1                      0.123       0     0     0        28.665      83    6325  14:13       2.55


  ***********************
  Outfall Loading Summary
  ***********************

  ------------------------------------------------------------
                        Flow       Avg       Max       Total
                        Freq      Flow      Flow      Volume
  Outfall Node          Pcnt       CFS       CFS    10^6 gal
  ------------------------------------------------------------
  POC                   9.21      0.06      2.61      59.969
  ------------------------------------------------------------
  System                9.21      0.06      2.61      59.969
```

****
Link Flow Summary
****

Link	Type	Maximum |Flow| CFS	Time of Max Occurrence days hr:min	Maximum |Veloc| ft/sec	Max/ Full Flow	Max/ Full Depth
OR1	ORIFICE	0.62	6325 14:14			0.00
W1	WEIR	1.93	6325 14:14			0.00

****
Conduit Surcharge Summary
****

No conduits were surcharged.

Analysis begun on: Tue Jan 28 17:33:44 2020
Analysis ended on: Tue Jan 28 17:34:26 2020
Total elapsed time: 00:00:42

EPA STORM WATER MANAGEMENT MODEL - VERSION 5.1 (Build 5.1.013)

POC D POST

****
Element Count
****
Number of rain gages 1
Number of subcatchments ... 4
Number of nodes 3
Number of links 6
Number of pollutants 0
Number of land uses 0

****
Raingage Summary
****

Name	Data Source	Data Type	Recording Interval
Poway	POWAY	INTENSITY	60 min.

****
Subcatchment Summary
****

Name	Area	Width	%Imperv	%Slope	Rain Gage	Outlet
BMP17	0.39	75.00	0.00	0.5000	Poway	ST17
BMP18	0.24	60.00	0.00	0.5000	Poway	ST18
DMA17	5.17	250.00	85.00	1.3800	Poway	BMP17
DMA18	4.48	300.00	85.00	1.4000	Poway	BMP18

****
LID Control Summary
****

Subcatchment	LID Control	No. of Units	Unit Area	Unit Width	% Area Covered	% Imperv Treated	% Perv Treated
BMP17	LID18	1	5109.00	0.00	30.07	0.00	0.00
BMP18	LID18	1	4914.00	0.00	47.00	0.00	0.00

****
Node Summary
****

Name	Type	Invert Elev.	Max. Depth	Ponded Area	External Inflow
POC	OUTFALL	0.00	0.00	0.0	
ST17	STORAGE	0.00	5.50	0.0	
ST18	STORAGE	0.00	4.50	0.0	

****
Link Summary
****

Name	From Node	To Node	Type	Length	%Slope	Roughness
OR1	ST18	POC	ORIFICE			
OR2	ST18	POC	ORIFICE			
OR3	ST17	POC	ORIFICE			
OR4	ST17	POC	ORIFICE			
W1	ST18	POC	WEIR			
W2	ST17	POC	WEIR			

****
Cross Section Summary
****

Conduit	Shape	Full Depth	Full Area	Hyd. Rad.	Max. Width	No. of Barrels	Full Flow

****
NOTE: The summary statistics displayed in this report are

```
based on results found at every computational time step,
not just on results from each reporting time step.
**********************************************************

****************
Analysis Options
****************
Flow Units ............... CFS
Process Models:
  Rainfall/Runoff ........ YES
  RDII ................... NO
  Snowmelt ............... NO
  Groundwater ............ NO
  Flow Routing ........... YES
  Ponding Allowed ........ NO
  Water Quality .......... NO
Infiltration Method ...... GREEN_AMPT
Flow Routing Method ...... KINWAVE
Starting Date ............ 10/04/1962 15:00:00
Ending Date .............. 05/23/2008 15:00:00
Antecedent Dry Days ...... 0.0
Report Time Step ......... 01:00:00
Wet Time Step ............ 00:10:00
Dry Time Step ............ 01:00:00
Routing Time Step ........ 60.00 sec


**************************        Volume         Depth
Runoff Quantity Continuity     acre-feet        inches
**************************     ---------       -------
Initial LID Storage ......         0.052         0.060
Total Precipitation ......       478.208       558.220
Evaporation Loss .........        83.754        97.767
Infiltration Loss ........        77.418        90.371
Surface Runoff ...........       317.312       370.403
LID Drainage .............         1.849         2.159
Final Storage ............         0.120         0.140
Continuity Error (%) .....        -0.458


**************************        Volume        Volume
Flow Routing Continuity        acre-feet      10^6 gal
**************************     ---------     ---------
Dry Weather Inflow .......         0.000         0.000
Wet Weather Inflow .......       319.159       104.003
Groundwater Inflow .......         0.000         0.000
RDII Inflow ..............         0.000         0.000
External Inflow ..........         0.000         0.000
External Outflow .........       319.105       103.985
Flooding Loss ............         0.000         0.000
Evaporation Loss .........         0.000         0.000
Exfiltration Loss ........         0.000         0.000
Initial Stored Volume ....         0.000         0.000
Final Stored Volume ......         0.002         0.001
Continuity Error (%) .....         0.016


********************************
Highest Flow Instability Indexes
********************************
All links are stable.


*************************
Routing Time Step Summary
*************************
Minimum Time Step           :    60.00 sec
Average Time Step           :    60.00 sec
Maximum Time Step           :    60.00 sec
Percent in Steady State     :     0.00
Average Iterations per Step :     1.00
Percent Not Converging      :     0.00


***************************
Subcatchment Runoff Summary
***************************

  ---------------------------------------------------------------------------------------------------------------
-------------------
```

Subcatchment	Total Precip in	Total Runon in	Total Evap in	Total Infil in	Imperv Runoff in	Perv Runoff in	Total Runoff in	Total Runoff 10^6 gal	Peak Runoff CFS	Runoff Coeff
BMP17	558.22	5383.73	181.52	571.24	0.00	5172.36	5201.37	55.08	4.31	0.875
BMP18	558.22	7626.57	250.46	449.84	0.00	7460.50	7505.84	48.91	3.69	0.917
DMA17	558.22	0.00	91.38	62.17	387.68	18.46	406.13	57.01	4.12	0.728
DMA18	558.22	0.00	89.66	61.79	389.68	18.90	408.58	49.70	3.58	0.732

****
LID Performance Summary
****

Subcatchment	LID Control	Total Inflow in	Evap Loss in	Infil Loss in	Surface Outflow in	Drain Outflow in	Initial Storage in	Final Storage in	Continuity Error %
BMP17	LID18	558.22	461.66	0.00	0.00	96.45	2.70	2.80	0.00
BMP18	LID18	558.22	461.66	0.00	0.00	96.45	2.70	2.80	0.00

****
Node Depth Summary
****

Node	Type	Average Depth Feet	Maximum Depth Feet	Maximum HGL Feet	Time of Max Occurrence days hr:min	Reported Max Depth Feet
POC	OUTFALL	0.00	0.00	0.00	0 00:00	0.00
ST17	STORAGE	0.02	3.61	3.61	6325 14:05	3.61
ST18	STORAGE	0.04	3.41	3.41	6348 09:06	3.41

****
Node Inflow Summary
****

Node	Type	Maximum Lateral Inflow CFS	Maximum Total Inflow CFS	Time of Max Occurrence days hr:min	Lateral Inflow Volume 10^6 gal	Total Inflow Volume 10^6 gal	Flow Balance Error Percent
POC	OUTFALL	0.05	4.99	6325 14:04	0.603	104	0.000
ST17	STORAGE	4.29	4.29	7475 13:01	54.8	54.8	0.020
ST18	STORAGE	3.66	3.66	6348 09:01	48.6	48.6	0.013

****
Node Flooding Summary
****

No nodes were flooded.

****
Storage Volume Summary
****

Storage Unit	Average Volume 1000 ft3	Avg Pcnt Full	Evap Pcnt Loss	Exfil Pcnt Loss	Maximum Volume 1000 ft3	Max Pcnt Full	Time of Max Occurrence days hr:min	Maximum Outflow CFS

ST17	0.128	0	0	0	23.585	60	6325	14:04	2.67
ST18	0.226	1	0	0	21.313	72	6348	09:04	3.65

****
Outfall Loading Summary
****

Outfall Node	Flow Freq Pcnt	Avg Flow CFS	Max Flow CFS	Total Volume 10^6 gal
POC	12.15	0.08	4.99	103.977
System	12.15	0.08	4.99	103.977

****
Link Flow Summary
****

Link	Type	Maximum |Flow| CFS	Time of Max Occurrence days hr:min	Maximum |Veloc| ft/sec	Max/ Full Flow	Max/ Full Depth
OR1	ORIFICE	0.19	6348 09:06			0.00
OR2	ORIFICE	0.27	6348 09:06			0.00
OR3	ORIFICE	0.44	6325 14:05			0.00
OR4	ORIFICE	0.50	6325 14:05			0.00
W1	WEIR	3.18	6348 09:06			0.00
W2	WEIR	1.72	6325 14:05			0.00

****
Conduit Surcharge Summary
****

No conduits were surcharged.

Analysis begun on: Fri Apr 3 11:46:08 2020
Analysis ended on: Fri Apr 3 11:47:47 2020
Total elapsed time: 00:01:39

EPA STORM WATER MANAGEMENT MODEL - VERSION 5.1 (Build 5.1.013)

POC E POST

****
Element Count
****
Number of rain gages 1
Number of subcatchments ... 2
Number of nodes 2
Number of links 4
Number of pollutants 0
Number of land uses 0

****
Raingage Summary
****

Name	Data Source	Data Type	Recording Interval
Poway	POWAY	INTENSITY	60 min.

****
Subcatchment Summary
****

Name	Area	Width	%Imperv	%Slope	Rain Gage	Outlet
BMP11	0.58	130.00	0.00	0.5000	Poway	ST1
DMA11	14.35	290.00	70.00	5.7000	Poway	BMP11

****
LID Control Summary
****

Subcatchment	LID Control	No. of Units	Unit Area	Unit Width	% Area Covered	% Imperv Treated	% Perv Treated
BMP11	LID	1	14666.00	0.00	58.05	0.00	0.00

****
Node Summary
****

Name	Type	Invert Elev.	Max. Depth	Ponded Area	External Inflow
POC	OUTFALL	0.00	0.00	0.0	
ST1	STORAGE	0.00	7.50	0.0	

****
Link Summary
****

Name	From Node	To Node	Type	Length	%Slope	Roughness
OR1	ST1	POC	ORIFICE			
OR2	ST1	POC	ORIFICE			
OR3	ST1	POC	ORIFICE			
W1	ST1	POC	WEIR			

****
Cross Section Summary
****

Conduit	Shape	Full Depth	Full Area	Hyd. Rad.	Max. Width	No. of Barrels	Full Flow

****
NOTE: The summary statistics displayed in this report are
based on results found at every computational time step,
not just on results from each reporting time step.
****

****
Analysis Options

```
  ****************
  Flow Units ............... CFS
  Process Models:
    Rainfall/Runoff ........ YES
    RDII ................... NO
    Snowmelt ............... NO
    Groundwater ............ NO
    Flow Routing ........... YES
    Ponding Allowed ........ NO
    Water Quality .......... NO
  Infiltration Method ...... GREEN_AMPT
  Flow Routing Method ...... KINWAVE
  Starting Date ............ 10/04/1962 15:00:00
  Ending Date .............. 05/23/2008 15:00:00
  Antecedent Dry Days ...... 0.0
  Report Time Step ......... 01:00:00
  Wet Time Step ............ 00:10:00
  Dry Time Step ............ 01:00:00
  Routing Time Step ........ 60.00 sec


  **************************        Volume         Depth
  Runoff Quantity Continuity     acre-feet        inches
  **************************     ---------       -------
  Initial LID Storage ......         0.076        0.061
  Total Precipitation ......       694.519      558.220
  Evaporation Loss .........       104.082       83.656
  Infiltration Loss ........       207.943      167.134
  Surface Runoff ...........       382.304      307.277
  LID Drainage .............         2.706        2.175
  Final Storage ............         0.158        0.127
  Continuity Error (%) .....        -0.374


  **************************        Volume        Volume
  Flow Routing Continuity        acre-feet      10^6 gal
  **************************     ---------     ---------
  Dry Weather Inflow .......         0.000        0.000
  Wet Weather Inflow .......       385.007      125.460
  Groundwater Inflow .......         0.000        0.000
  RDII Inflow ..............         0.000        0.000
  External Inflow ..........         0.000        0.000
  External Outflow .........       384.987      125.454
  Flooding Loss ............         0.000        0.000
  Evaporation Loss .........         0.000        0.000
  Exfiltration Loss ........         0.000        0.000
  Initial Stored Volume ....         0.000        0.000
  Final Stored Volume ......         0.004        0.001
  Continuity Error (%) .....         0.004


  *******************************
  Highest Flow Instability Indexes
  *******************************
  All links are stable.


  ************************
  Routing Time Step Summary
  ************************
  Minimum Time Step           :    60.00 sec
  Average Time Step           :    60.00 sec
  Maximum Time Step           :    60.00 sec
  Percent in Steady State     :     0.00
  Average Iterations per Step :     1.00
  Percent Not Converging      :     0.00


  ***************************
  Subcatchment Runoff Summary
  ***************************

  ---------------------------------------------------------------------------------------------------------------
-------------------
                          Total      Total      Total      Total     Imperv       Perv      Total
Total     Peak  Runoff
                         Precip      Runon       Evap      Infil     Runoff     Runoff     Runoff
Runoff   Runoff   Coeff
  Subcatchment                in         in         in         in         in         in         in    10^6
gal      CFS
```

```
  ------------------------------------------------------------------------------------------------------------------
-------------------
  BMP11                    558.22    8312.26     289.65     635.94       0.00    7909.75    7965.73
125.45    10.86   0.898
  DMA11                    558.22       0.00      75.33     148.19     319.42      16.55     335.98
130.91    10.81   0.602


  **********************
  LID Performance Summary
  **********************

  ------------------------------------------------------------------------------------------------------------------
---------
                                        Total      Evap     Infil   Surface    Drain    Initial     Final
Continuity
                                       Inflow      Loss      Loss   Outflow   Outflow   Storage   Storage
Error
  Subcatchment      LID Control             in        in        in        in        in        in        in
%
  ------------------------------------------------------------------------------------------------------------------
---------
  BMP11             LID                 558.22    461.66      0.00      0.00     96.45      2.70      2.80
0.00

  *****************
  Node Depth Summary
  *****************

  -------------------------------------------------------------------------------
                                Average  Maximum  Maximum  Time of Max    Reported
                                  Depth    Depth      HGL   Occurrence   Max Depth
  Node                 Type        Feet     Feet     Feet  days hr:min        Feet
  -------------------------------------------------------------------------------
  POC                  OUTFALL     0.00     0.00     0.00     0  00:00        0.00
  ST1                  STORAGE     0.18     5.83     5.83  6348  09:13        5.78


  ******************
  Node Inflow Summary
  ******************

  ----------------------------------------------------------------------------------------------------
                                Maximum  Maximum                  Lateral       Total        Flow
                                Lateral    Total  Time of Max      Inflow      Inflow     Balance
                                 Inflow   Inflow   Occurrence      Volume      Volume       Error
  Node                 Type         CFS      CFS  days hr:min    10^6 gal    10^6 gal     Percent
  ----------------------------------------------------------------------------------------------------
  POC                  OUTFALL     0.07    10.29  6348  09:13       0.882         125       0.000
  ST1                  STORAGE    10.82    10.82  6348  09:11         125         125       0.004


  *********************
  Node Flooding Summary
  *********************

  No nodes were flooded.


  **********************
  Storage Volume Summary
  **********************

  ----------------------------------------------------------------------------------------------------
                        Average     Avg  Evap Exfil       Maximum     Max    Time of Max    Maximum
                         Volume    Pcnt  Pcnt  Pcnt        Volume    Pcnt     Occurrence    Outflow
  Storage Unit         1000 ft3    Full  Loss  Loss      1000 ft3    Full    days hr:min        CFS
  ----------------------------------------------------------------------------------------------------
  ST1                     2.927       2     0     0       105.030      74    6348  09:12      10.24


  **********************
  Outfall Loading Summary
  **********************

  ------------------------------------------------------------
                        Flow       Avg       Max       Total
                        Freq      Flow      Flow      Volume
  Outfall Node          Pcnt       CFS       CFS    10^6 gal
  ------------------------------------------------------------
  POC                  28.14      0.04     10.29     125.444
```

```
-------------------------------------------------------------
System                28.14      0.04     10.29     125.444


********************
Link Flow Summary
********************

-------------------------------------------------------------------------------
                                Maximum  Time of Max   Maximum    Max/    Max/
                                 |Flow|   Occurrence   |Veloc|    Full    Full
Link                 Type          CFS  days hr:min    ft/sec    Flow   Depth
-------------------------------------------------------------------------------
OR1                  ORIFICE      0.14  6348  09:13                      0.00
OR2                  ORIFICE      0.26  6348  09:13                      0.00
OR3                  ORIFICE      0.42  6348  09:13                      0.00
W1                   WEIR         9.42  6348  09:13                      0.00


*************************
Conduit Surcharge Summary
*************************

No conduits were surcharged.


Analysis begun on:  Tue Jan 28 17:41:22 2020
Analysis ended on:  Tue Jan 28 17:42:07 2020
Total elapsed time: 00:00:45
```

ATTACHMENT F

Flow Frequency Statistical Analysis

Pre-project Flow Frequency - Long-term Simulation

Statistics - Node POC A Total Inflow

Rank	Start Date	Event Duration (hours)	Event Peak (CFS)	Exceedance Frequency (percent)	Return Period (years)
1	2/18/1980	74	6.02	0.5	47
2	3/24/1983	11	5.262	1	23.5
3	1/9/1978	25	5.125	1.49	15.67
4	1/25/1995	4	5.063	1.99	11.75
5	3/17/1982	10	4.71	2.49	9.4
7	2/3/1998	6	4.521	3.48	6.71
7	2/8/1998	6	4.521	3.48	6.71
8	12/28/2004	19	4.133	3.98	5.88
9	11/12/1976	3	3.944	4.48	5.22
10	2/14/1998	6	3.919	4.98	4.7
11	12/18/1978	4	3.9	5.47	4.27
12	12/29/1978	3	3.844	5.97	3.92
13	11/5/1987	2	3.791	6.47	3.62
14	2/28/1970	3	3.641	6.97	3.36
15	3/1/1983	36	3.609	7.46	3.13
16	1/29/1980	42	3.551	7.96	2.94
17	4/18/1995	6	3.54	8.46	2.76
18	1/6/1974	29	3.481	8.96	2.61
19	3/17/1963	4	3.479	9.45	2.47
20	1/9/2005	7	3.408	9.95	2.35
21	2/8/1983	6	3.36	10.45	2.24
22	1/6/1979	4	3.321	10.95	2.14
23	11/29/1982	22	3.131	11.44	2.04
24	1/4/1995	8	2.847	11.94	1.96
25	2/16/1980	5	2.804	12.44	1.88
27	2/27/2001	4	2.729	13.43	1.74
27	2/12/2003	4	2.729	13.43	1.74
28	11/22/1965	16	2.715	13.93	1.68
29	2/6/1976	31	2.604	14.43	1.62
30	11/16/1972	4	2.564	14.93	1.57
31	2/21/2005	11	2.493	15.42	1.52
32	11/30/2007	4	2.486	15.92	1.47
33	12/5/1966	14	2.44	16.42	1.42
34	2/17/1998	4	2.39	16.92	1.38
35	3/8/1974	4	2.365	17.41	1.34
36	4/1/1982	3	2.317	17.91	1.31
37	2/8/1993	3	2.299	18.41	1.27
38	2/21/2000	3	2.288	18.91	1.24
39	4/20/1988	40	2.215	19.4	1.21
40	1/25/1969	7	2.139	19.9	1.17
41	1/18/1993	14	2.116	20.4	1.15
42	2/15/1992	4	2.082	20.9	1.12
43	3/5/1995	10	2.048	21.39	1.09
44	2/8/1976	10	1.937	21.89	1.07
45	1/13/1993	11	1.864	22.39	1.04
46	1/9/1998	26	1.854	22.89	1.02
47	12/6/1966	3	1.786	23.38	1
48	4/14/2003	4	1.778	23.88	0.98
49	12/4/1974	2	1.754	24.38	0.96
50	2/6/1998	3	1.742	24.88	0.94
51	10/27/2004	12	1.618	25.37	0.92
52	4/8/1975	9	1.576	25.87	0.9
53	12/16/2002	3	1.499	26.37	0.89
54	11/16/1965	7	1.488	26.87	0.87
55	1/31/1996	3	1.475	27.36	0.85
56	11/22/1996	2	1.474	27.86	0.84
57	10/20/2004	7	1.461	28.36	0.82
58	1/16/1978	8	1.426	28.86	0.81

(years)

10-year Q:	4.800	cfs
5-year Q:	3.933	cfs
2-year Q:	2.989	cfs
Lower Flow Threshold:	50%	
0.5xQ2:	1.495	cfs

Pre-project Flow Frequency - Long-term Simulation

Statistics - Node POC B Total Inflow

Rank	Start Date	Event Duration (hours)	Event Peak (CFS)	Exceedance Frequency (percent)	Return Period (years)
1	2/18/1980	81	19.818	0.3	47
2	3/24/1983	15	18.868	0.59	23.5
3	1/9/1978	31	17.934	0.89	15.67
4	1/25/1995	17	16.161	1.18	11.75
5	2/8/1998	18	16.103	1.48	9.4
6	11/12/1976	4	15.89	1.78	7.83
7	2/28/1970	5	15.74	2.07	6.71
8	3/17/1982	22	15.712	2.37	5.88
9	2/3/1998	31	15.375	2.66	5.22
10	12/28/1978	41	15.094	2.96	4.7
11	12/17/1978	42	14.918	3.25	4.27
12	1/27/1980	71	14.781	3.55	3.92
13	3/1/1983	69	14.597	3.85	3.62
14	1/5/1979	26	13.689	4.14	3.36
15	12/28/2004	22	13.601	4.44	3.13
16	2/14/1998	13	13.151	4.73	2.94
17	1/6/1974	34	13.057	5.03	2.76
18	11/29/1982	26	12.839	5.33	2.61
19	2/8/1983	8	12.685	5.62	2.47
20	11/5/1987	4	12.49	5.92	2.35
21	4/18/1995	8	11.943	6.21	2.24
22	1/9/2005	56	11.905	6.51	2.14
23	2/8/1993	7	11.078	6.8	2.04
24	11/30/2007	14	10.841	7.1	1.96
25	2/27/2001	14	10.748	7.4	1.88
26	2/11/2003	33	10.5	7.69	1.81
27	4/1/1982	7	10.475	7.99	1.74
28	11/22/1965	29	10.362	8.28	1.68
29	2/15/1980	29	10.053	8.58	1.62
30	3/17/1963	8	10.035	8.88	1.57
31	1/4/1995	10	9.986	9.17	1.52
32	2/20/2000	42	9.765	9.47	1.47
33	2/17/1998	13	9.642	9.76	1.42
34	3/8/1974	12	9.507	10.06	1.38
35	12/4/1974	5	9.474	10.36	1.34
36	11/16/1972	24	9.22	10.65	1.31
37	2/21/2005	13	9.005	10.95	1.27
38	1/24/1969	25	8.51	11.24	1.24
39	10/27/2004	14	8.153	11.54	1.21
40	1/9/1998	33	8.083	11.83	1.17
41	11/21/1996	10	8.045	12.13	1.15
42	3/17/1983	31	7.96	12.43	1.12
43	3/5/1995	21	7.88	12.72	1.09
44	3/11/1995	26	7.861	13.02	1.07
45	12/9/1965	30	7.792	13.31	1.04
46	12/5/1966	15	7.745	13.61	1.02
47	2/6/1976	33	7.589	13.91	1
48	2/15/1992	6	7.575	14.2	0.98
49	2/6/1998	11	7.519	14.5	0.96
50	1/11/2001	37	7.27	14.79	0.94
51	1/12/1993	41	7.151	15.09	0.92
52	2/8/1976	12	7.102	15.38	0.9
53	4/20/1988	41	6.856	15.68	0.89
54	1/16/1978	13	6.788	15.98	0.87
55	3/4/1978	25	6.702	16.27	0.85
56	3/13/1996	5	6.653	16.57	0.84
57	4/8/1975	25	6.503	16.86	0.82
58	1/15/1993	82	6.482	17.16	0.81

(years)

10-year Q:	16.118	cfs
5-year Q:	15.256	cfs
2-year Q:	10.960	cfs

Lower Flow Threshold: 50%

0.5xQ2:	5.480	cfs

Pre-project Flow Frequency - Long-term Simulation

Statistics - Node POC C Total Inflow

Rank	Start Date	Event Duration (hours)	Event Peak (CFS)	Exceedance Frequency (percent)	Return Period (years)
1	2/18/1980	85	3.486	0.29	47
2	3/24/1983	16	3.357	0.59	23.5
3	1/9/1978	31	3.202	0.88	15.67
4	1/25/1995	17	3.012	1.18	11.75
5	3/17/1982	22	2.916	1.47	9.4
6	11/12/1976	4	2.866	1.77	7.83
7	2/28/1970	5	2.83	2.06	6.71
8	2/8/1998	17	2.773	2.36	5.88
9	12/17/1978	46	2.766	2.65	5.22
10	2/3/1998	29	2.659	2.95	4.7
11	12/28/1978	41	2.594	3.24	4.27
12	3/1/1983	74	2.575	3.54	3.92
13	1/28/1980	48	2.514	3.83	3.62
14	12/28/2004	22	2.505	4.13	3.36
15	1/5/1979	25	2.39	4.42	3.13
16	11/29/1982	24	2.369	4.72	2.94
17	2/14/1998	11	2.286	5.01	2.76
18	11/5/1987	4	2.27	5.31	2.61
19	2/8/1983	8	2.248	5.6	2.47
20	1/6/1974	33	2.148	5.9	2.35
21	1/9/2005	56	2.103	6.19	2.24
22	4/18/1995	8	2.102	6.49	2.14
23	2/8/1993	7	2.037	6.78	2.04
24	2/27/2001	15	1.929	7.08	1.96
25	11/30/2007	15	1.891	7.37	1.88
26	2/14/1980	72	1.786	7.67	1.81
27	4/1/1982	7	1.78	7.96	1.74
28	2/20/2000	28	1.772	8.26	1.68
29	11/22/1965	20	1.766	8.55	1.62
30	12/4/1974	5	1.748	8.85	1.57
31	3/8/1974	13	1.748	9.14	1.52
32	1/4/1995	9	1.738	9.44	1.47
33	11/16/1972	25	1.677	9.73	1.42
34	2/17/1998	11	1.644	10.03	1.38
35	3/17/1963	4	1.618	10.32	1.34
36	11/21/1996	12	1.599	10.62	1.31
37	12/9/1965	30	1.577	10.91	1.27
38	2/21/2005	13	1.576	11.21	1.24
39	10/27/2004	14	1.559	11.5	1.21
40	3/17/1983	31	1.55	11.8	1.17
41	1/11/2001	38	1.507	12.09	1.15
42	1/24/1969	25	1.467	12.39	1.12
43	2/12/2003	7	1.462	12.68	1.09
44	3/11/1995	25	1.409	12.98	1.07
45	2/6/1976	33	1.405	13.27	1.04
46	12/5/1966	15	1.394	13.57	1.02
47	2/15/1992	5	1.377	13.86	1
48	2/6/1998	10	1.367	14.16	0.98
49	3/5/1995	18	1.346	14.45	0.96
50	3/13/1996	5	1.339	14.75	0.94
51	1/12/1993	41	1.277	15.04	0.92
52	3/7/1994	6	1.251	15.34	0.9
53	1/16/1978	17	1.237	15.63	0.89
54	3/4/1978	20	1.233	15.93	0.87
55	2/8/1976	12	1.228	16.22	0.85
56	2/15/1986	10	1.214	16.52	0.84
57	4/20/1988	41	1.203	16.81	0.82
58	2/6/1969	10	1.193	17.11	0.81

(years)

10-year Q:	2.941	cfs
5-year Q:	2.721	cfs
2-year Q:	1.983	cfs
Lower Flow Threshold:	50%	
0.5xQ2:	0.992	cfs

Pre-project Flow Frequency - Long-term Simulation

Statistics - Node POC D Total Inflow

Rank	Start Date	Event Duration (hours)	Event Peak (CFS)	Exceedance Frequency (percent)	Return Period (years)
1	2/14/1980	182	5.44	0.3	47
2	1/9/1978	33	4.978	0.6	23.5
3	3/24/1983	16	4.977	0.9	15.67
4	2/28/1970	6	4.582	1.19	11.75
5	11/12/1976	5	4.569	1.49	9.4
6	1/25/1995	20	4.532	1.79	7.83
7	2/8/1998	19	4.418	2.09	6.71
8	3/17/1982	24	4.392	2.39	5.88
9	1/28/1980	49	4.308	2.69	5.22
10	12/28/1978	46	4.24	2.99	4.7
11	3/1/1983	74	4.19	3.28	4.27
12	2/3/1998	29	4.123	3.58	3.92
13	12/17/1978	34	3.925	3.88	3.62
14	1/5/1979	27	3.865	4.18	3.36
15	12/28/2004	23	3.626	4.48	3.13
16	11/29/1982	26	3.534	4.78	2.94
17	2/8/1983	9	3.498	5.07	2.76
18	2/14/1998	12	3.458	5.37	2.61
19	4/18/1995	9	3.347	5.67	2.47
20	1/6/1974	34	3.288	5.97	2.35
21	1/9/2005	61	3.251	6.27	2.24
22	11/5/1987	6	3.249	6.57	2.14
23	2/8/1993	9	3.164	6.87	2.04
24	11/30/2007	16	3.156	7.16	1.96
25	2/27/2001	16	2.996	7.46	1.88
26	1/4/1995	11	2.986	7.76	1.81
27	11/22/1965	22	2.909	8.06	1.74
28	4/1/1982	8	2.791	8.36	1.68
29	3/8/1974	14	2.674	8.66	1.62
30	2/20/2000	29	2.671	8.96	1.57
31	12/4/1974	6	2.644	9.25	1.52
32	2/21/2005	54	2.622	9.55	1.47
33	1/24/1969	55	2.465	9.85	1.42
34	2/17/1998	12	2.453	10.15	1.38
35	10/27/2004	16	2.441	10.45	1.34
36	11/21/1996	13	2.439	10.75	1.31
37	11/16/1972	25	2.422	11.04	1.27
38	3/17/1963	5	2.345	11.34	1.24
39	1/11/2001	39	2.331	11.64	1.21
40	12/5/1966	17	2.28	11.94	1.17
41	12/9/1965	31	2.213	12.24	1.15
42	3/5/1995	20	2.189	12.54	1.12
43	3/17/1983	32	2.188	12.84	1.09
44	3/11/1995	26	2.151	13.13	1.07
45	2/12/2003	9	2.101	13.43	1.04
46	2/6/1976	34	2.055	13.73	1.02
47	2/15/1992	7	2.051	14.03	1
48	2/8/1976	17	2.028	14.33	0.98
49	2/6/1998	11	2.013	14.63	0.96
50	1/12/1993	43	1.989	14.93	0.94
51	1/16/1978	18	1.972	15.22	0.92
52	4/8/1975	27	1.938	15.52	0.9
53	3/13/1996	6	1.932	15.82	0.89
54	4/20/1988	47	1.92	16.12	0.87
55	3/4/1978	22	1.881	16.42	0.85
56	2/15/1986	11	1.864	16.72	0.84
57	2/28/1978	49	1.8	17.01	0.82
58	3/7/1994	6	1.782	17.31	0.81

(years)

10-year Q:	4.572	cfs
5-year Q:	4.279	cfs
2-year Q:	3.160	cfs

Lower Flow Threshold: 50%

0.5xQ2: 1.580 cfs

Pre-project Flow Frequency - Long-term Simulation

Statistics - Node POC E Total Inflow

Rank	Start Date	Event Duration (hours)	Event Peak (CFS)	Exceedance Frequency (percent)	Return Period (years)
1	2/18/1980	77	6.847	0.46	47
2	1/9/1978	26	5.482	0.91	23.5
3	12/29/1978	22	5.286	1.37	15.67
5	2/3/1998	10	5.164	2.28	9.4
5	2/8/1998	10	5.164	2.28	9.4
6	3/24/1983	11	5.108	2.74	7.83
7	1/29/1980	43	5.075	3.2	6.71
8	1/25/1995	5	4.817	3.65	5.88
9	4/18/1995	8	4.64	4.11	5.22
10	3/17/1982	13	4.616	4.57	4.7
11	3/1/1983	37	4.544	5.02	4.27
12	3/17/1963	6	4.542	5.48	3.92
13	11/12/1976	3	4.404	5.94	3.62
14	2/14/1998	8	4.279	6.39	3.36
15	12/18/1978	5	4.262	6.85	3.13
16	2/28/1970	3	4.068	7.31	2.94
17	12/28/2004	21	3.867	7.76	2.76
18	1/9/2005	8	3.819	8.22	2.61
19	1/6/1979	6	3.779	8.68	2.47
20	1/4/1995	8	3.771	9.13	2.35
21	2/8/1983	7	3.756	9.59	2.24
22	1/6/1974	31	3.706	10.05	2.14
23	11/5/1987	3	3.514	10.5	2.04
24	2/16/1980	6	3.48	10.96	1.96
25	11/30/2007	5	3.456	11.42	1.88
26	11/22/1965	17	3.412	11.87	1.81
27	2/21/2005	12	3.301	12.33	1.74
28	12/5/1966	16	3.27	12.79	1.68
29	1/25/1969	10	2.934	13.24	1.62
30	11/29/1982	23	2.854	13.7	1.57
31	4/1/1982	4	2.777	14.16	1.52
32	3/5/1995	16	2.761	14.61	1.47
33	2/8/1993	5	2.74	15.07	1.42
34	2/27/2001	7	2.718	15.53	1.38
35	2/11/2003	30	2.717	15.98	1.34
36	2/8/1976	12	2.665	16.44	1.31
37	2/15/1992	5	2.618	16.89	1.27
38	11/16/1972	5	2.56	17.35	1.24
39	4/20/1988	41	2.367	17.81	1.21
40	10/27/2004	12	2.328	18.26	1.17
41	1/12/1993	42	2.323	18.72	1.15
42	2/17/1998	6	2.3	19.18	1.12
43	4/8/1975	20	2.277	19.63	1.09
44	2/21/2000	5	2.275	20.09	1.07
45	3/8/1974	6	2.27	20.55	1.04
46	2/6/1976	28	2.213	21	1.02
47	2/15/1986	9	2.151	21.46	1
48	1/11/2005	9	2.006	21.92	0.98
49	10/29/2000	5	2.004	22.37	0.96
50	10/20/2004	8	1.972	22.83	0.94
51	1/14/1978	12	1.867	23.29	0.92
52	12/4/1974	3	1.859	23.74	0.9
53	1/18/1993	16	1.838	24.2	0.89
54	1/16/1978	11	1.789	24.66	0.87
55	1/9/1998	27	1.711	25.11	0.85
56	4/14/2003	5	1.624	25.57	0.84
57	12/6/1966	4	1.623	26.03	0.82
58	2/6/1998	5	1.603	26.48	0.81

(years)

10-year Q:	5.164	cfs
5-year Q:	4.630	cfs
2-year Q:	3.497	cfs
Lower Flow Threshold:	0.500	
0.5xQ2:	1.749	cfs

Post-project Flow Frequency - Long-term Simulation

Statistics - Node POC A Total Inflow

Rank	Start Date	Event Duration (hours)	Event Peak (CFS)	Exceedance Frequency (percent)	Return Period (years)
1	2/13/1980	329	3.072	0.17	47
2	1/27/1980	198	2.881	0.35	23.5
3	1/3/1995	378	2.541	0.52	15.67
4	11/14/1965	362	2.152	0.69	11.75
5	12/3/1966	225	1.697	0.86	9.4
6	11/30/2007	277	1.598	1.04	7.83
7	2/24/1983	341	1.296	1.21	6.71
8	12/17/1978	186	1.259	1.38	5.88
9	12/27/1978	382	1.201	1.55	5.22
10	12/28/2004	479	1.163	1.73	4.7
11	1/3/1978	474	1.146	1.9	4.27
12	1/6/1993	445	0.993	2.07	3.92
13	3/14/1982	240	0.959	2.25	3.62
14	11/12/1976	130	0.95	2.42	3.36
15	10/27/2004	151	0.946	2.59	3.13
16	2/28/1970	265	0.937	2.76	2.94
17	2/3/1998	627	0.909	2.94	2.76
18	1/7/1980	326	0.9	3.11	2.61
19	2/27/1978	418	0.873	3.28	2.47
20	3/5/1995	287	0.808	3.45	2.35
21	2/4/1976	267	0.769	3.63	2.24
22	2/11/2005	427	0.754	3.8	2.14
23	2/7/1993	139	0.727	3.97	2.04
24	3/17/1983	304	0.726	4.15	1.96
25	2/15/1986	141	0.722	4.32	1.88
26	12/9/1965	262	0.702	4.49	1.81
27	1/24/1995	169	0.698	4.66	1.74
28	4/16/1995	177	0.689	4.84	1.68
29	4/5/1975	215	0.676	5.01	1.62
30	12/4/1974	128	0.659	5.18	1.57
31	3/25/1982	275	0.654	5.35	1.52
32	11/29/1982	161	0.654	5.53	1.47
33	1/14/1969	433	0.641	5.7	1.42
34	1/4/1974	232	0.639	5.87	1.38
35	2/4/1983	205	0.628	6.04	1.34
36	2/23/2001	223	0.609	6.22	1.31
37	11/21/1996	144	0.607	6.39	1.27
38	1/11/2001	155	0.596	6.56	1.24
39	3/15/1963	145	0.591	6.74	1.21
40	10/17/2004	209	0.589	6.91	1.17
41	2/22/2004	265	0.586	7.08	1.15
42	11/4/1987	122	0.574	7.25	1.12
43	2/11/2003	168	0.567	7.43	1.09
44	3/4/2005	116	0.556	7.6	1.07
45	4/20/1988	175	0.555	7.77	1.04
46	2/6/1992	335	0.553	7.94	1.02
47	2/20/2000	162	0.551	8.12	1
48	11/17/1986	124	0.542	8.29	0.98
49	3/7/1974	145	0.537	8.46	0.96
50	2/17/1994	109	0.536	8.64	0.94
51	3/6/1994	123	0.527	8.81	0.92
52	12/16/1987	142	0.522	8.98	0.9
53	5/8/1977	130	0.52	9.15	0.89
54	2/6/1969	117	0.516	9.33	0.87
55	1/3/1992	190	0.515	9.5	0.85
56	11/24/1985	289	0.515	9.67	0.84
57	3/19/1991	331	0.513	9.84	0.82
58	2/27/1991	178	0.507	10.02	0.81

10-year Q:	1.813	cfs
5-year Q:	1.185	cfs
2-year Q:	0.727	cfs
Lower Flow Threshold:	50%	
0.5xQ2:	0.363	cfs

Post-project Flow Frequency - Long-term Simulation

Statistics - Node POC B Total Inflow

Rank	Start Date	Event Duration (hours)	Event Peak (CFS)	Exceedance Frequency (percent)	Return Period (years)
1	1/27/1980	162	11.641	0.19	47
2	2/13/1980	293	9.884	0.37	23.5
3	11/14/1965	336	9.57	0.56	15.67
4	1/3/1995	396	8.417	0.75	11.75
5	11/30/2007	122	6.667	0.94	9.4
6	12/3/1966	186	5.425	1.12	7.83
7	1/3/1978	449	5.083	1.31	6.71
8	1/5/1979	165	4.906	1.5	5.88
9	12/28/2004	444	4.722	1.69	5.22
10	12/27/1978	168	4.473	1.87	4.7
11	2/3/1998	608	4.227	2.06	4.27
12	2/24/1983	314	4.214	2.25	3.92
13	10/27/2004	116	4.158	2.43	3.62
14	2/27/1978	405	3.992	2.62	3.36
15	3/11/1982	263	3.879	2.81	3.13
16	2/28/1970	202	3.862	3	2.94
17	12/27/1992	631	3.825	3.18	2.76
18	3/3/1995	303	3.72	3.37	2.61
19	11/12/1976	105	3.62	3.56	2.47
20	2/18/2005	219	3.582	3.75	2.35
21	12/17/1978	150	3.489	3.93	2.24
22	1/7/1980	345	3.45	4.12	2.14
23	2/7/1993	120	3.428	4.31	2.04
24	12/9/1965	247	3.342	4.49	1.96
25	2/15/1986	112	3.333	4.68	1.88
26	11/29/1982	127	3.255	4.87	1.81
27	12/4/1974	105	3.167	5.06	1.74
28	11/21/1996	115	3.119	5.24	1.68
29	4/5/1975	182	3.075	5.43	1.62
30	1/4/1974	199	2.998	5.62	1.57
31	2/4/1976	233	2.957	5.81	1.52
32	1/21/1995	213	2.866	5.99	1.47
33	3/17/1983	274	2.83	6.18	1.42
34	1/14/1969	420	2.813	6.37	1.38
35	4/16/1995	155	2.715	6.55	1.34
36	2/18/2004	270	2.712	6.74	1.31
37	1/8/2001	184	2.706	6.93	1.27
38	1/23/1983	485	2.641	7.12	1.24
39	11/24/1985	284	2.491	7.3	1.21
40	12/16/1987	137	2.4	7.49	1.17
41	2/27/1991	143	2.388	7.68	1.15
42	3/25/1982	258	2.311	7.87	1.12
43	1/20/1982	127	2.304	8.05	1.09
44	3/4/2005	101	2.225	8.24	1.07
45	2/23/2001	204	2.101	8.43	1.04
46	10/17/2004	180	2.099	8.61	1.02
47	2/11/2003	154	2.054	8.8	1
48	5/8/1977	107	2.042	8.99	0.98
49	11/17/1986	103	1.983	9.18	0.96
50	2/9/1963	132	1.865	9.36	0.94
51	2/11/2000	359	1.84	9.55	0.92
52	3/6/1994	105	1.781	9.74	0.9
53	3/13/1991	419	1.779	9.93	0.89
54	10/26/1974	216	1.711	10.11	0.87
55	3/3/1974	219	1.705	10.3	0.85
56	4/20/1988	152	1.702	10.49	0.84
57	2/6/1969	102	1.652	10.67	0.82
58	3/15/1963	128	1.637	10.86	0.81

10-year Q:	7.114	cfs
5-year Q:	4.617	cfs
2-year Q:	3.385	cfs
Lower Flow Threshold:	50%	
0.5xQ2:	1.693	cfs

Post-project Flow Frequency - Long-term Simulation

Statistics - Node POC C Total Inflow

Rank	Start Date	Event Duration (hours)	Event Peak (CFS)	Exceedance Frequency (percent)	Return Period (years)
1	1/27/1980	94	1.181	0.15	47
2	11/22/1965	100	0.697	0.3	23.5
3	2/13/1980	224	0.64	0.45	15.67
4	1/3/1995	79	0.607	0.6	11.75
5	12/3/1966	115	0.596	0.75	9.4
6	1/14/1978	147	0.589	0.9	7.83
7	1/9/1978	64	0.582	1.05	6.71
8	11/30/2007	54	0.581	1.2	5.88
9	2/28/1970	67	0.573	1.35	5.22
10	1/5/1979	58	0.57	1.49	4.7
11	12/27/1978	103	0.561	1.64	4.27
12	10/27/2004	47	0.561	1.79	3.92
13	12/9/1965	197	0.559	1.94	3.62
14	11/12/1976	39	0.556	2.09	3.36
15	3/3/1995	100	0.556	2.24	3.13
16	2/7/1993	70	0.555	2.39	2.94
17	12/28/2004	109	0.545	2.54	2.76
18	2/3/1998	172	0.543	2.69	2.61
19	2/24/1983	260	0.541	2.84	2.47
20	2/18/2005	150	0.536	2.99	2.35
21	2/27/1978	180	0.535	3.14	2.24
22	2/15/1986	44	0.534	3.29	2.14
23	3/14/1982	137	0.526	3.44	2.04
24	12/4/1974	40	0.521	3.59	1.96
25	3/21/1983	111	0.518	3.74	1.88
26	12/17/1978	86	0.518	3.89	1.81
27	11/21/1996	53	0.51	4.04	1.74
28	2/14/1998	281	0.506	4.19	1.68
29	1/7/2005	134	0.505	4.33	1.62
30	1/24/1995	78	0.503	4.48	1.57
31	2/4/1976	174	0.501	4.63	1.52
32	4/5/1975	111	0.491	4.78	1.47
33	11/29/1982	56	0.489	4.93	1.42
34	1/11/2001	64	0.486	5.08	1.38
35	3/4/2005	38	0.486	5.23	1.34
36	4/1/1982	36	0.479	5.38	1.31
37	4/16/1995	90	0.477	5.53	1.27
38	3/11/1995	50	0.474	5.68	1.24
39	11/24/1985	52	0.467	5.83	1.21
40	1/24/1969	130	0.466	5.98	1.17
41	2/4/1983	122	0.465	6.13	1.15
42	1/7/1980	156	0.463	6.28	1.12
43	1/4/1974	133	0.459	6.43	1.09
44	2/22/2004	59	0.459	6.58	1.07
45	11/17/1986	40	0.455	6.73	1.04
46	12/16/1987	44	0.454	6.88	1.02
47	2/23/2001	153	0.449	7.03	1
48	2/9/1963	65	0.446	7.17	0.98
49	1/6/1993	123	0.444	7.32	0.96
50	3/6/1994	41	0.442	7.47	0.94
51	5/8/1977	42	0.44	7.62	0.92
52	10/17/2004	114	0.433	7.77	0.9
53	1/12/1993	178	0.432	7.92	0.89
54	2/27/1991	72	0.431	8.07	0.87
55	1/20/1982	56	0.429	8.22	0.85
56	3/19/1991	83	0.426	8.37	0.84
57	2/20/2000	102	0.421	8.52	0.82
58	1/22/1967	82	0.42	8.67	0.81

10-year Q:	0.599	cfs
5-year Q:	0.572	cfs
2-year Q:	0.524	cfs
Lower Flow Threshold:	50%	
0.5xQ2:	0.262	cfs

Post-project Flow Frequency - Long-term Simulation

Statistics - Node POC D Total Inflow

Rank	Start Date	Event Duration (hours)	Event Peak (CFS)	Exceedance Frequency (percent)	Return Period (years)
1	1/27/1980	121	4.967	0.17	47
2	2/13/1980	249	4.353	0.33	23.5
3	11/22/1965	112	2.709	0.5	15.67
4	11/30/2007	79	2.676	0.67	11.75
5	1/3/1995	152	2.622	0.83	9.4
6	12/17/1978	109	2.02	1	7.83
7	12/3/1966	140	1.955	1.16	6.71
8	12/28/2004	401	1.816	1.33	5.88
9	1/5/1979	135	1.765	1.5	5.22
10	1/14/1978	157	1.744	1.66	4.7
11	1/9/1978	93	1.48	1.83	4.27
12	11/29/1982	85	1.442	2	3.92
13	3/5/1995	83	1.383	2.16	3.62
14	10/27/2004	74	1.362	2.33	3.36
15	12/27/1978	127	1.348	2.5	3.13
16	2/28/1970	163	1.321	2.66	2.94
17	11/12/1976	65	1.243	2.83	2.76
18	2/18/2005	179	1.203	3	2.61
19	2/3/1998	200	1.202	3.16	2.47
20	2/27/1978	208	1.184	3.33	2.35
21	2/7/1993	82	1.167	3.49	2.24
22	12/9/1965	213	1.167	3.66	2.14
23	11/21/1996	75	1.161	3.83	2.04
24	3/14/1982	161	1.159	3.99	1.96
25	2/15/1986	69	1.152	4.16	1.88
26	2/24/1983	277	1.141	4.33	1.81
27	12/4/1974	66	1.119	4.49	1.74
28	4/5/1975	139	1.002	4.66	1.68
29	2/4/1976	192	0.993	4.83	1.62
30	1/7/1980	207	0.99	4.99	1.57
31	2/14/1998	305	0.986	5.16	1.52
32	1/24/1995	105	0.966	5.32	1.47
33	1/11/2001	90	0.954	5.49	1.42
34	1/4/1974	156	0.951	5.66	1.38
35	2/22/2004	151	0.942	5.82	1.34
36	1/6/1993	131	0.938	5.99	1.31
37	1/18/1969	273	0.925	6.16	1.27
38	11/24/1985	80	0.921	6.32	1.24
39	3/17/1983	235	0.889	6.49	1.21
40	4/16/1995	117	0.872	6.66	1.17
41	2/27/1991	101	0.865	6.82	1.15
42	3/11/1995	80	0.863	6.99	1.12
43	1/20/1982	86	0.854	7.15	1.09
44	12/16/1987	106	0.852	7.32	1.07
45	2/4/1983	148	0.849	7.49	1.04
46	11/17/1986	66	0.778	7.65	1.02
47	1/12/1993	207	0.771	7.82	1
48	3/4/2005	64	0.768	7.99	0.98
49	2/9/1963	96	0.765	8.15	0.96
50	5/8/1977	70	0.758	8.32	0.94
51	10/17/2004	141	0.731	8.49	0.92
52	3/25/1982	221	0.706	8.65	0.9
53	3/6/1994	68	0.68	8.82	0.89
54	2/23/2001	167	0.655	8.99	0.87
55	2/20/2000	112	0.61	9.15	0.85
56	1/22/1967	101	0.595	9.32	0.84
57	2/11/2003	117	0.592	9.48	0.82
58	4/20/1988	115	0.586	9.65	0.81

10-year Q:	2.636	cfs
5-year Q:	1.756	cfs
2-year Q:	1.160	cfs
Lower Flow Threshold:	50%	
0.5xQ2:	0.580	cfs

Post-project Flow Frequency - Long-term Simulation

Statistics - Node POC E Total Inflow

Rank	Start Date	Event Duration (hours)	Event Peak (CFS)	Exceedance Frequency (percent)	Return Period (years)
1	2/13/1980	925	8.277	0.27	47
2	11/14/1965	525	4.923	0.53	23.5
3	12/3/1966	374	2.749	0.8	15.67
4	1/7/1980	843	2.526	1.06	11.75
5	12/18/1977	1665	2.357	1.33	9.4
6	2/24/1983	962	1.37	1.6	7.83
7	1/3/1995	818	1.011	1.86	6.71
8	12/28/2004	637	0.982	2.13	5.88
9	1/29/1998	955	0.785	2.39	5.22
10	12/17/1978	1511	0.777	2.66	4.7
11	12/27/1992	946	0.775	2.93	4.27
12	3/14/1982	747	0.774	3.19	3.92
13	2/27/1978	630	0.71	3.46	3.62
14	2/4/1976	423	0.697	3.72	3.36
15	11/30/2007	579	0.672	3.99	3.13
16	2/11/2005	788	0.663	4.26	2.94
17	10/17/2004	611	0.66	4.52	2.76
18	3/3/1995	683	0.616	4.79	2.61
19	1/4/1974	483	0.605	5.05	2.47
20	11/29/1982	409	0.502	5.32	2.35
21	2/27/1991	944	0.453	5.59	2.24
22	4/5/1975	450	0.438	5.85	2.14
23	1/30/1986	678	0.426	6.12	2.04
24	1/14/1969	819	0.423	6.38	1.96
25	12/9/1965	468	0.412	6.65	1.88
26	2/18/2004	493	0.4	6.91	1.81
27	4/14/1988	459	0.399	7.18	1.74
28	2/7/1993	638	0.372	7.45	1.68
29	1/20/1982	318	0.37	7.71	1.62
30	11/21/1996	294	0.361	7.98	1.57
31	2/18/1969	701	0.36	8.24	1.52
32	2/9/1963	317	0.349	8.51	1.47
33	2/28/1970	406	0.346	8.78	1.42
34	3/8/1986	469	0.345	9.04	1.38
35	2/13/2001	626	0.342	9.31	1.34
36	2/6/1992	499	0.34	9.57	1.31
37	11/21/1984	1254	0.332	9.84	1.27
38	4/16/1995	332	0.313	10.11	1.24
39	11/12/1976	277	0.307	10.37	1.21
40	2/11/2003	607	0.305	10.64	1.17
41	2/25/1981	446	0.302	10.9	1.15
42	1/8/2001	674	0.297	11.17	1.12
43	2/11/2000	742	0.297	11.44	1.09
44	3/13/1979	635	0.287	11.7	1.07
45	10/26/1974	357	0.287	11.97	1.04
46	12/4/1974	275	0.285	12.23	1.02
47	11/11/1985	899	0.283	12.5	1
48	1/5/2008	320	0.277	12.77	0.98
49	1/9/1998	329	0.27	13.03	0.96
50	12/16/1987	298	0.26	13.3	0.94
51	5/8/1977	280	0.253	13.56	0.92
52	1/19/1983	748	0.25	13.83	0.9
53	3/5/1975	499	0.247	14.1	0.89
54	3/4/1974	369	0.231	14.36	0.87
55	11/20/1963	288	0.23	14.63	0.85
56	11/8/1972	488	0.228	14.89	0.84
57	3/15/2003	303	0.223	15.16	0.82
58	12/28/1991	520	0.219	15.43	0.81

10-year Q:	2.400	cfs
5-year Q:	0.782	cfs
2-year Q:	0.425	cfs
Lower Flow Threshold:	50%	
0.5xQ2:	0.212	cfs

ATTACHMENT G

Flow Duration Comparison Curve

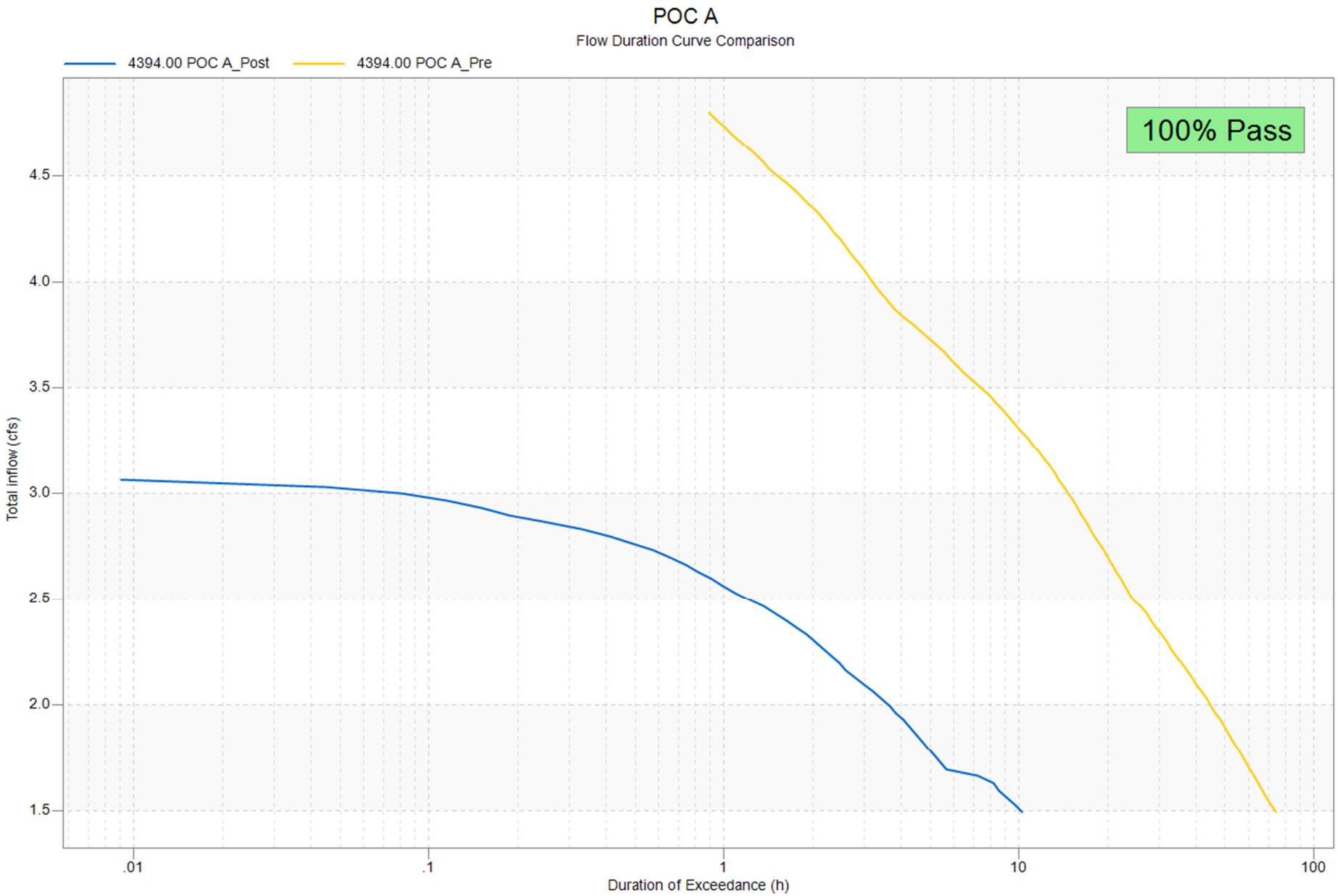
POC A
Flow Duration Curve Comparison
4394.00 POC A_Post
4394.00 POC A_Pre
100% Pass
Total inflow (cfs)
4.5
4.0
3.5
3.0
2.5
2.0
1.5
.01
.1
1
10
100
Duration of Exceedance (h)

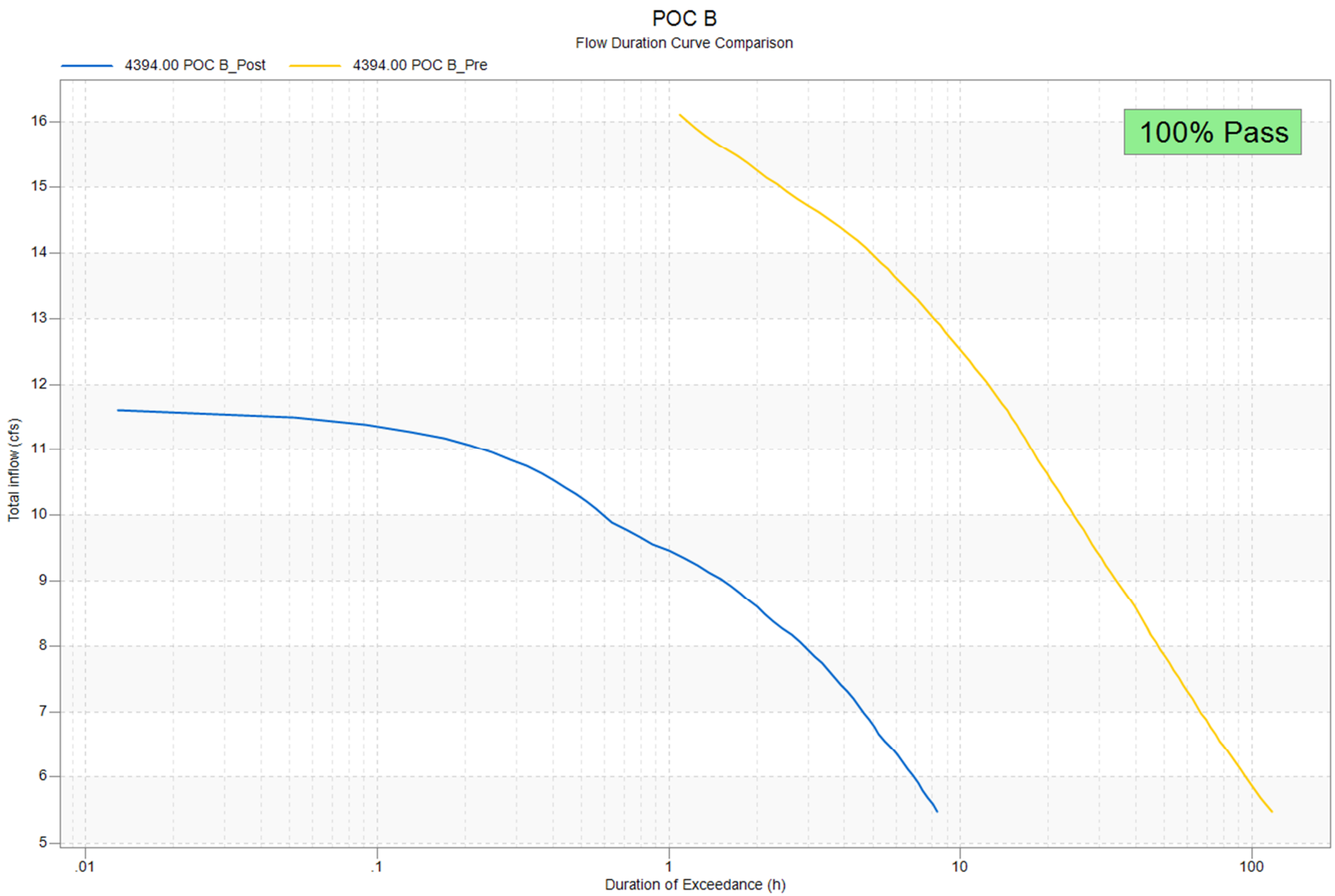
POC B
Flow Duration Curve Comparison
4394.00 POC B_Post
4394.00 POC B_Pre
100% Pass
Total inflow (cfs)
16
15
14
13
12
11
10
9
8
7
6
5
.01
.1
1
10
100
Duration of Exceedance (h)

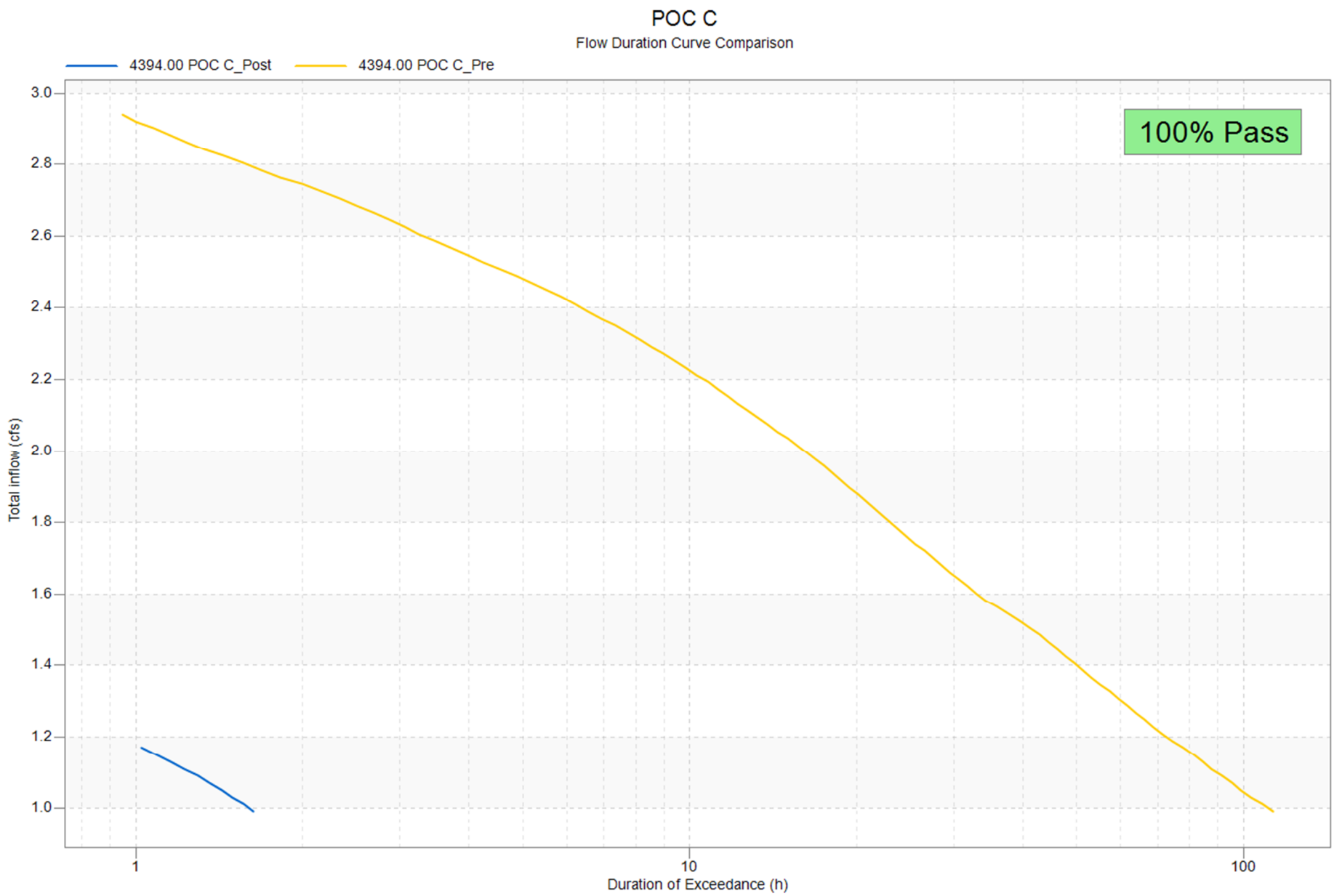
POC C
Flow Duration Curve Comparison
4394.00 POC C_Post
4394.00 POC C_Pre
100% Pass
Total inflow (cfs)
3.0
2.8
2.6
2.4
2.2
2.0
1.8
1.6
1.4
1.2
1.0
1
10
100
Duration of Exceedance (h)

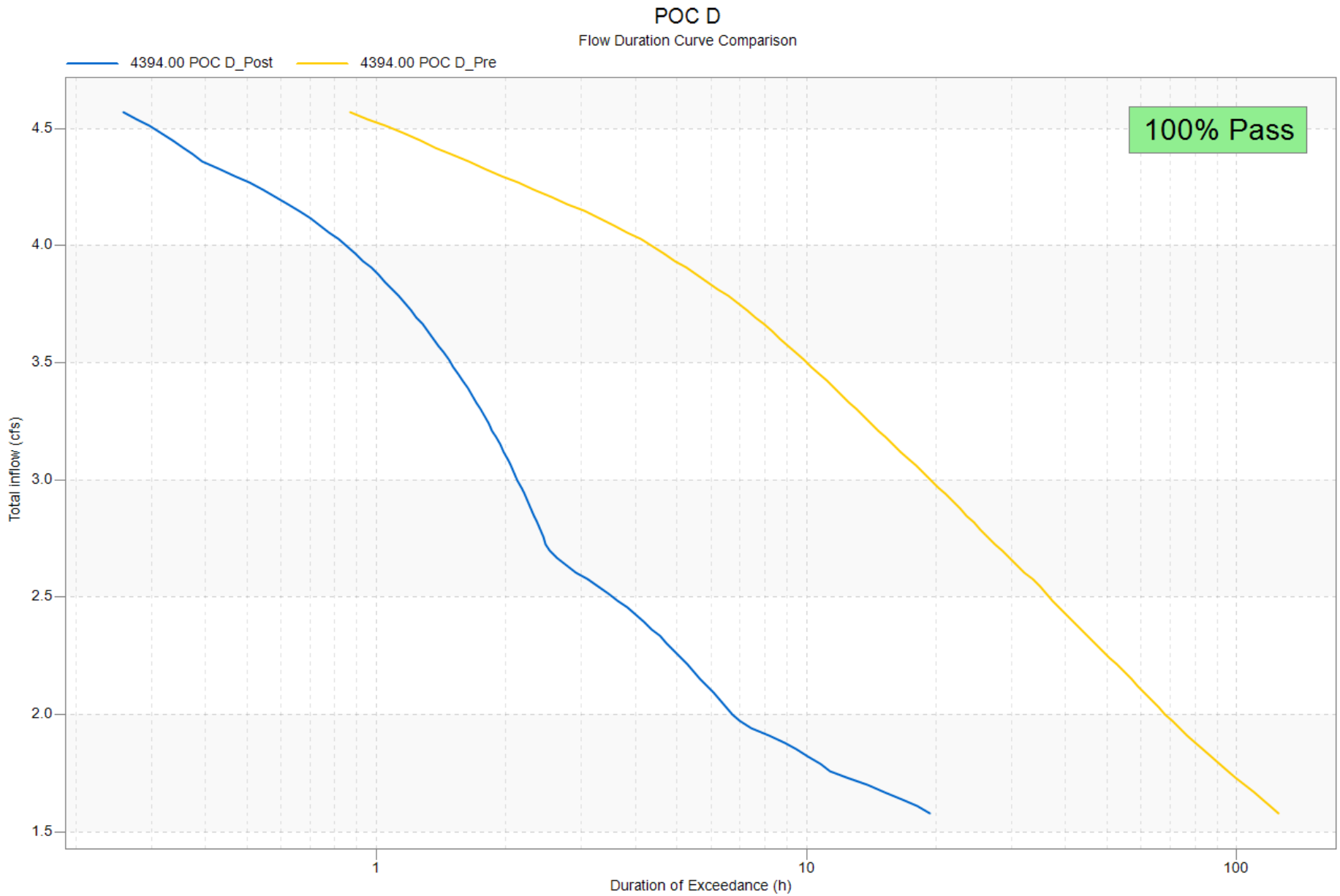
POC D
Flow Duration Curve Comparison
4394.00 POC D_Post
4394.00 POC D_Pre
100% Pass
Total inflow (cfs)
4.5
4.0
3.5
3.0
2.5
2.0
1.5
1
10
100
Duration of Exceedance (h)

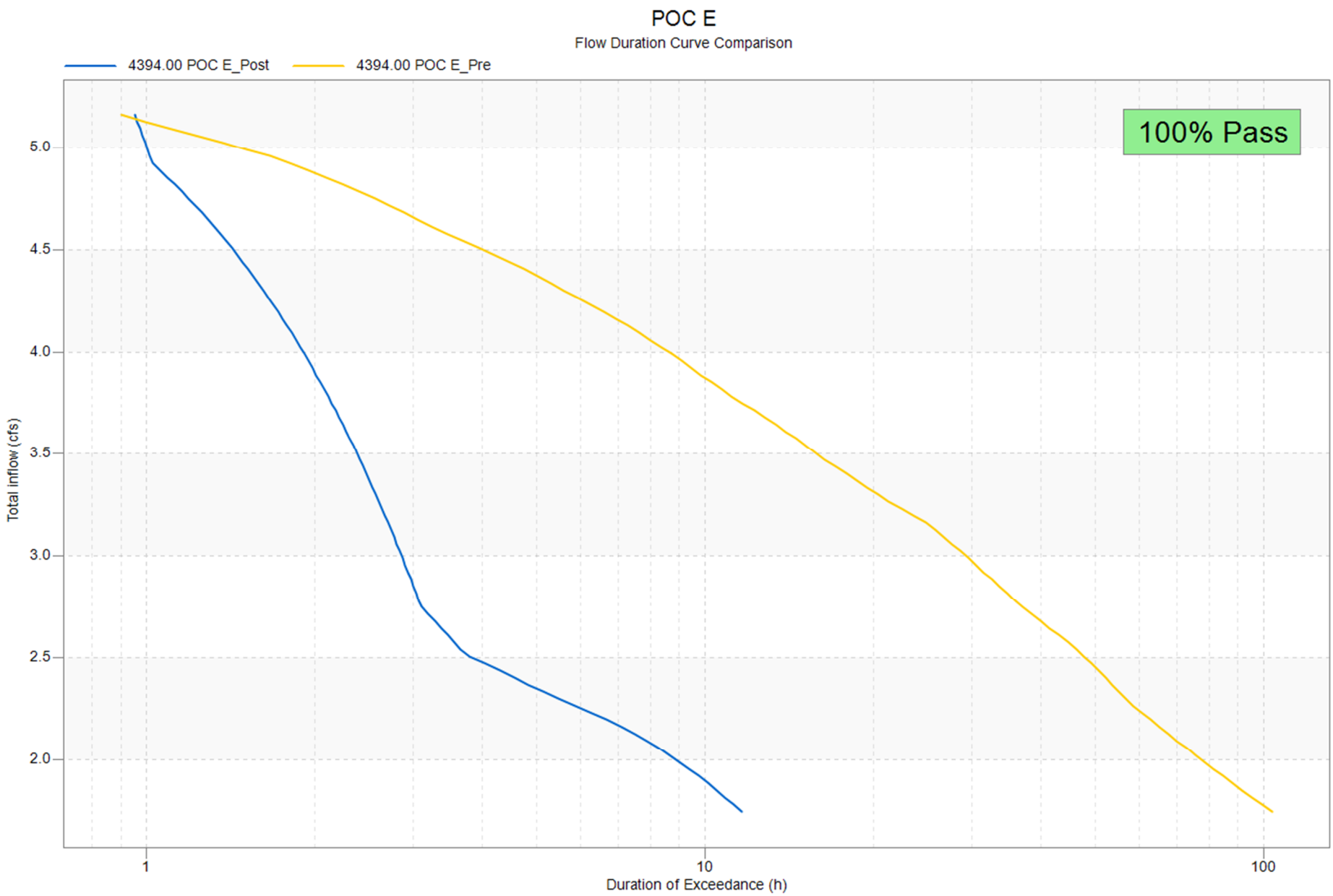
POC E
Flow Duration Curve Comparison
4394.00 POC E_Post
4394.00 POC E_Pre
100% Pass
Total inflow (cfs)
5.0
4.5
4.0
3.5
3.0
2.5
2.0
1
10
100
Duration of Exceedance (h)

Attachment 3
Structural BMP Maintenance Information

This is the cover sheet for Attachment 3.

Project Name: The Trails at Carmel Mountain Ranch

Indicate which Items are Included:

Attachment Sequence	Contents	Checklist
Attachment 3	Maintenance Agreement (Form DS-3247) (when applicable)	☑ Included ☐ Not applicable

Use this checklist to ensure the required information has been included in the Structural BMP Maintenance Information Attachment:

Attachment 3: For private entity operation and maintenance, Attachment 3 must include a Storm Water Management and Discharge Control Maintenance Agreement (Form DS-3247). The following information must be included in the exhibits attached to the maintenance agreement:

- ☑ Vicinity map
- ☑ Site design BMPs for which DCV reduction is claimed for meeting the pollutant control obligations.
- ☑ BMP and HMP location and dimensions
- ☑ BMP and HMP specifications/cross section/model
- ☑ Maintenance recommendations and frequency
- ☑ LID features such as (permeable paver and LS location, dim, SF).

THE CITY OF SAN DIEGO

RECORDING REQUESTED BY:
THE CITY OF SAN DIEGO
AND WHEN RECORDED MAIL TO:

_____

_____

_____

(THIS SPACE IS FOR RECORDER'S USE ONLY)

STORM WATER MANAGEMENT AND DISCHARGE CONTROL MAINTENANCE AGREEMENT

APPROVAL NUMBER:	ASSESSOR'S PARCEL NUMBER:	PROJECT NUMBER:
_____	_____	_____

This agreement is made by and between the City of San Diego, a municipal corporation [City] and

_____;

the owner or duly authorized representative of the owner [Property Owner] of property located at

_____
(PROPERTY ADDRESS)

and more particularly described as:

_____
(LEGAL DESCRIPTION OF PROPERTY)

in the City of San Diego, County of San Diego, State of California.

Property Owner is required pursuant to the City of San Diego Municipal Code, Chapter 4, Article 3, Division 3, Chapter 14, Article 2, Division 2, and the Land Development Manual, Storm Water Standards, to enter into a Storm Water Management and Discharge Control Maintenance Agreement [Maintenance Agreement] for the installation and maintenance of Permanent Storm Water Best Management Practices [Permanent Storm Water BMPs] prior to the issuance of construction/grading permits. The Maintenance Agreement is intended to ensure the establishment and maintenance of Permanent Storm Water BMPs on site, as described in the attached exhibit(s), the project's Storm Water Quality Management Plan [SWQMP] and Grading and/or Improvement Plan Drawing No(s), or Building Plan Project No(s): _____.

Property Owner wishes to obtain a building/engineering/grading permit according to the Grading and/or Improvement Plan Drawing No(s) or Building Plan Project No(s): _____.

Continued on Page 2

NOW, THEREFORE, the parties agree as follows:

1. Property Owner shall have prepared, or if qualified, shall prepare an Operation and Maintenance Procedure [OMP] for Permanent Storm Water BMPs, satisfactory to the City, according to the attached exhibit(s), consistent with the Grading and/or Improvement Plan Drawing No(s), or Building Plan Project No(s): _____.

2. Property Owner shall install, maintain, and repair or replace all Permanent Storm Water BMPs within the property, according to the OMP guidelines as described in the attached exhibit(s), the project's SWQMP, and Grading and/or Improvement Plan Drawing No(s), or Building Plan Project No(s) _____.

3. Property Owner shall maintain operation and maintenance records for at least five (5) years. These records shall be made available to the City for inspection upon request at any time.

This Maintenance Agreement shall commence upon execution of this document by all parties named hereon, and shall run with the land.

Executed by the City of San Diego and by Property Owner in San Diego, California.

See Attached Exhibit(s): _____

_____
(PROPERTY OWNER SIGNATURE)

_____
(PRINT NAME AND TITLE)

_____
(COMPANY/ORGANIZATION NAME)

_____
(DATE)

THE CITY OF SAN DIEGO

APPROVED:

_____
(DEPUTY CITY ENGINEER SIGNATURE)

_____
(PRINT NAME)

_____
(DATE)

NOTE: ALL SIGNATURES MUST INCLUDE NOTARY ACKNOWLEDGEMENT PER CIVIL CODE SEC. 1180 ET.SEQ.

Attachment 4
Copy of Plan Sheets Showing Permanent Storm Water BMPs

This is the cover sheet for Attachment 4.

Project Name: The Trails at Carmel Mountain Ranch

Use this checklist to ensure the required information has been included on the plans:

The plans must identify:

- ☑ Structural BMP(s) with ID numbers matching Form I-6 Summary of PDP Structural BMPs
- ☑ The grading and drainage design shown on the plans must be consistent with the delineation of DMAs shown on the DMA exhibit
- ☑ Details and specifications for construction of structural BMP(s)
- ☑ Signage indicating the location and boundary of structural BMP(s) as required by the City Engineer
- ☑ How to access the structural BMP(s) to inspect and perform maintenance
- ☑ Features that are provided to facilitate inspection (e.g., observation ports, cleanouts, silt posts, or other features that allow the inspector to view necessary components of the structural BMP and compare to maintenance thresholds)
- ☑ Manufacturer and part number for proprietary parts of structural BMP(s) when applicable
- ☑ Maintenance thresholds specific to the structural BMP(s), with a location-specific frame of reference (e.g., level of accumulated materials that triggers removal of the materials, to be identified based on viewing marks on silt posts or measured with a survey rod with respect to a fixed benchmark within the BMP)
- ☑ Recommended equipment to perform maintenance
- ☑ When applicable, necessary special training or certification requirements for inspection and maintenance personnel such as confined space entry or hazardous waste management
- ☑ Include landscaping plan sheets showing vegetation requirements for vegetated structural BMP(s)
- ☑ All BMPs must be fully dimensioned on the plans
- ☑ When proprietary BMPs are used, site specific cross section with outflow, inflow and model number shall be provided. Broucher photocopies are not allowed.

THE TRAILS AT CARMEL MOUNTAIN RANCH

REZONE NO. 2366507/VESTING TENTATIVE MAP NO. 2366422/PLANNED DEVELOPMENT PERMIT NO. 2366508/ SITE DEVELOPMENT PERMIT NO. 2366452/CUP PERMIT NO. 2366426/NEIGHBORHOOD DEVELOPMENT PERMIT NO. _____

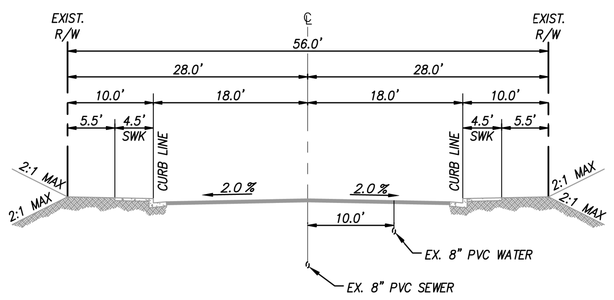

EXISTING EASTBOURNE ROAD
WEST OF HIGHLAND RANCH RD.
PER DWG 24088-D
NOT TO SCALE

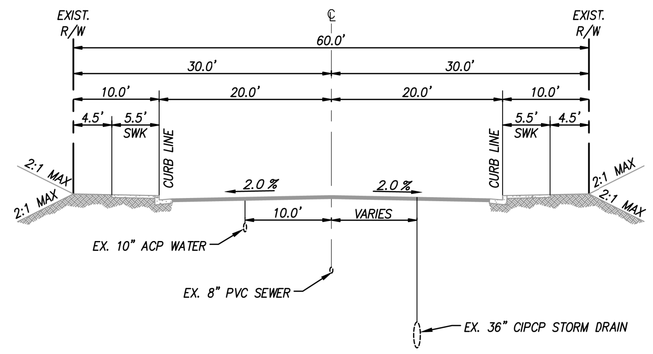

EXISTING CARMEL RIDGE ROAD
FROM STA 40+00.00 – STA 49+00.00
PER DWG 22745-D
NOT TO SCALE

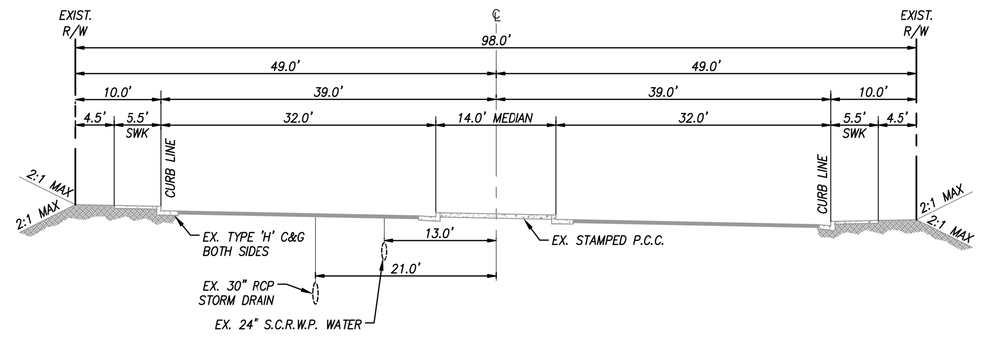

EXISTING RANCHO CARMEL DRIVE
FROM STA 42+00.00 TO STA 51+15.00
PER DWG 22917-D
NOT TO SCALE

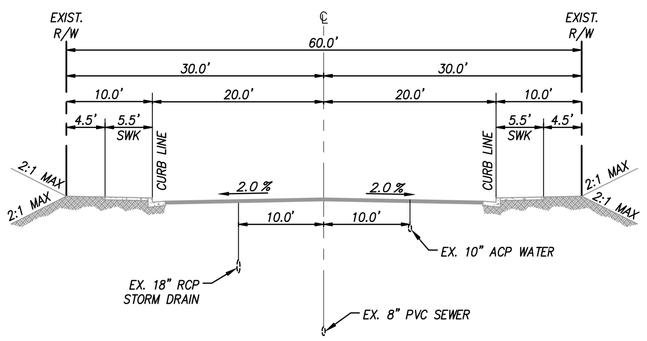

EXISTING EASTBOURNE ROAD
EAST OF HIGHLAND RANCH RD.
PER DWG 22745-D
NOT TO SCALE

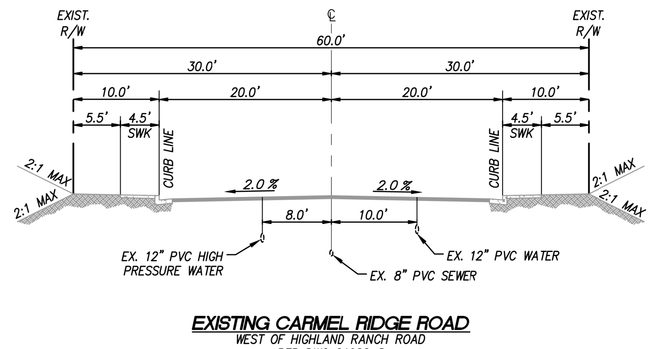

EXISTING CARMEL RIDGE ROAD
WEST OF HIGHLAND RANCH ROAD
PER DWG 24088-D
NOT TO SCALE

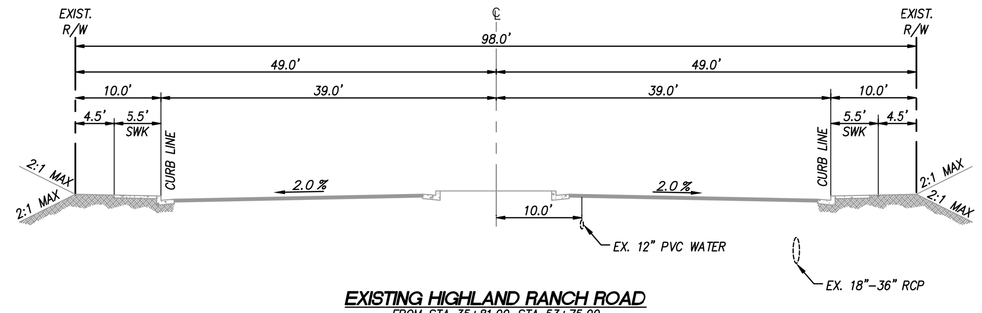

EXISTING HIGHLAND RANCH ROAD
FROM STA 35+81.00–STA 53+75.00
PER DWG 24274-D
NOT TO SCALE

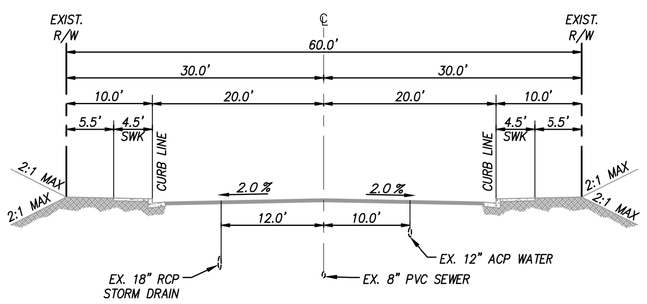

EXISTING WINDCREST LANE
PER DWG 23805-D
NOT TO SCALE

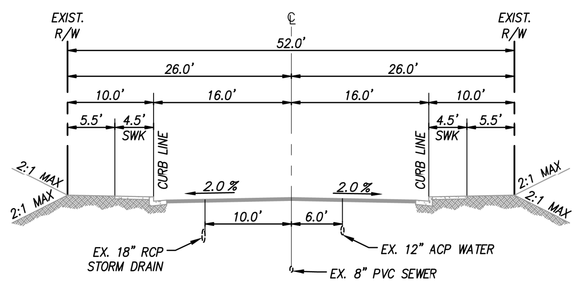

EXISTING CHIPPENHAM WAY
PER DWG. 23805-D
NOT TO SCALE

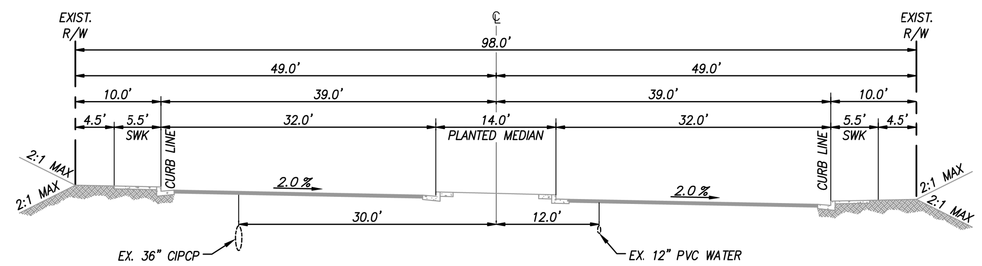

EXISTING HIGHLAND RANCH ROAD
FROM STA 16+94.00 – STA 35+81.00
PER DWG 22569-D
NOT TO SCALE

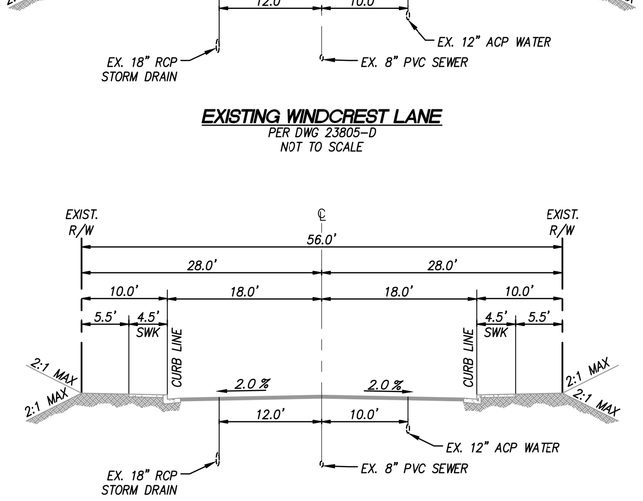

EXISTING BOULTON AVENUE
PER DWG. 23805-D
NOT TO SCALE

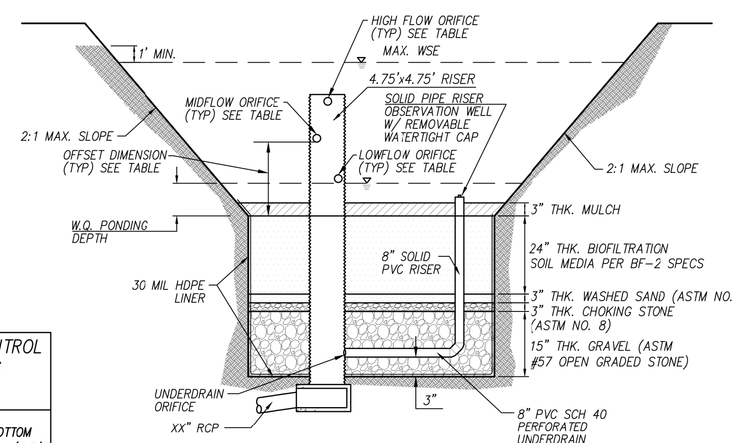

BIOFILTRATION BF-1 POLLUTANT CONTROL/ HYDROMODIFICATION/DETENTION BASIN (TYP.)
NOT TO SCALE

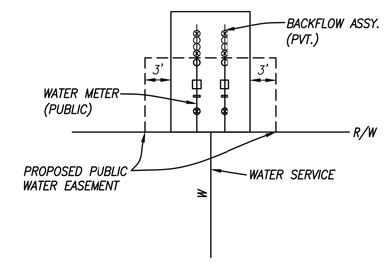

PUBLIC WATER EASEMENTS AT DRIVEWAY ENTRANCES
NOT TO SCALE

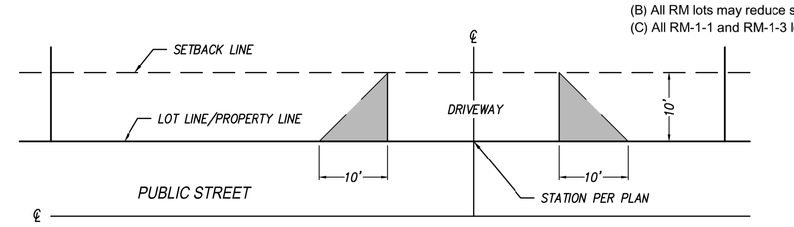

VISIBILITY TRIANGLE DETAIL
NOT TO SCALE
NOTE: NO OBSTRUCTION INCLUDING LANDSCAPING OR SOLID WALLS IN THE VISIBILITY TRIANGLE AREA SHALL EXCEED 24 INCHES IN HEIGHT.

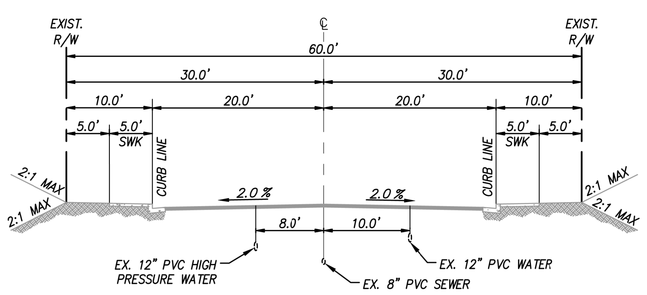

EXISTING SHOAL CREEK DRIVE
PER DWG 22089-D
NOT TO SCALE

STORMWATER STRUCTURAL POLLUTANT CONTROL & HYDROMODIFICATION CONTROL BMPS (LIST ALL FROM SWQMP)

DESCRIPTION/TYPE OF STRUCTURAL BMP	PLAN SHEET #	STRUCTURAL BMP ID#	BOTTOM AREA (S.F.)
BIOFILTRATION BF-1 POLLUTANT CONTROL/ HYDROMOD BASIN	17	1	7614
BIOFILTRATION BF-1 POLLUTANT CONTROL/ HYDROMOD BASIN	16	2	7784
BIOFILTRATION BF-1 POLLUTANT CONTROL/ HYDROMOD BASIN	13	5	4045
BIOFILTRATION BF-1 POLLUTANT CONTROL/ HYDROMOD BASIN	13	6	5792
BIOFILTRATION BF-1 POLLUTANT CONTROL/ HYDROMOD BASIN	15,16	8	9529
BIOFILTRATION BF-1 POLLUTANT CONTROL/ HYDROMOD BASIN	16,17	9	8913
BIOFILTRATION BF-1 POLLUTANT CONTROL/ HYDROMOD BASIN	21	11	14666
BIOFILTRATION BF-1 POLLUTANT CONTROL/ HYDROMOD BASIN	19	16	5615
BIOFILTRATION BF-1 POLLUTANT CONTROL/ HYDROMOD BASIN	18	17	5109
BIOFILTRATION BF-1 POLLUTANT CONTROL/ HYDROMOD BASIN	17,18	18	4914

BMP BASIN TABLE

UNIT	LOT	DESCRIPTION	AREA (SF)	AREA (AC)	OWNED BY:	MAINTAINED BY:
1	1,3	BASIN	7,614	0.17	HOA	HOA
2	1,3	BASIN	7,784	0.18	HOA	HOA
5	1,2	BASIN	4,045	0.09	HOA	HOA
6	1,2	BASIN	5,792	0.13	HOA	HOA
8	1,3	BASIN	9,529	0.22	HOA	HOA
9	1,5	BASIN	8,913	0.20	HOA	HOA
	1	BASIN	4914	0.11	HOA	HOA
10	1,3	BASIN	14,666	0.34	HOA	HOA
16	1	BASIN	5,615	0.13	HOA	HOA
17	1	BASIN	5,109	0.12	HOA	HOA
			SUBTOTAL:	1.69		

BIOFILTRATION ORIFICE DESIGN

BIOFILTRATION BMP#	UNDERDRAIN ORIFICE (IN)	LOW FLOW ORIFICE		MID FLOW ORIFICE		HIGH FLOW ORIFICE		OVERFLOW WEIR/RISER	
		DIA. (IN)	OFFSET (FT)*	DIA. (IN)	OFFSET (FT)*	DIA. (IN)	OFFSET (FT)*	DIA. (IN) OR SIZE (FTXFT)	OFFSET (FT)*
1	3	2.0	0.50	2.0	2.00	–	–	4.75X4.75	4.50
2	3	3.0	0.50	2-4IN	2.50	–	–	4.75X4.75	4.50
5	2	1.0	1.00	1.0	2.00	–	–	4.75X4.75	3.00
6	4.5	4.0	0.50	3-3IN	2.00	–	–	4.75X4.75	3.75
8	3	3.0	0.50	4.0	2.00	–	–	4.75X4.75	4.25
9	4	4.0	0.50	3-3IN	2.00	–	–	4.75X4.75	3.50
11	3	1.5	0.50	3.0	3.00	3.0	5.00	4.75X4.75	6.00
16	3	3.0	0.50	–	–	–	–	4.75X4.75	4.25
17	3	3.0	0.50	4.0	2.50	–	–	4.75X4.75	4.50
18	4	2.0	0.50	3.0	2.50	–	–	4.75X4.75	3.75

*OFFSET DIMENSIONS ARE DISTANCE FROM ORIFICE IE/WEIR TOP TO THE BOTTOM OF BASIN SURFACE LAYER (MULCH BOTTOM)

LAND USE / ZONING TABLE

LOT NO.	DWELLING UNITS	DEVELOPMENT (AC.)	BUFFER (AC.)	PARK (AC.)	OPEN SPACE (AC.)	TOTAL (AC.)	PROPOSED LAND USE	PROPOSED ZONE	DENSITY	OWNER/ MAINTENANCE
UNIT 1						**8.72**				
1	66	5.1					LOW MED RES	RM-1-1	12.9	SUBASSOCIATION
2					0.78		OPEN SPACE	AR-1-1		MASTER HOA
3			1.2				OPEN SPACE	AR-1-1		SUBASSOCIATION
4			1.64				OPEN SPACE	AR-1-1		SUBASSOCIATION
UNIT 2						**9.91**				
1	87	4.16					LOW MED RES	RM-1-3	20.9	SUBASSOCIATION
2					2.67		OPEN SPACE	AR-1-1		SUBASSOCIATION
3			1.3				OPEN SPACE	AR-1-1		SUBASSOCIATION
4			1.37				OPEN SPACE	AR-1-1		SUBASSOCIATION
5					0.41		OPEN SPACE	AR-1-1		MASTER HOA
UNIT 3						**1.36**				
1					1.36		OPEN SPACE	AR-1-1		CITY MAD
UNIT 4						**25.27**				
1					25.27		OPEN SPACE	AR-1-1		CITY MAD
UNIT 5						**2.76**				
1	78	2.29					MEDIUM RES	RM-2-6	34.1	OWNER
2			0.47				OPEN SPACE	AR-1-1		OWNER
UNIT 6						**5.83**				
1	128	3.42					MEDIUM RES	RM-3-7	37.4	
2			1.13				OPEN SPACE	AR-1-1		OWNER
3			1.28				OPEN SPACE	AR-1-1		OWNER
UNIT 7						**6.45**				
1				3.98			OPEN SPACE	AR-1-1		CITY PARKS & REC
2					2.47		OPEN SPACE	AR-1-1		MASTER HOA
UNIT 8						**10.92**				
1	98	6.9					LOW MED RES	RM-1-1	14.2	SUBASSOCIATION
2					0.48		OPEN SPACE	AR-1-1		SUBASSOCIATION
3			1.93				OPEN SPACE	AR-1-1		SUBASSOCIATION
4			1.61				OPEN SPACE	AR-1-1		SUBASSOCIATION
UNIT 9						**19.75**				
1	300	11.1					LOW MED RES	RM-2-5	27.0	
2					1.57		OPEN SPACE	AR-1-1		MASTER HOA
3					3.87		OPEN SPACE	AR-1-1		MASTER HOA
4			1.77				OPEN SPACE	AR-1-1		OWNER
5			0.88				OPEN SPACE	AR-1-1		OWNER
6			0.56				OPEN SPACE	AR-1-1		OWNER
UNIT 10						**15.34**				
1	200	10.07					LOW MED RES	RM-2-4	19.9	OWNER
2			2.24				OPEN SPACE	AR-1-1		OWNER
3			3.03				OPEN SPACE	AR-1-1		OWNER
UNIT 11						**0.9**				
1					0.9		OPEN SPACE	AR-1-1		MASTER HOA
UNIT 12						**6.07**				
1					6.07		OPEN SPACE	AR-1-1		MASTER HOA
UNIT 13						**9.26**				
1				1.9			OPEN SPACE	AR-1-1		CITY PARKS & REC
2					7.36		OPEN SPACE	AR-1-1		MASTER HOA
UNIT 14						**1.86**				
1		1.86					PRIVATE COMMERCIAL REC	RS-1-13		OWNER
UNIT 15						**13.6**				
1					13.6		OPEN SPACE	AR-1-1		MASTER HOA
UNIT 16						**19.94**				
1	123	4.75					LOW MED RES	RM-2-5	25.9	OWNER
2				3.91			OPEN SPACE	AR-1-1		CITY PARKS & REC
3			1.23				OPEN SPACE	AR-1-1		OWNER
4			1.13				OPEN SPACE	AR-1-1		OWNER
5					8.79		OPEN SPACE	AR-1-1		MASTER HOA
6					0.13		OPEN SPACE	AR-1-1		OWNER
UNIT 17						**5.94**				
1	120	3.29					MEDIUM RES	RM-3-7	36.5	OWNER
2		0.27					MIXED USE-RES	CN-1-1		OWNER
3					0.13		OPEN SPACE	AR-1-1		OWNER-LOT 1
4			1.25				OPEN SPACE	AR-1-1		OWNER-LOT 1
5			1				OPEN SPACE	AR-1-1		OWNER-Lot 1
TOTALS	1200	52.94	24.72	9.79	76.76	**164.21**				
PUBLIC R.O.W. DEDICATION						**0.33**				
PROJECT TOTAL						**164.54**				

DEVIATIONS
(A) All AR-1-1 lots may reduce Minimum lot sizes from 10 acres to 0.1 acres); Minimum Lot Width from 200' to ??'; Minimum Street Frontage from 200' to ??'; and may eliminate Refuse & Recyclable Materials Storage (Table 131-03C)
(B) All RM lots may reduce side and year yard setbacks to 0'
(C) All RM-1-1 and RM-1-3 lots may exceed building limit up to 37'; all RM-2-4, RM-2-5, RM-2-6 and RM-3-7 may exceed building height limits up to 48'

PROJECT DESIGN CONSULTANTS
Planning I Landscape Architecture I Engineering I Survey
701 B Street, Suite 800
San Diego, CA 92101
619.235.6471 Tel
619.234.0349 Fax

PREPARED BY:
NAME: PROJECT DESIGN CONSULTANTS
ADDRESS: 701 'B' STREET, SUITE 800
SAN DIEGO, CALIFORNIA 92101
PHONE #: (619) 235-6471

PROJECT ADDRESS:
14050 CARMEL RIDGE ROAD
SAN DIEGO, CALIFORNIA 92128

PROJECT NAME:
THE TRAILS AT CARMEL MOUNTAIN RANCH

SHEET TITLE:
SECTIONS AND DETAILS

REVISION 14:
REVISION 13:
REVISION 12:
REVISION 11:
REVISION 10:
REVISION 09:
REVISION 08:
REVISION 07:
REVISION 06:
REVISION 05:
REVISION 04:
REVISION 03:
REVISION 02:
REVISION 01: JANUARY 30, 2020
ORIGINAL DATE: NOVEMBER 14, 2019
SHEET 2 OF 55
DEP #

REGISTERED PROFESSIONAL ENGINEER
GREGORY M. SHIELDS
No. 42951
Exp. 03-31-20
CIVIL
STATE OF CALIFORNIA

Attachment 5
Drainage Report

Attach project's drainage report. Refer to Drainage Design Manual to determine the reporting requirements.

Refer to project Drainage Study under separate cover.

Attachment 6
Geotechnical and Groundwater Investigation Report

Attach project's geotechnical and groundwater investigation report. Refer to Appendix C.4 to determine the reporting requirements.

Attachment 6 – Geotechnical and Groundwater Investigation Report

This attachment includes the Stormwater Infiltration Feasibility Study completed by Geocon on 10/21/2019. It is one out of two reports completed by Geocon on infiltration within the project site, the other being the no-infiltration letter completed on 4/7/2020 which is included in attachment 1D.

STORM WATER INFILTRATION FEASIBILITY STUDY

CARMEL MOUNTAIN RANCH GOLF COURSE SAN DIEGO, CALIFORNIA

GEOCON
INCORPORATED

GEOTECHNICAL
ENVIRONMENTAL
MATERIALS

PREPARED FOR

NEW URBAN WEST, INCORPORATED
SAN DIEGO, CALIFORNIA

OCTOBER 21, 2019
PROJECT NO. 03071-32-45A

Project No. 03071-32-45A
October 21, 2019

New Urban West, Incorporated
16935 West Bernardo Drive, Suite 260
San Diego, California 92127

Attention: Mr. Jonathan Frankel

Subject: STORM WATER INFILTRATION FEASIBILITY STUDY
CARMEL MOUNTAIN RANCH GOLF COURSE
SAN DIEGO, CALIFORNIA

References:
1. *Geotechnical Investigation, Carmel Mountain Ranch Golf Course, San Diego, California*, prepared by Geocon Incorporated, draft dated October 18, 2019 (Project No. 03071-32-45A).

2. *DMA Map, Proposed Conditions, Exhibit 1A, Carmel Mountain Ranch, City of San Diego, California*, prepared by Project Design Consultants, dated August 22, 2019.

Dear Mr. Frankel:

In accordance with the request of Ms. Chelisa Pack with Project Design Consultants, Geocon Incorporated has prepared this report addressing the feasibility of infiltrating storm water within the proposed water quality basins on the subject site. The following information is provided to support the storm water BMP design in accordance with the 2018 *City of San Diego Storm Water Standards.*

The conclusions and recommendations presented herein are based on existing geologic and geotechnical information collected over several years, as summarized in Reference No. 1. In-situ permeability testing has not been performed or warranted at this stage in the development planning because the majority of basins will be supported by either compacted fill or formational materials. The formational materials are very dense and are generally considered impermeable or exhibiting very low infiltration rates. Infiltrating into compacted fill is not considered feasible, as discussed in the Storm Water Standards Manual and herein. As plans progress, in-situ and laboratory permeability testing should be performed to validate the information presented herein.

Based on review of the referenced report and plans, BMP's 2, 8, and 18 will be supported on at least 10 feet of fill materials. BMP's 1, 6, 9, 11, 13, 16, and 17 will be supported on formational materials consisting of granitic rock or Mission Valley Formation, and BMP 5 will be supported on

approximately 7 feet of colluvial materials over granitic rock. These soil and geologic conditions are generally not considered suitable for infiltration BMP's as discussed herein.

STORM WATER MANAGEMENT INVESTIGATION

We understand storm water management devices are being proposed in accordance with the current 2018 City of San Diego storm water standards. If not properly constructed, there is a potential for distress to improvements and properties located hydrologically down gradient or adjacent to these devices. Factors such as the amount of water to be detained, its residence time, and soil permeability have an important effect on seepage transmission and the potential adverse impacts that may occur if the storm water management features are not properly designed and constructed. We have not performed a hydrogeological study at the site. If infiltration of storm water runoff occurs, downstream properties may be subjected to seeps, springs, slope instability, raised groundwater, movement of foundations and slabs, or other undesirable impacts as a result of water infiltration.

Hydrologic Soil Group

The United States Department of Agriculture (USDA), Natural Resources Conservation Services (NRCS), possesses general information regarding the existing soil conditions for areas within the United States. The USDA NRCS website also provides the Hydrologic Soil Group. Table 1 presents the descriptions of the hydrologic soil groups. If a soil is assigned to a dual hydrologic group (A/D, B/D, or C/D), the first letter is for drained areas and the second is for undrained areas.

TABLE 1
HYDROLOGIC SOIL GROUP DEFINITIONS

Soil Group	Soil Group Definition
A	Soils having a high infiltration rate (low runoff potential) when thoroughly wet. These consist mainly of deep, well drained to excessively drained sands or gravelly sands. These soils have a high rate of water transmission.
B	Soils having a moderate infiltration rate when thoroughly wet. These consist chiefly of moderately deep or deep, moderately well drained or well drained soils that have moderately fine texture to moderately coarse texture. These soils have a moderate rate of water transmission.
C	Soils having a slow infiltration rate when thoroughly wet. These consist chiefly of soils having a layer that impedes the downward movement of water or soils of moderately fine texture or fine texture. These soils have a slow rate of water transmission.
D	Soils having a very slow infiltration rate (high runoff potential) when thoroughly wet. These consist chiefly of clays that have a high shrink-swell potential, soils that have a high water table, soils that have a claypan or clay layer at or near the surface, and soils that are shallow over nearly impervious material. These soils have a very slow rate of water transmission.

The subject site is underlain by surficial deposits consisting of previously-placed compacted fill, alluvium and colluvium. Formational units include Mission Valley Formation, Stadium Conglomerate,

granitic rock, and Friars Formation. After completion of the proposed grading operations, the property would generally consist of formational units exposed at grade or compacted fill deposits overlying bedrock materials. Based on our analyses, the lower portions of alluvium and colluvium below a 10-foot removal will be left in-place below BMP's 2, 5, 8 and 16. The compacted fill and formational materials should be classified as Soil Group D. In addition, the USDA NRCS website also provides an estimated saturated hydraulic conductivity for the existing soils. Tables 3A through 3K present the information from the USDA NRCS website. The Hydrologic Soil Group Map presents output from the USDA NRCS website showing the limits of the soil units.

TABLE 3A
USDA WEB SOIL SURVEY – HYDROLOGIC SOIL GROUP (DMA 1 – BMP 1)

Map Unit Name	Map Unit Symbol	Approximate Percentage of Property	Hydrologic Soil Group	k_{SAT} of Most Limiting Layer (Inches/ Hour)
Diablo Clay, 9 to 15% slopes	DaD	54	C	0.06 – 0.20
Diablo Clay, 15 to 30% slopes	DaE2	3	C	0.06 – 0.20
Diablo-Olivenhain Complex	DoE	39	D	0.06 – 0.20
Linne Clay Loam	LsE	4	C	0.2 – 0.57

TABLE 3B
USDA WEB SOIL SURVEY – HYDROLOGIC SOIL GROUP (DMA 2 – BMP 2)

Map Unit Name	Map Unit Symbol	Approximate Percentage of Property	Hydrologic Soil Group	k_{SAT} of Most Limiting Layer (Inches/ Hour)
Altamont Clay	AtE	32	C	0.06 – 0.20
Diablo Clay, 9 to 15% slopes	DaD	24	C	0.06 – 0.20
Diablo-Olivenhain Complex	DoE	35	D	0.06 – 0.20
Ramona Sandy Loam	RaB	9	C	0.2 – 0.57

TABLE 3C
USDA WEB SOIL SURVEY – HYDROLOGIC SOIL GROUP (DMA 5 – BMP 5)

Map Unit Name	Map Unit Symbol	Approximate Percentage of Property	Hydrologic Soil Group	k_{SAT} of Most Limiting Layer (Inches/ Hour)
Escondido very fine sandy loam	EsC	29	C	0.57 – 1.98
Ramona Sandy Loam	RaB	71	C	0.2 – 0.57

TABLE 3D
USDA WEB SOIL SURVEY – HYDROLOGIC SOIL GROUP (DMA 6 – BMP 6)

Map Unit Name	Map Unit Symbol	Approximate Percentage of Property	Hydrologic Soil Group	k_{SAT} of Most Limiting Layer (Inches/ Hour)
Cieneba rocky coarse sandy loam	CMe2	26	D	1.98 – 5.95
Escondido very fine sandy loam	EsC	13	C	0.57 – 1.98
Ramona Sandy Loam	RaC	61	C	0.2 – 0.57

TABLE 3E
USDA WEB SOIL SURVEY – HYDROLOGIC SOIL GROUP (DMA 8 – BMP 8)

Map Unit Name	Map Unit Symbol	Approximate Percentage of Property	Hydrologic Soil Group	k_{SAT} of Most Limiting Layer (Inches/ Hour)
Altamont Clay	AtE	41	C	0.06 – 0.20
Cieneba rocky coarse sandy loam	CMe2	12	D	1.98 – 5.95
Diablo-Olivenhain Complex	DoE	26	D	0.06 – 0.20
Linne Clay Loam	LsE	3	C	0.2 – 0.57
Ramona Sandy Loam	RaB	18	C	0.2 – 0.57

TABLE 3F
USDA WEB SOIL SURVEY – HYDROLOGIC SOIL GROUP (DMA 9 – BMP 9)

Map Unit Name	Map Unit Symbol	Approximate Percentage of Property	Hydrologic Soil Group	k_{SAT} of Most Limiting Layer (Inches/ Hour)
Diablo Clay, 9 to 15% slopes	DaD	70	C	0.06 – 0.20
Diablo Clay, 15 to 30% slopes	DaE2	2	C	0.06 – 0.20
Linne Clay Loam	LsE	28	C	0.2 – 0.57

TABLE 3G
USDA WEB SOIL SURVEY – HYDROLOGIC SOIL GROUP (DMA 11 – BMP 11)

Map Unit Name	Map Unit Symbol	Approximate Percentage of Property	Hydrologic Soil Group	k_{SAT} of Most Limiting Layer (Inches/ Hour)
Diablo Clay, 9 to 15% slopes	DaD	29	C	0.06 – 0.20
Diablo Clay, 15 to 30% slopes	DaE2	5	C	0.06 – 0.20
Diablo-Olivenhain Complex	DoE	9	D	0.06 – 0.20
Linne Clay Loam	LsE	58	C	0.2 – 0.57

TABLE 3H
USDA WEB SOIL SURVEY – HYDROLOGIC SOIL GROUP (DMA 13 – BMP 13)

Map Unit Name	Map Unit Symbol	Approximate Percentage of Property	Hydrologic Soil Group	k_{SAT} of Most Limiting Layer (Inches/ Hour)
Cieneba coarse sandy loam	CiE2	99	D	1.98 – 5.95
Ramona Sandy Loam	RaC	1	C	0.2 – 0.57

TABLE 3I
USDA WEB SOIL SURVEY – HYDROLOGIC SOIL GROUP (DMA 16 – BMP 16)

Map Unit Name	Map Unit Symbol	Approximate Percentage of Property	Hydrologic Soil Group	k_{SAT} of Most Limiting Layer (Inches/ Hour)
Diablo-Olivenhain Complex	DoE	35	D	0.06 – 0.20
Olivehain cobbly loam	OhC	65	D	0.00 – 0.06

TABLE 3J
USDA WEB SOIL SURVEY – HYDROLOGIC SOIL GROUP (DMA 17 – BMP 17)

Map Unit Name	Map Unit Symbol	Approximate Percentage of Property	Hydrologic Soil Group	k_{SAT} of Most Limiting Layer (Inches/ Hour)
Diablo Clay, 9 to 15% slopes	DaD	100	C	0.06 – 0.20

TABLE 3K
USDA WEB SOIL SURVEY – HYDROLOGIC SOIL GROUP (DMA 18 – BMP 18)

Map Unit Name	Map Unit Symbol	Approximate Percentage of Property	Hydrologic Soil Group	k_{SAT} of Most Limiting Layer (Inches/ Hour)
Diablo Clay, 9 to 15% slopes	DaD	83	C	0.06 – 0.20
Diablo Clay, 15 to 30% slopes	DaE2	17	C	0.06 – 0.20
Linne Clay Loam	LsE	<1	C	0.2 – 0.57

STORM WATER MANAGEMENT CONCLUSIONS

The *Overall Site Plan and Geologic Map*, Figure 1, presents the existing topography, proposed development and BMP locations. We have added the geologic contacts and locations of exploratory excavations.

Table 4 presents a summary of the anticipated soil/geologic conditions beneath each of the proposed BMP locations.

TABLE 4
ANTICIPATED SOIL/GEOLOGIC CONDITIONS BENEATH BMP LOCATIONS

BMP ID	Anticipated Geologic Conditions
BMP 1	Mission Valley Formation
BMP 2	Approximately 19 feet of previously-placed fill over 4 feet of Alluvium then Granitic Rock
BMP 5	Granitic Rock
BMP 6	Granitic Rock
BMP 8	Approximately 10 feet of previously-placed fill over 4 feet of Topsoil then Granitic Rock
BMP 9	Mission Valley Formation
BMP 11	Mission Valley Formation
BMP 13	Granitic Rock
BMP 16	Stadium Conglomerate or 4 feet of Colluvium over Stadium Conglomerate
BMP 17	Mission Valley Formation
BMP 18	Approximately 10 feet of compacted fill over Mission Valley Formation

Soil Types

Existing/Proposed Compacted Fill – Fill deposits associated with the previous golf course grading operations are expected to be widespread across the site and vary in thickness from a thin veneer to approximately 34 feet (Boring No. LB-1). The materials encountered during our study consisted of mixtures of silty to clayey sands to silty to sandy clays with minor amounts of gravel, cobble and boulder size rock fragments.

The majority of these fill deposits are unsuitable for additional fill loads and will require remedial grading. However, portions of the deeper fill deposits (below 10 feet) observed on Hole Nos. 2 and 8 appear suitable in their present condition.

Previously placed compacted fill deposits associated with the surrounding residential developments are located along the perimeter for the golf course. Testing and observation services during placement of the majority of these embankments were provided by Geocon Incorporated. In some cases, the structural fill areas were extended onto the golf course property.

The previously placed compacted fill consists of mixtures of silty to clayey sands to silty to sandy clays. Boulders and a “rock fill” were encountered within Trench Nos. T-59, T-60 and T-69.

Proposed remedial grading will consist of removing the compressible surficial soils and replacement as compacted fill. The proposed storm water BMP's 2, 8 and 18 will be founded in compacted fill placed above granitic rock. The compacted fill will be comprised of mixtures of on-site sand, silt, and clay. The fill will be compacted to a dry density of at least 90 percent of the laboratory maximum dry density. In our experience, compacted fill does not possess infiltration rates appropriate for infiltration BMP's. Hazards that occur as a result of fill soil saturation include a potential for hydro-consolidation of the granular fill soils, long term fill settlement, differential fill settlement, and lateral movement associated with saturated fill relaxation. The potential for lateral water migration to adversely impact existing or proposed structures, foundations, utilities, and roadways, is high. Therefore, full infiltration should be considered infeasible.

Section D.4.2 of the *2018 Storm Water Standards* (SWS) provides a discussion regarding fill materials used for infiltration. The SWS states:

- For engineered fills, infiltration rates may still be quite uncertain due to layering and heterogeneities introduced as part of construction that cannot be precisely controlled. Due to these uncertainties, full infiltration should be considered geotechnically infeasible and liners and subdrains should be used in areas where infiltration BMP's are founded in compacted fill.
- *Where possible, infiltration BMPs on fill material should be designed such that their infiltrating surface extends into native soils.* Full and partial infiltration should be considered geotechnically infeasible within the compacted fill and liners and subdrains should be used.
- *Because of the uncertainty of fill parameters as well as potential compaction of the native soils, an infiltration BMP may not be feasible.* Therefore, full infiltration should be considered geotechnically infeasible. Partial infiltration may be feasible if the infiltration BMP extends below the compacted fill.

Granitic Rock – Cretaceous-age granitic rock was encountered on Hole Nos. 1, 2, 7, 8 and 13. Based upon the subsurface excavations, seismic traverses, site reconnaissance and experience with similar geologic conditions in the area, the rock materials exhibit a variable weathering pattern ranging from completely weathered, decomposed granite to outcrops of fresh, extremely strong, hard rock. Proposed BMP's 6 and 13 are expected to expose granitic rock. Granitic rock is not considered suitable for infiltration BMP's due to the anticipated very low infiltration rates and high probability of lateral water migration impacting adjacent homes and improvements.

Mission Valley Formation – The Eocene-age Mission Valley Formation was encountered on Hole Nos. 1, 2, 10, 11, and 16 through 18 and consists of hard claystones and siltstones, and dense sandstones. The claystones and siltstones typically possess a medium to high expansion potential and low shear strength, compared to the sandstone units that have a low expansion potential and higher shear strength properties.

Proposed cut slopes exposing the weaker claystones and siltstones are prone to surficial instability and may require stability fills. In addition, some portions of the borings encountered weathered bedrock zones, which will require deeper remedial grading in order to provide a competent surface to support proposed fills.

Proposed BMP's 1, 9, 11, and 17 are expected to expose Mission Valley Formation. BMP 18 will be underlain by approximately 10 feet of fill over Mission Valley Formation. The Mission Valley Formation is not considered suitable for infiltration BMP's due to the anticipated very low infiltration rates and high probability of lateral water migration impacting adjacent homes and improvements.

Stadium Conglomerate – The Eocene-age Stadium Conglomerate was encountered on Hole Nos. 15 and 16, which overlies the Friars Formation and underlies the Mission Valley Formation. As encountered in exploratory borings and trenches, this deposit generally consists of a sandy to clayey, conglomerate with interbedded silty to gravelly sandstone. In addition, some of the excavations advanced through this unit encountered difficulty and refusal due to cemented layers and boulders.

Proposed BMP 16 is expected to expose Stadium Conglomerate. Stadium Conglomerate is not considered suitable for infiltration BMP's due to the anticipated very low infiltration rates and high probability of lateral water migration impacting adjacent homes and improvements.

Groundwater Elevations

Groundwater and seepage was encountered within several of the exploratory trenches and borings performed during the field investigation. Groundwater/seepage was found as shallow as 7 feet in Trench No. T-126 and as deep as 32 feet in Boring No. LB-14. However, due to the geologic conditions and the natural and artificial water sources inherent to the property, groundwater conditions are expected to fluctuate seasonally.

Groundwater is not expected to be encountered within approximately 10 feet from the bottom of proposed BMP's, however, moderate to heavy seepage was observed approximately 11 feet from the bottom of proposed BMP 5.

Soil or Groundwater Contamination

Based on review of the Geotracker website, no active cleanup sites exist on or adjacent to the subject basin locations. In addition, we are not aware of any contaminated soils or shallow groundwater on the site that would preclude storm water infiltration. An environmental assessment was not part of our scope of work.

Slopes and Other Geologic Hazards

Infiltration of storm water adjacent to cut or fill slopes should be avoided. Fill slopes will exhibit instability if water is allowed to saturate the compacted fill. Cut slopes may exhibit daylight seepage.

Several of the proposed BMP's are shown with bottom elevations near or higher than the surrounding residences. The potential for lateral water migration to adversely impact adjacent residences and roadways is high if infiltration BMP's founded in compacted fill or formational materials are used.

Storm Water Management Devices

Based on the discussion above, the proposed basins do not meet the feasibility criteria for full or partial infiltration due to soil conditions and planned grading. Therefore, the proposed storm water BMP's should be designed considering no infiltration of storm water. To prevent water migration and saturation of compacted fill or formational materials from adversely impacting public and private utilities, foundations, roadway improvements, and/or causing geologic hazards such as daylight water seepage on cut slopes and slope instability, impermeable liners (e.g. High-density polyethylene, HDPE, with a thickness of about 30 mil or equivalent Polyvinyl Chloride**,** PVC) and subdrains to convey the storm water are recommended. The liner should extend up the sidewalls of the BMP's. The subdrain should be perforated, installed near the base of the excavation, be at least 4-inches in diameter and consist of Schedule 40 PVC pipe. The final segment of the subdrain outside the limits of the storm water BMP should consist of solid pipe and connected to a proper outlet. Any penetration of the liner should be properly waterproofed. The devices should also be installed in accordance with the manufacturer's recommendations.

If you have questions, or if we may be of further service, please contact the undersigned at your convenience.

Very truly yours,

GEOCON INCORPORATED

Trevor E. Myers
RCE 63773

David B. Evans
CEG 1860

TEM:DBE:dmc

(e-mail) Addressee
(3/del) Project Design Consultants
Attention: Ms. Chelisa Pack

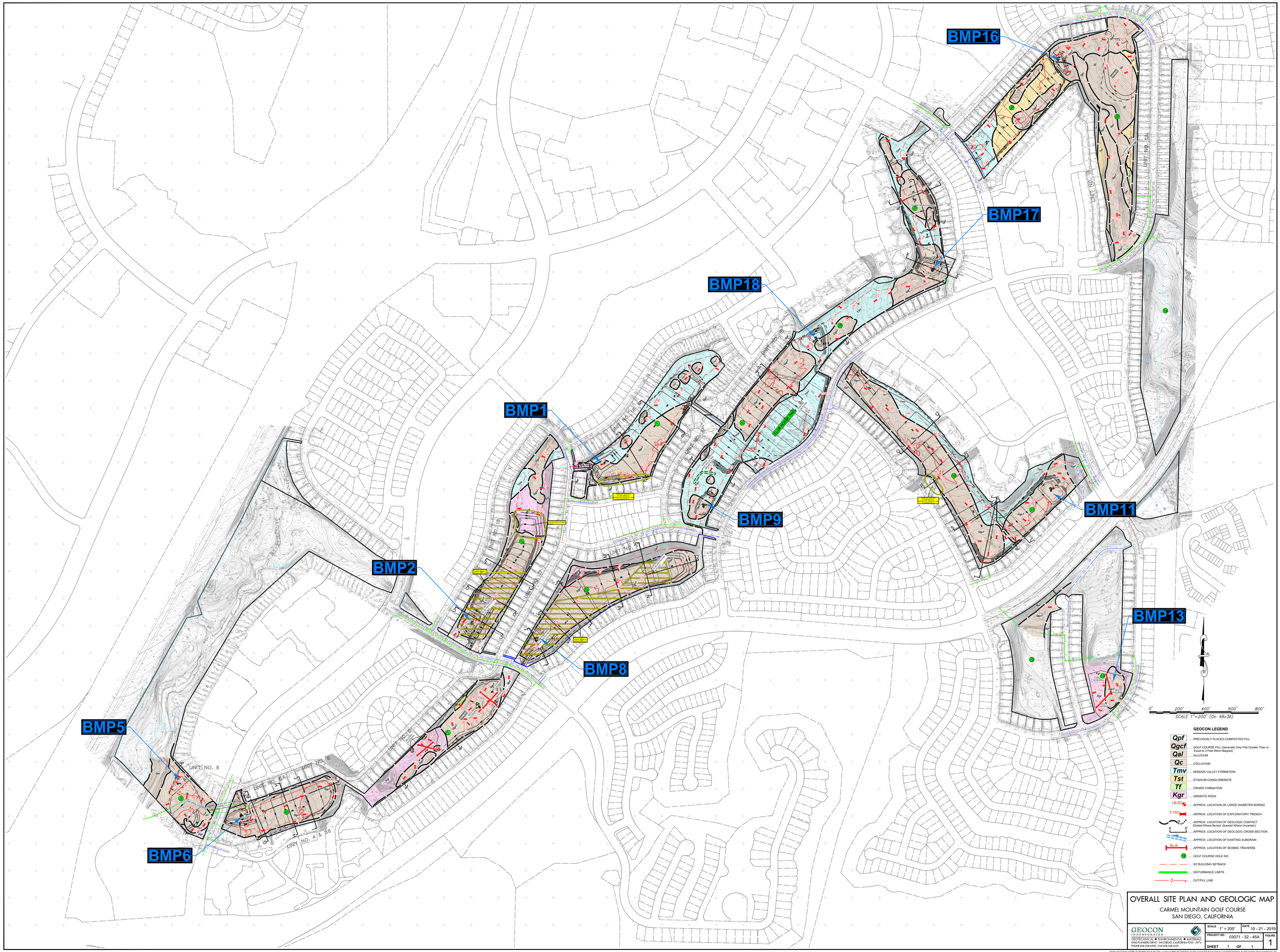

OVERALL SITE PLAN AND GEOLOGIC MAP

CARMEL MOUNTAIN GOLF COURSE
SAN DIEGO, CALIFORNIA

GEOCON
INCORPORATED
GEOTECHNICAL ■ ENVIRONMENTAL ■ MATERIALS
4960 FLANDERS DRIVE - SAN DIEGO, CALIFORNIA 92121 - 2974
PHONE 858 558-6900 - FAX 858 558-6159

SCALE	1" = 200'	DATE	10 - 21 - 2019
PROJECT NO.	03071 - 32 - 45A	FIGURE	1
SHEET	1 OF 1		

Plotted:10/22/2019 3:07PM | By:RUBEN AGUILAR | File Location:Y:\PROJECTS\03071-32-45A Carmel Mtn Ranch Golf Course\SHEETS\03071-32-45A Geoloop-StormwaterBasins4.dwg

APPENDIX A

APPENDIX A

WEB SOIL SURVEY REPORTS

FOR

CARMEL MOUNTAIN RANCH GOLF COURSE
SAN DIEGO, CALIFORNIA

PROJECT NO. 03071-32-45A

United States Department of Agriculture

Natural Resources Conservation Service

A product of the National Cooperative Soil Survey, a joint effort of the United States Department of Agriculture and other Federal agencies, State agencies including the Agricultural Experiment Stations, and local participants

Custom Soil Resource Report for San Diego County Area, California

Carmel Mountain Ranch - DMA 1

October 4, 2019

Preface

Soil surveys contain information that affects land use planning in survey areas. They highlight soil limitations that affect various land uses and provide information about the properties of the soils in the survey areas. Soil surveys are designed for many different users, including farmers, ranchers, foresters, agronomists, urban planners, community officials, engineers, developers, builders, and home buyers. Also, conservationists, teachers, students, and specialists in recreation, waste disposal, and pollution control can use the surveys to help them understand, protect, or enhance the environment.

Various land use regulations of Federal, State, and local governments may impose special restrictions on land use or land treatment. Soil surveys identify soil properties that are used in making various land use or land treatment decisions. The information is intended to help the land users identify and reduce the effects of soil limitations on various land uses. The landowner or user is responsible for identifying and complying with existing laws and regulations.

Although soil survey information can be used for general farm, local, and wider area planning, onsite investigation is needed to supplement this information in some cases. Examples include soil quality assessments (http://www.nrcs.usda.gov/wps/portal/nrcs/main/soils/health/) and certain conservation and engineering applications. For more detailed information, contact your local USDA Service Center (https://offices.sc.egov.usda.gov/locator/app?agency=nrcs) or your NRCS State Soil Scientist (http://www.nrcs.usda.gov/wps/portal/nrcs/detail/soils/contactus/?cid=nrcs142p2_053951).

Great differences in soil properties can occur within short distances. Some soils are seasonally wet or subject to flooding. Some are too unstable to be used as a foundation for buildings or roads. Clayey or wet soils are poorly suited to use as septic tank absorption fields. A high water table makes a soil poorly suited to basements or underground installations.

The National Cooperative Soil Survey is a joint effort of the United States Department of Agriculture and other Federal agencies, State agencies including the Agricultural Experiment Stations, and local agencies. The Natural Resources Conservation Service (NRCS) has leadership for the Federal part of the National Cooperative Soil Survey.

Information about soils is updated periodically. Updated information is available through the NRCS Web Soil Survey, the site for official soil survey information.

The U.S. Department of Agriculture (USDA) prohibits discrimination in all its programs and activities on the basis of race, color, national origin, age, disability, and where applicable, sex, marital status, familial status, parental status, religion, sexual orientation, genetic information, political beliefs, reprisal, or because all or a part of an individual's income is derived from any public assistance program. (Not all prohibited bases apply to all programs.) Persons with disabilities who require

Contents

How Soil Surveys Are Made

Soil surveys are made to provide information about the soils and miscellaneous areas in a specific area. They include a description of the soils and miscellaneous areas and their location on the landscape and tables that show soil properties and limitations affecting various uses. Soil scientists observed the steepness, length, and shape of the slopes; the general pattern of drainage; the kinds of crops and native plants; and the kinds of bedrock. They observed and described many soil profiles. A soil profile is the sequence of natural layers, or horizons, in a soil. The profile extends from the surface down into the unconsolidated material in which the soil formed or from the surface down to bedrock. The unconsolidated material is devoid of roots and other living organisms and has not been changed by other biological activity.

Currently, soils are mapped according to the boundaries of major land resource areas (MLRAs). MLRAs are geographically associated land resource units that share common characteristics related to physiography, geology, climate, water resources, soils, biological resources, and land uses (USDA, 2006). Soil survey areas typically consist of parts of one or more MLRA.

The soils and miscellaneous areas in a survey area occur in an orderly pattern that is related to the geology, landforms, relief, climate, and natural vegetation of the area. Each kind of soil and miscellaneous area is associated with a particular kind of landform or with a segment of the landform. By observing the soils and miscellaneous areas in the survey area and relating their position to specific segments of the landform, a soil scientist develops a concept, or model, of how they were formed. Thus, during mapping, this model enables the soil scientist to predict with a considerable degree of accuracy the kind of soil or miscellaneous area at a specific location on the landscape.

Commonly, individual soils on the landscape merge into one another as their characteristics gradually change. To construct an accurate soil map, however, soil scientists must determine the boundaries between the soils. They can observe only a limited number of soil profiles. Nevertheless, these observations, supplemented by an understanding of the soil-vegetation-landscape relationship, are sufficient to verify predictions of the kinds of soil in an area and to determine the boundaries.

Soil scientists recorded the characteristics of the soil profiles that they studied. They noted soil color, texture, size and shape of soil aggregates, kind and amount of rock fragments, distribution of plant roots, reaction, and other features that enable them to identify soils. After describing the soils in the survey area and determining their properties, the soil scientists assigned the soils to taxonomic classes (units). Taxonomic classes are concepts. Each taxonomic class has a set of soil characteristics with precisely defined limits. The classes are used as a basis for comparison to classify soils systematically. Soil taxonomy, the system of taxonomic classification used in the United States, is based mainly on the kind and character of soil properties and the arrangement of horizons within the profile. After the soil

scientists classified and named the soils in the survey area, they compared the individual soils with similar soils in the same taxonomic class in other areas so that they could confirm data and assemble additional data based on experience and research.

The objective of soil mapping is not to delineate pure map unit components; the objective is to separate the landscape into landforms or landform segments that have similar use and management requirements. Each map unit is defined by a unique combination of soil components and/or miscellaneous areas in predictable proportions. Some components may be highly contrasting to the other components of the map unit. The presence of minor components in a map unit in no way diminishes the usefulness or accuracy of the data. The delineation of such landforms and landform segments on the map provides sufficient information for the development of resource plans. If intensive use of small areas is planned, onsite investigation is needed to define and locate the soils and miscellaneous areas.

Soil scientists make many field observations in the process of producing a soil map. The frequency of observation is dependent upon several factors, including scale of mapping, intensity of mapping, design of map units, complexity of the landscape, and experience of the soil scientist. Observations are made to test and refine the soil-landscape model and predictions and to verify the classification of the soils at specific locations. Once the soil-landscape model is refined, a significantly smaller number of measurements of individual soil properties are made and recorded. These measurements may include field measurements, such as those for color, depth to bedrock, and texture, and laboratory measurements, such as those for content of sand, silt, clay, salt, and other components. Properties of each soil typically vary from one point to another across the landscape.

Observations for map unit components are aggregated to develop ranges of characteristics for the components. The aggregated values are presented. Direct measurements do not exist for every property presented for every map unit component. Values for some properties are estimated from combinations of other properties.

While a soil survey is in progress, samples of some of the soils in the area generally are collected for laboratory analyses and for engineering tests. Soil scientists interpret the data from these analyses and tests as well as the field-observed characteristics and the soil properties to determine the expected behavior of the soils under different uses. Interpretations for all of the soils are field tested through observation of the soils in different uses and under different levels of management. Some interpretations are modified to fit local conditions, and some new interpretations are developed to meet local needs. Data are assembled from other sources, such as research information, production records, and field experience of specialists. For example, data on crop yields under defined levels of management are assembled from farm records and from field or plot experiments on the same kinds of soil.

Predictions about soil behavior are based not only on soil properties but also on such variables as climate and biological activity. Soil conditions are predictable over long periods of time, but they are not predictable from year to year. For example, soil scientists can predict with a fairly high degree of accuracy that a given soil will have a high water table within certain depths in most years, but they cannot predict that a high water table will always be at a specific level in the soil on a specific date.

After soil scientists located and identified the significant natural bodies of soil in the survey area, they drew the boundaries of these bodies on aerial photographs and

identified each as a specific map unit. Aerial photographs show trees, buildings, fields, roads, and rivers, all of which help in locating boundaries accurately.

Soil Map

The soil map section includes the soil map for the defined area of interest, a list of soil map units on the map and extent of each map unit, and cartographic symbols displayed on the map. Also presented are various metadata about data used to produce the map, and a description of each soil map unit.

Custom Soil Resource Report
Soil Map

Map Scale: 1:2,570 if printed on A landscape (11" x 8.5") sheet.

N

Meters: 0 35 70 140 210

Feet: 0 100 200 400 600

Map projection: Web Mercator Corner coordinates: WGS84 Edge tics: UTM Zone 11N WGS84

MAP LEGEND

Area of Interest (AOI)

Area of Interest (AOI)

Soils

Soil Map Unit Polygons

Soil Map Unit Lines

Soil Map Unit Points

Special Point Features

Blowout

Borrow Pit

Clay Spot

Closed Depression

Gravel Pit

Gravelly Spot

Landfill

Lava Flow

Marsh or swamp

Mine or Quarry

Miscellaneous Water

Perennial Water

Rock Outcrop

Saline Spot

Sandy Spot

Severely Eroded Spot

Sinkhole

Slide or Slip

Sodic Spot

Spoil Area

Stony Spot

Very Stony Spot

Wet Spot

Other

Special Line Features

Water Features

Streams and Canals

Transportation

Rails

Interstate Highways

US Routes

Major Roads

Local Roads

Background

Aerial Photography

MAP INFORMATION

The soil surveys that comprise your AOI were mapped at 1:24,000.

Warning: Soil Map may not be valid at this scale.

Enlargement of maps beyond the scale of mapping can cause misunderstanding of the detail of mapping and accuracy of soil line placement. The maps do not show the small areas of contrasting soils that could have been shown at a more detailed scale.

Please rely on the bar scale on each map sheet for map measurements.

Source of Map: Natural Resources Conservation Service
Web Soil Survey URL:
Coordinate System: Web Mercator (EPSG:3857)

Maps from the Web Soil Survey are based on the Web Mercator projection, which preserves direction and shape but distorts distance and area. A projection that preserves area, such as the Albers equal-area conic projection, should be used if more accurate calculations of distance or area are required.

This product is generated from the USDA-NRCS certified data as of the version date(s) listed below.

Soil Survey Area: San Diego County Area, California
Survey Area Data: Version 14, Sep 16, 2019

Soil map units are labeled (as space allows) for map scales 1:50,000 or larger.

Date(s) aerial images were photographed: Nov 3, 2014—Nov 22, 2014

The orthophoto or other base map on which the soil lines were compiled and digitized probably differs from the background imagery displayed on these maps. As a result, some minor shifting of map unit boundaries may be evident.

Map Unit Legend

Map Unit Symbol	Map Unit Name	Acres in AOI	Percent of AOI
DaD	Diablo clay, 9 to 15 percent slopes, warm MAAT	4.4	54.4%
DaE2	Diablo clay, 15 to 30 percent slopes, eroded, warm MAAT	0.2	2.6%
DoE	Diablo-Olivenhain complex, 9 to 30 percent slopes	3.1	39.1%
LsE	Linne clay loam, 9 to 30 percent slopes	0.3	3.9%
Totals for Area of Interest		**8.1**	**100.0%**

Map Unit Descriptions

The map units delineated on the detailed soil maps in a soil survey represent the soils or miscellaneous areas in the survey area. The map unit descriptions, along with the maps, can be used to determine the composition and properties of a unit.

A map unit delineation on a soil map represents an area dominated by one or more major kinds of soil or miscellaneous areas. A map unit is identified and named according to the taxonomic classification of the dominant soils. Within a taxonomic class there are precisely defined limits for the properties of the soils. On the landscape, however, the soils are natural phenomena, and they have the characteristic variability of all natural phenomena. Thus, the range of some observed properties may extend beyond the limits defined for a taxonomic class. Areas of soils of a single taxonomic class rarely, if ever, can be mapped without including areas of other taxonomic classes. Consequently, every map unit is made up of the soils or miscellaneous areas for which it is named and some minor components that belong to taxonomic classes other than those of the major soils.

Most minor soils have properties similar to those of the dominant soil or soils in the map unit, and thus they do not affect use and management. These are called noncontrasting, or similar, components. They may or may not be mentioned in a particular map unit description. Other minor components, however, have properties and behavioral characteristics divergent enough to affect use or to require different management. These are called contrasting, or dissimilar, components. They generally are in small areas and could not be mapped separately because of the scale used. Some small areas of strongly contrasting soils or miscellaneous areas are identified by a special symbol on the maps. If included in the database for a given area, the contrasting minor components are identified in the map unit descriptions along with some characteristics of each. A few areas of minor components may not have been observed, and consequently they are not mentioned in the descriptions, especially where the pattern was so complex that it was impractical to make enough observations to identify all the soils and miscellaneous areas on the landscape.

The presence of minor components in a map unit in no way diminishes the usefulness or accuracy of the data. The objective of mapping is not to delineate pure taxonomic classes but rather to separate the landscape into landforms or landform segments that have similar use and management requirements. The delineation of such segments on the map provides sufficient information for the development of resource plans. If intensive use of small areas is planned, however, onsite investigation is needed to define and locate the soils and miscellaneous areas.

An identifying symbol precedes the map unit name in the map unit descriptions. Each description includes general facts about the unit and gives important soil properties and qualities.

Soils that have profiles that are almost alike make up a *soil series*. Except for differences in texture of the surface layer, all the soils of a series have major horizons that are similar in composition, thickness, and arrangement.

Soils of one series can differ in texture of the surface layer, slope, stoniness, salinity, degree of erosion, and other characteristics that affect their use. On the basis of such differences, a soil series is divided into *soil phases*. Most of the areas shown on the detailed soil maps are phases of soil series. The name of a soil phase commonly indicates a feature that affects use or management. For example, Alpha silt loam, 0 to 2 percent slopes, is a phase of the Alpha series.

Some map units are made up of two or more major soils or miscellaneous areas. These map units are complexes, associations, or undifferentiated groups.

A *complex* consists of two or more soils or miscellaneous areas in such an intricate pattern or in such small areas that they cannot be shown separately on the maps. The pattern and proportion of the soils or miscellaneous areas are somewhat similar in all areas. Alpha-Beta complex, 0 to 6 percent slopes, is an example.

An *association* is made up of two or more geographically associated soils or miscellaneous areas that are shown as one unit on the maps. Because of present or anticipated uses of the map units in the survey area, it was not considered practical or necessary to map the soils or miscellaneous areas separately. The pattern and relative proportion of the soils or miscellaneous areas are somewhat similar. Alpha-Beta association, 0 to 2 percent slopes, is an example.

An *undifferentiated group* is made up of two or more soils or miscellaneous areas that could be mapped individually but are mapped as one unit because similar interpretations can be made for use and management. The pattern and proportion of the soils or miscellaneous areas in a mapped area are not uniform. An area can be made up of only one of the major soils or miscellaneous areas, or it can be made up of all of them. Alpha and Beta soils, 0 to 2 percent slopes, is an example.

Some surveys include *miscellaneous areas*. Such areas have little or no soil material and support little or no vegetation. Rock outcrop is an example.

San Diego County Area, California

DaD—Diablo clay, 9 to 15 percent slopes, warm MAAT

Map Unit Setting

National map unit symbol: 2w63f
Elevation: 110 to 910 feet
Mean annual precipitation: 11 to 21 inches
Mean annual air temperature: 58 to 64 degrees F
Frost-free period: 290 to 365 days
Farmland classification: Farmland of statewide importance

Map Unit Composition

Diablo and similar soils: 85 percent
Minor components: 15 percent
Estimates are based on observations, descriptions, and transects of the mapunit.

Description of Diablo

Setting

Landform: Hillslopes
Landform position (two-dimensional): Backslope
Landform position (three-dimensional): Side slope
Down-slope shape: Convex
Across-slope shape: Convex
Parent material: Residuum weathered from calcareous shale

Typical profile

A - 0 to 15 inches: clay
Bkss1 - 15 to 28 inches: clay
Bkss2 - 28 to 40 inches: clay loam
Cr - 40 to 79 inches: bedrock

Properties and qualities

Slope: 9 to 15 percent
Depth to restrictive feature: 39 to 79 inches to paralithic bedrock
Natural drainage class: Well drained
Capacity of the most limiting layer to transmit water (Ksat): Moderately low to moderately high (0.06 to 0.20 in/hr)
Depth to water table: More than 80 inches
Frequency of flooding: None
Frequency of ponding: None
Calcium carbonate, maximum in profile: 5 percent
Available water storage in profile: Moderate (about 6.8 inches)

Interpretive groups

Land capability classification (irrigated): 4e
Land capability classification (nonirrigated): 4e
Hydrologic Soil Group: C
Ecological site: CLAYEY (1975) (R019XD001CA)
Hydric soil rating: No

Minor Components

Altamont

Percent of map unit: 10 percent

Landform: Hillslopes
Landform position (two-dimensional): Backslope
Landform position (three-dimensional): Side slope
Down-slope shape: Convex
Across-slope shape: Convex
Hydric soil rating: No

Linne

Percent of map unit: 3 percent
Landform: Hillslopes
Landform position (two-dimensional): Backslope
Landform position (three-dimensional): Side slope
Down-slope shape: Convex
Across-slope shape: Convex
Hydric soil rating: No

Olephant

Percent of map unit: 2 percent
Landform: Terraces
Landform position (three-dimensional): Tread
Down-slope shape: Concave
Across-slope shape: Concave
Hydric soil rating: No

DaE2—Diablo clay, 15 to 30 percent slopes, eroded, warm MAAT

Map Unit Setting

National map unit symbol: 2w60s
Elevation: 890 to 2,260 feet
Mean annual precipitation: 11 to 27 inches
Mean annual air temperature: 60 to 65 degrees F
Frost-free period: 270 to 365 days
Farmland classification: Not prime farmland

Map Unit Composition

Diablo and similar soils: 85 percent
Minor components: 15 percent
Estimates are based on observations, descriptions, and transects of the mapunit.

Description of Diablo

Setting

Landform: Hillslopes
Landform position (two-dimensional): Backslope
Landform position (three-dimensional): Side slope
Down-slope shape: Convex
Across-slope shape: Convex
Parent material: Residuum weathered from calcareous shale

Typical profile

A - 0 to 15 inches: clay

Bkss1 - 15 to 28 inches: clay
Bkss2 - 28 to 40 inches: clay loam
Cr - 40 to 79 inches: bedrock

Properties and qualities

Slope: 15 to 30 percent
Depth to restrictive feature: 39 to 79 inches to paralithic bedrock
Natural drainage class: Well drained
Capacity of the most limiting layer to transmit water (Ksat): Moderately low to moderately high (0.06 to 0.20 in/hr)
Depth to water table: More than 80 inches
Frequency of flooding: None
Frequency of ponding: None
Calcium carbonate, maximum in profile: 5 percent
Available water storage in profile: Moderate (about 6.8 inches)

Interpretive groups

Land capability classification (irrigated): 4e
Land capability classification (nonirrigated): 4e
Hydrologic Soil Group: C
Ecological site: CLAYEY (1975) (R019XD001CA)
Hydric soil rating: No

Minor Components

Altamont

Percent of map unit: 10 percent
Landform: Hillslopes
Landform position (two-dimensional): Backslope
Landform position (three-dimensional): Side slope
Down-slope shape: Convex
Across-slope shape: Convex
Hydric soil rating: No

Linne

Percent of map unit: 3 percent
Landform: Hillslopes
Landform position (two-dimensional): Backslope
Landform position (three-dimensional): Side slope
Down-slope shape: Convex
Across-slope shape: Convex
Hydric soil rating: No

Olephant

Percent of map unit: 2 percent
Landform: Terraces
Landform position (three-dimensional): Tread
Down-slope shape: Concave
Across-slope shape: Concave
Hydric soil rating: No

DoE—Diablo-Olivenhain complex, 9 to 30 percent slopes

Map Unit Setting

National map unit symbol: hbbh
Elevation: 100 to 3,250 feet
Mean annual precipitation: 9 to 25 inches
Mean annual air temperature: 59 to 63 degrees F
Frost-free period: 200 to 330 days
Farmland classification: Not prime farmland

Map Unit Composition

Diablo and similar soils: 50 percent
Olivenhain and similar soils: 45 percent
Minor components: 5 percent
Estimates are based on observations, descriptions, and transects of the mapunit.

Description of Diablo

Setting

Landform: Hillslopes
Landform position (two-dimensional): Backslope
Landform position (three-dimensional): Side slope
Down-slope shape: Convex
Across-slope shape: Convex
Parent material: Calcareous sandstone and shale

Typical profile

H1 - 0 to 15 inches: clay
H2 - 15 to 32 inches: clay, silty clay loam
H2 - 15 to 32 inches: weathered bedrock
H3 - 32 to 36 inches:

Properties and qualities

Slope: 9 to 30 percent
Depth to restrictive feature: 24 to 40 inches to paralithic bedrock
Natural drainage class: Well drained
Runoff class: Very high
Capacity of the most limiting layer to transmit water (Ksat): Moderately low to moderately high (0.06 to 0.20 in/hr)
Depth to water table: More than 80 inches
Frequency of flooding: None
Frequency of ponding: None
Calcium carbonate, maximum in profile: 10 percent
Available water storage in profile: Moderate (about 7.7 inches)

Interpretive groups

Land capability classification (irrigated): None specified
Land capability classification (nonirrigated): 4e
Hydrologic Soil Group: D
Ecological site: CLAYEY (1975) (R019XD001CA)

Hydric soil rating: No

Description of Olivenhain

Setting

Landform: Hillslopes
Landform position (two-dimensional): Backslope
Landform position (three-dimensional): Side slope
Down-slope shape: Convex
Across-slope shape: Convex
Parent material: Old alluvium

Typical profile

H1 - 0 to 10 inches: cobbly loam
H2 - 10 to 42 inches: very cobbly clay, very cobbly clay loam
H2 - 10 to 42 inches: cobbly loam, cobbly clay loam
H3 - 42 to 60 inches:
H3 - 42 to 60 inches:

Properties and qualities

Slope: 9 to 30 percent
Depth to restrictive feature: About 10 inches to abrupt textural change
Natural drainage class: Well drained
Runoff class: Very high
Capacity of the most limiting layer to transmit water (Ksat): Very low to moderately low (0.00 to 0.06 in/hr)
Depth to water table: More than 80 inches
Frequency of flooding: None
Frequency of ponding: None
Available water storage in profile: Very low (about 1.3 inches)

Interpretive groups

Land capability classification (irrigated): None specified
Land capability classification (nonirrigated): 4e
Hydrologic Soil Group: D
Ecological site: CLAYPAN (1975) (R019XD061CA)
Hydric soil rating: No

Minor Components

Linne

Percent of map unit: 5 percent
Hydric soil rating: No

LsE—Linne clay loam, 9 to 30 percent slopes

Map Unit Setting

National map unit symbol: hbdt
Elevation: 100 to 2,000 feet
Mean annual precipitation: 12 to 20 inches

Mean annual air temperature: 57 to 63 degrees F
Frost-free period: 200 to 330 days
Farmland classification: Not prime farmland

Map Unit Composition

Linne and similar soils: 85 percent
Minor components: 15 percent
Estimates are based on observations, descriptions, and transects of the mapunit.

Description of Linne

Setting

Landform: Hillslopes
Landform position (two-dimensional): Backslope
Landform position (three-dimensional): Side slope
Down-slope shape: Convex
Across-slope shape: Convex
Parent material: Residuum weathered from calcareous sandstone and shale

Typical profile

H1 - 0 to 15 inches: clay loam
H2 - 15 to 37 inches: clay loam, loam
H2 - 15 to 37 inches: weathered bedrock
H3 - 37 to 41 inches:

Properties and qualities

Slope: 9 to 30 percent
Depth to restrictive feature: 20 to 40 inches to paralithic bedrock
Natural drainage class: Well drained
Runoff class: Very high
Capacity of the most limiting layer to transmit water (Ksat): Moderately high (0.20 to 0.57 in/hr)
Depth to water table: More than 80 inches
Frequency of flooding: None
Frequency of ponding: None
Calcium carbonate, maximum in profile: 10 percent
Salinity, maximum in profile: Nonsaline to very slightly saline (0.0 to 2.0 mmhos/cm)
Available water storage in profile: High (about 10.2 inches)

Interpretive groups

Land capability classification (irrigated): 4e
Land capability classification (nonirrigated): 4e
Hydrologic Soil Group: C
Ecological site: CLAYEY (1975) (R019XD001CA)
Hydric soil rating: No

Minor Components

Diablo

Percent of map unit: 5 percent
Hydric soil rating: No

Huerhuero

Percent of map unit: 5 percent
Hydric soil rating: No

Altamont

Percent of map unit: 5 percent
Hydric soil rating: No

References

American Association of State Highway and Transportation Officials (AASHTO). 2004. Standard specifications for transportation materials and methods of sampling and testing. 24th edition.

American Society for Testing and Materials (ASTM). 2005. Standard classification of soils for engineering purposes. ASTM Standard D2487-00.

Cowardin, L.M., V. Carter, F.C. Golet, and E.T. LaRoe. 1979. Classification of wetlands and deep-water habitats of the United States. U.S. Fish and Wildlife Service FWS/OBS-79/31.

Federal Register. July 13, 1994. Changes in hydric soils of the United States.

Federal Register. September 18, 2002. Hydric soils of the United States.

Hurt, G.W., and L.M. Vasilas, editors. Version 6.0, 2006. Field indicators of hydric soils in the United States.

National Research Council. 1995. Wetlands: Characteristics and boundaries.

Soil Survey Division Staff. 1993. Soil survey manual. Soil Conservation Service. U.S. Department of Agriculture Handbook 18. http://www.nrcs.usda.gov/wps/portal/nrcs/detail/national/soils/?cid=nrcs142p2_054262

Soil Survey Staff. 1999. Soil taxonomy: A basic system of soil classification for making and interpreting soil surveys. 2nd edition. Natural Resources Conservation Service, U.S. Department of Agriculture Handbook 436. http://www.nrcs.usda.gov/wps/portal/nrcs/detail/national/soils/?cid=nrcs142p2_053577

Soil Survey Staff. 2010. Keys to soil taxonomy. 11th edition. U.S. Department of Agriculture, Natural Resources Conservation Service. http://www.nrcs.usda.gov/wps/portal/nrcs/detail/national/soils/?cid=nrcs142p2_053580

Tiner, R.W., Jr. 1985. Wetlands of Delaware. U.S. Fish and Wildlife Service and Delaware Department of Natural Resources and Environmental Control, Wetlands Section.

United States Army Corps of Engineers, Environmental Laboratory. 1987. Corps of Engineers wetlands delineation manual. Waterways Experiment Station Technical Report Y-87-1.

United States Department of Agriculture, Natural Resources Conservation Service. National forestry manual. http://www.nrcs.usda.gov/wps/portal/nrcs/detail/soils/home/?cid=nrcs142p2_053374

United States Department of Agriculture, Natural Resources Conservation Service. National range and pasture handbook. http://www.nrcs.usda.gov/wps/portal/nrcs/detail/national/landuse/rangepasture/?cid=stelprdb1043084

United States Department of Agriculture, Natural Resources Conservation Service. National soil survey handbook, title 430-VI. http://www.nrcs.usda.gov/wps/portal/nrcs/detail/soils/scientists/?cid=nrcs142p2_054242

United States Department of Agriculture, Natural Resources Conservation Service. 2006. Land resource regions and major land resource areas of the United States, the Caribbean, and the Pacific Basin. U.S. Department of Agriculture Handbook 296. http://www.nrcs.usda.gov/wps/portal/nrcs/detail/national/soils/?cid=nrcs142p2_053624

United States Department of Agriculture, Soil Conservation Service. 1961. Land capability classification. U.S. Department of Agriculture Handbook 210. http://www.nrcs.usda.gov/Internet/FSE_DOCUMENTS/nrcs142p2_052290.pdf

United States Department of Agriculture

NRCS

Natural Resources Conservation Service

A product of the National Cooperative Soil Survey, a joint effort of the United States Department of Agriculture and other Federal agencies, State agencies including the Agricultural Experiment Stations, and local participants

Custom Soil Resource Report for San Diego County Area, California

Carmel Mountain Ranch - DMA 2

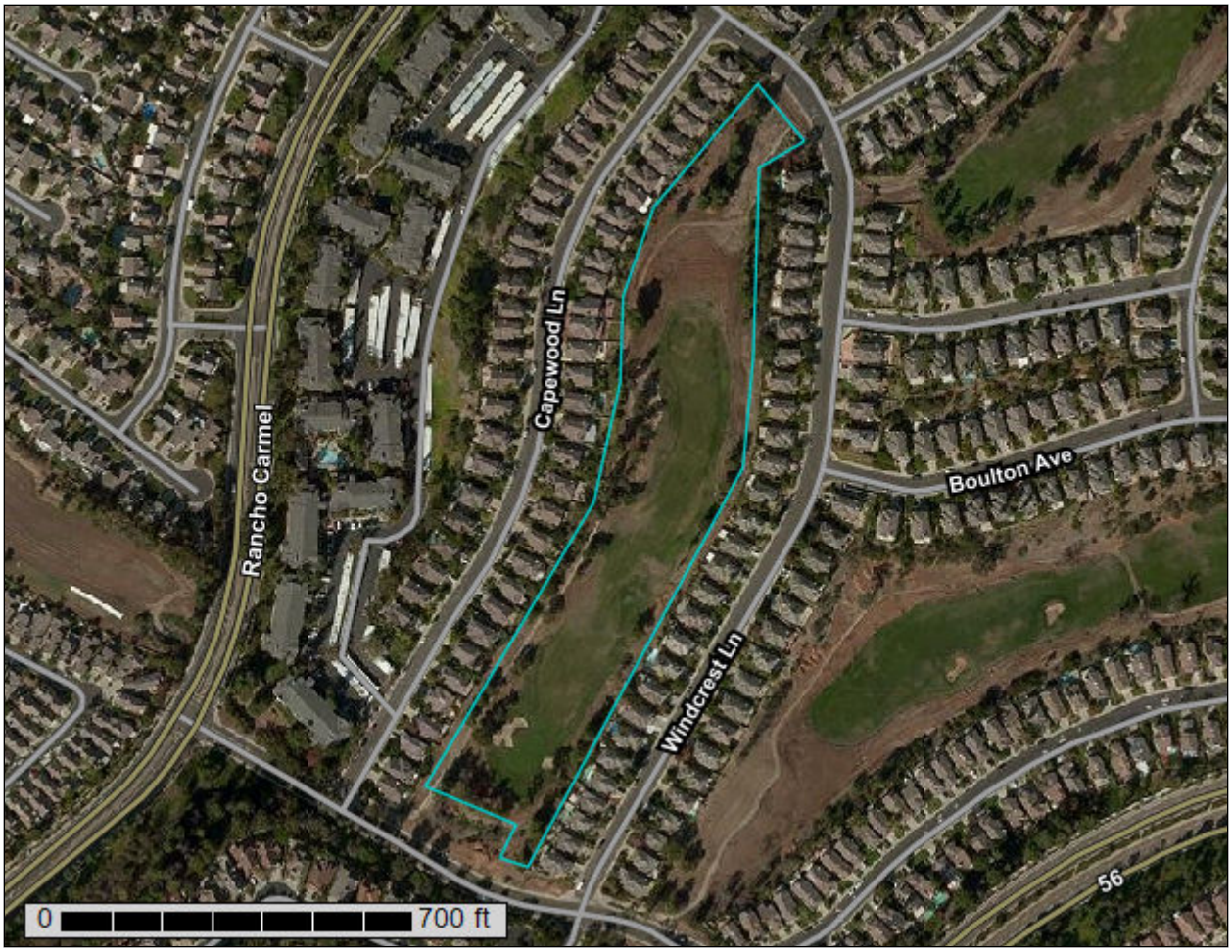

October 4, 2019

Preface

Soil surveys contain information that affects land use planning in survey areas. They highlight soil limitations that affect various land uses and provide information about the properties of the soils in the survey areas. Soil surveys are designed for many different users, including farmers, ranchers, foresters, agronomists, urban planners, community officials, engineers, developers, builders, and home buyers. Also, conservationists, teachers, students, and specialists in recreation, waste disposal, and pollution control can use the surveys to help them understand, protect, or enhance the environment.

Various land use regulations of Federal, State, and local governments may impose special restrictions on land use or land treatment. Soil surveys identify soil properties that are used in making various land use or land treatment decisions. The information is intended to help the land users identify and reduce the effects of soil limitations on various land uses. The landowner or user is responsible for identifying and complying with existing laws and regulations.

Although soil survey information can be used for general farm, local, and wider area planning, onsite investigation is needed to supplement this information in some cases. Examples include soil quality assessments (http://www.nrcs.usda.gov/wps/portal/nrcs/main/soils/health/) and certain conservation and engineering applications. For more detailed information, contact your local USDA Service Center (https://offices.sc.egov.usda.gov/locator/app?agency=nrcs) or your NRCS State Soil Scientist (http://www.nrcs.usda.gov/wps/portal/nrcs/detail/soils/contactus/?cid=nrcs142p2_053951).

Great differences in soil properties can occur within short distances. Some soils are seasonally wet or subject to flooding. Some are too unstable to be used as a foundation for buildings or roads. Clayey or wet soils are poorly suited to use as septic tank absorption fields. A high water table makes a soil poorly suited to basements or underground installations.

The National Cooperative Soil Survey is a joint effort of the United States Department of Agriculture and other Federal agencies, State agencies including the Agricultural Experiment Stations, and local agencies. The Natural Resources Conservation Service (NRCS) has leadership for the Federal part of the National Cooperative Soil Survey.

Information about soils is updated periodically. Updated information is available through the NRCS Web Soil Survey, the site for official soil survey information.

The U.S. Department of Agriculture (USDA) prohibits discrimination in all its programs and activities on the basis of race, color, national origin, age, disability, and where applicable, sex, marital status, familial status, parental status, religion, sexual orientation, genetic information, political beliefs, reprisal, or because all or a part of an individual's income is derived from any public assistance program. (Not all prohibited bases apply to all programs.) Persons with disabilities who require

Contents

How Soil Surveys Are Made

Soil surveys are made to provide information about the soils and miscellaneous areas in a specific area. They include a description of the soils and miscellaneous areas and their location on the landscape and tables that show soil properties and limitations affecting various uses. Soil scientists observed the steepness, length, and shape of the slopes; the general pattern of drainage; the kinds of crops and native plants; and the kinds of bedrock. They observed and described many soil profiles. A soil profile is the sequence of natural layers, or horizons, in a soil. The profile extends from the surface down into the unconsolidated material in which the soil formed or from the surface down to bedrock. The unconsolidated material is devoid of roots and other living organisms and has not been changed by other biological activity.

Currently, soils are mapped according to the boundaries of major land resource areas (MLRAs). MLRAs are geographically associated land resource units that share common characteristics related to physiography, geology, climate, water resources, soils, biological resources, and land uses (USDA, 2006). Soil survey areas typically consist of parts of one or more MLRA.

The soils and miscellaneous areas in a survey area occur in an orderly pattern that is related to the geology, landforms, relief, climate, and natural vegetation of the area. Each kind of soil and miscellaneous area is associated with a particular kind of landform or with a segment of the landform. By observing the soils and miscellaneous areas in the survey area and relating their position to specific segments of the landform, a soil scientist develops a concept, or model, of how they were formed. Thus, during mapping, this model enables the soil scientist to predict with a considerable degree of accuracy the kind of soil or miscellaneous area at a specific location on the landscape.

Commonly, individual soils on the landscape merge into one another as their characteristics gradually change. To construct an accurate soil map, however, soil scientists must determine the boundaries between the soils. They can observe only a limited number of soil profiles. Nevertheless, these observations, supplemented by an understanding of the soil-vegetation-landscape relationship, are sufficient to verify predictions of the kinds of soil in an area and to determine the boundaries.

Soil scientists recorded the characteristics of the soil profiles that they studied. They noted soil color, texture, size and shape of soil aggregates, kind and amount of rock fragments, distribution of plant roots, reaction, and other features that enable them to identify soils. After describing the soils in the survey area and determining their properties, the soil scientists assigned the soils to taxonomic classes (units). Taxonomic classes are concepts. Each taxonomic class has a set of soil characteristics with precisely defined limits. The classes are used as a basis for comparison to classify soils systematically. Soil taxonomy, the system of taxonomic classification used in the United States, is based mainly on the kind and character of soil properties and the arrangement of horizons within the profile. After the soil

scientists classified and named the soils in the survey area, they compared the individual soils with similar soils in the same taxonomic class in other areas so that they could confirm data and assemble additional data based on experience and research.

The objective of soil mapping is not to delineate pure map unit components; the objective is to separate the landscape into landforms or landform segments that have similar use and management requirements. Each map unit is defined by a unique combination of soil components and/or miscellaneous areas in predictable proportions. Some components may be highly contrasting to the other components of the map unit. The presence of minor components in a map unit in no way diminishes the usefulness or accuracy of the data. The delineation of such landforms and landform segments on the map provides sufficient information for the development of resource plans. If intensive use of small areas is planned, onsite investigation is needed to define and locate the soils and miscellaneous areas.

Soil scientists make many field observations in the process of producing a soil map. The frequency of observation is dependent upon several factors, including scale of mapping, intensity of mapping, design of map units, complexity of the landscape, and experience of the soil scientist. Observations are made to test and refine the soil-landscape model and predictions and to verify the classification of the soils at specific locations. Once the soil-landscape model is refined, a significantly smaller number of measurements of individual soil properties are made and recorded. These measurements may include field measurements, such as those for color, depth to bedrock, and texture, and laboratory measurements, such as those for content of sand, silt, clay, salt, and other components. Properties of each soil typically vary from one point to another across the landscape.

Observations for map unit components are aggregated to develop ranges of characteristics for the components. The aggregated values are presented. Direct measurements do not exist for every property presented for every map unit component. Values for some properties are estimated from combinations of other properties.

While a soil survey is in progress, samples of some of the soils in the area generally are collected for laboratory analyses and for engineering tests. Soil scientists interpret the data from these analyses and tests as well as the field-observed characteristics and the soil properties to determine the expected behavior of the soils under different uses. Interpretations for all of the soils are field tested through observation of the soils in different uses and under different levels of management. Some interpretations are modified to fit local conditions, and some new interpretations are developed to meet local needs. Data are assembled from other sources, such as research information, production records, and field experience of specialists. For example, data on crop yields under defined levels of management are assembled from farm records and from field or plot experiments on the same kinds of soil.

Predictions about soil behavior are based not only on soil properties but also on such variables as climate and biological activity. Soil conditions are predictable over long periods of time, but they are not predictable from year to year. For example, soil scientists can predict with a fairly high degree of accuracy that a given soil will have a high water table within certain depths in most years, but they cannot predict that a high water table will always be at a specific level in the soil on a specific date.

After soil scientists located and identified the significant natural bodies of soil in the survey area, they drew the boundaries of these bodies on aerial photographs and

identified each as a specific map unit. Aerial photographs show trees, buildings, fields, roads, and rivers, all of which help in locating boundaries accurately.

Soil Map

The soil map section includes the soil map for the defined area of interest, a list of soil map units on the map and extent of each map unit, and cartographic symbols displayed on the map. Also presented are various metadata about data used to produce the map, and a description of each soil map unit.

Custom Soil Resource Report
Soil Map

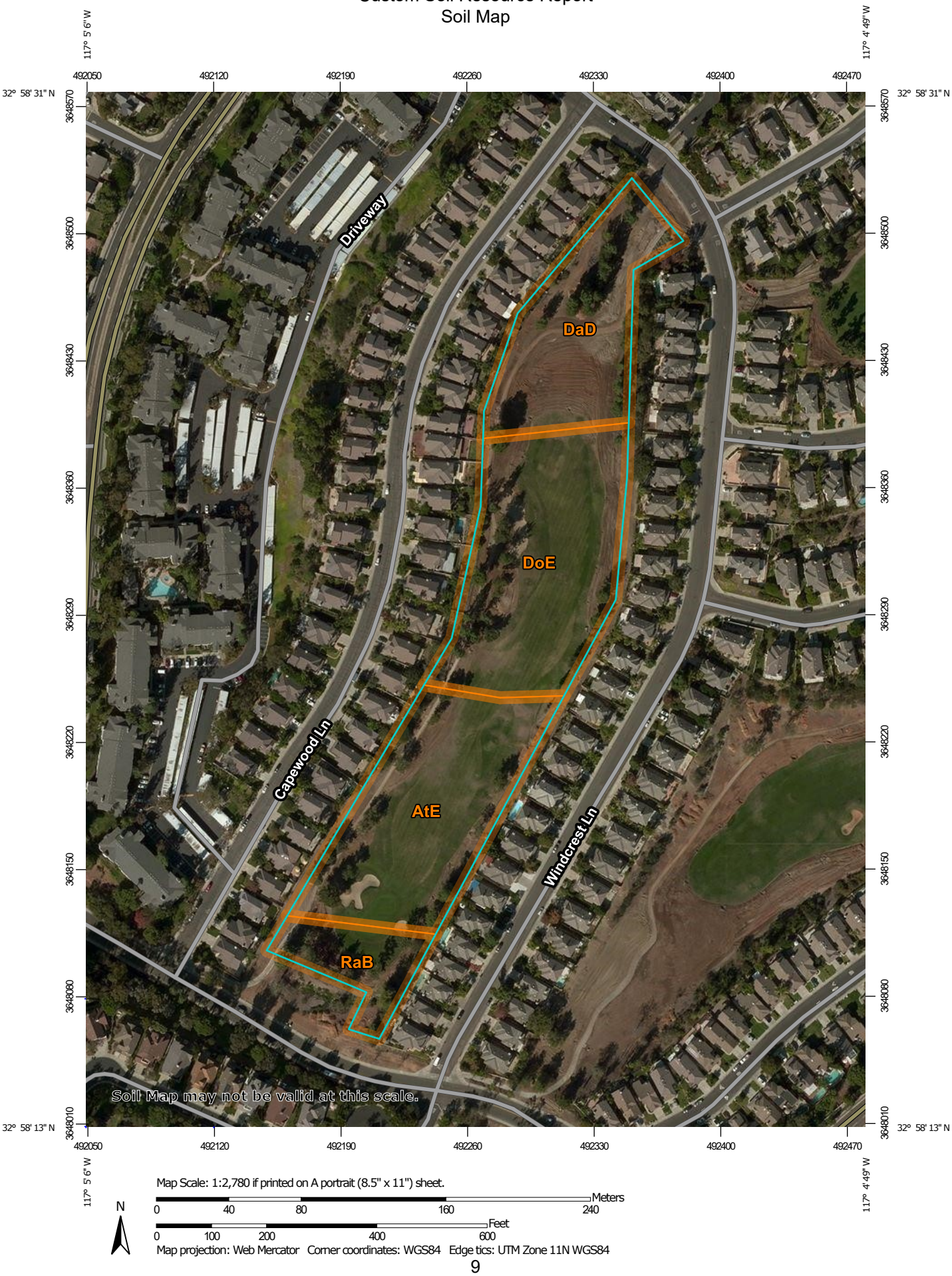

MAP LEGEND

Area of Interest (AOI)

Area of Interest (AOI)

Soils

Soil Map Unit Polygons

Soil Map Unit Lines

Soil Map Unit Points

Special Point Features

Blowout

Borrow Pit

Clay Spot

Closed Depression

Gravel Pit

Gravelly Spot

Landfill

Lava Flow

Marsh or swamp

Mine or Quarry

Miscellaneous Water

Perennial Water

Rock Outcrop

Saline Spot

Sandy Spot

Severely Eroded Spot

Sinkhole

Slide or Slip

Sodic Spot

Spoil Area

Stony Spot

Very Stony Spot

Wet Spot

Other

Special Line Features

Water Features

Streams and Canals

Transportation

Rails

Interstate Highways

US Routes

Major Roads

Local Roads

Background

Aerial Photography

MAP INFORMATION

The soil surveys that comprise your AOI were mapped at 1:24,000.

Warning: Soil Map may not be valid at this scale.

Enlargement of maps beyond the scale of mapping can cause misunderstanding of the detail of mapping and accuracy of soil line placement. The maps do not show the small areas of contrasting soils that could have been shown at a more detailed scale.

Please rely on the bar scale on each map sheet for map measurements.

Source of Map: Natural Resources Conservation Service
Web Soil Survey URL:
Coordinate System: Web Mercator (EPSG:3857)

Maps from the Web Soil Survey are based on the Web Mercator projection, which preserves direction and shape but distorts distance and area. A projection that preserves area, such as the Albers equal-area conic projection, should be used if more accurate calculations of distance or area are required.

This product is generated from the USDA-NRCS certified data as of the version date(s) listed below.

Soil Survey Area: San Diego County Area, California
Survey Area Data: Version 14, Sep 16, 2019

Soil map units are labeled (as space allows) for map scales 1:50,000 or larger.

Date(s) aerial images were photographed: Nov 3, 2014—Nov 22, 2014

The orthophoto or other base map on which the soil lines were compiled and digitized probably differs from the background imagery displayed on these maps. As a result, some minor shifting of map unit boundaries may be evident.

Map Unit Legend

Map Unit Symbol	Map Unit Name	Acres in AOI	Percent of AOI
AtE	Altamont clay, 15 to 30 percent slopes, warm MAAT, MLRA 20	2.7	32.2%
DaD	Diablo clay, 9 to 15 percent slopes, warm MAAT	1.9	23.5%
DoE	Diablo-Olivenhain complex, 9 to 30 percent slopes	2.9	35.4%
RaB	Ramona sandy loam, 2 to 5 percent slopes	0.7	8.9%
Totals for Area of Interest		**8.3**	**100.0%**

Map Unit Descriptions

The map units delineated on the detailed soil maps in a soil survey represent the soils or miscellaneous areas in the survey area. The map unit descriptions, along with the maps, can be used to determine the composition and properties of a unit.

A map unit delineation on a soil map represents an area dominated by one or more major kinds of soil or miscellaneous areas. A map unit is identified and named according to the taxonomic classification of the dominant soils. Within a taxonomic class there are precisely defined limits for the properties of the soils. On the landscape, however, the soils are natural phenomena, and they have the characteristic variability of all natural phenomena. Thus, the range of some observed properties may extend beyond the limits defined for a taxonomic class. Areas of soils of a single taxonomic class rarely, if ever, can be mapped without including areas of other taxonomic classes. Consequently, every map unit is made up of the soils or miscellaneous areas for which it is named and some minor components that belong to taxonomic classes other than those of the major soils.

Most minor soils have properties similar to those of the dominant soil or soils in the map unit, and thus they do not affect use and management. These are called noncontrasting, or similar, components. They may or may not be mentioned in a particular map unit description. Other minor components, however, have properties and behavioral characteristics divergent enough to affect use or to require different management. These are called contrasting, or dissimilar, components. They generally are in small areas and could not be mapped separately because of the scale used. Some small areas of strongly contrasting soils or miscellaneous areas are identified by a special symbol on the maps. If included in the database for a given area, the contrasting minor components are identified in the map unit descriptions along with some characteristics of each. A few areas of minor components may not have been observed, and consequently they are not mentioned in the descriptions, especially where the pattern was so complex that it was impractical to make enough observations to identify all the soils and miscellaneous areas on the landscape.

The presence of minor components in a map unit in no way diminishes the usefulness or accuracy of the data. The objective of mapping is not to delineate pure taxonomic classes but rather to separate the landscape into landforms or landform segments that have similar use and management requirements. The delineation of such segments on the map provides sufficient information for the development of resource plans. If intensive use of small areas is planned, however, onsite investigation is needed to define and locate the soils and miscellaneous areas.

An identifying symbol precedes the map unit name in the map unit descriptions. Each description includes general facts about the unit and gives important soil properties and qualities.

Soils that have profiles that are almost alike make up a *soil series*. Except for differences in texture of the surface layer, all the soils of a series have major horizons that are similar in composition, thickness, and arrangement.

Soils of one series can differ in texture of the surface layer, slope, stoniness, salinity, degree of erosion, and other characteristics that affect their use. On the basis of such differences, a soil series is divided into *soil phases*. Most of the areas shown on the detailed soil maps are phases of soil series. The name of a soil phase commonly indicates a feature that affects use or management. For example, Alpha silt loam, 0 to 2 percent slopes, is a phase of the Alpha series.

Some map units are made up of two or more major soils or miscellaneous areas. These map units are complexes, associations, or undifferentiated groups.

A *complex* consists of two or more soils or miscellaneous areas in such an intricate pattern or in such small areas that they cannot be shown separately on the maps. The pattern and proportion of the soils or miscellaneous areas are somewhat similar in all areas. Alpha-Beta complex, 0 to 6 percent slopes, is an example.

An *association* is made up of two or more geographically associated soils or miscellaneous areas that are shown as one unit on the maps. Because of present or anticipated uses of the map units in the survey area, it was not considered practical or necessary to map the soils or miscellaneous areas separately. The pattern and relative proportion of the soils or miscellaneous areas are somewhat similar. Alpha-Beta association, 0 to 2 percent slopes, is an example.

An *undifferentiated group* is made up of two or more soils or miscellaneous areas that could be mapped individually but are mapped as one unit because similar interpretations can be made for use and management. The pattern and proportion of the soils or miscellaneous areas in a mapped area are not uniform. An area can be made up of only one of the major soils or miscellaneous areas, or it can be made up of all of them. Alpha and Beta soils, 0 to 2 percent slopes, is an example.

Some surveys include *miscellaneous areas*. Such areas have little or no soil material and support little or no vegetation. Rock outcrop is an example.

San Diego County Area, California

AtE—Altamont clay, 15 to 30 percent slopes, warm MAAT, MLRA 20

Map Unit Setting

National map unit symbol: 2w627
Elevation: 20 to 860 feet
Mean annual precipitation: 11 to 15 inches
Mean annual air temperature: 62 to 65 degrees F
Frost-free period: 300 to 365 days
Farmland classification: Not prime farmland

Map Unit Composition

Altamont and similar soils: 85 percent
Minor components: 15 percent
Estimates are based on observations, descriptions, and transects of the mapunit.

Description of Altamont

Setting

Landform: Hillslopes, mountain slopes
Down-slope shape: Convex
Across-slope shape: Convex
Parent material: Residuum weathered from sandstone and shale

Typical profile

A - 0 to 4 inches: clay
Bss - 4 to 28 inches: clay
Bkss - 28 to 40 inches: clay
Cr - 40 to 50 inches:

Properties and qualities

Slope: 15 to 30 percent
Depth to restrictive feature: 40 to 60 inches to paralithic bedrock
Natural drainage class: Well drained
Runoff class: High
Capacity of the most limiting layer to transmit water (Ksat): Moderately low to moderately high (0.06 to 0.20 in/hr)
Depth to water table: More than 80 inches
Frequency of flooding: None
Frequency of ponding: None
Calcium carbonate, maximum in profile: 10 percent
Available water storage in profile: Moderate (about 6.4 inches)

Interpretive groups

Land capability classification (irrigated): 4e
Land capability classification (nonirrigated): 4e
Hydrologic Soil Group: C
Ecological site: CLAYEY (1975) (R019XD001CA)
Hydric soil rating: No

Minor Components

Las flores

Percent of map unit: 5 percent
Landform: Hillslopes, mountain slopes

Down-slope shape: Convex
Across-slope shape: Convex
Hydric soil rating: No

Diablo

Percent of map unit: 5 percent
Landform: Mountain slopes, hillslopes
Down-slope shape: Convex
Across-slope shape: Convex
Hydric soil rating: No

Linne

Percent of map unit: 5 percent
Landform: Hillslopes, mountain slopes
Down-slope shape: Convex
Across-slope shape: Convex
Hydric soil rating: No

DaD—Diablo clay, 9 to 15 percent slopes, warm MAAT

Map Unit Setting

National map unit symbol: 2w63f
Elevation: 110 to 910 feet
Mean annual precipitation: 11 to 21 inches
Mean annual air temperature: 58 to 64 degrees F
Frost-free period: 290 to 365 days
Farmland classification: Farmland of statewide importance

Map Unit Composition

Diablo and similar soils: 85 percent
Minor components: 15 percent
Estimates are based on observations, descriptions, and transects of the mapunit.

Description of Diablo

Setting

Landform: Hillslopes
Landform position (two-dimensional): Backslope
Landform position (three-dimensional): Side slope
Down-slope shape: Convex
Across-slope shape: Convex
Parent material: Residuum weathered from calcareous shale

Typical profile

A - 0 to 15 inches: clay
Bkss1 - 15 to 28 inches: clay
Bkss2 - 28 to 40 inches: clay loam
Cr - 40 to 79 inches: bedrock

Properties and qualities

Slope: 9 to 15 percent

Depth to restrictive feature: 39 to 79 inches to paralithic bedrock
Natural drainage class: Well drained
Capacity of the most limiting layer to transmit water (Ksat): Moderately low to moderately high (0.06 to 0.20 in/hr)
Depth to water table: More than 80 inches
Frequency of flooding: None
Frequency of ponding: None
Calcium carbonate, maximum in profile: 5 percent
Available water storage in profile: Moderate (about 6.8 inches)

Interpretive groups

Land capability classification (irrigated): 4e
Land capability classification (nonirrigated): 4e
Hydrologic Soil Group: C
Ecological site: CLAYEY (1975) (R019XD001CA)
Hydric soil rating: No

Minor Components

Altamont

Percent of map unit: 10 percent
Landform: Hillslopes
Landform position (two-dimensional): Backslope
Landform position (three-dimensional): Side slope
Down-slope shape: Convex
Across-slope shape: Convex
Hydric soil rating: No

Linne

Percent of map unit: 3 percent
Landform: Hillslopes
Landform position (two-dimensional): Backslope
Landform position (three-dimensional): Side slope
Down-slope shape: Convex
Across-slope shape: Convex
Hydric soil rating: No

Olephant

Percent of map unit: 2 percent
Landform: Terraces
Landform position (three-dimensional): Tread
Down-slope shape: Concave
Across-slope shape: Concave
Hydric soil rating: No

DoE—Diablo-Olivenhain complex, 9 to 30 percent slopes

Map Unit Setting

National map unit symbol: hbbh
Elevation: 100 to 3,250 feet
Mean annual precipitation: 9 to 25 inches

Mean annual air temperature: 59 to 63 degrees F
Frost-free period: 200 to 330 days
Farmland classification: Not prime farmland

Map Unit Composition

Diablo and similar soils: 50 percent
Olivenhain and similar soils: 45 percent
Minor components: 5 percent
Estimates are based on observations, descriptions, and transects of the mapunit.

Description of Diablo

Setting

Landform: Hillslopes
Landform position (two-dimensional): Backslope
Landform position (three-dimensional): Side slope
Down-slope shape: Convex
Across-slope shape: Convex
Parent material: Calcareous sandstone and shale

Typical profile

H1 - 0 to 15 inches: clay
H2 - 15 to 32 inches: clay, silty clay loam
H2 - 15 to 32 inches: weathered bedrock
H3 - 32 to 36 inches:

Properties and qualities

Slope: 9 to 30 percent
Depth to restrictive feature: 24 to 40 inches to paralithic bedrock
Natural drainage class: Well drained
Runoff class: Very high
Capacity of the most limiting layer to transmit water (Ksat): Moderately low to moderately high (0.06 to 0.20 in/hr)
Depth to water table: More than 80 inches
Frequency of flooding: None
Frequency of ponding: None
Calcium carbonate, maximum in profile: 10 percent
Available water storage in profile: Moderate (about 7.7 inches)

Interpretive groups

Land capability classification (irrigated): None specified
Land capability classification (nonirrigated): 4e
Hydrologic Soil Group: D
Ecological site: CLAYEY (1975) (R019XD001CA)
Hydric soil rating: No

Description of Olivenhain

Setting

Landform: Hillslopes
Landform position (two-dimensional): Backslope
Landform position (three-dimensional): Side slope
Down-slope shape: Convex
Across-slope shape: Convex
Parent material: Old alluvium

Typical profile

H1 - 0 to 10 inches: cobbly loam
H2 - 10 to 42 inches: very cobbly clay, very cobbly clay loam
H2 - 10 to 42 inches: cobbly loam, cobbly clay loam
H3 - 42 to 60 inches:
H3 - 42 to 60 inches:

Properties and qualities

Slope: 9 to 30 percent
Depth to restrictive feature: About 10 inches to abrupt textural change
Natural drainage class: Well drained
Runoff class: Very high
Capacity of the most limiting layer to transmit water (Ksat): Very low to moderately low (0.00 to 0.06 in/hr)
Depth to water table: More than 80 inches
Frequency of flooding: None
Frequency of ponding: None
Available water storage in profile: Very low (about 1.3 inches)

Interpretive groups

Land capability classification (irrigated): None specified
Land capability classification (nonirrigated): 4e
Hydrologic Soil Group: D
Ecological site: CLAYPAN (1975) (R019XD061CA)
Hydric soil rating: No

Minor Components

Linne

Percent of map unit: 5 percent
Hydric soil rating: No

RaB—Ramona sandy loam, 2 to 5 percent slopes

Map Unit Setting

National map unit symbol: hbfr
Elevation: 250 to 3,500 feet
Mean annual precipitation: 10 to 20 inches
Mean annual air temperature: 63 degrees F
Frost-free period: 230 to 320 days
Farmland classification: Prime farmland if irrigated

Map Unit Composition

Ramona and similar soils: 85 percent
Minor components: 15 percent
Estimates are based on observations, descriptions, and transects of the mapunit.

Description of Ramona

Setting

Landform: Alluvial fans
Landform position (two-dimensional): Toeslope
Landform position (three-dimensional): Base slope, rise
Down-slope shape: Linear
Across-slope shape: Convex
Parent material: Alluvium derived from granite

Typical profile

H1 - 0 to 17 inches: sandy loam
H2 - 17 to 60 inches: sandy clay loam, clay loam
H2 - 17 to 60 inches: sandy clay loam, sandy loam
H3 - 60 to 74 inches:
H3 - 60 to 74 inches:

Properties and qualities

Slope: 2 to 5 percent
Depth to restrictive feature: More than 80 inches
Natural drainage class: Well drained
Runoff class: Medium
Capacity of the most limiting layer to transmit water (Ksat): Moderately high (0.20 to 0.57 in/hr)
Depth to water table: More than 80 inches
Frequency of flooding: None
Frequency of ponding: None
Available water storage in profile: Very high (about 14.9 inches)

Interpretive groups

Land capability classification (irrigated): 2e
Land capability classification (nonirrigated): 4e
Hydrologic Soil Group: C
Hydric soil rating: No

Minor Components

Greenfield

Percent of map unit: 10 percent
Hydric soil rating: No

Plecentia

Percent of map unit: 5 percent
Hydric soil rating: No

References

American Association of State Highway and Transportation Officials (AASHTO). 2004. Standard specifications for transportation materials and methods of sampling and testing. 24th edition.

American Society for Testing and Materials (ASTM). 2005. Standard classification of soils for engineering purposes. ASTM Standard D2487-00.

Cowardin, L.M., V. Carter, F.C. Golet, and E.T. LaRoe. 1979. Classification of wetlands and deep-water habitats of the United States. U.S. Fish and Wildlife Service FWS/OBS-79/31.

Federal Register. July 13, 1994. Changes in hydric soils of the United States.

Federal Register. September 18, 2002. Hydric soils of the United States.

Hurt, G.W., and L.M. Vasilas, editors. Version 6.0, 2006. Field indicators of hydric soils in the United States.

National Research Council. 1995. Wetlands: Characteristics and boundaries.

Soil Survey Division Staff. 1993. Soil survey manual. Soil Conservation Service. U.S. Department of Agriculture Handbook 18. http://www.nrcs.usda.gov/wps/portal/nrcs/detail/national/soils/?cid=nrcs142p2_054262

Soil Survey Staff. 1999. Soil taxonomy: A basic system of soil classification for making and interpreting soil surveys. 2nd edition. Natural Resources Conservation Service, U.S. Department of Agriculture Handbook 436. http://www.nrcs.usda.gov/wps/portal/nrcs/detail/national/soils/?cid=nrcs142p2_053577

Soil Survey Staff. 2010. Keys to soil taxonomy. 11th edition. U.S. Department of Agriculture, Natural Resources Conservation Service. http://www.nrcs.usda.gov/wps/portal/nrcs/detail/national/soils/?cid=nrcs142p2_053580

Tiner, R.W., Jr. 1985. Wetlands of Delaware. U.S. Fish and Wildlife Service and Delaware Department of Natural Resources and Environmental Control, Wetlands Section.

United States Army Corps of Engineers, Environmental Laboratory. 1987. Corps of Engineers wetlands delineation manual. Waterways Experiment Station Technical Report Y-87-1.

United States Department of Agriculture, Natural Resources Conservation Service. National forestry manual. http://www.nrcs.usda.gov/wps/portal/nrcs/detail/soils/home/?cid=nrcs142p2_053374

United States Department of Agriculture, Natural Resources Conservation Service. National range and pasture handbook. http://www.nrcs.usda.gov/wps/portal/nrcs/detail/national/landuse/rangepasture/?cid=stelprdb1043084

United States Department of Agriculture, Natural Resources Conservation Service. National soil survey handbook, title 430-VI. http://www.nrcs.usda.gov/wps/portal/nrcs/detail/soils/scientists/?cid=nrcs142p2_054242

United States Department of Agriculture, Natural Resources Conservation Service. 2006. Land resource regions and major land resource areas of the United States, the Caribbean, and the Pacific Basin. U.S. Department of Agriculture Handbook 296. http://www.nrcs.usda.gov/wps/portal/nrcs/detail/national/soils/?cid=nrcs142p2_053624

United States Department of Agriculture, Soil Conservation Service. 1961. Land capability classification. U.S. Department of Agriculture Handbook 210. http://www.nrcs.usda.gov/Internet/FSE_DOCUMENTS/nrcs142p2_052290.pdf

United States Department of Agriculture

Natural Resources Conservation Service

A product of the National Cooperative Soil Survey, a joint effort of the United States Department of Agriculture and other Federal agencies, State agencies including the Agricultural Experiment Stations, and local participants

Custom Soil Resource Report for San Diego County Area, California

Carmel Mountain Ranch - DMA 5

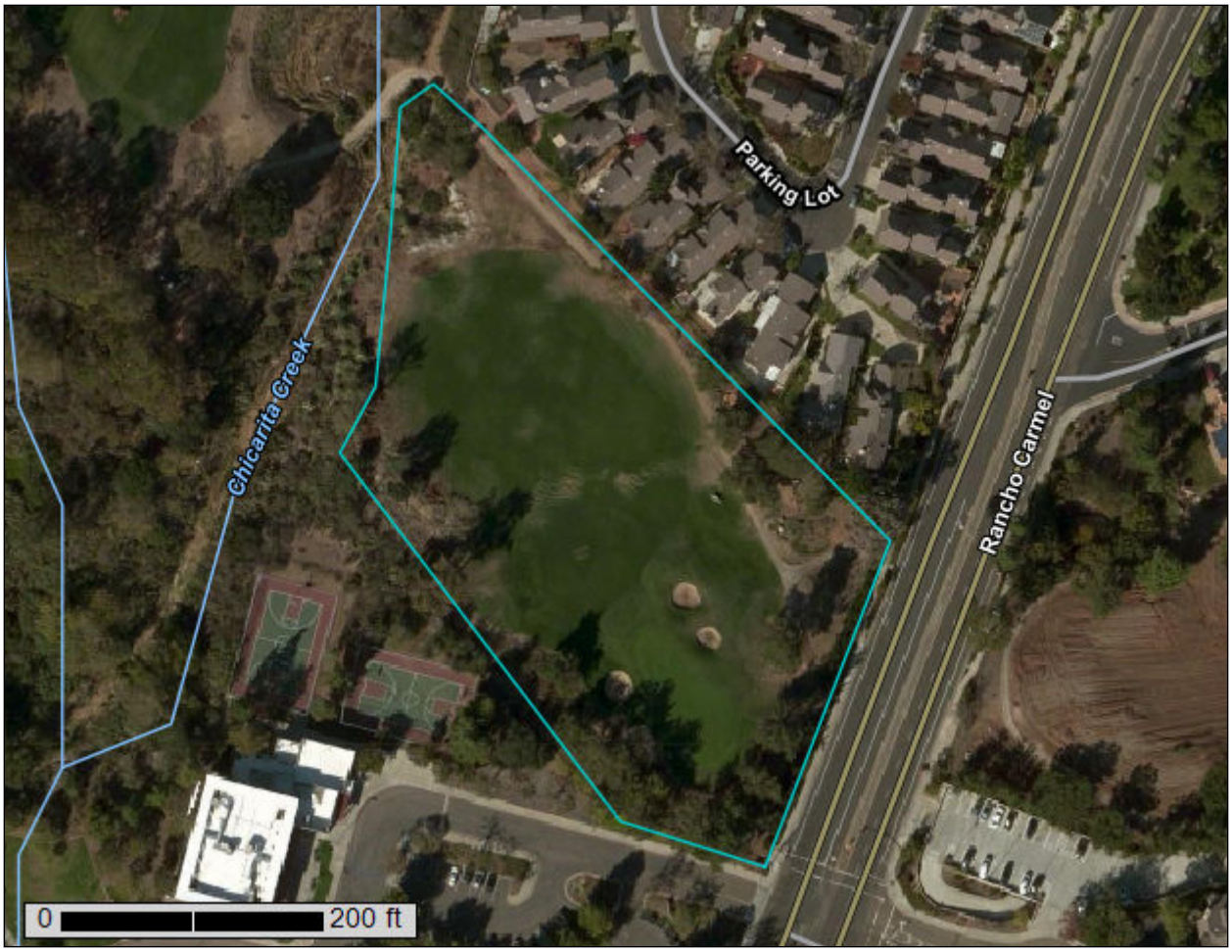

October 4, 2019

Preface

Soil surveys contain information that affects land use planning in survey areas. They highlight soil limitations that affect various land uses and provide information about the properties of the soils in the survey areas. Soil surveys are designed for many different users, including farmers, ranchers, foresters, agronomists, urban planners, community officials, engineers, developers, builders, and home buyers. Also, conservationists, teachers, students, and specialists in recreation, waste disposal, and pollution control can use the surveys to help them understand, protect, or enhance the environment.

Various land use regulations of Federal, State, and local governments may impose special restrictions on land use or land treatment. Soil surveys identify soil properties that are used in making various land use or land treatment decisions. The information is intended to help the land users identify and reduce the effects of soil limitations on various land uses. The landowner or user is responsible for identifying and complying with existing laws and regulations.

Although soil survey information can be used for general farm, local, and wider area planning, onsite investigation is needed to supplement this information in some cases. Examples include soil quality assessments (http://www.nrcs.usda.gov/wps/portal/nrcs/main/soils/health/) and certain conservation and engineering applications. For more detailed information, contact your local USDA Service Center (https://offices.sc.egov.usda.gov/locator/app?agency=nrcs) or your NRCS State Soil Scientist (http://www.nrcs.usda.gov/wps/portal/nrcs/detail/soils/contactus/?cid=nrcs142p2_053951).

Great differences in soil properties can occur within short distances. Some soils are seasonally wet or subject to flooding. Some are too unstable to be used as a foundation for buildings or roads. Clayey or wet soils are poorly suited to use as septic tank absorption fields. A high water table makes a soil poorly suited to basements or underground installations.

The National Cooperative Soil Survey is a joint effort of the United States Department of Agriculture and other Federal agencies, State agencies including the Agricultural Experiment Stations, and local agencies. The Natural Resources Conservation Service (NRCS) has leadership for the Federal part of the National Cooperative Soil Survey.

Information about soils is updated periodically. Updated information is available through the NRCS Web Soil Survey, the site for official soil survey information.

The U.S. Department of Agriculture (USDA) prohibits discrimination in all its programs and activities on the basis of race, color, national origin, age, disability, and where applicable, sex, marital status, familial status, parental status, religion, sexual orientation, genetic information, political beliefs, reprisal, or because all or a part of an individual's income is derived from any public assistance program. (Not all prohibited bases apply to all programs.) Persons with disabilities who require

Contents

How Soil Surveys Are Made

Soil surveys are made to provide information about the soils and miscellaneous areas in a specific area. They include a description of the soils and miscellaneous areas and their location on the landscape and tables that show soil properties and limitations affecting various uses. Soil scientists observed the steepness, length, and shape of the slopes; the general pattern of drainage; the kinds of crops and native plants; and the kinds of bedrock. They observed and described many soil profiles. A soil profile is the sequence of natural layers, or horizons, in a soil. The profile extends from the surface down into the unconsolidated material in which the soil formed or from the surface down to bedrock. The unconsolidated material is devoid of roots and other living organisms and has not been changed by other biological activity.

Currently, soils are mapped according to the boundaries of major land resource areas (MLRAs). MLRAs are geographically associated land resource units that share common characteristics related to physiography, geology, climate, water resources, soils, biological resources, and land uses (USDA, 2006). Soil survey areas typically consist of parts of one or more MLRA.

The soils and miscellaneous areas in a survey area occur in an orderly pattern that is related to the geology, landforms, relief, climate, and natural vegetation of the area. Each kind of soil and miscellaneous area is associated with a particular kind of landform or with a segment of the landform. By observing the soils and miscellaneous areas in the survey area and relating their position to specific segments of the landform, a soil scientist develops a concept, or model, of how they were formed. Thus, during mapping, this model enables the soil scientist to predict with a considerable degree of accuracy the kind of soil or miscellaneous area at a specific location on the landscape.

Commonly, individual soils on the landscape merge into one another as their characteristics gradually change. To construct an accurate soil map, however, soil scientists must determine the boundaries between the soils. They can observe only a limited number of soil profiles. Nevertheless, these observations, supplemented by an understanding of the soil-vegetation-landscape relationship, are sufficient to verify predictions of the kinds of soil in an area and to determine the boundaries.

Soil scientists recorded the characteristics of the soil profiles that they studied. They noted soil color, texture, size and shape of soil aggregates, kind and amount of rock fragments, distribution of plant roots, reaction, and other features that enable them to identify soils. After describing the soils in the survey area and determining their properties, the soil scientists assigned the soils to taxonomic classes (units). Taxonomic classes are concepts. Each taxonomic class has a set of soil characteristics with precisely defined limits. The classes are used as a basis for comparison to classify soils systematically. Soil taxonomy, the system of taxonomic classification used in the United States, is based mainly on the kind and character of soil properties and the arrangement of horizons within the profile. After the soil

scientists classified and named the soils in the survey area, they compared the individual soils with similar soils in the same taxonomic class in other areas so that they could confirm data and assemble additional data based on experience and research.

The objective of soil mapping is not to delineate pure map unit components; the objective is to separate the landscape into landforms or landform segments that have similar use and management requirements. Each map unit is defined by a unique combination of soil components and/or miscellaneous areas in predictable proportions. Some components may be highly contrasting to the other components of the map unit. The presence of minor components in a map unit in no way diminishes the usefulness or accuracy of the data. The delineation of such landforms and landform segments on the map provides sufficient information for the development of resource plans. If intensive use of small areas is planned, onsite investigation is needed to define and locate the soils and miscellaneous areas.

Soil scientists make many field observations in the process of producing a soil map. The frequency of observation is dependent upon several factors, including scale of mapping, intensity of mapping, design of map units, complexity of the landscape, and experience of the soil scientist. Observations are made to test and refine the soil-landscape model and predictions and to verify the classification of the soils at specific locations. Once the soil-landscape model is refined, a significantly smaller number of measurements of individual soil properties are made and recorded. These measurements may include field measurements, such as those for color, depth to bedrock, and texture, and laboratory measurements, such as those for content of sand, silt, clay, salt, and other components. Properties of each soil typically vary from one point to another across the landscape.

Observations for map unit components are aggregated to develop ranges of characteristics for the components. The aggregated values are presented. Direct measurements do not exist for every property presented for every map unit component. Values for some properties are estimated from combinations of other properties.

While a soil survey is in progress, samples of some of the soils in the area generally are collected for laboratory analyses and for engineering tests. Soil scientists interpret the data from these analyses and tests as well as the field-observed characteristics and the soil properties to determine the expected behavior of the soils under different uses. Interpretations for all of the soils are field tested through observation of the soils in different uses and under different levels of management. Some interpretations are modified to fit local conditions, and some new interpretations are developed to meet local needs. Data are assembled from other sources, such as research information, production records, and field experience of specialists. For example, data on crop yields under defined levels of management are assembled from farm records and from field or plot experiments on the same kinds of soil.

Predictions about soil behavior are based not only on soil properties but also on such variables as climate and biological activity. Soil conditions are predictable over long periods of time, but they are not predictable from year to year. For example, soil scientists can predict with a fairly high degree of accuracy that a given soil will have a high water table within certain depths in most years, but they cannot predict that a high water table will always be at a specific level in the soil on a specific date.

After soil scientists located and identified the significant natural bodies of soil in the survey area, they drew the boundaries of these bodies on aerial photographs and

identified each as a specific map unit. Aerial photographs show trees, buildings, fields, roads, and rivers, all of which help in locating boundaries accurately.

Soil Map

The soil map section includes the soil map for the defined area of interest, a list of soil map units on the map and extent of each map unit, and cartographic symbols displayed on the map. Also presented are various metadata about data used to produce the map, and a description of each soil map unit.

Custom Soil Resource Report
Soil Map

MAP LEGEND

Area of Interest (AOI)

Area of Interest (AOI)

Soils

Soil Map Unit Polygons

Soil Map Unit Lines

Soil Map Unit Points

Special Point Features

Blowout

Borrow Pit

Clay Spot

Closed Depression

Gravel Pit

Gravelly Spot

Landfill

Lava Flow

Marsh or swamp

Mine or Quarry

Miscellaneous Water

Perennial Water

Rock Outcrop

Saline Spot

Sandy Spot

Severely Eroded Spot

Sinkhole

Slide or Slip

Sodic Spot

Spoil Area

Stony Spot

Very Stony Spot

Wet Spot

Other

Special Line Features

Water Features

Streams and Canals

Transportation

Rails

Interstate Highways

US Routes

Major Roads

Local Roads

Background

Aerial Photography

MAP INFORMATION

The soil surveys that comprise your AOI were mapped at 1:24,000.

Warning: Soil Map may not be valid at this scale.

Enlargement of maps beyond the scale of mapping can cause misunderstanding of the detail of mapping and accuracy of soil line placement. The maps do not show the small areas of contrasting soils that could have been shown at a more detailed scale.

Please rely on the bar scale on each map sheet for map measurements.

Source of Map: Natural Resources Conservation Service
Web Soil Survey URL:
Coordinate System: Web Mercator (EPSG:3857)

Maps from the Web Soil Survey are based on the Web Mercator projection, which preserves direction and shape but distorts distance and area. A projection that preserves area, such as the Albers equal-area conic projection, should be used if more accurate calculations of distance or area are required.

This product is generated from the USDA-NRCS certified data as of the version date(s) listed below.

Soil Survey Area: San Diego County Area, California
Survey Area Data: Version 14, Sep 16, 2019

Soil map units are labeled (as space allows) for map scales 1:50,000 or larger.

Date(s) aerial images were photographed: Nov 3, 2014—Nov 22, 2014

The orthophoto or other base map on which the soil lines were compiled and digitized probably differs from the background imagery displayed on these maps. As a result, some minor shifting of map unit boundaries may be evident.

Map Unit Legend

Map Unit Symbol	Map Unit Name	Acres in AOI	Percent of AOI
EsC	Escondido very fine sandy loam, 5 to 9 percent slopes	0.9	29.4%
RaB	Ramona sandy loam, 2 to 5 percent slopes	2.1	70.6%
Totals for Area of Interest		**3.0**	**100.0%**

Map Unit Descriptions

The map units delineated on the detailed soil maps in a soil survey represent the soils or miscellaneous areas in the survey area. The map unit descriptions, along with the maps, can be used to determine the composition and properties of a unit.

A map unit delineation on a soil map represents an area dominated by one or more major kinds of soil or miscellaneous areas. A map unit is identified and named according to the taxonomic classification of the dominant soils. Within a taxonomic class there are precisely defined limits for the properties of the soils. On the landscape, however, the soils are natural phenomena, and they have the characteristic variability of all natural phenomena. Thus, the range of some observed properties may extend beyond the limits defined for a taxonomic class. Areas of soils of a single taxonomic class rarely, if ever, can be mapped without including areas of other taxonomic classes. Consequently, every map unit is made up of the soils or miscellaneous areas for which it is named and some minor components that belong to taxonomic classes other than those of the major soils.

Most minor soils have properties similar to those of the dominant soil or soils in the map unit, and thus they do not affect use and management. These are called noncontrasting, or similar, components. They may or may not be mentioned in a particular map unit description. Other minor components, however, have properties and behavioral characteristics divergent enough to affect use or to require different management. These are called contrasting, or dissimilar, components. They generally are in small areas and could not be mapped separately because of the scale used. Some small areas of strongly contrasting soils or miscellaneous areas are identified by a special symbol on the maps. If included in the database for a given area, the contrasting minor components are identified in the map unit descriptions along with some characteristics of each. A few areas of minor components may not have been observed, and consequently they are not mentioned in the descriptions, especially where the pattern was so complex that it was impractical to make enough observations to identify all the soils and miscellaneous areas on the landscape.

The presence of minor components in a map unit in no way diminishes the usefulness or accuracy of the data. The objective of mapping is not to delineate pure taxonomic classes but rather to separate the landscape into landforms or landform segments that have similar use and management requirements. The delineation of such segments on the map provides sufficient information for the development of resource plans. If intensive use of small areas is planned, however,

onsite investigation is needed to define and locate the soils and miscellaneous areas.

An identifying symbol precedes the map unit name in the map unit descriptions. Each description includes general facts about the unit and gives important soil properties and qualities.

Soils that have profiles that are almost alike make up a *soil series*. Except for differences in texture of the surface layer, all the soils of a series have major horizons that are similar in composition, thickness, and arrangement.

Soils of one series can differ in texture of the surface layer, slope, stoniness, salinity, degree of erosion, and other characteristics that affect their use. On the basis of such differences, a soil series is divided into *soil phases*. Most of the areas shown on the detailed soil maps are phases of soil series. The name of a soil phase commonly indicates a feature that affects use or management. For example, Alpha silt loam, 0 to 2 percent slopes, is a phase of the Alpha series.

Some map units are made up of two or more major soils or miscellaneous areas. These map units are complexes, associations, or undifferentiated groups.

A *complex* consists of two or more soils or miscellaneous areas in such an intricate pattern or in such small areas that they cannot be shown separately on the maps. The pattern and proportion of the soils or miscellaneous areas are somewhat similar in all areas. Alpha-Beta complex, 0 to 6 percent slopes, is an example.

An *association* is made up of two or more geographically associated soils or miscellaneous areas that are shown as one unit on the maps. Because of present or anticipated uses of the map units in the survey area, it was not considered practical or necessary to map the soils or miscellaneous areas separately. The pattern and relative proportion of the soils or miscellaneous areas are somewhat similar. Alpha-Beta association, 0 to 2 percent slopes, is an example.

An *undifferentiated group* is made up of two or more soils or miscellaneous areas that could be mapped individually but are mapped as one unit because similar interpretations can be made for use and management. The pattern and proportion of the soils or miscellaneous areas in a mapped area are not uniform. An area can be made up of only one of the major soils or miscellaneous areas, or it can be made up of all of them. Alpha and Beta soils, 0 to 2 percent slopes, is an example.

Some surveys include *miscellaneous areas*. Such areas have little or no soil material and support little or no vegetation. Rock outcrop is an example.

San Diego County Area, California

EsC—Escondido very fine sandy loam, 5 to 9 percent slopes

Map Unit Setting

National map unit symbol: hbbk
Elevation: 400 to 2,800 feet
Mean annual precipitation: 10 to 20 inches
Mean annual air temperature: 63 degrees F
Frost-free period: 260 to 310 days
Farmland classification: Farmland of statewide importance

Map Unit Composition

Escondido and similar soils: 85 percent
Minor components: 15 percent
Estimates are based on observations, descriptions, and transects of the mapunit.

Description of Escondido

Setting

Landform: Hillslopes
Landform position (two-dimensional): Backslope
Landform position (three-dimensional): Side slope
Down-slope shape: Convex
Across-slope shape: Convex
Parent material: Residuum weathered from metamorphic rock and sandstone

Typical profile

H1 - 0 to 8 inches: very fine sandy loam
H2 - 8 to 34 inches: silt loam, very fine sandy loam, fine sandy loam
H2 - 8 to 34 inches: unweathered bedrock
H2 - 8 to 34 inches:
H3 - 34 to 38 inches:

Properties and qualities

Slope: 5 to 9 percent
Depth to restrictive feature: 20 to 40 inches to lithic bedrock
Natural drainage class: Well drained
Runoff class: Medium
Capacity of the most limiting layer to transmit water (Ksat): Moderately high to high (0.57 to 1.98 in/hr)
Depth to water table: More than 80 inches
Frequency of flooding: None
Frequency of ponding: None
Available water storage in profile: Very high (about 12.9 inches)

Interpretive groups

Land capability classification (irrigated): 3e
Land capability classification (nonirrigated): 3e
Hydrologic Soil Group: C
Ecological site: LOAMY (1975) (R019XD029CA)
Hydric soil rating: No

Minor Components

Friant

Percent of map unit: 10 percent
Hydric soil rating: No

Fallbrook

Percent of map unit: 3 percent
Hydric soil rating: No

Vista

Percent of map unit: 2 percent
Hydric soil rating: No

RaB—Ramona sandy loam, 2 to 5 percent slopes

Map Unit Setting

National map unit symbol: hbfr
Elevation: 250 to 3,500 feet
Mean annual precipitation: 10 to 20 inches
Mean annual air temperature: 63 degrees F
Frost-free period: 230 to 320 days
Farmland classification: Prime farmland if irrigated

Map Unit Composition

Ramona and similar soils: 85 percent
Minor components: 15 percent
Estimates are based on observations, descriptions, and transects of the mapunit.

Description of Ramona

Setting

Landform: Alluvial fans
Landform position (two-dimensional): Toeslope
Landform position (three-dimensional): Base slope, rise
Down-slope shape: Linear
Across-slope shape: Convex
Parent material: Alluvium derived from granite

Typical profile

H1 - 0 to 17 inches: sandy loam
H2 - 17 to 60 inches: sandy clay loam, clay loam
H2 - 17 to 60 inches: sandy clay loam, sandy loam
H3 - 60 to 74 inches:
H3 - 60 to 74 inches:

Properties and qualities

Slope: 2 to 5 percent
Depth to restrictive feature: More than 80 inches
Natural drainage class: Well drained
Runoff class: Medium

Capacity of the most limiting layer to transmit water (Ksat): Moderately high (0.20 to 0.57 in/hr)
Depth to water table: More than 80 inches
Frequency of flooding: None
Frequency of ponding: None
Available water storage in profile: Very high (about 14.9 inches)

Interpretive groups

Land capability classification (irrigated): 2e
Land capability classification (nonirrigated): 4e
Hydrologic Soil Group: C
Hydric soil rating: No

Minor Components

Greenfield

Percent of map unit: 10 percent
Hydric soil rating: No

Plecentia

Percent of map unit: 5 percent
Hydric soil rating: No

References

American Association of State Highway and Transportation Officials (AASHTO). 2004. Standard specifications for transportation materials and methods of sampling and testing. 24th edition.

American Society for Testing and Materials (ASTM). 2005. Standard classification of soils for engineering purposes. ASTM Standard D2487-00.

Cowardin, L.M., V. Carter, F.C. Golet, and E.T. LaRoe. 1979. Classification of wetlands and deep-water habitats of the United States. U.S. Fish and Wildlife Service FWS/OBS-79/31.

Federal Register. July 13, 1994. Changes in hydric soils of the United States.

Federal Register. September 18, 2002. Hydric soils of the United States.

Hurt, G.W., and L.M. Vasilas, editors. Version 6.0, 2006. Field indicators of hydric soils in the United States.

National Research Council. 1995. Wetlands: Characteristics and boundaries.

Soil Survey Division Staff. 1993. Soil survey manual. Soil Conservation Service. U.S. Department of Agriculture Handbook 18. http://www.nrcs.usda.gov/wps/portal/nrcs/detail/national/soils/?cid=nrcs142p2_054262

Soil Survey Staff. 1999. Soil taxonomy: A basic system of soil classification for making and interpreting soil surveys. 2nd edition. Natural Resources Conservation Service, U.S. Department of Agriculture Handbook 436. http://www.nrcs.usda.gov/wps/portal/nrcs/detail/national/soils/?cid=nrcs142p2_053577

Soil Survey Staff. 2010. Keys to soil taxonomy. 11th edition. U.S. Department of Agriculture, Natural Resources Conservation Service. http://www.nrcs.usda.gov/wps/portal/nrcs/detail/national/soils/?cid=nrcs142p2_053580

Tiner, R.W., Jr. 1985. Wetlands of Delaware. U.S. Fish and Wildlife Service and Delaware Department of Natural Resources and Environmental Control, Wetlands Section.

United States Army Corps of Engineers, Environmental Laboratory. 1987. Corps of Engineers wetlands delineation manual. Waterways Experiment Station Technical Report Y-87-1.

United States Department of Agriculture, Natural Resources Conservation Service. National forestry manual. http://www.nrcs.usda.gov/wps/portal/nrcs/detail/soils/home/?cid=nrcs142p2_053374

United States Department of Agriculture, Natural Resources Conservation Service. National range and pasture handbook. http://www.nrcs.usda.gov/wps/portal/nrcs/detail/national/landuse/rangepasture/?cid=stelprdb1043084

United States Department of Agriculture, Natural Resources Conservation Service. National soil survey handbook, title 430-VI. http://www.nrcs.usda.gov/wps/portal/nrcs/detail/soils/scientists/?cid=nrcs142p2_054242

United States Department of Agriculture, Natural Resources Conservation Service. 2006. Land resource regions and major land resource areas of the United States, the Caribbean, and the Pacific Basin. U.S. Department of Agriculture Handbook 296. http://www.nrcs.usda.gov/wps/portal/nrcs/detail/national/soils/?cid=nrcs142p2_053624

United States Department of Agriculture, Soil Conservation Service. 1961. Land capability classification. U.S. Department of Agriculture Handbook 210. http://www.nrcs.usda.gov/Internet/FSE_DOCUMENTS/nrcs142p2_052290.pdf

United States Department of Agriculture

Natural Resources Conservation Service

A product of the National Cooperative Soil Survey, a joint effort of the United States Department of Agriculture and other Federal agencies, State agencies including the Agricultural Experiment Stations, and local participants

Custom Soil Resource Report for San Diego County Area, California

Carmel Mountain Ranch - DMA 6

October 4, 2019

Preface

Soil surveys contain information that affects land use planning in survey areas. They highlight soil limitations that affect various land uses and provide information about the properties of the soils in the survey areas. Soil surveys are designed for many different users, including farmers, ranchers, foresters, agronomists, urban planners, community officials, engineers, developers, builders, and home buyers. Also, conservationists, teachers, students, and specialists in recreation, waste disposal, and pollution control can use the surveys to help them understand, protect, or enhance the environment.

Various land use regulations of Federal, State, and local governments may impose special restrictions on land use or land treatment. Soil surveys identify soil properties that are used in making various land use or land treatment decisions. The information is intended to help the land users identify and reduce the effects of soil limitations on various land uses. The landowner or user is responsible for identifying and complying with existing laws and regulations.

Although soil survey information can be used for general farm, local, and wider area planning, onsite investigation is needed to supplement this information in some cases. Examples include soil quality assessments (http://www.nrcs.usda.gov/wps/portal/nrcs/main/soils/health/) and certain conservation and engineering applications. For more detailed information, contact your local USDA Service Center (https://offices.sc.egov.usda.gov/locator/app?agency=nrcs) or your NRCS State Soil Scientist (http://www.nrcs.usda.gov/wps/portal/nrcs/detail/soils/contactus/?cid=nrcs142p2_053951).

Great differences in soil properties can occur within short distances. Some soils are seasonally wet or subject to flooding. Some are too unstable to be used as a foundation for buildings or roads. Clayey or wet soils are poorly suited to use as septic tank absorption fields. A high water table makes a soil poorly suited to basements or underground installations.

The National Cooperative Soil Survey is a joint effort of the United States Department of Agriculture and other Federal agencies, State agencies including the Agricultural Experiment Stations, and local agencies. The Natural Resources Conservation Service (NRCS) has leadership for the Federal part of the National Cooperative Soil Survey.

Information about soils is updated periodically. Updated information is available through the NRCS Web Soil Survey, the site for official soil survey information.

The U.S. Department of Agriculture (USDA) prohibits discrimination in all its programs and activities on the basis of race, color, national origin, age, disability, and where applicable, sex, marital status, familial status, parental status, religion, sexual orientation, genetic information, political beliefs, reprisal, or because all or a part of an individual's income is derived from any public assistance program. (Not all prohibited bases apply to all programs.) Persons with disabilities who require

Contents

How Soil Surveys Are Made

Soil surveys are made to provide information about the soils and miscellaneous areas in a specific area. They include a description of the soils and miscellaneous areas and their location on the landscape and tables that show soil properties and limitations affecting various uses. Soil scientists observed the steepness, length, and shape of the slopes; the general pattern of drainage; the kinds of crops and native plants; and the kinds of bedrock. They observed and described many soil profiles. A soil profile is the sequence of natural layers, or horizons, in a soil. The profile extends from the surface down into the unconsolidated material in which the soil formed or from the surface down to bedrock. The unconsolidated material is devoid of roots and other living organisms and has not been changed by other biological activity.

Currently, soils are mapped according to the boundaries of major land resource areas (MLRAs). MLRAs are geographically associated land resource units that share common characteristics related to physiography, geology, climate, water resources, soils, biological resources, and land uses (USDA, 2006). Soil survey areas typically consist of parts of one or more MLRA.

The soils and miscellaneous areas in a survey area occur in an orderly pattern that is related to the geology, landforms, relief, climate, and natural vegetation of the area. Each kind of soil and miscellaneous area is associated with a particular kind of landform or with a segment of the landform. By observing the soils and miscellaneous areas in the survey area and relating their position to specific segments of the landform, a soil scientist develops a concept, or model, of how they were formed. Thus, during mapping, this model enables the soil scientist to predict with a considerable degree of accuracy the kind of soil or miscellaneous area at a specific location on the landscape.

Commonly, individual soils on the landscape merge into one another as their characteristics gradually change. To construct an accurate soil map, however, soil scientists must determine the boundaries between the soils. They can observe only a limited number of soil profiles. Nevertheless, these observations, supplemented by an understanding of the soil-vegetation-landscape relationship, are sufficient to verify predictions of the kinds of soil in an area and to determine the boundaries.

Soil scientists recorded the characteristics of the soil profiles that they studied. They noted soil color, texture, size and shape of soil aggregates, kind and amount of rock fragments, distribution of plant roots, reaction, and other features that enable them to identify soils. After describing the soils in the survey area and determining their properties, the soil scientists assigned the soils to taxonomic classes (units). Taxonomic classes are concepts. Each taxonomic class has a set of soil characteristics with precisely defined limits. The classes are used as a basis for comparison to classify soils systematically. Soil taxonomy, the system of taxonomic classification used in the United States, is based mainly on the kind and character of soil properties and the arrangement of horizons within the profile. After the soil

scientists classified and named the soils in the survey area, they compared the individual soils with similar soils in the same taxonomic class in other areas so that they could confirm data and assemble additional data based on experience and research.

The objective of soil mapping is not to delineate pure map unit components; the objective is to separate the landscape into landforms or landform segments that have similar use and management requirements. Each map unit is defined by a unique combination of soil components and/or miscellaneous areas in predictable proportions. Some components may be highly contrasting to the other components of the map unit. The presence of minor components in a map unit in no way diminishes the usefulness or accuracy of the data. The delineation of such landforms and landform segments on the map provides sufficient information for the development of resource plans. If intensive use of small areas is planned, onsite investigation is needed to define and locate the soils and miscellaneous areas.

Soil scientists make many field observations in the process of producing a soil map. The frequency of observation is dependent upon several factors, including scale of mapping, intensity of mapping, design of map units, complexity of the landscape, and experience of the soil scientist. Observations are made to test and refine the soil-landscape model and predictions and to verify the classification of the soils at specific locations. Once the soil-landscape model is refined, a significantly smaller number of measurements of individual soil properties are made and recorded. These measurements may include field measurements, such as those for color, depth to bedrock, and texture, and laboratory measurements, such as those for content of sand, silt, clay, salt, and other components. Properties of each soil typically vary from one point to another across the landscape.

Observations for map unit components are aggregated to develop ranges of characteristics for the components. The aggregated values are presented. Direct measurements do not exist for every property presented for every map unit component. Values for some properties are estimated from combinations of other properties.

While a soil survey is in progress, samples of some of the soils in the area generally are collected for laboratory analyses and for engineering tests. Soil scientists interpret the data from these analyses and tests as well as the field-observed characteristics and the soil properties to determine the expected behavior of the soils under different uses. Interpretations for all of the soils are field tested through observation of the soils in different uses and under different levels of management. Some interpretations are modified to fit local conditions, and some new interpretations are developed to meet local needs. Data are assembled from other sources, such as research information, production records, and field experience of specialists. For example, data on crop yields under defined levels of management are assembled from farm records and from field or plot experiments on the same kinds of soil.

Predictions about soil behavior are based not only on soil properties but also on such variables as climate and biological activity. Soil conditions are predictable over long periods of time, but they are not predictable from year to year. For example, soil scientists can predict with a fairly high degree of accuracy that a given soil will have a high water table within certain depths in most years, but they cannot predict that a high water table will always be at a specific level in the soil on a specific date.

After soil scientists located and identified the significant natural bodies of soil in the survey area, they drew the boundaries of these bodies on aerial photographs and

identified each as a specific map unit. Aerial photographs show trees, buildings, fields, roads, and rivers, all of which help in locating boundaries accurately.

Soil Map

The soil map section includes the soil map for the defined area of interest, a list of soil map units on the map and extent of each map unit, and cartographic symbols displayed on the map. Also presented are various metadata about data used to produce the map, and a description of each soil map unit.

Custom Soil Resource Report
Soil Map

Map Scale: 1:2,240 if printed on A landscape (11" x 8.5") sheet.

N

Meters: 0 30 60 120 180

Feet: 0 100 200 400 600

Map projection: Web Mercator Corner coordinates: WGS84 Edge tics: UTM Zone 11N WGS84

MAP LEGEND

Area of Interest (AOI)

Area of Interest (AOI)

Soils

Soil Map Unit Polygons

Soil Map Unit Lines

Soil Map Unit Points

Special Point Features

Blowout

Borrow Pit

Clay Spot

Closed Depression

Gravel Pit

Gravelly Spot

Landfill

Lava Flow

Marsh or swamp

Mine or Quarry

Miscellaneous Water

Perennial Water

Rock Outcrop

Saline Spot

Sandy Spot

Severely Eroded Spot

Sinkhole

Slide or Slip

Sodic Spot

Spoil Area

Stony Spot

Very Stony Spot

Wet Spot

Other

Special Line Features

Water Features

Streams and Canals

Transportation

Rails

Interstate Highways

US Routes

Major Roads

Local Roads

Background

Aerial Photography

MAP INFORMATION

The soil surveys that comprise your AOI were mapped at 1:24,000.

Warning: Soil Map may not be valid at this scale.

Enlargement of maps beyond the scale of mapping can cause misunderstanding of the detail of mapping and accuracy of soil line placement. The maps do not show the small areas of contrasting soils that could have been shown at a more detailed scale.

Please rely on the bar scale on each map sheet for map measurements.

Source of Map: Natural Resources Conservation Service
Web Soil Survey URL:
Coordinate System: Web Mercator (EPSG:3857)

Maps from the Web Soil Survey are based on the Web Mercator projection, which preserves direction and shape but distorts distance and area. A projection that preserves area, such as the Albers equal-area conic projection, should be used if more accurate calculations of distance or area are required.

This product is generated from the USDA-NRCS certified data as of the version date(s) listed below.

Soil Survey Area: San Diego County Area, California
Survey Area Data: Version 14, Sep 16, 2019

Soil map units are labeled (as space allows) for map scales 1:50,000 or larger.

Date(s) aerial images were photographed: Nov 3, 2014—Nov 22, 2014

The orthophoto or other base map on which the soil lines were compiled and digitized probably differs from the background imagery displayed on these maps. As a result, some minor shifting of map unit boundaries may be evident.

Map Unit Legend

Map Unit Symbol	Map Unit Name	Acres in AOI	Percent of AOI
CmE2	Cieneba rocky coarse sandy loam, 9 to 30 percent slopes, eroded	1.8	26.4%
EsC	Escondido very fine sandy loam, 5 to 9 percent slopes	0.9	13.0%
RaC	Ramona sandy loam, 5 to 9 percent slopes	4.2	60.6%
Totals for Area of Interest		**6.9**	**100.0%**

Map Unit Descriptions

The map units delineated on the detailed soil maps in a soil survey represent the soils or miscellaneous areas in the survey area. The map unit descriptions, along with the maps, can be used to determine the composition and properties of a unit.

A map unit delineation on a soil map represents an area dominated by one or more major kinds of soil or miscellaneous areas. A map unit is identified and named according to the taxonomic classification of the dominant soils. Within a taxonomic class there are precisely defined limits for the properties of the soils. On the landscape, however, the soils are natural phenomena, and they have the characteristic variability of all natural phenomena. Thus, the range of some observed properties may extend beyond the limits defined for a taxonomic class. Areas of soils of a single taxonomic class rarely, if ever, can be mapped without including areas of other taxonomic classes. Consequently, every map unit is made up of the soils or miscellaneous areas for which it is named and some minor components that belong to taxonomic classes other than those of the major soils.

Most minor soils have properties similar to those of the dominant soil or soils in the map unit, and thus they do not affect use and management. These are called noncontrasting, or similar, components. They may or may not be mentioned in a particular map unit description. Other minor components, however, have properties and behavioral characteristics divergent enough to affect use or to require different management. These are called contrasting, or dissimilar, components. They generally are in small areas and could not be mapped separately because of the scale used. Some small areas of strongly contrasting soils or miscellaneous areas are identified by a special symbol on the maps. If included in the database for a given area, the contrasting minor components are identified in the map unit descriptions along with some characteristics of each. A few areas of minor components may not have been observed, and consequently they are not mentioned in the descriptions, especially where the pattern was so complex that it was impractical to make enough observations to identify all the soils and miscellaneous areas on the landscape.

The presence of minor components in a map unit in no way diminishes the usefulness or accuracy of the data. The objective of mapping is not to delineate pure taxonomic classes but rather to separate the landscape into landforms or

landform segments that have similar use and management requirements. The delineation of such segments on the map provides sufficient information for the development of resource plans. If intensive use of small areas is planned, however, onsite investigation is needed to define and locate the soils and miscellaneous areas.

An identifying symbol precedes the map unit name in the map unit descriptions. Each description includes general facts about the unit and gives important soil properties and qualities.

Soils that have profiles that are almost alike make up a *soil series*. Except for differences in texture of the surface layer, all the soils of a series have major horizons that are similar in composition, thickness, and arrangement.

Soils of one series can differ in texture of the surface layer, slope, stoniness, salinity, degree of erosion, and other characteristics that affect their use. On the basis of such differences, a soil series is divided into *soil phases*. Most of the areas shown on the detailed soil maps are phases of soil series. The name of a soil phase commonly indicates a feature that affects use or management. For example, Alpha silt loam, 0 to 2 percent slopes, is a phase of the Alpha series.

Some map units are made up of two or more major soils or miscellaneous areas. These map units are complexes, associations, or undifferentiated groups.

A *complex* consists of two or more soils or miscellaneous areas in such an intricate pattern or in such small areas that they cannot be shown separately on the maps. The pattern and proportion of the soils or miscellaneous areas are somewhat similar in all areas. Alpha-Beta complex, 0 to 6 percent slopes, is an example.

An *association* is made up of two or more geographically associated soils or miscellaneous areas that are shown as one unit on the maps. Because of present or anticipated uses of the map units in the survey area, it was not considered practical or necessary to map the soils or miscellaneous areas separately. The pattern and relative proportion of the soils or miscellaneous areas are somewhat similar. Alpha-Beta association, 0 to 2 percent slopes, is an example.

An *undifferentiated group* is made up of two or more soils or miscellaneous areas that could be mapped individually but are mapped as one unit because similar interpretations can be made for use and management. The pattern and proportion of the soils or miscellaneous areas in a mapped area are not uniform. An area can be made up of only one of the major soils or miscellaneous areas, or it can be made up of all of them. Alpha and Beta soils, 0 to 2 percent slopes, is an example.

Some surveys include *miscellaneous areas*. Such areas have little or no soil material and support little or no vegetation. Rock outcrop is an example.

San Diego County Area, California

CmE2—Cieneba rocky coarse sandy loam, 9 to 30 percent slopes, eroded

Map Unit Setting

National map unit symbol: hb9t
Elevation: 500 to 4,000 feet
Mean annual precipitation: 8 to 35 inches
Mean annual air temperature: 45 to 64 degrees F
Frost-free period: 110 to 300 days
Farmland classification: Not prime farmland

Map Unit Composition

Cieneba and similar soils: 60 percent
Rock outcrop: 30 percent
Minor components: 10 percent
Estimates are based on observations, descriptions, and transects of the mapunit.

Description of Cieneba

Setting

Landform: Hills
Landform position (two-dimensional): Backslope
Landform position (three-dimensional): Side slope
Down-slope shape: Convex
Across-slope shape: Convex
Parent material: Residuum weathered from granite and granodiorite

Typical profile

H1 - 0 to 8 inches: coarse sandy loam
H2 - 8 to 12 inches: weathered bedrock

Properties and qualities

Slope: 9 to 30 percent
Depth to restrictive feature: 4 to 20 inches to paralithic bedrock
Natural drainage class: Somewhat excessively drained
Runoff class: Medium
Capacity of the most limiting layer to transmit water (Ksat): High (1.98 to 5.95 in/hr)
Depth to water table: More than 80 inches
Frequency of flooding: None
Frequency of ponding: None
Available water storage in profile: Very low (about 0.8 inches)

Interpretive groups

Land capability classification (irrigated): None specified
Land capability classification (nonirrigated): 7e
Hydrologic Soil Group: D
Ecological site: SHALLOW LOAMY (1975) (R019XD060CA)
Hydric soil rating: No

Description of Rock Outcrop

Setting

Landform: Hills

Landform position (three-dimensional): Side slope
Down-slope shape: Convex
Across-slope shape: Convex

Typical profile
H1 - 0 to 4 inches: unweathered bedrock

Interpretive groups
Land capability classification (irrigated): None specified
Land capability classification (nonirrigated): 8
Hydrologic Soil Group: D
Hydric soil rating: No

Minor Components

Vista
Percent of map unit: 5 percent
Hydric soil rating: No

Las posas
Percent of map unit: 5 percent
Hydric soil rating: No

EsC—Escondido very fine sandy loam, 5 to 9 percent slopes

Map Unit Setting
National map unit symbol: hbbk
Elevation: 400 to 2,800 feet
Mean annual precipitation: 10 to 20 inches
Mean annual air temperature: 63 degrees F
Frost-free period: 260 to 310 days
Farmland classification: Farmland of statewide importance

Map Unit Composition
Escondido and similar soils: 85 percent
Minor components: 15 percent
Estimates are based on observations, descriptions, and transects of the mapunit.

Description of Escondido

Setting
Landform: Hillslopes
Landform position (two-dimensional): Backslope
Landform position (three-dimensional): Side slope
Down-slope shape: Convex
Across-slope shape: Convex
Parent material: Residuum weathered from metamorphic rock and sandstone

Typical profile
H1 - 0 to 8 inches: very fine sandy loam
H2 - 8 to 34 inches: silt loam, very fine sandy loam, fine sandy loam

H2 - 8 to 34 inches: unweathered bedrock
H2 - 8 to 34 inches:
H3 - 34 to 38 inches:

Properties and qualities

Slope: 5 to 9 percent
Depth to restrictive feature: 20 to 40 inches to lithic bedrock
Natural drainage class: Well drained
Runoff class: Medium
Capacity of the most limiting layer to transmit water (Ksat): Moderately high to high (0.57 to 1.98 in/hr)
Depth to water table: More than 80 inches
Frequency of flooding: None
Frequency of ponding: None
Available water storage in profile: Very high (about 12.9 inches)

Interpretive groups

Land capability classification (irrigated): 3e
Land capability classification (nonirrigated): 3e
Hydrologic Soil Group: C
Ecological site: LOAMY (1975) (R019XD029CA)
Hydric soil rating: No

Minor Components

Friant

Percent of map unit: 10 percent
Hydric soil rating: No

Fallbrook

Percent of map unit: 3 percent
Hydric soil rating: No

Vista

Percent of map unit: 2 percent
Hydric soil rating: No

RaC—Ramona sandy loam, 5 to 9 percent slopes

Map Unit Setting

National map unit symbol: hbfs
Elevation: 250 to 3,500 feet
Mean annual precipitation: 10 to 20 inches
Mean annual air temperature: 63 degrees F
Frost-free period: 230 to 320 days
Farmland classification: Farmland of statewide importance

Map Unit Composition

Ramona and similar soils: 85 percent
Minor components: 15 percent
Estimates are based on observations, descriptions, and transects of the mapunit.

Description of Ramona

Setting

Landform: Alluvial fans
Landform position (two-dimensional): Toeslope
Landform position (three-dimensional): Base slope, rise
Down-slope shape: Linear
Across-slope shape: Convex
Parent material: Alluvium derived from granite

Typical profile

H1 - 0 to 17 inches: sandy loam
H2 - 17 to 60 inches: sandy clay loam, clay loam
H2 - 17 to 60 inches: sandy clay loam, sandy loam
H3 - 60 to 74 inches:
H3 - 60 to 74 inches:

Properties and qualities

Slope: 5 to 9 percent
Depth to restrictive feature: More than 80 inches
Natural drainage class: Well drained
Runoff class: High
Capacity of the most limiting layer to transmit water (Ksat): Moderately high (0.20 to 0.57 in/hr)
Depth to water table: More than 80 inches
Frequency of flooding: None
Frequency of ponding: None
Available water storage in profile: Very high (about 14.9 inches)

Interpretive groups

Land capability classification (irrigated): 3e
Land capability classification (nonirrigated): 4e
Hydrologic Soil Group: C
Ecological site: LOAMY (1975) (R019XD029CA)
Hydric soil rating: No

Minor Components

Greenfield

Percent of map unit: 5 percent
Hydric soil rating: No

Fallbrook

Percent of map unit: 5 percent
Hydric soil rating: No

Placentia

Percent of map unit: 5 percent
Hydric soil rating: No

References

American Association of State Highway and Transportation Officials (AASHTO). 2004. Standard specifications for transportation materials and methods of sampling and testing. 24th edition.

American Society for Testing and Materials (ASTM). 2005. Standard classification of soils for engineering purposes. ASTM Standard D2487-00.

Cowardin, L.M., V. Carter, F.C. Golet, and E.T. LaRoe. 1979. Classification of wetlands and deep-water habitats of the United States. U.S. Fish and Wildlife Service FWS/OBS-79/31.

Federal Register. July 13, 1994. Changes in hydric soils of the United States.

Federal Register. September 18, 2002. Hydric soils of the United States.

Hurt, G.W., and L.M. Vasilas, editors. Version 6.0, 2006. Field indicators of hydric soils in the United States.

National Research Council. 1995. Wetlands: Characteristics and boundaries.

Soil Survey Division Staff. 1993. Soil survey manual. Soil Conservation Service. U.S. Department of Agriculture Handbook 18. http://www.nrcs.usda.gov/wps/portal/nrcs/detail/national/soils/?cid=nrcs142p2_054262

Soil Survey Staff. 1999. Soil taxonomy: A basic system of soil classification for making and interpreting soil surveys. 2nd edition. Natural Resources Conservation Service, U.S. Department of Agriculture Handbook 436. http://www.nrcs.usda.gov/wps/portal/nrcs/detail/national/soils/?cid=nrcs142p2_053577

Soil Survey Staff. 2010. Keys to soil taxonomy. 11th edition. U.S. Department of Agriculture, Natural Resources Conservation Service. http://www.nrcs.usda.gov/wps/portal/nrcs/detail/national/soils/?cid=nrcs142p2_053580

Tiner, R.W., Jr. 1985. Wetlands of Delaware. U.S. Fish and Wildlife Service and Delaware Department of Natural Resources and Environmental Control, Wetlands Section.

United States Army Corps of Engineers, Environmental Laboratory. 1987. Corps of Engineers wetlands delineation manual. Waterways Experiment Station Technical Report Y-87-1.

United States Department of Agriculture, Natural Resources Conservation Service. National forestry manual. http://www.nrcs.usda.gov/wps/portal/nrcs/detail/soils/home/?cid=nrcs142p2_053374

United States Department of Agriculture, Natural Resources Conservation Service. National range and pasture handbook. http://www.nrcs.usda.gov/wps/portal/nrcs/detail/national/landuse/rangepasture/?cid=stelprdb1043084

United States Department of Agriculture, Natural Resources Conservation Service. National soil survey handbook, title 430-VI. http://www.nrcs.usda.gov/wps/portal/nrcs/detail/soils/scientists/?cid=nrcs142p2_054242

United States Department of Agriculture, Natural Resources Conservation Service. 2006. Land resource regions and major land resource areas of the United States, the Caribbean, and the Pacific Basin. U.S. Department of Agriculture Handbook 296. http://www.nrcs.usda.gov/wps/portal/nrcs/detail/national/soils/?cid=nrcs142p2_053624

United States Department of Agriculture, Soil Conservation Service. 1961. Land capability classification. U.S. Department of Agriculture Handbook 210. http://www.nrcs.usda.gov/Internet/FSE_DOCUMENTS/nrcs142p2_052290.pdf

United States Department of Agriculture

Natural Resources Conservation Service

A product of the National Cooperative Soil Survey, a joint effort of the United States Department of Agriculture and other Federal agencies, State agencies including the Agricultural Experiment Stations, and local participants

Custom Soil Resource Report for San Diego County Area, California

Carmel Mountain Ranch - DMA 8

October 4, 2019

Preface

Soil surveys contain information that affects land use planning in survey areas. They highlight soil limitations that affect various land uses and provide information about the properties of the soils in the survey areas. Soil surveys are designed for many different users, including farmers, ranchers, foresters, agronomists, urban planners, community officials, engineers, developers, builders, and home buyers. Also, conservationists, teachers, students, and specialists in recreation, waste disposal, and pollution control can use the surveys to help them understand, protect, or enhance the environment.

Various land use regulations of Federal, State, and local governments may impose special restrictions on land use or land treatment. Soil surveys identify soil properties that are used in making various land use or land treatment decisions. The information is intended to help the land users identify and reduce the effects of soil limitations on various land uses. The landowner or user is responsible for identifying and complying with existing laws and regulations.

Although soil survey information can be used for general farm, local, and wider area planning, onsite investigation is needed to supplement this information in some cases. Examples include soil quality assessments (http://www.nrcs.usda.gov/wps/portal/nrcs/main/soils/health/) and certain conservation and engineering applications. For more detailed information, contact your local USDA Service Center (https://offices.sc.egov.usda.gov/locator/app?agency=nrcs) or your NRCS State Soil Scientist (http://www.nrcs.usda.gov/wps/portal/nrcs/detail/soils/contactus/?cid=nrcs142p2_053951).

Great differences in soil properties can occur within short distances. Some soils are seasonally wet or subject to flooding. Some are too unstable to be used as a foundation for buildings or roads. Clayey or wet soils are poorly suited to use as septic tank absorption fields. A high water table makes a soil poorly suited to basements or underground installations.

The National Cooperative Soil Survey is a joint effort of the United States Department of Agriculture and other Federal agencies, State agencies including the Agricultural Experiment Stations, and local agencies. The Natural Resources Conservation Service (NRCS) has leadership for the Federal part of the National Cooperative Soil Survey.

Information about soils is updated periodically. Updated information is available through the NRCS Web Soil Survey, the site for official soil survey information.

The U.S. Department of Agriculture (USDA) prohibits discrimination in all its programs and activities on the basis of race, color, national origin, age, disability, and where applicable, sex, marital status, familial status, parental status, religion, sexual orientation, genetic information, political beliefs, reprisal, or because all or a part of an individual's income is derived from any public assistance program. (Not all prohibited bases apply to all programs.) Persons with disabilities who require

Contents

How Soil Surveys Are Made

Soil surveys are made to provide information about the soils and miscellaneous areas in a specific area. They include a description of the soils and miscellaneous areas and their location on the landscape and tables that show soil properties and limitations affecting various uses. Soil scientists observed the steepness, length, and shape of the slopes; the general pattern of drainage; the kinds of crops and native plants; and the kinds of bedrock. They observed and described many soil profiles. A soil profile is the sequence of natural layers, or horizons, in a soil. The profile extends from the surface down into the unconsolidated material in which the soil formed or from the surface down to bedrock. The unconsolidated material is devoid of roots and other living organisms and has not been changed by other biological activity.

Currently, soils are mapped according to the boundaries of major land resource areas (MLRAs). MLRAs are geographically associated land resource units that share common characteristics related to physiography, geology, climate, water resources, soils, biological resources, and land uses (USDA, 2006). Soil survey areas typically consist of parts of one or more MLRA.

The soils and miscellaneous areas in a survey area occur in an orderly pattern that is related to the geology, landforms, relief, climate, and natural vegetation of the area. Each kind of soil and miscellaneous area is associated with a particular kind of landform or with a segment of the landform. By observing the soils and miscellaneous areas in the survey area and relating their position to specific segments of the landform, a soil scientist develops a concept, or model, of how they were formed. Thus, during mapping, this model enables the soil scientist to predict with a considerable degree of accuracy the kind of soil or miscellaneous area at a specific location on the landscape.

Commonly, individual soils on the landscape merge into one another as their characteristics gradually change. To construct an accurate soil map, however, soil scientists must determine the boundaries between the soils. They can observe only a limited number of soil profiles. Nevertheless, these observations, supplemented by an understanding of the soil-vegetation-landscape relationship, are sufficient to verify predictions of the kinds of soil in an area and to determine the boundaries.

Soil scientists recorded the characteristics of the soil profiles that they studied. They noted soil color, texture, size and shape of soil aggregates, kind and amount of rock fragments, distribution of plant roots, reaction, and other features that enable them to identify soils. After describing the soils in the survey area and determining their properties, the soil scientists assigned the soils to taxonomic classes (units). Taxonomic classes are concepts. Each taxonomic class has a set of soil characteristics with precisely defined limits. The classes are used as a basis for comparison to classify soils systematically. Soil taxonomy, the system of taxonomic classification used in the United States, is based mainly on the kind and character of soil properties and the arrangement of horizons within the profile. After the soil

scientists classified and named the soils in the survey area, they compared the individual soils with similar soils in the same taxonomic class in other areas so that they could confirm data and assemble additional data based on experience and research.

The objective of soil mapping is not to delineate pure map unit components; the objective is to separate the landscape into landforms or landform segments that have similar use and management requirements. Each map unit is defined by a unique combination of soil components and/or miscellaneous areas in predictable proportions. Some components may be highly contrasting to the other components of the map unit. The presence of minor components in a map unit in no way diminishes the usefulness or accuracy of the data. The delineation of such landforms and landform segments on the map provides sufficient information for the development of resource plans. If intensive use of small areas is planned, onsite investigation is needed to define and locate the soils and miscellaneous areas.

Soil scientists make many field observations in the process of producing a soil map. The frequency of observation is dependent upon several factors, including scale of mapping, intensity of mapping, design of map units, complexity of the landscape, and experience of the soil scientist. Observations are made to test and refine the soil-landscape model and predictions and to verify the classification of the soils at specific locations. Once the soil-landscape model is refined, a significantly smaller number of measurements of individual soil properties are made and recorded. These measurements may include field measurements, such as those for color, depth to bedrock, and texture, and laboratory measurements, such as those for content of sand, silt, clay, salt, and other components. Properties of each soil typically vary from one point to another across the landscape.

Observations for map unit components are aggregated to develop ranges of characteristics for the components. The aggregated values are presented. Direct measurements do not exist for every property presented for every map unit component. Values for some properties are estimated from combinations of other properties.

While a soil survey is in progress, samples of some of the soils in the area generally are collected for laboratory analyses and for engineering tests. Soil scientists interpret the data from these analyses and tests as well as the field-observed characteristics and the soil properties to determine the expected behavior of the soils under different uses. Interpretations for all of the soils are field tested through observation of the soils in different uses and under different levels of management. Some interpretations are modified to fit local conditions, and some new interpretations are developed to meet local needs. Data are assembled from other sources, such as research information, production records, and field experience of specialists. For example, data on crop yields under defined levels of management are assembled from farm records and from field or plot experiments on the same kinds of soil.

Predictions about soil behavior are based not only on soil properties but also on such variables as climate and biological activity. Soil conditions are predictable over long periods of time, but they are not predictable from year to year. For example, soil scientists can predict with a fairly high degree of accuracy that a given soil will have a high water table within certain depths in most years, but they cannot predict that a high water table will always be at a specific level in the soil on a specific date.

After soil scientists located and identified the significant natural bodies of soil in the survey area, they drew the boundaries of these bodies on aerial photographs and

identified each as a specific map unit. Aerial photographs show trees, buildings, fields, roads, and rivers, all of which help in locating boundaries accurately.

Soil Map

The soil map section includes the soil map for the defined area of interest, a list of soil map units on the map and extent of each map unit, and cartographic symbols displayed on the map. Also presented are various metadata about data used to produce the map, and a description of each soil map unit.

Custom Soil Resource Report
Soil Map

Map Scale: 1:2,460 if printed on A landscape (11" x 8.5") sheet.

N

Meters: 0 35 70 140 210

Feet: 0 100 200 400 600

Map projection: Web Mercator Corner coordinates: WGS84 Edge tics: UTM Zone 11N WGS84

MAP LEGEND

Area of Interest (AOI)

Area of Interest (AOI)

Soils

Soil Map Unit Polygons

Soil Map Unit Lines

Soil Map Unit Points

Special Point Features

Blowout

Borrow Pit

Clay Spot

Closed Depression

Gravel Pit

Gravelly Spot

Landfill

Lava Flow

Marsh or swamp

Mine or Quarry

Miscellaneous Water

Perennial Water

Rock Outcrop

Saline Spot

Sandy Spot

Severely Eroded Spot

Sinkhole

Slide or Slip

Sodic Spot

Spoil Area

Stony Spot

Very Stony Spot

Wet Spot

Other

Special Line Features

Water Features

Streams and Canals

Transportation

Rails

Interstate Highways

US Routes

Major Roads

Local Roads

Background

Aerial Photography

MAP INFORMATION

The soil surveys that comprise your AOI were mapped at 1:24,000.

Warning: Soil Map may not be valid at this scale.

Enlargement of maps beyond the scale of mapping can cause misunderstanding of the detail of mapping and accuracy of soil line placement. The maps do not show the small areas of contrasting soils that could have been shown at a more detailed scale.

Please rely on the bar scale on each map sheet for map measurements.

Source of Map: Natural Resources Conservation Service
Web Soil Survey URL:
Coordinate System: Web Mercator (EPSG:3857)

Maps from the Web Soil Survey are based on the Web Mercator projection, which preserves direction and shape but distorts distance and area. A projection that preserves area, such as the Albers equal-area conic projection, should be used if more accurate calculations of distance or area are required.

This product is generated from the USDA-NRCS certified data as of the version date(s) listed below.

Soil Survey Area: San Diego County Area, California
Survey Area Data: Version 14, Sep 16, 2019

Soil map units are labeled (as space allows) for map scales 1:50,000 or larger.

Date(s) aerial images were photographed: Nov 3, 2014—Nov 22, 2014

The orthophoto or other base map on which the soil lines were compiled and digitized probably differs from the background imagery displayed on these maps. As a result, some minor shifting of map unit boundaries may be evident.

Map Unit Legend

Map Unit Symbol	Map Unit Name	Acres in AOI	Percent of AOI
AtE	Altamont clay, 15 to 30 percent slopes, warm MAAT, MLRA 20	4.2	41.2%
CmE2	Cieneba rocky coarse sandy loam, 9 to 30 percent slopes, eroded	1.2	11.8%
DoE	Diablo-Olivenhain complex, 9 to 30 percent slopes	2.6	25.5%
LsE	Linne clay loam, 9 to 30 percent slopes	0.3	3.3%
RaB	Ramona sandy loam, 2 to 5 percent slopes	1.9	18.2%
Totals for Area of Interest		**10.3**	**100.0%**

Map Unit Descriptions

The map units delineated on the detailed soil maps in a soil survey represent the soils or miscellaneous areas in the survey area. The map unit descriptions, along with the maps, can be used to determine the composition and properties of a unit.

A map unit delineation on a soil map represents an area dominated by one or more major kinds of soil or miscellaneous areas. A map unit is identified and named according to the taxonomic classification of the dominant soils. Within a taxonomic class there are precisely defined limits for the properties of the soils. On the landscape, however, the soils are natural phenomena, and they have the characteristic variability of all natural phenomena. Thus, the range of some observed properties may extend beyond the limits defined for a taxonomic class. Areas of soils of a single taxonomic class rarely, if ever, can be mapped without including areas of other taxonomic classes. Consequently, every map unit is made up of the soils or miscellaneous areas for which it is named and some minor components that belong to taxonomic classes other than those of the major soils.

Most minor soils have properties similar to those of the dominant soil or soils in the map unit, and thus they do not affect use and management. These are called noncontrasting, or similar, components. They may or may not be mentioned in a particular map unit description. Other minor components, however, have properties and behavioral characteristics divergent enough to affect use or to require different management. These are called contrasting, or dissimilar, components. They generally are in small areas and could not be mapped separately because of the scale used. Some small areas of strongly contrasting soils or miscellaneous areas are identified by a special symbol on the maps. If included in the database for a given area, the contrasting minor components are identified in the map unit descriptions along with some characteristics of each. A few areas of minor components may not have been observed, and consequently they are not mentioned in the descriptions, especially where the pattern was so complex that it

was impractical to make enough observations to identify all the soils and miscellaneous areas on the landscape.

The presence of minor components in a map unit in no way diminishes the usefulness or accuracy of the data. The objective of mapping is not to delineate pure taxonomic classes but rather to separate the landscape into landforms or landform segments that have similar use and management requirements. The delineation of such segments on the map provides sufficient information for the development of resource plans. If intensive use of small areas is planned, however, onsite investigation is needed to define and locate the soils and miscellaneous areas.

An identifying symbol precedes the map unit name in the map unit descriptions. Each description includes general facts about the unit and gives important soil properties and qualities.

Soils that have profiles that are almost alike make up a *soil series*. Except for differences in texture of the surface layer, all the soils of a series have major horizons that are similar in composition, thickness, and arrangement.

Soils of one series can differ in texture of the surface layer, slope, stoniness, salinity, degree of erosion, and other characteristics that affect their use. On the basis of such differences, a soil series is divided into *soil phases*. Most of the areas shown on the detailed soil maps are phases of soil series. The name of a soil phase commonly indicates a feature that affects use or management. For example, Alpha silt loam, 0 to 2 percent slopes, is a phase of the Alpha series.

Some map units are made up of two or more major soils or miscellaneous areas. These map units are complexes, associations, or undifferentiated groups.

A *complex* consists of two or more soils or miscellaneous areas in such an intricate pattern or in such small areas that they cannot be shown separately on the maps. The pattern and proportion of the soils or miscellaneous areas are somewhat similar in all areas. Alpha-Beta complex, 0 to 6 percent slopes, is an example.

An *association* is made up of two or more geographically associated soils or miscellaneous areas that are shown as one unit on the maps. Because of present or anticipated uses of the map units in the survey area, it was not considered practical or necessary to map the soils or miscellaneous areas separately. The pattern and relative proportion of the soils or miscellaneous areas are somewhat similar. Alpha-Beta association, 0 to 2 percent slopes, is an example.

An *undifferentiated group* is made up of two or more soils or miscellaneous areas that could be mapped individually but are mapped as one unit because similar interpretations can be made for use and management. The pattern and proportion of the soils or miscellaneous areas in a mapped area are not uniform. An area can be made up of only one of the major soils or miscellaneous areas, or it can be made up of all of them. Alpha and Beta soils, 0 to 2 percent slopes, is an example.

Some surveys include *miscellaneous areas*. Such areas have little or no soil material and support little or no vegetation. Rock outcrop is an example.

San Diego County Area, California

AtE—Altamont clay, 15 to 30 percent slopes, warm MAAT, MLRA 20

Map Unit Setting

National map unit symbol: 2w627
Elevation: 20 to 860 feet
Mean annual precipitation: 11 to 15 inches
Mean annual air temperature: 62 to 65 degrees F
Frost-free period: 300 to 365 days
Farmland classification: Not prime farmland

Map Unit Composition

Altamont and similar soils: 85 percent
Minor components: 15 percent
Estimates are based on observations, descriptions, and transects of the mapunit.

Description of Altamont

Setting

Landform: Hillslopes, mountain slopes
Down-slope shape: Convex
Across-slope shape: Convex
Parent material: Residuum weathered from sandstone and shale

Typical profile

A - 0 to 4 inches: clay
Bss - 4 to 28 inches: clay
Bkss - 28 to 40 inches: clay
Cr - 40 to 50 inches:

Properties and qualities

Slope: 15 to 30 percent
Depth to restrictive feature: 40 to 60 inches to paralithic bedrock
Natural drainage class: Well drained
Runoff class: High
Capacity of the most limiting layer to transmit water (Ksat): Moderately low to moderately high (0.06 to 0.20 in/hr)
Depth to water table: More than 80 inches
Frequency of flooding: None
Frequency of ponding: None
Calcium carbonate, maximum in profile: 10 percent
Available water storage in profile: Moderate (about 6.4 inches)

Interpretive groups

Land capability classification (irrigated): 4e
Land capability classification (nonirrigated): 4e
Hydrologic Soil Group: C
Ecological site: CLAYEY (1975) (R019XD001CA)
Hydric soil rating: No

Minor Components

Las flores

Percent of map unit: 5 percent
Landform: Hillslopes, mountain slopes

Down-slope shape: Convex
Across-slope shape: Convex
Hydric soil rating: No

Diablo

Percent of map unit: 5 percent
Landform: Mountain slopes, hillslopes
Down-slope shape: Convex
Across-slope shape: Convex
Hydric soil rating: No

Linne

Percent of map unit: 5 percent
Landform: Hillslopes, mountain slopes
Down-slope shape: Convex
Across-slope shape: Convex
Hydric soil rating: No

CmE2—Cieneba rocky coarse sandy loam, 9 to 30 percent slopes, eroded

Map Unit Setting

National map unit symbol: hb9t
Elevation: 500 to 4,000 feet
Mean annual precipitation: 8 to 35 inches
Mean annual air temperature: 45 to 64 degrees F
Frost-free period: 110 to 300 days
Farmland classification: Not prime farmland

Map Unit Composition

Cieneba and similar soils: 60 percent
Rock outcrop: 30 percent
Minor components: 10 percent
Estimates are based on observations, descriptions, and transects of the mapunit.

Description of Cieneba

Setting

Landform: Hills
Landform position (two-dimensional): Backslope
Landform position (three-dimensional): Side slope
Down-slope shape: Convex
Across-slope shape: Convex
Parent material: Residuum weathered from granite and granodiorite

Typical profile

H1 - 0 to 8 inches: coarse sandy loam
H2 - 8 to 12 inches: weathered bedrock

Properties and qualities

Slope: 9 to 30 percent

Depth to restrictive feature: 4 to 20 inches to paralithic bedrock
Natural drainage class: Somewhat excessively drained
Runoff class: Medium
Capacity of the most limiting layer to transmit water (Ksat): High (1.98 to 5.95 in/hr)
Depth to water table: More than 80 inches
Frequency of flooding: None
Frequency of ponding: None
Available water storage in profile: Very low (about 0.8 inches)

Interpretive groups
Land capability classification (irrigated): None specified
Land capability classification (nonirrigated): 7e
Hydrologic Soil Group: D
Ecological site: SHALLOW LOAMY (1975) (R019XD060CA)
Hydric soil rating: No

Description of Rock Outcrop

Setting
Landform: Hills
Landform position (three-dimensional): Side slope
Down-slope shape: Convex
Across-slope shape: Convex

Typical profile
H1 - 0 to 4 inches: unweathered bedrock

Interpretive groups
Land capability classification (irrigated): None specified
Land capability classification (nonirrigated): 8
Hydrologic Soil Group: D
Hydric soil rating: No

Minor Components

Vista
Percent of map unit: 5 percent
Hydric soil rating: No

Las posas
Percent of map unit: 5 percent
Hydric soil rating: No

DoE—Diablo-Olivenhain complex, 9 to 30 percent slopes

Map Unit Setting
National map unit symbol: hbbh
Elevation: 100 to 3,250 feet
Mean annual precipitation: 9 to 25 inches
Mean annual air temperature: 59 to 63 degrees F

Frost-free period: 200 to 330 days
Farmland classification: Not prime farmland

Map Unit Composition

Diablo and similar soils: 50 percent
Olivenhain and similar soils: 45 percent
Minor components: 5 percent
Estimates are based on observations, descriptions, and transects of the mapunit.

Description of Diablo

Setting

Landform: Hillslopes
Landform position (two-dimensional): Backslope
Landform position (three-dimensional): Side slope
Down-slope shape: Convex
Across-slope shape: Convex
Parent material: Calcareous sandstone and shale

Typical profile

H1 - 0 to 15 inches: clay
H2 - 15 to 32 inches: clay, silty clay loam
H2 - 15 to 32 inches: weathered bedrock
H3 - 32 to 36 inches:

Properties and qualities

Slope: 9 to 30 percent
Depth to restrictive feature: 24 to 40 inches to paralithic bedrock
Natural drainage class: Well drained
Runoff class: Very high
Capacity of the most limiting layer to transmit water (Ksat): Moderately low to moderately high (0.06 to 0.20 in/hr)
Depth to water table: More than 80 inches
Frequency of flooding: None
Frequency of ponding: None
Calcium carbonate, maximum in profile: 10 percent
Available water storage in profile: Moderate (about 7.7 inches)

Interpretive groups

Land capability classification (irrigated): None specified
Land capability classification (nonirrigated): 4e
Hydrologic Soil Group: D
Ecological site: CLAYEY (1975) (R019XD001CA)
Hydric soil rating: No

Description of Olivenhain

Setting

Landform: Hillslopes
Landform position (two-dimensional): Backslope
Landform position (three-dimensional): Side slope
Down-slope shape: Convex
Across-slope shape: Convex
Parent material: Old alluvium

Typical profile

H1 - 0 to 10 inches: cobbly loam

H2 - 10 to 42 inches: very cobbly clay, very cobbly clay loam
H2 - 10 to 42 inches: cobbly loam, cobbly clay loam
H3 - 42 to 60 inches:
H3 - 42 to 60 inches:

Properties and qualities

Slope: 9 to 30 percent
Depth to restrictive feature: About 10 inches to abrupt textural change
Natural drainage class: Well drained
Runoff class: Very high
Capacity of the most limiting layer to transmit water (Ksat): Very low to moderately low (0.00 to 0.06 in/hr)
Depth to water table: More than 80 inches
Frequency of flooding: None
Frequency of ponding: None
Available water storage in profile: Very low (about 1.3 inches)

Interpretive groups

Land capability classification (irrigated): None specified
Land capability classification (nonirrigated): 4e
Hydrologic Soil Group: D
Ecological site: CLAYPAN (1975) (R019XD061CA)
Hydric soil rating: No

Minor Components

Linne

Percent of map unit: 5 percent
Hydric soil rating: No

LsE—Linne clay loam, 9 to 30 percent slopes

Map Unit Setting

National map unit symbol: hbdt
Elevation: 100 to 2,000 feet
Mean annual precipitation: 12 to 20 inches
Mean annual air temperature: 57 to 63 degrees F
Frost-free period: 200 to 330 days
Farmland classification: Not prime farmland

Map Unit Composition

Linne and similar soils: 85 percent
Minor components: 15 percent
Estimates are based on observations, descriptions, and transects of the mapunit.

Description of Linne

Setting

Landform: Hillslopes
Landform position (two-dimensional): Backslope

Landform position (three-dimensional): Side slope
Down-slope shape: Convex
Across-slope shape: Convex
Parent material: Residuum weathered from calcareous sandstone and shale

Typical profile

H1 - 0 to 15 inches: clay loam
H2 - 15 to 37 inches: clay loam, loam
H2 - 15 to 37 inches: weathered bedrock
H3 - 37 to 41 inches:

Properties and qualities

Slope: 9 to 30 percent
Depth to restrictive feature: 20 to 40 inches to paralithic bedrock
Natural drainage class: Well drained
Runoff class: Very high
Capacity of the most limiting layer to transmit water (Ksat): Moderately high (0.20 to 0.57 in/hr)
Depth to water table: More than 80 inches
Frequency of flooding: None
Frequency of ponding: None
Calcium carbonate, maximum in profile: 10 percent
Salinity, maximum in profile: Nonsaline to very slightly saline (0.0 to 2.0 mmhos/cm)
Available water storage in profile: High (about 10.2 inches)

Interpretive groups

Land capability classification (irrigated): 4e
Land capability classification (nonirrigated): 4e
Hydrologic Soil Group: C
Ecological site: CLAYEY (1975) (R019XD001CA)
Hydric soil rating: No

Minor Components

Diablo

Percent of map unit: 5 percent
Hydric soil rating: No

Huerhuero

Percent of map unit: 5 percent
Hydric soil rating: No

Altamont

Percent of map unit: 5 percent
Hydric soil rating: No

RaB—Ramona sandy loam, 2 to 5 percent slopes

Map Unit Setting

National map unit symbol: hbfr
Elevation: 250 to 3,500 feet

Mean annual precipitation: 10 to 20 inches
Mean annual air temperature: 63 degrees F
Frost-free period: 230 to 320 days
Farmland classification: Prime farmland if irrigated

Map Unit Composition

Ramona and similar soils: 85 percent
Minor components: 15 percent
Estimates are based on observations, descriptions, and transects of the mapunit.

Description of Ramona

Setting

Landform: Alluvial fans
Landform position (two-dimensional): Toeslope
Landform position (three-dimensional): Base slope, rise
Down-slope shape: Linear
Across-slope shape: Convex
Parent material: Alluvium derived from granite

Typical profile

H1 - 0 to 17 inches: sandy loam
H2 - 17 to 60 inches: sandy clay loam, clay loam
H2 - 17 to 60 inches: sandy clay loam, sandy loam
H3 - 60 to 74 inches:
H3 - 60 to 74 inches:

Properties and qualities

Slope: 2 to 5 percent
Depth to restrictive feature: More than 80 inches
Natural drainage class: Well drained
Runoff class: Medium
Capacity of the most limiting layer to transmit water (Ksat): Moderately high (0.20 to 0.57 in/hr)
Depth to water table: More than 80 inches
Frequency of flooding: None
Frequency of ponding: None
Available water storage in profile: Very high (about 14.9 inches)

Interpretive groups

Land capability classification (irrigated): 2e
Land capability classification (nonirrigated): 4e
Hydrologic Soil Group: C
Hydric soil rating: No

Minor Components

Greenfield

Percent of map unit: 10 percent
Hydric soil rating: No

Plecentia

Percent of map unit: 5 percent
Hydric soil rating: No

References

American Association of State Highway and Transportation Officials (AASHTO). 2004. Standard specifications for transportation materials and methods of sampling and testing. 24th edition.

American Society for Testing and Materials (ASTM). 2005. Standard classification of soils for engineering purposes. ASTM Standard D2487-00.

Cowardin, L.M., V. Carter, F.C. Golet, and E.T. LaRoe. 1979. Classification of wetlands and deep-water habitats of the United States. U.S. Fish and Wildlife Service FWS/OBS-79/31.

Federal Register. July 13, 1994. Changes in hydric soils of the United States.

Federal Register. September 18, 2002. Hydric soils of the United States.

Hurt, G.W., and L.M. Vasilas, editors. Version 6.0, 2006. Field indicators of hydric soils in the United States.

National Research Council. 1995. Wetlands: Characteristics and boundaries.

Soil Survey Division Staff. 1993. Soil survey manual. Soil Conservation Service. U.S. Department of Agriculture Handbook 18. http://www.nrcs.usda.gov/wps/portal/nrcs/detail/national/soils/?cid=nrcs142p2_054262

Soil Survey Staff. 1999. Soil taxonomy: A basic system of soil classification for making and interpreting soil surveys. 2nd edition. Natural Resources Conservation Service, U.S. Department of Agriculture Handbook 436. http://www.nrcs.usda.gov/wps/portal/nrcs/detail/national/soils/?cid=nrcs142p2_053577

Soil Survey Staff. 2010. Keys to soil taxonomy. 11th edition. U.S. Department of Agriculture, Natural Resources Conservation Service. http://www.nrcs.usda.gov/wps/portal/nrcs/detail/national/soils/?cid=nrcs142p2_053580

Tiner, R.W., Jr. 1985. Wetlands of Delaware. U.S. Fish and Wildlife Service and Delaware Department of Natural Resources and Environmental Control, Wetlands Section.

United States Army Corps of Engineers, Environmental Laboratory. 1987. Corps of Engineers wetlands delineation manual. Waterways Experiment Station Technical Report Y-87-1.

United States Department of Agriculture, Natural Resources Conservation Service. National forestry manual. http://www.nrcs.usda.gov/wps/portal/nrcs/detail/soils/home/?cid=nrcs142p2_053374

United States Department of Agriculture, Natural Resources Conservation Service. National range and pasture handbook. http://www.nrcs.usda.gov/wps/portal/nrcs/detail/national/landuse/rangepasture/?cid=stelprdb1043084

United States Department of Agriculture, Natural Resources Conservation Service. National soil survey handbook, title 430-VI. http://www.nrcs.usda.gov/wps/portal/nrcs/detail/soils/scientists/?cid=nrcs142p2_054242

United States Department of Agriculture, Natural Resources Conservation Service. 2006. Land resource regions and major land resource areas of the United States, the Caribbean, and the Pacific Basin. U.S. Department of Agriculture Handbook 296. http://www.nrcs.usda.gov/wps/portal/nrcs/detail/national/soils/?cid=nrcs142p2_053624

United States Department of Agriculture, Soil Conservation Service. 1961. Land capability classification. U.S. Department of Agriculture Handbook 210. http://www.nrcs.usda.gov/Internet/FSE_DOCUMENTS/nrcs142p2_052290.pdf

United States Department of Agriculture

Natural Resources Conservation Service

A product of the National Cooperative Soil Survey, a joint effort of the United States Department of Agriculture and other Federal agencies, State agencies including the Agricultural Experiment Stations, and local participants

Custom Soil Resource Report for San Diego County Area, California

Carmel Mountain Ranch - DMA 9

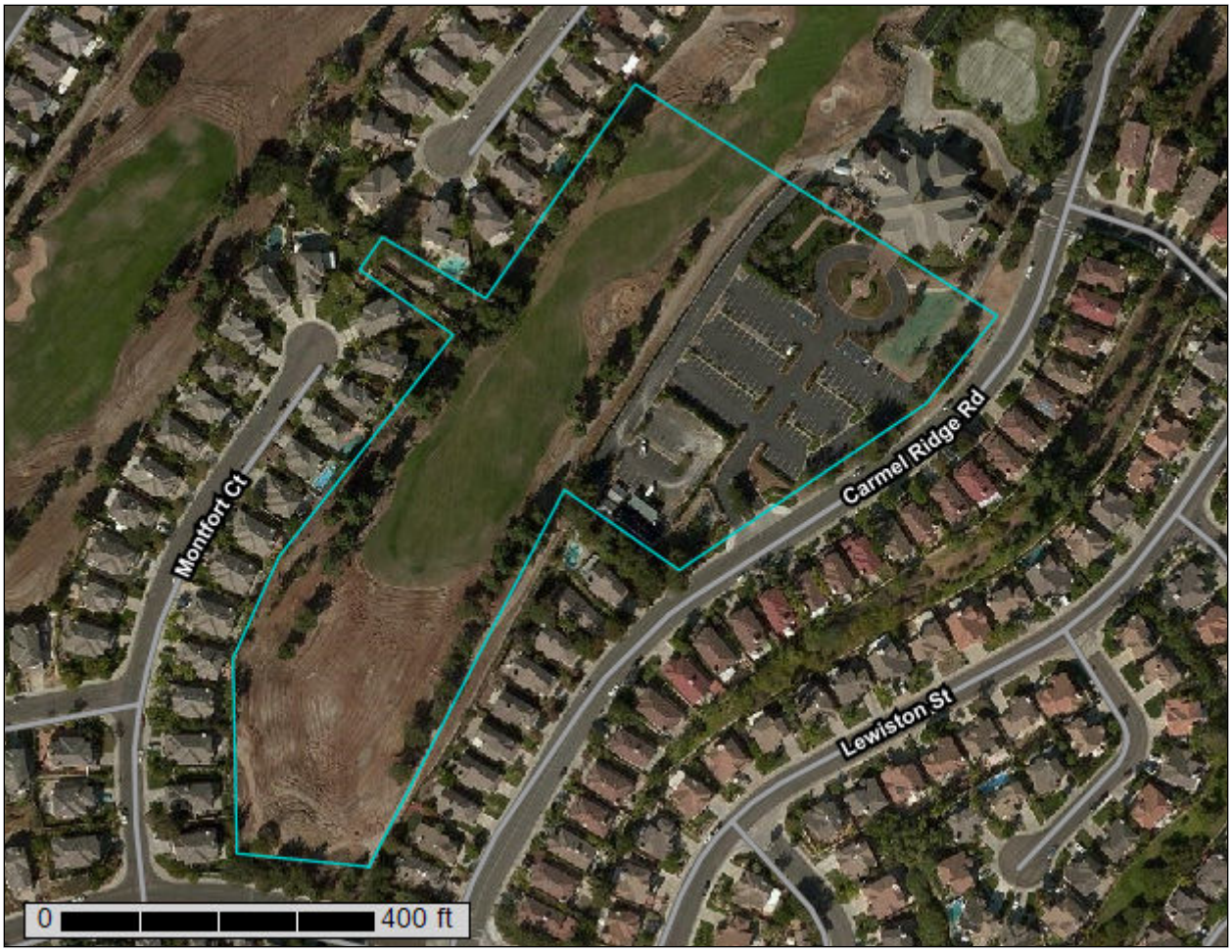

October 4, 2019

Preface

Soil surveys contain information that affects land use planning in survey areas. They highlight soil limitations that affect various land uses and provide information about the properties of the soils in the survey areas. Soil surveys are designed for many different users, including farmers, ranchers, foresters, agronomists, urban planners, community officials, engineers, developers, builders, and home buyers. Also, conservationists, teachers, students, and specialists in recreation, waste disposal, and pollution control can use the surveys to help them understand, protect, or enhance the environment.

Various land use regulations of Federal, State, and local governments may impose special restrictions on land use or land treatment. Soil surveys identify soil properties that are used in making various land use or land treatment decisions. The information is intended to help the land users identify and reduce the effects of soil limitations on various land uses. The landowner or user is responsible for identifying and complying with existing laws and regulations.

Although soil survey information can be used for general farm, local, and wider area planning, onsite investigation is needed to supplement this information in some cases. Examples include soil quality assessments (http://www.nrcs.usda.gov/wps/portal/nrcs/main/soils/health/) and certain conservation and engineering applications. For more detailed information, contact your local USDA Service Center (https://offices.sc.egov.usda.gov/locator/app?agency=nrcs) or your NRCS State Soil Scientist (http://www.nrcs.usda.gov/wps/portal/nrcs/detail/soils/contactus/?cid=nrcs142p2_053951).

Great differences in soil properties can occur within short distances. Some soils are seasonally wet or subject to flooding. Some are too unstable to be used as a foundation for buildings or roads. Clayey or wet soils are poorly suited to use as septic tank absorption fields. A high water table makes a soil poorly suited to basements or underground installations.

The National Cooperative Soil Survey is a joint effort of the United States Department of Agriculture and other Federal agencies, State agencies including the Agricultural Experiment Stations, and local agencies. The Natural Resources Conservation Service (NRCS) has leadership for the Federal part of the National Cooperative Soil Survey.

Information about soils is updated periodically. Updated information is available through the NRCS Web Soil Survey, the site for official soil survey information.

The U.S. Department of Agriculture (USDA) prohibits discrimination in all its programs and activities on the basis of race, color, national origin, age, disability, and where applicable, sex, marital status, familial status, parental status, religion, sexual orientation, genetic information, political beliefs, reprisal, or because all or a part of an individual's income is derived from any public assistance program. (Not all prohibited bases apply to all programs.) Persons with disabilities who require

Contents

How Soil Surveys Are Made

Soil surveys are made to provide information about the soils and miscellaneous areas in a specific area. They include a description of the soils and miscellaneous areas and their location on the landscape and tables that show soil properties and limitations affecting various uses. Soil scientists observed the steepness, length, and shape of the slopes; the general pattern of drainage; the kinds of crops and native plants; and the kinds of bedrock. They observed and described many soil profiles. A soil profile is the sequence of natural layers, or horizons, in a soil. The profile extends from the surface down into the unconsolidated material in which the soil formed or from the surface down to bedrock. The unconsolidated material is devoid of roots and other living organisms and has not been changed by other biological activity.

Currently, soils are mapped according to the boundaries of major land resource areas (MLRAs). MLRAs are geographically associated land resource units that share common characteristics related to physiography, geology, climate, water resources, soils, biological resources, and land uses (USDA, 2006). Soil survey areas typically consist of parts of one or more MLRA.

The soils and miscellaneous areas in a survey area occur in an orderly pattern that is related to the geology, landforms, relief, climate, and natural vegetation of the area. Each kind of soil and miscellaneous area is associated with a particular kind of landform or with a segment of the landform. By observing the soils and miscellaneous areas in the survey area and relating their position to specific segments of the landform, a soil scientist develops a concept, or model, of how they were formed. Thus, during mapping, this model enables the soil scientist to predict with a considerable degree of accuracy the kind of soil or miscellaneous area at a specific location on the landscape.

Commonly, individual soils on the landscape merge into one another as their characteristics gradually change. To construct an accurate soil map, however, soil scientists must determine the boundaries between the soils. They can observe only a limited number of soil profiles. Nevertheless, these observations, supplemented by an understanding of the soil-vegetation-landscape relationship, are sufficient to verify predictions of the kinds of soil in an area and to determine the boundaries.

Soil scientists recorded the characteristics of the soil profiles that they studied. They noted soil color, texture, size and shape of soil aggregates, kind and amount of rock fragments, distribution of plant roots, reaction, and other features that enable them to identify soils. After describing the soils in the survey area and determining their properties, the soil scientists assigned the soils to taxonomic classes (units). Taxonomic classes are concepts. Each taxonomic class has a set of soil characteristics with precisely defined limits. The classes are used as a basis for comparison to classify soils systematically. Soil taxonomy, the system of taxonomic classification used in the United States, is based mainly on the kind and character of soil properties and the arrangement of horizons within the profile. After the soil

scientists classified and named the soils in the survey area, they compared the individual soils with similar soils in the same taxonomic class in other areas so that they could confirm data and assemble additional data based on experience and research.

The objective of soil mapping is not to delineate pure map unit components; the objective is to separate the landscape into landforms or landform segments that have similar use and management requirements. Each map unit is defined by a unique combination of soil components and/or miscellaneous areas in predictable proportions. Some components may be highly contrasting to the other components of the map unit. The presence of minor components in a map unit in no way diminishes the usefulness or accuracy of the data. The delineation of such landforms and landform segments on the map provides sufficient information for the development of resource plans. If intensive use of small areas is planned, onsite investigation is needed to define and locate the soils and miscellaneous areas.

Soil scientists make many field observations in the process of producing a soil map. The frequency of observation is dependent upon several factors, including scale of mapping, intensity of mapping, design of map units, complexity of the landscape, and experience of the soil scientist. Observations are made to test and refine the soil-landscape model and predictions and to verify the classification of the soils at specific locations. Once the soil-landscape model is refined, a significantly smaller number of measurements of individual soil properties are made and recorded. These measurements may include field measurements, such as those for color, depth to bedrock, and texture, and laboratory measurements, such as those for content of sand, silt, clay, salt, and other components. Properties of each soil typically vary from one point to another across the landscape.

Observations for map unit components are aggregated to develop ranges of characteristics for the components. The aggregated values are presented. Direct measurements do not exist for every property presented for every map unit component. Values for some properties are estimated from combinations of other properties.

While a soil survey is in progress, samples of some of the soils in the area generally are collected for laboratory analyses and for engineering tests. Soil scientists interpret the data from these analyses and tests as well as the field-observed characteristics and the soil properties to determine the expected behavior of the soils under different uses. Interpretations for all of the soils are field tested through observation of the soils in different uses and under different levels of management. Some interpretations are modified to fit local conditions, and some new interpretations are developed to meet local needs. Data are assembled from other sources, such as research information, production records, and field experience of specialists. For example, data on crop yields under defined levels of management are assembled from farm records and from field or plot experiments on the same kinds of soil.

Predictions about soil behavior are based not only on soil properties but also on such variables as climate and biological activity. Soil conditions are predictable over long periods of time, but they are not predictable from year to year. For example, soil scientists can predict with a fairly high degree of accuracy that a given soil will have a high water table within certain depths in most years, but they cannot predict that a high water table will always be at a specific level in the soil on a specific date.

After soil scientists located and identified the significant natural bodies of soil in the survey area, they drew the boundaries of these bodies on aerial photographs and

identified each as a specific map unit. Aerial photographs show trees, buildings, fields, roads, and rivers, all of which help in locating boundaries accurately.

Soil Map

The soil map section includes the soil map for the defined area of interest, a list of soil map units on the map and extent of each map unit, and cartographic symbols displayed on the map. Also presented are various metadata about data used to produce the map, and a description of each soil map unit.

Custom Soil Resource Report
Soil Map

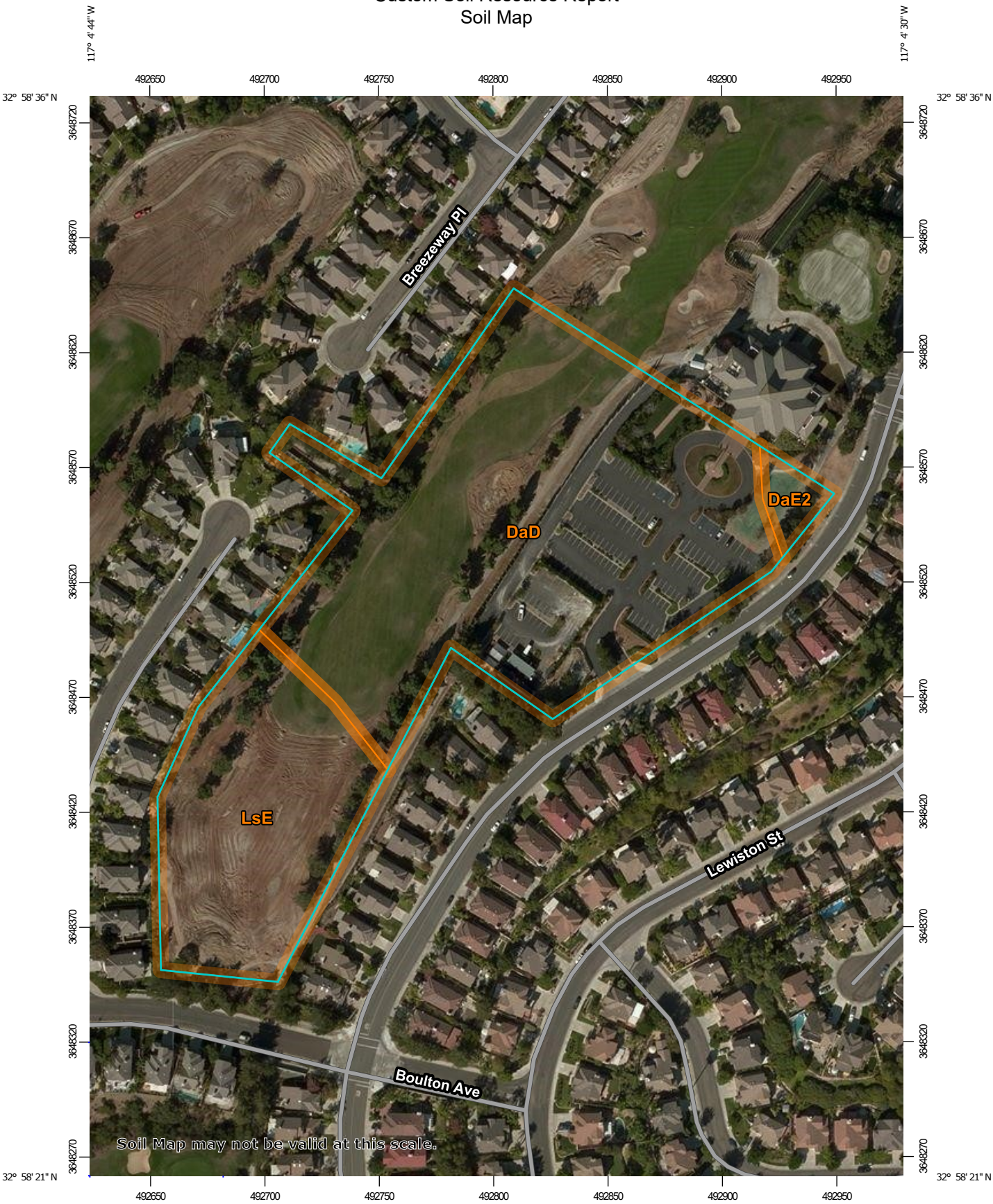

Map Scale: 1:2,290 if printed on A portrait (8.5" x 11") sheet.

N

Meters: 0 30 60 120 180

Feet: 0 100 200 400 600

Map projection: Web Mercator Corner coordinates: WGS84 Edge tics: UTM Zone 11N WGS84

MAP LEGEND

Area of Interest (AOI)

Area of Interest (AOI)

Soils

Soil Map Unit Polygons

Soil Map Unit Lines

Soil Map Unit Points

Special Point Features

Blowout

Borrow Pit

Clay Spot

Closed Depression

Gravel Pit

Gravelly Spot

Landfill

Lava Flow

Marsh or swamp

Mine or Quarry

Miscellaneous Water

Perennial Water

Rock Outcrop

Saline Spot

Sandy Spot

Severely Eroded Spot

Sinkhole

Slide or Slip

Sodic Spot

Spoil Area

Stony Spot

Very Stony Spot

Wet Spot

Other

Special Line Features

Water Features

Streams and Canals

Transportation

Rails

Interstate Highways

US Routes

Major Roads

Local Roads

Background

Aerial Photography

MAP INFORMATION

The soil surveys that comprise your AOI were mapped at 1:24,000.

Warning: Soil Map may not be valid at this scale.

Enlargement of maps beyond the scale of mapping can cause misunderstanding of the detail of mapping and accuracy of soil line placement. The maps do not show the small areas of contrasting soils that could have been shown at a more detailed scale.

Please rely on the bar scale on each map sheet for map measurements.

Source of Map: Natural Resources Conservation Service
Web Soil Survey URL:
Coordinate System: Web Mercator (EPSG:3857)

Maps from the Web Soil Survey are based on the Web Mercator projection, which preserves direction and shape but distorts distance and area. A projection that preserves area, such as the Albers equal-area conic projection, should be used if more accurate calculations of distance or area are required.

This product is generated from the USDA-NRCS certified data as of the version date(s) listed below.

Soil Survey Area: San Diego County Area, California
Survey Area Data: Version 14, Sep 16, 2019

Soil map units are labeled (as space allows) for map scales 1:50,000 or larger.

Date(s) aerial images were photographed: Nov 3, 2014—Nov 22, 2014

The orthophoto or other base map on which the soil lines were compiled and digitized probably differs from the background imagery displayed on these maps. As a result, some minor shifting of map unit boundaries may be evident.

Map Unit Legend

Map Unit Symbol	Map Unit Name	Acres in AOI	Percent of AOI
DaD	Diablo clay, 9 to 15 percent slopes, warm MAAT	6.4	70.4%
DaE2	Diablo clay, 15 to 30 percent slopes, eroded, warm MAAT	0.2	2.1%
LsE	Linne clay loam, 9 to 30 percent slopes	2.5	27.5%
Totals for Area of Interest		**9.0**	**100.0%**

Map Unit Descriptions

The map units delineated on the detailed soil maps in a soil survey represent the soils or miscellaneous areas in the survey area. The map unit descriptions, along with the maps, can be used to determine the composition and properties of a unit.

A map unit delineation on a soil map represents an area dominated by one or more major kinds of soil or miscellaneous areas. A map unit is identified and named according to the taxonomic classification of the dominant soils. Within a taxonomic class there are precisely defined limits for the properties of the soils. On the landscape, however, the soils are natural phenomena, and they have the characteristic variability of all natural phenomena. Thus, the range of some observed properties may extend beyond the limits defined for a taxonomic class. Areas of soils of a single taxonomic class rarely, if ever, can be mapped without including areas of other taxonomic classes. Consequently, every map unit is made up of the soils or miscellaneous areas for which it is named and some minor components that belong to taxonomic classes other than those of the major soils.

Most minor soils have properties similar to those of the dominant soil or soils in the map unit, and thus they do not affect use and management. These are called noncontrasting, or similar, components. They may or may not be mentioned in a particular map unit description. Other minor components, however, have properties and behavioral characteristics divergent enough to affect use or to require different management. These are called contrasting, or dissimilar, components. They generally are in small areas and could not be mapped separately because of the scale used. Some small areas of strongly contrasting soils or miscellaneous areas are identified by a special symbol on the maps. If included in the database for a given area, the contrasting minor components are identified in the map unit descriptions along with some characteristics of each. A few areas of minor components may not have been observed, and consequently they are not mentioned in the descriptions, especially where the pattern was so complex that it was impractical to make enough observations to identify all the soils and miscellaneous areas on the landscape.

The presence of minor components in a map unit in no way diminishes the usefulness or accuracy of the data. The objective of mapping is not to delineate pure taxonomic classes but rather to separate the landscape into landforms or

landform segments that have similar use and management requirements. The delineation of such segments on the map provides sufficient information for the development of resource plans. If intensive use of small areas is planned, however, onsite investigation is needed to define and locate the soils and miscellaneous areas.

An identifying symbol precedes the map unit name in the map unit descriptions. Each description includes general facts about the unit and gives important soil properties and qualities.

Soils that have profiles that are almost alike make up a *soil series*. Except for differences in texture of the surface layer, all the soils of a series have major horizons that are similar in composition, thickness, and arrangement.

Soils of one series can differ in texture of the surface layer, slope, stoniness, salinity, degree of erosion, and other characteristics that affect their use. On the basis of such differences, a soil series is divided into *soil phases*. Most of the areas shown on the detailed soil maps are phases of soil series. The name of a soil phase commonly indicates a feature that affects use or management. For example, Alpha silt loam, 0 to 2 percent slopes, is a phase of the Alpha series.

Some map units are made up of two or more major soils or miscellaneous areas. These map units are complexes, associations, or undifferentiated groups.

A *complex* consists of two or more soils or miscellaneous areas in such an intricate pattern or in such small areas that they cannot be shown separately on the maps. The pattern and proportion of the soils or miscellaneous areas are somewhat similar in all areas. Alpha-Beta complex, 0 to 6 percent slopes, is an example.

An *association* is made up of two or more geographically associated soils or miscellaneous areas that are shown as one unit on the maps. Because of present or anticipated uses of the map units in the survey area, it was not considered practical or necessary to map the soils or miscellaneous areas separately. The pattern and relative proportion of the soils or miscellaneous areas are somewhat similar. Alpha-Beta association, 0 to 2 percent slopes, is an example.

An *undifferentiated group* is made up of two or more soils or miscellaneous areas that could be mapped individually but are mapped as one unit because similar interpretations can be made for use and management. The pattern and proportion of the soils or miscellaneous areas in a mapped area are not uniform. An area can be made up of only one of the major soils or miscellaneous areas, or it can be made up of all of them. Alpha and Beta soils, 0 to 2 percent slopes, is an example.

Some surveys include *miscellaneous areas*. Such areas have little or no soil material and support little or no vegetation. Rock outcrop is an example.

San Diego County Area, California

DaD—Diablo clay, 9 to 15 percent slopes, warm MAAT

Map Unit Setting

National map unit symbol: 2w63f
Elevation: 110 to 910 feet
Mean annual precipitation: 11 to 21 inches
Mean annual air temperature: 58 to 64 degrees F
Frost-free period: 290 to 365 days
Farmland classification: Farmland of statewide importance

Map Unit Composition

Diablo and similar soils: 85 percent
Minor components: 15 percent
Estimates are based on observations, descriptions, and transects of the mapunit.

Description of Diablo

Setting

Landform: Hillslopes
Landform position (two-dimensional): Backslope
Landform position (three-dimensional): Side slope
Down-slope shape: Convex
Across-slope shape: Convex
Parent material: Residuum weathered from calcareous shale

Typical profile

A - 0 to 15 inches: clay
Bkss1 - 15 to 28 inches: clay
Bkss2 - 28 to 40 inches: clay loam
Cr - 40 to 79 inches: bedrock

Properties and qualities

Slope: 9 to 15 percent
Depth to restrictive feature: 39 to 79 inches to paralithic bedrock
Natural drainage class: Well drained
Capacity of the most limiting layer to transmit water (Ksat): Moderately low to moderately high (0.06 to 0.20 in/hr)
Depth to water table: More than 80 inches
Frequency of flooding: None
Frequency of ponding: None
Calcium carbonate, maximum in profile: 5 percent
Available water storage in profile: Moderate (about 6.8 inches)

Interpretive groups

Land capability classification (irrigated): 4e
Land capability classification (nonirrigated): 4e
Hydrologic Soil Group: C
Ecological site: CLAYEY (1975) (R019XD001CA)
Hydric soil rating: No

Minor Components

Altamont

Percent of map unit: 10 percent

Landform: Hillslopes
Landform position (two-dimensional): Backslope
Landform position (three-dimensional): Side slope
Down-slope shape: Convex
Across-slope shape: Convex
Hydric soil rating: No

Linne

Percent of map unit: 3 percent
Landform: Hillslopes
Landform position (two-dimensional): Backslope
Landform position (three-dimensional): Side slope
Down-slope shape: Convex
Across-slope shape: Convex
Hydric soil rating: No

Olephant

Percent of map unit: 2 percent
Landform: Terraces
Landform position (three-dimensional): Tread
Down-slope shape: Concave
Across-slope shape: Concave
Hydric soil rating: No

DaE2—Diablo clay, 15 to 30 percent slopes, eroded, warm MAAT

Map Unit Setting

National map unit symbol: 2w60s
Elevation: 890 to 2,260 feet
Mean annual precipitation: 11 to 27 inches
Mean annual air temperature: 60 to 65 degrees F
Frost-free period: 270 to 365 days
Farmland classification: Not prime farmland

Map Unit Composition

Diablo and similar soils: 85 percent
Minor components: 15 percent
Estimates are based on observations, descriptions, and transects of the mapunit.

Description of Diablo

Setting

Landform: Hillslopes
Landform position (two-dimensional): Backslope
Landform position (three-dimensional): Side slope
Down-slope shape: Convex
Across-slope shape: Convex
Parent material: Residuum weathered from calcareous shale

Typical profile

A - 0 to 15 inches: clay

Bkss1 - 15 to 28 inches: clay
Bkss2 - 28 to 40 inches: clay loam
Cr - 40 to 79 inches: bedrock

Properties and qualities

Slope: 15 to 30 percent
Depth to restrictive feature: 39 to 79 inches to paralithic bedrock
Natural drainage class: Well drained
Capacity of the most limiting layer to transmit water (Ksat): Moderately low to moderately high (0.06 to 0.20 in/hr)
Depth to water table: More than 80 inches
Frequency of flooding: None
Frequency of ponding: None
Calcium carbonate, maximum in profile: 5 percent
Available water storage in profile: Moderate (about 6.8 inches)

Interpretive groups

Land capability classification (irrigated): 4e
Land capability classification (nonirrigated): 4e
Hydrologic Soil Group: C
Ecological site: CLAYEY (1975) (R019XD001CA)
Hydric soil rating: No

Minor Components

Altamont

Percent of map unit: 10 percent
Landform: Hillslopes
Landform position (two-dimensional): Backslope
Landform position (three-dimensional): Side slope
Down-slope shape: Convex
Across-slope shape: Convex
Hydric soil rating: No

Linne

Percent of map unit: 3 percent
Landform: Hillslopes
Landform position (two-dimensional): Backslope
Landform position (three-dimensional): Side slope
Down-slope shape: Convex
Across-slope shape: Convex
Hydric soil rating: No

Olephant

Percent of map unit: 2 percent
Landform: Terraces
Landform position (three-dimensional): Tread
Down-slope shape: Concave
Across-slope shape: Concave
Hydric soil rating: No

LsE—Linne clay loam, 9 to 30 percent slopes

Map Unit Setting

National map unit symbol: hbdt
Elevation: 100 to 2,000 feet
Mean annual precipitation: 12 to 20 inches
Mean annual air temperature: 57 to 63 degrees F
Frost-free period: 200 to 330 days
Farmland classification: Not prime farmland

Map Unit Composition

Linne and similar soils: 85 percent
Minor components: 15 percent
Estimates are based on observations, descriptions, and transects of the mapunit.

Description of Linne

Setting

Landform: Hillslopes
Landform position (two-dimensional): Backslope
Landform position (three-dimensional): Side slope
Down-slope shape: Convex
Across-slope shape: Convex
Parent material: Residuum weathered from calcareous sandstone and shale

Typical profile

H1 - 0 to 15 inches: clay loam
H2 - 15 to 37 inches: clay loam, loam
H2 - 15 to 37 inches: weathered bedrock
H3 - 37 to 41 inches:

Properties and qualities

Slope: 9 to 30 percent
Depth to restrictive feature: 20 to 40 inches to paralithic bedrock
Natural drainage class: Well drained
Runoff class: Very high
Capacity of the most limiting layer to transmit water (Ksat): Moderately high (0.20 to 0.57 in/hr)
Depth to water table: More than 80 inches
Frequency of flooding: None
Frequency of ponding: None
Calcium carbonate, maximum in profile: 10 percent
Salinity, maximum in profile: Nonsaline to very slightly saline (0.0 to 2.0 mmhos/cm)
Available water storage in profile: High (about 10.2 inches)

Interpretive groups

Land capability classification (irrigated): 4e
Land capability classification (nonirrigated): 4e
Hydrologic Soil Group: C

Ecological site: CLAYEY (1975) (R019XD001CA)
Hydric soil rating: No

Minor Components

Diablo
Percent of map unit: 5 percent
Hydric soil rating: No

Huerhuero
Percent of map unit: 5 percent
Hydric soil rating: No

Altamont
Percent of map unit: 5 percent
Hydric soil rating: No

References

American Association of State Highway and Transportation Officials (AASHTO). 2004. Standard specifications for transportation materials and methods of sampling and testing. 24th edition.

American Society for Testing and Materials (ASTM). 2005. Standard classification of soils for engineering purposes. ASTM Standard D2487-00.

Cowardin, L.M., V. Carter, F.C. Golet, and E.T. LaRoe. 1979. Classification of wetlands and deep-water habitats of the United States. U.S. Fish and Wildlife Service FWS/OBS-79/31.

Federal Register. July 13, 1994. Changes in hydric soils of the United States.

Federal Register. September 18, 2002. Hydric soils of the United States.

Hurt, G.W., and L.M. Vasilas, editors. Version 6.0, 2006. Field indicators of hydric soils in the United States.

National Research Council. 1995. Wetlands: Characteristics and boundaries.

Soil Survey Division Staff. 1993. Soil survey manual. Soil Conservation Service. U.S. Department of Agriculture Handbook 18. http://www.nrcs.usda.gov/wps/portal/nrcs/detail/national/soils/?cid=nrcs142p2_054262

Soil Survey Staff. 1999. Soil taxonomy: A basic system of soil classification for making and interpreting soil surveys. 2nd edition. Natural Resources Conservation Service, U.S. Department of Agriculture Handbook 436. http://www.nrcs.usda.gov/wps/portal/nrcs/detail/national/soils/?cid=nrcs142p2_053577

Soil Survey Staff. 2010. Keys to soil taxonomy. 11th edition. U.S. Department of Agriculture, Natural Resources Conservation Service. http://www.nrcs.usda.gov/wps/portal/nrcs/detail/national/soils/?cid=nrcs142p2_053580

Tiner, R.W., Jr. 1985. Wetlands of Delaware. U.S. Fish and Wildlife Service and Delaware Department of Natural Resources and Environmental Control, Wetlands Section.

United States Army Corps of Engineers, Environmental Laboratory. 1987. Corps of Engineers wetlands delineation manual. Waterways Experiment Station Technical Report Y-87-1.

United States Department of Agriculture, Natural Resources Conservation Service. National forestry manual. http://www.nrcs.usda.gov/wps/portal/nrcs/detail/soils/home/?cid=nrcs142p2_053374

United States Department of Agriculture, Natural Resources Conservation Service. National range and pasture handbook. http://www.nrcs.usda.gov/wps/portal/nrcs/detail/national/landuse/rangepasture/?cid=stelprdb1043084

United States Department of Agriculture, Natural Resources Conservation Service. National soil survey handbook, title 430-VI. http://www.nrcs.usda.gov/wps/portal/nrcs/detail/soils/scientists/?cid=nrcs142p2_054242

United States Department of Agriculture, Natural Resources Conservation Service. 2006. Land resource regions and major land resource areas of the United States, the Caribbean, and the Pacific Basin. U.S. Department of Agriculture Handbook 296. http://www.nrcs.usda.gov/wps/portal/nrcs/detail/national/soils/?cid=nrcs142p2_053624

United States Department of Agriculture, Soil Conservation Service. 1961. Land capability classification. U.S. Department of Agriculture Handbook 210. http://www.nrcs.usda.gov/Internet/FSE_DOCUMENTS/nrcs142p2_052290.pdf

United States Department of Agriculture

Natural Resources Conservation Service

A product of the National Cooperative Soil Survey, a joint effort of the United States Department of Agriculture and other Federal agencies, State agencies including the Agricultural Experiment Stations, and local participants

Custom Soil Resource Report for San Diego County Area, California

Carmel Mountain Ranch - DMA 11

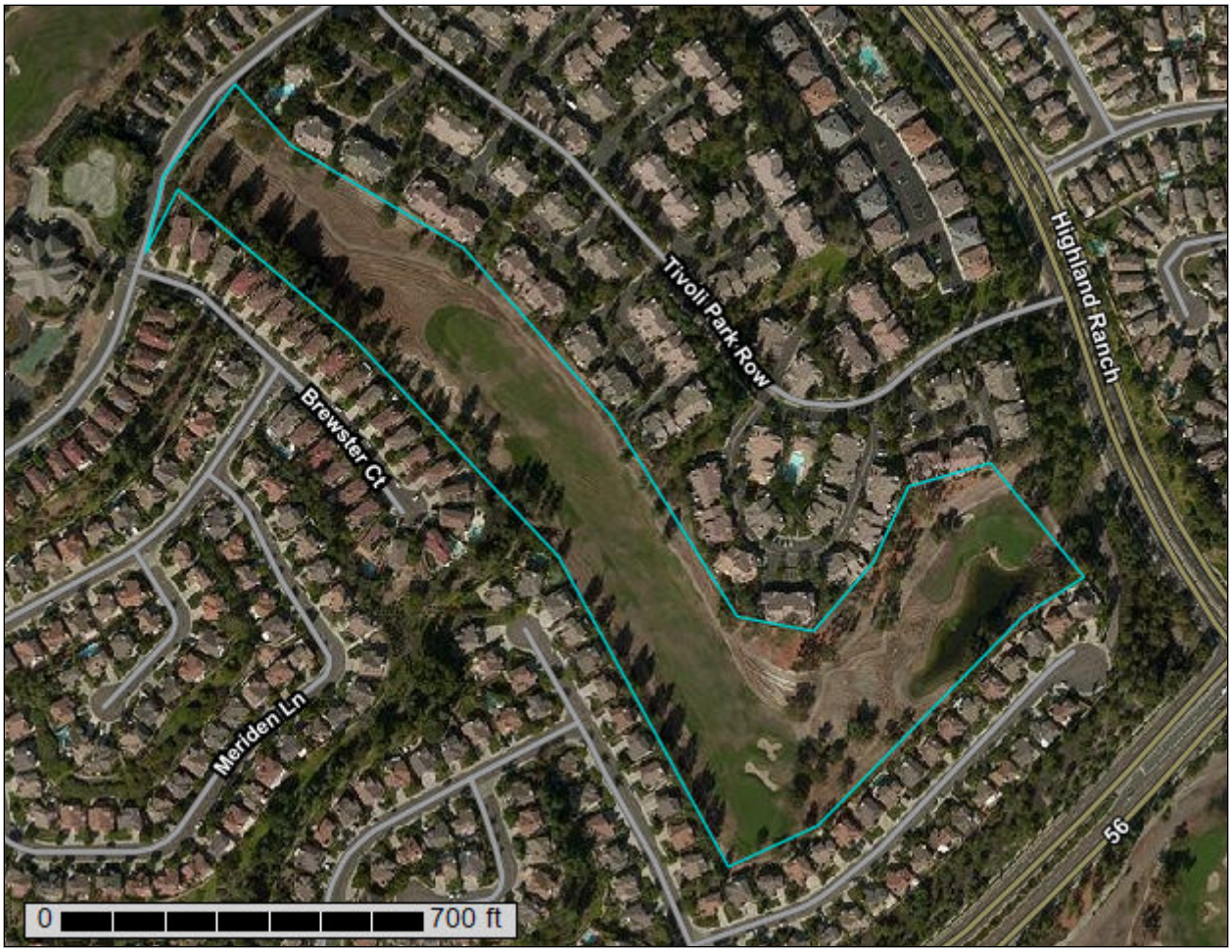

October 4, 2019

Preface

Soil surveys contain information that affects land use planning in survey areas. They highlight soil limitations that affect various land uses and provide information about the properties of the soils in the survey areas. Soil surveys are designed for many different users, including farmers, ranchers, foresters, agronomists, urban planners, community officials, engineers, developers, builders, and home buyers. Also, conservationists, teachers, students, and specialists in recreation, waste disposal, and pollution control can use the surveys to help them understand, protect, or enhance the environment.

Various land use regulations of Federal, State, and local governments may impose special restrictions on land use or land treatment. Soil surveys identify soil properties that are used in making various land use or land treatment decisions. The information is intended to help the land users identify and reduce the effects of soil limitations on various land uses. The landowner or user is responsible for identifying and complying with existing laws and regulations.

Although soil survey information can be used for general farm, local, and wider area planning, onsite investigation is needed to supplement this information in some cases. Examples include soil quality assessments (http://www.nrcs.usda.gov/wps/portal/nrcs/main/soils/health/) and certain conservation and engineering applications. For more detailed information, contact your local USDA Service Center (https://offices.sc.egov.usda.gov/locator/app?agency=nrcs) or your NRCS State Soil Scientist (http://www.nrcs.usda.gov/wps/portal/nrcs/detail/soils/contactus/?cid=nrcs142p2_053951).

Great differences in soil properties can occur within short distances. Some soils are seasonally wet or subject to flooding. Some are too unstable to be used as a foundation for buildings or roads. Clayey or wet soils are poorly suited to use as septic tank absorption fields. A high water table makes a soil poorly suited to basements or underground installations.

The National Cooperative Soil Survey is a joint effort of the United States Department of Agriculture and other Federal agencies, State agencies including the Agricultural Experiment Stations, and local agencies. The Natural Resources Conservation Service (NRCS) has leadership for the Federal part of the National Cooperative Soil Survey.

Information about soils is updated periodically. Updated information is available through the NRCS Web Soil Survey, the site for official soil survey information.

The U.S. Department of Agriculture (USDA) prohibits discrimination in all its programs and activities on the basis of race, color, national origin, age, disability, and where applicable, sex, marital status, familial status, parental status, religion, sexual orientation, genetic information, political beliefs, reprisal, or because all or a part of an individual's income is derived from any public assistance program. (Not all prohibited bases apply to all programs.) Persons with disabilities who require

Contents

How Soil Surveys Are Made

Soil surveys are made to provide information about the soils and miscellaneous areas in a specific area. They include a description of the soils and miscellaneous areas and their location on the landscape and tables that show soil properties and limitations affecting various uses. Soil scientists observed the steepness, length, and shape of the slopes; the general pattern of drainage; the kinds of crops and native plants; and the kinds of bedrock. They observed and described many soil profiles. A soil profile is the sequence of natural layers, or horizons, in a soil. The profile extends from the surface down into the unconsolidated material in which the soil formed or from the surface down to bedrock. The unconsolidated material is devoid of roots and other living organisms and has not been changed by other biological activity.

Currently, soils are mapped according to the boundaries of major land resource areas (MLRAs). MLRAs are geographically associated land resource units that share common characteristics related to physiography, geology, climate, water resources, soils, biological resources, and land uses (USDA, 2006). Soil survey areas typically consist of parts of one or more MLRA.

The soils and miscellaneous areas in a survey area occur in an orderly pattern that is related to the geology, landforms, relief, climate, and natural vegetation of the area. Each kind of soil and miscellaneous area is associated with a particular kind of landform or with a segment of the landform. By observing the soils and miscellaneous areas in the survey area and relating their position to specific segments of the landform, a soil scientist develops a concept, or model, of how they were formed. Thus, during mapping, this model enables the soil scientist to predict with a considerable degree of accuracy the kind of soil or miscellaneous area at a specific location on the landscape.

Commonly, individual soils on the landscape merge into one another as their characteristics gradually change. To construct an accurate soil map, however, soil scientists must determine the boundaries between the soils. They can observe only a limited number of soil profiles. Nevertheless, these observations, supplemented by an understanding of the soil-vegetation-landscape relationship, are sufficient to verify predictions of the kinds of soil in an area and to determine the boundaries.

Soil scientists recorded the characteristics of the soil profiles that they studied. They noted soil color, texture, size and shape of soil aggregates, kind and amount of rock fragments, distribution of plant roots, reaction, and other features that enable them to identify soils. After describing the soils in the survey area and determining their properties, the soil scientists assigned the soils to taxonomic classes (units). Taxonomic classes are concepts. Each taxonomic class has a set of soil characteristics with precisely defined limits. The classes are used as a basis for comparison to classify soils systematically. Soil taxonomy, the system of taxonomic classification used in the United States, is based mainly on the kind and character of soil properties and the arrangement of horizons within the profile. After the soil

scientists classified and named the soils in the survey area, they compared the individual soils with similar soils in the same taxonomic class in other areas so that they could confirm data and assemble additional data based on experience and research.

The objective of soil mapping is not to delineate pure map unit components; the objective is to separate the landscape into landforms or landform segments that have similar use and management requirements. Each map unit is defined by a unique combination of soil components and/or miscellaneous areas in predictable proportions. Some components may be highly contrasting to the other components of the map unit. The presence of minor components in a map unit in no way diminishes the usefulness or accuracy of the data. The delineation of such landforms and landform segments on the map provides sufficient information for the development of resource plans. If intensive use of small areas is planned, onsite investigation is needed to define and locate the soils and miscellaneous areas.

Soil scientists make many field observations in the process of producing a soil map. The frequency of observation is dependent upon several factors, including scale of mapping, intensity of mapping, design of map units, complexity of the landscape, and experience of the soil scientist. Observations are made to test and refine the soil-landscape model and predictions and to verify the classification of the soils at specific locations. Once the soil-landscape model is refined, a significantly smaller number of measurements of individual soil properties are made and recorded. These measurements may include field measurements, such as those for color, depth to bedrock, and texture, and laboratory measurements, such as those for content of sand, silt, clay, salt, and other components. Properties of each soil typically vary from one point to another across the landscape.

Observations for map unit components are aggregated to develop ranges of characteristics for the components. The aggregated values are presented. Direct measurements do not exist for every property presented for every map unit component. Values for some properties are estimated from combinations of other properties.

While a soil survey is in progress, samples of some of the soils in the area generally are collected for laboratory analyses and for engineering tests. Soil scientists interpret the data from these analyses and tests as well as the field-observed characteristics and the soil properties to determine the expected behavior of the soils under different uses. Interpretations for all of the soils are field tested through observation of the soils in different uses and under different levels of management. Some interpretations are modified to fit local conditions, and some new interpretations are developed to meet local needs. Data are assembled from other sources, such as research information, production records, and field experience of specialists. For example, data on crop yields under defined levels of management are assembled from farm records and from field or plot experiments on the same kinds of soil.

Predictions about soil behavior are based not only on soil properties but also on such variables as climate and biological activity. Soil conditions are predictable over long periods of time, but they are not predictable from year to year. For example, soil scientists can predict with a fairly high degree of accuracy that a given soil will have a high water table within certain depths in most years, but they cannot predict that a high water table will always be at a specific level in the soil on a specific date.

After soil scientists located and identified the significant natural bodies of soil in the survey area, they drew the boundaries of these bodies on aerial photographs and

identified each as a specific map unit. Aerial photographs show trees, buildings, fields, roads, and rivers, all of which help in locating boundaries accurately.

Soil Map

The soil map section includes the soil map for the defined area of interest, a list of soil map units on the map and extent of each map unit, and cartographic symbols displayed on the map. Also presented are various metadata about data used to produce the map, and a description of each soil map unit.

Custom Soil Resource Report
Soil Map

Map Scale: 1:3,890 if printed on A landscape (11" x 8.5") sheet.

N

Meters: 0 50 100 200 300

Feet: 0 150 300 600 900

Map projection: Web Mercator Corner coordinates: WGS84 Edge tics: UTM Zone 11N WGS84

MAP LEGEND

Area of Interest (AOI)

Area of Interest (AOI)

Soils

Soil Map Unit Polygons

Soil Map Unit Lines

Soil Map Unit Points

Special Point Features

Blowout

Borrow Pit

Clay Spot

Closed Depression

Gravel Pit

Gravelly Spot

Landfill

Lava Flow

Marsh or swamp

Mine or Quarry

Miscellaneous Water

Perennial Water

Rock Outcrop

Saline Spot

Sandy Spot

Severely Eroded Spot

Sinkhole

Slide or Slip

Sodic Spot

Spoil Area

Stony Spot

Very Stony Spot

Wet Spot

Other

Special Line Features

Water Features

Streams and Canals

Transportation

Rails

Interstate Highways

US Routes

Major Roads

Local Roads

Background

Aerial Photography

MAP INFORMATION

The soil surveys that comprise your AOI were mapped at 1:24,000.

Warning: Soil Map may not be valid at this scale.

Enlargement of maps beyond the scale of mapping can cause misunderstanding of the detail of mapping and accuracy of soil line placement. The maps do not show the small areas of contrasting soils that could have been shown at a more detailed scale.

Please rely on the bar scale on each map sheet for map measurements.

Source of Map: Natural Resources Conservation Service
Web Soil Survey URL:
Coordinate System: Web Mercator (EPSG:3857)

Maps from the Web Soil Survey are based on the Web Mercator projection, which preserves direction and shape but distorts distance and area. A projection that preserves area, such as the Albers equal-area conic projection, should be used if more accurate calculations of distance or area are required.

This product is generated from the USDA-NRCS certified data as of the version date(s) listed below.

Soil Survey Area: San Diego County Area, California
Survey Area Data: Version 14, Sep 16, 2019

Soil map units are labeled (as space allows) for map scales 1:50,000 or larger.

Date(s) aerial images were photographed: Nov 3, 2014—Nov 22, 2014

The orthophoto or other base map on which the soil lines were compiled and digitized probably differs from the background imagery displayed on these maps. As a result, some minor shifting of map unit boundaries may be evident.

Map Unit Legend

Map Unit Symbol	Map Unit Name	Acres in AOI	Percent of AOI
DaD	Diablo clay, 9 to 15 percent slopes, warm MAAT	4.2	28.9%
DaE2	Diablo clay, 15 to 30 percent slopes, eroded, warm MAAT	0.6	4.5%
DoE	Diablo-Olivenhain complex, 9 to 30 percent slopes	1.3	8.8%
LsE	Linne clay loam, 9 to 30 percent slopes	8.4	57.9%
Totals for Area of Interest		**14.5**	**100.0%**

Map Unit Descriptions

The map units delineated on the detailed soil maps in a soil survey represent the soils or miscellaneous areas in the survey area. The map unit descriptions, along with the maps, can be used to determine the composition and properties of a unit.

A map unit delineation on a soil map represents an area dominated by one or more major kinds of soil or miscellaneous areas. A map unit is identified and named according to the taxonomic classification of the dominant soils. Within a taxonomic class there are precisely defined limits for the properties of the soils. On the landscape, however, the soils are natural phenomena, and they have the characteristic variability of all natural phenomena. Thus, the range of some observed properties may extend beyond the limits defined for a taxonomic class. Areas of soils of a single taxonomic class rarely, if ever, can be mapped without including areas of other taxonomic classes. Consequently, every map unit is made up of the soils or miscellaneous areas for which it is named and some minor components that belong to taxonomic classes other than those of the major soils.

Most minor soils have properties similar to those of the dominant soil or soils in the map unit, and thus they do not affect use and management. These are called noncontrasting, or similar, components. They may or may not be mentioned in a particular map unit description. Other minor components, however, have properties and behavioral characteristics divergent enough to affect use or to require different management. These are called contrasting, or dissimilar, components. They generally are in small areas and could not be mapped separately because of the scale used. Some small areas of strongly contrasting soils or miscellaneous areas are identified by a special symbol on the maps. If included in the database for a given area, the contrasting minor components are identified in the map unit descriptions along with some characteristics of each. A few areas of minor components may not have been observed, and consequently they are not mentioned in the descriptions, especially where the pattern was so complex that it was impractical to make enough observations to identify all the soils and miscellaneous areas on the landscape.

The presence of minor components in a map unit in no way diminishes the usefulness or accuracy of the data. The objective of mapping is not to delineate pure taxonomic classes but rather to separate the landscape into landforms or landform segments that have similar use and management requirements. The delineation of such segments on the map provides sufficient information for the development of resource plans. If intensive use of small areas is planned, however, onsite investigation is needed to define and locate the soils and miscellaneous areas.

An identifying symbol precedes the map unit name in the map unit descriptions. Each description includes general facts about the unit and gives important soil properties and qualities.

Soils that have profiles that are almost alike make up a *soil series*. Except for differences in texture of the surface layer, all the soils of a series have major horizons that are similar in composition, thickness, and arrangement.

Soils of one series can differ in texture of the surface layer, slope, stoniness, salinity, degree of erosion, and other characteristics that affect their use. On the basis of such differences, a soil series is divided into *soil phases*. Most of the areas shown on the detailed soil maps are phases of soil series. The name of a soil phase commonly indicates a feature that affects use or management. For example, Alpha silt loam, 0 to 2 percent slopes, is a phase of the Alpha series.

Some map units are made up of two or more major soils or miscellaneous areas. These map units are complexes, associations, or undifferentiated groups.

A *complex* consists of two or more soils or miscellaneous areas in such an intricate pattern or in such small areas that they cannot be shown separately on the maps. The pattern and proportion of the soils or miscellaneous areas are somewhat similar in all areas. Alpha-Beta complex, 0 to 6 percent slopes, is an example.

An *association* is made up of two or more geographically associated soils or miscellaneous areas that are shown as one unit on the maps. Because of present or anticipated uses of the map units in the survey area, it was not considered practical or necessary to map the soils or miscellaneous areas separately. The pattern and relative proportion of the soils or miscellaneous areas are somewhat similar. Alpha-Beta association, 0 to 2 percent slopes, is an example.

An *undifferentiated group* is made up of two or more soils or miscellaneous areas that could be mapped individually but are mapped as one unit because similar interpretations can be made for use and management. The pattern and proportion of the soils or miscellaneous areas in a mapped area are not uniform. An area can be made up of only one of the major soils or miscellaneous areas, or it can be made up of all of them. Alpha and Beta soils, 0 to 2 percent slopes, is an example.

Some surveys include *miscellaneous areas*. Such areas have little or no soil material and support little or no vegetation. Rock outcrop is an example.

San Diego County Area, California

DaD—Diablo clay, 9 to 15 percent slopes, warm MAAT

Map Unit Setting

National map unit symbol: 2w63f
Elevation: 110 to 910 feet
Mean annual precipitation: 11 to 21 inches
Mean annual air temperature: 58 to 64 degrees F
Frost-free period: 290 to 365 days
Farmland classification: Farmland of statewide importance

Map Unit Composition

Diablo and similar soils: 85 percent
Minor components: 15 percent
Estimates are based on observations, descriptions, and transects of the mapunit.

Description of Diablo

Setting

Landform: Hillslopes
Landform position (two-dimensional): Backslope
Landform position (three-dimensional): Side slope
Down-slope shape: Convex
Across-slope shape: Convex
Parent material: Residuum weathered from calcareous shale

Typical profile

A - 0 to 15 inches: clay
Bkss1 - 15 to 28 inches: clay
Bkss2 - 28 to 40 inches: clay loam
Cr - 40 to 79 inches: bedrock

Properties and qualities

Slope: 9 to 15 percent
Depth to restrictive feature: 39 to 79 inches to paralithic bedrock
Natural drainage class: Well drained
Capacity of the most limiting layer to transmit water (Ksat): Moderately low to moderately high (0.06 to 0.20 in/hr)
Depth to water table: More than 80 inches
Frequency of flooding: None
Frequency of ponding: None
Calcium carbonate, maximum in profile: 5 percent
Available water storage in profile: Moderate (about 6.8 inches)

Interpretive groups

Land capability classification (irrigated): 4e
Land capability classification (nonirrigated): 4e
Hydrologic Soil Group: C
Ecological site: CLAYEY (1975) (R019XD001CA)
Hydric soil rating: No

Minor Components

Altamont

Percent of map unit: 10 percent

Landform: Hillslopes
Landform position (two-dimensional): Backslope
Landform position (three-dimensional): Side slope
Down-slope shape: Convex
Across-slope shape: Convex
Hydric soil rating: No

Linne

Percent of map unit: 3 percent
Landform: Hillslopes
Landform position (two-dimensional): Backslope
Landform position (three-dimensional): Side slope
Down-slope shape: Convex
Across-slope shape: Convex
Hydric soil rating: No

Olephant

Percent of map unit: 2 percent
Landform: Terraces
Landform position (three-dimensional): Tread
Down-slope shape: Concave
Across-slope shape: Concave
Hydric soil rating: No

DaE2—Diablo clay, 15 to 30 percent slopes, eroded, warm MAAT

Map Unit Setting

National map unit symbol: 2w60s
Elevation: 890 to 2,260 feet
Mean annual precipitation: 11 to 27 inches
Mean annual air temperature: 60 to 65 degrees F
Frost-free period: 270 to 365 days
Farmland classification: Not prime farmland

Map Unit Composition

Diablo and similar soils: 85 percent
Minor components: 15 percent
Estimates are based on observations, descriptions, and transects of the mapunit.

Description of Diablo

Setting

Landform: Hillslopes
Landform position (two-dimensional): Backslope
Landform position (three-dimensional): Side slope
Down-slope shape: Convex
Across-slope shape: Convex
Parent material: Residuum weathered from calcareous shale

Typical profile

A - 0 to 15 inches: clay

Bkss1 - 15 to 28 inches: clay
Bkss2 - 28 to 40 inches: clay loam
Cr - 40 to 79 inches: bedrock

Properties and qualities

Slope: 15 to 30 percent
Depth to restrictive feature: 39 to 79 inches to paralithic bedrock
Natural drainage class: Well drained
Capacity of the most limiting layer to transmit water (Ksat): Moderately low to moderately high (0.06 to 0.20 in/hr)
Depth to water table: More than 80 inches
Frequency of flooding: None
Frequency of ponding: None
Calcium carbonate, maximum in profile: 5 percent
Available water storage in profile: Moderate (about 6.8 inches)

Interpretive groups

Land capability classification (irrigated): 4e
Land capability classification (nonirrigated): 4e
Hydrologic Soil Group: C
Ecological site: CLAYEY (1975) (R019XD001CA)
Hydric soil rating: No

Minor Components

Altamont

Percent of map unit: 10 percent
Landform: Hillslopes
Landform position (two-dimensional): Backslope
Landform position (three-dimensional): Side slope
Down-slope shape: Convex
Across-slope shape: Convex
Hydric soil rating: No

Linne

Percent of map unit: 3 percent
Landform: Hillslopes
Landform position (two-dimensional): Backslope
Landform position (three-dimensional): Side slope
Down-slope shape: Convex
Across-slope shape: Convex
Hydric soil rating: No

Olephant

Percent of map unit: 2 percent
Landform: Terraces
Landform position (three-dimensional): Tread
Down-slope shape: Concave
Across-slope shape: Concave
Hydric soil rating: No

DoE—Diablo-Olivenhain complex, 9 to 30 percent slopes

Map Unit Setting

National map unit symbol: hbbh
Elevation: 100 to 3,250 feet
Mean annual precipitation: 9 to 25 inches
Mean annual air temperature: 59 to 63 degrees F
Frost-free period: 200 to 330 days
Farmland classification: Not prime farmland

Map Unit Composition

Diablo and similar soils: 50 percent
Olivenhain and similar soils: 45 percent
Minor components: 5 percent
Estimates are based on observations, descriptions, and transects of the mapunit.

Description of Diablo

Setting

Landform: Hillslopes
Landform position (two-dimensional): Backslope
Landform position (three-dimensional): Side slope
Down-slope shape: Convex
Across-slope shape: Convex
Parent material: Calcareous sandstone and shale

Typical profile

H1 - 0 to 15 inches: clay
H2 - 15 to 32 inches: clay, silty clay loam
H2 - 15 to 32 inches: weathered bedrock
H3 - 32 to 36 inches:

Properties and qualities

Slope: 9 to 30 percent
Depth to restrictive feature: 24 to 40 inches to paralithic bedrock
Natural drainage class: Well drained
Runoff class: Very high
Capacity of the most limiting layer to transmit water (Ksat): Moderately low to moderately high (0.06 to 0.20 in/hr)
Depth to water table: More than 80 inches
Frequency of flooding: None
Frequency of ponding: None
Calcium carbonate, maximum in profile: 10 percent
Available water storage in profile: Moderate (about 7.7 inches)

Interpretive groups

Land capability classification (irrigated): None specified
Land capability classification (nonirrigated): 4e
Hydrologic Soil Group: D
Ecological site: CLAYEY (1975) (R019XD001CA)

Hydric soil rating: No

Description of Olivenhain

Setting

Landform: Hillslopes
Landform position (two-dimensional): Backslope
Landform position (three-dimensional): Side slope
Down-slope shape: Convex
Across-slope shape: Convex
Parent material: Old alluvium

Typical profile

H1 - 0 to 10 inches: cobbly loam
H2 - 10 to 42 inches: very cobbly clay, very cobbly clay loam
H2 - 10 to 42 inches: cobbly loam, cobbly clay loam
H3 - 42 to 60 inches:
H3 - 42 to 60 inches:

Properties and qualities

Slope: 9 to 30 percent
Depth to restrictive feature: About 10 inches to abrupt textural change
Natural drainage class: Well drained
Runoff class: Very high
Capacity of the most limiting layer to transmit water (Ksat): Very low to moderately low (0.00 to 0.06 in/hr)
Depth to water table: More than 80 inches
Frequency of flooding: None
Frequency of ponding: None
Available water storage in profile: Very low (about 1.3 inches)

Interpretive groups

Land capability classification (irrigated): None specified
Land capability classification (nonirrigated): 4e
Hydrologic Soil Group: D
Ecological site: CLAYPAN (1975) (R019XD061CA)
Hydric soil rating: No

Minor Components

Linne

Percent of map unit: 5 percent
Hydric soil rating: No

LsE—Linne clay loam, 9 to 30 percent slopes

Map Unit Setting

National map unit symbol: hbdt
Elevation: 100 to 2,000 feet
Mean annual precipitation: 12 to 20 inches

Mean annual air temperature: 57 to 63 degrees F
Frost-free period: 200 to 330 days
Farmland classification: Not prime farmland

Map Unit Composition

Linne and similar soils: 85 percent
Minor components: 15 percent
Estimates are based on observations, descriptions, and transects of the mapunit.

Description of Linne

Setting

Landform: Hillslopes
Landform position (two-dimensional): Backslope
Landform position (three-dimensional): Side slope
Down-slope shape: Convex
Across-slope shape: Convex
Parent material: Residuum weathered from calcareous sandstone and shale

Typical profile

H1 - 0 to 15 inches: clay loam
H2 - 15 to 37 inches: clay loam, loam
H2 - 15 to 37 inches: weathered bedrock
H3 - 37 to 41 inches:

Properties and qualities

Slope: 9 to 30 percent
Depth to restrictive feature: 20 to 40 inches to paralithic bedrock
Natural drainage class: Well drained
Runoff class: Very high
Capacity of the most limiting layer to transmit water (Ksat): Moderately high (0.20 to 0.57 in/hr)
Depth to water table: More than 80 inches
Frequency of flooding: None
Frequency of ponding: None
Calcium carbonate, maximum in profile: 10 percent
Salinity, maximum in profile: Nonsaline to very slightly saline (0.0 to 2.0 mmhos/cm)
Available water storage in profile: High (about 10.2 inches)

Interpretive groups

Land capability classification (irrigated): 4e
Land capability classification (nonirrigated): 4e
Hydrologic Soil Group: C
Ecological site: CLAYEY (1975) (R019XD001CA)
Hydric soil rating: No

Minor Components

Diablo

Percent of map unit: 5 percent
Hydric soil rating: No

Huerhuero

Percent of map unit: 5 percent
Hydric soil rating: No

Altamont

Percent of map unit: 5 percent
Hydric soil rating: No

References

American Association of State Highway and Transportation Officials (AASHTO). 2004. Standard specifications for transportation materials and methods of sampling and testing. 24th edition.

American Society for Testing and Materials (ASTM). 2005. Standard classification of soils for engineering purposes. ASTM Standard D2487-00.

Cowardin, L.M., V. Carter, F.C. Golet, and E.T. LaRoe. 1979. Classification of wetlands and deep-water habitats of the United States. U.S. Fish and Wildlife Service FWS/OBS-79/31.

Federal Register. July 13, 1994. Changes in hydric soils of the United States.

Federal Register. September 18, 2002. Hydric soils of the United States.

Hurt, G.W., and L.M. Vasilas, editors. Version 6.0, 2006. Field indicators of hydric soils in the United States.

National Research Council. 1995. Wetlands: Characteristics and boundaries.

Soil Survey Division Staff. 1993. Soil survey manual. Soil Conservation Service. U.S. Department of Agriculture Handbook 18. http://www.nrcs.usda.gov/wps/portal/nrcs/detail/national/soils/?cid=nrcs142p2_054262

Soil Survey Staff. 1999. Soil taxonomy: A basic system of soil classification for making and interpreting soil surveys. 2nd edition. Natural Resources Conservation Service, U.S. Department of Agriculture Handbook 436. http://www.nrcs.usda.gov/wps/portal/nrcs/detail/national/soils/?cid=nrcs142p2_053577

Soil Survey Staff. 2010. Keys to soil taxonomy. 11th edition. U.S. Department of Agriculture, Natural Resources Conservation Service. http://www.nrcs.usda.gov/wps/portal/nrcs/detail/national/soils/?cid=nrcs142p2_053580

Tiner, R.W., Jr. 1985. Wetlands of Delaware. U.S. Fish and Wildlife Service and Delaware Department of Natural Resources and Environmental Control, Wetlands Section.

United States Army Corps of Engineers, Environmental Laboratory. 1987. Corps of Engineers wetlands delineation manual. Waterways Experiment Station Technical Report Y-87-1.

United States Department of Agriculture, Natural Resources Conservation Service. National forestry manual. http://www.nrcs.usda.gov/wps/portal/nrcs/detail/soils/home/?cid=nrcs142p2_053374

United States Department of Agriculture, Natural Resources Conservation Service. National range and pasture handbook. http://www.nrcs.usda.gov/wps/portal/nrcs/detail/national/landuse/rangepasture/?cid=stelprdb1043084

United States Department of Agriculture, Natural Resources Conservation Service. National soil survey handbook, title 430-VI. http://www.nrcs.usda.gov/wps/portal/nrcs/detail/soils/scientists/?cid=nrcs142p2_054242

United States Department of Agriculture, Natural Resources Conservation Service. 2006. Land resource regions and major land resource areas of the United States, the Caribbean, and the Pacific Basin. U.S. Department of Agriculture Handbook 296. http://www.nrcs.usda.gov/wps/portal/nrcs/detail/national/soils/?cid=nrcs142p2_053624

United States Department of Agriculture, Soil Conservation Service. 1961. Land capability classification. U.S. Department of Agriculture Handbook 210. http://www.nrcs.usda.gov/Internet/FSE_DOCUMENTS/nrcs142p2_052290.pdf

United States Department of Agriculture

Natural Resources Conservation Service

A product of the National Cooperative Soil Survey, a joint effort of the United States Department of Agriculture and other Federal agencies, State agencies including the Agricultural Experiment Stations, and local participants

Custom Soil Resource Report for San Diego County Area, California

Carmel Mountain Ranch - DMA 13

October 4, 2019

Preface

Soil surveys contain information that affects land use planning in survey areas. They highlight soil limitations that affect various land uses and provide information about the properties of the soils in the survey areas. Soil surveys are designed for many different users, including farmers, ranchers, foresters, agronomists, urban planners, community officials, engineers, developers, builders, and home buyers. Also, conservationists, teachers, students, and specialists in recreation, waste disposal, and pollution control can use the surveys to help them understand, protect, or enhance the environment.

Various land use regulations of Federal, State, and local governments may impose special restrictions on land use or land treatment. Soil surveys identify soil properties that are used in making various land use or land treatment decisions. The information is intended to help the land users identify and reduce the effects of soil limitations on various land uses. The landowner or user is responsible for identifying and complying with existing laws and regulations.

Although soil survey information can be used for general farm, local, and wider area planning, onsite investigation is needed to supplement this information in some cases. Examples include soil quality assessments (http://www.nrcs.usda.gov/wps/portal/nrcs/main/soils/health/) and certain conservation and engineering applications. For more detailed information, contact your local USDA Service Center (https://offices.sc.egov.usda.gov/locator/app?agency=nrcs) or your NRCS State Soil Scientist (http://www.nrcs.usda.gov/wps/portal/nrcs/detail/soils/contactus/?cid=nrcs142p2_053951).

Great differences in soil properties can occur within short distances. Some soils are seasonally wet or subject to flooding. Some are too unstable to be used as a foundation for buildings or roads. Clayey or wet soils are poorly suited to use as septic tank absorption fields. A high water table makes a soil poorly suited to basements or underground installations.

The National Cooperative Soil Survey is a joint effort of the United States Department of Agriculture and other Federal agencies, State agencies including the Agricultural Experiment Stations, and local agencies. The Natural Resources Conservation Service (NRCS) has leadership for the Federal part of the National Cooperative Soil Survey.

Information about soils is updated periodically. Updated information is available through the NRCS Web Soil Survey, the site for official soil survey information.

The U.S. Department of Agriculture (USDA) prohibits discrimination in all its programs and activities on the basis of race, color, national origin, age, disability, and where applicable, sex, marital status, familial status, parental status, religion, sexual orientation, genetic information, political beliefs, reprisal, or because all or a part of an individual's income is derived from any public assistance program. (Not all prohibited bases apply to all programs.) Persons with disabilities who require

Contents

How Soil Surveys Are Made

Soil surveys are made to provide information about the soils and miscellaneous areas in a specific area. They include a description of the soils and miscellaneous areas and their location on the landscape and tables that show soil properties and limitations affecting various uses. Soil scientists observed the steepness, length, and shape of the slopes; the general pattern of drainage; the kinds of crops and native plants; and the kinds of bedrock. They observed and described many soil profiles. A soil profile is the sequence of natural layers, or horizons, in a soil. The profile extends from the surface down into the unconsolidated material in which the soil formed or from the surface down to bedrock. The unconsolidated material is devoid of roots and other living organisms and has not been changed by other biological activity.

Currently, soils are mapped according to the boundaries of major land resource areas (MLRAs). MLRAs are geographically associated land resource units that share common characteristics related to physiography, geology, climate, water resources, soils, biological resources, and land uses (USDA, 2006). Soil survey areas typically consist of parts of one or more MLRA.

The soils and miscellaneous areas in a survey area occur in an orderly pattern that is related to the geology, landforms, relief, climate, and natural vegetation of the area. Each kind of soil and miscellaneous area is associated with a particular kind of landform or with a segment of the landform. By observing the soils and miscellaneous areas in the survey area and relating their position to specific segments of the landform, a soil scientist develops a concept, or model, of how they were formed. Thus, during mapping, this model enables the soil scientist to predict with a considerable degree of accuracy the kind of soil or miscellaneous area at a specific location on the landscape.

Commonly, individual soils on the landscape merge into one another as their characteristics gradually change. To construct an accurate soil map, however, soil scientists must determine the boundaries between the soils. They can observe only a limited number of soil profiles. Nevertheless, these observations, supplemented by an understanding of the soil-vegetation-landscape relationship, are sufficient to verify predictions of the kinds of soil in an area and to determine the boundaries.

Soil scientists recorded the characteristics of the soil profiles that they studied. They noted soil color, texture, size and shape of soil aggregates, kind and amount of rock fragments, distribution of plant roots, reaction, and other features that enable them to identify soils. After describing the soils in the survey area and determining their properties, the soil scientists assigned the soils to taxonomic classes (units). Taxonomic classes are concepts. Each taxonomic class has a set of soil characteristics with precisely defined limits. The classes are used as a basis for comparison to classify soils systematically. Soil taxonomy, the system of taxonomic classification used in the United States, is based mainly on the kind and character of soil properties and the arrangement of horizons within the profile. After the soil

scientists classified and named the soils in the survey area, they compared the individual soils with similar soils in the same taxonomic class in other areas so that they could confirm data and assemble additional data based on experience and research.

The objective of soil mapping is not to delineate pure map unit components; the objective is to separate the landscape into landforms or landform segments that have similar use and management requirements. Each map unit is defined by a unique combination of soil components and/or miscellaneous areas in predictable proportions. Some components may be highly contrasting to the other components of the map unit. The presence of minor components in a map unit in no way diminishes the usefulness or accuracy of the data. The delineation of such landforms and landform segments on the map provides sufficient information for the development of resource plans. If intensive use of small areas is planned, onsite investigation is needed to define and locate the soils and miscellaneous areas.

Soil scientists make many field observations in the process of producing a soil map. The frequency of observation is dependent upon several factors, including scale of mapping, intensity of mapping, design of map units, complexity of the landscape, and experience of the soil scientist. Observations are made to test and refine the soil-landscape model and predictions and to verify the classification of the soils at specific locations. Once the soil-landscape model is refined, a significantly smaller number of measurements of individual soil properties are made and recorded. These measurements may include field measurements, such as those for color, depth to bedrock, and texture, and laboratory measurements, such as those for content of sand, silt, clay, salt, and other components. Properties of each soil typically vary from one point to another across the landscape.

Observations for map unit components are aggregated to develop ranges of characteristics for the components. The aggregated values are presented. Direct measurements do not exist for every property presented for every map unit component. Values for some properties are estimated from combinations of other properties.

While a soil survey is in progress, samples of some of the soils in the area generally are collected for laboratory analyses and for engineering tests. Soil scientists interpret the data from these analyses and tests as well as the field-observed characteristics and the soil properties to determine the expected behavior of the soils under different uses. Interpretations for all of the soils are field tested through observation of the soils in different uses and under different levels of management. Some interpretations are modified to fit local conditions, and some new interpretations are developed to meet local needs. Data are assembled from other sources, such as research information, production records, and field experience of specialists. For example, data on crop yields under defined levels of management are assembled from farm records and from field or plot experiments on the same kinds of soil.

Predictions about soil behavior are based not only on soil properties but also on such variables as climate and biological activity. Soil conditions are predictable over long periods of time, but they are not predictable from year to year. For example, soil scientists can predict with a fairly high degree of accuracy that a given soil will have a high water table within certain depths in most years, but they cannot predict that a high water table will always be at a specific level in the soil on a specific date.

After soil scientists located and identified the significant natural bodies of soil in the survey area, they drew the boundaries of these bodies on aerial photographs and

identified each as a specific map unit. Aerial photographs show trees, buildings, fields, roads, and rivers, all of which help in locating boundaries accurately.

Soil Map

The soil map section includes the soil map for the defined area of interest, a list of soil map units on the map and extent of each map unit, and cartographic symbols displayed on the map. Also presented are various metadata about data used to produce the map, and a description of each soil map unit.

Custom Soil Resource Report
Soil Map

Map Scale: 1:916 if printed on A landscape (11" x 8.5") sheet.

N

Meters: 0 10 20 40 60

Feet: 0 40 80 160 240

Map projection: Web Mercator Corner coordinates: WGS84 Edge tics: UTM Zone 11N WGS84

MAP LEGEND

Area of Interest (AOI)

Area of Interest (AOI)

Soils

Soil Map Unit Polygons

Soil Map Unit Lines

Soil Map Unit Points

Special Point Features

Blowout

Borrow Pit

Clay Spot

Closed Depression

Gravel Pit

Gravelly Spot

Landfill

Lava Flow

Marsh or swamp

Mine or Quarry

Miscellaneous Water

Perennial Water

Rock Outcrop

Saline Spot

Sandy Spot

Severely Eroded Spot

Sinkhole

Slide or Slip

Sodic Spot

Spoil Area

Stony Spot

Very Stony Spot

Wet Spot

Other

Special Line Features

Water Features

Streams and Canals

Transportation

Rails

Interstate Highways

US Routes

Major Roads

Local Roads

Background

Aerial Photography

MAP INFORMATION

The soil surveys that comprise your AOI were mapped at 1:24,000.

Warning: Soil Map may not be valid at this scale.

Enlargement of maps beyond the scale of mapping can cause misunderstanding of the detail of mapping and accuracy of soil line placement. The maps do not show the small areas of contrasting soils that could have been shown at a more detailed scale.

Please rely on the bar scale on each map sheet for map measurements.

Source of Map: Natural Resources Conservation Service
Web Soil Survey URL:
Coordinate System: Web Mercator (EPSG:3857)

Maps from the Web Soil Survey are based on the Web Mercator projection, which preserves direction and shape but distorts distance and area. A projection that preserves area, such as the Albers equal-area conic projection, should be used if more accurate calculations of distance or area are required.

This product is generated from the USDA-NRCS certified data as of the version date(s) listed below.

Soil Survey Area: San Diego County Area, California
Survey Area Data: Version 14, Sep 16, 2019

Soil map units are labeled (as space allows) for map scales 1:50,000 or larger.

Date(s) aerial images were photographed: Nov 3, 2014—Nov 22, 2014

The orthophoto or other base map on which the soil lines were compiled and digitized probably differs from the background imagery displayed on these maps. As a result, some minor shifting of map unit boundaries may be evident.

Map Unit Legend

Map Unit Symbol	Map Unit Name	Acres in AOI	Percent of AOI
CIE2	Cieneba coarse sandy loam, 15 to 30 percent slopes, eroded	1.8	99.3%
RaC	Ramona sandy loam, 5 to 9 percent slopes	0.0	0.7%
Totals for Area of Interest		**1.8**	**100.0%**

Map Unit Descriptions

The map units delineated on the detailed soil maps in a soil survey represent the soils or miscellaneous areas in the survey area. The map unit descriptions, along with the maps, can be used to determine the composition and properties of a unit.

A map unit delineation on a soil map represents an area dominated by one or more major kinds of soil or miscellaneous areas. A map unit is identified and named according to the taxonomic classification of the dominant soils. Within a taxonomic class there are precisely defined limits for the properties of the soils. On the landscape, however, the soils are natural phenomena, and they have the characteristic variability of all natural phenomena. Thus, the range of some observed properties may extend beyond the limits defined for a taxonomic class. Areas of soils of a single taxonomic class rarely, if ever, can be mapped without including areas of other taxonomic classes. Consequently, every map unit is made up of the soils or miscellaneous areas for which it is named and some minor components that belong to taxonomic classes other than those of the major soils.

Most minor soils have properties similar to those of the dominant soil or soils in the map unit, and thus they do not affect use and management. These are called noncontrasting, or similar, components. They may or may not be mentioned in a particular map unit description. Other minor components, however, have properties and behavioral characteristics divergent enough to affect use or to require different management. These are called contrasting, or dissimilar, components. They generally are in small areas and could not be mapped separately because of the scale used. Some small areas of strongly contrasting soils or miscellaneous areas are identified by a special symbol on the maps. If included in the database for a given area, the contrasting minor components are identified in the map unit descriptions along with some characteristics of each. A few areas of minor components may not have been observed, and consequently they are not mentioned in the descriptions, especially where the pattern was so complex that it was impractical to make enough observations to identify all the soils and miscellaneous areas on the landscape.

The presence of minor components in a map unit in no way diminishes the usefulness or accuracy of the data. The objective of mapping is not to delineate pure taxonomic classes but rather to separate the landscape into landforms or landform segments that have similar use and management requirements. The delineation of such segments on the map provides sufficient information for the development of resource plans. If intensive use of small areas is planned, however,

onsite investigation is needed to define and locate the soils and miscellaneous areas.

An identifying symbol precedes the map unit name in the map unit descriptions. Each description includes general facts about the unit and gives important soil properties and qualities.

Soils that have profiles that are almost alike make up a *soil series*. Except for differences in texture of the surface layer, all the soils of a series have major horizons that are similar in composition, thickness, and arrangement.

Soils of one series can differ in texture of the surface layer, slope, stoniness, salinity, degree of erosion, and other characteristics that affect their use. On the basis of such differences, a soil series is divided into *soil phases*. Most of the areas shown on the detailed soil maps are phases of soil series. The name of a soil phase commonly indicates a feature that affects use or management. For example, Alpha silt loam, 0 to 2 percent slopes, is a phase of the Alpha series.

Some map units are made up of two or more major soils or miscellaneous areas. These map units are complexes, associations, or undifferentiated groups.

A *complex* consists of two or more soils or miscellaneous areas in such an intricate pattern or in such small areas that they cannot be shown separately on the maps. The pattern and proportion of the soils or miscellaneous areas are somewhat similar in all areas. Alpha-Beta complex, 0 to 6 percent slopes, is an example.

An *association* is made up of two or more geographically associated soils or miscellaneous areas that are shown as one unit on the maps. Because of present or anticipated uses of the map units in the survey area, it was not considered practical or necessary to map the soils or miscellaneous areas separately. The pattern and relative proportion of the soils or miscellaneous areas are somewhat similar. Alpha-Beta association, 0 to 2 percent slopes, is an example.

An *undifferentiated group* is made up of two or more soils or miscellaneous areas that could be mapped individually but are mapped as one unit because similar interpretations can be made for use and management. The pattern and proportion of the soils or miscellaneous areas in a mapped area are not uniform. An area can be made up of only one of the major soils or miscellaneous areas, or it can be made up of all of them. Alpha and Beta soils, 0 to 2 percent slopes, is an example.

Some surveys include *miscellaneous areas*. Such areas have little or no soil material and support little or no vegetation. Rock outcrop is an example.

San Diego County Area, California

CIE2—Cieneba coarse sandy loam, 15 to 30 percent slopes, eroded

Map Unit Setting

National map unit symbol: hb9r
Elevation: 500 to 4,000 feet
Mean annual precipitation: 12 to 35 inches
Mean annual air temperature: 57 to 64 degrees F
Frost-free period: 200 to 300 days
Farmland classification: Not prime farmland

Map Unit Composition

Cieneba and similar soils: 85 percent
Minor components: 10 percent
Estimates are based on observations, descriptions, and transects of the mapunit.

Description of Cieneba

Setting

Landform: Hills
Landform position (two-dimensional): Backslope
Landform position (three-dimensional): Side slope
Down-slope shape: Convex
Across-slope shape: Convex
Parent material: Residuum weathered from granite and granodiorite

Typical profile

H1 - 0 to 10 inches: coarse sandy loam
H2 - 10 to 14 inches: weathered bedrock

Properties and qualities

Slope: 15 to 30 percent
Depth to restrictive feature: 4 to 20 inches to paralithic bedrock
Natural drainage class: Somewhat excessively drained
Runoff class: Medium
Capacity of the most limiting layer to transmit water (Ksat): High (1.98 to 5.95 in/hr)
Depth to water table: More than 80 inches
Frequency of flooding: None
Frequency of ponding: None
Available water storage in profile: Very low (about 1.0 inches)

Interpretive groups

Land capability classification (irrigated): 6e
Land capability classification (nonirrigated): 7e
Hydrologic Soil Group: D
Ecological site: SHALLOW LOAMY (1975) (R019XD060CA)
Hydric soil rating: No

Minor Components

Fallbrook

Percent of map unit: 5 percent
Hydric soil rating: No

Vista

Percent of map unit: 5 percent
Hydric soil rating: No

RaC—Ramona sandy loam, 5 to 9 percent slopes

Map Unit Setting

National map unit symbol: hbfs
Elevation: 250 to 3,500 feet
Mean annual precipitation: 10 to 20 inches
Mean annual air temperature: 63 degrees F
Frost-free period: 230 to 320 days
Farmland classification: Farmland of statewide importance

Map Unit Composition

Ramona and similar soils: 85 percent
Minor components: 15 percent
Estimates are based on observations, descriptions, and transects of the mapunit.

Description of Ramona

Setting

Landform: Alluvial fans
Landform position (two-dimensional): Toeslope
Landform position (three-dimensional): Base slope, rise
Down-slope shape: Linear
Across-slope shape: Convex
Parent material: Alluvium derived from granite

Typical profile

H1 - 0 to 17 inches: sandy loam
H2 - 17 to 60 inches: sandy clay loam, clay loam
H2 - 17 to 60 inches: sandy clay loam, sandy loam
H3 - 60 to 74 inches:
H3 - 60 to 74 inches:

Properties and qualities

Slope: 5 to 9 percent
Depth to restrictive feature: More than 80 inches
Natural drainage class: Well drained
Runoff class: High
Capacity of the most limiting layer to transmit water (Ksat): Moderately high (0.20 to 0.57 in/hr)
Depth to water table: More than 80 inches
Frequency of flooding: None
Frequency of ponding: None
Available water storage in profile: Very high (about 14.9 inches)

Interpretive groups

Land capability classification (irrigated): 3e

Land capability classification (nonirrigated): 4e
Hydrologic Soil Group: C
Ecological site: LOAMY (1975) (R019XD029CA)
Hydric soil rating: No

Minor Components

Greenfield
Percent of map unit: 5 percent
Hydric soil rating: No

Fallbrook
Percent of map unit: 5 percent
Hydric soil rating: No

Placentia
Percent of map unit: 5 percent
Hydric soil rating: No

References

American Association of State Highway and Transportation Officials (AASHTO). 2004. Standard specifications for transportation materials and methods of sampling and testing. 24th edition.

American Society for Testing and Materials (ASTM). 2005. Standard classification of soils for engineering purposes. ASTM Standard D2487-00.

Cowardin, L.M., V. Carter, F.C. Golet, and E.T. LaRoe. 1979. Classification of wetlands and deep-water habitats of the United States. U.S. Fish and Wildlife Service FWS/OBS-79/31.

Federal Register. July 13, 1994. Changes in hydric soils of the United States.

Federal Register. September 18, 2002. Hydric soils of the United States.

Hurt, G.W., and L.M. Vasilas, editors. Version 6.0, 2006. Field indicators of hydric soils in the United States.

National Research Council. 1995. Wetlands: Characteristics and boundaries.

Soil Survey Division Staff. 1993. Soil survey manual. Soil Conservation Service. U.S. Department of Agriculture Handbook 18. http://www.nrcs.usda.gov/wps/portal/nrcs/detail/national/soils/?cid=nrcs142p2_054262

Soil Survey Staff. 1999. Soil taxonomy: A basic system of soil classification for making and interpreting soil surveys. 2nd edition. Natural Resources Conservation Service, U.S. Department of Agriculture Handbook 436. http://www.nrcs.usda.gov/wps/portal/nrcs/detail/national/soils/?cid=nrcs142p2_053577

Soil Survey Staff. 2010. Keys to soil taxonomy. 11th edition. U.S. Department of Agriculture, Natural Resources Conservation Service. http://www.nrcs.usda.gov/wps/portal/nrcs/detail/national/soils/?cid=nrcs142p2_053580

Tiner, R.W., Jr. 1985. Wetlands of Delaware. U.S. Fish and Wildlife Service and Delaware Department of Natural Resources and Environmental Control, Wetlands Section.

United States Army Corps of Engineers, Environmental Laboratory. 1987. Corps of Engineers wetlands delineation manual. Waterways Experiment Station Technical Report Y-87-1.

United States Department of Agriculture, Natural Resources Conservation Service. National forestry manual. http://www.nrcs.usda.gov/wps/portal/nrcs/detail/soils/home/?cid=nrcs142p2_053374

United States Department of Agriculture, Natural Resources Conservation Service. National range and pasture handbook. http://www.nrcs.usda.gov/wps/portal/nrcs/detail/national/landuse/rangepasture/?cid=stelprdb1043084

United States Department of Agriculture, Natural Resources Conservation Service. National soil survey handbook, title 430-VI. http://www.nrcs.usda.gov/wps/portal/nrcs/detail/soils/scientists/?cid=nrcs142p2_054242

United States Department of Agriculture, Natural Resources Conservation Service. 2006. Land resource regions and major land resource areas of the United States, the Caribbean, and the Pacific Basin. U.S. Department of Agriculture Handbook 296. http://www.nrcs.usda.gov/wps/portal/nrcs/detail/national/soils/?cid=nrcs142p2_053624

United States Department of Agriculture, Soil Conservation Service. 1961. Land capability classification. U.S. Department of Agriculture Handbook 210. http://www.nrcs.usda.gov/Internet/FSE_DOCUMENTS/nrcs142p2_052290.pdf

United States Department of Agriculture

Natural Resources Conservation Service

A product of the National Cooperative Soil Survey, a joint effort of the United States Department of Agriculture and other Federal agencies, State agencies including the Agricultural Experiment Stations, and local participants

Custom Soil Resource Report for San Diego County Area, California

Carmel Mountain Ranch - DMA 16

October 4, 2019

Preface

Soil surveys contain information that affects land use planning in survey areas. They highlight soil limitations that affect various land uses and provide information about the properties of the soils in the survey areas. Soil surveys are designed for many different users, including farmers, ranchers, foresters, agronomists, urban planners, community officials, engineers, developers, builders, and home buyers. Also, conservationists, teachers, students, and specialists in recreation, waste disposal, and pollution control can use the surveys to help them understand, protect, or enhance the environment.

Various land use regulations of Federal, State, and local governments may impose special restrictions on land use or land treatment. Soil surveys identify soil properties that are used in making various land use or land treatment decisions. The information is intended to help the land users identify and reduce the effects of soil limitations on various land uses. The landowner or user is responsible for identifying and complying with existing laws and regulations.

Although soil survey information can be used for general farm, local, and wider area planning, onsite investigation is needed to supplement this information in some cases. Examples include soil quality assessments (http://www.nrcs.usda.gov/wps/portal/nrcs/main/soils/health/) and certain conservation and engineering applications. For more detailed information, contact your local USDA Service Center (https://offices.sc.egov.usda.gov/locator/app?agency=nrcs) or your NRCS State Soil Scientist (http://www.nrcs.usda.gov/wps/portal/nrcs/detail/soils/contactus/?cid=nrcs142p2_053951).

Great differences in soil properties can occur within short distances. Some soils are seasonally wet or subject to flooding. Some are too unstable to be used as a foundation for buildings or roads. Clayey or wet soils are poorly suited to use as septic tank absorption fields. A high water table makes a soil poorly suited to basements or underground installations.

The National Cooperative Soil Survey is a joint effort of the United States Department of Agriculture and other Federal agencies, State agencies including the Agricultural Experiment Stations, and local agencies. The Natural Resources Conservation Service (NRCS) has leadership for the Federal part of the National Cooperative Soil Survey.

Information about soils is updated periodically. Updated information is available through the NRCS Web Soil Survey, the site for official soil survey information.

The U.S. Department of Agriculture (USDA) prohibits discrimination in all its programs and activities on the basis of race, color, national origin, age, disability, and where applicable, sex, marital status, familial status, parental status, religion, sexual orientation, genetic information, political beliefs, reprisal, or because all or a part of an individual's income is derived from any public assistance program. (Not all prohibited bases apply to all programs.) Persons with disabilities who require

Contents

How Soil Surveys Are Made

Soil surveys are made to provide information about the soils and miscellaneous areas in a specific area. They include a description of the soils and miscellaneous areas and their location on the landscape and tables that show soil properties and limitations affecting various uses. Soil scientists observed the steepness, length, and shape of the slopes; the general pattern of drainage; the kinds of crops and native plants; and the kinds of bedrock. They observed and described many soil profiles. A soil profile is the sequence of natural layers, or horizons, in a soil. The profile extends from the surface down into the unconsolidated material in which the soil formed or from the surface down to bedrock. The unconsolidated material is devoid of roots and other living organisms and has not been changed by other biological activity.

Currently, soils are mapped according to the boundaries of major land resource areas (MLRAs). MLRAs are geographically associated land resource units that share common characteristics related to physiography, geology, climate, water resources, soils, biological resources, and land uses (USDA, 2006). Soil survey areas typically consist of parts of one or more MLRA.

The soils and miscellaneous areas in a survey area occur in an orderly pattern that is related to the geology, landforms, relief, climate, and natural vegetation of the area. Each kind of soil and miscellaneous area is associated with a particular kind of landform or with a segment of the landform. By observing the soils and miscellaneous areas in the survey area and relating their position to specific segments of the landform, a soil scientist develops a concept, or model, of how they were formed. Thus, during mapping, this model enables the soil scientist to predict with a considerable degree of accuracy the kind of soil or miscellaneous area at a specific location on the landscape.

Commonly, individual soils on the landscape merge into one another as their characteristics gradually change. To construct an accurate soil map, however, soil scientists must determine the boundaries between the soils. They can observe only a limited number of soil profiles. Nevertheless, these observations, supplemented by an understanding of the soil-vegetation-landscape relationship, are sufficient to verify predictions of the kinds of soil in an area and to determine the boundaries.

Soil scientists recorded the characteristics of the soil profiles that they studied. They noted soil color, texture, size and shape of soil aggregates, kind and amount of rock fragments, distribution of plant roots, reaction, and other features that enable them to identify soils. After describing the soils in the survey area and determining their properties, the soil scientists assigned the soils to taxonomic classes (units). Taxonomic classes are concepts. Each taxonomic class has a set of soil characteristics with precisely defined limits. The classes are used as a basis for comparison to classify soils systematically. Soil taxonomy, the system of taxonomic classification used in the United States, is based mainly on the kind and character of soil properties and the arrangement of horizons within the profile. After the soil

scientists classified and named the soils in the survey area, they compared the individual soils with similar soils in the same taxonomic class in other areas so that they could confirm data and assemble additional data based on experience and research.

The objective of soil mapping is not to delineate pure map unit components; the objective is to separate the landscape into landforms or landform segments that have similar use and management requirements. Each map unit is defined by a unique combination of soil components and/or miscellaneous areas in predictable proportions. Some components may be highly contrasting to the other components of the map unit. The presence of minor components in a map unit in no way diminishes the usefulness or accuracy of the data. The delineation of such landforms and landform segments on the map provides sufficient information for the development of resource plans. If intensive use of small areas is planned, onsite investigation is needed to define and locate the soils and miscellaneous areas.

Soil scientists make many field observations in the process of producing a soil map. The frequency of observation is dependent upon several factors, including scale of mapping, intensity of mapping, design of map units, complexity of the landscape, and experience of the soil scientist. Observations are made to test and refine the soil-landscape model and predictions and to verify the classification of the soils at specific locations. Once the soil-landscape model is refined, a significantly smaller number of measurements of individual soil properties are made and recorded. These measurements may include field measurements, such as those for color, depth to bedrock, and texture, and laboratory measurements, such as those for content of sand, silt, clay, salt, and other components. Properties of each soil typically vary from one point to another across the landscape.

Observations for map unit components are aggregated to develop ranges of characteristics for the components. The aggregated values are presented. Direct measurements do not exist for every property presented for every map unit component. Values for some properties are estimated from combinations of other properties.

While a soil survey is in progress, samples of some of the soils in the area generally are collected for laboratory analyses and for engineering tests. Soil scientists interpret the data from these analyses and tests as well as the field-observed characteristics and the soil properties to determine the expected behavior of the soils under different uses. Interpretations for all of the soils are field tested through observation of the soils in different uses and under different levels of management. Some interpretations are modified to fit local conditions, and some new interpretations are developed to meet local needs. Data are assembled from other sources, such as research information, production records, and field experience of specialists. For example, data on crop yields under defined levels of management are assembled from farm records and from field or plot experiments on the same kinds of soil.

Predictions about soil behavior are based not only on soil properties but also on such variables as climate and biological activity. Soil conditions are predictable over long periods of time, but they are not predictable from year to year. For example, soil scientists can predict with a fairly high degree of accuracy that a given soil will have a high water table within certain depths in most years, but they cannot predict that a high water table will always be at a specific level in the soil on a specific date.

After soil scientists located and identified the significant natural bodies of soil in the survey area, they drew the boundaries of these bodies on aerial photographs and

identified each as a specific map unit. Aerial photographs show trees, buildings, fields, roads, and rivers, all of which help in locating boundaries accurately.

Soil Map

The soil map section includes the soil map for the defined area of interest, a list of soil map units on the map and extent of each map unit, and cartographic symbols displayed on the map. Also presented are various metadata about data used to produce the map, and a description of each soil map unit.

Custom Soil Resource Report
Soil Map

Map Scale: 1:1,890 if printed on A portrait (8.5" x 11") sheet.

N

Meters: 0 25 50 100 150

Feet: 0 50 100 200 300

Map projection: Web Mercator Corner coordinates: WGS84 Edge tics: UTM Zone 11N WGS84

MAP LEGEND

Area of Interest (AOI)

Area of Interest (AOI)

Soils

Soil Map Unit Polygons

Soil Map Unit Lines

Soil Map Unit Points

Special Point Features

Blowout

Borrow Pit

Clay Spot

Closed Depression

Gravel Pit

Gravelly Spot

Landfill

Lava Flow

Marsh or swamp

Mine or Quarry

Miscellaneous Water

Perennial Water

Rock Outcrop

Saline Spot

Sandy Spot

Severely Eroded Spot

Sinkhole

Slide or Slip

Sodic Spot

Spoil Area

Stony Spot

Very Stony Spot

Wet Spot

Other

Special Line Features

Water Features

Streams and Canals

Transportation

Rails

Interstate Highways

US Routes

Major Roads

Local Roads

Background

Aerial Photography

MAP INFORMATION

The soil surveys that comprise your AOI were mapped at 1:24,000.

Warning: Soil Map may not be valid at this scale.

Enlargement of maps beyond the scale of mapping can cause misunderstanding of the detail of mapping and accuracy of soil line placement. The maps do not show the small areas of contrasting soils that could have been shown at a more detailed scale.

Please rely on the bar scale on each map sheet for map measurements.

Source of Map: Natural Resources Conservation Service
Web Soil Survey URL:
Coordinate System: Web Mercator (EPSG:3857)

Maps from the Web Soil Survey are based on the Web Mercator projection, which preserves direction and shape but distorts distance and area. A projection that preserves area, such as the Albers equal-area conic projection, should be used if more accurate calculations of distance or area are required.

This product is generated from the USDA-NRCS certified data as of the version date(s) listed below.

Soil Survey Area: San Diego County Area, California
Survey Area Data: Version 14, Sep 16, 2019

Soil map units are labeled (as space allows) for map scales 1:50,000 or larger.

Date(s) aerial images were photographed: Nov 3, 2014—Nov 22, 2014

The orthophoto or other base map on which the soil lines were compiled and digitized probably differs from the background imagery displayed on these maps. As a result, some minor shifting of map unit boundaries may be evident.

Map Unit Legend

Map Unit Symbol	Map Unit Name	Acres in AOI	Percent of AOI
DoE	Diablo-Olivenhain complex, 9 to 30 percent slopes	2.3	34.9%
OhC	Olivenhain cobbly loam, 2 to 9 percent slopes	4.3	65.1%
Totals for Area of Interest		**6.6**	**100.0%**

Map Unit Descriptions

The map units delineated on the detailed soil maps in a soil survey represent the soils or miscellaneous areas in the survey area. The map unit descriptions, along with the maps, can be used to determine the composition and properties of a unit.

A map unit delineation on a soil map represents an area dominated by one or more major kinds of soil or miscellaneous areas. A map unit is identified and named according to the taxonomic classification of the dominant soils. Within a taxonomic class there are precisely defined limits for the properties of the soils. On the landscape, however, the soils are natural phenomena, and they have the characteristic variability of all natural phenomena. Thus, the range of some observed properties may extend beyond the limits defined for a taxonomic class. Areas of soils of a single taxonomic class rarely, if ever, can be mapped without including areas of other taxonomic classes. Consequently, every map unit is made up of the soils or miscellaneous areas for which it is named and some minor components that belong to taxonomic classes other than those of the major soils.

Most minor soils have properties similar to those of the dominant soil or soils in the map unit, and thus they do not affect use and management. These are called noncontrasting, or similar, components. They may or may not be mentioned in a particular map unit description. Other minor components, however, have properties and behavioral characteristics divergent enough to affect use or to require different management. These are called contrasting, or dissimilar, components. They generally are in small areas and could not be mapped separately because of the scale used. Some small areas of strongly contrasting soils or miscellaneous areas are identified by a special symbol on the maps. If included in the database for a given area, the contrasting minor components are identified in the map unit descriptions along with some characteristics of each. A few areas of minor components may not have been observed, and consequently they are not mentioned in the descriptions, especially where the pattern was so complex that it was impractical to make enough observations to identify all the soils and miscellaneous areas on the landscape.

The presence of minor components in a map unit in no way diminishes the usefulness or accuracy of the data. The objective of mapping is not to delineate pure taxonomic classes but rather to separate the landscape into landforms or landform segments that have similar use and management requirements. The delineation of such segments on the map provides sufficient information for the development of resource plans. If intensive use of small areas is planned, however,

onsite investigation is needed to define and locate the soils and miscellaneous areas.

An identifying symbol precedes the map unit name in the map unit descriptions. Each description includes general facts about the unit and gives important soil properties and qualities.

Soils that have profiles that are almost alike make up a *soil series*. Except for differences in texture of the surface layer, all the soils of a series have major horizons that are similar in composition, thickness, and arrangement.

Soils of one series can differ in texture of the surface layer, slope, stoniness, salinity, degree of erosion, and other characteristics that affect their use. On the basis of such differences, a soil series is divided into *soil phases*. Most of the areas shown on the detailed soil maps are phases of soil series. The name of a soil phase commonly indicates a feature that affects use or management. For example, Alpha silt loam, 0 to 2 percent slopes, is a phase of the Alpha series.

Some map units are made up of two or more major soils or miscellaneous areas. These map units are complexes, associations, or undifferentiated groups.

A *complex* consists of two or more soils or miscellaneous areas in such an intricate pattern or in such small areas that they cannot be shown separately on the maps. The pattern and proportion of the soils or miscellaneous areas are somewhat similar in all areas. Alpha-Beta complex, 0 to 6 percent slopes, is an example.

An *association* is made up of two or more geographically associated soils or miscellaneous areas that are shown as one unit on the maps. Because of present or anticipated uses of the map units in the survey area, it was not considered practical or necessary to map the soils or miscellaneous areas separately. The pattern and relative proportion of the soils or miscellaneous areas are somewhat similar. Alpha-Beta association, 0 to 2 percent slopes, is an example.

An *undifferentiated group* is made up of two or more soils or miscellaneous areas that could be mapped individually but are mapped as one unit because similar interpretations can be made for use and management. The pattern and proportion of the soils or miscellaneous areas in a mapped area are not uniform. An area can be made up of only one of the major soils or miscellaneous areas, or it can be made up of all of them. Alpha and Beta soils, 0 to 2 percent slopes, is an example.

Some surveys include *miscellaneous areas*. Such areas have little or no soil material and support little or no vegetation. Rock outcrop is an example.

San Diego County Area, California

DoE—Diablo-Olivenhain complex, 9 to 30 percent slopes

Map Unit Setting

National map unit symbol: hbbh
Elevation: 100 to 3,250 feet
Mean annual precipitation: 9 to 25 inches
Mean annual air temperature: 59 to 63 degrees F
Frost-free period: 200 to 330 days
Farmland classification: Not prime farmland

Map Unit Composition

Diablo and similar soils: 50 percent
Olivenhain and similar soils: 45 percent
Minor components: 5 percent
Estimates are based on observations, descriptions, and transects of the mapunit.

Description of Diablo

Setting

Landform: Hillslopes
Landform position (two-dimensional): Backslope
Landform position (three-dimensional): Side slope
Down-slope shape: Convex
Across-slope shape: Convex
Parent material: Calcareous sandstone and shale

Typical profile

H1 - 0 to 15 inches: clay
H2 - 15 to 32 inches: clay, silty clay loam
H2 - 15 to 32 inches: weathered bedrock
H3 - 32 to 36 inches:

Properties and qualities

Slope: 9 to 30 percent
Depth to restrictive feature: 24 to 40 inches to paralithic bedrock
Natural drainage class: Well drained
Runoff class: Very high
Capacity of the most limiting layer to transmit water (Ksat): Moderately low to moderately high (0.06 to 0.20 in/hr)
Depth to water table: More than 80 inches
Frequency of flooding: None
Frequency of ponding: None
Calcium carbonate, maximum in profile: 10 percent
Available water storage in profile: Moderate (about 7.7 inches)

Interpretive groups

Land capability classification (irrigated): None specified
Land capability classification (nonirrigated): 4e
Hydrologic Soil Group: D
Ecological site: CLAYEY (1975) (R019XD001CA)
Hydric soil rating: No

Description of Olivenhain

Setting

Landform: Hillslopes
Landform position (two-dimensional): Backslope
Landform position (three-dimensional): Side slope
Down-slope shape: Convex
Across-slope shape: Convex
Parent material: Old alluvium

Typical profile

H1 - 0 to 10 inches: cobbly loam
H2 - 10 to 42 inches: very cobbly clay, very cobbly clay loam
H2 - 10 to 42 inches: cobbly loam, cobbly clay loam
H3 - 42 to 60 inches:
H3 - 42 to 60 inches:

Properties and qualities

Slope: 9 to 30 percent
Depth to restrictive feature: About 10 inches to abrupt textural change
Natural drainage class: Well drained
Runoff class: Very high
Capacity of the most limiting layer to transmit water (Ksat): Very low to moderately low (0.00 to 0.06 in/hr)
Depth to water table: More than 80 inches
Frequency of flooding: None
Frequency of ponding: None
Available water storage in profile: Very low (about 1.3 inches)

Interpretive groups

Land capability classification (irrigated): None specified
Land capability classification (nonirrigated): 4e
Hydrologic Soil Group: D
Ecological site: CLAYPAN (1975) (R019XD061CA)
Hydric soil rating: No

Minor Components

Linne

Percent of map unit: 5 percent
Hydric soil rating: No

OhC—Olivenhain cobbly loam, 2 to 9 percent slopes

Map Unit Setting

National map unit symbol: hbfb
Elevation: 100 to 600 feet
Mean annual precipitation: 14 inches
Mean annual air temperature: 63 degrees F

Frost-free period: 290 to 330 days
Farmland classification: Not prime farmland

Map Unit Composition

Olivenhain and similar soils: 85 percent
Minor components: 10 percent
Estimates are based on observations, descriptions, and transects of the mapunit.

Description of Olivenhain

Setting

Landform: Marine terraces
Down-slope shape: Convex
Across-slope shape: Convex
Parent material: Gravelly alluvium derived from mixed sources

Typical profile

H1 - 0 to 10 inches: cobbly loam
H2 - 10 to 42 inches: very cobbly clay, very cobbly clay loam
H2 - 10 to 42 inches: cobbly loam, cobbly clay loam
H3 - 42 to 60 inches:
H3 - 42 to 60 inches:

Properties and qualities

Slope: 2 to 9 percent
Depth to restrictive feature: About 10 inches to abrupt textural change
Natural drainage class: Well drained
Runoff class: Very high
Capacity of the most limiting layer to transmit water (Ksat): Very low to moderately low (0.00 to 0.06 in/hr)
Depth to water table: More than 80 inches
Frequency of flooding: None
Frequency of ponding: None
Available water storage in profile: Very low (about 1.3 inches)

Interpretive groups

Land capability classification (irrigated): 4e
Land capability classification (nonirrigated): 4e
Hydrologic Soil Group: D
Ecological site: CLAYPAN (1975) (R019XD061CA)
Hydric soil rating: No

Minor Components

Diablo

Percent of map unit: 4 percent
Hydric soil rating: No

Huerhuero

Percent of map unit: 2 percent
Hydric soil rating: No

Unnamed, ponded

Percent of map unit: 2 percent
Landform: Depressions
Hydric soil rating: Yes

Linne

Percent of map unit: 2 percent
Hydric soil rating: No

References

American Association of State Highway and Transportation Officials (AASHTO). 2004. Standard specifications for transportation materials and methods of sampling and testing. 24th edition.

American Society for Testing and Materials (ASTM). 2005. Standard classification of soils for engineering purposes. ASTM Standard D2487-00.

Cowardin, L.M., V. Carter, F.C. Golet, and E.T. LaRoe. 1979. Classification of wetlands and deep-water habitats of the United States. U.S. Fish and Wildlife Service FWS/OBS-79/31.

Federal Register. July 13, 1994. Changes in hydric soils of the United States.

Federal Register. September 18, 2002. Hydric soils of the United States.

Hurt, G.W., and L.M. Vasilas, editors. Version 6.0, 2006. Field indicators of hydric soils in the United States.

National Research Council. 1995. Wetlands: Characteristics and boundaries.

Soil Survey Division Staff. 1993. Soil survey manual. Soil Conservation Service. U.S. Department of Agriculture Handbook 18. http://www.nrcs.usda.gov/wps/portal/nrcs/detail/national/soils/?cid=nrcs142p2_054262

Soil Survey Staff. 1999. Soil taxonomy: A basic system of soil classification for making and interpreting soil surveys. 2nd edition. Natural Resources Conservation Service, U.S. Department of Agriculture Handbook 436. http://www.nrcs.usda.gov/wps/portal/nrcs/detail/national/soils/?cid=nrcs142p2_053577

Soil Survey Staff. 2010. Keys to soil taxonomy. 11th edition. U.S. Department of Agriculture, Natural Resources Conservation Service. http://www.nrcs.usda.gov/wps/portal/nrcs/detail/national/soils/?cid=nrcs142p2_053580

Tiner, R.W., Jr. 1985. Wetlands of Delaware. U.S. Fish and Wildlife Service and Delaware Department of Natural Resources and Environmental Control, Wetlands Section.

United States Army Corps of Engineers, Environmental Laboratory. 1987. Corps of Engineers wetlands delineation manual. Waterways Experiment Station Technical Report Y-87-1.

United States Department of Agriculture, Natural Resources Conservation Service. National forestry manual. http://www.nrcs.usda.gov/wps/portal/nrcs/detail/soils/home/?cid=nrcs142p2_053374

United States Department of Agriculture, Natural Resources Conservation Service. National range and pasture handbook. http://www.nrcs.usda.gov/wps/portal/nrcs/detail/national/landuse/rangepasture/?cid=stelprdb1043084

United States Department of Agriculture, Natural Resources Conservation Service. National soil survey handbook, title 430-VI. http://www.nrcs.usda.gov/wps/portal/nrcs/detail/soils/scientists/?cid=nrcs142p2_054242

United States Department of Agriculture, Natural Resources Conservation Service. 2006. Land resource regions and major land resource areas of the United States, the Caribbean, and the Pacific Basin. U.S. Department of Agriculture Handbook 296. http://www.nrcs.usda.gov/wps/portal/nrcs/detail/national/soils/?cid=nrcs142p2_053624

United States Department of Agriculture, Soil Conservation Service. 1961. Land capability classification. U.S. Department of Agriculture Handbook 210. http://www.nrcs.usda.gov/Internet/FSE_DOCUMENTS/nrcs142p2_052290.pdf

United States Department of Agriculture

Natural Resources Conservation Service

A product of the National Cooperative Soil Survey, a joint effort of the United States Department of Agriculture and other Federal agencies, State agencies including the Agricultural Experiment Stations, and local participants

Custom Soil Resource Report for San Diego County Area, California

Carmel Mountain Ranch - DMA 17

October 4, 2019

Preface

Soil surveys contain information that affects land use planning in survey areas. They highlight soil limitations that affect various land uses and provide information about the properties of the soils in the survey areas. Soil surveys are designed for many different users, including farmers, ranchers, foresters, agronomists, urban planners, community officials, engineers, developers, builders, and home buyers. Also, conservationists, teachers, students, and specialists in recreation, waste disposal, and pollution control can use the surveys to help them understand, protect, or enhance the environment.

Various land use regulations of Federal, State, and local governments may impose special restrictions on land use or land treatment. Soil surveys identify soil properties that are used in making various land use or land treatment decisions. The information is intended to help the land users identify and reduce the effects of soil limitations on various land uses. The landowner or user is responsible for identifying and complying with existing laws and regulations.

Although soil survey information can be used for general farm, local, and wider area planning, onsite investigation is needed to supplement this information in some cases. Examples include soil quality assessments (http://www.nrcs.usda.gov/wps/portal/nrcs/main/soils/health/) and certain conservation and engineering applications. For more detailed information, contact your local USDA Service Center (https://offices.sc.egov.usda.gov/locator/app?agency=nrcs) or your NRCS State Soil Scientist (http://www.nrcs.usda.gov/wps/portal/nrcs/detail/soils/contactus/?cid=nrcs142p2_053951).

Great differences in soil properties can occur within short distances. Some soils are seasonally wet or subject to flooding. Some are too unstable to be used as a foundation for buildings or roads. Clayey or wet soils are poorly suited to use as septic tank absorption fields. A high water table makes a soil poorly suited to basements or underground installations.

The National Cooperative Soil Survey is a joint effort of the United States Department of Agriculture and other Federal agencies, State agencies including the Agricultural Experiment Stations, and local agencies. The Natural Resources Conservation Service (NRCS) has leadership for the Federal part of the National Cooperative Soil Survey.

Information about soils is updated periodically. Updated information is available through the NRCS Web Soil Survey, the site for official soil survey information.

The U.S. Department of Agriculture (USDA) prohibits discrimination in all its programs and activities on the basis of race, color, national origin, age, disability, and where applicable, sex, marital status, familial status, parental status, religion, sexual orientation, genetic information, political beliefs, reprisal, or because all or a part of an individual's income is derived from any public assistance program. (Not all prohibited bases apply to all programs.) Persons with disabilities who require

Contents

How Soil Surveys Are Made

Soil surveys are made to provide information about the soils and miscellaneous areas in a specific area. They include a description of the soils and miscellaneous areas and their location on the landscape and tables that show soil properties and limitations affecting various uses. Soil scientists observed the steepness, length, and shape of the slopes; the general pattern of drainage; the kinds of crops and native plants; and the kinds of bedrock. They observed and described many soil profiles. A soil profile is the sequence of natural layers, or horizons, in a soil. The profile extends from the surface down into the unconsolidated material in which the soil formed or from the surface down to bedrock. The unconsolidated material is devoid of roots and other living organisms and has not been changed by other biological activity.

Currently, soils are mapped according to the boundaries of major land resource areas (MLRAs). MLRAs are geographically associated land resource units that share common characteristics related to physiography, geology, climate, water resources, soils, biological resources, and land uses (USDA, 2006). Soil survey areas typically consist of parts of one or more MLRA.

The soils and miscellaneous areas in a survey area occur in an orderly pattern that is related to the geology, landforms, relief, climate, and natural vegetation of the area. Each kind of soil and miscellaneous area is associated with a particular kind of landform or with a segment of the landform. By observing the soils and miscellaneous areas in the survey area and relating their position to specific segments of the landform, a soil scientist develops a concept, or model, of how they were formed. Thus, during mapping, this model enables the soil scientist to predict with a considerable degree of accuracy the kind of soil or miscellaneous area at a specific location on the landscape.

Commonly, individual soils on the landscape merge into one another as their characteristics gradually change. To construct an accurate soil map, however, soil scientists must determine the boundaries between the soils. They can observe only a limited number of soil profiles. Nevertheless, these observations, supplemented by an understanding of the soil-vegetation-landscape relationship, are sufficient to verify predictions of the kinds of soil in an area and to determine the boundaries.

Soil scientists recorded the characteristics of the soil profiles that they studied. They noted soil color, texture, size and shape of soil aggregates, kind and amount of rock fragments, distribution of plant roots, reaction, and other features that enable them to identify soils. After describing the soils in the survey area and determining their properties, the soil scientists assigned the soils to taxonomic classes (units). Taxonomic classes are concepts. Each taxonomic class has a set of soil characteristics with precisely defined limits. The classes are used as a basis for comparison to classify soils systematically. Soil taxonomy, the system of taxonomic classification used in the United States, is based mainly on the kind and character of soil properties and the arrangement of horizons within the profile. After the soil

scientists classified and named the soils in the survey area, they compared the individual soils with similar soils in the same taxonomic class in other areas so that they could confirm data and assemble additional data based on experience and research.

The objective of soil mapping is not to delineate pure map unit components; the objective is to separate the landscape into landforms or landform segments that have similar use and management requirements. Each map unit is defined by a unique combination of soil components and/or miscellaneous areas in predictable proportions. Some components may be highly contrasting to the other components of the map unit. The presence of minor components in a map unit in no way diminishes the usefulness or accuracy of the data. The delineation of such landforms and landform segments on the map provides sufficient information for the development of resource plans. If intensive use of small areas is planned, onsite investigation is needed to define and locate the soils and miscellaneous areas.

Soil scientists make many field observations in the process of producing a soil map. The frequency of observation is dependent upon several factors, including scale of mapping, intensity of mapping, design of map units, complexity of the landscape, and experience of the soil scientist. Observations are made to test and refine the soil-landscape model and predictions and to verify the classification of the soils at specific locations. Once the soil-landscape model is refined, a significantly smaller number of measurements of individual soil properties are made and recorded. These measurements may include field measurements, such as those for color, depth to bedrock, and texture, and laboratory measurements, such as those for content of sand, silt, clay, salt, and other components. Properties of each soil typically vary from one point to another across the landscape.

Observations for map unit components are aggregated to develop ranges of characteristics for the components. The aggregated values are presented. Direct measurements do not exist for every property presented for every map unit component. Values for some properties are estimated from combinations of other properties.

While a soil survey is in progress, samples of some of the soils in the area generally are collected for laboratory analyses and for engineering tests. Soil scientists interpret the data from these analyses and tests as well as the field-observed characteristics and the soil properties to determine the expected behavior of the soils under different uses. Interpretations for all of the soils are field tested through observation of the soils in different uses and under different levels of management. Some interpretations are modified to fit local conditions, and some new interpretations are developed to meet local needs. Data are assembled from other sources, such as research information, production records, and field experience of specialists. For example, data on crop yields under defined levels of management are assembled from farm records and from field or plot experiments on the same kinds of soil.

Predictions about soil behavior are based not only on soil properties but also on such variables as climate and biological activity. Soil conditions are predictable over long periods of time, but they are not predictable from year to year. For example, soil scientists can predict with a fairly high degree of accuracy that a given soil will have a high water table within certain depths in most years, but they cannot predict that a high water table will always be at a specific level in the soil on a specific date.

After soil scientists located and identified the significant natural bodies of soil in the survey area, they drew the boundaries of these bodies on aerial photographs and

identified each as a specific map unit. Aerial photographs show trees, buildings, fields, roads, and rivers, all of which help in locating boundaries accurately.

Soil Map

The soil map section includes the soil map for the defined area of interest, a list of soil map units on the map and extent of each map unit, and cartographic symbols displayed on the map. Also presented are various metadata about data used to produce the map, and a description of each soil map unit.

Custom Soil Resource Report
Soil Map

Map Scale: 1:1,560 if printed on A portrait (8.5" x 11") sheet.

N

Meters: 0 20 40 80 120

Feet: 0 50 100 200 300

Map projection: Web Mercator Corner coordinates: WGS84 Edge tics: UTM Zone 11N WGS84

MAP LEGEND

Area of Interest (AOI)

Area of Interest (AOI)

Soils

Soil Map Unit Polygons

Soil Map Unit Lines

Soil Map Unit Points

Special Point Features

Blowout

Borrow Pit

Clay Spot

Closed Depression

Gravel Pit

Gravelly Spot

Landfill

Lava Flow

Marsh or swamp

Mine or Quarry

Miscellaneous Water

Perennial Water

Rock Outcrop

Saline Spot

Sandy Spot

Severely Eroded Spot

Sinkhole

Slide or Slip

Sodic Spot

Spoil Area

Stony Spot

Very Stony Spot

Wet Spot

Other

Special Line Features

Water Features

Streams and Canals

Transportation

Rails

Interstate Highways

US Routes

Major Roads

Local Roads

Background

Aerial Photography

MAP INFORMATION

The soil surveys that comprise your AOI were mapped at 1:24,000.

Warning: Soil Map may not be valid at this scale.

Enlargement of maps beyond the scale of mapping can cause misunderstanding of the detail of mapping and accuracy of soil line placement. The maps do not show the small areas of contrasting soils that could have been shown at a more detailed scale.

Please rely on the bar scale on each map sheet for map measurements.

Source of Map: Natural Resources Conservation Service
Web Soil Survey URL:
Coordinate System: Web Mercator (EPSG:3857)

Maps from the Web Soil Survey are based on the Web Mercator projection, which preserves direction and shape but distorts distance and area. A projection that preserves area, such as the Albers equal-area conic projection, should be used if more accurate calculations of distance or area are required.

This product is generated from the USDA-NRCS certified data as of the version date(s) listed below.

Soil Survey Area: San Diego County Area, California
Survey Area Data: Version 14, Sep 16, 2019

Soil map units are labeled (as space allows) for map scales 1:50,000 or larger.

Date(s) aerial images were photographed: Nov 3, 2014—Nov 22, 2014

The orthophoto or other base map on which the soil lines were compiled and digitized probably differs from the background imagery displayed on these maps. As a result, some minor shifting of map unit boundaries may be evident.

Map Unit Legend

Map Unit Symbol	Map Unit Name	Acres in AOI	Percent of AOI
DaD	Diablo clay, 9 to 15 percent slopes, warm MAAT	4.2	100.0%
Totals for Area of Interest		**4.2**	**100.0%**

Map Unit Descriptions

The map units delineated on the detailed soil maps in a soil survey represent the soils or miscellaneous areas in the survey area. The map unit descriptions, along with the maps, can be used to determine the composition and properties of a unit.

A map unit delineation on a soil map represents an area dominated by one or more major kinds of soil or miscellaneous areas. A map unit is identified and named according to the taxonomic classification of the dominant soils. Within a taxonomic class there are precisely defined limits for the properties of the soils. On the landscape, however, the soils are natural phenomena, and they have the characteristic variability of all natural phenomena. Thus, the range of some observed properties may extend beyond the limits defined for a taxonomic class. Areas of soils of a single taxonomic class rarely, if ever, can be mapped without including areas of other taxonomic classes. Consequently, every map unit is made up of the soils or miscellaneous areas for which it is named and some minor components that belong to taxonomic classes other than those of the major soils.

Most minor soils have properties similar to those of the dominant soil or soils in the map unit, and thus they do not affect use and management. These are called noncontrasting, or similar, components. They may or may not be mentioned in a particular map unit description. Other minor components, however, have properties and behavioral characteristics divergent enough to affect use or to require different management. These are called contrasting, or dissimilar, components. They generally are in small areas and could not be mapped separately because of the scale used. Some small areas of strongly contrasting soils or miscellaneous areas are identified by a special symbol on the maps. If included in the database for a given area, the contrasting minor components are identified in the map unit descriptions along with some characteristics of each. A few areas of minor components may not have been observed, and consequently they are not mentioned in the descriptions, especially where the pattern was so complex that it was impractical to make enough observations to identify all the soils and miscellaneous areas on the landscape.

The presence of minor components in a map unit in no way diminishes the usefulness or accuracy of the data. The objective of mapping is not to delineate pure taxonomic classes but rather to separate the landscape into landforms or landform segments that have similar use and management requirements. The delineation of such segments on the map provides sufficient information for the development of resource plans. If intensive use of small areas is planned, however, onsite investigation is needed to define and locate the soils and miscellaneous areas.

An identifying symbol precedes the map unit name in the map unit descriptions. Each description includes general facts about the unit and gives important soil properties and qualities.

Soils that have profiles that are almost alike make up a *soil series*. Except for differences in texture of the surface layer, all the soils of a series have major horizons that are similar in composition, thickness, and arrangement.

Soils of one series can differ in texture of the surface layer, slope, stoniness, salinity, degree of erosion, and other characteristics that affect their use. On the basis of such differences, a soil series is divided into *soil phases*. Most of the areas shown on the detailed soil maps are phases of soil series. The name of a soil phase commonly indicates a feature that affects use or management. For example, Alpha silt loam, 0 to 2 percent slopes, is a phase of the Alpha series.

Some map units are made up of two or more major soils or miscellaneous areas. These map units are complexes, associations, or undifferentiated groups.

A *complex* consists of two or more soils or miscellaneous areas in such an intricate pattern or in such small areas that they cannot be shown separately on the maps. The pattern and proportion of the soils or miscellaneous areas are somewhat similar in all areas. Alpha-Beta complex, 0 to 6 percent slopes, is an example.

An *association* is made up of two or more geographically associated soils or miscellaneous areas that are shown as one unit on the maps. Because of present or anticipated uses of the map units in the survey area, it was not considered practical or necessary to map the soils or miscellaneous areas separately. The pattern and relative proportion of the soils or miscellaneous areas are somewhat similar. Alpha-Beta association, 0 to 2 percent slopes, is an example.

An *undifferentiated group* is made up of two or more soils or miscellaneous areas that could be mapped individually but are mapped as one unit because similar interpretations can be made for use and management. The pattern and proportion of the soils or miscellaneous areas in a mapped area are not uniform. An area can be made up of only one of the major soils or miscellaneous areas, or it can be made up of all of them. Alpha and Beta soils, 0 to 2 percent slopes, is an example.

Some surveys include *miscellaneous areas*. Such areas have little or no soil material and support little or no vegetation. Rock outcrop is an example.

San Diego County Area, California

DaD—Diablo clay, 9 to 15 percent slopes, warm MAAT

Map Unit Setting

National map unit symbol: 2w63f
Elevation: 110 to 910 feet
Mean annual precipitation: 11 to 21 inches
Mean annual air temperature: 58 to 64 degrees F
Frost-free period: 290 to 365 days
Farmland classification: Farmland of statewide importance

Map Unit Composition

Diablo and similar soils: 85 percent
Minor components: 15 percent
Estimates are based on observations, descriptions, and transects of the mapunit.

Description of Diablo

Setting

Landform: Hillslopes
Landform position (two-dimensional): Backslope
Landform position (three-dimensional): Side slope
Down-slope shape: Convex
Across-slope shape: Convex
Parent material: Residuum weathered from calcareous shale

Typical profile

A - 0 to 15 inches: clay
Bkss1 - 15 to 28 inches: clay
Bkss2 - 28 to 40 inches: clay loam
Cr - 40 to 79 inches: bedrock

Properties and qualities

Slope: 9 to 15 percent
Depth to restrictive feature: 39 to 79 inches to paralithic bedrock
Natural drainage class: Well drained
Capacity of the most limiting layer to transmit water (Ksat): Moderately low to moderately high (0.06 to 0.20 in/hr)
Depth to water table: More than 80 inches
Frequency of flooding: None
Frequency of ponding: None
Calcium carbonate, maximum in profile: 5 percent
Available water storage in profile: Moderate (about 6.8 inches)

Interpretive groups

Land capability classification (irrigated): 4e
Land capability classification (nonirrigated): 4e
Hydrologic Soil Group: C
Ecological site: CLAYEY (1975) (R019XD001CA)
Hydric soil rating: No

Minor Components

Altamont

Percent of map unit: 10 percent

Landform: Hillslopes
Landform position (two-dimensional): Backslope
Landform position (three-dimensional): Side slope
Down-slope shape: Convex
Across-slope shape: Convex
Hydric soil rating: No

Linne

Percent of map unit: 3 percent
Landform: Hillslopes
Landform position (two-dimensional): Backslope
Landform position (three-dimensional): Side slope
Down-slope shape: Convex
Across-slope shape: Convex
Hydric soil rating: No

Olephant

Percent of map unit: 2 percent
Landform: Terraces
Landform position (three-dimensional): Tread
Down-slope shape: Concave
Across-slope shape: Concave
Hydric soil rating: No

References

American Association of State Highway and Transportation Officials (AASHTO). 2004. Standard specifications for transportation materials and methods of sampling and testing. 24th edition.

American Society for Testing and Materials (ASTM). 2005. Standard classification of soils for engineering purposes. ASTM Standard D2487-00.

Cowardin, L.M., V. Carter, F.C. Golet, and E.T. LaRoe. 1979. Classification of wetlands and deep-water habitats of the United States. U.S. Fish and Wildlife Service FWS/OBS-79/31.

Federal Register. July 13, 1994. Changes in hydric soils of the United States.

Federal Register. September 18, 2002. Hydric soils of the United States.

Hurt, G.W., and L.M. Vasilas, editors. Version 6.0, 2006. Field indicators of hydric soils in the United States.

National Research Council. 1995. Wetlands: Characteristics and boundaries.

Soil Survey Division Staff. 1993. Soil survey manual. Soil Conservation Service. U.S. Department of Agriculture Handbook 18. http://www.nrcs.usda.gov/wps/portal/nrcs/detail/national/soils/?cid=nrcs142p2_054262

Soil Survey Staff. 1999. Soil taxonomy: A basic system of soil classification for making and interpreting soil surveys. 2nd edition. Natural Resources Conservation Service, U.S. Department of Agriculture Handbook 436. http://www.nrcs.usda.gov/wps/portal/nrcs/detail/national/soils/?cid=nrcs142p2_053577

Soil Survey Staff. 2010. Keys to soil taxonomy. 11th edition. U.S. Department of Agriculture, Natural Resources Conservation Service. http://www.nrcs.usda.gov/wps/portal/nrcs/detail/national/soils/?cid=nrcs142p2_053580

Tiner, R.W., Jr. 1985. Wetlands of Delaware. U.S. Fish and Wildlife Service and Delaware Department of Natural Resources and Environmental Control, Wetlands Section.

United States Army Corps of Engineers, Environmental Laboratory. 1987. Corps of Engineers wetlands delineation manual. Waterways Experiment Station Technical Report Y-87-1.

United States Department of Agriculture, Natural Resources Conservation Service. National forestry manual. http://www.nrcs.usda.gov/wps/portal/nrcs/detail/soils/home/?cid=nrcs142p2_053374

United States Department of Agriculture, Natural Resources Conservation Service. National range and pasture handbook. http://www.nrcs.usda.gov/wps/portal/nrcs/detail/national/landuse/rangepasture/?cid=stelprdb1043084

United States Department of Agriculture, Natural Resources Conservation Service. National soil survey handbook, title 430-VI. http://www.nrcs.usda.gov/wps/portal/nrcs/detail/soils/scientists/?cid=nrcs142p2_054242

United States Department of Agriculture, Natural Resources Conservation Service. 2006. Land resource regions and major land resource areas of the United States, the Caribbean, and the Pacific Basin. U.S. Department of Agriculture Handbook 296. http://www.nrcs.usda.gov/wps/portal/nrcs/detail/national/soils/?cid=nrcs142p2_053624

United States Department of Agriculture, Soil Conservation Service. 1961. Land capability classification. U.S. Department of Agriculture Handbook 210. http://www.nrcs.usda.gov/Internet/FSE_DOCUMENTS/nrcs142p2_052290.pdf

United States Department of Agriculture

Natural Resources Conservation Service

A product of the National Cooperative Soil Survey, a joint effort of the United States Department of Agriculture and other Federal agencies, State agencies including the Agricultural Experiment Stations, and local participants

Custom Soil Resource Report for San Diego County Area, California

Carmel Mountain Ranch - DMA 18

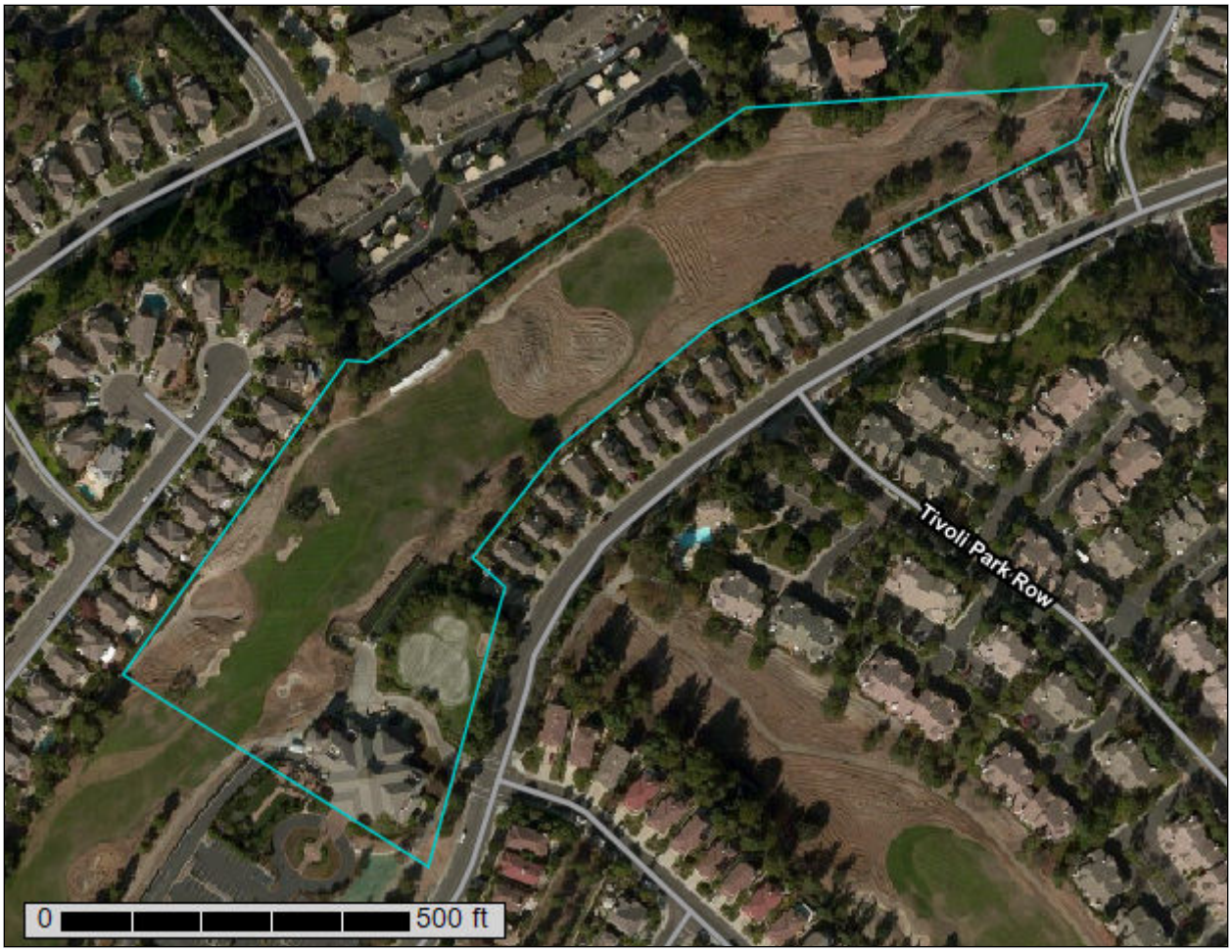

October 4, 2019

Preface

Soil surveys contain information that affects land use planning in survey areas. They highlight soil limitations that affect various land uses and provide information about the properties of the soils in the survey areas. Soil surveys are designed for many different users, including farmers, ranchers, foresters, agronomists, urban planners, community officials, engineers, developers, builders, and home buyers. Also, conservationists, teachers, students, and specialists in recreation, waste disposal, and pollution control can use the surveys to help them understand, protect, or enhance the environment.

Various land use regulations of Federal, State, and local governments may impose special restrictions on land use or land treatment. Soil surveys identify soil properties that are used in making various land use or land treatment decisions. The information is intended to help the land users identify and reduce the effects of soil limitations on various land uses. The landowner or user is responsible for identifying and complying with existing laws and regulations.

Although soil survey information can be used for general farm, local, and wider area planning, onsite investigation is needed to supplement this information in some cases. Examples include soil quality assessments (http://www.nrcs.usda.gov/wps/portal/nrcs/main/soils/health/) and certain conservation and engineering applications. For more detailed information, contact your local USDA Service Center (https://offices.sc.egov.usda.gov/locator/app?agency=nrcs) or your NRCS State Soil Scientist (http://www.nrcs.usda.gov/wps/portal/nrcs/detail/soils/contactus/?cid=nrcs142p2_053951).

Great differences in soil properties can occur within short distances. Some soils are seasonally wet or subject to flooding. Some are too unstable to be used as a foundation for buildings or roads. Clayey or wet soils are poorly suited to use as septic tank absorption fields. A high water table makes a soil poorly suited to basements or underground installations.

The National Cooperative Soil Survey is a joint effort of the United States Department of Agriculture and other Federal agencies, State agencies including the Agricultural Experiment Stations, and local agencies. The Natural Resources Conservation Service (NRCS) has leadership for the Federal part of the National Cooperative Soil Survey.

Information about soils is updated periodically. Updated information is available through the NRCS Web Soil Survey, the site for official soil survey information.

The U.S. Department of Agriculture (USDA) prohibits discrimination in all its programs and activities on the basis of race, color, national origin, age, disability, and where applicable, sex, marital status, familial status, parental status, religion, sexual orientation, genetic information, political beliefs, reprisal, or because all or a part of an individual's income is derived from any public assistance program. (Not all prohibited bases apply to all programs.) Persons with disabilities who require

Contents

How Soil Surveys Are Made

Soil surveys are made to provide information about the soils and miscellaneous areas in a specific area. They include a description of the soils and miscellaneous areas and their location on the landscape and tables that show soil properties and limitations affecting various uses. Soil scientists observed the steepness, length, and shape of the slopes; the general pattern of drainage; the kinds of crops and native plants; and the kinds of bedrock. They observed and described many soil profiles. A soil profile is the sequence of natural layers, or horizons, in a soil. The profile extends from the surface down into the unconsolidated material in which the soil formed or from the surface down to bedrock. The unconsolidated material is devoid of roots and other living organisms and has not been changed by other biological activity.

Currently, soils are mapped according to the boundaries of major land resource areas (MLRAs). MLRAs are geographically associated land resource units that share common characteristics related to physiography, geology, climate, water resources, soils, biological resources, and land uses (USDA, 2006). Soil survey areas typically consist of parts of one or more MLRA.

The soils and miscellaneous areas in a survey area occur in an orderly pattern that is related to the geology, landforms, relief, climate, and natural vegetation of the area. Each kind of soil and miscellaneous area is associated with a particular kind of landform or with a segment of the landform. By observing the soils and miscellaneous areas in the survey area and relating their position to specific segments of the landform, a soil scientist develops a concept, or model, of how they were formed. Thus, during mapping, this model enables the soil scientist to predict with a considerable degree of accuracy the kind of soil or miscellaneous area at a specific location on the landscape.

Commonly, individual soils on the landscape merge into one another as their characteristics gradually change. To construct an accurate soil map, however, soil scientists must determine the boundaries between the soils. They can observe only a limited number of soil profiles. Nevertheless, these observations, supplemented by an understanding of the soil-vegetation-landscape relationship, are sufficient to verify predictions of the kinds of soil in an area and to determine the boundaries.

Soil scientists recorded the characteristics of the soil profiles that they studied. They noted soil color, texture, size and shape of soil aggregates, kind and amount of rock fragments, distribution of plant roots, reaction, and other features that enable them to identify soils. After describing the soils in the survey area and determining their properties, the soil scientists assigned the soils to taxonomic classes (units). Taxonomic classes are concepts. Each taxonomic class has a set of soil characteristics with precisely defined limits. The classes are used as a basis for comparison to classify soils systematically. Soil taxonomy, the system of taxonomic classification used in the United States, is based mainly on the kind and character of soil properties and the arrangement of horizons within the profile. After the soil

scientists classified and named the soils in the survey area, they compared the individual soils with similar soils in the same taxonomic class in other areas so that they could confirm data and assemble additional data based on experience and research.

The objective of soil mapping is not to delineate pure map unit components; the objective is to separate the landscape into landforms or landform segments that have similar use and management requirements. Each map unit is defined by a unique combination of soil components and/or miscellaneous areas in predictable proportions. Some components may be highly contrasting to the other components of the map unit. The presence of minor components in a map unit in no way diminishes the usefulness or accuracy of the data. The delineation of such landforms and landform segments on the map provides sufficient information for the development of resource plans. If intensive use of small areas is planned, onsite investigation is needed to define and locate the soils and miscellaneous areas.

Soil scientists make many field observations in the process of producing a soil map. The frequency of observation is dependent upon several factors, including scale of mapping, intensity of mapping, design of map units, complexity of the landscape, and experience of the soil scientist. Observations are made to test and refine the soil-landscape model and predictions and to verify the classification of the soils at specific locations. Once the soil-landscape model is refined, a significantly smaller number of measurements of individual soil properties are made and recorded. These measurements may include field measurements, such as those for color, depth to bedrock, and texture, and laboratory measurements, such as those for content of sand, silt, clay, salt, and other components. Properties of each soil typically vary from one point to another across the landscape.

Observations for map unit components are aggregated to develop ranges of characteristics for the components. The aggregated values are presented. Direct measurements do not exist for every property presented for every map unit component. Values for some properties are estimated from combinations of other properties.

While a soil survey is in progress, samples of some of the soils in the area generally are collected for laboratory analyses and for engineering tests. Soil scientists interpret the data from these analyses and tests as well as the field-observed characteristics and the soil properties to determine the expected behavior of the soils under different uses. Interpretations for all of the soils are field tested through observation of the soils in different uses and under different levels of management. Some interpretations are modified to fit local conditions, and some new interpretations are developed to meet local needs. Data are assembled from other sources, such as research information, production records, and field experience of specialists. For example, data on crop yields under defined levels of management are assembled from farm records and from field or plot experiments on the same kinds of soil.

Predictions about soil behavior are based not only on soil properties but also on such variables as climate and biological activity. Soil conditions are predictable over long periods of time, but they are not predictable from year to year. For example, soil scientists can predict with a fairly high degree of accuracy that a given soil will have a high water table within certain depths in most years, but they cannot predict that a high water table will always be at a specific level in the soil on a specific date.

After soil scientists located and identified the significant natural bodies of soil in the survey area, they drew the boundaries of these bodies on aerial photographs and

identified each as a specific map unit. Aerial photographs show trees, buildings, fields, roads, and rivers, all of which help in locating boundaries accurately.

Soil Map

The soil map section includes the soil map for the defined area of interest, a list of soil map units on the map and extent of each map unit, and cartographic symbols displayed on the map. Also presented are various metadata about data used to produce the map, and a description of each soil map unit.

Custom Soil Resource Report
Soil Map

Map Scale: 1:2,890 if printed on A landscape (11" x 8.5") sheet.

N

Meters: 0 40 80 160 240

Feet: 0 100 200 400 600

Map projection: Web Mercator Corner coordinates: WGS84 Edge tics: UTM Zone 11N WGS84

MAP LEGEND

Area of Interest (AOI)

Area of Interest (AOI)

Soils

Soil Map Unit Polygons

Soil Map Unit Lines

Soil Map Unit Points

Special Point Features

Blowout

Borrow Pit

Clay Spot

Closed Depression

Gravel Pit

Gravelly Spot

Landfill

Lava Flow

Marsh or swamp

Mine or Quarry

Miscellaneous Water

Perennial Water

Rock Outcrop

Saline Spot

Sandy Spot

Severely Eroded Spot

Sinkhole

Slide or Slip

Sodic Spot

Spoil Area

Stony Spot

Very Stony Spot

Wet Spot

Other

Special Line Features

Water Features

Streams and Canals

Transportation

Rails

Interstate Highways

US Routes

Major Roads

Local Roads

Background

Aerial Photography

MAP INFORMATION

The soil surveys that comprise your AOI were mapped at 1:24,000.

Warning: Soil Map may not be valid at this scale.

Enlargement of maps beyond the scale of mapping can cause misunderstanding of the detail of mapping and accuracy of soil line placement. The maps do not show the small areas of contrasting soils that could have been shown at a more detailed scale.

Please rely on the bar scale on each map sheet for map measurements.

Source of Map: Natural Resources Conservation Service
Web Soil Survey URL:
Coordinate System: Web Mercator (EPSG:3857)

Maps from the Web Soil Survey are based on the Web Mercator projection, which preserves direction and shape but distorts distance and area. A projection that preserves area, such as the Albers equal-area conic projection, should be used if more accurate calculations of distance or area are required.

This product is generated from the USDA-NRCS certified data as of the version date(s) listed below.

Soil Survey Area: San Diego County Area, California
Survey Area Data: Version 14, Sep 16, 2019

Soil map units are labeled (as space allows) for map scales 1:50,000 or larger.

Date(s) aerial images were photographed: Nov 3, 2014—Nov 22, 2014

The orthophoto or other base map on which the soil lines were compiled and digitized probably differs from the background imagery displayed on these maps. As a result, some minor shifting of map unit boundaries may be evident.

Map Unit Legend

Map Unit Symbol	Map Unit Name	Acres in AOI	Percent of AOI
DaD	Diablo clay, 9 to 15 percent slopes, warm MAAT	8.5	83.0%
DaE2	Diablo clay, 15 to 30 percent slopes, eroded, warm MAAT	1.7	16.9%
LsE	Linne clay loam, 9 to 30 percent slopes	0.0	0.1%
Totals for Area of Interest		**10.2**	**100.0%**

Map Unit Descriptions

The map units delineated on the detailed soil maps in a soil survey represent the soils or miscellaneous areas in the survey area. The map unit descriptions, along with the maps, can be used to determine the composition and properties of a unit.

A map unit delineation on a soil map represents an area dominated by one or more major kinds of soil or miscellaneous areas. A map unit is identified and named according to the taxonomic classification of the dominant soils. Within a taxonomic class there are precisely defined limits for the properties of the soils. On the landscape, however, the soils are natural phenomena, and they have the characteristic variability of all natural phenomena. Thus, the range of some observed properties may extend beyond the limits defined for a taxonomic class. Areas of soils of a single taxonomic class rarely, if ever, can be mapped without including areas of other taxonomic classes. Consequently, every map unit is made up of the soils or miscellaneous areas for which it is named and some minor components that belong to taxonomic classes other than those of the major soils.

Most minor soils have properties similar to those of the dominant soil or soils in the map unit, and thus they do not affect use and management. These are called noncontrasting, or similar, components. They may or may not be mentioned in a particular map unit description. Other minor components, however, have properties and behavioral characteristics divergent enough to affect use or to require different management. These are called contrasting, or dissimilar, components. They generally are in small areas and could not be mapped separately because of the scale used. Some small areas of strongly contrasting soils or miscellaneous areas are identified by a special symbol on the maps. If included in the database for a given area, the contrasting minor components are identified in the map unit descriptions along with some characteristics of each. A few areas of minor components may not have been observed, and consequently they are not mentioned in the descriptions, especially where the pattern was so complex that it was impractical to make enough observations to identify all the soils and miscellaneous areas on the landscape.

The presence of minor components in a map unit in no way diminishes the usefulness or accuracy of the data. The objective of mapping is not to delineate pure taxonomic classes but rather to separate the landscape into landforms or

landform segments that have similar use and management requirements. The delineation of such segments on the map provides sufficient information for the development of resource plans. If intensive use of small areas is planned, however, onsite investigation is needed to define and locate the soils and miscellaneous areas.

An identifying symbol precedes the map unit name in the map unit descriptions. Each description includes general facts about the unit and gives important soil properties and qualities.

Soils that have profiles that are almost alike make up a *soil series*. Except for differences in texture of the surface layer, all the soils of a series have major horizons that are similar in composition, thickness, and arrangement.

Soils of one series can differ in texture of the surface layer, slope, stoniness, salinity, degree of erosion, and other characteristics that affect their use. On the basis of such differences, a soil series is divided into *soil phases*. Most of the areas shown on the detailed soil maps are phases of soil series. The name of a soil phase commonly indicates a feature that affects use or management. For example, Alpha silt loam, 0 to 2 percent slopes, is a phase of the Alpha series.

Some map units are made up of two or more major soils or miscellaneous areas. These map units are complexes, associations, or undifferentiated groups.

A *complex* consists of two or more soils or miscellaneous areas in such an intricate pattern or in such small areas that they cannot be shown separately on the maps. The pattern and proportion of the soils or miscellaneous areas are somewhat similar in all areas. Alpha-Beta complex, 0 to 6 percent slopes, is an example.

An *association* is made up of two or more geographically associated soils or miscellaneous areas that are shown as one unit on the maps. Because of present or anticipated uses of the map units in the survey area, it was not considered practical or necessary to map the soils or miscellaneous areas separately. The pattern and relative proportion of the soils or miscellaneous areas are somewhat similar. Alpha-Beta association, 0 to 2 percent slopes, is an example.

An *undifferentiated group* is made up of two or more soils or miscellaneous areas that could be mapped individually but are mapped as one unit because similar interpretations can be made for use and management. The pattern and proportion of the soils or miscellaneous areas in a mapped area are not uniform. An area can be made up of only one of the major soils or miscellaneous areas, or it can be made up of all of them. Alpha and Beta soils, 0 to 2 percent slopes, is an example.

Some surveys include *miscellaneous areas*. Such areas have little or no soil material and support little or no vegetation. Rock outcrop is an example.

San Diego County Area, California

DaD—Diablo clay, 9 to 15 percent slopes, warm MAAT

Map Unit Setting

National map unit symbol: 2w63f
Elevation: 110 to 910 feet
Mean annual precipitation: 11 to 21 inches
Mean annual air temperature: 58 to 64 degrees F
Frost-free period: 290 to 365 days
Farmland classification: Farmland of statewide importance

Map Unit Composition

Diablo and similar soils: 85 percent
Minor components: 15 percent
Estimates are based on observations, descriptions, and transects of the mapunit.

Description of Diablo

Setting

Landform: Hillslopes
Landform position (two-dimensional): Backslope
Landform position (three-dimensional): Side slope
Down-slope shape: Convex
Across-slope shape: Convex
Parent material: Residuum weathered from calcareous shale

Typical profile

A - 0 to 15 inches: clay
Bkss1 - 15 to 28 inches: clay
Bkss2 - 28 to 40 inches: clay loam
Cr - 40 to 79 inches: bedrock

Properties and qualities

Slope: 9 to 15 percent
Depth to restrictive feature: 39 to 79 inches to paralithic bedrock
Natural drainage class: Well drained
Capacity of the most limiting layer to transmit water (Ksat): Moderately low to moderately high (0.06 to 0.20 in/hr)
Depth to water table: More than 80 inches
Frequency of flooding: None
Frequency of ponding: None
Calcium carbonate, maximum in profile: 5 percent
Available water storage in profile: Moderate (about 6.8 inches)

Interpretive groups

Land capability classification (irrigated): 4e
Land capability classification (nonirrigated): 4e
Hydrologic Soil Group: C
Ecological site: CLAYEY (1975) (R019XD001CA)
Hydric soil rating: No

Minor Components

Altamont

Percent of map unit: 10 percent

Landform: Hillslopes
Landform position (two-dimensional): Backslope
Landform position (three-dimensional): Side slope
Down-slope shape: Convex
Across-slope shape: Convex
Hydric soil rating: No

Linne

Percent of map unit: 3 percent
Landform: Hillslopes
Landform position (two-dimensional): Backslope
Landform position (three-dimensional): Side slope
Down-slope shape: Convex
Across-slope shape: Convex
Hydric soil rating: No

Olephant

Percent of map unit: 2 percent
Landform: Terraces
Landform position (three-dimensional): Tread
Down-slope shape: Concave
Across-slope shape: Concave
Hydric soil rating: No

DaE2—Diablo clay, 15 to 30 percent slopes, eroded, warm MAAT

Map Unit Setting

National map unit symbol: 2w60s
Elevation: 890 to 2,260 feet
Mean annual precipitation: 11 to 27 inches
Mean annual air temperature: 60 to 65 degrees F
Frost-free period: 270 to 365 days
Farmland classification: Not prime farmland

Map Unit Composition

Diablo and similar soils: 85 percent
Minor components: 15 percent
Estimates are based on observations, descriptions, and transects of the mapunit.

Description of Diablo

Setting

Landform: Hillslopes
Landform position (two-dimensional): Backslope
Landform position (three-dimensional): Side slope
Down-slope shape: Convex
Across-slope shape: Convex
Parent material: Residuum weathered from calcareous shale

Typical profile

A - 0 to 15 inches: clay

Bkss1 - 15 to 28 inches: clay
Bkss2 - 28 to 40 inches: clay loam
Cr - 40 to 79 inches: bedrock

Properties and qualities

Slope: 15 to 30 percent
Depth to restrictive feature: 39 to 79 inches to paralithic bedrock
Natural drainage class: Well drained
Capacity of the most limiting layer to transmit water (Ksat): Moderately low to moderately high (0.06 to 0.20 in/hr)
Depth to water table: More than 80 inches
Frequency of flooding: None
Frequency of ponding: None
Calcium carbonate, maximum in profile: 5 percent
Available water storage in profile: Moderate (about 6.8 inches)

Interpretive groups

Land capability classification (irrigated): 4e
Land capability classification (nonirrigated): 4e
Hydrologic Soil Group: C
Ecological site: CLAYEY (1975) (R019XD001CA)
Hydric soil rating: No

Minor Components

Altamont

Percent of map unit: 10 percent
Landform: Hillslopes
Landform position (two-dimensional): Backslope
Landform position (three-dimensional): Side slope
Down-slope shape: Convex
Across-slope shape: Convex
Hydric soil rating: No

Linne

Percent of map unit: 3 percent
Landform: Hillslopes
Landform position (two-dimensional): Backslope
Landform position (three-dimensional): Side slope
Down-slope shape: Convex
Across-slope shape: Convex
Hydric soil rating: No

Olephant

Percent of map unit: 2 percent
Landform: Terraces
Landform position (three-dimensional): Tread
Down-slope shape: Concave
Across-slope shape: Concave
Hydric soil rating: No

LsE—Linne clay loam, 9 to 30 percent slopes

Map Unit Setting

National map unit symbol: hbdt
Elevation: 100 to 2,000 feet
Mean annual precipitation: 12 to 20 inches
Mean annual air temperature: 57 to 63 degrees F
Frost-free period: 200 to 330 days
Farmland classification: Not prime farmland

Map Unit Composition

Linne and similar soils: 85 percent
Minor components: 15 percent
Estimates are based on observations, descriptions, and transects of the mapunit.

Description of Linne

Setting

Landform: Hillslopes
Landform position (two-dimensional): Backslope
Landform position (three-dimensional): Side slope
Down-slope shape: Convex
Across-slope shape: Convex
Parent material: Residuum weathered from calcareous sandstone and shale

Typical profile

H1 - 0 to 15 inches: clay loam
H2 - 15 to 37 inches: clay loam, loam
H2 - 15 to 37 inches: weathered bedrock
H3 - 37 to 41 inches:

Properties and qualities

Slope: 9 to 30 percent
Depth to restrictive feature: 20 to 40 inches to paralithic bedrock
Natural drainage class: Well drained
Runoff class: Very high
Capacity of the most limiting layer to transmit water (Ksat): Moderately high (0.20 to 0.57 in/hr)
Depth to water table: More than 80 inches
Frequency of flooding: None
Frequency of ponding: None
Calcium carbonate, maximum in profile: 10 percent
Salinity, maximum in profile: Nonsaline to very slightly saline (0.0 to 2.0 mmhos/cm)
Available water storage in profile: High (about 10.2 inches)

Interpretive groups

Land capability classification (irrigated): 4e
Land capability classification (nonirrigated): 4e
Hydrologic Soil Group: C

Ecological site: CLAYEY (1975) (R019XD001CA)
Hydric soil rating: No

Minor Components

Diablo
Percent of map unit: 5 percent
Hydric soil rating: No

Huerhuero
Percent of map unit: 5 percent
Hydric soil rating: No

Altamont
Percent of map unit: 5 percent
Hydric soil rating: No

References

American Association of State Highway and Transportation Officials (AASHTO). 2004. Standard specifications for transportation materials and methods of sampling and testing. 24th edition.

American Society for Testing and Materials (ASTM). 2005. Standard classification of soils for engineering purposes. ASTM Standard D2487-00.

Cowardin, L.M., V. Carter, F.C. Golet, and E.T. LaRoe. 1979. Classification of wetlands and deep-water habitats of the United States. U.S. Fish and Wildlife Service FWS/OBS-79/31.

Federal Register. July 13, 1994. Changes in hydric soils of the United States.

Federal Register. September 18, 2002. Hydric soils of the United States.

Hurt, G.W., and L.M. Vasilas, editors. Version 6.0, 2006. Field indicators of hydric soils in the United States.

National Research Council. 1995. Wetlands: Characteristics and boundaries.

Soil Survey Division Staff. 1993. Soil survey manual. Soil Conservation Service. U.S. Department of Agriculture Handbook 18. http://www.nrcs.usda.gov/wps/portal/nrcs/detail/national/soils/?cid=nrcs142p2_054262

Soil Survey Staff. 1999. Soil taxonomy: A basic system of soil classification for making and interpreting soil surveys. 2nd edition. Natural Resources Conservation Service, U.S. Department of Agriculture Handbook 436. http://www.nrcs.usda.gov/wps/portal/nrcs/detail/national/soils/?cid=nrcs142p2_053577

Soil Survey Staff. 2010. Keys to soil taxonomy. 11th edition. U.S. Department of Agriculture, Natural Resources Conservation Service. http://www.nrcs.usda.gov/wps/portal/nrcs/detail/national/soils/?cid=nrcs142p2_053580

Tiner, R.W., Jr. 1985. Wetlands of Delaware. U.S. Fish and Wildlife Service and Delaware Department of Natural Resources and Environmental Control, Wetlands Section.

United States Army Corps of Engineers, Environmental Laboratory. 1987. Corps of Engineers wetlands delineation manual. Waterways Experiment Station Technical Report Y-87-1.

United States Department of Agriculture, Natural Resources Conservation Service. National forestry manual. http://www.nrcs.usda.gov/wps/portal/nrcs/detail/soils/home/?cid=nrcs142p2_053374

United States Department of Agriculture, Natural Resources Conservation Service. National range and pasture handbook. http://www.nrcs.usda.gov/wps/portal/nrcs/detail/national/landuse/rangepasture/?cid=stelprdb1043084

United States Department of Agriculture, Natural Resources Conservation Service. National soil survey handbook, title 430-VI. http://www.nrcs.usda.gov/wps/portal/nrcs/detail/soils/scientists/?cid=nrcs142p2_054242

United States Department of Agriculture, Natural Resources Conservation Service. 2006. Land resource regions and major land resource areas of the United States, the Caribbean, and the Pacific Basin. U.S. Department of Agriculture Handbook 296. http://www.nrcs.usda.gov/wps/portal/nrcs/detail/national/soils/?cid=nrcs142p2_053624

United States Department of Agriculture, Soil Conservation Service. 1961. Land capability classification. U.S. Department of Agriculture Handbook 210. http://www.nrcs.usda.gov/Internet/FSE_DOCUMENTS/nrcs142p2_052290.pdf