San Simeon Community Services District

Community Water Tank Project
Initial Study and Mitigated Negative Declaration

Prepared for:
San Simeon Community Services District
111 Pico Avenue
San Simeon, CA 93452

Prepared by:
Oliveira Environmental Consulting, LLC
3155 Rose Avenue
San Luis Obispo, CA 93401
www.olive-env.com

September 2019

San Simeon Community Services District

Community Water Tank Project

Prepared for:

San Simeon Community Services District
111 Pico Avenue
San Simeon, CA 93452
Contact: Charlie Grace, General Manager
805-927-4778; cgrace@graceenviro.com
www.sansimeoncsd.com

Prepared by:

Oliveira Environmental Consulting, LLC
3155 Rose Avenue
San Luis Obispo, CA 93401
Contact: Jeff Oliveira, Principal Environmental Planner
805-234-7393; jeffo@olive-env.com
www.olive-env.com

September 2019

TABLE OF CONTENTS

Section **Page**

Table of Contents..... 1

Environmental Factors Potentially Effected (IS Checklist Summary).....2

1. Project Description.....3

2. Project Background..... 5

3. Project Location..... 6

4. Existing Setting..... 6

5. Environmental Analysis..... 6

I. Aesthetics..... 7
II. Agricultural Resources..... 10
III. Air Quality/Greenhouse Gas Emissions/Energy..... 11
IV. Biological Resources..... 18
V. Cultural Resources.....32
VI. Geology and Soils..... 36
VII. Hazards and Hazardous Materials.....42
VIII. Noise.....44
IX. Population and Housing..... 46
X. Public Services..... 47
XI. Recreation..... 48
XII. Transportation and Circulation..... 49
XIII. Wastewater..... 50
XIV. Water.....51
XV. Land Use..... 53
XVI. Mandatory Findings of Significance..... 54

6. References and Resources..... 54

7. Mitigation Monitoring and Reporting Program..... 56

Tables:
Table 1. Estimated Construction Emissions..... 14
Table 2. Native Grassland Erosion Control Seed Mix.....32

Attachments:
Attachment A: Figure 1, Site Location. Figure 2, Project Site Plan/Aerial Overlay
Attachment B: Project Visual Simulations
Attachment C: Project Site Plans
Attachment D: Biological Resources Assessment and Rare Plant Surveys
Attachment E: Geotechnical Report

SAN SIMEON COMMUNITY SERVICES DISTRICT
INITIAL STUDY AND ENVIRONMENTAL CHECKLIST

Proposed Project: Community Water Tank Project

ENVIRONMENTAL FACTORS POTENTIALLY AFFECTED: The proposed project could have a "Potentially Significant Impact" for at least one of the environmental factors checked below. Please refer to the attached pages for a discussion on mitigation measures or project revisions to either reduce these impacts to less than significant levels or require further study.

☒ Aesthetics	☒ Geology and Soils	☐ Recreation
☐ Agricultural Resources	☐ Hazards/Hazardous Materials	☐ Transportation/Circulation
☒ Air Quality	☒ Noise	☐ Wastewater
☒ Biological Resources	☐ Population/Housing	☐ Water/Hydrology
☐ Cultural Resources	☐ Public Services/Utilities	☐ Land Use

DETERMINATION: (To be completed by the Lead Agency)

On the basis of this initial evaluation, the San Simeon Community Services District finds that:

☐ The proposed project COULD NOT have a significant effect on the environment, and a NEGATIVE DECLARATION will be prepared.

☒ Although the proposed project could have a significant effect on the environment, there will not be a significant effect in this case because revisions in the project have been made by or agreed to by the project proponent. A MITIGATED NEGATIVE DECLARATION will be prepared.

☐ The proposed project MAY have a significant effect on the environment, and an ENVIRONMENTAL IMPACT REPORT is required.

☐ The proposed project MAY have a "potentially significant impact" or "potentially significant unless mitigated" impact on the environment, but at least one effect 1) has been adequately analyzed in an earlier document pursuant to applicable legal standards, and 2) has been addressed by mitigation measures based on the earlier analysis as described on attached sheets. An ENVIRONMENTAL IMPACT REPORT is required, but it must analyze only the effects that remain to be addressed.

☐ Although the proposed project could have a significant effect on the environment, because all potentially significant effects (a) have been analyzed adequately in an earlier EIR or NEGATIVE DECLARATION pursuant to applicable standards, and (b) have been avoided or mitigated pursuant to that earlier EIR or NEGATIVE DECLARATION, including revisions or mitigation measures that are imposed upon the proposed project, nothing further is required.

Jeff Oliveira, Principal Environmental Planner		8/27/19
Prepared by (Print)	Signature	Date
Charlie Grace, SSCSD General Manager		8/27/19
Lead Agency Rep. (Print)	Signature	Date

Project Environmental Analysis: The San Simeon Community Services District (SSCSD) environmental review process incorporates all of the requirements for completing the Initial Study as required by the California Environmental Quality Act (CEQA) and the CEQA Guidelines. The Initial Study includes on-site inspection of the project site and surroundings and a detailed review of the information in the file for the project. In addition, available background information is reviewed for each project. Relevant information regarding soil types and characteristics, geologic information, significant vegetation and/or wildlife resources, water availability, wastewater disposal services, existing land uses and surrounding land use categories and other information relevant to the environmental review process are evaluated for each project. The SSCSD uses the Initial Study checklist to summarize the results of the research accomplished during the project environmental review.

Persons, agencies or organizations interested in obtaining more information regarding the environmental review process for a project should contact the San Simeon Community Services District at 111 Pico Avenue, San Simeon, CA 93452 (805-927-4778).

1. PROJECT DESCRIPTION: Based on the project site plans and details from the project files the proposed San Simeon Community Services District (SSCSD) Community Water Tank Project includes the following details:

Existing Community Water Reservoir Details:

- The current water storage facility includes a buried and covered reservoir with a 150,000 gallon storage capacity;
- The reservoir is of concrete construction and lined;
- The storage facility is not part of a natural water feature (i.e., dammed stream or open reservoir) and is covered and does not serve any natural function;
- The current tank is buried, with only approximately 2-3 feet of the tank being above- ground;
- The current water storage facility is located just east of the SSCSD offices, on a part of the Hearst Ranch, and is fenced and paved (approximately 50 feet x 50 feet in size);
- Water quality at the current facility is regulated by the State Water Resources Control Board Division of Drinking Water; and
- The current water demand for the community of San Simeon is approximately 90,000 gallons per day.

Proposed Water Tank Construction Details (Please refer to the Attached Site Plans):

- The proposed project would involve installation of two new water storage tanks at 400,000 gallons each, for a total water storage capacity of 800,000 gallons;
- Each new water tank would be approximately 25.5 feet tall and have a diameter of 50 feet total;
- The new water tanks would be located approximately 530 feet northeast of the existing water reservoir, up-slope from the existing reservoir;

- The new water tanks would provide increased water storage capacity which is intended to help satisfy fire flow concerns discussed in the 2018 SSCSD Water System Master Plan;
- The existing water reservoir would remain in-place for use in the storage of recycled water;
- The proposed new tanks would be located on a new concrete pad approximately 175 feet long by 87 feet wide. With approximately 300 feet of proposed utility trenching in native soils, the total project area of disturbance would be approximately 29,410 square feet (0.675 acres) ;
- Total grading volume proposed = 4,808 cubic yards of cut material (no fill proposed);
- The tank pad would be graded into the existing on-site slope resulting in 2:1 finished slopes along the tank pad. As a result, the tank pad floor would be located in a small basin that would be 11.8 feet tall at the southeast end, 2.75 feet tall at the northwest end, 8.61 feet on the west side, and 7.83 feet tall on the east side;
- The proposed project would increase community water storage capacity (as required by CalFire), but would not result in increased water production or pumping;
- The proposed project would include infrastructure improvements for community potable water transmission. This includes proposed potable water system pipeline improvements, which would include the following details:

    - Addition of a new water pipeline from the proposed water tank site to Pico Avenue terminating at Avonne Avenue;
    - An expansion and extension of the water pipeline would extend southeast from the SSCSD office location (at the northwest terminus of Pico Avenue) to the Jasper Way cul-de-sac; and
    - An additional water pipeline would be installed near the Avonne Avenue cul-de- sac and extend south to the existing Motel 6 parking lot, terminating at Castillo Drive.

With the exception of the approximately 300 feet of pipeline connecting the proposed new water tanks to the existing water reservoir, all pipeline improvements would be installed within existing utility easements, utility conduits and otherwise previously disturbed areas. Pipeline improvements within existing utility easements and previously disturbed utility trenches would not result in significant environmental impacts. It is anticipated that the existing water reservoir would remain in-place for use in the storage of recycled water.

Please refer to the 2018 SSCSD Water System Master Plan for a detailed description of the proposed water tank project, including the proposed pipeline improvements. The Master Plan can be found at: http://www.sansimeoncsd.com/pdf/board_meetings/San%20Simeon%20CSD%20Master%20Plan%20DRAFT%2004052018.pdf

As with the existing community water reservoir, the new water tanks will be located on a portion of the Hearst Ranch, which is currently under a Conservation Easement. A Letter of Intent between Hearst Holdings, Inc. and the SSCSD describing the proposed new community water tanks has been approved by both parties (December 21, 2018) and complies with the existing easement.

Please refer to the attached project Site Plans for a detailed schematic of the proposed water tank construction, including pad and tank construction as well as the proposed potable water pipeline

improvements and connections to the existing community water infrastructure. Please refer to Figure 2, Site Plan/Aerial Overlay, for a detailed depiction of the proposed project site on the landscape.

2. PROJECT BACKGROUND: The San Simeon Community Services District provides potable water and recycled water service to the surrounding community, as well as wastewater treatment services. As discussed in the 2018 Master Plan, the SSCSD manages two primary production wells (as well as a third well that is leased and used on an infrequent basis), a reverse osmosis treatment unit that is used during high chloride events within the groundwater basin, the existing 150,000 gallon storage reservoir discussed above, a potable water distribution network consisting of 293 active customer accounts (as of June 2017), a side stream recycled water treatment system, a gravity sewer system consisting of approximately 1.6 miles of small diameter (6- and 8-inch) pipelines, and a wastewater treatment plant that treats both the community's wastewater and wastewater from the nearby Hearst San Simeon Historical Monument.

Community Water Storage Improvement Purpose and Need: As discussed in the 2018 San Simeon CSD Master Plan, water storage facilities are sized based on three components of storage, described as follows:

- Operational Storage. This covers the day to day demands of the existing system that exceed the average demands of the system (peak and maximum day for example). For San Simeon, this was calculated at 25% of the maximum day demand (or 33,250 gallons).

- Emergency Storage. This is the storage that is present in a water tank for short-term emergency events such as extended power loss or events that would prevent the system from operating under normal conditions and is intended to provide basic sanitary needs for the community for up to 48 hours. Based on the calculations in the Master Plan, the goal is to provide emergency storage equal to 50% of the maximum day demand or 66,500 gallons.

- Fire Storage. This is the volume of water sufficient enough to provide the required system fire flow as stated in the California Fire Code. Table BB105.1 of the CFC provides the required fire flow based on the type of construction of a structure and the square footage.

Based on the analysis of the current SSCSD potable water system and discussions with Cal Fire representatives as reported in the 2018 Master Plan, it was determined that existing potable water storage volume availability is far below what is required for fire suppression. As such, the purpose of the proposed project is to help bring the community water storage capacity up to meet fire suppression needs.

According to consultations with Cal Fire under the community Master Plan and a review of Table BB105.1 of the California Fire Code (2016), the volume of water needed for community fire suppression was determined to be 6,000 gallons per minute for a duration of 4 hours. This works out to 1.44 million gallons of required fire suppression storage. As with many communities, the fire storage requirement far exceeds the requirements of the other two components (operational and emergency storage) discussed above.

The total storage required for the community based on all three components of water storage is 1.54 million gallons (MG). The proposed project would result in the total storage capacity of 800,000 gallons, representing the initial step towards meeting the water storage needs.

Future water storage construction has not been planned or designed and funding has not been secured for additional water storage; as such, it would be premature and speculative to include a second phase of construction in this environmental impact analysis. However, if future water tanks are proposed at the current project site, it is anticipated that the future CEQA analysis will tier off of this Mitigated Negative Declaration pursuant to CEQA Guidelines Section 15152.

3. PROJECT LOCATION: The proposed project site is located on an approximately 3.6-acre agricultural parcel on the Hearst Ranch, northeast of the Community of San Simeon, on the north coast of San Luis Obispo County, CA (APN: 013-011-024). The proposed water tanks would be located up-slope from and approximately 530 feet northeast of the existing water reservoir accessed at the northern terminus of Pico Avenue. The proposed construction would be located on a 175 foot by 87 foot pad and would include approximately 300 feet of utility trenching in native soil (the remainder of utility improvements would be located within existing previously disturbed utility easements). The project site is bound by open space and agricultural use (livestock grazing).

The project site has the following approximate latitude/longitude coordinates: North: 35.6199°, West: -121.1414°. Please refer to Figure 1, Project Site Location/Vicinity, for a depiction of the proposed project location.

4. EXISTING SETTING: The existing site is adjacent to and northeast of the Community of San Simeon, northeast of Highway 1. The project site is regularly grazed and contains pipe fencing creating two horse paddocks. The site is bounded to the north and west by open agricultural space and Monterey pine forests, and an equestrian ranch located off Pico Creek Road to the north. Pico Creek bends around the area just beyond the ranch. On the south and east, the site is surrounded by grassland that is used for livestock grazing. The community of San Simeon is located to the south of the project site. The area surrounding the community is primarily undeveloped coastal plain, with open space owned by California State Parks and the Hearst Ranch.

5. ENVIRONMENTAL ANALYSIS: During the Initial Study process, several issues were identified as having potentially significant environmental effects (see following Initial Study). Impacts identified as "Impact can & will be mitigated" are considered to be significant but mitigable impacts. Those potentially significant items associated with the proposed uses can be minimized to less than significant levels. Please refer to the Initial Study Checklist and environmental impact analysis below.

INITIAL STUDY CHECKLIST

I.	AESTHETICS - *Will the project:*	Potentially Significant	Impact can & will be mitigated	Insignificant Impact	Not Applicable
a)	*Create an aesthetically incompatible site open to public view?*	☐	☐	☒	☐
b)	*Introduce a use within a scenic view open to public view?*	☐	☐	☒	☐
c)	*Change the visual character of an area?*	☐	☐	☒	☐
d)	*Create glare or night lighting, which may affect surrounding areas?*	☐	☒	☐	☐
e)	*Impact unique geological or physical features?*	☐	☐	☒	☐
f)	*Other:* _____	☐	☐	☐	☒

Setting. San Simeon is a small, approximately 100-acre, unincorporated community situated on the north coast of San Luis Obispo County, CA, and is situated along a portion of State Highway 1. The San Simeon community is bordered on the east by open space owned by the Hearst Corporation, on the north and south sides by State Parks property, and by the Pacific Ocean to the west.

The community is located on a coastal plain, bordered by the Pacific Ocean and the Santa Lucia mountain range on the east. Pico Creek is a perennial stream that borders the community to the north. The groundwater basin associated with the creek is the sole source of potable water for the community. The community has a residential and commercial component focusing on visitor services and tourism, much of which is attracted to the area by the nearby Hearst Castle. There are no industrial uses within the community.

The community is governed by a five-member elected San Simeon Community Services District Board of Directors. San Simeon's development occurred primarily in the 1960s and 70s. However, growth in recent years has been halted under a growth moratorium due to the shortage of potable water supply. Originally called San Simeon Acres, the community water and wastewater systems have been developed over many decades based on the originally purchased infrastructure.

The community weather pattern is relatively cool. San Simeon receives approximately 20 inches on average of rainfall. According to the 2010 census, San Simeon Community Services District has 462 residents, living in approximately 301 dwelling units. The commercial portion of the community is focused on tourism which represents a major component of the community water usage and wastewater production. There are approximately 706 hotel/motel units in SSCSD's service area according to the previously prepared Master Plan document (2006).

The proposed project site is located on an approximately 3.6-acre agricultural parcel on the Hearst Ranch, northeast of the Community of San Simeon. The project site is void of trees or shrubs, it is regularly grazed and contains pipe fencing creating two horse paddocks. The site is bounded to the north and west by open agricultural space and Monterey pine forests, and an equestrian ranch located off Pico Creek Road to the north. Pico Creek bends around the area just beyond the ranch. On the south and east, the site is surrounded by grassland that is used for livestock grazing.

Although the project site is blocked from public view by intervening topography, development of the approximately 25-foot tall proposed water tanks has the potential to be intermittently visible from public vantage points, primarily from travelers along Highway 1. However, development of the proposed water tanks would not obstruct or silhouette against any ridgelines.

Impact. As the overarching policy document guiding development for the community, the County of San Luis Obispo General Plan contains policies to ensure that development is compatible with the existing visual context. The County's Open Space and Conservation Element include policies to minimize visual impacts on surrounding natural landscapes and scenic views. In addition, the County's Zoning Code and Design Guidelines provide guidance on structural design requirements to ensure compatibility with surrounding land uses.

The proposed project site lies over a small ridgeline and is effectively blocked from view from public vantage points. However, development of the proposed 25-foot tall/50-foot diameter water tanks could have the potential to be visible from travelers along Highway 1 in the vicinity of the Pico Avenue intersection and the Pico Creek Bridge. Highway 1 is considered to be a scenic corridor under the County General Plan Conservation and Open Space Element and development in the vicinity requires a visual impact analysis.

<u>Photosimulation and Visual Analysis</u>
In order to provide the required visual assessment, a viewshed photosimulation of the proposed water tank project was prepared by Steve Puglisi Architects, Inc. (November 2018).

The photosimulation and visual analysis utilized topographic mapping obtained from the Department of Transportation (CalTrans) showing the elevations of Highway 1 from 500 feet north of the Pico Creek Bridge to 1,500 feet south of the Bridge. This information was combined with the topographic survey prepared for the proposed project. This data was combined into a 3-dimensional model and overlaid onto a Google Earth model and terrane mapping showing Highway 1 and the proposed water tank site. It is important to note that, according to the project site plans, the water tank pad would be built below-grade, reducing the elevation and profile of the new tanks.

The topographic and project site mapping details were used to create a virtual 3D "drive by" along Highway 1 that was used to determine the most prominent critical viewing areas from the scenic corridor. Four locations were chosen to represent the most prominent critical viewing areas of the project site and photos were taken at each location in order to pinpoint the exact opportunities for viewing the project development. The proposed water tanks were placed onto the landscape at the planned elevations utilizing the topographic data and superimposed into the site photos.

For the purpose of comparison, the analysis includes two photosimulations for each of the four critical viewing areas (please refer to Attachment B). As shown in Attachment B, the simulation shows the water tanks on the landscape without vegetation or intervening structures, the other photosimulation shows the same tanks superimposed onto the corresponding site photo showing existing vegetation and community structures. Red arrows are used to show the location of the project site within each photo since it cannot be seen clearly from any public vantage point.

Please refer to the attached SSCSD Water Tank Project Photosimulation and Visual Analysis (Attachment B) for a depiction of the four critical viewing areas with superimposed water tanks.

The result of the visual simulation shows that the proposed water tanks would be almost completely shielded from public views due to intervening topography, vegetation, and existing structural development within the community. The only other public vantage point with the potential for views of the site would be from Jasper Avenue, along the northeastern boundary of the community. Similarly, views from this vantage point would be completely blocked by intervening topography.

Because the proposed water tank construction would be blocked from public views, visual impacts and impacts to views from the scenic Highway 1 corridor would be considered less than significant.

However, the current project site is undeveloped and the introduction of the proposed project has the potential to result in significant but mitigable impacts related to new nighttime lighting and glare.

Mitigation/Conclusion. In order to reduce nighttime lighting and glare impacts to less than significant levels the following shall be required:

AES-1. The following project features shall be required:

- Project outdoor lighting shall be limited to the minimum required for security and safety;
- Outdoor lighting shall be of a minimal wattage required for security and safety;
- The height of outdoor light fixtures shall be limited to the minimum height allowed;
- Outdoor light fixtures shall include a solid/metal hood to direct light downward and shall be designed to avoid the spilling of light off-site; and
- The tanks shall include a painting schematic that shows the application of a color palate that disguises and blends the tanks into the natural environmental to the extent feasible.

Implementation of the above measures will reduce impacts to less than significant levels.

II. AGRICULTURAL RESOURCES - *Will the project:*	Potentially Significant	Impact can & will be mitigated	Insignificant Impact	Not Applicable
a) Convert prime agricultural land to non-agricultural use?	☐	☐	☐	☒
b) Impair agricultural use of other property or result in conversion to other uses?	☐	☐	☐	☒
c) Conflict with existing zoning or Williamson Act program?	☐	☐	☐	☒
d) Other: _____	☐	☐	☐	☒

Setting. As discussed in the project Biological Resources Assessment (Kevin Merk Associates, December 24, 2018), the project site is located above the existing SSCSD water reservoir on a coastal terrace situated in the foothills below the western flank of the Santa Lucia Range. Elevations on the property range from approximately 77 to 194 feet (23-59 meters). The site includes an unpaved road that provides access to the existing SSCSD reservoir structure and to a cluster of satellite dishes to the northeast of the project area.

According to the Natural Resource Conservation Service soils map, the project site consists of the Conception loam (5-9% slopes) soil type. This is a gently sloping loamy claypan soil and is very poorly drained. The soil has moderate erodibility and low shrink-swell characteristics with potential septic system constraints due to slow percolation. This soil is considered Class III without irrigation and Class II when irrigated.

The site is currently part of the Hearst Ranch and also includes a pipe fence surrounding two horse paddocks. There is bare ground and disturbed areas within the interior fence line where there is a water trough shared by both paddocks. The site is actively grazed by horses. The SSCSD maintains a Letter of Intent with the Hearst Corporation for operation of the existing community water reservoir and for the construction of the proposed water tank project.

Impact. The project site is zoned Agriculture and Residential Multi Family and is part of the Hearst Ranch and is used for livestock grazing and contains a pipe-fence horse corral. The SSCSD has an approved Letter of Intent agreement with the Hearst Corporation that will allow development of the proposed water tank project. The proposed tank pad is relatively small (175 feet by 85 feet), and is located adjacent to the existing community water reservoir, minimizing the need for trenching in undisturbed soils. Development of the proposed project has been coordinated with the Hearst Corporation and would not significantly impact the agricultural operations of the Hearst Ranch.

Mitigation/Conclusion. No mitigation measures are necessary.

III.	AIR QUALITY/GREENHOUSE GAS EMISSIONS/ENERGY - *Will the project:*	Potentially Significant	Impact can & will be mitigated	Insignificant Impact	Not Applicable
a)	*Violate any state or federal ambient air quality standard, or exceed air quality emission thresholds as established by the applicable air quality district?*	☐	☐	☒	☐
b)	*Expose any sensitive receptor to substantial air pollutant concentrations?*	☐	☒	☐	☐
c)	*Create or subject individuals to air pollution emissions or objectionable odors?*	☐	☐	☒	☐
d)	*Be inconsistent with an applicable Air Quality Management Plan?*	☐	☐	☒	☐
e)	*Result in a cumulatively considerable net increase of any criteria pollutant for which the project region is nonattainment under an applicable federal or state ambient air quality standards that are due to increased energy use or traffic generation, or intensified land use change?*	☐	☐	☒	☐
GREENHOUSE GASSES					
f)	*Generate greenhouse gas emissions, either directly or indirectly, that may have a significant impact on the environment?*	☐	☐	☒	☐
g)	*Conflict with an applicable plan, policy or regulation adopted for the purpose of reducing the emissions of greenhouse gases.*	☐	☐	☒	☐
ENERGY					
h)	*Result in a potentially significant environmental impact due to wasteful, inefficient, or unnecessary consumption of energy resources, during project construction or operation?*	☐	☐	☒	☐
i)	*Conflict with or obstruct a state or local plan for renewable energy or energy efficiency?*	☐	☐	☒	☐
j)	*Other:* _____	☐	☐	☐	☒

Setting. San Luis Obispo County is part of the South Central Coast Air Basin, which also includes Santa Barbara and Ventura Counties. The area is influenced by its proximity to the Pacific Ocean. Air quality in the San Simeon region of San Luis Obispo County is characteristically different than other regions of the County (i.e., the Upper Salinas River Valley and the East County Plain), although the physical features that divide them provide only limited barriers to transport pollutants between regions.

Both the US Environmental Protection Agency (EPA) and the California Air Resources Board (CARB) have established ambient air quality standards for common pollutants. These ambient air quality standards are levels of contaminants representing safe levels that avoid specific adverse health effects associated with each pollutant. The ambient air quality standards cover what are called "criteria" pollutants because the health and other effects of each pollutant are described in criteria documents. Areas that meet ambient air quality standards are classified as attainment areas, while areas that do not meet these standards are classified as nonattainment areas. San Simeon is currently designated as nonattainment for the state and federal ambient air quality standards for ground-level ozone and $PM_{2.5}$ as well as the state standards for PM_{10}.

Locally, the Air Pollution Control District (APCD) has developed and updated their CEQA Air Quality Handbook (2012) to evaluate project specific impacts and help determine if air quality mitigation measures are needed, or if potentially significant impacts could result. To evaluate long-term emissions, cumulative effects, and establish countywide programs to reach acceptable air quality levels, a Clean Air Plan has been adopted for the County (prepared by APCD).

In San Luis Obispo County, ozone and PM_{10} are the pollutants of main concern, since exceeding the state health-based standards for those pollutants are experienced in certain parts of the air basin in most years. For this reason, the County of San Luis Obispo is designated nonattainment for the one-hour California Ambient Air Quality Standards (CAAQS) for ozone and the CAAQS for respirable particulate matter (PM_{10}). The County is designated attainment for national ambient air quality standards (NAAQS).

Naturally occurring asbestos (NOA) has been identified by the state Air Resources Board as a toxic air contaminant. Serpentine and ultramafic rocks are very common throughout California and may contain naturally occurring asbestos. However, the San Luis Obispo County APCD has recently reviewed and updated their NOA policy and current mapped NOA data-set and combined it with the County serpentine map. As a result, the project site in the community of San Simeon was determined to fall outside of the NOA occurrence buffer.

<u>Construction Generated Emissions</u>

Construction-generated emissions are short term and of temporary duration, lasting only as long as construction activities occur, but possess the potential to represent a significant air quality impact. The construction of the proposed project would result in the temporary generation of emissions resulting from site preparation and grading, as well as from motor vehicle exhaust associated with construction equipment and the movement of equipment across unpaved surfaces and worker trips. Emissions of airborne particulate matter are largely dependent on the amount of ground disturbance associated with site preparation activities.

Greenhouse Gas Emissions

Data compiled by the United Nations Framework Convention on Climate Change indicates that, in 2010, total worldwide greenhouse gas (GHG) emissions were estimated to be 48,629 million metric tons of carbon dioxide equivalent (MMTCO2e), including emissions/removals from land use, land use change, and forestry; greenhouse gas emissions in the U.S. were 6,809 MMTCO2e, and emissions in California were 450 MMTCO2e.

Prominent GHG emissions contributing to the greenhouse effect are carbon dioxide (CO_2), methane (CH_4), nitrous oxide (N_2O), hydrofluorocarbons (HFCs), perfluorocarbons (PFCs), and sulfur hexafluoride (SF6). GHG emissions in excess of natural ambient concentrations are responsible for intensifying the greenhouse effect and have led to a trend of global climate change or global warming. Global sources of GHG emissions include fossil fuel combustion in both stationary and mobile sources, fugitive emissions from landfills, wastewater treatment, agricultural sources, deforestation, high global warming potential (GWP) gases from industrial and chemical sources, and other activities.

While California's greenhouse gas emissions inventory is large, it has low emissions per capita. California ranks fourth lowest of the 50 states in CO_2 emissions per capita. The largest source of greenhouse gases in California is transportation. According to the most recent ARB Scoping Plan Inventory (2017) transportation contributed an average of 41% of the State's total greenhouse gas emissions between 2000 and 2017. Industrial emissions generation was the second-largest source at 24%.

Statewide legislation, rules and regulations that apply to GHG emissions associated with the project setting include the Sustainable Communities and Climate Protection Act of 2008 (Senate Bill [SB] 375), the Global Warming Solutions Act of 2006 (Assembly Bill [AB] 32), Advanced Clean Cars Rule, Low Carbon Fuel Standard, Renewable Portfolio Standard, California Building Codes, and recent amendments to the California Environmental Quality Act (CEQA) pursuant to SB 97 with respect to analysis of GHG emissions and climate change impacts.

The California Air Resources Board (CARB), the California Environmental Protection Agency, San Luis Obispo County APCD and other governmental agencies with jurisdiction have developed guidelines and thresholds to address a project's cumulative contribution to GHG in the South Central Coast Air Basin. In order to assess GHG impacts, the APCD produced the "Greenhouse Gas Thresholds and Supporting Evidence" publication (March 28, 2012), which addresses GHG emission thresholds for significance.

The San Luis Obispo County APCD is the agency primarily responsible for ensuring that NAAQS and California ambient air quality standards (CAAQS) are not exceeded and that air quality conditions are maintained in the region. The County of San Luis Obispo APCD adopted the Clean Air Plan in January 1992; the Plan was updated in 1998, and again in 2001. The Clean Air Plan is a comprehensive planning document designed to reduce emissions from traditional industrial and commercial sources, as well as from motor vehicle use. The purpose of the County's Clean Air Plan is to address the attainment and maintenance of state and federal ambient air quality standards by following a comprehensive set of emission control measures within the Plan.

Impact. Temporary impacts from the project, including but not limited to excavation and construction activities, vehicle emissions from heavy duty equipment, have the potential to create dust and emissions that exceed air quality standards during construction for temporary and intermediate periods.

Construction Emissions

Construction activities can generate fugitive dust, which could be a nuisance to local residents and businesses in close proximity to the proposed construction site. The proposed project is not expected to generate construction emissions in excess of the thresholds approved by the APCD [Ozone Precursors (ROG + NO_x) = 137 lbs. /day or 2.5 tons for projects lasting up to one quarter; Diesel Particulate Matter (DPM) = 7 lbs. /day or 0.13 tons for projects lasting up to one quarter; Fugitive Particulate Matter (PM_{10}) = 2.5 tons for projects lasting up to one quarter]. Because the project is within 1,000 feet of sensitive receptors, impacts related to fugitive dust emissions during proposed construction activities are considered significant but mitigable.

As proposed, the project would result in the disturbance of approximately 29,410 square feet (0.675 acres), which would include moving a total of approximately 4,808 cubic yards of cut (no fill proposed). This will result in the creation of construction dust, as well as short- and long-term vehicle emissions.

Based on Table 2-1 and 2-2 of the APCD CEQA Air Quality Handbook, estimated construction related emissions are as follows.

Table 1. Estimated Construction Emissions

Pollutant	Rate Factors	Total Estimated Emissions	APCD Quarterly Threshold	Threshold Exceeded?
ROG + NO_x	(Grading Volume x 0.0203) + (Grading Volume x 0.0935)	547.150 lbs.	5,000 lbs. (2.5 tons)	No
Diesel Particulate Matter (DPM)	Grading Volume x 0.0049	23.559 lbs.	260 lbs. (0.13 tons)	No
Fugitive Particulate Matter (PM_{10})	(0.349 acres) x 0.75 tons/acre/month of activity	0.506 tons	2.5 tons	No

Rate Factors and APCD Quarterly Thresholds from Tables 2-1 and 2-2 of APCD Air Quality Handbook (2012).

As shown above, the project would not exceed APCD's construction emissions thresholds for DPM, PM_{10}, or ROG + NO_x. However; the project's construction activities would result in short-term emissions from heavy equipment and motor vehicles, as well as fugitive dust (PM_{10}) emissions that could affect localized air quality. As described in the SLOAPCD CEQA Air Quality Handbook (April 2012), any project with grading areas greater than 4.0 acres or that are within 1,000 feet of any sensitive receptor to implement standard mitigation measures. Because the project disturbance has the potential to be within 1,000 feet of sensitive receptors, impacts related to construction emissions are considered significant but mitigable.

Construction equipment itself can be the source of air quality emission impacts, and may be subject to California Air Resources Board or APCD permitting requirements. This includes portable equipment, 50 horsepower (hp) or greater or other equipment listed in the APCD's 2012 CEQA Handbook, Technical Appendices. Truck trips associated with the materials that will be cut from the site may also be a source of emissions subject to APCD permitting requirements, subject to specific truck routing selected. Impacts related to vehicle and heavy equipment emissions are considered significant but mitigable.

Naturally occurring asbestos (NOA) has been identified by the state Air Resources Board as a toxic air contaminant. Serpentine and ultramafic rocks are very common throughout California and may contain naturally occurring asbestos. However, the San Luis Obispo County APCD has recently reviewed and updated their NOA policy and current mapped NOA data-set and combined it with the County serpentine map. As a result, the community of San Simeon was determined to fall outside of the NOA occurrence buffer zone. Impacts related to NOA are considered less than significant.

The proposed project would include improvements and upgrades to existing water utility infrastructure, which has the potential to disturb asbestos that is often found in underground utility pipes and pipelines. Demolition can have potential negative air quality impacts, including issues surrounding proper handling, demolition, and disposal of asbestos containing material (ACM). As such, the project may be subject to various regulatory jurisdictions, including the requirements stipulated in the National Emission Standard for Hazardous Air Pollutants (40CFR61, Subpart M – asbestos NESHAP). Impacts related to the demolition or disposal of existing utility pipes are considered to be significant but mitigable.

Operational Impacts

The proposed project consists of the construction of the proposed community water storage tanks and associated infrastructure improvements and would not result in operational impacts. Air quality impacts are expected to be limited to construction related emissions.

Greenhouse Gas Emissions

In order to assess GHG impacts, the APCD produced the "Greenhouse Gas Thresholds and Supporting Evidence" publication (March 28, 2012), which addresses GHG emission thresholds for significance. According to the APCD, in the absence of a Qualified GHG Reduction Strategy, the "Bright-Line" numeric threshold of 1,150 metric tons of CO2e per year represents an emissions level below which a project's contribution to global climate change would be deemed less than "cumulatively considerable." This threshold is equivalent to a project size of approximately 70 single-family dwelling units, or a 70,000 square-foot office building; it is anticipated to capture approximately 5% of all future projects, which equates to approximately 19% of future unmitigated emission. Based on the project description discussed above, the construction activities associated with the proposed water tank construction and infrastructure improvements would not have the potential to exceed the Bright-Line threshold and GHG impacts would be considered less than significant.

Energy Use

In regard to energy uses, the proposed project would utilize existing well pumps to fill the proposed water tanks. The project is limited to the development of increased water storage for the community

and the necessary infrastructure improvements, no increase in pumping is proposed. Establishing the necessary water storage is necessary to meet the fire flow requirements established by CalFire, and is not expected to consume unnecessary energy resources during project construction and operation. In addition, there are no conflict with state or local plans for renewable energy or energy efficiency.

Mitigation/Conclusion. The following mitigation shall be required in order to reduce impacts to less than significant levels:

AQ-1. To mitigate fugitive dust emissions related to project construction, the following shall be implemented:

a) Reduce the amount of the disturbed area where possible;
b) Use of water trucks or sprinkler systems in sufficient quantities to prevent airborne dust from leaving the site. Increased watering frequency would be required whenever wind speeds exceed 15 mph. Reclaimed (non-potable) water should be used whenever possible;
c) All dirt stock pile areas should be sprayed daily as needed;
d) Permanent dust control measures identified in the approved project revegetation and landscape plans should be implemented as soon as possible following completion of any soil disturbing activities;
e) Exposed ground areas that are planned to be reworked at dates greater than one month after initial grading should be sown with a fast germinating, non-invasive grass seed and watered until vegetation is established;
f) All disturbed soil areas not subject to revegetation should be stabilized using approved chemical soil binders, jute netting, or other methods approved in advance by the APCD;
g) All roadways, driveways, sidewalks, etc. to be paved should be completed as soon as possible. In addition, building pads should be laid as soon as possible after grading unless seeding or soil binders are used;
h) Vehicle speed for all construction vehicles shall not exceed 15 mph on any unpaved surface at the construction site;
i) All trucks hauling dirt, sand, soil, or other loose materials are to be covered or should maintain at least two feet of freeboard (minimum vertical distance between top of load and top of trailer) in accordance with CVC Section 23114;
j) Install wheel washers where vehicles enter and exit unpaved roads onto streets, or wash off trucks and equipment leaving the site;
k) Sweep streets at the end of each day if visible soil material is carried onto adjacent paved roads. Water sweepers with reclaimed water should be used where feasible;
l) All of these fugitive dust mitigation measures shall be shown on grading and building plans; and
m) The contractor or builder shall designate a person or persons to monitor the fugitive dust emissions and enhance the implementation of the measures as necessary to minimize dust complaints, reduce visible emissions below 20% opacity, and to prevent transport of dust offsite. Their duties shall include holidays and weekend periods when work may not be in progress. The name and telephone number of such persons shall be provided to the APCD Compliance Division prior to the start of any grading, earthwork or demolition.

AQ-2. The required mitigation measures for reducing nitrogen oxides (NOx), reactive organic gases (ROG), and diesel particulate matter (DPM) emissions from construction equipment are listed below:

- Maintain all construction equipment in proper tune according to manufacturer's specifications;
- Fuel all off-road and portable diesel powered equipment with ARB certified motor vehicle
- diesel fuel (non-taxed version suitable for use off-road);
- Use diesel construction equipment meeting ARB's Tier 2 certified engines or cleaner off-road heavy-duty diesel engines, and comply with the State off-Road Regulation;
- Use on-road heavy-duty trucks that meet the ARB's 2007 or cleaner certification standard for on-road heavy-duty diesel engines, and comply with the State On-Road Regulation;
- Construction or trucking companies with fleets that that do not have engines in their fleet that meet the engine standards identified in the above two measures (e.g. captive or NOx exempt area fleets) may be eligible by proving alternative compliance;
- All on and off-road diesel equipment shall not idle for more than 5 minutes. Signs shall be posted in the designated queuing areas and or job sites to remind drivers and operators of the 5 minute idling limit;
- Diesel idling within 1,000 feet of sensitive receptors is not permitted;
- Staging and queuing areas shall not be located within 1,000 feet of sensitive receptors;
- Electrify equipment when feasible;
- Substitute gasoline-powered in place of diesel-powered equipment, where feasible; and,
- Use alternatively fueled construction equipment on-site where feasible, such as compressed natural gas (CNG), liquefied natural gas (LNG), propane or biodiesel.

AQ-3. Any scheduled disturbance, removal, or relocation of utility pipelines shall be coordinated with the APCD Enforcement Division at (805) 781-5912 to ensure compliance with NESHAP, which include, but are not limited to: 1) written notification, within at least 10 business days of activities commencing, to the APCD, 2) asbestos survey conducted by a Certified Asbestos Consultant, and, 3) applicable removal and disposal requirements of identified ACM.

Implementation of the above measures will reduce impacts to less than significant levels.

IV.	BIOLOGICAL RESOURCES - *Will the project:*	Potentially Significant	Impact can & will be mitigated	Insignificant Impact	Not Applicable
a)	***Result in a loss of unique or special status species or their habitats?***	☐	☐	☒	☐
b)	***Reduce the extent, diversity or quality of native or other important vegetation?***	☐	☒	☐	☐
c)	***Impact wetland or riparian habitat?***	☐	☐	☒	☐
d)	***Introduce barriers to movement of resident or migratory fish or wildlife species, or factors, which could hinder the normal activities of wildlife?***	☐	☐	☒	☐
e)	***Conflict with any regional plans or policies to protect sensitive species, or regulations of the California Department of Fish & Wildlife or U.S. Fish & Wildlife Service?***	☐	☐	☒	☐
f)	***Other:*** _____	☐	☐	☐	☒

Setting: In order to assess project site biological resources, a Biological Resources Assessment (BRA) was prepared by Oliveira Environmental Consulting LLC Biologist and Senior Project Manager, Kevin Merk (Kevin Merk Associates, LLC. December 24, 2018). Please refer to this report for additional details on the project site biological resources.

As discussed in the report, the 3.6-acre site is located at the northeastern terminus of Pico Avenue in the community of San Simeon. The site is located on the western flank of the Santa Lucia Range and exhibits elevations ranging from approximately 77 to 194 feet above sea level.

The site includes an unpaved road that provides access from the northern terminus of Pico Avenue to the existing San Simeon CSD reservoir structure, which is on a paved pad and fenced with chain link. From the existing SSCSD reservoir, the unpaved road leads to the proposed water tanks site. The proposed new water tank site is fenced with an existing pipe fence/no-climb mesh, and an interior pipe fence that divides two existing horse corrals. The site is bound to the north and west by a band of coastal scrub and Monterey pine forest, and beyond is an equestrian ranch located off Pico Creek Road to the north.

Pico Creek bends around the area just beyond the ranch, originating from the western slope of the Santa Lucia Range and flowing in a southwesterly direction, forming a lagoon at the crossing of Highway 1 before discharging into the Pacific Ocean. It is bordered by riparian woodland and has estuarine wetland habitat at its mouth. Two ponds that are surrounded by freshwater marsh vegetation lie within the creek's riparian zone, just east of the Highway 1 Bridge. On the south and east, the site is surrounded by grassland that is used for livestock grazing. The community of San Simeon just to the south of the project site access road is relatively small (population 462). The

surrounding area is mainly undeveloped coastal plain, with open space owned by California State Parks and Hearst Ranch.

The proposed project would include a new water pipeline installed from the existing community reservoir up to the proposed new tanks. An existing unpaved access road would be improved by adding a surface of decomposed granite or crushed base to a width of 12 feet. The project also includes proposed improvements and upgrades to the community water infrastructure which would be co-located with existing, previously disturbed utility easements under roadways in the community of San Simeon.

Habitat Types

According to the project Biological Resources Assessment, three plant community or habitat types were observed in the study area and included: Developed/Ruderal; Grassland; and Coastal Scrub (please refer to the Biological Resources Assessment for a detailed depiction of on-site habitats). Within the proposed project impact area, grassland and ruderal were the primary habitat types. These habitat types are described as follows:

Developed/Ruderal

The areas identified as developed or ruderal include the access road, the existing reservoir, and areas of bare dirt or reduced vegetation due to horse trampling and grazing. Where plants occurred, they were predominately weedy non-native species that are adapted to disturbance, such as Mediterranean barley (*Hordeum marinum* ssp. *gussoneanum*), hare barley (*Hordeum murinum* ssp. *leporinum*), ripgut brome (*Bromus diandrus*), slender wild oats (*Avena barbata*), rattlesnake grass (*Briza maxima*), English plantain (*Plantago lanceolata*), sheep sorrel (*Rumex acetosella*) and fiddleneck dock (*Rumex pulcher*). Some small patches of grazed-down native purple needle grass (*Stipa pulchra*) were also seen as a rare component within the ruderal areas that were heavily grazed. The shoulders of the existing access road were disturbed to a greater degree than surrounding grassland areas and possibly were mowed as part of site maintenance and fire risk reduction.

Grassland

The grassland on-site consists mainly of non-native species as described above for ruderal habitats, but there were also patches of native bunchgrasses with elements of coastal terrace prairie community, particularly along the northern and northeastern perimeter of the site where grazing impacts were reduced. In these areas, native grasses consisted of purple needle grass, California oatgrass (*Danthonia californica*), and blue wild rye (*Elymus glaucus*). Other native species were Santa Ynez false lupine (*Thermopsis macrophylla*) and western rush (*Juncus occidentalis*). Adjacent to and outside of the study area and along the fence line in the northern and northeastern edges, were elements of the surrounding Monterey pine forest consisting of one isolated Monterey pine tree that was deceased from pitch canker, toyon (*Heteromeles arbutifolia*), and young coast live oaks (*Quercus agrifolia*), as well as a few coyote brush (*Baccharis pilularis*) shrubs.

Coastal Scrub

The coastal scrub community on-site occurs along the edges of the existing access road and was dominated by coyote brush. Other species included California sagebrush (*Artemisia californica*), coast live oak, toyon, and California poppy (*Eschscholzia californica*).

Special-Status Plants
The project biological analysis included a detailed mapping and assessment of special-status plants. A total of ten special-status plant species were determined to have the potential to occur on-site within the grassland or coastal scrub habitat types, plus one species that was observed during the survey. None of these species are federally or state listed as Threatened or Endangered or are Candidates for listing, but instead are California Rare Plants. One Monterey pine (*Pinus radiata*) was present within the study area, outside of the project disturbance boundary. This tree was deceased and had evidence of pitch canker disease. It occurred just inside the fence line, and while numerous Monterey pine trees were present just beyond the northern half of the site, none occurred in the impact area. No other special-status plant species were observed during the survey; however, the initial visit occurred during the driest time of year when many annual plant species were unidentifiable and were impacted by horse grazing and trampling.

The following rare plant species are considered to have potential to occur on-site due to plant community and soils affiliations, documented elevational range, and records in the site vicinity (refer to the project Biological Resources Assessment for a summary of ecological information). The species with potential to occur on-site include:

- Hickman's onion (*Allium hickmanii*);
- Dwarf goldenstar (*Bloomeria humilis*);
- Brewer's calandrinia (*Calandrinia breweri*);
- Cambria morning-glory (*Calystegia subacaulis* ssp. *episcopalis*);
- San Luis Obispo owl's-clover (*Castilleja densiflora* var. *obispoensis*);
- Compact cobwebby thistle (*Cirsium occidentale* var. *compactum*);
- Blochman's dudleya (*Dudleya blochmaniae* ssp. *blochmaniae*);
- Perennial goldfields (*Lasthenia californica* ssp. *macrantha*);
- Marsh microseris (*Microseris paludosa*);
- Gairdner's yampah (*Perideridia gairdneri* ssp. *gairdneri*); and
- Monterey pine (*Pinus radiata*) — one deceased tree observed

Based on the above list of special-status plants with the potential to occur on-site, seasonally timed rare plant surveys were recommended to determine whether these species occur on-site.

Seasonally Timed Rare Plant Survey
As a result of the identification of 11 special-status plants with the potential to occur on-site and as recommended in the project Biological Resources Assessment, the project biologist, Kevin Merk, conducted botanical surveys on April 25 and June 7, 2019 to supplement the August 31, 2018 site visit documented in the BRA.

The rare plant surveys were conducted in accordance with accepted protocols developed by the U.S. Fish and Wildlife Service (U.S. Fish and Wildlife Service, 2000; USFWS), California Department of Fish and Wildlife (California Department of Fish and Wildlife, 2000; CDFW), and California Native Plant

Society (California Native Plant Society, 2001; CNPS). As required under these protocols, the rare plant surveys included the following efforts:

- Survey personnel traversed all suitable habitat within the entire project area on foot by walking meandering transects to ensure thorough coverage of the area;
- Surveys were spaced throughout the spring season to document the site's flora; and
- Surveys were floristic in nature, and all plant species observed were recorded and identified to a sufficient level to determine rarity.

The rare plant surveys conducted in April and June 2019 identified two special status plants growing outside of the project disturbance boundary and along the outer perimeter of the study area, and included Cambria morning glory (*Calystegia subacaulis* ssp. *episcopalis*) and Blochman's dudleya (*Dudleya blochmaniae* ssp. *blochmaniae*). One dead Monterey pine (*Pinus radiata*) was still present in the outer, northeastern limits of the study area and since it was dead, it was not mapped. Other Monterey pine trees were present outside the study area and are common in the region. In addition, an area of native grassland was observed in the northern part of the study area, and the Habitat Map included in the BRA was revised to show the limits of this plant community (please refer to the attached Rare Plant Survey Results for the SSCSD Water Improvement Project. July 29, 2019).

Cambria morning glory (*Calystegia subacaulis ssp. episcopalis*)
This is a California Rare Plant Rank (CRPR) 4.2 species, was observed in patchy, low density occurrences (i.e., 1-4 plants/square meter) along the eastern fence-line. Several individual plants were also observed growing in the dense non-native grassland areas along the western part of the study area. Cambria morning glory was observed as a common component of the extensive grasslands to the east of the site, and the species is known to occur throughout grasslands in the northern San Luis Obispo coastal areas extending southward to Santa Maria in northern Santa Barbara County. The CRPR 4.2 listing means the species is of limited geographic distribution and on a watch list. The threat ranking of 0.2 means it is moderately threatened. As stated above, it is common in the region, and while the proposed project may impact several individuals growing along the eastern fence-line between the existing reservoir and proposed water tank site, the project would not result in significant impacts to this species existence in the region.

Blochman's Dudleya (*Dudleya blochmaniae ssp. blochmaniae*)
This is a CRPR 1B.2 species that was observed at two distinct locations along the outer limits of the western study area. Exposed rock outcroppings just outside the western fence-line supported roughly 50 individual Blochman's Dudleya plants. The majority of the study area contained dense non-native grassland with a buildup of thatch, and was not suitable habitat for this species. The CRPR 1B.2 listing means it is rare throughout its range. The threat ranking of 0.2 means it is moderately threatened. The species is known to occur on shallow rocky soils and along the margins of rock outcrops throughout coastal San Luis Obispo County. The project as proposed would not impact this species.

Monterey pine (*Pinus radiata*)
This is a CRPR 1B.1 species and was observed as a common element of the woodland habitat on the slopes outside the study area. One dead individual was observed in the study area, and several other trees were present in the fenced pasture, but outside the proposed project footprint. The CRPR 1B.1

listing for this species means it is rare throughout its range. The threat ranking of 0.1 means it seriously threated in California. The species occurs in three primary geographic areas in the Central California area, which includes northern Santa Cruz County, the Monterey Peninsula in Monterey County, and the Cambria/San Simeon area of northern San Luis Obispo County. The species has been planted worldwide as an important commercial lumber tree, and is also commonly used in landscaping. The proposed project will not impact any Monterey pine trees.

Sensitive Natural Communities

The CNDDB identifies Monterey pine forest as a sensitive natural community that occurs to the north of the project site, north of Pico Creek. Monterey pine forest was observed during the survey just outside the study area, to the northwest, north, and northeast of the site. In this area, it generally occurred intermixed with coastal scrub or had components of coast live oak and toyon, in which Monterey pine was either co-dominate or not dominant.

Wetlands

The National Wetland Inventory (NWI) map shows freshwater forested/shrub wetland areas along Pico Creek to the north, but it does not extend into the project study area. As shown in the BRA, the NWI map also notes the spring to the south of the site as freshwater emergent wetland habitat, which does not occur in the study area.

Special-Status Wildlife

Based on the records search and surveys completed as part of the project BRA, there is potential for one rare invertebrate species, five special-status amphibian or reptile species, 12 special-status bird species, and one special-status mammal species to occur on-site. In addition, one special-status bird species was observed during the field survey. These species and associated in-field observations are summarized below.

Obscure bumblebee (*Bombus caliginosus*).

This species may occur on-site from March to October, and are most likely to occur around the perimeter of the site where there is greater vegetative cover. The only record from the vicinity is from 1975. This invertebrate species does not have specific listing status, but would be considered to be of local or regional concern.

Southwestern pond turtle (*Actinemys pallida*).

This species is known to be extant in Pico Creek and the ponds within the creek's riparian zone just upstream of the Highway 1 Bridge. Although there are no ponds or permanent streams on the property, they could use upland habitats on the site for refugia in fall/winter. Southwestern pond turtles move away from aquatic sites in late summer or fall when water levels decline. According to wildlife studies in Pico Creek, observed turtles left the water, or moved from aquatic sites when water levels declined to begin a period of dormancy. They stayed within 50 meters of the aquatic habitat until late October, when some individuals moved as far as 350 meters from water and remained there through the winter.

The proposed project impact areas are within 188 to 230 meters of suitable and occupied aquatic habitat in Pico Creek. However, due to low vegetative cover, any individuals are unlikely to remain

on-site during periods of dormancy. In addition, the project site is just beyond the distance from water that turtles were found to nest. Although adult turtles are capable of making longer overland movements, the hatchlings must successfully migrate to water, which may limit the amount of upland habitat that is used for nesting.

San Simeon slender salamander (*Batrachoseps incognitus*).
This species occurs along the crest of the Santa Lucia Range near San Simeon, reaching to near sea level by San Simeon Pier, and extending Northwest along the western flank of the mountains to Gorda. However, little is known about this species especially in areas with privately held lands. They could occur in the forest habitat beyond the perimeter of the project site and there is a slight possibility they could move through grassland areas on-site during moist nights in the spring when they are surface active.

California red-legged frog (*Rana draytonii*).
This species is a federally Threatened species that is known to be extant in Pico Creek and the ponds upstream of Highway 1. While generally found in close proximity to water in the spring and summer, they occupy upland areas when water levels recede in the late-summer and fall, as well as during rainy periods in the winter. Individuals migrating between aquatic sites used for summer residence and other aquatic sites used for breeding have been found to move overland distances of at least 2,800 meters (Bulger et al. 2003).

The project impact areas are within 188 to 230 meters of suitable and occupied aquatic habitat in Pico Creek. Therefore, it is possible that frogs may occur at the study site in winter, although unlikely. They may move through the site during nighttime overland movements in the winter rain season. If there are objects (such as the proposed water tank development) present, they may take cover under these objects during the day.

California newt (*Taricha torosa*).
This species is primarily a terrestrial species, migrating to ponds, reservoirs and streams to breed. In central California, this species occupies rolling woodland and grassland, and they can migrate up to 3,200 meters from aquatic breeding sites. Newts may be found under cover objects or walking around near rural residences. Although there are no CNDDB records within five miles of the project site, numerous records of populations from coastal streams have been documented from San Simeon and Santa Rosa creeks, where they generally occupy upstream areas in more mountainous and rocky conditions. Pico Creek is situated in a large enough watershed where they may occupy upstream habitats, and periodically be washed downstream. There is suitable grassland habitat on-site, and they could temporarily occupy these areas during winter or spring when the ground is wet.

Two-striped gartersnake (*Thamnophis hammondii*)
This species is known to be extant in Pico Creek. This species is highly aquatic in summer, where they consume aquatic prey. In winter they are mostly inactive in upland habitats, where they use small mammal burrows. During previous studies they were found far from water beginning in mid-October, and occurred in grassland or scrub habitats. Mean distance to water for individuals in winter ranged from 50 to 182 meters. There is suitable upland habitat on-site in grassland and scrub areas, and

California ground squirrels (*Otospermophilus beecheyi*) were observed on-site that provide suitable burrows for overwintering two-striped gartersnakes.

Tricolored blackbird (*Agelaius tricolor*)
This species is a Candidate for state Endangered status. It has been observed at Pico Creek (The Cornell Lab of Ornithology 2018a), where there is potentially suitable nesting habitat in wetland vegetation near the mouth of the creek and surrounding the ponds just upstream of Highway 1. Potentially suitable foraging habitat is present on-site in grazed grassland areas, and this species occurs in the area year-round. Due to the proximity of wetland vegetation along Pico Creek, periodic foraging onsite or individuals moving through the site may occur, but no nesting or roosting habitat is present on or immediately adjacent to the project site.

Grasshopper sparrow (*Ammodramus savannarum*)
This species has been observed at Pico Creek, and there are also numerous sightings along the coast in the vicinity (The Cornell Lab of Ornithology 2018a). Potentially suitable foraging and nesting habitat is present onsite in grassland areas, where it could nest on the ground in dense grass within the project impact area.

Golden eagle (*Aquila chrysaetos*)
This is a state Fully Protected species that could potentially occur on-site periodically. There are numerous sightings along the coast in the project vicinity (The Cornell Lab of Ornithology 2018a). Potentially suitable foraging habitat is present on-site in grassland areas, but may not be expansive enough to be ideal. No nesting habitat occurs in the project impact area. Their preferred nesting habitat is associated with cliffs, and no raptor nests were seen in large trees surrounding the site, making impacts to this species from the project unlikely.

Long-eared owl (*Asio otus*)
This is a Species of Special Concern for nesting. It has been recorded in close proximity to the site, and the project area is within the year-round range of the species (The Cornell Lab of Ornithology 2018a). Suitable foraging habitat is present in grassland and coastal scrub areas on-site. They roost in dense forests, which are not present on-site, and the area surrounding the site is marginal due to a more open canopy. Suitable nesting habitat is present in mixed forest/scrub habitat around the perimeter of the site. There is a possibility they could nest on the ground in grassland on the project site.

Burrowing owl (*Athene cunicularia*)
This is listed by CDFW as a Species of Special Concern for burrowing sites and some wintering sites. It has been recorded in close proximity to the site, and the project area is within the year-round range of the species (The Cornell Lab of Ornithology 2018a, 2018b). Potentially suitable foraging and nesting habitat are present in grassland and coastal scrub areas onsite. However, the coastal populations in San Luis Obispo County are considered to no longer breed in this area (Wilkerson and Siegel 2010). California ground squirrels that excavate burrows used by owls were observed onsite, but did not exist as a large colony that is typically used for breeding sites. This species is not expected to nest onsite but could occur as an uncommon transient moving through the area.

Ferruginous hawk (*Buteo regalis*)
This species occurs in this area only during winter, and has been recorded within five miles of the project area. Potentially suitable foraging habitat is present in grassland habitats on-site, but they do not nest in this region. Grasslands on-site are not expansive enough to be ideal foraging habitat.

Northern harrier (*Circus cyaneus*)
This species was observed flying over the site during the survey. Marginally suitable foraging habitat is present in grassland areas, but may not be expansive enough to be ideal. Nests are placed on the ground in clumps of vegetation. However, the project site is relatively small in size with a high level of human and grazing disturbance, and with the abundance of high-quality nesting habitat surrounding the site, they are unlikely to nest on-site. This species is listed by CDFW as a Species of Special Concern for nesting.

White-tailed kite (*Elanus leucurus*)
This is considered a Fully Protected species by CDFW for nesting. It has been observed at Pico Creek and at numerous other locations in the site vicinity (The Cornell Lab of Ornithology 2018a). Suitable foraging habitat is present in grassland areas on-site, but the heavily grazed nature of much of the site is not ideal. Nesting could occur in the forest edge habitat surrounding the site, but no nesting habitat is present on the site.

California horned lark (*Eremophila alpestris actia*)
This species has been observed in close proximity to the project site (The Cornell Lab of Ornithology 2018a). Suitable foraging and nesting habitat are present in grazed grasslands on-site, and they nest on the ground preferring bare ground or sparse vegetation. Since they are not negatively affected by grazing disturbance, they could occur on-site.

Prairie falcon (*Falco mexicanus*)
This species has been recorded in the site vicinity, although this is considered rare (The Cornell Lab of Ornithology 2018a). Suitable foraging habitat is present in grassland and coastal scrub habitat on-site. However, no nesting habitat is present on-site, and there is only a slight possibility they would nest in trees surrounding the site. This species is listed by CDFW as a Species of Special Concern for nesting. If they were to occur on-site, their occupancy would be rare while foraging or moving through the site.

American peregrine falcon (*Falco peregrinus anatum*)
This is considered a Fully Protected species by CDFW for nesting. It has been recorded in the site vicinity, but sighting records have been suppressed (The Cornell Lab of Ornithology 2018a). Potentially suitable foraging habitat is present in grassland areas on-site, but no nesting habitat is present on or adjacent to the site. If they were to occur onsite, their occupancy would be rare while foraging or moving through the site.

Loggerhead shrike (*Lanius ludovicianus*)
This species has been recorded at several locations in the project vicinity (The Cornell Lab of Ornithology 2018a). Suitable habitat for foraging is present in the project area in grassland and scrub habitat. There is no nesting habitat in project impact areas, but could potentially nest in brushy or

forested areas beyond the project site, including in the scrub along the entrance road. Could occur onsite periodically while foraging.

Yellow warbler (*Setophaga petechia*)
This species has been recorded on numerous occasions on Pico Avenue adjacent to the project site (The Cornell Lab of Ornithology 2018a). This species is closely tied to riparian habitat for foraging and nesting, however, this habitat does not occur on-site. Since they are known to occur in such close proximity, there is a chance they could periodically move through the site.

Pallid bat (*Antrozous pallidus*)
This species could forage in the grassland and coastal scrub habitats on-site. Roosting habitat (maternity, winter, daytime or night roosts) are not present on the property or in nearby areas.

Designated Critical Habitat
California red-legged frog critical habitat has been designated in the community of San Simeon in proximity to areas proposed for utility improvements under the proposed project. No designated critical habitat is present within the grassland or coastal scrub habitats where the proposed water tanks would be placed or improvements to the access road would occur. Designated critical habitat for the south- central California coast steelhead (*Oncorhynchus mykiss irideus*) is present within Pico Creek, but is not in close proximity to the project site.

Combining Designations and Environmentally Sensitive Habitat Area (ESHA)
The County of San Luis Obispo Coastal Zone Land Use Ordinance (CZLUO) and corresponding North Coast Planning Area Rural Combining Designation Map specifies and maps Combining Designation areas on the North Coast. The Coastal Zone Land Use Ordinance identifies the following Combining Designations related to biological resources within the project site area:

- Terrestrial Habitat/Sensitive Resource Area - 500 acres of Monterey pine forest north of the project site;
- Coastal Stream - Pico Creek, which is located off-site and is known habitat for steelhead spawning as well as other special-status species;
- Riparian Vegetation - along Pico Creek; and
- Sensitive Resource Area - coastal terrace to the south of the site and west of Highway 1.

As discussed in the project BRA, the subject site itself does not include any of the Combining Designation areas listed above. However, these listings were used to guide the site-specific biological survey in order to inform the survey methodology and to confirm the presence or absence of these resources on-site.

Environmentally Sensitive Habitat Areas (ESHA) are defined in Section 23.11 of the CZLUO as a type of Sensitive Resource Area where plant or animal life or their habitats are either rare or especially valuable because of their special nature or role in an ecosystem and which could easily disturbed or degraded by human activities and development. They include wetlands, coastal streams and riparian vegetation, as well as terrestrial and marine habitats and are mapped as Land Use Element Combining Designations. ESHA is the same as an Environmentally Sensitive Habitat. The project

impact area is not mapped as, or within 100 feet of, ESHA according to the North Coast Planning Area Rural Combining Designation Map.

Although mapped ESHA does not occur on-site, the site has the potential to support unmapped ESHA. The CZLUO defines unmapped ESHA as areas containing features or natural resources with equivalent characteristics and natural function as mapped sensitive habitat areas or mapped ESHA.
As a result of the project biological assessment, it was determined that the biological resources associated with ESHA and/or the Combining Designations listed above were absent from the proposed project site. In addition, given the disturbed nature of the project impact areas, the project site does not meet the definition of unmapped ESHA under the CZLUO.

However, consistent with the requirements of development within or adjacent to ESHA, it is important to note that the project includes the required biological resources report as stipulated under Section 23.07.170 (Environmentally Sensitive Habitats) of the CZLUO. The results of which are discussed in detail herein. Consistent with the CZLUO development standards for environmentally sensitive habitats, the project has been designed in a manner that avoids and/or mitigates any significant disruption or degradation of habitat values.

Impact. The proposed project would permanently affect approximately 29,410 square feet of grassland and ruderal habitat for the construction of the tank pad, installation of the two water tanks and minimal utility trenching in undisturbed soils. Improvements to the access road would also permanently affect less than one acre of grassland and coastal scrub habitat. Temporary effects to grassland habitat would occur as a result of trenching for the installation of new water pipe to connect the existing reservoir to the proposed new water tanks, including grading around the access road and tank pad, as needed for construction of these facilities. The proposed utility upgrades and improvements in the community of San Simeon will occur in the developed areas of roadways and existing utility easements, and will not affect any natural habitats.

The project does not involve any tree removal or encroachment into the Monterey pine forest habitat that surrounds the site. No wetlands, ponds, streams, drainage channels or other hydrologic features are present on the property, and there would be no indirect effects to these habitats located on areas adjacent to the property.

Special-Status Plant Impacts
The Biological Resources Assessment prepared for the proposed project included the potential for significant but mitigable impacts to rare plant species. The BRA included mitigation measures to address potential impacts to rare plants, including seasonally timed rare plant surveys and conducting salvage and relocation efforts under a rare plant compensatory mitigation plan for any special-status plants that may occur on-site.

Rather than requiring additional studies as mitigation for the proposed project, and in consultation with the County of San Luis Obispo Environmental Division, it was determined that the project environmental determination would be postponed until the recommended seasonally timed rare plant surveys have been completed. Since then, the required surveys have been completed, the results of which are summarized above.

As a result of the seasonally timed rare plant surveys it has been determined that implementation of the mitigation measures listed below will reduce impacts to special-status plants to less than significant levels.

Special-Status Wildlife Impacts

Insects/Mammals

The obscure bumblebee is included on the special-status species lists within the CNDDB (CDFW 2018c) and *Special Animals* (CDFW 2018a), but it does not have listing status that would trigger significance under CEQA. Impacts to the obscure bumblebee are considered less than significant.

The pallid bat could potentially forage on-site, but no roosting habitat is present on-site or in close enough proximity to the site that roosting activity could be affected by construction disturbance. Foraging behavior is not expected to be impacted because they forage at night and construction activities would occur during the day. The loss of approximately 29,410 square feet of grassland and ruderal habitat that supports prey species would not be considered a significant impact, especially considering the amount of habitat that will remain within the study area and in surrounding areas. No potential roosting habitat will be lost or temporarily affected by the project. Impacts to the pallid bat are considered less than significant.

Amphibian and Reptile Species

The special-status amphibian and reptile species considered as having potential to occur in or occupy aquatic or mesic forested habitats in the late spring and summer, and use upland habitats in the fall (depending on when water levels decline) through the winter include the southwestern pond turtle, San Simeon slender salamander, California red-legged frog, California newt, and two-striped gartersnake. The other amphibian and reptile species listed above would inhabit Pico Creek, the ponds near Highway 1, and the adjacent wetland habitat and riparian woodland throughout the spring and summer. The only exception is the southwestern pond turtle, which lays eggs in upland habitats in the summer, but the project impact areas are beyond the distance that females travel from water for excavating nest sites.

The California red-legged frog is a federally Threatened species; therefore, impacts to any individuals would be considered take under the Federal Endangered Species Act. The proposed project impact areas are within 188 to 230 meters of suitable and occupied aquatic habitat in Pico Creek, which is well within the maximum distance that adult California red-legged frogs have been found to move away from water when occupying terrestrial habitats, during periods of winter inactivity or while undergoing breeding migrations. Two streams are present to the south of the project site that are within the species' dispersal distance from Pico Creek, and one of these is known to be occupied by the species. Grassland and scrub habitats are suitable for frog overland movements. Therefore, frogs could pass through the site while migrating to other area streams or during other bouts of terrestrial activity in the winter. They could become entrapped in trenches or steep-walled excavations that are left open at night, or take refuge under construction material such as stacks of pipe or metal. They would not occur on-site during dry periods due to the lack of aquatic habitat, mesic conditions, or dense vegetation.

Based on the analysis in the project BRA, impacts to special status amphibian and reptile species (including the California red-legged frog) are considered significant but mitigable.

The proposed community utility improvements and upgrades would occur in designated critical habitat for the California red-legged frog. However, no natural habitat would be affected by this phase of the project since all work will occur in developed habitat that would not be considered to be part of the designated critical habitat since it does not contain the physical or biological features that are essential to the conservation of this species. Impacts to designated critical habitat from the proposed utility improvements and upgrades are considered less than significant.

Nesting Birds

Direct effects to special-status adult birds are not expected to occur as a result of construction activities because these mobile individuals could easily move out of harm's way and forage in other nearby areas. However, construction during the nesting season (February 1 to August 31) would have the potential to interrupt breeding or nesting behavior, which could lead to the abandonment of nests containing eggs or young, causing their mortality. Species that nest in the woodland or scrub habitats surrounding the site could also be affected if they are in close enough proximity to noise and physical disturbance. The active nests of ground-nesting species could also be impacted during vegetation removal. In addition to the special-status bird species with potential to occur in the area, nesting activities of common species of birds protected under the Migratory Bird Treaty Act and California Fish and Game Code could be affected by the project. Impacts to nesting birds are considered significant but mitigable.

Riparian Habitat and Sensitive Natural Community Impacts

No Riparian habitat is present on the property, and the proposed action would not indirectly affect Riparian habitat off-site. Monterey Pine Forest is considered to be a sensitive natural community (S1.1) recorded in the CNDDB as occurring in to the north of the property and north of Pico Creek. Monterey pines occur in a band just beyond the northern boundary of the site, and are mixed with components of coastal scrub habitat, as well as toyon and coast live oak. The proposed project does not occur in this habitat and there would be no indirect effects on these offsite areas. Therefore, impacts to Riparian habitat or sensitive natural communities are considered less than significant.

No wetland habitat is present on the property, and there are no basins or swales that would collect water and could potentially support wetland vegetation during years with above-average rainfall. Additionally, no streams, drainages, or channels that convey water and potentially could be regulated other waters are present. Improvements to the access road will occur approximately 100 feet from freshwater emergent wetland habitat off-site that is associated with a spring to the south. In addition, with the incorporation of BMPs described in the mitigation requirements below, impacts to wetlands or streams occurring in off-site areas will be reduced to less than significant levels. Additionally, the project would not affect the movement of native wildlife or influence wildlife corridors because no elements of the proposed project would affect use of the property.

Mitigation/Conclusion. In order to reduce impacts to biological resources to less than significant levels, the following mitigation measures shall be implemented:

BIO-1. All vegetation removal, excavation of the tank pads, and trenching for the segment of new water line between the existing reservoir and new tanks shall occur from middle of May to late October, depending on weather conditions. If other phases of construction cannot take place during this period, Mitigation Measure BIO-2 shall apply.

BIO-2. If construction activities cannot be completed within the dry season window as described in Mitigation Measure BIO-1, a qualified biologist shall complete a daily pre-activity survey of all areas in which construction activities are planned for the day, including an inspection of stored materials, parked vehicles and any trenches that were open overnight. If any California red-legged frogs are found on-site, the biologist shall immediately contact the USFWS and work shall be halted until proper clearance has been given by the USFWS. If any southwestern pond turtles, San Simeon slender salamanders, California newts or two-striped gartersnakes are found, the qualified biologist shall ensure that these individuals are not killed or injured by the work.

BIO-3. A pre-construction survey for all special-status wildlife species shall be conducted within 24 hours prior to the commencement of initial vegetation removal and/or site grading and/or trenching. If work commences on different areas at different times, a separate preconstruction survey shall be conducted before the start of work in each area. A qualified biologist shall inspect underneath any objects such as lumber, boards, logs, rocks, and brush piles for wildlife species that may be present in impact areas. If any federally listed species are found, the USFWS shall be notified as described in Mitigation Measure BIO-2. If any birds' nests are found, the measures described below in Mitigation Measure BIO-5 shall be followed.

BIO-4. Conduct the initiation of construction activities outside of the nesting season. All initial site disturbance shall be limited to the time period between September 1 and November 1, if feasible. If initial site disturbance such as vegetation removal, grading, and trenching cannot be conducted during this time period, implementation of Mitigation Measure BIO-5 is required.

BIO-5. Conduct a pre-construction nesting bird survey. If it is not possible to schedule the initiation of construction between September 1 and November 1, a qualified biologist shall conduct a pre-construction survey for nesting birds within 250 feet of project impact areas to ensure that no active nests will be disturbed. The pre-construction survey shall be conducted no more than seven days before the initiation of construction activities in any given area of the project site. During this survey, the qualified biologist shall inspect all potential nest substrates in the impact area, and any nests identified will be monitored to determine if they are active. If no active nests are found, construction may proceed. If an active nest is found within 50 feet (250 feet for raptors) of the construction area, the biologist, in consultation with CDFW, shall determine the extent of a buffer to be established around the nest. The buffer will be delineated with flagging, and no work shall take place within the buffer area until the young have left the nest, as determined by a qualified biologist.

BIO-6. Prepare and present a Worker Environmental Awareness Program. A qualified biologist shall prepare a Worker Environmental Awareness Program that will be presented to all

construction personnel and employees before any ground-disturbing activities commence at the project site. This program shall detail the measures undertaken during project implementation to avoid and minimize impacts on biological resources. It shall include a description of special-status species potentially occurring on the project site and their natural history; the status of the species and their protection under the FESA, CESA, Bald and Golden Eagle Protection Act, MBTA, and California Fish and Game Code; and the penalties for take. All attendees of the Worker Environmental Awareness Program shall sign an attendance form.

BIO-7. Observe construction standard operating and Best Management Practices (BMPs). The following standard practices are recommended to reduce various project impacts on biological resources.

a) Prior to the start of construction, the limits of disturbance shall be clearly delineated by stakes, construction fencing, flags, or another clearly identifiable system.
b) All pipes, metal tubing, or similar materials stored or stacked on the project site for one or more overnight periods shall be either securely capped before storage or thoroughly inspected for wildlife before the materials are moved, buried, capped, or otherwise used. In addition, materials such as lumber, plywood, and rolls of silt fence stored on site shall be thoroughly inspected before use. Materials that could provide shelter/nesting habitat for birds shall be covered with netting or other exclusion methods during the nesting season, where feasible and appropriate, to prevent birds from building nests. If encountered, wildlife shall be allowed to escape unimpeded, or relocated by a qualified biologist to a designated appropriate habitat area away from construction activities. Any wildlife relocations shall be authorized as necessary by CDFW and/or USFWS.
c) To prevent entrapment of wildlife, all excavations (e.g., steep-walled holes or trenches) more than 6 inches deep shall be covered with plywood or similar materials when not in use or contain escape ramps constructed of dirt fill, wooden planks, or other material that wildlife could ascend. The amount of time trenches or other excavations are left open shall be minimized. All excavations more than 6 inches deep shall be inspected daily prior to the start of construction and immediately before being covered or filled. Any wildlife discovered shall be allowed to escape unimpeded before construction activities resume or shall be relocated by an authorized biologist in accordance with CDFW and/or USFWS regulations.
d) Dust suppression shall occur during construction activities when necessary to meet air quality standards and protect biological resources. Dust control is an important component to minimize impacts on native vegetation growing on or adjacent to the site. BMPs for dust abatement shall be a component of the project's construction documents.
e) To minimize disturbance, all vehicle traffic shall be restricted to established roads, construction areas, and other designated areas.
f) No vehicles or equipment shall be refueled within 100 feet of wetlands or streams (including offsite areas) unless a bermed and lined refueling area is constructed. No vehicles or construction equipment shall be stored overnight within 100 feet of these areas unless drip pans or ground covers are used. Spill kits shall be maintained on the site, and a spill response plan shall be in place.

g) No concrete washout shall be conducted on the site outside of an appropriate containment system.
h) The use of chemicals, fuels, lubricants, or biocides shall be in compliance with all local, state, and federal regulations. All uses of such compounds shall observe label and other restrictions mandated by the U.S. Environmental Protection Agency, California Department of Food and Agriculture, and other state and federal legislation.
i) All food-related trash items (e.g., wrappers, cans, bottles, food scraps), small construction debris (e.g., nails, bits of metal and plastic), and other human-generated debris (e.g., cigarette butts) shall be stored in animal-proof containers and/or removed from the site on a weekly basis. No deliberate feeding of wildlife shall be allowed.

BIO-8. Install appropriate erosion controls and revegetate graded areas. All areas where temporary construction-related impacts have taken place shall have appropriate erosion controls and other stormwater protection BMPs installed to prevent erosion potential. As part of the local approval process, a Sediment and Erosion Control Plan shall be prepared that specifically seeks to protect the drainages and wetland and riparian habitat adjacent to the construction area. Silt fencing, straw bales, sand bags, fiber rolls and/or other types of materials shall be prescribed in the plan to prevent erosion and sedimentation. Biotechnical approaches using native vegetation shall be used as feasible. Areas with disturbed soils shall be restored under the direction of a qualified restoration ecologist. Methods may include recontouring graded areas to blend in with existing natural contours, covering the areas with salvaged topsoil containing native seedbank from the site, and/or applying the native seed mix described in Table 2 to the graded areas through either direct hand seeding or hydroseeding methods.

Table 2. Native Grassland Erosion Control Seed Mix.

Species	Application Rate (lbs./acre)
Bromus carinatus (California brome)	5
Hordeum brachyantherum (meadow barley)	5
Vulpia microstachys (six weeks fescue)	3
Stipa pulchra (purple needle grass)	10
Trifolium wildenvii (tomcat clover)	5
Total	**28**

Table Source: SSCSD Water System Improvement Project Biological Resources Assessment (Kevin Merk Associates, 2018).

Implementation of the mitigation measures listed above will reduce impacts to biological resources to less than significant levels.

V.	CULTURAL RESOURCES - *Will the project:*	Potentially Significant	Impact can & will be mitigated	Insignificant Impact	Not Applicable
a)	*Cause a substantial adverse change in the significance of a historical resource as defined in 15064.5?*	☐	☐	☐	☒
b)	*Cause a substantial adverse change in the significance of an archaeological resource pursuant to 15064.5?*	☐	☐	☒	☐
c)	*Directly or indirectly destroy a unique paleontological resource or site or unique geological feature?*	☐	☐	☒	☐
d)	*Disturb any human remains, including those interred outside of formal cemeteries?*	☐	☐	☒	☐
e)	*Cause a substantial adverse change to a Tribal Cultural Resource?*	☐	☐	☒	☐
e)	*Other:* _____	☐	☐	☐	☒

Setting. In order to determine the nature of the project site cultural resource landscape, and to inform the project cultural resource impact analysis, an archaeological survey was prepared for the proposed project by Terry L. Joslin, Ph.D., RPA (Cultural Resources Survey of The San Simeon Water Tank Installation Project, 111 Pico Lane, San Simeon, San Luis Obispo County, California. August 2018).

As discussed in the project archaeological report, the study area is located just north of the modern San Simeon community. This landform is marked by a gently west-northwest sloping ridge flank approximately 180 feet above mean sea level, approximately one mile northeast from the Pacific Ocean. This region is centered on broad marine terraces overlooking the San Simeon Reef—a term developed by fishery biologists to describe the rocky shelves, reefs, and associated kelp forests of this section of coastline—a distinctive environment that fostered unique coastal adaptations.

The topographic context for the project is a series of the broad south-southwest-facing coastal terrace that extends from the Pacific Ocean east to low-lying foothills. Farther to the east, a series of relatively low (600-1500m) northwest-southeast trending mountains, the Santa Lucia Range, separate the coastal terraces from the inland valleys.

The study area is characterized by unconsolidated fill that overlies indurated sandstones, conglomerates, and argillites of the Cretaceous-age Franciscan Formation uplifted during the Late Pleistocene. Surface manifestations of the underlying Cambria Slab formation are small numerous rock outcrops, steep slopes, and thin soils. These outcrops include materials for the manufacture of

artifacts and tools shaped by pecking and abrading. The Franciscan Formation also provides excellent-quality chert that often occurs in multiple mottled colors. Specific to the San Simeon Reef, prominent and abundant sources of workable Franciscan chert are situated along the eastern slope of the coastal foothills, exposed along the Cambria Fault-line contact zone above Green Valley.

In addition to tool making, the environments of the San Simeon Reef are exceptionally productive food sources, with an abundance of marine rocky intertidal, nearshore sandy bottoms, kelp beds, estuarine, and pelagic waters in addition to terrestrial resources for hunting and plant gathering.

Freshwater streams originating from the Santa Lucia Range are primarily seasonal; however, large watersheds at relatively regular intervals contain year-round water sources. All major stream outlets along the north coast show a pattern of well-developed prehistoric occupation. Seeps and springs are also located along the marine terrace at the heads of canyons. The study area is immediately above Pico Creek drainage and is northeast of Arroyo Del Padre Juan, providing a relatively stable water supply is in the immediately area.

Prehistoric and Ethnographic Context

Along the central California coast a suite of similar cultural changes are evident in the archaeological record, and often related to local and regional environmental changes. Evidence of the cultural changes has framed the local chronology into six periods identified as the Late, Middle/Late Transition, Middle, Early, Millingstone and Paleoindian Periods. Please refer to the attached archaeological report for a detailed summary of all six prehistoric Periods with regard to significant natural events and changes in behavioral strategies and technology reflected in subsistence and settlement patterns.

At the time of Spanish contact, speakers of the Playano language occupied the lands within the proposed project study area at the boundary of two known ethnographic groups, the Salinan to the north and the Obispeño or Northern Chumash to the south. Diaries of the first Spanish explorers indicate that native people along the San Simeon Reef lived a mobile lifestyle and appeared to have a more dispersed settlement pattern compared to the Chumash of Santa Barbara Channel. Ethnohistorical populations along the northern San Luis Obispo Coast practiced a hunting gathering-fishing economy similar to most areas of pre-contact coastal California, where groups occupied a wide range of microenvironments and employed a diverse array of material culture to acquire resources.

Historic Context

Historically the area was initially explored by Europeans in 1769 under Captain Gaspar de Portola's expedition, which traveled overland in the area in search of food to sustain Spanish soldiers and settlers of the region. San Simeon is named after the on the Rancho San Simeon Mexican land grant deeded to Jose Ramon Estrada in 1842. Settlers were drawn to the area because of the fertile land, streams, and lumber. Additionally, miners were attracted to the area by the 1862 discovery of cinnabar, the ore from which quicksilver can be made. During several years Cambria and San Simeon were booming mine towns, and prospectors flooded the area. The project site is void of any structural development and does not have the potential for containing historic resources.

Impact. As part of the project archaeological report, an archival research was prepared that focused on primary and secondary sources to develop a general historic context and property-specific information for the immediate project area. To identify previously recorded archaeological and historical sites, the report reviewed archaeological site records, site location base maps, and cultural resources survey and excavation reports on file at the Central Coast Information Center (CCIC), University of California, Santa Barbara. The project area has not been surveyed for cultural resources and two prehistoric sites are within a 0.25-mile radius of the study area.

The archaeological report also included consultation with the National Register of Historic Places (NRHP) via the National Register Information Service (NRIS). The comprehensive records search identified no nominated cultural resources within or in the immediate vicinity of the current survey area.

The project site was surveyed for archaeological resources on August 3, 2018. The property is situated in agriculture lands, on a wide gently west-northwest sloping ridge flank. The entire survey area was systematically walked in less than 5 meter northwest-southeast transects. Open areas of surface soils were inspected along existing utility lines, in the existing dirt road, and along the iron fence lines. The location of the closest existing archaeological site in proximity to the project site, consisting of a sparse lithic scatter, was also inspected to confirm its location outside the proposed project area.

Archival research and an intensive archaeological survey of the project area identified no cultural resources. The survey results confirm the records search conducted at the Central Coast Information Center. Although sites are recorded within 0.25 miles of the project, they are topographically removed from the proposed project site. As a result, impacts to cultural resources are considered less than significant and no further archaeological work is required or recommended within the project site. Furthermore, implementation of the required County of San Luis Obispo General Plan Policies and Programs would ensure protection of any archaeological or paleontological resources or human remains that may be encountered during project construction.

In addition, per Assembly Bill 52 (AB 52), notices regarding the opportunity for tribal consultation on the project were sent on December 3, 2018. Response was received via a phone call from the Salinan Tribe on January 15, 2019. The tribal representative asked about the nature of the proposed project and details of the archaeological survey and requested caution during project grading activities. As a result, the SSCSD contacted the project archaeologist and confirmed that the potential for impacts to cultural resources are considered less than significant and no mitigation measures are recommended beyond the County standard conditions for protection of cultural resources. In order to address the request made during the AB 52 consultation, the mitigation measure listed below shall be a requirement of project implementation.

Mitigation/Conclusion. No significant cultural resource impacts are expected to result from project construction. However, in the event of an unanticipated discovery of archaeological resources during earth-moving activities, the following measure shall be implemented.

CR-1. In the event that archaeological resources are unearthed or discovered during any construction activities, the following standards shall apply:

Construction shall cease and the County of San Luis Obispo Project Manager and the SSCSD representative shall be notified so that the extent and location of discovered materials may be recorded by a qualified archaeologist, and a protection plan can be implemented to protect or remove the resources in accordance with State or Federal law. In the event of accidental discovery of human remains, all work is required to stop and the County Coroner will be contacted and the Most Likely Descendent will be identified and contacted.

VI.	**GEOLOGY AND SOILS** - ***Will the project:***	**Potentially Significant**	**Impact can & will be mitigated**	**Insignificant Impact**	**Not Applicable**
a)	***Result in exposure to or production of unstable earth conditions, such as landslides, earthquakes, liquefaction, ground failure, land subsidence or other similar hazards?***	☐	☒	☐	☐
b)	***Be within a California Geological Survey "Alquist-Priolo Earthquake Fault Zone"?***	☐	☐	☐	☒
c)	***Result in soil erosion, topographic changes, loss of topsoil or unstable soil conditions from project-related improvements, such as vegetation removal, grading, excavation, or fill?***	☐	☒	☐	☐
d)	***Change rates of soil absorption, or amount or direction of surface runoff?***	☐	☒	☐	☐
e)	***Include structures located on expansive soils?***	☐	☐	☒	☐
f)	***Change the drainage patterns where substantial on- or off-site sedimentation/ erosion or flooding may occur?***	☐	☒	☐	☐
g)	***Involve activities within the 100-year flood zone?***	☐	☐	☐	☒
h*)*	***Be inconsistent with the goals and policies of the County General Plan relating to geologic and seismic hazards?***	☐	☐	☒	☐
i)	***Preclude the future extraction of valuable mineral resources?***	☐	☐	☒	☐
j)	***Other:*** _____	☐	☐	☐	☒

Setting: The following discussion and analysis is based on the geotechnical report prepared for the proposed project (Geotechnical Report for San Simeon Community Services District Potable Water Reservoir Project Final Design. Oakridge Geoscience, Inc. September 2018). Please refer to the attached report for additional details on the proposed project construction and geologic resources.

The project site is located within the Central Coast Range geologic/geomorphic province of California. This province is characterized by generally northwest-southeast trending mountain ranges composed of metamorphic, sedimentary and volcanic rocks ranging in age from Cretaceous to Recent. Major northeast-southwest trending folds, right-lateral strike-slip and reverse faults reflect regional seismic setting of the Coast Ranges.

The earth materials mapped in the vicinity of the proposed SSCSD tank site by the USGS (2014), consists of middle Pleistocene-age marine terrace deposits overlying Late Cretaceous-age Franciscan Formation Mélange. The USGS describes the marine terrace deposits as "a well-developed terrace surface often covered by a thick package of sediments". The underlying Franciscan Formation is described as sheared black and gray argillite enclosing blocks of graywacke, conglomerate, greenstone, diabase, chert, serpentine, and glaucophane schist ranging in size from pebble to hill-sized. The coastal belt (including the San Simeon area) is composed mostly of Late Cretaceous and Tertiary, low grade metasediments.

The Coast Range geomorphic province is characterized by a complex zone of active faulting and folding. Major strike-slip and reverse faults include the Hosgri-San Simeon, Oceanic, and Rinconada faults. The Hosgri-San Simeon fault is located directly offshore of the project site and the Oceanic fault, located approximately 2.5 miles east of the project site, was the source of the 2003 M6.6 San Simeon earthquake (USGS, 2014). An active fault is defined as a fault that has a historic seismic record (activity in the last 100 years) or displaces Holocene (11,000 years and younger) deposits. Faults that exhibit signs of geologically recent movement (active within the past 11,000 years) are considered the most likely to experience movement in the near future. Therefore, active faults are generally thought to have the greatest fault rupture potential. Most agencies, however, will consider potentially active faults (active within the past two million years) as being capable of generating future earthquakes. Faults classified as inactive are not considered to present a significant fault rupture hazard or seismic source. Structural damage associated with earthquake hazards can be minimized with proper foundation engineering based on an analysis of the soils on a given building site, thereby limiting the damage to habitable structures in areas most likely to have these occurrences.

According to Federal Emergency Management Agency (FEMA) data, the project site is located outside of any defined 100-year floodplain. The project site consists of the Conception loam (5-9% slopes) soil type. This is a gently sloping loamy claypan soil and is very poorly drained. The soil has moderate erodibility and low shrink-swell characteristics and exhibits slow percolation. The site does not contain and is not located in proximity to mineral resource extraction.

Impact. Seismically induced ground rupture is defined as the physical displacement of surface deposits in response to an earthquake's seismic waves. Ground rupture is most likely to occur along active faults. However, the potential for ground rupture also exists along potentially active faults. The

project site is located in the seismically active portion of central California and the project most likely will be subjected to strong earthquake ground motion during its lifetime. The M6.6 San Simeon earthquake in 2003 generated strong ground motion at the site. The project site is located approximately 1.5 miles from the San Gregorio-Hosgri Fault System, including the San Simeon Fault Zone, and is located approximately 2.5 miles from the Oceanic-West Huasna Fault and approximately 41 miles from the San Andreas Fault.

The project site is not located within an Earthquake Fault Zone as established in accordance with the Alquist-Priolo Earthquake Fault Zoning Act of 1972 and no known active or potentially active faults cross or trend toward the site. The potential for surface rupture to occur on the site is determined to be low, and impacts are considered less than significant.

Small to moderate earthquakes (with magnitudes less than 5.0 on the Richter Scale) are common in San Luis Obispo County. As such, strong shaking should be expected during the lifetime of the proposed project. However, the proposed project has been designed and would be constructed to meet California Building Code (CBC) standards for seismic zone compliance. In addition, the proposed project would require adherence to the County of San Luis Obispo General Plan policies and program created to mitigate seismic impacts. With implementation of the policies discussed in detail in the project geotechnical report and adherence to the CBC and County standards, impacts related to seismic hazards are considered less than significant.

Liquefaction is the loss of strength in saturated granular soils produced by seismic shaking. For this to occur, the soils must be saturated at a relatively shallow depth, of a granular (non-cohesive) nature, and be relatively loose. If those criteria are met and strong ground motion occurs, then those soils may liquefy.

The site is underlain by medium dense to dense marine terrace deposits and claystone bedrock of the Franciscan Formation. Shallow perched groundwater seepage was encountered during soil boring tests in the marine terrace deposits above the contact with the underlying claystone bedrock. Based on the available data, the potential for liquefaction to occur as a result of a seismic event is considered to be low and impacts are considered less than significant.

According to the County of San Luis Obispo General Plan, the area including the project site is listed under the Combining Designation map as a Geologic Study Area (GSA) related to landslide potential. As indicated in the project geotechnical report, no large-scale landslides are mapped in the project vicinity on regional geologic maps or were observed during the geotechnical report field reconnaissance. The proposed tank site is located in a relatively gentle slope area (4 percent slope in the tank area) composed of marine terrace deposits overlying Franciscan Formation bedrock units. The Franciscan materials can be prone to landsliding, downhill creep and instability; however, based on the available subsurface data the potential for slope instability to impact the site is considered low. Landslide impacts are considered less than significant.

The majority of the more granular soils encountered in the project site exploration are considered to have low expansion potential. However, the potential exists for expansive soils to be encountered during excavation for the tank foundations. As such, impacts are considered significant but mitigable.

Based on the relative density of the soil and bedrock materials, the potential for soil collapse is considered to be low.

Storm runoff volumes and rates will be altered as a result of construction of structures and pavement. To adequately manage storm water runoff within the County resulting from new construction, the County requires the preparation of a Stormwater and Erosion Control Plan. The Plan requires adherence to Best Management Practices and improvements to adequately manage and control storm water runoff, erosion and sedimentation, including measures as needed to ensure that runoff from any source during construction and post-construction will be retained on-site or disposed off-site to an adequate storm water facility. Compliance with this requirement will ensure that storm water impacts will be less than significant.

Mitigation/Conclusion. In order to address the potential project impacts discussed above, the project geotechnical report includes recommendations to address multiple details of the project design and construction.

GEO-1. In order to address the potential for geologic impacts related to the proposed project construction, the mitigation measure recommendations listed in Section 3.0 of the project geotechnical report shall be implemented as required elements of the project. The following is a summary of the required measures (please refer to the geotechnical report for a detailed discussion of these recommended mitigation measures):

a) Subsurface Construction. The tank pad excavation shall be cut into the existing grade by a minimum of three feet to remove the surficial colluvial soil zone and expose the underlying granular marine terrace soils a minimum of three feet beyond the limits of the tank footprints for foundation support;
b) General Site Clearing and Grubbing. Soil containing debris, organics, trees and root systems, and other unsuitable materials shall be excavated and removed from improvement areas prior to commencing grading operations. Areas shall be cleared of old foundations, slabs, pavement, abandoned utilities, and soils disturbed during the demolition process. Depressions or disturbed areas left from the removal of such material shall be replaced with compacted fill;
c) Subgrade Preparation. The tank foundation area plus three feet outside of the tank ringwall foundation shall be founded in marine terrace materials over-excavated to a depth of two feet below the proposed tank footing elevation. The resulting surface shall be scarified to a depth of at least nine inches, moisture conditioned and compacted to 90 percent relative compaction. The fill shall be compacted to 95 percent relative compaction. If clayey terrace deposits that are plastic and/or have high expansion potential are exposed in the foundation excavation, those materials shall be over-excavated and replaced with non-expansive soil materials conforming to general fill below;
d) Compacted Fill. The material generated from the over-excavation can be utilized as compacted fill as long as those materials satisfy criteria for general fill listed in the geotechnical report and oversize materials removed from the fill. Material derived from the over-excavation may generate oversize material that may need to be processed to use as on-site fill;

e) General Fill. General fill shall consist of granular soil materials free of organics, oversize rock (greater than six inches in diameter), trash, debris, and other deleterious or unsuitable materials, and shall have an expansion index less than 20. The fill materials shall have less than 15 percent larger than three inches in diameter and cobbles larger than six inches shall be removed from the fill;
f) Aggregate and Miscellaneous Base. Base materials shall consist of material conforming to Caltrans Standard Specifications for Class 2 Aggregate Base, Section 26-1.02 (Caltrans, 2015) or Section 200-2.5 of the Greenbook (2018) for Processed Miscellaneous Base;
g) Imported Fill. Although importing fill is not anticipated, if material is imported, the imported subgrade fill materials shall comply with recommendations for general fill or as appropriate for its intended use. Imported fill should be reviewed by the geotechnical engineer prior to being transported to the site;
h) Fill Placement. Fill shall be placed, moisture conditioned, and compacted to a minimum of 95 percent relative compaction beneath the tank footprints plus three feet outside the footings and 90 percent relative compaction for general fill. The moisture content of the fill should be 0 to 2 percent above the optimum. Each soil layer should be spread evenly and should be thoroughly blade-mixed during the spreading to provide relative uniformity of material within each layer. Soft or yielding materials shall be removed and be replaced with properly compacted fill material prior to placing the next layer. Rock, cobbles, and other oversized material greater than six inches in dimension in any direction shall be removed from the fill material being placed. Fill and backfill materials should be placed in layers that can be compacted with the equipment being used. Fill shall be spread in lifts no thicker than approximately eight inches; prior to being compacted. Fill and backfill materials may need to be placed in thinner lifts to achieve the recommended compaction depending on the equipment being used;
i) Compaction. Fill placement and grading operations should be performed according to Greenbook Specification 300-4, and the grading recommendations of this report. Relative compaction shall be assessed based on the latest approved edition of ASTM D1557. The tank pad over-excavation and upper one-foot of access road sections (subgrade plus base materials) shall be compacted to 95 percent relative compaction. General fill shall be compacted to a minimum of 90 percent relative compaction. The recommended specified relative compaction should extend to a minimum of three feet horizontally beyond the limits of the improvements. Density testing should be performed a minimum of every two vertical feet and one test per every 100 cubic yards of fill placed;
j) Allowable Bearing Pressure. Continuous footings for the tank ringwall can be supported on recompacted on-site granular fill materials. For these conditions, shallow footings shall be designed using a maximum allowable bearing pressure of 2,000 pounds per square foot (psf). The allowable value incorporates a factor of safety of at least 3. A one-third increase in the allowable bearing pressure may be used for transient loads such as seismic or wind forces;
k) Minimum Embedment Depth and Width. In general, footings embedded in fill materials shall extend to at least two feet below the lowest adjacent grade and have a minimum width of 18 inches. Isolated pad footings shall be at least three feet in least dimension;
l) Sliding and Passive Resistance. The passive resistance for the upper one-foot of soil shall be neglected unless the soils are confined at the ground surface by slab-on-grade or

pavement. The passive resistance shall be reduced to 150 pcf if the ground surface in front of the wall descends at a 2:1 slope. Sliding resistance and passive pressure may be used together without reduction, when used with the recommended minimum factors of safety. For static conditions, minimum factors of safety of 1.5 and 2.0 are required for foundation overturning and sliding, respectively. The factor of safety for sliding can be reduced to 1.5 if passive resistance is neglected. The factor of safety for transient (seismic, wind) conditions shall be at least 1.1;

m) Static Settlements. The estimated static settlement due to new tank loading ranges from ¾- to 1-½ inch. The structure shall be designed to accommodate static differential settlements of at least ½-inch over a distance of 30 feet (i.e., a distortion ratio of approximately 1/720) for similarly sized and loaded footings;

n) Temporary Slopes and Excavations. Temporary slopes shall be braced or sloped according to the requirements of OSHA. All temporary excavations shall be monitored for signs of instability and appropriate actions (such as flattening the slope, providing shoring, and controlling groundwater, if encountered) shall be undertaken if evidence of potential instability is observed;

o) Permanent Slopes. Permanent cut-slopes shall be inclined at 2:1 or flatter;

p) Site Drainage. Site grading shall be provided such that positive drainage away from improvements is provided. Water shall not be allowed to pond near the improvements. The construction of finished slopes of 1 to 2 percent away from the improvements. Erosion control and maintenance of the slopes shall be provided to reduce the potential for erosion; and

q) Water Pipeline and Dry Utilities. The pipelines and/or dry utilities shall have a minimum of six inches of clean sand bedding and be covered with a minimum of 12 inches of clean sand. The sand shall have a minimum sand equivalent (SE) of 30 and should be compacted to a minimum of 90 percent relative compaction. The trench zone above the bedding can be backfilled with general fill consisting on on-site soil and compacted to a minimum of 90 percent relative compaction. Ditch plugs such as sacked concrete, shall be provided every 50 feet along the length of the trench in areas where the pipeline gradient is steeper than 5:1. The ditch plugs shall extend from the bottom of the trench to the ground surface to help reduce runoff. In addition, the trench surface shall be protected from allowing surface water to run down the length of the trench.

Implementation of the measures recommended in the project geotechnical report, summarized above, will reduce impacts to less than significant levels.

VII.	HAZARDS & HAZARDOUS MATERIALS - *Will the project:*	Potentially Significant	Impact can & will be mitigated	Insignificant Impact	Not Applicable
a)	*Result in a risk of explosion or release of hazardous substances (e.g. oil, pesticides, chemicals, radiation) or exposure of people to hazardous substances?*	☐	☐	☒	☐
b)	*Interfere with an emergency response or evacuation plan?*	☐	☐	☐	☒
c)	*Expose people to safety risk associated with airport flight pattern?*	☐	☐	☒	☐
d)	*Increase fire hazard risk or expose people or structures to high fire hazard conditions?*	☐	☐	☒	☐
e)	*Create any other health hazard or potential hazard?*	☐	☐	☒	☐
f)	*Other:* _____	☐	☐	☐	☒

Setting. Hazardous Materials: Hazardous materials are defined as substances with physical and chemical properties of ignitability, corrosivity, reactivity, or toxicity which may pose a threat to human health or the environment. This includes, for example, chemical materials such as petroleum products, solvents, pesticides, herbicides, paints, metals, asbestos, and other regulated chemical materials. Additionally, hazards include known historical spills, leaks, illegal dumping, or other methods of release of hazardous materials to soil, sediment, groundwater, or surface water. If a historical release exists, then there is a risk associated with disturbing the historical release area. The potential for risks associated with hazardous materials are varied regionally. The primary risk concerns within the project area are expected to focus on the transportation of hazardous materials in and around the community. Most of these incidents are related to the increasing frequency of transport of chemicals over roadways, railways or through industrial accidents. Highway 1 is the major transportation corridor through the San Simeon area.

Fire Hazards: Fires have the potential to cause significant losses to life, property, and the environment. Urban fire hazards result from the materials that make up the built environment, the size and organization of structures, and spacing of buildings. Additional factors that can accelerate fire hazards are availability of emergency access, available water volume and pressure for fire suppression, and response time for fire fighters. Fire hazard severity in rural areas, including areas on the edge between urban and rural land (commonly called the wildland interface), are highly influenced by the slope of the landscape and site vegetation and climate. Where wildland fires may be a threat, plant fuels are often managed by replacement planting, grazing, plowing, or mechanical clearing.

Airport Hazards: The project site is not in the vicinity of any airports.

Impact. The proposed project would not create a significant hazard to the public or to the environment through the routine transport, use, or disposal of hazardous materials. Construction of the proposed project would be required to comply with applicable building, health, fire, and safety codes. Hazardous materials would be used in varying amounts during construction of the project. Construction and maintenance activities would use hazardous materials such as fuels (gasoline and diesel), oils, and lubricants; paints and paint thinners; glues; cleaners (which could include solvents and corrosives in addition to soaps and detergents); and possibly pesticides and herbicides. The amount of materials used would be small, so the project would not create a significant hazard to the public or to the environment through the routine transport, use, or disposal of hazardous materials, assuming such use complies with applicable federal, state, and local regulations, including but not limited to Titles 8 and 22 of the CCR, the Uniform Fire Code, and Chapter 6.95 of the California Health and Safety Code. The project is not located in an area of known hazardous material contamination and is not listed on the "Cortese List" of hazardous materials sites compiled pursuant to Government Code Section 65962.5.

With respect to operation of the proposed water tanks and infrastructure upgrades, hazardous materials are not proposed for use. Treatment of pumped water for domestic use is currently ongoing at the SSCSD and regulated by the Regional Water Quality Control Board and would change as a result of the proposed water storage project.

The proposed project would not result in the routine transport, use, disposal, handling, or emission of any hazardous materials that would create a significant hazard to the public or to the environment. Implementation of Title 49, Parts 171–180, of the Code of Federal Regulations and stipulations in the General Plan Safety Element would reduce any impacts associated with the potential for accidental release during construction. These regulations establish standards by which hazardous materials would be transported, within and adjacent to the proposed project. Where transport of these materials occurs on roads, the California Highway Patrol is the responsible agency for enforcement of regulations.

The proposed project is not located in proximity to any schools.

Fire protection is provided by CalFire Department, Station 10, located at 6126 Coventry Lane, in the community of Cambria, CA. The Fire station is in close proximity to the project site, providing timely emergency support if needed. No airports are nearby, and as a result the project is not within an Airport Review area. There are no private airstrips in the vicinity of the project site that would result in a safety hazard for people residing or working in the project area.

In addition, it is important to note that the primary purpose of the proposed project is to provide necessary upgrades to the San Simeon water infrastructure to improve community fire flow, as directed by CalFire and documented in the SSCSD Master Plan discussed under the Project Description Section.

Mitigation/Conclusion. With implementation of applicable local, State and Federal regulations discussed above, impacts are considered less than significant. No mitigation measures are require

VIII.	NOISE - *Will the project:*	Potentially Significant	Impact can & will be mitigated	Insignificant Impact	Not Applicable
a)	*Expose people to noise levels that exceed the County Noise Element thresholds?*	☐	☒	☐	☐
b)	*Generate increases in the ambient noise levels for adjoining areas?*	☐	☐	☒	☐
c)	*Expose people to severe noise or vibration?*	☐	☐	☒	☐
d)	*Other:* _____	☐	☐	☐	☒

Setting. The major noise source in the community of San Simeon, as in most other communities, is traffic. The relatively small community does not exhibit other common noise generators such as railroads, aircraft, farming activities, quarry activities, and industrial and food packaging facilities can contribute to local ambient noise levels.

Some land uses are less tolerant of noise than others. For example, schools, hospitals, churches, and residences are more sensitive to noise intrusion than commercial or industrial activities. For this reason, land use compatibility with the noise environment is an important consideration in the planning and design of new developments. As ambient noise levels affect the perceived livability of a development, the mismanagement or neglect of noise impacts can impair the economic health and growth potential of a community by reducing the area's desirability as a place to live, shop and work.

The Office of Noise Control, established by the California Noise Control Act of 1973, has developed criteria and guidelines for local agencies for use in setting standards for human exposure to noise and preparing noise elements. The noise standards developed by the Office of Noise Control and intended as guidelines for municipal noise elements and have been incorporated in the County's General Plan Noise Element.

The proposed project is not within close proximity of loud noise sources and will not conflict with any sensitive noise receptors (e.g., residences). Additionally, the project is not considered a "noise sensitive land use". The proposed project is located within an agricultural area and based on the Noise Element's projected future noise generation from known stationary and vehicle-generated noise sources, the project is within an acceptable threshold area. There nearest sensitive receptor is located approximately 1,200 feet from the proposed water tank construction location. However, utility upgrades within the community have the potential to result in noise generation from intermittent/temporary construction activities.

Impact. The proposed water tank construction site is located within an agricultural area and based on the Noise Element's projected future noise generation from known stationary and vehicle-generated noise sources, the project is within an acceptable threshold area. The project would not generate loud noises as a result of operations, nor conflict with the surrounding uses. Operation of the proposed water tanks would not generate an increase in existing noise levels and the project

would not expose people to significant increased noise levels. However, the proposed utility improvements and upgrades would require temporary/intermittent construction activities within the community, primarily limited to existing utility easements along roadways and sidewalks.

During the construction phase of the project, noise generated from construction activities may intermittently dominate the noise environment in the immediate area. Short-term construction noise would be limited in nature and duration; however, utility upgrades would occur within close proximity of sensitive receptors in the community (residential and commercial uses). Construction-related noise would be limited to the daytime hours of 7:00 a.m. to 9:00 p.m. Monday through Friday, and 8:00 a.m. to 5:00 p.m. on Saturday or Sunday, consistent with County construction noise exception standards (County Code Section 22.10.120.A). Potential construction-related noise impacts resulting from the proposed water tank construction would be less than significant. However, noise impacts from construction activities within the community associated with the proposed utility upgrades within the community could result in significant but mitigable impacts.

The proposed project is not expected to result in a significant long-term increase in traffic noise levels. The operation of the proposed project would not be expected to have a significant impact on daily noise at the project site. As such, noise-related impacts resulting from operation of the proposed project would be less than significant.

The proposed project site is not located within an airport land use plan.

Mitigation/Conclusion. In order to reduce noise impacts related to project construction to less than significant levels, the following mitigation is required:

N-1: Stationary construction equipment used for proposed utility and infrastructure upgrades within the community that generates noise exceeding 65 dBA at the project boundaries shall be shielded with the most modern and effective noise control devices (i.e., mufflers, lagging, and/or motor enclosures). Impact tools (e.g., jack hammers, pavement breakers, and rock drills) used for project construction within the community shall be hydraulically or electrically powered wherever possible to avoid noise associated with compressed-air exhaust from pneumatically powered tools. Where use of pneumatic tools is unavoidable, an exhaust muffler on the compressed-air exhaust shall be used. All equipment shall be properly maintained to ensure that no additional noise, due to worn or improperly maintained parts, is generated. Stockpiling and vehicle staging areas shall be located as far as practical from sensitive noise receptors. Every effort shall be made to create the greatest distance between noise sources and sensitive receptors during construction activities within the community.

IX.	POPULATION/HOUSING - *Will the project:*	Potentially Significant	Impact can & will be mitigated	Insignificant Impact	Not Applicable
a)	*Induce substantial growth in an area either directly or indirectly (e.g., through projects in an undeveloped area or extension of major infrastructure)?*	☐	☐	☒	☐
b)	*Displace existing housing or people, requiring construction of replacement housing elsewhere?*	☐	☐	☐	☒
c)	*Create the need for substantial new housing in the area?*	☐	☐	☒	☐
d)	*Use substantial amount of fuel or energy?*	☐	☐	☒	☐
e)	*Other:* _____	☐	☐	☐	☒

Setting. In its efforts to provide for affordable housing, the county currently administers the Home Investment Partnerships (HOME) Program and the Community Development Block Grant (CDBG) program, which provides limited financing to projects relating to affordable housing throughout the county. The County's Inclusionary Housing Ordinance requires provision of new affordable housing in conjunction with both residential and nonresidential development and subdivisions.

As an unincorporated community in San Luis Obispo County, the area is subject to the North Coast Land Use and Circulation Elements of the San Luis Obispo County General Plan. In that document, it states that the County's Growth Management Ordinance limits growth County wide to 2.3%. The growth of the community of San Simeon is limited by the current moratorium on building permits/approvals enacted as a voluntary measure by the SSCSD Board of Directors in the 1980s. This has restricted the growth of the community for several decades and remains in place.

Impact. Implementation of the proposed project would increase the community water storage and transmission capacity in order to meet fire flow demands stipulated by CalFire and to help provide the necessary public safety for residential and commercial users. The current growth moratorium in San Simeon is a voluntary act by the SSCSD Board of Directors. The increase of water storage and transmission capacity associated with the proposed project would not, in and of itself, trigger the lifting of the moratorium. Any attempt to assess growth inducing impacts would be premature and speculative at this time. At such time that the SSCSD Board of Directors wishes to propose the lifting of the moratorium, the action would trigger its own environmental review process under CEQA and growth inducing impacts (among others) would be analyzed at that time.

The project would not displace any existing housing. Project energy use and related impacts are discussed under Impact Issue Area III, Air Quality. Impacts are considered less than significant.

Mitigation/Conclusion. No significant population and housing impacts are anticipated, and no mitigation measures are necessary.

X.	PUBLIC SERVICES/UTILITIES - *Will the project have an effect upon, or result in the need for new or altered public services in any of the following areas:*	Potentially Significant	Impact can & will be mitigated	Insignificant Impact	Not Applicable
a)	*Fire protection?*	☐	☐	☒	☐
b)	*Police protection (e.g., Police, Sheriff, CHP)?*	☐	☐	☒	☐
c)	*Schools?*	☐	☐	☒	☐
d)	*Roads?*	☐	☐	☒	☐
e)	*Solid Wastes?*	☐	☐	☒	☐
f)	*Other public facilities?*	☐	☐	☒	☐
g)	*Other:* _____	☐	☐	☐	☒

Setting. Police and Fire. Fire protection and emergency response services within the community of San Simeon are provided by CalFire Station 10, which is staffed by a cooperative agreement between CalFire and the County of San Luis Obispo. This station is comprised of a Fire Chief, three Captains, and three Engineers and is supported by approximately 12 paid on-call reservists who are shared by the County of San Luis Obispo as well as the North Coast Ocean Rescue team. Police services are provided by the San Luis Obispo County Sheriff Coast Station.

Schools. The Coast Union Unified School District provides public school services for the community of San Simeon. Coast Unified School District is located in the community of Cambria. The district consists of one K-5 elementary school, one 6–8 middle school, one traditional 9–12 high school and one alternative high school. There are approximately 850 students enrolled K-12.

Recreation. The community of San Simeon is a relatively small community; however, it is a popular location for locals and tourists to enjoy outdoor recreational opportunities related to the coastal environmental and beaches. The community is a popular destination for travelers along Highway 1, with a focus on the nearby Hearst Castle. The community is surrounded by State Parks properties that offer hiking for outdoor recreation and observing the unique natural coastal environment. This includes the San Simeon State Park, offering fishing, day use and interpretive amenities.

Solid Waste. Mission County Disposal provides solid waste services to the community of San Simeon.

Other Public Facilities. The San Luis Obispo County Library network program supports San Simeon residents with a branch library location at the Cambria Library. Road maintenance is provided by both the SSCSD as well as the County of San Luis Obispo.

Impact. Implementation of the proposed project will not result in additional residential development that could contribute to a cumulative demand on public services including schools, police, fire and solid waste The project's direct and cumulative impacts are within the general assumptions of allowed uses within the community that were used to estimate the fees in place. Construction within

utility easements will be coordinated with the County of San Luis Obispo. As such, public service impacts are considered less than significant.

Mitigation/Conclusion. Impacts are considered less than significant, no mitigation is required.

XI.	RECREATION - *Will the project:*	Potentially Significant	Impact can & will be mitigated	Insignificant Impact	Not Applicable
a)	*Increase the use or demand for parks or other recreation opportunities?*	☐	☐	☒	☐
b)	*Affect the access to trails, parks or other recreation opportunities?*	☐	☐	☒	☐
c)	*Other* _____	☐	☐	☐	☒

Setting. As discussed under Section X, Public Services/Utilities, the community of San Simeon is a relatively small community; however, it is a popular location for locals and tourists to enjoy outdoor recreational opportunities related to the coastal environmental and beaches. The community is a popular destination for travelers along Highway 1, with a focus on the nearby Hearst Castle. The community is surrounded by State Parks properties that offer hiking for outdoor recreation and observing the unique natural coastal environment. This includes the San Simeon State Park, offering fishing, day use and interpretive amenities.

Impact. The proposed project would not create a significant need for additional park, Natural Area, and/or recreational resources. The proposed project is limited to the development of new water tanks and the corresponding utility improvements and upgrades. The project would be located on a privately-owned agricultural parcel that supports existing agricultural activities under the Hearst Ranch. Construction and operation of the proposed water tanks and utilities would not have any adverse effects on existing or planned recreational opportunities in the County.

Mitigation/Conclusion. Impacts are considered less than significant and no additional measures are required.

XII.	TRANSPORTATION/ CIRCULATION - *Will the project:*	Potentially Significant	Impact can & will be mitigated	Insignificant Impact	Not Applicable
a)	*Increase vehicle trips to local or areawide circulation system?*	☐	☐	☒	☐
b)	*Reduce existing "Levels of Service" on public roadway(s)?*	☐	☐	☒	☐
c)	*Create unsafe conditions on public roadways (e.g., limited access, design features, sight distance, slow vehicles)?*	☐	☐	☒	☐
d)	*Provide for adequate emergency access?*	☐	☐	☒	☐
e)	*Result in inadequate parking capacity?*	☐	☐	☒	☐
f)	*Result in inadequate internal traffic circulation?*	☐	☐	☒	☐
g)	*Conflict with adopted policies, plans, or programs supporting alternative transportation (e.g., pedestrian access, bus turnouts, bicycle racks, etc.)?*	☐	☐	☒	☐
h)	*Result in a change in air traffic patterns that may result in substantial safety risks?*	☐	☐	☐	☒
i)	*Other:* _____	☐	☐	☐	☒

Setting. Regional access to the community of San Simeon is provided by U.S. Highway 1, and access to the project site vicinity is provided by Pico Avenue. The County has established the acceptable Level of Service (
LOS) on roads for this rural area as "C" or better. The existing road network in the area, including the project's access street (Pico Avenue), is operating at acceptable levels. Based on existing road speeds and configuration, sight distance is considered acceptable.

Impact. The proposed project is limited to the construction of the proposed water tanks and associated utility upgrade and improvements discussed above in detail under the Project Description. No development is proposed that would have the potential to increase traffic on local roadways or regional transportation corridors (e.g., Highway 1). Project traffic impacts are limited to temporary construction activities associated with the water tanks and utility improvements and operational traffic increases are not expected. Therefore, transportation and traffic impacts are considered less than significant.

The project will not affect air traffic patterns. The project would not substantially increase hazards due to a design feature or incompatible use. Impacts are considered less than significant.

The proposed project would not conflict with adopted policies, plans, or programs supporting alternative transportation. Project construction staging will not be allowed to obstruct traffic access to community residences. Impacts are considered less than significant.

Mitigation/Conclusion. Traffic and circulation impacts are considered less than significant. Further mitigation is not required.

XIII.	WASTEWATER - *Will the project:*	Potentially Significant	Impact can & will be mitigated	Insignificant Impact	Not Applicable
a)	***Violate waste discharge requirements or local criteria for wastewater systems?***	☐	☐	☒	☐
b)	***Change the quality of surface or ground water (e.g., nitrogen-loading, daylighting)?***	☐	☐	☒	☐
c)	***Adversely affect community wastewater service provider?***	☐	☐	☒	☐
d)	***Other:*** _____	☐	☐	☐	☒

Setting. The SSCSD Wastewater Treatment Plant is located off of Balboa Ave in the community of San Simeon. A gravity sewer system conveys domestic wastewater to the District's Wastewater Treatment Plant. The collection system is comprised of approximately 1.6 miles of gravity sewer pipe (mostly six inches in diameter). The District also receives wastewater from the Hearst San Simeon State Historical Monument (the State). Per the 2018 Master Plan the Average Daily Flow (ADF) for the District is 76,500 gpd (gallons per day) based on flow records for 24 consecutive months from 2014 to 2016.

The SSCSD and the Central Coast Regional Water Quality Control Board (RWQCB) ensure that proposed projects conform to all applicable local standards. Please refer to Section XIV, *Water,* for a discussion of potential impacts related to stormwater runoff.

Impact. The proposed project would not generate wastewater or require wastewater disposal during project operation. Construction-related wastewater would be accommodated by licensed on-site portable restroom and hand-washing facilities and disposed of in accordance with existing regulations. Wastewater impacts are considered less than significant.

Mitigation/Conclusion. Mitigation measures are not required. Impacts are considered less than significant.

XIV.	WATER - *Will the project:*	Potentially Significant	Impact can & will be mitigated	Insignificant Impact	Not Applicable
a)	*Violate any water quality standards?*	☐	☐	☒	☐
b)	*Discharge into surface waters or otherwise alter surface water quality (e.g., turbidity, temperature, dissolved oxygen, etc.)?*	☐	☐	☒	☐
c)	*Change the quality of groundwater (e.g., saltwater intrusion, nitrogen-loading, etc.)?*	☐	☐	☒	☐
d)	*Change the quantity or movement of available surface or ground water?*	☐	☐	☒	☐
e)	*Adversely affect community water service provider?*	☐	☐	☒	☐
f)	*Other:* _____	☐	☐	☐	☒

Setting. The San Simeon Community Services District provides potable water and recycled water service to the surrounding community, as well as wastewater treatment services. SSCSD manages two primary production wells (as well as a third well that is leased and used on an infrequent basis), a reverse osmosis treatment unit that is used during high chloride events within the groundwater basin, a 150,000 gallon existing storage reservoir, a potable water distribution network consisting of 293 active customer accounts (as of June 2017), a side stream recycled water treatment system, a gravity sewer system consisting of approximately 1.6 miles of small diameter (6- and 8-inch) pipelines, and a wastewater treatment plant that treats both the community's wastewater and wastewater from the nearby Hearst San Simeon Historical Monument.

The existing potable water distribution system consists of primarily 6- and 8 inch diameter asbestos cement pipelines. The community water supply is comprised entirely of groundwater. Water is produced in the two primary production ground water wells located in the northwest boundary of the community adjacent to the SSCSD office. The District shares a third emergency use well with the Hearst Corporation that is located further upgradient from the main wellfield. From the wells, water is redirected to the reverse osmosis treatment unit if chloride levels necessitate treatment. Otherwise, water enters the distribution system and is stored in the existing 150,000 gallon lined, buried concrete reservoir located approximately 800 feet northeast of the District office.

With respect to community water demand and the proposed increase in water storage capacity, it is important to note that the proposed project would not increase allowable pumping rates in the SSCSD well fields.

Proposed Water Storage Capacity Improvements

In previous discussions with CalFire representatives and extensive discussions with District staff during the 2018 Master Plan update, it was determined that existing potable water storage volume availability is far below what is required for fire suppression. The previous master plan had estimated that a total storage capacity of 750,000 gallons was needed based on a 2,500 gpm fire flow requirement. Discussion with the local Cal Fire representative responsible for the area covering the District, stated that the 2016 California Fire Code was to be followed. Based on Table BB105.1 of the California Fire Code (2016) and the square footage of the largest building in the Community (the San Simeon Lodge), the volume of water needed for fire suppression was determined to be 6,000 gallons per minute for a duration of 4 hours. This works out to 1.44 million gallons of required fire suppression storage. Including other, non-emergency, water use demands the total storage required for the community is 1.54 million gallons. The proposed project is considered to be the initial phase required to meet this demand based on CalFire requirements.

Impact. The project's soil types and descriptions are discussed in detail in the Agriculture, Biological Resources and Geology and Soils Sections above. As described in the NRCS Soil Survey, the project's soil erodibility is considered to be moderate. A sedimentation and erosion control plan is required for all construction and grading projects (LUO Sec. 22.52.120) to minimize these impacts. When required, the plan is prepared by a civil engineer to address both temporary and long-term sedimentation and erosion impacts. In addition, the County's Land Use Ordinance requires that temporary erosion and sedimentation measures to be installed when work is scheduled during the rainy season.

The proposed project would be constructed in an area with generally level topography. No portion of the proposed project site is within a 100-year Flood Hazard designation. Underlying soils have moderate erodibility. Please refer to Sections IV (Biological Resources0 and VI (Geology and Soils) for a detailed discussion of erosion and sedimentation impacts and required mitigation to reduce impacts to less than significant levels.

The proposed project is intended to address insufficient water storage capacity in the community of San Simeon through the construction of the proposed water tanks and associated infrastructure improvements and upgrades. The proposed project would be considered an overall benefit to the community water services.

Mitigation/Conclusion. With the incorporation of water quality mitigation required under the Biological Resources and Geology and Soils Sections and implementation of the County's Sedimentation and Erosion Control Plan requirements, construction impacts are considered less than significant. No additional mitigation is required.

XV.	LAND USE - *Will the project:*	Inconsistent	Potentially Inconsistent	Consistent	Not Applicable
a)	*Be potentially inconsistent with land use, policy/regulation (e.g., general plan [County General Plan and ordinance], specific plan, Clean Air Plan, etc.) adopted to avoid or mitigate for environmental effects?*	☐	☐	☒	☐
b)	*Be potentially inconsistent with any habitat or community conservation plan?*	☐	☐	☒	☐
c)	*Be potentially inconsistent with adopted agency environmental plans or policies with jurisdiction over the project?*	☐	☐	☒	☐
d)	*Be potentially incompatible with surrounding land uses?*	☐	☐	☒	☐
e)	*Other:* _____	☐	☐	☐	☒

Setting/Impact. Surrounding uses neighboring the project site are dominated by Agriculture and Residential Multi-Family zoning land uses. The subject parcel and the vicinity are agricultural in use consisting of livestock grazing on the Hearst Ranch. The proposed project was reviewed for consistency with policy and/or regulatory documents relating to the environment and appropriate land use (e.g., County Land Use Ordinance, General Plan, etc.). Based on a review of the County's Coastal Zone Land Use Ordinance, the project would fall into the Public Utility Facilities category, which requires Development Plan/Coastal Development Permit approval pursuant to CZLUO Section 23.08.288. The project was found to be consistent with these documents.

The project is not within or adjacent to a habitat or community conservation plan. The project is consistent or compatible with the surrounding uses as discussed in this Initial Study.

Mitigation/Conclusion. No inconsistencies were identified and therefore no additional measures above what will already be required are determined necessary.

XVI. MANDATORY FINDINGS OF SIGNIFICANCE - *Will the project:*	Potentially Significant	Impact can & will be mitigated	Insignificant Impact	Not Applicable
a) Have the potential to degrade the quality of the environment, substantially reduce the habitat of a fish or wildlife species, cause a fish or wildlife population to drop below self-sustaining levels, threaten to eliminate a plant or animal community, reduce the number or restrict the range of a rare or endangered plant or animal or eliminate important examples of the major periods of history or prehistory?	☐	☒	☐	☐
b) Have impacts that are individually limited, but cumulatively considerable? ("Cumulatively considerable" means that the incremental effects of a project are considerable when viewed in connection with the effects of past projects, the effects of other current projects, and the effects of probable future projects)?	☐	☐	☒	☐
c) Have environmental effects which will cause substantial adverse effects on human beings, either directly or indirectly?	☐	☐	☒	☐

For further information on CEQA or the environmental review process, please contact the San Simeon Community Services District, the County of San Luis Obispo Department of Planning and Building, or the California Environmental Resources Evaluation System at "http://ceres.ca.gov/topic/env_law/ceqa/guidelines/" for information about the California Environmental Quality Act.

6. REFERENCES AND RESOURCES

1. Kevin Merk Associates, LLC. San Simeon Community Services District Water System Improvement Project (APN 013-011-024) San Luis Obispo County, California, Biological Resources Assessment. December 24, 2018.
2. Kevin Merk Associates, LLC. Rare Plant Survey for the San Simeon Community Services District Water Improvement Project, San Simeon, San Luis Obispo County, California. July 29, 2019.
3. Steven Puglisi Architects, Inc. San Simeon Community Services District Water Tank Project Visual Simulations. November 2018.
4. Oakridge Geoscience, Inc. Geotechnical Report, San Simeon Community Services District Potable Water Reservoir Project Final Design. September 2018.
5. Central Coast Archaeological Research Consultants. Terry L. Joslin, PhD., RPA. Cultural Resources Survey of the San Simeon Water Tank Installation Project, 111 Pico Lane, San Simeon, San Luis Obispo County, California. August 2018.

6. Phoenix Civil Engineering, Inc., San Simeon Community Services District. San Simeon CSD Master Plan – Potable Water, Wastewater, Recycled Water and Road Network Improvement Plan. April 2018.
7. County of San Luis Obispo. Coastal Zone Land Use Ordinance, Local Coastal Program. Title 23 of the San Luis Obispo County Code. Revised September 2018.
8. County of San Luis Obispo. County General Plan.
9. Air Pollution Control District, County of San Luis Obispo. (December 2001) Clean Air Plan San Luis Obispo.
10. San Luis Obispo County APCD. April 2012. CEQA Air Quality Handbook. A Guide for Assessing the Air Quality Impacts for Projects Subject to CEQA.
11. U.S. Census 2010.
12. San Luis Obispo County APCD. March 28, 2012. Greenhouse Gas Thresholds and Supporting Evidence.
13. California Air Resources Board and California Environmental Protection Agency. April 2005. Air Quality and Land Use Handbook: A Community Health Perspective.
14. Web Soils Survey (USDA): http://websoilsurvey.sc.egov.usda.gov/App/WebSoilSurvey.aspx
15. FEMA Flood Map: https://msc.fema.gov/portal
16. U.S. Department of Agriculture, Natural Resources Conservation Service. Web Soil Survey.
17. California Air Resources Board. *Ambient Air Quality Standards.*
18. California Department of Conservation, California Geological Survey. *Alquist-Priolo Earthquake Fault Zoning Act. California Public Resources Code, Section 2621 et seq.* 1972.
19. California Department of Conservation, California Geological Survey. *Seismic Hazards Mapping Act. California Public Resources Code. Section 2690 et seq.* 1990.
20. California Department of Conservation, Division of Land Resource Protection, Farmland Mapping and Monitoring Program. *Soil Candidate Listing for Prime Agricultural Farmland of Statewide Importance*.
21. California Regional Water Quality Control Board, Central Coast Region. *Water Quality Control Plan.* As updated.
22. California Resources Agency. *California Environmental Quality Act, California Public Resources Code, Division 13 Environmental Protection, Sections 21000–21777.* 2005.
23. California Resources Agency. *Guidelines for the Implementation of the California Environmental Quality Act, Title 14 California Code of Regulations. Chapter 3.* 2005.
24. Governor's Office of Planning and Research, State of California. *Guidelines for Implementation of the California Environmental Quality Act.*
25. California Native Plant Society (CNPS). *Inventory of Rare and Endangered Plants (online edition, v8-01a)*. California Native Plant Society. Sacramento, CA.
26. California Department of Fish and Wildlife (CDFW). 2013. California Natural Diversity Database (CNDDB). Wildlife and Habitat Data Analysis Branch, California Dept. Fish and Game, Sacramento, CA.
27. California Department of Finance. Demographic Research Unit http://www.dof.ca.gov/Forecasting/Demographics/

7. MITIGATION MONITORING AND REPORTING PROGRAM

Mitigation Measure/Condition of Approval	Action Required	When Monitoring to Occur	Monitoring Frequency	Responsible Agency or Party	Compliance Verification		
					Initial	Date	Comments
Aesthetics							
AES-1. The following project features shall be required: • Project outdoor lighting shall be limited to the minimum required for security and safety; • Outdoor lighting shall be of a minimal wattage required for security and safety; • The height of outdoor light fixtures shall be limited to the minimum height allowed; • Outdoor light fixtures shall include a solid/metal hood to direct light downward and shall be designed to avoid the spilling of light off-site; and • The tanks shall include a painting schematic that shows the application of a color palate that disguises and blends the tanks into the natural environmental to the extent feasible.	Required mitigation shall be shown on building plans and shall be incorporated into project design prior to final approvals.	County staff shall ensure required measures are included in project design prior to project approval.	Prior to project approval.	County of San Luis Obispo, SSCSD			
Air Quality/Greenhouse Gas Emissions/Energy							
AQ-1. To mitigate fugitive dust emissions related to project construction, the following shall be implemented: a. Reduce the amount of the disturbed area where possible; b. Use of water trucks or sprinkler systems in sufficient quantities to prevent airborne dust from leaving the site. Increased watering frequency would be required whenever wind speeds exceed 15 mph. Reclaimed (non-potable) water should be used whenever possible; c. All dirt stock pile areas should be sprayed daily as needed; d. Permanent dust control measures identified in the approved project revegetation and landscape plans	Required mitigation shall be shown on building plans and shall be incorporated into project design prior to final approvals.	County staff shall ensure required measures are included in project design prior to project approval.	Prior to project approval.	County of San Luis Obispo, SSCSD			

Mitigation Measure/Condition of Approval	Action Required	When Monitoring to Occur	Monitoring Frequency	Responsible Agency or Party	Compliance Verification		
					Initial	Date	Comments
should be implemented as soon as possible following completion of any soil disturbing activities; e. Exposed ground areas that are planned to be reworked at dates greater than one month after initial grading should be sown with a fast germinating, non-invasive grass seed and watered until vegetation is established; f. All disturbed soil areas not subject to revegetation should be stabilized using approved chemical soil binders, jute netting, or other methods approved in advance by the APCD; g. All roadways, driveways, sidewalks, etc. to be paved should be completed as soon as possible. In addition, building pads should be laid as soon as possible after grading unless seeding or soil binders are used; h. Vehicle speed for all construction vehicles shall not exceed 15 mph on any unpaved surface at the construction site; i. All trucks hauling dirt, sand, soil, or other loose materials are to be covered or should maintain at least two feet of freeboard (minimum vertical distance between top of load and top of trailer) in accordance with CVC Section 23114; j. Install wheel washers where vehicles enter and exit unpaved roads onto streets, or wash off trucks and equipment leaving the site; k. Sweep streets at the end of each day if visible soil material is carried onto adjacent paved roads. Water sweepers with reclaimed water should be used where feasible; l. All of these fugitive dust mitigation measures shall be shown on grading and building plans; and m. The contractor or builder shall designate a person or persons to monitor the fugitive dust emissions and enhance the implementation of the measures as necessary to minimize dust complaints, reduce visible							

Mitigation Measure/Condition of Approval	Action Required	When Monitoring to Occur	Monitoring Frequency	Responsible Agency or Party	Compliance Verification		
					Initial	Date	Comments
emissions below 20% opacity, and to prevent transport of dust offsite. Their duties shall include holidays and weekend periods when work may not be in progress. The name and telephone number of such persons shall be provided to the APCD Compliance Division prior to the start of any grading, earthwork or demolition.							
AQ-2. The required mitigation measures for reducing nitrogen oxides (NOx), reactive organic gases (ROG), and diesel particulate matter (DPM) emissions from construction equipment are listed below: • Maintain all construction equipment in proper tune according to manufacturer's specifications; • Fuel all off-road and portable diesel powered equipment with ARB certified motor vehicle • diesel fuel (non-taxed version suitable for use off-road); • Use diesel construction equipment meeting ARB's Tier 2 certified engines or cleaner off-road heavy-duty diesel engines, and comply with the State off-Road Regulation; • Use on-road heavy-duty trucks that meet the ARB's 2007 or cleaner certification standard for on-road heavy-duty diesel engines, and comply with the State On-Road Regulation; • Construction or trucking companies with fleets that that do not have engines in their fleet that meet the engine standards identified in the above two measures (e.g. captive or NOx exempt area fleets) may be eligible by proving alternative compliance; • All on and off-road diesel equipment shall not idle for more than 5 minutes. Signs shall be posted in the designated queuing areas and or job sites to remind drivers and operators of the 5 minute idling limit;	Required mitigation shall be shown on building plans and shall be incorporated into project design prior to final approvals.	County staff shall ensure required measures are included in project design prior to project approval.	Prior to project approvals.	County of San Luis Obispo, SSCSD			

Mitigation Measure/Condition of Approval	Action Required	When Monitoring to Occur	Monitoring Frequency	Responsible Agency or Party	Compliance Verification		
					Initial	Date	Comments
• Diesel idling within 1,000 feet of sensitive receptors is not permitted; • Staging and queuing areas shall not be located within 1,000 feet of sensitive receptors; • Electrify equipment when feasible; • Substitute gasoline-powered in place of diesel-powered equipment, where feasible; and, • Use alternatively fueled construction equipment on-site where feasible, such as compressed natural gas (CNG), liquefied natural gas (LNG), propane or biodiesel.							
AQ-3. Any scheduled disturbance, removal, or relocation of utility pipelines shall be coordinated with the APCD Enforcement Division at (805) 781-5912 to ensure compliance with NESHAP, which include, but are not limited to: 1) written notification, within at least 10 business days of activities commencing, to the APCD, 2) asbestos survey conducted by a Certified Asbestos Consultant, and, 3) applicable removal and disposal requirements of identified ACM.	Verification of required mitigation measure shall be provided prior to construction.	Prior to construction.	Prior to construction activities.	SSCSD			
Biological Resources							
BIO-1. All vegetation removal, excavation of the tank pads, and trenching for the segment of new water line between the existing reservoir and new tanks shall occur from middle of May to late October, depending on weather conditions. If other phases of construction cannot take place during this period, Mitigation Measure BIO-2 shall apply.	Measure shall be factored into construction schedule.	At time of construction	Prior to construction kick off.	SSCSD			
BIO-2. If construction activities cannot be completed within the dry season window as described in Mitigation Measure BIO-1, a qualified biologist shall complete a daily pre-activity survey of all areas in which construction activities are planned for the day, including an inspection of stored materials, parked vehicles and any trenches that were open overnight. If any	Measure shall be factored into construction schedule and reported to County for monitoring.	At time of construction.	Prior to construction kick off	SSCSD			

Mitigation Measure/Condition of Approval	Action Required	When Monitoring to Occur	Monitoring Frequency	Responsible Agency or Party	Compliance Verification		
					Initial	Date	Comments
California red-legged frogs are found on-site, the biologist shall immediately contact the USFWS and work shall be halted until proper clearance has been given by the USFWS. If any southwestern pond turtles, San Simeon slender salamanders, California newts or two-striped gartersnakes are found, the qualified biologist shall ensure that these individuals are not killed or injured by the work.							
BIO-3. A pre-construction survey for all special-status wildlife species shall be conducted within 24 hours prior to the commencement of initial vegetation removal and/or site grading and/or trenching. If work commences on different areas at different times, a separate preconstruction survey shall be conducted before the start of work in each area. A qualified biologist shall inspect underneath any objects such as lumber, boards, logs, rocks, and brush piles for wildlife species that may be present in impact areas. If any federally listed species are found, the USFWS shall be notified as described in Mitigation Measure BIO-2. If any birds' nests are found, the measures described below in Mitigation Measure BIO-5 shall be followed.	Measure shall be factored into construction schedule and reported to County for monitoring.	Measure shall be implemented prior to and during construction.	Periodically per Measure.	SSCSD			
BIO-4. Conduct the initiation of construction activities outside of the nesting season. All initial site disturbance shall be limited to the time period between September 1 and November 1, if feasible. If initial site disturbance such as vegetation removal, grading, and trenching cannot be conducted during this time period, implementation of Mitigation Measure BIO-5 is required.	Measure shall be factored into construction schedule.	Prior to construction scheduling.	Once, prior to construction scheduling.	SSCSD			
BIO-5. Conduct a pre-construction nesting bird survey. If it is not possible to schedule the initiation of construction between September 1 and November 1, a qualified biologist shall conduct a pre-construction survey for nesting birds within 250 feet of project impact areas to ensure that no active nests will be disturbed. The pre-construction survey shall be conducted	Survey shall be scheduled by qualified biologist and coordinated with SSCSD and construction crew.	Prior to construction scheduling.	Once, per mitigation measure.	SSCSD			

Mitigation Measure/Condition of Approval	Action Required	When Monitoring to Occur	Monitoring Frequency	Responsible Agency or Party	Compliance Verification		
					Initial	Date	Comments
no more than seven days before the initiation of construction activities in any given area of the project site. During this survey, the qualified biologist shall inspect all potential nest substrates in the impact area, and any nests identified will be monitored to determine if they are active. If no active nests are found, construction may proceed. If an active nest is found within 50 feet (250 feet for raptors) of the construction area, the biologist, in consultation with CDFW, shall determine the extent of a buffer to be established around the nest. The buffer will be delineated with flagging, and no work shall take place within the buffer area until the young have left the nest, as determined by a qualified biologist.							
BIO-6. Prepare and present a Worker Environmental Awareness Program. A qualified biologist shall prepare a Worker Environmental Awareness Program that will be presented to all construction personnel and employees before any ground-disturbing activities commence at the project site. This program shall detail the measures undertaken during project implementation to avoid and minimize impacts on biological resources. It shall include a description of special-status species potentially occurring on the project site and their natural history; the status of the species and their protection under the FESA, CESA, Bald and Golden Eagle Protection Act, MBTA, and California Fish and Game Code; and the penalties for take. All attendees of the Worker Environmental Awareness Program shall sign an attendance form.	Program shall be implemented as required and sign in sheet shall be provided to SSCSD and County.	Prior to construction kick off.	Once per mitigation measure.	SSCSD			
BIO-7. Observe construction standard operating and Best Management Practices (BMPs). The following standard practices are recommended to reduce various project impacts on biological resources. a. Prior to the start of construction, the limits of disturbance shall be clearly delineated by stakes,	Measures shall be listed on project plans and implemented as required. Regular reports shall be submitted to SSCSD and County.	As part of regular construction monitoring.	Measures shall be inspected by construction monitor during site visits.	SSCSD			

Mitigation Measure/Condition of Approval	Action Required	When Monitoring to Occur	Monitoring Frequency	Responsible Agency or Party	Compliance Verification		
					Initial	Date	Comments
construction fencing, flags, or another clearly identifiable system. b. All pipes, metal tubing, or similar materials stored or stacked on the project site for one or more overnight periods shall be either securely capped before storage or thoroughly inspected for wildlife before the materials are moved, buried, capped, or otherwise used. In addition, materials such as lumber, plywood, and rolls of silt fence stored on site shall be thoroughly inspected before use. Materials that could provide shelter/nesting habitat for birds shall be covered with netting or other exclusion methods during the nesting season, where feasible and appropriate, to prevent birds from building nests. If encountered, wildlife shall be allowed to escape unimpeded, or relocated by a qualified biologist to a designated appropriate habitat area away from construction activities. Any wildlife relocations shall be authorized as necessary by CDFW and/or USFWS. c. To prevent entrapment of wildlife, all excavations (e.g., steep-walled holes or trenches) more than 6 inches deep shall be covered with plywood or similar materials when not in use or contain escape ramps constructed of dirt fill, wooden planks, or other material that wildlife could ascend. The amount of time trenches or other excavations are left open shall be minimized. All excavations more than 6 inches deep shall be inspected daily prior to the start of construction and immediately before being covered or filled. Any wildlife discovered shall be allowed to escape unimpeded before construction activities resume or shall be relocated by an authorized biologist in accordance with CDFW and/or USFWS regulations. d. Dust suppression shall occur during construction activities when necessary to meet air quality standards and protect biological resources. Dust control is an important component to minimize impacts on native							

Mitigation Measure/Condition of Approval	Action Required	When Monitoring to Occur	Monitoring Frequency	Responsible Agency or Party	Compliance Verification		
					Initial	Date	Comments
vegetation growing on or adjacent to the site. BMPs for dust abatement shall be a component of the project's construction documents. e. To minimize disturbance, all vehicle traffic shall be restricted to established roads, construction areas, and other designated areas. f. No vehicles or equipment shall be refueled within 100 feet of wetlands or streams (including offsite areas) unless a bermed and lined refueling area is constructed. No vehicles or construction equipment shall be stored overnight within 100 feet of these areas unless drip pans or ground covers are used. Spill kits shall be maintained on the site, and a spill response plan shall be in place. g. No concrete washout shall be conducted on the site outside of an appropriate containment system. h. The use of chemicals, fuels, lubricants, or biocides shall be in compliance with all local, state, and federal regulations. All uses of such compounds shall observe label and other restrictions mandated by the U.S. Environmental Protection Agency, California Department of Food and Agriculture, and other state and federal legislation. i. All food-related trash items (e.g., wrappers, cans, bottles, food scraps), small construction debris (e.g., nails, bits of metal and plastic), and other human-generated debris (e.g., cigarette butts) shall be stored in animal-proof containers and/or removed from the site on a weekly basis. No deliberate feeding of wildlife shall be allowed.							
BIO-8. Install appropriate erosion controls and revegetated graded areas. All areas where temporary construction-related impacts have taken place shall have appropriate erosion controls and other stormwater protection BMPs installed to prevent erosion potential. As part of the local approval process, a Sediment and Erosion Control Plan shall be	Measure shall be shown on project plans and implemented per measure.	Erosion controls shall be monitored as part of construction	Monitoring to occur at regular intervals per construction progress.	SSCSD			

Mitigation Measure/Condition of Approval	Action Required	When Monitoring to Occur	Monitoring Frequency	Responsible Agency or Party	Compliance Verification		
					Initial	Date	Comments
prepared that specifically seeks to protect the drainages and wetland and riparian habitat adjacent to the construction area. Silt fencing, straw bales, sand bags, fiber rolls and/or other types of materials shall be prescribed in the plan to prevent erosion and sedimentation. Biotechnical approaches using native vegetation shall be used as feasible. Areas with disturbed soils shall be restored under the direction of a qualified restoration ecologist. Methods may include recontouring graded areas to blend in with existing natural contours, covering the areas with salvaged topsoil containing native seedbank from the site, and/or applying the native seed mix described in Table 2 to the graded areas through either direct hand seeding or hydroseeding methods. **Table 2. Native Grassland Erosion Control Seed Mix.** **Species** / **Application Rate (lbs./acre)** *Bromus carinatus* (California brome) / 5 *Hordeum brachyantherum* (meadow barley) / 5 *Vulpia microstachys* (six weeks fescue) / 3 *Stipa pulchra* (purple needle grass) / 10 *Trifolium wildenvii* (tomcat clover) / 5 **Total** / **28** *Table Source: SSCSD Water System Improvement Project Biological Resources Assessment (Kevin Merk Associates, 2018).*		monitoring effort.					
Cultural Resources							
CR-1. In the event that archaeological resources are unearthed or discovered during any construction activities, the following standards shall apply:	Measure shall be printed on project plans and implemented as needed.	During initial construction efforts.	During initial construction activity.	SSCSD, County of SLO			

Mitigation Measure/Condition of Approval	Action Required	When Monitoring to Occur	Monitoring Frequency	Responsible Agency or Party	Compliance Verification		
					Initial	Date	Comments
Construction shall cease and the County of San Luis Obispo Project Manager and the SSCSD representative shall be notified so that the extent and location of discovered materials may be recorded by a qualified archaeologist, and a protection plan can be implemented to protect or remove the resources in accordance with State or Federal law. In the event of accidental discovery of human remains, all work is required to stop and the County Coroner will be contacted and the Most Likely Descendent will be identified and contacted.							
Geology and Soils							
GEO-1. In order to address the potential for geologic impacts related to the proposed project construction, the mitigation measure recommendations listed in Section 3.0 of the project geotechnical report shall be implemented as required elements of the project. The following is a summary of the required measures (please refer to the geotechnical report for a detailed discussion of these recommended mitigation measures). Measures listed in MND above and in project geotechnical report.	Measures shall be incorporated into project design.	Prior to issuance of construction permit.	Once prior to issuance of construction permit.	SSCSD, County of SLO			
Noise							
N-1. Stationary construction equipment used for proposed utility and infrastructure upgrades within the community that generates noise exceeding 65 dBA at the project boundaries shall be shielded with the most modern and effective noise control devices (i.e., mufflers, lagging, and/or motor enclosures). Impact tools (e.g., jack hammers, pavement breakers, and rock drills) used for project construction within the community shall be hydraulically or electrically powered wherever possible to avoid noise associated with compressed-air exhaust from pneumatically powered tools. Where use of pneumatic tools is unavoidable, an exhaust muffler on the compressed-air exhaust shall be used. All equipment shall be properly maintained to ensure that no additional noise, due to	Required mitigation measures shall be printed on building plans.	Monitoring shall be required at periodic inspections.	Throughout construction activities.	SSCSD, County of SLO			

Mitigation Measure/Condition of Approval	Action Required	When Monitoring to Occur	Monitoring Frequency	Responsible Agency or Party	Compliance Verification		
					Initial	Date	Comments
worn or improperly maintained parts, is generated. Stockpiling and vehicle staging areas shall be located as far as practical from sensitive noise receptors. Every effort shall be made to create the greatest distance between noise sources and sensitive receptors during construction activities within the community.							

Attachment A:
Figure 1, Site Location. Figure 2, Project Aerial Overview

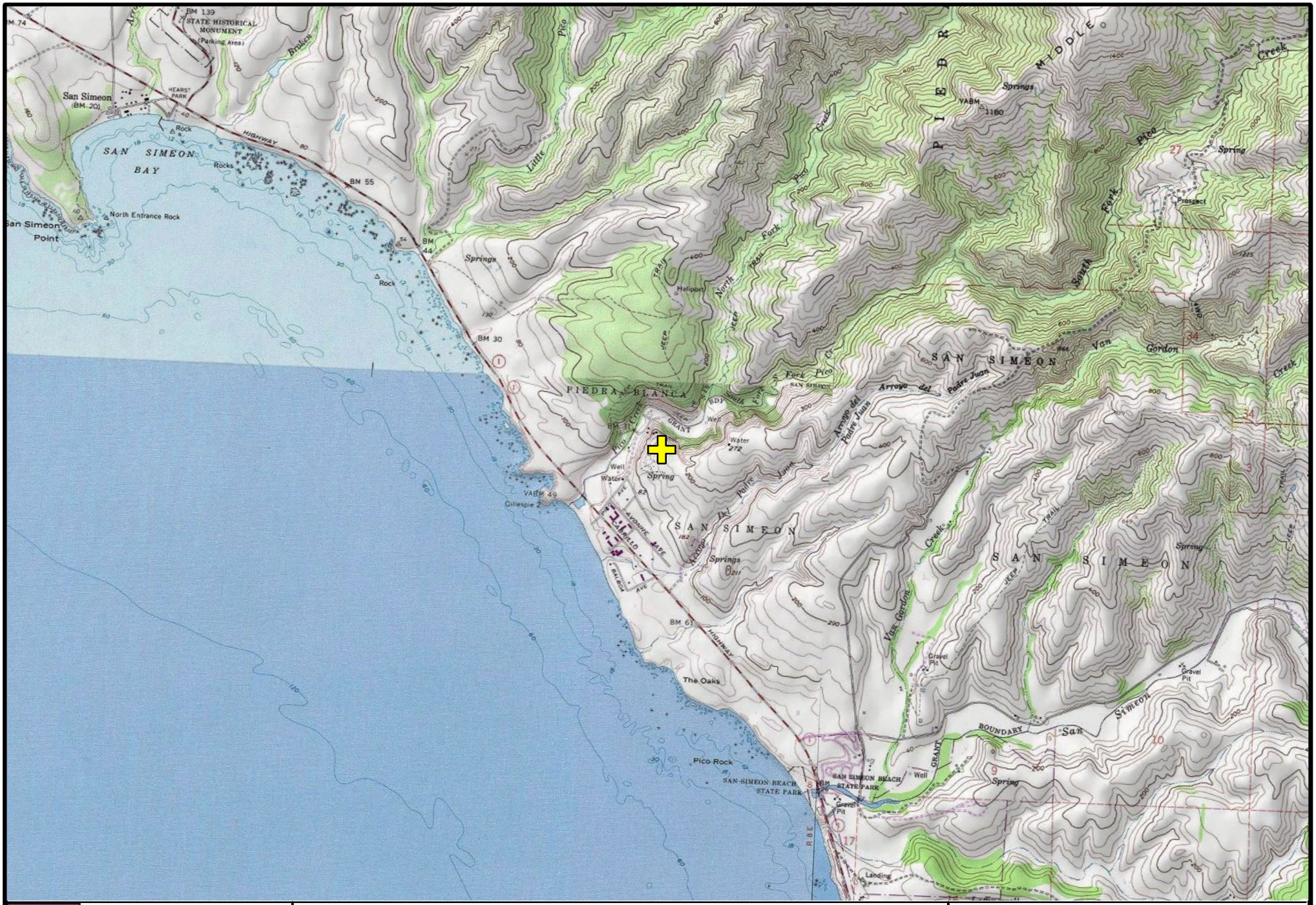

OLIVEIRA ENVIRONMENTAL CONSULTING

N W E S

1:40,000

0 500 1,000 2,000 3,000 4,000 Feet

Community Water Tank Project

San Simeon Community Services District

Figure 1

Regional Location

OLIVEIRA ENVIRONMENTAL CONSULTING

N W E S

1:2,199

0 30 60 120 180 240 Feet

Community Water Tank Project

San Simeon Community Services District

Figure 2

Aerial Overview

Attachment B:
Project Visual Simulations

Steven Puglisi
ARCHITECTS, INC

VIEW MAP

SAN SIMEON WATER TANKS

SITE PHOTOS 13 NOVEMBER.2018

Steven Puglisi
ARCHITECTS, INC

VIEW 1

SAN SIMEON WATER TANKS

SITE PHOTOS 13 NOVEMBER.2018

Steven Puglisi
ARCHITECTS, INC

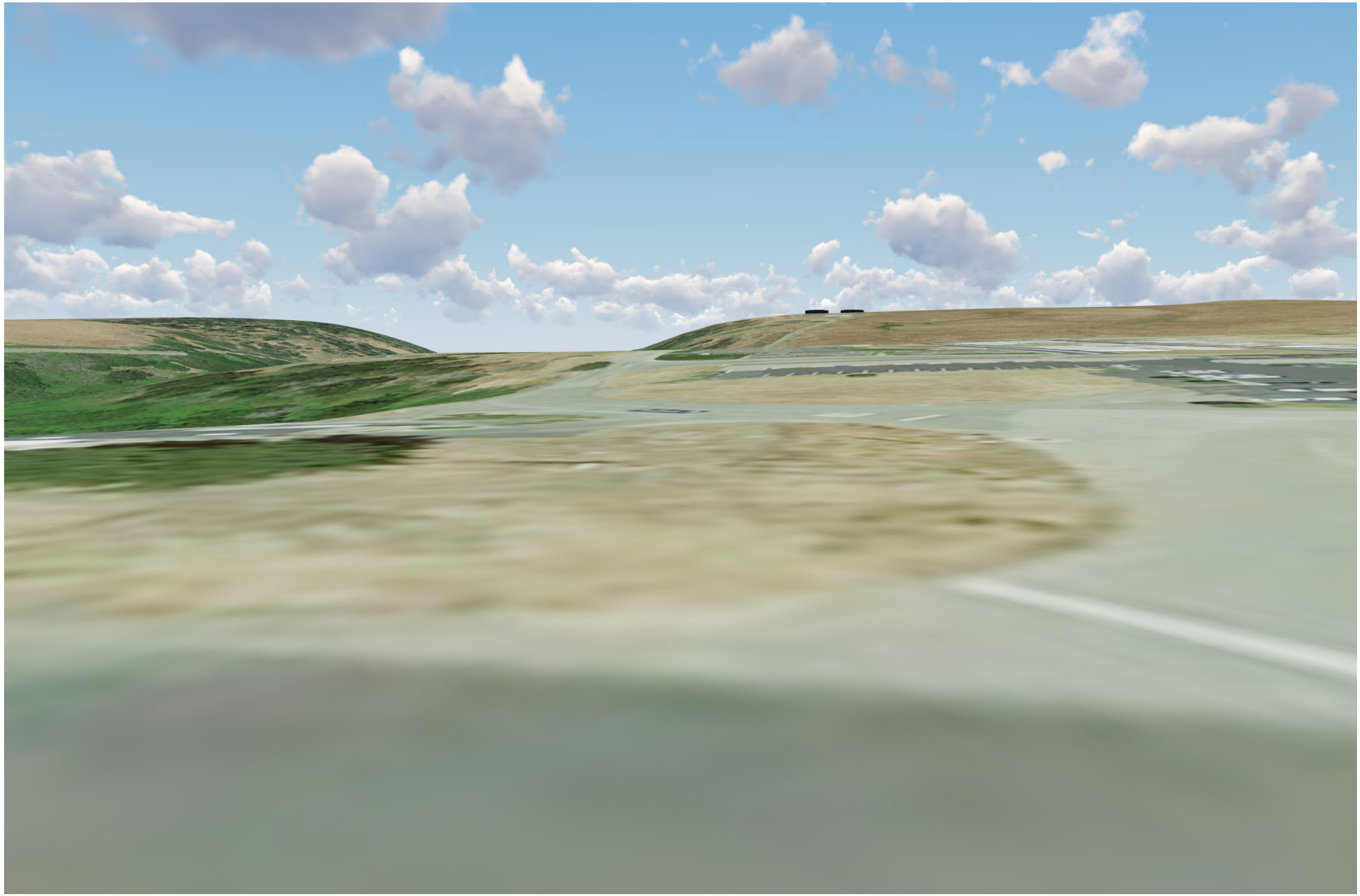

VIEW 1

SAN SIMEON WATER TANKS

SITE RENDER 20 NOVEMBER.2018

Steven Puglisi
ARCHITECTS, INC

VIEW 2

SAN SIMEON WATER TANKS

SITE PHOTOS 13 NOVEMBER.2018

Steven Puglisi
ARCHITECTS,
INC

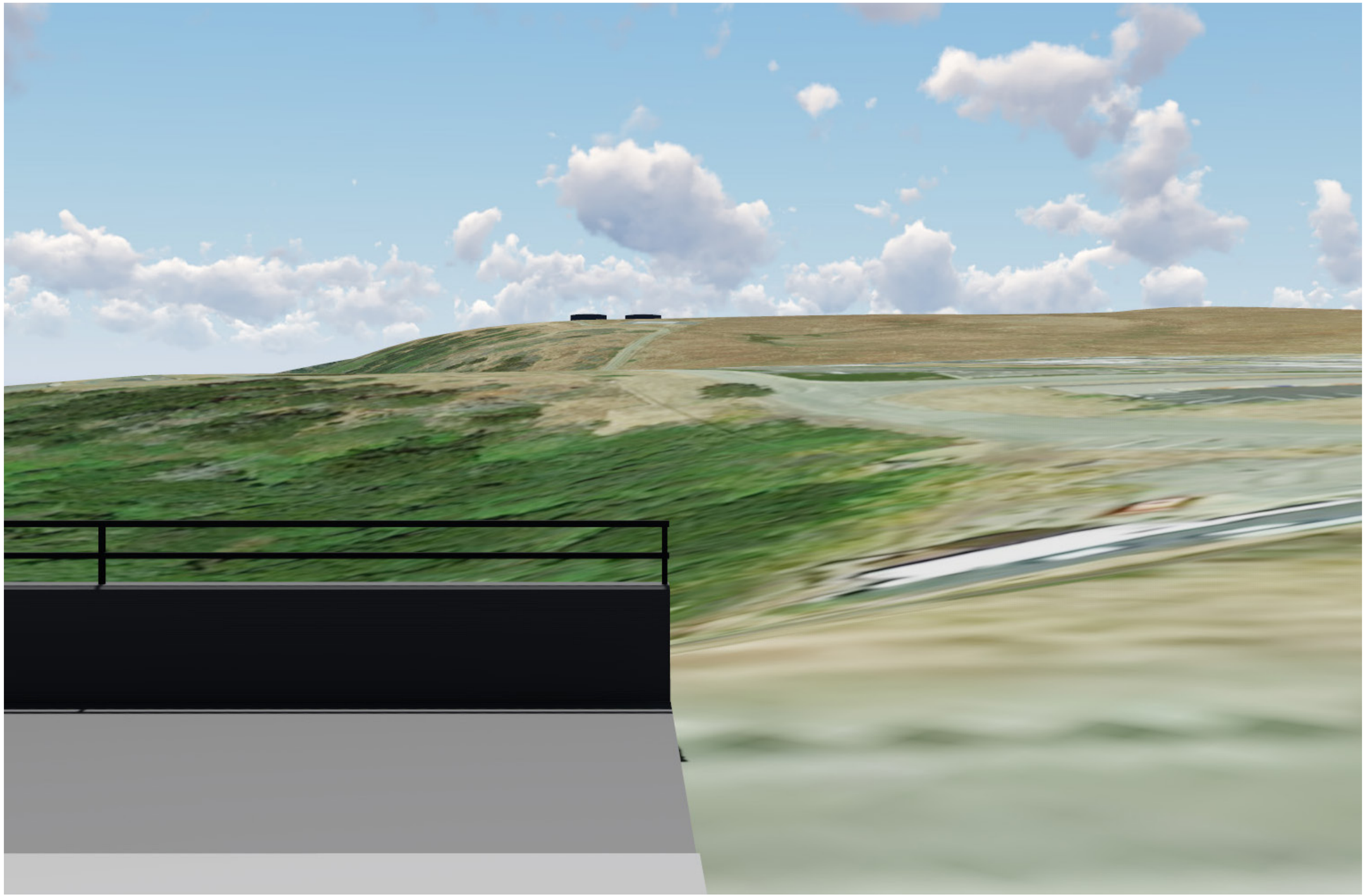

VIEW 2

SAN SIMEON WATER TANKS

SITE RENDER 20 NOVEMBER.2018

Steven Puglisi
ARCHITECTS,
INC

VIEW 3

SAN SIMEON WATER TANKS

SITE PHOTOS 13 NOVEMBER.2018

Steven Puglisi
ARCHITECTS,
INC

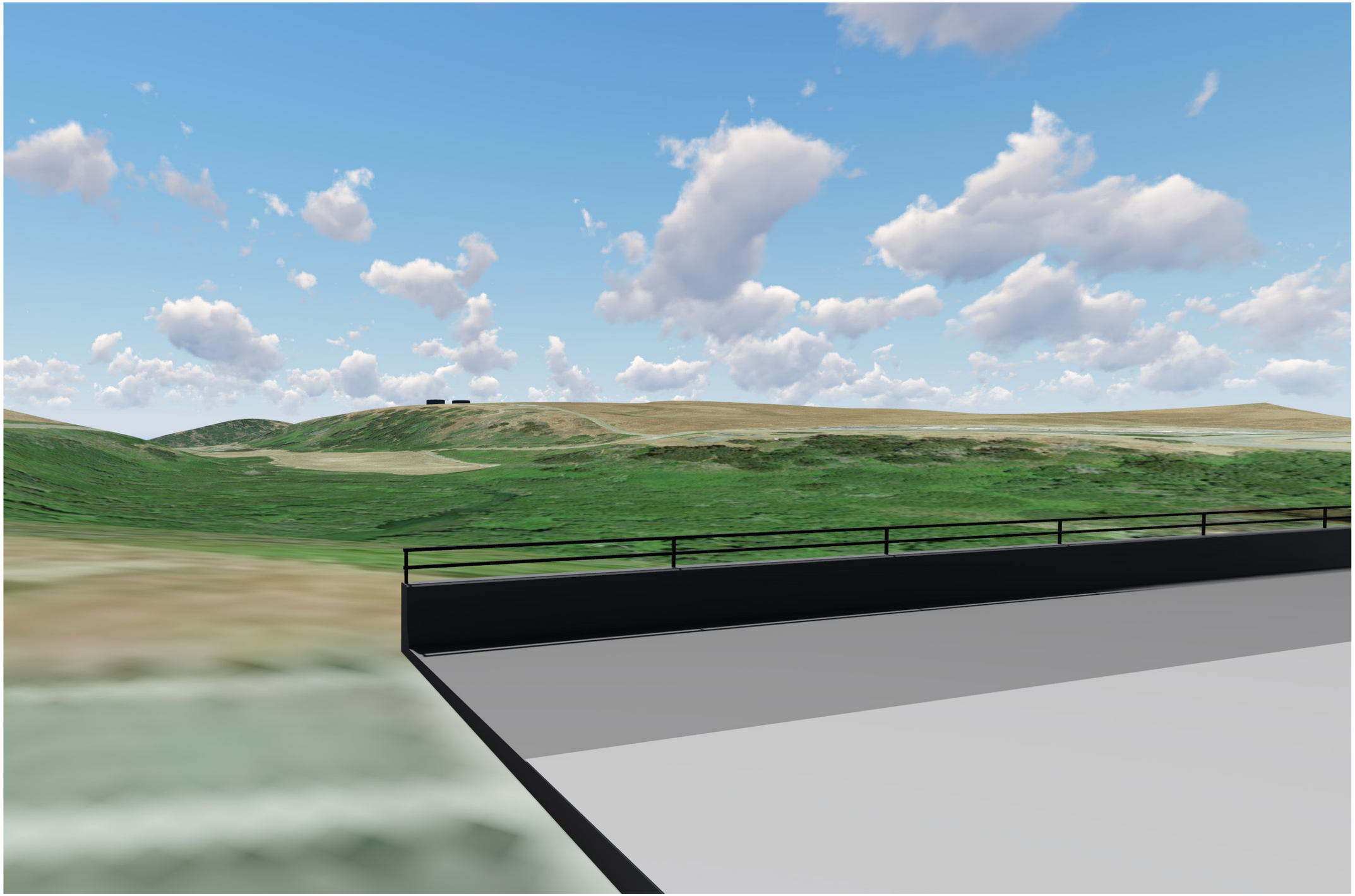

VIEW 3

SAN SIMEON WATER TANKS

SITE RENDER 20 NOVEMBER.2018

Steven Puglisi
ARCHITECTS, INC

VIEW 4

SAN SIMEON WATER TANKS

SITE PHOTOS 13 NOVEMBER.2018

Steven Puglisi
ARCHITECTS,
INC

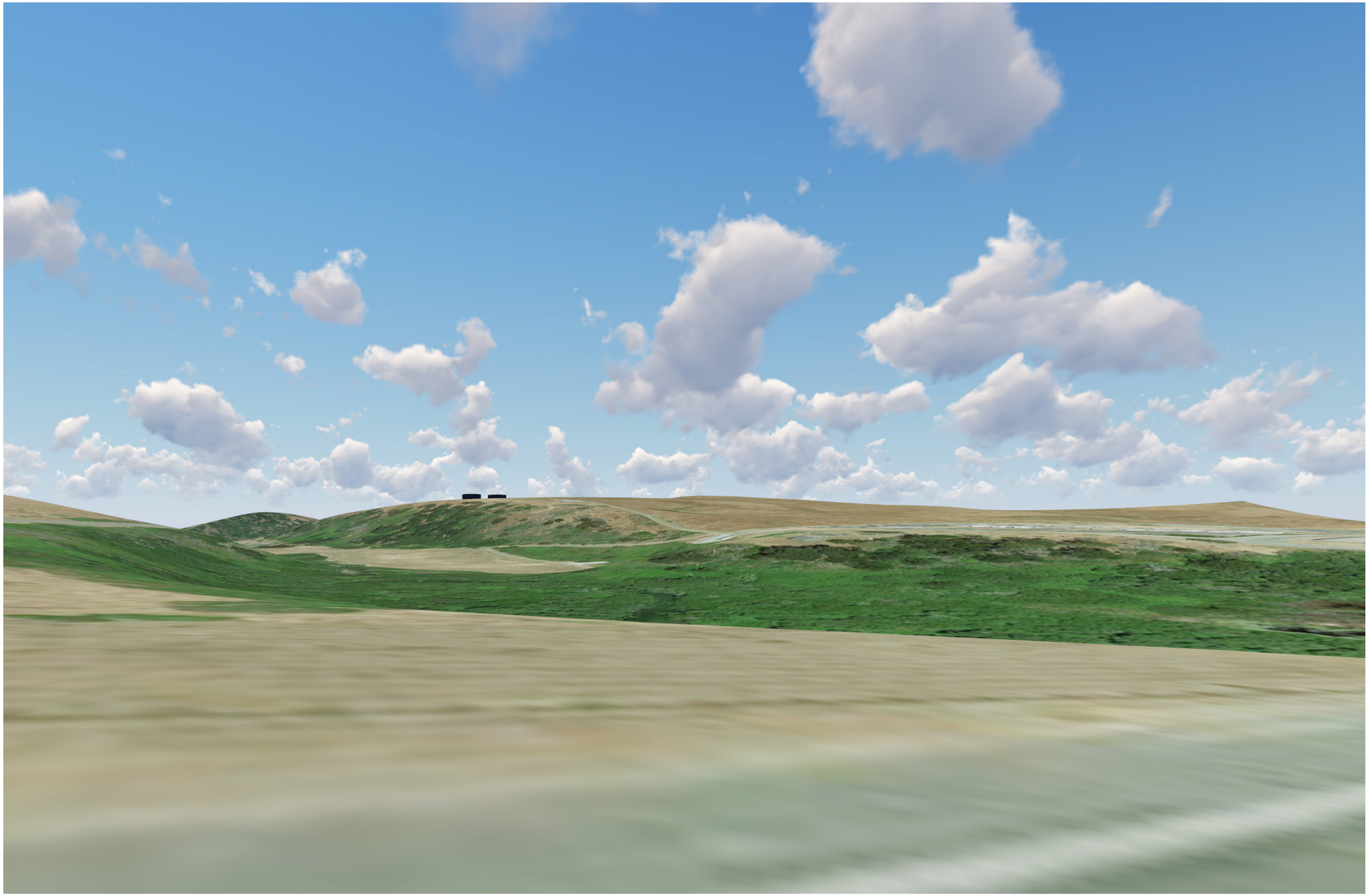

VIEW 4

SAN SIMEON WATER TANKS

SITE RENDER 20 NOVEMBER.2018

Attachment C
Project Site Plans

SAN SIMEON COMMUNITY SERVICES DISTRICT

SAN SIMEON, CALIFORNIA

WATER SYSTEM IMPROVEMENT PROJECT
PHASE 1

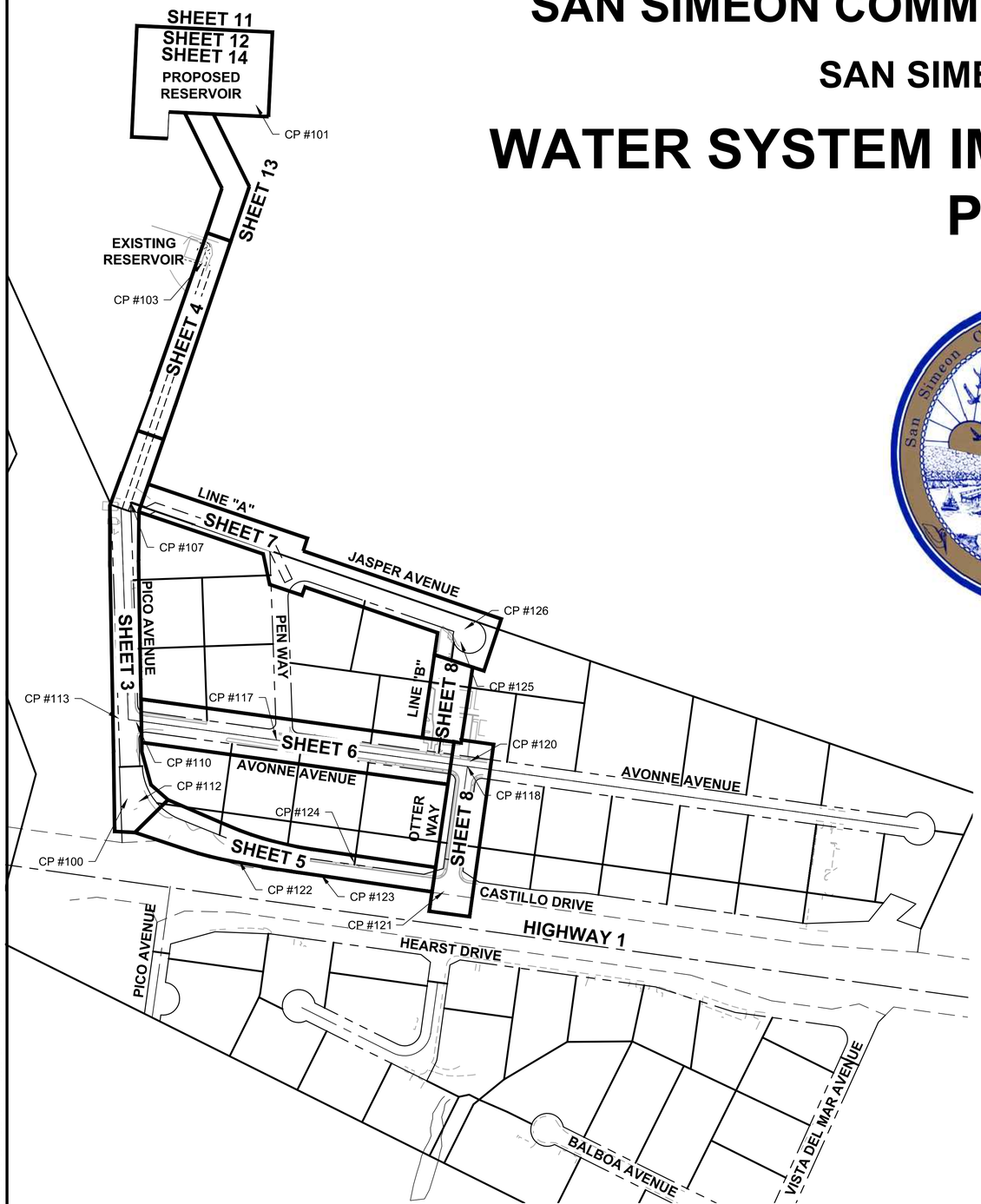

SITE MAP

1" = 200'

SHEET INDEX

DWG. NO.	SHT. NO.	DESCRIPTION
G-01	1	TITLE SHEET
G-02	2	NOTES & ABBREVIATIONS
C-01	3	PICO AVENUE - STA 1+00 TO 11+00
C-02	4	PICO AVENUE - STA 11+00 TO 18+30.45
C-03	5	CASTILLO DRIVE - STA 1+00 TO 10+54.56
C-04	6	AVONNE AVENUE - STA 10+00 TO 20+28.63
C-05	7	LINE "A" - STA 1+00 TO 6+80.33 JASPER AVENUE - STA 1+00 TO 6+34.05
C-06	8	OTTER WAY - STA 1+00 TO 3+51.03 LINE "B" - STA 1+00 TO 4+53.04
C-07	9	WATER MAIN IMPROVEMENT DETAILS
C-08	10	RESERVOIR IMPROVEMENTS INDEX SHEET
C-09	11	RESERVOIR IMPROVEMENTS SITE GRADING
C-10	12	RESERVOIR IMPROVEMENTS SITE GRADING & DETAILS
C-11	13	RESERVOIR SITE UTILITY PLAN
C-12	14	RESERVOIR SITE UTILITY PLAN
E-1	15	SYMBOL LISTS, ONE LINE, NOTES, PANEL SCHEDULES
E-2	16	OVERALL ELECTRICAL SITE PLAN, LUMINAIRE DETAILS
E-3	17	HDQTR & RESERVOIR SITE ELECTRICAL PLANS
E-4	18	TANK SITE ELECTRICAL PLAN
-	19	PROCESS AND INSTRUMENTATION DIAGRAM AND INSTRUMENTATION LEGEND
-	20	REMOTE TERMINAL UNIT ENCLOSURE LAYOUT, PARTS LIST
-	21	REMOTE TERMINAL UNIT ENCLOSURE AC POWER DIST DETAILS
-	22	REMOTE TERMINAL UNIT ENCLOSURE DC POWER DIST DETAILS
-	23	REMOTE TERMINAL UNIT ENCLOSURE ANALOG/DIGITAL INPUT WIRING DETAILS
-	24	REMOTE TERMINAL UNIT ENCLOSURE COMMUNICATION WIRING SCHEMATIC, ANTENNA FABRICATION DETAILS
-	25	INSTRUMENT INSTALLATION DETAILS
-	26	CHLORINE RESIDUAL ANALYZER ENCLOSURE LAYOUT AND PARTS LIST
-	27	REVERSE OSMOSIS PLANT RO AND FILTER VALVE WIRING MODIFICATIONS

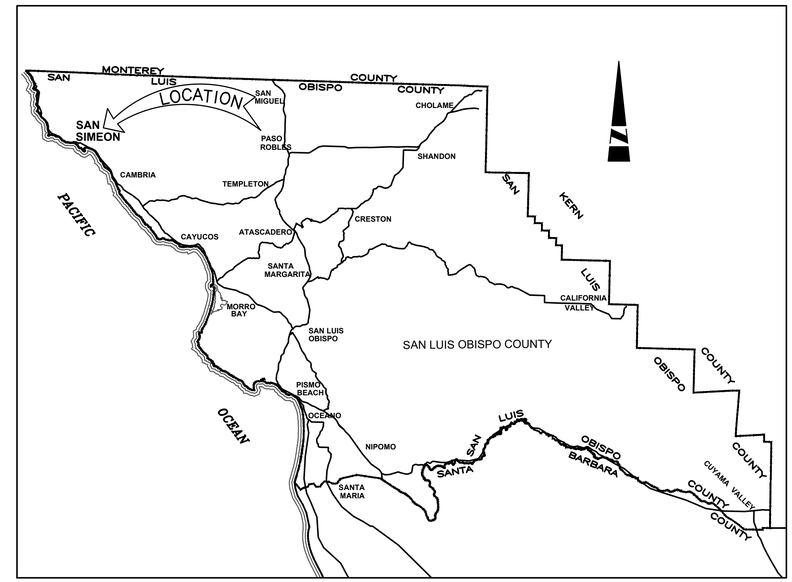

LOCATION MAP

N.T.S.

UTILITY CONTACTS

WATER, SEWER, STORM DRAIN
SAN SIMEON COMMUNITY SERVICES DISTRICT
JERRY COPELAND (805) 927-4778

POWER
PACIFIC GAS AND ELECTRIC
(800) PGE-5000

GAS
SOUTHERN CALIFORNIA GAS COMPANY
(818) 701-4516 x3360

CABLE TV
CHARTER CABLE
(888) 438-2427

SAN SIMEON CABLE

TELEPHONE
AT&T REPRESENTATIVE
FORKERT ENGINEERING AND SURVEY
(714) 963-7964

BENCH MARK

THE BENCH MARK FOR THIS PROJECT IS SLO 1 PM 53.8
ELEVATION = 85.49 (NAVD88)

Know what's below. Call 811 before you dig.

REGISTERED PROFESSIONAL ENGINEER JONATHON M. JURGENS No. 60214 EXP. 6/30/20 CIVIL STATE OF CALIFORNIA

VERIFY SCALES
BAR IS ONE INCH ON ORIGINAL DRAWING
0 — 1
IF NOT ONE INCH ON THIS SHEET, ADJUST SCALES ACCORDINGLY

PREPARED BY:
PHOENIX CIVIL ENGINEERING, INC.
535 E. MAIN STREET
SANTA PAULA, CA 93060
(805) 658-6800

REGISTERED CE 60214 — EXP. 6-30-20 — DATE

REV.	SYM.	DESCRIPTION	R.C.E.	DATE
		75% SUBMITTAL		1/1/19

SAN SIMEON COMMUNITY SERVICES DISTRICT
WATER SYSTEM IMPROVEMENT PROJECT
PHASE 1

TITLE SHEET

REVIEWED BY:
GENERAL MANAGER — DATE

JOB NO. -
DRAWING NO. G-01

DESIGNED BY:	DRAWN BY:	CHECKED BY:	DATE
JMT	CK	JMT	11/9/18

SHEET 1 OF 27

DWG: C:\Users\ChrisKeck\Box\SSCSD Reservoir\ACAD\IMPROVEMENTS\01-SSCSD-TITLE.dwg USER: ChrisKeck
DATE: Jan 14, 2019 1:37pm XREFS: PC-BOR RESERVOIR SSCSD-LO 181307I PCE

75% SUBMITTAL

WATER CONSTRUCTION NOTES:

1. ALL FITTINGS SHALL BE DUCTILE IRON, CL 350 CONFORMING TO CURRENT AWWA STANDARDS, DOUBLE LINED.

2. MECHANICAL RESTRAINED JOINTS SHALL BE USED TO CONNECT C-900 PIPE TO DUCTILE IRON FITTINGS, UNLESS INDICATED OTHERWISE.

3. PVC WATER PIPES SHALL BE AWWA C-900 DR 25 IN CONFORMANCE WITH CONTRACT DOCUMENTS.

4. ALL VALVES ARE RESILIENT WEDGE GATE VALVES, PER CONTRACT DOCUMENTS, UNLESS OTHERWISE NOTED.

5. CONTRACTOR SHALL REMOVE AND DISPOSE OF ALL EXISTING WATERLINE, SERVICE AND APPURTENANCES TO BE REPLACED. CONTRACTOR SHALL COMPLETELY PLUG ENDS OF WATER LINES THAT ARE SLATED TO BE ABANDONED WITH CONCRETE. SALVAGE EXISTING VALVES IN ACCORDANCE WITH THE SPECIAL CONDITIONS.

6. EXISTING WATER MAIN LINES SHALL REMAIN IN SERVICE DURING CONSTRUCTION AND SHALL BE TAKEN OUT OF SERVICE ONLY AFTER THE FINAL CONNECTION OF NEW WATER MAINLINE.

7. THE CONTRACTOR SHALL ARRANGE FOR A PRE-CONSTRUCTION MEETING (48 HOURS MINIMUM PRIOR TO THE START OF CONSTRUCTION) WITH THE DISTRICT REPRESENTATIVE (805) 927-4778. CONTACT THE REGIONAL NOTIFICATION CENTER (UNDERGROUND SERVICE ALERT OF NORTHERN CALIFORNIA - U.S.A. AT 1-800-227-2600) AND REQUEST THAT UTILITY OWNERS MARK OR OTHERWISE INDICATE THE LOCATION OF THEIR FACILITIES.

8. DURING ALL PHASES OF CONSTRUCTION, INCLUDING SUSPENSION OF WORK, UNTIL FINAL ACCEPTANCE OF THE PROJECT, OBSERVE, FOLLOW AND IMPLEMENT ALL THE REQUIREMENTS OF THE NPDES AND STORMWATER POLLUTION PREVENTION PROGRAM AND KEEP THE WORK SITE CLEAN AND FREE FROM RUBBISH AND DEBRIS. ALSO ABATE DUST NUISANCE BY CLEANING, SWEEPING, SPRINKLING WITH WATER AND USING DUST FENCES OR OTHER METHODS AS DIRECTED BY THE DISTRICT'S REPRESENTATIVE THROUGHOUT THE CONSTRUCTION OPERATION.

9. KEEP A STRICT RECORD OF ALL CHANGES AND SUBMIT THIS RECORD TO THE DISTRICT REPRESENTATIVE. ALSO COORDINATE TRANSFERRING "AS-BUILT" INFORMATION ON THE CONTRACT DRAWINGS AND DELIVER THE CERTIFIED "AS-BUILT" PLANS TO THE DISTRICT BEFORE THE FINAL ACCEPTANCE OF THE PROJECT SHALL BE FILED.

10. EXERCISE DUE CARE TO AVOID INJURY TO EXISTING IMPROVEMENTS OR FACILITIES, UTILITY FACILITIES, ADJACENT PROPERTY, AND TREES AND SHRUBBERY THAT ARE NOT TO BE REMOVED. ALL DAMAGE CAUSED TO PUBLIC/PRIVATE STREETS, INCLUDING HAUL ROUTES, ALLEYS, SIDEWALKS, CURBS OR STREET FURNISHINGS, OR TO PRIVATE PROPERTY SHALL BE REPAIRED TO THE SATISFACTION OF THE DISTRICT'S REPRESENTATIVE.

11. DESIGNATE AND KEEP ON THE PROJECT AT ALL TIMES WHILE WORK IS BEING PERFORMED A COMPETENT SUPERINTENDENT WHO SHALL NOT BE REPLACED WITHOUT A WRITTEN NOTICE AND APPROVAL FROM THE DISTRICT. THE SUPERINTENDENT WILL BE THE CONTRACTOR'S REPRESENTATIVE AT THE SITE AND SHALL HAVE AUTHORITY TO ACT ON BEHALF OF THE CONTRACTOR. ALL COMMUNICATIONS GIVEN TO THE SUPERINTENDENT SHALL BE AS BINDING AS IF GIVEN TO THE CONTRACTOR. DURING PERIODS WHEN THE WORK IS SUSPENDED, MAKE APPROPRIATE ARRANGEMENTS FOR ANY EMERGENCY WORK WHICH MAY BE REQUIRED.

12. THE COST OF ALL INITIAL TESTING AND RETESTING TO BE PERFORMED UNDER THE DIRECTION OF THE DISTRICT'S REPRESENTATIVE SHALL BE BORNE BY THE CONTRACTOR.

13. WHEN THE WORK ON ANY PORTION OF THE PROJECT IS SUFFICIENTLY COMPLETE TO BE UTILIZED OR PLACED INTO SERVICE, THE DISTRICT SHALL HAVE THE RIGHT UPON WRITTEN NOTIFICATION TO THE CONTRACTOR TO UTILIZE SUCH PORTIONS OF THE WORK AND TO PLACE THE OPERABLE PORTIONS INTO SERVICE AND TO OPERATE SAME. UPON SAID NOTICE AND COMMENCEMENT OF UTILIZATION OR OPERATION BY THE DISTRICT, THE DUTY OF MAINTAINING THE PORTIONS SO UTILIZED OR PLACED INTO OPERATION SHALL NOT APPLY; PROVIDED, HOWEVER, THAT NOTHING IN THIS NOTE SHALL BE CONSTRUED AS RELIEVING THE FULL RESPONSIBILITY FOR COMPLETING THE WORK IN ITS ENTIRETY, FOR REPAIRING DEFECTIVE WORK AND MATERIALS, FOR PROTECTING THE WORK FROM DAMAGE, AND FOR BEING RESPONSIBLE FOR DAMAGE.

14. CONDUCT OPERATIONS AS TO OFFER THE LEAST POSSIBLE OBSTRUCTION AND INCONVENIENCE TO THE PUBLIC AND HAVE UNDER CONSTRUCTION NO GREATER LENGTH OR AMOUNT OF WORK THAN CAN BE PROSECUTED PROPERLY WITH DUE REGARD TO THE RIGHTS OF THE PUBLIC. CONVENIENT ACCESS TO DRIVEWAYS, HOUSES, AND BUILDINGS ALONG THE LINE OF WORK SHALL BE MAINTAINED AND TEMPORARY CROSSINGS SHALL BE PROVIDED AND MAINTAINED IN GOOD CONDITION. NO MORE THAN ONE CROSSING OR INTERSECTION STREET OR ROAD SHALL BE CLOSED AT ANY ONE TIME.

15. IN ACCORDANCE WITH GENERALLY ACCEPTED CONSTRUCTION PRACTICES, BE SOLELY AND COMPLETELY RESPONSIBLE FOR CONDITIONS OF THE JOB SITE, INCLUDING SAFETY OF ALL PERSONS AND PROPERTY DURING PERFORMANCE OF THE WORK AND FULLY COMPLY WITH ALL STATE, FEDERAL AND OTHER LAWS, RULES, REGULATIONS AND ORDER RELATING TO SAFETY OF WORKERS AND ALL OTHERS. THIS MAY INCLUDE THE ISSUANCE OF PERSONAL PROTECTIVE EQUIPMENT.

16. ALL WATER MAINS SHALL BE PRESSURE TESTED AND CHLORINATED IN CONFORMANCE WITH CONTRACT DOCUMENTS PRIOR TO CONNECTING TO THE EXISTING SYSTEM. THE CONTRACTOR SHALL VERIFY ALL VALVES IN THE SYSTEM ARE IN THE OPEN POSITION AFTER THE TEST.

17. THE WATER MAIN SHALL HAVE NO JOINTS WITHIN 10 FEET OF SEWER CROSSINGS OVER NEW MAIN AND WITHIN 4 FEET OF SEWER CROSSING UNDER NEW MAIN, UNLESS INDICATED ON THE PLAN. SEPARATION SHALL BE PER CALIFORNIA DEPARTMENT OF PUBLIC HEALTH GUIDELINES.

18. POTHOLE EXISTING MAINS TO VERIFY GRADE OF NEW MAINS.

19. THRUST BLOCKS SHALL BE PER THE COUNTY OF SLO 2011 PUBLIC IMPROVEMENT STANDARD DRAWING W-1a.

20. VERIFY DIMENSIONS AND CONDITIONS AT THE SITE BEFORE STARTING WORK. ANY CONFLICT BETWEEN DETAILS OR DIMENSIONS ON THE DRAWINGS SHALL BE REPORTED PROMPTLY TO THE DISTRICT'S REPRESENTATIVE WHO WILL DETERMINE THE INTENT OF THE DRAWINGS.

21. EXCEPT WHERE NOTED, REPAIR DRIVEWAYS AND AC BERMS DAMAGED DURING CONSTRUCTION. SAWCUTS SHALL BE MADE ALONG EXISTING SCORE LINES.

22. PROVIDE ALL NECESSARY TRAFFIC CONTROL DEVICES DURING DURATION OF CONSTRUCTION WORK, INCLUDING, BUT NOT LIMITED TO, LIGHTED BARRICADES, K-RAIL, DELINEATORS, TRAFFIC CONES, ETC., TO SAFELY CONVEY TRAFFIC AND PEDESTRIANS THROUGH AND AROUND CONSTRICTION WORK ZONES.

23. ALL STRIPING AND MARKINGS SHALL BE REPLACED IN KIND BY CONTRACTOR IF DISTURBED.

24. OVERHEAD ELECTRIC AND CABLE TV LINES ARE NOT NECESSARILY INDICATED ON THE DRAWING, BUT MAY EXIST ON THE JOB SITE. EXERCISE CAUTION WHILE WORKING NEAR OR UNDER, ALL ELECTRIC AND CABLE TV LINES.

25. ANTICIPATE ENCOUNTERING VARYING SOIL CONDITIONS DURING EXCAVATION. NO ADDITIONAL ALLOWANCE WILL BE MADE FOR EXTRA WORK PERTAINING TO TRENCHING CONDITIONS. THE DISTRICT SHALL PROVIDE AVAILABLE SOIL CONDITIONS IN PROJECT AREAS IF KNOWN.

26. USE LOW IMPACT TRENCHING METHODS WITHIN FOUR FEET HORIZONTALLY OF PRIVATE OR PUBLIC TREES. LOW IMPACT METHODS INCLUDE, BUT ARE NOT LIMITED TO, USE OF HIGH PRESSURE TOOLS, VACUUM OR SUCTION TOOLS, OR HAND METHODS.

27. TRENCHING METHODS SHALL CONFORM WITH THE ORDER OF THE STATE OF CALIFORNIA DIVISION OF INDUSTRIAL SAFETY AND O.S.H.A. STANDARD.

28. ALL UTILITIES AND OTHER STRUCTURES AFFECTED BY THE WATER LINE PROJECT MUST BE LOCATED IN THE FIELD PRIOR TO THE START OF PIPELINE EXCAVATION. ONCE THESE UTILITIES AND STRUCTURES HAVE BEEN EXPOSED TAKE MEASUREMENTS AND VERIFY THEIR LOCATIONS WITH THE DISTRICT'S REPRESENTATIVE. PROTECT ALL EXISTING FACILITIES, WHETHER OR NOT THEIR EXISTENCE OR APPROXIMATE LOCATIONS ARE SHOWN ON THESE PLANS, FROM DAMAGE DURING CONSTRUCTION.

29. WHERE UNDERGROUND UTILITIES ARE SHOWN, ASSUME EVERY LOT IS SERVED BY A SERVICE CONNECTION FROM EACH UTILITY.

30. DO NOT LEAVE ANY TRENCH OPEN DURING NON-WORKING HOURS.

31. SAW CUT EXISTING PAVEMENT AND REPLACE AC AND BASE IN ACCORDANCE WITH THE TECHNICAL SPECIFICATIONS.

32. BACKFILL SHALL BE IN ACCORDANCE WITH THE CONTRACT DOCUMENTS. COMPACTION EFFORTS SHALL NOT DISTURB ADJACENT STREET STRUCTURAL SECTION. BEDDING, TRENCHING AND TRENCH RESURFACING SHALL BE PER PROJECT SPECIFICATIONS.

33. NOTIFY DISTRICT REPRESENTATIVE WHEN TREE ROOTS GREATER THAN TWO INCHES IN DIAMETER ARE ENCOUNTERED DURING CONSTRUCTION. DO NOT CUT PRIVATE OR PUBLIC TREE ROOTS OF DIAMETER GREATER THAN TWO INCHES WITHOUT THE APPROVAL OF THE DISTRICT'S REPRESENTATIVE. ADDITIONAL COSTS SHALL BE ALLOWED FOR DELAYS DUE TO TREE ROOT ISSUES.

34. RETAIN SERVICES OF A QUALIFIED LAND SURVEYOR FOR CONSTRUCTION PIPELINE ALIGNMENTS AND WHEN PROPOSED CONSTRUCTION REQUIRES DISTURBANCE OR REMOVAL OF SURVEY MONUMENTS OR CENTER LINE TIES. THE CONTRACTOR SHALL BE RESPONSIBLE FOR THE PAYMENT FOR THE SERVICES TO REESTABLISH DESTROYED CENTER LINE TIES, BENCH MARKS, AND SURVEY MONUMENTS.

CAUTION: UNDERGROUND STRUCTURES AND UNDERGROUND UTILITIES REPORTED BY THEIR RESPECTIVE OWNERS OR THOSE SHOWN ON RECORDS EXAMINED ARE INDICATED WITH THEIR APPROXIMATE LOCATION AND EXTENT. THE CONTRACTOR IS REQUIRED TO TAKE DUE PRECAUTIONARY MEASURES TO PROTECT THE UTILITIES OR STRUCTURES FOUND AT THE SITE. IT SHALL BE THE CONTRACTOR'S RESPONSIBILITY TO NOTIFY THE OWNERS OF THE UTILITIES OR STRUCTURES CONCERNED BEFORE STARTING TO WORK.

ABBREVIATIONS

AC/ASPH	ASPHALT CONCRETE
AC	ASBESTOS CEMENT PIPE
AVE	AVENUE
ATT	AT&T UTILITY
BF	BLIND FLANGE
BFP	BACKFLOW PREVENTER
C.I.	CAST IRON PIPE
C.L.	CHAIN LINK FENCE
C/L	CENTERLINE
CLR	CLEAR
CMP	CORRUGATED METAL PIPE
CONC	CONCRETE
CTV	CABLE TELEVISION
CY	CUBIC YARD
D	DRAINLINE
DI	DRAINAGE INLET
DIA	DIAMETER
DR	DIMENSION RATIO
DRWY	DRIVEWAY
DWG	DRAWING
E/ELECT	ELECTRICAL UTILITY
ELEV	ELEVATION
EP	EDGE OF PAVEMENT
EX	EXISTING
FH	FIRE HYDRANT
FLG	FLANGE
FT	FEET
GA	GAUGE
GALV	GALVANIZED
GM	GAS METER
ICV	IRRIGATION CONTROL VALVE
LBS/CY	POUNDS PER CUBIC YARD
MAX	MAXIMUM
MB	MAIL BOX
MH	MANHOLE
MJ	MECHANICAL JOINT
MIN	MINIMUM
NPDES	NATIONAL POLLUTANT DISCHARGE ELIMINATION SYSTEM
N.T.S.	NOT TO SCALE
P.C.C.	PORTLAND CONCRETE CEMENT
PL	PROPERTY LINE
PP	POWER POLE
PVC	POLYVINYL CHLORIDE
PVMT	PAVEMENT
RD	ROAD
RW	RESILIENT WEDGE
R/W	RIGHT OF WAY
SCH	SCHEDULE
SD	STORM DRAIN
SHT	SHEET
SL	STREET LIGHT
SMH	SEWER MANHOLE
SS	SANITARY SEWER
STA	STATION
STD	STANDARD
TEL	TELECOMMUNICATION
TYP	TYPICAL
VCP	VITRIFIED CLAY PIPE
W	WATER PIPELINE
WM	WATER METER
WV	WATER VALVE

BENCH MARK

THE BENCH MARK FOR THIS PROJECT IS SLO 1 PM 53.8
ELEVATION = 85.49 (NAVD88)

NOTE:
EXISTING WATER, STORM DRAIN, AND SEWER LINES WERE PLOTTED FROM ABOVE GROUND EVIDENCE AND ATLAS MAPS FROM SAN SIMEON CSD.

VERIFY SCALES
BAR IS ONE INCH ON ORIGINAL DRAWING
0 — 1
IF NOT ONE INCH ON THIS SHEET, ADJUST SCALES ACCORDINGLY

Know what's below. Call 811 before you dig.

REGISTERED PROFESSIONAL ENGINEER JONATHON M. TURNER No. 60214 EXP. 6/30/20 CIVIL STATE OF CALIFORNIA

PREPARED BY:
PHOENIX CIVIL ENGINEERING, INC.
535 E. MAIN STREET
SANTA PAULA, CA 93060
(805) 658-6800

6-30-20
REGISTERED CE 60214 EXP. DATE

REV.	SYM.	DESCRIPTION	R.C.E.	DATE
		75% SUBMITTAL		1/1/19

SAN SIMEON COMMUNITY SERVICES DISTRICT
WATER SYSTEM IMPROVEMENT PROJECT
PHASE 1

NOTES AND ABBREVIATIONS

REVIEWED BY:
GENERAL MANAGER DATE

JOB NO. -
DRAWING NO. G-02

DESIGNED BY:	DRAWN BY:	CHECKED BY:	DATE
JMT	CK	JMT	11/9/18

SHEET 2 OF 27

75% SUBMITTAL

DWG: C:\Users\ChrisKeck\Box\SSCSD Reservoir\ACAD\IMPROVEMENTS\02-SSCSD-NOTES.dwg USER: ChrisKeck
DATE: Jan 14, 2019 1:39pm XREFS: PC-BDR RESERVOIR SSCSD-IMP SSCSD-LO 181301I PCE

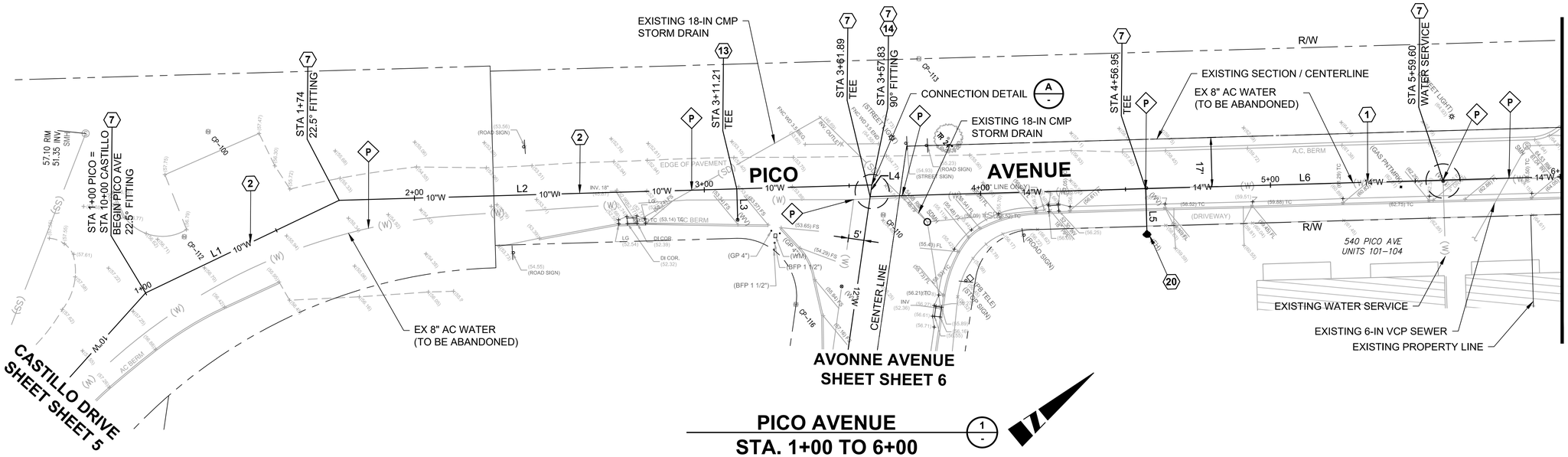

PICO AVENUE
STA. 1+00 TO 6+00

LINE TABLE		
LINE #	BEARING	LENGTH
L1	N14° 06' 51"E	74.00'
L2	N38° 00' 48"E	183.83'
L3	S51° 59' 12"E	10.68'
L4	S42° 08' 50"E	4.06'
L5	S51° 59' 12"E	15.81'
L6	N38° 00' 48"E	238.11'
L7	N38° 00' 48"E	421.99'
L8	S51° 59' 12"E	15.45'
L9	S51° 59' 12"E	8.10'
L10	S40° 44' 12"E	5.00'
L11	N38° 00' 48"E	18.06'
L12	N58° 43' 44"E	94.30'
L13	N58° 43' 44"E	78.01'
L14	S51° 59' 12"E	16.16'

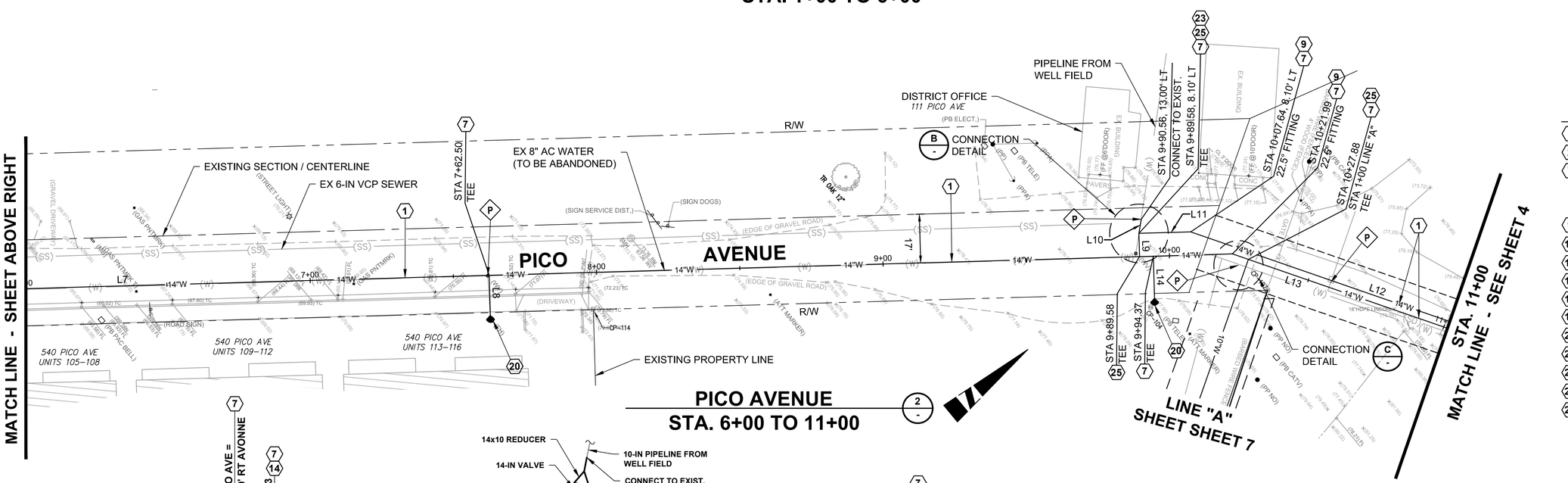

PICO AVENUE
STA. 6+00 TO 11+00

CONSTRUCTION NOTES

1. 14-INCH DIA DR 25 C900 PVC PIPE
2. 10-INCH DIA DR 25 C900 PVC PIPE
7. THRUST BLOCK PER COUNTY OF SAN LUIS OBISPO, DEPT OF PUBLIC WORKS 2011 PUBLIC IMPROVEMENTS STD. DWG W-1 & W-1a.
9. 14-IN 22.5° FITTING FLANGED
10. 6-IN TEE FLANGED
11. AIR/VAC ASSEMBLY. SEE 3/9
13. WATER SERVICE. SEE 2/9
14. 10-IN 90° FITTING MJ x MJ
16. 10-IN BLIND FLANGE
20. FIRE HYDRANT ASSEMBLY PER 1/9
22. 12-INCH DIA DR 25 C900 PVC PIPE
23. 14-IN 11.25° FITTING FLG x MJ
24. 12-IN TEE FLANGED
25. 14-IN TEE FLANGED

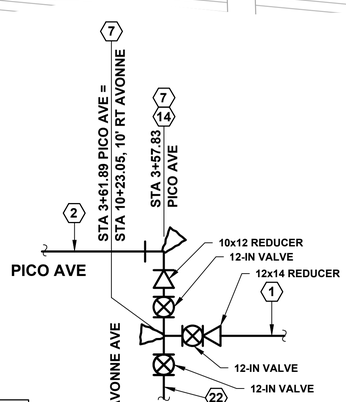

DETAIL A
SCALE: N.T.S.

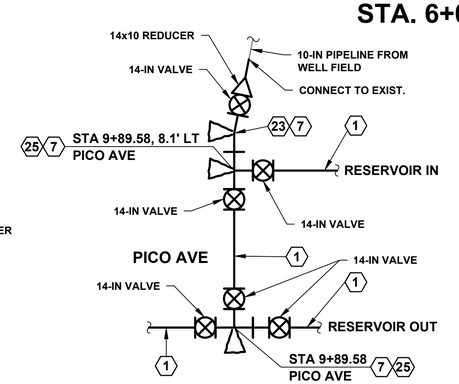

DETAIL B
SCALE: N.T.S.

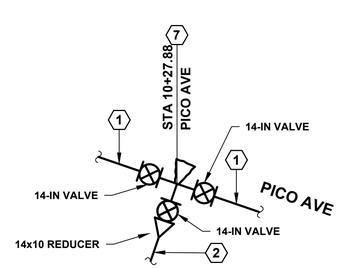

DETAIL C
SCALE: N.T.S.

LEGEND
P UTILITY POTHOLE

SCALE: 1" = 20'
20' 10' 0 20' 40'
SCALE IN FEET

VERIFY SCALES
BAR IS ONE INCH ON ORIGINAL DRAWING
0 —— +1
IF NOT ONE INCH ON THIS SHEET, ADJUST SCALES ACCORDINGLY

Know what's below. Call 811 before you dig.

REGISTERED PROFESSIONAL ENGINEER JONATHON M. KIRKER No. 60214 EXP. 6/30/20 CIVIL STATE OF CALIFORNIA

PREPARED BY:
PHOENIX CIVIL ENGINEERING, INC.
535 E. MAIN STREET
SANTA PAULA, CA 93060
(805) 658-6800

6-30-20
REGISTERED CE 60214 EXP. DATE

REV.	SYM.	DESCRIPTION	R.C.E.	DATE
		75% SUBMITTAL		1/1/19

SAN SIMEON COMMUNITY SERVICES DISTRICT
WATER SYSTEM IMPROVEMENT PROJECT PHASE 1

PICO AVENUE
STA. 1+00 TO STA. 11+00

REVIEWED BY:
GENERAL MANAGER DATE

JOB NO. -
DRAWING NO. C-01

DESIGNED BY:	DRAWN BY:	CHECKED BY:	DATE
JMT	CK	JMT	11/9/18

SHEET 3 OF 27

DWG: C:\Users\ChrisKeck\Box\SSCSD Reservoir\ACAD\IMPROVEMENTS\03-SSCSD-PICO-PLAN.dwg USER: ChrisKeck
DATE: Jan 14, 2019 1:40pm XREFS: PC-BDR RESERVOIR 181301T PCE SSCSD-LO SSCSD-IMP

75% SUBMITTAL

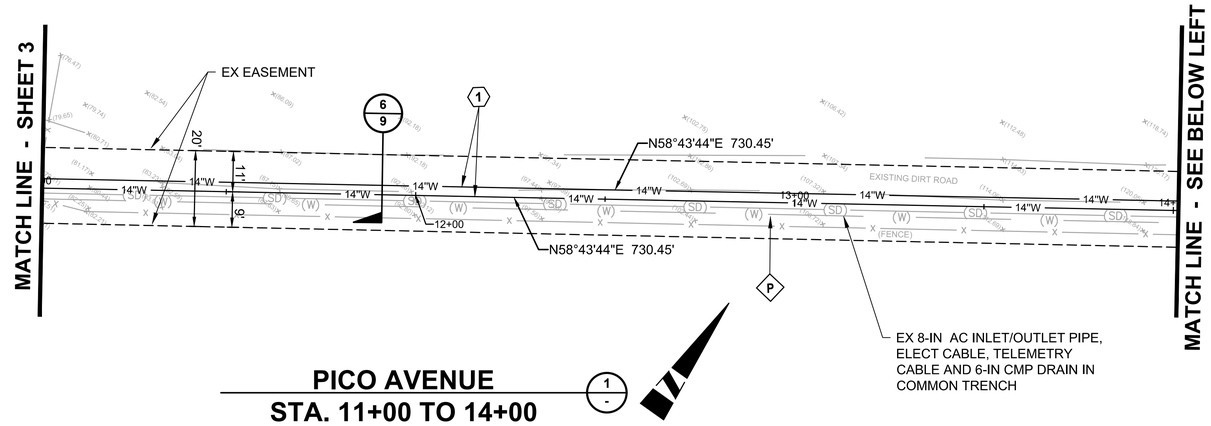

CONSTRUCTION NOTES

1. INSTALL 14-INCH DIA DR 25 C900 PVC PIPE

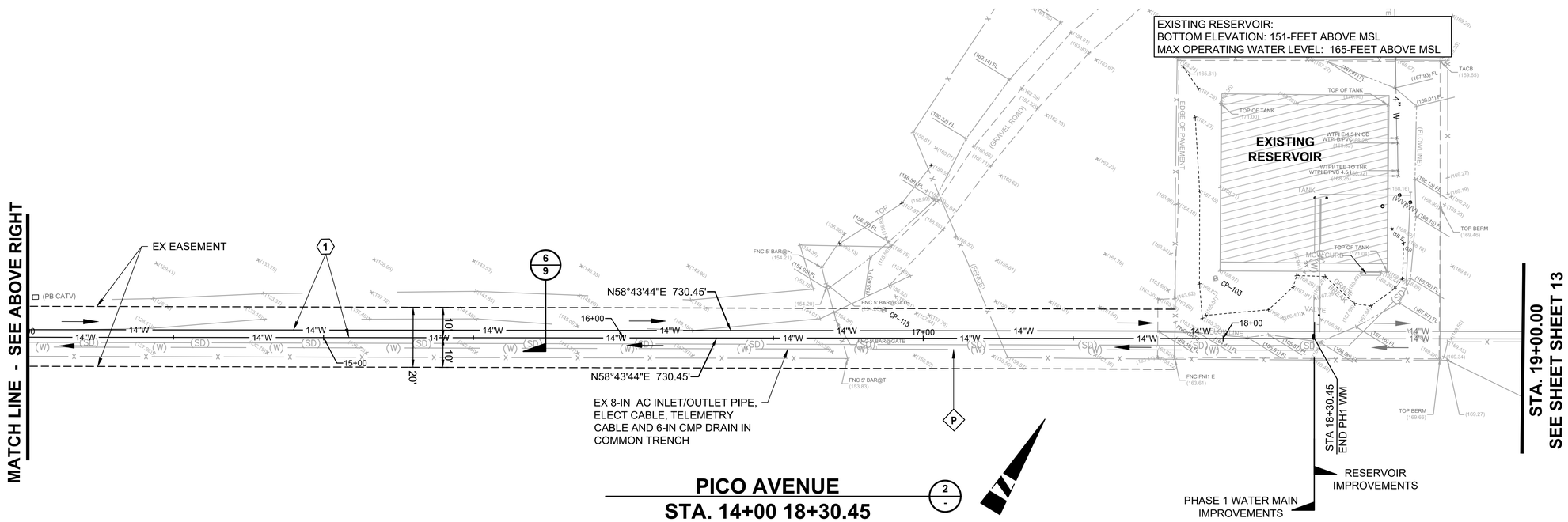

LEGEND

P UTILITY POTHOLE

SCALE: 1" = 20'

20' 10' 0 20' 40'

SCALE IN FEET

VERIFY SCALES
BAR IS ONE INCH ON ORIGINAL DRAWING
0 1
IF NOT ONE INCH ON THIS SHEET, ADJUST SCALES ACCORDINGLY

Know what's below. Call 811 before you dig.

REGISTERED PROFESSIONAL ENGINEER JONATHON M. TURNER No. 60214 EXP. 6/30/20 CIVIL STATE OF CALIFORNIA

PREPARED BY:
PHOENIX CIVIL ENGINEERING, INC.
535 E. MAIN STREET
SANTA PAULA, CA 93060
(805) 658-6800

6-30-20
REGISTERED CE 60214 EXP. DATE

REV.	SYM.	DESCRIPTION	R.C.E.	DATE
		75% SUBMITTAL		1/1/19

SAN SIMEON COMMUNITY SERVICES DISTRICT
WATER SYSTEM IMPROVEMENT PROJECT
PHASE 1

PICO AVENUE
STA. 14+00 to 18+30.45

REVIEWED BY:
GENERAL MANAGER DATE

JOB NO. -
DRAWING NO. C-02

DESIGNED BY:	DRAWN BY:	CHECKED BY:	DATE
JMT	CK	JMT	11/9/18

SHEET 4 OF 27

DWG: C:\Users\ChrisKeck\Box\SSCSD Reservoir\ACAD\IMPROVEMENTS\03-SSCSD-PICO-PLAN.dwg USER: ChrisKeck
DATE: Jan 14, 2019 1:41pm XREFS: PC-BDR RESERVOIR 181301T1 PCE SSCSD-LO SSCSD-IMP

75% SUBMITTAL

LINE TABLE		
LINE #	BEARING	LENGTH
L1	N8° 23' 09"W	47.22'
L2	N42° 08' 09"W	82.99'
L3	N42° 08' 09"W	112.92'
L4	N47° 50' 36"E	26.13'
L5	N42° 08' 09"W	333.58'
L6	N47° 50' 36"E	26.13'
L7	N42° 08' 09"W	5.02'
L8	N42° 08' 09"W	10.79'

CURVE TABLE			
Curve #	Length	Radius	Delta
C1	369.80'	800.00'	26.48'

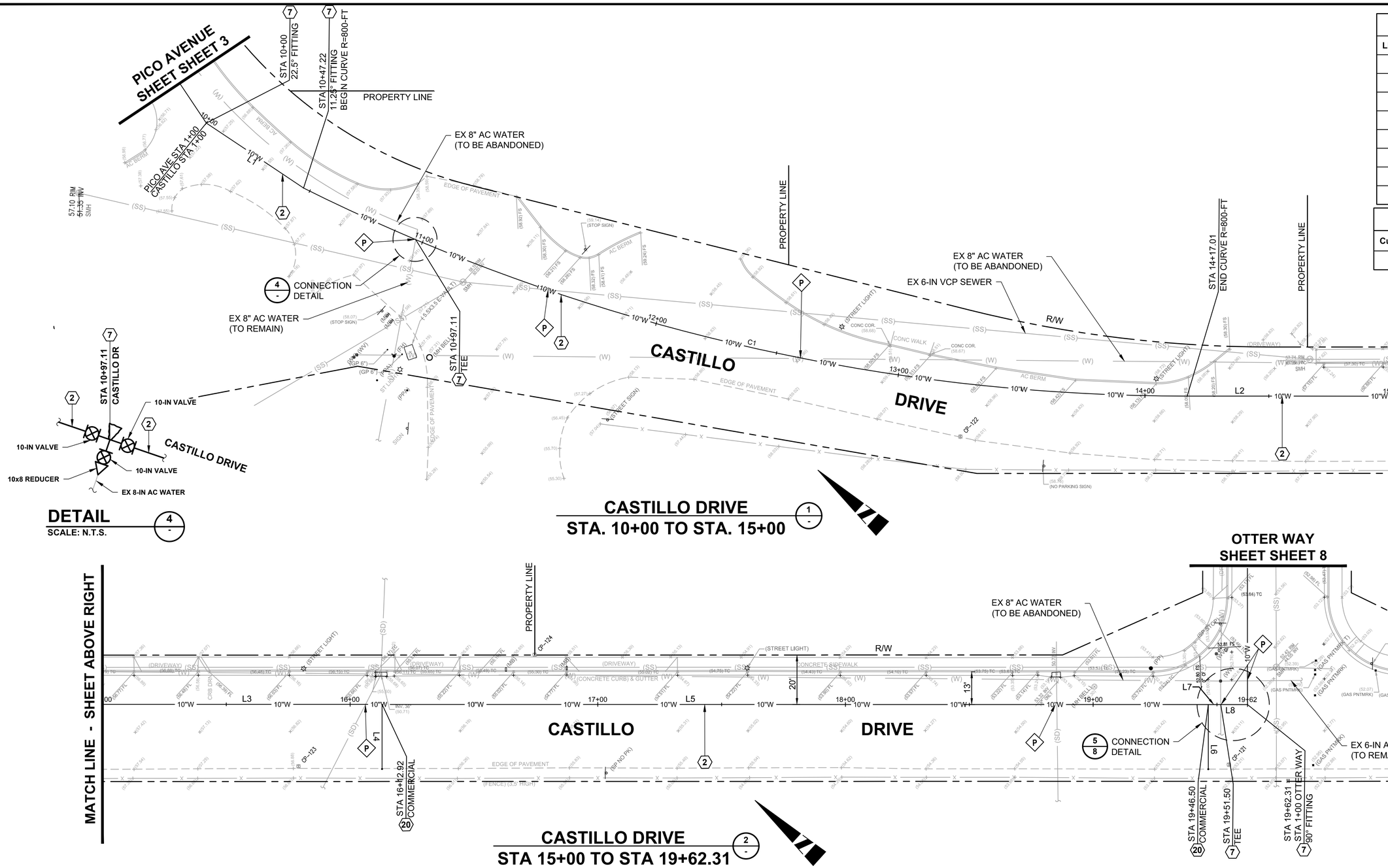

SCALE: 1" = 20'

20' 10' 0 20' 40'

SCALE IN FEET

CONSTRUCTION NOTES

2. INSTALL 10-INCH DIA DR 25 C900 PVC PIPE
7. INSTALL THRUST BLOCK PER COUNTY OF SAN LUIS OBISPO, DEPT OF PUBLIC WORKS 2011 PUBLIC IMPROVEMENTS STD. DWG W-1 & W-1a.
20. FIRE HYDRANT ASSEMBLY PER 1/9

VERIFY SCALES
BAR IS ONE INCH ON ORIGINAL DRAWING
0 1
IF NOT ONE INCH ON THIS SHEET, ADJUST SCALES ACCORDINGLY

Know what's below. Call 811 before you dig.

REGISTERED PROFESSIONAL ENGINEER JONATHON M. TURNER No. 60214 EXP. 6/30/20 CIVIL STATE OF CALIFORNIA

PREPARED BY:
PHOENIX CIVIL ENGINEERING, INC.
535 E. MAIN STREET
SANTA PAULA, CA 93060
(805) 658-6800

REGISTERED CE 60214 — EXP. 6-30-20 — DATE

REV.	SYM.	DESCRIPTION	R.C.E.	DATE
		75% SUBMITTAL		1/1/19

SAN SIMEON COMMUNITY SERVICES DISTRICT
WATER SYSTEM IMPROVEMENT PROJECT
PHASE 1

CASTILLO DRIVE
STA. 10+00 TO STA. 19+62.31

REVIEWED BY: GENERAL MANAGER — DATE

JOB NO. -
DRAWING NO. C-03

DESIGNED BY:	DRAWN BY:	CHECKED BY:	DATE
JMT	CK	JMT	11/9/18

SHEET 5 OF 27

DWG: C:\Users\ChrisKeck\Box\SSCSD Reservoir\ACAD\IMPROVEMENTS\05-SSCSD-CASTILLO-PLAN.dwg USER: ChrisKeck
DATE: Jan 14, 2019 1:42pm XREFS: PC-BDR RESERVOIR SSCSD-LO SSCSD-IMP 181301I PCE

75% SUBMITTAL

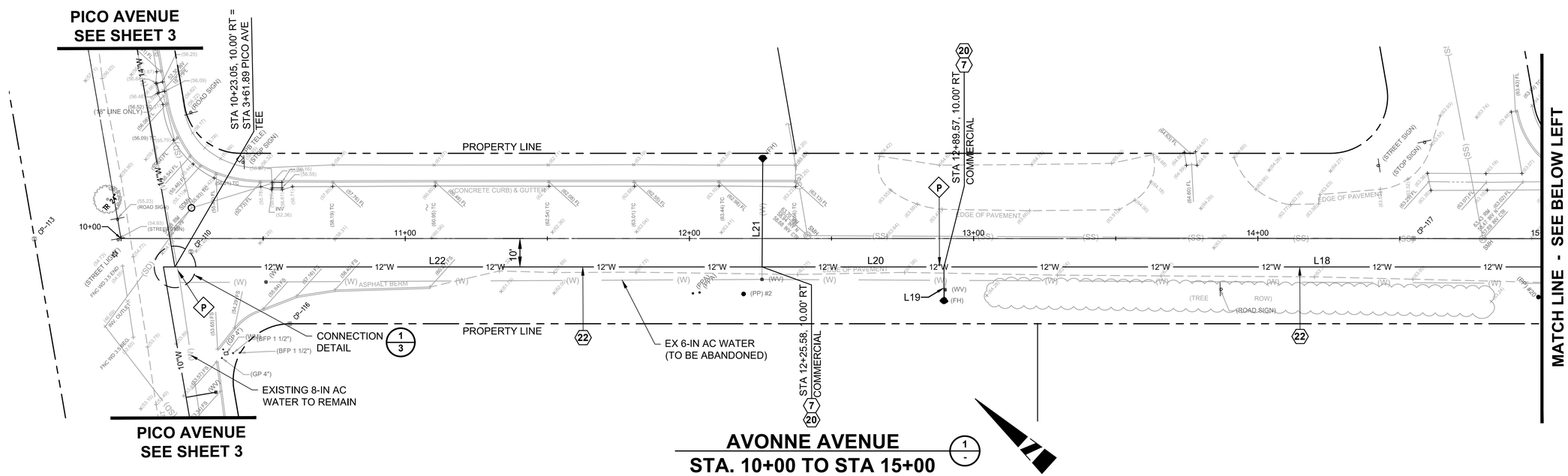

AVONNE AVENUE
STA. 10+00 TO STA 15+00

LINE TABLE		
LINE #	BEARING	LENGTH
L9	N42° 08' 50"W	4.00'
L10	N47° 50' 01"E	11.73'
L11	N42° 08' 50"W	4.00'
L12	N42° 08' 50"W	101.29'
L14	N42° 08' 50"W	166.32'
L15	N47° 51' 10"E	16.78'
L16	N42° 08' 50"W	148.62'
L17	N42° 08' 50"W	112.40'
L18	N42° 08' 50"W	210.43'
L19	N47° 51' 10"E	11.97'
L20	N42° 08' 50"W	63.99'
L21	N48° 12' 55"E	38.31'
L22	N42° 08' 50"W	206.59'
L23	N47° 51' 10"E	18.16'

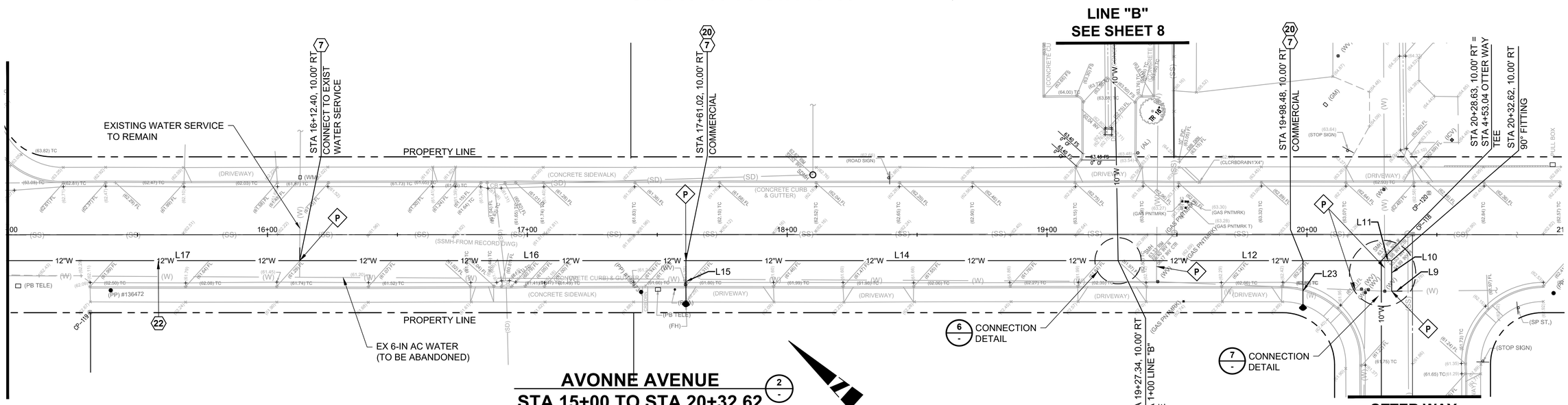

LINE "B"
SEE SHEET 8

AVONNE AVENUE
STA 15+00 TO STA 20+32.62

CONSTRUCTION NOTES

7. INSTALL THRUST BLOCK PER COUNTY OF SAN LUIS OBISPO, DEPT OF PUBLIC WORKS 2011 PUBLIC IMPROVEMENTS STD. DWG W-1 & W-1a.
20. FIRE HYDRANT ASSEMBLY PER (1/9)
22. 12-INCH DIA DR 25 C900 PVC PIPE

SCALE: 1" = 20'
20' 10' 0 20' 40'
SCALE IN FEET

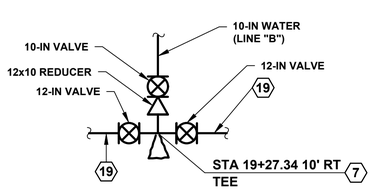

DETAIL (6/-)
SCALE: N.T.S.

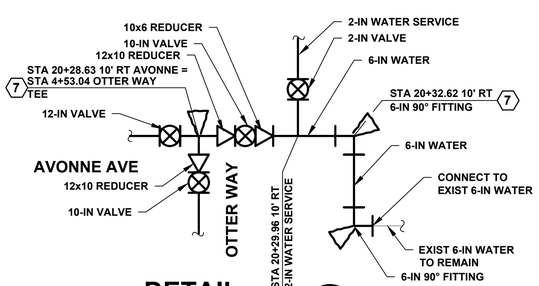

DETAIL (7/-)
SCALE: N.T.S.

VERIFY SCALES
BAR IS ONE INCH ON ORIGINAL DRAWING
0 — 1
IF NOT ONE INCH ON THIS SHEET, ADJUST SCALES ACCORDINGLY

Know what's below. Call 811 before you dig.

REGISTERED PROFESSIONAL ENGINEER JONATHON M. BURKER No. 60214 EXP. 6/30/20 CIVIL STATE OF CALIFORNIA

PREPARED BY:
PHOENIX CIVIL ENGINEERING, INC.
535 E. MAIN STREET
SANTA PAULA, CA 93060
(805) 658-6800

6-30-20
REGISTERED CE 60214 EXP. DATE

REV.	SYM.	DESCRIPTION	R.C.E.	DATE
		75% SUBMITTAL		1/1/19

SAN SIMEON COMMUNITY SERVICES DISTRICT
WATER SYSTEM IMPROVEMENT PROJECT
PHASE 1

AVONNE AVENUE
STA. 10+00 TO STA. 20+28.63

REVIEWED BY: GENERAL MANAGER DATE
JOB NO. -
DRAWING NO. C-04

DESIGNED BY:	DRAWN BY:	CHECKED BY:	DATE
JMT	CK	JMT	11/9/18

SHEET 6 OF 27

75% SUBMITTAL

DWG: C:\Users\ChrisKeck\Box\SSCSD Reservoir\ACAD\IMPROVEMENTS\06-SSCSD-AVONNE-PLAN.dwg USER: ChrisKeck
DATE: Jan 14, 2019 1:44pm XREFS: PC-BDR RESERVOIR SSCSD-LO SSCSD-IMP 18130TI PCE

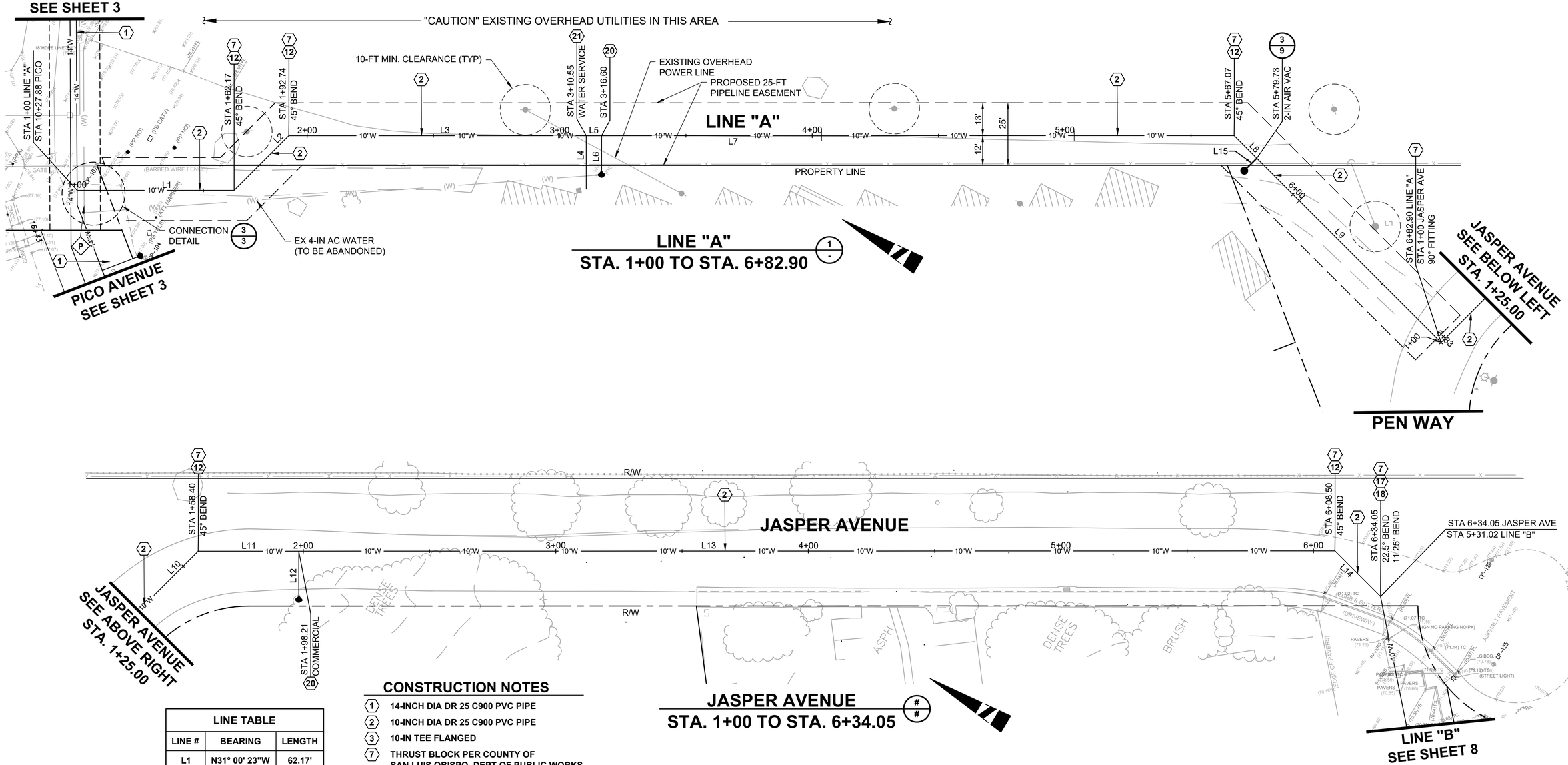

CONSTRUCTION NOTES

1. 14-INCH DIA DR 25 C900 PVC PIPE
2. 10-INCH DIA DR 25 C900 PVC PIPE
3. 10-IN TEE FLANGED
7. THRUST BLOCK PER COUNTY OF SAN LUIS OBISPO, DEPT OF PUBLIC WORKS 2011 PUBLIC IMPROVEMENTS STD. DWG W-1 & W-1a.
12. 10-IN 45° FITTING
17. 10-IN 22.5° FITTING MJ x FLG
18. 10-IN 11.25° FITTING FLG x MJ
20. FIRE HYDRANT ASSEMBLY PER (1/9)
21. WATER SERVICE CONNECTION (2/9)

LINE TABLE

LINE #	BEARING	LENGTH
L1	N31° 00' 23"W	62.17'
L2	N76° 00' 23"W	30.57'
L3	N30° 59' 58"W	117.81'
L4	N58° 59' 37"E	21.12'
L5	N31° 08' 35"W	6.05'
L6	N58° 59' 37"E	15.49'
L7	N31° 00' 23"W	250.47'
L8	N13° 59' 37"E	12.66'
L9	N13° 59' 37"E	103.17'
L10	N76° 00' 59"W	58.40'
L11	N31° 00' 59"W	39.82'
L12	N58° 59' 01"E	19.27'
L13	N31° 00' 59"W	410.28'
L14	N13° 59' 01"E	25.55'
L15	N76° 00' 23"W	7.00'

LEGEND

(P) UTILITY POTHOLE

VERIFY SCALES
BAR IS ONE INCH ON ORIGINAL DRAWING
0 — 1
IF NOT ONE INCH ON THIS SHEET, ADJUST SCALES ACCORDINGLY

SCALE: 1" = 20'
20' 10' 0 20' 40'
SCALE IN FEET

Know what's below. Call 811 before you dig.

REGISTERED PROFESSIONAL ENGINEER JONATHON M. TURNER No. 60214 EXP. 6/30/20 CIVIL STATE OF CALIFORNIA

PREPARED BY:
PHOENIX CIVIL ENGINEERING, INC.
535 E. MAIN STREET
SANTA PAULA, CA 93060
(805) 658-6800

REGISTERED CE 60214 — EXP. 6-30-20 — DATE

REV.	SYM.	DESCRIPTION	R.C.E.	DATE
		75% SUBMITTAL		1/1/19

SAN SIMEON COMMUNITY SERVICES DISTRICT
WATER SYSTEM IMPROVEMENT PROJECT
PHASE 1

LINE "A" - STA. 1+00 TO STA. 6+82.90
JASPER AVENUE - STA. 1+00 TO STA. 6+34.05

REVIEWED BY: GENERAL MANAGER — DATE

JOB NO. -
DRAWING NO. C-05

DESIGNED BY:	DRAWN BY:	CHECKED BY:	DATE
JMT	CK	JMT	11/9/18

SHEET 7 OF 27

DWG: C:\Users\ChrisKeck\Box\SSCSD Reservoir\ACAD\IMPROVEMENTS\07-SSCSD-JASPER-LINE A-PLAN.dwg USER: ChrisKeck
DATE: Jan 14, 2019 1:45pm XREFS: San Simeon Pipelines UTILITIES pc-bdr reservoir SSCSD-LO 181001 PCE SSCSD-IMP

75% SUBMITTAL

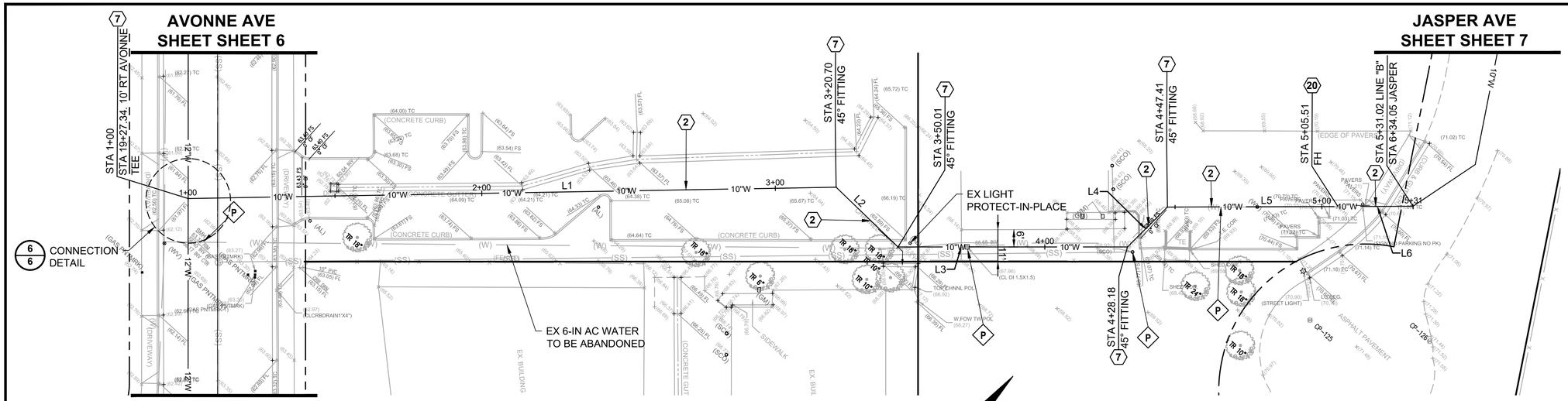

LINE "B"
STA. 1+00 TO STA. 5+31.02

CONSTRUCTION NOTES

2. 10-INCH DIA DR 25 C900 PVC PIPE
7. THRUST BLOCK PER COUNTY OF SAN LUIS OBISPO, DEPT OF PUBLIC WORKS 2011 PUBLIC IMPROVEMENTS STD. DWG W-1 & W-1a.
20. FIRE HYDRANT ASSEMBLY PER 1/9

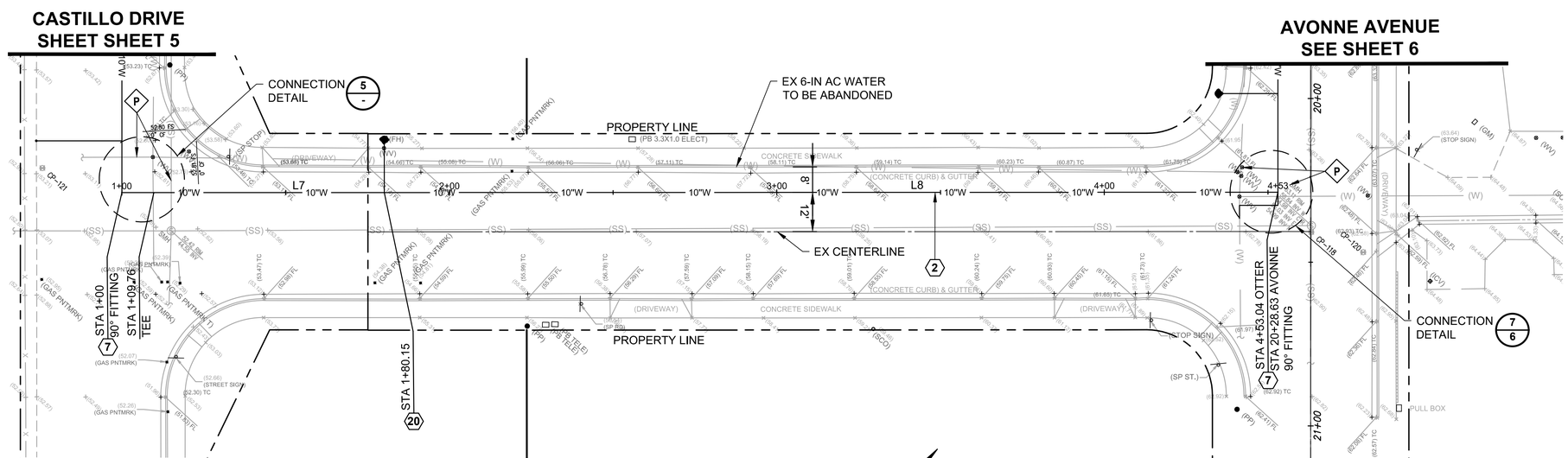

OTTER WAY
STA. 1+00 TO STA. 4+53.04

LINE TABLE		
LINE #	BEARING	LENGTH
L1	N46° 50' 01"E	220.70'
L2	N88° 09' 59"W	29.31'
L3	N47° 50' 01"E	78.17'
L4	N2° 50' 01"E	19.23'
L5	N47° 43' 25"E	58.10'
L6	N47° 30' 11"E	25.51'
L7	N47° 50' 01"E	80.15'
L8	N47° 50' 02"E	272.89'

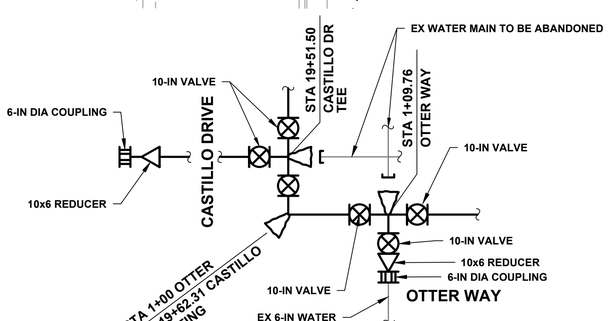

DETAIL
SCALE: N.T.S.

VERIFY SCALES
BAR IS ONE INCH ON ORIGINAL DRAWING
0 — 1
IF NOT ONE INCH ON THIS SHEET, ADJUST SCALES ACCORDINGLY

SCALE: 1" = 20'
20' 10' 0 20' 40'
SCALE IN FEET

Know what's below. Call 811 before you dig.

REGISTERED PROFESSIONAL ENGINEER JONATHON M. TURNER No. 60214 EXP. 6/30/20 CIVIL STATE OF CALIFORNIA

PREPARED BY:
PHOENIX CIVIL ENGINEERING, INC.
535 E. MAIN STREET
SANTA PAULA, CA 93060
(805) 658-6800

REGISTERED CE 60214 — EXP. 6-30-20 — DATE

REV.	SYM.	DESCRIPTION	R.C.E.	DATE
		75% SUBMITTAL		1/1/19

SAN SIMEON COMMUNITY SERVICES DISTRICT
WATER SYSTEM IMPROVEMENT PROJECT
PHASE 1

LINE "B" - STA. 1+00 TO STA. 5+31.02
OTTER WAY- STA. 1+00 TO STA. 4+53.04

REVIEWED BY: GENERAL MANAGER — DATE

JOB NO. -
DRAWING NO. C-06

DESIGNED BY:	DRAWN BY:	CHECKED BY:	DATE
JMT	CK	JMT	11/9/18

SHEET 8 OF 27

75% SUBMITTAL

DWG: C:\Users\Chrisk\Box\SSCSD Reservoir\ACAD\IMPROVEMENTS\08-SSCSD-OTTER-LINE B.dwg USER: Chrisk
DATE: Jan 14, 2019 1:47pm XREFS: PC-BDR RESERVOIR SSCSD-LO SSCSD-MP 181301 PCE San Simeon Pipelines

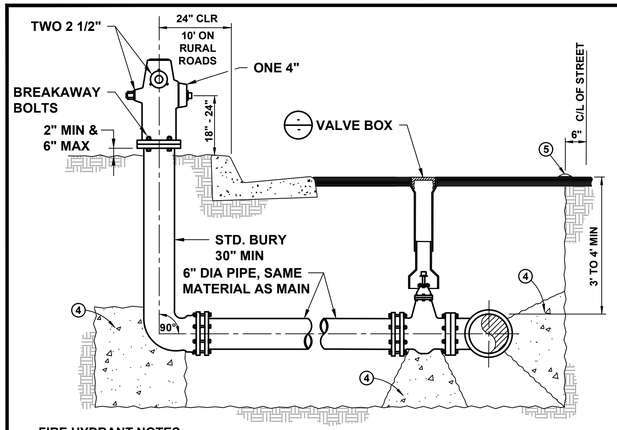

FIRE HYDRANT NOTES:

1. HEIGHT SHALL BE MEASURED FROM EDGE OF PAVEMENT WHEN CONCRETE CURB OR ASPHALT DIKE ARE NOT REQUIRED PER THE DESIGN STANDARDS.
2. DISTANCE SHALL BE INCREASED TO 10-FEET CLEAR FROM THE EDGE OF TRAVELED WAY (EDW) ON RURAL ROADS (SEE U-1).
3. IN RURAL AREAS A 4' MINIMUM RADIUS CLEAR AND LEVEL ZONE SURROUNDING THE FIRE HYDRANT SHALL BE REQUIRED.
4. CONCRETE THRUST BLOCKS SHALL CONFORM TO STATE STANDARD 90-1.01, 470 LBS/CY CEMENTITIOUS MATERIAL [5 SACK], POURED AGAINST UNDISTURBED SOIL AND SHIELDED FROM FLANGES AND BOLTS.
5. EACH HYDRANT SHALL BE IDENTIFIED BY A REFLECTORIZED BLUE RAISED PAVEMENT MARKER PER SECTION 10.301c OF THE UNIFORM FIRE CODE.
6. THE HYDRANT CAP AND OUTLET NOZZLE SHALL BE PAINTED IN ACCORDANCE WITH TABLE 6.6 OF 6.2.1.D.2.
7. THE CONCRETE CURB OR ASPHALT DIKE SHALL BE PAINTED RED 15-FEET EITHER SIDE OF THE FIRE HYDRANT.
8. HYDRANT SHALL BE CLOW F960, OR APPROVED EQUAL.
9. EACH HYDRANT SHALL HAVE TWO 2-1/2" OUTLETS AND ONE 4" OUTLET WITH EXTERNAL NSF THREAD.
10. ALL FITTINGS SHALL BE CEMENT MORTAR LINED IN ACCORDANCE WITH AWWA STANDARD C-104.
11. HYDRANT LATERAL SHALL BE OF THE SAME MATERIAL AS THE MAIN.
12. 14-GAUGE INSULATED COPPER TRACER WIRE SHALL BE ATTACHED TO THE PIPE AND BROUGHT ABOVE GRADE AND SECURED TO THE HYDRANT BOLT FLANGE.
13. COLOR CODED BLUE 3" WIDE POLYETHYLENE NON-DETECTABLE TAPE MARKED "CAUTION BURIED WATER LINE BELOW" SHALL BE BURIED IN THE TRENCH AND ABOVE THE PIPE AND TRACER WIRE.

FIRE HYDRANT DETAIL

SCALE: N.T.S.

1 / -

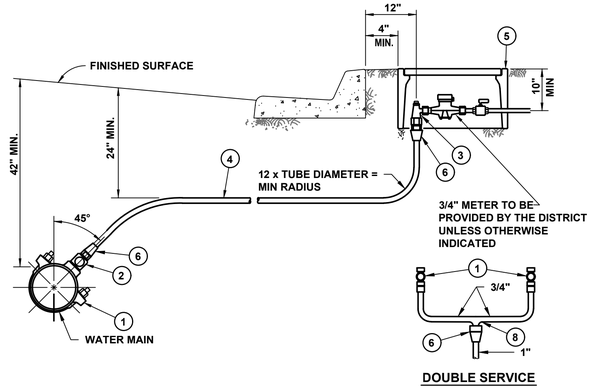

WATER SERVICE NOTES:

1. BRONZE SERVICE SADDLE, DOUBLE STRAP, MUELLER BR 2B 0899 IP, 075 OR 100, O.A.E..
2. CORPORATION STOP WITH IP THREADS, MUELLER H-10012, O.A.E.
3. ANGLE METER STOP, JONES J-1966W, 3/4" OR 1",O.A.E..
4. POLYETHYLENE PIPE, 3/4' MIN. I.D. FOR SINGLE SERVICE 1" MIN. I.D. FOR DOUBLE SERVICE.
5. METER BOX, BROOKS PRODUCT 37-S, O.A.E..
6. MUELLER INSTA-TITE CONNECTION H-15426 (MALE) O.A.E..
7. IN UNPAVED AREA SET METER BOX 1" TO 1 1/2" ABOVE FINISHED GRADE.
8. U-BRANCH CONNECTION, MUELLER H-15365, O.A.E.
9. O.A.E. = "OR APPROVED EQUAL".
10. WATER METER AND CUSTOMER SIDE SHUT OFF VALVE TO BE INSTALLED BY THE WATER PURVEYOR.
11. CORPORATION STOPS SHALL NOT BE SPACED CLOSER THAN 12" MEASURED ALONG THE CENTERLINE OF THE PIPE.
12. 3/4" SINGLE SERVICE LINE, 1" DOUBLE SERVICE LINES, USE 16" x 21" DUAL METER BOX (BROOKS PRODUCT OR APPROVED EQUAL) FOR DOUBLE SERVICE.
13. SERVICES LARGER THAN 1" MAY BE PVC SCHEDULE 80 PIPE.
14. 14-GAUGE INSULATED COPPER TRACER WIRE SHALL BE ATTACHED TO THE PIPE AND BROUGHT ABOVE GRADE THROUGH ANY METER OR VALVE BOXES.
15. COLOR CODED BLUE 3" WIDE POLYETHYLENE NON-DETECTABLE TAPE MARKED "CAUTION BURIED WATER LINE BELOW" SHALL BE BURIED IN THE TRENCH ABOVE THE PIPE AND TRACER WIRE.

WATER SERVICE CONNECTION

SCALE: N.T.S.

2 / -

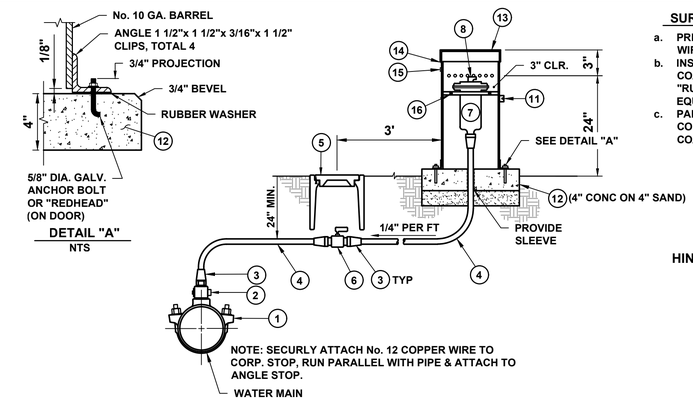

SURFACE PREPARATION AND PAINT::

a. PREPARE BOTH INSIDE AND OUTSIDE PIPE SURFACES BY WIRE BRUSH CLEANING.
b. INSIDE AND OUTSIDE SURFACES SHALL BE PRIMER COATED WITH TWO COATS. PRIMER SHALL BE "RUST-OLEUM CLEAN METAL PRIMER", OR APPROVED EQUAL.
c. PAINT SHALL BE RUST-OLEUM INDUSTRIAL ENAMEL COLOR "SAFETY BLUE", OR APPROVED EQUAL, TWO COATS OF PAINT ARE REQUIRED.

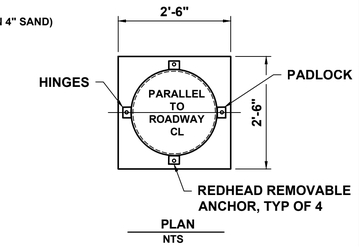

NOTES:

1. BRONZE SERVICE SADDLE, DOUBLE STRAP, WITH AWWA I.P. THREADS.
2. CORPORATION STOP WITH IP THREADS.
3. MULLER INSTA-TITE CONNECTION.
4. POLYETHYLENE PIPE, PIPE SIZE SHOULD MATCH AIR & VACUUM RELIEF VALVE SIZE.
5. CAST IRON TRAFFIC COVER & EXTENSIONS AS REQUIRED.
6. BALL VALVE.
7. AIR & VACUUM RELIEF VALVE WITH STAINLESS STEEL TRIM.
8. SCH. 80 PVC ELBOW.
9. 14-GAUGE INSULATED COPPER TRACER WIRE SHALL BE ATTACHED TO THE PIPE AND BROUGHT ABOVE GRADE THROUGH ANY METER OR VALVE BOXES.
10. COLOR CODED BLUE 3" WIDE POLYETHYLENE NON-DETECTABLE TAPE MARKED "CAUTION BURIED WATER LINE BELOW" SHALL BE BURIED IN THE TRENCH AND ABOVE THE PIPE AND TRACER WIRE.
11. ANGLE 1 1/2"x 1 1/2"x 3/16" LONG. WELD TO BARREL AND DOOR WITH HOLES FOR PADLOCK (2 REQ.).
12. CONCRETE BASE SHALL CONFORM TO STATE STANDARD 90-1.01, 565 LBS/CY CEMENTITIOUS MATERIAL (6 SACK).
13. FABRICATE LID FROM 10GA. PLATE WELDED TO BARREL. FABRICATE BARREL FROM 10 GA. STEEL PIPE. DRILL 20 EA. 1/2" HOLES 3" FROM TOP OF BARREL. STEEL PIPE SHALL BE MIN 20"Ø AS REQ'D. TO MATAIN MIN CLEARANCE BETWEEN BARREL AND VALVE SIDES.
14. WELD AND GRIND SMOOTH.
15. HINGE-WELD TO DOOR AND BARREL.
16. GALV. STEEL BRACE WITH BOLTED CONNECTIONS

AIR/VAC RELIEF ASSEMBLY

SCALE: N.T.S.

3 / -

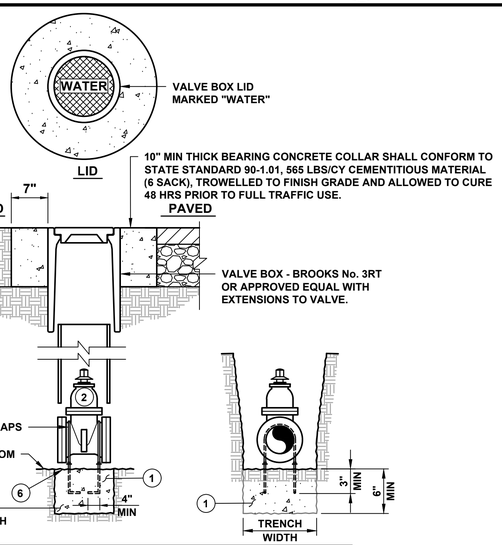

NOTES:

1. CONCRETE THRUST BLOCKS SHALL CONFORM TO STATE STANDARD 90-1.01, 470 LBS/CY CEMENTITIOUS MATERIAL (5 SACK), AND POURED AGAINST UNDISTURBED NATIVE SOIL.
2. VALVES SHALL HAVE NON-RISING STEM, RESILIENT WEDGE RESILIENT SEAT, AND BE EPOXY COATED.
3. ALL MATERIALS AND INSTALLATION SHALL CONFORM WITH THE APPLICABLE SECTIONS OF THE DESIGN STANDARDS.
4. AL FITTINGS SHALL BE WRAPPED IN POLYETHYLENE SHEET AND ALL FLANGES AND BOLTS SHALL BE SHIELDED FROM CONCRETE PER THE DESIGN STANDARDS.
5. UNDER NO CIRCUMSTANCES SHALL UTILITY LIDS AND CONCRETE COLLARS BE LOCATED WITHIN CURBS, GUTTERS, SIDEWALKS, DRIVEWAYS, CURB APRONS OR CROSS GUTTERS.
6. VALVE ANCHOR SHALL BE POURED LEVEL WITH TRENCH BOTTOM. ANCHOR STRAPS SHALL BE FASTENED TO CONCRETE EMBEDDED ANCHOR BOLTS.

VERIFY SCALES
BAR IS ONE INCH ON ORIGINAL DRAWING
0 — 1
IF NOT ONE INCH ON THIS SHEET, ADJUST SCALES ACCORDINGLY

VALVE ANCHOR & BOX

SCALE: N.T.S.

4 / -

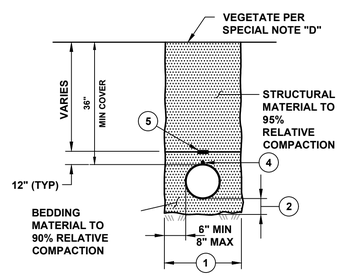

UNPAVED SURFACE

SPECIAL NOTES (UNPAVED SURFACE):

A. SPECIAL CONSIDERATION SHALL BE TAKEN BY THE DESIGNER TO ENSURE SURFACE DRAINAGE WILL NOT ENTER TRENCH.
B. WHEN TRENCHING ON STEEP SLOPES, CUT-OFF WALLS AND OR PIPE ANCHORS MAY BE REQUIRED BY THE DEPARTMENT AND SHALL BE DETAILED ON THE PLANS.
C. TRENCHING ALIGNMENT SHALL BE DESIGNED TO AVOID DAMAGE TO EXISTING TREES AND THEIR ROOT SYSTEM. WHEN ADJACENT TO TREES THEN THE TRENCHING RECOMMENDATIONS OF THE PROJECT BOTANIST SHALL BE FOLLOWED.
D. THE UPPER SURFACE SHALL BE SCARIFIED AND REVEGETATED. VEGETATIVE COVER SHALL BE ESTABLISHED PRIOR TO ACCEPTANCE OF WORK.

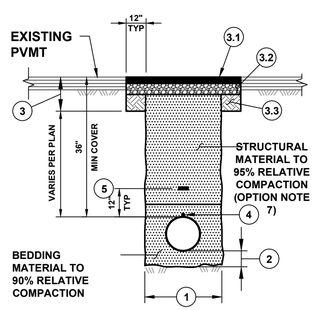

PAVED SURFACE

NOTES:

1. TRENCH WIDTH SHALL BE PIPE DIA PLUS 6" FOR EACH SIDE OF PIPE.
2. BEDDING MEASUREMENT IS 6" BELOW GREATEST OUTSIDE DIMENSION AT PIPE JOINTS.PIPE SHALL BE BACKFILLED TO THE SPRING LINE AMD COMPACTED TO 90% PRIOR TO COMPLETING INITIAL BACKFILL.
3. ROAD STRUCTURAL SECTION SHALL BE BASED ON THE TI AND R VALUE AT TIME OF CONSTRUCTION.
   3.1. HOT MIX ASPHALT (HMA) PER THE DESIGN STDS TO 95% RELATIVE COMPACTION.
   3.2. CLASS II AGGREGATE BASE TO 95% RELATIVE COMPACTION.
   3.3. 12" MIN SUBGRADE TO 95% RELATIVE COMPACTION.
4. FOR WATER, 14 GAUGE INSULTED COPPER TRACER WIRE SHALL BE ATTACHED TO PIPES AND SERVICE LATERALS.
5. 3" WIDE POLYETHYLENE NON-DETECTABLE TAPE MARKED AND COLOR CODED PER THE DESIGN STD'S SHALL BE BURIED IN THE TRENCH 12-INCHES ABOVE ALL PIPES AND LATERALS.
6. REFER TO STD DRAWINGS U-3 TO U-3b FOR ADDITIONAL REQUIREMENTS FOR WATER TRENCHES.
7. CONCRETE SLURRY TRENCH BACKFILL SHALL CONFORM TO STATE STD 90-1.01, 188 LBS/CY CEMENTITIOUS MATERIAL (2 SACKS), TO SURFACE OF BASE COURSE SECTION. DO NOT PLACE AGGREGATE BASE ABOVE SLURRY BACKFILL.

BEDDING MATERIAL

SIEVE SIZES	PERCENT PASSING
1"	100%
No. 4	80% - 100%
No. 200	0% - 15%

STRUCTURAL MATERIAL

SIEVE SIZES	PERCENT PASSING
3"	100%
No. 4	35% - 100%
No. 30	20% - 100%

TYPICAL TRENCH DETAIL

SCALE:

5 / -

Know what's below. Call 811 before you dig.

REGISTERED PROFESSIONAL ENGINEER JONATHON M. TURNER No. 60214 EXP. 6/30/20 CIVIL STATE OF CALIFORNIA

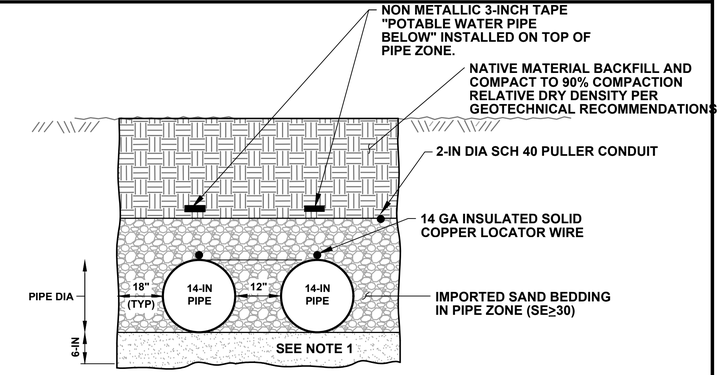

NOTES:

1. IMPORTED SAND BEDDING SHALL EXTEND 6-INCHES MIN. BELOW PIPE AND COMPACT PER GEOTECHNICAL REPORT.
2. OVER EXCAVATION SHALL BE REQUIRED IF NATIVE MATERIAL IS SOFT, SPONGY OR UNSTABLE. OVER EXCAVATION MATERIALS SHALL BE CRUSHED ROCK MATERIAL AND COMPACTED TO 95% RELATIVE COMPACTION.
3. INSTALL TRENCH PLUGS EVERY 50-FT WHERE PIPELINE SLOPE IS STEEPER THAN 5:1

COMMON TRENCH DETAIL

SCALE: N.T.S.

6 / -

PREPARED BY:
PHOENIX CIVIL ENGINEERING, INC.
535 E. MAIN STREET
SANTA PAULA, CA 93060
(805) 658-6800

REGISTERED CE 60214 — 6-30-20 EXP. — DATE

REV.	SYM.	DESCRIPTION	R.C.E.	DATE
		75% SUBMITTAL		1/1/19

SAN SIMEON COMMUNITY SERVICES DISTRICT
WATER SYSTEM IMPROVEMENT PROJECT
PHASE 1

DETAILS

REVIEWED BY: GENERAL MANAGER — DATE

JOB NO. -
DRAWING NO. C-07

DESIGNED BY:	DRAWN BY:	CHECKED BY:	DATE
JMT	CK	JMT	11/9/18

SHEET 9 OF 27

75% SUBMITTAL

DWG: C:\Users\ChrisKeck\Box\SSCSD Reservoir\ACAD\IMPROVEMENTS\09-SSCD-WATER-DETAILS-01.dwg USER: ChrisKeck
DATE: Jan 14, 2019 1:48pm XREFS: San Simeon - Water Pipeline Control San Simeon Pipelines pc-bdr reservoir

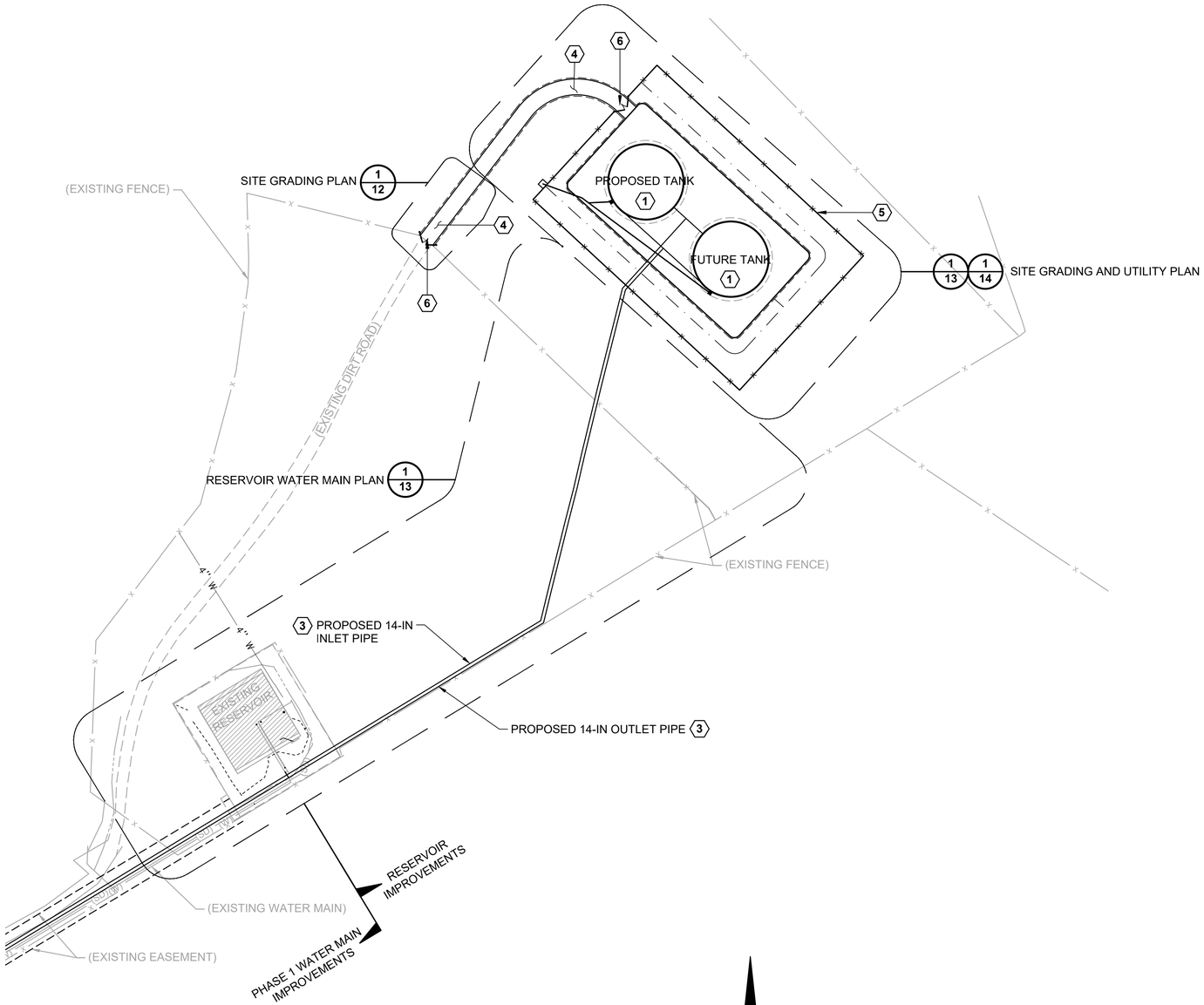

RESEVOIR SITE LAYOUT

SCALE: 1" = 50'

1/-

CONSTRUCTION NOTES

1. (2) 57-FOOT DIA BY 24-FOOT TALL 400,000 GALLON ABOVE GROUND WELDED STEEL POTABLE WATER TANK.
3. 14-INCH DIA PVC C900 DR 18 OR DUCTILE IRON CLASS 53 INLET/OUTLET PIPE. SEE PLAN FOR LENGTH. FOR TRENCH SEE 6/9
4. 12-FOOT WIDE DG (DECOMPOSED GRANITE) OR CMB (CRUSHED MISCELLANEOUS BASE) ACCESS ROADWAY. SEE C/12
5. 6-FOOT HIGH CHAIN LINK FENCE PER SPPWC STD PLAN 600-3 AROUND THE PERIMETER OF THE TANK SITE. CHAIN LINK FENCE TO HAVE 3 STRANDS OF BARBED WIRE ALONG THE TOP.
6. 16-FOOT WIDE CHAIN LINK ACCESS GATE.

SCALE: 1" = 50'

50' 25' 0 50' 100'

SCALE IN FEET

811 Know what's below. Call 811 before you dig.

REGISTERED PROFESSIONAL ENGINEER JONATHON M. TURNER No. 60214 EXP. 6/30/20 CIVIL STATE OF CALIFORNIA

PREPARED BY:
PHOENIX CIVIL ENGINEERING, INC.
535 E. MAIN STREET
SANTA PAULA, CA 93060
(805) 658-6800

REGISTERED CE 60214 — EXP. 6-30-20 — DATE

REV.	SYM.	DESCRIPTION	R.C.E.	DATE
		75% SUBMITTAL		1/1/19

SAN SIMEON COMMUNITY SERVICES DISTRICT

WATER SYSTEM IMPROVEMENT PROJECT PHASE 1

RESERVOIR IMPROVEMENTS INDEX SHEET

REVIEWED BY: GENERAL MANAGER — DATE

JOB NO. -

DRAWING NO. C-08

DESIGNED BY:	DRAWN BY:	CHECKED BY:	DATE
JMT	CK	JMT	11/9/18

SHEET 10 OF 27

VERIFY SCALES
BAR IS ONE INCH ON ORIGINAL DRAWING
0 — 1
IF NOT ONE INCH ON THIS SHEET, ADJUST SCALES ACCORDINGLY

DWG: C:\Users\ChrisKeck\Box\SSCSD Reservoir\ACAD\IMPROVEMENTS\10-SSCSD-TANK-SHEETINDEX.dwg USER: ChrisKeck
DATE: Jan 14, 2019 1:50pm XREFS: SSCSD-IMP SSCSD-LO 181301 PCE PC-BDR RESERVOIR

75% SUBMITTAL

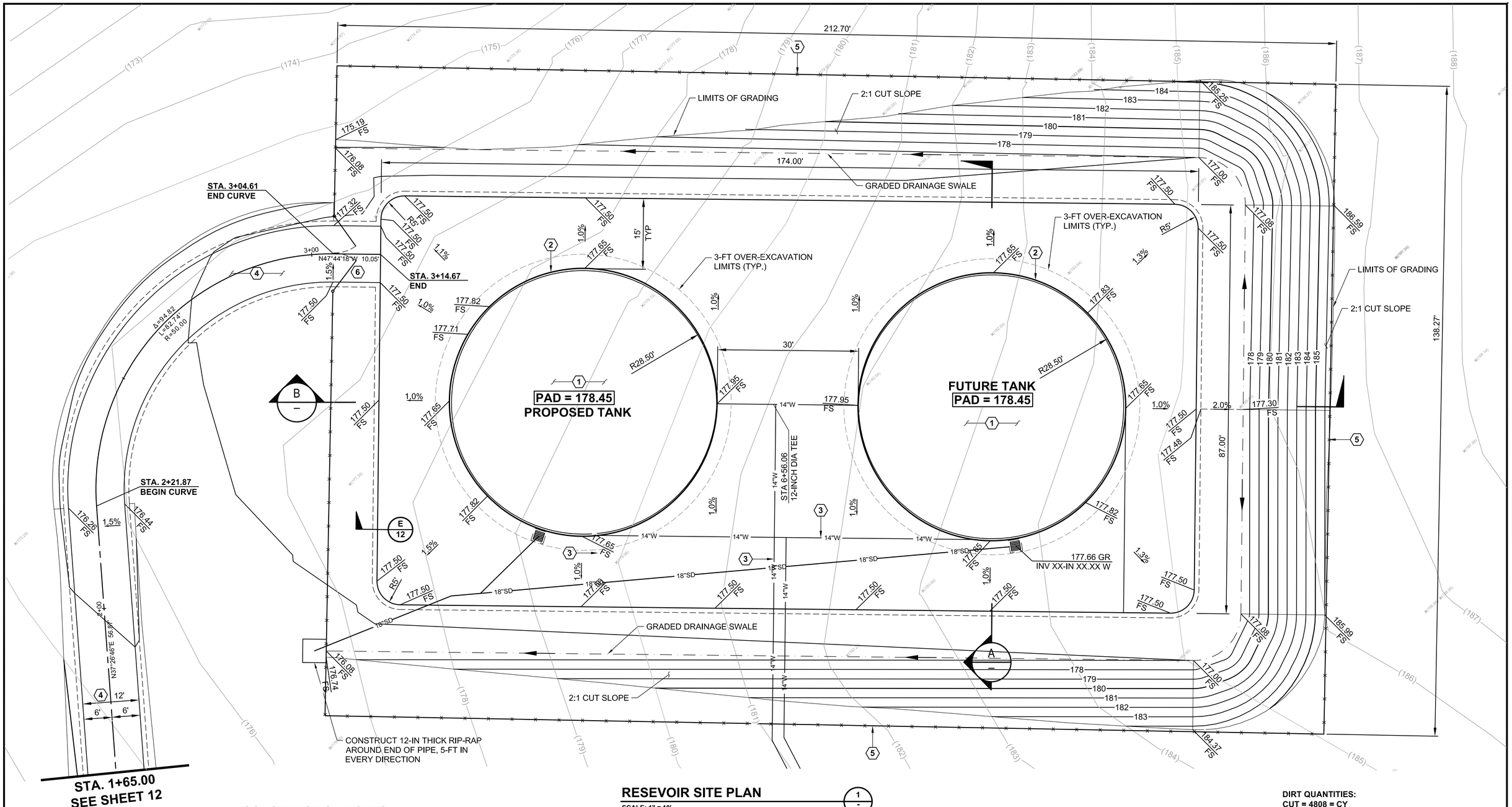

RESEVOIR SITE PLAN

SCALE: 1" = 10'

1 / -

DIRT QUANTITIES:
CUT = 4808 = CY
FILL = 0 CY
ON SITE DISTRIBUTION (GRADING) = 4808 CY

CONSTRUCTION NOTES

1. (2) 57-FOOT DIA BY 24-FOOT TALL 400,000 GALLON ABOVE GROUND WELDED STEEL POTABLE WATER TANK.
2. WATER TANK SUPPORT PAD PER MANUFACTURER. SEE D/12
3. 14-INCH DIA PVC C900 DR 18 OR DUCTILE IRON CLASS 53 OUTLET PIPE. SEE PLAN FOR LENGTH. FOR TRENCH SEE B/6
4. 12-FOOT WIDE DG (DECOMPOSED GRANITE) OR CMB (CRUSHED MISCELLANEOUS BASE) ACCESS ROADWAY. SEE C/12
5. 6-FOOT HIGH CHAIN LINK FENCE PER SPPWC STD PLAN 600-3 AROUND THE PERIMETER OF THE TANK SITE. CHAIN LINK FENCE TO HAVE 3 STRANDS OF BARBED WIRE ALONG THE TOP.
6. 16-FOOT WIDE CHAIN LINK ACCESS GATE.

VERIFY SCALES
BAR IS ONE INCH ON ORIGINAL DRAWING
0 — 1
IF NOT ONE INCH ON THIS SHEET, ADJUST SCALES ACCORDINGLY

SCALE: 1" = 10'
10' 5' 0 10' 20'
SCALE IN FEET

Know what's below. Call 811 before you dig.

REGISTERED PROFESSIONAL ENGINEER JONATHON M. KUNKER No. 60214 EXP. 6/30/20 CIVIL STATE OF CALIFORNIA

PREPARED BY:
PHOENIX CIVIL ENGINEERING, INC.
535 E. MAIN STREET
SANTA PAULA, CA 93060
(805) 658-6800

6-30-20
REGISTERED CE 60214 EXP. DATE

REV.	SYM.	DESCRIPTION	R.C.E.	DATE
		75% SUBMITTAL		1/1/19

SAN SIMEON COMMUNITY SERVICES DISTRICT
WATER SYSTEM IMPROVEMENT PROJECT
PHASE 1

RESERVOIR IMPROVEMENTS
SITE GRADING PLAN

REVIEWED BY:
GENERAL MANAGER DATE

JOB NO. -
DRAWING NO. C-09

DESIGNED BY:	DRAWN BY:	CHECKED BY:	DATE
JMT	CK	JMT	11/9/18

SHEET 11 OF 27

75% SUBMITTAL

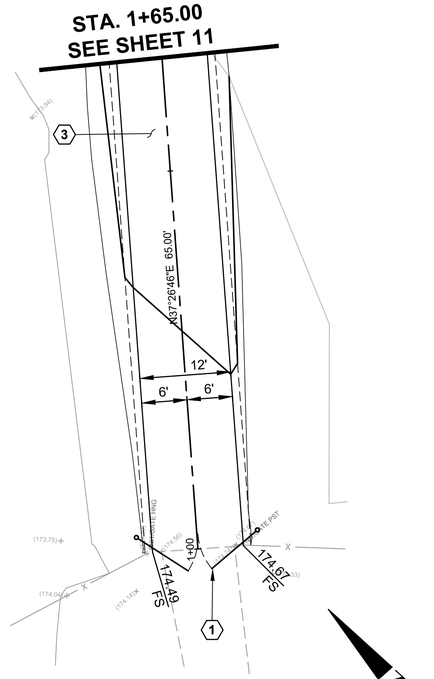

RESEVOIR ACCESS ROAD

SCALE: 1" = 10'

1 -

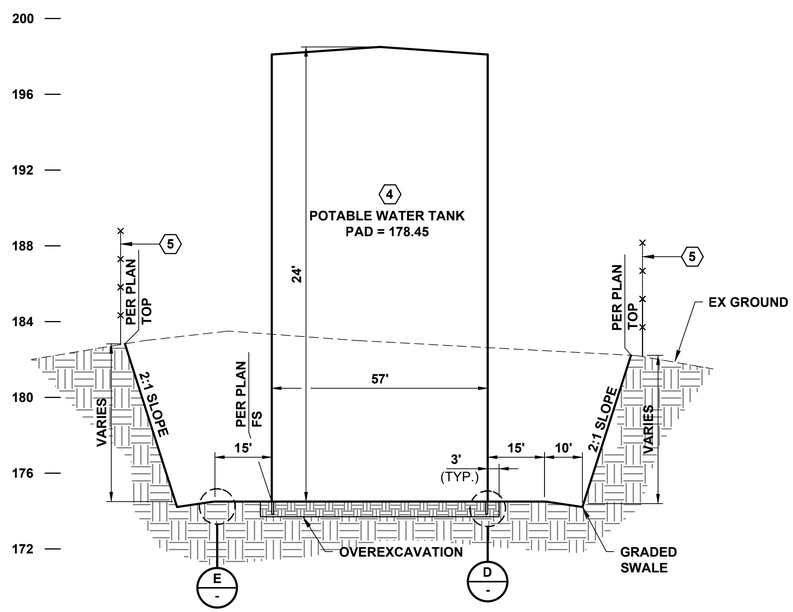

SECTION A-A

N.T.S.

A -

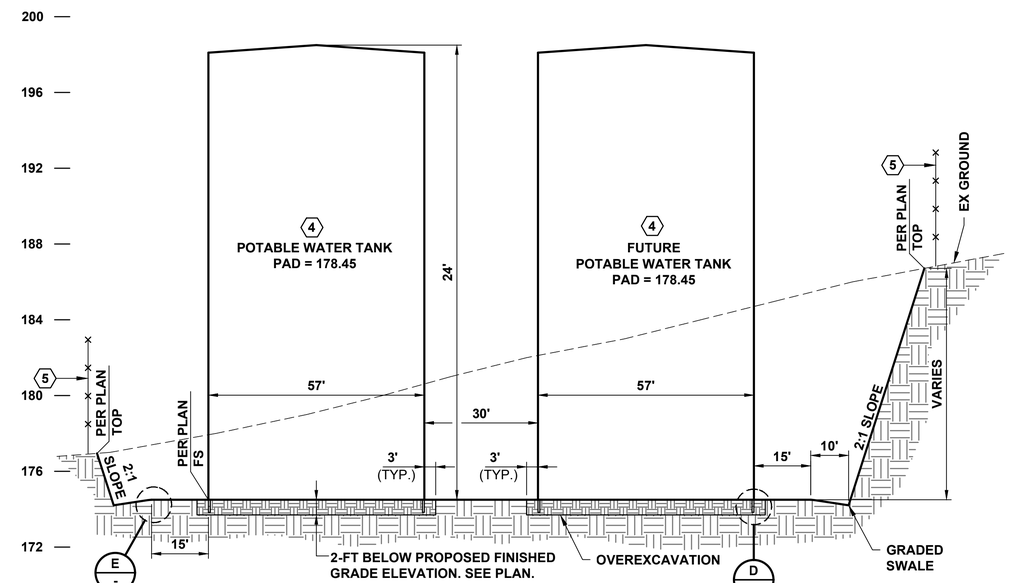

SECTION B-B

N.T.S.

B -

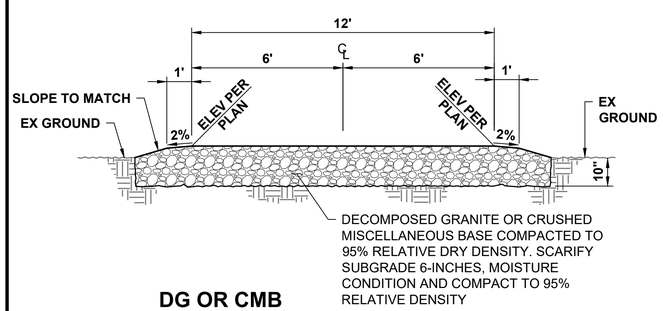

DG OR CMB ACCESS ROADWAY DETAIL

SCALE: N.T.S.

C -

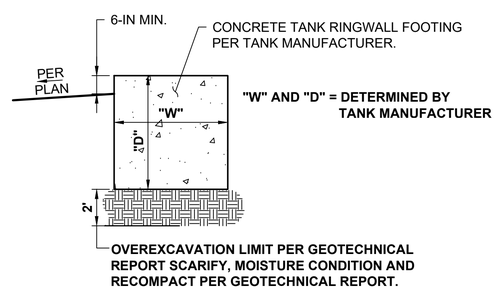

TANK RINGWALL FOOTING DETAIL

SCALE: N.T.S.

D -

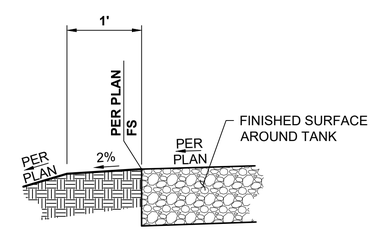

EDGE DETAIL

SCALE: N.T.S.

E -

CONSTRUCTION NOTES

1. INSTALL 16-FT WIDE x 6-FT HIGH DOUBLE SWING CHAIN LINK ACCESS GATE ACROSS ROAD. INSTALL FENCE POSTS AS NEEDED TO SUPPORT ACCESS GATE.
2. OVEREXCAVATION LIMITS UNDER PROPOSED TANKS. REFER TO GEOTECHNICAL REPORT.
3. 12-FOOT WIDE DG (DECOMPOSED GRANITE) OR CMB (CRUSHED MISCELLANEOUS BASE) ACCESS ROADWAY. SEE C/12
4. 57-FOOT DIA BY 24-FOOT TALL 400,000 GALLON ABOVE GROUND WELDED STEEL POTABLE WATER TANK BY MANUFACTURER.
5. 6-FOOT HIGH CHAIN LINK FENCE PER SPPWC STD PLAN 600-3 AROUND THE PERIMETER OF THE TANK SITE. CHAIN LINK FENCE TO HAVE 3 STRANDS OF BARBED WIRE ALONG THE TOP.

VERIFY SCALES
BAR IS ONE INCH ON ORIGINAL DRAWING
0 — 1
IF NOT ONE INCH ON THIS SHEET, ADJUST SCALES ACCORDINGLY

SCALE: 1" = 10'

10' 5' 0 10' 20'
SCALE IN FEET

811 Know what's below. Call 811 before you dig.

REGISTERED PROFESSIONAL ENGINEER JONATHON M. TURNER No. 60214 EXP. 6/30/20 CIVIL STATE OF CALIFORNIA

PREPARED BY:
PHOENIX CIVIL ENGINEERING, INC.
535 E. MAIN STREET
SANTA PAULA, CA 93060
(805) 658-6800

6-30-20
REGISTERED CE 60214 EXP. DATE

REV.	SYM.	DESCRIPTION	R.C.E.	DATE
		75% SUBMITTAL		1/1/19

SAN SIMEON COMMUNITY SERVICES DISTRICT
WATER SYSTEM IMPROVEMENT PROJECT
PHASE 1

RESERVOIR IMPROVEMENTS
SITE GRADING AND DETAILS

REVIEWED BY:
GENERAL MANAGER DATE

JOB NO. -
DRAWING NO. C-10

DESIGNED BY:	DRAWN BY:	CHECKED BY:	DATE
JMT	CK	JMT	11/9/18

SHEET 12 OF 27

75% SUBMITTAL

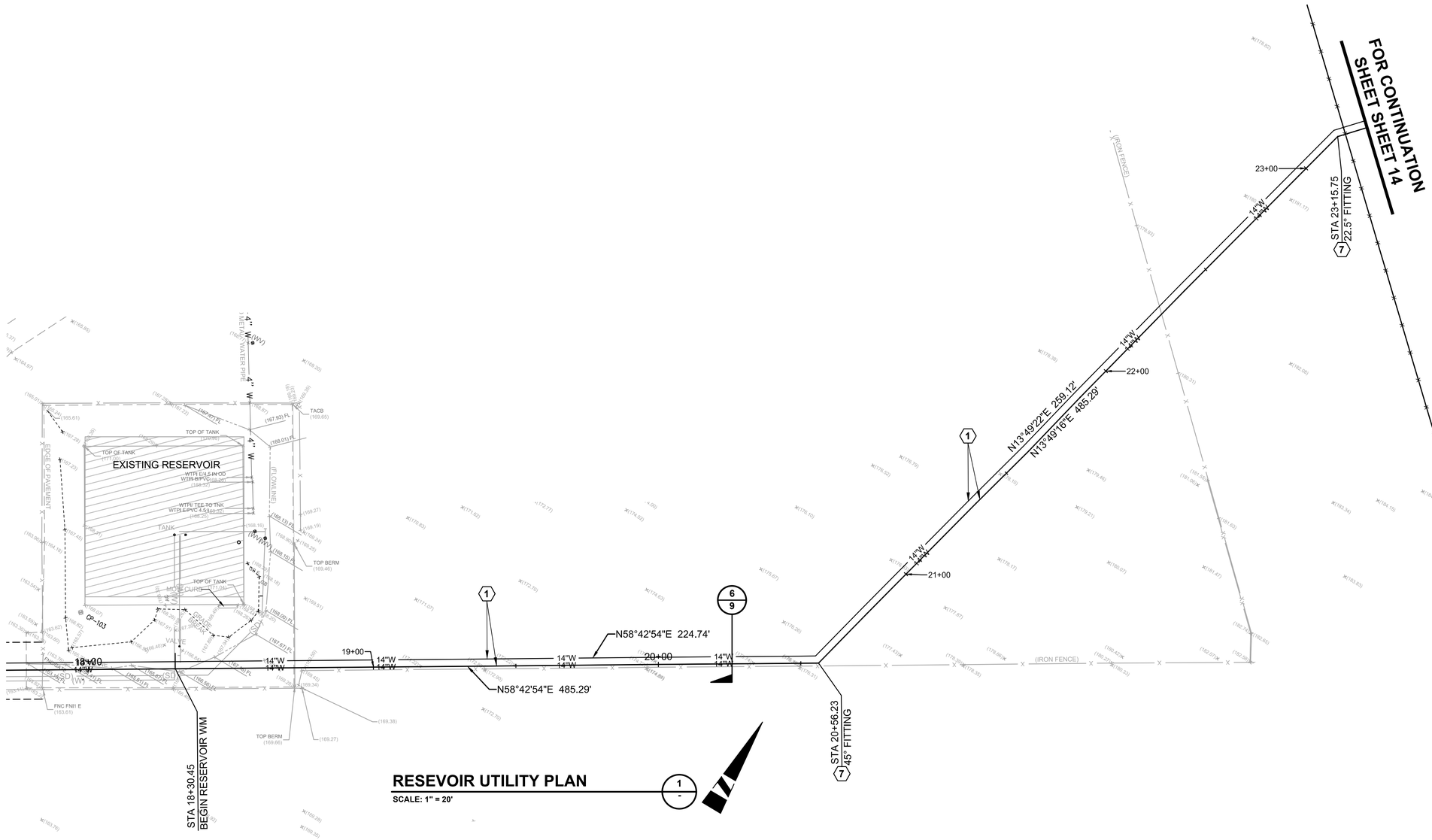

RESEVOIR UTILITY PLAN

SCALE: 1" = 20'

CONSTRUCTION NOTES

1. 14-INCH DIA DR 25 C900 PVC PIPE
7. THRUST BLOCK PER COUNTY OF SAN LUIS OBISPO, DEPT OF PUBLIC WORKS 2011 PUBLIC IMPROVEMENTS STD. DWG W-1 & W-1a.

SCALE: 1" = 30'

30' 15' 0 30' 60'

SCALE IN FEET

VERIFY SCALES
BAR IS ONE INCH ON ORIGINAL DRAWING
0 1
IF NOT ONE INCH ON THIS SHEET, ADJUST SCALES ACCORDINGLY

Know what's below. Call 811 before you dig.

REGISTERED PROFESSIONAL ENGINEER JONATHON M. TURNER No. 60214 EXP. 6/30/20 CIVIL STATE OF CALIFORNIA

PREPARED BY:
PHOENIX CIVIL ENGINEERING, INC.
535 E. MAIN STREET
SANTA PAULA, CA 93060
(805) 658-6800

6-30-20
REGISTERED CE 60214 EXP. DATE

REV.	SYM.	DESCRIPTION	R.C.E.	DATE
		75% SUBMITTAL		1/1/19

SAN SIMEON COMMUNITY SERVICES DISTRICT
WATER SYSTEM IMPROVEMENT PROJECT
PHASE 1

WATER RESERVOIR SITE UTILITY PLAN

REVIEWED BY: GENERAL MANAGER DATE

JOB NO. -
DRAWING NO. C-11

DESIGNED BY:	DRAWN BY:	CHECKED BY:	DATE
JMT	CK	JMT	11/9/18

SHEET 13 OF 27

DWG: C:\Users\ChrisKeck\Box\SSCSD Reservoir\ACAD\IMPROVEMENTS\13-SSCSD-TANK-UTIL.dwg USER: ChrisKeck
DATE: Jan 14, 2019 1:54pm XREFS: SSCSD-MP SSCSD-LO 181301 PCE PC-BDR RESERVOIR San Simeon - Water Pipeline Control San Simeon Pipelines

75% SUBMITTAL

PROPOSED TANKS:
BOTTOM ELEVATION: 174.50-FEET ABOVE MSL
MAX OPERATING WATER LEVEL: 195.50-FEET ABOVE MSL
DIFFERENCE IN ELEVATION (HIGH WATER): 30.50-FEET (13 PSI)

LINE TABLE		
LINE #	BEARING	LENGTH
L1	N42° 15' 42"E	71.47'
L2	N42° 15' 42"E	42.56'
L3	N47° 44' 18"W	12.50'
L4	N47° 44' 18"W	17.50'
L6	N47° 44' 18"W	40.00'
L7	N47° 44' 18"W	40.00'
L9	N70° 14' 18"W	31.36'
L10	N53° 23' 16"W	6.25'
L11	N87° 15' 42"E	17.41'
L12	N53° 23' 16"W	113.04'

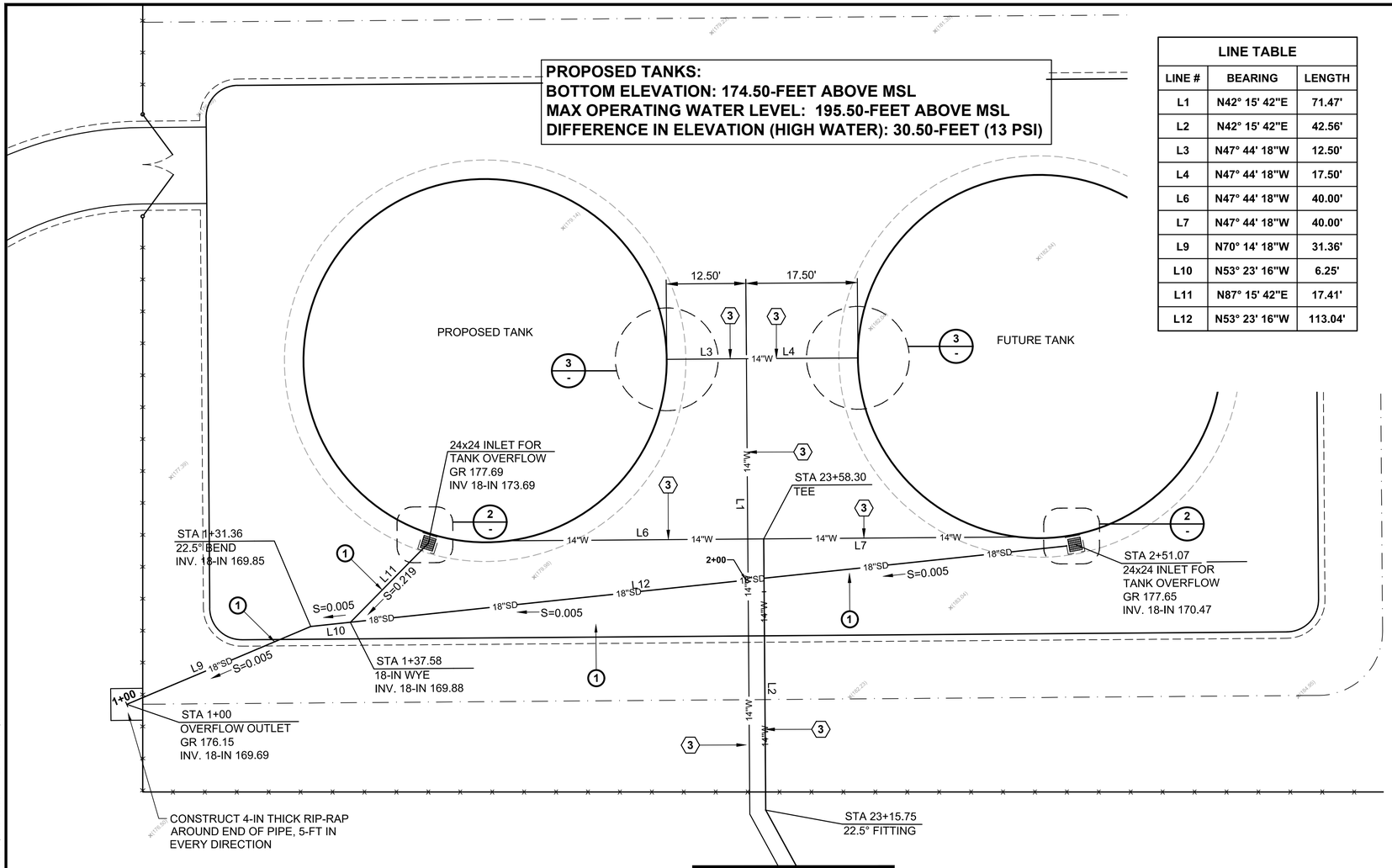

FOR CONTINUATION SHEET SHEET 13

RESERVOIR UTILITY PLAN

SCALE: 1" = 10'

(1)

STORM DRAIN CONSTRUCTION NOTES

(1) 18-IN DIA DOUBLE WALLED, CORUGATED HDPE STORM DRAIN PIPE

CONSTRUCTION NOTES

(1) (2) 57-FOOT DIA BY 24-FOOT TALL 400,000 GALLON ABOVE GROUND WELDED STEEL POTABLE WATER TANK.

(2) WATER TANK SUPPORT PAD. SEE D/12

(3) 14-INCH DIA PVC C900 DR 18 OR DUCTILE IRON CLASS 53 COMMON INLET/OUTLET PIPE. SEE PLAN FOR LENGTH. FOR TRENCH SEE 6/9

(4) 12-FOOT WIDE DG (DECOMPOSED GRANITE) OR CMB (CRUSHED MISCELLANEOUS BASE) ACCESS ROADWAY. SEE C/12

(5) 6-FOOT HIGH CHAIN LINK FENCE PER SPPWC STD PLAN 600-3 AROUND THE PERIMETER OF THE TANK SITE. CHAIN LINK FENCE TO HAVE 3 STRANDS OF BARBED WIRE ALONG THE TOP.

(6) 16-FOOT WIDE CHAIN LINK ACCESS GATE.

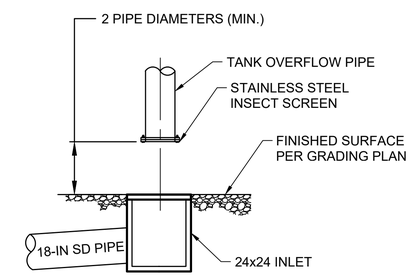

ENLARGED DETAIL

SCALE: N.T.S.

(2)

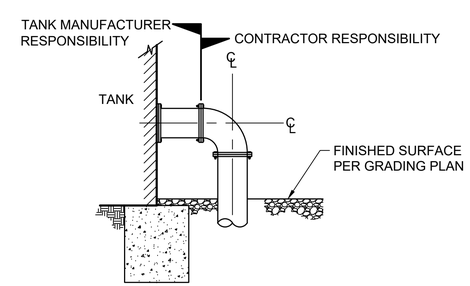

PIPE INLET/OUTLET DETAIL

SCALE: N.T.S.

(3)

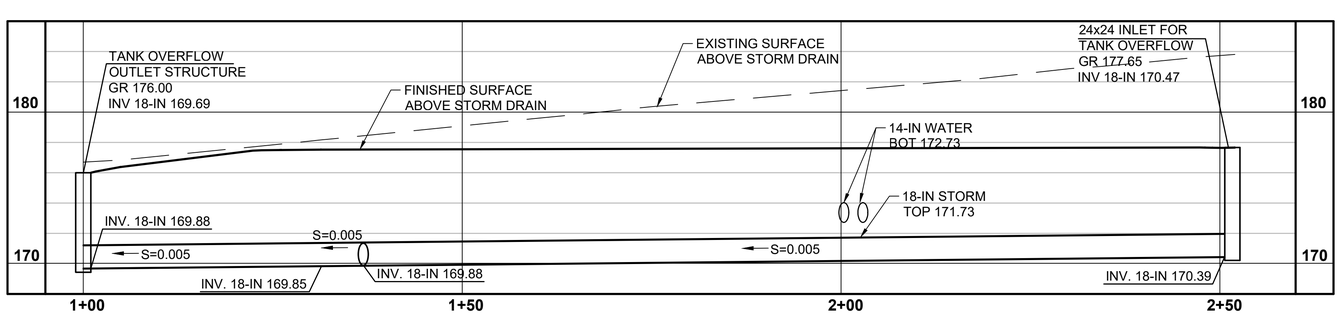

STORM DRAIN PROFILE

SCALE: 1" = 10' / HORIZ. 1" = 5' VERT.

(2)

VERIFY SCALES
BAR IS ONE INCH ON ORIGINAL DRAWING
0 — 1
IF NOT ONE INCH ON THIS SHEET, ADJUST SCALES ACCORDINGLY

SCALE: 1" = 10'
10' 5' 0 10' 20'
SCALE IN FEET

Know what's below. Call 811 before you dig.

REGISTERED PROFESSIONAL ENGINEER JONATHON M. TURNER No. 60214 EXP. 6/30/20 CIVIL STATE OF CALIFORNIA

PREPARED BY:
PHOENIX CIVIL ENGINEERING, INC.
535 E. MAIN STREET
SANTA PAULA, CA 93060
(805) 658-6800

6-30-20
REGISTERED CE 60214 EXP. DATE

REV.	SYM.	DESCRIPTION	R.C.E.	DATE
		75% SUBMITTAL		1/1/19

SAN SIMEON COMMUNITY SERVICES DISTRICT
WATER SYSTEM IMPROVEMENT PROJECT
PHASE 1

WATER RESERVOIR UTILITY SITE PLAN

REVIEWED BY:
GENERAL MANAGER DATE

JOB NO. -
DRAWING NO. C-12

DESIGNED BY:	DRAWN BY:	CHECKED BY:	DATE
JMT	CK	JMT	11/9/18

SHEET 14 OF 27

75% SUBMITTAL

DWG: C:\Users\ChrisKeck\Box\SSCSD Reservoir\ACAD\IMPROVEMENTS\14-SSCSD-TANK-UTIL.dwg USER: ChrisKeck
DATE: Jan 14, 2019 1:55pm XREFS: SSCSD-IMP SSCSD-LO 181301 PCE PC-BDR RESERVOIR San Simeon - Water Pipeline Control San Simeon Pipelines

PIPES, DUCTS, AND CONDUITS SHALL BE SUPPORTED AND BRACED PER OSHPD PRE-APPROVAL OF MANUFACTURER'S CERTIFICATION NO. OPM-0043-13 THE 'MASON INDUSTRIES INC. SEISMIC RESTRAINT COMPONENTS FOR SUSPENDED UTILITIES.' A COPY OF THE OSHPD PRE-APPROVED DOCUMENTS SHALL BE AT THE JOB SITE AT ALL TIMES. INSTALLATION OF THIS EQUIPMENT MUST BE DONE IN STRICT ACCORDANCE WITH THE PRE-APPROVED DOCUMENTS.

EXPANSION ANCHORS FOR USE IN CONCRETE IN DRY LOCATIONS SHALL BE HILTI CARBON STEEL KWIK BOLT TZ WEDGE ANCHORS. EXPANSION ANCHORS FOR USE IN CONCRETE IN DAMP AND WET LOCATIONS SHALL BE HILTI STAINLESS STEEL KWIK BOLT TZ WEDGE ANCHORS. EXPANSION ANCHORS FOR USE IN GROUT FILLED MASONRY IN DRY LOCATIONS SHALL BE SIMPSON WEDGE-ALL CARBON STEEL WEDGE ANCHORS. EXPANSION ANCHORS FOR USE IN GROUT FILLED MASONRY IN DAMP AND WET LOCATIONS SHALL BE SIMPSON WEDGE-ALL MECHANICALLY GALVANIZED CARBON STEEL WEDGE ANCHORS. PROVIDE ANCHORS OF DIAMETER AND MINIMUM EMBEDMENT INDICATED. DRY LOCATIONS ARE DEFINED AS LOCATIONS NOT NORMALLY SUBJECT TO DAMPNESS OR WETNESS. DAMP LOCATIONS ARE DEFINED AS PARTIALLY PROTECTED LOCATIONS UNDER CANOPIES, MARQUEES, ROOFED PORCHES, AND LIKE LOCATIONS AND INTERIOR LOCATIONS SUBJECT TO MODERATE DEGREES OF MOISTURE, SUCH AS SOME BASEMENTS. WET LOCATIONS ARE DEFINED AS INSTALLATIONS UNDERGROUND OR IN CONCRETE SLABS OR MASONRY IN DIRECT CONTACT WITH THE EARTH, LOCATIONS SUBJECT TO SATURATION WITH WATER OR OTHER LIQUIDS, AND LOCATIONS EXPOSED TO WEATHER AND UNPROTECTED.

PROOF LOAD TEST FOR WEDGE TYPE ANCHOR BOLTS: WHERE ANCHOR BOLTS OF THE WEDGE EXPANSION TYPE ARE LOADED IN PULLOUT OR SHEAR, 50% OF THE BOLTS (ALTERNATE BOLTS IN ANY GROUP ARRANGEMENT) SHALL BE PROOF TESTED AT LEAST 24 HOURS AFTER INSTALLATION IN THE PRESENCE OF PROJECT INSPECTOR TO THE TEST VALUES LISTED FOR THE PARTICULAR ANCHOR. IF ANY BOLTS FAIL THE PROOF LOAD TEST, TEST ALL ANCHOR BOLTS OF THE SAME TYPE, INSTALLED BY THE SAME TRADE, AND NOT PREVIOUSLY TESTED, UNTIL 20 CONSECUTIVE ANCHORS PASS, THEN RESUME INITIAL TEST FREQUENCY. ANCHORS SHALL BE TESTED WITH A CALIBRATED TORQUE WRENCH AND MUST ATTAIN SPECIFIED TORQUE VALUE WITHIN 1/2 TURN OF THE NUT.

TEST:	TORQUE			
BOLT DIAMETER (INCHES):	3/8	1/2	5/8	3/4
KB-TZ TORQUE VALUE (FT-LBS), ESR-1917:	25	40	60	110
WEDGE-ALL TORQUE VALUE (FT-LBS), ESR-1396:	30	35	55	120

WHEN INSTALLING DRILLED-IN ANCHORS IN EXISTING NON-PRESTRESSED REINFORCED CONCRETE, USE CARE AND CAUTION TO AVOID CUTTING OR DAMAGING THE EXISTING REINFORCING BARS. MAINTAIN A MINIMUM CLEARANCE OF ONE INCH BETWEEN THE REINFORCEMENT AND THE DRILLED-IN ANCHOR.

24 SEISMIC NOTES

BRANCH-CIRCUIT PANELBOARD
PANEL T

SERVICE: 120/208V S/N 1P 3W | BUS: 100A | LOCATION: TANKS
MAIN BREAKER: 15A 2P CB | FEEDER: SEE ONE LINE DIAGRAM | VER: A8
MOUNTING: PEDESTAL | MINIMUM AIC RATING: 10,000

CIRC	TRIP	POLE	REC	LTG	HP	LOAD	VOLT AMPS A	VOLT AMPS B		DESCRIPTION	
1	20	1		4		1	240			SITE LIGHTING	
2	20	1				5	500			RTU	
3	20	1				2		180		RECEPTACLE	
4	20	1				5		500		CHLORINE ANALYSER	
5	20	1					0			SPARE	
6	20	1					0			SPARE	
7		1						0		SPACE	
8		1						0		SPACE	
9		1					0			SPACE	
10		1					0			SPACE	
11		1						0		SPACE	
12		1						0		SPACE	
CONNECTED LOAD (VA)							740	680	0	1420	6 MAX. PHASE AMPS
COMP. LOAD FACTOR (VA)							0	0	0	0	
COMPUTED LOAD (VA)							740	680	0	1420	6 MAX. PHASE AMPS
CONT. LOAD FACTOR (VA)							60	0	0	60	
CONDUCTOR LOAD (VA)							800	680	0	1480	7 MAX. PHASE AMPS

12 PANEL T LOAD SCHEDULE

BRANCH-CIRCUIT PANELBOARD
R

SERVICE: 120/208V S/N 1P 3W | BUS: 100A | LOCATION: RESERVOIR
MAIN BREAKER: 15A 2P CB | FEEDER: SEE ONE LINE DIAGRAM | VER: A8
MOUNTING: PEDESTAL | MINIMUM AIC RATING: 10,000

CIRC	TRIP	POLE	REC	LTG	HP	LOAD	VOLT AMPS A	VOLT AMPS B		DESCRIPTION	
1	20	1				5	500			PLC ENCLOSURE	
2	20	1	1			2	180			CONTROL PANEL	
3	20	1	1			2		180		RECEPTACLE	
4	20	1						0		SPARE	
5		1					0			SPACE	
6		1					0			SPACE	
7		1						0		SPACE	
8		1						0		SPACE	
9		1					0			SPACE	
10		1					0			SPACE	
11		1						0		SPACE	
12		1						0		SPACE	
CONNECTED LOAD (VA)							680	180	0	860	6 MAX. PHASE AMPS
COMP. LOAD FACTOR (VA)							0	0	0	0	
COMPUTED LOAD (VA)							680	180	0	860	6 MAX. PHASE AMPS
CONT. LOAD FACTOR (VA)							0	0	0	0	
CONDUCTOR LOAD (VA)							680	180	0	860	6 MAX. PHASE AMPS

12 PANEL R LOAD SCHEDULE

THE NUMBERS IN THE LOAD COLUMN OF THE PANEL SCHEDULES REFER TO THE CATEGORY NUMBERS IDENTIFIED BELOW. DEMAND FACTORS ARE APPLIED BASED ON THE 2010 CALIFORNIA ELECTRICAL CODE SECTION LISTED FOR EACH CATEGORY. THE PANEL SCHEDULE CALCULATED LOAD IS DETERMINED BY SUBTRACTING FROM THE CONNECTED LOAD THE AMOUNT ALLOWED BY CATEGORIES 2, 4, 7, AND 8. THE CONDUCTOR LOAD IS DETERMINED BY ADDING THE AMOUNTS REQUIRED BY CATEGORIES 1, 3, AND 6 TO THE CALCULATED LOAD.

1. CONTINUOUS LOAD (CEC 220-14(A)(D))
2. RECEPTACLE LOAD (CEC 220-14I)
3. MOTOR LOAD (CEC 220-14C)
4. KITCHEN EQUIPMENT LOAD (CEC 220-56)
5. CONNECTED LOAD (NON-CONTINUOUS LOAD WITH NO DEMAND FACTOR)
6. METERED LOAD (CEC 220-87)
7. ELEVATOR LOAD (CEC 620-14)
8. X-RAY EQUIPMENT DEMAND (CEC 517-73)

12 PANEL SCHEDULE NOTES

(X) DESIGNATION FOR OCPD OR DISCONNECTION EQUIPMENT BY CIRCUIT NUMBER OR LETTER. M=MAIN, B=BRANCH CIRCUIT DEVICE, F=FEEDER, T=TAP.

AF (B) AT 3P — MOLDED CASE CIRCUIT BREAKER. AF=FRAME SIZE, AT=TRIP RATING, P=NUMBER OF POLES, A=AMP RATING.

T KVA — TRANSFORMER WITH PRIMARY AND SECONDARY VOLTAGES, PHASES, AND KVA RATING AS INDICATED.

(RM) — CURRENT TRANSFORMER AND REVENUE METER.

UTILITY SOURCE.

14 ONE LINE DIAGRAM SYMBOL LIST

DETAIL NOTES

1. ALL ELECTRICAL WORK SHOWN IS EXISTING UON.
2. MINI-POWER CENTER MPC-T.
3. MINI-POWER CENTER MPC-R.

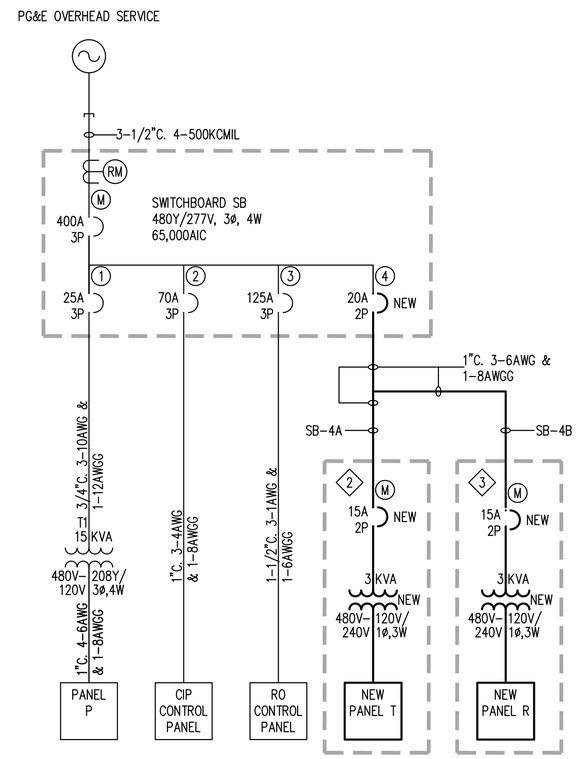

12 ONE LINE DIAGRAM

3/4"C. 3-12AWG & 1-12AWGG. QUANTITY OF HASH MARKS INDICATES QUANTITY OF NORMAL CURRENT CARRYING CONDUCTORS SIZED AT 12AWG. PROVIDE MINIMUM 3/4" CONDUIT. MAXIMUM NUMBER OF 12AWG CONDUCTORS SHALL NOT EXCEED 12 WITHOUT INCREASING THE CONDUIT SIZE. INCLUDE 1-12AWGG IN ALL CONDUITS. WHERE NO HASH MARKS ARE INDICATED, PROVIDE 2-12AWG & 1-12AWGG.

CONDUIT RUN IN OR BELOW FLOOR, OR BELOW GRADE.

CONDUIT RUN EXPOSED.

OVERHEAD CONDUCTOR

LIQUIDTIGHT FLEXIBLE STEEL CONDUIT

CONDUIT RISER DOWN.

CONDUIT RISER UP.

CONDUIT RUN CONTINUATION.

CONDUIT STUBBED OUT, MARKED, AND CAPPED.

DOTTED LINE INDICATES EQUIPMENT TO BE DISCONNECTED AND REMOVED UON.

G — 2AWG BC EQUIPMENT GROUNDING CONDUCTOR WITHIN CONCRETE SLAB UON.

(J) — WALL MOUNTED JUNCTION BOX WITH HINGE COVER. SIZE AND MOUNTING HEIGHT AS INDICATED ON THE PLANS.

(J) — JUNCTION BOX WITH BLANK FACEPLATE.

DUPLEX GFCI RECEPTACLE IN SURFACE WALL MOUNTED OUTLET BOX AT +18" UON.

S_{ab} — SINGLE POLE TOGGLE SWITCH IN SURFACE WALL OUTLET BOX UON. SUBSCRIPTS INDICATE OUTLETS CONTROLLED AND A GANGED ASSEMBLY WITH A SWITCH OF THE TYPE INDICATED FOR EACH SUBSCRIPT. +42" UON.

ELECTRICAL BRANCH CIRCUIT PANELBOARD, SURFACE MOUNTED.

(PC) — PHOTOCELL CONTROL IN WEATHERPROOF ENCLOSURE. ORIENT TO THE NORTH.

(A) — LUMINAIRE DESIGNATION. LETTER INDICATES LUMINAIRE TYPE.

(16 / E1) — DETAIL REFERENCE. TOP NUMBER INDICATES DETAIL NUMBER. BOTTOM NUMBER INDICATES SHEET WHERE DETAIL IS LOCATED.

Electrical Abbreviations

AWGG	AMERICAN WIRE GAGE GROUND CONDUCTOR, SIZE AS INDICATED.
CO	CONDUIT ONLY WITH NYLON PULLROPE
EX	EXISTING
NTS	NOT TO SCALE
UON	UNLESS OTHERWISE NOTED

8 PLAN SYMBOL LIST

REGISTERED PROFESSIONAL ENGINEER JACK V. IVERS No. 12622 Exp. 9/19 ELECTRICAL STATE OF CALIFORNIA

IRJ ENGINEERS, INC.
MECHANICAL & ELECTRICAL ENGINEERS
4517 MARKET STREET, SUITE 18 VENTURA, CALIFORNIA 93003 (805) 642-2355
JOB No. 1824-00

REGISTERED PROFESSIONAL ENGINEER JONATHON M. TURNER No. 60214 EXP. 6/30/20 CIVIL STATE OF CALIFORNIA

PREPARED BY:
PHOENIX CIVIL ENGINEERING, INC.
535 E. MAIN STREET
SANTA PAULA, CA 93060
(805) 658-6800

REGISTERED CE 60214 — EXP. 6-30-20 — DATE

REV.	SYM.	DESCRIPTION	R.C.E.	DATE
		75% SUBMITTAL		12/4/18

SAN SIMEON COMMUNITY SERVICES DISTRICT
WATER SYSTEM IMPROVEMENT PROJECT PHASE 1
SYMBOL LISTS, ONE LINE, NOTES,PANEL SCHEDULES

REVIEWED BY: GENERAL MANAGER — DATE
JOB NO. -
DRAWING NO. E-1

DESIGNED BY:	DRAWN BY:	CHECKED BY:	DATE	
JVI	JVI	JEJ	11/9/18	SHEET OF 14

75% SUBMITTAL

Y182400GR.DWG 20190114 E182400SLDWG 1/14/2019 8:57AM ©IRJ ENGINEERS, INC.

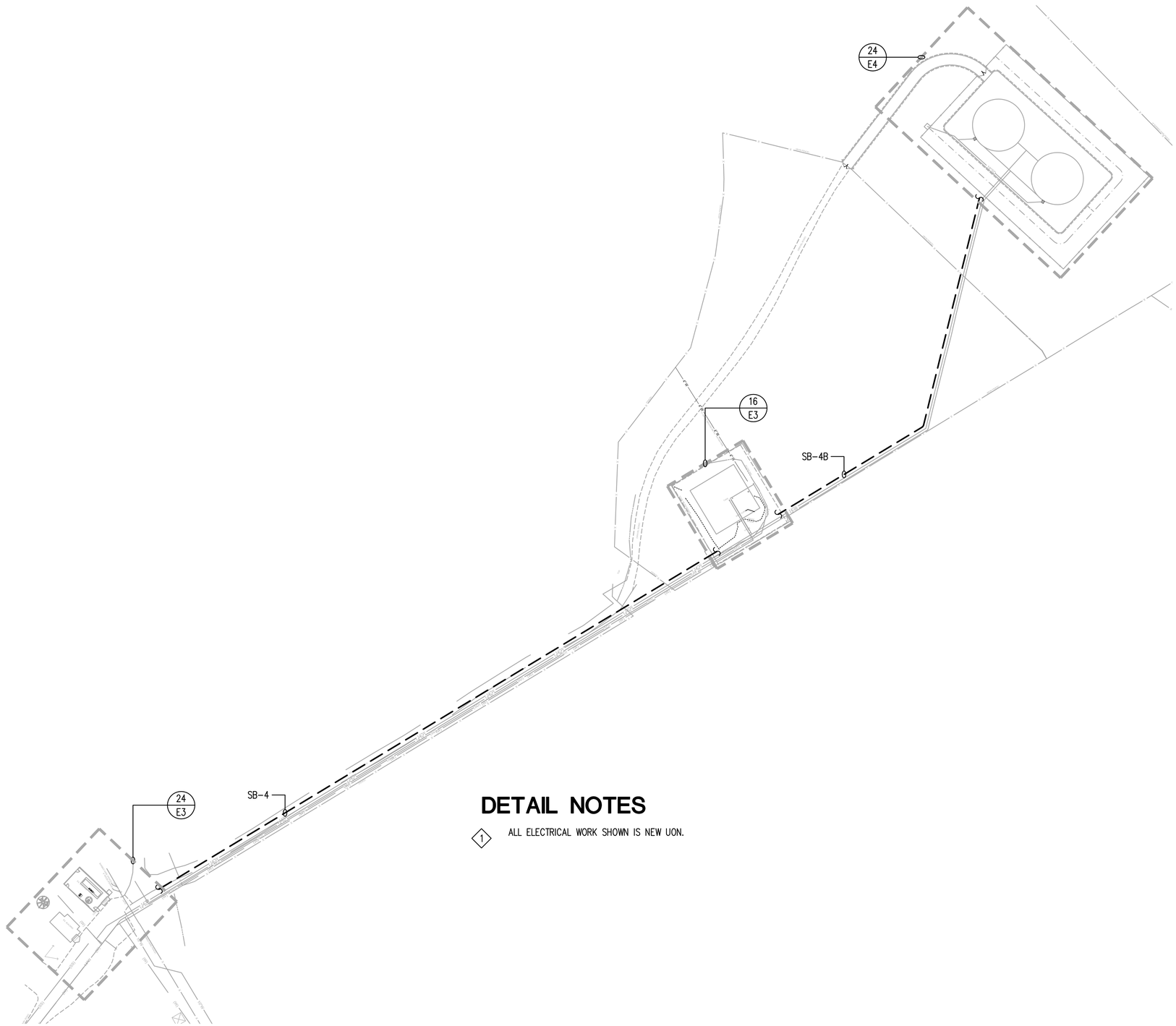

DETAIL NOTES

1. ALL ELECTRICAL WORK SHOWN IS NEW UON.

24 OVERALL SITE ELECTRICAL PLAN

SCALE 1" = 60' – 0"

60' 30' 0 120'
45' 15' 60'

1. PRIOR TO BIDDING, CONTRACTOR SHALL DETERMINE MOUNTING REQUIREMENTS FOR EACH LUMINAIRE AT EACH LOCATION.
2. SEE DESCRIPTION.
3. SEE SPECIFICATIONS AND DETAIL 12 ON SHEET E-201 FOR ADDITIONAL REQUIREMENTS.
4. CATALOG NUMBER AND DESCRIPTIONS SHALL BE VERIFIED BY CONTRACTOR PRIOR TO SUBMISSION OF SHOP DRAWINGS. ANY CONFLICTS SHALL BE BROUGHT TO THE ATTENTION OF THE ENGINEER

TYPE	MANUFACTURER	CATALOG NUMBER (1)(2)(3)(4)	DESCRIPTION (1)(3)(4)	LAMP TYPE	LAMP QUAN/ WATTS	INPUT WATTS (VA)	MOUNTING
A	PHILIPS GARDCO OR EQUAL	LUMINAIRE: ASA 32L 500 NW-G2 UAM 5 120 FP1-120 HIS BK	ONE 120 VOLT, FULL CUT-OFF 4000K LED LUMINAIRE WITH TYPE IV DISTRIBUTION, CAST ALUMINUM LOW PROFILE HOUSING, CLEAR TEMPERED GLASS LENS, CAST ALUMINUM HEAT SINK, PRE-SET DRIVER TO PROVIDE CONSTANT LIGHT OUTPUT OF THE LIFE SPAN OF THE LED MODULE, INTERNAL HOUSE SIDE SHIELD, NRTL LISTED FOR WET LOCATIONS, AND POLYESTER POWDER COAT TEXTURED BLACK FINISH.	LED ARRAY	1/52	52 (60)	POLE
	PHILIPS GARDCO OR EQUAL	POLE: SSA4-CB-8-D1-BLP SR	NOMINAL 4" SQUARE STRAIGHT SMOOTH ALUMINUM POLE WITH LUMINAIRE/POLE COMBINATION HAVING A STEADY 80MPH WIND LOADING RATING. PROVIDE WITH .125" WALL THICKNESS. POLE AND BASE SHALL HAVE AN ELECTROSTATICALLY APPLIED POLYURETHANE BLACK FINISH TO MATCH LUMINAIRE. POLE LENGTH SHALL BE 8 FEET. PROVIDE WITH (4) HOT-DIP GALVANIZED ANCHOR BOLTS AND DOUBLE HEX NUTS AND WASHERS. PROVIDE SINGLE POLE MOUNTED RECEPTACLE WITH IN-USE COVER.				

12 LUMINAIRE SCHEDULE

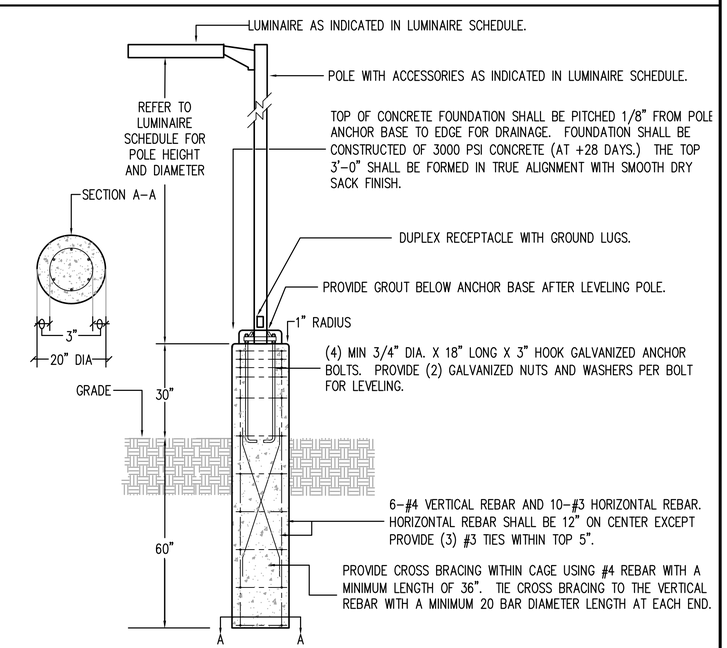

12 LUMINAIRE SCHEDULE

REGISTERED PROFESSIONAL ENGINEER JACK V. IVERS No. 12622 Exp. 9/19 ELECTRICAL STATE OF CALIFORNIA

IRJ ENGINEERS, INC.
MECHANICAL & ELECTRICAL ENGINEERS
JOB No. 1824-00
4517 MARKET STREET, SUITE 1B VENTURA, CALIFORNIA 93003
(805) 642-2355

REGISTERED PROFESSIONAL ENGINEER JONATHON M. TURNER No. 60214 EXP. 6/30/20 CIVIL STATE OF CALIFORNIA

PREPARED BY:
PHOENIX CIVIL ENGINEERING, INC.
535 E. MAIN STREET
SANTA PAULA, CA 93060
(805) 658-6800

REGISTERED CE 60214 EXP. 6-30-20 DATE

REV.	SYM.	DESCRIPTION	R.C.E.	DATE
		75% SUBMITTAL		12/4/18

SAN SIMEON COMMUNITY SERVICES DISTRICT
WATER SYSTEM IMPROVEMENT PROJECT PHASE 1
OVERALL ELECTRICAL SITE PLAN, LUMINAIRE DETAILS

REVIEWED BY:
GENERAL MANAGER DATE
JOB NO. -
DRAWING NO. E-2

DESIGNED BY:	DRAWN BY:	CHECKED BY:	DATE	SHEET OF 14
JVI	JVI	JEJ	11/9/18	

75% SUBMITTAL

Y182400BR.DWG 20190114 E182400B.DWG 1/14/2019 8:57AM ©IRJ ENGINEERS, INC.

DETAIL NOTES

1. ALL ELECTRICAL WORK SHOWN IS EXISTING UON.

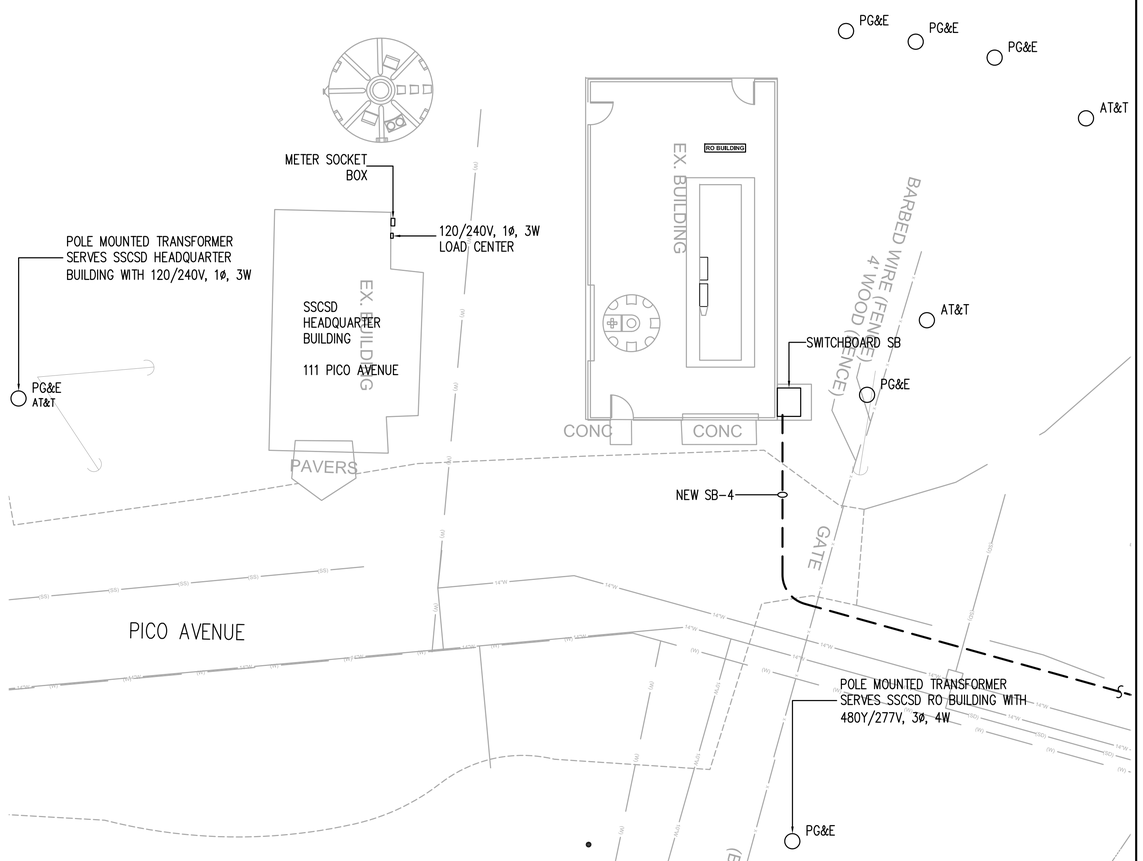

24 HEADQUARTER SITE ELECTRICAL PLAN

SCALE 1" = 10' – 0" 10' 5' 0 20' 7.5' 2.5' 10'

DETAIL NOTES

1. ALL ELECTRICAL WORK SHOWN IS EXISTING UON.

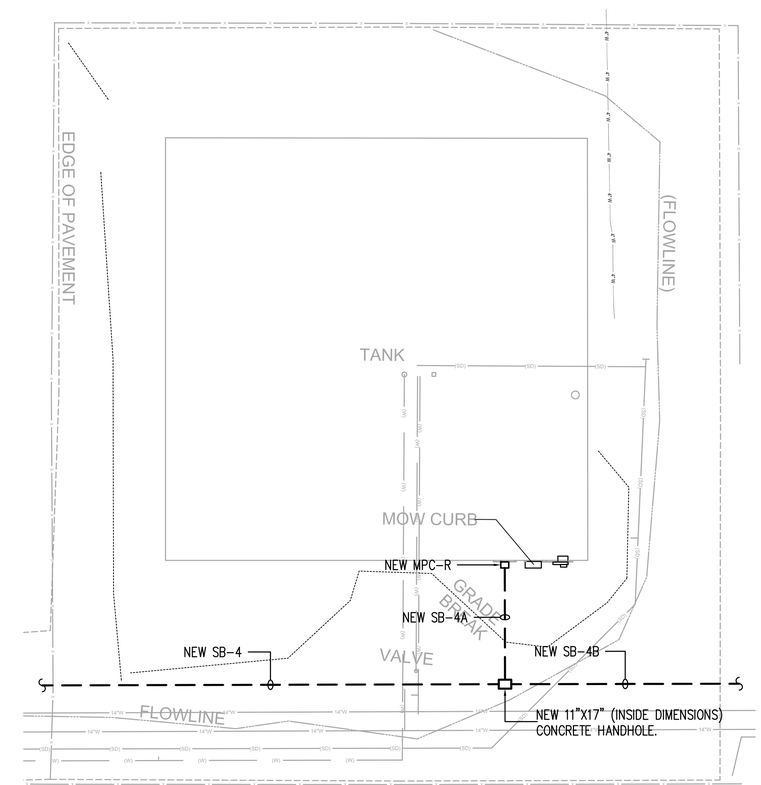

16 RESERVOIR SITE ELECTRICAL PLAN

SCALE 1" = 10' – 0" 10' 5' 0 20' 7.5' 2.5' 10'

REGISTERED PROFESSIONAL ENGINEER JACK V. IVERS No. 12622 Exp. 9/19 ELECTRICAL STATE OF CALIFORNIA

IRJ ENGINEERS, INC.
MECHANICAL & ELECTRICAL ENGINEERS
4517 MARKET STREET, SUITE 18 VENTURA, CALIFORNIA 93003
(805) 642-2355
JOB No. 1824-00

REGISTERED PROFESSIONAL ENGINEER JONATHON M. TUNKER No. 60214 EXP. 6/30/20 CIVIL STATE OF CALIFORNIA

PREPARED BY:
PHOENIX CIVIL ENGINEERING, INC.
535 E. MAIN STREET
SANTA PAULA, CA 93060
(805) 658-6800

REGISTERED CE 60214 — EXP. 6-30-20 — DATE

REV.	SYM.	DESCRIPTION	R.C.E.	DATE
		75% SUBMITTAL		12/4/18

SAN SIMEON COMMUNITY SERVICES DISTRICT
WATER SYSTEM IMPROVEMENT PROJECT
PHASE 1

HEADQUARTER & RESERVOIR SITE ELECTRICAL PLANS

REVIEWED BY: GENERAL MANAGER — DATE
JOB NO. -
DRAWING NO. E-3

DESIGNED BY:	DRAWN BY:	CHECKED BY:	DATE	SHEET OF 14
JVI	JVI	JEJ	11/9/18	

75% SUBMITTAL

Y182400GR.DWG 20190114 E182400B.DWG 1/14/2019 8:57AM ©IRJ ENGINEERS, INC.

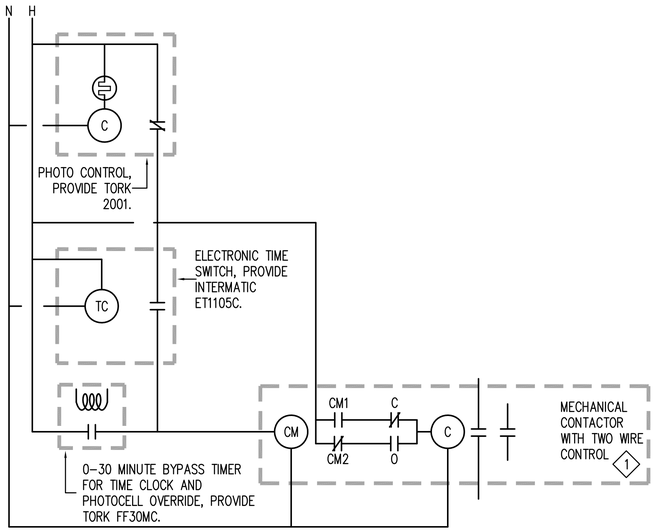

DETAIL NOTES

1. PROVIDE ASCO MODEL 918 60 20 3 1 ACC47.
2. REFER TO SITE PLAN FOR CIRCUITING
3. LOCATE THE TIME SWITCH, BYPASS TIMER, AND MECHANICAL CONTACTOR IN A SINGLE LIGHTING CONTROL PANEL ENCLOSURE.

23 LIGHTING CONTROL

DETAIL NOTES

1. ALL ELECTRICAL WORK SHOWN IS NEW UON.

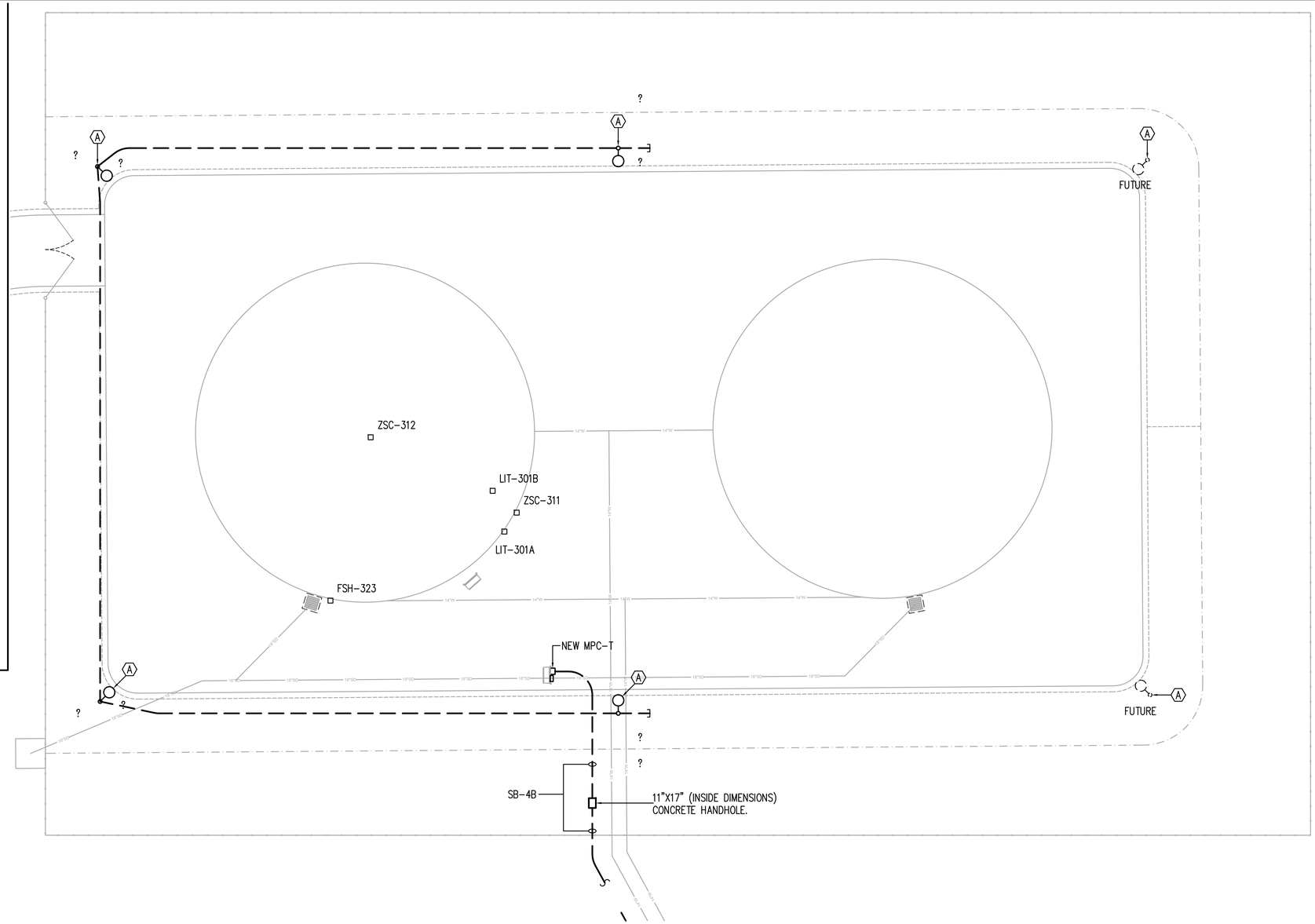

24 TANK SITE ELECTRICAL PLAN

SCALE 1" = 10' - 0"

10' 5' 0 20'
7.5' 2.5' 10'

REGISTERED PROFESSIONAL ENGINEER JACK V. IVERS No. 12622 Exp. 9/19 ELECTRICAL STATE OF CALIFORNIA

IRJ ENGINEERS, INC.
MECHANICAL & ELECTRICAL ENGINEERS
4517 MARKET STREET, SUITE 1B VENTURA, CALIFORNIA 93003
(805) 642-2355
JOB No. 1824-00

REGISTERED PROFESSIONAL ENGINEER JONATHON M. FUNKER No. 60214 EXP. 6/30/20 CIVIL STATE OF CALIFORNIA

PREPARED BY:
PHOENIX CIVIL ENGINEERING, INC.
535 E. MAIN STREET
SANTA PAULA, CA 93060
(805) 658-6800

REGISTERED CE 60214 — EXP. 6-30-20 — DATE

REV.	SYM.	DESCRIPTION	R.C.E.	DATE
		75% SUBMITTAL		12/4/18

SAN SIMEON COMMUNITY SERVICES DISTRICT
WATER SYSTEM IMPROVEMENT PROJECT PHASE 1

TANK SITE ELECTRICAL PLAN

REVIEWED BY: GENERAL MANAGER — DATE

JOB NO. -
DRAWING NO. E-4

DESIGNED BY:	DRAWN BY:	CHECKED BY:	DATE	
JVI	JVI	JEJ	11/9/18	SHEET OF 14

75% SUBMITTAL

Y182400BR.DWG 20190114 E1E3400B.DWG 1/14/2019 8:57AM ©IRJ ENGINEERS, INC.

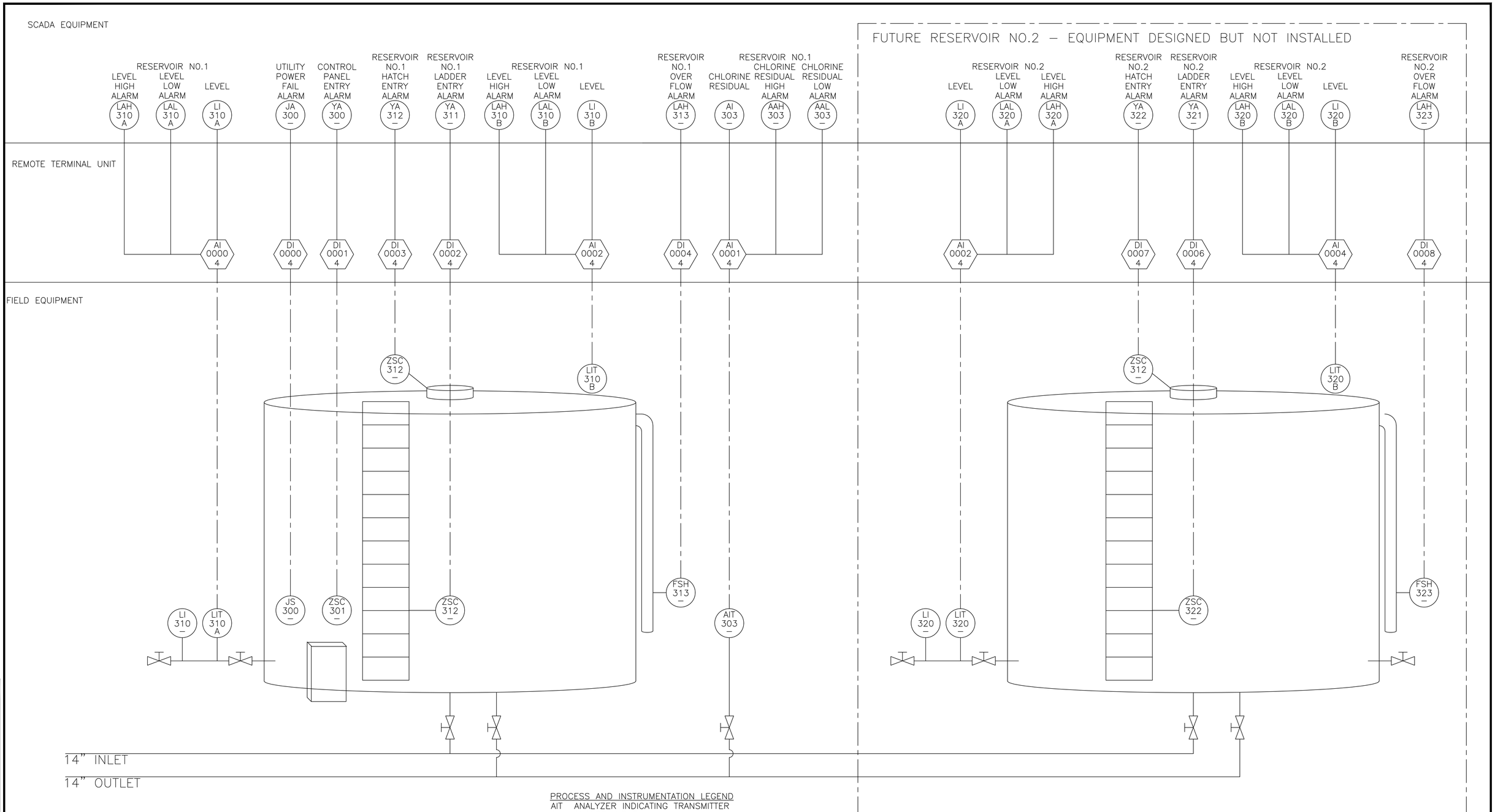

PROCESS AND INSTRUMENTATION LEGEND

AIT	ANALYZER INDICATING TRANSMITTER
AI	ANALOG INPUT
AAH	ANALYZER ALARM HIGH
AAL	ANALYZER ALARM LOW
DI	DIGITAL INPUT
JA	POWER ALARM
JS	POWER SWITCH
LAH	LEVEL ALARM HIGH
LAL	LEVEL ALARM LOW
LI	LEVEL INDICATOR
LIT	LEVEL INDICATOR TRANSMITTER
YA	ALARM POINT
ZSC	POSITION SWITCH CLOSED

VERIFY SCALES
BAR IS ONE INCH ON ORIGINAL DRAWING
0 1
IF NOT ONE INCH ON THIS SHEET, ADJUST SCALES ACCORDINGLY

811 Know what's below. Call 811 before you dig.

PREPARED BY:
PHOENIX CIVIL ENGINEERING, INC.
535 E. MAIN STREET
SANTA PAULA, CA 93060
(805) 658–6800

REGISTERED CE 60214 EXP. 6–30–20 DATE -

REV.	SYM.	DESCRIPTION	R.C.E.	DATE
		50% SUBMITTAL		11/9/18

SAN SIMEON COMMUNITY SERVICES DISTRICT
WATER SYSTEM IMPROVEMENT PROJECT PHASE 1
PROCESS AND INSTRUMENTATION DIAGRAM AND INSTRUMENTATION LEGEND

REVIEWED BY:
GENERAL MANAGER DATE

JOB NO. -
DRAWING NO.

DESIGNED BY:	DRAWN BY:	CHECKED BY:	DATE	
LFT	LFT	LFT	11/9/18	SHEET 19 OF 27

75% SUBMITTAL

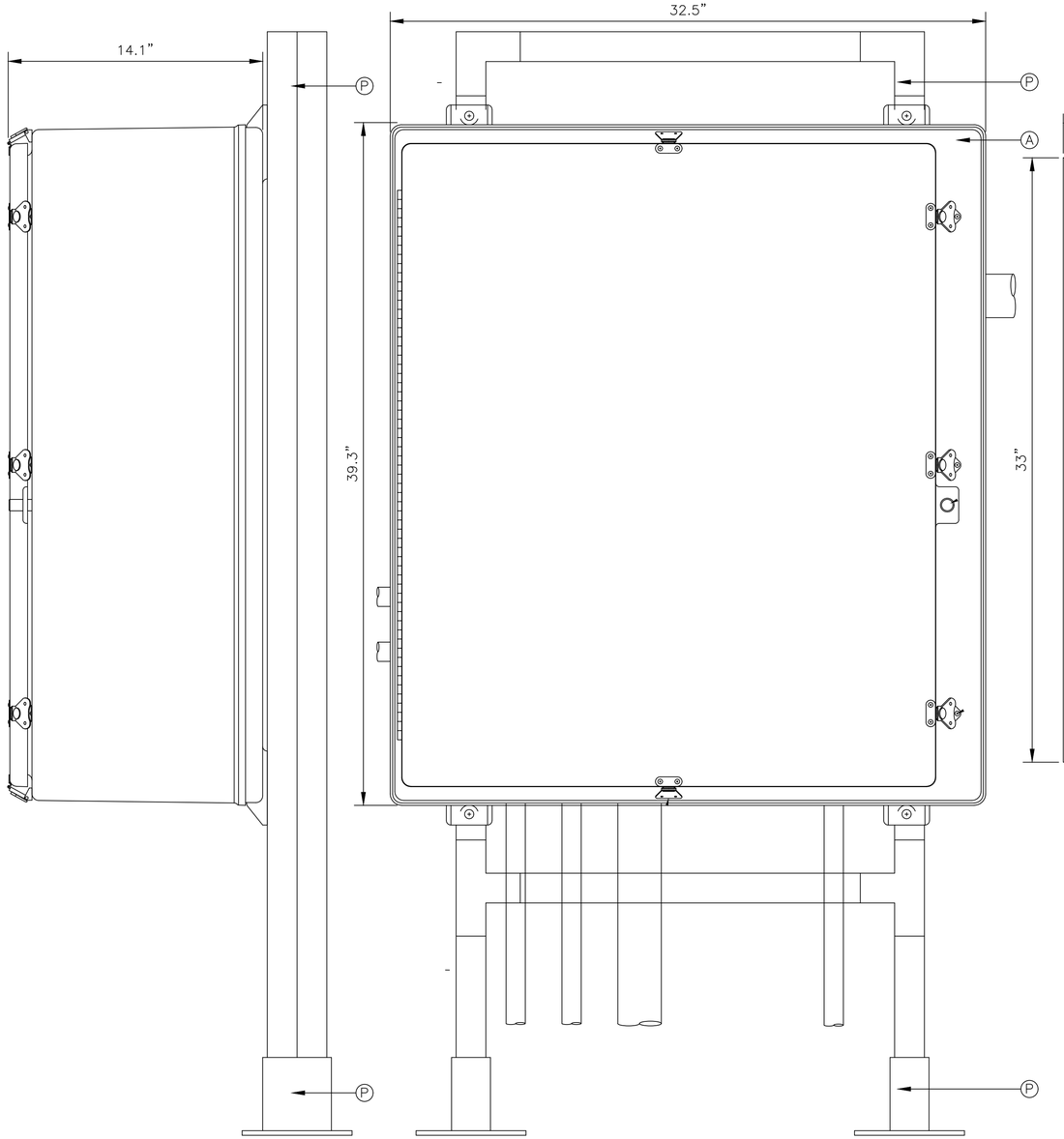

CONTROL ENCLOSURE EXTERIOR LAYOUT
SCALE 1" = 4"

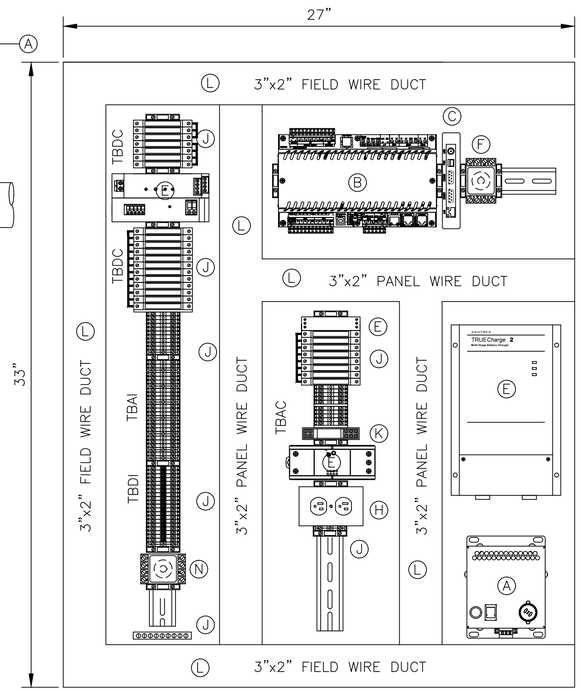

CONTROL ENCLOSURE INTERIOR LAYOUT
SCALE 1" = 4"

TANK CONTROL ENCLOSURE PARTS LIST

ITEM	QUANTITY	DESCRIPTION	MANUFACTURER PART NUMBER
A	1	NEMA 4X ENCLOSURE, 36"X30"X14"	SAGINAW SCE-36H3014QFGLP
	1	ENCLOSURE BACK PLATE 36'X30"	SAGINAW SCE-36P30
	1	ENCLOSURE LAMP HOLDER, 18", LED, 120 V	SAGINAW SCE-LF18NO
	1	ENCLOSURE LAMP, 18", LED	SAGINAW SCE-LEDB18
	1	ENCLOSURE HEATER, 120 V, THERMOSTAT, 150 W	SAGINAW SCE-HF1251A
	1	ENCLOSURE DOOR SWITCH	SAGINAW SCE-LSA
B	1	REMOTE TERMINAL UNIT, 6 AI, 10 DIO, 10-30 VDC	SCHNEIDER ELECTRIC TBUP350-1A20-AA00
C	1	SERIAL/ETHERNET RADIO, 450-512 MHZ, LIC	MDS SD04-MDCESNNSNN
	1	RADIO DIN RAIL MOUNT	MDS 03-4125A04
D	1	YAGI ANTENNA, 450-470 MHZ, 3 ELEMENT	ANTENEX Y4503
	1	SUPLERFLEX CABLE, 1/2" LMR400, TYPE N MALE	TIMES MICROWAVE CXTA60A-50
	1	RADIO SURGE PROTECTOR, TYPE N FEMALE BULKHEA	POLYPHASOR VHF50HN-MAB
	1	RADIO JUMPER CABLE, LMR400, N MALE TO TNC MALE	TIMES MICROWAVE CXTA40G-XX
E	1	AC POWER SURGE PROTECTOR	PHOENIX PT-S-PE/S-120AC/FM
	1	BATTERY CHARGER, 13.6 VDC, 10 A	XANTREX TRUECHARGE2-10
	1	DC TO DC CONVERTER, 12 TO 24, 120 W	PHOENIX CONTACT 2320131
	1	DC POWER SUPPLY 24 VDC, 120 W	IDEC PS5R-VF24
	1	POWER SUPPLY ISOLATOR	PHOENIX CONTACT 2866514
F	1	LOW VOLTAGE DISCONNECT RELAY	MACROMATICS VAKP012D
	1	LOW VOLTAGE DISCONNECT RELAY BASE	MACROMATICS 70169-D
G	1	UPS BATTERY, 12 VDC, 34 AMP HR	C&D MPS 12-150MR
	1	BATTERY BOX	MCMASTER CARR 69995K82
	2	BATTERY QUICK CONNECT TERMINALS	MCMASTER CARR 7043K1 RED
H	1	RECEPTACLE, DIN RAIL MOUNT, GFI	HUBBEL DRUBGFI15H
J	25	FUSE TERMINALS	ALLEN BRADLEY 1492-H6
	3	FUSE TERMINAL END PLATE	ALLEN BRADLEY 1492-N37
	3	FUSE TERMINAL JUMPER BAR	ALLEN BRADLEY 1492-SJS
	50	FEED THROUGH TERMINALS	ALLEN BRADLEY 1492-J3
	4	FEED THROUGH TERMINAL END PLATE	ALLEN BRADLEY 1492-EBJ3
	4	FEED THROUGH TERMINAL JUMPER BAR	ALLEN BRADLEY 1492-CJJ5-10
	10	GROUND TERMINALS	ALLEN BRADLEY 1492-JG3
	20	END ANCHOR TERMINALS	ALLEN BRADLEY 1492-ERL35
	3	TERMINAL RAIL	WEIDMULLER 996497
	30	TERMINAL RAIL SUPPORTS	WEIDMULLER 049492
	2	GROUND BAR	SQUARE D PKG9T
K	1	SLIM RELAYS, DPDT, 120 VAC COIL	ALLEN BRADLEY 700HK32A1
	1	SLIM RELAY BASES, DPDT	ALLEN BRADLEY 700HN122
L	AS REQ'D	WIRE DUCT, 2" X 3", WHITE, NARROW	TAYLOR T3X4HDW
	AS REQ'D	WIRE DUCT, 2" COVER, NARROW	TAYLOR T3CW
M	AS REQ'D	WIRE FERRULES, 18 AWG	FERRULESDIRECT.COM
	AS REQ'D	WIRE BLUE -24 VDC	THWN OR HW
	AS REQ'D	WIRE PURPLE -12 VDC	THWN OR HW
	AS REQ'D	WIRE WHITE/BLUE STRIP 0 VDC	THWN OR HW
	AS REQ'D	WIRE BLACK -120 VAC	THWN OR HW
	AS REQ'D	WIRE WHITE - NEUTRAL	THWN OR HW
	AS REQ'D	WIRE GREEN - GROUND	THWN OR HW
	AS REQ'D	INSTRUMENT CABLE - 1 PAIR	BELDEN 87760
	AS REQ'D	INSTRUMENT CABLE - 2 PAIR	BELDEN 87723
	AS REQ'D	CATE 5E CABLES	L-COM TRD815BL-7
N	1	OVER FLOW SENSOR	GEMS WARRICK 3E2C
	1	OVER FLOW RELAY	GEMS WARRICK DC2BD005
	1	OVER FLOW RELAY BASE	GEMS WARRICK
P	2	DOUBLE CHANNEL, GALVANIZED, 10 FT	MCMASTER CARR 3208T154
	2	DOUBLE CHANNEL BASE, GALVANIZED	MCMASTER CARR 33145T28
	4	CHANNEL ELBOW CONNECTOR, GALVANIZED	MCMASTER CARR 33125T176
	4	CHANNEL TEE CONNECTOR, GALVANIZED	MCMASTER CARR 33125T178
	AR	CHANNEL MOUNTING HARDWARE	

VERIFY SCALES
BAR IS ONE INCH ON ORIGINAL DRAWING
0 1
IF NOT ONE INCH ON THIS SHEET, ADJUST SCALES ACCORDINGLY

811 Know what's below. Call 811 before you dig.

PREPARED BY:
PHOENIX CIVIL ENGINEERING, INC.
535 E. MAIN STREET
SANTA PAULA, CA 93060
(805) 658-6800

6-30-20 -
REGISTERED CE 60214 EXP. DATE

REV.	SYM.	DESCRIPTION	R.C.E.	DATE
		50% SUBMITTAL		11/9/18

SAN SIMEON COMMUNITY SERVICES DISTRICT
WATER SYSTEM IMPROVEMENT PROJECT
PHASE 1
REMOTE TERMINAL UNIT ENCLOSURE LAYOUTS, PARTS LIST

REVIEWED BY:
GENERAL MANAGER DATE
JOB NO. -
DRAWING NO.

DESIGNED BY:	DRAWN BY:	CHECKED BY:	DATE	
LFT	LFT	LFT	11/9/18	SHEET 20 OF 27

75% SUBMITTAL

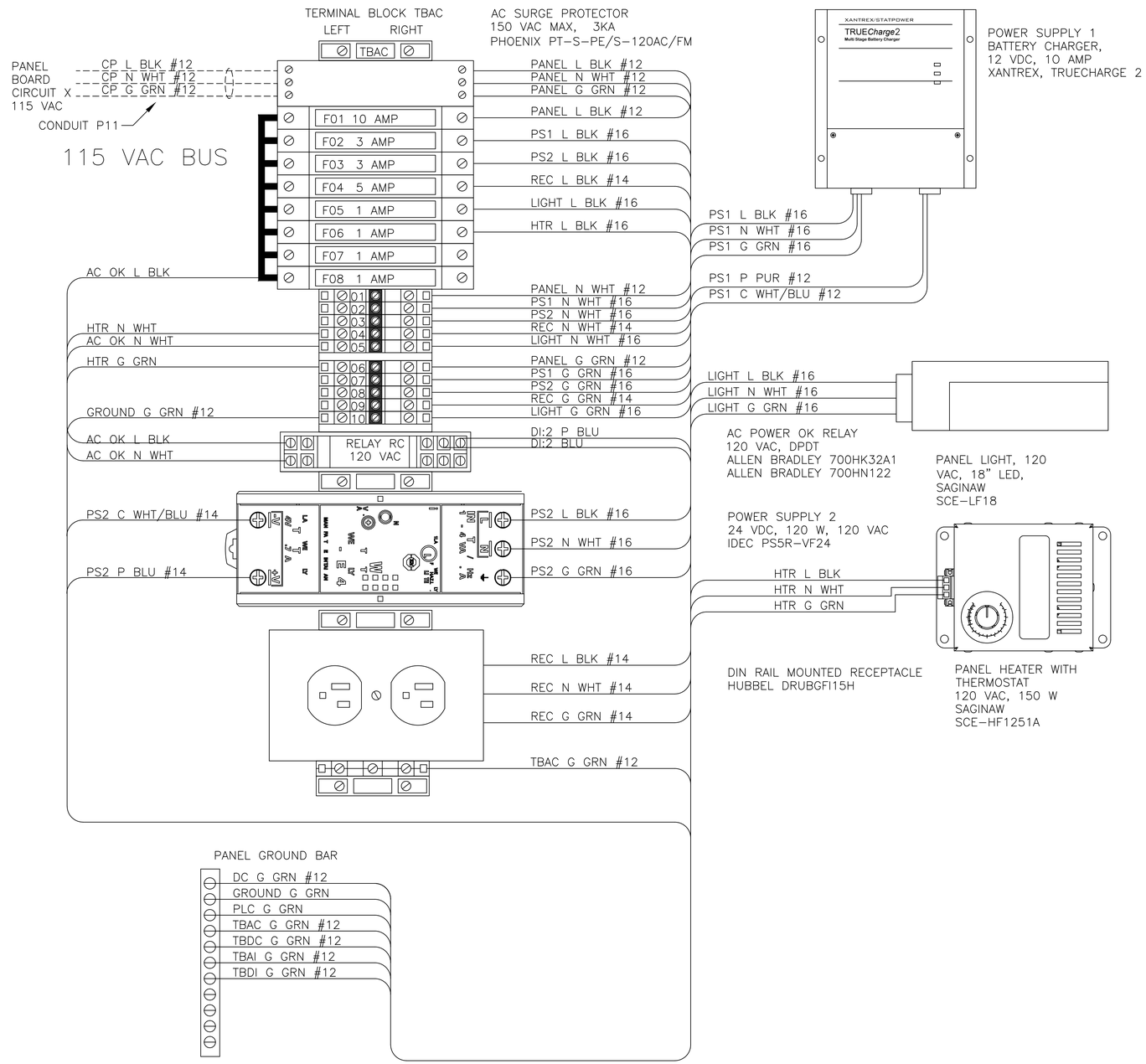

AC POWER DISTRIBUTION WIRING DETAILS

TERMINAL BLOCK TYPES AND PART NUMBERS LEGEND

FRONT VIEW	PART NUMBER	MANUFACTURER	DESCRIPTION
	996497	WEIDMULLER	SLOTTED ASSEMBLY RAIL, 35mm
	1492-J3	ALLEN BRADLEY	FEED-THROUGH TERMINAL BLOCK
	1492-EBJ3	ALLEN BRADLEY	END SECTION FOR FEED THROUGH TERMINAL
	1492-CJJ5-10	ALLEN BRADLEY	JUMPER BAR - 10 BLOCKS
	1492-JD3	ALLEN BRADLEY	DOUBLE LEVEL FEED-THROUGH TERMINAL BLOCK
	1492-EBJD3	ALLEN BRADLEY	END SECTION FOR DOUBLE LEVEL FEED THROUGH
	1492-H6	ALLEN BRADLEY	FUSE HOLDER TERMINAL BLOCK 1 1/4" X 1/4" FUSE
	1492-N37	ALLEN BRADLEY	
	1492-SJS	ALLEN BRADLEY	JUMPER BAR - 10 BLOCKS
	1492-JKD3	ALLEN BRADLEY	DISCONNECT SWITCH TERMINAL BLOCK
	1492-JG3	ALLEN BRADLEY	GROUND TO RAIL TERMINAL BLOCK
	1492-ERL35	ALLEN BRADLEY	END BRACKET
	049492	WEIDMULLER	TO SUPPORT TERMINAL RAIL AND ISOLATE TERMINAL STRIP FROM PANEL BACK PLATE MOUNT UNDER TERMINAL RAIL AT 8" INTERVALS

PANEL CONSTRUCTION NOTES:

1. UNLESS OTHERWISE SPECIFIED, ALL INTERIOR CONTROL PANEL WIRING (SHOWN SOLID) SHALL BE #18 AWG THHN OR HW, COLOR AS INDICATED.
2. ALL FIELD WIRING (SHOWN IN DASHED LINES) SHALL BE #14 AWG w/ TYPE THHN/THWN INSULATION, COLOR AS INDICATED, UNLESS SIZE INDICATED.
3. ALL WIRES SMALLER THAN 14 AWG SHALL USE WIRE FERRULES IN PANEL TERMINAL WHERE APPROPRIATE.
4. ALL WIRES SHALL HAVE HEAT SHRINK WIRE LABELS AS INDICATED.
5. ALL WIRES SHALL HAVE LABELS ON BOTH ENDS OF THE WIRE AS SHOWN ON THE DRAWINGS.
6. TERMINAL SUPPORTS SHALL BE PLACED AT 8" INTERVALS FOR ALL TERMINAL RAILS.
7. ALL EQUIPMENT, TERMINAL RAILS, AND WIRE DUCT SHALL BE MOUNTED WITH 10-32 SCREWS TO THE BACK PLATE WILL BE DRILLED AND TAPPED FOR THE SCREWS.
8. NO SELF TAPPING SCREWS SHALL BE ALLOWED FOR ANY MOUNTING.
9. MOUNT A CHART FOR FUSE SIZE AND FUNCTION ON INSIDE OF PANEL.
10. PANEL TO BE FABRICATED IN A UL-508 CERTIFIED PANEL SHOP.

VERIFY SCALES
BAR IS ONE INCH ON ORIGINAL DRAWING
0 ——— 1
IF NOT ONE INCH ON THIS SHEET, ADJUST SCALES ACCORDINGLY

811 Know what's below. Call 811 before you dig.

PREPARED BY:
PHOENIX CIVIL ENGINEERING, INC.
535 E. MAIN STREET
SANTA PAULA, CA 93060
(805) 658-6800

REGISTERED CE 60214 EXP. 6-30-20 DATE -

REV.	SYM.	DESCRIPTION	R.C.E.	DATE
		50% SUBMITTAL		11/9/18

SAN SIMEON COMMUNITY SERVICES DISTRICT
WATER SYSTEM IMPROVEMENT PROJECT
PHASE 1
REMOTE TERMINAL UNIT ENCLOSURE
AC POWER DISTRIBUTION DETAILS

REVIEWED BY: GENERAL MANAGER DATE

JOB NO. -
DRAWING NO.

DESIGNED BY:	DRAWN BY:	CHECKED BY:	DATE
LFT	LFT	LFT	11/9/18

75% SUBMITTAL

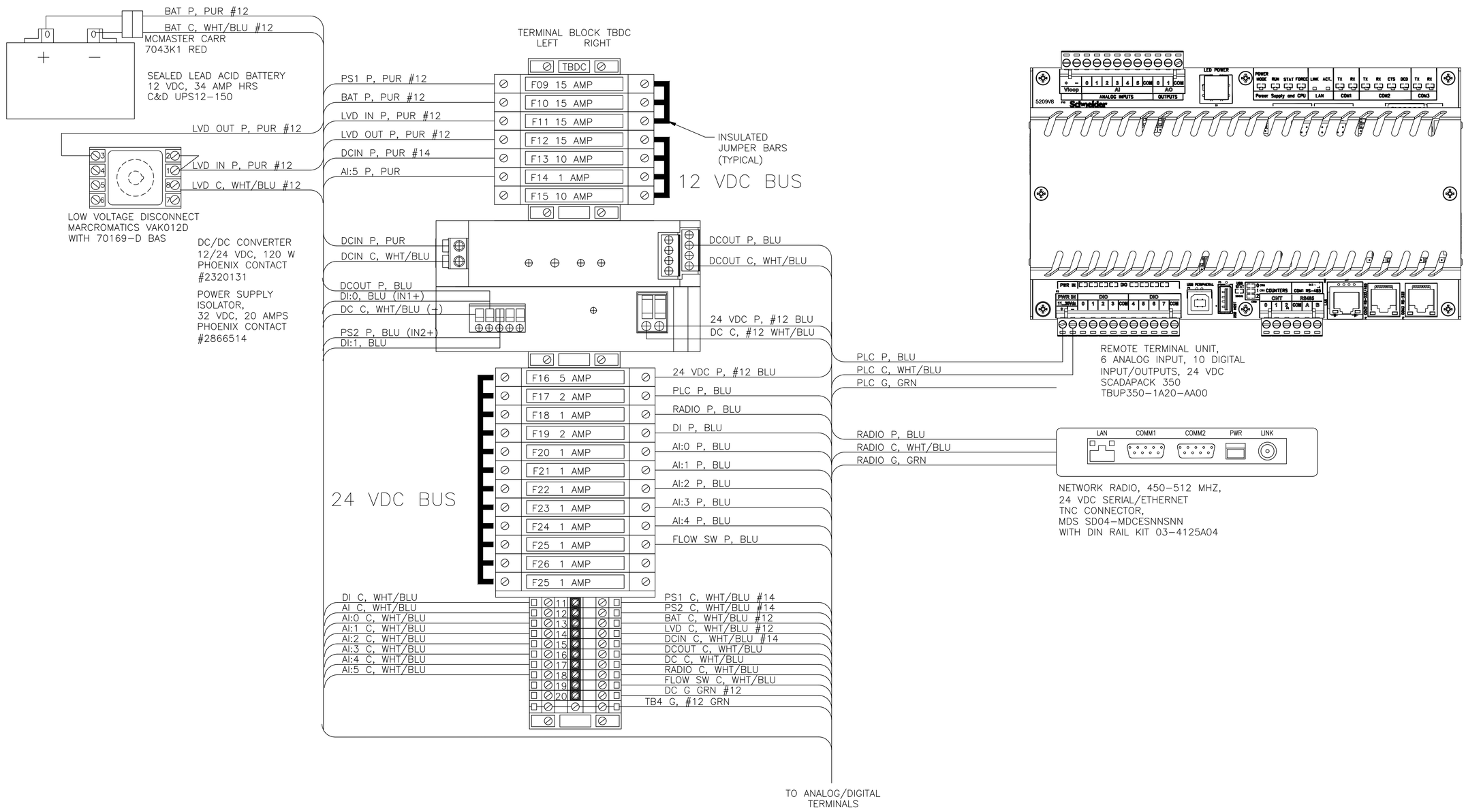

DC POWER DISTRIBUTION WIRING DETAILS

VERIFY SCALES
BAR IS ONE INCH ON ORIGINAL DRAWING
0 1
IF NOT ONE INCH ON THIS SHEET,
ADJUST SCALES ACCORDINGLY

Know what's below.
Call 811 before you dig.

PREPARED BY:
PHOENIX CIVIL ENGINEERING, INC.
535 E. MAIN STREET
SANTA PAULA, CA 93060
(805) 658-6800

6-30-20 -
REGISTERED CE 60214 EXP. DATE

REV.	SYM.	DESCRIPTION	R.C.E.	DATE
		50% SUBMITTAL		11/9/18

SAN SIMEON COMMUNITY SERVICES DISTRICT
WATER SYSTEM IMPROVEMENT PROJECT
PHASE 1
REMOTE TERMINAL UNIT ENCLOSURE
DC POWER DISTRIBUTION DETAILS

REVIEWED BY:
GENERAL MANAGER DATE

JOB NO. -
DRAWING NO.

DESIGNED BY:	DRAWN BY:	CHECKED BY:	DATE	
LFT	LFT	LFT	11/9/18	SHEET 22 OF 27

75% SUBMITTAL

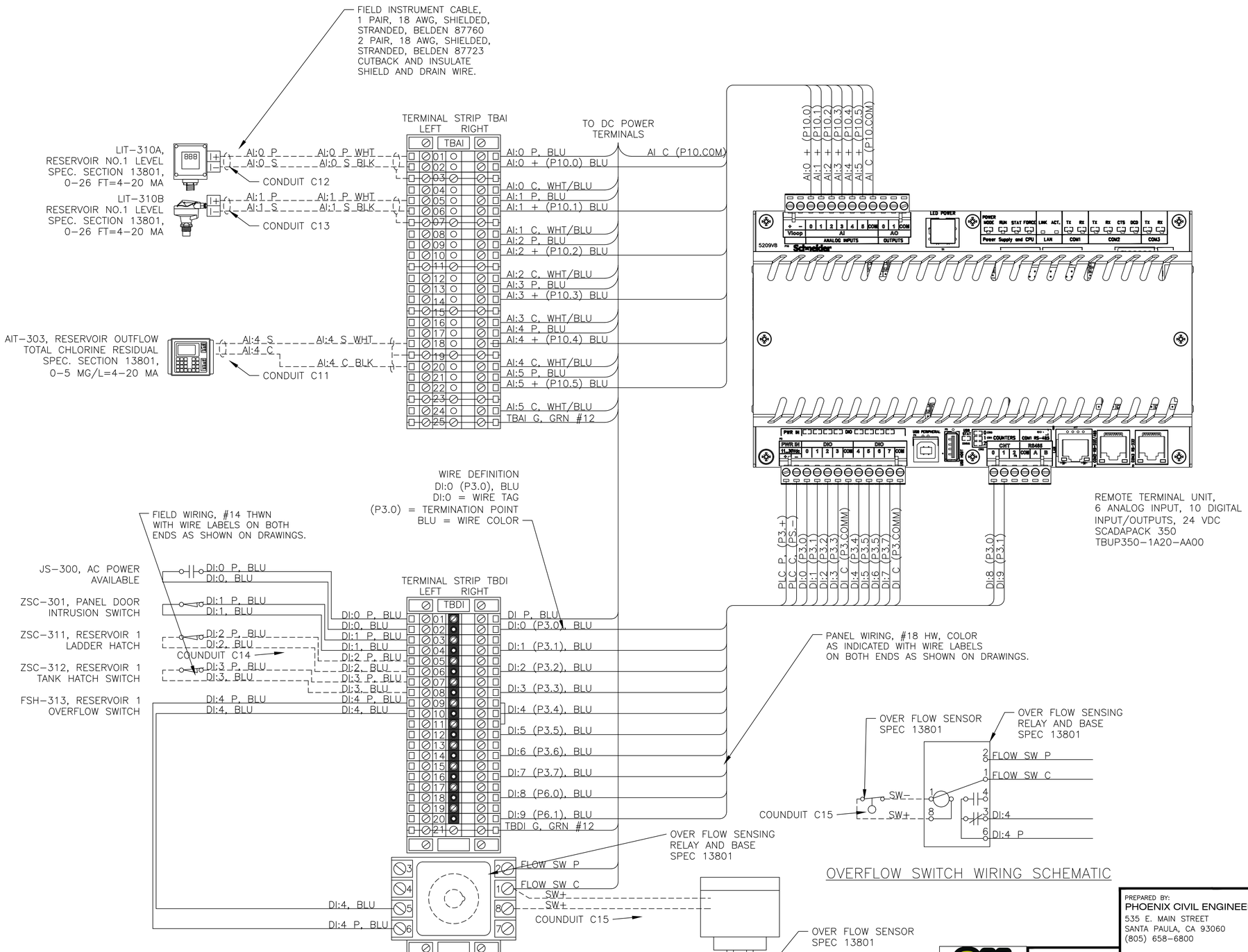

VERIFY SCALES
BAR IS ONE INCH ON ORIGINAL DRAWING
0 — 1
IF NOT ONE INCH ON THIS SHEET, ADJUST SCALES ACCORDINGLY

Know what's below. Call 811 before you dig.

PREPARED BY:
PHOENIX CIVIL ENGINEERING, INC.
535 E. MAIN STREET
SANTA PAULA, CA 93060
(805) 658-6800

REGISTERED CE 60214 — EXP. 6-30-20 — DATE -

REV.	SYM.	DESCRIPTION	R.C.E.	DATE
		50% SUBMITTAL		11/9/18

SAN SIMEON COMMUNITY SERVICES DISTRICT
WATER SYSTEM IMPROVEMENT PROJECT PHASE 1
REMOTE TERMINAL UNIT ENCLOSURE ANALOG/DIGITAL INPUT WIRING DETAILS

REVIEWED BY:
GENERAL MANAGER — DATE

JOB NO. -
DRAWING NO.

DESIGNED BY:	DRAWN BY:	CHECKED BY:	DATE	
LFT	LFT	LFT	11/9/18	SHEET 23 OF 27

75% SUBMITTAL

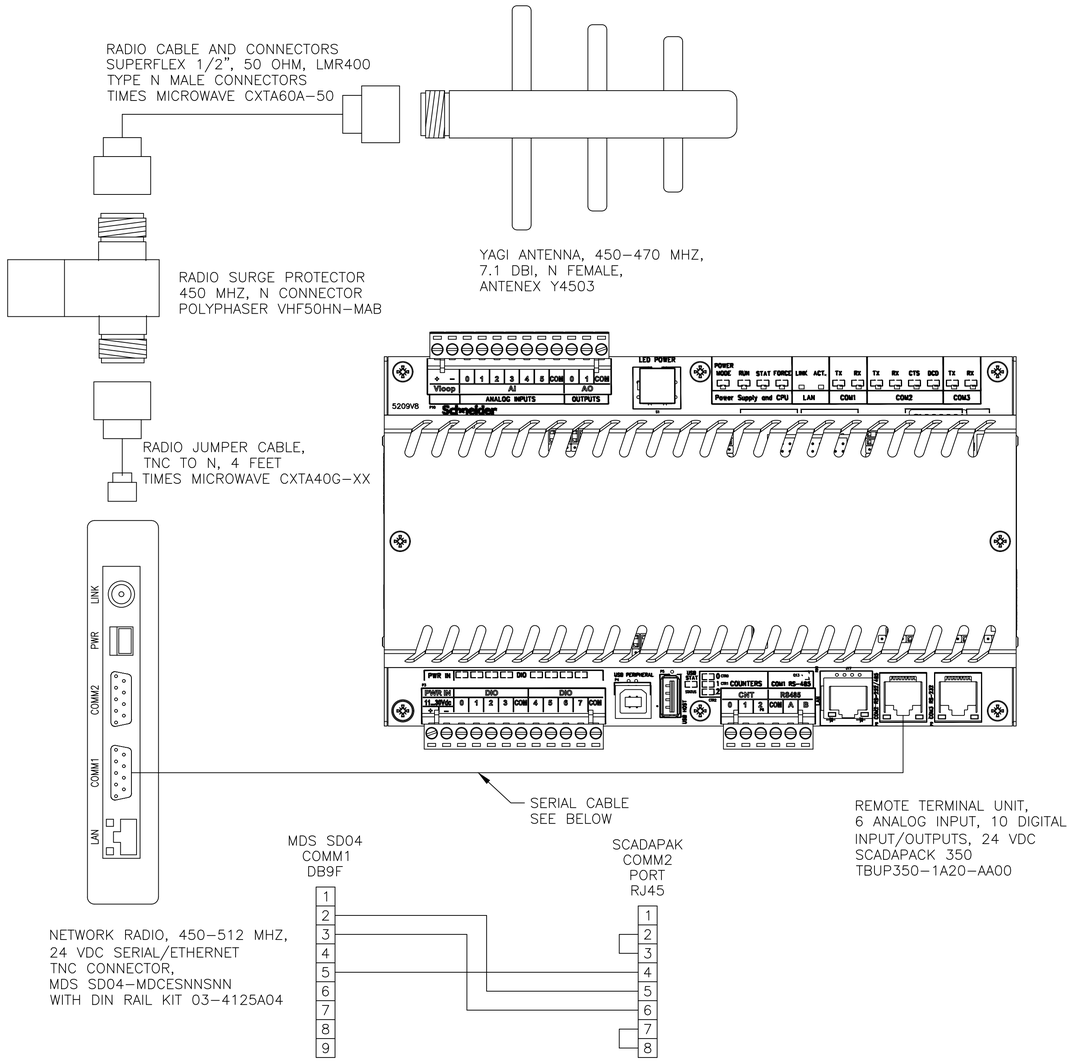

RADIO/SERIAL COMMUNICATIONS SCHEMATIC

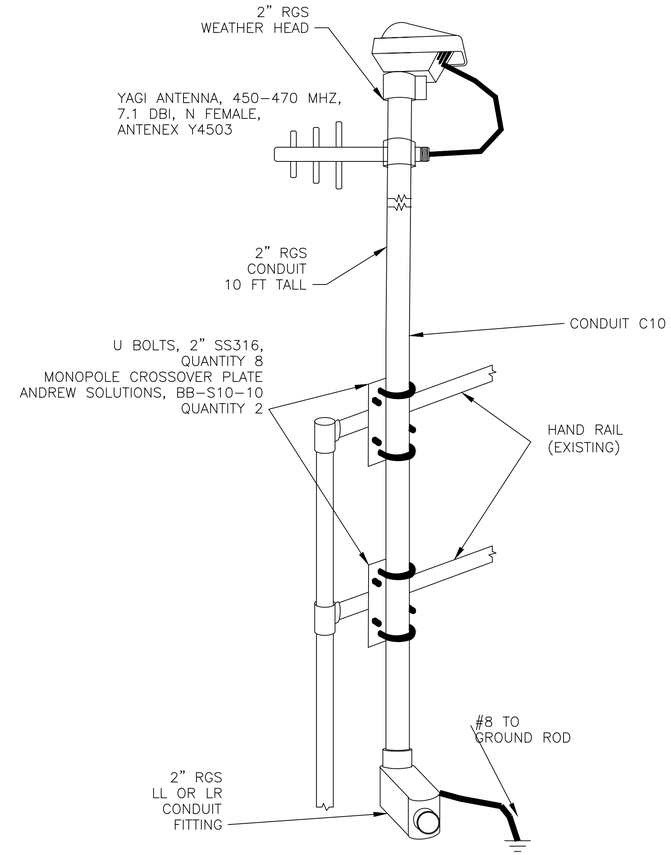

HANDRAIL MOUNT ANTENNA MAST ASSEMBLY

VERIFY SCALES
BAR IS ONE INCH ON ORIGINAL DRAWING
0 1
IF NOT ONE INCH ON THIS SHEET,
ADJUST SCALES ACCORDINGLY

Know what's below. Call 811 before you dig.

PREPARED BY:
PHOENIX CIVIL ENGINEERING, INC.
535 E. MAIN STREET
SANTA PAULA, CA 93060
(805) 658-6800

REGISTERED CE 60214 — EXP. 6-30-20 — DATE -

REV.	SYM.	DESCRIPTION	R.C.E.	DATE
		50% SUBMITTAL		11/9/18

SAN SIMEON COMMUNITY SERVICES DISTRICT
WATER SYSTEM IMPROVEMENT PROJECT
PHASE 1
REMOTE TERMINAL UNIT ENCLOSURE
COMMUNICATION WIRING SCHEMATIC,
ANTENNA FABRICATION DETAILS

REVIEWED BY:
GENERAL MANAGER — DATE

JOB NO. -
DRAWING NO.

DESIGNED BY:	DRAWN BY:	CHECKED BY:	DATE	
LFT	LFT	LFT	11/9/18	SHEET 24 OF 27

75% SUBMITTAL

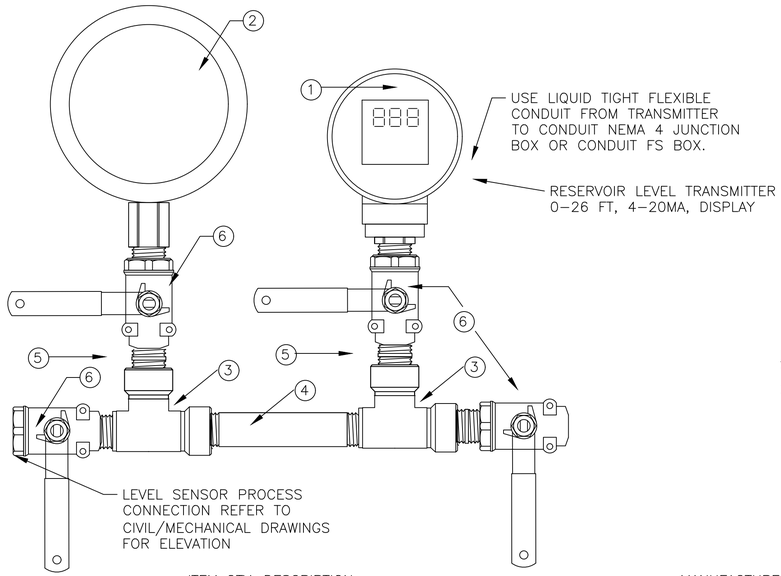

ITEM	QTY	DESCRIPTION	MANUFACTURER MODEL
1	1	PRESSURE TRANSMITTER, 0–26 FT, 4–20 MA, DISPLAY	SPECIFICATION SECTION 13801
2	1	PRESSURE GAUGE, 0–26 FT, 1/2" NPT	SPECIFICATION SECTION 13801
3	3	STREET TEE, 1/2" NPT, STAINLESS STEEL	SWAGELOK SS–8–ST
4	1	NIPPLE, 1/2" NPT, STAINLESS STEEL	SWAGELOK SS–8–HLN–4.00
5	2	CLOSE NIPPLE, 1/2" NPT, STAINLESS STEEL	SWAGELOK SS–8–CN
6	4	BALL VALVE, 1/2" NPT, STAINLESS STEEL	APOLLO 76–103–01A

A — PRESSURE/LEVEL TRANSMITTER ASSEMBLY

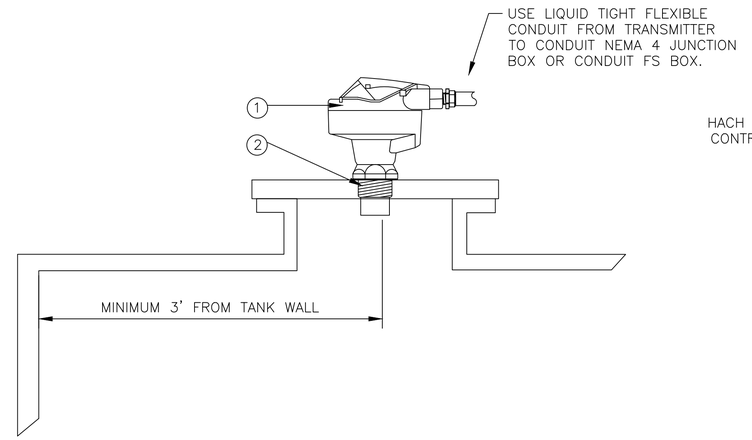

ITEM	QTY	DESCRIPTION	MANUFACTURER MODEL
1	1	ULTRASONIC LEVEL SENSOR, 0–26 FT, 4–20 MA, DISPLAY	SPECIFICATION SECTION 13801
2	1	PROCESS CONNECTION 2" FEMALE NPT	

B — ULTRASONIC LEVEL TRANSMITTER ASSEMBLY

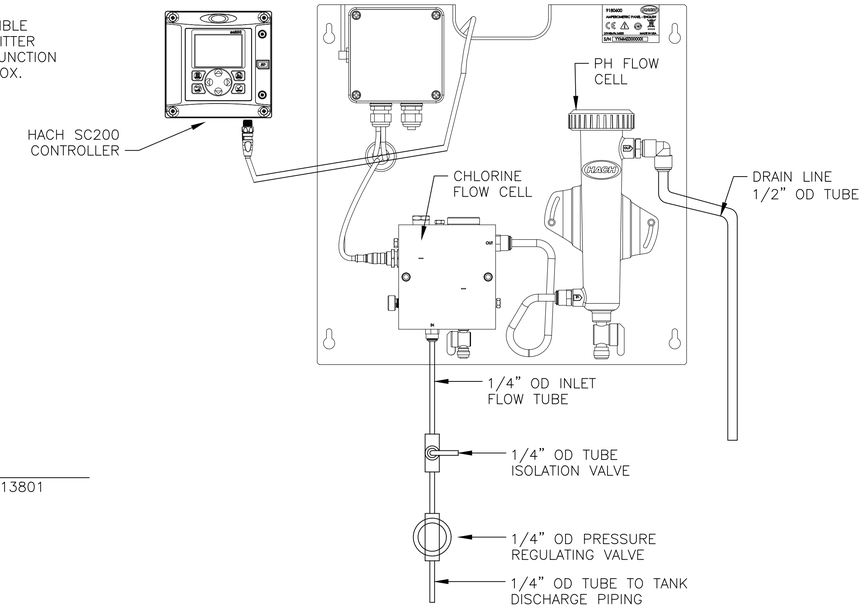

ITEM	QTY	DESCRIPTION	MANUFACTURER MODEL
1	1	CHLORINE RESIDUAL ANALYZER REAGENTLESS	SPECIFICATION SECTION 13801
2	1	CHLORINE RESIDUAL CONTROLLER	SPECIFICATION SECTION 13801
3	1	SUPPLY LINE 1/4" OD TUBING, LENGTH AS REQUIRED	
4	1	ISOLATION VALVE, 1/4" TUBE	
5	1	PRESSURE REGULATING VALVE, 1/4" TUBE	

C — CHLORINE RESIDUAL ANALYZER (TOTAL) ASSEMBLY

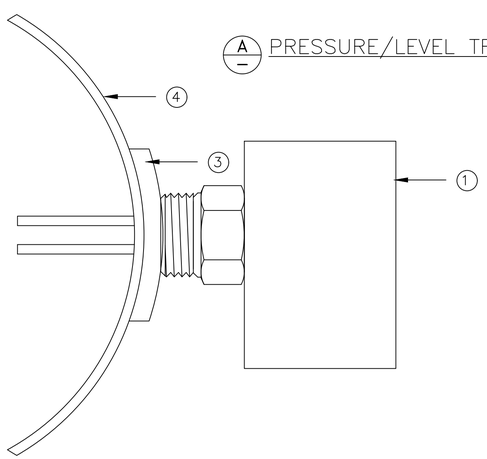

ITEM	QTY	DESCRIPTION	MANUFACTURER MODEL
1	1	TANK OVER FLOW SENSOR, STAINLESS STEEL, 2 PROBE	SPECIFICATION SECTION 13801
2	1	LEVEL CONTROL RELAY, DC SERIES, 24 VDC, SPDT	SPECIFICATION SECTION 13801
3	1	2" NPT EXTRA HEAVY DUTY FITTING	
4	1	TANK OVER FLOW PIPE	

D — RESERVOIR OVER FLOW SENSOR ASSEMBLY

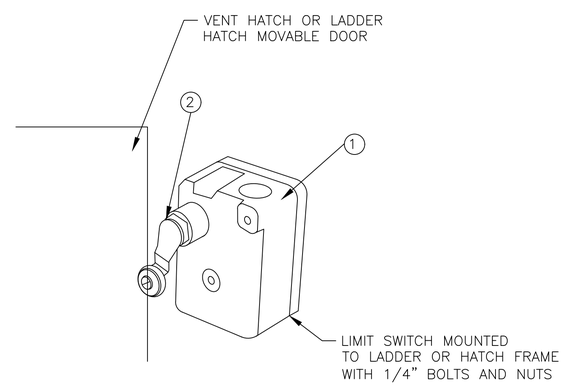

ITEM	QTY	DESCRIPTION	MANUFACTURER MODEL
1	1	LIMIT SWITCH, DPDT, 250 V,10 A, FORM C CONTACTS	SPECIFICATION SECTION 13801
2	1	LEVER ARM WITH ROLLER	SPECIFICATION SECTION 13801

E — SECURITY LIMIT SWITCHES MOUNTING ASSEMBLY

VERIFY SCALES
BAR IS ONE INCH ON ORIGINAL DRAWING
0 — 1
IF NOT ONE INCH ON THIS SHEET, ADJUST SCALES ACCORDINGLY

811 Know what's below. Call 811 before you dig.

PREPARED BY:
PHOENIX CIVIL ENGINEERING, INC.
535 E. MAIN STREET
SANTA PAULA, CA 93060
(805) 658–6800

REGISTERED CE 60214 — EXP. 6–30–20 — DATE -

REV.	SYM.	DESCRIPTION	R.C.E.	DATE
		50% SUBMITTAL		11/9/18

SAN SIMEON COMMUNITY SERVICES DISTRICT
WATER SYSTEM IMPROVEMENT PROJECT PHASE 1
INSTRUMENT INSTALLATION DETAILS

REVIEWED BY:
GENERAL MANAGER — DATE

JOB NO. -
DRAWING NO.

DESIGNED BY:	DRAWN BY:	CHECKED BY:	DATE
LFT	LFT	LFT	11/9/18

SHEET 25 OF 27

75% SUBMITTAL

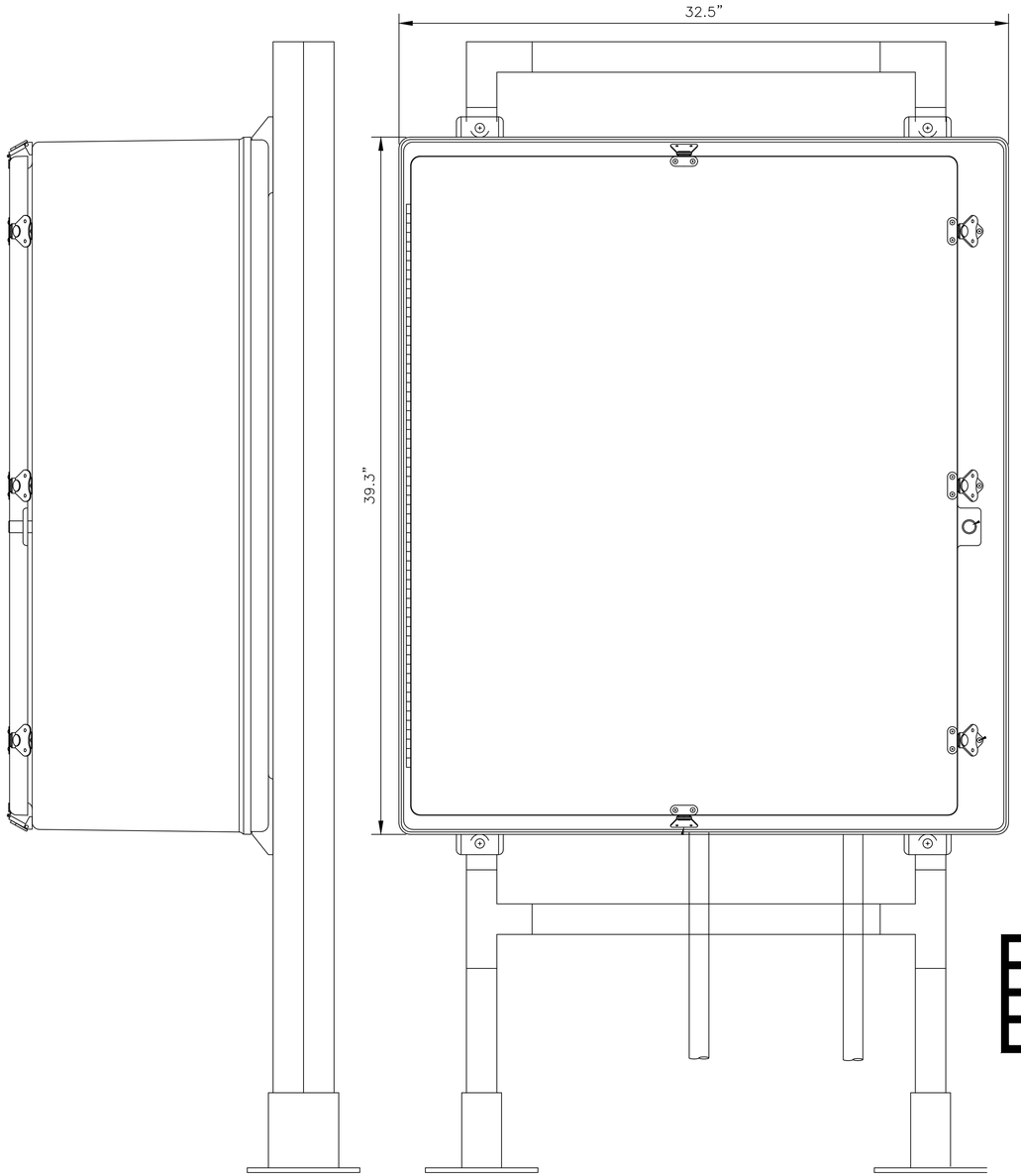

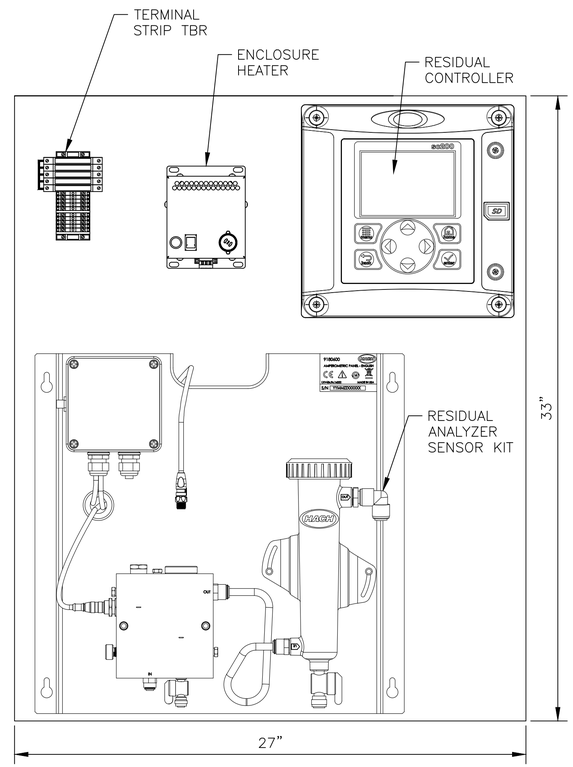

RESIDUAL CONTROL ENCLOSURE PARTS LIST			
ITEM	QUANTITY	DESCRIPTION	MANUFACTURER PART NUMBER
A	1	NEMA 4X ENCLOSURE, 36"X30"X14"	SAGINAW SCE-36H3014QFGLP
	1	ENCLOSURE BACK PLATE 36'X30"	SAGINAW SCE-36P30
	1	ENCLOSURE LAMP HOLDER, 18", LED, 120 V	SAGINAW SCE-LF18NO
	1	ENCLOSURE LAMP, 18", LED	SAGINAW SCE-LEDB18
	1	ENCLOSURE HEATER, 120 V, THERMOSTAT, 150 W	SAGINAW SCE-HF1251A
B	1	CHLORINE RESIDUAL ANALYZER CONTROLLER	SEE SPECIFICATIONS SECTION 13801
	1	CHLORINE RESIDUAL ANALYZER SENSOR KIT	SEE SPECIFICATIONS SECTION 13801
C	1	MISCELLANEOUS PIPING, VALVES, REGULATORS	
D	4	FUSE TERMINALS	ALLEN BRADLEY 1492-H6
	1	FUSE TERMINAL END PLATE	ALLEN BRADLEY 1492-N37
	1	FUSE TERMINAL JUMPER BAR	ALLEN BRADLEY 1492-SJS
	13	FEED THROUGH TERMINALS	ALLEN BRADLEY 1492-J3
	3	FEED THROUGH TERMINAL END PLATE	ALLEN BRADLEY 1492-EBJ3
	2	FEED THROUGH TERMINAL JUMPER BAR	ALLEN BRADLEY 1492-CJJ5-5
	1	GROUND TERMINALS	ALLEN BRADLEY 1492-JG3
	2	END ANCHOR TERMINALS	ALLEN BRADLEY 1492-ERL35
	1	TERMINAL RAIL	WEIDMULLER 996497
E	1	OVER FLOW SENSOR	GEMS WARRICK 3E2C
	1	OVER FLOW RELAY	GEMS WARRICK DC2BD005
	1	OVER FLOW RELAY BASE	GEMS WARRICK
F	2	DOUBLE CHANNEL, GALVANIZED, 10 FT	MCMASTER CARR 3208T154
	2	DOUBLE CHANNEL BASE, GALVANIZED	MCMASTER CARR 33145T28
	4	CHANNEL ELBOW CONNECTOR, GALVANIZED	MCMASTER CARR 33125T176
	4	CHANNEL TEE CONNECTOR, GALVANIZED	MCMASTER CARR 33125T178
	AR	CHANNEL MOUNTING HARDWARE	

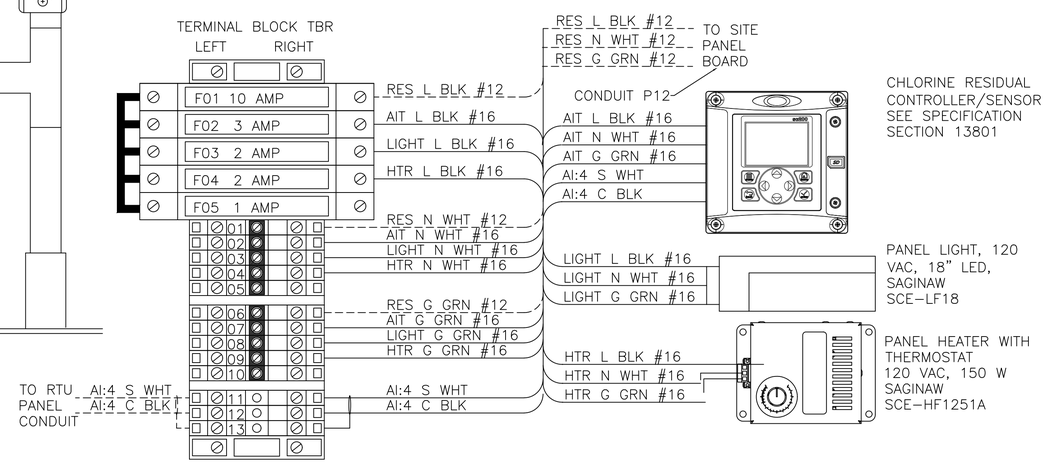

VERIFY SCALES
BAR IS ONE INCH ON ORIGINAL DRAWING
0 —— 1
IF NOT ONE INCH ON THIS SHEET, ADJUST SCALES ACCORDINGLY

Know what's below. Call 811 before you dig.

PREPARED BY:
PHOENIX CIVIL ENGINEERING, INC.
535 E. MAIN STREET
SANTA PAULA, CA 93060
(805) 658-6800

REGISTERED CE 60214 — EXP. 6-30-20 — DATE -

REV.	SYM.	DESCRIPTION	R.C.E.	DATE
		50% SUBMITTAL		11/9/18

SAN SIMEON COMMUNITY SERVICES DISTRICT
WATER SYSTEM IMPROVEMENT PROJECT
PHASE 1
CHLORINE RESIDUAL ANALYZER ENCLOSURE
LAYOUT AND PARTS LIST

REVIEWED BY: GENERAL MANAGER — DATE
JOB NO. -
DRAWING NO.

DESIGNED BY:	DRAWN BY:	CHECKED BY:	DATE	
LFT	CK	LFT	11/9/18	SHEET 26 OF 27

75% SUBMITTAL

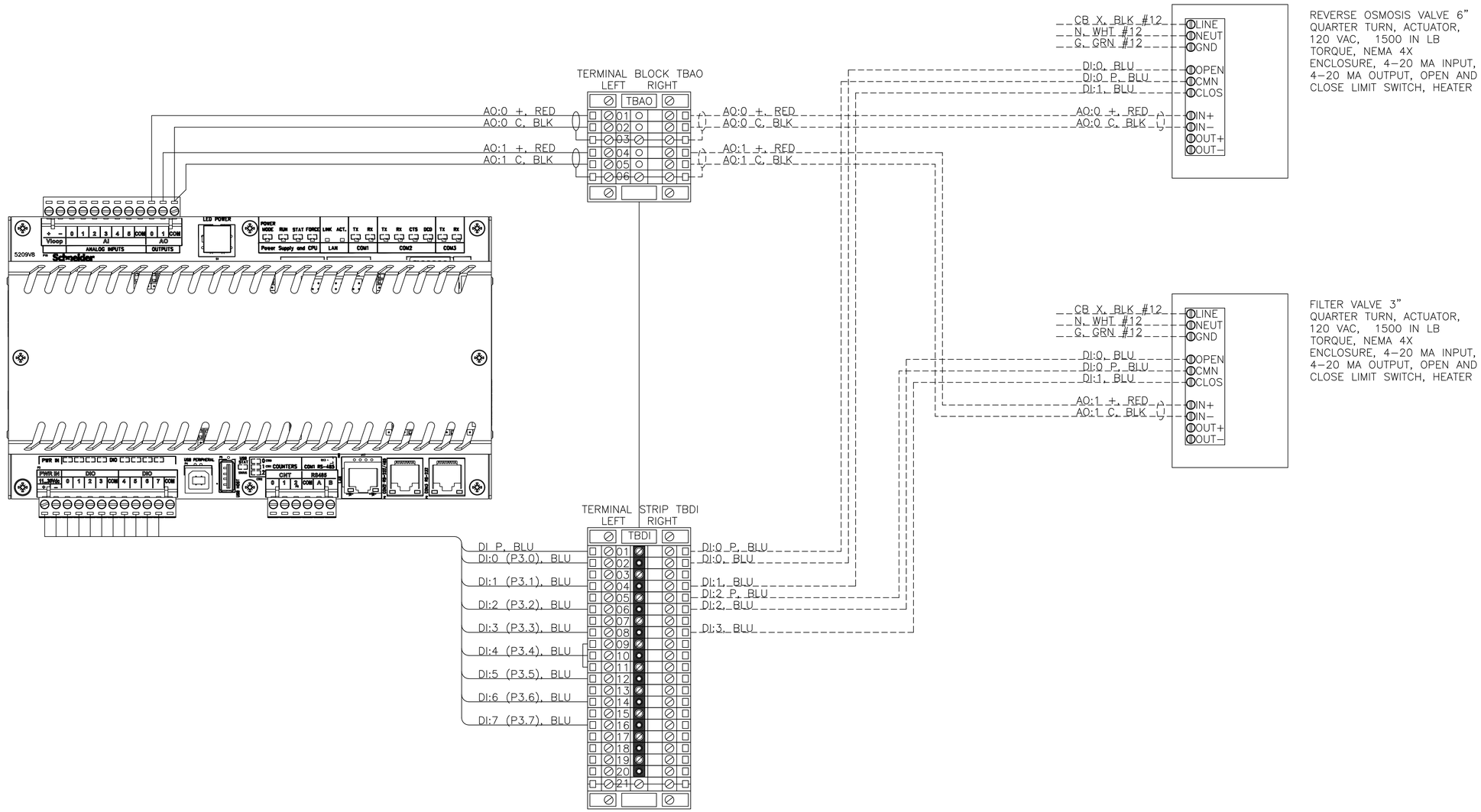

VERIFY SCALES
BAR IS ONE INCH ON ORIGINAL DRAWING
0 1
IF NOT ONE INCH ON THIS SHEET, ADJUST SCALES ACCORDINGLY

Know what's below. Call 811 before you dig.

PREPARED BY:
PHOENIX CIVIL ENGINEERING, INC.
535 E. MAIN STREET
SANTA PAULA, CA 93060
(805) 658-6800

6-30-20 -
REGISTERED CE 60214 EXP. DATE

REV.	SYM.	DESCRIPTION	R.C.E.	DATE
		50% SUBMITTAL		11/9/18

SAN SIMEON COMMUNITY SERVICES DISTRICT
WATER SYSTEM IMPROVEMENT PROJECT
PHASE 1
REVERSE OSMOSIS PLANT RO AND
FILTER VALVE WIRING MODIFICATIONS

REVIEWED BY:
GENERAL MANAGER DATE

JOB NO. -
DRAWING NO.

DESIGNED BY:	DRAWN BY:	CHECKED BY:	DATE	
JMT	CK	JMT	11/9/18	SHEET 27 OF 27

75% SUBMITTAL

Attachment D
Biological Resources Assessment and Rare Plant Surveys

SAN SIMEON COMMUNITY SERVICES DISTRICT WATER SYSTEM IMPROVEMENT PROJECT

(APN 013-011-024)

SAN LUIS OBISPO COUNTY, CALIFORNIA

BIOLOGICAL RESOURCES ASSESSMENT

Prepared for:

Oliveira Environmental Consulting, LLC
and
San Simeon Community Services District
111 Pico Avenue
San Simeon, California 93452

Prepared by:

Kevin Merk Associates, LLC
P.O. Box 318
San Luis Obispo, California 93406

December 24, 2018

TABLE OF CONTENTS

Page

EXECUTIVE SUMMARY ii

1.0 INTRODUCTION 1
1.1 Project Description 1
1.2. Regulatory Overview 4

2.0 METHODS 6

3.0 RESULTS 8
3.1 Existing Conditions 8
3.2. Habitat Types 8
3.3 Hydrologic Features 10
3.4 Soils 10
3.5 Special-status Biological Resources 10

4.0 IMPACT ANALYSIS AND RECOMMENDED MITIGATION 19
4.1 Direct and Indirect Effects 20
4.2 Cumulative Effects 28

5.0 CONCLUSION 28

6.0 REFERENCES 29

LIST OF TABLES

Table 1 – Native Grassland Erosion Control Seed Mix 2

LIST OF FIGURES

Figure 1 – Site Location Map 2
Figure 2 – Aerial Overview Map 3
Figure 3 – Habitat Map 9
Figure 4 – Soils Map 11
Figure 5A – CNDDB Map for Plant Species 12
Figure 5B – CNDDB Map for Animal Species 13

APPENDICES

Appendix A – List of Plants and Animals Observed Onsite During the Site Visit
Appendix B – Photo Plate
Appendix C – Special-status Biological Resources Known From the Project Vicinity
Appendix D – Project Plans

EXECUTIVE SUMMARY

Kevin Merk Associates, LLC conducted a biological resources assessment for the proposed San Simeon Community Services District Water System Improvement Project, San Simeon, San Luis Obispo County, California. The 3.6-acre site is located at the northeastern terminus of Pico Avenue in the community of San Simeon. The proposed project includes the construction of two 400,000-gallon water storage tanks, intended to provide necessary infrastructure improvements for the community of San Simeon. The tank pad site would be graded, surfaced and surrounded by a chain link fence, comprising approximately 29,410 square feet. There would be a new water pipeline installed from the existing reservoir on the site to the new tanks. The existing unpaved access road would be improved by adding a surface of decomposed granite or crushed base to a width of 12 feet. The project also includes new water pipelines along existing utility easements under roadways in the community of San Simeon. The purpose of the investigation was to evaluate the existing conditions of the proposed project area, assess the potential for special-status species to occur in the study area, and provide an assessment of biological resources that may be affected by the construction of the proposed project to support the County of San Luis Obispo's environmental review process.

The site contained an unpaved road that provides access to the existing San Simeon CSD reservoir structure, which is on a paved pad and fenced with chain link. The perimeter of the site is fenced with pipe fence/no-climb mesh, and an interior pipe fence divides two horse paddocks. Developed or ruderal areas included the access road, the existing reservoir, and areas of bare dirt or reduced vegetation due to horse trampling and grazing. Grassland habitat onsite consisted mainly of non-native species, but there were also patches of native bunchgrasses with elements of the coastal terrace prairie plant community where grazing impacts were reduced. Coastal scrub was present along the access road. No sensitive natural communities, Environmentally Sensitive Habitat Areas, wetlands, riparian areas or streams occur within project impact areas or are located offsite and may be indirectly affected. Designated critical habitat for the California red-legged frog (*Rana draytonii*) is present in the community of San Simeon where work will occur within existing paved roadways, and this area does not contain any of the elements to support this species. There is a slight chance that several rare plant species may occur onsite. Mitigation proposed herein includes seasonally timed rare plant surveys and if they are found, avoidance and compensatory mitigation measures that will ensure no net loss of rare plants.

Pico Creek is located offsite but nearby, and as it curves around the area it is located 188 to 230 meters away from the project site. It has an associated riparian zone (that does not meet the project area), freshwater emergent wetland habitat, ponds, and estuarine wetland and lagoon areas that are known to support several special-status wildlife species. Because of the proximity of the creek to the site, and the undeveloped nature of the surrounding coastal terrace habitat, a large number of special-status animal species may use the site periodically for various aspects of their life history. These species include the federally threatened California red-legged frog and other amphibian and reptile species of special concern. Nesting sites, nursery sites, or other habitat elements that would support breeding populations are largely absent from the site, with the exception of ground-nesting birds. This is in part due to the lack of aquatic habitat or trees on the site; therefore, wildlife species may pass through the site or forage minimally and are not likely to be affected by construction activities. Loss of approximately 29,410 square feet of grassland and ruderal habitat and less that 1 acre of coastal scrub habitat would have negligible effects on each of the species considered. Species-specific mitigation measures have been prescribed to reduce impacts on individuals of these species to a level below significance. Standard construction mitigation measures and Best Management Practices are also prescribed to reduce any potential project effects to wildlife in general and adjacent offsite habitats. With the incorporation of these mitigation measures, no impacts of the project would potentially be significant.

1.0 INTRODUCTION

Kevin Merk Associates, LLC (KMA) working with Oliveira Environmental Consulting, LLC (OEC) conducted a biological resources assessment for the proposed San Simeon Community Services District (CSD) Water System Improvement Project, San Simeon, San Luis Obispo County, California (Figure 1). The proposed project is located on a parcel identified by Assessor's Parcel Number 013-011-024. The purpose of the investigation was to evaluate the existing conditions of the proposed project area, assess the potential for special-status species to occur in the study area, and provide an assessment of biological resources that may be affected by the construction of the proposed project to support the environmental review process by determining any potential impacts on biological resources as defined under the California Environmental Quality Act (CEQA).

The 3.6-acre site is located at the northeastern terminus of Pico Avenue in the community of San Simeon (Figure 2). An unpaved road on the site provides access to the existing San Simeon CSD reservoir structure. The remainder of the site is grazed and contains pipe fencing creating two horse paddocks. The site is bounded to the north and west by a band of coastal scrub and Monterey pine forest, and beyond is an equestrian ranch located off Pico Creek Road to the north. Pico Creek bends around the area just beyond the ranch, originating from the western slope of the Santa Lucia Range and flowing in a southwesterly direction, forming a lagoon at the crossing of Highway 1 before discharging into the Pacific Ocean. It is bordered by riparian woodland and has estuarine wetland habitat at its mouth. Two ponds that are surrounded by freshwater marsh vegetation lie within the creek's riparian zone, just east of the Highway 1 bridge (Figure 2). On the south and east, the site is surrounded by grassland that is used for cattle grazing. The community of San Simeon just to the south of the project site access road is quite small (population 462), and many of the structures support the tourist industry, including motels and restaurants. The surrounding area is mainly undeveloped coastal plain, with open space owned by California State Parks and Hearst Ranch.

1.1. Project Description

The proposed project includes the construction of two 400,000-gallon water storage tanks, intended to provide necessary infrastructure improvements for the community of San Simeon. The new water tanks would provide increased water storage capacity that would satisfy the fire flow concerns discussed in the 2018 San Simeon CSD Water System Master Plan. Each new water tank would be approximately 24 feet tall and have a diameter of 57 feet, and be situated on a new concrete pad approximately 175 feet long by 87 feet wide. The new water tanks would be located approximately 530 feet northeast of and upslope from the existing water reservoir structure. A new pipeline would be installed to connect the existing reservoir with the new tanks. The tank pad would be graded into the existing slope resulting in 2:1 finished slopes along the tank pad. As a result, the tank pad floor would be located in a small basin that would be 11.8 feet tall at the southeast end, 2.75 feet tall at the northwest end, 8.61 feet on the west side, and 7.83 feet tall on the east side. The existing unpaved road would be improved by adding a surface of decomposed granite or crushed base to a width of 12 feet. The tank site would be surrounded by a fence composed of 6-foot high chain link and topped with three strands of barbed wire.

The proposed project also includes infrastructure improvements for community water transmission, which includes the following details:

- Addition of a second water pipeline from the water tank site to Pico Avenue terminating at Avonne Avenue;
- An expansion and extension of the water pipeline would extend southeast from the San Simeon CSD office location (111 Pico Avenue) terminating at the Jasper Avenue cul-de-sac;

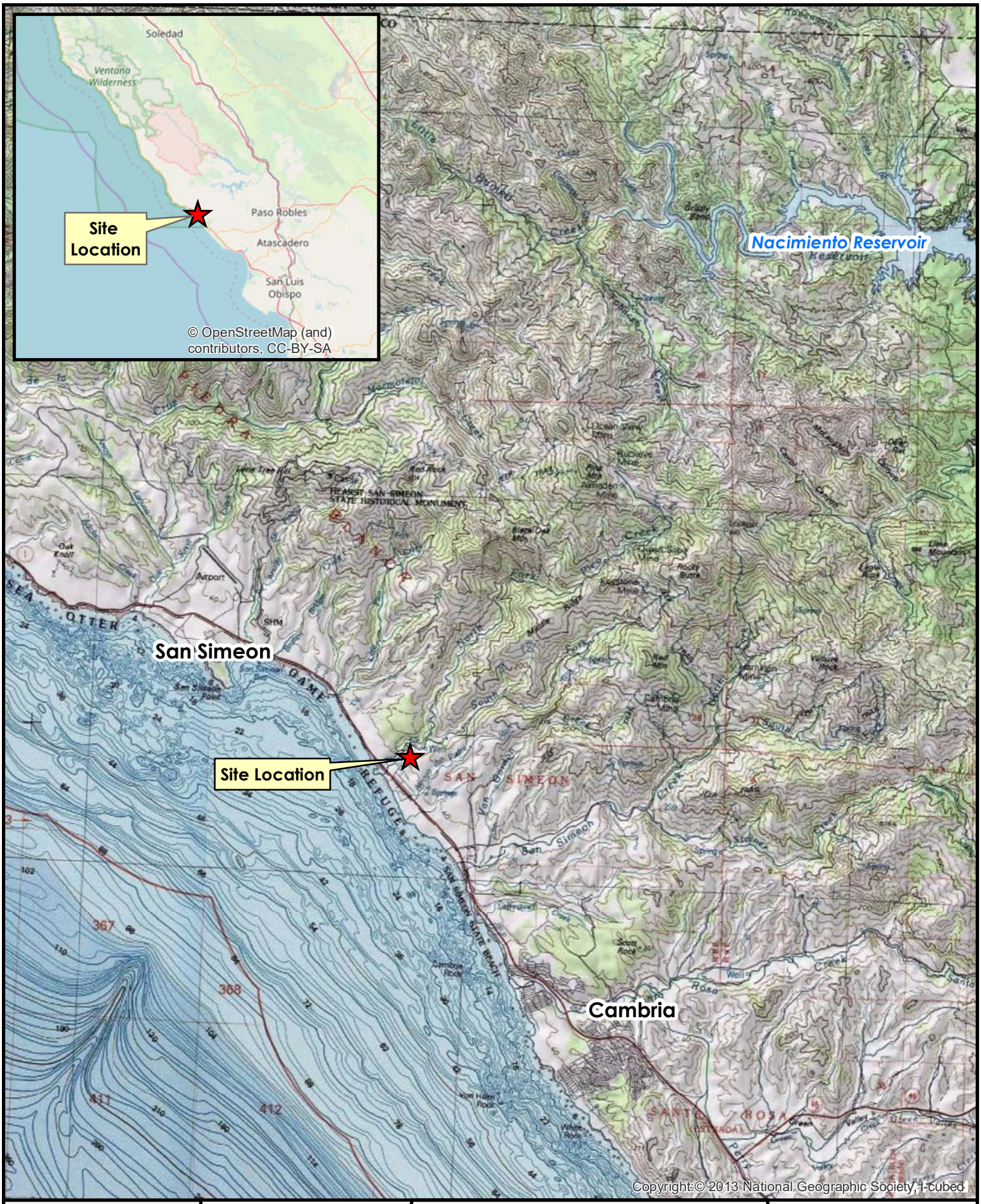

KEVIN MERK ASSOCIATES

N W E S

1 in = 2 miles

SSCSD Water System Improvement Project

San Simeon CSD

Figure 1

Site Location

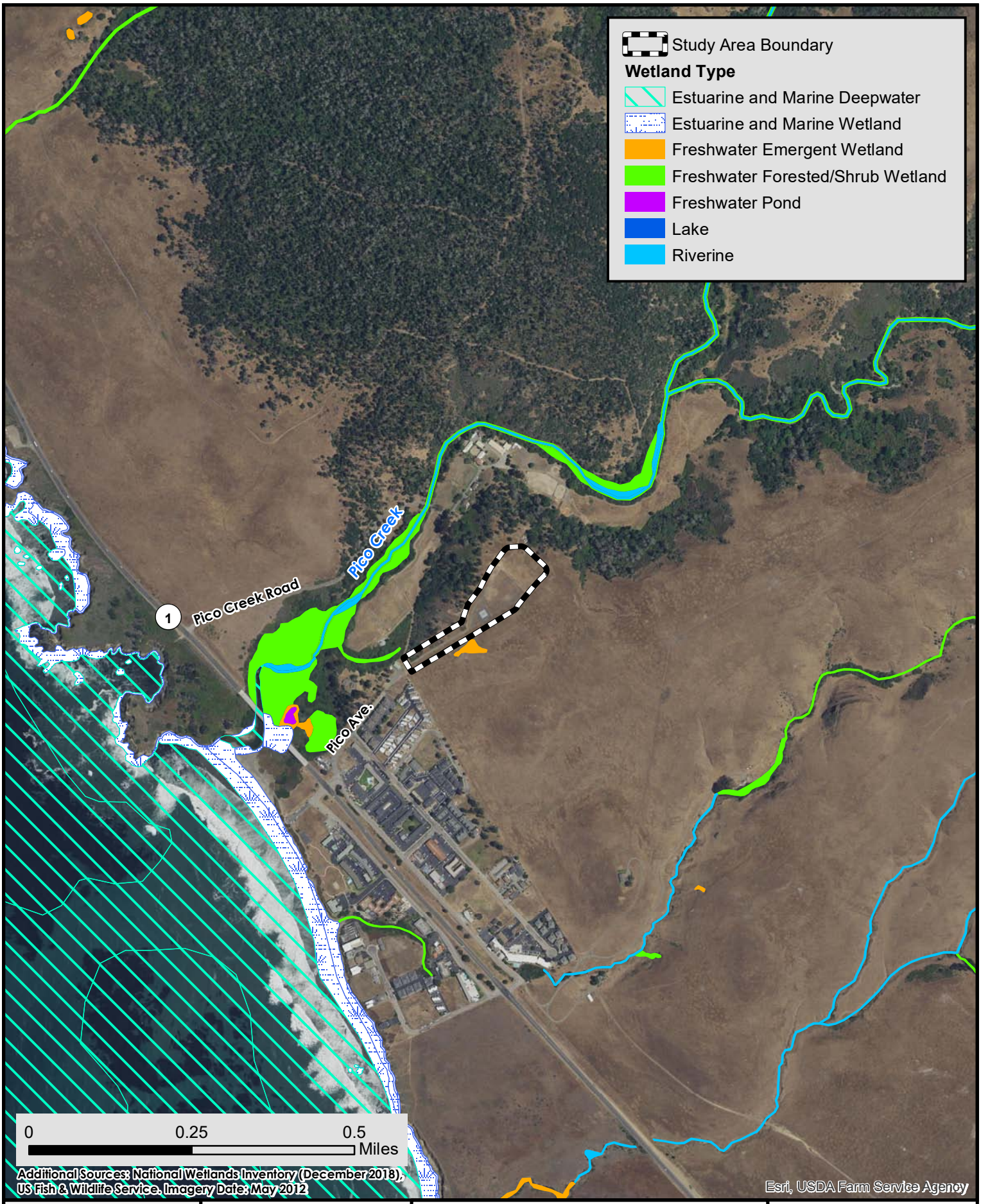

KEVIN MERK ASSOCIATES

N W E S

1 in = 1,000 feet

SSCSD Water System Improvement Project

San Simeon CSD

Figure 2

Aerial Overview

- An additional water pipeline would be installed near the Avonne Avenue cul-de-sac and extend south to the existing Motel 6 parking lot, terminating at Castillo Drive; and
- With the exception of the pipeline connecting the new tanks to the existing water reservoir, all new pipelines would be installed within existing utility easements and otherwise disturbed areas.

1.2. Regulatory Overview

For the purpose of this report, special-status species are those plants and animals listed, or Candidates for listing, as Threatened or Endangered by the U.S. Fish and Wildlife Service (USFWS) under the federal Endangered Species Act (FESA); those listed as Threatened or Endangered under the California Endangered Species Act (CESA); and, animals designated as "Species of Special Concern," "Fully Protected," or "Watch List" by the California Department of Fish and Wildlife (CDFW; CDFW 2018a).

FESA provisions protect federally listed species and their habitats from unlawful take, which is defined as "to harass, harm, pursue, hunt, shoot, wound, kill, trap, capture, or collect, or to attempt to engage in any of the specifically enumerated conduct." Under these regulations, "harm" may include significant habitat modification or degradation that kills or injures wildlife. Candidate species are not afforded legal protection under FESA; however, Candidate species typically receive special attention during the CEQA environmental review process. CESA provides for the protection and preservation of native species of plants and animals that are experiencing a significant decline which if not halted would lead to a threatened or endangered designation. Habitat degradation or modification is not expressly included in the definition of take under CESA.

CDFW maintains a list of Species of Special Concern for those species in which declining population levels, limited ranges, and/or continuing threats have made them vulnerable to extinction. The goal of designating species as special concern is to halt or reverse their decline early enough to secure their long-term viability. Species of Special Concern may receive special attention during environmental review, but do not have statutory protection. FESA and CESA emphasize early consultation to avoid impacts on Threatened and Endangered species. As part of the consultation process, project proponents are directed to develop appropriate mitigation plans to offset project effects on listed species and their habitats.

Critical habitat is designated for species listed under FESA, and are areas that contain the physical or biological features which are essential to the conservation of those species and may need special management or protection. Critical habitat designations affect only federal agency actions or federally funded or permitted activities. Activities by private landowners are not affected if there is no federal nexus.

Rare plants are those defined as occurring on California Rare Plant Rank (CRPR) 1, 2, 3 and 4 developed by the CDFW working in concert with the California Native Plant Society (CDFW 2018b). Rank 4 species are a watch list, and typically do not meet CEQA's rarity definition (Section 15380), but are included here because they may be of local concern. The CRPR definitions are as follows:

- *Rank 1A = Presumed extirpated in California and either rare or extinct elsewhere;*
- *Rank 1B.1 = Rare or endangered in California and elsewhere; seriously threatened in California (over 80% of occurrences threatened/high degree and immediacy of threat);*

- *Rank 1B.2 = Rare or endangered in California and elsewhere; moderately threatened in California (20-80% occurrences threatened);*
- *Rank 1B.3 = Rare or endangered in California and elsewhere, not very threatened in California (<20% of occurrences threatened or no current threats known);*
- *Rank 2A = Presumed extirpated in California, but more common elsewhere;*
- *Rank 2B = Rare or endangered in California, but more common elsewhere;*
- *Rank 3 = Plants needing more information (most are species that are taxonomically unresolved; some species on this list meet the definitions of rarity under CNPS and CESA); and*
- *Rank 4.2 = Plants of limited distribution (watch list), fairly threatened in California (20-80% occurrences threatened).*
- *Rank 4.3= Plants of limited distribution (watch list), not very threatened in California.*

Raptors (e.g., eagles, hawks, and owls) and their nests are protected under both federal and state regulations. Birds of prey are protected in California under the State Fish and Game Code Section 3503.5. Disturbance that causes nest abandonment or loss of reproductive effort is considered take by CDFW. Eagles are protected under the Bald and Golden Eagle Protection Act. The federal Migratory Bird Treaty Act (MBTA) applies to many bird species, including common species, and prohibits killing, possessing, or trading in migratory birds, including whole birds, parts of birds, bird nests, and eggs. The act restricts construction disturbance during the nesting season that could result in the incidental loss of fertile eggs or nestlings or otherwise lead to nest abandonment.

Sensitive natural communities are those native plant communities listed in the California Natural Diversity Database (CNDDB; CDFW 2018c) as rare or of limited distribution. They are evaluated using NatureServe's Heritage Methodology to assign ranks based on rarity and threat, and those with ranks of S1 to S3 are to be addressed in the environmental review process under CEQA (CDFW 2018d).

Environmentally Sensitive Habitat Areas (ESHA) are designated pursuant to the California Coastal Act. A variety of plant communities within the Coastal Zone meet the definition of ESHA (Coastal Act Section 30107.5), including riparian areas, wetlands, maritime chaparral and special-status species habitat. The California Coastal Commission (CCC), with technical assistance from the CDFW, is responsible for protecting ESHA within the Coastal Zone, and have required local agencies such as the County of San Luis Obispo to develop policies aimed at protecting and preserving these areas.

CEQA defines a *significant effect on the environment* as "a substantial, or potentially substantial, adverse change in the environment." Projects that may have significant effects are required to be analyzed in an Environmental Impact Report (EIR). Under CEQA, a project's effects on biotic resources are deemed significant where the project would do any of the following:

- Potentially substantially degrade the quality of the environment
- Substantially reduce the habitat of a fish or wildlife species
- Cause a fish or wildlife population to drop below self-sustaining levels
- Threaten to eliminate a plant or animal community
- Substantially reduce the number or restrict the range of an endangered, threatened, or rare species
- Have possible environmental effects that are individually limited but cumulatively considerable

In addition to the criteria above that trigger mandatory findings of significance, Appendix G of the CEQA Guidelines includes six additional impacts to consider when analyzing the significance of project effects, which may or may not be significant, depending on the level of impact. A project's effects on biological resources could be deemed significant if the project would do the following:

a) Have a substantial adverse effect, either directly or through habitat modifications, on any species identified as a candidate, sensitive, or special-status species in local or regional plans, policies, or regulations, or by CDFW or USFWS.
b) Have a substantial adverse effect on any riparian habitat or other sensitive natural community identified in local or regional plans, policies, or regulations, or by CDFW or USFWS.
c) Have a substantial adverse effect on federally protected wetlands as defined by Section 404 of the Clean Water Act (including, but not limited to, marsh, vernal pool, coastal, etc.) through direct removal, filling, hydrological interruption, or other means.
d) Interfere substantially with the movement of any native resident or migratory fish or wildlife species or with established native resident or migratory wildlife corridors, or impede the use of native wildlife nursery sites.
e) Conflict with any local policies or ordinances protecting biological resources, such as a tree preservation policy or ordinance.
f) Conflict with the provisions of an adopted Habitat Conservation Plan, Natural Community Conservation Plan, or other approved local, regional, or state habitat conservation plan.

If the project proponent agrees to mitigation measures or project modifications that would avoid all significant effects or would mitigate the significant effect(s) to a point below the level of significance, an EIR would not be required. The project proponent would be bound to implement the mitigation measures to reduce the project effects to below a level of significance. Mitigation is not required for effects that are less than significant.

2.0 METHODS

This investigation followed the County of San Luis Obispo (County; 2016) *Draft Guidelines for Biological Resources Assessments*. Aerial imagery obtained from Google Earth was inspected prior to, during and following the field survey to define the current extent of onsite plant community boundaries and assist in identifying potential habitat for special-status species. The "project impact area" was defined as the outer edge of grading, trenching or vegetation removal and obtained from the site plan (consisting of 3.6 acres), and the "study area" was the area within a 50-foot buffer from the project impact area (7.4 acres). Kevin Merk conducted field work for this investigation on August 31, 2018. The site was accessed via public and private roads, and the proposed project area was surveyed on foot. A list of dominant plant species in each plant community was made, and all animal species observed were noted (Appendix A). Plant taxonomy followed the Jepson Flora Project (2018), and nomenclature for animals is reported as it appears in the CNDDB (CDFW 2018c) or as updates are available (California Herps 2018). Plant communities and other site features were mapped on Google Earth aerial imagery. Classification of the onsite plant communities was based generally on the CDFW's (2018d) *Vegetation Classification and Mapping Program* and was compared to Sawyer et al.'s (2009) *Manual of California Vegetation* and Holland's (1986) *Preliminary Descriptions of the Terrestrial Natural Communities of California*. In addition, photos of the proposed project area were taken, and a photo plate is included as Appendix B.

The CNDDB (CDFW 2018c) was queried for special-status plant and animal species occurrences and sensitive natural communities within the following United States Geological Survey (USGS)

7.5-minute quadrangles: Pico Creek, Piedras Blancas, San Simeon, Pebblestone Shut-in, Cambria, and Cypress Mountain. Due to the coastal location of the project site, the customary search of the project site and adjoining quadrangles would have yielded few records, so the search was expanded to include other quadrangles that contain biogeographical components similar to that of the project site. CNDDB records of special-status plant and animal occurrences and sensitive natural communities within a five-mile buffer of the project site were mapped.

From the list of all special-status species within the six quadrangle search, local species distribution and ecological information was obtained from a variety of online and published sources (Hoover 1970, Jennings and Hayes 1994, Bolster 1998, Lanoo 2005, Calflora 2018, California Herps 2018, The Cornell Lab of Ornithology 2018a, 2018b; CDFW 2018e), and those species that occur in coastal habitats or the western slope or ridge of the Santa Lucia Range were considered to be within the project vicinity (Appendix C). From the list of all special-status species recorded in the project vicinity, an evaluation of those with potential to occur onsite was conducted based upon the suitability of habitat conditions onsite, and the local distribution (geographical and elevational ranges) and specific requirements (plant communities and soils) of the species considered.

Definitive surveys for the presence or absence of special-status plant and animal species were not conducted, and the site visit was conducted at the time of year when many annual plant species were not identifiable. We relied on existing information and known occurrence records in the region coupled with our site-specific observations to make determinations for the probability of occurrence of special-status species in the study area. Those species listed as "Potential" in Appendix C met the following requirements: records in the site vicinity, appropriate plant community and soil associations onsite, and within the elevational range of the species. If any one of these elements was not met or considered to be marginal for the site, but the other elements were present, that species was considered "Unlikely". If environmental conditions were clearly inappropriate onsite, or the species is of very limited distribution that does not overlap the site, those species were considered "Not Expected". Species that were observed during the survey were listed as "Present". If any lifestage or particular life history use (i.e., foraging) fit the requirements of the onsite conditions, even while other aspects were inappropriate for certain functions (i.e., breeding), these species were still considered to have "Potential" to occur onsite and a description of this assessment is provided in the special-status species table (Appendix C) as well as a more in-depth analysis in the text.

The Web Soil Survey was used to identify the soil mapping units present within the study area (Natural Resources Conservation Service 2018). The National Wetlands Inventory (NWI) was also reviewed to evaluate the extent of identified wetlands on the site and in the vicinity (USFWS 2018a; refer to Figure 2). The U.S. Geological Survey topographic map of the study area was also reviewed for hydrologic features. Designated critical habitat for species listed under FESA was mapped according to information provided in USFWS (2018b). We determined whether sensitive natural communities, wetlands or other waters under state or federal jurisdiction, designated critical habitat, and ESHA occur on the site or nearby and could be indirectly affected by the proposed project.

Pursuant to County guidelines (2016), we then evaluated the potential impacts of the proposed project on each of these biological resource issues, including the six additional impacts in CEQA Appendix G. An evaluation of significance as defined under CEQA is provided for each potential impact, and mitigation is proposed to reduce impacts to a level below the significance threshold.

3.0 RESULTS

A list of plants and animals observed during the surveys is included as Appendix A. Appendix B is a photo plate of photographs taken during the site visit to characterize the onsite conditions. Appendix C includes a list of all special-status species and plant communities identified in the CNDDB within the site vicinity, and an evaluation as to their potential presence onsite. Appendix D includes the project plans prepared by Associated Development Services Corporation. A map illustrating the habitat types onsite is included as Figure 3. Figure 4 is a soils map of the site, and Figures 5A and 5B are the CNDDB maps showing the locations of special-status biological resources (i.e., plant and animal species and sensitive plant communities) known from the general area.

3.1 Existing Conditions

The site is located in the coastal terrace below the western flank of the Santa Lucia Range. Elevations on the property range from approximately 77 to 194 feet (23-59 meters). The site contained an unpaved road that provides access to the existing San Simeon CSD reservoir structure, which is on a paved pad and fenced with chain link, and to a cluster of satellite dishes to the northeast of the project area. The perimeter of the site was fenced with pipe fence/no-climb mesh, and an interior pipe fence divides two horse paddocks. There was bare ground and disturbed areas particularly along the interior fence line where there is a water trough shared by both paddocks. The site was actively grazed by horses.

3.2 Habitat Types

Three plant community or land use types were observed in the study area and included: 1) Developed/Ruderal; 2) Grassland; and 3) Coastal Scrub (Figure 3). Within the proposed project impact area, grassland and ruderal were the primary habitat types. These habitat types are described below.

3.2.1 Developed/Ruderal

The areas identified as developed or ruderal were around and included the access road, the existing reservoir, and areas of bare dirt or reduced vegetation due to horse trampling and grazing. Where plants occurred, they were predominately weedy non-native species that are adapted to disturbance, such as Mediterranean barley (*Hordeum marinum* ssp. *gussoneanum*), hare barley (*Hordeum murinum* ssp. *leporinum*), ripgut brome (*Bromus diandrus*), slender wild oats (*Avena barbata*), rattlesnake grass (*Briza maxima*), English plantain (*Plantago lanceolata*), sheep sorrel (*Rumex acetosella*) and fiddleneck dock (*Rumex pulcher*). Some small patches of grazed-down native purple needle grass (*Stipa pulchra*) were also seen as a rare component within the ruderal areas that were heavily grazed. The shoulders of the road were disturbed to a greater degree than surrounding grassland areas and possibly were mowed as part of site maintenance and fire risk reduction.

3.2.2 Grassland

The grassland onsite consisted mainly of non-native species as described above for ruderal habitats, but there were also patches of native bunchgrasses with elements of coastal terrace prairie community, particularly along the northern and northeastern perimeter of the site where grazing impacts were reduced. In these areas, native grasses consisted of purple needle grass, California oatgrass (*Danthonia californica*), and blue wild rye (*Elymus glaucus*). Other native species were Santa

KEVIN MERK ASSOCIATES

N W E S

1 in = 200 feet

SSCSD Water System Improvement Project

San Simeon CSD

Figure 3

Habitat Map

Ynez false lupine (*Thermopsis macrophylla*) and western rush (*Juncus occidentalis*). Near the edge of the study area and along the fence line in the northern and northeastern edges, were elements of the surrounding Monterey pine forest consisting of one isolated Monterey pine tree that was deceased from pitch canker, toyon (*Heteromeles arbutifolia*), and young coast live oaks (*Quercus agrifolia*), as well as a few coyote brush (*Baccharis pilularis*) shrubs.

3.2.3. Coastal Scrub

The coastal scrub community onsite occurred along the access road and was dominated by coyote brush. Other species included California sagebrush (*Artemisia californica*), coast live oak, toyon, and California poppy (*Eschscholzia californica*).

3.3 Hydrologic Features

No blue line or intermittent drainages are shown on the property within the USGS Pico Creek quadrangle. The topographic map shows a spring just offsite to the south, which was observed to have wetland vegetation during the field survey and is surrounded by coastal terrace prairie habitat. This feature is mapped by the NWI as freshwater emergent wetland (Figure 2).

No ephemeral drainage channels or wetlands were observed onsite during the survey. The site is gently sloping to flat and does not contain any drainages.

3.4 Soils

The Natural Resources Conservation Service (2018) identified only one soil type on the property, Concepcion loam 5-9% slopes, as shown on Figure 4. This soil occurs on the toeslope of terraces within 1 to 2 miles of the Pacific Ocean. It is alluvium derived from sedimentary rock and is moderately well-drained.

3.5 Special-status Biological Resources

The northern San Luis Obispo County coast has specific habitat and geologic areas that support numerous special-status plant and animal species, designated critical habitat for federally listed species, and sensitive plant communities. Figures 5A and 5B illustrates the CNDDB-documented occurrences of these resources within a five-mile search radius of the site. Appendix C provides a list of special-status biological resources (i.e., plants, natural communities, or animals) recorded from the site vicinity, their listing status, and our assessment as to whether these resources have potential to occur onsite.

3.5.1 Plants

Ten special-status plant species were determined to have potential to occur onsite within the grassland or coastal scrub habitat types, plus one species that was observed during the survey. None of these species are federally or state listed as Threatened or Endangered or are Candidates for listing, but instead are California Rare Plants. One Monterey pine (*Pinus radiata*) was present within the study area. This tree was deceased and had evidence of pitch canker disease. It occurred just inside the fence line, and while numerous Monterey pine trees were present just beyond the northern half of the site, none occurred in the impact area. No other special-status plant species were observed during the survey; however, the visit occurred during the driest time

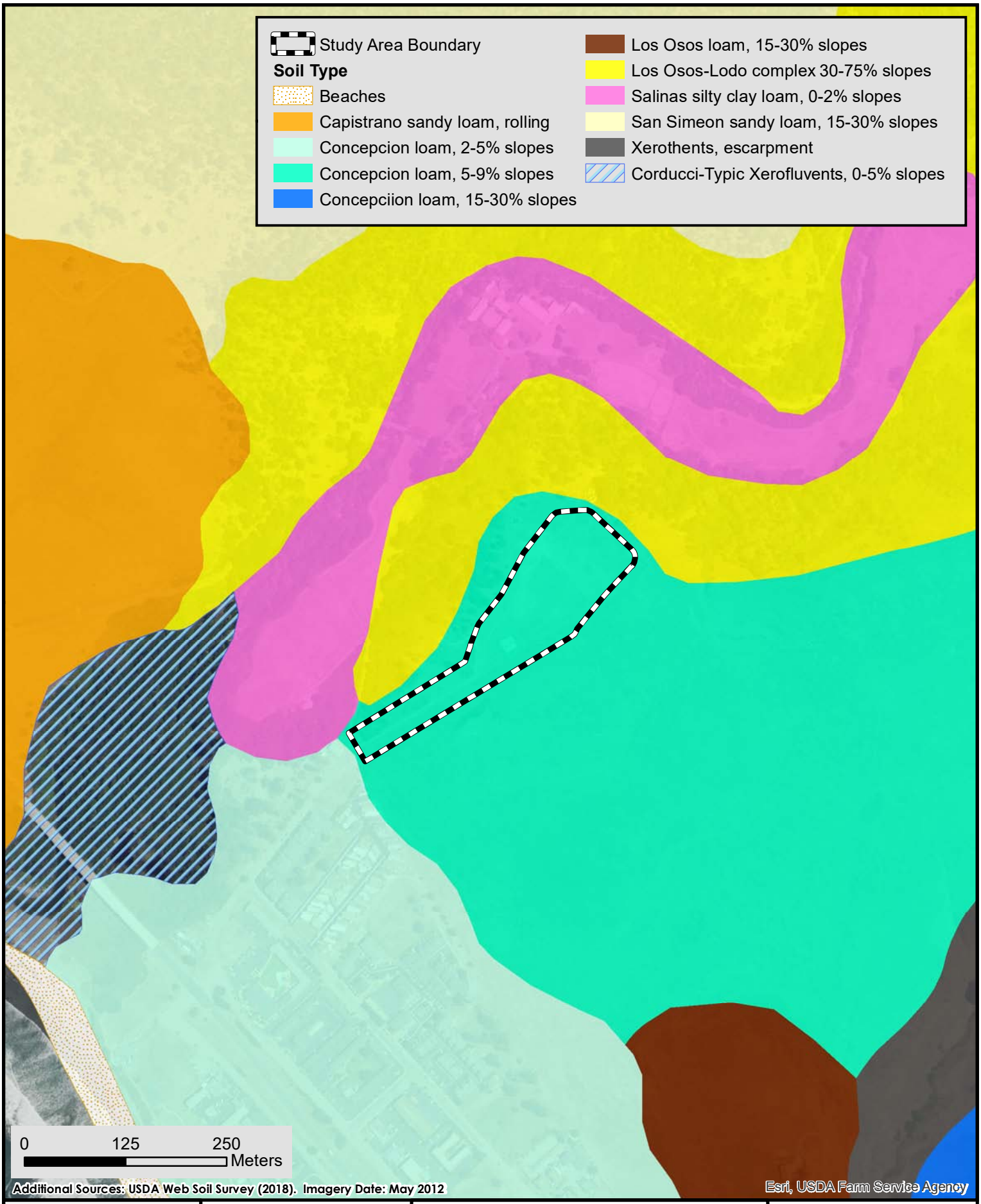

KEVIN MERK ASSOCIATES

N W E S

1 in = 500 feet

SSCSD Water System Improvement Project

San Simeon CSD

Figure 4

Soils Map

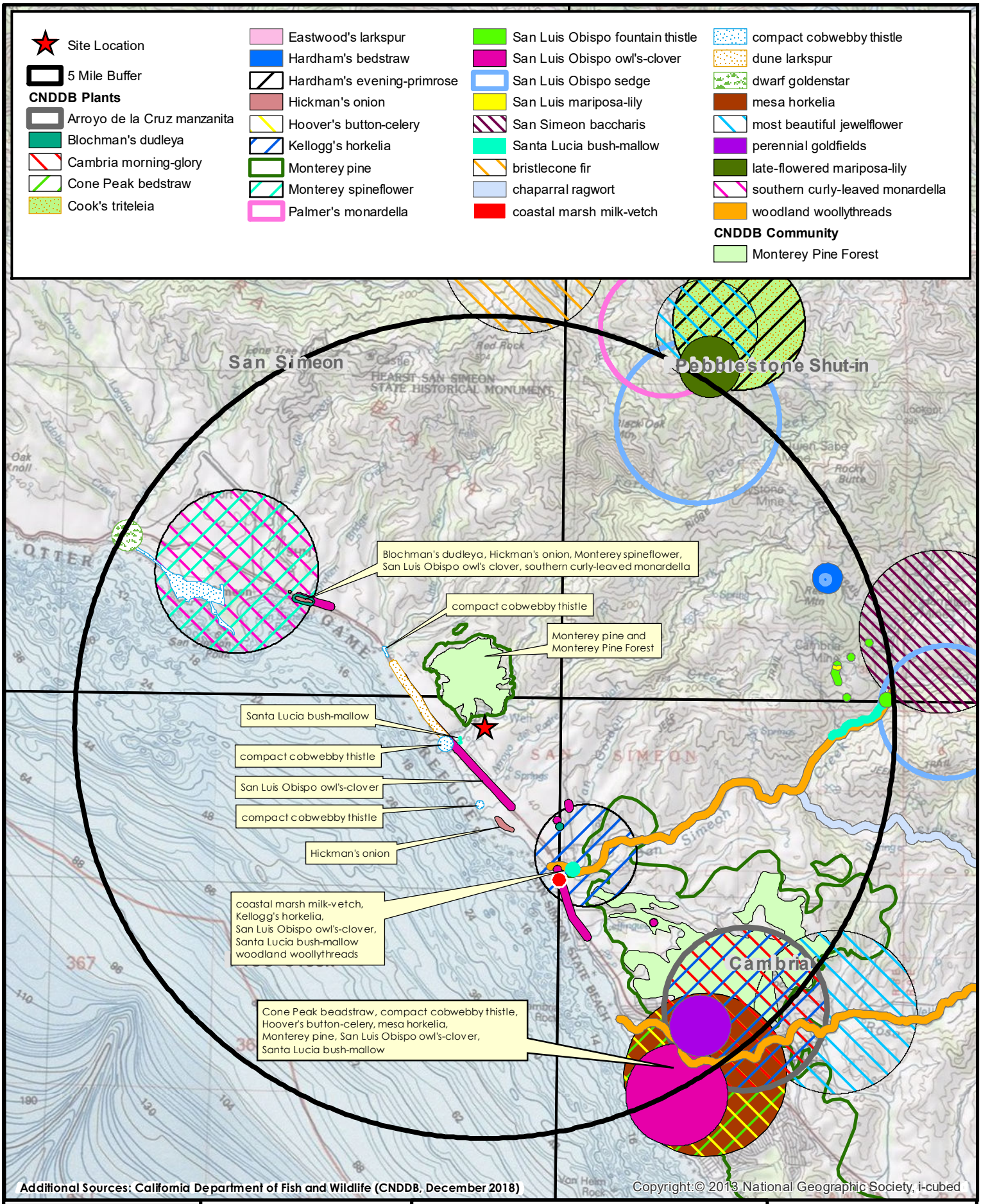

KEVIN MERK ASSOCIATES

N W E S

1 inch = 1.5 miles

SSCSD Water System Improvement Project

San Simeon CSD

Figure 5A

CNDDB Plants

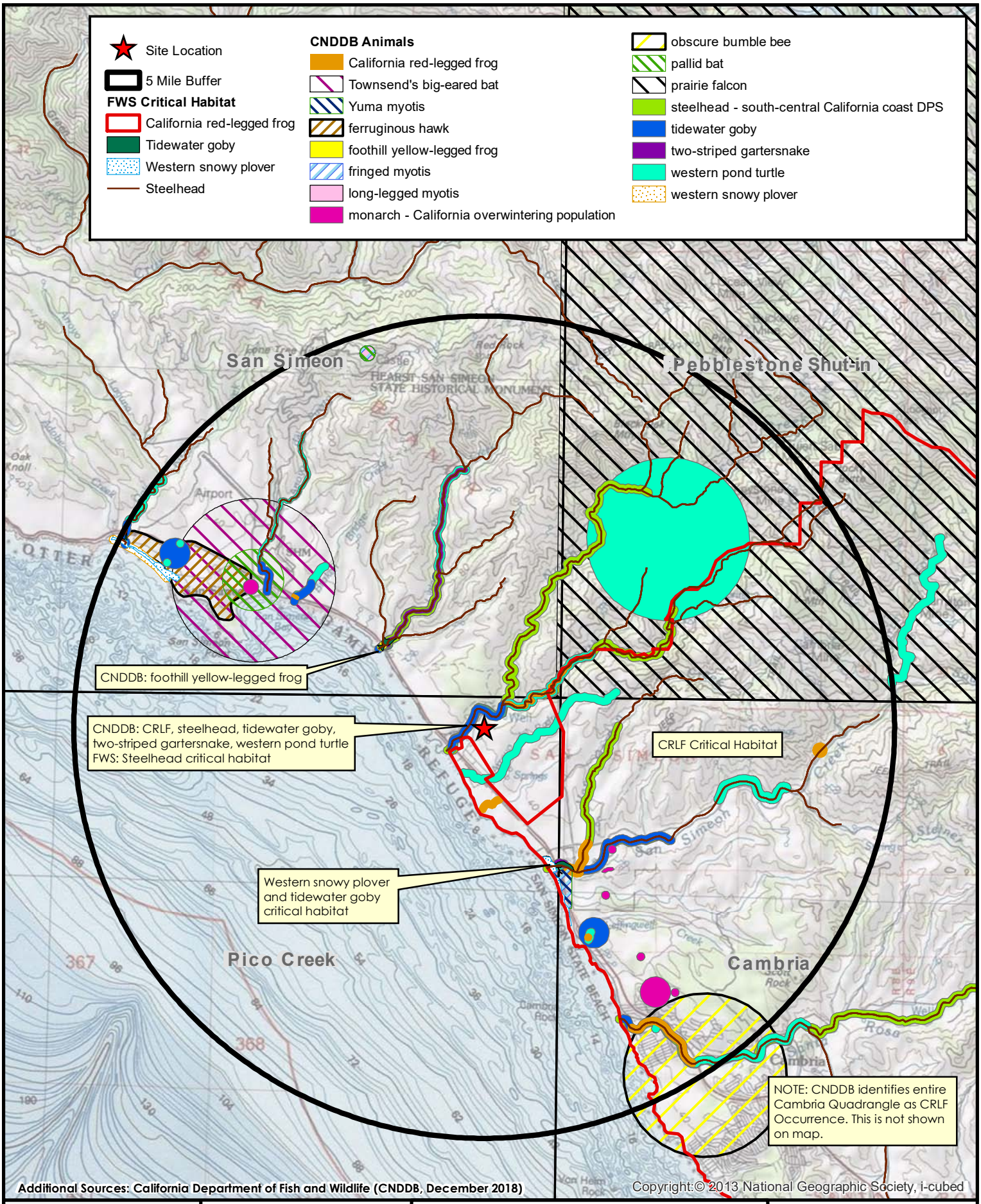

KEVIN MERK ASSOCIATES

N W E S

1 inch = 1.5 miles

SSCSD Water System Improvement Project

San Simeon CSD

Figure 5B

CNDDB Animals

of year when many annual plant species were unidentifiable and were impacted by horse grazing and trampling.

The following rare plant species are considered to have potential to occur onsite due to plant community and soils affiliations, documented elevational range, and records in the site vicinity (see Appendix C for a summary of ecological information). Seasonally timed rare plant surveys would be needed to determine whether these species occur onsite. The species with potential to occur include:

- **Hickman's onion (*Allium hickmanii*);**
- **Dwarf goldenstar (*Bloomeria humilis*);**
- **Brewer's calandrinia (*Calandrinia breweri*);**
- **Cambria morning-glory (*Calystegia subacaulis* ssp. *episcopalis*);**
- **San Luis Obispo owl's-clover (*Castilleja densiflora* var. *obispoensis*);**
- **Compact cobwebby thistle (*Cirsium occidentale* var. *compactum*);**
- **Blochman's dudleya (*Dudleya blochmaniae* ssp. *blochmaniae*);**
- **Perennial goldfields (*Lasthenia californica* ssp. *macrantha*);**
- **Marsh microseris (*Microseris paludosa*);**
- **Gairdner's yampah (*Perideridia gairdneri* ssp. *gairdneri*); and**
- **Monterey pine (*Pinus radiata*) —** one deceased tree observed

3.5.2 Sensitive Natural Communities

The CNDDB identifies Monterey pine forest as a sensitive natural community that occurs to the north of the project site, north of Pico Creek (Figure 5A). Monterey pine forest was observed during the survey just outside the study area, to the northwest, north, and northeast of the site. In this area, it generally occurred intermixed with coastal scrub or had components of coast live oak and toyon, in which Monterey pine was either co-dominate or not dominant.

3.5.3 Wetlands

The NWI map shows freshwater forested/shrub wetland areas along Pico Creek to the north, but it does not extend into the study area (Figure 2). The NWI map also notes the spring to the south of the site as freshwater emergent wetland habitat, which is described above in Section 3.3 and also does not occur in the study area.

3.5.4 ESHA

The County (2018a) has developed the North Coast Area Plan, which is a local planning document that specifies and maps ESHA. This plan indicates a geologic study area at the project site, which is a land use element combining designation that is widespread throughout the planning area. Combining designations are special land use categories that represent potentially hazardous conditions or significant natural resources, where more in-depth information and study may be needed to avoid or minimize environmental impacts associated with a project. A geologic study area indicates moderate to high landslide risk areas. The plan also contains the following types as combining designations near the study site, but not within it:

- Terrestrial habitat/sensitive resource area - 500 acres of Monterey pine forest north of the site;
- Coastal stream - Pico Creek, which is habitat for steelhead spawning as well as other special-status species;
- Riparian vegetation - along Pico Creek; and,

- Sensitive resource area - coastal terrace to the south of the site and west of Highway 1

3.5.5 Animals

There is potential for one rare invertebrate species, five special-status amphibian or reptile species, 12 special-status bird species, and one special-status mammal species to occur onsite (Appendix C). In addition, one special-status bird species was observed during the survey. Of the 20 animal species that occur or with potential to occur onsite, one of the amphibian species is federally listed; one bird species is a Candidate for state listing; three bird species are considered Fully Protected by CDFW; and the other special-status species are CDFW Species of Special Concern or are on other CDFW lists. While habitat associations and evaluation of occurrence are summarized in Appendix C, these 20 species are described in further detail below.

The **obscure bumblebee** (*Bombus caliginosus*) may occur onsite from March to October, and are most likely to occur around the perimeter of the site where there is greater vegetative cover. Little is known about the species and the only record from the vicinity is from 1975 (CDFW 2018c). It is not known whether they are extant in this area. This invertebrate species does not have specific listing status, but would be considered to be of local or regional concern.

The **southwestern pond turtle** (*Actinemys pallida*) is known to be extant in Pico Creek and the ponds within the creek's riparian zone just upstream of the Highway 1 bridge. Although there are no ponds or permanent streams on the property that could support the aquatic life history phase of this species, they could use upland habitats on the site for refugia in fall/winter. Southwestern pond turtles move away from aquatic sites in late summer or fall when water levels decline. They have been found to undergo movements of up to 1,096 meters within upland habitats in one season, and they occupy woodland, scrub and chaparral vegetation within 500 meters from their aquatic sites for up to 30 weeks (Reese and Welsh 1997, Rathbun et al. 2002, Pilliod et al. 2013). Rathbun et al. (1993) followed the movements of southwestern pond turtles at Pico and San Simeon creeks using radio telemetry. They found that turtles left the water, or moved from aquatic sites when water levels declined, as early as August to begin a period of dormancy. They stayed within 50 meters of the aquatic habitat until late October, when some individuals moved as far as 350 meters from water and remained there through the winter. During dormant periods, turtles were in areas with dense cover such as willow/blackberry thickets, patches of coyote brush, or Monterey pine stands (Rathbun et al. 1993). Additionally, nesting occurred in upland areas 30 to 170 meters of aquatic habitats from late-April to mid-July (Rathbun et al. 1992, 1993, 2002; Scott et al. 2008). Nesting activity was in the late afternoon, in well-compacted soils of sunny open areas and sparse grasslands (Rathbun et al. 1993). Hatchlings may leave the nest in the fall or overwinter in the nest and move to water the following spring. The project impact areas are within 188 to 230 meters of suitable and occupied aquatic habitat in Pico Creek.

Therefore, there is potential that pond turtles may move through the site during winter periods, but due to low vegetative cover, they are unlikely to remain onsite during periods of dormancy. Suitable nesting habitat is present onsite and radiotracked turtles were found using grassland habitats during nesting season very close to the project area, but the site is just beyond the distance from water that turtles were found to nest. Although adult turtles are capable of making longer overland movements, the hatchlings must successfully migrate to water, which may limit the amount of upland habitat that is used for nesting.

The **San Simeon slender salamander** (*Batrachoseps incognitus*) occurs along the crest of the Santa Lucia Range near San Simeon, reaching to near sea level by San Simeon Pier, and extending northwest along the western flank of the mountains to Gorda. The project site occurs in an area

that has not been sampled, and they are generally thought to occur further east along the crest (Samuel S. Sweet, unpublished range map). However, little is known about this species especially in areas with privately held lands. They could occur in the forest habitat beyond the perimeter of the site and there is a slight possibility they could move through grassland areas onsite during moist nights in the spring when they are surface active.

The **California red-legged frog** (*Rana draytonii*) is a federally Threatened species that is known to be extant in Pico Creek and the ponds upstream of Highway 1. While generally found in close proximity to water in the spring and summer, they occupy upland areas when water levels recede in the late-summer and fall, as well as during rainy periods in the winter. In mesic habitats along the coast, they have been found to move through upland habitats up to a total distance of 3,200 meters in one season, with the greatest segment without encountering a water source being 1,200 meters (Bulger et al. 2003). Individuals migrating between aquatic sites used for summer residence and other aquatic sites used for breeding have been found to move overland distances of at least 2,800 meters (Bulger et al. 2003). While undergoing terrestrial movements, they move through grassland areas, agricultural fields, and grazed areas including areas with substantial slopes or elevational changes (Bulger et al. 2003). Long-distance movements occurred in populations where there are high stream flows during the breeding season. California red-legged frogs that were radio tracked at Pico and San Simeon creeks remained within 50 meters of water (Rathbun et al. 1993). While in upland habitats, frogs took cover under dense leaf litter and shrubby vegetation, such as willows, blackberry thickets, German ivy, nettles, and downed trees (Rathbun et al. 1993).

The project impact areas are within 188 to 230 meters of suitable and occupied aquatic habitat in Pico Creek. Therefore, it is possible that frogs may occur at the study site in winter, although unlikely. They may move through the site during nighttime overland movements in the winter rain season. If there are objects such as rocks, logs, dense shrubby vegetation, or water tanks present, they may take cover under these objects during the day.

The **California newt** (*Taricha torosa*) is primarily a terrestrial species, migrating to ponds, reservoirs and streams to breed. In central California, this species occupies rolling woodland and grassland, and they can migrate up to 3,200 meters from aquatic breeding sites (Lanoo 2005). Newts may be found under cover objects such as plant containers or lumber, or walking around near rural residences. Although there are no CNDDB records within five miles of the site, numerous records of extant (at that time) populations from coastal streams near San Simeon have been reported in Jennings and Hayes (1994). They have been documented from San Simeon and Santa Rosa creeks, where they generally occupy upstream areas in more mountainous and rocky conditions. Pico Creek is situated in a large enough watershed where they may occupy upstream habitats, and periodically be washed downstream. There is suitable grassland habitat onsite, and they could temporarily occupy these areas during winter or spring when the ground is wet.

The **two-striped gartersnake** (*Thamnophis hammondii*) is known to be extant in Pico Creek. This species is highly aquatic in summer, where they consume aquatic prey. In winter they are mostly inactive in upland habitats, where they use small mammal burrows. Rathbun et al. (1993) radio tracked two-striped gartersnakes in Pico and San Simeon creeks, and found that the snakes were found far from water beginning in mid-October, and occurred in grassland or scrub habitats. Mean distance to water for individuals in winter ranged from 50 to 182 meters, but maximum distances were not reported in this study. There is suitable upland habitat onsite in grassland and scrub areas, and California ground squirrels (*Otospermophilus beecheyi*) were observed onsite that would provide suitable burrows for overwintering two-striped gartersnakes.

The **tricolored blackbird** (*Agelaius tricolor*) is a Candidate for state Endangered status. It has been observed at Pico Creek (The Cornell Lab of Ornithology 2018a), where there is potentially suitable nesting habitat in wetland vegetation near the mouth of the creek and surrounding the ponds just upstream of Highway 1. There are also numerous sightings along the coast in the vicinity (The Cornell Lab of Ornithology 2018a). Potentially suitable foraging habitat is present onsite in grazed grassland areas, and this species occurs in the area year-round. Due to the proximity of wetland vegetation along Pico Creek, periodic foraging onsite or individuals moving through the site may occur, but no nesting or roosting habitat is present on or immediately adjacent to the site.

The **grasshopper sparrow** (*Ammodramus savannarum*) has been observed at Pico Creek, and there are also numerous sightings along the coast in the vicinity (The Cornell Lab of Ornithology 2018a). Potentially suitable foraging and nesting habitat is present onsite in grassland areas, where it could nest on the ground in dense grass within the project impact area.

The **golden eagle** (*Aquila chrysaetos*) is a state Fully Protected species that could potentially occur onsite periodically. There are numerous sightings along the coast in the project vicinity (The Cornell Lab of Ornithology 2018a). Potentially suitable foraging habitat is present onsite in grassland areas, but may not be expansive enough to be ideal. No nesting habitat occurs in the impact area. Their preferred nesting habitat is associated with cliffs, and no raptor nests were seen in large trees surrounding the site, making impacts to this species from the project appear unlikely.

The **long-eared owl** (*Asio otus*) is a Species of Special Concern for nesting. It has been recorded in close proximity to the site, and the project area is within the year-round range of the species (The Cornell Lab of Ornithology 2018a). Suitable foraging habitat is present in grassland and coastal scrub areas onsite. They roost in dense forests, which are not present onsite, and the area surrounding the site is marginal due to a more open canopy. Suitable nesting habitat is present in mixed forest/scrub habitat around the perimeter of the site, and there is a slight possibility they could nest on the ground in grassland on the site.

The **burrowing owl** (*Athene cunicularia*) is listed by CDFW as a Species of Special Concern for burrowing sites and some wintering sites. It has been recorded in close proximity to the site, and the project area is within the year-round range of the species (The Cornell Lab of Ornithology 2018a, 2018b). Potentially suitable foraging and nesting habitat are present in grassland and coastal scrub areas onsite. However, the coastal populations in San Luis Obispo County are considered to no longer breed in this area (Wilkerson and Siegel 2010). California ground squirrels that excavate burrows used by owls were observed onsite, but did not exist as a large colony that is typically used for breeding sites. This species is not expected to nest onsite but could occur as an uncommon transient moving through the area.

The **ferruginous hawk** (*Buteo regalis*) occurs in this area only during winter, and has been recorded within five miles of the project area (Figure 5B). Potentially suitable foraging habitat is present in grassland habitats onsite, but they do not nest in this region. Grasslands onsite are not expansive enough to be ideal foraging habitat, and in the rare event that it occurred onsite, foraging would occur periodically while passing through the area.

The **northern harrier** (*Circus cyaneus*) was observed flying over the site during the survey. Marginally suitable foraging habitat is present in grassland areas, but may not be expansive enough to be ideal. Nests are placed on the ground in clumps of vegetation, and they do nest in grazed pastures, but due to the onsite horse paddocks being relatively small in size with a high

level of human and grazing disturbance, and the abundance of high-quality nesting habitat surrounding the site, they are unlikely to nest onsite. This species is listed by CDFW as a Species of Special Concern for nesting.

The **white-tailed kite** (*Elanus leucurus*) is considered a Fully Protected species by CDFW for nesting. It has been observed at Pico Creek and at numerous other locations in the site vicinity (The Cornell Lab of Ornithology 2018a). Suitable foraging habitat is present in grassland areas onsite, but the heavily grazed nature of much of the site is not ideal. During the non-breeding season, they roost communally in trees or tall shrubs at the edges of grasslands (The Cornell Lab of Ornithology 2018b); since they occur in this area year-round, roosting could occur around the edges of the site, but no roosting habitat is present onsite. Nesting could occur in the forest edge habitat surrounding the site, but no nesting habitat is present on the site. If they were to occur onsite, their occupancy would be rare while foraging or moving through the site.

The **California horned lark** (*Eremophila alpestris actia*) has been observed in close proximity to the project site (The Cornell Lab of Ornithology 2018a). Suitable foraging and nesting habitat are present in grazed grasslands onsite, and they nest on the ground preferring bare ground or sparse vegetation. Since they are not negatively affected by grazing disturbance, they could occur onsite while foraging or nesting.

The **prairie falcon** (*Falco mexicanus*) has been recorded in the site vicinity, although are rare (The Cornell Lab of Ornithology 2018a). Suitable foraging habitat is present in grassland and coastal scrub habitat onsite, including areas impacted by horses as they are somewhat tolerant of grazing activities. No nesting habitat is present onsite, and there is only a slight possibility they would nest in trees surrounding the site. This species is listed by CDFW as a Species of Special Concern for nesting. If they were to occur onsite, their occupancy would be rare while foraging or moving through the site.

The **American peregrine falcon** (*Falco peregrinus anatum*) is considered a Fully Protected species by CDFW for nesting. It has been recorded in the site vicinity, but it is difficult to assess its rarity because sighting records have been suppressed (The Cornell Lab of Ornithology 2018a). Potentially suitable foraging habitat is present in grassland areas onsite, but no nesting habitat is present on or adjacent to the site. If they were to occur onsite, their occupancy would be rare while foraging or moving through the site.

The **loggerhead shrike** (*Lanius ludovicianus*) has been recorded at several locations in the project vicinity (The Cornell Lab of Ornithology 2018a). Suitable habitat for foraging is present in the project area in grassland and scrub habitat, and this species occurs in pastures and other disturbed areas with low vegetation. There is no nesting habitat in project impact areas, but could potentially nest in brushy or forested areas beyond the project site, including in the scrub along the entrance road. Could occur onsite periodically while foraging.

The **yellow warbler** (*Setophaga petechia*) has been recorded on numerous occasions on Pico Avenue adjacent to the project site (The Cornell Lab of Ornithology 2018a). This species is closely tied to riparian habitat for foraging and nesting, and this habitat does not occur onsite. However, since they are known to occur in such close proximity, there is a chance they could periodically move through the site.

The **pallid bat** (*Antrozous pallidus*) could forage in the grassland and coastal scrub habitats onsite. Roosting habitat (maternity, winter, daytime or night roosts) are not present on the property or in nearby areas.

3.5.6 Designated Critical Habitat

California red-legged frog critical habitat has been designated in the community of San Simeon where the project would construct additional water lines along existing roadways. No designated critical habitat is present within the grassland or coastal scrub habitats where the tanks would be placed or improvements to the access road would occur. Designated critical habitat for the south-central California coast steelhead (*Oncorhynchus mykiss irideus*) is present within Pico Creek, but is not in close proximity to the project site.

3.5.6. Migratory Birds and Raptors

There are several species of birds with potential to occur onsite that build nests on the ground and could occur within project impact areas. In addition, many resident and migrant birds would likely build nests in various trees, shrubs, and snags in the Monterey pine forest and coastal scrub habitats surrounding the project site. These include raptors, special-status species as well as common species that are protected under the MBTA.

4.0 IMPACT ANALYSIS AND RECOMMENDED MITIGATION

The following impact analysis and recommended mitigation measures are intended to help guide project planning efforts, and support the CEQA review process. The impact discussion addresses the range of impacts that could result from implementation of the proposed project. Direct effects (or impacts), as defined under CEQA, are caused by a project and occur at the same time and place. Indirect effects are caused by a project, but occur at a different time or place. Cumulative effects are those that result from when the effects of the subject project combine with effects from other unrelated projects to compound environmental harm. The proposed site plan prepared by Associated Development Services Corporation (Appendix D), the project description provided by OEC, along with the observations of onsite conditions from the site visit and evaluation of special-status biological resources provided the basis for this analysis.

The proposed project would permanently affect approximately 29,410 square feet of grassland and ruderal habitat for the construction of the tank pad and installation of the two water tanks. Improvements to the access road, including widening and surfacing with decomposed granite or other material, would also permanently affect less than one acre of grassland and coastal scrub habitat. Temporary effects to grassland habitat would occur as a result trenching for the installation of new water pipe to connect the existing reservoir to the new water tanks, and grading around the access road and tank pad, as needed for construction of these facilities. The construction of additional water pipelines in the community of San Simeon will occur in the developed areas of roadways, and will not affect any natural habitats.

The project does not involve any tree removal or encroachment into the Monterey pine forest habitat that surrounds the site. No wetlands, ponds, streams, drainage channels or other hydrologic features are present on the property, and there would be no indirect effects to these habitats located on areas adjacent to the property.

4.1 Direct and Indirect Effects

A) Adverse Effects on Candidate, Sensitive or Special-status Species

Eleven rare plant species and 20 special-status animal species have been observed in the area and have potential to occur onsite. Designated critical habitat for one animal species is present within the project site. Nesting birds and raptors could potentially occur in project impact areas or in areas adjacent to the project site. Impacts of the proposed project could occur on a portion of these species, as described below, and mitigation measures are proposed to bring these impacts to a level below significance. In addition, standard mitigation measures (7a-c) are recommended to reduce a broad range of impacts on plant and animal species and their habitats.

Bio Impact 1. Construction of the water tank pad site, road improvements, and installation of the pipeline between the existing reservoir and the new tanks could potentially impact rare plant species. This a significant but mitigable impact.

Seasonally-timed rare plant surveys have not yet been conducted to determine whether any of the eleven rare plant species identified with potential to occur in the project area are present in impact areas, and only one of these species was seen during the reconnaissance survey. Rare plant surveys would be required during the appropriate blooming periods of the plant species determined to have potential to occur onsite (Appendix C). If rare plant species are present, project activities such as grading, excavation, trenching, structure and infrastructure placement, and trampling/soil compaction caused by construction access and staging could directly affect these plants. Long-term effects could include reductions in numbers when habitat is lost to construction of the new tank facility and access roads. Short-term effects could be temporary ground disturbance such as trenching for the water line and staging areas that are allowed to revegetate after construction. Ground disturbance generally favors non-native plant species that may outcompete native species in the long-term.

Rare plant surveys are needed to determine the presence and distribution of rare plant species within the study area. If much larger populations of rare species occur outside the proposed development footprint, and the loss of small areas of suitable habitat or individuals does not pose a significant threat to the larger populations present on the property, impacts may not be considered to be significant. Furthermore, Brewer's calandrinia, Cambria morning-glory and Gairdner's yampah are CRPR 4.2, which typically does not meet the CEQA thresholds used to define rarity (please refer to Section 15380 of CEQA). The following mitigation is required to ensure that impacts are below significance, but will ultimately be determined based upon the results of the focused rare plant surveys and the degree of any impacts.

Mitigation Measure BIO-1a: Conduct preconstruction surveys for rare plants. During the spring and summer prior to construction, a qualified botanist shall conduct surveys during the period(s) when the rare plant species with potential to occur on the Project site are identifiable, which is generally the blooming period (see Appendix C). The surveys shall follow the protocols given in *Guidelines for Conducting and Reporting Botanical Inventories for Federally Listed, Proposed, and Candidate Plants* (USFWS 2000) and *Protocols for Surveying and Evaluating Impacts to Special Status Native Plant Populations and Natural Communities* (California Department of Fish and Game 2009). If no rare plant species are detected during the survey, no further mitigation is required. All rare plant occurrences within the study area shall be flagged or mapped for avoidance. If construction activities cannot avoid the rare plants, Mitigation Measure BIO-1b shall be implemented.

Mitigation Measure BIO-1b: Conduct salvage and relocation of impacted rare plants, and implement a rare plant compensatory mitigation plan. If project impacts cannot avoid the rare plant areas, rare plant salvage from the disturbance area and relocation to appropriate habitat outside the development footprint shall occur. Salvage and relocation activities will include the collection of seed and/or bulbs prior to grading activities. Seed shall be hand broadcasted into areas of suitable habitat outside the development area, or incorporated into the native grassland erosion control seed mix described in Table 1 under Mitigation Measure BIO-7c. Any bulbs salvaged shall be planted in similar habitat as close to the collection site as possible.

A rare plant compensatory mitigation plan shall be developed to ensure no net loss of special-status plant species from the proposed project. The mitigation plan shall be developed by a qualified botanist/restoration ecologist in consultation with the County and CDFW, as appropriate. The special-status plant species mitigation program shall at a minimum include the following:

- The overall goals and measurable objectives for no net loss of special-status plant species;
- Identification of specific mitigation areas of suitable size, with appropriate site conditions, and in close proximity to the impact area;
- Specific habitat management concepts to be implemented during the establishment period (i.e., habitat assessments for the period immediately following construction; annual population surveys and identification of monitoring reference sites; and a seasonally-timed weed abatement program);
- Success criteria based on the goals and measurable objectives to ensure that a viable population(s) is established on the project site; and
- Reporting requirements to ensure consistent data collection and reporting methods used by monitoring personnel.

Monitoring should occur annually for five years to ensure successful establishment of all planted propagules or salvaged plants and no net loss of the species. In the case of annual plants, it may be difficult to determine if there has been a net loss or gain of a population during the monitoring period due to interannual variability. Therefore, reference sites should be used to the extent possible to extrapolate trends in species' population dynamics. An adaptive management program should also be included to address both foreseen and unforeseen circumstances relating to the preservation and mitigation programs. The plan should include remedial measures to address any negative impacts to the special-status plant species and their habitats (i.e., removal of weeds, additional seeding/planting efforts) if the species or its habitat is suffering a net loss at the time of the follow-up surveys.

Bio Impact 2. Construction of the water tank pad site, road improvements, and installation of the pipeline between the existing reservoir and the new tanks could potentially impact the obscure bumblebee, which does not have specific listing status. This is considered a less than significant impact.

The obscure bumblebee is included on the special-status species lists within the CNDDB (CDFW 2018c) and *Special Animals* (CDFW 2018a), but it does not have listing status that would trigger significance under CEQA. Because no significant impacts would occur, no mitigation is required.

Bio Impact 3. Construction of the water tank pad site, road improvements, and installation of the pipeline between the existing reservoir and the new tanks could potentially impact special-status amphibian and reptile species. This a significant but mitigable impact.

Each of the special-status amphibian and reptile species considered as having potential to occur occupy aquatic or mesic forested habitats in the late spring and summer, and use upland habitats in the fall (depending on when water levels decline) through the winter. These species include the southwestern pond turtle, San Simeon slender salamander, California red-legged frog, California newt, and two-striped gartersnake. The slender salamander is closely tied to woodland habitats, and would only occur around the perimeter of the site during winter and spring periods of surface activity. During wet periods, it could be found under surface objects such as logs, boards, or rocks.

The other amphibian and reptile species would inhabit Pico Creek, the ponds near Highway 1, and the adjacent wetland habitat and riparian woodland throughout the spring and summer. The only exception is the southwestern pond turtle, which lays eggs in upland habitats in the summer, but the project impact areas are beyond the distance that females travel from water for excavating nest sites. During the winter, individuals of these species occupy upland habitats away from their summer aquatic sites of residence likely as an adaptation to avoid high stream flows. Only a proportion of individuals move long distances away from water, and in cases where ponds that are not subject to high stream flows are available, most individuals may overwinter at the pond sites. The perimeter fence surrounding the site is not expected to be a barrier to this species: the salamanders and snake could go through it; the frog could go through it or climb over or under it; and the turtle could go under it.

The California red-legged frog is a federally Threatened species; therefore, impacts to any individuals would be considered take under FESA. The project impact areas are within 188 to 230 meters of suitable and occupied aquatic habitat in Pico Creek, which is well within the maximum distance that adult California red-legged frogs have been found to move away from water when occupying terrestrial habitats, during periods of winter inactivity or while undergoing breeding migrations. No information is available on the dispersal of juvenile frogs away from their natal habitat. Two streams are present to the south of the project site that are within the species' dispersal distance from Pico Creek, and one of these is known to be occupied by the species (Figure 5B). Grassland and scrub habitats are suitable for frog overland movements, and the slope between Pico Creek and the project site would not be a deterrent (Bulger et al. 2003). Therefore, frogs could pass through the site while migrating to other area streams or during other bouts of terrestrial activity in the winter. They could become entrapped in trenches or steep-walled excavations that are left open at night, or take refuge under construction material such as stacks of pipe or metal. They would not occur onsite during dry periods due to the lack of aquatic habitat, mesic conditions, or dense vegetation. To reduce potential project impacts on the California red-legged frog, as well as other special-status amphibian and reptile species, the following mitigation measures are required to bring effects to a level below significance. Note that these mitigation measures only apply to work conducted for the access road, pad for the two new tanks and trenching for the waterline between the existing reservoir and the new tanks.

Mitigation Measure BIO-3a: Conduct all construction activities during the dry season, mid-May to late October. All vegetation removal, excavation of the tank pads, and trenching for the segment of new water line between the existing reservoir and new tanks shall occur from middle of May to late October, depending on weather conditions. If other phases of construction cannot take place during this period, Mitigation Measure BIO-3b shall apply.

Mitigation Measure BIO-3b: Conducted daily pre-activity surveys for construction activities occurring during the rainy season, early November to mid May. If all construction activities cannot be completed within the dry season window as described in Mitigation Measure BIO-3a, a qualified biologist shall complete a daily pre-activity survey of all areas in which construction activities are planned for the day, including an inspection of stored materials, parked vehicles and any trenches that were open overnight. If any California red-legged frogs are found onsite, the biologist shall immediately contact the USFWS and work shall be halted until proper clearance has been given by the USFWS. If any southwestern pond turtles, San Simeon slender salamanders, California newts or two-striped gartersnakes are found, the qualified biologist shall use prudent measures to ensure that these individuals are not killed or injured by the work.

Mitigation Measure BIO-3c: Conduct a wildlife pre-construction survey. In addition to the mitigation measures described above, a pre-construction survey for all special-status wildlife species shall be conducted within 24 hours prior to the commencement of initial vegetation removal and/or site grading and/or trenching. If work commences on different areas at different times, a separate pre-construction survey shall be conducted before the start of work in each area. A qualified biologist shall inspect underneath any objects such as lumber, boards, logs, rocks, and brush piles for wildlife species that may be present in impact areas. If any federally listed species are found, the USFWS shall be notified as described in Mitigation Measure BIO-3b. If any birds' nests are found, the measures described below in Mitigation Measure BIO-4b shall be followed.

Bio Impact 4. Construction of the water tank pad site, road improvements, and installation of the pipeline between the existing reservoir and the new tanks could potentially impact protected bird species. This a significant but mitigable impact.

Grasshopper sparrow, long-eared owl, and California horned lark could forage and/or nest on the project site. No nesting habitat is present within project impact areas for tricolored blackbird, golden eagle, burrowing owl, ferruginous hawk, northern harrier*, white-tailed kite*, prairie falcon*, American peregrine falcon*, loggerhead shrike* and yellow warbler. The species indicated with a "*" are considered special-status only for nesting habitat. The project would have no significant effect on nesting habitat for these species because it does not occur in the project area. However, these species may occur periodically or forage minimally on the site. The project would result in the loss of approximately 29,410 square feet of grassland and ruderal habitat in which grasshopper sparrow, long-eared owl, and California horned lark potentially could nest, and in which each of these species could potentially forage. Considering the amount of suitable grassland habitat that will remain unaffected on the site, and the amount available surrounding the site, the loss of this small amount of habitat is negligible and not considered significant from an ecological perspective.

Direct effects to special-status adult birds are not expected to occur as a result of construction activities because these mobile individuals could easily move out of harm's way and forage in other nearby areas. However, if construction were to take place during the nesting season (February 1 to August 31), breeding or nesting behavior could be interrupted, which could lead to the abandonment of nests containing eggs or young, causing to their mortality. Species that nest in the woodland or scrub habitats surrounding the site could also be affected if they are in close enough proximity to noise and physical disturbance. The active nests of ground-nesting species could be destroyed during vegetation removal. In addition to the special-status bird species with potential to occur in the area, nesting activities of common species of birds protected under the MBTA and California Fish and Game Code could be affected by the project. No long-term effects to breeding or nesting behavior are expected as human activities will be limited, and bird species will

likely resume using the site after the completion of construction. Any disturbance of active nests of protected species would be considered significant. Implementation of the following mitigation measures along with the general wildlife pre-construction survey (Mitigation Measure BIO-3c) standard biological mitigation measures (7a-c) would reduce impacts to a less-than-significant level.

Mitigation Measure BIO-4a: Conduct the initiation of construction activities outside of the nesting season. All initial site disturbance shall be limited to the time period between September 1 and November 1, if feasible. If initial site disturbance such as vegetation removal, grading, and trenching cannot be conducted during this time period, implementation of Mitigation Measure BIO-4b is required.

Mitigation Measure BIO-4b: Conduct a pre-construction nesting bird survey. If it is not possible to schedule the initiation of construction between September 1 and November 1, a qualified biologist shall conduct a pre-construction survey for nesting birds within 250 feet of project impact areas to ensure that no active nests will be disturbed. The pre-construction survey shall be conducted no more than seven days before the initiation of construction activities in any given area of the project site. During this survey, the qualified biologist shall inspect all potential nest substrates in the impact area, and any nests identified will be monitored to determine if they are active. If no active nests are found, construction may proceed. If an active nest is found within 50 feet (250 feet for raptors) of the construction area, the biologist, in consultation with CDFW, shall determine the extent of a buffer to be established around the nest. The buffer will be delineated with flagging, and no work shall take place within the buffer area until the young have left the nest, as determined by a qualified biologist.

Bio Impact 5. Construction of the water tank pad site, road improvements, and installation of the pipeline between the existing reservoir and the new tanks will take place in potential foraging habitat of the pallid bat. This is considered a less than significant impact.

The pallid bat could potentially forage onsite, but no roosting habitat is present onsite or in close enough proximity to the site that roosting activity could be affected by construction disturbance. Foraging behavior is not expected to be impacted because they forage at night and construction activities would occur during the day. The loss of approximately 29,410 square feet of grassland and ruderal habitat that supports prey species would not be considered a significant impact, especially considering the amount of habitat that will remain within the study area and in surrounding areas. No potential roosting habitat will be lost or temporarily affected by the project. Because there would be no significant effects on pallid bat, no mitigation is needed.

Bio Impact 6. Installation of new water pipelines in the community of San Simeon will occur in designated critical habitat for the California red-legged frog. This is considered a less than significant impact.

The streets and residential development of the community of San Simeon are included within the boundaries of California red-legged frog critical habitat. The project would involve trenching to install new waterlines on several streets where there are utility easements. No natural habitat would be affected by this phase of the project as all work will occur in developed habitat. Critical habitat areas are to contain the physical or biological features that are essential to the conservation of those species. The project impact area contains no such suitable features. Since critical habitat will not be affected, no mitigation is needed.

Standard Biological Mitigation Measures

In addition to the species-specific mitigation measures described above, implementation of the following general mitigation measures will reduce impacts on all protected biological resources during construction.

Mitigation Measure BIO-7a: Prepare and present a Worker Environmental Awareness Program. A qualified biologist shall prepare a Worker Environmental Awareness Program that will be presented to all construction personnel and employees before any ground-disturbing activities commence at the project site. This program shall detail the measures undertaken during project implementation to avoid and minimize impacts on biological resources. It shall include a description of special-status species potentially occurring on the project site and their natural history; the status of the species and their protection under the FESA, CESA, Bald and Golden Eagle Protection Act, MBTA, and California Fish and Game Code; and the penalties for take. All attendees of the Worker Environmental Awareness Program shall sign an attendance form.

Mitigation Measure BIO-7b: Observe construction standard operating and Best Management Practices (BMPs). The following standard practices are recommended to reduce various project impacts on biological resources.

a. Prior to the start of construction, the limits of disturbance shall be clearly delineated by stakes, construction fencing, flags, or another clearly identifiable system.
b. All pipes, metal tubing, or similar materials stored or stacked on the project site for one or more overnight periods shall be either securely capped before storage or thoroughly inspected for wildlife before the materials are moved, buried, capped, or otherwise used. In addition, materials such as lumber, plywood, and rolls of silt fence stored on site shall be thoroughly inspected before use. Materials that could provide shelter/nesting habitat for birds shall be covered with netting or other exclusion methods during the nesting season, where feasible and appropriate, to prevent birds from building nests. If encountered, wildlife shall be allowed to escape unimpeded, or relocated by a qualified biologist to a designated appropriate habitat area away from construction activities. Any wildlife relocations shall be authorized as necessary by CDFW and/or USFWS.
c. To prevent entrapment of wildlife, all excavations (e.g., steep-walled holes or trenches) more than 6 inches deep shall be covered with plywood or similar materials when not in use or contain escape ramps constructed of dirt fill, wooden planks, or other material that wildlife could ascend. The amount of time trenches or other excavations are left open shall be minimized. All excavations more than 6 inches deep shall be inspected daily prior to the start of construction and immediately before being covered or filled. Any wildlife discovered shall be allowed to escape unimpeded before construction activities resume or shall be relocated by an authorized biologist in accordance with CDFW and/or USFWS regulations.
d. Dust suppression shall occur during construction activities when necessary to meet air quality standards and protect biological resources. Dust control is an important component to minimize impacts on native vegetation growing on or adjacent to the site. BMPs for dust abatement shall be a component of the project's construction documents.
e. To minimize disturbance, all vehicle traffic shall be restricted to established roads, construction areas, and other designated areas.
f. No vehicles or equipment shall be refueled within 100 feet of wetlands or streams (including offsite areas) unless a bermed and lined refueling area is constructed. No vehicles or construction equipment shall be stored overnight within 100 feet of these areas unless drip pans or ground covers are used. Spill kits shall be maintained on the site, and a spill response plan shall be in place.

g. No concrete washout shall be conducted on the site outside of an appropriate containment system.
h. The use of chemicals, fuels, lubricants, or biocides shall be in compliance with all local, state, and federal regulations. All uses of such compounds shall observe label and other restrictions mandated by the U.S. Environmental Protection Agency, California Department of Food and Agriculture, and other state and federal legislation.
i. All food-related trash items (e.g., wrappers, cans, bottles, food scraps), small construction debris (e.g., nails, bits of metal and plastic), and other human-generated debris (e.g., cigarette butts) shall be stored in animal-proof containers and/or removed from the site on a weekly basis. No deliberate feeding of wildlife shall be allowed.

Mitigation Measure BIO-7c: Install appropriate erosion controls and revegetate graded areas. All areas where temporary construction-related impacts have taken place shall have appropriate erosion controls and other stormwater protection BMPs installed to prevent erosion potential. As part of the local approval process, a Sediment and Erosion Control Plan shall be prepared that specifically seeks to protect the drainages and wetland and riparian habitat adjacent to the construction area. Silt fencing, straw bales, sand bags, fiber rolls and/or other types of materials shall be prescribed in the plan to prevent erosion and sedimentation. Biotechnical approaches using native vegetation shall be used as feasible. Areas with disturbed soils shall be restored under the direction of a qualified restoration ecologist. Methods may include recontouring graded areas to blend in with existing natural contours, covering the areas with salvaged topsoil containing native seedbank from the site, and/or applying the native seed mix described in Table 1 to the graded areas through either direct hand seeding or hydroseeding methods.

Table 1. Native Grassland Erosion Control Seed Mix

Species	Application Rate (lbs/acre)
Bromus carinatus (California brome)	5
Hordeum brachyantherum (meadow barley)	5
Vulpia microstachys (six weeks fescue)	3
Stipa pulchra (purple needle grass)	10
Trifolium wildenovii (tomcat clover)	5
Total	**28**

B) Adverse Effects on Riparian Habitat or Sensitive Natural Communities

No Riparian habitat is present on the property, and the proposed action would not indirectly affect Riparian habitat offsite. Monterey Pine Forest is considered to be a sensitive natural community (S1.1) recorded in the CNDDB as occurring in to the north of the property and north of Pico Creek. Monterey pines occur in a band just beyond the northern boundary of the site, and are mixed with components of coastal scrub habitat, as well as toyon and coast live oak. The proposed project does not occur in this habitat and there would be no indirect effects on these offsite areas. Therefore, there would be no impact on Riparian habitat or sensitive natural communities.

Bio Impact 7. Construction of the tank pad site will permanently affect approximately 29,410 square feet of grassland and ruderal habitat, and access road improvements will impact less than one acre of coastal scrub habitat. This is considered a less than significant impact.

Grassland and coastal scrub plant communities are common throughout the region, and are not considered sensitive plant communities by the CDFW. Additionally, grassland habitat onsite is disturbed by horse grazing and trampling, resulting in areas with bare soils and non-native weedy vegetation. If any rare plants occur in these areas, compensatory mitigation will be employed to ensure no net loss of these populations, as described in Mitigation Measure BIO-1b. In addition, temporarily impacted areas will be stabilized and revegetated as described in Mitigation Measure BIO-7c. Therefore, the loss of small amounts of grassland and coastal scrub habitat types onsite would be considered a less than significant impact pursuant to CEQA, and no mitigation would be required.

C) Federally Protected Wetlands

No wetland habitat is present on the property, and there are no basins or swales that would collect water and could potentially support wetland vegetation during years with above-average rainfall. Additionally, no streams, drainages, or channels that convey water and potentially could be regulated other waters are present. Improvements to the access road will occur 28 meters (92 feet) from freshwater emergent wetland habitat offsite that is associated with a spring to the south. This is an acceptable setback distance. In addition, with the incorporation of BMPs described in Mitigation Measures BIO-7b and 7c, there would be no impacts to wetlands or streams occurring in offsite areas. Because there will be no impact on wetlands or other jurisdictional habitats, no mitigation is required.

D) Interference with Movement of Native Fish or Wildlife, Wildlife Corridors, and Wildlife Nursery Sites

The proposed project would not affect the movement of native wildlife or influence wildlife corridors because no elements are proposed that would influence these wildlife uses of the site. No habitat for fish is present within the project site. The project proposes to install fencing around the 29,410 square foot tank site consisting of 6-foot high chain link and three strands of barbed wire along the top. The project area is currently surrounded by pipe fencing with no-climb wire, which likely restricts movement of some medium-sized mammals such as badgers. The small amount of fencing around the tank structure, which will be contained within the existing perimeter fence, will not result in any new interference with wildlife movement. No wildlife nursery sites are expected within the project site due to the disturbed nature of the habitat from grazing and lack of appropriate habitat elements that would support these uses, such as large trees. Because there will be no impact on movement of native fish or wildlife, wildlife corridors or wildlife nursery sites, no mitigation is required.

E) Conflicts with Local Policies or Ordinances, Such as Tree Preservation

The County of San Luis Obispo adopted an Oak Woodland Ordinance (Chapter 22.58) on April 11, 2017, effective May 11, 2017. This ordinance prohibits clear-cutting (removal of more than one acre) of contiguous trees within an oak woodland and on slopes $\geq$30 percent, without an exemption or permit. Property owners who want to remove less than one acre of oak woodland can be authorized by filing an Oak Woodland Tree Removal Form with the Department of Planning

and Building (County 2018b). No oak trees will be removed as part of this project, and none will be indirectly affected.

The project site falls within the North Coast Area Plan (County 2018a). This plan defines and maps ESHA in the planning area, and indicates a geologic study area for moderate to high landslide risk on the project site. The plan also contains several combining designations near the study site but not within it. Utility projects are an allowable use in ESHA in accordance with the County's Coastal Zone Land Use Ordinance. The project has been designed to minimize or avoid effects to the extent possible and mitigation detailed herein will reduce impacts to a level below significance. Since there is no conflict with local policies or ordinances, no mitigation is required.

F) Conflicts with Local, Regional or State Conservation Plans

The project site is not in an area subject to a Habitat Conservation Plan, Natural Community Conservation Plan or other such habitat conservation plan; therefore, no conflict would occur. Because there would be no conflicts with local, regional or state conservation plans, no mitigation is required.

4.2. Cumulative Effects

The proposed project will affect a minimal area of a common habitat type (grassland) that exists in a somewhat degraded state from its use as a horse paddock. While there is some wildlife habitat value to the area, construction of the project will involve a small footprint that will not affect the habitat value of the area overall. No sensitive natural communities, designated critical habitat, ESHA, wetlands, riparian areas or streams occur within project impact areas or are located offsite and may be indirectly affected. Mitigation has been prescribed for potential impacts on special-status species that would bring effects below the level of significance. Because there would be no effects of the project in the context of the site's importance in the overall area, the project would not contribute to cumulative effects of other non-federal projects planned in the area.

5.0 CONCLUSION

The proposed project site is located in a coastal area of northern San Luis Obispo County in which there are a relatively large number of sensitive biological resources. However, the project footprint is relatively small, and it is planned to be constructed in an area that does not contain sensitive habitats and has been disturbed by grazing. There is a possibility that several rare plant species may occur onsite. Mitigation proposed herein includes seasonally timed rare plant surveys and if they are found, avoidance and compensatory mitigation measures that will ensure no net loss of rare plants. Because many special-status animal species occur in the site vicinity, there is a chance that individuals may use the site periodically for various aspects of their life history. Nesting sites, nursery sites, or other habitat elements that would support breeding populations are largely absent from the site, with the exception of ground-nesting birds. This is in part due to the lack of aquatic habitat or trees on the site. However, Pico Creek is about 200 meters away from the site, and the site is located in a relatively vast area of undeveloped habitat; therefore, wildlife species may pass through the site or forage minimally onsite. Species-specific mitigation measures have been prescribed to reduce impacts on special-status wildlife to a level below significance. Standard construction mitigation measures and BMPs are also prescribed to reduce any potential project effects in general. With the incorporation of these mitigation measures, no impacts of the project would potentially be significant.

6.0 REFERENCES

Bolster, B.C. (editor). 1998. Draft Terrestrial Mammal Species of Special Concern in California. Contributing authors: P.V. Brylski, P.W. Collins, E.D. Pierson, W.E. Rainey and T.E. Kucera. Prepared for California Department of Fish and Game, Wildlife Management Division, Nongame Bird and Mammal Conservation Program. Contract FG3146WM.

Bulger, J.B., N.J. Scott, and R.B. Seymour. 2003. Terrestrial activity and conservation of adult California red-legged frogs *Rana aurora draytonii* in coastal forests and grasslands. Biological Conservation 110:85-95.

Calflora. 2018. Information on wild California plants for conservation, education, and appreciation. Berkeley, CA. Accessed via http://www.calflora.org/ in December 2018.

California Department of Fish and Game. 2001. Fish and Game Code of California, Section 3503.5. Gould Publications, Altamonte Springs, FL.

California Department of Fish and Game. 2009. Protocols for Surveying and Evaluating Impacts to Special Status Native Plant Populations and Natural Communities. November 24, 2009.

California Department of Fish and Wildlife (CDFW). 2018a (August). Special Animals. Biogeographic Data Branch, California Natural Diversity Database.

California Department of Fish and Wildlife (CDFW). 2018b (August). Special Vascular Plants, Bryophytes, and Lichens List. Quarterly publication. Natural Diversity Database.

California Department of Fish and Wildlife (CDFW). 2018c. California Natural Diversity Database (CNDDB). Commercial version dated September 30, 2018. Accessed in December 2018.

California Department of Fish and Wildlife (CDFW). 2018d. Vegetation Classification and Mapping Program (VegCAMP). Accessed via: https://www.wildlife.ca.gov/Data/VegCAMP in December 2018.

California Department of Fish and Wildlife (CDFW). 2018e. California Wildlife Habitat Relations. Accessed via: https://www.wildlife.ca.gov/data/cwhr in December 2018.

California Herps. 2018. A Guide to the Amphibians and Reptiles of California. Accessed via: http://www.californiaherps.com in December 2018.

California Native Plant Society. 2018. Inventory of Rare and Endangered Plants of California. Online edition V8-03 0.39. Accessed via: http://www.rareplants.cnps.org in December 2018.

The Cornell Lab of Ornithology. 2018a. eBird. Accessed via: https://ebird.org in December 2018.

The Cornell Lab of Ornithology. 2018b. All About Birds. Accessed via: https://www.allaboutbirds.org in December 2018.

County of San Luis Obispo (County). 2016. Draft Guidelines for Biological Resources Assessments, Guidelines for Biological Consultants. Department of Planning and Building.

County of San Luis Obispo (County). 2018a. North Coast Area Plan. The Land Use and Circulation Elements of the San Luis Obispo County General Plan. Adopted by the San Luis Obispo County Board of Supervisors September 22, 1980 - Resolution 80-350. Revised October 5, 2018.

County of San Luis Obispo (County). 2018b. Oak Woodland Ordinance. Accessed via: https://www.slocounty.ca.gov/Departments/Planning-Building/Long-Range-Planning/Services/Oak-Woodland-Ordinance.aspx in December 2018.

Holland, R.F. 1986. Preliminary Descriptions of the Terrestrial Natural Communities of California. California Department of Fish and Game, Sacramento.

Hoover, R.F. 1970. The Vascular Plants of San Luis Obispo County, California. University of California Press, Berkeley, CA.

Jennings, M. R., and M. P. Hayes. 1994. Amphibian and reptile species of special concern in California, 1 November 1994. California Department of Fish and Game, Inland Fisheries Division, Rancho Cordova, California. 255 pp.

Jepson Flora Project (editors). 2018. Jepson eFlora. The Jepson Herbarium, University of California, Berkeley. Accessed via: http://ucjeps.berkeley.edu/eflora/ in December 2018.

Lanoo, M (editor). 2005. Amphibian Declines: The Conservation Status of United States Species. University of California Press.

Natural Resources Conservation Service. 2018. Web Soil Survey. National Cooperative Soil Survey, U.S. Department of Agriculture. Accessed via: http://websoilsurvey.nrcs.usda.gov/ in December 2018.

Pilliod, D.S., J.L. Welty, and R. Stafford. 2013. Terrestrial movement patterns of western pond turtles (*Actinemys marmorata*) in central California. Herpetological Conservation and Biology 8(1):207-221.

Rathbun, G.B., N. Siepel, and D. Holland. 1992. Nesting behavior and movements of western pond turtles, *Clemmys marmorata*. The Southwestern Naturalist 37(3):319-324.

Rathbun, G.B., M.R. Jennings, T.G. Murphey, and N.R. Siepel. 1993. Status and ecology of sensitive aquatic vertebrates in lower San Simeon and Pico Creeks, San Luis Obispo County, California. Final Report under Cooperative Agreement 14-16-0009-91-1909 between U.S. Fish and Wildlife Service and California Department of Parks and Recreation. Publication Number PB93-230779, National Technical Information Service, Springfield, Virginia.

Rathbun, G.B., N.J. Scott, Jr., and T.G. Murphey. 2002. Terrestrial habitat use by Pacific pond turtles in a Mediterranean Climate. The Southwestern Naturalist 47(2):225-235.

Reese, D.A., and H.H. Welsh. 1997. Use of terrestrial habitat by western pond turtles, *Clemmys marmorata*: Implications for management. Pages 352-357 *In* Proceedings: Conservation, Restoration, and Management of Tortoises and Turtles. An International Conference held by the New York Turtle and Tortoise Society.

Sawyer, J. O., T. Keeler-Wolf, and J.M. Evens. 2009. A Manual of California Vegetation, Second Edition. California Native Plant Society, Sacramento, CA.

Scott, N.J., G.B. Rathbun, T.G. Murphey, and M.B. Harker. 2008. Reproduction of Pacific pond turtles (*Actinemys marmorata*) in coastal streams of central California. Herpetological Conservation and Biology 3(2):143-148.

United States Fish and Wildlife Service (USFWS). 2000. Guidelines for Conducting and Reporting Botanical Inventories for Federally Listed, Proposed, and Candidate Plants. January 2000.

United States Fish and Wildlife Service (USFWS). 2018a. National Wetlands Inventory. U.S. Department of the Interior, Washington, D.C. Accessed via: http://www.fws.gov/wetlands/ in December 2018.

United States Fish and Wildlife Service (USFWS). 2018b. Threatened and Endangered Species Active Critical Habitat Report. ECOS Environmental Conservation Online System. Accessed via: https://ecos.fws. gov in December 2018.

Wilkerson, R.L. and R.B. Siegel. 2010. Assessing changes in the distribution and abundance of burrowing owls in California, 1993-2007. Bird Populations 10:1-36.

APPENDIX A

Species Observed List

KMA

Appendix A – List of Plants and Animals Observed Onsite During the Site Visit

Scientific Name*	Common Name
Plants	
*Aira caryophyllea**	Silvery hairgrass
Artemisia californica	California sagebrush
*Avena barbata**	Slender wild oats
Baccharis pilularis	Coyote brush
*Bellardia trixago**	Mediterranean linseed
*Briza maxima**	Rattlesnake grass
*Bromus diandrus**	Ripgut brome
*Bromus hordeacous**	Soft chess
*Cirsium vulgare**	Bull thistle
Chlorogalum pomeridianum	Amole
Danthonia californica	California oatgrass
Deinandra corymbosa	Coastal tarweed
Elymus glaucus	Blue wild rye
Eschscholzia californica	California poppy
*Festuca perennis**	Italian rye grass
Frangula californica	California coffeeberry
Heteromeles arbutifolia	Toyon
*Hirschfeldia incana**	Summer mustard
Hordeum marinum ssp. *gussoneanum**	Mediterranean barley
Hordeum murinum ssp. *leporinum**	Hare barley
Juncus occidentalis	Western rush
*Lysimachia arvensis**	Scarlet pimpernel
Pinus radiata	Monterey pine (mostly outside study area)
*Plantago lanceolata**	English plantain
Quercus agrifolia	Coast live oak
*Rumex acetosella**	Sheep sorrel
*Rumex pulcher**	Fiddleneck dock
Stipa pulchra	Purple needle grass
Thermopsis macrophylla	Santa Ynez false lupine
Toxicodendron diversilobum	Poison oak
Animals	
Cathartes aura	Turkey vulture
Circus hudsonius	Northern harrier
Falco sparverius	American kestrel
Otospermophilus beecheyi	California ground-squirrel
Thomomys bottae	Botta's pocket gopher

*Non-native plant species.

APPENDIX B

Photo Plate

KMA

Appendix B. Photo Plate

Photo 1. Grassland habitats in the project site that have been grazed by horses. Also shown is the perimeter fence.

Photo 2. Grassland habitat with scattered coyote brush (*Baccharis pilularis*) shrubs along the study area perimeter. Monterey pine forest outside the boundary of the site is seen in the distance.

Photo 3. A native bunchgrass, purple needle grass (*Stipa pulchra*), occurred as a component of the grassland habitat in areas with lower disturbance.

Photo 4. A deceased Monterey pine (*Pinus radiata*) along the edge of the study area was the only tree present.

Photo 5. Grassland habitat had elements of coastal terrace prairie in areas with lower disturbance.

Photo 6. Ruderal areas along the interior pipe fence line where tramping and grazing effects were more pronounced.

Photo 7. View from the southern perimeter fence looking southwest toward the existing reservoir. The new water line would run along the fence to the new tanks.

Photo 8. Coastal scrub habitat along the access road, looking toward the entrance of the site with the community of San Simeon in the distance. This road would be improved to 12 feet wide and surfaced with decomposed granite or crushed miscellaneous base.

APPENDIX C

Special Status Species Table

KMA

Appendix C. Special-status Biological Resources Known from the Project Vicinity

Scientific Name	Common Name	Fed	CA	Rare Plant Rank	Habitat	Probability of Occurrence / Site Suitability / Observations
PLANTS						
Abies bracteata	Santa Lucia fir (=bristlecone fir)	—	—	1B.3	Evergreen tree; broadleaved upland forest, chaparral, lower montane coniferous forest, and riparian woodland; 183-1555 meters in elevation.	**Not expected.** No forest or woodland habitat occurs on the project site, and it is outside of the elevational range of the species. Not expected to occur onsite.
Agrostis hooveri	Hoover's bent grass	—	—	1B.2	Perennial grass; closed-cone coniferous forest, chaparral, cismontane woodland, valley and foothill grassland usually on sandy soils derived from sandstone or shale; 6-610 meters in elevation; blooms April to July.	**Unlikely.** Suitable grassland habitat is present and the site is within the elevational range of the species, but onsite soils are not sandy and may be unsuitable. Low probability to occur onsite.
Allium hickmanii	Hickman's onion	—	—	1B.2	Perennial bulbiferous herb; closed-cone coniferous forest, maritime chaparral, coastal prairie, coastal scrub, and grassland occasionally in wetlands; 5-200 meters in elevation; blooms March to May.	**Potential.** Suitable grassland and coastal scrub habitats are present and the site is within the elevational range of the species. Grazing disturbance may have reduced the potential for occurring but seasonally timed rare plant survey is needed. Could occur onsite.
Arctostaphylos cruzensis	Arroyo de la Cruz manzanita	—	—	1B.2	Perennial evergreen shrub; broadleaved upland forest, coastal bluff scrub, closed-cone coniferous forest, chaparral, coastal scrub, and valley and foothill grassland in sandy soils; 60-310 meters in elevation; blooms December to March.	**Not expected.** Although suitable grassland and coastal scrub habitat is present onsite, the site is just outside of the elevational range and would have been seen during the survey. Not expected to occur onsite.

Scientific Name	Common Name	Fed	CA	Rare Plant Rank	Habitat	Probability of Occurrence / Site Suitability / Observations
Arctostaphylos hookeri ssp. *hearstiorum*	Hearsts' manzanita	—	—	1B.2	Perennial evergreen shrub; maritime chaparral, coastal prairie, coastal scrub, valley and foothill grassland in sandy soils; 55-200 meters in elevation; blooms February to April.	**Not expected.** Although suitable grassland and coastal scrub habitat is present onsite, the site is just outside of the elevational range and would have been seen during the survey. Not expected to occur onsite.
Arctostaphylos obispoensis	Bishop manzanita	—	—	4.3	Perennial evergreen shrub; closed-cone coniferous forest, chaparral, and cismontane woodland on rocky serpentine soil; 150-1005 meters in elevation; blooms February to June.	**Not expected.** No suitable habitat or soils, the site is outside of the elevational range, and would have been seen during the survey. Not expected to occur onsite.
Astragalus pycnostachyus var. *pycnostachyus*	coastal marsh milk-vetch	—	—	1B.2	Perennial herb; mesic coastal dunes, coastal scrub, marshes, swamps, and streamsides; 0-30 meters in elevation; blooms April to June.	**Unlikely.** Suitable coastal scrub mesic grassland habitat are present and the site is within the species' elevational range, but wetland conditions are not present onsite and this perennial species would have been observed during the survey. Low potential to occur onsite.
Baccharis plummerae ssp. *glabrata*	San Simeon baccharis	—	—	1B.2	Perennial deciduous shrub; coastal scrub; 50-480 meters in elevation; blooms in June.	**Unlikely.** Suitable coastal scrub habitat is present but the site is outside of the species' elevational range. Not observed during survey. Low potential to occur onsite.
Bloomeria humilis	dwarf goldenstar	—	—	1B.2	Perennial bulbiferous herb; coastal bluff scrub, chaparral, valley and foothill grassland; 10-120 meters in elevation; blooms in June.	**Potential.** Suitable grassland habitat is present and the site is within the species' elevational range. Grazing disturbance may have reduced the potential of this species from occurring but seasonally timed rare plant survey is needed. Could occur onsite.

Scientific Name	Common Name	Fed	CA	Rare Plant Rank	Habitat	Probability of Occurrence / Site Suitability / Observations
Calandrinia breweri	Brewer's calandrinia	—	—	4.2	Annual herb; chaparral and coastal scrub including disturbed sites and burned areas with sandy or loamy soil; 10-1200 meters in elevation; blooms March to June.	**Potential.** Suitable coastal scrub habitat and loamy soils are present and the site is within the species' elevational range. Could occur onsite.
Calochortus clavatus var. *recurvifolius*	Arroyo de la Cruz mariposa lily	—	—	1B.2	Perennial bulbiferous herb; coastal bluff scrub, maritime chaparral, coastal prairie, lower montane coniferous forest; 10-120 meters in elevation; blooms June to July.	**Unlikely.** Elements of coastal prairie habitat are present on the project site and it is within the elevational range, but grazing disturbance may preclude this perennial species from occurring and it is known from fewer than ten occurrences. Low potential to occur onsite.
Calochortus fimbriatus	late-flowered mariposa lily	—	—	1B.3	Perennial bulbiferous herb; chaparral, cismontane woodland, riparian woodland often on serpentine soils; 275-1905 meters in elevation; blooms June to August.	**Not expected.** No suitable habitat or soils are present, the project site is outside of the species' elevational range and grazing disturbance may preclude this perennial species from occurring. Not expected to occur onsite.
Calochortus obispoensis	San Luis Obispo mariposa lily	—	—	1B.2	Perennial bulbiferous herb; chaparral, cismontane woodland, coastal scrub, valley and foothill grassland often on serpentine soils; 50-730 meters in elevation; blooms May to July.	**Not expected.** Suitable soils are absent, the project site is outside of the species' elevational range and grazing disturbance may preclude this perennial species from occurring. Not expected to occur onsite.
Calystegia subacaulis ssp. *episcopalis*	Cambria morning-glory	—	—	4.2	Perennial herb; grassland, chaparral, coastal prairie and cismontane woodland in open areas usually with clay soils; 30-500 meters in elevation; blooms April to May.	**Potential.** Suitable grassland habitat with open areas is present and the site is within the species' elevational range, although clay soils are absent, species has been observed on loamy soils. Could occur onsite.

Scientific Name	Common Name	Fed	CA	Rare Plant Rank	Habitat	Probability of Occurrence / Site Suitability / Observations
Camissoniopsis hardhamiae	Hardham's evening-primrose	—	—	1B.2	Annual herb; disturbed or burned areas in chaparral and cismontane woodland with sandy or decomposed carbonate soils; 140-945 meters in elevation; blooms March to May.	**Not expected.** Although marginally suitable habitat is present around the boundaries of woodland habitat, the site is outside of the species' elevational range. Not expected to occur onsite.
Carex obispoensis	San Luis Obispo sedge	—	—	1B.2	Perennial herb; closed-cone coniferous forest, chaparral, coastal prairie, coastal scrub, valley and foothill grassland, often on serpentine and clay soils in seeps; 10-820 meters in elevation; blooms April to June.	**Unlikely.** Suitable habitat and elevation are present, although soils may be marginal and mesic conditions are absent. Low probability to occur onsite.
Castilleja densiflora var. *obispoensis*	San Luis Obispo owl's clover	—	—	1B.2	Annual herb; meadows, seeps, and valley and foothill grassland sometimes on serpentine; 10 to 400 meters in elevation; blooms March to May.	**Potential.** Suitable habitat is present in grasslands onsite and the site is within the species' elevational range although mesic conditions are absent. Could occur onsite.
Ceanothus hearstiorum	Hearsts' ceanothus	—	—	1B.2	Perennial evergreen shrub; maritime chaparral, coastal prairie, coastal scrub; 75-245 meters in elevation; blooms March to April.	**Not expected.** Potentially suitable coastal scrub and elements of coastal prairie habitat are present, but the site is outside of the species' elevational range and this shrub likely would have been seen during the survey. Not expected to occur onsite.
Ceanothus maritimus	San Luis Obispo ceanothus (=maritime ceanothus)	—	—	1B.2	Perennial evergreen shrub; coastal bluff scrub, maritime chaparral, and valley and foothill grassland on clay soils; 10-150 meters in elevation; blooms January to April.	**Not expected.** Potentially suitable grassland habitat is present, and the site is within the species' elevational range, but clay soils are absent and this shrub likely would have been seen during the survey. Not expected to occur onsite.

Scientific Name	Common Name	Fed	CA	Rare Plant Rank	Habitat	Probability of Occurrence / Site Suitability / Observations
Chorizanthe pungens var. *pungens*	Monterey spineflower	—	—	1B.2	Annual herb; maritime chaparral, cismontane woodland, coastal dunes, coastal scrub, valley and foothill grassland on sandy soils; 3-450 meters in elevation; blooms April to August.	**Not expected.** Suitable habitat is present in grassland and coastal scrub areas onsite and the site is within the species' elevational range, but sandy soils are absent. Not expected to occur onsite.
Cirsium fontinale var. *obispoense*	San Luis Obispo fountain thistle	E	E	1B.2	Perennial herb; chaparral, cismontane woodland, coastal scrub, valley and foothill grassland in seeps and drainages with serpentine; 35-385 meters in elevation; blooms February to September.	**Not expected.** Suitable grassland and coastal scrub habitat are present, but no wetlands, seeps or serpentine soils are present and it is a perennial species that would have been observed during the survey. Not expected to occur onsite.
Cirsium occidentale var. *compactum*	compact cobwebby thistle	—	—	1B.2	Perennial herb; chaparral, coastal scrub, coastal dunes, coastal prairie; 5-150 meters in elevation; blooms April to July.	**Potential.** Suitable coastal scrub and elements of coastal prairie habitat are present and the site is within the species' elevational range. Recorded very close to the project area. Could occur onsite.
Delphinium parryi ssp. *blochmaniae*	dune larkspur	—	—	1B.2	Perennial herb; maritime chaparral and coastal dunes, including rocky areas; 0-200 meters in elevation; blooms April to June.	**Not expected.** Suitable habitat is not present and the only record in the vicinity is unverified; otherwise its local distribution is from Morro Bay south to Guadalupe. Not expected to occur onsite
Delphinium parryi ssp. *eastwoodiae*	Eastwood's larkspur	—	—	1B.2	Perennial herb; chaparral, valley & foothill grassland generally in serpentine soils; 75-500 meters in elevation; blooms February to March.	**Not expected.** No documented occurrences are in the project vicinity - CNDDB mapped location appears to be an error (Stenner Cr. in SLO - not Steiner Cr. in Cambria). Serpentine not present. Not expected to occur onsite.

Scientific Name	Common Name	Fed	CA	Rare Plant Rank	Habitat	Probability of Occurrence / Site Suitability / Observations
Dudleya blochmaniae ssp. *blochmaniae*	Blochman's dudleya	—	—	1B.1	Perennial herb; coastal bluff scrub, chaparral, coastal scrub, and valley and foothill grassland on rocky, often clay or serpentine soils and sandstone rock outcrops; 5 - 450 meters in elevation; blooms April through June.	**Potential.** Suitable habitat is present in grassland and coastal scrub and the site is within the species' elevational range and some rocky areas are present along the access road. Could occur within the study area but unlikely to be in impact areas.
Eryngium aristulatum var. *hooveri*	Hoover's button-celery	—	—	1B.1	Herb that can occur as either an annual or a perennial; vernal pools, seasonally wet grasslands, and roadside ditches; 3-45 meters in elevation; blooms June to August.	**Not expected.** No suitable mesic habitat or vernal pools are present. Not expected to occur onsite.
Galium californicum ssp. *luciense*	Cone Peak bedstraw	—	—	1B.3	Perennial herb; broad-leaved upland forest, chaparral, cismontane woodland lower montane coniferous forest often on rocky soils and sometimes serpentine; 400-1525 feet in elevation; blooms March to September.	**Not expected.** The project area is outside of the elevational range of the species and no suitable habitat is present. Not expected to occur onsite.
Galium hardhamiae	Hardham's bedstraw	—	—	1B.3	Perennial herb; closed-cone coniferous forest and chaparral in serpentine soils; 395-975 meters in elevation; blooms April to October.	**Not expected.** The project area is outside of the elevational range of the species and no suitable habitat is present. Not expected to occur onsite.
Horkelia cuneata var. *sericea*	Kellogg's horkelia	—	—	1B.1	Perennial herb; closed-cone coniferous forest, maritime chaparral, and coastal scrub on sandy or gravelly soils often in open areas; 10-200 meters in elevation; blooms April through September.	**Unlikely.** Suitable habitat exists onsite in coastal scrub along the access road where appropriate soils are present, but it is a perennial species that would have been observed during the survey. Low probability to occur onsite.

Scientific Name	Common Name	Fed	CA	Rare Plant Rank	Habitat	Probability of Occurrence / Site Suitability / Observations
Horkelia cuneata var. puberula	mesa horkelia	—	—	1B.1	Perennial herb; chaparral, cismontane woodland, coastal scrub; sandy or gravelly soils; 70- 810 meters elevation; blooms February to September.	**Not expected.** The project area is outside of the elevational range and local distribution of the variety - the nearby record is imprecise and has not been verified. Not expected to occur onsite.
Lasthenia californica ssp. *macrantha*	perennial goldfields	—	—	1B.2	Perennial herb; coastal bluff scrub, coastal dunes and coastal scrub; 5-520 meters in elevation; blooms January to November.	**Potential.** Suitable habitat is present in coastal scrub onsite and the project area is within the elevational range of the species. Could occur onsite.
Malacothamnus palmeri var. *palmeri*	Santa Lucia bush-mallow	—	—	1B.2	Perennial deciduous shrub; chaparral on rocky soils and slopes, but occasionally extending down canyons to near sea level; 3-670 meters in elevation; blooms May to July.	**Unlikely.** Chaparral habitat is not present, but has been recorded adjacent to the site in atypical habitat consisting of a gravel bar along Pico Creek. Perennial shrub that would have been seen during the surveys. Low probability to occur onsite.
Microseris paludosa	marsh microseris	—	—	1B.2	Perennial herb; closed-cone coniferous forest, open cismontane woodland, coastal scrub, moist valley and foothill grassland; 5-355 meters in elevation; blooms April to July.	**Potential.** Suitable habitat is present in coastal scrub and grassland onsite, and the project area is within the elevational range of the species. Could occur onsite.
Monardella palmeri	Palmer's monardella	—	—	1B.2	Perennial herb; chaparral and cismontane woodland on serpentine soils; 200-800 meters in elevation; blooms June to August.	**Not expected.** The project area is outside the elevational range of the species and suitable habitat is absent. Not expected to occur onsite.
Monardella sinuata ssp. *sinuata*	southern curly-leaved monardella	—	—	1B.2	Annual herb; chaparral, cismontane woodland, coastal dunes and coastal scrub in openings on sandy soils; 0-300 meters in elevation; blooms April to September.	**Unlikely.** Suitable habitat is present along the access road in coastal scrub habitat, but sandy soils are absent. Low potential to occur onsite.

Scientific Name	Common Name	Fed	CA	Rare Plant Rank	Habitat	Probability of Occurrence / Site Suitability / Observations
Monolopia gracilens	woodland woollythreads	—	—	1B.2	Annual herb; openings of broad-leaved upland forest, chaparral, cismontane woodland, north coast coniferous forest and valley and foothill grassland typically on serpentine; 100 to 1,200 meters in elevation; blooms February to July.	**Not expected.** The site is outside the elevational range documented for the species as the nearby records are imprecise locations that have not been verified. Not expected to occur onsite.
Pedicularis dudleyi	Dudley's lousewort	—	—	1B.2	Perennial herb; maritime chaparral, cismontane woodland, coniferous forest, valley and foothill grassland; 60-900 meters in elevation; blooms April to July.	**Unlikely.** Suitable grassland habitat is present, but the project area is just outside the elevational range of the species. Low probability to occur onsite.
Perideridia gairdneri ssp. *gairdneri*	Gairdner's yampah	—	—	4.2	Perennial herb; broadleafed upland forest, chaparral, coastal prairie, valley and foothill grassland, vernal pools; 0-610 meters in elevation; blooms June – October	**Potential.** Suitable grassland habitat is present onsite and is within the elevational range of the species. Could occur onsite.
Pinus radiata	Monterey pine	—	—	1B.1	Perennial evergreen tree; closed-cone coniferous forest and cismontane woodland; 25-185 meters in elevation.	**Present.** Monterey pine forest exists surrounding the project area, and one deceased tree occurred in the study area, although none are within the impact area.
Sanicula maritima	adobe sanicle	—	R	1B.1	Perennial herb; chaparral, coastal prairie, meadows and seeps, valley and foothill grassland on clay and serpentine soils; 30-240 meters in elevation; blooms February to May.	**Unlikely.** Suitable grassland and coastal prairie habitat are present, but suitable serpentine soils are absent. Low probability to occur onsite.
Senecio aphanactis	chaparral ragwort	—	—	2B.2	Annual herb; chaparral, cismontane woodland, coastal scrub in drying alkaline flats; 15-800 meters in elevation; blooms January to April.	**Not Expected.** Suitable coastal scrub habitat is present at the appropriate elevation but no verified records in the vicinity - CNDDB mapped location appears to be an error (Stenner Cr. in SLO - not Steiner Cr. in Cambria). Not expected to occur onsite.

Scientific Name	Common Name	Fed	CA	Rare Plant Rank	Habitat	Probability of Occurrence / Site Suitability / Observations
Streptanthus albidus ssp. *peramoenus*	most beautiful jewel flower	—	—	1B.2	Annual herb; chaparral, cismontane woodland, valley & foothill grassland in serpentine soils; 94-1000 meters in elevation; blooms March to October.	**Not Expected.** Grassland occur onsite but the site is outside the elevational range of the species and no suitable soils onsite. Not expected to occur onsite.
Triteleia ixioides ssp. *cookii*	Cook's triteleia	—	—	1B.3	Perennial bulbiferous herb; cismontane woodland, closed-cone coniferous forest in moist places with serpentine soils; 150-700 meters in elevation; blooms May to June.	**Not expected.** No suitable habitat onsite and the project area is outside the elevational range of the subspecies. Not expected to occur onsite.

**E = Endangered; T = Threatened; R = Rare; '—' = no status; Rank 1B – Rare or endangered in California and elsewhere; Rank 2A – Presumed extirpated in California, but more common elsewhere; Rank 2B – Rare or endangered in California, but more common elsewhere; Rank 4 – Limited distribution (Watch List). Sources: California Natural Diversity Database (California Department of Fish and Wildlife 2018a); Special Vascular Plants, Bryophytes, and Lichens List (California Department of Fish and Wildlife 2018d); Inventory of Rare and Endangered Plants of California (California Native Plant Society 2018); Information on Wild California Plants for Conservation, Education, and Appreciation (Calflora 2018).*

NATURAL COMMUNITIES	
Monterey Pine Forest - State Rank S1.1	**Present.** Monterey pine forest is present around the boundary of the project site, with a few trees within the fenceline that delineates the horse corrals. Only one dead tree observed in the study area, likely the result of pitch canker.

Scientific Name	Common Name	Fed	CA	CDFW	Habitat	Probability of Occurrence / Site Suitability / Observations
INVERTEBRATES						
Bombus caliginosus	obscure bumblebee	—	—	—	Found on ceanothus, thistles, sweet peas, lupines, willows, clover and blackberry. Queens emerge from hibernation in late January, workers appear in early March, and males emerge in April. Colonies dissolve in late October, with only the new queens surviving.	**Potential.** Suitable habitat for foraging workers may be present onsite, but little is known about this species in the area. The only record in the site vicinity is from 1975 in the general vicinity of Cambria. Could occur onsite.
Danaus plexippus pop. 1	monarch butterfly (overwintering population)	—	—	—	Wind-protected tree groves of eucalyptus, Monterey pine and cypress along the coast, with nectar and water sources nearby.	**Unlikely.** May occur in Monterey pine forest surrounding the site and fly over the project site. Overwintering roost sites in tree groves are not present within the project area. Low probability to occur onsite.
FISH						
Eucyclogobius newberryi	tidewater goby	E	—	SSC	Small, euryhaline, benthic fish that inhabits coastal lagoons, estuaries, stream mouths, and backwater marshes, rarely in open ocean. Usually in brackish lower reaches but can occur up to 7 miles upstream from the ocean. Requires shallow water with little to no flow and fine substrate.	**Not expected.** Documented in Pico Creek near the project site, but no aquatic habitat is present within the project area.
Oncorhynchus mykiss irideus pop. 9	south-central California coast steelhead	T	—	—	Adults spawn in freshwater streams with clear, well-oxygenated, cool water and clean gravel substrate. Also require instream cover (branches, logs) and streamside vegetation. Juveniles rear in freshwater reaches or lagoons before going to the ocean to mature, and then return to freshwater to reproduce.	**Not expected.** Documented in Pico Creek near the project site, but no aquatic habitat is present within the project area.

Scientific Name	Common Name	Fed	CA	CDFW	Habitat	Probability of Occurrence / Site Suitability / Observations
AMPHIBIANS/REPTILES						
Actinemys pallida (=*Emys marmorata*)	southwestern pond turtle (=western pond turtle)	—	—	SSC	Ponds, lakes, rivers, streams, marshes, brackish lagoons, and irrigation ditches with a mosaic if vegetation and open areas for basking. Uses upland areas for nesting and in winter, including woodland, forest, grassland, chaparral, and grasslands.	**Potential.** Suitable coastal scrub and grassland upland habitat is present onsite in close proximity to known occupied aquatic habitat at Pico Creek. Could occur onsite during movements for nesting or while using upland habitats, but no aquatic habitat or cover for upland refugia is present in the project area.
Batrachoseps incognitus	San Simeon slender salamander	—	—	—	Open and closed forests of pine, laurel, sycamore and oak woodland. 0-1000 meters in elevation. Usually found under rocks, logs, bark, and other surface objects, and retreats underground when soil dries or temperatures approach freezing. Active on surface January to June during moist conditions with moderate temperatures.	**Potential.** Suitable habitat is present in forest surrounding the site and could enter grassland areas around the perimeter during appropriate moist conditions. Species has been recorded in San Simeon but has been little studied.
Rana boylii	foothill yellow-legged frog	—	CT	SSC	Rocky streams and rivers with open sunny banks, surrounded by forests, chaparral and woodlands. Sometimes found in isolated pools, backwaters, and spring-fed pools. Reproduction is exclusively in streams and rivers. Usually found near water and diurnal.	**Not expected.** Extensive surveys along the coastal streams indicate this species has been extirpated south of Ragged Point, and the most recent observation is from Little Pico Creek in 1999. Suitable habitat is present in Pico Creek, but they would not occur onsite due to remaining close to water.

Scientific Name	Common Name	Fed	CA	CDFW	Habitat	Probability of Occurrence / Site Suitability / Observations
Rana draytonii	California red-legged frog	T	—	SSC	Forages and breeds in streams with deep slow-moving pools, stock ponds, reservoirs, springs, lagoons, and marshes; usually with emergent or riparian vegetation but also found at sites lacking vegetation. Uses riparian and various upland habitats in winter and for dispersal.	**Potential.** No suitable aquatic is habitat present onsite but is known to occur in Pico Creek adjacent to the site, and potentially could use upland areas on the site in winter. Could occur onsite during rainy periods but would not occur at other times of year.
Taricha torosa	California newt (=Coast Range newt)	—	—	SSC	Primarily terrestrial in forests, oak woodlands, chaparral, and rolling grassland. Breeds in ponds, reservoirs and pools of clear streams.	**Potential.** No aquatic is habitat present onsite, but suitable aquatic habitat is present at Pico Creek near the site, and they potentially could use upland areas on the site. Could occur onsite.
Thamnophis hammondii	two-striped gartersnake	—	—	SSC	Pools, creeks, and stock ponds in oak woodland, chaparral, scrub, and coniferous forest. Primarily aquatic, feeding on tadpoles, newt larvae, small frogs and toads, fish, earthworms and fish eggs. Occurs in upland habitats in rodent burrows or basking on the surface. Active from January to November, depending on weather.	**Potential.** No suitable aquatic habitat is present onsite but known to occur in Pico Creek and could periodically occur in scrub or grassland areas onsite, especially during winter. Could occur onsite.
BIRDS						
Accipiter cooperii	Cooper's hawk (nesting)	—	—	WL	Woodlands, forests, and riparian areas where they mainly prey on birds; nests in trees usually on flat ground in dense woodlands; occurs year-round in this area.	**Unlikely.** Suitable habitat is in the forest surrounding the site, but generally doesn't forage in open areas such as the grasslands and scrub in the project site. No nesting habitat is present. Low probability to occur onsite.

Scientific Name	Common Name	Fed	CA	CDFW	Habitat	Probability of Occurrence / Site Suitability / Observations
Accipiter striatus	sharp-shinned hawk (nesting)	—	—	WL	Forages along the edges of dense mixed woodlands and forests where they prey on birds; nests in dense forests with closed canopies in conifer trees; occurs in winter in this area.	**Unlikely.** Suitable habitat is in the forest surrounding the site, but generally doesn't forage in open areas such as the grasslands and scrub in the project site. No nesting habitat is present and does not nest in this region. Low probability to occur onsite.
Agelaius tricolor	tricolored blackbird	—	CE	SSC	Forages in a variety of habitats including pastures, agricultural fields, rice fields, and feedlots; nests in freshwater marshes with tules or cattails, or in other dense vegetation such as thistle, blackberry, thickets, in close proximity to open water; occurs year-round in this area.	**Potential.** Suitable foraging habitat is present in grassland areas onsite and could nest in wetland riparian along Pico Creek and ponds near Hwy. 1. Individuals could periodically occur onsite while foraging or moving through the area, but nesting habitat is not present in the project area.
Ammodramus savannarum	grasshopper sparrow	—	—	SSC	Grasslands, prairies, hayfields, and open pastures with little scrub cover and some bare ground where they prey on grasshoppers and other invertebrates; nests on the ground at the base of clumps of grass within a large patch of tall grass; occurs in this area during breeding season.	**Potential.** Suitable foraging and nesting habitat are present onsite, and may nest in grassland areas within the impact footprint. Could occur onsite.
Aquila chrysaetos	golden eagle	—	—	FP, WL	Mountainous and valley-foothill areas in open and semi-open vegetation; forages in open terrain where they prey on small mammals; nesting usually occurs on cliff ledges, and less commonly in large trees or on structures such as electrical towers; occurs year-round in this area.	**Potential.** Foraging could occur in grassland habitats onsite, but the open habitats may not be expansive enough to be ideal. No nesting habitat is onsite. Potentially could nest in large trees surrounding the site but no raptor nests were observed during the survey. Individuals could periodically occur onsite while foraging or moving through the area.

Scientific Name	Common Name	Fed	CA	CDFW	Habitat	Probability of Occurrence / Site Suitability / Observations
Asio otus	long-eared owl (nesting)	—	—	SSC	Roosts in dense forests and forages in open grassland, shrublands, coniferous forest and deciduous woodlands where they prey on small mammals; nests in brushy vegetation adjacent to open habitats or rarely in cavities or on the ground; occurs year-round in this area.	**Potential.** Suitable foraging habitat is present in grassland and coastal scrub areas onsite. Could nest around the perimeter of the site in forest or shrub habitats, and there is a slight chance they could nest on the ground in the grassland habitat. No rootsing habitat in the project area. Could occur onsite.
Athene cunicularia	burrowing owl (burrowing sites & some wintering sites)	—	—	SSC	Open treeless areas with low sparse vegetation such as grasslands, deserts, pastures, agricultural fields, airports, and artificial embankments where they prey on small vertebrates and various invertebrates; nests in burrows created by other animals with nearby lookouts such as fence posts or shrubs; occurs year-round in this area.	**Potential.** Suitable habitat for foraging is present in grassland areas onsite. No longer nests in this region. While ground squirrels were observed in the study area, no large burrow complex present that would be used for nesting. Could occur periodically onsite while foraging.
Buteo regalis	ferruginous hawk	—	—	WL	Open country such as grasslands, sagebrush, saltbush shrubland, and edges of pinyon-juniper forest where they prey on small mammals; nests on lone trees, cliffs, utility poles, and shrubs from ground-level to 65-feet high; occurs in this area during winter.	**Potential.** May forage onsite in grasslands but this habitat may not be expansive enough onsite to be ideal. Does not nest in this region. Could occur onsite periodically while foraging or moving through the area.
Charadrius alexandrinus nivosus	western snowy plover	T	—	SSC	Sand spits, beaches, creek and river mouths, salt flats at lagoons and estuaries, levees, river bars, edges of alkaline lakes and reservoirs where they feed on invertebrates; nesting is on dry ground lacking vegetation; occurs year-round in this area.	**Unlikely.** May occur on the beach and around the Pico Creek lagoon, but would not forage or nest onsite. May fly over the area. Low probability to occur onsite.

Scientific Name	Common Name	Fed	CA	CDFW	Habitat	Probability of Occurrence / Site Suitability / Observations
Circus cyaneus	northern harrier (nesting)	—	—	SSC	Large areas of wetlands and grasslands with low vegetation where they prey on small mammals, amphibians, reptiles and birds; nesting is in marshes, grazed meadows, and desert shrubland where they nest on the ground in a dense clump of vegetation such as willows, grasses, sedge, bulrushes or cattails; occurs year-round in this area.	**Present.** Marginally suitable foraging habitat is present onsite due to limited size, and they are unlikely to nest due to human and grazing disturbance. Could nest in the more expansive areas surrounding the site. Observed flying over the site during the survey.
Elanus leucurus	white-tailed kite (nesting)	—	—	FP	Savannas, open woodlands, marshes, desert grasslands, and fields where they prey on small mammals, birds, lizards, and insects; nests in the edges of forests or in isolated trees; occurs in this area year-round.	**Potential.** Suitable foraging habitat is present in grassland areas onsite. No nesting habitat is present onsite but could nest or roost in the forest edge surrounding the site. Could occur onsite periodically while foraging.
Eremophila alpestris actia	California horned lark	—	—	WL	Areas with sparse vegetation or bare ground in prairies, deserts, tundra, beaches, dunes, airports, plowed fields and heavily grazed pastures where they eat seeds and insects; nesting is on bare ground; occurs year-round in this area.	**Potential.** Suitable foraging and nesting habitat are present onsite in grassland areas, especially where vegetation has been reduced by horses. Could occur onsite.
Falco mexicanus	prairie falcon (nesting)	—	—	WL	Grasslands, desert shrubland, tundra, coastal scrub, feedlots, and agricultural fields where they feed on small mammals, insects and birds; nests on high cliff ledges, steep bluffs, trees, or on buildings or utility poles; occurs year-round in this area.	**Potential.** Suitable foraging habitat is present in grassland and coastal scrub habitat onsite, including areas impacted by horses. No nesting habitat is present, and there is only a slight possibility they would nest in trees surrounding the site. Could occur onsite periodically while foraging.

Scientific Name	Common Name	Fed	CA	CDFW	Habitat	Probability of Occurrence / Site Suitability / Observations
Falco peregrinus anatum	American peregrine falcon (nesting)	—	—	FP	Open habitats along rivers, coastlines, mudflats, islands and lake edges where they prey on birds; nests on cliffs, buildings or utility poles; occurs year-round in this area.	**Potential.** Suitable foraging habitat is present in grassland habitat onsite. No nesting habitat is present on or adjacent to the site. Could occur onsite periodically while foraging.
Haliaeetus leucocephalus	bald eagle	—	E	FP	Open areas near water where they mainly feed on fish, and may also eat birds, amphibians, reptiles, small mammals, and crabs; nests in large mature trees such as ponderosa pine or occasionally on cliffs or the ground, within 1 mile of a large water source; occurs year-round in this area.	**Unlikely.** Suitable foraging habitat is present in grassland habitat onsite, although the paddocks are probably less than ideal and the coastal location offers ample foraging opportunities on fish. No nesting habitat is present on or adjacent to the site. Low probability to occur onsite periodically while foraging or moving through the area.
Lanius ludovicianus	loggerhead shrike (nesting)	—	—	SSC	Open country with low vegetation and well-spaced shrubs or trees such as coastal scrub, grasslands, agricultural fields, pastures, riparian areas, desert scrub, savannas, prairies, golf courses, and along roadsides where they prey on insects, amphibians, reptiles and small mammals; nests in trees, shrubs, or brush piles; occurs in this area year-round.	**Potential.** Suitable habitat for foraging is present in the project area in grassland and scrub habitat, and this species occurs in pastures and other disturbed areas with low vegetation. There is no nesting habitat in project impact areas. Could occur onsite periodically while foraging.
Pelecanus occidentalis californicus	California brown pelican (nesting colony & communal roosts)	—	—	FP	Estuarine, marine subtidal, islands, offshore rocky areas, sandbars and marine pelagic waters where they feed on fish; nests on the ground in dense low shrubs or on an exposed treetop; occurs year-round in this area.	**Not expected.** May occur on nearby beaches and nearshore areas, but unlikely to occur on the project site. Nesting is not expected to occur onsite.

Scientific Name	Common Name	Fed	CA	CDFW	Habitat	Probability of Occurrence / Site Suitability / Observations
Setophaga petechia	yellow warbler	—	—	SSC	Wetland and riparian habitats with willows, cottonwoods, aspens, sycamores and alders where they eat insects; nesting is in shrubs or small trees; occurs year-round in this area.	**Potential.** Suitable riparian habitat is present near the site along Pico Creek, and they may occasionally occur along the forested edge of the site. Low probability to nest in shrubs or trees along the edge of the site, but no nesting habitat is present in project impact areas. Could occur onsite periodically during foraging.
MAMMALS						
Antrozous pallidus	pallid bat	—	—	SSC	Open dry habitats including deserts, grasslands, shrublands, woodlands, and forests; roosts in rocky outcrops, caves, crevasses, mines, hollow trees, and buildings that moderate temperature; night roosts on porches and open buildings.	**Potential.** Suitable foraging habitat present in grassland and scrub habitats onsite, but no roosting habitat is present. Could occur onsite.
Corynorhinus townsendii	Townsend's big-eared bat	—	—	SSC	Desert scrub, sagebrush, chaparral, oak woodlands, riparian and coniferous forests; prefers mesic habitats and closely tied to rock cliffs with crevasses; roosts in caves, cliffs, mines, tunnels and bridges.	**Unlikely.** Potentially suitable foraging habitat is present in woodlands around the boundary of the site, but no suitable foraging habitat is present onsite. Suitable roosting habitat is not present in the area. Low probability to occur onsite.
Myotis thysanodes	fringed myotis	—	—	—	Desert scrub, high elevation coniferous forest, oak woodland, mixed deciduous forest; roosts in caves, buildings, mines and cavities of large trees.	**Unlikely.** Potentially suitable foraging habitat is present in woodlands around the boundary of the site, but no suitable foraging habitat is present onsite. Suitable roosting habitat is not present in the area. Low probability to occur onsite.

Scientific Name	Common Name	Fed	CA	CDFW	Habitat	Probability of Occurrence / Site Suitability / Observations
Myotis volans	long-legged myotis	—	—	—	Montane coniferous forests usually between 2-3000 meters in elevation, also in high desert, redwood forest, and giant sequoia forest; roosts in buildings, mines, and crevices in rocky areas or large trees.	**Not expected.** Suitable elevations and dense forest are not present on or near the project site. Not expected to occur onsite.
Myotis yumanensis	Yuma myotis	—	—	—	Open forests and woodlands with water sources such as ponds, streams, and stock tanks; roosts in buildings, mines, caves, crevices and under bridges; night roosts in more open areas.	**Unlikely.** Potentially suitable foraging habitat is present in woodlands around the boundary of the site, but suitable foraging and roosting habitat is not present. Low probability to occur onsite.
Taxidea taxus	American badger	—	—	SSC	Open grasslands, fields and the edge of scrub and woodland habitats; requires dry loose soils for burrowing and shelter and feeds on a variety of small mammals such as California ground squirrel and pocket gopher.	**Not expected.** Grassland and scrub habitat onsite are potentially suitable, and potential prey was observed, but the type of fencing surrounding the site likely would prevent badgers from accessing the area. No potential dens were observed. Not expected to occur onsite.

**E = Endangered; T = Threatened; C = Candidate; SSC = CDFW Species of Special Concern; FP = Fully Protected; WL = Watch List; '—' = no status; California Natural Diversity Database (California Department of Fish and Wildlife 2018a); Special Animals List (California Department of Fish and Wildlife 2018c); A Guide to the Amphibians and Reptiles of California (California Herps 2018); Lannoo (2005); Rathbun et al. (1993); The Cornell Lab of Ornithology (eBird 2018, All About Birds 2018); Draft Terrestrial Mammal Species of Special Concern in California (Bolster 1998).*

APPENDIX D

Project Plans

KMA

SAN SIMEON COMMUNITY SERVICES DISTRICT

SAN SIMEON, CALIFORNIA

WATER SYSTEM IMPROVEMENT PROJECT
PHASE 1

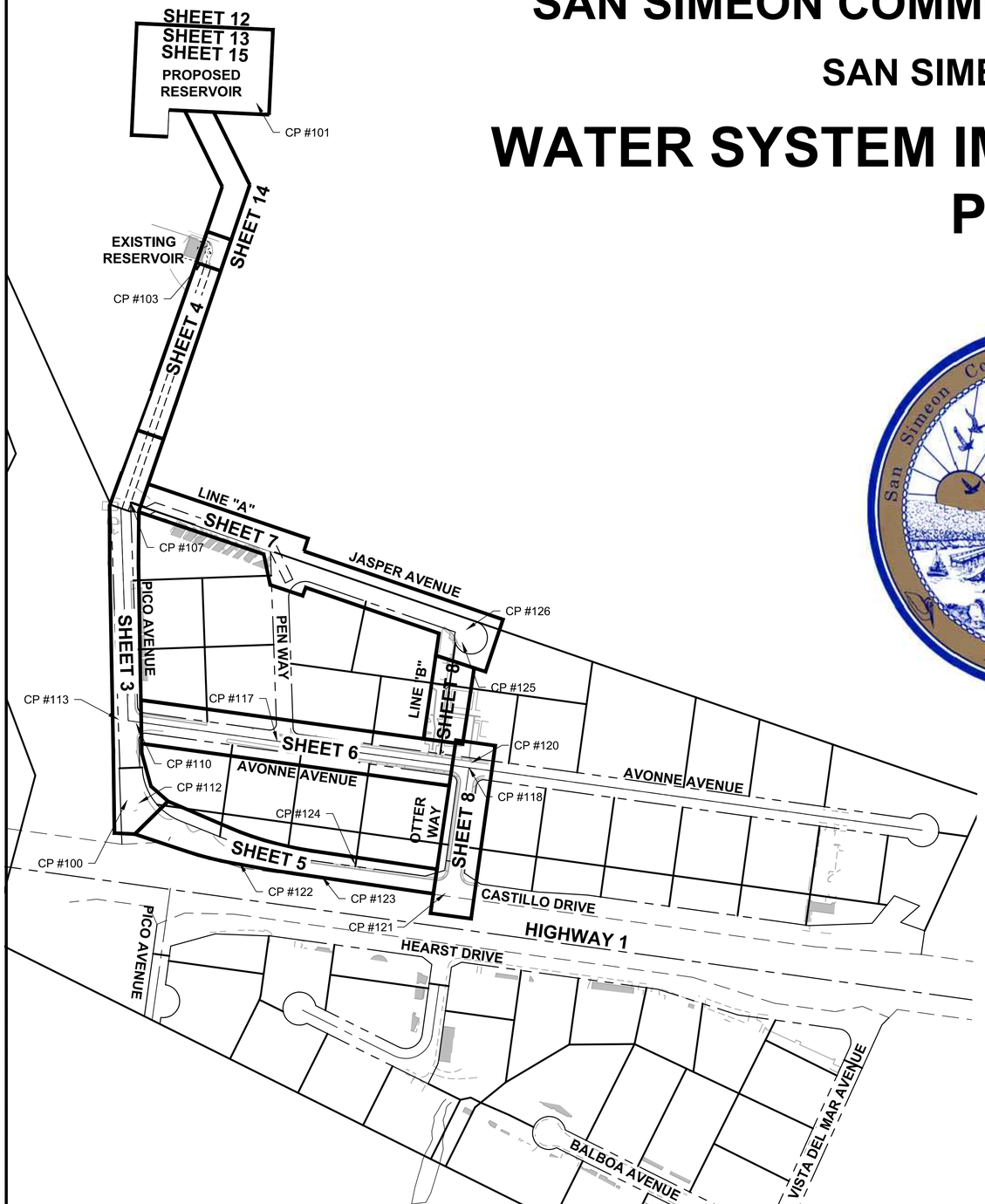

SITE MAP

1" = 200'

SHEET INDEX

DWG. NO.	SHT. NO.	DESCRIPTION
G-01	1	TITLE SHEET
G-02	2	NOTES & ABBREVIATIONS
C-01	3	PICO AVENUE - STA 1+00 TO 11+00
C-02	4	PICO AVENUE - STA 11+00 TO 18+29.07
C-03	5	CASTILLO DRIVE - STA 1+00 TO 10+54.56
C-04	6	AVONNE AVENUE - STA 10+00 TO 20+28.63
C-05	7	LINE "A" - STA 1+00 TO 6+80.33 JASPER AVENUE - STA 1+00 TO 6+34.05
C-06	8	OTTER WAY - STA 1+00 TO 3+51.03 LINE "B" - STA 1+00 TO 4+53.04
C-07	9	WATER MAIN IMPROVEMENT DETAILS
C-08	10	RESERVOIR IMPROVEMENTS INDEX SHEET
C-09	11	RESERVOIR IMPROVEMENTS SITE GRADING
C-10	12	RESERVOIR IMPROVEMENTS SITE GRADING & DETAILS
C-11	13	RESERVOIR SITE UTILITY PLAN
C-12	14	RESERVOIR SITE UTILITY PLAN

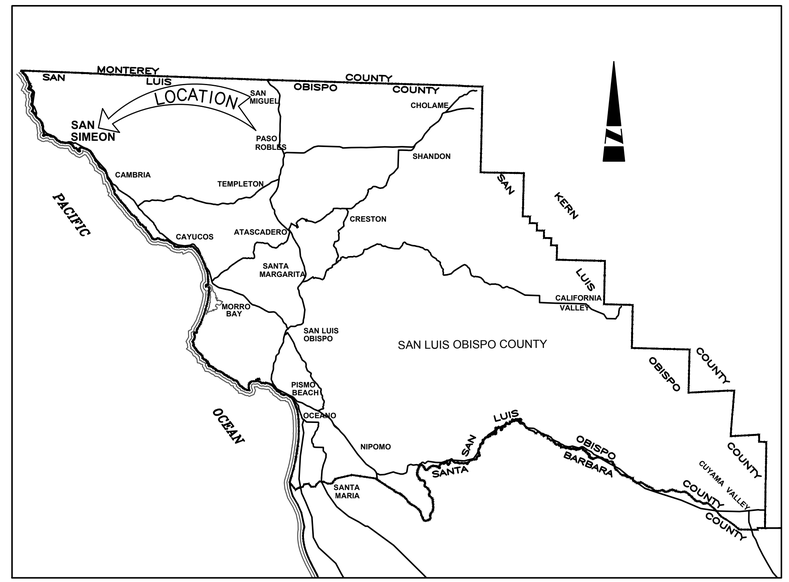

LOCATION MAP

N.T.S.

UTILITY CONTACTS

WATER, SEWER, STORM DRAIN
SAN SIMEON COMMUNITY SERVICES DISTRICT
JERRY COPELAND (805) 927-4778

POWER
PACIFIC GAS AND ELECTRIC
(800) PGE-5000

GAS
SOUTHERN CALIFORNIA GAS COMPANY
(818) 701-4516 x3360

CABLE TV
CHARTER CABLE
(888) 438-2427

SAN SIMEON CABLE

TELEPHONE
AT&T REPRESENTATIVE
FORKERT ENGINEERING AND SURVEY
(714) 963-7964

BENCH MARK

THE BENCH MARK FOR THIS PROJECT IS SLO 1 PM 53.8
ELEVATION = 85.49 (NAVD88)

VERIFY SCALES
BAR IS ONE INCH ON ORIGINAL DRAWING
0 — 1
IF NOT ONE INCH ON THIS SHEET, ADJUST SCALES ACCORDINGLY

Know what's below. Call 811 before you dig.

REGISTERED PROFESSIONAL ENGINEER JONATHON M. JURKER No. 60214 EXP. 6/30/20 CIVIL STATE OF CALIFORNIA

PREPARED BY:
PHOENIX CIVIL ENGINEERING, INC.
535 E. MAIN STREET
SANTA PAULA, CA 93060
(805) 658-6800

REGISTERED CE 60214 EXP. 6-30-20 DATE

REV.	SYM.	DESCRIPTION	R.C.E.	DATE
		50% SUBMITTAL		11/9/18

SAN SIMEON COMMUNITY SERVICES DISTRICT
WATER SYSTEM IMPROVEMENT PROJECT
PHASE 1

TITLE SHEET

REVIEWED BY: GENERAL MANAGER DATE
JOB NO. -
DRAWING NO. G-01

DESIGNED BY:	DRAWN BY:	CHECKED BY:	DATE
JMT	CK	JMT	11/9/18

SHEET 1 OF 14

50% SUBMITTAL

DWG: C:\Users\ChrisKeck\Box\SSCSD Reservoir\ACAD\IMPROVEMENTS\01-SSCSD-TITLE.dwg USER: ChrisKeck
DATE: Nov 09, 2018 9:27am XREF'S: PC-BDR RESERVOIR SSCSD-LO 181301T1 PCE

WATER CONSTRUCTION NOTES:

1. ALL FITTINGS SHALL BE DUCTILE IRON, CL 350 CONFORMING TO CURRENT AWWA STANDARDS, DOUBLE LINED.

2. MECHANICAL RESTRAINED JOINTS SHALL BE USED TO CONNECT C-900 PIPE TO DUCTILE IRON FITTINGS, UNLESS INDICATED OTHERWISE.

3. PVC WATER PIPES SHALL BE AWWA C-900 DR 25 IN CONFORMANCE WITH CONTRACT DOCUMENTS.

4. ALL VALVES ARE RESILIENT WEDGE GATE VALVES, PER CONTRACT DOCUMENTS, UNLESS OTHERWISE NOTED.

5. CONTRACTOR SHALL REMOVE AND DISPOSE OF ALL EXISTING WATERLINE, SERVICE AND APPURTENANCES TO BE REPLACED. CONTRACTOR SHALL COMPLETELY PLUG ENDS OF WATER LINES THAT ARE SLATED TO BE ABANDONED WITH CONCRETE. SALVAGE EXISTING VALVES IN ACCORDANCE WITH THE SPECIAL CONDITIONS.

6. EXISTING WATER MAIN LINES SHALL REMAIN IN SERVICE DURING CONSTRUCTION AND SHALL BE TAKEN OUT OF SERVICE ONLY AFTER THE FINAL CONNECTION OF NEW WATER MAINLINE.

7. THE CONTRACTOR SHALL ARRANGE FOR A PRE-CONSTRUCTION MEETING (48 HOURS MINIMUM PRIOR TO THE START OF CONSTRUCTION) WITH THE DISTRICT REPRESENTATIVE (805) 927-4778. CONTACT THE REGIONAL NOTIFICATION CENTER (UNDERGROUND SERVICE ALERT OF NORTHERN CALIFORNIA - U.S.A. AT 1-800-227-2600) AND REQUEST THAT UTILITY OWNERS MARK OR OTHERWISE INDICATE THE LOCATION OF THEIR FACILITIES.

8. DURING ALL PHASES OF CONSTRUCTION, INCLUDING SUSPENSION OF WORK, UNTIL FINAL ACCEPTANCE OF THE PROJECT, OBSERVE, FOLLOW AND IMPLEMENT ALL THE REQUIREMENTS OF THE NPDES AND STORMWATER POLLUTION PREVENTION PROGRAM AND KEEP THE WORK SITE CLEAN AND FREE FROM RUBBISH AND DEBRIS. ALSO ABATE DUST NUISANCE BY CLEANING, SWEEPING, SPRINKLING WITH WATER AND USING DUST FENCES OR OTHER METHODS AS DIRECTED BY THE DISTRICT'S REPRESENTATIVE THROUGHOUT THE CONSTRUCTION OPERATION.

9. KEEP A STRICT RECORD OF ALL CHANGES AND SUBMIT THIS RECORD TO THE DISTRICT REPRESENTATIVE. ALSO COORDINATE TRANSFERRING "AS-BUILT" INFORMATION ON THE CONTRACT DRAWINGS AND DELIVER THE CERTIFIED "AS-BUILT" PLANS TO THE DISTRICT BEFORE THE FINAL ACCEPTANCE OF THE PROJECT SHALL BE FILED.

10. EXERCISE DUE CARE TO AVOID INJURY TO EXISTING IMPROVEMENTS OR FACILITIES, UTILITY FACILITIES, ADJACENT PROPERTY, AND TREES AND SHRUBBERY THAT ARE NOT TO BE REMOVED. ALL DAMAGE CAUSED TO PUBLIC/PRIVATE STREETS, INCLUDING HAUL ROUTES, ALLEYS, SIDEWALKS, CURBS OR STREET FURNISHINGS, OR TO PRIVATE PROPERTY SHALL BE REPAIRED TO THE SATISFACTION OF THE DISTRICT'S REPRESENTATIVE.

11. DESIGNATE AND KEEP ON THE PROJECT AT ALL TIMES WHILE WORK IS BEING PERFORMED A COMPETENT SUPERINTENDENT WHO SHALL NOT BE REPLACED WITHOUT A WRITTEN NOTICE AND APPROVAL FROM THE DISTRICT. THE SUPERINTENDENT WILL BE THE CONTRACTOR'S REPRESENTATIVE AT THE SITE AND SHALL HAVE AUTHORITY TO ACT ON BEHALF OF THE CONTRACTOR. ALL COMMUNICATIONS GIVEN TO THE SUPERINTENDENT SHALL BE AS BINDING AS IF GIVEN TO THE CONTRACTOR. DURING PERIODS WHEN THE WORK IS SUSPENDED, MAKE APPROPRIATE ARRANGEMENTS FOR ANY EMERGENCY WORK WHICH MAY BE REQUIRED.

12. THE COST OF ALL INITIAL TESTING AND RETESTING TO BE PERFORMED UNDER THE DIRECTION OF THE DISTRICT'S REPRESENTATIVE SHALL BE BORNE BY THE CONTRACTOR.

13. WHEN THE WORK ON ANY PORTION OF THE PROJECT IS SUFFICIENTLY COMPLETE TO BE UTILIZED OR PLACED INTO SERVICE, THE DISTRICT SHALL HAVE THE RIGHT UPON WRITTEN NOTIFICATION TO THE CONTRACTOR TO UTILIZE SUCH PORTIONS OF THE WORK AND TO PLACE THE OPERABLE PORTIONS INTO SERVICE AND TO OPERATE SAME. UPON SAID NOTICE AND COMMENCEMENT OF UTILIZATION OR OPERATION BY THE DISTRICT, THE DUTY OF MAINTAINING THE PORTIONS SO UTILIZED OR PLACED INTO OPERATION SHALL NOT APPLY; PROVIDED, HOWEVER, THAT NOTHING IN THIS NOTE SHALL BE CONSTRUED AS RELIEVING THE FULL RESPONSIBILITY FOR COMPLETING THE WORK IN ITS ENTIRETY, FOR REPAIRING DEFECTIVE WORK AND MATERIALS, FOR PROTECTING THE WORK FROM DAMAGE, AND FOR BEING RESPONSIBLE FOR DAMAGE.

14. CONDUCT OPERATIONS AS TO OFFER THE LEAST POSSIBLE OBSTRUCTION AND INCONVENIENCE TO THE PUBLIC AND HAVE UNDER CONSTRUCTION NO GREATER LENGTH OR AMOUNT OF WORK THAN CAN BE PROSECUTED PROPERLY WITH DUE REGARD TO THE RIGHTS OF THE PUBLIC. CONVENIENT ACCESS TO DRIVEWAYS, HOUSES, AND BUILDINGS ALONG THE LINE OF WORK SHALL BE MAINTAINED AND TEMPORARY CROSSINGS SHALL BE PROVIDED AND MAINTAINED IN GOOD CONDITION. NO MORE THAN ONE CROSSING OR INTERSECTION STREET OR ROAD SHALL BE CLOSED AT ANY ONE TIME.

15. IN ACCORDANCE WITH GENERALLY ACCEPTED CONSTRUCTION PRACTICES, BE SOLELY AND COMPLETELY RESPONSIBLE FOR CONDITIONS OF THE JOB SITE, INCLUDING SAFETY OF ALL PERSONS AND PROPERTY DURING PERFORMANCE OF THE WORK AND FULLY COMPLY WITH ALL STATE, FEDERAL AND OTHER LAWS, RULES, REGULATIONS AND ORDER RELATING TO SAFETY OF WORKERS AND ALL OTHERS. THIS MAY INCLUDE THE ISSUANCE OF PERSONAL PROTECTIVE EQUIPMENT.

16. ALL WATER MAINS SHALL BE PRESSURE TESTED AND CHLORINATED IN CONFORMANCE WITH CONTRACT DOCUMENTS PRIOR TO CONNECTING TO THE EXISTING SYSTEM. THE CONTRACTOR SHALL VERIFY ALL VALVES IN THE SYSTEM ARE IN THE OPEN POSITION AFTER THE TEST.

17. THE WATER MAIN SHALL HAVE NO JOINTS WITHIN 10 FEET OF SEWER CROSSINGS OVER NEW MAIN AND WITHIN 4 FEET OF SEWER CROSSING UNDER NEW MAIN, UNLESS INDICATED ON THE PLAN. SEPARATION SHALL BE PER CALIFORNIA DEPARTMENT OF PUBLIC HEALTH GUIDELINES.

18. POTHOLE EXISTING MAINS TO VERIFY GRADE OF NEW MAINS.

19. THRUST BLOCKS SHALL BE PER THE COUNTY OF SLO 2011 PUBLIC IMPROVEMENT STANDARD DRAWING W-1a.

20. VERIFY DIMENSIONS AND CONDITIONS AT THE SITE BEFORE STARTING WORK. ANY CONFLICT BETWEEN DETAILS OR DIMENSIONS ON THE DRAWINGS SHALL BE REPORTED PROMPTLY TO THE DISTRICT'S REPRESENTATIVE WHO WILL DETERMINE THE INTENT OF THE DRAWINGS.

21. EXCEPT WHERE NOTED, REPAIR DRIVEWAYS AND AC BERMS DAMAGED DURING CONSTRUCTION. SAWCUTS SHALL BE MADE ALONG EXISTING SCORE LINES.

22. PROVIDE ALL NECESSARY TRAFFIC CONTROL DEVICES DURING DURATION OF CONSTRUCTION WORK, INCLUDING, BUT NOT LIMITED TO, LIGHTED BARRICADES, K-RAIL, DELINEATORS, TRAFFIC CONES, ETC., TO SAFELY CONVEY TRAFFIC AND PEDESTRIANS THROUGH AND AROUND CONSTRICTION WORK ZONES.

23. ALL STRIPING AND MARKINGS SHALL BE REPLACED IN KIND BY CONTRACTOR IF DISTURBED.

24. OVERHEAD ELECTRIC AND CABLE TV LINES ARE NOT NECESSARILY INDICATED ON THE DRAWING, BUT MAY EXIST ON THE JOB SITE. EXERCISE CAUTION WHILE WORKING NEAR OR UNDER, ALL ELECTRIC AND CABLE TV LINES.

25. ANTICIPATE ENCOUNTERING VARYING SOIL CONDITIONS DURING EXCAVATION. NO ADDITIONAL ALLOWANCE WILL BE MADE FOR EXTRA WORK PERTAINING TO TRENCHING CONDITIONS. THE DISTRICT SHALL PROVIDE AVAILABLE SOIL CONDITIONS IN PROJECT AREAS IF KNOWN.

26. USE LOW IMPACT TRENCHING METHODS WITHIN FOUR FEET HORIZONTALLY OF PRIVATE OR PUBLIC TREES. LOW IMPACT METHODS INCLUDE, BUT ARE NOT LIMITED TO, USE OF HIGH PRESSURE TOOLS, VACUUM OR SUCTION TOOLS, OR HAND METHODS.

27. TRENCHING METHODS SHALL CONFORM WITH THE ORDER OF THE STATE OF CALIFORNIA DIVISION OF INDUSTRIAL SAFETY AND O.S.H.A. STANDARD.

28. ALL UTILITIES AND OTHER STRUCTURES AFFECTED BY THE WATER LINE PROJECT MUST BE LOCATED IN THE FIELD PRIOR TO THE START OF PIPELINE EXCAVATION. ONCE THESE UTILITIES AND STRUCTURES HAVE BEEN EXPOSED TAKE MEASUREMENTS AND VERIFY THEIR LOCATIONS WITH THE DISTRICT'S REPRESENTATIVE. PROTECT ALL EXISTING FACILITIES, WHETHER OR NOT THEIR EXISTENCE OR APPROXIMATE LOCATIONS ARE SHOWN ON THESE PLANS, FROM DAMAGE DURING CONSTRUCTION.

29. WHERE UNDERGROUND UTILITIES ARE SHOWN, ASSUME EVERY LOT IS SERVED BY A SERVICE CONNECTION FROM EACH UTILITY.

30. DO NOT LEAVE ANY TRENCH OPEN DURING NON-WORKING HOURS.

31. SAW CUT EXISTING PAVEMENT AND REPLACE AC AND BASE IN ACCORDANCE WITH THE TECHNICAL SPECIFICATIONS.

32. BACKFILL SHALL BE IN ACCORDANCE WITH THE CONTRACT DOCUMENTS. COMPACTION EFFORTS SHALL NOT DISTURB ADJACENT STREET STRUCTURAL SECTION. BEDDING, TRENCHING AND TRENCH RESURFACING SHALL BE PER PROJECT SPECIFICATIONS.

33. NOTIFY DISTRICT REPRESENTATIVE WHEN TREE ROOTS GREATER THAN TWO INCHES IN DIAMETER ARE ENCOUNTERED DURING CONSTRUCTION. DO NOT CUT PRIVATE OR PUBLIC TREE ROOTS OF DIAMETER GREATER THAN TWO INCHES WITHOUT THE APPROVAL OF THE DISTRICT'S REPRESENTATIVE. ADDITIONAL COSTS SHALL BE ALLOWED FOR DELAYS DUE TO TREE ROOT ISSUES.

34. RETAIN SERVICES OF A QUALIFIED LAND SURVEYOR FOR CONSTRUCTION PIPELINE ALIGNMENTS AND WHEN PROPOSED CONSTRUCTION REQUIRES DISTURBANCE OR REMOVAL OF SURVEY MONUMENTS OR CENTER LINE TIES. THE CONTRACTOR SHALL BE RESPONSIBLE FOR THE PAYMENT FOR THE SERVICES TO REESTABLISH DESTROYED CENTER LINE TIES, BENCH MARKS, AND SURVEY MONUMENTS.

CAUTION: UNDERGROUND STRUCTURES AND UNDERGROUND UTILITIES REPORTED BY THEIR RESPECTIVE OWNERS OR THOSE SHOWN ON RECORDS EXAMINED ARE INDICATED WITH THEIR APPROXIMATE LOCATION AND EXTENT. THE CONTRACTOR IS REQUIRED TO TAKE DUE PRECAUTIONARY MEASURES TO PROTECT THE UTILITIES OR STRUCTURES FOUND AT THE SITE. IT SHALL BE THE CONTRACTOR'S RESPONSIBILITY TO NOTIFY THE OWNERS OF THE UTILITIES OR STRUCTURES CONCERNED BEFORE STARTING TO WORK.

ABBREVIATIONS

AC/ASPH	ASPHALT CONCRETE
AC	ASBESTOS CEMENT PIPE
AVE	AVENUE
ATT	AT&T UTILITY
BF	BLIND FLANGE
BFP	BACKFLOW PREVENTER
C.I.	CAST IRON PIPE
C.L.	CHAIN LINK FENCE
C/L	CENTERLINE
CLR	CLEAR
CMP	CORRUGATED METAL PIPE
CONC	CONCRETE
CTV	CABLE TELEVISION
CY	CUBIC YARD
D	DRAINLINE
DI	DRAINAGE INLET
DIA	DIAMETER
DR	DIMENSION RATIO
DRWY	DRIVEWAY
DWG	DRAWING
E/ELECT	ELECTRICAL UTILITY
ELEV	ELEVATION
EP	EDGE OF PAVEMENT
EX	EXISTING
FH	FIRE HYDRANT
FLG	FLANGE
FT	FEET
GA	GAUGE
GALV	GALVANIZED
GM	GAS METER
ICV	IRRIGATION CONTROL VALVE
LBS/CY	POUNDS PER CUBIC YARD
MAX	MAXIMUM
MB	MAIL BOX
MH	MANHOLE
MJ	MECHANICAL JOINT
MIN	MINIMUM
NPDES	NATIONAL POLLUTANT DISCHARGE ELIMINATION SYSTEM
N.T.S.	NOT TO SCALE
P.C.C.	PORTLAND CONCRETE CEMENT
PL	PROPERTY LINE
PP	POWER POLE
PVC	POLYVINYL CHLORIDE
PVMT	PAVEMENT
RD	ROAD
RW	RESILIENT WEDGE
R/W	RIGHT OF WAY
SCH	SCHEDULE
SD	STORM DRAIN
SHT	SHEET
SL	STREET LIGHT
SMH	SEWER MANHOLE
SS	SANITARY SEWER
STA	STATION
STD	STANDARD
TEL	TELECOMMUNICATION
TYP	TYPICAL
VCP	VITRIFIED CLAY PIPE
W	WATER PIPELINE
WM	WATER METER
WV	WATER VALVE

BENCH MARK

THE BENCH MARK FOR THIS PROJECT IS SLO 1 PM 53.8
ELEVATION = 85.49 (NAVD88)

NOTE:
EXISTING WATER, STORM DRAIN, AND SEWER LINES WERE PLOTTED FROM ABOVE GROUND EVIDENCE AND ATLAS MAPS FROM SAN SIMEON CSD.

VERIFY SCALES
BAR IS ONE INCH ON ORIGINAL DRAWING
0 — 1
IF NOT ONE INCH ON THIS SHEET, ADJUST SCALES ACCORDINGLY

Know what's below. Call 811 before you dig.

REGISTERED PROFESSIONAL ENGINEER JONATHON M. TURNER No. 60214 EXP. 6/30/20 CIVIL STATE OF CALIFORNIA

PREPARED BY:
PHOENIX CIVIL ENGINEERING, INC.
535 E. MAIN STREET
SANTA PAULA, CA 93060
(805) 658-6800

6-30-20
REGISTERED CE 60214 EXP. DATE

REV.	SYM.	DESCRIPTION	R.C.E.	DATE
		50% SUBMITTAL		11/9/18

SAN SIMEON COMMUNITY SERVICES DISTRICT
WATER SYSTEM IMPROVEMENT PROJECT
PHASE 1

NOTES AND ABBREVIATIONS

REVIEWED BY: GENERAL MANAGER DATE
JOB NO. -
DRAWING NO. G-02

DESIGNED BY:	DRAWN BY:	CHECKED BY:	DATE
JMT	CK	JMT	11/9/18

SHEET 2 OF 14

50% SUBMITTAL

DWG: C:\Users\ChrisKeck\Box\SSCSD Reservoir\ACAD\IMPROVEMENTS\02-SSCSD-NOTES.dwg USER: ChrisKeck
DATE: Nov 09, 2018 9:01am XREFS: PC-BDR RESERVOIR SSCSD-IMP SSCSD-LO 181301 PCE

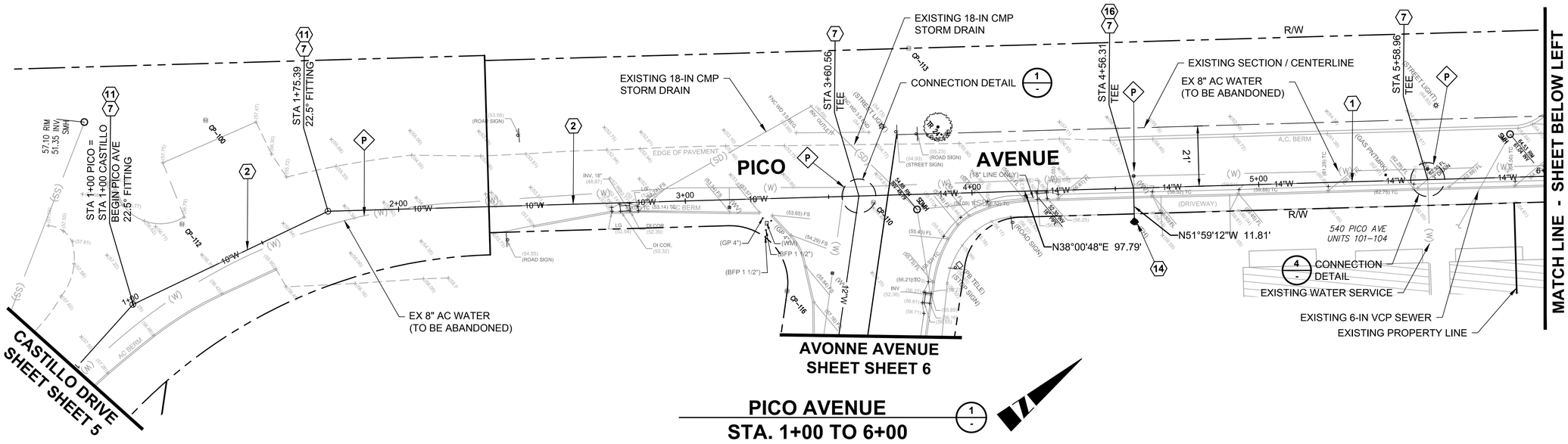

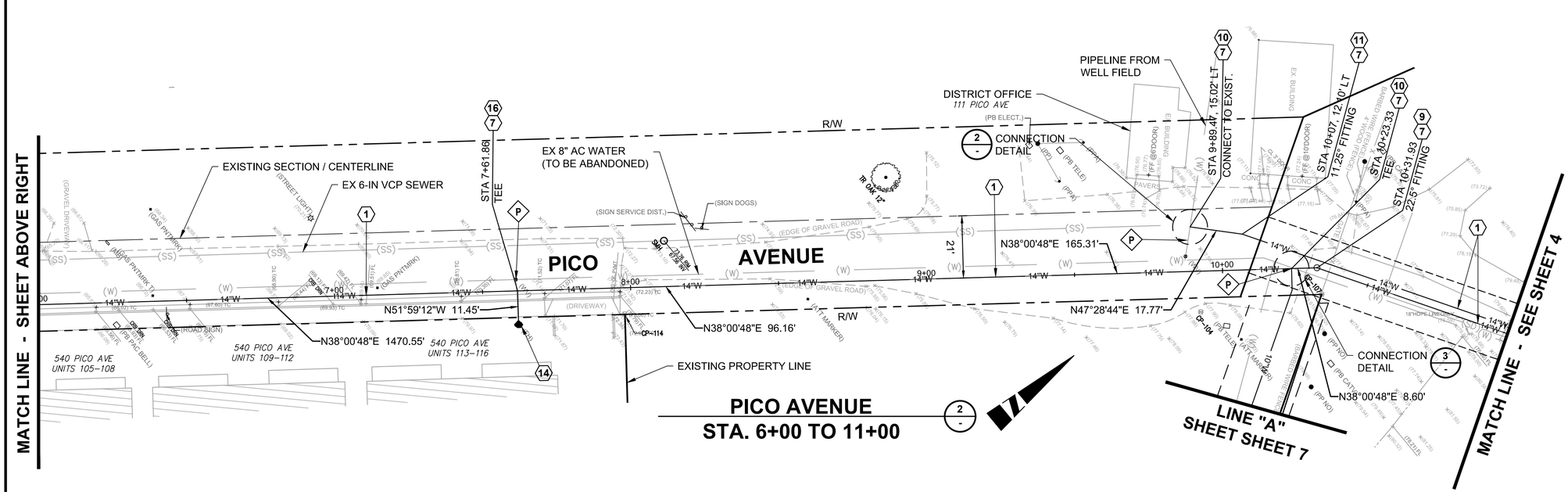

CONSTRUCTION NOTES

1. INSTALL 14-INCH DIA DR 25 C900 PVC PIPE
2. INSTALL 10-INCH DIA DR 25 C900 PVC PIPE
3. INSTALL 10-IN TEE FLANGED
4. INSTALL 10-IN X 6-IN MJ x FLG REDUCER
5. INSTALL 10-IN RW GATE VALVE FLG x MJ
6. INSTALL 6-IN RW GATE VALVE FLG x MJ
7. INSTALL THRUST BLOCK PER COUNTY OF SAN LUIS OBISPO, DEPT OF PUBLIC WORKS 2011 PUBLIC IMPROVEMENTS STD. DWG W-1 & W-1a.
8. INSTALL 6-IN X 1-IN REDUCER
9. INSTALL 12-IN 22.5° FITTING FLANGED
10. INSTALL 6-IN TEE FLANGED
11. INSTALL AIR/VAC ASSEMBLY. SEE
12. INSTALL 10-IN 45° FITTING
13. INSTALL WATER SERVICE. SEE
14. INSTALL 10-IN 90° FITTING MJ x MJ
15. INSTALL 10-IN RW GATE VALVE FLANGED
16. INSTALL 10-IN BLIND FLANGE
17. INSTALL 10-IN 22.5° FITTING MJ x FLG
18. INSTALL 10-IN 11.25° FITTING FLG x MJ
19. INSTALL 6-INCH DIA DR 25 C900 PVC PIPE

LEGEND

P UTILITY POTHOLE

SCALE: 1" = 20'

20' 10' 0 20' 40'

SCALE IN FEET

VERIFY SCALES
BAR IS ONE INCH ON ORIGINAL DRAWING
0 ——— +1
IF NOT ONE INCH ON THIS SHEET, ADJUST SCALES ACCORDINGLY

DETAIL 1 SCALE: N.T.S.

DETAIL 2 SCALE: N.T.S.

DETAIL 3 SCALE: N.T.S.

DETAIL 4 SCALE: N.T.S.

Know what's below. Call 811 before you dig.

REGISTERED PROFESSIONAL ENGINEER JONATHON M. KIRKEY No. 60214 EXP. 6/30/20 CIVIL STATE OF CALIFORNIA

PREPARED BY:
PHOENIX CIVIL ENGINEERING, INC.
535 E. MAIN STREET
SANTA PAULA, CA 93060
(805) 658-6800

REGISTERED CE 60214 EXP. 6-30-20 DATE

REV.	SYM.	DESCRIPTION	R.C.E.	DATE
		50% SUBMITTAL		11/9/18

SAN SIMEON COMMUNITY SERVICES DISTRICT

WATER SYSTEM IMPROVEMENT PROJECT PHASE 1

PICO AVENUE
STA. 1+00 TO STA. 11+00

REVIEWED BY: _____ GENERAL MANAGER _____ DATE

JOB NO. -

DRAWING NO. C-01

DESIGNED BY:	DRAWN BY:	CHECKED BY:	DATE
JMT	CK	JMT	11/9/18

SHEET 3 OF 14

50% SUBMITTAL

DWG: C:\Users\ChrisKeck\Box\SSCSD Reservoir\ACAD\IMPROVEMENTS\06-SSCSD-PICO-PLAN.dwg USER: ChrisKeck
DATE: Nov 09, 2018 8:48am XREFS: PC-BDR RESERVOIR 181301 PCE SSCSD-LO SSCSD-MP

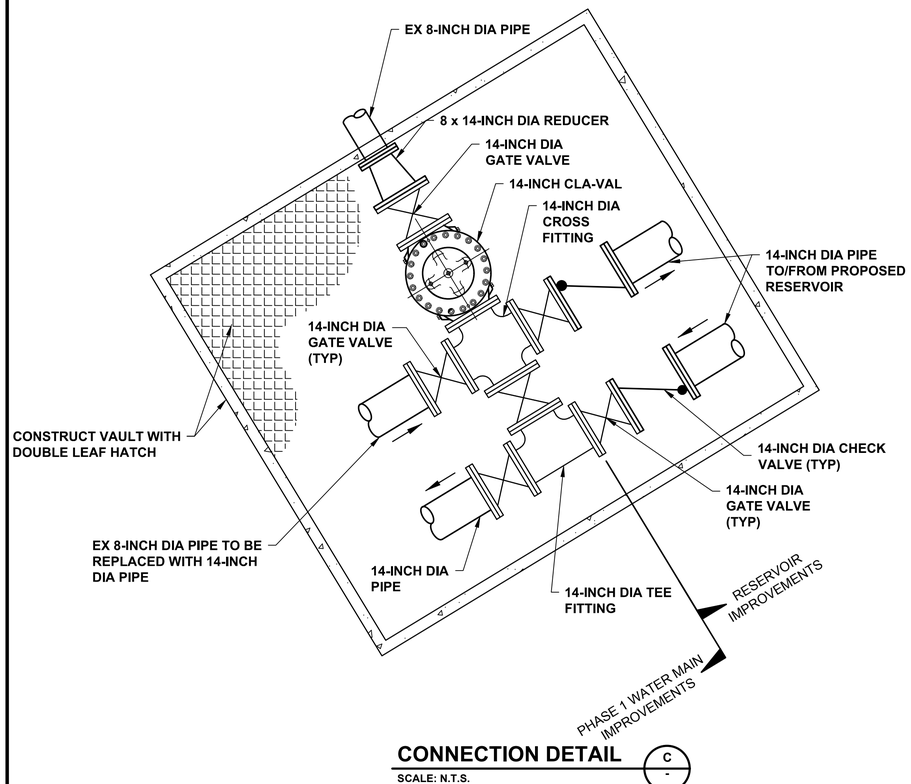

CONNECTION DETAIL (C)

SCALE: N.T.S.

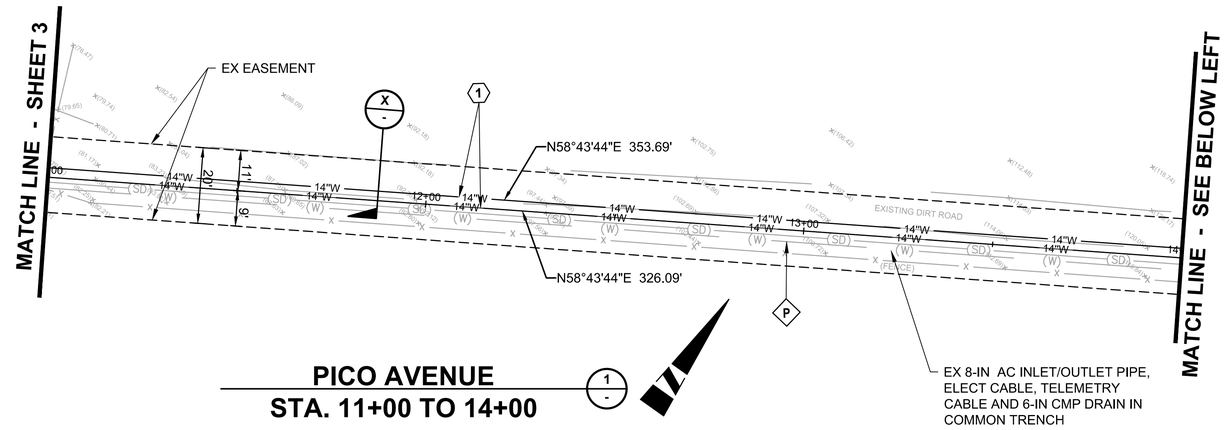

PICO AVENUE (1)
STA. 11+00 TO 14+00

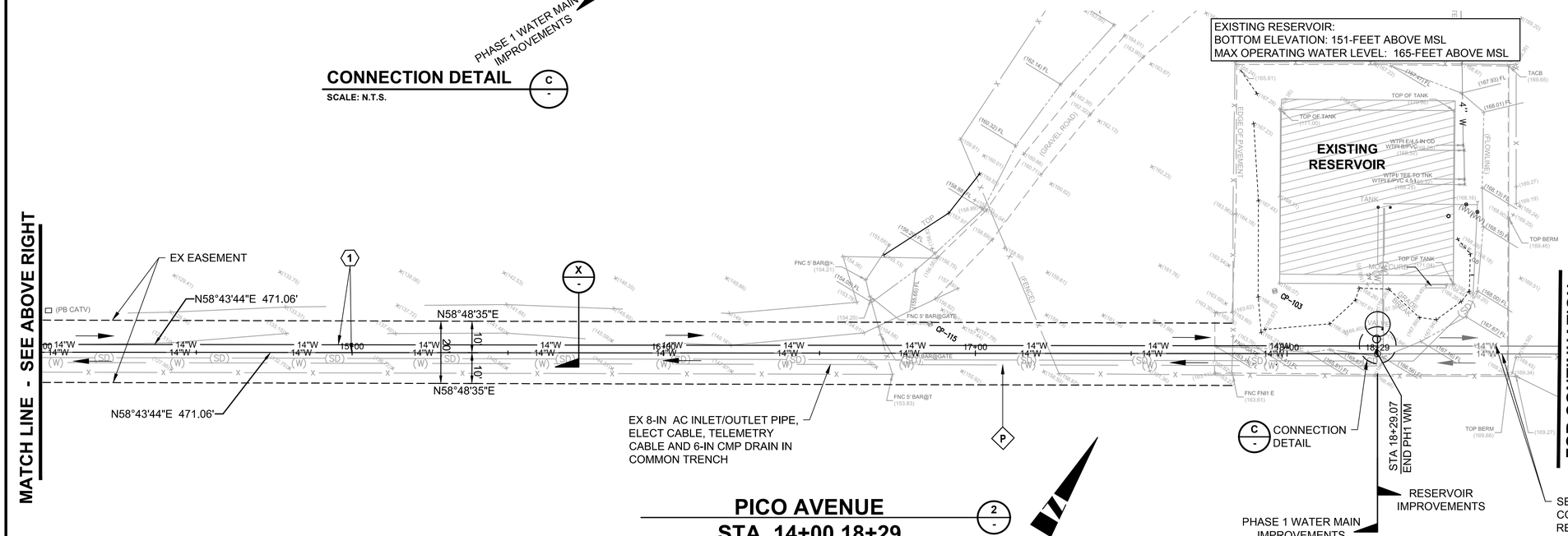

PICO AVENUE (2)
STA. 14+00 18+29

CONSTRUCTION NOTES

1. INSTALL 14-INCH DIA DR 25 C900 PVC PIPE
2. INSTALL 10-INCH DIA DR 25 C900 PVC PIPE
3. INSTALL 10-IN TEE FLANGED
4. INSTALL 10-IN X 6-IN MJ x FLG REDUCER
5. INSTALL 10-IN RW GATE VALVE FLG x MJ
6. INSTALL 6-IN RW GATE VALVE FLG x MJ
7. INSTALL THRUST BLOCK PER COUNTY OF SAN LUIS OBISPO, DEPT OF PUBLIC WORKS 2011 PUBLIC IMPROVEMENTS STD. DWG W-1 & W-1a.
8. INSTALL 6-IN X 1-IN REDUCER
9. INSTALL 12-IN 22.5° FITTING FLANGED
10. INSTALL 6-IN TEE FLANGED
11. INSTALL AIR/VAC ASSEMBLY. SEE
12. INSTALL 10-IN 45° FITTING
13. INSTALL WATER SERVICE. SEE
14. INSTALL 10-IN 90° FITTING MJ x MJ
15. INSTALL 10-IN RW GATE VALVE FLANGED
16. INSTALL 10-IN BLIND FLANGE
17. INSTALL 10-IN 22.5° FITTING MJ x FLG
18. INSTALL 10-IN 11.25° FITTING FLG x MJ
19. INSTALL 6-INCH DIA DR 25 C900 PVC PIPE

LEGEND

(P) UTILITY POTHOLE

SCALE: 1" = 20'

20' 10' 0 20' 40'

SCALE IN FEET

VERIFY SCALES
BAR IS ONE INCH ON ORIGINAL DRAWING
0 — 1
IF NOT ONE INCH ON THIS SHEET, ADJUST SCALES ACCORDINGLY

Know what's below. Call 811 before you dig.

REGISTERED PROFESSIONAL ENGINEER JONATHON M. TURNER No. 60214 EXP. 6/30/20 CIVIL STATE OF CALIFORNIA

PREPARED BY:
PHOENIX CIVIL ENGINEERING, INC.
535 E. MAIN STREET
SANTA PAULA, CA 93060
(805) 658-6800

REGISTERED CE 60214 — EXP. 6-30-20 — DATE

REV.	SYM.	DESCRIPTION	R.C.E.	DATE
		50% SUBMITTAL		11/9/18

SAN SIMEON COMMUNITY SERVICES DISTRICT
WATER SYSTEM IMPROVEMENT PROJECT
PHASE 1

PICO AVENUE
STA. 14+00 to 18+29.07

REVIEWED BY: GENERAL MANAGER — DATE

JOB NO. -
DRAWING NO. C-02

DESIGNED BY:	DRAWN BY:	CHECKED BY:	DATE	
JMT	CK	JMT	11/9/18	SHEET 4 OF 14

50% SUBMITTAL

DWG: C:\Users\ChrisKeck\Box\SSCSD Reservoir\ACAD\IMPROVEMENTS\06-SSCSD-PICO-PLAN.dwg USER: ChrisKeck
DATE: Nov 09, 2018 8:49am XREFS: PC-BDR RESERVOIR 181301T PCE SSCSD-LO SSCSD-MP

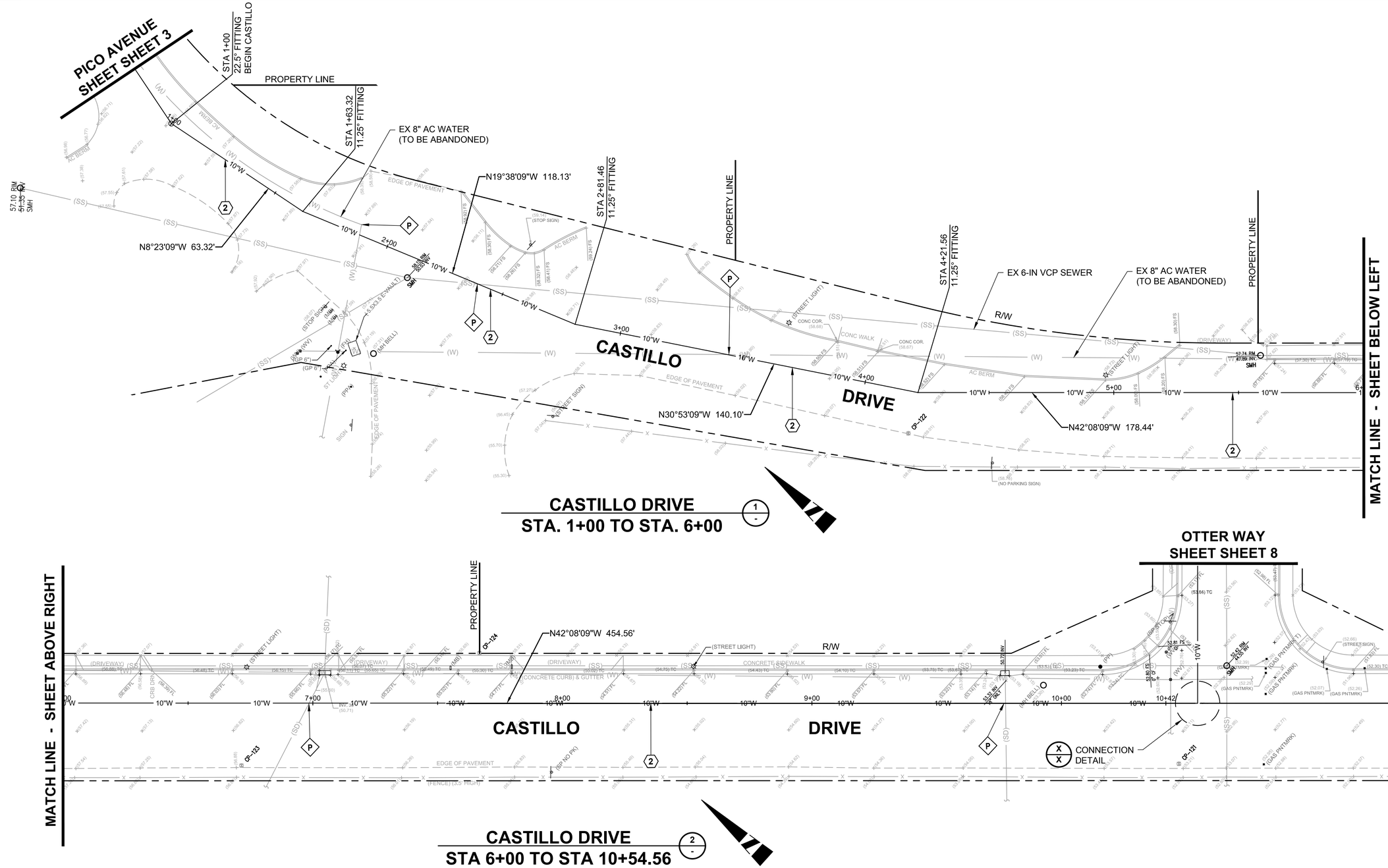

CONSTRUCTION NOTES

1. INSTALL 14-INCH DIA DR 25 C900 PVC PIPE
2. INSTALL 10-INCH DIA DR 25 C900 PVC PIPE
3. INSTALL 10-IN TEE FLANGED
4. INSTALL 10-IN X 6-IN MJ x FLG REDUCER
5. INSTALL 10-IN RW GATE VALVE FLG x MJ
6. INSTALL 6-IN RW GATE VALVE FLG x MJ
7. INSTALL THRUST BLOCK PER COUNTY OF SAN LUIS OBISPO, DEPT OF PUBLIC WORKS 2011 PUBLIC IMPROVEMENTS STD. DWG W-1 & W-1a.
8. INSTALL 6-IN X 1-IN REDUCER
9. INSTALL 12-IN 22.5° FITTING FLANGED
10. INSTALL 6-IN TEE FLANGED
11. INSTALL AIR/VAC ASSEMBLY. SEE
12. INSTALL 10-IN 45° FITTING
13. INSTALL WATER SERVICE. SEE
14. INSTALL 10-IN 90° FITTING MJ x MJ
15. INSTALL 10-IN RW GATE VALVE FLANGED
16. INSTALL 10-IN BLIND FLANGE
17. INSTALL 10-IN 22.5° FITTING MJ x FLG
18. INSTALL 10-IN 11.25° FITTING FLG x MJ
19. INSTALL 6-INCH DIA DR 25 C900 PVC PIPE

SCALE: 1" = 20'
20' 10' 0 20' 40'
SCALE IN FEET

VERIFY SCALES
BAR IS ONE INCH ON ORIGINAL DRAWING
0 1
IF NOT ONE INCH ON THIS SHEET, ADJUST SCALES ACCORDINGLY

Know what's below. Call 811 before you dig.

REGISTERED PROFESSIONAL ENGINEER JONATHON M. TURNER No. 60214 EXP. 6/30/20 CIVIL STATE OF CALIFORNIA

PREPARED BY:
PHOENIX CIVIL ENGINEERING, INC.
535 E. MAIN STREET
SANTA PAULA, CA 93060
(805) 658-6800

REGISTERED CE 60214 — EXP. 6-30-20 — DATE

REV.	SYM.	DESCRIPTION	R.C.E.	DATE
		50% SUBMITTAL		11/9/18

SAN SIMEON COMMUNITY SERVICES DISTRICT
WATER SYSTEM IMPROVEMENT PROJECT
PHASE 1

CASTILLO DRIVE
STA. 1+00 TO STA. 10+54.56

REVIEWED BY: GENERAL MANAGER — DATE
JOB NO. -
DRAWING NO. C-03

DESIGNED BY:	DRAWN BY:	CHECKED BY:	DATE	
JMT	CK	JMT	11/9/18	SHEET 5 OF 14

DWG: C:\Users\ChrisKeck\Box\SSCSD Reservoir\ACAD\IMPROVEMENTS\08-SSCSD-CASTILLO-PLAN.dwg USER: ChrisKeck
DATE: Nov 09, 2018 8:59am XREFS: PC-BDR RESERVOIR SSCSD-LO SSCSD-IMP 181301 PCE

50% SUBMITTAL

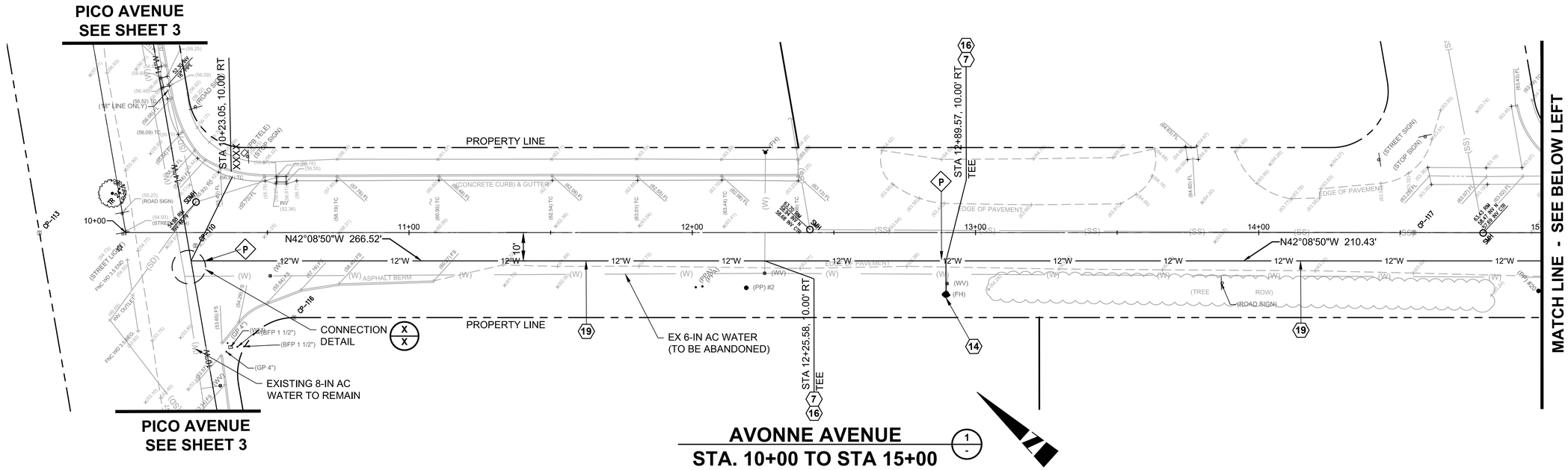

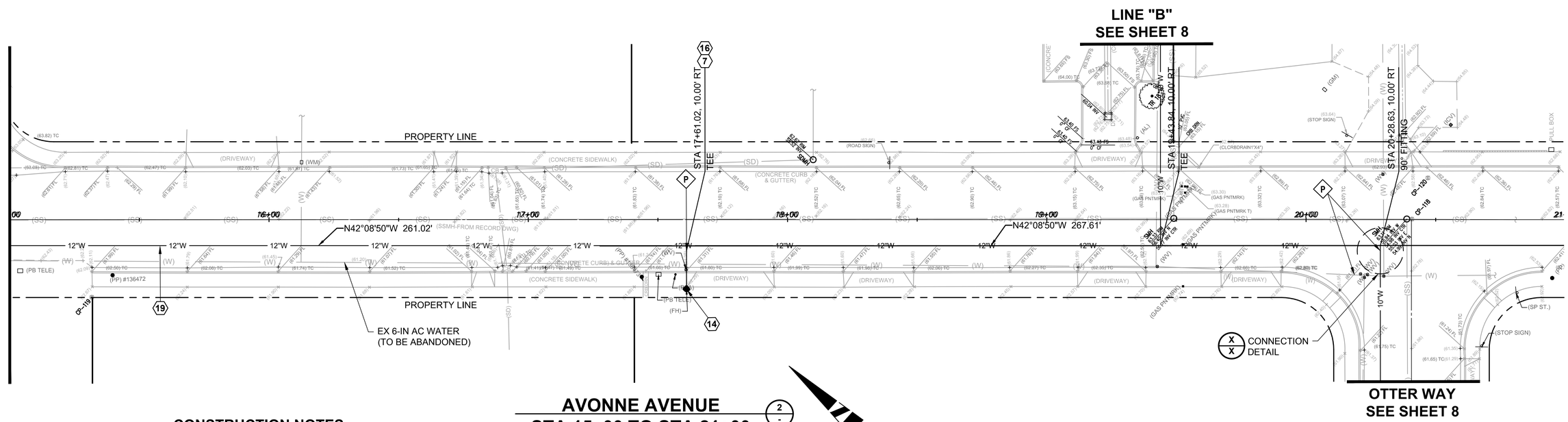

CONSTRUCTION NOTES

7. INSTALL THRUST BLOCK PER COUNTY OF SAN LUIS OBISPO, DEPT OF PUBLIC WORKS 2011 PUBLIC IMPROVEMENTS STD. DWG W-1 & W-1a.
14. INSTALL 10-IN 90° FITTING MJ x MJ
16. INSTALL 10-IN BLIND FLANGE
19. INSTALL 12-INCH DIA DR 25 C900 PVC PIPE

VERIFY SCALES
BAR IS ONE INCH ON ORIGINAL DRAWING
0 — 1
IF NOT ONE INCH ON THIS SHEET, ADJUST SCALES ACCORDINGLY

SCALE: 1" = 20'
20' 10' 0 20' 40'
SCALE IN FEET

Know what's below. Call 811 before you dig.

REGISTERED PROFESSIONAL ENGINEER JONATHON M. TURNER No. 60214 EXP. 6/30/20 CIVIL STATE OF CALIFORNIA

PREPARED BY:
PHOENIX CIVIL ENGINEERING, INC.
535 E. MAIN STREET
SANTA PAULA, CA 93060
(805) 658-6800

REGISTERED CE 60214 — EXP. 6-30-20 — DATE

REV.	SYM.	DESCRIPTION	R.C.E.	DATE
		50% SUBMITTAL		11/9/18

SAN SIMEON COMMUNITY SERVICES DISTRICT
WATER SYSTEM IMPROVEMENT PROJECT
PHASE 1

AVONNE AVENUE
STA. 10+00 TO STA. 20+28.63

REVIEWED BY: GENERAL MANAGER — DATE

JOB NO. -
DRAWING NO. C-04

DESIGNED BY:	DRAWN BY:	CHECKED BY:	DATE	
JMT	CK	JMT	11/9/18	SHEET 6 OF 14

DWG: C:\Users\ChrisKeck\Box\SSCSD Reservoir\ACAD\IMPROVEMENTS\04-SSCSD-AVONNE-PLAN.dwg USER: ChrisKeck
DATE: Nov 09, 2018 8:52am XREFS: PC-BDR RESERVOIR SSCSD-LO SSCSD-MP 181001 PCE

50% SUBMITTAL

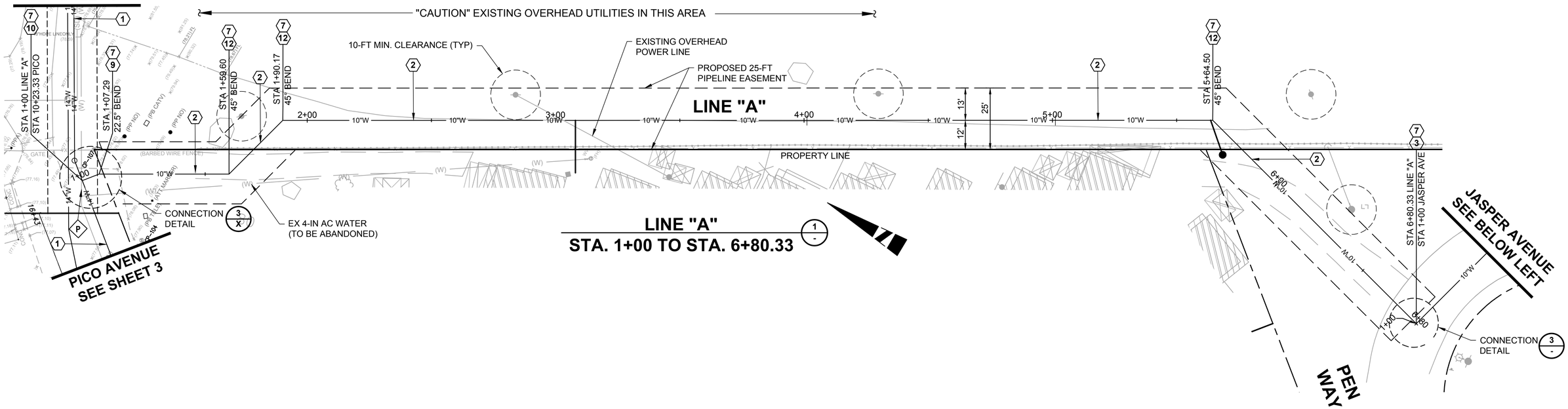

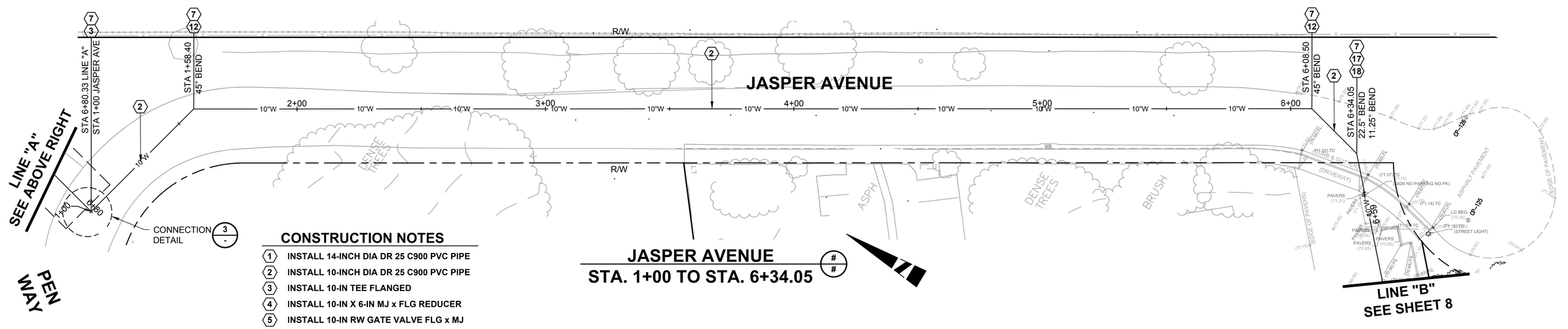

CONSTRUCTION NOTES

1. INSTALL 14-INCH DIA DR 25 C900 PVC PIPE
2. INSTALL 10-INCH DIA DR 25 C900 PVC PIPE
3. INSTALL 10-IN TEE FLANGED
4. INSTALL 10-IN X 6-IN MJ x FLG REDUCER
5. INSTALL 10-IN RW GATE VALVE FLG x MJ
6. INSTALL 6-IN RW GATE VALVE FLG x MJ
7. INSTALL THRUST BLOCK PER COUNTY OF SAN LUIS OBISPO, DEPT OF PUBLIC WORKS 2011 PUBLIC IMPROVEMENTS STD. DWG W-1 & W-1a.
8. INSTALL 6-IN X 1-IN REDUCER
9. INSTALL 12-IN 22.5° FITTING FLANGED
10. INSTALL 6-IN TEE FLANGED
11. INSTALL AIR/VAC ASSEMBLY. SEE
12. INSTALL 10-IN 45° FITTING
13. INSTALL WATER SERVICE. SEE
14. INSTALL 10-IN 90° FITTING MJ x MJ
15. INSTALL 10-IN RW GATE VALVE FLANGED
16. INSTALL 10-IN BLIND FLANGE
17. INSTALL 10-IN 22.5° FITTING MJ x FLG
18. INSTALL 10-IN 11.25° FITTING FLG x MJ
19. INSTALL 12-INCH DIA DR 25 C900 PVC PIPE

LEGEND

P — UTILITY POTHOLE

VERIFY SCALES
BAR IS ONE INCH ON ORIGINAL DRAWING
0 — 1
IF NOT ONE INCH ON THIS SHEET, ADJUST SCALES ACCORDINGLY

DETAIL 1 (-) SCALE: N.T.S.

DETAIL 2 (-) SCALE: N.T.S.

DETAIL 3 (-) SCALE: N.T.S.

SCALE: 1" = 20'
20' 10' 0 20' 40'
SCALE IN FEET

30' 15' 0 30' 60'
SCALE IN FEET

Know what's below. Call 811 before you dig.

REGISTERED PROFESSIONAL ENGINEER JONATHON M. TURNER No. 60214 EXP. 6/30/20 CIVIL STATE OF CALIFORNIA

PREPARED BY:
PHOENIX CIVIL ENGINEERING, INC.
535 E. MAIN STREET
SANTA PAULA, CA 93060
(805) 658-6800

REGISTERED CE 60214 — EXP. 6-30-20 — DATE

REV.	SYM.	DESCRIPTION	R.C.E.	DATE
		50% SUBMITTAL		11/9/18

SAN SIMEON COMMUNITY SERVICES DISTRICT
WATER SYSTEM IMPROVEMENT PROJECT
PHASE 1

LINE "A" - STA. 1+00 TO STA. 6+80.33
JASPER AVENUE - STA. 1+00 TO STA. 6+34.05

REVIEWED BY: GENERAL MANAGER — DATE

JOB NO. -
DRAWING NO. C-05

DESIGNED BY:	DRAWN BY:	CHECKED BY:	DATE
JMT	CK	JMT	11/9/18

SHEET 7 OF 14

50% SUBMITTAL

DWG: C:\Users\ChrisKeck\Box\SSCSD Reservoir\ACAD\IMPROVEMENTS\05-SSCSD-JASPER-LINE A-PLAN.dwg USER: ChrisKeck
DATE: Nov 09, 2018 8:57am XREFS: San Simeon Pipelines UTILITIES pc-bdr reservoir SSCSD-LO SSCSD-IMP 181001 PCE

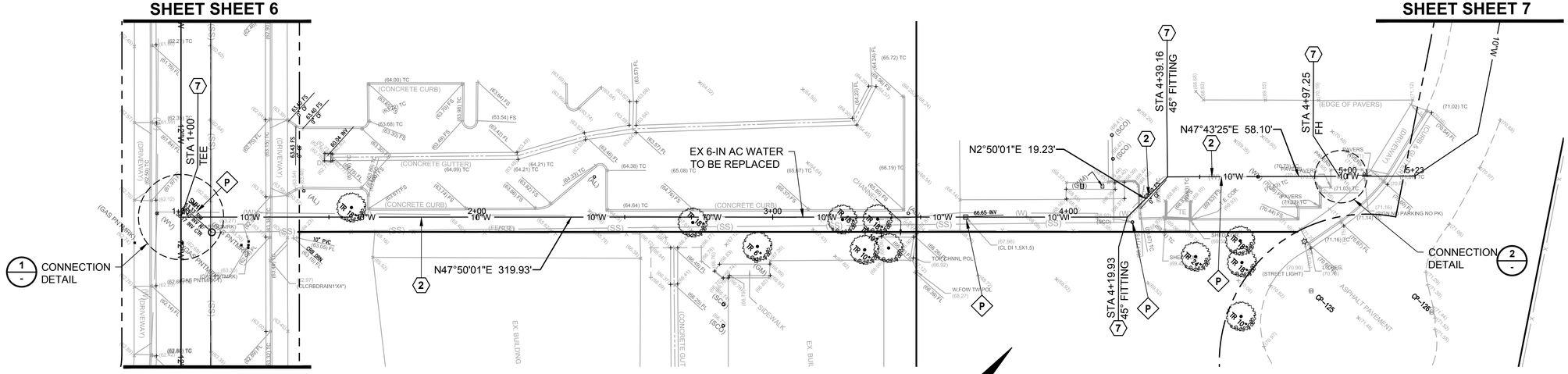

LINE "B"
STA. 1+00 TO STA. 4+97.25

CONSTRUCTION NOTES

1. INSTALL 14-INCH DIA DR 25 C900 PVC PIPE
2. INSTALL 10-INCH DIA DR 25 C900 PVC PIPE
3. INSTALL 10-IN TEE FLANGED
4. INSTALL 10-IN X 6-IN MJ x FLG REDUCER
5. INSTALL 10-IN RW GATE VALVE FLG x MJ
6. INSTALL 6-IN RW GATE VALVE FLG x MJ
7. INSTALL THRUST BLOCK PER COUNTY OF SAN LUIS OBISPO, DEPT OF PUBLIC WORKS 2011 PUBLIC IMPROVEMENTS STD. DWG W-1 & W-1a.
8. INSTALL 6-IN X 1-IN REDUCER
9. INSTALL 12-IN 22.5° FITTING FLANGED
10. INSTALL 6-IN TEE FLANGED
11. INSTALL AIR/VAC ASSEMBLY. SEE
12. INSTALL 10-IN 45° FITTING
13. INSTALL WATER SERVICE. SEE
14. INSTALL 10-IN 90° FITTING MJ x MJ
15. INSTALL 10-IN RW GATE VALVE FLANGED
16. INSTALL 10-IN BLIND FLANGE
17. INSTALL 10-IN 22.5° FITTING MJ x FLG
18. INSTALL 10-IN 11.25° FITTING FLG x MJ
19. INSTALL 12-INCH DIA DR 25 C900 PVC PIPE

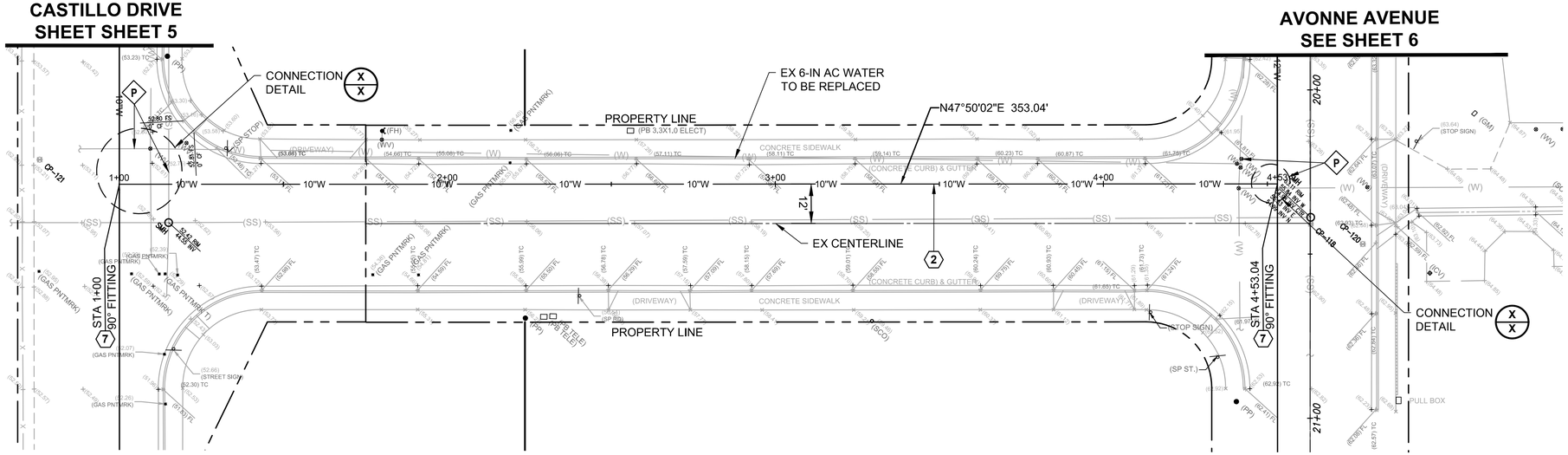

OTTER WAY
STA. 1+00 TO STA. 4+53.04

SCALE: 1" = 20'
20' 10' 0 20' 40'
SCALE IN FEET

VERIFY SCALES
BAR IS ONE INCH ON ORIGINAL DRAWING
0 1 2
IF NOT ONE INCH ON THIS SHEET, ADJUST SCALES ACCORDINGLY

DETAIL 1
SCALE: N.T.S.

DETAIL 2
SCALE: N.T.S.

Know what's below. Call 811 before you dig.

REGISTERED PROFESSIONAL ENGINEER JONATHON M. JURGENS No. 60214 EXP. 6/30/20 CIVIL STATE OF CALIFORNIA

PREPARED BY:
PHOENIX CIVIL ENGINEERING, INC.
535 E. MAIN STREET
SANTA PAULA, CA 93060
(805) 658-6800

REGISTERED CE 60214 — EXP. 6-30-20 — DATE

REV.	SYM.	DESCRIPTION	R.C.E.	DATE
		50% SUBMITTAL		11/8/18

SAN SIMEON COMMUNITY SERVICES DISTRICT
WATER SYSTEM IMPROVEMENT PROJECT
PHASE 1

LINE "B" - STA. 1+00 TO STA. 4+97.25
OTTER WAY- STA. 1+00 TO STA. 4+53.04

REVIEWED BY: GENERAL MANAGER — DATE
JOB NO. -
DRAWING NO. C-06

DESIGNED BY:	DRAWN BY:	CHECKED BY:	DATE
JMT	CK	JMT	11/7/18

SHEET 8 OF 15

50% SUBMITTAL

DWG: C:\Users\chrisk\Box\SSCSD Reservoir\ACAD\IMPROVEMENTS\08-SSCSD-OTTER-LINE B.dwg USER: ChrisKeck
DATE: Nov 09, 2018 8:47am XREFS: PC-BDR RESERVOIR SSCSD-LO SSCSD-IMP 181307T PCE San Simeon Pipelines

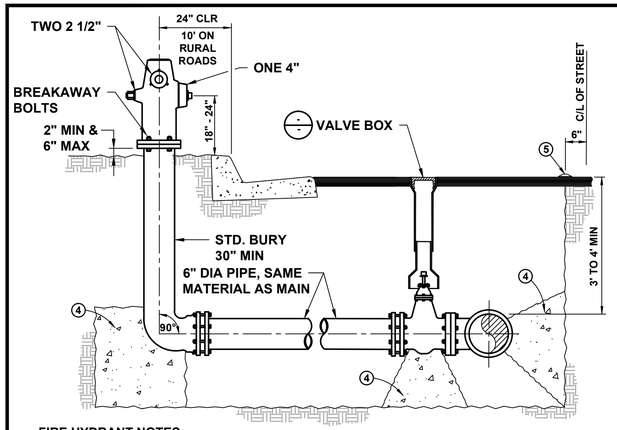

FIRE HYDRANT NOTES:

1. HEIGHT SHALL BE MEASURED FROM EDGE OF PAVEMENT WHEN CONCRETE CURB OR ASPHALT DIKE ARE NOT REQUIRED PER THE DESIGN STANDARDS.
2. DISTANCE SHALL BE INCREASED TO 10-FEET CLEAR FROM THE EDGE OF TRAVELED WAY (EDW) ON RURAL ROADS (SEE U-1).
3. IN RURAL AREAS A 4' MINIMUM RADIUS CLEAR AND LEVEL ZONE SURROUNDING THE FIRE HYDRANT SHALL BE REQUIRED.
4. CONCRETE THRUST BLOCKS SHALL CONFORM TO STATE STANDARD 90-1.01, 470 LBS/CY CEMENTITIOUS MATERIAL [5 SACK], POURED AGAINST UNDISTURBED SOIL AND SHIELDED FROM FLANGES AND BOLTS.
5. EACH HYDRANT SHALL BE IDENTIFIED BY A REFLECTORIZED BLUE RAISED PAVEMENT MARKER PER SECTION 10.301c OF THE UNIFORM FIRE CODE.
6. THE HYDRANT CAP AND OUTLET NOZZLE SHALL BE PAINTED IN ACCORDANCE WITH TABLE 6.6 OF 6.2.1.D.2.
7. THE CONCRETE CURB OR ASPHALT DIKE SHALL BE PAINTED RED 15-FEET EITHER SIDE OF THE FIRE HYDRANT.
8. HYDRANT SHALL BE CLOW F960, OR APPROVED EQUAL.
9. EACH HYDRANT SHALL HAVE TWO 2-1/2" OUTLETS AND ONE 4" OUTLET WITH EXTERNAL NSF THREAD.
10. ALL FITTINGS SHALL BE CEMENT MORTAR LINED IN ACCORDANCE WITH AWWA STANDARD C-104.
11. HYDRANT LATERAL SHALL BE OF THE SAME MATERIAL AS THE MAIN.
12. 14-GAUGE INSULATED COPPER TRACER WIRE SHALL BE ATTACHED TO THE PIPE AND BROUGHT ABOVE GRADE AND SECURED TO THE HYDRANT BOLT FLANGE.
13. COLOR CODED BLUE 3" WIDE POLYETHYLENE NON-DETECTABLE TAPE MARKED "CAUTION BURIED WATER LINE BELOW" SHALL BE BURIED IN THE TRENCH AND ABOVE THE PIPE AND TRACER WIRE.

FIRE HYDRANT DETAIL

SCALE: N.T.S.

1 / -

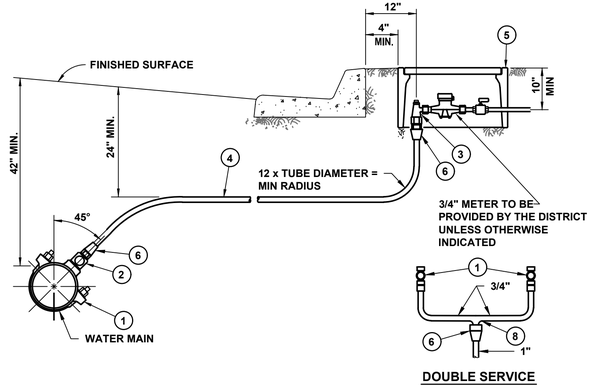

WATER SERVICE NOTES:

1. BRONZE SERVICE SADDLE, DOUBLE STRAP, MUELLER BR 2B 0899 IP, 075 OR 100, O.A.E..
2. CORPORATION STOP WITH IP THREADS, MUELLER H-10012, O.A.E.
3. ANGLE METER STOP, JONES J-1966W, 3/4" OR 1",O.A.E..
4. POLYETHYLENE PIPE, 3/4' MIN. I.D. FOR SINGLE SERVICE 1" MIN. I.D. FOR DOUBLE SERVICE.
5. METER BOX, BROOKS PRODUCT 37-S, O.A.E..
6. MUELLER INSTA-TITE CONNECTION H-15426 (MALE) O.A.E..
7. IN UNPAVED AREA SET METER BOX 1" TO 1 1/2" ABOVE FINISHED GRADE.
8. U-BRANCH CONNECTION, MUELLER H-15365, O.A.E.
9. O.A.E. = "OR APPROVED EQUAL".
10. WATER METER AND CUSTOMER SIDE SHUT OFF VALVE TO BE INSTALLED BY THE WATER PURVEYOR.
11. CORPORATION STOPS SHALL NOT BE SPACED CLOSER THAN 12" MEASURED ALONG THE CENTERLINE OF THE PIPE.
12. 3/4" SINGLE SERVICE LINE, 1" DOUBLE SERVICE LINES, USE 16" x 21" DUAL METER BOX (BROOKS PRODUCT OR APPROVED EQUAL) FOR DOUBLE SERVICE.
13. SERVICES LARGER THAN 1" MAY BE PVC SCHEDULE 80 PIPE.
14. 14-GAUGE INSULATED COPPER TRACER WIRE SHALL BE ATTACHED TO THE PIPE AND BROUGHT ABOVE GRADE THROUGH ANY METER OR VALVE BOXES.
15. COLOR CODED BLUE 3" WIDE POLYETHYLENE NON-DETECTABLE TAPE MARKED "CAUTION BURIED WATER LINE BELOW" SHALL BE BURIED IN THE TRENCH ABOVE THE PIPE AND TRACER WIRE.

WATER SERVICE CONNECTION

SCALE: N.T.S.

2 / -

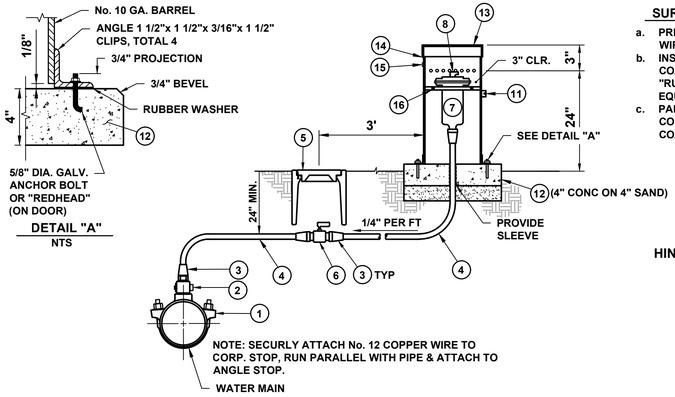

SURFACE PREPARATION AND PAINT::

a. PREPARE BOTH INSIDE AND OUTSIDE PIPE SURFACES BY WIRE BRUSH CLEANING.
b. INSIDE AND OUTSIDE SURFACES SHALL BE PRIMER COATED WITH TWO COATS. PRIMER SHALL BE "RUST-OLEUM CLEAN METAL PRIMER", OR APPROVED EQUAL.
c. PAINT SHALL BE RUST-OLEUM INDUSTRIAL ENAMEL COLOR "SAFETY BLUE", OR APPROVED EQUAL, TWO COATS OF PAINT ARE REQUIRED.

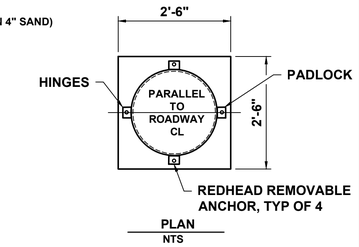

NOTES:

1. BRONZE SERVICE SADDLE, DOUBLE STRAP, WITH AWWA I.P. THREADS.
2. CORPORATION STOP WITH IP THREADS.
3. MULLER INSTA-TITE CONNECTION.
4. POLYETHYLENE PIPE, PIPE SIZE SHOULD MATCH AIR & VACUUM RELIEF VALVE SIZE.
5. CAST IRON TRAFFIC COVER & EXTENSIONS AS REQUIRED.
6. BALL VALVE.
7. AIR & VACUUM RELIEF VALVE WITH STAINLESS STEEL TRIM.
8. SCH. 80 PVC ELBOW.
9. 14-GAUGE INSULATED COPPER TRACER WIRE SHALL BE ATTACHED TO THE PIPE AND BROUGHT ABOVE GRADE THROUGH ANY METER OR VALVE BOXES.
10. COLOR CODED BLUE 3" WIDE POLYETHYLENE NON-DETECTABLE TAPE MARKED "CAUTION BURIED WATER LINE BELOW" SHALL BE BURIED IN THE TRENCH AND ABOVE THE PIPE AND TRACER WIRE.
11. ANGLE 1 1/2"x 1 1/2"x 3/16" LONG. WELD TO BARREL AND DOOR WITH HOLES FOR PADLOCK (2 REQ.).
12. CONCRETE BASE SHALL CONFORM TO STATE STANDARD 90-1.01, 565 LBS/CY CEMENTITIOUS MATERIAL (6 SACK).
13. FABRICATE LID FROM 10GA. PLATE WELDED TO BARREL. FABRICATE BARREL FROM 10 GA. STEEL PIPE. DRILL 20 EA. 1/2" HOLES 3" FROM TOP OF BARREL. STEEL PIPE SHALL BE MIN 20"Ø AS REQ'D. TO MATAIN MIN CLEARANCE BETWEEN BARREL AND VALVE SIDES.
14. WELD AND GRIND SMOOTH.
15. HINGE-WELD TO DOOR AND BARREL.
16. GALV. STEEL BRACE WITH BOLTED CONNECTIONS

AIR/VAC RELIEF ASSEMBLY

SCALE: N.T.S.

3 / -

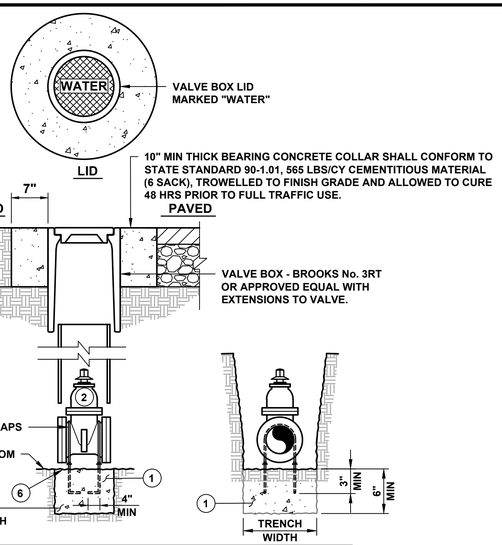

NOTES:

1. CONCRETE THRUST BLOCKS SHALL CONFORM TO STATE STANDARD 90-1.01, 470 LBS/CY CEMENTITIOUS MATERIAL (5 SACK), AND POURED AGAINST UNDISTURBED NATIVE SOIL.
2. VALVES SHALL HAVE NON-RISING STEM, RESILIENT WEDGE RESILIENT SEAT, AND BE EPOXY COATED.
3. ALL MATERIALS AND INSTALLATION SHALL CONFORM WITH THE APPLICABLE SECTIONS OF THE DESIGN STANDARDS.
4. AL FITTINGS SHALL BE WRAPPED IN POLYETHYLENE SHEET AND ALL FLANGES AND BOLTS SHALL BE SHIELDED FROM CONCRETE PER THE DESIGN STANDARDS.
5. UNDER NO CIRCUMSTANCES SHALL UTILITY LIDS AND CONCRETE COLLARS BE LOCATED WITHIN CURBS, GUTTERS, SIDEWALKS, DRIVEWAYS, CURB APRONS OR CROSS GUTTERS.
6. VALVE ANCHOR SHALL BE POURED LEVEL WITH TRENCH BOTTOM. ANCHOR STRAPS SHALL BE FASTENED TO CONCRETE EMBEDDED ANCHOR BOLTS.

VERIFY SCALES
BAR IS ONE INCH ON ORIGINAL DRAWING
0 — 1
IF NOT ONE INCH ON THIS SHEET, ADJUST SCALES ACCORDINGLY

VALVE ANCHOR & BOX

SCALE: N.T.S.

4 / -

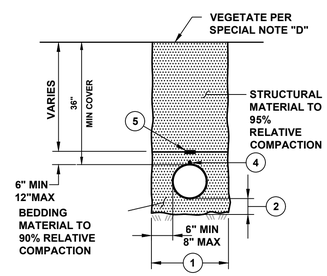

UNPAVED SURFACE

SPECIAL NOTES (UNPAVED SURFACE):

A. SPECIAL CONSIDERATION SHALL BE TAKEN BY THE DESIGNER TO ENSURE SURFACE DRAINAGE WILL NOT ENTER TRENCH.
B. WHEN TRENCHING ON STEEP SLOPES, CUT-OFF WALLS AND OR PIPE ANCHORS MAY BE REQUIRED BY THE DEPARTMENT AND SHALL BE DETAILED ON THE PLANS.
C. TRENCHING ALIGNMENT SHALL BE DESIGNED TO AVOID DAMAGE TO EXISTING TREES AND THEIR ROOT SYSTEM. WHEN ADJACENT TO TREES THEN THE TRENCHING RECOMMENDATIONS OF THE PROJECT BOTANIST SHALL BE FOLLOWED.
D. THE UPPER SURFACE SHALL BE SCARIFIED AND REVEGETATED. VEGETATIVE COVER SHALL BE ESTABLISHED PRIOR TO ACCEPTANCE OF WORK.

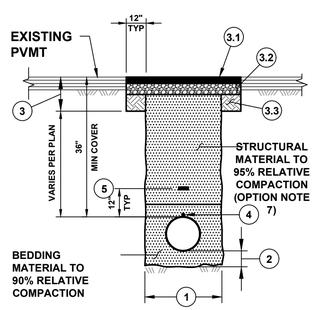

PAVED SURFACE

NOTES:

1. TRENCH WIDTH SHALL BE PIPE DIA PLUS 6" FOR EACH SIDE OF PIPE.
2. BEDDING MEASUREMENT IS 6" BELOW GREATEST OUTSIDE DIMENSION AT PIPE JOINTS.PIPE SHALL BE BACKFILLED TO THE SPRING LINE AMD COMPACTED TO 90% PRIOR TO COMPLETING INITIAL BACKFILL.
3. ROAD STRUCTURAL SECTION SHALL BE BASED ON THE TI AND R VALUE AT TIME OF CONSTRUCTION.
   3.1. HOT MIX ASPHALT (HMA) PER THE DESIGN STDS TO 95% RELATIVE COMPACTION.
   3.2. CLASS II AGGREGATE BASE TO 95% RELATIVE COMPACTION.
   3.3. 12" MIN SUBGRADE TO 95% RELATIVE COMPACTION.
4. FOR WATER, 14 GAUGE INSULTED COPPER TRACER WIRE SHALL BE ATTACHED TO PIPES AND SERVICE LATERALS.
5. 3" WIDE POLYETHYLENE NON-DETECTABLE TAPE MARKED AND COLOR CODED PER THE DESIGN STD'S SHALL BE BURIED IN THE TRENCH 12-INCHES ABOVE ALL PIPES AND LATERALS.
6. REFER TO STD DRAWINGS U-3 TO U-3b FOR ADDITIONAL REQUIREMENTS FOR WATER TRENCHES.
7. CONCRETE SLURRY TRENCH BACKFILL SHALL CONFORM TO STATE STD 90-1.01, 188 LBS/CY CEMENTITIOUS MATERIAL (2 SACKS), TO SURFACE OF BASE COURSE SECTION. DO NOT PLACE AGGREGATE BASE ABOVE SLURRY BACKFILL.

BEDDING MATERIAL

SIEVE SIZES	PERCENT PASSING
1"	100%
No. 4	80% - 100%
No. 200	0% - 15%

STRUCTURAL MATERIAL

SIEVE SIZES	PERCENT PASSING
3"	100%
No. 4	35% - 100%
No. 30	20% - 100%

TYPICAL TRENCH DETAIL

SCALE:

5 / -

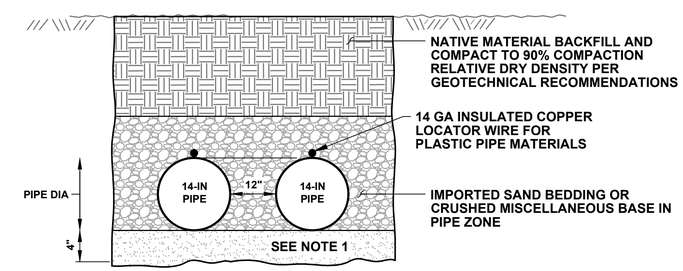

NOTES:

1. IMPORTED SAND BEDDING SHALL EXTEND 4-INCHES MIN. BELOW PIPE
2. OVER EXCAVATION SHALL BE REQUIRED IF NATIVE MATERIAL IS SOFT, SPONGY OR UNSTABLE. OVER EXCAVATION MATERIALS SHALL BE CRUSHED ROCK MATERIAL AND COMPACTED TO 95% RELATIVE COMPACTION.

COMMON TRENCH DETAIL

SCALE: N.T.S.

B / -

Know what's below. Call 811 before you dig.

REGISTERED PROFESSIONAL ENGINEER JONATHON M. TURNER No. 60214 EXP. 6/30/20 CIVIL STATE OF CALIFORNIA

PREPARED BY:
PHOENIX CIVIL ENGINEERING, INC.
535 E. MAIN STREET
SANTA PAULA, CA 93060
(805) 658-6800

REGISTERED CE 60214 — EXP. 6-30-20 — DATE

REV.	SYM.	DESCRIPTION	R.C.E.	DATE
		50% SUBMITTAL		11/9/18

SAN SIMEON COMMUNITY SERVICES DISTRICT
WATER SYSTEM IMPROVEMENT PROJECT PHASE 1

DETAILS

REVIEWED BY: GENERAL MANAGER — DATE

JOB NO. -
DRAWING NO. C-07

DESIGNED BY:	DRAWN BY:	CHECKED BY:	DATE	
JMT	CK	JMT	11/9/18	SHEET 09 OF 14

50% SUBMITTAL

DWG: C:\Users\ChrisKeck\Box\SSCSD Reservoir\ACAD\IMPROVEMENTS\09-SSCSD-WATER-DETAILS-01.dwg USER: ChrisKeck
DATE: Nov 09, 2018 9:23am XREFS: San Simeon - Water Pipeline Control San Simeon Pipelines pc-bbr reservoir

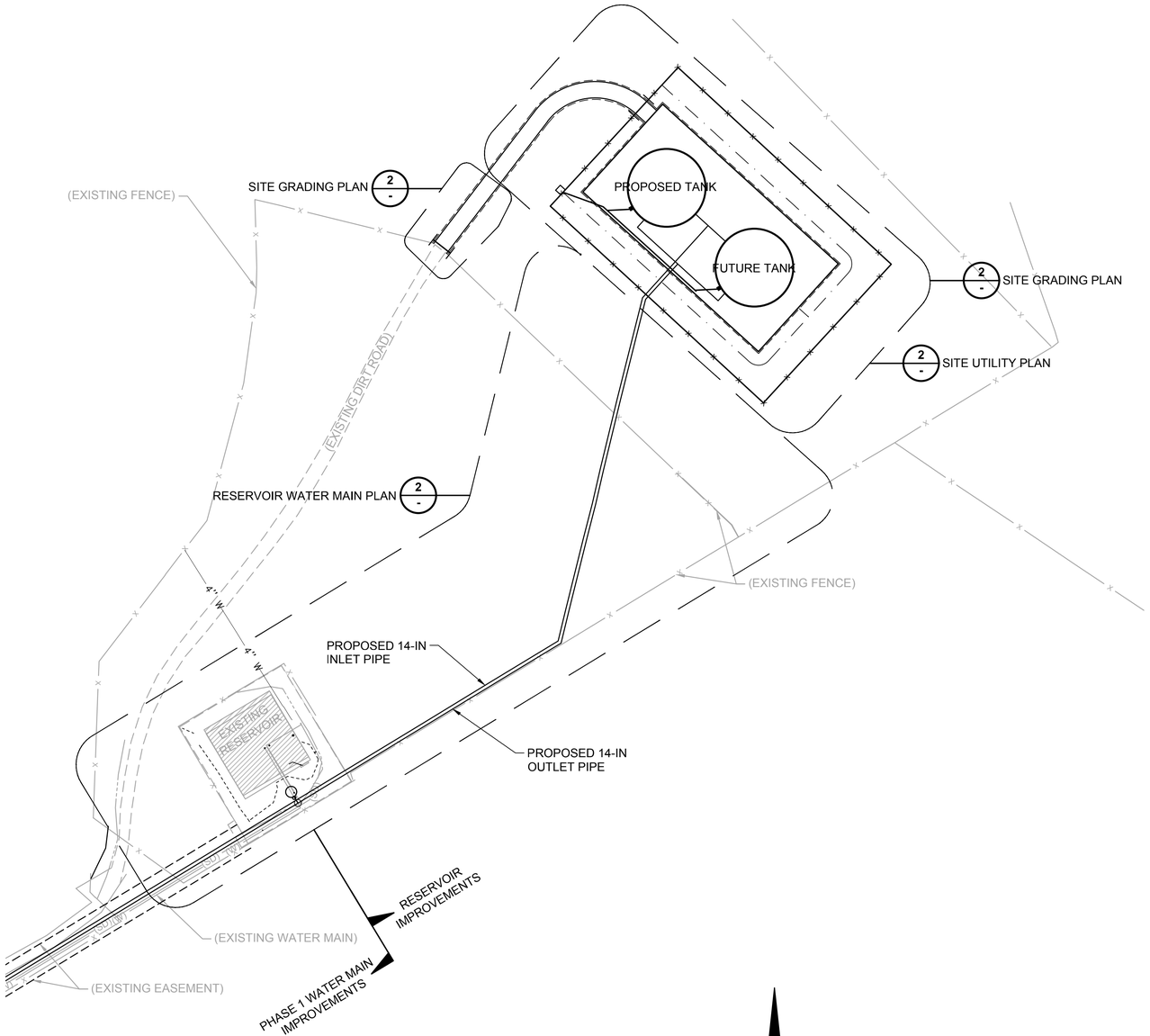

RESEVOIR SHEET LAYOUT

SCALE: 1" = 50'

1 -

CONSTRUCTION NOTES

1. (2) 57-FOOT DIA BY 24-FOOT TALL 400,000 GALLON ABOVE GROUND WELDED STEEL POTABLE WATER TANK.
2. WATER TANK SUPPORT PAD. SEE A/1
3. 12-INCH DIA PVC C900 DR 18 OR DUCTILE IRON CLASS 53 COMMON INLET/OUTLET PIPE. SEE PLAN FOR LENGTH. FOR TRENCH SEE B/1
4. 12-FOOT WIDE DG (DECOMPOSED GRANITE) OR CMB (CRUSHED MISCELLANEOUS BASE) ACCESS ROADWAY. SEE C/-
5. 6-FOOT HIGH CHAIN LINK FENCE PER SPPWC STD PLAN 600-3 AROUND THE PERIMETER OF THE TANK SITE. CHAIN LINK FENCE TO HAVE 3 STRANDS OF BARBED WIRE ALONG THE TOP.
6. 16-FOOT WIDE CHAIN LINK ACCESS GATE.

SCALE: 1" = 40'

40' 20' 0 40' 80'

SCALE IN FEET

VERIFY SCALES
BAR IS ONE INCH ON ORIGINAL DRAWING
0 1
IF NOT ONE INCH ON THIS SHEET, ADJUST SCALES ACCORDINGLY

811 Know what's below. Call 811 before you dig.

REGISTERED PROFESSIONAL ENGINEER JONATHON M. TURNER No. 60214 EXP. 6/30/20 CIVIL STATE OF CALIFORNIA

PREPARED BY:
PHOENIX CIVIL ENGINEERING, INC.
535 E. MAIN STREET
SANTA PAULA, CA 93060
(805) 658-6800

REGISTERED CE 60214 — EXP. 6-30-20 — DATE

REV.	SYM.	DESCRIPTION	R.C.E.	DATE
		50% SUBMITTAL		11/9/18

SAN SIMEON COMMUNITY SERVICES DISTRICT
WATER SYSTEM IMPROVEMENT PROJECT
PHASE 1

WATER RESERVOIR INDEX SHEET

REVIEWED BY: GENERAL MANAGER — DATE

JOB NO. -
DRAWING NO. C-08

DESIGNED BY:	DRAWN BY:	CHECKED BY:	DATE	
JMT	CK	JMT	11/9/18	SHEET 10 OF 14

50% SUBMITTAL

DWG: C:\Users\ChrisKeck\Box\SSCSD Reservoir\ACAD\IMPROVEMENTS\11-SSCSD-TANK-SHEETINDEX.dwg USER: ChrisKeck
DATE: Nov 09, 2018 9:07am XREFS: SSCSD-IMP SSCSD-LO 181301 PCE PC-BDR RESERVOIR

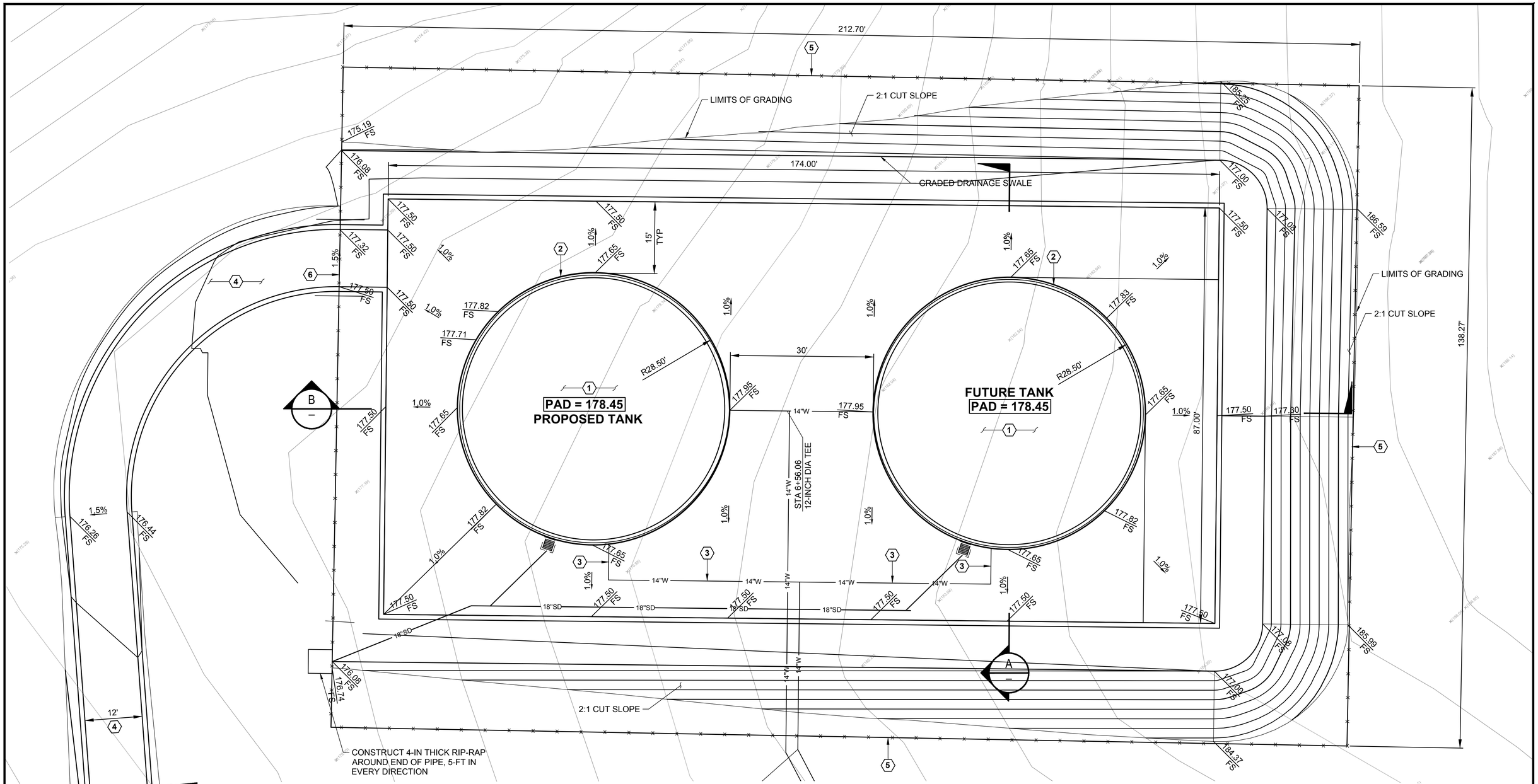

RESEVOIR SITE PLAN

SCALE: 1" = 10'

1 / -

DIRT QUANTITIES:
CUT = 4808 = CY
FILL = 0 CY
ON SITE DISTRIBUTION (GRADING) = 4808 CY

CONSTRUCTION NOTES

1. (2) 57-FOOT DIA BY 24-FOOT TALL 400,000 GALLON ABOVE GROUND WELDED STEEL POTABLE WATER TANK.
2. WATER TANK SUPPORT PAD. SEE A/1
3. 12-INCH DIA PVC C900 DR 18 OR DUCTILE IRON CLASS 53 COMMON INLET/OUTLET PIPE. SEE PLAN FOR LENGTH. FOR TRENCH SEE B/1
4. 12-FOOT WIDE DG (DECOMPOSED GRANITE) OR CMB (CRUSHED MISCELLANEOUS BASE) ACCESS ROADWAY. SEE C/-
5. 6-FOOT HIGH CHAIN LINK FENCE PER SPPWC STD PLAN 600-3 AROUND THE PERIMETER OF THE TANK SITE. CHAIN LINK FENCE TO HAVE 3 STRANDS OF BARBED WIRE ALONG THE TOP.
6. 16-FOOT WIDE CHAIN LINK ACCESS GATE.

VERIFY SCALES
BAR IS ONE INCH ON ORIGINAL DRAWING
0 — 1
IF NOT ONE INCH ON THIS SHEET, ADJUST SCALES ACCORDINGLY

SCALE: 1" = 10'
10' 5' 0 10' 20'
SCALE IN FEET

Know what's below. Call 811 before you dig.

REGISTERED PROFESSIONAL ENGINEER JONATHON M. TURNER No. 60214 EXP. 6/30/20 CIVIL STATE OF CALIFORNIA

PREPARED BY:
PHOENIX CIVIL ENGINEERING, INC.
535 E. MAIN STREET
SANTA PAULA, CA 93060
(805) 658-6800

6-30-20
REGISTERED CE 60214 EXP. DATE

REV.	SYM.	DESCRIPTION	R.C.E.	DATE
		50% SUBMITTAL		11/9/18

SAN SIMEON COMMUNITY SERVICES DISTRICT
WATER SYSTEM IMPROVEMENT PROJECT
PHASE 1

RESERVOIR IMPROVEMENTS
SITE GRADING PLAN

REVIEWED BY:
GENERAL MANAGER DATE

JOB NO. -
DRAWING NO. C-09

DESIGNED BY:	DRAWN BY:	CHECKED BY:	DATE	
JMT	CK	JMT	11/9/18	SHEET 11 OF 14

50% SUBMITTAL

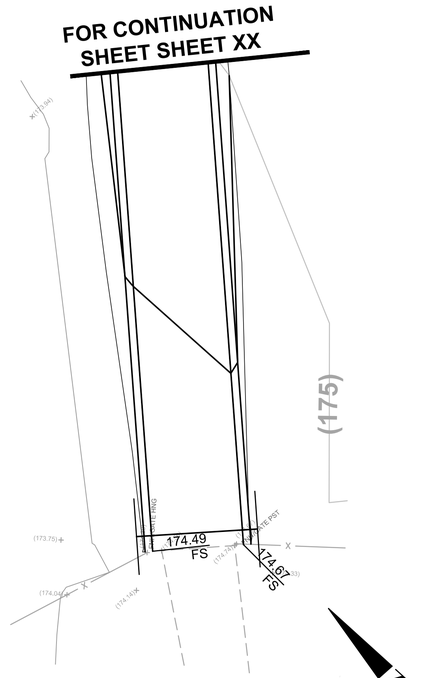

RESEVOIR SITE PLAN

SCALE: 1" = 10'

1 / -

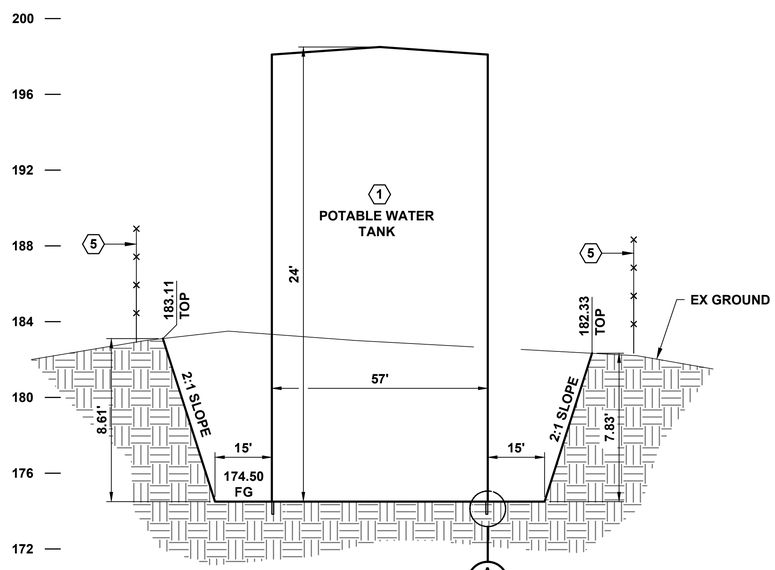

SECTION A-A

SCALE: 1" = 20' HORIZONTAL, 1" = 4' VERTICAL

A / 1

A / -

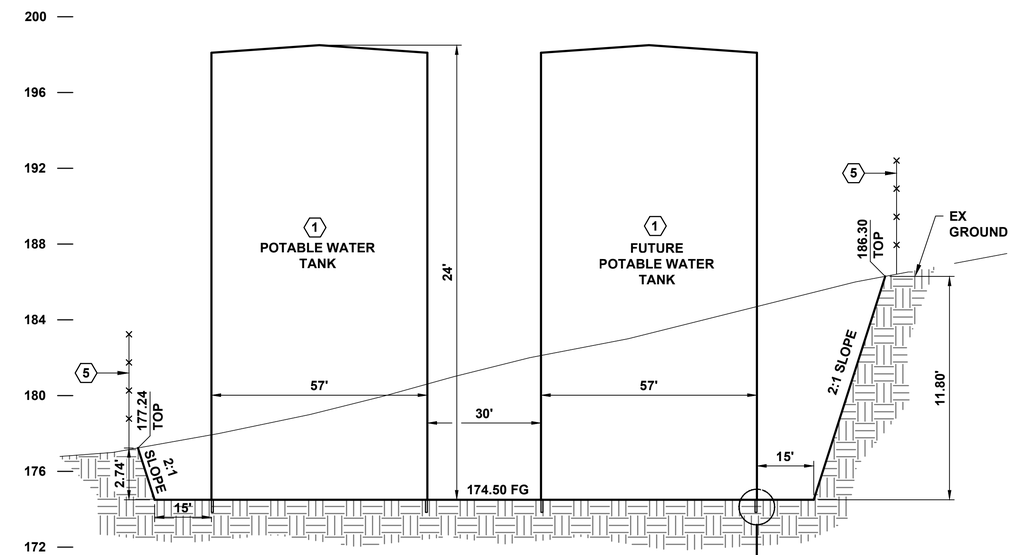

SECTION B-B

SCALE: 1" = 20' HORIZONTAL, 1" = 4' VERTICAL

B / -

A / 1

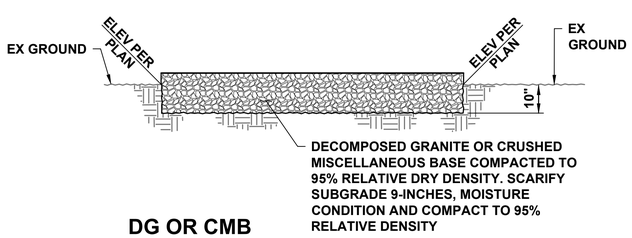

DG OR CMB ACCESS ROADWAY DETAIL

SCALE: N.T.S.

C / -

TANK PAD DETAIL

SCALE: N.T.S.

D / -

VERIFY SCALES
BAR IS ONE INCH ON ORIGINAL DRAWING
0 1
IF NOT ONE INCH ON THIS SHEET,
ADJUST SCALES ACCORDINGLY

SCALE: 1" = 10'

10' 5' 0 10' 20'

SCALE IN FEET

Know what's below. Call 811 before you dig.

REGISTERED PROFESSIONAL ENGINEER JONATHON M. TURNER No. 60214 EXP. 6/30/20 CIVIL STATE OF CALIFORNIA

PREPARED BY:
PHOENIX CIVIL ENGINEERING, INC.
535 E. MAIN STREET
SANTA PAULA, CA 93060
(805) 658-6800

6-30-20
REGISTERED CE 60214 EXP. DATE

REV.	SYM.	DESCRIPTION	R.C.E.	DATE
		50% SUBMITTAL		11/9/18

SAN SIMEON COMMUNITY SERVICES DISTRICT

WATER SYSTEM IMPROVEMENT PROJECT
PHASE 1

RESERVOIR IMPROVEMENTS
SITE GRADING & DETAILS

REVIEWED BY:
GENERAL MANAGER DATE

JOB NO. -
DRAWING NO. C-10

DESIGNED BY:	DRAWN BY:	CHECKED BY:	DATE
JMT	CK	JMT	11/9/18

SHEET 12 OF 14

50% SUBMITTAL

RESERVOIR CONNECTION DETAIL (2 / -)

SCALE: 1" = 5'

RESEVOIR UTILITY PLAN (1 / -)

SCALE: 1" = 20'

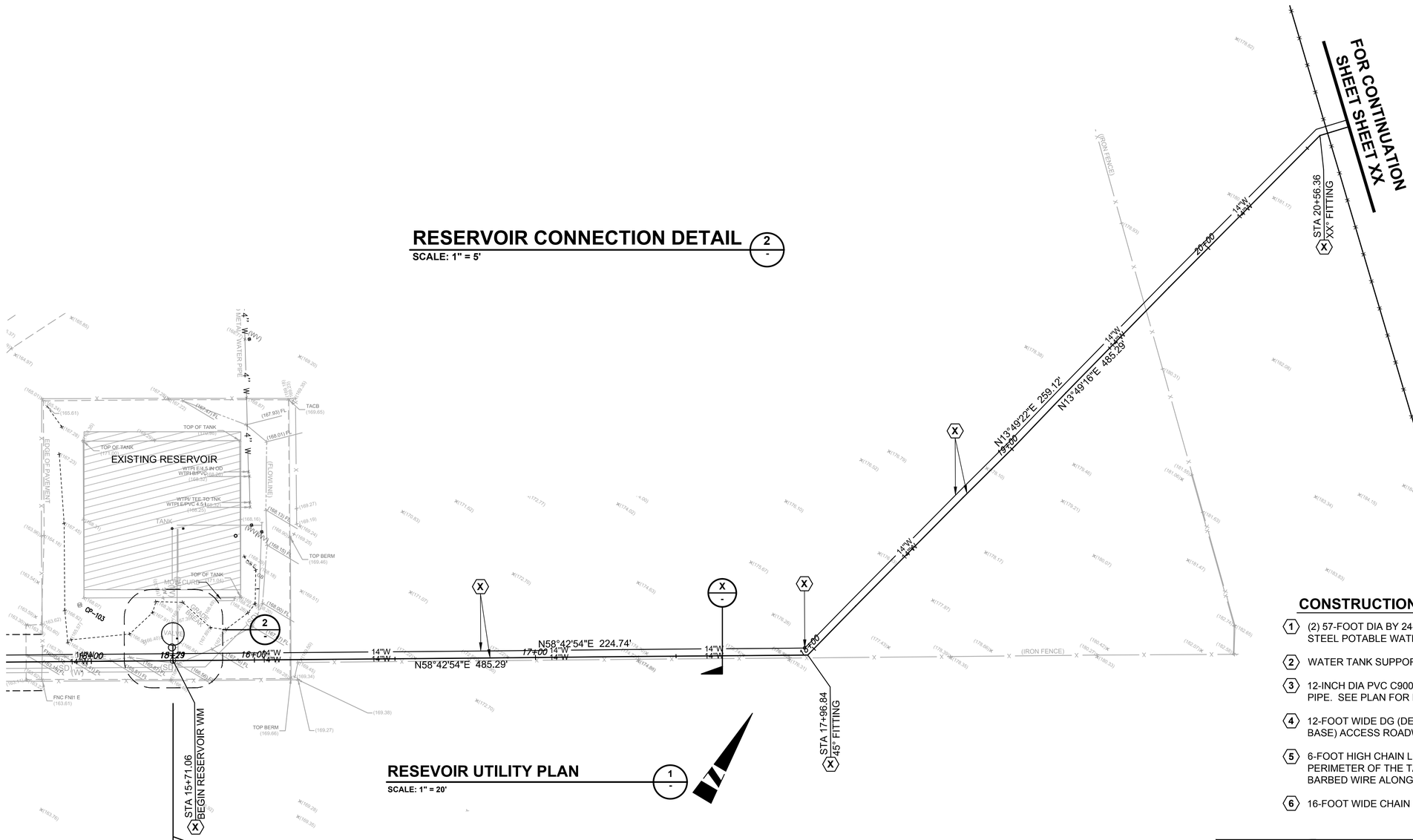

CONSTRUCTION NOTES

1. (2) 57-FOOT DIA BY 24-FOOT TALL 400,000 GALLON ABOVE GROUND WELDED STEEL POTABLE WATER TANK.
2. WATER TANK SUPPORT PAD. SEE (A / 1)
3. 12-INCH DIA PVC C900 DR 18 OR DUCTILE IRON CLASS 53 COMMON INLET/OUTLET PIPE. SEE PLAN FOR LENGTH. FOR TRENCH SEE (B / 1)
4. 12-FOOT WIDE DG (DECOMPOSED GRANITE) OR CMB (CRUSHED MISCELLANEOUS BASE) ACCESS ROADWAY. SEE (C / -)
5. 6-FOOT HIGH CHAIN LINK FENCE PER SPPWC STD PLAN 600-3 AROUND THE PERIMETER OF THE TANK SITE. CHAIN LINK FENCE TO HAVE 3 STRANDS OF BARBED WIRE ALONG THE TOP.
6. 16-FOOT WIDE CHAIN LINK ACCESS GATE.

SCALE: 1" = 30'

30' 15' 0 30' 60'

SCALE IN FEET

VERIFY SCALES
BAR IS ONE INCH ON ORIGINAL DRAWING
0 1
IF NOT ONE INCH ON THIS SHEET, ADJUST SCALES ACCORDINGLY

Know what's below. Call 811 before you dig.

REGISTERED PROFESSIONAL ENGINEER JONATHON M. TURNER No. 60214 EXP. 6/30/20 CIVIL STATE OF CALIFORNIA

PREPARED BY:
PHOENIX CIVIL ENGINEERING, INC.
535 E. MAIN STREET
SANTA PAULA, CA 93060
(805) 658-6800

REGISTERED CE 60214 EXP. 6-30-20 DATE

REV.	SYM.	DESCRIPTION	R.C.E.	DATE
		50% SUBMITTAL		11/9/18

SAN SIMEON COMMUNITY SERVICES DISTRICT
WATER SYSTEM IMPROVEMENT PROJECT
PHASE 1

WATER RESERVOIR SITE UTILITY PLAN

REVIEWED BY: GENERAL MANAGER DATE

JOB NO. -
DRAWING NO. C-11

DESIGNED BY:	DRAWN BY:	CHECKED BY:	DATE
JMT	CK	JMT	11/9/18

SHEET 13 OF 14

50% SUBMITTAL

DWG: C:\Users\ChrisKeck\Box\SSCSD Reservoir\ACAD\IMPROVEMENTS\14-SSCSD-TANK-UTIL.dwg USER: ChrisKeck
DATE: Nov 09, 2018 10:32am XREFS: SSCSD-IMP SSCSD-LO 181301 PCE PC-BDR RESERVOIR San Simeon – Water Pipeline Control San Simeon Pipelines

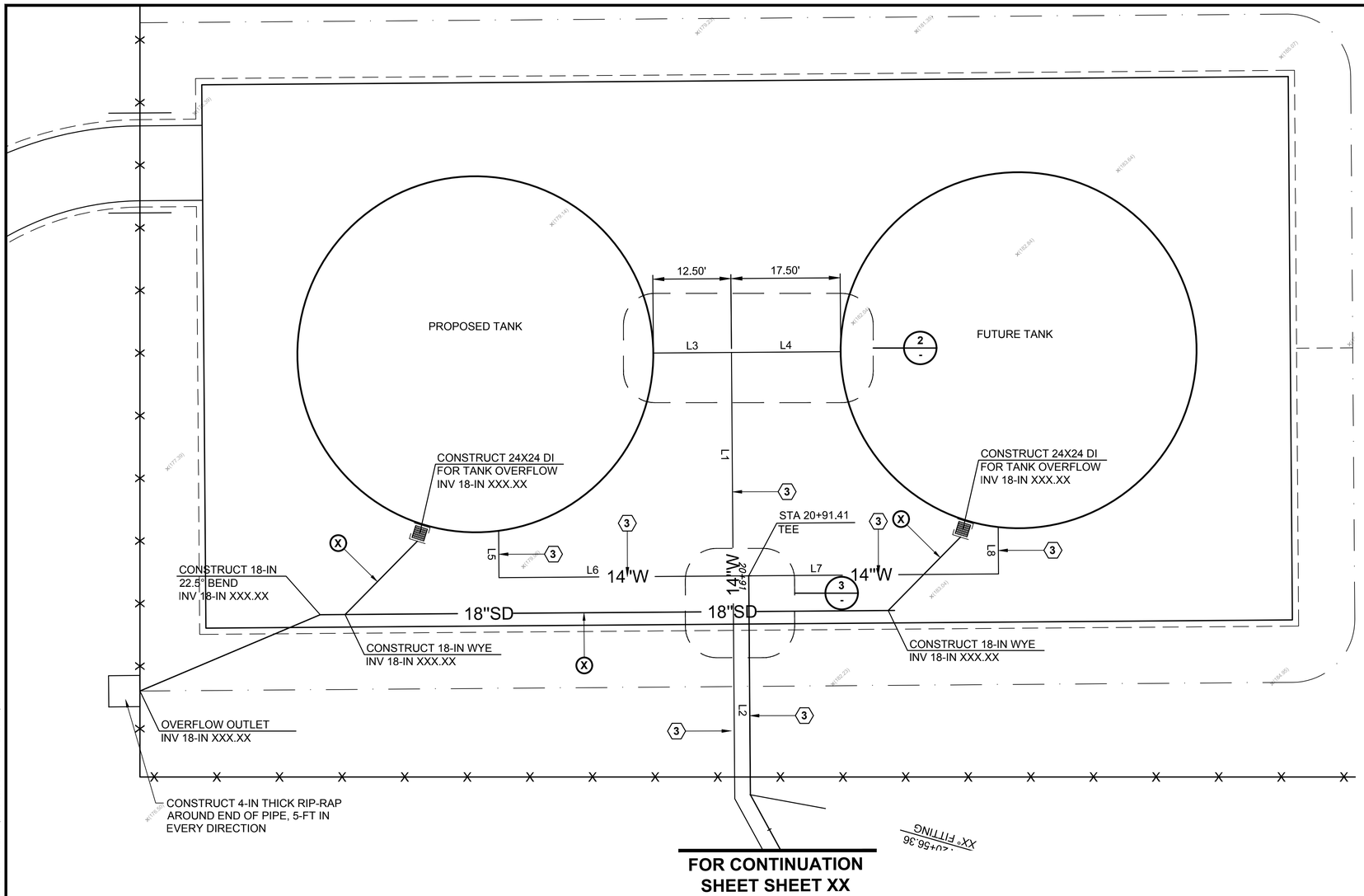

RESEVOIR UTILITY PLAN

SCALE: 1" = 10'

STORM DRAIN CONSTRUCTION NOTES

1. INSTALL 38 LF OF 8-IN DIA HDPE STORM DRAIN PIPE

PROPOSED TANKS:
BOTTOM ELEVATION: 174.50-FEET ABOVE MSL
MAX OPERATING WATER LEVEL: 195.50-FEET ABOVE MSL
DIFFERENCE IN ELEVATION (HIGH WATER): 30.50-FEET (13 PSI)

CONSTRUCTION NOTES

1. (2) 57-FOOT DIA BY 24-FOOT TALL 400,000 GALLON ABOVE GROUND WELDED STEEL POTABLE WATER TANK.
2. WATER TANK SUPPORT PAD. SEE A/1
3. 12-INCH DIA PVC C900 DR 18 OR DUCTILE IRON CLASS 53 COMMON INLET/OUTLET PIPE. SEE PLAN FOR LENGTH. FOR TRENCH SEE B/1
4. 12-FOOT WIDE DG (DECOMPOSED GRANITE) OR CMB (CRUSHED MISCELLANEOUS BASE) ACCESS ROADWAY. SEE C/-
5. 6-FOOT HIGH CHAIN LINK FENCE PER SPPWC STD PLAN 600-3 AROUND THE PERIMETER OF THE TANK SITE. CHAIN LINK FENCE TO HAVE 3 STRANDS OF BARBED WIRE ALONG THE TOP.
6. 16-FOOT WIDE CHAIN LINK ACCESS GATE.

LINE TABLE

LINE #	BEARING	LENGTH
L1	N42° 15' 42"E	71.47'
L2	N42° 15' 42"E	35.06'
L3	N47° 44' 18"W	12.50'
L4	N47° 44' 18"W	17.50'
L5	N42° 15' 42"E	7.50'
L6	N47° 44' 18"W	40.00'
L7	N47° 44' 18"W	40.00'
L8	N42° 15' 42"E	7.50'

SCALE: 1" = 10'
10' 5' 0 10' 20'
SCALE IN FEET

ENLARGED DETAIL

SCALE: 1" = XX'

VERIFY SCALES
BAR IS ONE INCH ON ORIGINAL DRAWING
0 1
IF NOT ONE INCH ON THIS SHEET, ADJUST SCALES ACCORDINGLY

ENLARGED DETAIL

SCALE: 1" = XX'

811 Know what's below. Call 811 before you dig.

REGISTERED PROFESSIONAL ENGINEER JONATHON M. TURNER No. 60214 EXP. 6/30/20 CIVIL STATE OF CALIFORNIA

PREPARED BY:
PHOENIX CIVIL ENGINEERING, INC.
535 E. MAIN STREET
SANTA PAULA, CA 93060
(805) 658-6800

6-30-20
REGISTERED CE 60214 EXP. DATE

REV.	SYM.	DESCRIPTION	R.C.E.	DATE
		50% SUBMITTAL		11/9/18

SAN SIMEON COMMUNITY SERVICES DISTRICT
WATER SYSTEM IMPROVEMENT PROJECT
PHASE 1

WATER RESERVOIR UTILITY SITE PLAN

REVIEWED BY:
GENERAL MANAGER DATE

JOB NO. -
DRAWING NO. C-12

DESIGNED BY:	DRAWN BY:	CHECKED BY:	DATE
JMT	CK	JMT	11/9/18

SHEET 14 OF 14

50% SUBMITTAL

DWG: C:\Users\Chrisk\Box\SSCSD Reservoir\ACAD\IMPROVEMENTS\14-SSCSD-TANK-UTIL.dwg USER: ChrisKeck
DATE: Nov 09, 2018 9:26am XREFS: SSCSD-IMP SSCSD-LO 181301 PCE PC-BDR RESERVOIR San Simeon - Water Pipeline Control San Simeon Pipelines

Kevin Merk Associates, LLC | P.O. Box 318, San Luis Obispo, CA 93406 | 805-748-5837

July 29, 2019

Mr. Jeff Oliveira
Oliveira Environmental Consulting
3155 Rose Avenue
San Luis Obispo, CA 93401

Subject: Rare Plant Survey Results for the San Simeon Community Services District Water Improvement Project, San Simeon, San Luis Obispo County, California

Dear Mr. Oliveira:

Kevin Merk Associates (KMA), at your request, conducted rare plant surveys of the San Simeon Community Services District's proposed Water Improvement project site during the spring of 2019. Following field work and analysis for preparation of the project's Biological Resources Assessment (KMA, 2018; BRA), special status plants were identified as having potential to occur onsite based on the presence of suitable habitat. Mitigation Measure BIO-1a was developed in the BRA to require seasonally timed rare plant surveys, and Mitigation Measure BIO-1b detailed the requirements should a special status plant be identified on the site and affected by the proposed project. The following provides the methods and results of the rare plant surveys conducted on the site in the spring 2019.

Methods

KMA conducted the botanical surveys on April 25 and June 7, 2019 to supplement the August 31, 2018 site visit documented in the BRA. Surveys were conducted in accordance with accepted protocols developed by the U.S. Fish and Wildlife Service (U.S. Fish and Wildlife Service, 2000; USFWS), California Department of Fish and Wildlife (California Department of Fish and Wildlife, 2000; CDFW), and California Native Plant Society (California Native Plant Society, 2001; CNPS), which means: 1) survey personnel traversed all suitable habitat within the entire project area on foot by walking meandering transects to ensure thorough coverage of the area; 2) surveys were spaced throughout the spring season to document the site's flora; a 3) surveys were floristic in nature, and all plant species observed were recorded and identified to a sufficient level to determine rarity. Plant taxonomy followed nomenclature included in the Jepson Manual, second addition (Baldwin et al., 2012). Robert Hoover's *The Vascular Plants of San Luis Obispo County, California* (1970) was also used to identify plants observed onsite. Calflora and the Consortium of California Herbarium were also accessed online to obtain records of special status plant observations from the region. Special status plant occurrences observed in the field were delineated using a Trimble GPS (GeoXH 6000) unit capable of decimeter accuracy.

Special status species definitions followed those described in the BRA prepared for the project in 2018. The Habitat Map included as Figure 3 in the BRA was used alongside recent aerial imagery from Google Earth during the field surveys. Reference populations of several of the species on the

target list were visited during the course of the survey effort to ensure the species were in identifiable condition at the time each survey was conducted.

Results

The BRA prepared for the project in 2018 identified 11 special status plants with potential to occur onsite based on the presence of suitable habitat. Surveys conducted in April and June 2019 identified two special status plants growing along the outer perimeter of the study area, and included Cambria morning glory (*Calystegia subacaulis* ssp. *episcopalis*) and Blochman's dudleya (*Dudleya blochmaniae* ssp. *blochmaniae*). One dead Monterey pine (*Pinus radiata*) was still present in the outer, northeastern limits of the study area and since it was dead, it was not mapped. Other Monterey pine trees were present outside the study area and are common in the region. In addition, an area of native grassland was observed in the northern part of the study area, and the Habitat Map included in the BRA was revised to show the limits of this plant community (please see attached Figure 3A). Also included is an updated plant list of species observed during the surveys and a photo plate to illustrate existing conditions of the site and document the rare plant occurrences observed in the spring of 2019. The following summarizes the findings of the survey effort.

Cambria morning glory, a California Rare Plant Rank (CRPR) 4.2 species, was observed in patchy, low density occurrences (i.e., 1-4 plants/square meter) along the eastern fenceline. Several individual plants were also observed growing in the dense non-native grassland areas along the western part of the study area. Cambria morning glory was observed as a common component of the extensive grasslands to the east of the site, and the species is known to occur throughout grasslands in the northern San Luis Obispo coastal areas extending southward to Santa Maria in northern Santa Barbara County. The CRPR 4.2 listing means the species is of limited geographic distribution and on a watch list. The threat ranking of 0.2 means it is moderately threatened (approximately 20-80% of occurrences are threatened with a moderate degree and immediacy of threat). As stated above, it is common in the region, and while the proposed project may impact several individuals growing along the eastern fenceline during pipeline installation between the existing reservoir and future tanks, the project would not result in significant impacts to this species existence in the region.

Blochman's Dudleya is a CRPR 1B.2 species that was observed at two distinct locations along the outer limits of the western study area. Exposed rock outcroppings just outside the western fenceline supported roughly 50 individual Blochman's Dudleya plants (refer to Figure 3A). The majority of the study area contained dense non-native grassland with a buildup of thatch, and was not suitable habitat for this species. The CRPR 1B.2 listing means it is rare throughout its range. The threat ranking of 0.2 means it is moderately threatened (approximately 20-80% of occurrences are threatened with a moderate degree and immediacy of threat). The species is known to occur on shallow rocky soils and along the margins of rock outcrops throughout coastal San Luis Obispo County. The project as proposed would not impact this species. Since all project-related activities would occur within the fenced area surrounding the existing reservoir.

Monterey pine is a CRPR 1B.1 and was observed as a common element of the woodland habitat on the slopes outside the study area. One dead individual was observed in the study area, and several other trees were present in the fenced pasture, but outside the proposed project footprint. The

CRPR 1B.1 listing for this species means it is rare throughout its range. The threat ranking of 0.1 means it seriously threated in California with over 80% of the occurrences with a high degree and immediacy of threat. The species occurs in three primary geographic areas in the Central California area, which includes the Waddell Creek/Año Nuevo area of northern Santa Cruz County, the Monterey Peninsula in Monterey County, and the Cambria/San Simeon area of northern San Luis Obispo County. The species has been planted worldwide as an important lumber tree., and is also commonly used in landscaping The proposed project will not impact any Monterey pine trees.

As stated above and shown on the attached Figure 3A, an area of native grassland was observed in the northern part of the study area. It was composed primarily of purple needlegrass (*Stipa pulchra*). Review of sheet 10 of 14 shows the proposed reservoir tanks may impact some of this native grassland. Native grassland composed of purple needlegrass does not currently meet the state of California's rarity definition as it is listed as S4 (please refer to the BRA for further detail). While native grassland is common in the region, and extensive areas of purple needlegrass were observed offsite during the spring surveys, mitigation measures provided in the BRA were developed to reduce project related impacts to grassland habitat and reduce potential impacts from erosion to a less than significant level. Mitigation measure BIO-7c requires temporarily impacted areas be stabilized and revegetated using a native erosion control seed mix composed of four grasses and one clover found in grassland habitat in the San Simeon area. Implementation of Mitigation measure BIO-7c would adequately mitigate project related impacts to native grassland to a less than significant level pursuant to the California Environmental Quality Act.

Thank you for the opportunity to work with you on this project. If you have any questions regarding the information contained herein, please call me directly.

Sincerely,
KEVIN MERK ASSOCIATES, LLC

Kevin B. Merk
Principal Biologist

Attachments *Figure 3A – Habitat Map (updated)*
Updated Plant List
Photo Plate

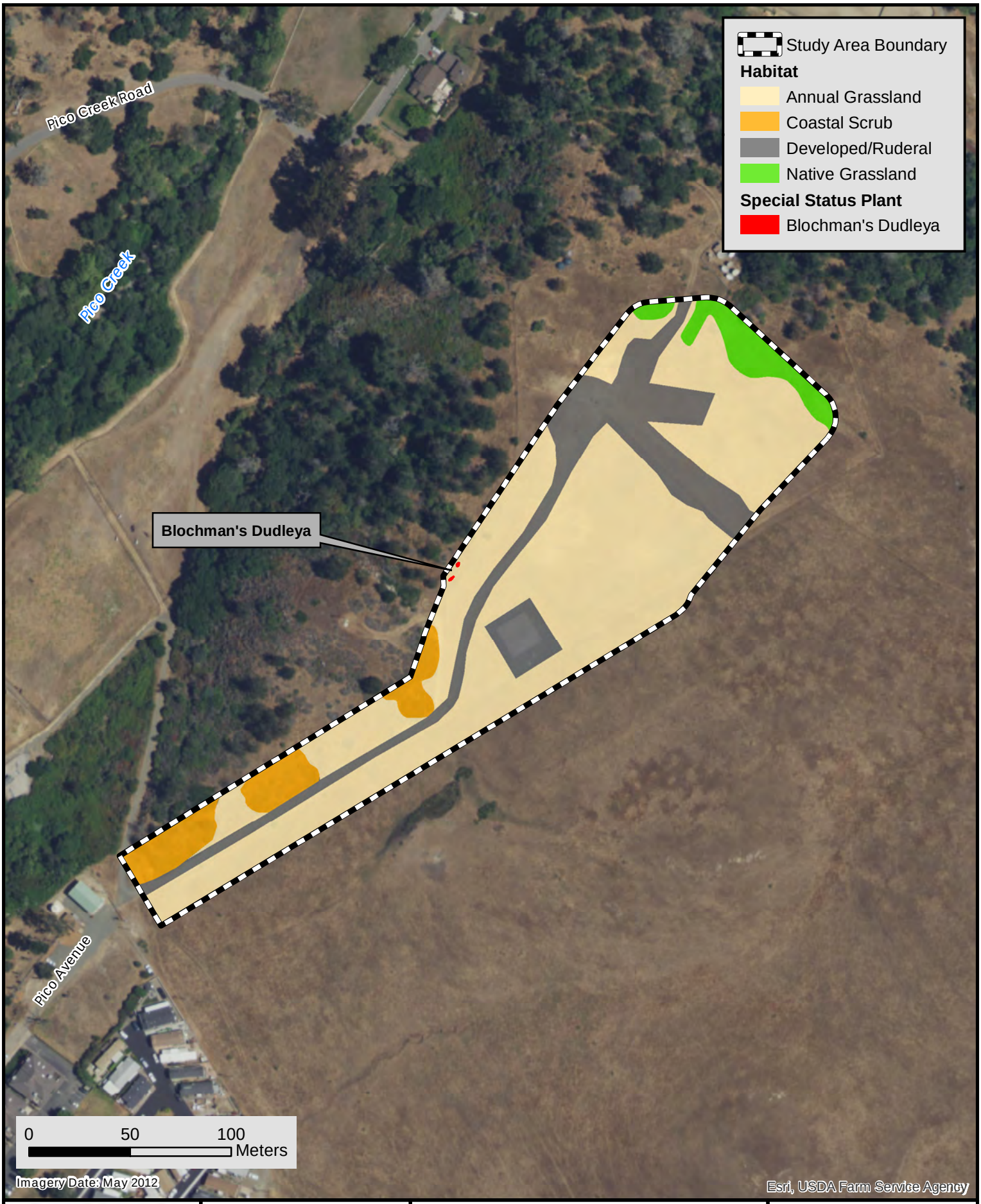

KEVIN MERK ASSOCIATES

N W E S

1 in = 200 feet

SSCSD Water System Improvement Project

San Simeon CSD

Figure 3A

Habitat Map

List of Plants Observed Onsite During the April and June 2019 Site Visits

Scientific Name*	Common Name
Plants	
Achillea millefolium	Yarrow
*Aira caryophyllea**	Silvery hairgrass
Artemisia californica	California sagebrush
*Avena barbata**	Slender wild oats
Baccharis pilularis	Coyote brush
*Bellardia trixago**	Mediterranean linseed
*Brachypodium distachyon**	False brome
*Briza maxima**	Rattlesnake grass
*Briza minor**	Little quake grass
*Bromus hordeaceus**	Soft chess
*Bromus diandrus**	Ripgut brome
Calystegia macrostegia ssp. *cyclostegia*	Coast morning glory
Calystegia subacaulis* ssp. *episcopalis	**Cambria morning glory (CRPR List 4.2)**
*Carduus pycnocephalus**	Italian thistle
Chlorogalum pomeridianum	Amole
*Cirsium vulgare**	Bull thistle
Danthonia californica	California oatgrass
Deinandra corymbosa	Coastal tarweed
Dudleya blochmaniae* ssp. *blochmaniae	**Blochman's dudleya (outside fence; CRPR 1B.1)**
Elymus glaucus	Blue wild rye
*Erodium botrys**	Storksbill
*Erodium cicutarium**	Red-stemmed filaree
Eschscholzia californica	California poppy
*Festuca (=Vulpia) myuros**	Rattail fescue
*Festuca perennis**	Italian rye grass
Frangula californica	California coffeeberry
Heteromeles arbutifolia	Toyon
*Hirschfeldia incana**	Summer mustard
Hordeum marinum ssp. *gussoneanum**	Mediterranean barley
Hordeum murinum ssp. *leporinum**	Hare barley
*Hypochaeris glabra**	Smooth cat's ear
Juncus bufonius	Toad rush
Juncus occidentalis	Western rush
*Linum bienne**	Flax
*Lysimachia arvensis**	Scarlet pimpernel
*Matricaria discoidea**	Pineapple weed
*Medicago polymorpha**	Burclover
Pinus radiata	**Monterey pine (outside study area; CRPR 1B)**
*Plantago lanceolata**	English plantain
*Poa annua**	Annual blue grass
Quercus agrifolia	Coast live oak
*Rumex acetosella**	Sheep sorrel
*Rumex pulcher**	Fiddleneck dock
Sisyrinchium bellum	Blue-eyed grass
*Sonchus asper**	Prickly sow thistle

Scientific Name*	Common Name
Stipa pulchra	Purple needle grass
Taraxia ovata	Sun cup
Thermopsis macrophylla	Santa Ynez false lupine
Toxicodendron diversilobum	Poison oak
Trifolium depauperatum var. *amplectens*	Pale sack clover
*Trifolium dubium**	Little hop clover
*Trifolium incarnatum**	Scarlet clover
*Trifolium subterraneum**	Subterranean clover
Triphysaria eriantha ssp. *rosea*	Johnny tuck

* = Non-native species.
Bold = special status species.

Photo Plate

Photo 1. Northerly view of entrance driveway and fencing that separates site from extensive grasslands to the east.

Photo 2. Majority of onsite grassland was dominated by non-native species such as Italian ryegrass and *Bellardia trixago* (white flowering herb in photo).

Photo 3. Site was actively grazed by horses and this photo shows central fence separating pastures. Note bare disturbed soils and dense non-native grasses.

Photo 4. Far northern part of site contained a predominance of native bunchgrasses and other forbs and was mapped as native grassland (refer to Figure 3A).

Photo 5. Eastern fenceline borders extensive grasslands on the neighboring property. Several Cambria morning glory plants were observed along the fence with higher density occurrences present further east offsite.

Photo 6. Photo of one Cambria morning glory plant growing along fenceline between existing reservoir and future tank site.

Photo 7. Several small rock outcroppings outside the western fenceline had occurrences of Blochman's Dudleya plants.

Photo 8. Close-up view of Blochman's Dudleya plants growing on exposed rock outside the western fenceline. These occurrences will not be impacted by the proposed project.

Attachment E
Geotechnical Report

GEOTECHNICAL REPORT

SAN SIMEON COMMUNITY SERVICES DISTRICT POTABLE WATER RESERVOIR PROJECT FINAL DESIGN

San Simeon, California

Prepared for:
Phoenix Civil Engineering, Inc.

September 2018
Project No. 003.004

Oakridge Geoscience, Inc.

PO Box 2540, Camarillo, California 93011
www.Oakridgegeo.com
805-603-4900

September 24, 20187
Project No. 003.004

Phoenix Civil Engineering, Inc.
535 Main Street
Santa Paula, California 93060

Subject: Geotechnical Report, San Simeon Community Services District, Potable Water Reservoir Final Design, San Simeon, California

Dear Mr. Turner:

Oakridge Geoscience, Inc. is pleased to present this geotechnical report for the final design of the San Simeon Community Services District Potable Water Reservoir Project in San Simeon, California. The proposed project will consist of construction of two 400,000-gallon potable water tanks and associated piping. The purpose of this report is to summarize the anticipated geotechnical conditions at the project site and provide geotechnical recommendations in support of the project design by Phoenix Civil Engineering, Inc.

Closure

We appreciate the opportunity to provide geotechnical services to Phoenix Civil Engineering for the San Simeon Potable Water Reservoir Project. Please contact us if you have any questions regarding information presented herein.

Sincerely,

OAKRIDGE GEOSCIENCE, INC.

REGISTERED GEOLOGIST
LORI E. PRENTICE
EG NO. 2312
CERTIFIED ENGINEERING GEOLOGIST
STATE OF CALIFORNIA

REGISTERED GEOTECHNICAL ENGINEER
RORY A. ROBINSON
No. 2491
Exp. 09/30/2019
GEOTECHNICAL
STATE OF CALIFORNIA

Lori E. Prentice, CEG
President

Rory "Tony" Robinson, PE, GE
Principal Geotechnical Engineer

Copies Submitted: (1 electronic copy (pdf) via email)

CONTENTS

Page

1.0 INTRODUCTION 1
- 1.1 General Statement 1
- 1.2 Purpose and Understanding 1
- 1.3 Project Description 1
- 1.4 Work Performed 1
  - 1.4.1 Data Review and Project Coordination 2
  - 1.4.2 Field Exploration 2
  - 1.4.3 Laboratory Testing 2
  - 1.4.4 Geotechnical Analyses and Report 2

2.0 FINDINGS 3
- 2.1 Site Description 3
- 2.2 Geologic Setting 3
  - 2.2.1 Regional Geology 3
  - 2.2.2 Local Geology 3
- 2.3 Subsurface Conditions and Engineering Properties 4
  - 2.3.1 Colluvium (Qc) 4
  - 2.3.2 Marine Terrace Deposits (Qmtcm) 4
  - 2.3.3 Franciscan Formation Mélange (Kfm) 4
  - 2.3.4 Engineering Properties 5
- 2.4 Groundwater 5
- 2.5 Potential Variation of Subsurface Materials 6
- 2.6 Seismic Considerations and Geohazards 6
  - 2.6.1 Faults 6
  - 2.6.2 Ground Rupture Potential 6
  - 2.6.3 Seismic Considerations for 2013 CBC 7
  - 2.6.4 2013 CBC Seismic Design Parameters 7
  - 2.6.5 American Water Works Association (AWWA) D100 Seismic Design Parameters 8
  - 2.6.6 Liquefaction Potential 8
  - 2.6.7 Landsliding and Slope Stability 9
  - 2.6.8 Expansive and Collapsible Soils 9

3.0 OPINIONS AND RECOMMENDATIONS 10
- 3.1 Summary of Subsurface Site Conditions 10
- 3.2 Soil Chemistry and Corrosion 10
  - 3.2.1 Test Results 10
  - 3.2.2 Corrosion and Cement Considerations 11

CONTENTS - CONTINUED

Page

3.3 Site Grading 11
3.3.1 General Site Clearing and Grubbing 11
3.3.2 Subgrade Preparation 11
3.3.3 Fill Material Selection 11
3.3.4 Dewatering 12
3.3.5 Fill Placement 12
3.3.6 Compaction 13
3.4 Foundation Design 13
3.4.1 Shallow Foundation Design 13
3.4.2 Allowable Bearing Pressure 13
3.4.3 Minimum Embedment Depth and Width 13
3.4.4 Sliding and Passive Resistance 13
3.4.5 Static Settlements 14
3.5 Construction Considerations 14
3.5.1 Excavation Conditions 14
3.5.2 Temporary Slopes and Excavations 14
3.5.3 Permanent Slopes 15
3.5.4 Site Drainage 15
3.5.5 Water Pipeline and Dry Utilities 15
4.0 LIMITATIONS 15
4.1 Report Use 15
4.2 Hazardous Materials 15
4.3 Local Practice 16
4.4 Plan Review 16
4.5 Construction Monitoring 16
REFERENCES 17

PLATES

PLATE 1 SITE LOCATION MAP
PLATE 2 EXPLORATION LOCATION MAP
PLATE 3 REGIONAL GEOLOGY MAP

APPENDICES

APPENDIX A FIELD EXPLORATION
APPENDIX B LABORATORY TESTING

1.0 INTRODUCTION

1.1 GENERAL STATEMENT

This geotechnical report summarizes the findings and recommendations of the geotechnical study performed by Oakridge Geoscience, Inc. (OGI) for the final design phase of the San Simeon Potable Water Reservoir Project in San Simeon, California. The proposed project will consist of construction of two 400,000-gallon welded steel potable water storage tanks and associated piping as summarized below. The general location of the proposed project site is shown on Plate 1.

1.2 BACKGROUND

OGI performed a preliminary geotechnical study in 2017 (OGI, 2017) to evaluate the geotechnical conditions of the site located about 300 feet to the southwest of the current location that was being considered at that time.

1.3 PURPOSE AND UNDERSTANDING

The purpose of this design-level geotechnical study is to evaluate the geotechnical conditions in the vicinity of the revised location of the proposed water tanks and provide opinions and geotechnical recommendations for the project. Our understanding of the project and requirements is based on discussions with Phoenix Civil Engineering, Inc. (PCE) and information provided in the project RFP. The current project location and exploration locations from the current study and from OGI (2017) are shown on Plate 2.

1.4 PROJECT DESCRIPTION

As depicted on plans by PCE, the proposed project consists of the following elements:

- Two 400,000-gallon welded steel tanks (57 feet in diameter, 24 feet high, with a tank pad finished grade elevation (El.) of El. +174.5 feet.
- Approximately 555 feet of 14-inch diameter ductile iron water pipeline connecting the existing reservoir to the new tanks.
- The revised proposed tank location is approximately 500 feet upslope to the northeast of the existing concrete reservoir. Grading for the new tank site will include 2 horizontal to 1 vertical (2h:1v) cutslopes ranging from about two- to about 10-feet high.

1.5 WORK PERFORMED

Our proposed work scope for the original project scope (2017) was presented in our proposal dated February 3, 2017 and was authorized by a PCE Agreement for Professional Consulting Services, dated March 23, 2017. The scope of work performed for this study was presented in our proposal dated June 8, 2018 and was authorized by a PCE Agreement for Professional Consulting Services, dated August 3, 2018. The work performed for this study consists of review of existing work by OGI, project-specific field exploration, laboratory testing, geotechnical engineering evaluation, and preparation of this report.

1.5.1 Data Review and Project Coordination

We reviewed readily available published geologic data for the San Simeon area and our report for the 30 percent design study. Prior to subsurface exploration, we contacted Underground Service Alert (USA) for utility coordination. PCE indicated that SSCSD does not have any geotechnical data for the existing tank available for review.

1.5.2 Field Exploration

Field exploration for the project consisted of advancing three hollow-stem-auger drill holes in the site footprint being evaluated for the 2017 study (DH-1 through DH-3) and two hollow-stem-auger drill holes in the revised footprint location (DH-101 and DH-102) for the current study to evaluate the subsurface conditions. The approximate drill hole locations are indicted on Plate 2. The drill holes were advanced by S/G Drilling of Lompoc, California with a CME85 drill rig equipped with an automatic trip hammer. The drill holes were advanced to depths of 25 to 30 feet and were logged by our field geologist to document excavation conditions and material types. The drill holes were sampled using driven standard penetration test (SPT) or modified California split spoon samplers at about 2-1/2-foot intervals to about 10 to 15 feet and at about 5-foot intervals to total depth. Additionally, bulk samples were collected from cuttings returned to the ground surface by the auger flights. The drill holes were backfilled to the surface with the excavated materials and wheel-rolled upon completion at each location.

The drill hole logs are provided in Appendix A.

1.5.3 Laboratory Testing

Geotechnical laboratory tests were performed on selected earth materials sampled in the drill holes to characterize the earth materials and estimate relevant engineering design parameters. The testing consists of moisture/density measurements, grainsize, plasticity, compaction, and limited chemical testing (sulfates, sulfides, chlorides, pH, and resistivity). The laboratory test results are presented on the drill hole logs (Appendix A) and in Appendix B.

1.5.4 Geotechnical Analyses and Report

We evaluated the field and laboratory geotechnical data, developed geotechnical engineering recommendations for design and construction of the project based on the revised design concept provided to us, and prepared this report to summarize our findings, opinions and recommendations. Our report includes the following:

- Summary of work performed and results of our data review;
- Drill hole logs and an exploration location map;
- Summary of the subsurface soil and groundwater conditions encountered;
- Laboratory test results;
- Assessment of seismically-related geohazards such as strong ground motion, fault rupture potential, liquefaction potential, liquefaction-related settlement, and seismically induced settlement;
- Assessment of geologic hazards such as flooding, erosion, slope instability, expansive or collapsible soils;

- California Building Code (CBC) and AWWA D100 seismic design;
- Earthwork and grading recommendations, including clearing and grubbing, subgrade soil preparation, compaction requirements, and earthen roadways;
- Suitability of excavated materials for use as fill and select fill; suggested specifications for on-site and imported materials used as fill;
- Foundation parameters including allowable active and passive pressure, allowable bearing pressure, coefficient of friction, lateral earth pressures; and
- Corrosion potential.

2.0 FINDINGS

2.1 SITE DESCRIPTION

The project site is located on an elevated terrace area northeast of the community of San Simeon as indicated on Plate 1. The existing partly buried SSCSD concrete reservoir is located in a grass pasture area along a dirt/gravel ranch road extending upslope about 800 feet northeast of the northeastern end of Pico Avenue. The proposed revised tank site is located within a pasture area about 500 feet northeast and upslope of the existing reservoir. The project site slopes gently to the southwest; the elevation is about El. +170 feet near the existing partially buried tank and about El. +177 to +186 feet near the proposed new tank site (Plate 2). The southwesterly draining Pico Creek is located downslope to the northwest of the site about 600 feet with an elevation of about +20 feet.

2.2 GEOLOGIC SETTING

2.2.1 Regional Geology

The project site is located within the Central Coast Range geologic/geomorphic province of California. That province is characterized by generally northwest-southeast trending mountain ranges composed of metamorphic, sedimentary and volcanic rocks ranging in age from Cretaceous to Recent. Major northeast-southwest trending folds, right-lateral strike-slip and reverse faults reflect regional seismic setting of the Coast Ranges. Several authors including Weber (1983), Dibblee (1976), and more recently the USGS (2014) have mapped the San Simeon area. The regional geology as mapped by the USGS (2014) is presented on Plate 3.

2.2.2 Local Geology

The earth materials mapped in the vicinity of the proposed SSCSD tank site by the USGS (2014), consists of middle Pleistocene-age marine terrace deposits (Qmtcm) overlying Late Cretaceous-age Franciscan Formation Mélange (Kfm). The USGS describes the marine terrace deposits as “a well-developed terrace surface often covered by a thick package of sediments”. The underlying Franciscan Formation mélange is described as “sheared black and gray argillite enclosing blocks of graywacke, conglomerate, greenstone, diabase, chert, serpentine, and glaucophane schist ranging in size from pebble to hill-sized”. The rocks of the Franciscan Complex are mostly derived from Jurassic to Cretaceous oceanic crust and pelagic deposits that have been “variable metamorphosed, depending on the depth of subduction”. The coastal belt

(including the San Simeon area) is composed mostly of Late Cretaceous and Tertiary, low grade metasediments.

The Coast Range geomorphic province is characterized by a complex zone of active faulting and folding. Major strike-slip and reverse faults include the Hosgri-San Simeon, Oceanic, and Rinconada faults. The Hosgri-San Simeon fault is located directly offshore of the project site (Plate 3) and the Oceanic fault, located about 2.5 miles east of the project site, was the source of the 2003 M6.6 San Simeon earthquake (USGS, 2014). Additional information relative to the seismicity at the site in presented in Section 2.6 of this report.

2.3 SUBSURFACE CONDITIONS AND ENGINEERING PROPERTIES

Earth materials encountered in the drill holes advanced for this study consist of a thin colluvial soil layer overlying marine terrace deposits which in turn overlie claystone bedrock of the Franciscan Formation Mélange to the depths explored of about 30 feet (Appendix A). Descriptions of the earth materials are presented in the following sections.

2.3.1 Colluvium (Qc)

Colluvium consisting primarily of sandy silt and clayey sand was encountered in the upper 2 to 3 feet in each of the drill holes (Appendix A) advanced for this study. The colluvial materials were described as grayish to dark grayish brown, dry, and had roots in the upper 12 to 18 inches. A thin layer of clay was encountered in DH-2 from about 2-1/2 to 3 feet below the ground surface.

2.3.2 Marine Terrace Deposits (Qmtcm)

Marine terrace deposits were encountered beneath the colluvium to depths of about 18 to 24 feet at the locations explored. The terrace deposits generally consisted of medium dense to very dense, orangish brown to brownish orange sand with clay, clayey sand, clayey sand with gravel, and gravel with sand as depicted on the drill hole logs in Appendix A.

Overall, the marine terrace deposits were described as damp, with the exception of a fine sandy sample at 10 feet in DH-2, which was described as wet. SPT N-value blowcounts generally ranged from 21 to greater than 50 blows per foot (bpf), indicating the samples were medium dense to dense. The terrace deposits contained varying amounts of gravel/rock fragments that may have affected the blowcounts as noted on the logs. The wet sample from 10 feet in DH-1 had an SPT N-value of 10 bpf, indicating the soil in that zone was loose to medium dense.

Groundwater seepage was encountered in the marine terrace deposits above the contact with the underlying Franciscan Formation bedrock (Appendix A).

2.3.3 Franciscan Formation Mélange (Kfm)

The Franciscan Formation mélange was encountered in each of the drill holes below the marine terrace deposits at depths ranging from about 18 to 24 feet. The depths of the bedrock correlate to elevations of about El. +152 feet in drill holes DH-1 through DH-3 and about El. +160 feet in drill holes DH-101 and DH-102. The mélange bedrock is described as dark brownish gray to dark greenish gray, moderately to intensely weathered, very soft (rock)/very stiff to hard (soil), damp to moist, graywacke claystone. The moderately to intensely weathered claystone had SPT N-value blowcounts of 34 to 84 bpf, suggesting engineering characteristics consistent with very stiff to hard clay soil. We note the Franciscan Formation can contain well indurated, hard to very

hard bedrock masses that can be difficult to excavate. We also note that outcrops of well indurated very hard Franciscan Formation materials were observed near the existing reservoir during our site visits. Also, Franciscan bedrock materials can be prone to landsliding, downhill creep, and instability

2.3.4 Engineering Properties

A summary of the general engineering parameters for the earth materials encountered in the drill holes advanced for this study consists of:

- The dry density of the marine terrace deposits ranged from 98 to 128 pounds per cubic foot (pcf), with most values in the range of 109 to 119 pcf.
- The moisture contents of the marine terrace deposits ranged from 7 to 20 percent, with most values between 11 and 19 percent.
- A laboratory maximum density test (ASTM D1557) was performed on a selected bulk sample of near surface soil collected from one of the drill holes. The test results indicate a maximum dry density of about 127 pcf and an optimum moisture content of 11 percent for the tested sample. Comparison of the in-place soil moisture contents and densities to the laboratory maximum density curve indicates the moisture contents of the tested soils are near or above the optimum moisture content and relative density of the soils is in the range of about 85 to 93 percent.
- The results of grainsize analyses indicate fines contents (percent passing No. 200 sieve) ranging from about 17 to 46 percent for the tested clayey sand samples and 3 to 12 percent for tested sand with clay and gravel and gravel with sand and clay samples.
- An Atterberg limits test (plasticity) performed on a sample of clayey sand marine terrace material indicates the tested fine-grained materials in the soil are plastic with a liquid limit of 60 and plasticity index of 41.
- The results of the soil chemistry tests are summarized in Section 3.2 below.

2.4 GROUNDWATER

Groundwater seepage was encountered in four of the five drill holes in the lower portions of the marine terrace deposits above the Franciscan Formation claystone bedrock. The depths of the groundwater ranged from about 19 to 24 feet at the exploration locations. Additionally, groundwater seepage was encountered in granular sediments at a depth of about 10 feet in DH-2. Review of geologic mapping and topographic maps by the USGS (2014 and 2015), indicates there are seeps in the descending hillside areas downslope to the northwest and southwest of the project site that may be related to daylighting of the terrace deposit/bedrock contact. Regional groundwater within the Franciscan Formation bedrock is expected to vary depending on rock quality and fracture density. Based on our data review, there are limited published regional groundwater data available for the sparsely populated San Simeon area. PCE has indicated the District's water source is from two shallow (about 50 feet deep) wells installed within Pico Creek. The water within the creek is seasonal and is influenced by tidal elevations.

2.5 POTENTIAL VARIATION OF SUBSURFACE MATERIALS

There is a potential for variation in the consistency, density, and strength/hardness of the materials from what was encountered in our explorations. The potential exists to encounter perched water, zones of poorly consolidated soils, well indurated, very hard bedrock materials, or other conditions not indicated on the exploration logs. If significant variation in the geologic conditions is observed during construction, we recommend the geotechnical engineer, in conjunction with the project designer, evaluate the impact of those variations on the project design.

2.6 SEISMIC CONSIDERATIONS AND GEOHAZARDS

2.6.1 Faults

The project site is located in the seismically active portion of central California and the project most likely will be subjected to strong earthquake ground motion during its lifetime. We note the M6.6 San Simeon earthquake in 2003 generated strong ground motion at the site. As summarized in Table 1, several active or potentially active faults are known or postulated to exist near the proposed tank site.

Table 1. Nearby Faults

Fault	Approximate Distance (miles)	Maximum Moment Magnitude (Mmax)
San Gregorio-Hosgri Fault System, including the San Simeon Fault Zone	1.5	7.3
Oceanic-West Huasna Fault	2.5	6.8
San Andreas Fault	41.0	8.1

Fault distances and earthquake magnitudes obtained from the USGS website applications

2.6.2 Ground Rupture Potential

The site is not located within a State of California Earthquake Fault Zone (formerly Alquist-Priolo Special Studies Zone) and no known active or potentially active faults cross or trend toward the site. The potential for fault rupture to affect the site is considered low.

2.6.3 Seismic Considerations for 2016 CBC

We estimated the probabilistic seismic hazards for the proposed tank site using the USGS Interactive Deaggregations web application (USGS). The estimated peak horizontal ground acceleration (pga) at the proposed tank site is estimated to be about 0.735g for an earthquake event with a 2,475-year return period (2 percent probability of exceedance in 50 years) assuming Site Class D[1] soil conditions. Table 2 summarizes the probabilistically estimated strong ground motion parameters for the project site.

Table 2. Summary of USGS Probabilistic Seismic Hazard Deaggregation Results

Return Period (years)	Mean Magnitude (Mw)	Mean Source Distance (km)	Peak Horizontal Ground Acceleration
2,475	6.7	7.45	0.735g

2.6.4 2016 CBC Seismic Design Parameters

In accordance with Chapter 16, Section 1613 of the 2016 CBC, the following parameters have been obtained from the USGS Seismic Design Maps web application and shall be incorporated into the seismic design at the project site. The subsurface conditions at the site are considered to satisfy the parameters for Site Class D as described in the footnote below. The associated seismic design parameters for Site Class D for use in generating the risk-targeted maximum considered earthquake and design level spectra are summarized in Table 3.

Table 3. 2016 CBC Seismic Design Parameters

2016 California Building Code Section 1613	Seismic Parameter	Site Class D Values
---	Latitude	35.6197
---	Longitude	-121.1416
Figure 1613.3.1(1)	Mapped Acceleration Response Parameter (S_s)	1.660g
Figure 1613.3.1(2)	Mapped Acceleration Response Parameter (S_1)	0.634g
Section 1613.3.2	Site Class	D
Section 1613.3.3 and Table 1613.3.3(1)	Site Coefficient (F_a)	1.0
Section 1613.3.3 and Table 1613.3.3(2)	Site Coefficient (F_v)	1.5

[1]. Site Class D is defined in the California Building Code as the stiff soil having the following average parameters for the upper 100 foot of the site: 1) shear wave velocity of 600 to 1,200 ft./sec,15< N value <50, and 1,000 psf <Su<2,000 psf. The average corrected N-value (N160) in the upper 25 feet of the site is 35. Weathered, soft rock is present below the medium dense to dense marine terrace deposits which have equivalent SPT N-values to the dense marine terrace deposits.

2016 California Building Code Section 1613	Seismic Parameter	Site Class D Values
Section 1613.3.3	Adjusted Acceleration Response Parameter (S_{MS})	1.660g
Section 1613.3.3	Adjusted Acceleration Response Parameter (S_{M1})	0.951g
Section 1613.3.3	Adjusted Acceleration Response Parameter (S_{DS})	1.107g
Section 1613.3.3	Adjusted Acceleration Response Parameter (S_{D1})	0.634g
Section 11.4.5	Design Response Spectrum (Figure 22-12; T_L)	T_L = 8 sec
Section 11.8.3	Peak Ground Acceleration	PGA = 0.735
Equation 11.8-1	$PGA_M = F_{PGA}$ x PGA	PGA_M = 0.735
Section 21.2.1.1	Figure 22-17, C_{RS}	C_{RS} = 0.847
Section 21.2.1.1	Figure 22-17, C_{R1}	C_{R1} = 0.842

2.6.5 American Water Works Association (AWWA) D100 Seismic Design Parameters

The AWWA D100 seismic design criteria incorporates the design earthquake ground motion procedure presented in ASCE 7 for an earthquake caused by an event with a 2 percent probability of exceedance within a 50-year period (recurrence interval of approximately 2,500 years). The estimated peak horizontal ground motion with a 2 percent probability of exceedance in 2,475 years is 0.735g as summarized in Table 3. The ASCE 7 earthquake ground procedures are incorporated into the 2013 CBC seismic design parameters presented in Table 3; therefore, the parameters presented in Table 3 can be utilized for design of the proposed tanks.

The AWWA D100 seismic design criteria includes a Seismic Use Group (SUG; Section 13.2) and seismic importance factor (I_E; Table 24). The SUG is a classification assigned to the tank based on its intended use and expected performance during a seismic event. If the tank is expected to provide post-earthquake fire suppression, it should have a SUG III designation which incorporates a seismic importance factor I_E of 1.5. The response modification factors, R_i (impulsive component) and R_c (convective component) can be selected from AWWA D100 Table 28 based on the type of tank. The design response spectrum for impulsive components including factors T_s, T_i, T_L, and S_{ai} can be developed using AWWA D100 equations 13-9, 13-10, and 3-11 based on the natural period of the tank and using a region-dependent transition period for T_L equal to Zone 8 (AWWA D100, Figure 19).

2.6.6 Liquefaction Potential

Liquefaction is described as the sudden loss of soil strength because of a rapid increase in soil pore water pressures due to cyclic loading during a seismic event. In order for liquefaction to occur, three general geotechnical characteristics must be present: 1) groundwater must be present within the potentially liquefiable zone; 2) the potentially liquefiable soil must meet certain grain size and classification characteristics; and 3) the potentially liquefiable granular soil must be of low to moderate relative density. If those criteria are met and strong ground motion occurs, then those soils may liquefy, depending upon the intensity and cyclic nature of the strong ground

motion. Liquefaction that produces surface effects generally occurs in the upper 40 to 50 feet of the soil column, although the phenomenon is not restricted to depths of less than 50 feet.

The site is underlain by medium dense to dense marine terrace deposits and claystone bedrock of the Franciscan Formation. Shallow perched groundwater seepage was encountered in the marine terrace deposits above the contact with the underlying claystone bedrock. The observed groundwater seepage is likely transitory as water accumulates on the relatively impermeable claystone bedrock and dissipates with time into the bedrock and laterally outward toward where the terrace bedrock contact daylights in the natural slope face. We note the USGS quadrangle sheet for the Pico Creek Quadrangle shows a seepage symbol near El. +140 feet on the slope southwest of the proposed tank site near the existing reservoir. That seepage symbol is likely related to groundwater seeping along the terrace/bedrock contact. Based on the available data, the potential for liquefaction to occur as a result of a seismic event is considered to be low.

2.6.7 Landsliding and Slope Stability

No large-scale landslides are mapped in the vicinity on reviewed regional geologic maps or were observed during our field reconnaissance. The proposed tank site is located in relatively gentle slope area (4 percent slope in the tank area) composed of marine terrace deposits overlying Franciscan Formation bedrock units. Based on the drill holes advanced for this study, the Franciscan Formation claystone bedrock below the marine terrace materials appears to slope gently to the southwest, similar to the ground surface. The elevation of the Franciscan Formation in the vicinity of the revised tank site appears to be about El. +160 feet. The bedrock surface may represent an erosional marine platform upon which the granular marine terraces were deposited. The bedding within the Franciscan Formation typically has highly variable orientations and is not continuous over long distances. The Franciscan materials can be prone to landsliding, downhill creep and instability, however, based on the available subsurface data the potential for slope instability to impact the site appears to be low.

2.6.8 Expansive and Collapsible Soils

The majority of the more granular soils encountered in our site exploration are considered to have low expansion potential. However, based on the results from one plasticity test (DH-2 at 2-1/2 feet), the potential exists for expansive soils to be encountered during excavation for the tank foundations. Based on the relative density of the soil and bedrock materials, the potential for hydroconsolidation (soil collapse) is considered to be low.

3.0 OPINIONS AND RECOMMENDATIONS

3.1 SUMMARY OF SUBSURFACE SITE CONDITIONS

The geotechnical conditions for the project were evaluated based on the explorations and laboratory testing performed for this study and for OGI (2017) supplemented by regional geologic data from the project area.

- Earth materials encountered in the drill holes advanced for the project consist of a thin colluvial soil layer overlying predominately granular clayey sand marine terrace deposits and weak claystone bedrock of the Franciscan Formation mélange to the depths explored of 30 feet (Appendix A).
- The marine terrace deposits are medium dense to dense with variable amounts of gravel/rock fragments and with gravel layers.
- Groundwater seepage was encountered near the base of the terrace deposits overlying the relatively impermeable claystone bedrock of the Franciscan Formation.
- The site is located in seismically active area and has a relatively high peak ground acceleration of 0.735g.
- The project design anticipates locating the proposed tank pad near a finished grade elevation of about El. +174.5 feet. The tank pad excavation should be cut into the existing grade by a minimum of three feet to remove the surficial colluvial soil zone and expose the underlying granular marine terrace soils a minimum of three feet beyond the limits of the tank footprints for foundation support.

3.2 SOIL CHEMISTRY AND CORROSION

3.2.1 Test Results

Two selected soil samples obtained from our explorations were provided to Cooper Testing Laboratories for resistivity, pH, chloride, and sulfate testing. The test results are summarized below and the laboratory test reports are included in Appendix B.

Table 4. Summary of Chemical Test Results

Drill Hole	USCS Classification	Depth (feet)	Sulfate (mg/kg)	Sulfate) (%)	Chloride (mg/kg)	Resistivity (ohm-cm)	pH
DH-3	Clayey Sand	2 - 6	13	0.0013	29	3,712	4.5
DH-101	Clayey Sand	0 - 5	85	0.0085	28	4,869	4.5

3.2.2 Corrosion and Cement Considerations

As summarized in the table above, the measured pH of the tested samples (ASTM G51) is 4.5, the measured electrical resistivities (ASTM G57) are 3,712 to 4,869 ohm-centimeters, the chloride contents (ASTM D4327) are 28 to 29 mg/kg, and the sulfate contents (ASTM D4327) are 13 to 85 mg/kg (0.0013 to 0.0085 percent).

Caltrans (2018) classifies soils as non-corrosive if the earth materials have less than 500 ppm chlorides, less than 0.20 percent sulfates (i.e., 2,000 mg/kg or ppm), a pH of 5.5 or more, or an electrical resistivity of 1,000 ohm-centimeters or more. The data suggest the tested soil material is not corrosive to underground steel. If applicable, the test results should be evaluated by a corrosion engineer to determine how underground utilities should be protected from corrosion.

The cement type should be selected with consideration of the pH of the tested soils (4.5). Available pH data suggest that, per Table 855.4A of Caltrans (2018), Type V Portland cement with a minimum of 675 lb/cy cementitious material with a maximum water to cementitious ratio of 0.4. should be used for concrete that will be in contact with the onsite soils.

3.3 SITE GRADING

3.3.1 General Site Clearing and Grubbing

Soil containing debris, organics, trees and root systems, and other unsuitable materials should be excavated and removed from improvement areas prior to commencing grading operations. Areas should be cleared of old foundations, slabs, pavement, abandoned utilities, and soils disturbed during the demolition process. Depressions or disturbed areas left from the removal of such material should be replaced with compacted fill.

3.3.2 Subgrade Preparation

Following site clearing, we recommend the colluvial soils be removed to expose the underlying granular marine terrace deposits in the tank pad excavation. The tank foundation area plus three feet outside of the tank ringwall foundation should be founded in marine terrace materials overexcavated to a depth of two feet below the proposed tank footing elevation. The resulting surface should be scarified to a depth of at least nine inches, moisture conditioned and compacted to 90 percent relative compaction. The overexcavation should be brought back up to grade with compacted fill meeting the project specifications listed below for compacted fill. The fill should be compacted to 95 percent relative compaction. We anticipate the clayey sand marine terrace deposits can be utilized for compacted fill. The intent of the overexcavation and recompaction is to provide a uniform bearing surface for the tank ringwalls and tank base plates.

If clayey terrace deposits that are plastic and/or have high expansion potential are exposed in the foundation excavation, those materials should be overexcavated and replaced with non-expansive soil materials conforming to general fill below.

3.3.3 Fill Material Selection

Recommended fill material selection requirements for subgrade fill, aggregate base, and use of onsite materials are presented below. Areas or zones where the various fill materials may be used are described below.

Compacted Fill. As described above, the near-surface materials encountered in the drill holes consist primarily of clayey sand with varying amounts of gravel/rock fragments. The material generated from the overexcavation can be utilized as compacted fill as long as those materials satisfy criteria for general fill listed below and oversize materials removed from the fill. Material derived from the overexcavation may generate oversize material that may need to be processed to use as onsite fill.

General Fill. General fill should consist of granular soil materials (SP, SW, SM, and SC) free of organics, oversize rock (greater than six inches in diameter), trash, debris, and other deleterious or unsuitable materials, and should have an expansion index less than 20. The fill materials should have less than 15 percent larger than three inches in diameter and cobbles larger than six inches should be removed from the fill.

Aggregate and Miscellaneous Base. Base materials should consist of material conforming to Caltrans Standard Specifications for Class 2 Aggregate Base, Section 26-1.02 (Caltrans, 2015) or Section 200-2.5 of the Greenbook (2018) for Processed Miscellaneous Base.

Imported Fill. Although importing fill is not anticipated, if material is imported, the imported subgrade fill materials should comply with recommendations for general fill or as appropriate for its intended use. Imported fill should be reviewed by the geotechnical engineer prior to being transported to the site.

3.3.4 Dewatering

On the basis of our subsurface exploration, we do not anticipate groundwater will be encountered during site grading activities. Although we do not anticipate the need for dewatering, groundwater levels may vary seasonally and it is possible some seepage may be encountered in the excavations following rain events.

3.3.5 Fill Placement

Fill should be placed, moisture conditioned, and compacted to a minimum of 95 percent relative compaction beneath the tank footprints plus three feet outside the footings and 90 percent relative compaction for general fill. In general, we recommend the moisture content of the fill should be 0 to 2 percent above the optimum. We note the tested soils have moisture contents in the range of 8 to 25 percent. On the basis of the test results, the onsite soil may need to be dried back or possibly have water added during grading to bring the moisture content up near the optimum moisture content of about 12 percent. Each layer should be spread evenly and should be thoroughly blade-mixed during the spreading to provide relative uniformity of material within each layer. Soft or yielding materials should be removed and be replaced with properly compacted fill material prior to placing the next layer.

Rock, cobbles, and other oversized material greater than six inches in dimension in any direction should be removed from the fill material being placed. The contractor should be prepared to screen all native materials prior to placement as compacted fill. Rocks should not be nested and voids should be filled with compacted material. Organics, foreign matter, and other deleterious materials also should be removed from any material used in constructed fills.

Fill and backfill materials should be placed in layers that can be compacted with the equipment being used. Fill should be spread in lifts no thicker than approximately eight inches

prior to being compacted. Fill and backfill materials may need to be placed in thinner lifts to achieve the recommended compaction depending on the equipment being used.

3.3.6 Compaction

Fill placement and grading operations should be performed according to Greenbook Specification 300-4, and the grading recommendations of this report. Relative compaction should be assessed based on the latest approved edition of ASTM D1557. The tank pad over-excavation and upper one-foot of access road sections (subgrade plus base materials) should be compacted to 95 percent relative compaction. We recommend general fill be compacted to a minimum of 90 percent relative compaction. The recommended specified relative compaction should extend to a minimum of three feet horizontally beyond the limits of the improvements. Density testing should be performed a minimum of every two vertical feet and one test per every 100 cubic yards of fill placed.

3.4 FOUNDATION DESIGN

3.4.1 Shallow Foundation Design

The proposed tanks can be supported on a shallow foundation system consisting of a circular ring footing designed in accordance with current AWWA and Greenbook requirements.

3.4.2 Allowable Bearing Pressure

Continuous footings for the tank ringwall can be supported on recompacted onsite granular fill materials. For these conditions, we recommend shallow footings be designed using a maximum allowable bearing pressure of 2,000 pounds per square foot (psf). The allowable value incorporates a factor of safety of at least 3. A one-third increase in the allowable bearing pressure may be used for transient loads such as seismic or wind forces.

3.4.3 Minimum Embedment Depth and Width

In general, footings embedded in fill materials should extend to at least two feet below the lowest adjacent grade and have a minimum width of 18 inches. Isolated pad footings should be at least three feet in least dimension.

3.4.4 Sliding and Passive Resistance

Ultimate sliding resistance (friction) generated at the interface of concrete foundations and compacted soils can be computed by multiplying the total dead weight structural load by a coefficient of 0.4. The ultimate net passive resistance developed from lateral bearing of foundations against compacted backfill or undisturbed native soil can be estimated using an equivalent fluid weight of 300 pcf. The passive resistance for the upper one-foot of soil should be neglected unless the soils are confined at the ground surface by slab-on-grade or pavement. The passive resistance should be reduced to 150 pcf if the ground surface in front of the wall descends at a 2h:1v slope. Sliding resistance and passive pressure may be used together without reduction, when used with the recommended minimum factors of safety. For static conditions, minimum factors of safety of 1.5 and 2.0 are recommended for foundation overturning and sliding, respectively. The factor of safety for sliding can be reduced to 1.5 if passive resistance is neglected. The factor of safety for transient (seismic, wind) conditions should be at least 1.1.

3.4.5 Static Settlements

Static settlements generally will occur in response to foundation loads on the foundation support material. About three to 10 feet of soil will be removed from the tank pad foundation which will reduce loading on the existing soil by about 400 to 1,300 psf. Net load from the water and steel tank shell is estimated to be about 1,800 psf resulting in a net increase of about 500 to 1,400 psf. The estimated static settlement due to new tank loading ranges from ¾- to 1-½ inch. The structure should be designed to accommodate static differential settlements of at least ½-inch over a distance of 30 feet (i.e., a distortion ratio of approximately 1/720) for similarly sized and loaded footings.

3.5 CONSTRUCTION CONSIDERATIONS

3.5.1 Excavation Conditions

Subsurface materials encountered in explorations for this study consisted of medium dense to dense granular soils with varying amounts of gravel/rock fragments. The excavation may generate oversized material (greater than six-inches in diameter) that will need to be processed on-site to place as compacted fill. In addition, the soil will need to be moisture conditioned, either drying back or adding water, to achieve moisture content near the optimum moisture content.

3.5.2 Temporary Slopes and Excavations

The contractor should be responsible for the design of temporary slopes. Within the anticipated depths of excavation, the soil profile is anticipated to consist of medium dense clayey sand soil materials with varying amounts of gravel/rock fragments. Temporary slopes should be braced or sloped according to the requirements of OSHA.

As input to design, excavations in granular soil without shoring can be classified as Type C and should be sloped no steeper than 1.5h:1v as deemed appropriate based upon classification Type determined in the field per OSHA guidelines. We recommend all temporary excavations be monitored for signs of instability and appropriate actions (such as flattening the slope, providing shoring, and controlling groundwater, if encountered) should be undertaken if evidence of potential instability is observed. Table 5 summarizes parameters for consideration in the design of temporary slopes or shoring systems.

Table 5. Engineering Parameters for Design of Temporary Slopes and Shoring[1]

Soil Unit	Total Unit Weight (pcf)	Friction Angle (degrees)	Cohesion (psf)
Clayey Sand (SC)	130	32	0

[1] Parameters provided here are valid only for the design of temporary slopes and shoring.

3.5.3 Permanent Slopes

Permanent cut-slopes should be inclined at 2h:1v or flatter.

3.5.4 Site Drainage

Site grading should be provided such that positive drainage away from improvements is provided. Water should not be allowed to pond near the improvements. We recommend the construction of finished slopes of 1 to 2 percent away from the improvements. Erosion control and maintenance of the slopes should be provided to reduce the potential for erosion.

3.5.5 Water Pipeline and Dry Utilities

A new water inlet pipeline and a new water outlet pipeline will be constructed as part of the project to connect the existing and new reservoirs. The pipeline alignment is being defined as part of the project final design. We recommend the pipelines and/or dry utilities have a minimum of six inches of clean sand bedding and be covered with a minimum of 12 inches of clean sand. The sand should have a minimum sand equivalent (SE) of 30 and should be compacted to a minimum of 90 percent relative compaction. Flooding of the sand should not be allowed. The onsite materials contain about 12 to 46 percent fines and will not be suitable for sand bedding.

The trench zone above the bedding can be backfilled with general fill consisting on onsite soil (screened of gravel larger than two inches) and compacted to a minimum of 90 percent relative compaction. Ditch plugs such as sacked concrete, should be provided every 50 feet along the length of the trench in areas where the pipeline gradient is steeper than 5h:1v. The ditch plugs should extend from the bottom of the trench to the ground surface to help reduce runoff. In addition, the trench surface should be protected from allowing surface water to run down the length of the trench.

4.0 LIMITATIONS

4.1 REPORT USE

This report has been prepared for the exclusive use of Phoenix Civil Engineering and the San Simeon Community Services District and its agents for the design and construction of the proposed Potable Water Tank project. The findings, conclusions, and recommendations presented herein were prepared in accordance with generally accepted geotechnical engineering practices of the project region. No other warranty, express or implied, is made.

Although information contained in this report may be of some use for other purposes, it may not contain sufficient information for other parties or uses. If any changes are made to the project as described in this report, the conclusions and recommendations in this report shall not be considered valid unless the changes are reviewed and the conclusions and recommendations of this report are modified or validated in writing by OGI.

4.2 HAZARDOUS MATERIALS

This report does not provide information regarding the presence of hazardous/toxic materials in the soil, surface water, groundwater, or atmosphere. We note naturally occurring

asbestos materials can occur in the Franciscan Formation bedrock materials and materials derived from the Franciscan Formation.

4.3 LOCAL PRACTICE

In performing our professional services, we have used generally accepted geologic and geotechnical engineering principles and have applied the degree of care and skill ordinarily exercised under similar circumstances by reputable geotechnical engineers currently practicing in this or similar localities. No other warranty, express or implied, is made as to the professional advice included in this report.

4.4 PLAN REVIEW

We recommend OGI be provided the opportunity to review and comment on the geotechnical aspects of any project plans and specifications prepared for this project before they are finalized. The purpose of that review will be to evaluate if the recommendations in this report have been properly interpreted and implemented in the design and specifications.

4.5 CONSTRUCTION MONITORING

Users of this report should recognize the construction process is an integral design component with respect to the geotechnical aspects of a project, and geotechnical engineering is inexact due to the variability of natural and man-induced processes, which can produce unanticipated or changed conditions. Proper geotechnical observation and testing during construction is imperative in allowing the geotechnical engineer the opportunity to verify assumptions made during the design process. Therefore, we recommend OGI be retained during project construction to observe compliance with project plans and specifications and to recommend design changes, if needed, in the event that subsurface conditions differ from those anticipated.

REFERENCES

American Concrete Institute (2014), ACI 318-14, *Building Code Requirements for Structural Concrete*

American Society of Civil Engineers (2010), ASCE Standard 7-10, *Minimum Design Loads for Buildings and Other Structures*.

California Building Code (2016), *2016 California Building Code*, published by the International Conference of Building Officials, Whittier, California.

California Department of Transportation (Caltrans, 2015), *Standard Specifications,* Sacramento, California, http://caltrans-opac.ca.gov/publicat.htm.

_____ (2018), *Highway Design Manual,* Sacramento, California, issued July 2.

California Division of Mines and Geology (CDMG, 1986*), Official Map of Alquist-Priolo Earthquake Fault Hazard Zones, San Simeon Quadrangle:* California Division of Mines and Geology, scale 1:24,000

Dibblee, T.W., Jr., (1976), *Geologic Map of the Piedras Blancas/San Simeon Quadrangles,* Dibblee Foundation Map 366.

Jennings, C.W. and Bryant, W.A. (2010), *Fault Activity Map of California*; California Geological Survey Geologic Data Map No. 6, map scale 1:750,000.

Oakridge Geoscience, Inc. (2017), *San Simeon Community Services District, 30 Percent Design Level, Potable Water Reservoir Project*, prepared for Phoenix Civil Engineering, Inc., dated August 24.

USGS (2014), *Geologic and Geophysical Maps of the Eastern Three Fourths of the Cambria 30´ x 60´ Quadrangle, Central California Coast Ranges*, Scientific Investigations Map 3287

_____ http://geohazards.usgs.gov/cfusion/hazfaults_search/hf_search_main.cfm

_____ https://geohazards.usgs.gov/deaggint

_____ (2015), Pico Creek, California Topographic Map

Weber, G.E., (1983), *Geological Investigation of the Marine Terraces of the San Simeon Region and Pleistocene Activity on the San Simeon Fault Zone, San Luis Obispo County, California*: Menlo Park, California, unpublished technical report to U.S. Geological Survey under Contract 14- 08-00001-18230, 66 p.

PLATES

SITE LOCATION MAP
San Simeon Community Services District
Potable Water Reservoir Final Design
San Simeon, California

PLATE 1

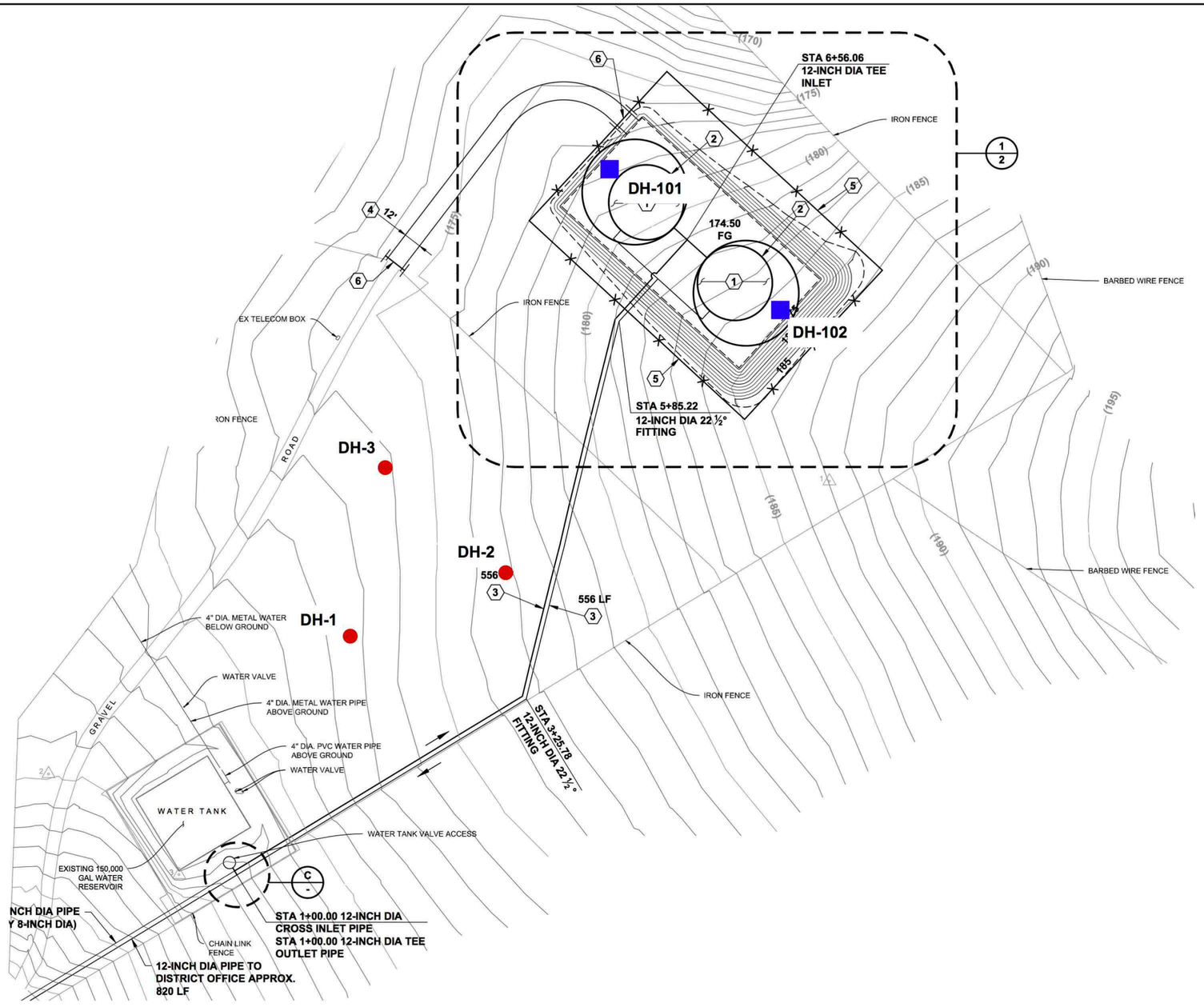

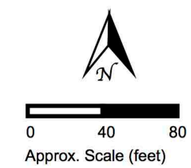

DH-101 ■ Approximate location of drill hole advanced in 2018

DH-1 ● Approximate location of drill hole advanced in 2017

EXPLORATION LOCATION MAP
San Simeon Community Services District
Potable Water Reservoir Final Design
San Simeon, California

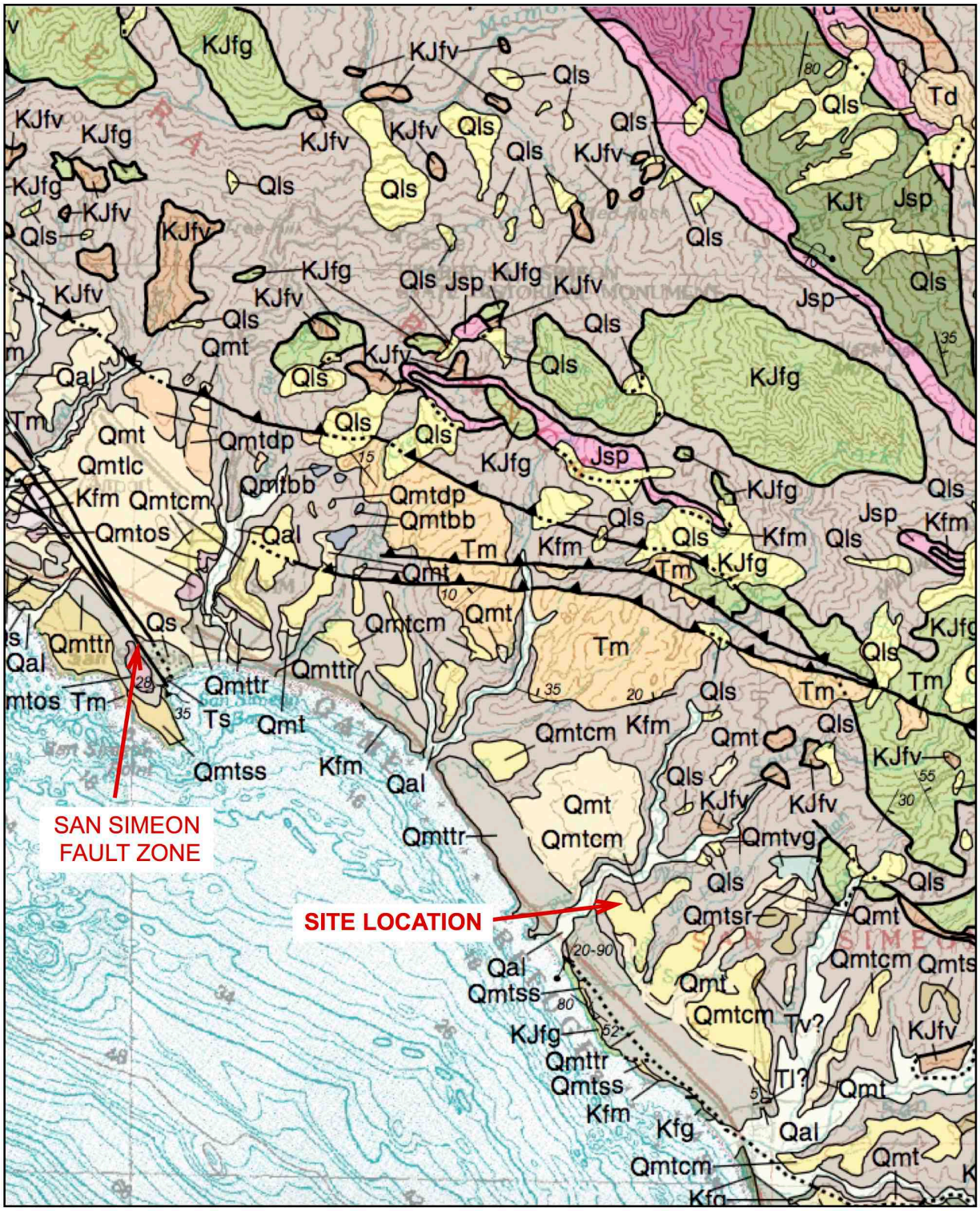

Source: USGS (2014)

REGIONAL GEOLOGIC MAP
San Simeon Community Services District
Potable Water Reservoir Final Design
San Simeon, California

PLATE 3

APPENDIX A

LOG OF DRILL HOLE DH-101

LOCATION: See location map

SURFACE EL. (ft): 178'

ELEV. (ft) / DEPTH (ft)	MATERIAL SYMBOL	SAMPLE	NUMBER	BLOW COUNT	MATERIAL DESCRIPTION	DRY DEN. (pcf)	MOISTURE CONTENT %	PLASTICITY (LL/PI)	% PASSING No. 200	TV or PP (tsf)
177 / 2			A	--	**Colluvium (Qc)** Clayey SAND (SC): dark grayish brown, dry, with fine roots		12		30	
175 / 4			1	38	**Marine Terrace Deposits (Qmtcm)** Clayey SAND (SC): dense, orangish brown, damp, fine to medium sand		13		34	
173 / 6			2a 2b	(91)	- very dense, with brown clayey lenses, and scattered fine gravel, at 5'		14			
171 / 8 / 169			3	37	- dense, darker brown, damp to moist, at 7-1/2'		14			
10 / 167 / 12 / 165			4	(40)	Fine SAND with Clay (SP-SC): medium dense, orangish brown, moist	98	13			
14 / 163 / 16 / 161			5	37	Clayey SAND with Gravel (SC): dense, orangish brown, moist, medium to coarse sand, gravel to about 3/4" - firmer drilling below about 18'		14		16	
18 / 159			6	(74/9)	**Franciscan Formation Mélange (Kjf)** GRAYWACKE (Rx): claystone, intensely weathered, soft (rock) Sandy CLAY (CL) hard, dark brownish gray, damp to moist, with iron oxide staining, blocky		17		70	pp>4.5

CONTRACTOR:	S/G Drilling	TOTAL DEPTH (ft):	30.5'
METHOD:	8"-dia. Hollowstem	WATER DEPTH (ft):	Not Encountered
BACKFILL:	Cuttings	LOGGED BY:	L Prentice
DATE:	August 30, 2018	CHECKED BY:	C Prentice

NOTE: The log and data presented herein are a simplification of actual subsurface conditions encountered at the time of exploration at the specific location explored. Subsurface conditions may differ at other locations and at this location with the passage of time.

SAN SIMEON COMMUNITY SERVICES DISTRICT POTABLE WATER RESERVOIR
San Simeon, California

LOG OF DRILL HOLE DH-101 (Continued)

LOCATION: See location map
SURFACE EL. (ft): 178'

ELEV. (ft) DEPTH (ft)	MATERIAL SYMBOL	SAMPLE	NUMBER	BLOW COUNT	MATERIAL DESCRIPTION	DRY DEN. (pcf)	MOISTURE CONTENT %	PLASTICITY (LL/PI)	% PASSING No. 200	TV or PP (tsf)
					- sampler bouncing, refusal, at 20-1/4'					
157										
22					- firmer drilling, below 22'					
155										
24					- moderately weathered, dark greenish gray, with greenish inclusions, at 24'					
153			7	44			11			
26										
151										
28										
149					- fresh, at 29'					
30			8	77/11			17		34	
147										
32										
145										
34										
143										
36										
141										
38										
139										

CONTRACTOR:	S/G Drilling	NOTE: The log and data presented herein are a simplification of actual subsurface conditions encountered at the time of exploration at the specific location explored. Subsurface conditions may differ at other locations and at this location with the passage of time.	TOTAL DEPTH (ft):	30.5'
METHOD:	8"-dia. Hollowstem		WATER DEPTH (ft):	Not Encountered
BACKFILL:	Cuttings		LOGGED BY:	L Prentice
DATE:	August 30, 2018		CHECKED BY:	C Prentice

SAN SIMEON COMMUNITY SERVICES DISTRICT POTABLE WATER RESERVOIR
San Simeon, California

LOG OF DRILL HOLE DH-102

LOCATION: See location map
SURFACE EL. (ft): 184.5'

ELEV. (ft) DEPTH (ft)	MATERIAL SYMBOL	SAMPLE	NUMBER	BLOW COUNT	MATERIAL DESCRIPTION	DRY DEN. (pcf)	MOISTURE CONTENT %	PLASTICITY (LL/PI)	% PASSING No. 200	TV or PP (tsf)
					Colluvium (Qc)					
183.5					Clayey SAND (SC) to Sandy CLAY (CL): dark grayish brown, dry, with fine roots and scattered fine gravel					
2										
181.5			1	(50/3)			17		46	
					Marine Terrace Deposits (Qmtcm)					
4					Clayey SAND (SC): very dense, brownish orange, damp, fine to medium sand					
179.5										
6			2	57			14		15	
177.5										
8					- dense, moist, finer grained, at 7-1/2'					
			3	(56)	- with 2-1/2" diameter bluish gray clayey sand pod, at 8'		17			
175.5										
10					- interbedded with coarse sand lenses, at 10'					
173.5			4	33			7		11	
12										
171.5										
14					- medium dense, at 14'					
169.5			5	(33)		105	14			
					- with coarse rounded gravel in sampler shoe					
16										
167.5										
18										
165.5					SAND with Clay and Gravel (SP-SC): very dense, dark orangish brown, moist, coarse sand to fine subangular to subrounded					
			6	50						

CONTRACTOR:	S/G Drilling	TOTAL DEPTH (ft):	30.5'
METHOD:	8"-dia. Hollowstem	WATER DEPTH (ft):	24'
BACKFILL:	Cuttings	LOGGED BY:	L Prentice
DATE:	August 30, 2018	CHECKED BY:	C Prentice

NOTE: The log and data presented herein are a simplification of actual subsurface conditions encountered at the time of exploration at the specific location explored. Subsurface conditions may differ at other locations and at this location with the passage of time.

SAN SIMEON COMMUNITY SERVICES DISTRICT POTABLE WATER RESERVOIR
San Simeon, California

LOG OF DRILL HOLE DH-102 (Continued)

LOCATION: See location map
SURFACE EL. (ft): 184.5'

ELEV. (ft) DEPTH (ft)	MATERIAL SYMBOL	SAMPLE	NUMBER	BLOW COUNT	MATERIAL DESCRIPTION	DRY DEN. (pcf)	MOISTURE CONTENT %	PLASTICITY (LL/PI)	% PASSING No. 200	TV or PP (tsf)
					gravel					
163.5										
22										
161.5										
					- wet above bedrock contact, at 24'					
24					**Franciscan Formation Mélange (Kjf)**					
159.5			7	(60/8)	GRAYWACKE (Rx): claystone, intensely weathered, soft (rock)		10		10	
					CLAY (CL) hard, moderate brownish gray, damp to moist, with iron oxide staining, blocky					
26										
157.5										
28										
155.5					- fresh, dark bluish gray, at 29'					
30			8	84	- with siltstone lens, at 29-3/4'		6			
153.5										
32										
151.5										
34										
149.5										
36										
147.5										
38										
145.5										

CONTRACTOR:	S/G Drilling	TOTAL DEPTH (ft):	30.5'
METHOD:	8"-dia. Hollowstem	WATER DEPTH (ft):	24'
BACKFILL:	Cuttings	LOGGED BY:	L Prentice
DATE:	August 30, 2018	CHECKED BY:	C Prentice

NOTE: The log and data presented herein are a simplification of actual subsurface conditions encountered at the time of exploration at the specific location explored. Subsurface conditions may differ at other locations and at this location with the passage of time.

SAN SIMEON COMMUNITY SERVICES DISTRICT POTABLE WATER RESERVOIR
San Simeon, California

LOG OF DRILL HOLE DH-1

LOCATION: See location map
SURFACE EL. (ft): 172.5'

ELEV. (ft) / DEPTH (ft)	MATERIAL SYMBOL	SAMPLE	NUMBER	BLOW COUNT	MATERIAL DESCRIPTION	DRY DEN. (pcf)	MOISTURE CONTENT %	PLASTICITY (LL/PI)	% PASSING No. 200	TV or PP (tsf)
					Colluvium (Qc)					
171.5 / 2			1	--	Clayey SAND (SC): grayish brown, dry, with roots in upper 1 to 1-1/2'		11	27/15	30	
					Marine Terrace Deposits (Qmtcm)					
169.5 / 4			2	(40)	Clayey SAND (SC): medium dense, orangish brown, damp, with coarse sand, and fine whitish inclusions	102	20			
167.5 / 6			3	34	- dense/hard, brownish orange, at 5'		14		22	
165.5 / 8			4	(46)	- firmer drilling, at 7' - brownish orange, with fine gravel to 1/2"-dia., and with fine whitish inclusions, at 7-1/2'	112	12			
163.5 / 10										
161.5 / 12			5	37	SAND with Clay and Gravel (SP-SC): dense, orangish brown, damp, subrounded to rounded gravel to 1/2"-dia., with few whitish inclusions		11		12	
159.5 / 14										
157.5 / 16			6	(67)	GRAVEL with Sand (GC): dense, brownish orange, damp, with clay and with angular rock fragments to 3/4"-length; blowcounts may be affected by gravel/rock fragments	119	8		3	
155.5 / 18										
153.5			7a	34	- wet above bedrock contact at 19'					

CONTRACTOR:	S/G Drilling	TOTAL DEPTH (ft):	25-1/2'
METHOD:	8"-dia. Hollowstem-auger	WATER DEPTH (ft):	19'
BACKFILL:	Cuttings	LOGGED BY:	L Prentice
DATE:	July 7, 2017	CHECKED BY:	C Prentice

NOTE: The log and data presented herein are a simplification of actual subsurface conditions encountered at the time of exploration at the specific location explored. Subsurface conditions may differ at other locations and at this location with the passage of time.

SAN SIMEON COMMUNITY SERVICES DISTRICT POTABLE WATER RESERVOIR
San Simeon, California

LOG OF DRILL HOLE DH-1 (Continued)

LOCATION: See location map
SURFACE EL. (ft): 172.5'

ELEV. (ft) DEPTH (ft)	MATERIAL SYMBOL	SAMPLE	NUMBER	BLOW COUNT	MATERIAL DESCRIPTION	DRY DEN. (pcf)	MOISTURE CONTENT %	PLASTICITY (LL/PI)	% PASSING No. 200	TV or PP (tsf)
			7b		**Franciscan Formation Mélange (Kjf)**					
151.5					GRAYWACKE (Rx): claystone, moderately to intensely weathered, very soft (rock)/very stiff (soil), dark brownish gray, damp to moist					
22					- sampler wet after sampling, at 19'					
					- harder drilling below about 22'					
149.5										
24					- moderately weathered, dark gray claystone and light gray					
147.5			8	57	siltstone, hard (soil), damp, at 24'					
26					Note: hole caved to about 17-1/2' and groundwater measured at about					
145.5					17' after drilling and pulling augers from drill hole.					
28										
143.5										
30										
141.5										
32										
139.5										
34										
137.5										
36										
135.5										
38										
133.5										

CONTRACTOR:	S/G Drilling	NOTE: The log and data presented herein are a simplification of actual subsurface conditions encountered at the time of exploration at the specific location explored. Subsurface conditions may differ at other locations and at this location with the passage of time.	TOTAL DEPTH (ft):	25-1/2'
METHOD:	8"-dia. Hollowstem-auger		WATER DEPTH (ft):	19'
BACKFILL:	Cuttings		LOGGED BY:	L Prentice
DATE:	July 7, 2017		CHECKED BY:	C Prentice

SAN SIMEON COMMUNITY SERVICES DISTRICT POTABLE WATER RESERVOIR
San Simeon, California

LOG OF DRILL HOLE DH-2

LOCATION: See location map
SURFACE EL. (ft): 176.5'

ELEV. (ft) DEPTH (ft)	MATERIAL SYMBOL	SAMPLE	NUMBER	BLOW COUNT	MATERIAL DESCRIPTION	DRY DEN. (pcf)	MOISTURE CONTENT %	PLASTICITY (LL/PI)	% PASSING No. 200	TV or PP (tsf)
175.5 / 2					**Colluvium (Qc)** Clayey SAND (SC): grayish brown, dry, with roots in upper 1 to 1-1/2'					
173.5					CLAY (CL): very stiff, moderate brown with orangish pods, damp					
4			1	17	**Marine Terrace Deposits (Qmtcm)** Clayey SAND (SC): medium dense, moderate brown and orangish brown, damp, plastic (fat) clay, with fine whitish inclusions		16	60/41	46	
171.5 / 6			2	(50/3)	- very dense, orangish brown mottled with gray brown, damp, with few scattered subangular fine gravel to 1/4"-dia., at 5'	91	13			
169.5 / 8			3	27	- light gray, with some orangish mottling, at 7-1/2'		17		30	
167.5 / 10			4	16	- loose to medium dense, light brownish gray, fine sand, wet, at 10' - sampler wet, no groundwater measured after sampling at 10'; possible seep					
165.5 / 12										
163.5 / 14			5	50/5	- dense, brownish orange, moist, with subangular to subrounded gravel and angular rock fragments to 3/4"-dia., at 14'; blowcounts may be affected by gravel/rock fragments		14		17	
161.5 / 16										
159.5 / 18										
157.5			6	(68)	- dense, with wet coarse sand seams/lenses, and with angular rock fragments to 2"-length, sampler wet after sampling, at 19'	109	18		13	

CONTRACTOR:	S/G Drilling	TOTAL DEPTH (ft):	25-1/2'
METHOD:	8"-dia. Hollowstem-auger	WATER DEPTH (ft):	19'
BACKFILL:	Cuttings	LOGGED BY:	L Prentice
DATE:	July 7, 2017	CHECKED BY:	C Prentice

NOTE: The log and data presented herein are a simplification of actual subsurface conditions encountered at the time of exploration at the specific location explored. Subsurface conditions may differ at other locations and at this location with the passage of time.

SAN SIMEON COMMUNITY SERVICES DISTRICT POTABLE WATER RESERVOIR
San Simeon, California

LOG OF DRILL HOLE DH-2 (Continued)

LOCATION: See location map
SURFACE EL. (ft): 176.5'

ELEV. (ft) DEPTH (ft)	MATERIAL SYMBOL	SAMPLE	NUMBER	BLOW COUNT	MATERIAL DESCRIPTION	DRY DEN. (pcf)	MOISTURE CONTENT %	PLASTICITY (LL/PI)	% PASSING No. 200	TV or PP (tsf)
155.5										
22										
153.5										
24					**Franciscan Formation Mélange (Kjf)**					
151.5			7	42	GRAYWACKE (Rx): claystone, intensely weathered, very soft (rock)/hard (soil), medium to light gray, damp to moist		12			
26					Note: hole caved to about 22-1/2' and groundwater measured at about 22' after drilling and pulling augers from drill hole.					
149.5										
28										
147.5										
30										
145.5										
32										
143.5										
34										
141.5										
36										
139.5										
38										
137.5										

CONTRACTOR:	S/G Drilling	NOTE: The log and data presented herein are a simplification of actual subsurface conditions encountered at the time of exploration at the specific location explored. Subsurface conditions may differ at other locations and at this location with the passage of time.	TOTAL DEPTH (ft):	25-1/2'
METHOD:	8"-dia. Hollowstem-auger		WATER DEPTH (ft):	19'
BACKFILL:	Cuttings		LOGGED BY:	L Prentice
DATE:	July 7, 2017		CHECKED BY:	C Prentice

SAN SIMEON COMMUNITY SERVICES DISTRICT POTABLE WATER RESERVOIR
San Simeon, California

LOG OF DRILL HOLE DH-3

LOCATION: See location map
SURFACE EL. (ft): 174'

ELEV. (ft) / DEPTH (ft)	MATERIAL SYMBOL	SAMPLE	NUMBER	BLOW COUNT	MATERIAL DESCRIPTION	DRY DEN. (pcf)	MOISTURE CONTENT %	PLASTICITY (LL/PI)	% PASSING No. 200	TV or PP (tsf)
					Colluvium (Qc)					
173.0			1	--	Clayey SAND (SC): grayish brown, dry, with roots in upper 1 to 1-1/2'				35	
2					**Marine Terrace Deposits (Qmtcm)**					
171.0			2	(44)	Clayey SAND (SC): medium dense, brownish orange mottled with reddish brown, damp, with fine whitish inclusions	109	19			
4			3	--			14			
169.0					- very dense, medium to coarse sand, at 5'					
6			4	58			15			
167.0					- with increased clay content, 7-1/2 to 8-1/2'					
8			5	(61)		117	15			
165.0										
10					- dense, with clayey sand with fine subangular to subrounded gravel, at 10 to 11-1/2'					
163.0			6	36			15		17	
12										
161.0										
14					Clayey SAND with Gravel (SC): dense, orangish brown, damp to moist, with black oxidation on sand and gravel, subrounded to angular gravel and rock fragments to 1-1/2"-dia./length					
159.0			7	(78)		128	8			
16										
157.0										
18										
155.0					SAND with Silt (SP-SM), medium dense to dense, orangish brown, wet, with clay and few fine gravel					
			8	30			25		8	

CONTRACTOR:	S/G Drillling	TOTAL DEPTH (ft):	25-1/2'
METHOD:	8"-dia. Hollowstem-auger	WATER DEPTH (ft):	19'
BACKFILL:	Cuttings	LOGGED BY:	L Prentice
DATE:	July 7, 2017	CHECKED BY:	C Prentice

NOTE: The log and data presented herein are a simplification of actual subsurface conditions encountered at the time of exploration at the specific location explored. Subsurface conditions may differ at other locations and at this location with the passage of time.

SAN SIMEON COMMUNITY SERVICES DISTRICT POTABLE WATER RESERVOIR
San Simeon, California

LOG OF DRILL HOLE DH-3 (Continued)

LOCATION: See location map
SURFACE EL. (ft): 174'

ELEV. (ft) DEPTH (ft)	MATERIAL SYMBOL	SAMPLE	NUMBER	BLOW COUNT	MATERIAL DESCRIPTION	DRY DEN. (pcf)	MOISTURE CONTENT %	PLASTICITY (LL/PI)	% PASSING No. 200	TV or PP (tsf)
153.0					- wet at 19' above bedrock contact					
22					- driller noted harder drilling, possible top of bedrock, at 22'					
151.0					**Franciscan Formation Mélange (Kjf)**					
24										
149.0			9	34	GRAYWACKE (Rx): claystone, intensely weathered, very soft (rock)/hard (soil), dark greenish gray, damp to moist					
26					Note: hole caved to about 21-1/3' and groundwater measured at about 19' after drilling and pulling augers from drill hole.					
147.0										
28										
145.0										
30										
143.0										
32										
141.0										
34										
139.0										
36										
137.0										
38										
135.0										

CONTRACTOR:	S/G Drillling	TOTAL DEPTH (ft):	25-1/2'
METHOD:	8"-dia. Hollowstem-auger	WATER DEPTH (ft):	19'
BACKFILL:	Cuttings	LOGGED BY:	L Prentice
DATE:	July 7, 2017	CHECKED BY:	C Prentice

NOTE: The log and data presented herein are a simplification of actual subsurface conditions encountered at the time of exploration at the specific location explored. Subsurface conditions may differ at other locations and at this location with the passage of time.

SAN SIMEON COMMUNITY SERVICES DISTRICT POTABLE WATER RESERVOIR
San Simeon, California

SUMMARY OF SAMPLING DETAILS

Symbol	Sample Number	Blowcount Push, or Grab	Sampler Type
	1	Bulk	Bulk Sample
	2	23	Standard Penetration Test (SPT) Sampler (1-3/8" ID/2" OD) driven
	3	(23)	Modified California Liner Sampler driven (2-3/8" ID/3" OD)
	4	Push	Thin-walled sampler pushed (2-7/8" ID/3" OD)
	5	(23)	Modified California Liner Sampler (disturbed) driven (2-3/8" ID/3" OD)

Blowcount Informtion

Blowcount	Description
63	63 blows for 1' penetration after initial 6" seating
89/11	89 blows for 11" penetration after initial 6" seating
33/6	33 blows for 6" drive after initial 6" seating
Ref	>50 blows for initial 6" seating
(23)	Blowcounts for modified California sampler

MATERIAL SYMBOLS AND CLASSIFICATIONS

- Lean CLAY (CL)
- Fat CLAY (CH)
- Sandy CLAY (CL)
- SILT (ML)
- Elastic SILT (MH)
- Clayey SILT (ML)
- Clayey GRAVEL (GP and GW)
- Sandy SILT (ML)
- Silty SAND (SM)
- SAND with Silt (SP-SM and SW-SM)
- SAND (SP and SW)
- Clayey SAND (SC)
- SAND with Clay (SP-SC and SW-SC)
- CLAYSTONE
- SILTSTONE
- SANDSTONE
- VOLCANIC
- DOLOMITIC
- SILICEOUS
- PAVING AND BASE MATERIALS
- CONCRETE
- GRAVEL (GP and GW)
- GRAVEL with Sand (GP and GW)
- SAND with Gravel (SP and SW)
- SAND with Silt and Gravel (SP-SM and SW-SM)
- Silty SAND with Gravel (SM)
- Clayey SAND with Gravel (SC)

Other Symbols

- Groundwater
- Strata break

SUMMARY OF TERMS AND SYMBOLS USED ON LOGS

Summary of Rock Logging Descriptions

Weathering for Intact Rock (after USBR 2001)

Descriptors	Diagnostic Features					General characteristics (strength, excavation, etc.) §
	Chemical weathering-Discoloration And/or oxidation		Mechanical weathering-Grain boundary conditions (disaggregation) primarily for granitics and some coarse-grained sediments	Texture and solutioning		
	Body of rock	Fracture Surfaces		Texture	Leaching	
Fresh	No discoloration, not Oxidized	No discoloration or oxidation	No separation, intact (tight)	No change	No leaching	Hammer rings when crystalline rocks are struck. Almost always rock excavation except for naturally weak or weakly cemented rocks such as siltstones or shales.
Slightly weathered	Discoloration or oxidation is Limited to surface of, or short distance from, fractures; some feldspar crystals are dull	Minor to complete discoloration or oxidation of most surfaces	No visible separation, intact (tight)	Preserved	Minor leaching of some soluble minerals may be noted	Hammer rings when crystalline rocks are stuck. Body of rock not weakened. With few exceptions, such as siltstones or shales, classified as rock excavation.
Moderately Weathered	Discoloration or oxidation extends from fractures usually throughout; Fe-Mg minerals are "rusty" feldspar crystals are "cloudy"	All fracture surfaces are discolored or oxidized	Partial separation of boundaries visible	Generally preserved	Soluble minerals may be mostly leached	Hammer does not ring when rock is struck. Body of rock is slightly weakened. Depending on fracturing, usually is rock excavation except in naturally weak rocks such as siltstones or shales.
Intensely Weathered	Discoloration or oxidation throughout; all feldspars and Fe-Mg minerals are altered to clay to some extent; or chemical alteration produces in situ disaggregation, see grain boundary conditions	All fracture surfaces are discolored or oxidized, surfaces friable	Partial separation, rock is friable; in semiarid conditions granitics are disaggregated	Texture altered by chemical disintegra -tion (hy-dration, argillation)	Leaching of soluble minerals may be complete	Dull sound when struck with hammer, usually can be broken with moderate to heavy manual pressure or by light hammer blow without reference to planes of weakness such as incipient or hairline fractures, or veinlets. Rock is significantly weakened. Usually common excavation.
Decomposed	Discolored or oxidized throughout, but resistant minerals such as quartz may be unaltered; all feldspars and Fe-Mg minerals are completely altered to clay		Complete separation of grain boundaries (disaggregated)	Resembles a soil, partial or complete remnant rock structure may be preserved; leaching of soluble minerals usually complete		Can be granulated by hand. Always common excavation. Resistant minerals such as quartz may be present as "stringers" or "dikes."

Rock Hardness (after USBR 2001)

Descriptor	Criteria
Extremely hard	Cannot be scratched with a pocketknife or sharp knife. Can only be chipped with repeated hammer blows.
Very hard	Cannot be scratched with a pocketknife. Breaks with repeated hammer blows.
Hard	Can be scratched with a pocketknife with difficulty (heavy pressure). Breaks with heavy hammer blows.
Moderately hard	Can be scratched with a pocketknife with light or moderate pressure. Breaks with light hammer blow or heavy manual pressure.
Moderately soft	Can be grooved 2 mm (1/6 inch) deep with a pocketknife with moderate or heavy pressure. Breaks with light hammer blow or heavy manual pressure.
Soft	Can be grooved or gouged easily with a pocketknife or sharp pick with light pressure, can be scratched with fingernail. Breaks with light to moderate manual pressure.
Very soft	Can be readily indented, grooved or gouged with fingernail, or carved with a pocketknife. Breaks with light manual pressure.

SUMMARY OF ROCK TERMS USED ON LOGS

APPENDIX B

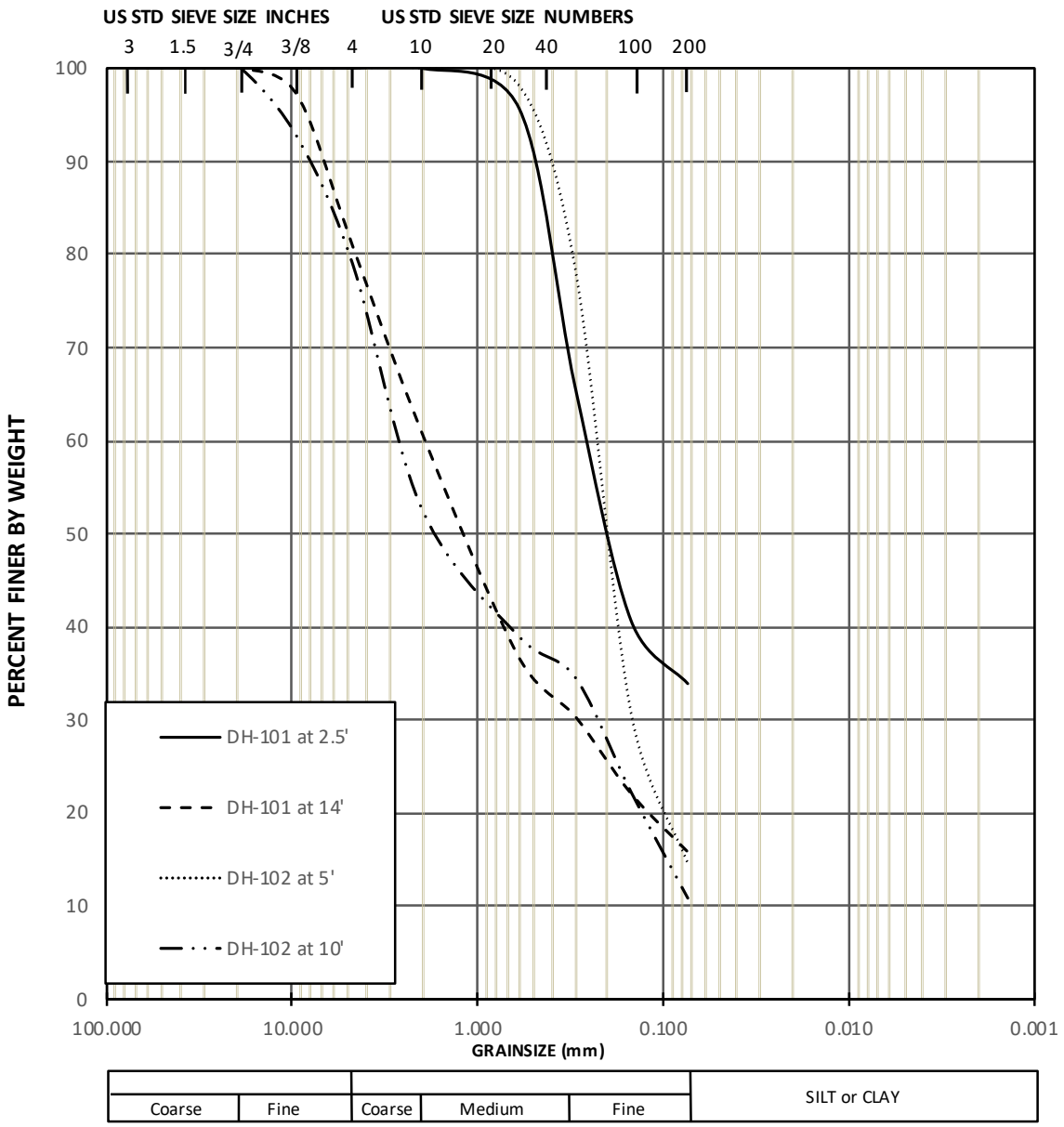

LOCATION	DEPTH	CLASSIFICATION	PASSING NO. 200 (%)
DH-101	2.5'	Clayey SAND (SC)	34
DH-101	14'	Clayey SAND (SC)	16
DH-102	5'	Clayey SAND (SC)	15
DH-102	10'	Clayey SAND (SC) with Sand Lenses	11

GRAINSIZE DISTRIBUTION
San Simeon Community Services District Potable Water Reservoir
San Simeon, California

PLATE B-1a

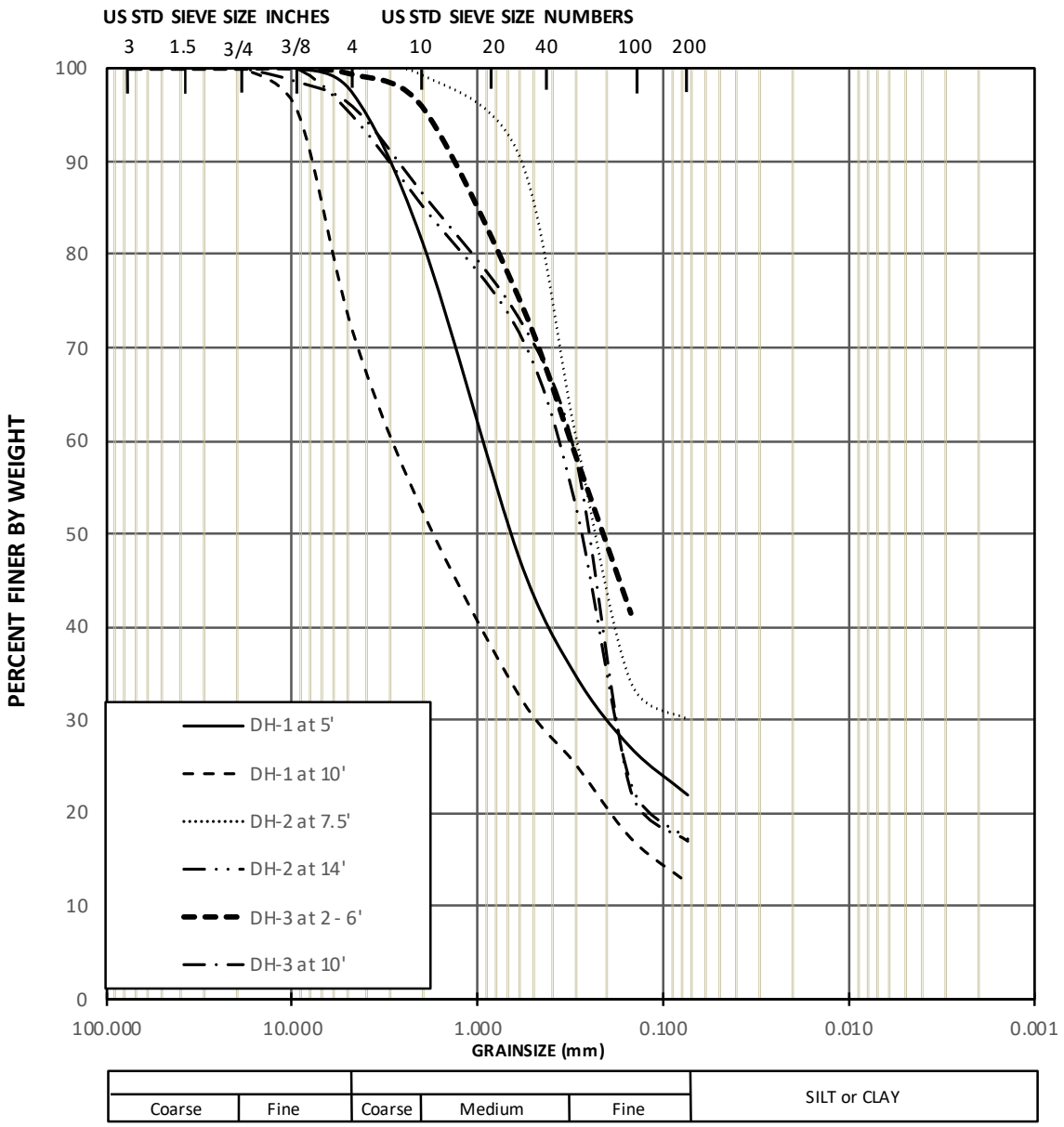

LOCATION	DEPTH	CLASSIFICATION	PASSING NO. 200 (%)
DH-1	5'	Clayey SAND (SC)	22
DH-1	10'	SAND with Clay and Gravel (SP-SC)	12
DH-2	7.5'	Clayey SAND (SC)	30
DH-2	14'	Clayey SAND (SC)	17
DH-3	2 - 6'	Clayey to Silty SAND (SC to SM)	35
DH-3	10	Clayey SAND (SC)	17

GRAINSIZE DISTRIBUTION
San Simeon Community Services District Potable Water Reservoir
San Simeon, California

PLATE B-1b

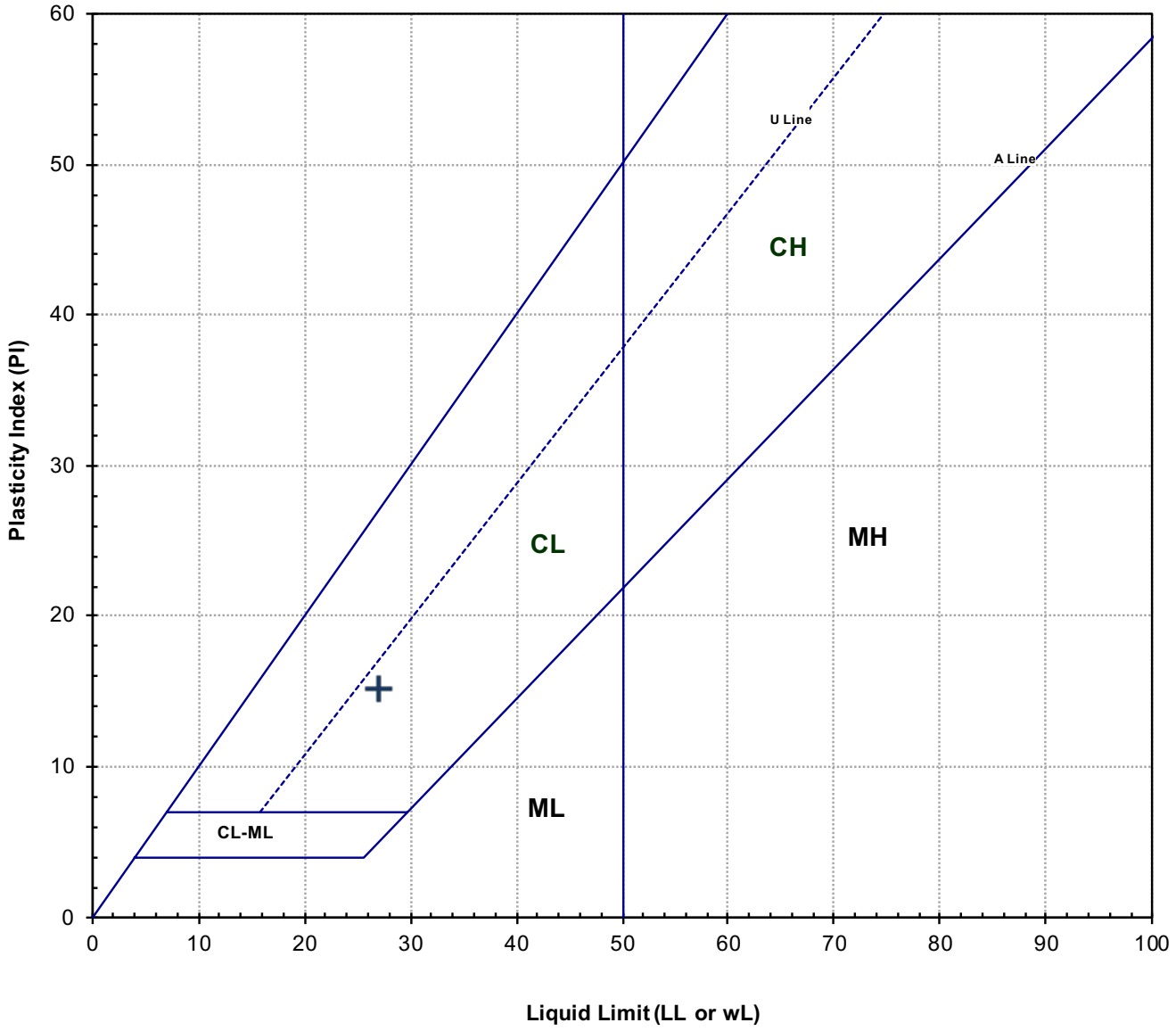

		CLASSIFICATION	LIQUID LIMIT (LL)	PLASTIC LIMIT (PL)	PLASTICITY INDEX (PI)
LOCATION	DH-1				
DEPTH	0-5'	Clayey SAND (SC)	27	12	15

PLASTICITY CHART
San Simeon Community Services District Potable Water Reservoir
San Simeon, California

PLATE B-2a

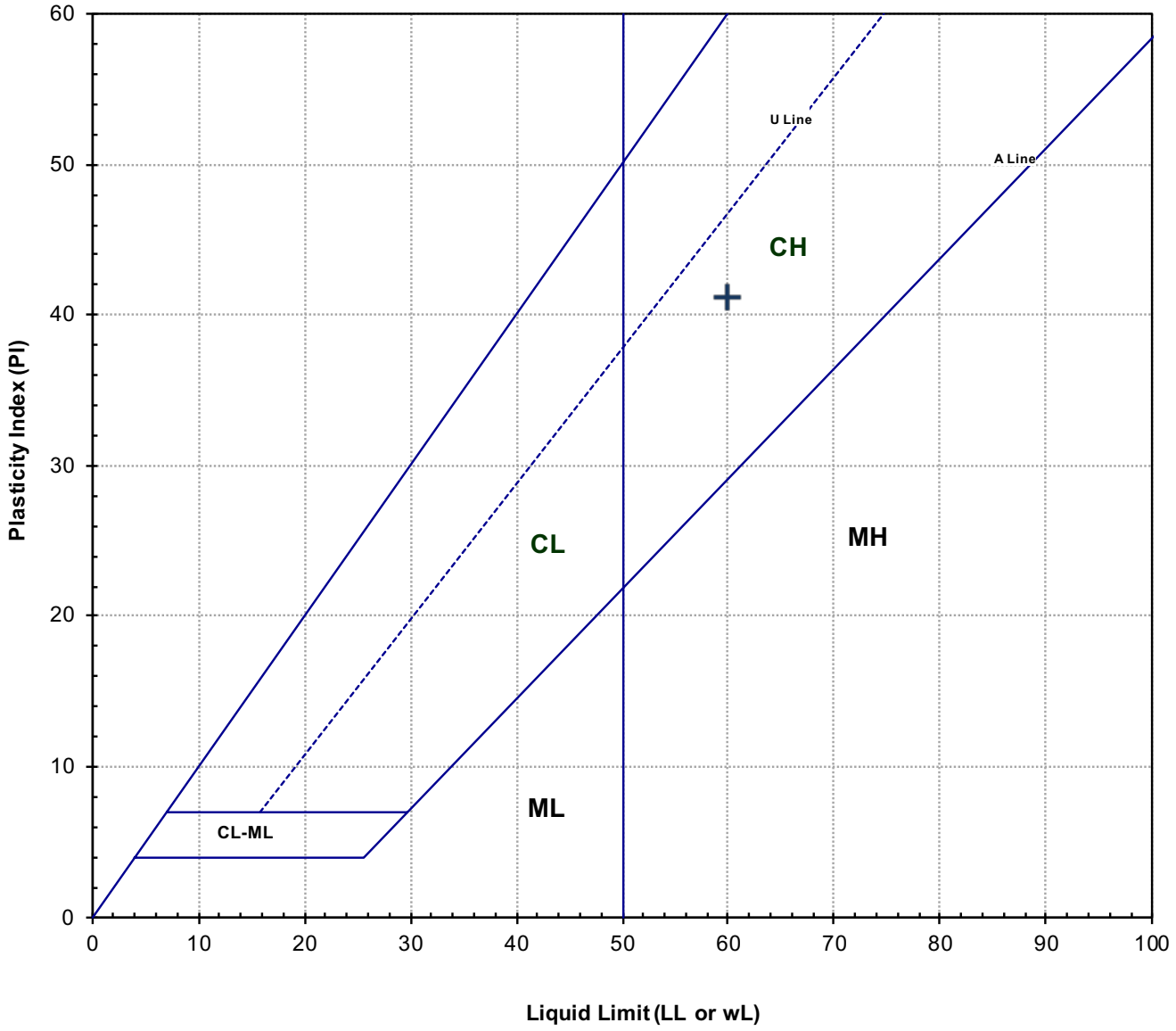

		CLASSIFICATION	LIQUID LIMIT (LL)	PLASTIC LIMIT (PL)	PLASTICITY INDEX (PI)
LOCATION	DH-2				
DEPTH	2.5'	Clayey SAND (SC)	60	19	41

PLASTICITY CHART
San Simeon Community Services District Potable Water Reservoir
San Simeon, California

PLATE B-2b

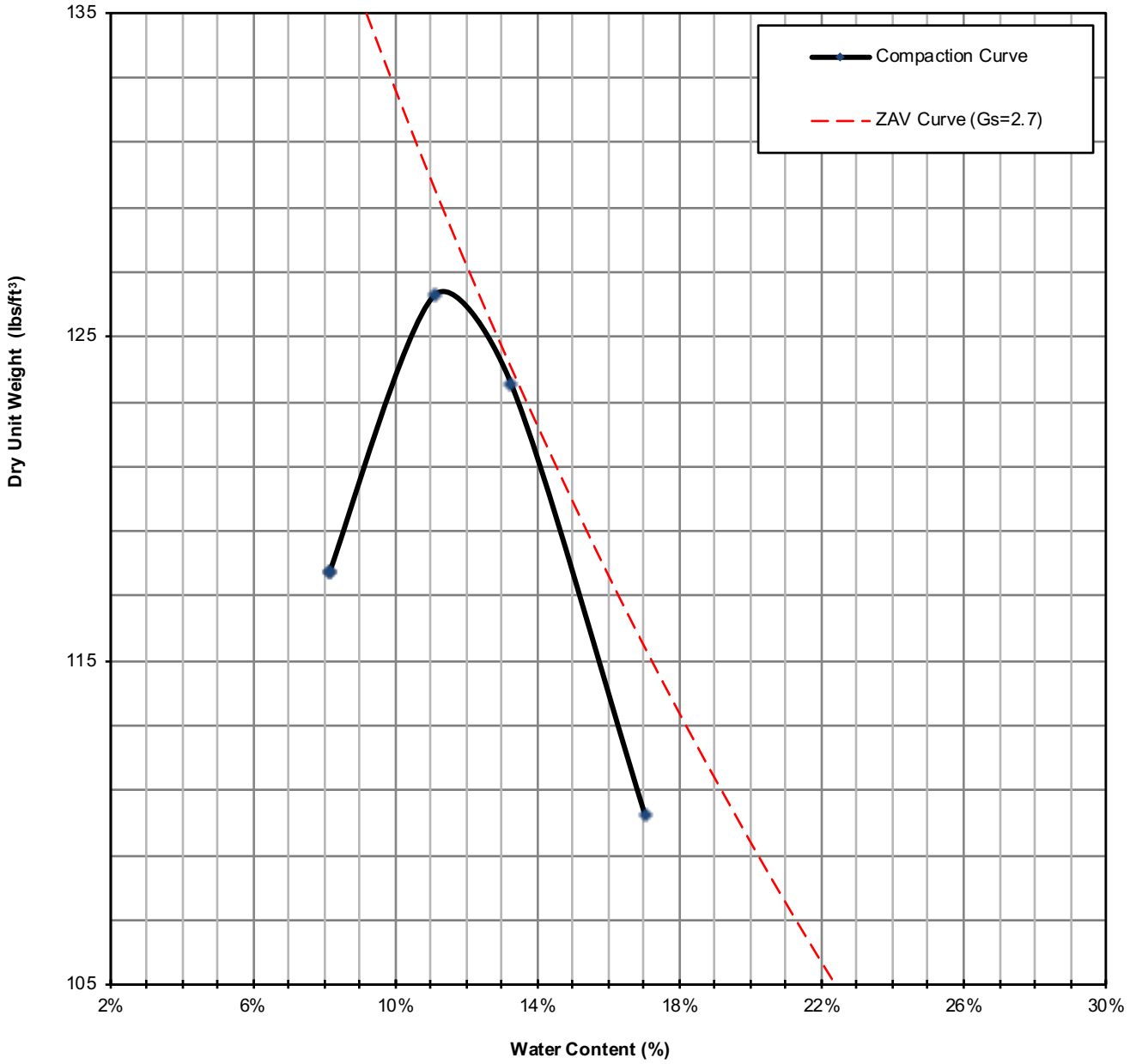

LOCATION: DH-3	CLASSIFICATION	MAXIMUM UNIT DRY WEIGHT (pcf)	OPTIMUM WATE CONTENT (%)
DEPTH: 2-6'	Clayey to Silty SAND (SC to SM	127	11

COMPACTION TEST RESULTS

San Simeon Community Services District Potable Water Reservoir
San Simeon, California

PLATE B-3

Corrosivity Tests Summary

CTL # 903-019 **Date:** 8/2/17 **Tested By:** PJ **Checked:** PJ
Client: Oakridge Geoscience **Project:** San Simeon Reservior **Proj. No:** 003.004
Remarks:

Sample Location or ID			Resistivity @ 15.5 °C (Ohm-cm)			Chloride	Sulfate		pH	ORP (Redox)		Sulfide	Moisture	Soil Visual Description
			As Rec.	Min	Sat.	mg/kg	mg/kg	%				Qualitative	At Test	
						Dry Wt.	Dry Wt.	Dry Wt.		E_H (mv)	At Test	by Lead	%	
Boring	Sample, No.	Depth, ft.	ASTM G57	Cal 643	ASTM G57	ASTM D4327	ASTM D4327	ASTM D4327	ASTM G51	ASTM G200	Temp °C	Acetate Paper	ASTM D2216	
DH-3	3	2-6	-	-	3,712	29	13	0.0013	4.5	-	-	-	12.7	Olive Brown Sandy CLAY

Corrosivity Tests Summary

CTL # 903-046 **Date:** 9/13/18 **Tested By:** PJ **Checked:** PJ
Client: Oakrdige Geoscience **Project:** San Simeon Tank **Proj. No:** 003.004
Remarks:

Sample Location or ID			Resistivity @ 15.5 °C (Ohm-cm)			Chloride	Sulfate		pH	ORP (Redox)		Sulfide	Moisture	
			As Rec.	Min	Sat.	mg/kg	mg/kg	%				Qualitative	At Test	Soil Visual Description
						Dry Wt.	Dry Wt.	Dry Wt.		E_H (mv)	At Test	by Lead	%	
Boring	Sample, No.	Depth, ft.	ASTM G57	Cal 643	ASTM G57	ASTM D4327	ASTM D4327	ASTM D4327	ASTM G51	ASTM G200	Temp °C	Acetate Paper	ASTM D2216	
DH-101	1	0-5	-	-	4,869	28	85	0.0085	4.5	-	-	-	12.1	Reddish Brown Clayey SAND