Appendix H Drainage Data

Appendices

This page intentionally left blank.

APPENDIX C: PERCOLATION TESTING

Percolation testing was performed utilizing exploratory borings PT-5 on April 2nd, 2019. The continuous pre-soak falling-head test method for water percolation testing was utilized to evaluate soil infiltration rates of the native soils encountered between depths of 10 to 20 feet below the ground surface at the respective boring locations in accordance with Los Angeles County (2017), Administrative Manual--Guidelines for Design, Investigation, and Reporting Low Impact Development Storm Water Infiltration. The test location was prepared by placing a perforated 2-inch diameter PVC pipe surrounded by pea gravel after drilling and sampling. Water was filled to the ground surface to pre-soak prior to testing.

The borings were cased using a two-inch diameter perforated casing. Water was added to the bore hole until the water level was as near the ground surface as could be achieved and allowed to pre-soak for at least 4 hours if the water did not drain entirely within 30 minutes after filling the boring two (2) consecutive times. After pre-soak, water was added to the bore hole until the water level was as near ten (10) feet below the ground surface as could be achieved. The water level was measured to the nearest 1/8-inch. There were at least three (3) sets of measurements taken for each test and each set consisted of at least three (3) measurements. The results of the percolation tests are tabulated in the tables below:

Table No. C-1, Soil Boring Percolation Test Results

Boring No.	Depth of Test (feet)	Top Soil Types (USCS)	Average Percolation Rate (inches/hour)	Lowest Percolation Rate (inches/hour)
PT-5*	10–20 bgl	Silty Sand (SM)	0.85	0.62

*Percolation rate was obtained from an 8-inch diameter bore hole to a depth which shows in the next column (Depth of Test). The percolation rate may change with different well dimensions. The adjustment to the provided percolation rate to a well with different dimensions should be determined by the well designer.

In accordance with County of Los Angeles requirements, the minimum percolation rate for design of infiltration systems for storm water management is 0.3 inches per hour. It should be noted that per Los Angeles County Low Impact Development, Best Management Practices Guidelines, any planned infiltration systems should be at least 10 feet above historically highest groundwater levels. Review of the Seismic Hazard Zone Report for the La Habra Quadrangle (CDMG 1997) indicated the historically highest groundwater levels at depths of approximately 25 feet below ground surface. More recent groundwater level monitoring in local groundwater wells has shown depths to groundwater varies between approximately 27 and 35 feet below ground surface. The project Civil Engineer shall review the percolation rates presented for design of the proposed infiltration system. Additional details about drywell design and requirements can be found in the Low Impact Development Manual, County of Los Angeles Department of

Public Works, latest edition. The infiltration system should be properly maintained periodically to minimize sedimentation in the infiltration system.

Table No. C-2, Infiltration Facility Setback Requirements per Los Angeles County

Setback from	Distance
Property lines and public right of way	5 feet
Any foundation	15 feet or within 1:1 plane drawn up from the bottom of foundation, whichever greater
Face of any slope	H/2, 5 feet minimum (H is height of slope)
Water wells used for drinking water	100 feet
Historically highest groundwater levels	10 feet above

Log of Boring No. PT5

Dates Drilled: 4/2/2019 Logged by: RAM Checked By:

Equipment: 8" HOLLOW STEM AUGER Driving Weight and Drop: 140 lbs / 30 in

Ground Surface Elevation (ft): Depth to Water (ft): NOT ENCOUNTERED

Depth (ft)	Graphic Log	SUMMARY OF SUBSURFACE CONDITIONS This log is part of the report prepared by Converse for this project and should be read together with the report. This summary applies only at the location of the boring and at the time of drilling. Subsurface conditions may differ at other locations and may change at this location with the passage of time. The data presented is a simplification of actual conditions encountered.	SAMPLES DRIVE	SAMPLES BULK	BLOWS/6"	MOISTURE (%)	DRY UNIT WT. (pcf)	OTHER
		FILL (Af): **SILTY CLAY (CL):** moist, brown.						
			■		5/9/10	21	105	
5		-light brown	■		1/3/4	18	100	
		ALLUVIUM (Qal): **SILTY CLAY (CL):** moist, soft, light brown.						
			■		5/9/10	15	109	wa (fc=83%)
10			■		3/8/15	14	112	
		SILTY SAND (SM): fine to coarse-grained, with gravels, cobbles and weathered lithic fragments, dry, light brown.						
15			☒		11/22/31			wa (fc=12%)
20			■		24/31/24	6	118	
		End of boring at 21.5 feet. Groundwater was not encountered. Percolation test performed for bottom 10 feet. Borehole was backfilled with cement grout on 4/2/19.						

GOOD SOIL FOR PERCOLATION

Converse Consultants

Project Name
Wedgeworth Elementary School
16949 Wedgeworth Drive
Hacienda Heights, California 91745

Project No. **18-31-330-02**

Figure No. **A-20**

Percolation Testing

Job Name: Wedgeworth ES, HLPUSD
Job No.: 18-31-330-02
Location: Inside the baseball field
Test Date: April 2, 2019

Test Boring No **PT-5**
Depth of Boring (d_b): 10.0 feet
Diameter of Boring (D): 0.67 feet
Test Performer: PA

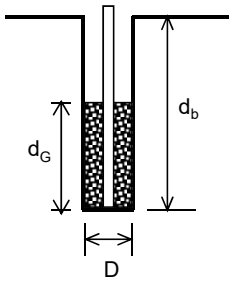

Percolation Test was performed from 10 feet to 20 feet below ground level

Time of Testing			Water Level Measurement		Water Level Calculations				Percolation Rate Calculations		
Initial Time	Final Time	Time Interval	Initial depth to water	Final depth to water	Initial Height of water column	Final Height of water column	Drop in Height	Average height of water column	Pre-adjusted Percolation Rate	Reduction Factor	Adjusted Percolation Rate
T_i	T_f	ΔT	d_1	d_2	d_i	d_f	$\Delta d = d_i - d_f$	L_{ave}	$k_i = \Delta d / \Delta T$	R_f	$k = k_i / R_f$
		(hr)	(feet)	(feet)	(feet)	(feet)	(feet)	(feet)	(inch/hr)		(inch/hr)
Percolation Test											
11:00:00 AM	11:30:00 AM	0.50	0.00	1.20	10.00	8.80	1.20	9.40	28.80	29.1	0.99
11:30:00 AM	12:00:00 PM	0.50	1.20	2.30	8.80	7.70	1.10	8.25	26.40	25.6	1.03
12:00:00 PM	12:30:00 PM	0.50	2.30	3.30	7.70	6.70	1.00	7.20	24.00	22.5	1.07
12:30:00 PM	1:00:00 PM	0.50	0.00	1.10	10.00	8.90	1.10	9.45	26.40	29.2	0.90
1:00:00 PM	1:30:00 PM	0.50	1.10	2.00	8.90	8.00	0.90	8.45	21.60	26.2	0.82
1:30:00 PM	2:00:00 PM	0.50	2.00	2.80	8.00	7.20	0.80	7.60	19.20	23.7	0.81
2:00:00 PM	2:30:00 PM	0.50	0.00	0.90	10.00	9.10	0.90	9.55	21.60	29.5	0.73
2:30:00 PM	3:00:00 PM	0.50	0.90	1.60	9.10	8.40	0.70	8.75	16.80	27.1	0.62
3:00:00 PM	3:30:00 PM	0.50	1.60	2.30	8.40	7.70	0.70	8.05	16.80	25.0	0.67

Note: Reduction Factor, $R_f = (2*d_i - \Delta d)/D + 1$

Lowest Perlcolaton Rate = 0.62 inch/hr
Average Percolation Rate = 0.85 inch/hr

Reference: Los Angeles County (2017). Administrative Manual - Guidelines for Design, Investigation, and Reporting Low Impact Development Storm Water Infiltration , 6/30/17.

NOT TO SCALE

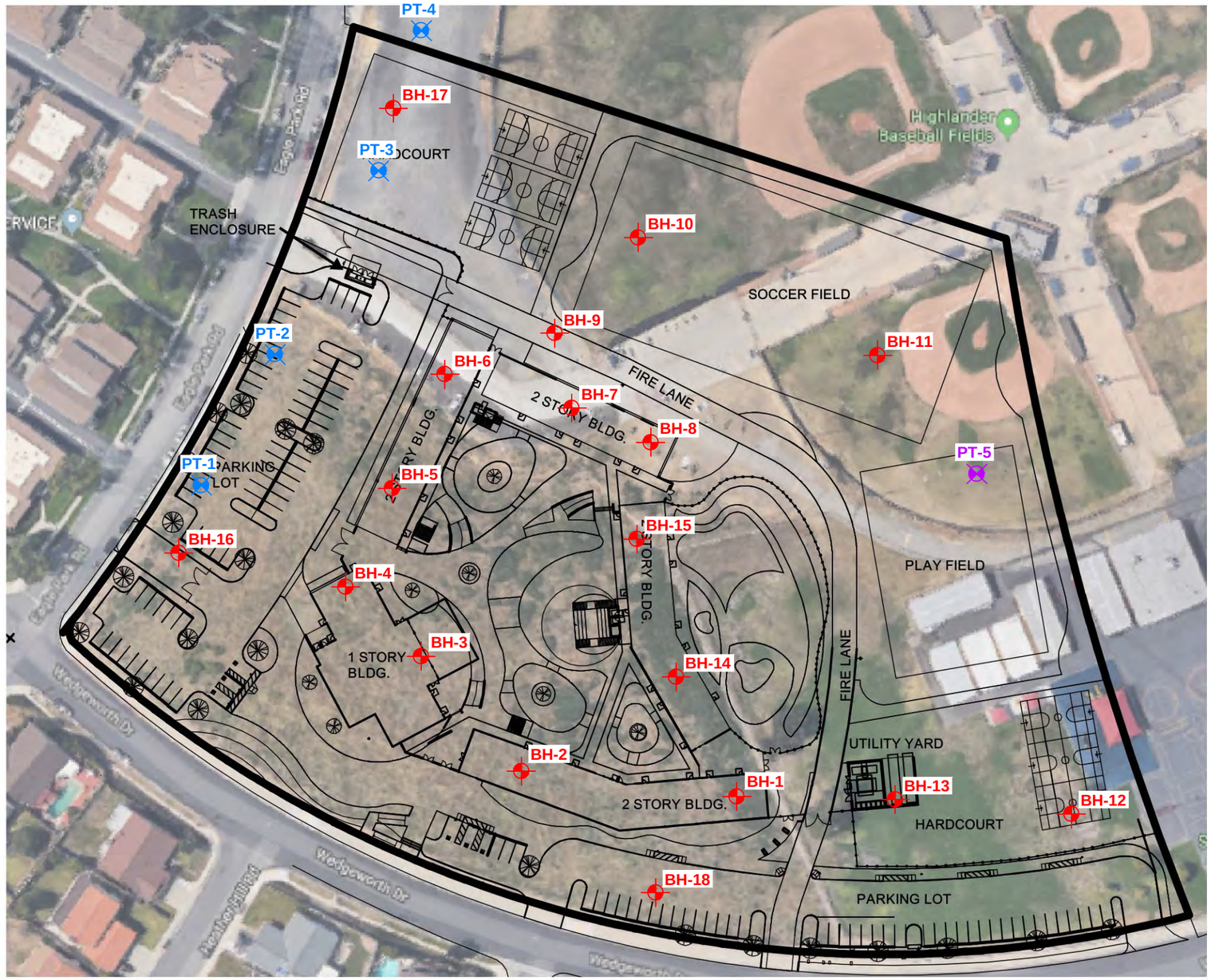

LEGEND

- APPROXIMATE LOCATION OF BORING (APRIL 2019)
- APPROXIMATE LOCATION OF PERCOLATION TESTS (FEBRUARY 2019)
- APPROXIMATE LOCATION OF PERCOLATION TEST (APRIL 2019)

SITE PLAN AND APPROXIMATE LOCATION OF BORINGS

Converse Consultants

WEDGEWORTH ELEMENTARY SCHOOL PROJECT
16949 WEDGEWORTH DRIVE, HACIENDA HEIGHTS, CA
FOR: HACIENDA LA PUENTE UNIFIED SCHOOL DISTRICT

Project No.	Figure No.
18-31-330-02	2

I:\ACADDRAWINGS\18\31\330\18-31-330-01-SITEPLAN AND BORINGS.DWG

CONTECH®
ENGINEERED SOLUTIONS

CDS®
Hydrodynamic Separator

The experts you need to solve your stormwater challenges

Contech is the leader in stormwater solutions, helping engineers, contractors and owners with infrastructure and land development projects throughout North America.

With our responsive team of stormwater experts, local regulatory expertise and flexible solutions, Contech is the trusted partner you can count on for stormwater management solutions.

Your Contech Team

STORMWATER CONSULTANT

It's my job to recommend the best solution to meet permitting requirements.

STORMWATER DESIGN ENGINEER

I work with consultants to design the best approved solution to meet your project's needs.

REGULATORY MANAGER

I understand the local stormwater regulations and what solutions will be approved.

SALES ENGINEER

I make sure our solutions meet the needs of the contractor during construction.

Contech is your partner in stormwater management solutions

Unique screening technology for stormwater runoff – CDS®

The CDS hydrodynamic separator uses swirl concentration and continuous deflective separation to screen, separate and trap trash, debris, sediment, and hydrocarbons from stormwater runoff.

At the heart of the CDS system is a unique screening technology used to capture and retain trash and debris. The screen face is louvered so that it is smooth in the downstream direction. The effect created is called "Continuous Deflective Separation." The power of the incoming flow is harnessed to continually shear debris off the screen and to direct trash and sediment toward the center of the separation cylinder. This results in a screen that is self-cleaning and provides 100% removal of floatables and neutrally buoyant material debris 4.7 mm or larger, without blinding.

CDS is used to meet trash Total Maximum Daily Load (TMDL) requirements, for stormwater quality control, inlet and outlet pollution control, and as pretreatment for filtration, detention/infiltration, bioretention, rainwater harvesting systems, and a variety of green infrastructure practices.

CDS® Features and Benefits

FEATURE	BENEFIT
Captures and retains 100% of floatables and neutrally buoyant debris 4.7mm or larger	Superior pollutant removal
Self-cleaning screen	Ease of maintenance
Isolated storage sump eliminates scour potential	Excellent pollutant retention
Internal bypass	Eliminates the need for additional structures
Multiple pipe inlets and 90-180º angles	Design flexibility
Clear access to sump and stored pollutants	Fast, easy maintenance

APPLICATION TIPS

- Because of its internal peak bypass weirs, CDS systems can provide cost savings by eliminating the need for additional structures.
- Pretreating detention, infiltration, and green infrastructure practices with CDS can protect downstream structures and provide for easy maintenance.
- The CDS an ideal solution for retrofit applications due to its compact footprint and configuration flexibility.

The CDS® Screen

A fundamentally different approach to trash control ...

Traditional approaches to trash control typically involve "direct screening" that can easily become clogged, as trash is pinned to the screen as water passes through. Clogged screens can lead to flooding as water backs up. The design of the CDS screen is fundamentally different. Flow is introduced to the screen face which is louvered so that it is smooth in the downstream direction. The effect created is called "Continuous Deflective Separation." The power of the incoming flow is harnessed to continually shear debris off the screen and to direct trash and sediment toward the center of the separation cylinder.

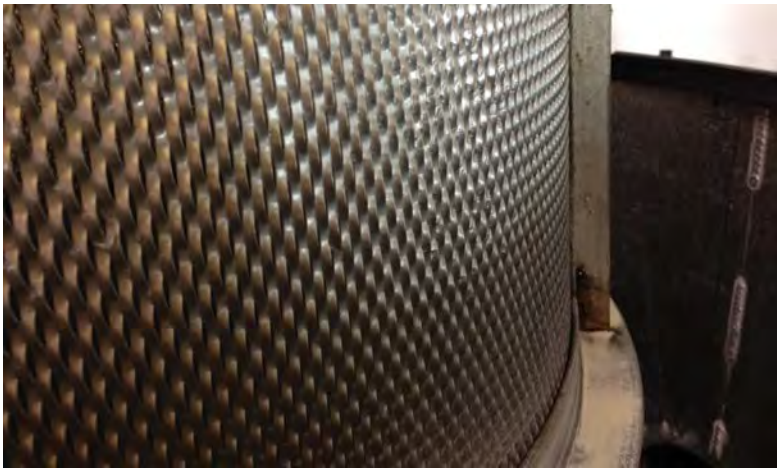

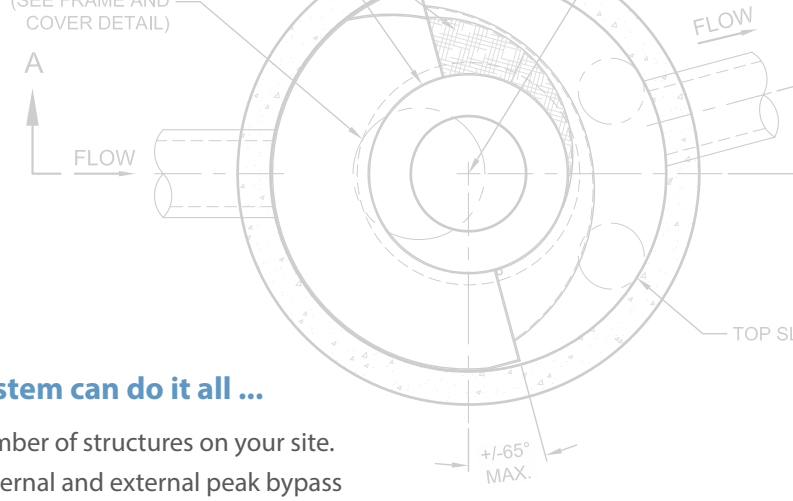

CDS® Design Configuration

Why use traditional stormwater design when ONE system can do it all ...

The CDS effectively treats stormwater runoff while reducing the number of structures on your site. Inline, offline, grate inlet, and drop inlet configurations available. Internal and external peak bypass options also available.

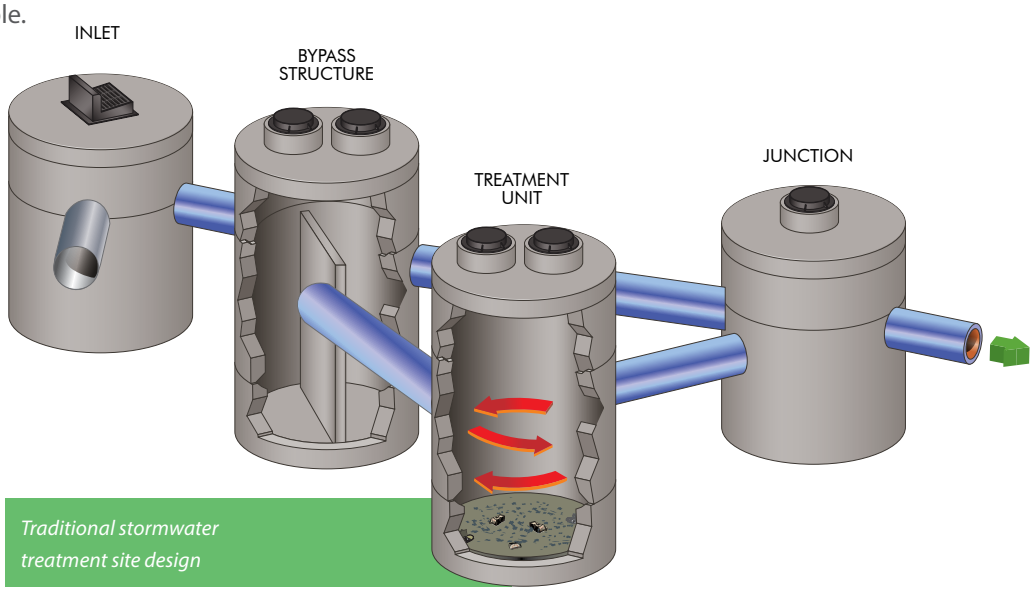

Traditional stormwater treatment site design

A Traditional Stormwater Treatment Site Design would require several structures on your site. With CDS, one system can do it all!

CDS® Advantages

- Grate inlet option available
- Internal bypass weir
- Accepts multiple inlets at a variety of angles
- Advanced hydrodynamic separator
- Captures and retains 100% of floatables and neutrally buoyant debris 4.7 mm or larger
- Indirect screening capability keeps screen from clogging
- Retention of all captured pollutants, even at high flows
- Performance verified by NJCAT, WA Ecology, and ETV Canada

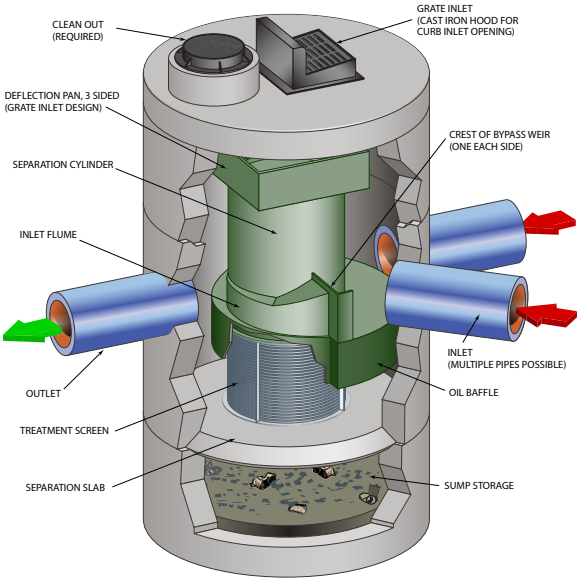

Learn More:
www.ContechES.com/cds

CDS® Applications

CDS is commonly used in the following stormwater applications:

- Stormwater quality control – trash, debris, sediment, and hydrocarbon removal
- Urban retrofit and redevelopment
- Inlet and outlet protection
- Pretreatment for filtration, detention/infiltration, bioretention, rainwater harvesting systems, and Low Impact Development designs

CDS® provides trash control

CDS® pretreats a bioswale

Select CDS® Certifications and Verifications

CDS has been verified by some of the most stringent stormwater technology evaluation organizations in North America, including:

- Washington State Department of Ecology (GULD) - Pretreatment
- New Jersey Department of Environmental Protection (NJ DEP)
- Canadian Environmental Technology Verification (ETV)
- California Statewide Trash Amendments Full Capture System Certified*

**The CDS System has been certified by the California State Water Resources Control Board as a Full Capture System provided that it is sized to treat the peak flow rate from the region specific 1-year, 1-hour design storm, or the peak flow capacity of the corresponding storm drain, whichever is less.*

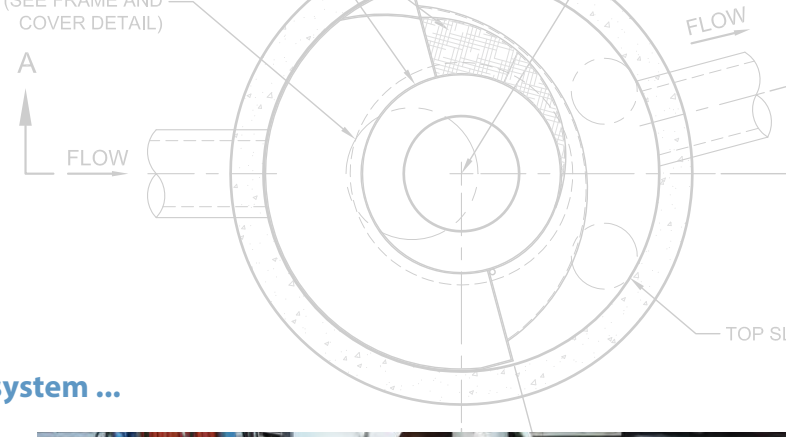

CDS® Maintenance

Select a cost-effective and easy-to-access treatment system ...

Systems vary in their maintenance needs, and the selection of a cost-effective and easy-to-access treatment system can mean a huge difference in maintenance expenses for years to come.

A CDS unit is designed to minimize maintenance and make it as easy and inexpensive as possible to keep our systems working properly.

Most CDS® units can easily be cleaned within thirty minutes.

INSPECTION

Inspection is the key to effective maintenance. Pollutant deposition and transport may vary from year to year and site to site. Semi-annual inspections will help ensure that the system is cleaned out at the appropriate time. Inspections should be performed more frequently where site conditions may cause rapid accumulation of pollutants.

RECOMMENDATIONS FOR CDS MAINTENANCE

The recommended cleanout of solids within the CDS unit's sump should occur at 75% of the sump capacity. Access to the CDS unit is typically achieved through two manhole access covers – one allows inspection and cleanout of the separation chamber and sump, and another allows inspection and cleanout of sediment captured and retained behind the screen. A vacuum truck is recommended for cleanout of the CDS unit and can be easily accomplished in less than 30 minutes for most installations.

HDS Product Design Worksheets

Our in-house team of engineers can support you through the entire permitting process - and the first step is sending us your project information by filling out one of the Project Design Worksheets. We will forward your information to an in-house engineer who will contact you with specific recommendations for your project.

The free tool is available at
www.ContechES.com/pdw-treatment

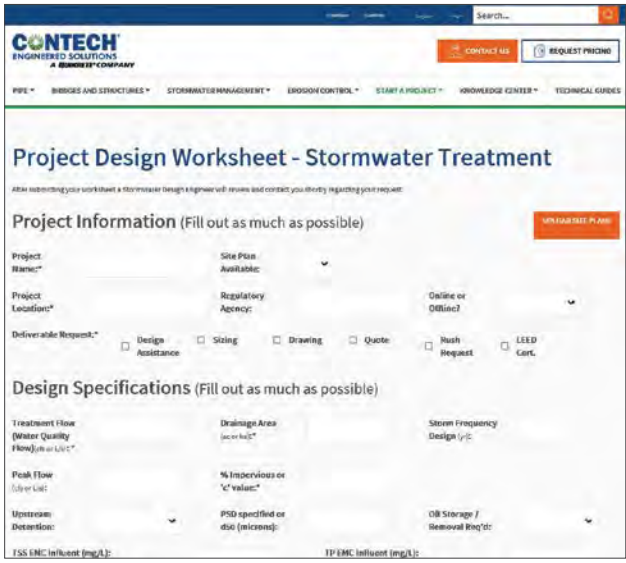

Learn More:
www.ContechES.com/pdw-treatment

A partner you can rely on

STORMWATER SOLUTIONS

PIPE SOLUTIONS

STRUCTURES SOLUTIONS

Few companies offer the wide range of high-quality stormwater resources you can find with us — state-of-the-art products, decades of expertise, and all the maintenance support you need to operate your system cost-effectively.

THE CONTECH WAY

Contech® Engineered Solutions provides innovative, cost-effective site solutions to engineers, contractors, and developers on projects across North America. Our portfolio includes bridges, drainage, erosion control, retaining wall, sanitary sewer and stormwater management products.

TAKE THE NEXT STEP

For more information: www.ContechES.com

CONTECH® ENGINEERED SOLUTIONS

Get social with us:

800-338-1122 | www.ContechES.com

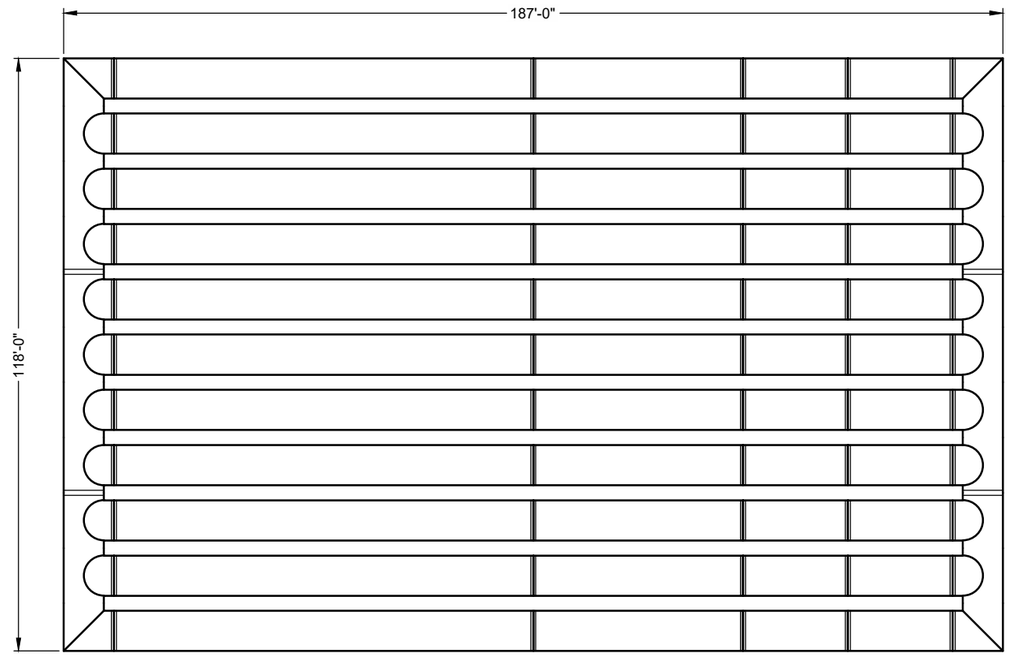

ASSEMBLY
SCALE: 1" = 30'

PROJECT SUMMARY

CALCULATION DETAILS
- LENGTH PER BARREL = 171 FT
- LENGTH PER HEADER = 118 FT
- LOADING = H20 & H25
- APPROX. CMP FOOTAGE = 2,117 FT

STORAGE SUMMARY
- STORAGE VOLUME REQUIRED 150,000 CF
- PIPE STORAGE = 106,412 CF
- STRUCTURAL BACKFILL STORAGE = 43,590 CF
- TOTAL STORAGE PROVIDED = 150,002 CF

PIPE DETAILS
- DIAMETER = 96 IN
- CORRUGATION = 5" X 1" OR 3" X 1"
- GAGE = 16
- COATING = ALUMINIZED STEEL TYPE 2 (ALT2)
- WALL TYPE = PERFORATED
- BARREL SPACING = 36 IN

BACKFILL DETAILS
- WIDTH AT ENDS = 36 IN
- ABOVE PIPE = 6 IN
- WIDTH AT SIDES = 36 IN
- BELOW PIPE = 6 IN

NOTES
- ALL RISER AND STUB DIMENSIONS ARE TO CENTERLINE. ALL ELEVATIONS, DIMENSIONS, AND LOCATIONS OF RISERS AND INLETS, SHALL BE VERIFIED BY THE ENGINEER OF RECORD PRIOR TO RELEASING FOR FABRICATION.
- ALL FITTINGS AND REINFORCEMENT COMPLY WITH ASTM A998.
- ALL RISERS AND STUBS ARE 2 ⅔" x ½" CORRUGATION AND 16 GAGE UNLESS OTHERWISE NOTED.
- RISERS TO BE FIELD TRIMMED TO GRADE.
- QUANTITY OF PIPE SHOWN DOES NOT PROVIDE EXTRA PIPE FOR CONNECTING THE SYSTEM TO EXISTING PIPE OR DRAINAGE STRUCTURES. OUR SYSTEM AS DETAILED PROVIDES NOMINAL INLET AND/OR OUTLET PIPE STUB FOR CONNECTION TO EXISTING DRAINAGE FACILITIES. IF ADDITIONAL PIPE IS NEEDED IT IS THE RESPONSIBILITY OF THE CONTRACTOR.
- BAND TYPE TO BE DETERMINED UPON FINAL DESIGN.
- THE PROJECT SUMMARY IS REFLECTIVE OF THE DYODS DESIGN, QUANTITIES ARE APPROX. AND SHOULD BE VERIFIED UPON FINAL DESIGN AND APPROVAL. FOR EXAMPLE, TOTAL EXCAVATION DOES NOT CONSIDER ALL VARIABLES SUCH AS SHORING AND ONLY ACCOUNTS FOR MATERIAL WITHIN THE ESTIMATED EXCAVATION FOOTPRINT.

NOTE:
THESE DRAWINGS ARE FOR CONCEPTUAL PURPOSES AND DO NOT REFLECT ANY LOCAL PREFERENCES OR REGULATIONS. PLEASE CONTACT YOUR LOCAL CONTECH REP FOR MODIFICATIONS.

C:\DYODS\DATA\CPC\DYODS_10992-1.DWG 4/25/2019 9:21 PM

MARK	DATE	REVISION DESCRIPTION	BY

CONTECH ENGINEERED SOLUTIONS LLC
www.ContechES.com
9025 Centre Pointe Dr., Suite 400, West Chester, OH 45069
800-338-1122 513-645-7000 513-645-7993 FAX

CONTECH CMP DETENTION SYSTEMS

CONTECH
DYODS
DRAWING

DYODS - 10992-1-0
PROJECT NAME: Wedgeworth Elementary School
Hacienda Heights, CA
DESCRIPTION: 50 YEAR STORM RETENTION DESIGN

PROJECT No.:	SEQ. No.:	DATE:
10992-1	0	4/25/2019
DESIGNED: DYODS		DRAWN: DYODS
CHECKED:		APPROVED:
SHEET NO.: D1		

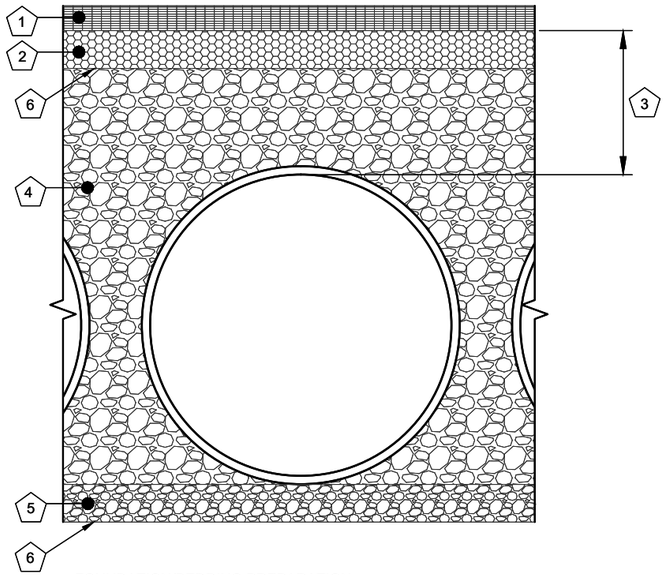

FOUNDATION/BEDDING PREPARATION

PRIOR TO PLACING THE BEDDING, THE FOUNDATION MUST BE CONSTRUCTED TO A UNIFORM AND STABLE GRADE. IN THE EVENT THAT UNSUITABLE FOUNDATION MATERIALS ARE ENCOUNTERED DURING EXCAVATION, THEY SHALL BE REMOVED AND BROUGHT BACK TO THE GRADE WITH A FILL MATERIAL AS APPROVED BY THE ENGINEER. ONCE THE FOUNDATION PREPARATION IS COMPLETE, THE 4 INCHES OF A WELL-GRADED GRANULAR MATERIAL SHALL BE PLACED AS THE BEDDING.

BACKFILL

THE BACKFILL MATERIAL SHALL BE FREE-DRAINING ANGULAR WASHED STONE 3/4" - 2" PARTICLE SIZE. MATERIAL SHALL BE PLACED IN 8"-10" MAXIMUM LIFTS. MATERIAL SHALL BE WORKED INTO THE PIPE HAUNCHES BY MEANS OF SHOVEL-SLICING, RODDING, AIR-TAMPER, VIBRATORY ROD, OR OTHER EFFECTIVE METHODS COMPACTION IS CONSIDERED ADEQUATE WHEN NO FURTHER YIELDING OF THE MATERIAL IS OBSERVED UNDER THE COMPACTOR, OR UNDER FOOT, AND THE PROJECT ENGINEER OR HIS REPRESENTATIVE IS SATISFIED WITH THE LEVEL OF COMPACTION. INADEQUATE COMPACTION CAN LEAD TO EXCESSIVE DEFLECTIONS WITHIN THE SYSTEM AND SETTLEMENT OF THE SOILS OVER THE SYSTEM. BACKFILL SHALL BE PLACED SUCH THAT THERE IS NO MORE THAN A TWO-LIFT DIFFERENTIAL BETWEEN THE SIDES OF ANY PIPE IN THE SYSTEM AT ALL TIMES DURING THE BACKFILL PROCESS. BACKFILL SHALL BE ADVANCED ALONG THE LENGTH OF THE SYSTEM AT THE SAME RATE TO AVOID DIFFERENTIAL LOADING ON ANY PIPES IN THE SYSTEM.

EQUIPMENT USED TO PLACE AND COMPACT THE BACKFILL SHALL BE OF A SIZE AND TYPE SO AS NOT TO DISTORT, DAMAGE, OR DISPLACE THE PIPE. ATTENTION MUST BE GIVEN TO PROVIDING ADEQUATE MINIMUM COVER FOR SUCH EQUIPMENT, AND MAINTAINING BALANCED LOADING ON ALL PIPES IN THE SYSTEM, DURING ALL SUCH OPERATIONS.

OTHER ALTERNATE BACKFILL MATERIAL MAY BE ALLOWED DEPENDING ON SITE SPECIFIC CONDITIONS. REFER TO TYPICAL BACKFILL DETAIL FOR MATERIAL REQUIRED.

BACKFILL DETAIL

SCALE: N.T.S.

NOTE:
THESE DRAWINGS ARE FOR CONCEPTUAL PURPOSES AND DO NOT REFLECT ANY LOCAL PREFERENCES OR REGULATIONS. PLEASE CONTACT YOUR LOCAL CONTECH REP FOR MODIFICATIONS.

KEY

1.) RIGID OR FLEXIBLE PAVEMENT

2.) GRANULAR ROAD BASE

3.) 12" MIN. FOR DIAMETERS THROUGH 96"
18" MIN. FOR DIAMETERS FROM 102"
AND LARGER MEASURED TO TOP OF
RIGID OR BOTTOM OF FLEXIBLE
PAVEMENT.

4.) FREE DRAINING ANGULAR WASHED
STONE 3/4" - 2" MIN. PARTICLE SIZE.

5.) GRANULAR BEDDING, ROUGHLY
SHAPED TO FIT THE BOTTOM OF PIPE,
4"- 6" IN DEPTH.

6.) CONTECH C-40 OR C-45
NON-WOVEN GEOTEXTILE
REQUIRED, WRAPPING TRENCH
ONLY.

2 2/3" x 1/2" CORRUGATION - STEEL AND ALUMINUM CMP
EDGE SPACING EQUAL ON BOTH SIDES

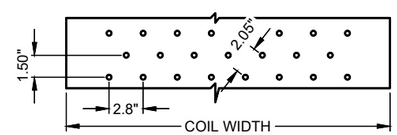

OPEN AREA = 3.76 SQ IN/SQ FT

3" x 1" CORRUGATION - STEEL AND ALUMINUM CMP
(COIL PROVIDED FROM CONTECH LANTANA, FL PLANT)

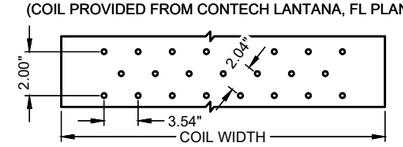

OPEN AREA = 4.16 SQ IN/SQ FT

5" x 1" CORRUGATION - STEEL ONLY
EDGE SPACING EQUAL ON BOTH SIDES

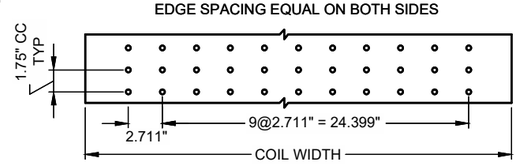

OPEN AREA = 3.33 SQ IN/SQ FT

NOTES:

1. PERFORATIONS MEET AASHTO AND ASTM SPECIFICATIONS.
2. PERFORATION OPEN AREA PER SQUARE FOOT OF PIPE IS BASED ON THE NOMINAL DIAMETER AND LENGTH OF PIPE.
3. ALL DIMENSIONS ARE SUBJECT TO MANUFACTURING TOLERANCES.
4. ALL HOLES Ø3/8".

TYPICAL PERFORATION DETAIL

SCALE: N.T.S.

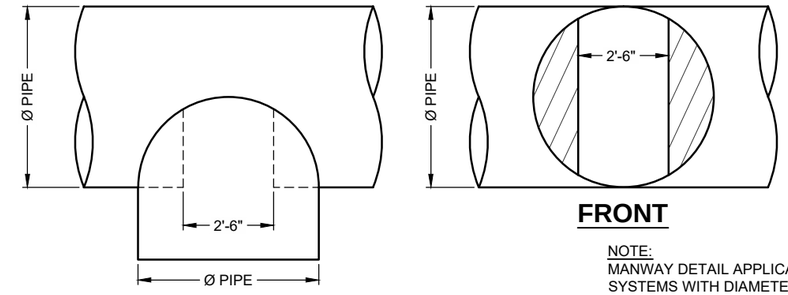

PLAN

FRONT

TYPICAL MANWAY DETAIL

SCALE: N.T.S.

NOTE:
MANWAY DETAIL APPLICABLE FOR CMP SYSTEMS WITH DIAMETERS 48" AND LARGER. MANWAYS MAY BE REQUIRED ON SMALLER SYSTEMS DEPENDING ON ACTUAL SITE SPECIFIC CONDITIONS.

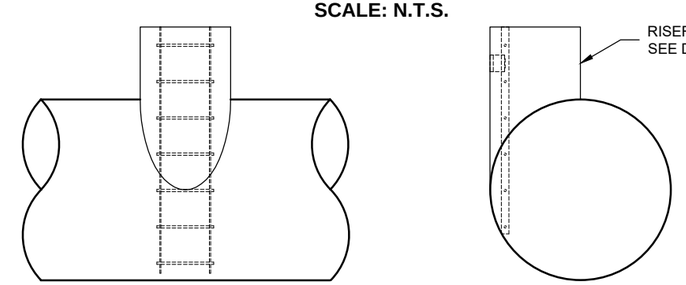

ELEVATION

END

TYPICAL RISER DETAIL

SCALE: N.T.S.

NOTE:
LADDERS ARE OPTIONAL AND ARE NOT REQUIRED FOR ALL SYSTEMS.

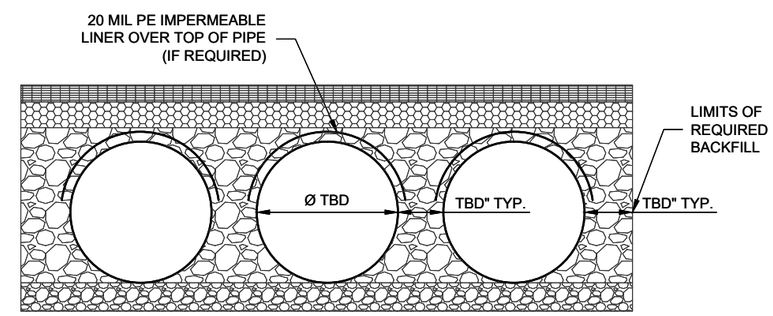

TYPICAL SECTION VIEW

LINER OVER ROWS
SCALE: N.T.S.

NOTE: IF SALTING AGENTS FOR SNOW AND ICE REMOVAL ARE USED ON OR NEAR THE PROJECT, A GEOMEMBRANE BARRIER IS RECOMMENDED WITH THE SYSTEM. THE GEOMEMBRANE LINER IS INTENDED TO HELP PROTECT THE SYSTEM FROM THE POTENTIAL ADVERSE EFFECTS THAT MAY RESULT FROM A CHANGE IN THE SURROUNDING ENVIRONMENT OVER A PERIOD OF TIME. PLEASE REFER TO THE CORRUGATED METAL PIPE DETENTION DESIGN GUIDE FOR ADDITIONAL INFORMATION.

MARK	DATE	REVISION DESCRIPTION	BY

CONTECH ENGINEERED SOLUTIONS LLC
www.ContechES.com
9025 Centre Pointe Dr., Suite 400, West Chester, OH 45069
800-338-1122 513-645-7000 513-645-7993 FAX

CONTECH CMP DETENTION SYSTEMS

CONTECH
DYODS
DRAWING

DYODS - 10992-1-0
PROJECT NAME: Wedgeworth Elementary School
Hacienda Heights, CA
DESCRIPTION: 50 YEAR STORM RETENTION DESIGN

PROJECT No.: 10992-1	SEQ. No.: 0	DATE: 4/25/2019
DESIGNED: DYODS		DRAWN: DYODS
CHECKED:		APPROVED:
SHEET NO.: D2		

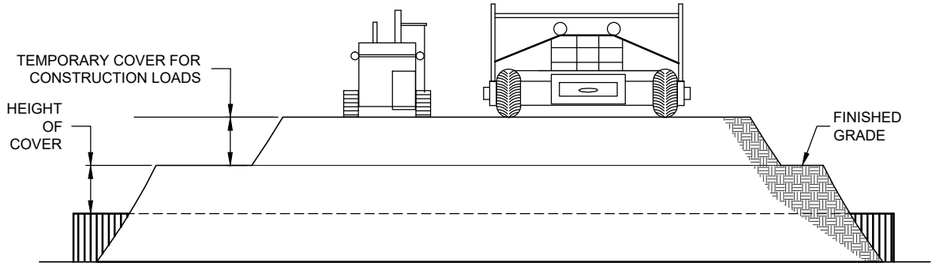

CONSTRUCTION LOADS

FOR TEMPORARY CONSTRUCTION VEHICLE LOADS, AN EXTRA AMOUNT OF COMPACTED COVER MAY BE REQUIRED OVER THE TOP OF THE PIPE. THE HEIGHT-OF-COVER SHALL MEET THE MINIMUM REQUIREMENTS SHOWN IN THE TABLE BELOW. THE USE OF HEAVY CONSTRUCTION EQUIPMENT NECESSITATES GREATER PROTECTION FOR THE PIPE THAN FINISHED GRADE COVER MINIMUMS FOR NORMAL HIGHWAY TRAFFIC.

PIPE SPAN, INCHES	AXLE LOADS (kips)			
	18-50	50-75	75-110	110-150
	MINIMUM COVER (FT)			
12-42	2.0	2.5	3.0	3.0
48-72	3.0	3.0	3.5	4.0
78-120	3.0	3.5	4.0	4.0
126-144	3.5	4.0	4.5	4.5

*MINIMUM COVER MAY VARY, DEPENDING ON LOCAL CONDITIONS. THE CONTRACTOR MUST PROVIDE THE ADDITIONAL COVER REQUIRED TO AVOID DAMAGE TO THE PIPE. MINIMUM COVER IS MEASURED FROM THE TOP OF THE PIPE TO THE TOP OF THE MAINTAINED CONSTRUCTION ROADWAY SURFACE.

CONSTRUCTION LOADING DIAGRAM

SCALE: N.T.S.

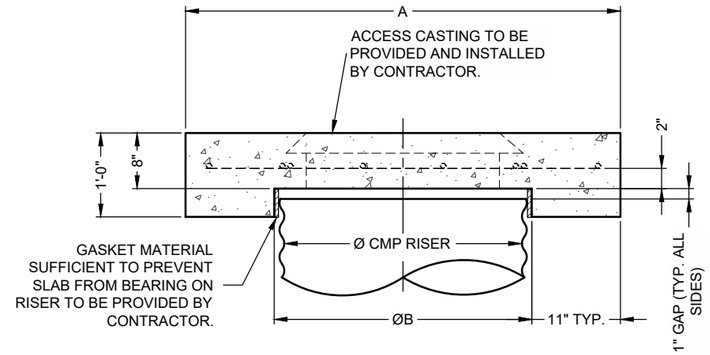

SECTION VIEW

REINFORCING TABLE				
Ø CMP RISER	A	Ø B	REINFORCING	**BEARING PRESSURE (PSF)
24"	Ø 4' 4'X4'	26"	#5 @ 12" OCEW #5 @ 12" OCEW	2,410 1,780
30"	Ø 4'-6" 4'-6" X 4'-6"	32"	#5 @ 12" OCEW #5 @ 12" OCEW	2,120 1,530
36"	Ø 5' 5' X 5'	38"	#5 @ 10" OCEW #5 @ 10" OCEW	1,890 1,350
42"	Ø 5'-6" 5'-6" X 5'-6"	44"	#5 @ 10" OCEW #5 @ 9" OCEW	1,720 1,210
48"	Ø 6' 6' X 6'	50"	#5 @ 9" OCEW #5 @ 8" OCEW	1,600 1,100

** ASSUMED SOIL BEARING CAPACITY

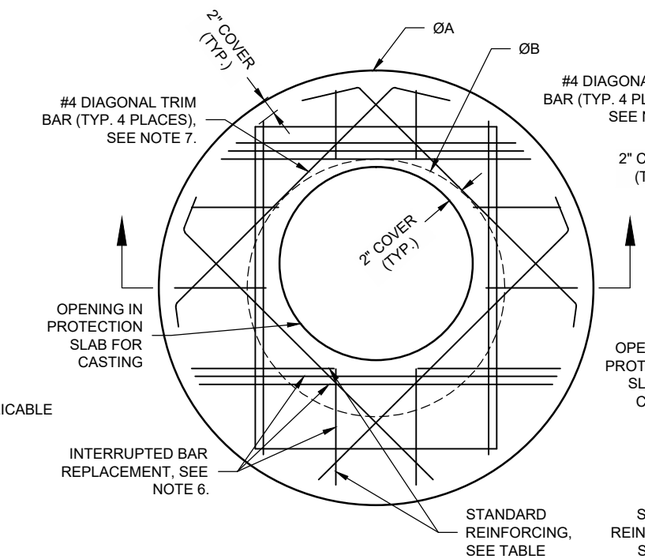

ROUND OPTION PLAN VIEW

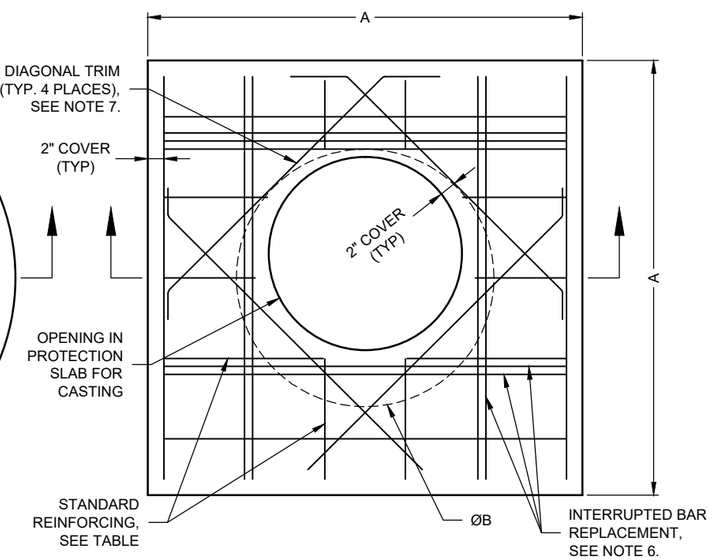

SQUARE OPTION PLAN VIEW

SPECIFICATION FOR DESIGNED DETENTION SYSTEM:

SCOPE
THIS SPECIFICATION COVERS THE MANUFACTURE AND INSTALLATION OF THE DESIGNED DETENTION SYSTEM DETAILED IN THE PROJECT PLANS.

MATERIAL
THE MATERIAL SHALL CONFORM TO THE APPLICABLE REQUIREMENTS LISTED BELOW:

ALUMINIZED TYPE 2 STEEL COILS SHALL CONFORM TO THE APPLICABLE REQUIREMENTS OF AASHTO M-274 OR ASTM A-92.

THE GALVANIZED STEEL COILS SHALL CONFORM TO THE APPLICABLE REQUIREMENTS OF AASHTO M-218 OR ASTM A-929.

THE POLYMER COATED STEEL COILS SHALL CONFORM TO THE APPLICABLE REQUIREMENTS OF AASHTO M-246 OR ASTM A-742.

THE ALUMINUM COILS SHALL CONFORM TO THE APPLICABLE REQUIREMENTS OF AASHTO M-197 OR ASTM B-744.

CONSTRUCTION LOADS
CONSTRUCTION LOADS MAY BE HIGHER THAN FINAL LOADS. FOLLOW THE MANUFACTURER'S OR NCSPA GUIDELINES.

PIPE
THE PIPE SHALL BE MANUFACTURED IN ACCORDANCE TO THE APPLICABLE REQUIREMENTS LISTED BELOW:

ALUMINIZED TYPE 2: AASHTO M-36 OR ASTM A-760

GALVANIZED: AASHTO M-36 OR ASTM A-760

POLYMER COATED: AASHTO M-245 OR ASTM A-762

ALUMINUM: AASHTO M-196 OR ASTM B-745

HANDLING AND ASSEMBLY
SHALL BE IN ACCORDANCE WITH NCSP'S (NATIONAL CORRUGATED STEEL PIPE ASSOCIATION) FOR ALUMINIZED TYPE 2, GALVANIZED OR POLYMER COATED STEEL. SHALL BE IN ACCORDANCE WITH THE MANUFACTURER'S RECOMMENDATIONS FOR ALUMINUM PIPE.

INSTALLATION
SHALL BE IN ACCORDANCE WITH AASHTO STANDARD SPECIFICATIONS FOR HIGHWAY BRIDGES, SECTION 26, DIVISION II DIVISION II OR ASTM A-798 (FOR ALUMINIZED TYPE 2, GALVANIZED OR POLYMER COATED STEEL) OR ASTM B-788 (FOR ALUMINUM PIPE) AND IN CONFORMANCE WITH THE PROJECT PLANS AND SPECIFICATIONS. IF THERE ARE ANY INCONSISTENCIES OR CONFLICTS THE CONTRACTOR SHOULD DISCUSS AND RESOLVE WITH THE SITE ENGINEER.

IT IS ALWAYS THE RESPONSIBILITY OF THE CONTRACTOR TO FOLLOW OSHA GUIDELINES FOR SAFE PRACTICES.

NOTES:

1. DESIGN IN ACCORDANCE WITH AASHTO, 17th EDITION.
2. DESIGN LOAD HS25.
3. EARTH COVER = 1' MAX.
4. CONCRETE STRENGTH = 3,500 psi
5. REINFORCING STEEL = ASTM A615, GRADE 60.
6. PROVIDE ADDITIONAL REINFORCING AROUND OPENINGS EQUAL TO THE BARS INTERRUPTED, HALF EACH SIDE. ADDITIONAL BARS TO BE IN THE SAME PLANE.
7. TRIM OPENING WITH DIAGONAL #4 BARS, EXTEND BARS A MINIMUM OF 12" BEYOND OPENING, BEND BARS AS REQUIRED TO MAINTAIN BAR COVER.
8. PROTECTION SLAB AND ALL MATERIALS TO BE PROVIDED AND INSTALLED BY CONTRACTOR.
9. DETAIL DESIGN BY DELTA ENGINEERING, BINGHAMTON, NY.

MANHOLE CAP DETAIL

SCALE: N.T.S.

NOTE:
THESE DRAWINGS ARE FOR CONCEPTUAL PURPOSES AND DO NOT REFLECT ANY LOCAL PREFERENCES OR REGULATIONS. PLEASE CONTACT YOUR LOCAL CONTECH REP FOR MODIFICATIONS.

C:\DYODS\DATA\CP\DYODS_10992-1.DWG 4/25/2019 9:21 PM

MARK	DATE	REVISION DESCRIPTION	BY

CONTECH ENGINEERED SOLUTIONS LLC
www.ContechES.com
9025 Centre Pointe Dr., Suite 400, West Chester, OH 45069
800-338-1122 513-645-7000 513-645-7993 FAX

CONTECH CMP DETENTION SYSTEMS

CONTECH
DYODS
DRAWING

DYODS - 10992-1-0
PROJECT NAME: Wedgeworth Elementary School
Hacienda Heights, CA
DESCRIPTION: 50 YEAR STORM RETENTION DESIGN

PROJECT No.: 10992-1	SEQ. No.: 0	DATE: 4/25/2019
DESIGNED: DYODS		DRAWN: DYODS
CHECKED:		APPROVED:
SHEET NO.: D3		

CMP DETENTION INSTALLATION GUIDE

PROPER INSTALLATION OF A FLEXIBLE UNDERGROUND DETENTION SYSTEM WILL ENSURE LONG-TERM PERFORMANCE. THE CONFIGURATION OF THESE SYSTEMS OFTEN REQUIRES SPECIAL CONSTRUCTION PRACTICES THAT DIFFER FROM CONVENTIONAL FLEXIBLE PIPE CONSTRUCTION. CONTECH ENGINEERED SOLUTIONS STRONGLY SUGGESTS SCHEDULING A PRE-CONSTRUCTION MEETING WITH YOUR LOCAL SALES ENGINEER TO DETERMINE IF ADDITIONAL MEASURES, NOT COVERED IN THIS GUIDE, ARE APPROPRIATE FOR YOUR SITE.

FOUNDATION

CONSTRUCT A FOUNDATION THAT CAN SUPPORT THE DESIGN LOADING APPLIED BY THE PIPE AND ADJACENT BACKFILL WEIGHT AS WELL AS MAINTAIN ITS INTEGRITY DURING CONSTRUCTION.

IF SOFT OR UNSUITABLE SOILS ARE ENCOUNTERED, REMOVE THE POOR SOILS DOWN TO A SUITABLE DEPTH AND THEN BUILD UP TO THE APPROPRIATE ELEVATION WITH A COMPETENT BACKFILL MATERIAL. THE STRUCTURAL FILL MATERIAL GRADATION SHOULD NOT ALLOW THE MIGRATION OF FINES, WHICH CAN CAUSE SETTLEMENT OF THE DETENTION SYSTEM OR PAVEMENT ABOVE. IF THE STRUCTURAL FILL MATERIAL IS NOT COMPATIBLE WITH THE UNDERLYING SOILS AN ENGINEERING FABRIC SHOULD BE USED AS A SEPARATOR. IN SOME CASES, USING A STIFF REINFORCING GEOGRID REDUCES OVER EXCAVATION AND REPLACEMENT FILL QUANTITIES.

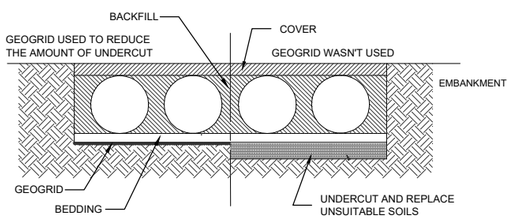

GRADE THE FOUNDATION SUBGRADE TO A UNIFORM OR SLIGHTLY SLOPING GRADE. IF THE SUBGRADE IS CLAY OR RELATIVELY NON-POROUS AND THE CONSTRUCTION SEQUENCE WILL LAST FOR AN EXTENDED PERIOD OF TIME, IT IS BEST TO SLOPE THE GRADE TO ONE END OF THE SYSTEM. THIS WILL ALLOW EXCESS WATER TO DRAIN QUICKLY, PREVENTING SATURATION OF THE SUBGRADE.

BEDDING

A 4 TO 6-INCH THICK, WELL-GRADED, GRANULAR MATERIAL IS THE PREFERRED PIPE BEDDING. IF CONSTRUCTION EQUIPMENT WILL OPERATE FOR AN EXTENDED PERIOD OF TIME ON THE BEDDING, USE EITHER AN ENGINEERING FABRIC OR A STIFF GEOGRID TO ENSURE THE BASE MATERIAL MAINTAINS ITS INTEGRITY.

USING AN OPEN-GRADED BEDDING MATERIAL IS ACCEPTABLE; HOWEVER, AN ENGINEERING FABRIC SEPARATOR IS REQUIRED BETWEEN THE BASE AND THE SUBGRADE.

GRADE THE BASE TO A SMOOTH, UNIFORM GRADE TO ALLOW FOR THE PROPER PLACEMENT OF THE PIPE.

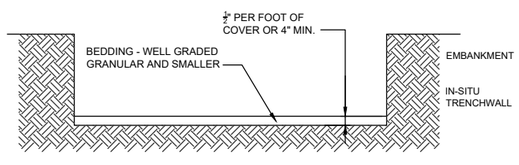

GEOMEMBRANE BARRIER

A SITE'S RESISTIVITY MAY CHANGE OVER TIME WHEN VARIOUS TYPES OF SALTING AGENTS ARE USED, SUCH AS ROAD SALTS FOR DEICING AGENTS. IF SALTING AGENTS ARE USED ON OR NEAR THE PROJECT SITE, A GEOMEMBRANE BARRIER IS RECOMMENDED WITH THE SYSTEM. THE GEOMEMBRANE LINER IS INTENDED TO HELP PROTECT THE SYSTEM FROM THE POTENTIAL ADVERSE EFFECTS THAT MAY RESULT FROM THE USE OF SUCH AGENTS INCLUDING PREMATURE CORROSION AND REDUCED ACTUAL SERVICE LIFE.

THE PROJECT'S ENGINEER OF RECORD IS TO EVALUATE WHETHER SALTING AGENTS WILL BE USED ON OR NEAR THE PROJECT SITE, AND USE HIS/HER BEST JUDGEMENT TO DETERMINE IF ANY ADDITIONAL PROTECTIVE MEASURES ARE REQUIRED. BELOW IS A TYPICAL DETAIL SHOWING THE PLACEMENT OF A GEOMEMBRANE BARRIER FOR PROJECTS WHERE SALTING AGENTS ARE USED ON OR NEAR THE PROJECT SITE.

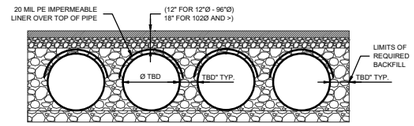

IN-SITU TRENCH WALL

IF EXCAVATION IS REQUIRED, THE TRENCH WALL NEEDS TO BE CAPABLE OF SUPPORTING THE LOAD THAT THE PIPE SHEDS AS THE SYSTEM IS LOADED. IF SOILS ARE NOT CAPABLE OF SUPPORTING THESE LOADS, THE PIPE CAN DEFLECT. PERFORM A SIMPLE SOIL PRESSURE CHECK USING THE APPLIED LOADS TO DETERMINE THE LIMITS OF EXCAVATION BEYOND THE SPRING LINE OF THE OUTER MOST PIPES.

IN MOST CASES THE REQUIREMENTS FOR A SAFE WORK ENVIRONMENT AND PROPER BACKFILL PLACEMENT AND COMPACTION TAKE CARE OF THIS CONCERN.

BACKFILL MATERIAL

TYPICALLY, THE BEST BACKFILL MATERIAL IS AN ANGULAR, WELL-GRADED, GRANULAR FILL MEETING THE REQUIREMENTS OF AASHTO A-1, A-2 OR A-3. IN SOME CASES, IT MAY BE DESIRABLE TO USE A UNIFORMLY GRADED MATERIAL FOR THE FIRST 18- TO 24-INCHES. THIS TYPE OF MATERIAL IS EASIER TO PLACE UNDER THE HAUNCHES OF THE PIPE AND REQUIRES LITTLE COMPACTIVE EFFORT. DEPENDING ON THE BEDDING MATERIAL, A SEPARATION GEOTEXTILE MIGHT BE REQUIRED ABOVE AND BELOW THESE INITIAL LIFTS.

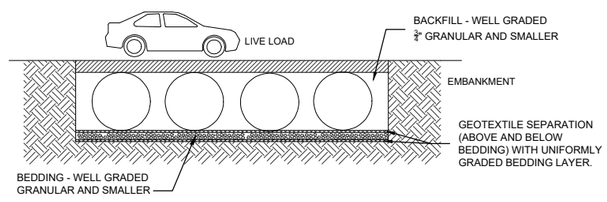

OPEN-GRADED FILL IS TYPICALLY NOT USED BEYOND THE INITIAL 18- TO 24-INCHES BECAUSE THIS TYPE OF FILL OFTEN DOES NOT PROVIDE ADEQUATE CONFINING RESTRAINT TO THE PIPES. IF A UNIFORMLY GRADED MATERIAL (PARTICLES ALL ONE SIZE) IS USED, INSTALL A GEOTEXTILE SEPARATION FABRIC TO PREVENT THE MIGRATION OF FINES INTO THE BACKFILL.

BACKFILL USING CONTROLLED LOW-STRENGTH MATERIAL (CLSM OR "FLOWABLE FILL") WHEN THE SPACING BETWEEN THE PIPES WILL NOT ALLOW FOR PLACEMENT AND ADEQUATE COMPACTION OF THE BACKFILL. WORK CLOSELY WITH THE LOCAL CONTECH SALES ENGINEER REGARDING THE SPECIAL INSTALLATION TECHNIQUES REQUIRED WHEN USING CLSM.

BACKFILL PLACEMENT

PLACE BACKFILL IN 8-INCH LOOSE LIFTS AND COMPACT TO 90% AASHTO T99 STANDARD PROCTOR DENSITY. MATERIAL SHALL BE WORKED INTO THE PIPE HAUNCHES BY MEANS OF SHOVEL-SLICING, RODDING, AIR TAMPER, VIBRATORY ROD, OR OTHER EFFECTIVE METHODS.

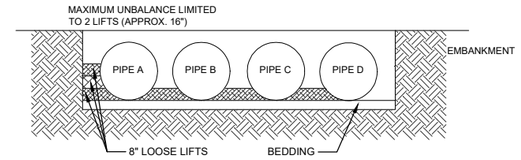

IF AASHTO T99 PROCEDURES ARE DETERMINED INFEASIBLE BY THE GEOTECHNICAL ENGINEER OF RECORD, COMPACTION IS CONSIDERED ADEQUATE WHEN NO FURTHER YIELDING OF THE MATERIAL IS OBSERVED UNDER THE COMPACTOR, OR UNDER FOOT, AND THE GEOTECHNICAL ENGINEER OF RECORD (OR REPRESENTATIVE THEREOF) IS SATISFIED WITH THE LEVEL OF COMPACTION.

FOR LARGE SYSTEMS, CONVEYOR SYSTEMS, BACKHOES WITH LONG REACHES OR DRAGLINES WITH STONE BUCKETS MAY BE USED TO PLACE BACKFILL. ONCE MINIMUM COVER FOR CONSTRUCTION LOADING ACROSS THE ENTIRE WIDTH OF THE SYSTEM IS REACHED, ADVANCE THE EQUIPMENT TO THE END OF THE RECENTLY PLACED FILL, AND BEGIN THE SEQUENCE AGAIN UNTIL THE SYSTEM IS COMPLETELY BACKFILLED. THIS TYPE OF CONSTRUCTION SEQUENCE PROVIDES ROOM FOR STOCKPILED BACKFILL DIRECTLY BEHIND THE BACKHOE, AS WELL AS THE MOVEMENT OF CONSTRUCTION TRAFFIC. MATERIAL STOCKPILES ON TOP OF THE BACKFILLED DETENTION SYSTEM SHOULD BE LIMITED TO 8- TO 10-FEET HIGH AND MUST PROVIDE BALANCED LOADING ACROSS ALL BARRELS. TO DETERMINE THE PROPER COVER OVER THE PIPES TO ALLOW THE MOVEMENT OF CONSTRUCTION EQUIPMENT SEE TABLE 1, OR CONTACT YOUR LOCAL CONTECH SALES ENGINEER.

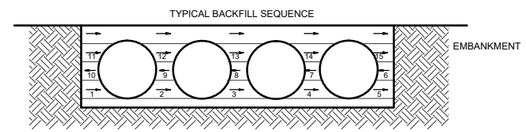

WHEN FLOWABLE FILL IS USED, YOU MUST PREVENT PIPE FLOATATION. TYPICALLY, SMALL LIFTS ARE PLACED BETWEEN THE PIPES AND THEN ALLOWED TO SET-UP PRIOR TO THE PLACEMENT OF THE NEXT LIFT. THE ALLOWABLE THICKNESS OF THE CLSM LIFT IS A FUNCTION OF A PROPER BALANCE BETWEEN THE UPLIFT FORCE OF THE CLSM, THE OPPOSING WEIGHT OF THE PIPE, AND THE EFFECT OF OTHER RESTRAINING MEASURES. THE PIPE CAN CARRY LIMITED FLUID PRESSURE WITHOUT PIPE DISTORTION OR DISPLACEMENT, WHICH ALSO AFFECTS THE CLSM LIFT THICKNESS. YOUR LOCAL CONTECH SALES ENGINEER CAN HELP DETERMINE THE PROPER LIFT THICKNESS.

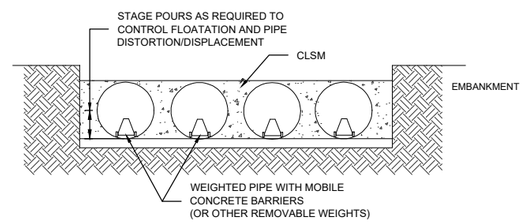

CONSTRUCTION LOADING

TYPICALLY, THE MINIMUM COVER SPECIFIED FOR A PROJECT ASSUMES H-20 LIVE LOAD. BECAUSE CONSTRUCTION LOADS OFTEN EXCEED DESIGN LIVE LOADS, INCREASED TEMPORARY MINIMUM COVER REQUIREMENTS ARE NECESSARY. SINCE CONSTRUCTION EQUIPMENT VARIES FROM JOB TO JOB, IT IS BEST TO ADDRESS EQUIPMENT SPECIFIC MINIMUM COVER REQUIREMENTS WITH YOUR LOCAL CONTECH SALES ENGINEER DURING YOUR PRE-CONSTRUCTION MEETING.

ADDITIONAL CONSIDERATIONS

BECAUSE MOST SYSTEMS ARE CONSTRUCTED BELOW-GRADE, RAINFALL CAN RAPIDLY FILL THE EXCAVATION; POTENTIALLY CAUSING FLOATATION AND MOVEMENT OF THE PREVIOUSLY PLACED PIPES. TO HELP MITIGATE POTENTIAL PROBLEMS, IT IS BEST TO START THE INSTALLATION AT THE DOWNSTREAM END WITH THE OUTLET ALREADY CONSTRUCTED TO ALLOW A ROUTE FOR THE WATER TO ESCAPE. TEMPORARY DIVERSION MEASURES MAY BE REQUIRED FOR HIGH FLOWS DUE TO THE RESTRICTED NATURE OF THE OUTLET PIPE.

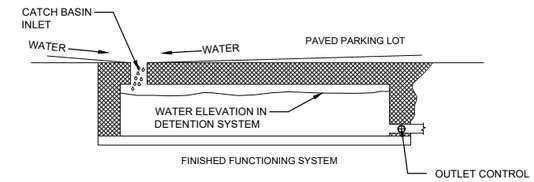

CMP DETENTION SYSTEM INSPECTION AND MAINTENANCE

UNDERGROUND STORMWATER DETENTION AND INFILTRATION SYSTEMS MUST BE INSPECTED AND MAINTAINED AT REGULAR INTERVALS FOR PURPOSES OF PERFORMANCE AND LONGEVITY.

INSPECTION

INSPECTION IS THE KEY TO EFFECTIVE MAINTENANCE OF CMP DETENTION SYSTEMS AND IS EASILY PERFORMED. CONTECH RECOMMENDS ONGOING, QUARTERLY INSPECTIONS. THE RATE AT WHICH THE SYSTEM COLLECTS POLLUTANTS WILL DEPEND MORE ON SITE SPECIFIC ACTIVITIES RATHER THAN THE SIZE OR CONFIGURATION OF THE SYSTEM.

INSPECTIONS SHOULD BE PERFORMED MORE OFTEN IN EQUIPMENT WASHDOWN AREAS, IN CLIMATES WHERE SANDING AND/OR SALTING OPERATIONS TAKE PLACE, AND IN OTHER VARIOUS INSTANCES IN WHICH ONE WOULD EXPECT HIGHER ACCUMULATIONS OF SEDIMENT OR ABRASIVE/ CORROSIVE CONDITIONS. A RECORD OF EACH INSPECTION IS TO BE MAINTAINED FOR THE LIFE OF THE SYSTEM

MAINTENANCE

CMP DETENTION SYSTEMS SHOULD BE CLEANED WHEN AN INSPECTION REVEALS ACCUMULATED SEDIMENT OR TRASH IS CLOGGING THE DISCHARGE ORIFICE.

ACCUMULATED SEDIMENT AND TRASH CAN TYPICALLY BE EVACUATED THROUGH THE MANHOLE OVER THE OUTLET ORIFICE. IF MAINTENANCE IS NOT PERFORMED AS RECOMMENDED, SEDIMENT AND TRASH MAY ACCUMULATE IN FRONT OF THE OUTLET ORIFICE. MANHOLE COVERS SHOULD BE SECURELY SEATED FOLLOWING CLEANING ACTIVITIES. CONTECH SUGGESTS THAT ALL SYSTEMS BE DESIGNED WITH AN ACCESS/INSPECTION MANHOLE SITUATED AT OR NEAR THE INLET AND THE OUTLET ORIFICE. SHOULD IT BE NECESSARY TO GET INSIDE THE SYSTEM TO PERFORM MAINTENANCE ACTIVITIES, ALL APPROPRIATE PRECAUTIONS REGARDING CONFINED SPACE ENTRY AND OSHA REGULATIONS SHOULD BE FOLLOWED.

SYSTEMS ARE TO BE RINSED, INCLUDING ABOVE THE SPRING LINE, ANNUALLY SOON AFTER THE SPRING THAW, AND AFTER ANY ADDITIONAL USE OF SALTING AGENTS, AS PART OF THE MAINTENANCE PROGRAM FOR ALL SYSTEMS WHERE SALTING AGENTS MAY ACCUMULATE INSIDE THE PIPE.

MAINTAINING AN UNDERGROUND DETENTION OR INFILTRATION SYSTEM IS EASIEST WHEN THERE IS NO FLOW ENTERING THE SYSTEM. FOR THIS REASON, IT IS A GOOD IDEA TO SCHEDULE THE CLEANOUT DURING DRY WEATHER.

THE FOREGOING INSPECTION AND MAINTENANCE EFFORTS HELP ENSURE UNDERGROUND PIPE SYSTEMS USED FOR STORMWATER STORAGE CONTINUE TO FUNCTION AS INTENDED BY IDENTIFYING RECOMMENDED REGULAR INSPECTION AND MAINTENANCE PRACTICES. INSPECTION AND MAINTENANCE RELATED TO THE STRUCTURAL INTEGRITY OF THE PIPE OR THE SOUNDNESS OF PIPE JOINT CONNECTIONS IS BEYOND THE SCOPE OF THIS GUIDE.

MARK	DATE	REVISION DESCRIPTION	BY

CONTECH ENGINEERED SOLUTIONS LLC
www.ContechES.com
9025 Centre Pointe Dr., Suite 400, West Chester, OH 45069
800-338-1122 513-645-7000 513-645-7993 FAX

CONTECH CMP DETENTION SYSTEMS

CONTECH **DYODS** DRAWING

DYODS - 10992-1-0
PROJECT NAME: Wedgeworth Elementary School
Hacienda Heights, CA
DESCRIPTION: 50 YEAR STORM RETENTION DESIGN

PROJECT No.: 10992-1	SEQ. No.: 0	DATE: 4/25/2019
DESIGNED: DYODS		DRAWN: DYODS
CHECKED:		APPROVED:
SHEET NO.: D4		

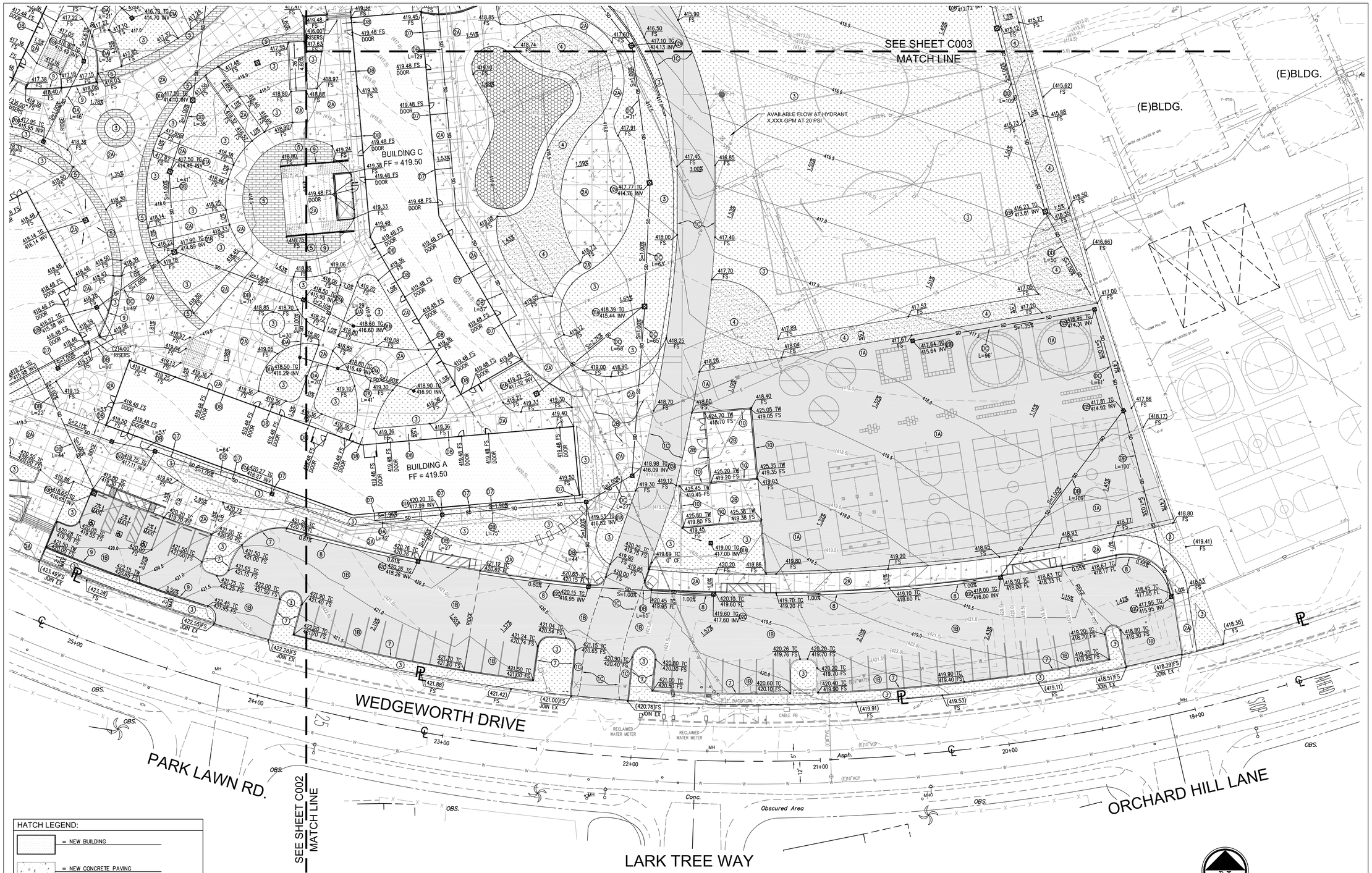

HATCH LEGEND:

- = NEW BUILDING
- = NEW CONCRETE PAVING
- = NEW ASPHALT CONCRETE PAVING
- = NEW LANDSCAPE
- = NEW DECOMPOSED GRANITE
- = NEW CONCRETE PAVERS
- = NEW RUBBERIZED SURFACE

CONSTRUCTION NOTES:

(P) PROTECT EXISTING IMPROVEMENT IN PLACE.
(1A) CONSTRUCT ASPHALT PAVEMENT, LIGHT DUTY SECTION, PER TABLE 1 ON SHEET C004.
(1B) CONSTRUCT ASPHALT PAVEMENT, MEDIUM DUTY SECTION, PER TABLE 1 ON SHEET C004.
(1C) CONSTRUCT ASPHALT PAVEMENT, HEAVY DUTY SECTION, PER TABLE 1 ON SHEET C004.
(2A) CONSTRUCT CONCRETE PAVEMENT, LIGHT DUTY SECTION, PER TABLE 2 ON SHEET C004.
(2B) CONSTRUCT CONCRETE PAVEMENT, HEAVY DUTY SECTION, PER TABLE 2 ON SHEET C004.
(3) NEW LANDSCAPE PER LANDSCAPE PLAN.
(4) CONSTRUCT DECOMPOSED GRANITE PER LANDSCAPE PLAN.
(5) CONSTRUCT CONCRETE PAVERS PER LANDSCAPE PLAN.
(6) CONSTRUCT FLAG POLE PER ARCHITECTURAL PLAN.
(7) CONSTRUCT CONCRETE CURB PER GRADES HEREON AND DETAIL 7 ON SHEET C006.
(8) CONSTRUCT CONCRETE CURB AND GUTTER PER GRADES HEREON AND DETAIL 8 ON SHEET C006.
(9) CONSTRUCT RETAINING WALL PER STRUCTURAL PLAN.
(10) CONSTRUCT CMU WALL PER STRUCTURAL PLAN.
(11) CONSTRUCT REDWOOD HEADER PER DETAIL 11 ON C004.

STORM DRAIN CONSTRUCTION NOTES:

(1A) CONSTRUCT 12" SQUARE CATCH BASIN WITH ADA STEEL PARKWAY GRATE PER DETAIL D1 ON SHEET C005.
(1B) CONSTRUCT 12" SQUARE CATCH BASIN WITH HEEL-PROOF STEEL PARKWAY GRATE PER DETAIL D1 ON C005.
(2A) CONSTRUCT 18" SQUARE CATCH BASIN WITH ADA STEEL PARKWAY GRATE PER DETAIL D2A ON SHEET C005.
(2B) CONSTRUCT 18" SQUARE CATCH BASIN WITH HEEL-PROOF STEEL PARKWAY GRATE PER DETAIL D2B ON C005.
(2C) CONSTRUCT 18" SQUARE CATCH BASIN WITH ADA STEEL TRAFFIC GRATE PER DETAIL D2C ON C005.
(3A) CONSTRUCT 24" SQUARE CATCH BASIN WITH ADA STEEL PARKWAY GRATE PER DETAIL D3A ON SHEET C006.
(3B) CONSTRUCT 24" SQUARE CATCH BASIN WITH HEEL PROOF STEEL PARKWAY GRATE PER DETAIL D3B ON C006.
(3C) CONSTRUCT 24" SQUARE CATCH BASIN WITH ADA STEEL TRAFFIC GRATE PER DETAIL D3C ON SHEET C006.
(4) CONSTRUCT CONTECH CDS HYDRODYNAMIC SEPARATOR PER DETAIL ON C006.
(5) CONSTRUCT CONTECH RETENTION CHAMBERS PER DETAILS ON C007.
(6) CONSTRUCT CONTECH ACCESS MANHOLE RISER PER DETAILS ON C007.
(7) CONNECT UNDERGROUND 4" HDPE ROOF DRAIN TO BUILDING PER PLUMBING PLAN.
(8) CONNECT UNDERGROUND 3" HDPE ROOF DRAIN TO BUILDING PER PLUMBING PLAN.

(A) CONSTRUCT 4" HDPE PIPE. SEE CORRESPONDING TRENCHING DETAIL ON SHEET C004.
(B) CONSTRUCT 6" HDPE PIPE. SEE CORRESPONDING TRENCHING DETAIL ON SHEET C004.
(C) CONSTRUCT 8" HDPE PIPE. SEE CORRESPONDING TRENCHING DETAIL ON SHEET C004.
(D) CONSTRUCT 12" HDPE PIPE. SEE CORRESPONDING TRENCHING DETAIL ON SHEET C004.
(E) CONSTRUCT 18" HDPE PIPE. SEE CORRESPONDING TRENCHING DETAIL ON SHEET C004.
(F) CONSTRUCT 24" HDPE PIPE. SEE CORRESPONDING TRENCHING DETAIL ON SHEET C004.
(G) CONSTRUCT 30" HDPE PIPE. SEE CORRESPONDING TRENCHING DETAIL ON SHEET C004.

N

20 10 0 20 40 60

SCALE: 1" = 20'

DSA AP03-119972

PBK

ARCHITECTURE

ONTARIO
2855 E. Guasti Road, Suite 402
Ontario, CA 91761
909-937-9200 P
909-937-4161 F
PBK.com

WEDGEWORTH K-8 SCHOOL

16949 WEDGEWORTH DR.
HACIENDA HEIGHTS, CA 91745

DSA SUBMITTAL

HACIENDA LA PUENTE UNIFIED SCHOOL DISTRICT

DSA 03-119972

KEY PLAN

TRUE NORTH

ENGINEER

REGISTERED PROFESSIONAL ENGINEER
WING-CHI CHOW
No. C 34971
Exp. 09-30-19
CIVIL
STATE OF CALIFORNIA

ARCHITECT

LICENSED ARCHITECT
Mark A. Eder
No. C-28195
REN. 5-31-2021
STATE OF CALIFORNIA

CLIENT
HACIENDA LA PUENTE USD

PROJECT NUMBER
1884

DATE: July 15, 2019
DRAWN BY: DB
CHECKED BY: RC

REVISIONS

No.	Description	Date

DSA SUBMITTAL

GRADING & DRAINAGE PLAN

C001

HATCH LEGEND:

- = NEW BUILDING
- = NEW CONCRETE PAVING
- = NEW ASPHALT CONCRETE PAVING
- = NEW LANDSCAPE
- = NEW DECOMPOSED GRANITE
- = NEW CONCRETE PAVERS

STORM DRAIN CONSTRUCTION NOTES:

- (D1A) CONSTRUCT 12" SQUARE CATCH BASIN WITH ADA STEEL PARKWAY GRATE PER DETAIL D1 ON SHEET C005.
- (D1B) CONSTRUCT 12" SQUARE CATCH BASIN WITH HEEL-PROOF STEEL PARKWAY GRATE PER DETAIL D1 ON SHEET C005.
- (D2A) CONSTRUCT 18" SQUARE CATCH BASIN WITH ADA STEEL TRAFFIC GRATE PER DETAIL D2A ON SHEET C005.
- (D2B) CONSTRUCT 18" SQUARE CATCH BASIN WITH HEEL-PROOF STEEL PARKWAY GRATE PER DETAIL D2B ON SHEET C005.
- (D3A) CONSTRUCT 24" SQUARE CATCH BASIN WITH ADA STEEL PARKWAY GRATE PER DETAIL D3 ON SHEET C006.
- (D3B) CONSTRUCT 24" SQUARE CATCH BASIN WITH HEEL PROOF STEEL PARKWAY GRATE PER DETAIL D3B ON SHEET C006.
- (D4) CONSTRUCT CONTECH CDS HYDRODYNAMIC SEPARATOR PER DETAIL ON C006.
- (D5) CONSTRUCT CONTECH RETENTION CHAMBERS PER DETAILS ON C007.
- (D6) CONSTRUCT CONTECH ACCESS MANHOLE RISER PER DETAILS ON C007.
- (D7) CONNECT UNDERGROUND 4" HDPE ROOF DRAIN CONNECTION TO BUILDING PER PLUMBING PLAN.
- (DA) CONSTRUCT 4" HDPE PIPE. SEE CORRESPONDING TRENCHING DETAIL ON SHEET C004.
- (DB) CONSTRUCT 6" HDPE PIPE. SEE CORRESPONDING TRENCHING DETAIL ON SHEET C004.
- (DC) CONSTRUCT 8" HDPE PIPE. SEE CORRESPONDING TRENCHING DETAIL ON SHEET C004.
- (DD) CONSTRUCT 12" HDPE PIPE. SEE CORRESPONDING TRENCHING DETAIL ON SHEET C004.
- (DE) CONSTRUCT 18" HDPE PIPE. SEE CORRESPONDING TRENCHING DETAIL ON SHEET C004.
- (DF) CONSTRUCT 24" HDPE PIPE. SEE CORRESPONDING TRENCHING DETAIL ON SHEET C004.
- (DG) CONSTRUCT 30" HDPE PIPE. SEE CORRESPONDING TRENCHING DETAIL ON SHEET C004.

CONSTRUCTION NOTES:

- (P) PROTECT EXISTING IMPROVEMENT IN PLACE.
- (1A) CONSTRUCT ASPHALT PAVEMENT, LIGHT DUTY SECTION, PER TABLE 1 ON SHEET C004.
- (1B) CONSTRUCT ASPHALT PAVEMENT, MEDIUM DUTY SECTION, PER TABLE 1 ON SHEET C004.
- (1C) CONSTRUCT ASPHALT PAVEMENT, HEAVY DUTY SECTION, PER TABLE 1 ON SHEET C004.
- (2A) CONSTRUCT CONCRETE PAVEMENT, LIGHT DUTY SECTION, PER TABLE 2 ON SHEET C004.
- (2B) CONSTRUCT CONCRETE PAVEMENT, HEAVY DUTY SECTION, PER TABLE 2 ON SHEET C004.
- (3) NEW LANDSCAPE PER LANDSCAPE PLAN.
- (4) CONSTRUCT DECOMPOSED GRANITE PER LANDSCAPE PLAN.
- (5) CONSTRUCT CONCRETE PAVERS PER LANDSCAPE PLAN.
- (6) CONSTRUCT FLAG POLE PER ARCHITECTURAL PLAN.
- (7) CONSTRUCT CONCRETE CURB PER GRADES HEREON AND DETAIL 7 ON SHEET C006.
- (8) CONSTRUCT CONCRETE CURB AND GUTTER PER GRADES HEREON AND DETAIL 8 ON SHEET C006.

DSA APP 03-119972

PBK

ARCHITECTURE

ONTARIO
2855 E. Guasti Road, Suite 402
Ontario, CA 91761
909-937-9200 P
909-937-4161 F
PBK.com

WEDGEWORTH K-8 SCHOOL

16949 WEDGEWORTH DR.
HACIENDA HEIGHTS, CA 91745

DSA SUBMITTAL

HACIENDA LA PUENTE UNIFIED SCHOOL DISTRICT

DSA 03-119972

KEY PLAN

TRUE NORTH

ENGINEER

REGISTERED PROFESSIONAL ENGINEER
Alfred Cho Chiu
No. C 34971
Exp. 09-30-19
CIVIL
STATE OF CALIFORNIA

ARCHITECT

LICENSED ARCHITECT
Mark A. Eagar
No. C-28195
REN. 5-31-2021
STATE OF CALIFORNIA

CLIENT
HACIENDA LA PUENTE USD

PROJECT NUMBER
1884

DATE:	July 15, 2019
DRAWN BY:	DB
CHECKED BY:	RC

REVISIONS

No.	Description	Date

GRADING & DRAINAGE PLAN

DSA SUBMITTAL

C002

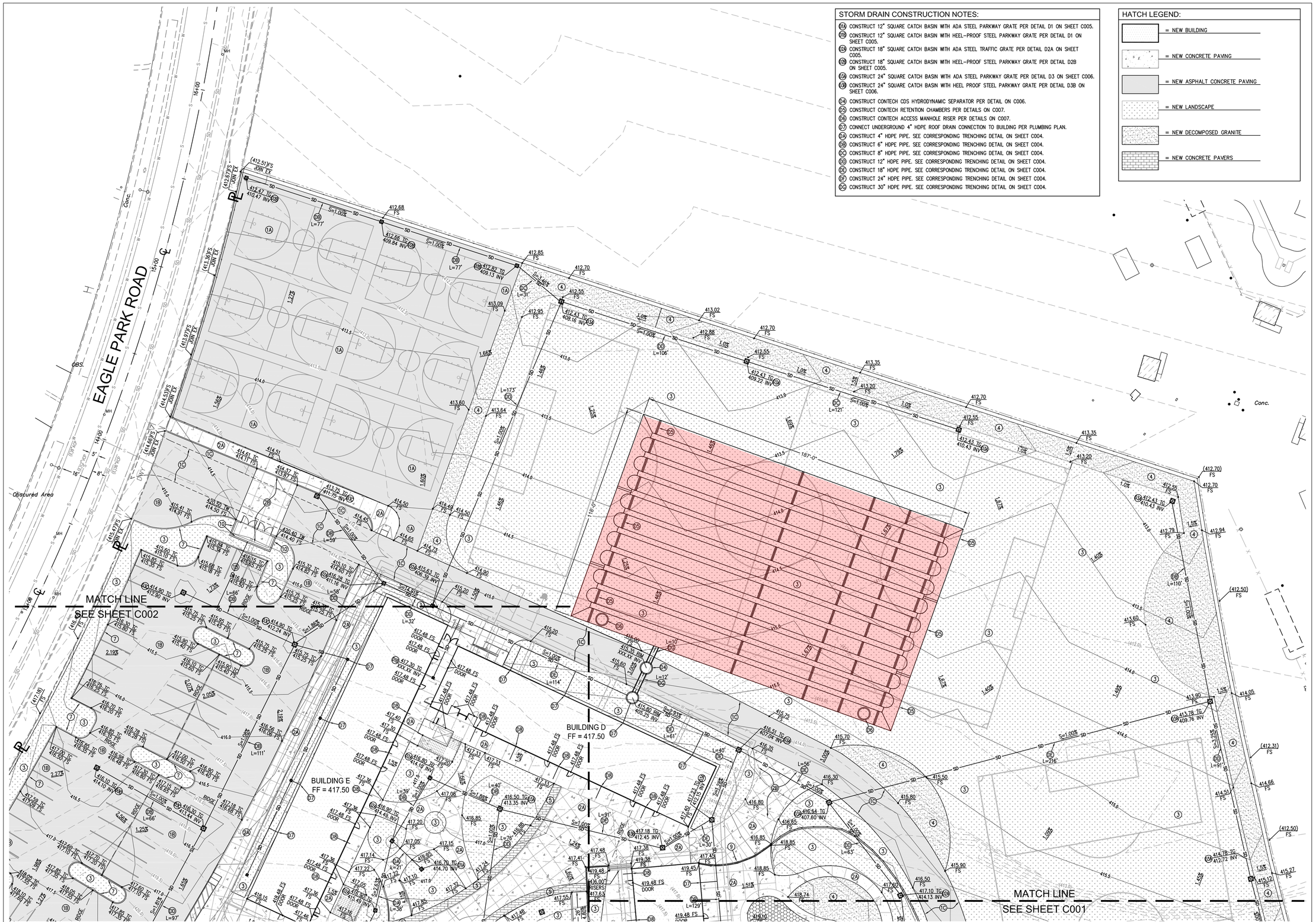

STORM DRAIN CONSTRUCTION NOTES:

- (D1A) CONSTRUCT 12" SQUARE CATCH BASIN WITH ADA STEEL PARKWAY GRATE PER DETAIL D1 ON SHEET C005.
- (D1B) CONSTRUCT 12" SQUARE CATCH BASIN WITH HEEL-PROOF STEEL PARKWAY GRATE PER DETAIL D1 ON SHEET C005.
- (D2A) CONSTRUCT 18" SQUARE CATCH BASIN WITH ADA STEEL TRAFFIC GRATE PER DETAIL D2A ON SHEET C005.
- (D2B) CONSTRUCT 18" SQUARE CATCH BASIN WITH HEEL-PROOF STEEL PARKWAY GRATE PER DETAIL D2B ON SHEET C005.
- (D3A) CONSTRUCT 24" SQUARE CATCH BASIN WITH ADA STEEL PARKWAY GRATE PER DETAIL D3 ON SHEET C006.
- (D3B) CONSTRUCT 24" SQUARE CATCH BASIN WITH HEEL PROOF STEEL PARKWAY GRATE PER DETAIL D3B ON SHEET C006.
- (D4) CONSTRUCT CONTECH CDS HYDRODYNAMIC SEPARATOR PER DETAIL ON C006.
- (D5) CONSTRUCT CONTECH RETENTION CHAMBERS PER DETAILS ON C007.
- (D6) CONSTRUCT CONTECH ACCESS MANHOLE RISER PER DETAILS ON C007.
- (D7) CONNECT UNDERGROUND 4" HDPE ROOF DRAIN CONNECTION TO BUILDING PER PLUMBING PLAN.
- (DA) CONSTRUCT 4" HDPE PIPE. SEE CORRESPONDING TRENCHING DETAIL ON SHEET C004.
- (DB) CONSTRUCT 6" HDPE PIPE. SEE CORRESPONDING TRENCHING DETAIL ON SHEET C004.
- (DC) CONSTRUCT 8" HDPE PIPE. SEE CORRESPONDING TRENCHING DETAIL ON SHEET C004.
- (DD) CONSTRUCT 12" HDPE PIPE. SEE CORRESPONDING TRENCHING DETAIL ON SHEET C004.
- (DE) CONSTRUCT 18" HDPE PIPE. SEE CORRESPONDING TRENCHING DETAIL ON SHEET C004.
- (DF) CONSTRUCT 24" HDPE PIPE. SEE CORRESPONDING TRENCHING DETAIL ON SHEET C004.
- (DG) CONSTRUCT 30" HDPE PIPE. SEE CORRESPONDING TRENCHING DETAIL ON SHEET C004.

HATCH LEGEND:

- = NEW BUILDING
- = NEW CONCRETE PAVING
- = NEW ASPHALT CONCRETE PAVING
- = NEW LANDSCAPE
- = NEW DECOMPOSED GRANITE
- = NEW CONCRETE PAVERS

CONSTRUCTION NOTES:

- (P) PROTECT EXISTING IMPROVEMENT IN PLACE.
- (1A) CONSTRUCT ASPHALT PAVEMENT, LIGHT DUTY SECTION, PER TABLE 1 ON SHEET C004.
- (1B) CONSTRUCT ASPHALT PAVEMENT, MEDIUM DUTY SECTION, PER TABLE 1 ON SHEET C004.
- (1C) CONSTRUCT ASPHALT PAVEMENT, HEAVY DUTY SECTION, PER TABLE 1 ON SHEET C004.
- (2A) CONSTRUCT CONCRETE PAVEMENT, LIGHT DUTY SECTION, PER TABLE 2 ON SHEET C004.
- (2B) CONSTRUCT CONCRETE PAVEMENT, HEAVY DUTY SECTION, PER TABLE 2 ON SHEET C004.
- (3) NEW LANDSCAPE PER LANDSCAPE PLAN.
- (4) CONSTRUCT DECOMPOSED GRANITE PER LANDSCAPE PLAN.
- (5) CONSTRUCT CONCRETE PAVERS PER LANDSCAPE PLAN.
- (6) CONSTRUCT FLAG POLE PER ARCHITECTURAL PLAN.
- (7) CONSTRUCT CONCRETE CURB PER GRADES HEREON AND DETAIL 7 ON SHEET C006.
- (8) CONSTRUCT CONCRETE CURB AND GUTTER PER GRADES HEREON AND DETAIL 8 ON SHEET C006.

N

20 10 0 20 40 60

SCALE: 1" = 20'

DSA 03-119972

PBK

ARCHITECTURE
ONTARIO
2855 E. Guasti Road, Suite 402
Ontario, CA 91761
909-937-9200 P
909-937-6161 F
PBK.com

WEDGEWORTH K-8 SCHOOL

16949 WEDGEWORTH DR.
HACIENDA HEIGHTS, CA 91745

DSA SUBMITTAL

HACIENDA LA PUENTE UNIFIED SCHOOL DISTRICT

DSA 03-119972

KEY PLAN

TRUE NORTH

ENGINEER

REGISTERED PROFESSIONAL ENGINEER
RICHARD C. CRAIG
No. C 34971
Exp. 09-30-19
CIVIL
STATE OF CALIFORNIA

ARCHITECT

LICENSED ARCHITECT
Mark A. Eakins
No. C-28195
REN. 5-31-2021
STATE OF CALIFORNIA

CLIENT
HACIENDA LA PUENTE USD

PROJECT NUMBER
1884

DATE:	July 15, 2019
DRAWN BY:	DB
CHECKED BY:	RC

REVISIONS

No.	Description	Date

GRADING & DRAINAGE PLAN

DSA SUBMITTAL

C003

ON-SITE TRENCHING DETAILS - STORM DRAINS, SEWER & WATER LINES

TYPICAL TRENCH PATCHING NOTE:
ALL UTILITY TRENCHING PATCHES IN HARDSCAPE AREAS SHALL COMPLY WITH C.B.C. SECTIONS 11B-302.1 AND 11B-303.

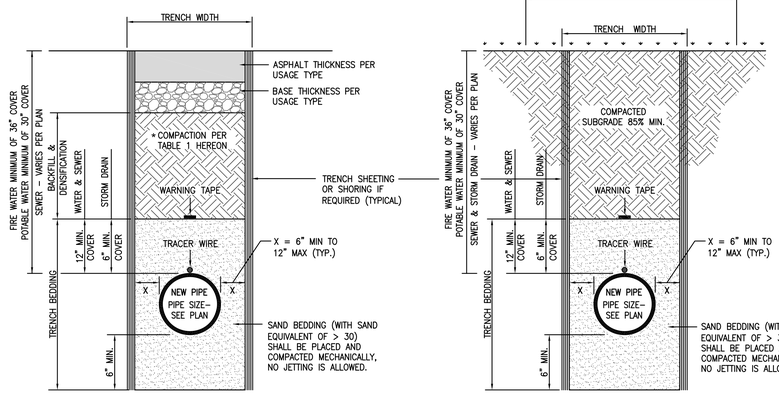

NEW ASPHALT AREAS
N.T.S.

NEW OR EXISTING LANDSCAPED AREAS
N.T.S.

NEW CONCRETE AREAS
N.T.S.

TRENCH EXCAVATION, BEDDING, & BACKFILL NOTES:

EXCAVATION NOTE: THE 2016 CALIFORNIA OCCUPATIONAL SAFETY AND HEALTH REGULATIONS (CAL/OSHA) WILL REQUIRE A PERMIT FOR THE CONSTRUCTION OF TRENCHES OR EXCAVATIONS WHICH ARE FIVE (5) FEET OR DEEPER AND INTO WHICH A PERSON IS REQUIRED TO DESCEND. FOR PERMIT PURPOSES, "DESCEND" MEANS TO ENTER ANY PART OF THE TRENCH OR EXCAVATION ONCE THE EXCAVATION HAS ATTAINED A DEPTH OF 5 FEET OR MORE. FOR REGULATIONS RELATING TO PERMITS FOR EXCAVATIONS AND TRENCHES, REFER TO THE CALIFORNIA CODE OF REGULATIONS TITLE 8, CHAPTER 3.2, ARTICLE 2, SECTION 341 OF THE CALIFORNIA OCCUPATIONAL SAFETY AND HEALTH REGULATIONS (CAL/OSHA)

THE CONTRACTOR SHALL SUBMIT A DETAIL SHOWING THE DESIGN OR SHORING, BRACING SLOPING OR OTHER PROVISIONS TO BE MADE FOR WORKER PROTECTION FROM THE HAZARDS OF CAVING GROUND DURING THE EXCAVATION. THE PLAN SUBMITTED SHALL BE SIGNED BY A REGISTERED CIVIL OR STRUCTURAL ENGINEER CERTIFIED THAT THE PLAN COMPLIES WITH ALL OSHA CONSTRUCTION SAFETY ORDERS.

BEDDING MATERIAL SHALL BE COARSE SAND WITH SAND EQUIVALENT OF 35 OR GREATER. NO ANGULAR STONES OR PEA GRAVELS WILL BE ALLOWED IN PIPE BEDDING.

COMPACTION METHODS: ALL BEDDING & BACKFILL COMPACTION SHALL BE BY HAND-OPERATED, PLATE-TYPE, VIBRATORY, OR OTHER SUITABLE HAND-TAMPERS IN AREAS NOT ACCESSIBLE TO LARGER ROLLERS OR COMPACTERS. EXTREME CARE SHALL BE TAKEN TO AVOID DAMAGE TO CONDUITS, PIPES, AND ANY APPURTENANCES. WATER DENSIFICATION BY INUNDATION OR JETTING SHALL NOT BE PERMITTED WITHOUT PRIOR WRITTEN APPROVAL FROM CIVIL ENGINEER.

SHEETING: WHEN EXCAVATION DEPTHS OR SOIL CONDITIONS REQUIRE SHORING OR USE OF A TRENCH BOX, THE BOTTOM OF THE SHORING OR TRENCH BOX SHOULD BE PLACED NO LOWER THEN THE TOP OF THE PIPE. THIS PREVENTS DISRUPTION OF THE BACKFILL ENVELOPE WHEN REMOVING THE SHORING OR TRENCH BOX. IF THIS PRACTICE CANNOT BE FOLLOWED, CONSIDERATION SHOULD BE GIVEN TO LEAVING THE SHORING IN PLACE.

* GENERAL NOTES:

IF 90% COMPACTION IS NOT ATTAINABLE DURING CONSTRUCTION THE USE OF A SLURRY BACKFILL MAY BE SUBSTITUTED. SAND SLURRY SHALL CONSIST OF 1 SACK PORTLAND CEMENT (CLASS 100-E-100) PER CUBIC YARD OF SAND SLURRY MIX.

WARNING TAPE NOTES (POTABLE WATER):

A METALLIC LINED TAPED FOR UNDERGROUND PIPES, MARKED "CAUTION BURIED WATER LINE BELOW", IN POLYETHYLENE FILM COLOR BLUE, INSTALLED ABOVE PIPE, 6" WIDE.

WARNING TAPE NOTES (FIRE WATER):

A METALLIC LINED TAPED FOR UNDERGROUND PIPES, MARKED "CAUTION FIRE LINE BELOW", IN POLYETHYLENE FILM COLOR RED, INSTALLED ABOVE PIPE, 6" WIDE.

WARNING TAPE NOTES (STORM DRAIN):

A METALLIC LINED TAPED FOR UNDERGROUND PIPES, MARKED "CAUTION STORM DRAIN LINE BELOW", IN POLYETHYLENE FILM COLOR GREEN, INSTALLED ABOVE PIPE, 6" WIDE.

WARNING TAPE NOTES (SANITARY SEWER):

A METALLIC LINED TAPED FOR UNDERGROUND PIPES, MARKED "CAUTION BURIED SEWER LINE BELOW", IN POLYETHYLENE FILM COLOR GREEN, INSTALLED ABOVE PIPE, 6" WIDE.

TRACER WIRE NOTES:

COPPER TRACER WIRE SHALL BE INSTALLED ON ALL NON-METALLIC PIPELINES, 2" AND GREATER, JUST ABOVE THE HORIZONTAL CENTERLINE OF THE PIPE. THE COPPER WIRE SHALL BE #14 AWG.

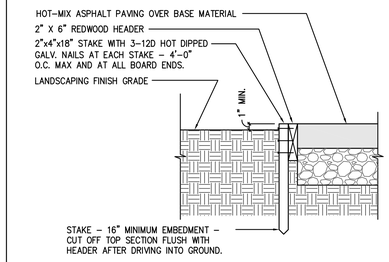

11 REDWOOD HEADER DETAIL
NOT TO SCALE

USAGE TYPE	TABLE 1 ASPHALT CONCRETE PAVEMENT STRUCTURAL SECTION
1A LIGHT DUTY	3" THICK ASPHALT OVER 3.5" THICK BASE OVER ENGINEERED FILL PER DETAIL BELOW.
1B MEDIUM DUTY	4" THICK ASPHALT OVER 5" THICK BASE OVER ENGINEERED FILL PER DETAIL BELOW.
1C HEAVY DUTY	6" THICK ASPHALT OVER 8" THICK BASE OVER ENGINEERED FILL PER DETAIL BELOW.

USAGE TYPE	TABLE 2 CONCRETE PAVEMENT STRUCTURAL SECTION
2A LIGHT DUTY	4" THICK CONCRETE PAVEMENT OVER 4" THICK BASE PER DETAIL BELOW.
2B HEAVY DUTY	6" THICK CONCRETE PAVEMENT OVER 6" THICK BASE PER DETAIL BELOW.

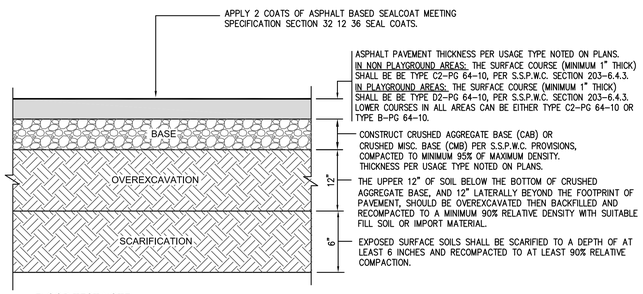

FLOOD TEST NOTE:

BEFORE ACCEPTANCE, ALL ASPHALT SHALL BE WATER TESTED TO ENSURE PROPER DRAINAGE AS DIRECTED BY THE INSPECTOR. THE CONTRACTOR SHALL PROVIDE WATER FOR THIS PURPOSE. THE FLOODING SHALL BE DONE BY WATER TANK TRUCK. DEPRESSIONS WHERE THE WATER PONDS TO A DEPTH OF MORE THAN 1/8-INCH SHALL BE FILLED OR THE SLOPE CORRECTED TO PROVIDE PROPER DRAINAGE. THE EDGES OF THE FILL SHALL BE FEATHERED AND SMOOTHED SO THAT THE JOINT BETWEEN THE FILL AND THE ORIGINAL SURFACE IS INVISIBLE. NO STANDING WATER SHALL REMAIN AFTER 30 MINUTES ON A 70 DEGREE F (OR WARMER) DAY.

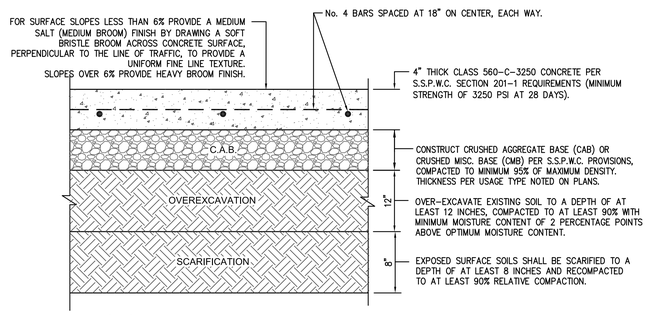

NOTES:

1. ADJACENT PAVING, WHERE OCCURS, TO BE FLUSH WITH TOP EDGE OF SLAB.
2. ALL CONCRETE WALKS SHALL BE ASTM C-150 TYPE II PORTLAND CEMENT.
3. ALL CONCRETE WALKS SHALL BE 1" MAXIMUM COARSE AGGREGATE SIZE CONFORMING TO GRADING 'C' OF THE S.P.P.W.C. SECTION 201-1.3.2(A).

TRENCHING NOTICE TO CONTRACTOR

WATER PIPES SHALL NOT BE RUN OR LAID IN THE SAME TRENCH AS BUILDING SEWER UNLESS BOTH OF THE FOLLOWING CONDITIONS ARE MET PER 2016 CALIFORNIA PLUMBING CODE, SECTION 609.2:

THE BOTTOM OF THE WATER PIPE, AT ALL POINTS, SHALL BE AT LEAST TWELVE (12) INCHES ABOVE THE TOP OF THE SEWER LINE.

THE WATER PIPE SHALL BE PLACED ON A SOLID SHELF EXCAVATED AT ONE SIDE OF THE COMMON TRENCH WITH A MINIMUM CLEAR HORIZONTAL DISTANCE OF AT LEAST TWELVE (12) INCHES FROM THE SEWER.

TYPICAL TRENCH PATCHING NOTE:
ALL UTILITY TRENCHING PATCHES IN HARDSCAPE AREAS SHALL COMPLY WITH C.B.C. SECTIONS 11B-302.1 AND 11B-303.

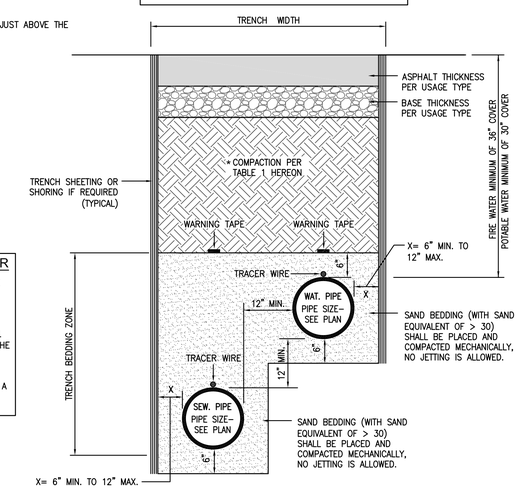

ALTERNATE TRENCH DETAIL IN ASPHALT PAVEMENT AREAS
(ALLOWABLE WHERE CONDITIONS APPLY)
NOT TO SCALE

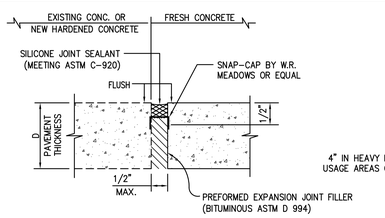

AA EXPANSION JOINT (E.J.)
NOT TO SCALE

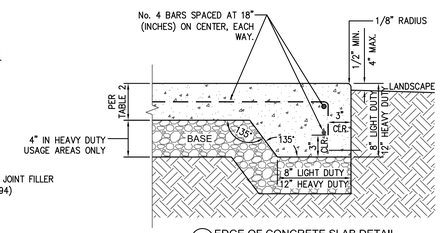

CC EDGE OF CONCRETE SLAB DETAIL
NOT TO SCALE

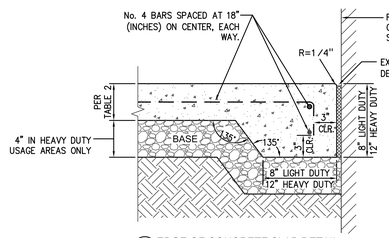

EE EDGE OF CONCRETE SLAB DETAIL
NOT TO SCALE

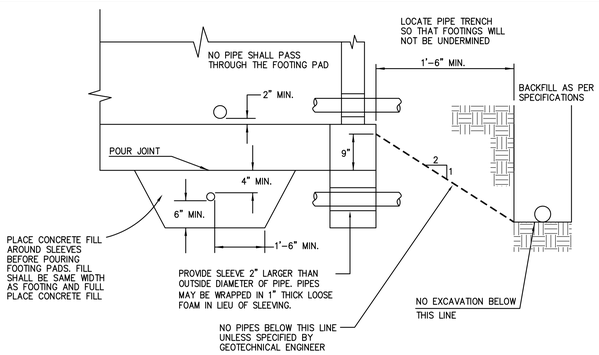

ALL TRENCH EXCAVATIONS TO BE ABOVE 2:1 PLANE AS SHOWN PER 2016 CBC SECTION 1809A.14.

TYPICAL PIPE TRENCH / FOOTING DETAIL
NOT TO SCALE

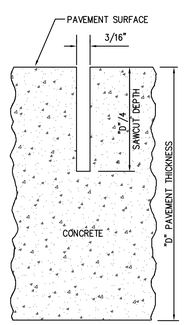

BB CONTROL JOINT (C.J.)
NOT TO SCALE

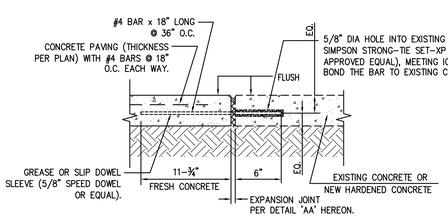

NOTE: 1. VERTICAL CHANGE IN ELEVATION ALONG ACCESSIBLE PATH OF TRAVEL CANNOT EXCEET 1/4" PER CBC 11B-303.2

2. LEVEL CHANGE BETWEEN 1/4"-1/2" MUST BE BEVELED AT 1:2 MAX PER CBC 111B-303.3

DD EXPANSION JOINT (E.J.) WITH REBAR
NOT TO SCALE

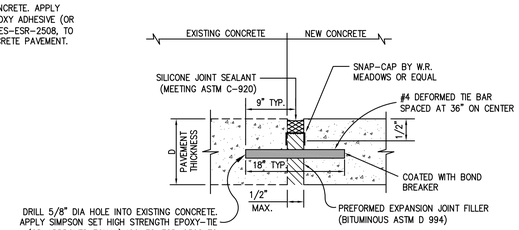

FF DOWELED JOINT (D.J.)
NOT TO SCALE

DSA AP03-119972

PBK

ARCHITECTURE
ONTARIO
2855 E. Guasti Road, Suite 402
Ontario, CA 91761
909-937-9200 P
909-937-4161 F
PBK.com

WEDGEWORTH K-8 SCHOOL
16949 WEDGEWORTH DR.
HACIENDA HEIGHTS, CA 91745
DSA SUBMITTAL

HACIENDA LA PUENTE UNIFIED SCHOOL DISTRICT

DSA 03-119972

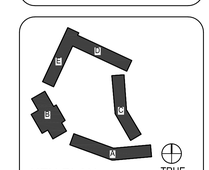

KEY PLAN
TRUE NORTH

ENGINEER
REGISTERED PROFESSIONAL ENGINEER
WILLIAM WING-CHI CHAN
No. C 34971
Exp. 09-30-19
CIVIL
STATE OF CALIFORNIA

ARCHITECT
LICENSED ARCHITECT
Mark A. Eagle
No. C-28195
Exp. 5-31-2021
STATE OF CALIFORNIA

CLIENT
HACIENDA LA PUENTE USD

PROJECT NUMBER
1884

DATE: July 15, 2019
DRAWN BY: DB
CHECKED BY: RC
REVISIONS

No.	Description	Date

DSA SUBMITTAL

GRADING DETAILS

C004

Plot Date: 6/21/2019 5:30:07 PM Last Save By: devin.burgess Login: Ron Comedy S:\Jobs\2777 - PBK\2777n - Wedgeworth ES\Civil\Wedgeworth ES - C004 Grading Details.dwg

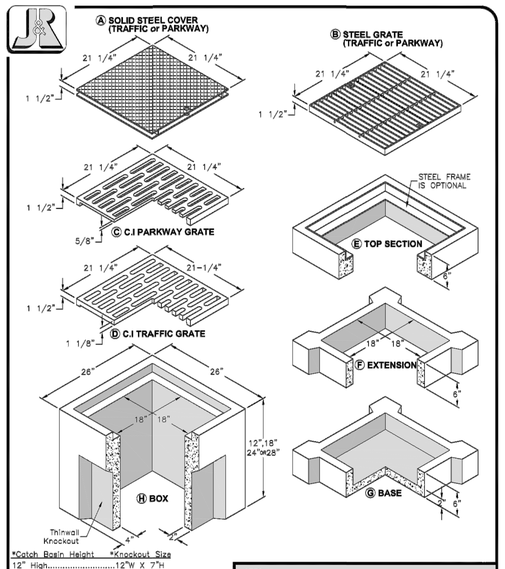

CB1818 SERIES
18" X 18" CATCH BASIN

NOTES
1. Steel Traffic Frames W/ Steel TFC Covers Or Steel TFC Grates Are Designed For AASHTO H-20 Wheel Loading, But Are Not Intended For Direct Traffic Installations.
2. Steel Frames W/ Steel Parkway Covers Or Steel Parkway Grates, Are Designed For A Live Load Of 300 p.s.f.
3. Cast Iron Traffic Grates Are Designed For AASHTO H-10 Wheel Loading, But Are Not Intended For Direct Traffic Installations
4. Cast Iron Parkway Grates Are Designed For 300 p.s.f Wheel Loading.

D2A D2B 18" x 18" CATCH BASIN DETAIL
NOT TO SCALE

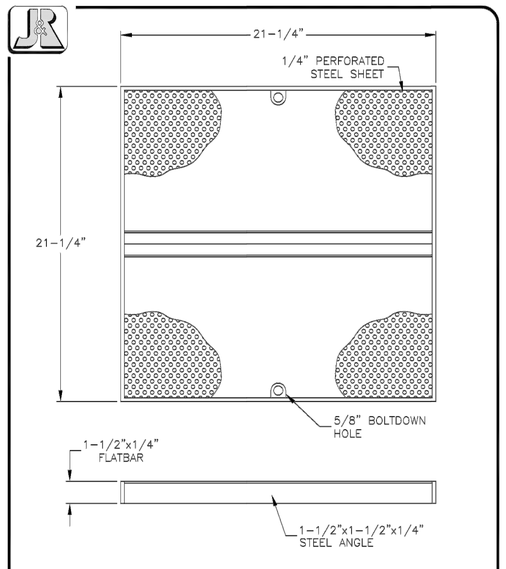

18" X 18" STEEL HEEL-PROOF BOLTDOWN PARKWAY GRATE

NOTES
1. Steel Frames W/ Steel Parkway Covers Or Steel Parkway Grates, Are Designed For A Live Load Of 300 p.s.f.

D2B 18" HEEL-PROOF PARKWAY GRATE
NOT TO SCALE

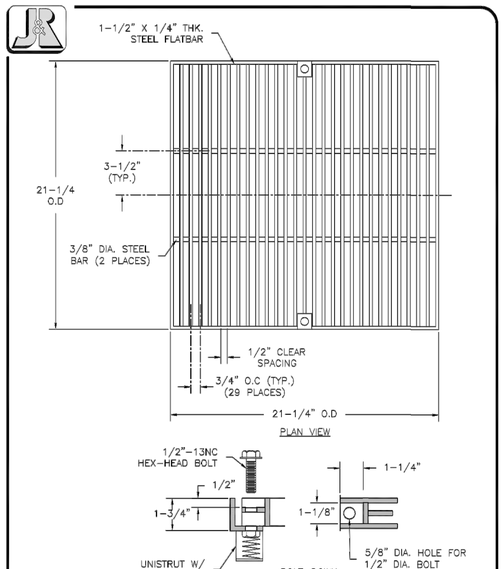

18" X 18" STEEL TRAFFIC GRATE per ADA SPECIFICATIONS

1. All steel shall conform to ASTM A36.
2. Grate conforms to ADA requirements.
3. Galvanizing is available upon request.
4. Structures are designed for AASHTO H-20 Wheel Loading.

D2A 18" ADA TRAFFIC RATED GRATE
NOT TO SCALE

GRATE OPENING NOTICE TO CONTRACTOR:
PER THE 2016 C.B.C. 11B-302.4 & 11B-302.3: GRATINGS LOCATED IN GROUND AND FLOOR SURFACES ALONG ACCESSIBLE ROUTES SHALL BE LIMITED TO SPACES NO GREATER THAN 1/2-INCH WIDE IN ONE DIRECTION. IF GRATINGS HAVE ELONGATED OPENINGS, THEY SHALL BE PLACED SO THAT THE LONG DIMENSION IS PERPENDICULAR TO THE DOMINANT DIRECTION OF TRAFFIC.

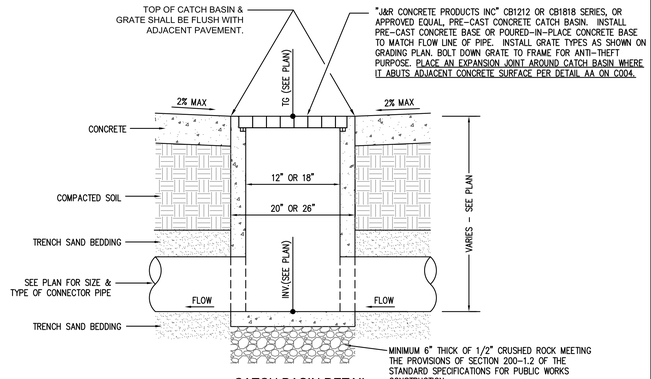

X X CATCH BASIN DETAIL
IN CONCRETE AREAS
NOT TO SCALE

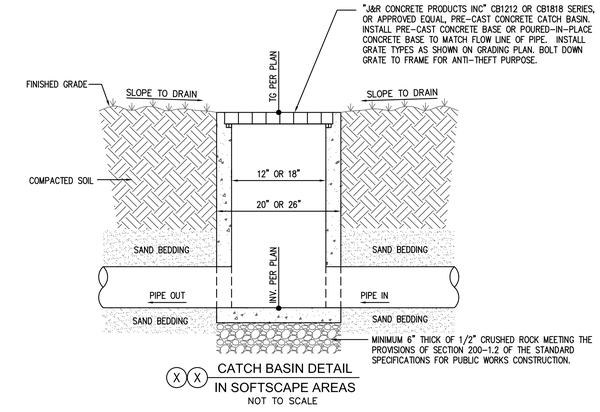

X X CATCH BASIN DETAIL
IN SOFTSCAPE AREAS
NOT TO SCALE

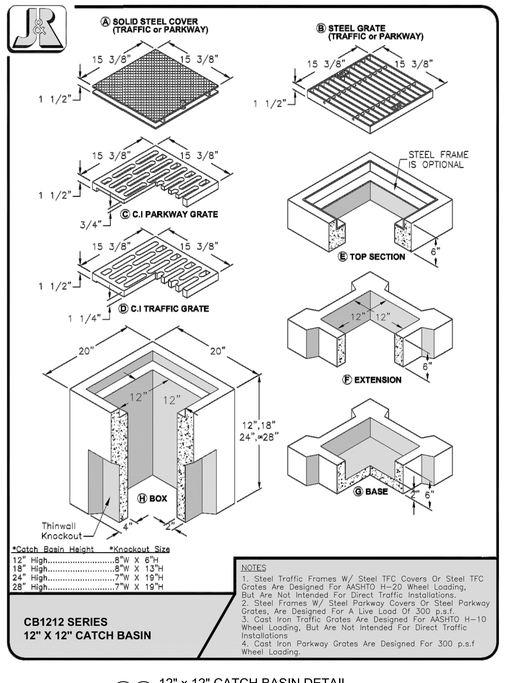

CB1212 SERIES
12" X 12" CATCH BASIN

NOTES
1. Steel Traffic Frames W/ Steel TFC Covers Or Steel TFC Grates Are Designed For AASHTO H-20 Wheel Loading, But Are Not Intended For Direct Traffic Installations.
2. Steel Frames W/ Steel Parkway Covers Or Steel Parkway Grates, Are Designed For A Live Load Of 300 p.s.f.
3. Cast Iron Traffic Grates Are Designed For AASHTO H-10 Wheel Loading, But Are Not Intended For Direct Traffic Installations
4. Cast Iron Parkway Grates Are Designed For 300 p.s.f Wheel Loading.

D1A D1B 12" x 12" CATCH BASIN DETAIL
NOT TO SCALE

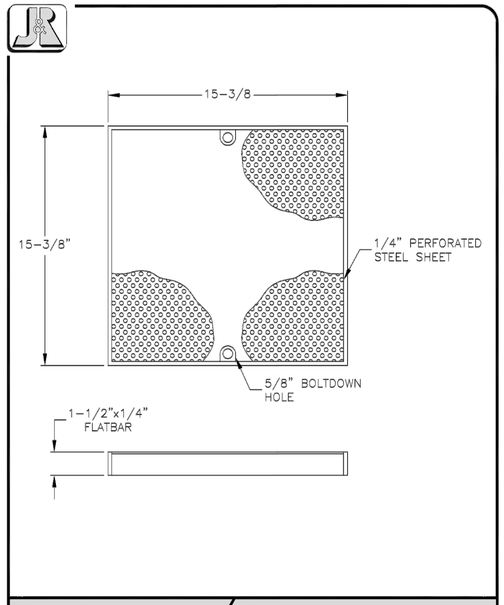

12" X 12" STEEL HEEL-PROOF PARKWAY GRATE

NOTES
1. Steel Frames W/ Steel Parkway Covers Or Steel Parkway Grates, Are Designed For A Live Load Of 300 p.s.f.

D1B 12" HEEL-PROOF PARKWAY GRATE DETAIL
NOT TO SCALE

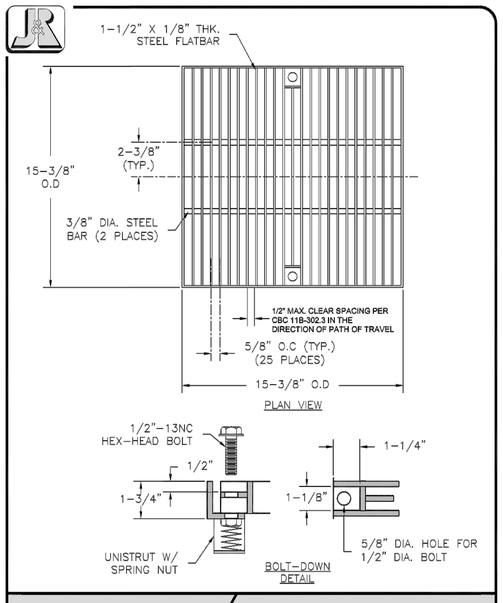

12" X 12" STEEL PARKWAY GRATE per ADA SPECIFICATIONS

1. All steel shall conform to ASTM A36.
2. Grate conforms to ADA requirements.
3. Galvanizing is available upon request.
4. Structures are designed for 300p.s.f Pedestrian Loading.

D1A 12" ADA PARKWAY GRATE DETAIL
INSTALL IN SOFTSCAPE AREAS
NOT TO SCALE

DSA 03-119972

PBK
ARCHITECTURE
ONTARIO
2855 E. Guasti Road, Suite 402
Ontario, CA 91761
909-937-9200 P
909-937-4161 F
PBK.com

WEDGEWORTH K-8 SCHOOL
16949 WEDGEWORTH DR.
HACIENDA HEIGHTS, CA 91745
DSA SUBMITTAL

HACIENDA LA PUENTE UNIFIED SCHOOL DISTRICT

DSA 03-119972

KEY PLAN
TRUE NORTH

ENGINEER
REGISTERED PROFESSIONAL ENGINEER
RICHARD NG - CIVIL
No. C 34971
Exp. 09-30-19
CIVIL
STATE OF CALIFORNIA

ARCHITECT
LICENSED ARCHITECT
Mark A. Eakins
No. C-28195
REV. 5-31-2019
STATE OF CALIFORNIA

CLIENT
HACIENDA LA PUENTE USD
PROJECT NUMBER
1884
DATE: July 15, 2019
DRAWN BY: DB
CHECKED BY: RC
REVISIONS

No.	Description	Date

GRADING DETAILS
DSA SUBMITTAL

C005

Plot Date: 6/21/2019 5:30:38 PM Last Save By: devin.burgess Login: Ron Canedy S:\Jobs\2777 - PBK\2777n - Wedgeworth ES\Civil\Wedgeworth ES - C005 Grading Details.dwg

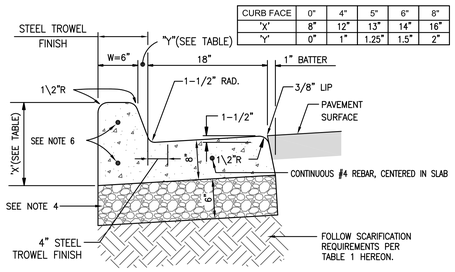

CURB FACE	0"	4"	5"	6"	8"
'X'	8"	12"	13"	14"	16"
'Y'	0"	1"	1.25"	1.5"	2"

8 CONCRETE CURB AND GUTTER DETAIL
NOT TO SCALE

GENERAL NOTES
1. ALL EXPOSED EDGES SHALL HAVE A 1/2" RADIUS EXCEPT THE GUTTER FLOW LINE SHALL BE 1-1/2" RADIUS.
2. GUTTER SHALL HAVE A FINE-BROOM FINISH EXCEPT WHERE STEEL TROWEL FINISH IS INDICATED.
3. CONTROL JOINTS SHALL BE PLACED IN CURBING AT REGULAR INTERVALS OF 10'. EXPANSION JOINTS AT 30' INTERVALS, AND AT DRIVE APPROACHES, B.C.'S, E.C.'S, CROSS GUTTERS AND CATCH BASIN TRANSITIONS. PER JOINT DETAILS ON C004.
4. A 6" THICK LAYER OF CRUSHED BASE SHALL BE PLACED UNDER ALL CURB AND GUTTER. MINIMUM COMPACTION OF 95% IS REQUIRED.
5. CONCRETE CURB AND GUTTER SHALL BE MINIMUM CLASS 520-C-2500 PER S.S.P.W.C. SECTION 201-1.
6. PLACE CONTINUOUS #4 REBARS, 3" MINIMUM FROM TOP AND 3" MINIMUM FROM BOTTOM OF CURB AND GUTTER.

CURB FACE	0"	2"	4"	5"	6"	8"
'X'	12"	14"	16"	17"	18"	20"
'Y'	0"	0.5"	1"	1.25"	1.5"	2"

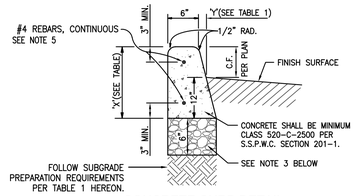

7 CONCRETE CURB DETAIL
NOT TO SCALE

CURB GENERAL NOTES:
1. ALL EXPOSED EDGES SHALL HAVE A 1/2" RADIUS.
2. CONTROL JOINTS SHALL BE PLACED IN CURBING AT REGULAR INTERVALS OF 10'. EXPANSION JOINTS AT 30' INTERVALS, AND AT DRIVE APPROACHES, B.C.'S, E.C.'S, CROSS GUTTERS AND CATCH BASIN TRANSITIONS PER JOINT DETAILS ON C004.
3. A 6" THICK LAYER OF CRUSHED BASE SHALL BE PLACED UNDER ALL CURB. MINIMUM COMPACTION OF 95% RELATIVE DENSITY UNLESS WAIVED BY CIVIL ENGINEER.
4. CONCRETE CURB SHALL BE MINIMUM CLASS 520-C-2500 PER S.S.P.W.C. SECTION 201-1.
5. PLACE NO. 4 REBARS 3" MINIMUM FROM TOP AND BOTTOM OF CURB.

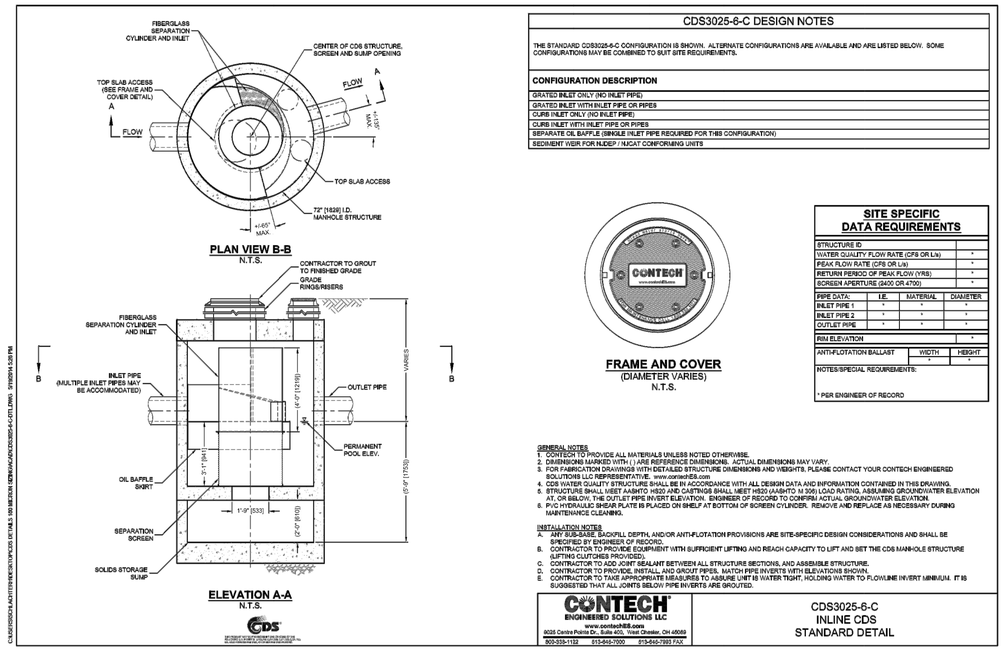

CDS3025-6-C DESIGN NOTES

THE STANDARD CDS3025-6-C CONFIGURATION IS SHOWN. ALTERNATE CONFIGURATIONS ARE AVAILABLE AND ARE LISTED BELOW. SOME CONFIGURATIONS MAY BE COMBINED TO SUIT SITE REQUIREMENTS.

CONFIGURATION DESCRIPTION
GRATED INLET ONLY (NO INLET PIPE)
GRATED INLET WITH INLET PIPE OR PIPES
CURB INLET ONLY (NO INLET PIPE)
CURB INLET WITH INLET PIPE OR PIPES
SEPARATE OIL BAFFLE (SINGLE INLET PIPE REQUIRED FOR THIS CONFIGURATION)
SEDIMENT WEIR FOR NJDEP / NJCAT CONFORMING UNITS

SITE SPECIFIC DATA REQUIREMENTS

STRUCTURE ID			
WATER QUALITY FLOW RATE (CFS OR L/s)			*
PEAK FLOW RATE (CFS OR L/s)			*
RETURN PERIOD OF PEAK FLOW (YRS)			*
SCREEN APERTURE (3400 OR 4700)			*
PIPE DATA:	I.E.	MATERIAL	DIAMETER
INLET PIPE 1	*	*	*
INLET PIPE 2	*	*	*
OUTLET PIPE	*	*	*
RIM ELEVATION			*
ANTI-FLOTATION BALLAST		WIDTH	HEIGHT
		*	*
NOTES/SPECIAL REQUIREMENTS:			
* PER ENGINEER OF RECORD			

GENERAL NOTES
1. CONTECH TO PROVIDE ALL MATERIALS UNLESS NOTED OTHERWISE.
2. DIMENSIONS MARKED WITH ( ) ARE REFERENCE DIMENSIONS. ACTUAL DIMENSIONS MAY VARY.
3. FOR FABRICATION DRAWINGS WITH DETAILED STRUCTURE DIMENSIONS AND WEIGHTS, PLEASE CONTACT YOUR CONTECH ENGINEERED SOLUTIONS LLC REPRESENTATIVE. www.contechES.com
4. CDS WATER QUALITY STRUCTURE SHALL BE IN ACCORDANCE WITH ALL DESIGN DATA AND INFORMATION CONTAINED IN THIS DRAWING.
5. STRUCTURE SHALL MEET AASHTO HS20 AND CASTINGS SHALL MEET HS20 (AASHTO M 306) LOAD RATING, ASSUMING GROUNDWATER ELEVATION AT, OR BELOW, THE OUTLET PIPE INVERT ELEVATION. ENGINEER OF RECORD TO CONFIRM ACTUAL GROUNDWATER ELEVATION.
6. PVC HYDRAULIC SHEAR PLATE IS PLACED ON SHELF AT BOTTOM OF SCREEN CYLINDER. REMOVE AND REPLACE AS NECESSARY DURING MAINTENANCE CLEANING.

INSTALLATION NOTES
A. ANY SUB-BASE, BACKFILL DEPTH, AND/OR ANTI-FLOTATION PROVISIONS ARE SITE-SPECIFIC DESIGN CONSIDERATIONS AND SHALL BE SPECIFIED BY ENGINEER OF RECORD.
B. CONTRACTOR TO PROVIDE EQUIPMENT WITH SUFFICIENT LIFTING AND REACH CAPACITY TO LIFT AND SET THE CDS MANHOLE STRUCTURE (LIFTING CLUTCHES PROVIDED).
C. CONTRACTOR TO ADD JOINT SEALANT BETWEEN ALL STRUCTURE SECTIONS, AND ASSEMBLE STRUCTURE.
D. CONTRACTOR TO PROVIDE, INSTALL, AND GROUT PIPES. MATCH PIPE INVERTS WITH ELEVATIONS SHOWN.
E. CONTRACTOR TO TAKE APPROPRIATE MEASURES TO ASSURE UNIT IS WATER TIGHT, HOLDING WATER TO FLOWLINE INVERT MINIMUM. IT IS SUGGESTED THAT ALL JOINTS BELOW PIPE INVERTS ARE GROUTED.

CONTECH ENGINEERED SOLUTIONS LLC
www.contechES.com
9025 Centre Pointe Dr., Suite 400, West Chester, OH 45069
800-338-1122 513-645-7000 513-645-7993 FAX

CDS3025-6-C
INLINE CDS
STANDARD DETAIL

D4 CONTECH CDS SEPARATOR DETAIL

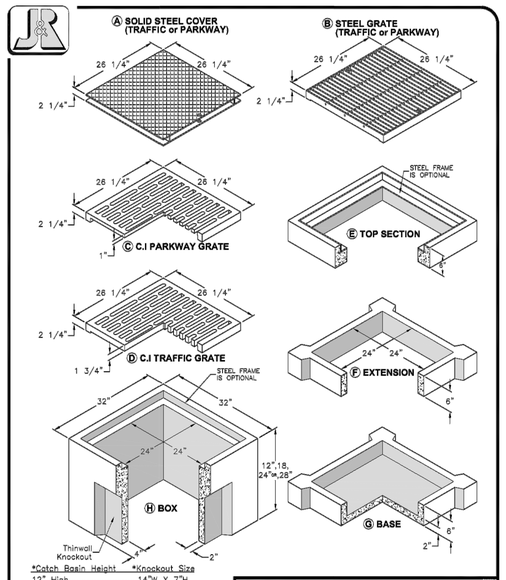

CB2424 SERIES
24" X 24" CATCH BASIN

NOTES
1. Steel Traffic Frames W/ Steel TFC Covers Or Steel TFC Grates Are Designed For AASHTO H-20 Wheel Loading, But Are Not Intended For Direct Traffic Installations.
2. Steel Frames W/ Steel Parkway Covers Or Steel Parkway Grates, Are Designed For A Live Load Of 300 p.s.f.
3. Cast Iron Traffic Grates Are Designed For AASHTO H-10 Wheel Loading, But Are Not Intended For Direct Traffic Installations
4. Cast Iron Parkway Grates Are Designed For 300 p.s.f Wheel Loading.

D3A D3B 24" x 24" CATCH BASIN DETAIL
NOT TO SCALE

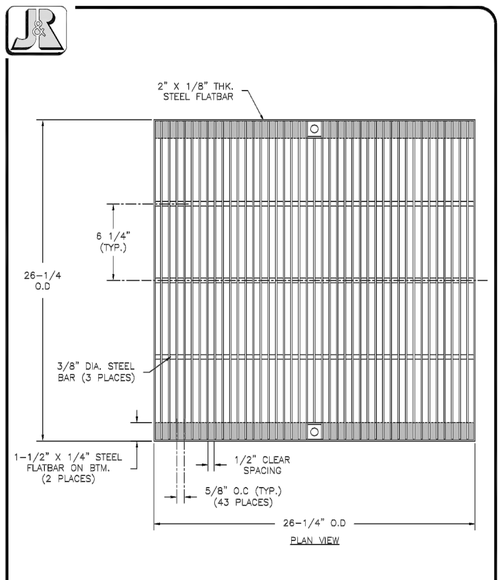

24" X 24" STEEL PARKWAY GRATE per ADA SPECIFICATIONS

1. All steel shall conform to ASTM A36.
2. Grate conforms to ADA requirements.
3. Galvanizing is available upon request.
4. Structures are designed for 300p.s.f Pedestrian Loading.

D3A 24" ADA PARKWAY GRATE DETAIL
INSTALL IN SOFTSCAPE AREAS

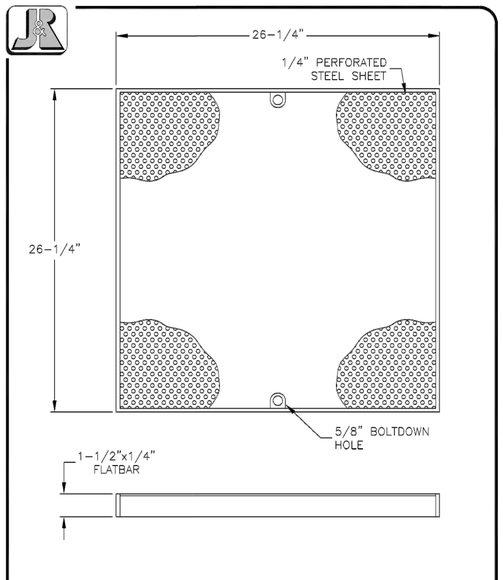

24" X 24" STEEL HEEL-PROOF BOLTDOWN PARKWAY GRATE

NOTES
1. Steel Frames W/ Steel Parkway Covers Or Steel Parkway Grates, Are Designed For A Live Load Of 300 p.s.f.

D3B 24" HEEL-PROOF GRATE DETAIL
INSTALL IN HARDSCAPE AREAS

DSA AF03-119972

PBK

ARCHITECTURE
ONTARIO
2855 E. Guasti Road, Suite 402
Ontario, CA 91761
909-937-9200 P
909-937-6161 F
PBK.com

WEDGEWORTH K-8 SCHOOL
16949 WEDGEWORTH DR.
HACIENDA HEIGHTS, CA 91745
DSA SUBMITTAL

DSA 03-119972

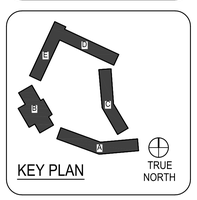

ENGINEER
REGISTERED PROFESSIONAL ENGINEER
RICHARD W. NG - CIVIL
No. C 34971
Exp. 09-30-19
CIVIL
STATE OF CALIFORNIA

ARCHITECT
LICENSED ARCHITECT
Mark A. Eagan
No. C-28195
REV. 5-31-2019
STATE OF CALIFORNIA

CLIENT
HACIENDA LA PUENTE USD
PROJECT NUMBER
1884
DATE: July 15, 2019
DRAWN BY: DB
CHECKED BY: RC
REVISIONS

No.	Description	Date

DSA SUBMITTAL

GRADING DETAILS

C006

Plot Date: 6/21/2019 5:28:15 PM Last Save By: devin.burgess Login: Ron Connelly S:\Jobs\2777 - PBK\2777n - Wedgeworth ES\Civil\Wedgeworth ES - C006 Grading Details.dwg

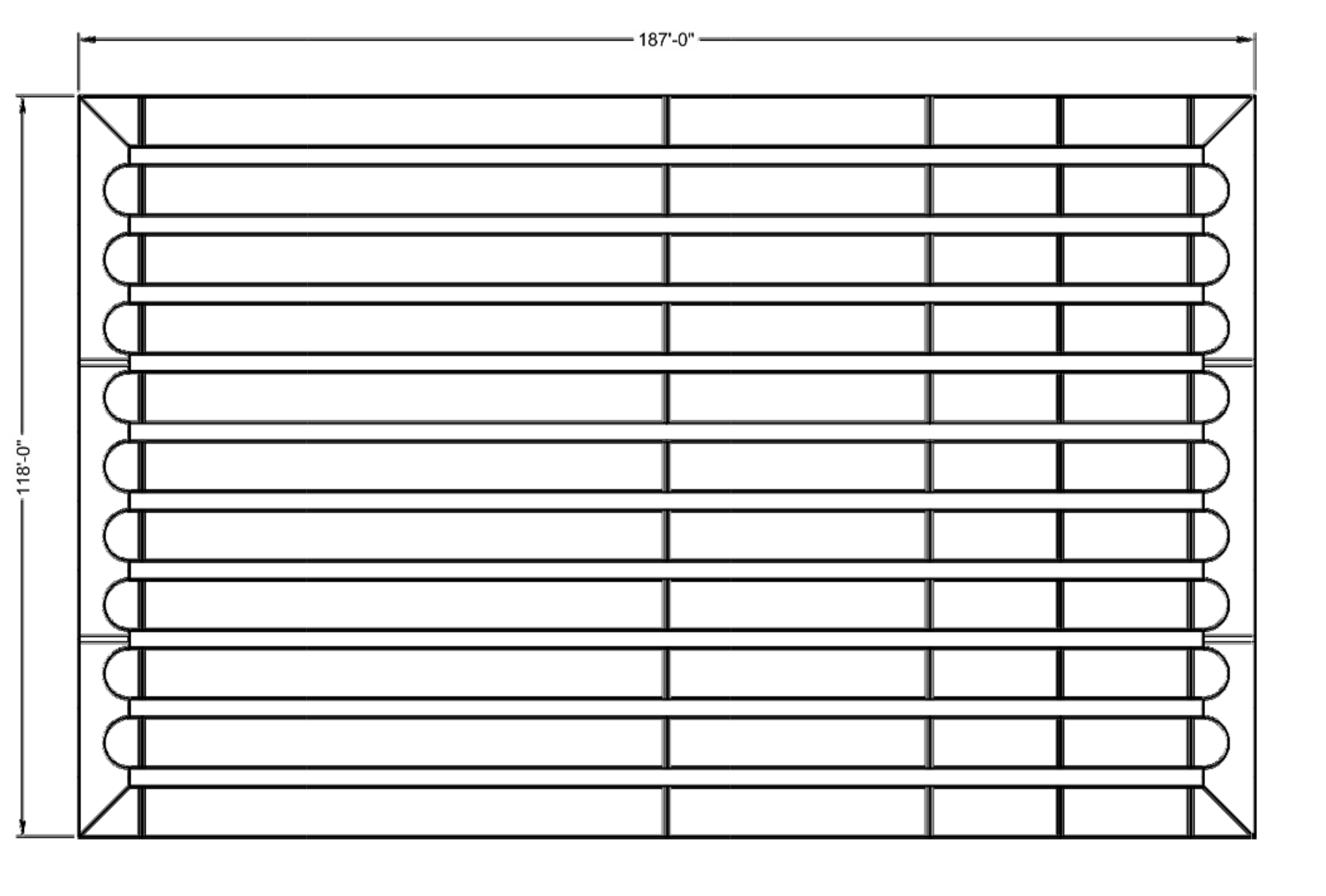

ASSEMBLY
SCALE: 1" = 30'

PROJECT SUMMARY

CALCULATION DETAILS
- LENGTH PER BARREL = 171 FT
- LENGTH PER HEADER = 118 FT
- LOADING = H20 & H25
- APPROX. CMP FOOTAGE = 2,117 FT

STORAGE SUMMARY
- STORAGE VOLUME REQUIRED 150,000 CF
- PIPE STORAGE = 106,412 CF
- STRUCTURAL BACKFILL STORAGE = 43,590 CF
- TOTAL STORAGE PROVIDED = 150,002 CF

PIPE DETAILS
- DIAMETER = 96 IN
- CORRUGATION = 5" X 1" OR 3" X 1"
- GAGE = 16
- COATING = ALUMINIZED STEEL TYPE 2 (ALT2)
- WALL TYPE = PERFORATED
- BARREL SPACING = 36 IN

BACKFILL DETAILS
- WIDTH AT ENDS = 36 IN
- ABOVE PIPE = 6 IN
- WIDTH AT SIDES = 36 IN
- BELOW PIPE = 6 IN

NOTES
- ALL RISER AND STUB DIMENSIONS ARE TO CENTERLINE. ALL ELEVATIONS, DIMENSIONS, AND LOCATIONS OF RISERS AND INLETS, SHALL BE VERIFIED BY THE ENGINEER OF RECORD PRIOR TO RELEASING FOR FABRICATION.
- ALL FITTINGS AND REINFORCEMENT COMPLY WITH ASTM A998.
- ALL RISERS AND STUBS ARE 2 ⅔" x ½" CORRUGATION AND 16 GAGE UNLESS OTHERWISE NOTED.
- RISERS TO BE FIELD TRIMMED TO GRADE.
- QUANTITY OF PIPE SHOWN DOES NOT PROVIDE EXTRA PIPE FOR CONNECTING THE SYSTEM TO EXISTING PIPE OR DRAINAGE STRUCTURES. OUR SYSTEM AS DETAILED PROVIDES NOMINAL INLET AND/OR OUTLET PIPE STUB FOR CONNECTION TO EXISTING DRAINAGE FACILITIES. IF ADDITIONAL PIPE IS NEEDED IT IS THE RESPONSIBILITY OF THE CONTRACTOR.
- BAND TYPE TO BE DETERMINED UPON FINAL DESIGN.
- THE PROJECT SUMMARY IS REFLECTIVE OF THE DYODS DESIGN, QUANTITIES ARE APPROX. AND SHOULD BE VERIFIED UPON FINAL DESIGN AND APPROVAL. FOR EXAMPLE, TOTAL EXCAVATION DOES NOT CONSIDER ALL VARIABLES SUCH AS SHORING AND ONLY ACCOUNTS FOR MATERIAL WITHIN THE ESTIMATED EXCAVATION FOOTPRINT.

NOTE:
THESE DRAWINGS ARE FOR CONCEPTUAL PURPOSES AND DO NOT REFLECT ANY LOCAL PREFERENCES OR REGULATIONS. PLEASE CONTACT YOUR LOCAL CONTECH REP FOR MODIFICATIONS.

MARK	DATE	REVISION DESCRIPTION	BY

CONTECH ENGINEERED SOLUTIONS LLC
www.ContechES.com
9025 Centre Pointe Dr., Suite 400, West Chester, OH 45069
800-338-1122 513-645-7000 513-645-7993 FAX

CONTECH CMP DETENTION SYSTEMS
CONTECH DYODS DRAWING

DYODS - 10992-1-0
PROJECT NAME: Wedgeworth Elementary School
Hacienda Heights, CA
DESCRIPTION: 50 YEAR STORM RETENTION DESIGN

PROJECT No.:	SEQ. No.:	DATE:
10992-1	0	4/25/2019
DESIGNED: DYODS	DRAWN: DYODS	
CHECKED:	APPROVED:	
SHEET NO.: D1		

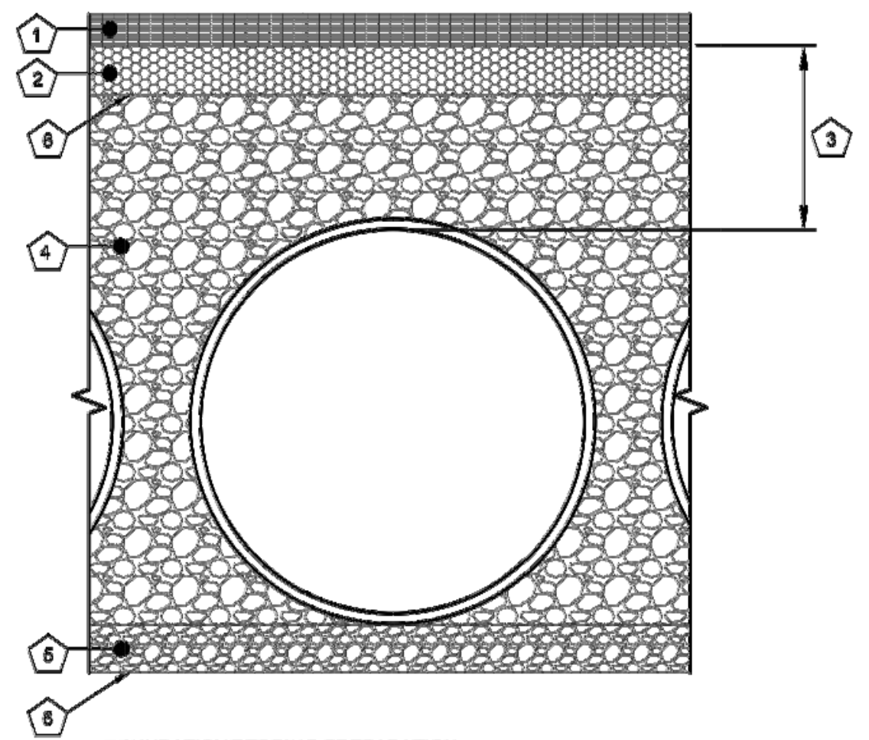

KEY

1.) RIGID OR FLEXIBLE PAVEMENT

2.) GRANULAR ROAD BASE

3.) 12" MIN. FOR DIAMETERS THROUGH 96" 18" MIN. FOR DIAMETERS FROM 102" AND LARGER MEASURED TO TOP OF RIGID OR BOTTOM OF FLEXIBLE PAVEMENT.

4.) FREE DRAINING ANGULAR WASHED STONE 3/4" - 2" MIN. PARTICLE SIZE.

5.) GRANULAR BEDDING, ROUGHLY SHAPED TO FIT THE BOTTOM OF PIPE, 4"- 6" IN DEPTH.

6.) CONTECH C-40 OR C-45 NON-WOVEN GEOTEXTILE REQUIRED, WRAPPING TRENCH ONLY.

FOUNDATION/BEDDING PREPARATION

PRIOR TO PLACING THE BEDDING, THE FOUNDATION MUST BE CONSTRUCTED TO A UNIFORM AND STABLE GRADE. IN THE EVENT THAT UNSUITABLE FOUNDATION MATERIALS ARE ENCOUNTERED DURING EXCAVATION, THEY SHALL BE REMOVED AND BROUGHT BACK TO THE GRADE WITH A FILL MATERIAL AS APPROVED BY THE ENGINEER. ONCE THE FOUNDATION PREPARATION IS COMPLETE, THE 4 INCHES OF A WELL-GRADED GRANULAR MATERIAL SHALL BE PLACED AS THE BEDDING.

BACKFILL

THE BACKFILL MATERIAL SHALL BE FREE-DRAINING ANGULAR WASHED STONE 3/4" - 2" PARTICLE SIZE. MATERIAL SHALL BE PLACED IN 8"-10" MAXIMUM LIFTS. MATERIAL SHALL BE WORKED INTO THE PIPE HAUNCHES BY MEANS OF SHOVEL-SLICING, RODDING, AIR-TAMPER, VIBRATORY ROD, OR OTHER EFFECTIVE METHODS COMPACTION IS CONSIDERED ADEQUATE WHEN NO FURTHER YIELDING OF THE MATERIAL IS OBSERVED UNDER THE COMPACTOR, OR UNDER FOOT, AND THE PROJECT ENGINEER OR HIS REPRESENTATIVE IS SATISFIED WITH THE LEVEL OF COMPACTION. INADEQUATE COMPACTION CAN LEAD TO EXCESSIVE DEFLECTIONS WITHIN THE SYSTEM AND SETTLEMENT OF THE SOILS OVER THE SYSTEM. BACKFILL SHALL BE PLACED SUCH THAT THERE IS NO MORE THAN A TWO-LIFT DIFFERENTIAL BETWEEN THE SIDES OF ANY PIPE IN THE SYSTEM AT ALL TIMES DURING THE BACKFILL PROCESS. BACKFILL SHALL BE ADVANCED ALONG THE LENGTH OF THE SYSTEM AT THE SAME RATE TO AVOID DIFFERENTIAL LOADING ON ANY PIPES IN THE SYSTEM.

EQUIPMENT USED TO PLACE AND COMPACT THE BACKFILL SHALL BE OF A SIZE AND TYPE SO AS NOT TO DISTORT, DAMAGE, OR DISPLACE THE PIPE. ATTENTION MUST BE GIVEN TO PROVIDING ADEQUATE MINIMUM COVER FOR SUCH EQUIPMENT, AND MAINTAINING BALANCED LOADING ON ALL PIPES IN THE SYSTEM, DURING ALL SUCH OPERATIONS.

OTHER ALTERNATE BACKFILL MATERIAL MAY BE ALLOWED DEPENDING ON SITE SPECIFIC CONDITIONS. REFER TO TYPICAL BACKFILL DETAIL FOR MATERIAL REQUIRED.

BACKFILL DETAIL
SCALE: N.T.S.

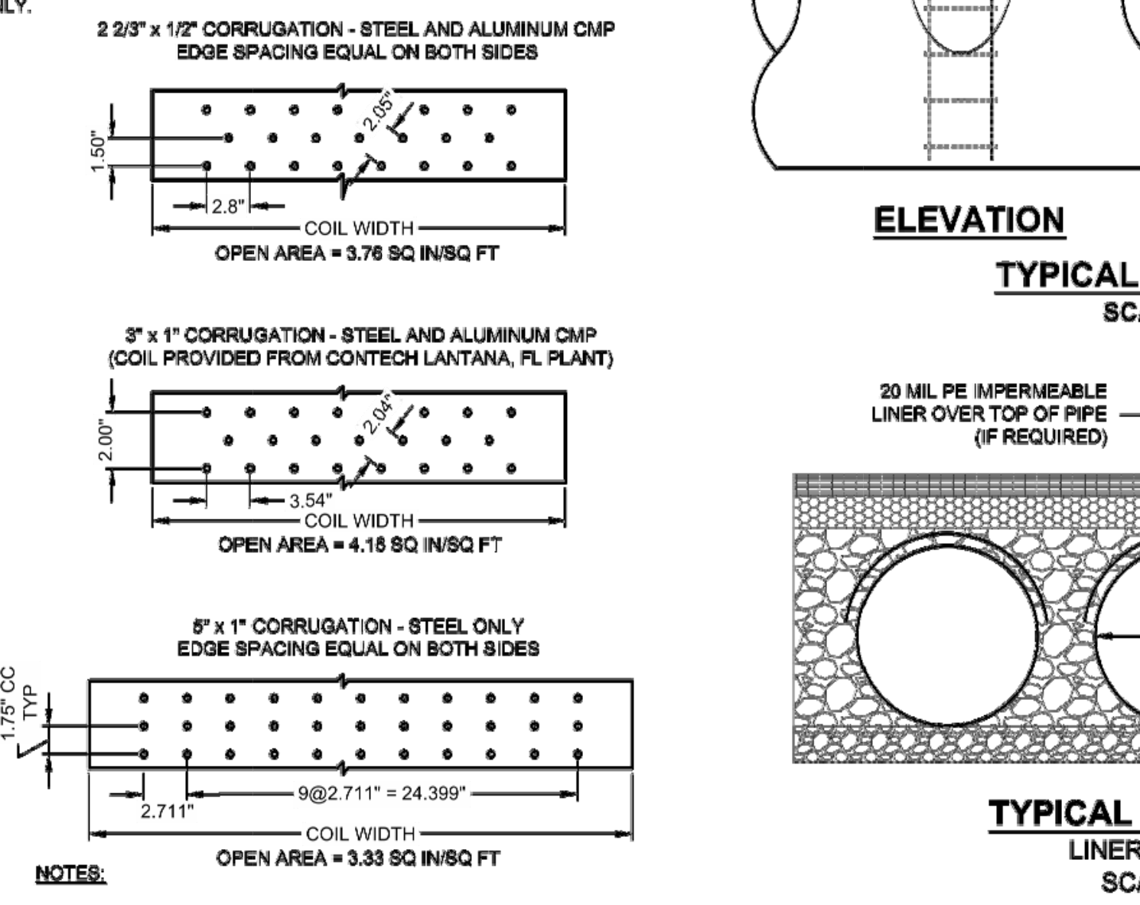

NOTES:
1. PERFORATIONS MEET AASHTO AND ASTM SPECIFICATIONS.
2. PERFORATION OPEN AREA PER SQUARE FOOT OF PIPE IS BASED ON THE NOMINAL DIAMETER AND LENGTH OF PIPE.
3. ALL DIMENSIONS ARE SUBJECT TO MANUFACTURING TOLERANCES.
4. ALL HOLES Ø3/8".

TYPICAL PERFORATION DETAIL
SCALE: N.T.S.

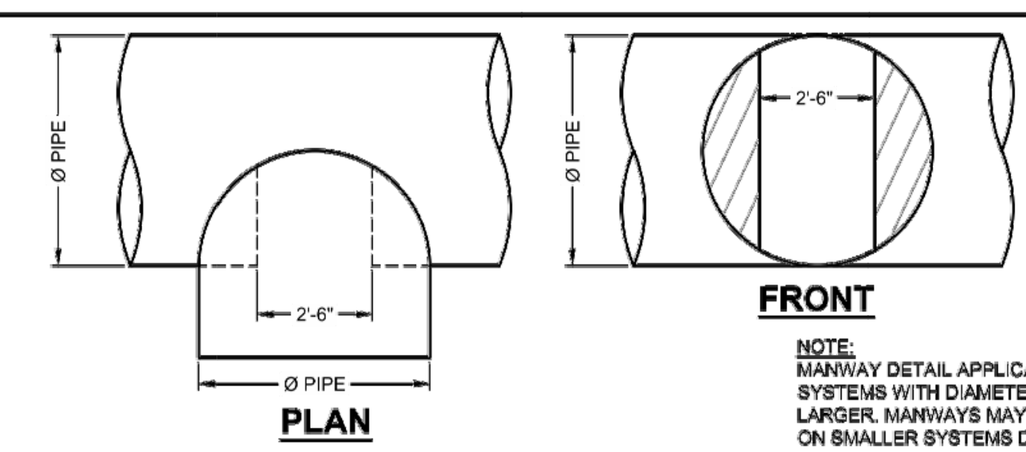

TYPICAL MANWAY DETAIL
SCALE: N.T.S.

NOTE:
MANWAY DETAIL APPLICABLE FOR CMP SYSTEMS WITH DIAMETERS 48" AND LARGER. MANWAYS MAY BE REQUIRED ON SMALLER SYSTEMS DEPENDING ON ACTUAL SITE SPECIFIC CONDITIONS.

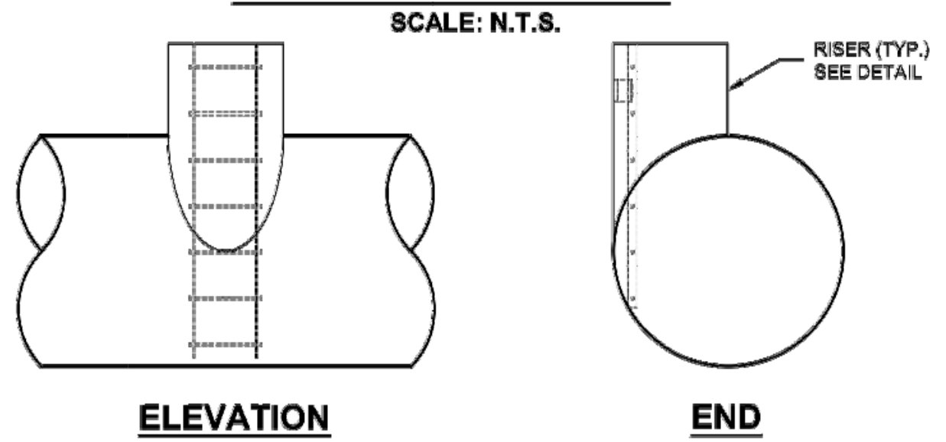

TYPICAL RISER DETAIL
SCALE: N.T.S.

NOTE:
LADDERS ARE OPTIONAL AND ARE NOT REQUIRED FOR ALL SYSTEMS.

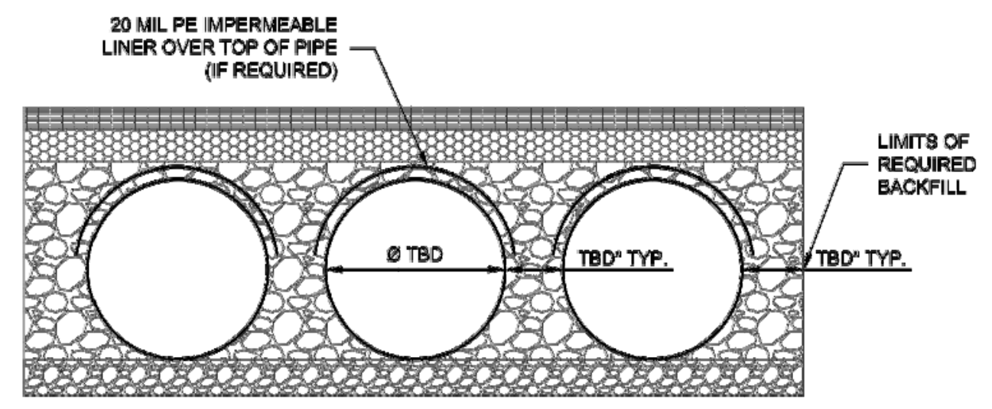

TYPICAL SECTION VIEW
LINER OVER ROWS
SCALE: N.T.S.

NOTE: IF SALTING AGENTS FOR SNOW AND ICE REMOVAL ARE USED ON OR NEAR THE PROJECT, A GEOMEMBRANE BARRIER IS RECOMMENDED WITH THE SYSTEM. THE GEOMEMBRANE LINER IS INTENDED TO HELP PROTECT THE SYSTEM FROM THE POTENTIAL ADVERSE EFFECTS THAT MAY RESULT FROM A CHANGE IN THE SURROUNDING ENVIRONMENT OVER A PERIOD OF TIME. PLEASE REFER TO THE CORRUGATED METAL PIPE DETENTION DESIGN GUIDE FOR ADDITIONAL INFORMATION.

NOTE:
THESE DRAWINGS ARE FOR CONCEPTUAL PURPOSES AND DO NOT REFLECT ANY LOCAL PREFERENCES OR REGULATIONS. PLEASE CONTACT YOUR LOCAL CONTECH REP FOR MODIFICATIONS.

MARK	DATE	REVISION DESCRIPTION	BY

CONTECH ENGINEERED SOLUTIONS LLC
www.ContechES.com
9025 Centre Pointe Dr., Suite 400, West Chester, OH 45069
800-338-1122 513-645-7000 513-645-7993 FAX

CONTECH CMP DETENTION SYSTEMS
CONTECH DYODS DRAWING

DYODS - 10992-1-0
PROJECT NAME: Wedgeworth Elementary School
Hacienda Heights, CA
DESCRIPTION: 50 YEAR STORM RETENTION DESIGN

PROJECT No.:	SEQ. No.:	DATE:
10992-1	0	4/25/2019
DESIGNED: DYODS	DRAWN: DYODS	
CHECKED:	APPROVED:	
SHEET NO.: D2		

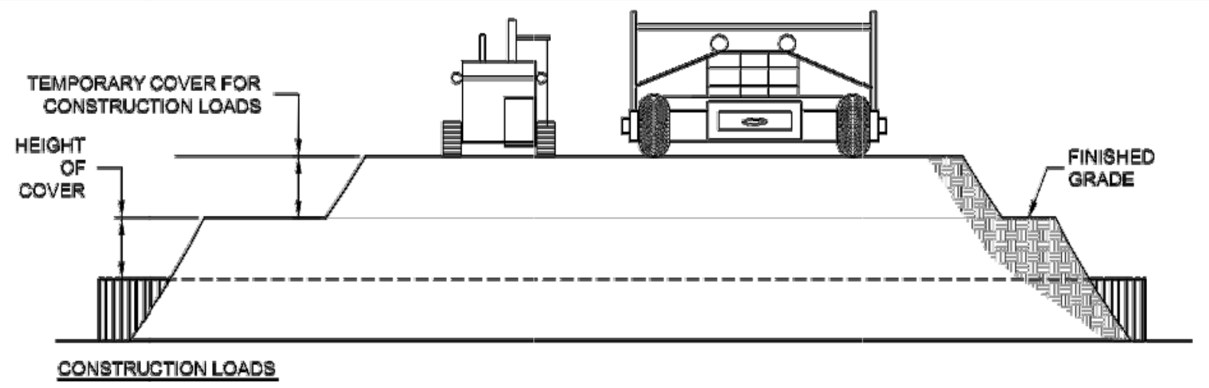

CONSTRUCTION LOADS

FOR TEMPORARY CONSTRUCTION VEHICLE LOADS, AN EXTRA AMOUNT OF COMPACTED COVER MAY BE REQUIRED OVER THE TOP OF THE PIPE. THE HEIGHT-OF-COVER SHALL MEET THE MINIMUM REQUIREMENTS SHOWN IN THE TABLE BELOW. THE USE OF HEAVY CONSTRUCTION EQUIPMENT NECESSITATES GREATER PROTECTION FOR THE PIPE THAN FINISHED GRADE COVER MINIMUMS FOR NORMAL HIGHWAY TRAFFIC.

PIPE SPAN, INCHES	AXLE LOADS (kips)			
	18-50	50-75	75-110	110-150
	MINIMUM COVER (FT)			
12-42	2.0	2.5	3.0	3.0
48-72	3.0	3.0	3.5	4.0
78-120	3.0	3.5	4.0	4.0
126-144	3.5	4.0	4.5	4.5

*MINIMUM COVER MAY VARY, DEPENDING ON LOCAL CONDITIONS. THE CONTRACTOR MUST PROVIDE THE ADDITIONAL COVER REQUIRED TO AVOID DAMAGE TO THE PIPE. MINIMUM COVER IS MEASURED FROM THE TOP OF THE PIPE TO THE TOP OF THE MAINTAINED CONSTRUCTION ROADWAY SURFACE.

CONSTRUCTION LOADING DIAGRAM
SCALE: N.T.S.

SPECIFICATION FOR DESIGNED DETENTION SYSTEM:

SCOPE
THIS SPECIFICATION COVERS THE MANUFACTURE AND INSTALLATION OF THE DESIGNED DETENTION SYSTEM DETAILED IN THE PROJECT PLANS.

MATERIAL
THE MATERIAL SHALL CONFORM TO THE APPLICABLE REQUIREMENTS LISTED BELOW:

ALUMINIZED TYPE 2 STEEL COILS SHALL CONFORM TO THE APPLICABLE REQUIREMENTS OF AASHTO M-274 OR ASTM A-92.

THE GALVANIZED STEEL COILS SHALL CONFORM TO THE APPLICABLE REQUIREMENTS OF AASHTO M-218 OR ASTM A-929.

THE POLYMER COATED STEEL COILS SHALL CONFORM TO THE APPLICABLE REQUIREMENTS OF AASHTO M-246 OR ASTM A-742.

THE ALUMINUM COILS SHALL CONFORM TO THE APPLICABLE REQUIREMENTS OF AASHTO M-197 OR ASTM B-744.

CONSTRUCTION LOADS
CONSTRUCTION LOADS MAY BE HIGHER THAN FINAL LOADS. FOLLOW THE MANUFACTURER'S OR NCSPA GUIDELINES.

PIPE
THE PIPE SHALL BE MANUFACTURED IN ACCORDANCE TO THE APPLICABLE REQUIREMENTS LISTED BELOW:

ALUMINIZED TYPE 2: AASHTO M-36 OR ASTM A-760

GALVANIZED: AASHTO M-36 OR ASTM A-760

POLYMER COATED: AASHTO M-245 OR ASTM A-762

ALUMINUM: AASHTO M-196 OR ASTM B-745

HANDLING AND ASSEMBLY
SHALL BE IN ACCORDANCE WITH NCSP'S (NATIONAL CORRUGATED STEEL PIPE ASSOCIATION) FOR ALUMINIZED TYPE 2, GALVANIZED OR POLYMER COATED STEEL. SHALL BE IN ACCORDANCE WITH THE MANUFACTURER'S RECOMMENDATIONS FOR ALUMINUM PIPE.

INSTALLATION
SHALL BE IN ACCORDANCE WITH AASHTO STANDARD SPECIFICATIONS FOR HIGHWAY BRIDGES, SECTION 26, DIVISION II DIVISION II OR ASTM A-798 (FOR ALUMINIZED TYPE 2, GALVANIZED OR POLYMER COATED STEEL) OR ASTM B-788 (FOR ALUMINUM PIPE) AND IN CONFORMANCE WITH THE PROJECT PLANS AND SPECIFICATIONS. IF THERE ARE ANY INCONSISTENCIES OR CONFLICTS THE CONTRACTOR SHOULD DISCUSS AND RESOLVE WITH THE SITE ENGINEER.

IT IS ALWAYS THE RESPONSIBILITY OF THE CONTRACTOR TO FOLLOW OSHA GUIDELINES FOR SAFE PRACTICES.

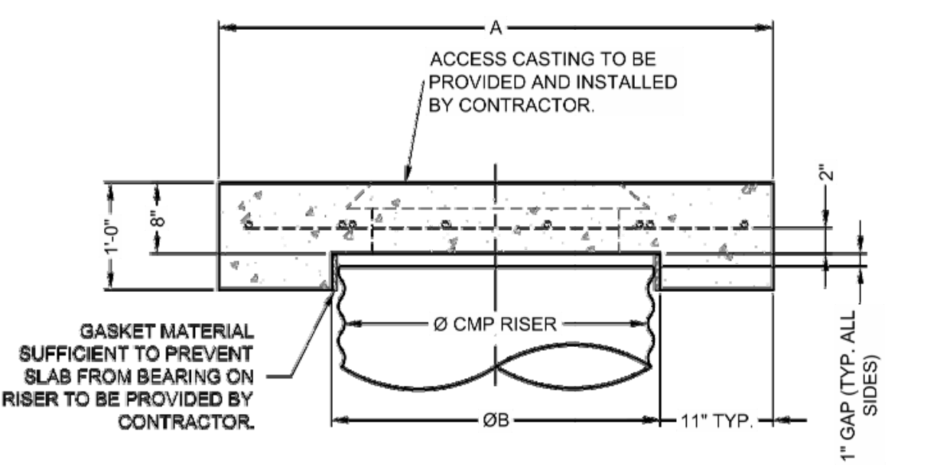

SECTION VIEW

REINFORCING TABLE

Ø CMP RISER	A	Ø B	REINFORCING	**BEARING PRESSURE (PSF)
24"	Ø 4' 4'X4'	26"	#5 @ 12" OCEW #5 @ 12" OCEW	2,410 1,780
30"	Ø 4'-6" 4'-6" X 4'-6"	32"	#5 @ 12" OCEW #5 @ 12" OCEW	2,120 1,530
36"	Ø 5' 5' X 5'	38"	#5 @ 10" OCEW #5 @ 10" OCEW	1,890 1,350
42"	Ø 5'-6" 5'-6" X 5'-6"	44"	#5 @ 10" OCEW #5 @ 9" OCEW	1,720 1,210
48"	Ø 6' 6' X 6'	50"	#5 @ 9" OCEW #5 @ 8" OCEW	1,600 1,100

** ASSUMED SOIL BEARING CAPACITY

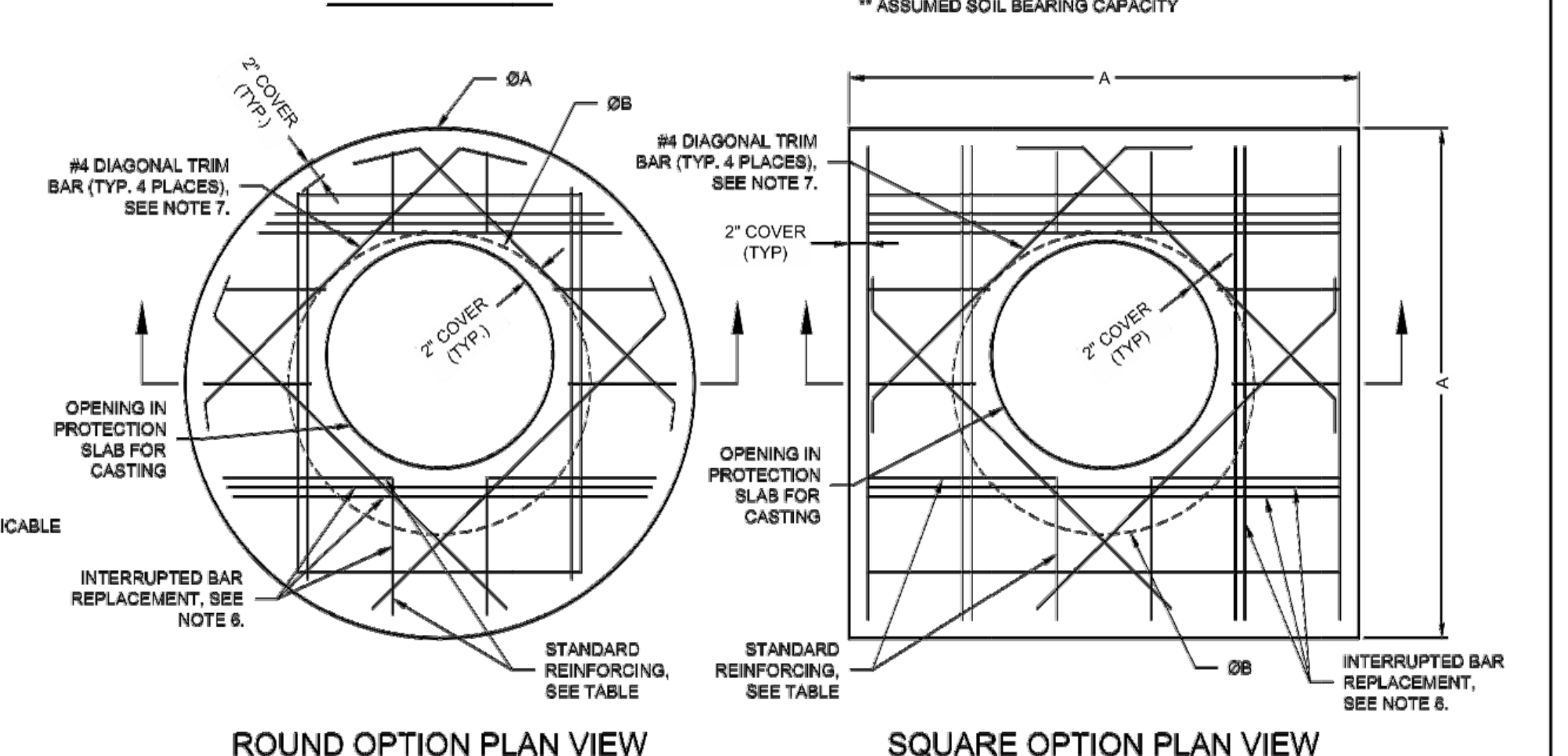

ROUND OPTION PLAN VIEW

SQUARE OPTION PLAN VIEW

NOTES:

1. DESIGN IN ACCORDANCE WITH AASHTO, 17th EDITION.
2. DESIGN LOAD HS25.
3. EARTH COVER = 1' MAX.
4. CONCRETE STRENGTH = 3,500 psi
5. REINFORCING STEEL = ASTM A615, GRADE 60.
6. PROVIDE ADDITIONAL REINFORCING AROUND OPENINGS EQUAL TO THE BARS INTERRUPTED, HALF EACH SIDE. ADDITIONAL BARS TO BE IN THE SAME PLANE.
7. TRIM OPENING WITH DIAGONAL #4 BARS, EXTEND BARS A MINIMUM OF 12" BEYOND OPENING, BEND BARS AS REQUIRED TO MAINTAIN BAR COVER.
8. PROTECTION SLAB AND ALL MATERIALS TO BE PROVIDED AND INSTALLED BY CONTRACTOR.
9. DETAIL DESIGN BY DELTA ENGINEERING, BINGHAMTON, NY.

MANHOLE CAP DETAIL
SCALE: N.T.S.

NOTE:
THESE DRAWINGS ARE FOR CONCEPTUAL PURPOSES AND DO NOT REFLECT ANY LOCAL PREFERENCES OR REGULATIONS. PLEASE CONTACT YOUR LOCAL CONTECH REP FOR MODIFICATIONS.

MARK	DATE	REVISION DESCRIPTION	BY

CONTECH ENGINEERED SOLUTIONS LLC
www.ContechES.com
9025 Centre Pointe Dr., Suite 400, West Chester, OH 45069
800-338-1122 513-645-7000 513-645-7993 FAX

CONTECH CMP DETENTION SYSTEMS
CONTECH DYODS DRAWING

DYODS - 10992-1-0
PROJECT NAME: Wedgeworth Elementary School
Hacienda Heights, CA
DESCRIPTION: 50 YEAR STORM RETENTION DESIGN

PROJECT No.:	SEQ. No.:	DATE:
10992-1	0	4/25/2019
DESIGNED: DYODS	DRAWN: DYODS	
CHECKED:	APPROVED:	
SHEET NO.: D3		

CMP DETENTION INSTALLATION GUIDE

PROPER INSTALLATION OF A FLEXIBLE UNDERGROUND DETENTION SYSTEM WILL ENSURE LONG-TERM PERFORMANCE. THE CONFIGURATION OF THESE SYSTEMS OFTEN REQUIRES SPECIAL CONSTRUCTION PRACTICES THAT DIFFER FROM CONVENTIONAL FLEXIBLE PIPE CONSTRUCTION. CONTECH ENGINEERED SOLUTIONS STRONGLY SUGGESTS SCHEDULING A PRE-CONSTRUCTION MEETING WITH YOUR LOCAL SALES ENGINEER TO DETERMINE IF ADDITIONAL MEASURES, NOT COVERED IN THIS GUIDE, ARE APPROPRIATE FOR YOUR SITE.

FOUNDATION

CONSTRUCT A FOUNDATION THAT CAN SUPPORT THE DESIGN LOADING APPLIED BY THE PIPE AND ADJACENT BACKFILL WEIGHT AS WELL AS MAINTAIN ITS INTEGRITY DURING CONSTRUCTION.

IF SOFT OR UNSUITABLE SOILS ARE ENCOUNTERED, REMOVE THE POOR SOILS DOWN TO A SUITABLE DEPTH AND THEN BUILD UP TO THE APPROPRIATE ELEVATION WITH A COMPETENT BACKFILL MATERIAL. THE STRUCTURAL FILL MATERIAL GRADATION SHOULD NOT ALLOW THE MIGRATION OF FINES, WHICH CAN CAUSE SETTLEMENT OF THE DETENTION SYSTEM OR PAVEMENT ABOVE. IF THE STRUCTURAL FILL MATERIAL IS NOT COMPATIBLE WITH THE UNDERLYING SOILS AN ENGINEERING FABRIC SHOULD BE USED AS A SEPARATOR. IN SOME CASES, USING A STIFF REINFORCING GEOGRID REDUCES OVER EXCAVATION AND REPLACEMENT FILL QUANTITIES.

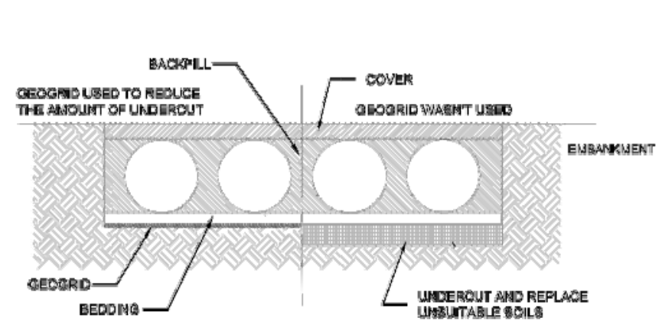

GRADE THE FOUNDATION SUBGRADE TO A UNIFORM OR SLIGHTLY SLOPING GRADE. IF THE SUBGRADE IS CLAY OR RELATIVELY NON-POROUS AND THE CONSTRUCTION SEQUENCE WILL LAST FOR AN EXTENDED PERIOD OF TIME, IT IS BEST TO SLOPE THE GRADE TO ONE END OF THE SYSTEM. THIS WILL ALLOW EXCESS WATER TO DRAIN QUICKLY, PREVENTING SATURATION OF THE SUBGRADE.

BEDDING

A 4 TO 6-INCH THICK, WELL-GRADED, GRANULAR MATERIAL IS THE PREFERRED PIPE BEDDING. IF CONSTRUCTION EQUIPMENT WILL OPERATE FOR AN EXTENDED PERIOD OF TIME ON THE BEDDING, USE EITHER AN ENGINEERING FABRIC OR A STIFF GEOGRID TO ENSURE THE BASE MATERIAL MAINTAINS ITS INTEGRITY.

USING AN OPEN-GRADED BEDDING MATERIAL IS ACCEPTABLE; HOWEVER, AN ENGINEERING FABRIC SEPARATOR IS REQUIRED BETWEEN THE BASE AND THE SUBGRADE.

GRADE THE BASE TO A SMOOTH, UNIFORM GRADE TO ALLOW FOR THE PROPER PLACEMENT OF THE PIPE.

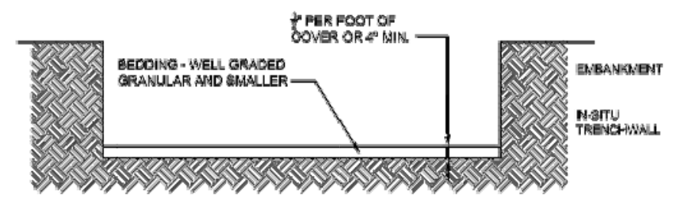

GEOMEMBRANE BARRIER

A SITE'S RESISTIVITY MAY CHANGE OVER TIME WHEN VARIOUS TYPES OF SALTING AGENTS ARE USED, SUCH AS ROAD SALTS FOR DEICING AGENTS. IF SALTING AGENTS ARE USED ON OR NEAR THE PROJECT SITE, A GEOMEMBRANE BARRIER IS RECOMMENDED WITH THE SYSTEM. THE GEOMEMBRANE LINER IS INTENDED TO HELP PROTECT THE SYSTEM FROM THE POTENTIAL ADVERSE EFFECTS THAT MAY RESULT FROM THE USE OF SUCH AGENTS INCLUDING PREMATURE CORROSION AND REDUCED ACTUAL SERVICE LIFE.

THE PROJECT'S ENGINEER OF RECORD IS TO EVALUATE WHETHER SALTING AGENTS WILL BE USED ON OR NEAR THE PROJECT SITE, AND USE HIS/HER BEST JUDGEMENT TO DETERMINE IF ANY ADDITIONAL PROTECTIVE MEASURES ARE REQUIRED. BELOW IS A TYPICAL DETAIL SHOWING THE PLACEMENT OF A GEOMEMBRANE BARRIER FOR PROJECTS WHERE SALTING AGENTS ARE USED ON OR NEAR THE PROJECT SITE.

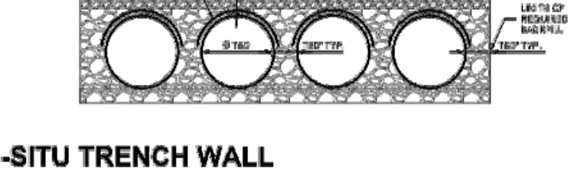

IN-SITU TRENCH WALL

IF EXCAVATION IS REQUIRED, THE TRENCH WALL NEEDS TO BE CAPABLE OF SUPPORTING THE LOAD THAT THE PIPE SHEDS AS THE SYSTEM IS LOADED. IF SOILS ARE NOT CAPABLE OF SUPPORTING THESE LOADS, THE PIPE CAN DEFLECT. PERFORM A SIMPLE SOIL PRESSURE CHECK USING THE APPLIED LOADS TO DETERMINE THE LIMITS OF EXCAVATION BEYOND THE SPRING LINE OF THE OUTER MOST PIPES.

IN MOST CASES THE REQUIREMENTS FOR A SAFE WORK ENVIRONMENT AND PROPER BACKFILL PLACEMENT AND COMPACTION TAKE CARE OF THIS CONCERN.

BACKFILL MATERIAL

TYPICALLY, THE BEST BACKFILL MATERIAL IS AN ANGULAR, WELL-GRADED, GRANULAR FILL MEETING THE REQUIREMENTS OF AASHTO A-1, A-2 OR A-3. IN SOME CASES, IT MAY BE DESIRABLE TO USE A UNIFORMLY GRADED MATERIAL FOR THE FIRST 18- TO 24-INCHES. THIS TYPE OF MATERIAL IS EASIER TO PLACE UNDER THE HAUNCHES OF THE PIPE AND REQUIRES LITTLE COMPACTIVE EFFORT. DEPENDING ON THE BEDDING MATERIAL, A SEPARATION GEOTEXTILE MIGHT BE REQUIRED ABOVE AND BELOW THESE INITIAL LIFTS.

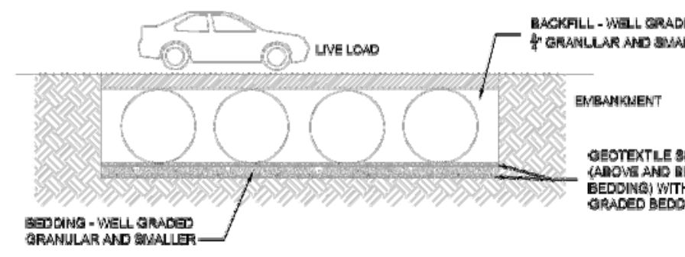

OPEN-GRADED FILL IS TYPICALLY NOT USED BEYOND THE INITIAL 18- TO 24-INCHES BECAUSE THIS TYPE OF FILL OFTEN DOES NOT PROVIDE ADEQUATE CONFINING RESTRAINT TO THE PIPES. IF A UNIFORMLY GRADED MATERIAL (PARTICLES ALL ONE SIZE) IS USED, INSTALL A GEOTEXTILE SEPARATION FABRIC TO PREVENT THE MIGRATION OF FINES INTO THE BACKFILL.

BACKFILL USING CONTROLLED LOW-STRENGTH MATERIAL (CLSM OR "FLOWABLE FILL") WHEN THE SPACING BETWEEN THE PIPES WILL NOT ALLOW FOR PLACEMENT AND ADEQUATE COMPACTION OF THE BACKFILL. WORK CLOSELY WITH THE LOCAL CONTECH SALES ENGINEER REGARDING THE SPECIAL INSTALLATION TECHNIQUES REQUIRED WHEN USING CLSM.

BACKFILL PLACEMENT

PLACE BACKFILL IN 8-INCH LOOSE LIFTS AND COMPACT TO 90% AASHTO T99 STANDARD PROCTOR DENSITY. MATERIAL SHALL BE WORKED INTO THE PIPE HAUNCHES BY MEANS OF SHOVEL-SLICING, RODDING, AIR TAMPER, VIBRATORY ROD, OR OTHER EFFECTIVE METHODS.

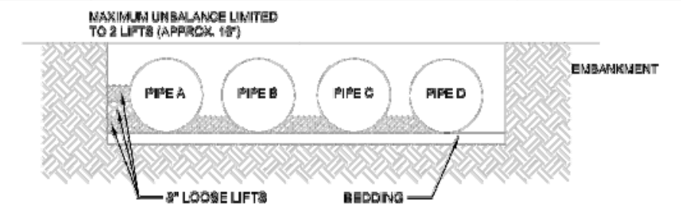

IF AASHTO T99 PROCEDURES ARE DETERMINED INFEASIBLE BY THE GEOTECHNICAL ENGINEER OF RECORD, COMPACTION IS CONSIDERED ADEQUATE WHEN NO FURTHER YIELDING OF THE MATERIAL IS OBSERVED UNDER THE COMPACTOR, OR UNDER FOOT, AND THE GEOTECHNICAL ENGINEER OF RECORD (OR REPRESENTATIVE THEREOF) IS SATISFIED WITH THE LEVEL OF COMPACTION.

FOR LARGE SYSTEMS, CONVEYOR SYSTEMS, BACKHOES WITH LONG REACHES OR DRAGLINES WITH STONE BUCKETS MAY BE USED TO PLACE BACKFILL. ONCE MINIMUM COVER FOR CONSTRUCTION LOADING ACROSS THE ENTIRE WIDTH OF THE SYSTEM IS REACHED, ADVANCE THE EQUIPMENT TO THE END OF THE RECENTLY PLACED FILL, AND BEGIN THE SEQUENCE AGAIN UNTIL THE SYSTEM IS COMPLETELY BACKFILLED. THIS TYPE OF CONSTRUCTION SEQUENCE PROVIDES ROOM FOR STOCKPILED BACKFILL DIRECTLY BEHIND THE BACKHOE, AS WELL AS THE MOVEMENT OF CONSTRUCTION TRAFFIC. MATERIAL STOCKPILES ON TOP OF THE BACKFILLED DETENTION SYSTEM SHOULD BE LIMITED TO 8- TO 10-FEET HIGH AND MUST PROVIDE BALANCED LOADING ACROSS ALL BARRELS. TO DETERMINE THE PROPER COVER OVER THE PIPES TO ALLOW THE MOVEMENT OF CONSTRUCTION EQUIPMENT SEE TABLE 1, OR CONTACT YOUR LOCAL CONTECH SALES ENGINEER.

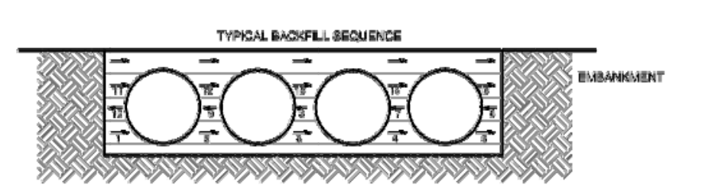

WHEN FLOWABLE FILL IS USED, YOU MUST PREVENT PIPE FLOATATION. TYPICALLY, SMALL LIFTS ARE PLACED BETWEEN THE PIPES AND THEN ALLOWED TO SET-UP PRIOR TO THE PLACEMENT OF THE NEXT LIFT. THE ALLOWABLE THICKNESS OF THE CLSM LIFT IS A FUNCTION OF A PROPER BALANCE BETWEEN THE UPLIFT FORCE OF THE CLSM, THE OPPOSING WEIGHT OF THE PIPE, AND THE EFFECT OF OTHER RESTRAINING MEASURES. THE PIPE CAN CARRY LIMITED FLUID PRESSURE WITHOUT PIPE DISTORTION OR DISPLACEMENT, WHICH ALSO AFFECTS THE CLSM LIFT THICKNESS. YOUR LOCAL CONTECH SALES ENGINEER CAN HELP DETERMINE THE PROPER LIFT THICKNESS.

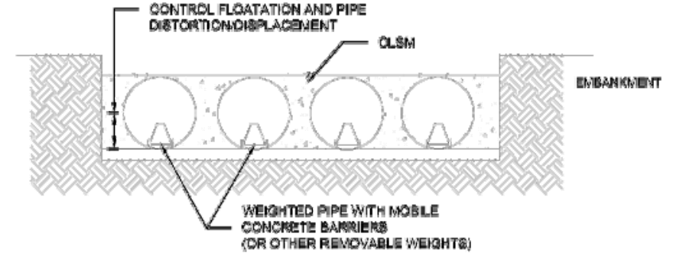

CONSTRUCTION LOADING

TYPICALLY, THE MINIMUM COVER SPECIFIED FOR A PROJECT ASSUMES H-20 LIVE LOAD. BECAUSE CONSTRUCTION LOADS OFTEN EXCEED DESIGN LIVE LOADS, INCREASED TEMPORARY MINIMUM COVER REQUIREMENTS ARE NECESSARY. SINCE CONSTRUCTION EQUIPMENT VARIES FROM JOB TO JOB, IT IS BEST TO ADDRESS EQUIPMENT SPECIFIC MINIMUM COVER REQUIREMENTS WITH YOUR LOCAL CONTECH SALES ENGINEER DURING YOUR PRE-CONSTRUCTION MEETING.

ADDITIONAL CONSIDERATIONS

BECAUSE MOST SYSTEMS ARE CONSTRUCTED BELOW-GRADE, RAINFALL CAN RAPIDLY FILL THE EXCAVATION; POTENTIALLY CAUSING FLOATATION AND MOVEMENT OF THE PREVIOUSLY PLACED PIPES. TO HELP MITIGATE POTENTIAL PROBLEMS, IT IS BEST TO START THE INSTALLATION AT THE DOWNSTREAM END WITH THE OUTLET ALREADY CONSTRUCTED TO ALLOW A ROUTE FOR THE WATER TO ESCAPE. TEMPORARY DIVERSION MEASURES MAY BE REQUIRED FOR HIGH FLOWS DUE TO THE RESTRICTED NATURE OF THE OUTLET PIPE.

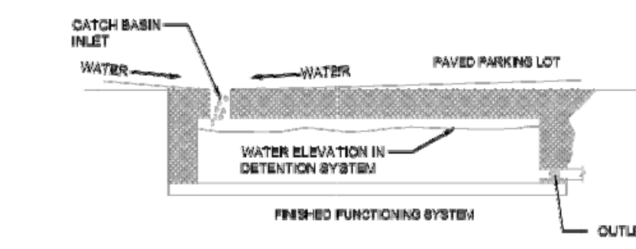

CMP DETENTION SYSTEM INSPECTION AND MAINTENANCE

UNDERGROUND STORMWATER DETENTION AND INFILTRATION SYSTEMS MUST BE INSPECTED AND MAINTAINED AT REGULAR INTERVALS FOR PURPOSES OF PERFORMANCE AND LONGEVITY.

INSPECTION

INSPECTION IS THE KEY TO EFFECTIVE MAINTENANCE OF CMP DETENTION SYSTEMS AND IS EASILY PERFORMED. CONTECH RECOMMENDS ONGOING, QUARTERLY INSPECTIONS. THE RATE AT WHICH THE SYSTEM COLLECTS POLLUTANTS WILL DEPEND MORE ON SITE SPECIFIC ACTIVITIES RATHER THAN THE SIZE OR CONFIGURATION OF THE SYSTEM.

INSPECTIONS SHOULD BE PERFORMED MORE OFTEN IN EQUIPMENT WASHDOWN AREAS, IN CLIMATES WHERE SANDING AND/OR SALTING OPERATIONS TAKE PLACE, AND IN OTHER VARIOUS INSTANCES IN WHICH ONE WOULD EXPECT HIGHER ACCUMULATIONS OF SEDIMENT OR ABRASIVE/ CORROSIVE CONDITIONS. A RECORD OF EACH INSPECTION IS TO BE MAINTAINED FOR THE LIFE OF THE SYSTEM

MAINTENANCE

CMP DETENTION SYSTEMS SHOULD BE CLEANED WHEN AN INSPECTION REVEALS ACCUMULATED SEDIMENT OR TRASH IS CLOGGING THE DISCHARGE ORIFICE.

ACCUMULATED SEDIMENT AND TRASH CAN TYPICALLY BE EVACUATED THROUGH THE MANHOLE OVER THE OUTLET ORIFICE. IF MAINTENANCE IS NOT PERFORMED AS RECOMMENDED, SEDIMENT AND TRASH MAY ACCUMULATE IN FRONT OF THE OUTLET ORIFICE. MANHOLE COVERS SHOULD BE SECURELY SEATED FOLLOWING CLEANING ACTIVITIES. CONTECH SUGGESTS THAT ALL SYSTEMS BE DESIGNED WITH AN ACCESS/INSPECTION MANHOLE SITUATED AT OR NEAR THE INLET AND THE OUTLET ORIFICE. SHOULD IT BE NECESSARY TO GET INSIDE THE SYSTEM TO PERFORM MAINTENANCE ACTIVITIES, ALL APPROPRIATE PRECAUTIONS REGARDING CONFINED SPACE ENTRY AND OSHA REGULATIONS SHOULD BE FOLLOWED.

SYSTEMS ARE TO BE RINSED, INCLUDING ABOVE THE SPRING LINE, ANNUALLY SOON AFTER THE SPRING THAW, AND AFTER ANY ADDITIONAL USE OF SALTING AGENTS, AS PART OF THE MAINTENANCE PROGRAM FOR ALL SYSTEMS WHERE SALTING AGENTS MAY ACCUMULATE INSIDE THE PIPE.

MAINTAINING AN UNDERGROUND DETENTION OR INFILTRATION SYSTEM IS EASIEST WHEN THERE IS NO FLOW ENTERING THE SYSTEM. FOR THIS REASON, IT IS A GOOD IDEA TO SCHEDULE THE CLEANOUT DURING DRY WEATHER.

THE FOREGOING INSPECTION AND MAINTENANCE EFFORTS HELP ENSURE UNDERGROUND PIPE SYSTEMS USED FOR STORMWATER STORAGE CONTINUE TO FUNCTION AS INTENDED BY IDENTIFYING RECOMMENDED REGULAR INSPECTION AND MAINTENANCE PRACTICES. INSPECTION AND MAINTENANCE RELATED TO THE STRUCTURAL INTEGRITY OF THE PIPE OR THE SOUNDNESS OF PIPE JOINT CONNECTIONS IS BEYOND THE SCOPE OF THIS GUIDE.

MARK	DATE	REVISION DESCRIPTION	BY

CONTECH ENGINEERED SOLUTIONS LLC
www.ContechES.com
9025 Centre Pointe Dr., Suite 400, West Chester, OH 45069
800-338-1122 513-645-7000 513-645-7993 FAX

CONTECH CMP DETENTION SYSTEMS
CONTECH DYODS DRAWING

DYODS - 10992-1-0
PROJECT NAME: Wedgeworth Elementary School
Hacienda Heights, CA
DESCRIPTION: 50 YEAR STORM RETENTION DESIGN

PROJECT No.:	SEQ. No.:	DATE:
10992-1	0	4/25/2019
DESIGNED: DYODS	DRAWN: DYODS	
CHECKED:	APPROVED:	
SHEET NO.: D4		

PBK

ARCHITECTURE
ONTARIO
2855 E. Guasti Road, Suite 402
Ontario, CA 91761
909-937-9200 P
909-937-6161 F
PBK.com

WEDGEWORTH K-8 SCHOOL

16949 WEDGEWORTH DR.
HACIENDA HEIGHTS, CA 91745

DSA SUBMITTAL

HACIENDA LA PUENTE UNIFIED SCHOOL DISTRICT 1970

DSA 03-119972

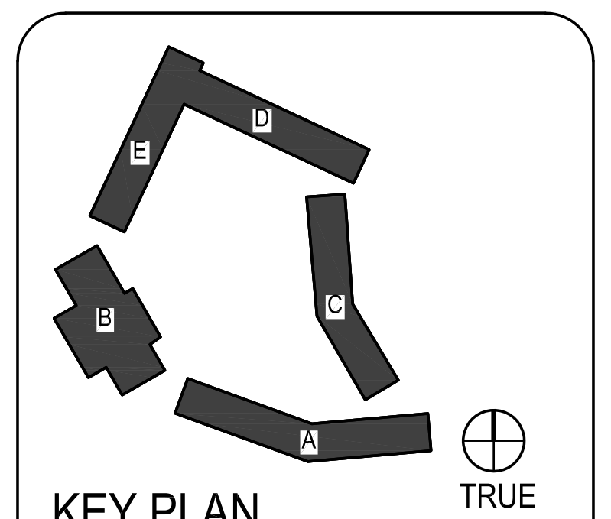

KEY PLAN

ENGINEER
REGISTERED PROFESSIONAL ENGINEER
ALAN WING-CHI LEE
No. C 34971
Exp. 09-30-19
CIVIL
STATE OF CALIFORNIA

ARCHITECT
LICENSED ARCHITECT
Mark A. Eacrett
No. C-28195
REN. 5-31-2021
STATE OF CALIFORNIA

CLIENT
HACIENDA LA PUENTE USD
PROJECT NUMBER
1884

DATE:	July 15, 2019
DRAWN BY:	DB
CHECKED BY:	RC

REVISIONS

No.	Description	Date

GRADING DETAILS

DSA SUBMITTAL

C007