Appendix G. Design Plans

THIS PAGE INTENTIONALLY LEFT BLANK

Dist	COUNTY	ROUTE	POST MILES TOTAL PROJECT	SHEET No.	TOTAL SHEETS
12	ORA	57	11.5/12.5	1	5

REGISTERED CIVIL ENGINEER DATE

PLANS APPROVAL DATE

REGISTERED PROFESSIONAL ENGINEER No. Exp. CIVIL STATE OF CALIFORNIA

THE STATE OF CALIFORNIA OR ITS OFFICERS OR AGENTS SHALL NOT BE RESPONSIBLE FOR THE ACCURACY OR COMPLETENESS OF SCANNED COPIES OF THIS PLAN SHEET.

WSP USA
1100 TOWN & COUNTRY, SUITE 200
ORANGE, CA 92868

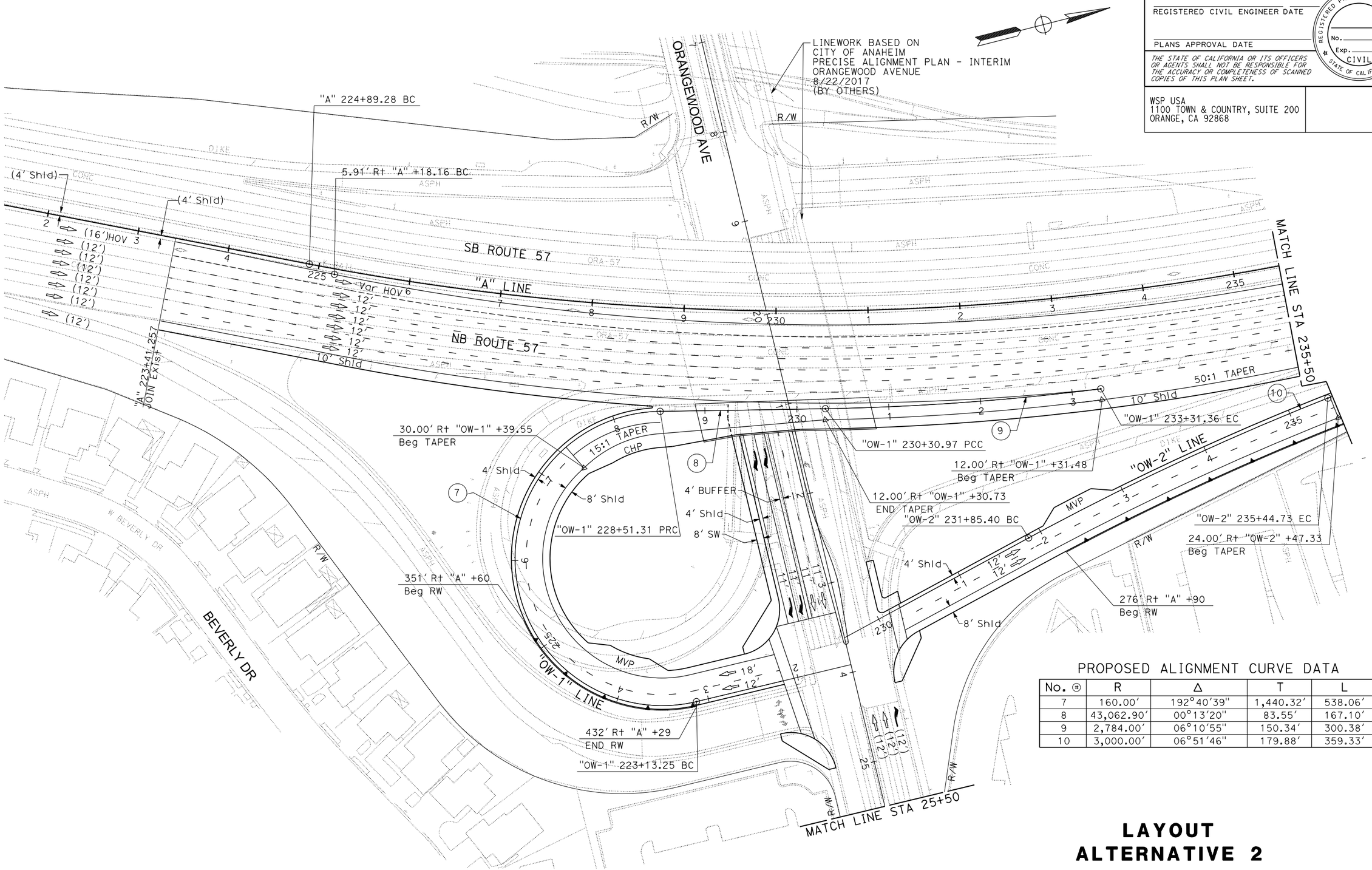

PROPOSED ALIGNMENT CURVE DATA

No. ⊛	R	Δ	T	L
7	160.00'	192°40'39"	1,440.32'	538.06'
8	43,062.90'	00°13'20"	83.55'	167.10'
9	2,784.00'	06°10'55"	150.34'	300.38'
10	3,000.00'	06°51'46"	179.88'	359.33'

LAYOUT
ALTERNATIVE 2

SCALE 1" = 50'

L-1

REVISED BY | DATE REVISED | CALCULATED-DESIGNED BY | CHECKED BY | FUNCTIONAL SUPERVISOR

STATE OF CALIFORNIA - DEPARTMENT OF TRANSPORTATION

Caltrans

SR57_Katella_Alt2-EA001.dgn

LAST REVISION 00-00-00 | DATE PLOTTED => 15-FEB-2018 | TIME PLOTTED => 16:30

BORDER LAST REVISED 7/2/2010 | USERNAME => HernandezH | DGN FILE => SR57_Katella_Alt2-EA001.dgn | RELATIVE BORDER SCALE IS IN INCHES 0 1 2 3 | UNIT 0000 | PROJECT NUMBER & PHASE 00000000001

Dist	COUNTY	ROUTE	POST MILES TOTAL PROJECT	SHEET No.	TOTAL SHEETS
12	ORA	57	11.5/12.5	2	5

REGISTERED CIVIL ENGINEER DATE

PLANS APPROVAL DATE

REGISTERED PROFESSIONAL ENGINEER No. Exp. CIVIL STATE OF CALIFORNIA

THE STATE OF CALIFORNIA OR ITS OFFICERS OR AGENTS SHALL NOT BE RESPONSIBLE FOR THE ACCURACY OR COMPLETENESS OF SCANNED COPIES OF THIS PLAN SHEET.

WSP USA
1100 TOWN & COUNTRY, SUITE 200
ORANGE, CA 92868

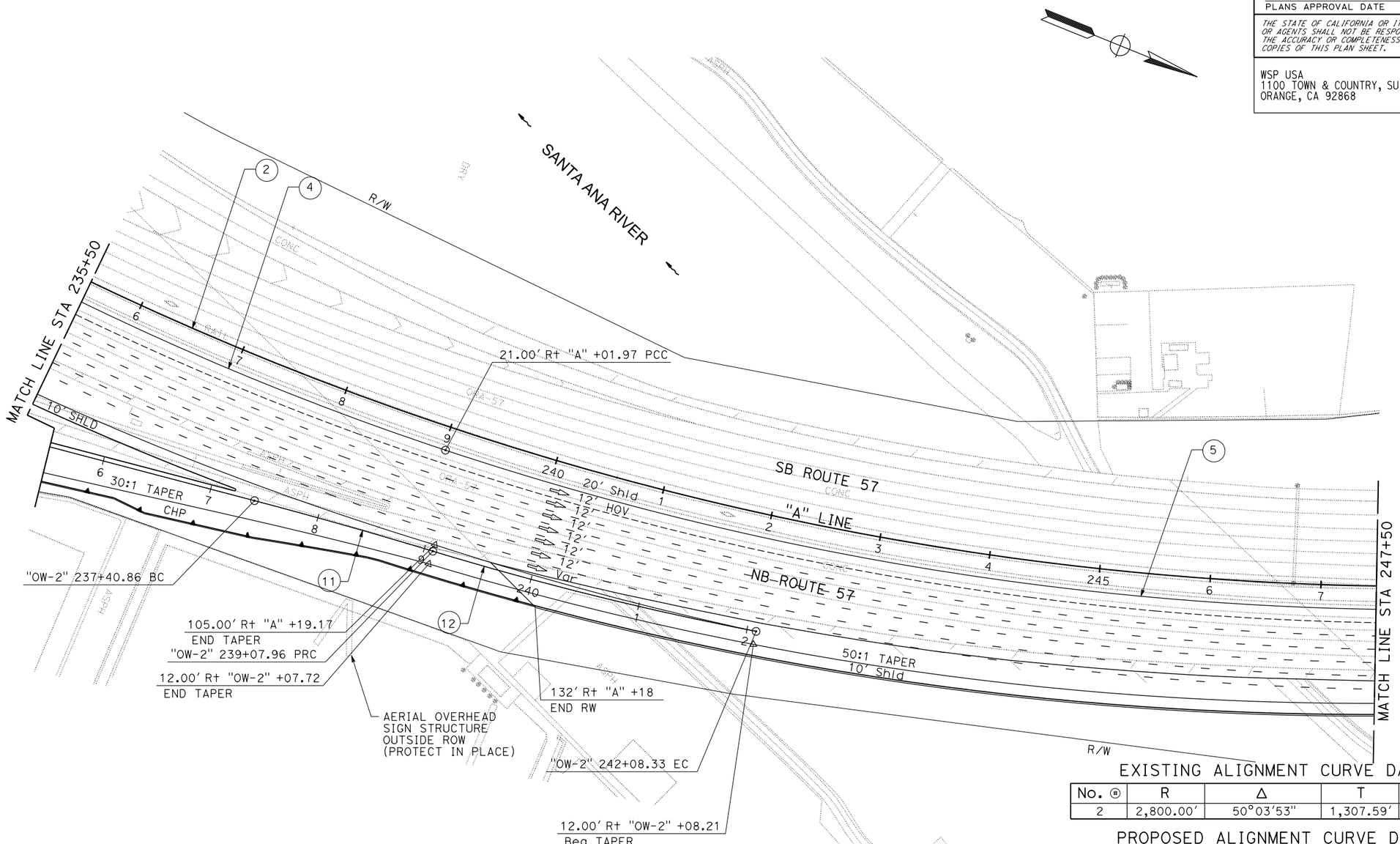

EXISTING ALIGNMENT CURVE DATA

No. ⊛	R	Δ	T	L
2	2,800.00'	50°03'53"	1,307.59'	2,446.62'

PROPOSED ALIGNMENT CURVE DATA

No. ⊛	R	Δ	T	L
4	2,700.00'	29°32'05"	711.73'	1,391.79'
5	2,821.00'	22°14'30"	554.52'	1,095.08'
11	4,412.92'	02°10'10"	83.56'	167.10'
12	2,905.00'	05°55'27"	150.32'	300.37'

LAYOUT ALTERNATIVE 2

SCALE 1" = 50'

L-2

REVISED BY | DATE REVISED

CALCULATED-DESIGNED BY | CHECKED BY

FUNCTIONAL SUPERVISOR

STATE OF CALIFORNIA - DEPARTMENT OF TRANSPORTATION

Caltrans

SR57_Katella_Alt2-EA002.dgn

LAST REVISION 00-00-00 | DATE PLOTTED => 15-FEB-2018 | TIME PLOTTED => 16:30

BORDER LAST REVISED 7/2/2010 | USERNAME => HernandezH | DGN FILE => SR57_Katella_Alt2-EA002.dgn | RELATIVE BORDER SCALE IS IN INCHES 0 1 2 3 | UNIT 0000 | PROJECT NUMBER & PHASE 00000000001

Dist	COUNTY	ROUTE	POST MILES TOTAL PROJECT	SHEET No.	TOTAL SHEETS
12	ORA	57	11.5/12.5	3	5

REGISTERED CIVIL ENGINEER DATE

PLANS APPROVAL DATE

REGISTERED PROFESSIONAL ENGINEER No. Exp. CIVIL STATE OF CALIFORNIA

THE STATE OF CALIFORNIA OR ITS OFFICERS OR AGENTS SHALL NOT BE RESPONSIBLE FOR THE ACCURACY OR COMPLETENESS OF SCANNED COPIES OF THIS PLAN SHEET.

WSP USA
1100 TOWN & COUNTRY, SUITE 200
ORANGE, CA 92868

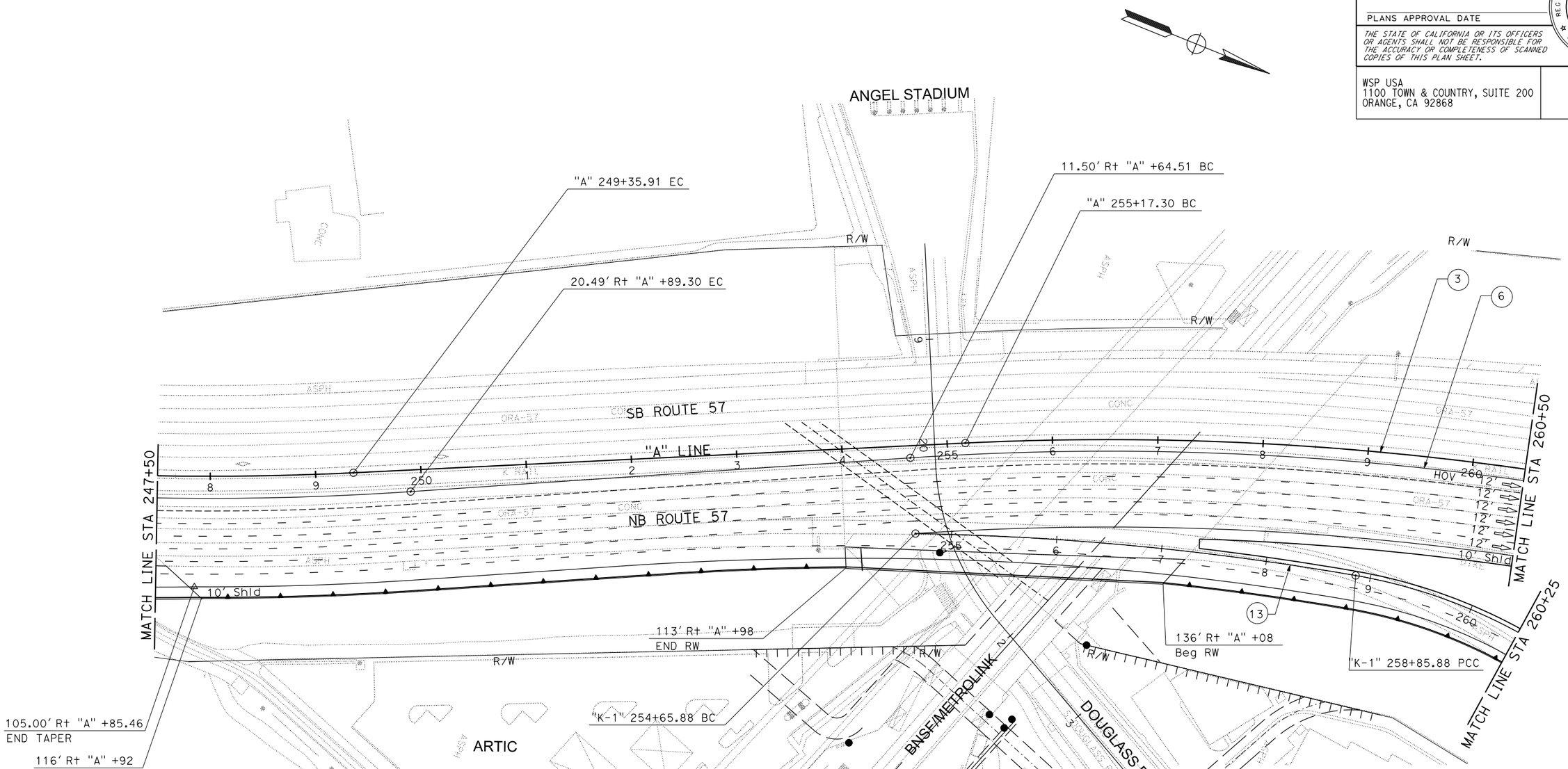

EXISTING ALIGNMENT CURVE DATA

No. ⊕	R	Δ	T	L
3	2,800.00′	44°04′53″	1,135.96′	2,158.30′

PROPOSED ALIGNMENT CURVE DATA

No. ⊕	R	Δ	T	L
6	2,789.00′	17°06′03″	419.33′	832.42′
13	2,717.00′	08°51′25″	210.42′	420.00′

LAYOUT ALTERNATIVE 2

SCALE 1" = 50′

L-3

REVISED BY | DATE REVISED

CALCULATED- DESIGNED BY | CHECKED BY

FUNCTIONAL SUPERVISOR

STATE OF CALIFORNIA - DEPARTMENT OF TRANSPORTATION

Caltrans

SR57_Katella_Alt2-EA003.dgn

LAST REVISION 00-00-00 | DATE PLOTTED => 15-FEB-2018 | TIME PLOTTED => 16:30

BORDER LAST REVISED 7/2/2010 | USERNAME => HernandezH | DGN FILE => SR57_Katella_Alt2-EA003.dgn | RELATIVE BORDER SCALE IS IN INCHES 0 1 2 3 | UNIT 0000 | PROJECT NUMBER & PHASE 00000000001

Dist	COUNTY	ROUTE	POST MILES TOTAL PROJECT	SHEET No.	TOTAL SHEETS
12	ORA	57	11.5/12.5	4	5

REGISTERED CIVIL ENGINEER DATE

PLANS APPROVAL DATE

REGISTERED PROFESSIONAL ENGINEER No. Exp. CIVIL STATE OF CALIFORNIA

THE STATE OF CALIFORNIA OR ITS OFFICERS OR AGENTS SHALL NOT BE RESPONSIBLE FOR THE ACCURACY OR COMPLETENESS OF SCANNED COPIES OF THIS PLAN SHEET.

WSP USA
1100 TOWN & COUNTRY, SUITE 200
ORANGE, CA 92868

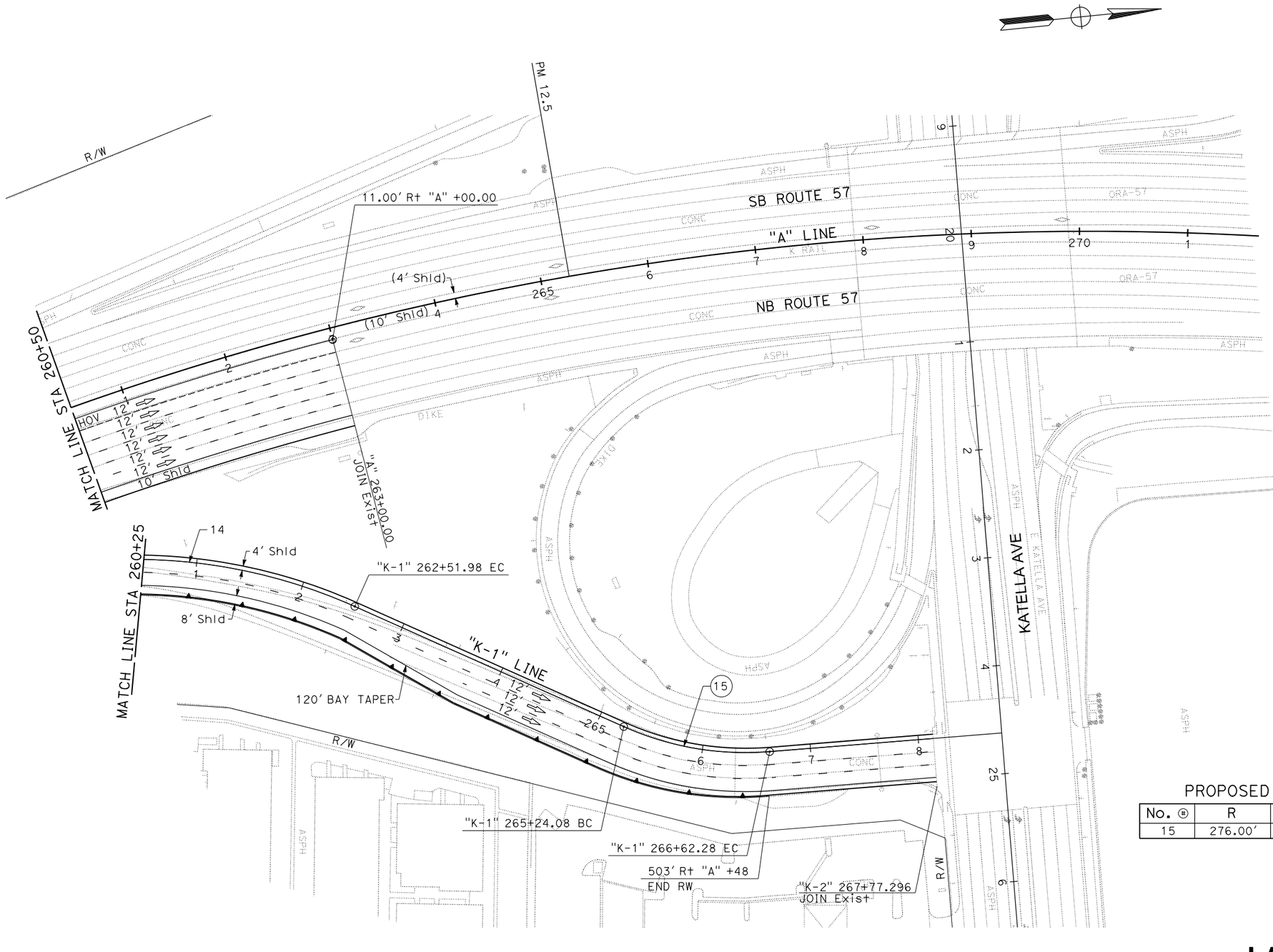

PROPOSED ALIGNMENT CURVE DATA

No. ⊕	R	Δ	T	L
15	276.00'	28°41'21"	70.58'	138.20'

LAYOUT ALTERNATIVE 2

SCALE 1" = 50'

L-4

REVISED BY | DATE REVISED
CALCULATED-DESIGNED BY | CHECKED BY
FUNCTIONAL SUPERVISOR

STATE OF CALIFORNIA - DEPARTMENT OF TRANSPORTATION
Caltrans

SR57_Katella_Alt2-EA004.dgn

LAST REVISION 00-00-00 | DATE PLOTTED => 15-FEB-2018 | TIME PLOTTED => 16:30

Dist	COUNTY	ROUTE	POST MILES TOTAL PROJECT	SHEET No.	TOTAL SHEETS
12	ORA	57	11.5/12.5	5	5

REGISTERED CIVIL ENGINEER DATE

PLANS APPROVAL DATE

REGISTERED PROFESSIONAL ENGINEER No. Exp. CIVIL STATE OF CALIFORNIA

THE STATE OF CALIFORNIA OR ITS OFFICERS OR AGENTS SHALL NOT BE RESPONSIBLE FOR THE ACCURACY OR COMPLETENESS OF SCANNED COPIES OF THIS PLAN SHEET.

WSP USA
1100 TOWN & COUNTRY, SUITE 200
ORANGE, CA 92868

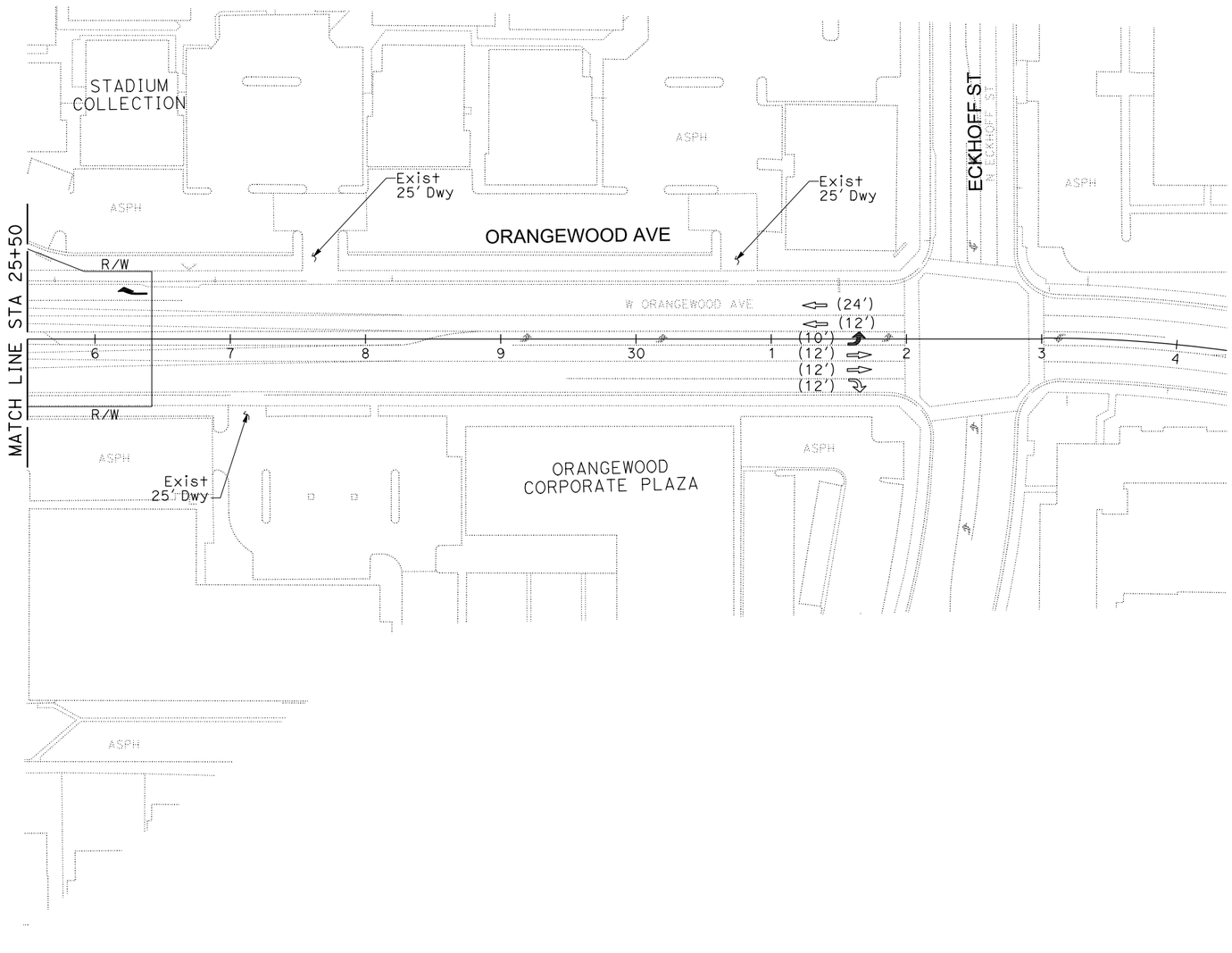

LAYOUT ALTERNATIVE 2

SCALE 1" = 50'

L-5

REVISED BY | DATE REVISED

CALCULATED-DESIGNED BY | CHECKED BY

FUNCTIONAL SUPERVISOR

STATE OF CALIFORNIA - DEPARTMENT OF TRANSPORTATION

Caltrans

SR57_Katella_Alt2-EA005.dgn

LAST REVISION 00-00-00 | DATE PLOTTED => 23-JUL-2018 | TIME PLOTTED => 09:18

BORDER LAST REVISED 7/2/2010 | USERNAME => USXP668477 | DGN FILE => SR57_Katella_Alt2-EA005.dgn | RELATIVE BORDER SCALE IS IN INCHES 0 1 2 3 | UNIT 0000 | PROJECT NUMBER & PHASE 00000000001

Dist	COUNTY	ROUTE	POST MILES TOTAL PROJECT	SHEET No.	TOTAL SHEETS
12	ORA	57	11.5/12.5	1	5

REGISTERED CIVIL ENGINEER DATE

PLANS APPROVAL DATE

REGISTERED PROFESSIONAL ENGINEER No. Exp. CIVIL STATE OF CALIFORNIA

THE STATE OF CALIFORNIA OR ITS OFFICERS OR AGENTS SHALL NOT BE RESPONSIBLE FOR THE ACCURACY OR COMPLETENESS OF SCANNED COPIES OF THIS PLAN SHEET.

WSP USA
1100 TOWN & COUNTRY, SUITE 200
ORANGE, CA 92868

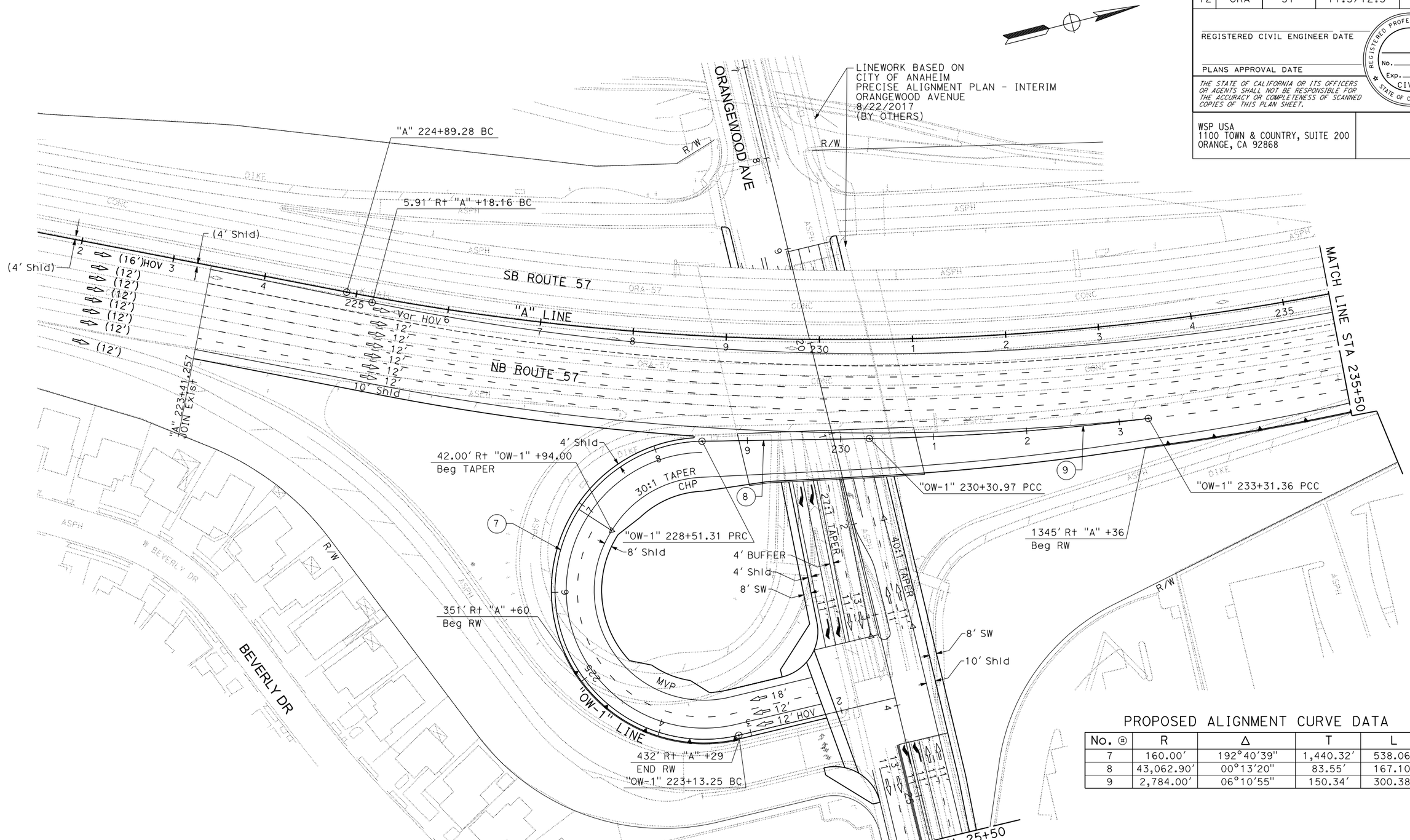

PROPOSED ALIGNMENT CURVE DATA

No.	R	Δ	T	L
7	160.00'	192°40'39"	1,440.32'	538.06'
8	43,062.90'	00°13'20"	83.55'	167.10'
9	2,784.00'	06°10'55"	150.34'	300.38'

LAYOUT
ALTERNATIVE 2A

SCALE 1" = 50'

L-1

REVISED BY | DATE REVISED | CALCULATED-DESIGNED BY | CHECKED BY | FUNCTIONAL SUPERVISOR

STATE OF CALIFORNIA - DEPARTMENT OF TRANSPORTATION

Caltrans

SR57_Katella_Alt2a-EA001.dgn

LAST REVISION 00-00-00 | DATE PLOTTED => 15-FEB-2018 | TIME PLOTTED => 16:30

BORDER LAST REVISED 7/2/2010 | USERNAME => HernandezH | DGN FILE => SR57_Katella_Alt2a-EA001.dgn | RELATIVE BORDER SCALE IS IN INCHES 0 1 2 3 | UNIT 0000 | PROJECT NUMBER & PHASE 00000000001

Dist	COUNTY	ROUTE	POST MILES TOTAL PROJECT	SHEET No.	TOTAL SHEETS
12	ORA	57	11.5/12.5	2	5

REGISTERED CIVIL ENGINEER DATE

PLANS APPROVAL DATE

REGISTERED PROFESSIONAL ENGINEER No. Exp. CIVIL STATE OF CALIFORNIA

THE STATE OF CALIFORNIA OR ITS OFFICERS OR AGENTS SHALL NOT BE RESPONSIBLE FOR THE ACCURACY OR COMPLETENESS OF SCANNED COPIES OF THIS PLAN SHEET.

WSP USA
1100 TOWN & COUNTRY, SUITE 200
ORANGE, CA 92868

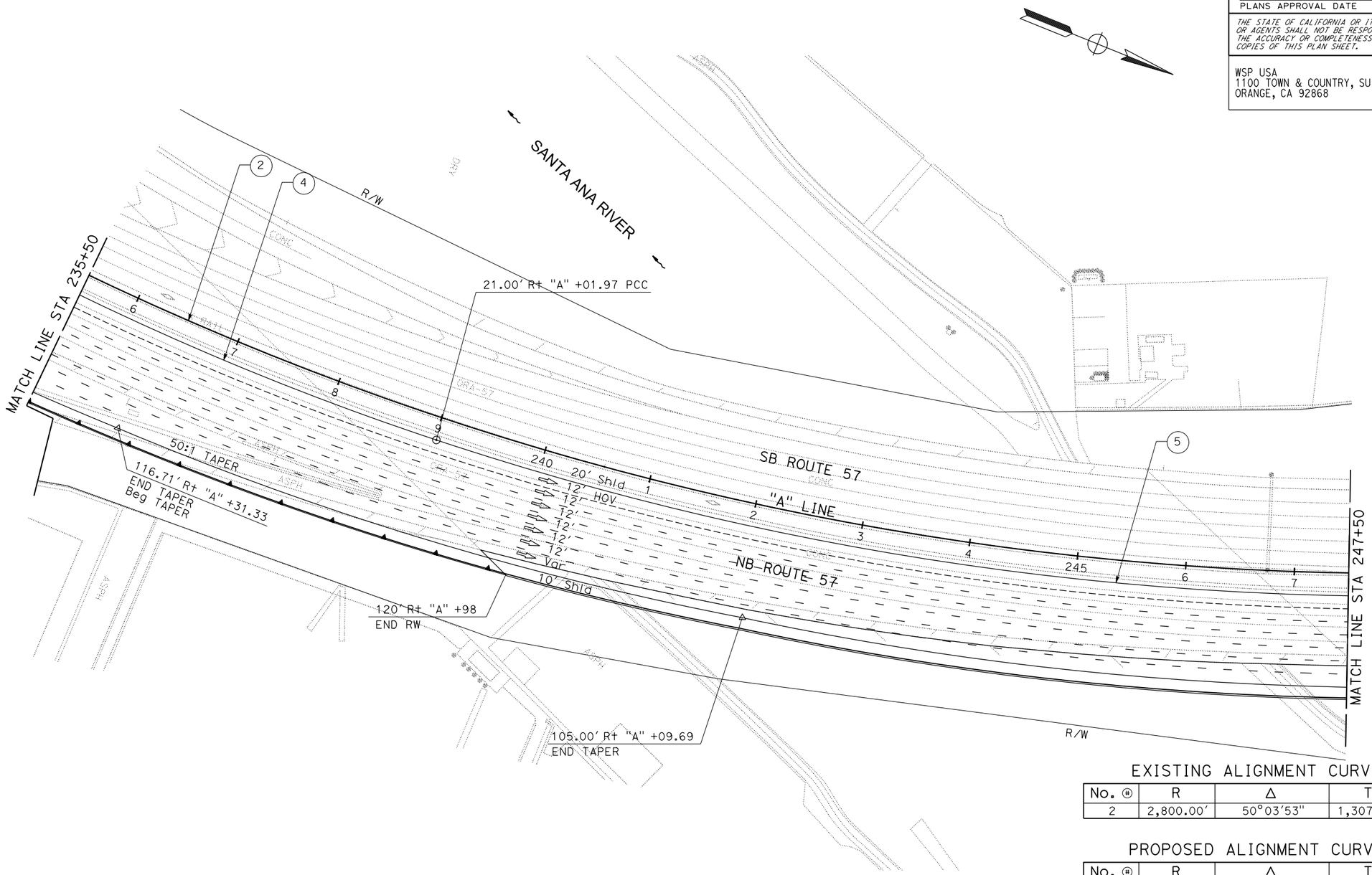

EXISTING ALIGNMENT CURVE DATA

No. ⊛	R	Δ	T	L
2	2,800.00'	50°03'53"	1,307.59'	2,446.62'

PROPOSED ALIGNMENT CURVE DATA

No. ⊛	R	Δ	T	L
4	2,700.00'	29°32'05"	711.73'	1,391.79'
5	2,821.00'	22°14'30"	554.52'	1,095.08'

LAYOUT
ALTERNATIVE 2A

SCALE 1" = 50'

L-2

REVISED BY	DATE REVISED

CALCULATED-DESIGNED BY
CHECKED BY
FUNCTIONAL SUPERVISOR

STATE OF CALIFORNIA - DEPARTMENT OF TRANSPORTATION
Caltrans

SR57_Katella_Alt2a-EA002.dgn

LAST REVISION 00-00-00
DATE PLOTTED => 15-FEB-2018
TIME PLOTTED => 16:30

Dist	COUNTY	ROUTE	POST MILES TOTAL PROJECT	SHEET No.	TOTAL SHEETS
12	ORA	57	11.5/12.5	3	5

REGISTERED CIVIL ENGINEER DATE

PLANS APPROVAL DATE

REGISTERED PROFESSIONAL ENGINEER No. Exp. CIVIL STATE OF CALIFORNIA

THE STATE OF CALIFORNIA OR ITS OFFICERS OR AGENTS SHALL NOT BE RESPONSIBLE FOR THE ACCURACY OR COMPLETENESS OF SCANNED COPIES OF THIS PLAN SHEET.

WSP USA
1100 TOWN & COUNTRY, SUITE 200
ORANGE, CA 92868

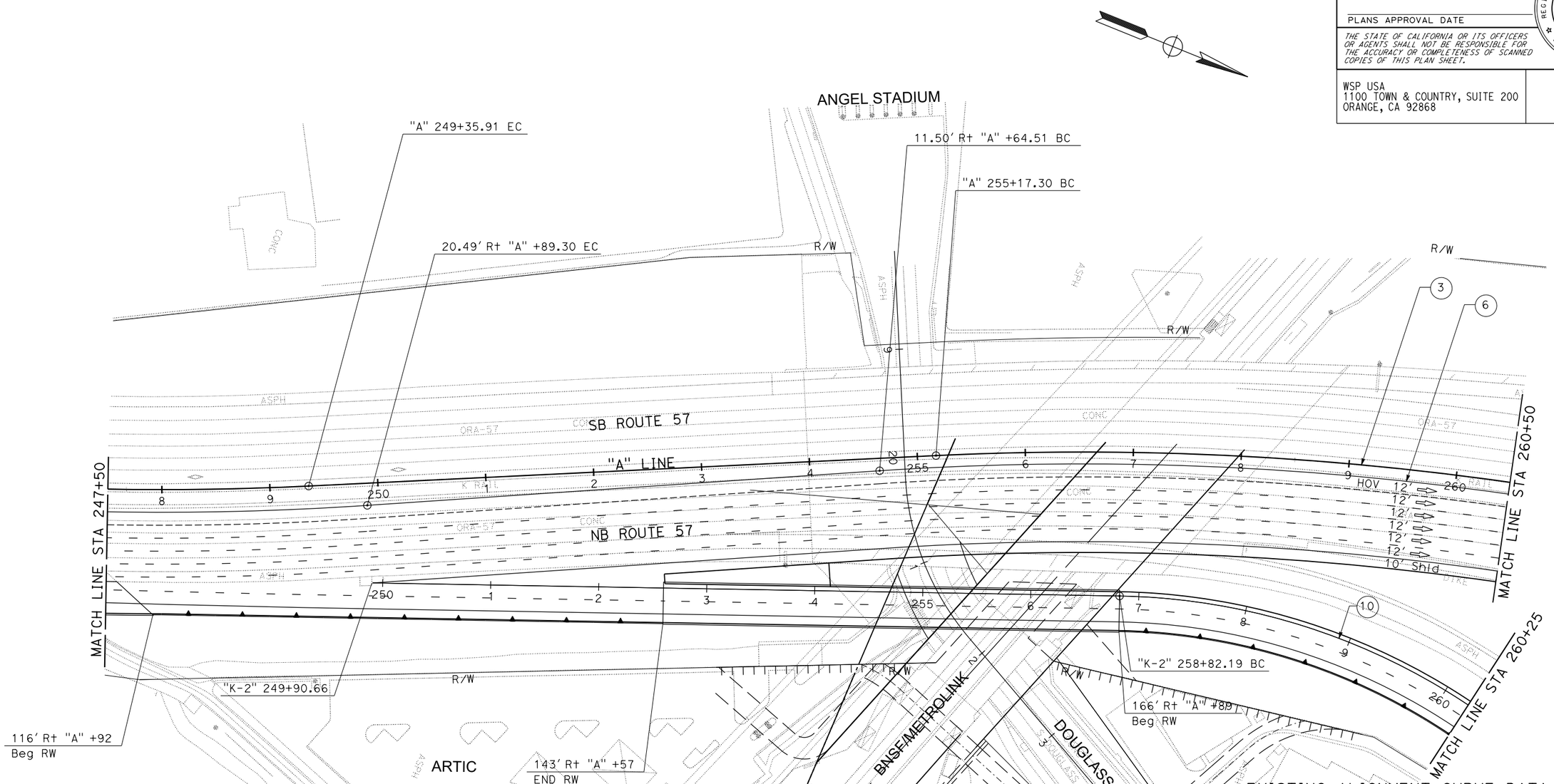

EXISTING ALIGNMENT CURVE DATA

No. ⊕	R	Δ	T	L
3	2,800.00'	44°04'53"	1,135.96'	2,158.30'

PROPOSED ALIGNMENT CURVE DATA

No. ⊕	R	Δ	T	L
6	2,789.00'	17°06'03"	419.33'	832.42'
10	600.00'	42°02'56"	230.61'	440.33'

LAYOUT
ALTERNATIVE 2A

SCALE 1" = 50'

L-3

REVISED BY	DATE REVISED

CALCULATED-DESIGNED BY

CHECKED BY

FUNCTIONAL SUPERVISOR

STATE OF CALIFORNIA - DEPARTMENT OF TRANSPORTATION

Caltrans

SR57_Katella_Alt2a-EA003.dgn

LAST REVISION 00-00-00 | DATE PLOTTED => 15-FEB-2018 | TIME PLOTTED => 16:30

Dist	COUNTY	ROUTE	POST MILES TOTAL PROJECT	SHEET No.	TOTAL SHEETS
12	ORA	57	11.5/12.5	4	5

REGISTERED CIVIL ENGINEER DATE

PLANS APPROVAL DATE

REGISTERED PROFESSIONAL ENGINEER No. Exp. CIVIL STATE OF CALIFORNIA

THE STATE OF CALIFORNIA OR ITS OFFICERS OR AGENTS SHALL NOT BE RESPONSIBLE FOR THE ACCURACY OR COMPLETENESS OF SCANNED COPIES OF THIS PLAN SHEET.

WSP USA
1100 TOWN & COUNTRY, SUITE 200
ORANGE, CA 92868

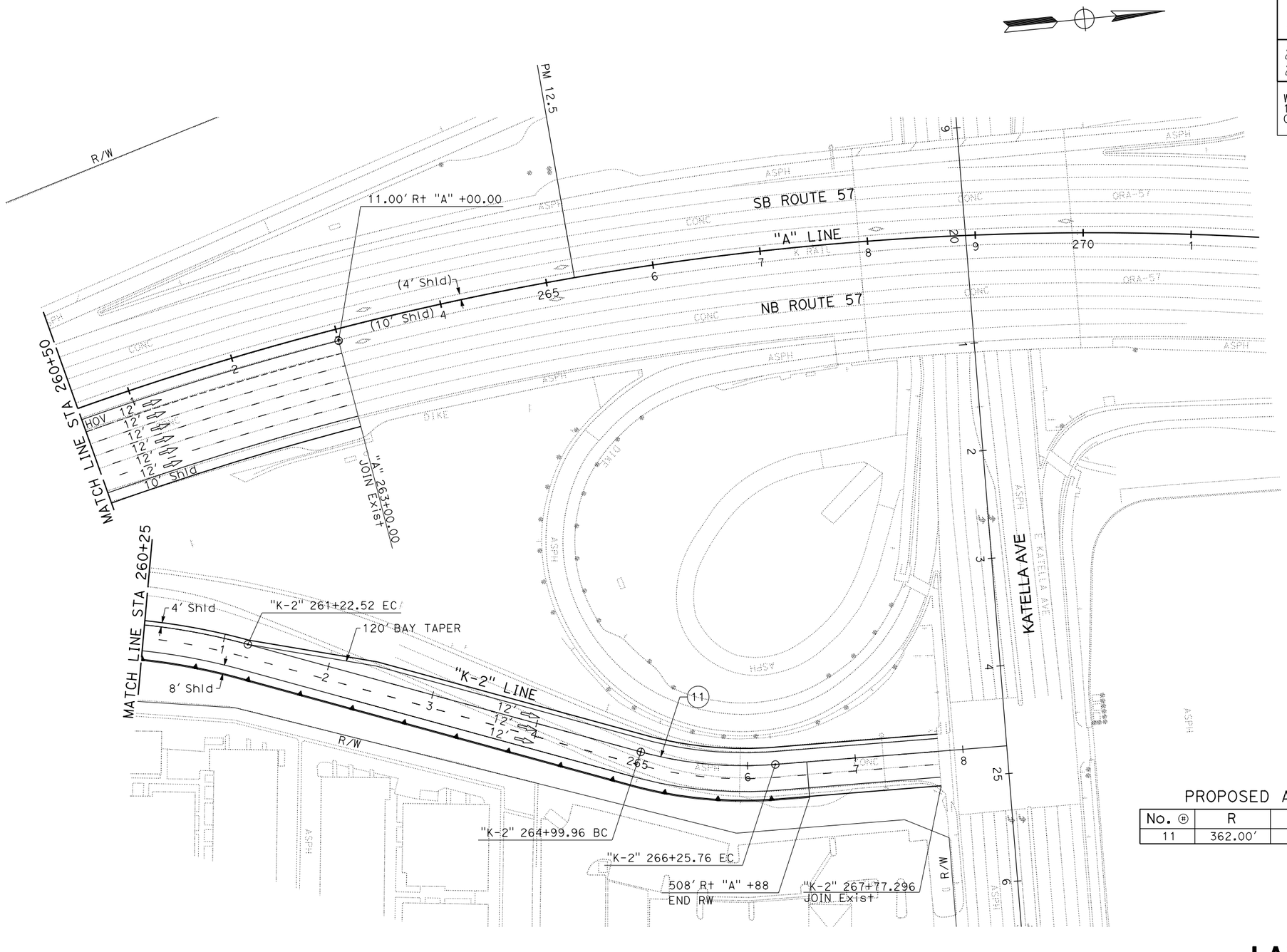

PROPOSED ALIGNMENT CURVE DATA

No. ⊕	R	Δ	T	L
11	362.00'	19°54'40"	63.54'	125.80'

LAYOUT
ALTERNATIVE 2A

SCALE 1" = 50'

L-4

REVISED BY | DATE REVISED | CALCULATED-DESIGNED BY | CHECKED BY | FUNCTIONAL SUPERVISOR

STATE OF CALIFORNIA - DEPARTMENT OF TRANSPORTATION

Caltrans

SR57_Katella_Alt2a-EA004.dgn

LAST REVISION 00-00-00 | DATE PLOTTED => 15-FEB-2018 | TIME PLOTTED => 16:30

BORDER LAST REVISED 7/2/2010 | USERNAME => HernandezH | DGN FILE => SR57_Katella_Alt2a-EA004.dgn | RELATIVE BORDER SCALE IS IN INCHES 0 1 2 3 | UNIT 0000 | PROJECT NUMBER & PHASE 00000000001

Dist	COUNTY	ROUTE	POST MILES TOTAL PROJECT	SHEET No.	TOTAL SHEETS
12	ORA	57	11.5/12.5	5	5

REGISTERED CIVIL ENGINEER DATE

PLANS APPROVAL DATE

REGISTERED PROFESSIONAL ENGINEER No. Exp. CIVIL STATE OF CALIFORNIA

THE STATE OF CALIFORNIA OR ITS OFFICERS OR AGENTS SHALL NOT BE RESPONSIBLE FOR THE ACCURACY OR COMPLETENESS OF SCANNED COPIES OF THIS PLAN SHEET.

WSP USA
1100 TOWN & COUNTRY, SUITE 200
ORANGE, CA 92868

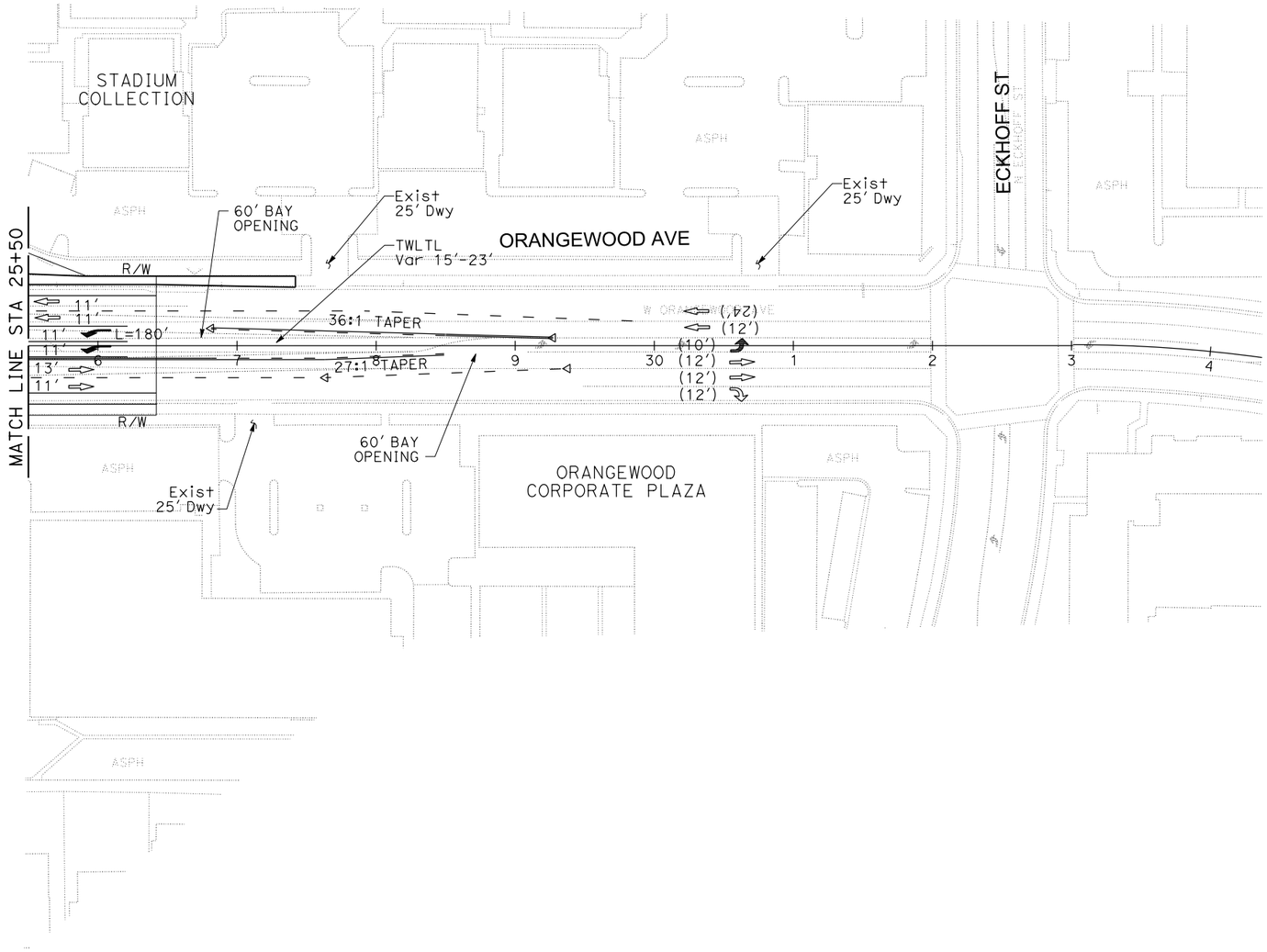

LAYOUT
ALTERNATIVE 2A

SCALE 1" = 50'

L-5

REVISED BY | DATE REVISED

CALCULATED-DESIGNED BY | CHECKED BY

FUNCTIONAL SUPERVISOR

STATE OF CALIFORNIA - DEPARTMENT OF TRANSPORTATION

Caltrans

SR57_Katella_Alt2a-EA005.dgn

LAST REVISION 00-00-00 | DATE PLOTTED => 20-JUL-2018 | TIME PLOTTED => 16:22

BORDER LAST REVISED 7/2/2010 | USERNAME => USXP668477 | DGN FILE => SR57_Katella_Alt2a-EA005.dgn | RELATIVE BORDER SCALE IS IN INCHES 0 1 2 3 | UNIT 0000 | PROJECT NUMBER & PHASE 00000000001

Dist	COUNTY	ROUTE	POST MILES TOTAL PROJECT	SHEET No.	TOTAL SHEETS
12	ORA	57	11.5/12.5	1	5

REGISTERED CIVIL ENGINEER DATE

PLANS APPROVAL DATE

REGISTERED PROFESSIONAL ENGINEER No. Exp. CIVIL STATE OF CALIFORNIA

THE STATE OF CALIFORNIA OR ITS OFFICERS OR AGENTS SHALL NOT BE RESPONSIBLE FOR THE ACCURACY OR COMPLETENESS OF SCANNED COPIES OF THIS PLAN SHEET.

WSP USA
1100 TOWN & COUNTRY, SUITE 200
ORANGE, CA 92868

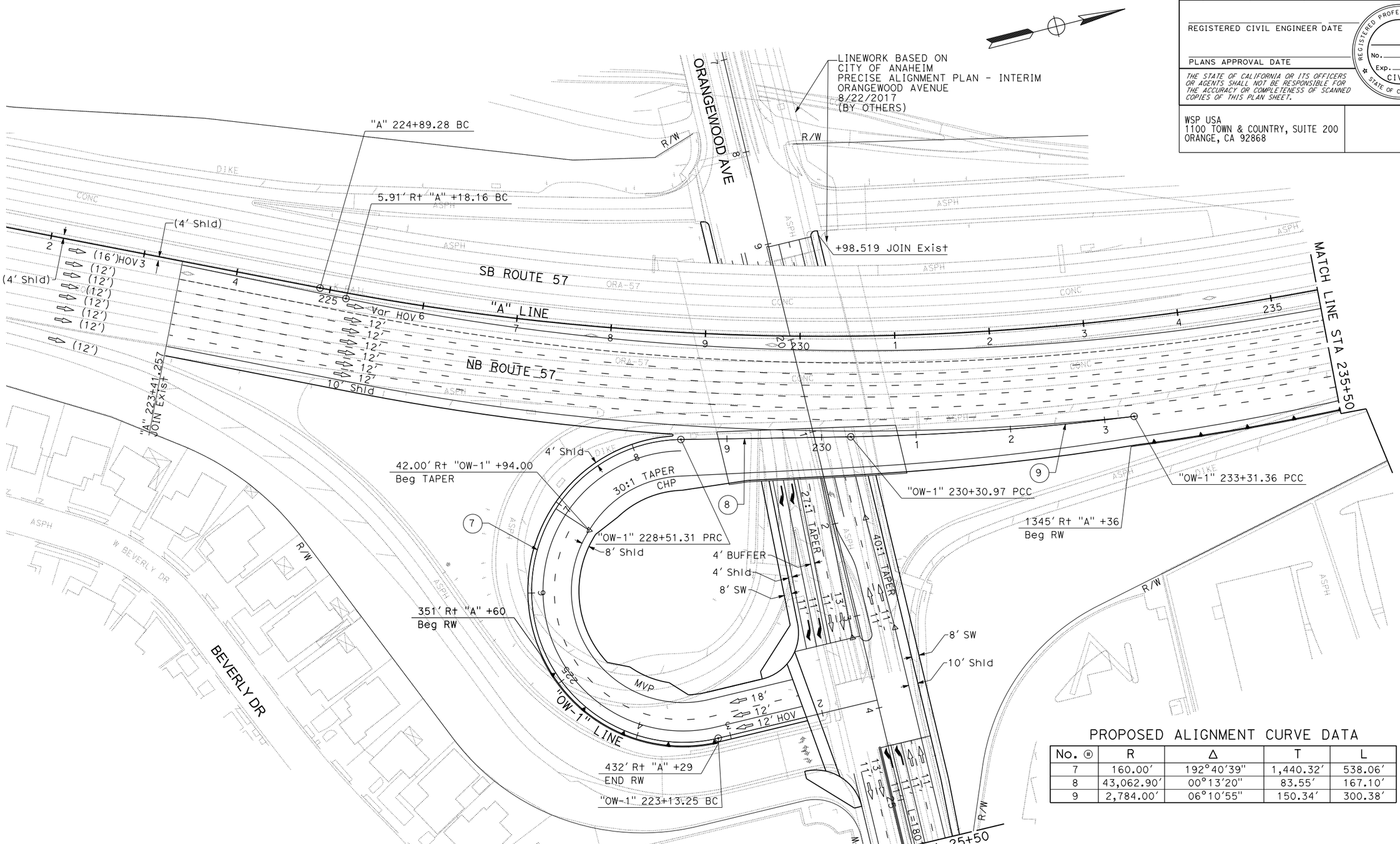

PROPOSED ALIGNMENT CURVE DATA

No. ⊕	R	Δ	T	L
7	160.00'	192°40'39"	1,440.32'	538.06'
8	43,062.90'	00°13'20"	83.55'	167.10'
9	2,784.00'	06°10'55"	150.34'	300.38'

LAYOUT
ALTERNATIVE 2B

SCALE 1" = 50'

L-1

REVISED BY | DATE REVISED

CALCULATED-DESIGNED BY | CHECKED BY

FUNCTIONAL SUPERVISOR

STATE OF CALIFORNIA - DEPARTMENT OF TRANSPORTATION

Caltrans

SR57_Katella_Alt2b-EA001.dgn

LAST REVISION 00-00-00 | DATE PLOTTED => 15-FEB-2018 | TIME PLOTTED => 16:30

BORDER LAST REVISED 7/2/2010 | USERNAME => HernandezH | DGN FILE => SR57_Katella_Alt2b-EA001.dgn | RELATIVE BORDER SCALE IS IN INCHES 0 1 2 3 | UNIT 0000 | PROJECT NUMBER & PHASE 00000000001

Dist	COUNTY	ROUTE	POST MILES TOTAL PROJECT	SHEET No.	TOTAL SHEETS
12	ORA	57	11.5/12.5	2	5

REGISTERED CIVIL ENGINEER DATE

PLANS APPROVAL DATE

REGISTERED PROFESSIONAL ENGINEER No. Exp. CIVIL STATE OF CALIFORNIA

THE STATE OF CALIFORNIA OR ITS OFFICERS OR AGENTS SHALL NOT BE RESPONSIBLE FOR THE ACCURACY OR COMPLETENESS OF SCANNED COPIES OF THIS PLAN SHEET.

WSP USA
1100 TOWN & COUNTRY, SUITE 200
ORANGE, CA 92868

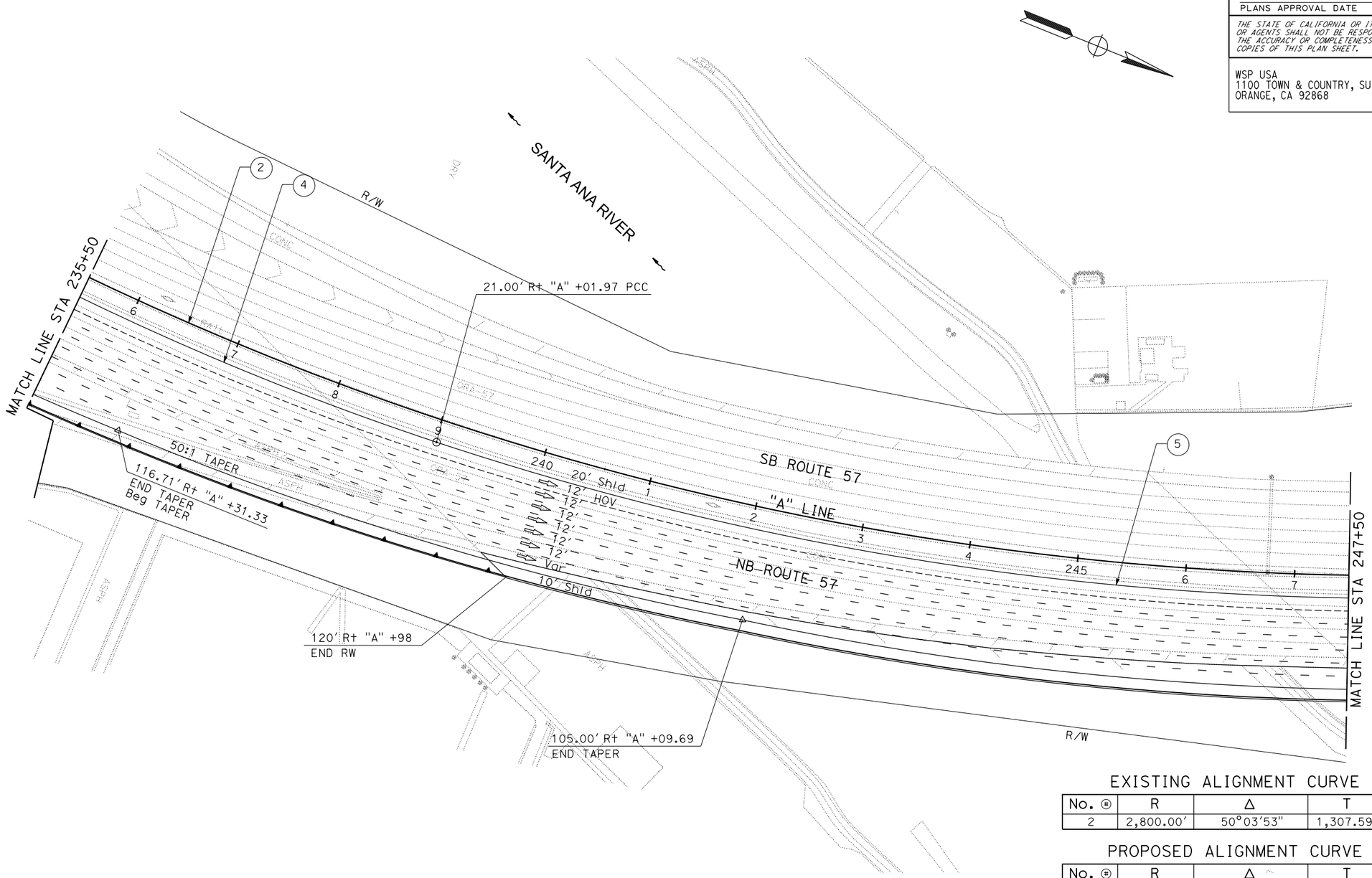

EXISTING ALIGNMENT CURVE DATA

No. ⊕	R	Δ	T	L
2	2,800.00'	50°03'53"	1,307.59'	2,446.62'

PROPOSED ALIGNMENT CURVE DATA

No. ⊕	R	Δ	T	L
4	2,700.00'	29°32'05"	711.73'	1,391.79'
5	2,821.00'	22°14'30"	554.52'	1,095.08'

LAYOUT
ALTERNATIVE 2B

SCALE 1" = 50'

L-2

REVISED BY | DATE REVISED

CALCULATED-DESIGNED BY | CHECKED BY

FUNCTIONAL SUPERVISOR

STATE OF CALIFORNIA - DEPARTMENT OF TRANSPORTATION

Caltrans

SR57_Katella_Alt2b-EA002.dgn

LAST REVISION 00-00-00 | DATE PLOTTED => 15-FEB-2018 | TIME PLOTTED => 16:30

Dist	COUNTY	ROUTE	POST MILES TOTAL PROJECT	SHEET No.	TOTAL SHEETS
12	ORA	57	11.5/12.5	3	5

REGISTERED CIVIL ENGINEER DATE

PLANS APPROVAL DATE

REGISTERED PROFESSIONAL ENGINEER No. Exp. CIVIL STATE OF CALIFORNIA

THE STATE OF CALIFORNIA OR ITS OFFICERS OR AGENTS SHALL NOT BE RESPONSIBLE FOR THE ACCURACY OR COMPLETENESS OF SCANNED COPIES OF THIS PLAN SHEET.

WSP USA
1100 TOWN & COUNTRY, SUITE 200
ORANGE, CA 92868

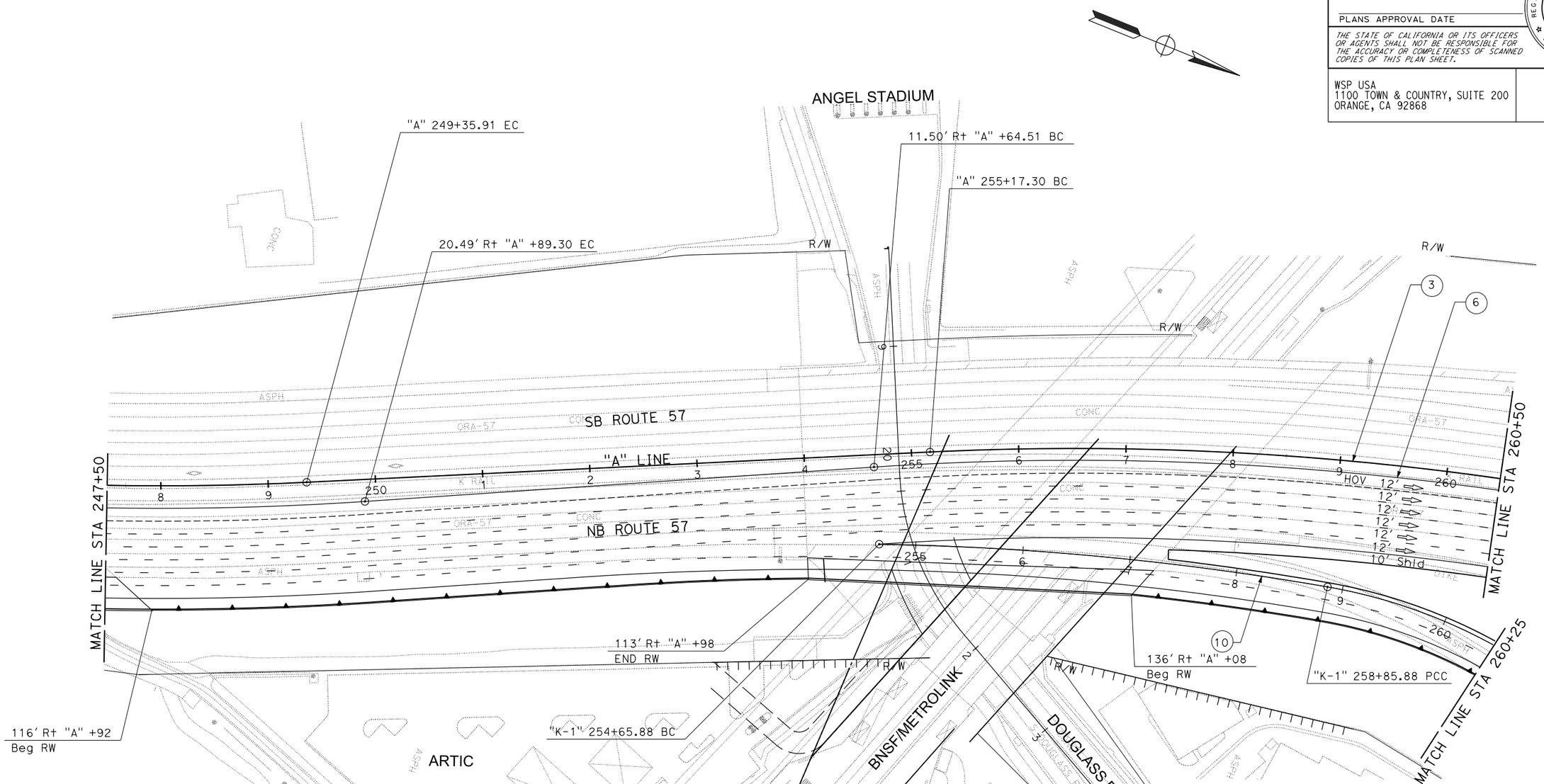

EXISTING ALIGNMENT CURVE DATA

No. ⊕	R	Δ	T	L
3	2,800.00'	44°04'53"	1,135.96'	2,158.30'

PROPOSED ALIGNMENT CURVE DATA

No. ⊕	R	Δ	T	L
6	2,789.00'	17°06'03"	419.33'	832.42'
10	2,717.00'	08°51'25"	210.42'	420.00'

LAYOUT
ALTERNATIVE 2B

SCALE 1" = 50'

L-3

REVISED BY | DATE REVISED

CALCULATED-DESIGNED BY | CHECKED BY

FUNCTIONAL SUPERVISOR

STATE OF CALIFORNIA - DEPARTMENT OF TRANSPORTATION

Caltrans

SR57_Katella_Alt2b-EA003.dgn

LAST REVISION 00-00-00 | DATE PLOTTED => 15-FEB-2018 | TIME PLOTTED => 16:30

BORDER LAST REVISED 7/2/2010 | USERNAME => HernandezH | DGN FILE => SR57_Katella_Alt2b-EA003.dgn | RELATIVE BORDER SCALE IS IN INCHES 0 1 2 3 | UNIT 0000 | PROJECT NUMBER & PHASE 00000000001

Dist	COUNTY	ROUTE	POST MILES TOTAL PROJECT	SHEET No.	TOTAL SHEETS
12	ORA	57	11.5/12.5	4	5

REGISTERED CIVIL ENGINEER DATE

PLANS APPROVAL DATE

REGISTERED PROFESSIONAL ENGINEER No. Exp. CIVIL STATE OF CALIFORNIA

THE STATE OF CALIFORNIA OR ITS OFFICERS OR AGENTS SHALL NOT BE RESPONSIBLE FOR THE ACCURACY OR COMPLETENESS OF SCANNED COPIES OF THIS PLAN SHEET.

WSP USA
1100 TOWN & COUNTRY, SUITE 200
ORANGE, CA 92868

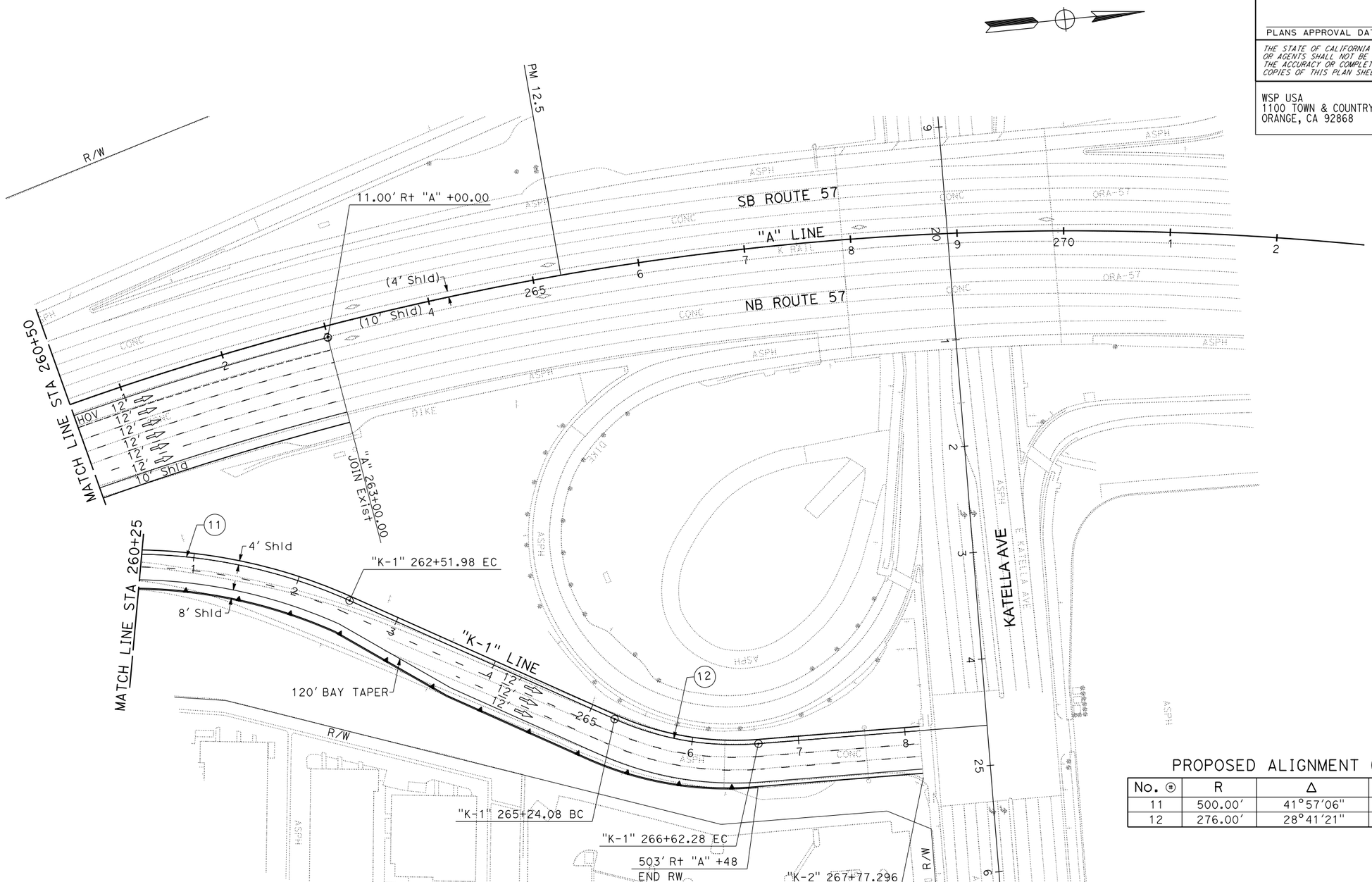

PROPOSED ALIGNMENT CURVE DATA

No. ⊕	R	Δ	T	L
11	500.00'	41°57'06"	191.69'	366.10'
12	276.00'	28°41'21"	70.58'	138.20'

LAYOUT
ALTERNATIVE 2B

SCALE 1" = 50'

L-4

REVISED BY | DATE REVISED | CALCULATED-DESIGNED BY | CHECKED BY | FUNCTIONAL SUPERVISOR

STATE OF CALIFORNIA - DEPARTMENT OF TRANSPORTATION

Caltrans

SR57_Katella_Alt2b-EA004.dgn

LAST REVISION 00-00-00 | DATE PLOTTED => 15-FEB-2018 | TIME PLOTTED => 16:30

BORDER LAST REVISED 7/2/2010 | USERNAME => HernandezH | DGN FILE => SR57_Katella_Alt2b-EA004.dgn | RELATIVE BORDER SCALE IS IN INCHES 0 1 2 3 | UNIT 0000 | PROJECT NUMBER & PHASE 00000000001

Dist	COUNTY	ROUTE	POST MILES TOTAL PROJECT	SHEET No.	TOTAL SHEETS
12	ORA	57	11.5/12.5	5	5

REGISTERED CIVIL ENGINEER DATE

PLANS APPROVAL DATE

REGISTERED PROFESSIONAL ENGINEER No. Exp. CIVIL STATE OF CALIFORNIA

THE STATE OF CALIFORNIA OR ITS OFFICERS OR AGENTS SHALL NOT BE RESPONSIBLE FOR THE ACCURACY OR COMPLETENESS OF SCANNED COPIES OF THIS PLAN SHEET.

WSP USA
1100 TOWN & COUNTRY, SUITE 200
ORANGE, CA 92868

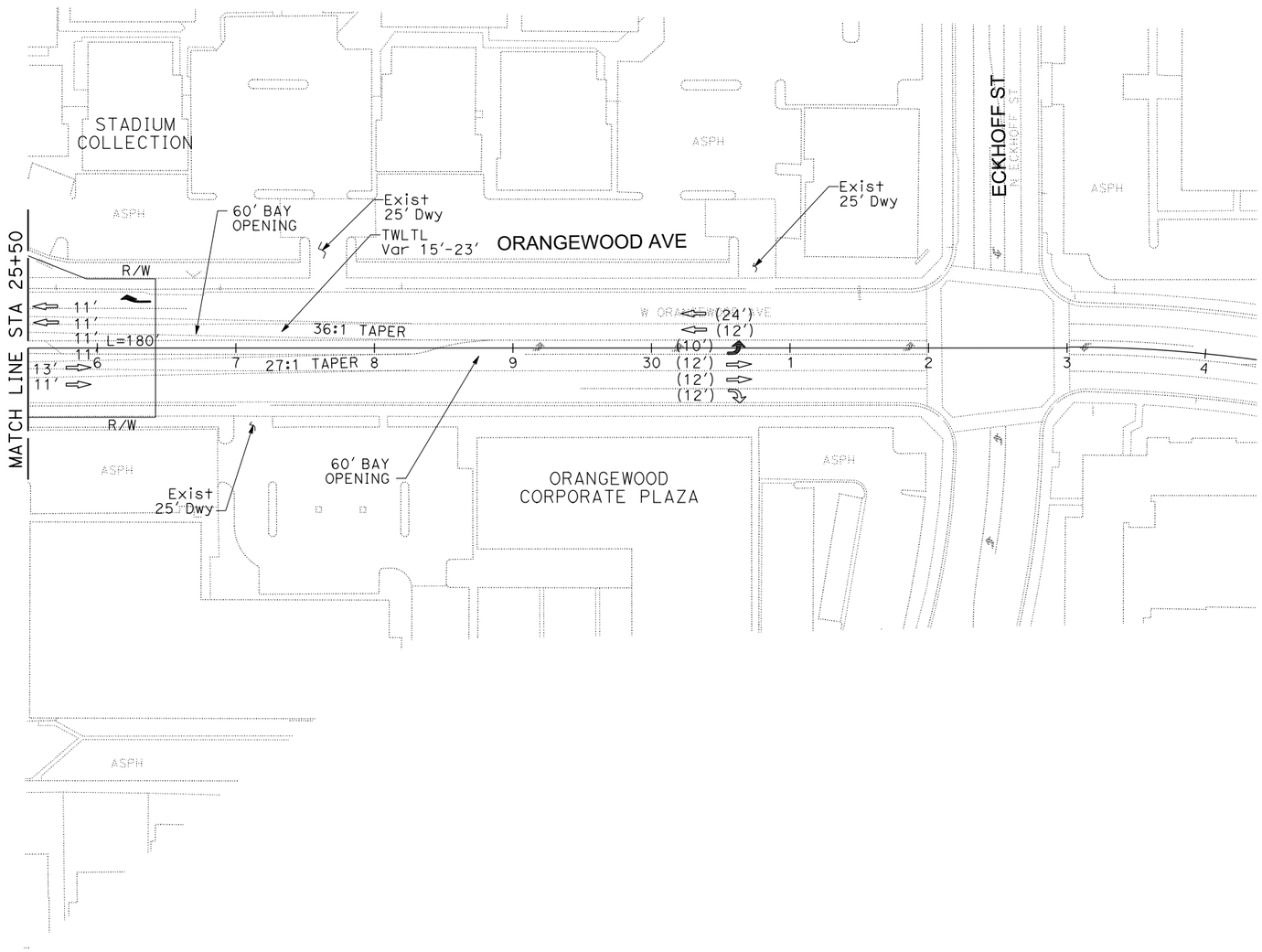

LAYOUT
ALTERNATIVE 2B

SCALE 1" = 50'

L-5

REVISED BY	DATE REVISED

CALCULATED-DESIGNED BY

CHECKED BY

FUNCTIONAL SUPERVISOR

STATE OF CALIFORNIA - DEPARTMENT OF TRANSPORTATION

Caltrans

SR57_Katella_Alt2b-EA005.dgn

LAST REVISION 00-00-00

DATE PLOTTED => 23-JUL-2018
TIME PLOTTED => 09:21

Dist	COUNTY	ROUTE	POST MILES TOTAL PROJECT	SHEET No.	TOTAL SHEETS
12	Ora	57	11.5/12.5		

REGISTERED CIVIL ENGINEER DATE

PLANS APPROVAL DATE

REGISTERED PROFESSIONAL ENGINEER No. Exp. CIVIL STATE OF CALIFORNIA

THE STATE OF CALIFORNIA OR ITS OFFICERS OR AGENTS SHALL NOT BE RESPONSIBLE FOR THE ACCURACY OR COMPLETENESS OF SCANNED COPIES OF THIS PLAN SHEET.

T.Y. LIN INTERNATIONAL
20 PACIFICA
SUITE 350
IRVINE, CA 92618

ORANGE COUNTY
TRANSPORTATION AUTHORITY
550 SOUTH MAIN STREET
ORANGE, CA 92868

NOTES:

1. DIMENSIONS OF THE PAVEMENT STRUCTURES (STRUCTURAL SECTIONS) ARE SUBJECT TO TOLERANCES SPECIFIED IN THE STANDARD SPECIFICATIONS.

EXISTING STRUCTURAL SECTIONS

A
- 0.75' PCC
- 0.50' RMCTB (B)
- 0.25' RMCTB AB
- 0.50' CLASS 4 AS

B
- 0.33' AC
- 0.50' AB
- 0.92' AS

STRUCTURAL SECTIONS

1
- 0.90' CRCP
- 0.25' HMA-A
- 0.70' CLASS 2 AS
- 0.65' BASEMENT SOIL

2
- 0.20' RHMA-G
- 0.90' HMA-A
- 1.05' CLASS 2 AB
- 0.75' BASEMENT SOIL

3
- 0.85' JPCP
- 0.25' HMA-A
- 0.70' CLASS 2 AS
- 0.70' BASEMENT SOIL

4
- 0.33' AC
- 0.50' AB
- 0.92' AS

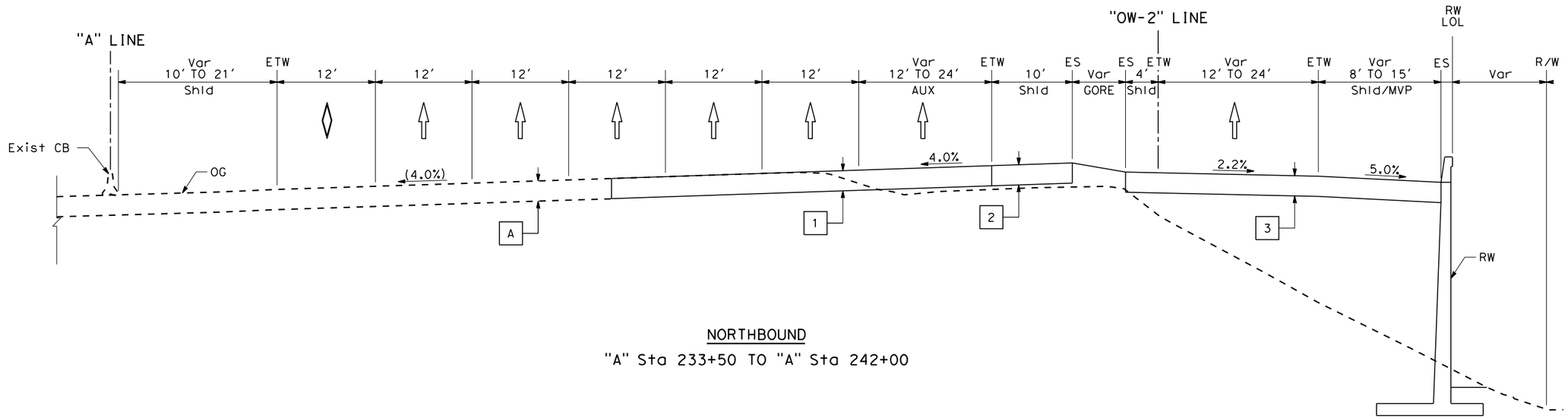

NORTHBOUND

"A" Sta 233+50 TO "A" Sta 242+00

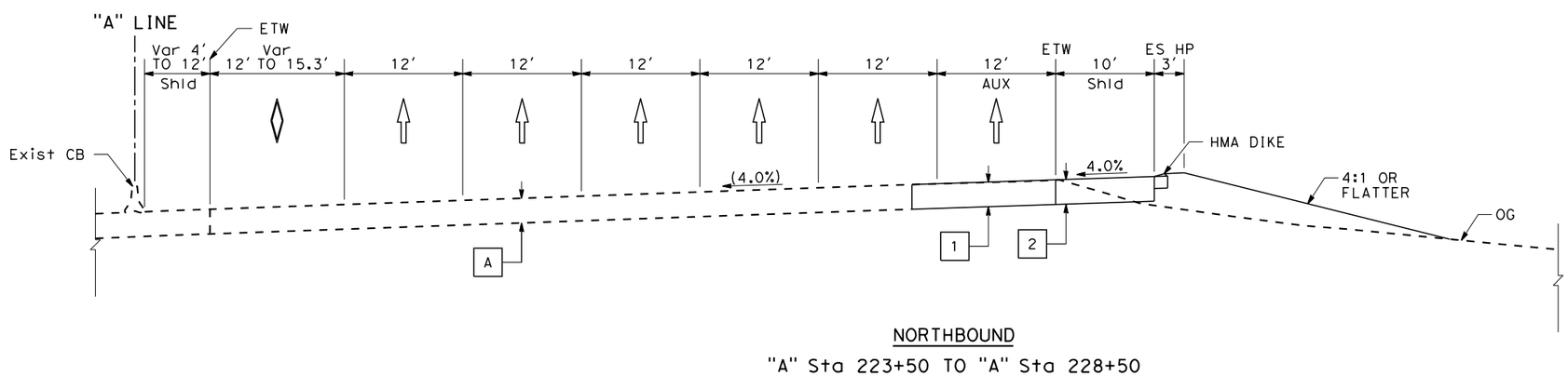

NORTHBOUND

"A" Sta 223+50 TO "A" Sta 228+50

ROUTE 57

TYPICAL CROSS SECTIONS

ALTERNATIVE 2

NO SCALE

X-1

NOT FOR CONSTRUCTION

STATE OF CALIFORNIA - DEPARTMENT OF TRANSPORTATION

Caltrans

CONSULTANT FUNCTIONAL SUPERVISOR

CALCULATED-DESIGNED BY

CHECKED BY

REVISED BY

DATE REVISED

LAST REVISION 00-00-00

DATE PLOTTED => 1/10/2018
TIME PLOTTED => 9:31:41 AM

Dist	COUNTY	ROUTE	POST MILES TOTAL PROJECT	SHEET No.	TOTAL SHEETS
12	Ora	57	11.5/12.5		

REGISTERED CIVIL ENGINEER DATE

PLANS APPROVAL DATE

REGISTERED PROFESSIONAL ENGINEER No. Exp. CIVIL STATE OF CALIFORNIA

THE STATE OF CALIFORNIA OR ITS OFFICERS OR AGENTS SHALL NOT BE RESPONSIBLE FOR THE ACCURACY OR COMPLETENESS OF SCANNED COPIES OF THIS PLAN SHEET.

T.Y. LIN INTERNATIONAL
20 PACIFICA
SUITE 350
IRVINE, CA 92618

ORANGE COUNTY
TRANSPORTATION AUTHORITY
550 SOUTH MAIN STREET
ORANGE, CA 92868

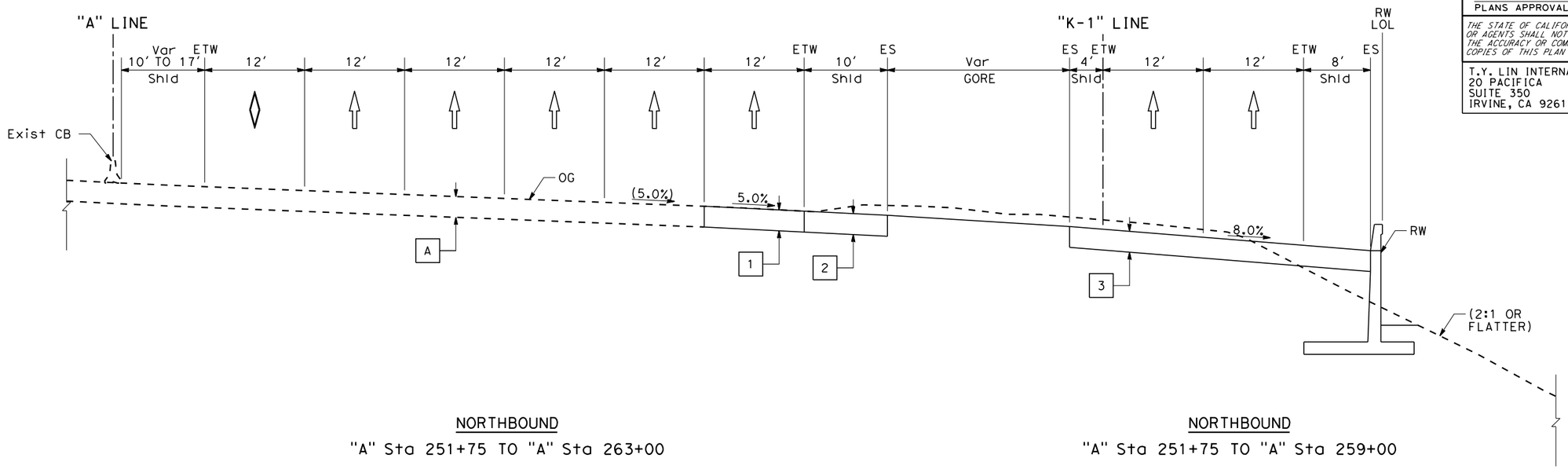

NORTHBOUND

"A" Sta 251+75 TO "A" Sta 263+00

NORTHBOUND

"A" Sta 251+75 TO "A" Sta 259+00

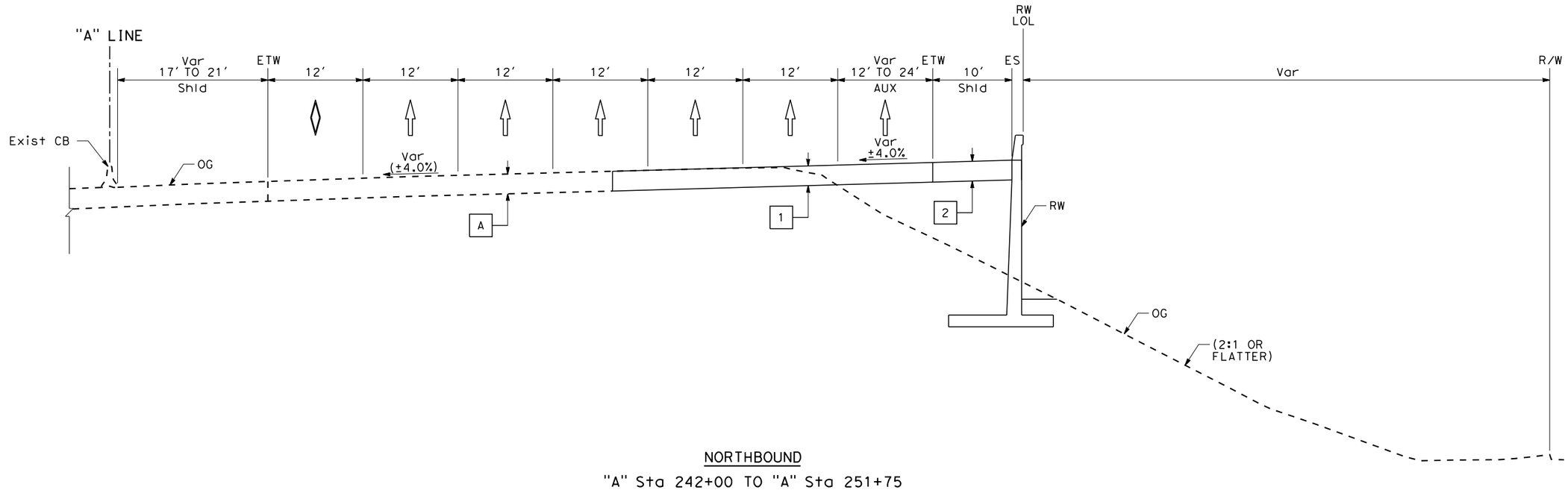

NORTHBOUND

"A" Sta 242+00 TO "A" Sta 251+75

ROUTE 57

TYPICAL CROSS SECTIONS

ALTERNATIVE 2

NO SCALE

X-2

NOT FOR CONSTRUCTION

STATE OF CALIFORNIA - DEPARTMENT OF TRANSPORTATION

Caltrans®

CONSULTANT FUNCTIONAL SUPERVISOR

CALCULATED-DESIGNED BY

CHECKED BY

REVISED BY

DATE REVISED

LAST REVISION 00-00-00

DATE PLOTTED => 1/10/2018
TIME PLOTTED => 9:31:41 AM

Dist	COUNTY	ROUTE	POST MILES TOTAL PROJECT	SHEET No.	TOTAL SHEETS
12	Ora	57	11.5/12.5		

REGISTERED CIVIL ENGINEER DATE

PLANS APPROVAL DATE

REGISTERED PROFESSIONAL ENGINEER No. Exp. CIVIL STATE OF CALIFORNIA

THE STATE OF CALIFORNIA OR ITS OFFICERS OR AGENTS SHALL NOT BE RESPONSIBLE FOR THE ACCURACY OR COMPLETENESS OF SCANNED COPIES OF THIS PLAN SHEET.

T.Y. LIN INTERNATIONAL
20 PACIFICA
SUITE 350
IRVINE, CA 92618

ORANGE COUNTY
TRANSPORTATION AUTHORITY
550 SOUTH MAIN STREET
ORANGE, CA 92868

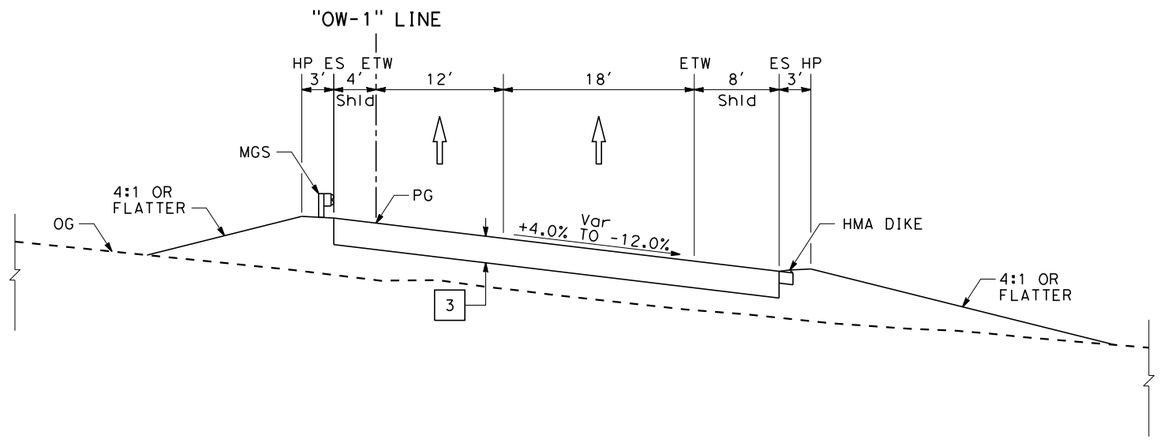

NORTHBOUND

"OW-1" Sta 225+50 TO "OW-1" Sta 227+50

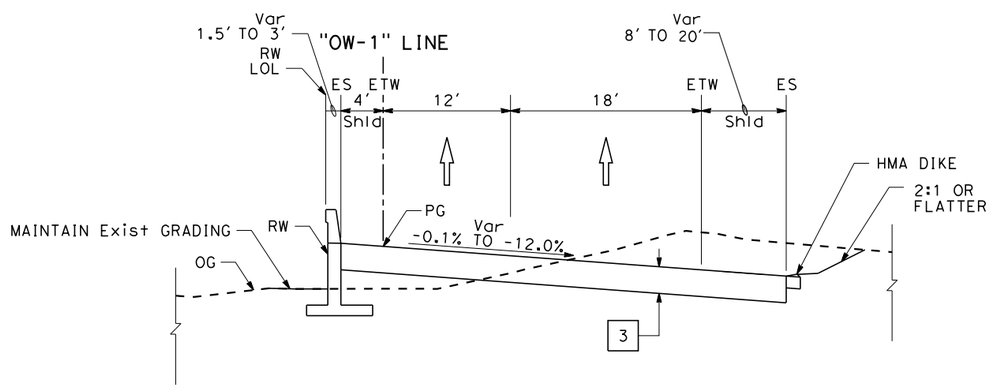

NORTHBOUND

"OW-1" Sta 222+50 TO "OW-1" Sta 225+50

ORANGEWOOD Ave LOOP ON-RAMP

TYPICAL CROSS SECTIONS

ALTERNATIVE 2

NO SCALE

X-3

NOT FOR CONSTRUCTION

STATE OF CALIFORNIA - DEPARTMENT OF TRANSPORTATION

Caltrans

CONSULTANT FUNCTIONAL SUPERVISOR

CALCULATED-DESIGNED BY

CHECKED BY

REVISED BY

DATE REVISED

LAST REVISION 00-00-00

DATE PLOTTED => 1/10/2018
TIME PLOTTED => 9:31:42 AM

Dist	COUNTY	ROUTE	POST MILES TOTAL PROJECT	SHEET No.	TOTAL SHEETS
12	Ora	57	11.5/12.5		

REGISTERED CIVIL ENGINEER DATE

PLANS APPROVAL DATE

REGISTERED PROFESSIONAL ENGINEER No. Exp. CIVIL STATE OF CALIFORNIA

THE STATE OF CALIFORNIA OR ITS OFFICERS OR AGENTS SHALL NOT BE RESPONSIBLE FOR THE ACCURACY OR COMPLETENESS OF SCANNED COPIES OF THIS PLAN SHEET.

T.Y. LIN INTERNATIONAL
20 PACIFICA
SUITE 350
IRVINE, CA 92618

ORANGE COUNTY
TRANSPORTATION AUTHORITY
550 SOUTH MAIN STREET
ORANGE, CA 92868

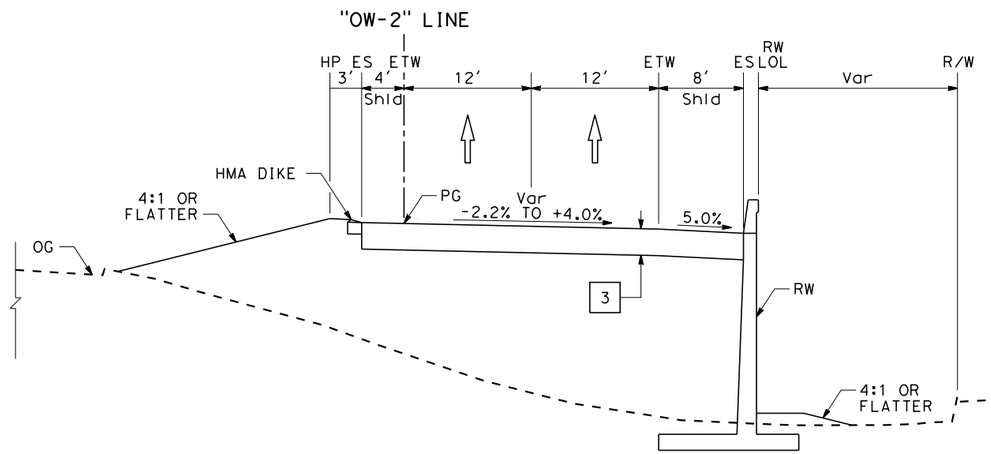

NORTHBOUND

"OW-2" Sta 232+00 TO "OW-2" Sta 235+50

ORANGEWOOD Ave NB DIRECT ON-RAMP

TYPICAL CROSS SECTIONS

ALTERNATIVE 2

NO SCALE

X-4

NOT FOR CONSTRUCTION

STATE OF CALIFORNIA - DEPARTMENT OF TRANSPORTATION

Caltrans

CONSULTANT FUNCTIONAL SUPERVISOR

CALCULATED-DESIGNED BY

CHECKED BY

REVISED BY

DATE REVISED

LAST REVISION 00-00-00

DATE PLOTTED => 1/10/2018
TIME PLOTTED => 9:31:42 AM

Dist	COUNTY	ROUTE	POST MILES TOTAL PROJECT	SHEET No.	TOTAL SHEETS
12	Ora	57	11.5/12.5		

REGISTERED CIVIL ENGINEER DATE

PLANS APPROVAL DATE

REGISTERED PROFESSIONAL ENGINEER No. Exp. CIVIL STATE OF CALIFORNIA

THE STATE OF CALIFORNIA OR ITS OFFICERS OR AGENTS SHALL NOT BE RESPONSIBLE FOR THE ACCURACY OR COMPLETENESS OF SCANNED COPIES OF THIS PLAN SHEET.

T.Y. LIN INTERNATIONAL
20 PACIFICA
SUITE 350
IRVINE, CA 92618

ORANGE COUNTY
TRANSPORTATION AUTHORITY
550 SOUTH MAIN STREET
ORANGE, CA 92868

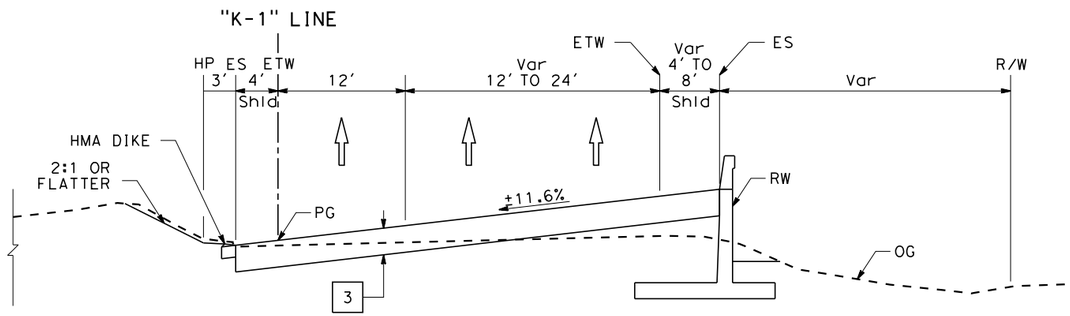

NORTHBOUND

"K-1" Sta 262+50 TO "K-1" 268+00

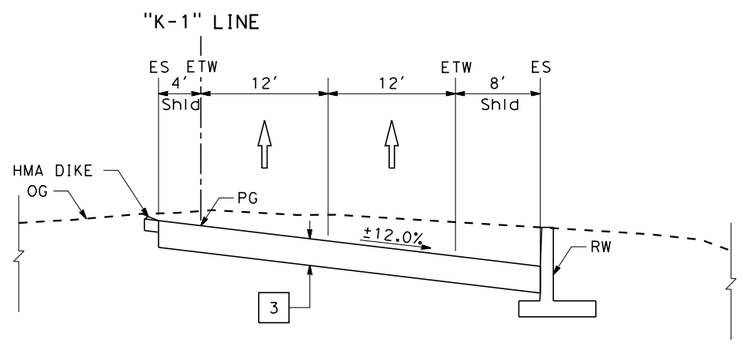

NORTHBOUND

"K-1" Sta 259+00 TO "K-1" 262+50

KATELLA Ave NB OFF-RAMP

TYPICAL CROSS SECTIONS

ALTERNATIVE 2

NO SCALE

X-5

NOT FOR CONSTRUCTION

STATE OF CALIFORNIA - DEPARTMENT OF TRANSPORTATION

Caltrans

CONSULTANT FUNCTIONAL SUPERVISOR

CALCULATED-DESIGNED BY

CHECKED BY

REVISED BY

DATE REVISED

LAST REVISION 00-00-00

DATE PLOTTED => 1/10/2018
TIME PLOTTED => 9:31:42 AM

Dist	COUNTY	ROUTE	POST MILES TOTAL PROJECT	SHEET No.	TOTAL SHEETS
12	Ora	57	11.5/12.5		

REGISTERED CIVIL ENGINEER DATE

PLANS APPROVAL DATE

REGISTERED PROFESSIONAL ENGINEER No. Exp. CIVIL STATE OF CALIFORNIA

THE STATE OF CALIFORNIA OR ITS OFFICERS OR AGENTS SHALL NOT BE RESPONSIBLE FOR THE ACCURACY OR COMPLETENESS OF SCANNED COPIES OF THIS PLAN SHEET.

T.Y. LIN INTERNATIONAL
20 PACIFICA
SUITE 350
IRVINE, CA 92618

ORANGE COUNTY
TRANSPORTATION AUTHORITY
550 SOUTH MAIN STREET
ORANGE, CA 92868

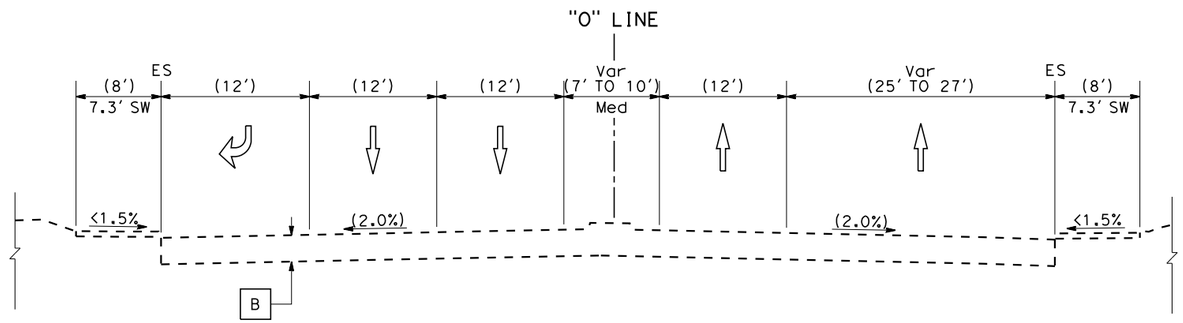

EASTBOUND

"O" Sta 24+00 TO "O" 26+50

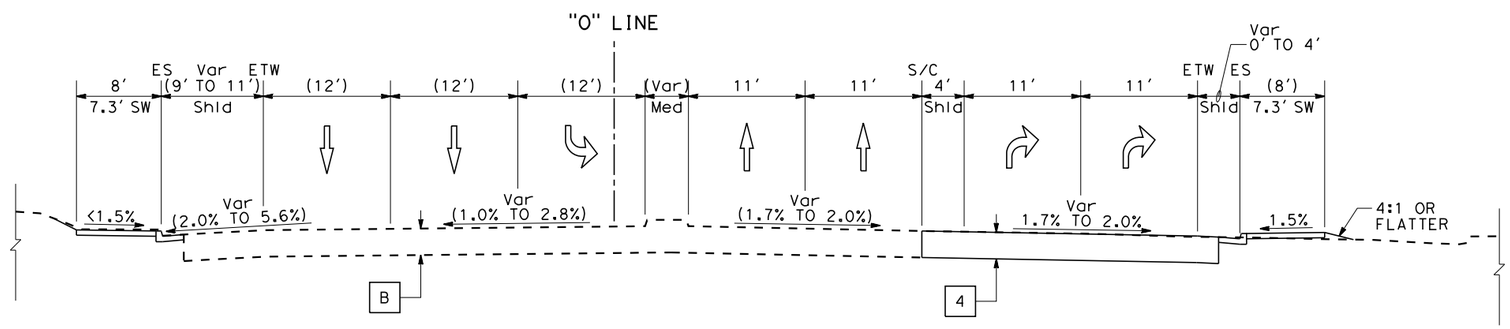

EASTBOUND

"O" Sta 19+50 TO "O" 24+00

ORANGEWOOD Ave

TYPICAL CROSS SECTIONS

ALTERNATIVE 2

NO SCALE

X-6

NOT FOR CONSTRUCTION

STATE OF CALIFORNIA - DEPARTMENT OF TRANSPORTATION

Caltrans

CONSULTANT FUNCTIONAL SUPERVISOR

CALCULATED-DESIGNED BY

CHECKED BY

REVISED BY

DATE REVISED

LAST REVISION 00-00-00

DATE PLOTTED => 1/10/2018
TIME PLOTTED => 9:31:43 AM

Dist	COUNTY	ROUTE	POST MILES TOTAL PROJECT	SHEET No.	TOTAL SHEETS
12	Ora	57	11.5/12.5		

REGISTERED CIVIL ENGINEER DATE

PLANS APPROVAL DATE

REGISTERED PROFESSIONAL ENGINEER No. Exp. CIVIL STATE OF CALIFORNIA

THE STATE OF CALIFORNIA OR ITS OFFICERS OR AGENTS SHALL NOT BE RESPONSIBLE FOR THE ACCURACY OR COMPLETENESS OF SCANNED COPIES OF THIS PLAN SHEET.

T.Y. LIN INTERNATIONAL
20 PACIFICA
SUITE 350
IRVINE, CA 92618

ORANGE COUNTY
TRANSPORTATION AUTHORITY
550 SOUTH MAIN STREET
ORANGE, CA 92868

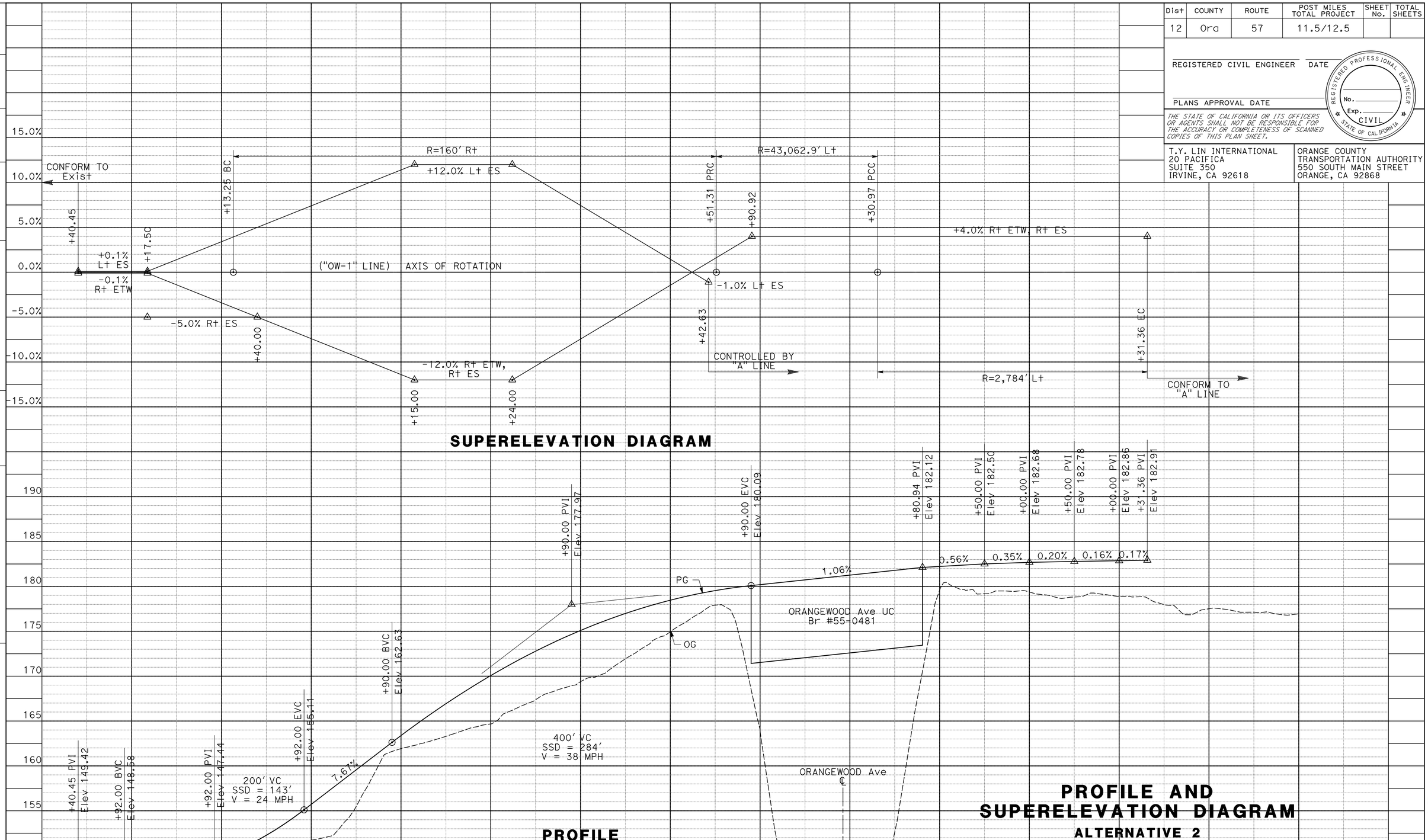

PROFILE AND SUPERELEVATION DIAGRAM

ALTERNATIVE 2

SCALE: Horiz: 1" = 50'
Vert: 1" = 5'

PS-1

STATION		TOTAL
CY	Exc	
	Emb	

NOT FOR CONSTRUCTION

STATE OF CALIFORNIA - DEPARTMENT OF TRANSPORTATION

Caltrans

CONSULTANT FUNCTIONAL SUPERVISOR

CALCULATED-DESIGNED BY

CHECKED BY

REVISED BY

DATE REVISED

LAST REVISION 00-00-00

DATE PLOTTED => $DATE
TIME PLOTTED => $TIME

Dist	COUNTY	ROUTE	POST MILES TOTAL PROJECT	SHEET No.	TOTAL SHEETS
12	Ora	57	11.5/12.5		

REGISTERED CIVIL ENGINEER DATE

PLANS APPROVAL DATE

REGISTERED PROFESSIONAL ENGINEER No. Exp. CIVIL STATE OF CALIFORNIA

THE STATE OF CALIFORNIA OR ITS OFFICERS OR AGENTS SHALL NOT BE RESPONSIBLE FOR THE ACCURACY OR COMPLETENESS OF SCANNED COPIES OF THIS PLAN SHEET.

T.Y. LIN INTERNATIONAL
20 PACIFICA
SUITE 350
IRVINE, CA 92618

ORANGE COUNTY TRANSPORTATION AUTHORITY
550 SOUTH MAIN STREET
ORANGE, CA 92868

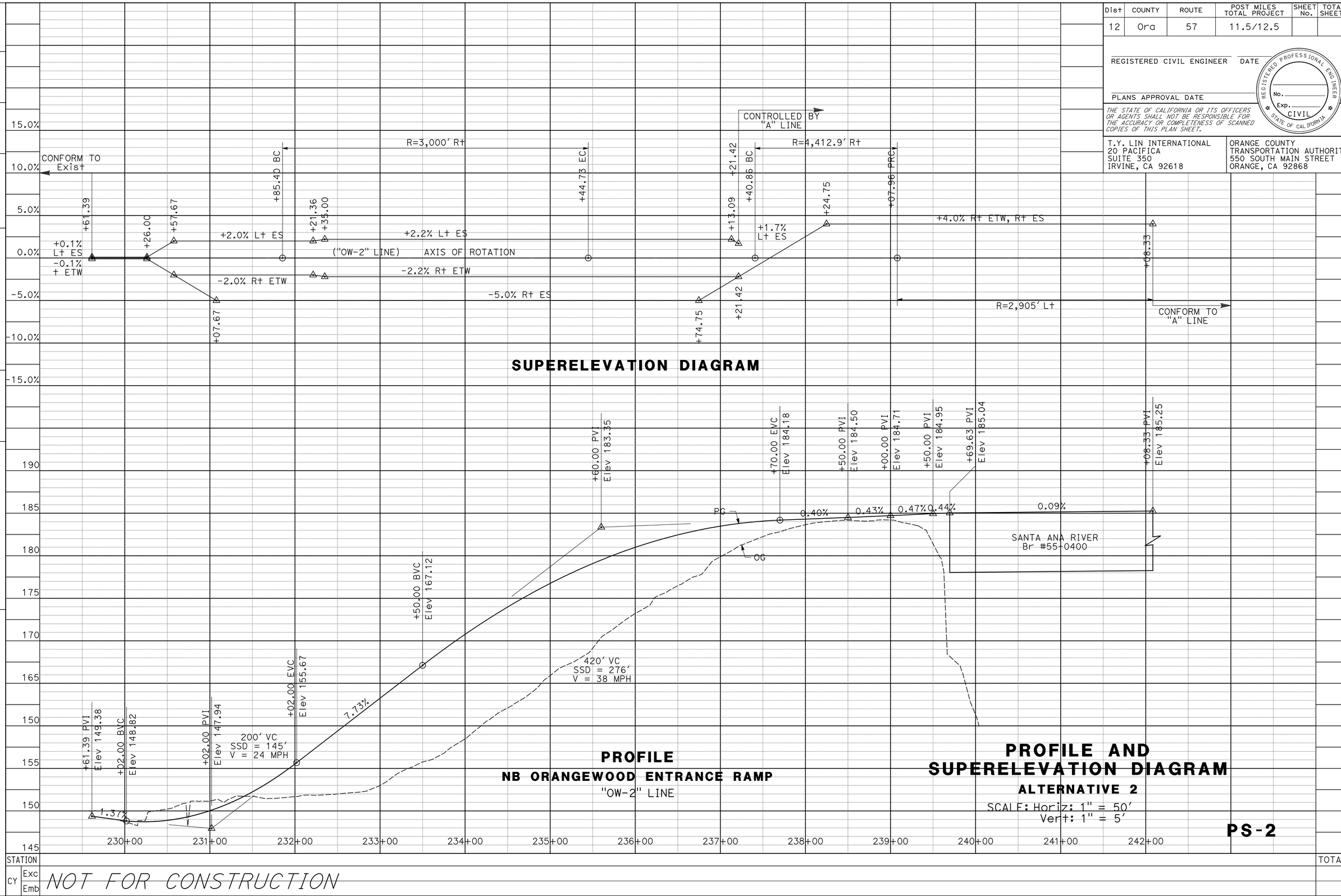

PROFILE AND SUPERELEVATION DIAGRAM

ALTERNATIVE 2

SCALE: Horiz: 1" = 50'
Vert: 1" = 5'

PS-2

NOT FOR CONSTRUCTION

STATE OF CALIFORNIA - DEPARTMENT OF TRANSPORTATION

Caltrans

CONSULTANT FUNCTIONAL SUPERVISOR

CALCULATED-DESIGNED BY

CHECKED BY

REVISED BY

DATE REVISED

LAST REVISION 00-00-00

DATE PLOTTED => $DATE
TIME PLOTTED => $TIME

Dist	COUNTY	ROUTE	POST MILES TOTAL PROJECT	SHEET No.	TOTAL SHEETS
12	Ora	57	11.5/12.5		

REGISTERED CIVIL ENGINEER DATE

PLANS APPROVAL DATE

REGISTERED PROFESSIONAL ENGINEER No. Exp. CIVIL STATE OF CALIFORNIA

THE STATE OF CALIFORNIA OR ITS OFFICERS OR AGENTS SHALL NOT BE RESPONSIBLE FOR THE ACCURACY OR COMPLETENESS OF SCANNED COPIES OF THIS PLAN SHEET.

T.Y. LIN INTERNATIONAL
20 PACIFICA
SUITE 350
IRVINE, CA 92618

ORANGE COUNTY
TRANSPORTATION AUTHORITY
550 SOUTH MAIN STREET
ORANGE, CA 92868

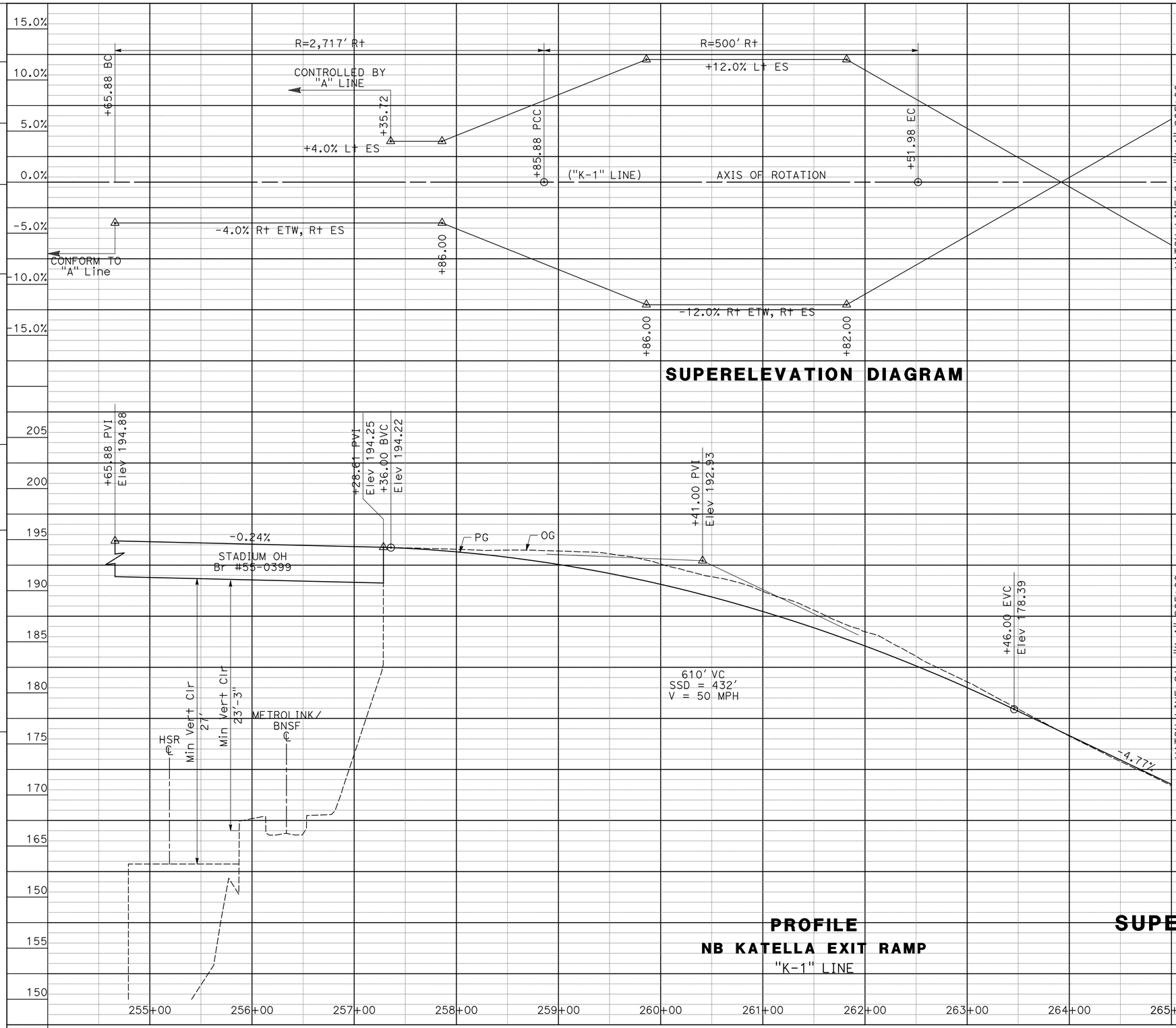

PROFILE AND SUPERELEVATION DIAGRAM

ALTERNATIVE 2

SCALE: Horiz: 1" = 50'
Vert: 1" = 5'

PS-3

STATION		TOTAL
CY	Exc	
	Emb	

NOT FOR CONSTRUCTION

REVISED BY | DATE REVISED | CALCULATED-DESIGNED BY | CHECKED BY | CONSULTANT FUNCTIONAL SUPERVISOR

STATE OF CALIFORNIA - DEPARTMENT OF TRANSPORTATION

Caltrans

LAST REVISION 00-00-00 | DATE PLOTTED => $DATE | TIME PLOTTED => $TIME

Dist	COUNTY	ROUTE	POST MILES TOTAL PROJECT	SHEET No.	TOTAL SHEETS
12	Ora	57	11.5/12.5		

REGISTERED CIVIL ENGINEER DATE

PLANS APPROVAL DATE

REGISTERED PROFESSIONAL ENGINEER No. Exp. CIVIL STATE OF CALIFORNIA

THE STATE OF CALIFORNIA OR ITS OFFICERS OR AGENTS SHALL NOT BE RESPONSIBLE FOR THE ACCURACY OR COMPLETENESS OF SCANNED COPIES OF THIS PLAN SHEET.

T.Y. LIN INTERNATIONAL
20 PACIFICA
SUITE 350
IRVINE, CA 92618

ORANGE COUNTY
TRANSPORTATION AUTHORITY
550 SOUTH MAIN STREET
ORANGE, CA 92868

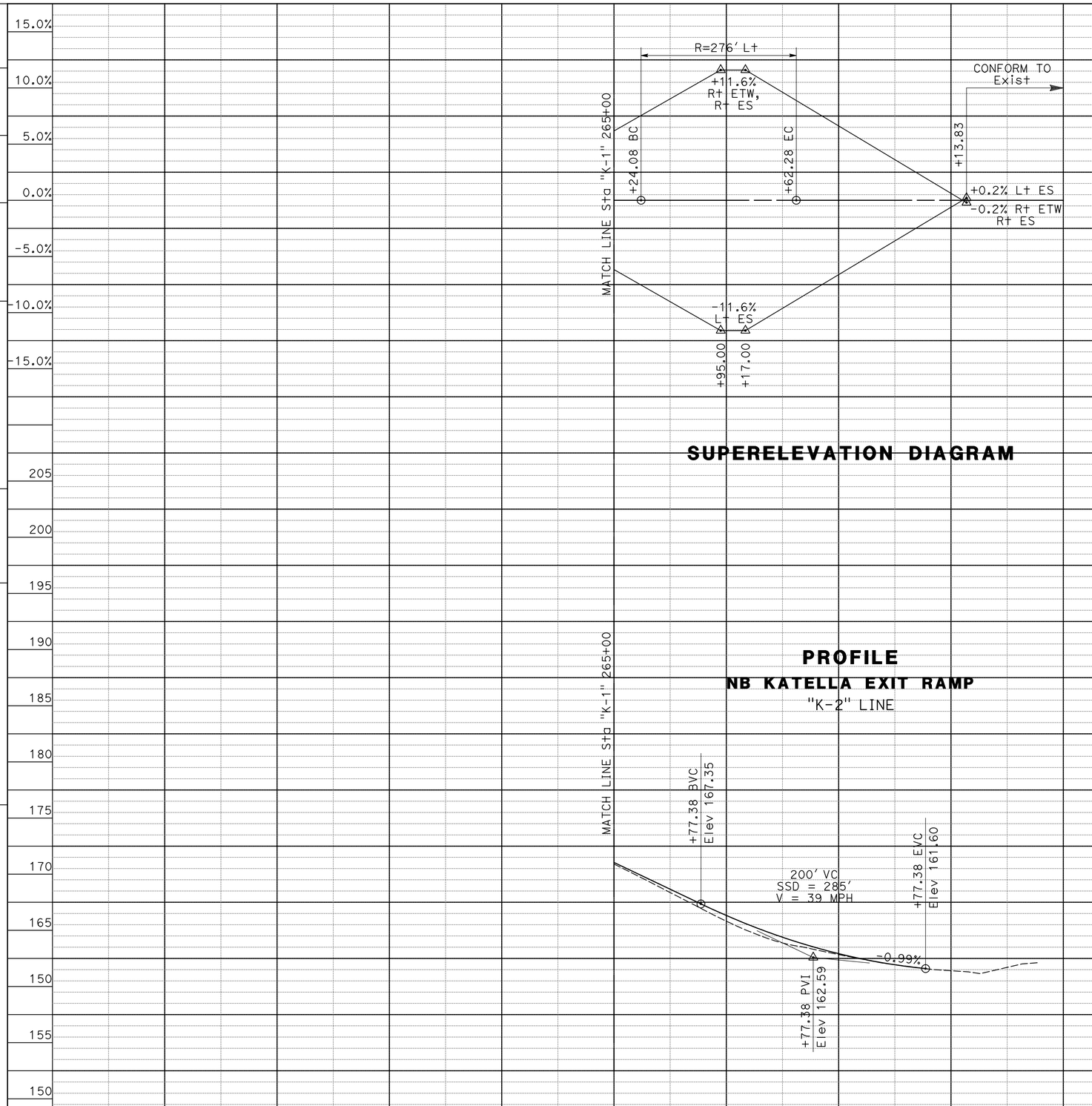

PROFILE AND SUPERELEVATION DIAGRAM

ALTERNATIVE 2

SCALE: Horiz: 1" = 50'
Vert: 1" = 5'

PS-4

STATION		TOTAL
CY	Exc	
	Emb	

NOT FOR CONSTRUCTION

REVISED BY | DATE REVISED

CALCULATED-DESIGNED BY | CHECKED BY

CONSULTANT FUNCTIONAL SUPERVISOR

STATE OF CALIFORNIA - DEPARTMENT OF TRANSPORTATION

Caltrans

LAST REVISION 00-00-00 | DATE PLOTTED => $DATE | TIME PLOTTED => $TIME

Dist	COUNTY	ROUTE	POST MILES TOTAL PROJECT	SHEET No.	TOTAL SHEETS
12	Ora	57	11.5/12.5		

REGISTERED CIVIL ENGINEER DATE

PLANS APPROVAL DATE

REGISTERED PROFESSIONAL ENGINEER No. Exp. CIVIL STATE OF CALIFORNIA

THE STATE OF CALIFORNIA OR ITS OFFICERS OR AGENTS SHALL NOT BE RESPONSIBLE FOR THE ACCURACY OR COMPLETENESS OF SCANNED COPIES OF THIS PLAN SHEET.

T.Y. LIN INTERNATIONAL
20 PACIFICA
SUITE 350
IRVINE, CA 92618

ORANGE COUNTY
TRANSPORTATION AUTHORITY
550 SOUTH MAIN STREET
ORANGE, CA 92868

NOTES:

1. DIMENSIONS OF THE PAVEMENT STRUCTURES (STRUCTURAL SECTIONS) ARE SUBJECT TO TOLERANCES SPECIFIED IN THE STANDARD SPECIFICATIONS.

EXISTING STRUCTURAL SECTIONS

A
- 0.75' PCC
- 0.50' RMCTB (B)
- 0.25' RMCTB AB
- 0.50' CLASS 4 AS

B
- 0.33' AC
- 0.50' AB
- 0.92' AS

STRUCTURAL SECTIONS

1
- 0.90' CRCP
- 0.25' HMA-A
- 0.70' CLASS 2 AS
- 0.65' BASEMENT SOIL

2
- 0.20' RHMA-G
- 0.90' HMA-A
- 1.05' CLASS 2 AB
- 0.75' BASEMENT SOIL

3
- 0.85' JPCP
- 0.25' HMA-A
- 0.70' CLASS 2 AS
- 0.70' BASEMENT SOIL

4
- 0.33' AC
- 0.50' AB
- 0.92' AS

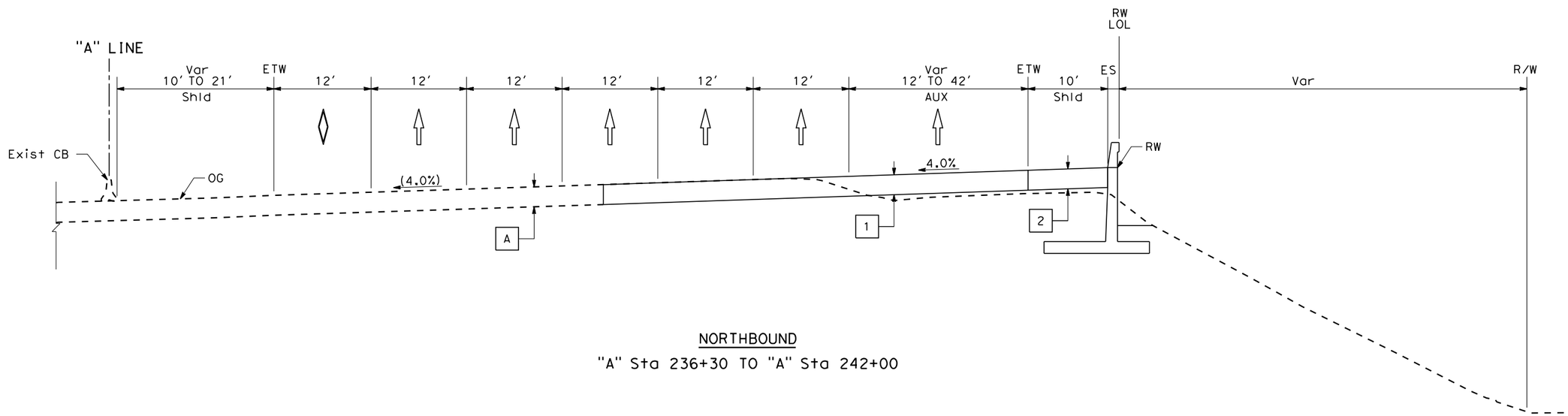

NORTHBOUND

"A" Sta 236+30 TO "A" Sta 242+00

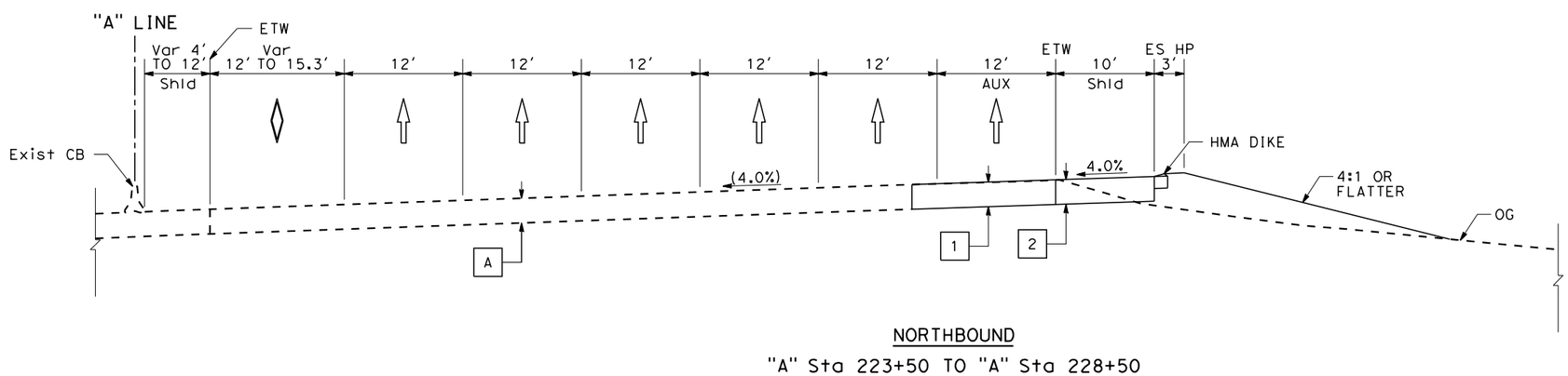

NORTHBOUND

"A" Sta 223+50 TO "A" Sta 228+50

ROUTE 57

TYPICAL CROSS SECTIONS

ALTERNATIVE 2A

NO SCALE

X-1

NOT FOR CONSTRUCTION

STATE OF CALIFORNIA - DEPARTMENT OF TRANSPORTATION

Caltrans

CONSULTANT FUNCTIONAL SUPERVISOR

CALCULATED-DESIGNED BY

CHECKED BY

REVISED BY

DATE REVISED

LAST REVISION 00-00-00

DATE PLOTTED => 1/10/2018
TIME PLOTTED => 9:31:43 AM

Dist	COUNTY	ROUTE	POST MILES TOTAL PROJECT	SHEET No.	TOTAL SHEETS
12	Ora	57	11.5/12.5		

REGISTERED CIVIL ENGINEER DATE

PLANS APPROVAL DATE

REGISTERED PROFESSIONAL ENGINEER No. Exp. CIVIL STATE OF CALIFORNIA

THE STATE OF CALIFORNIA OR ITS OFFICERS OR AGENTS SHALL NOT BE RESPONSIBLE FOR THE ACCURACY OR COMPLETENESS OF SCANNED COPIES OF THIS PLAN SHEET.

T.Y. LIN INTERNATIONAL
20 PACIFICA
SUITE 350
IRVINE, CA 92618

ORANGE COUNTY
TRANSPORTATION AUTHORITY
550 SOUTH MAIN STREET
ORANGE, CA 92868

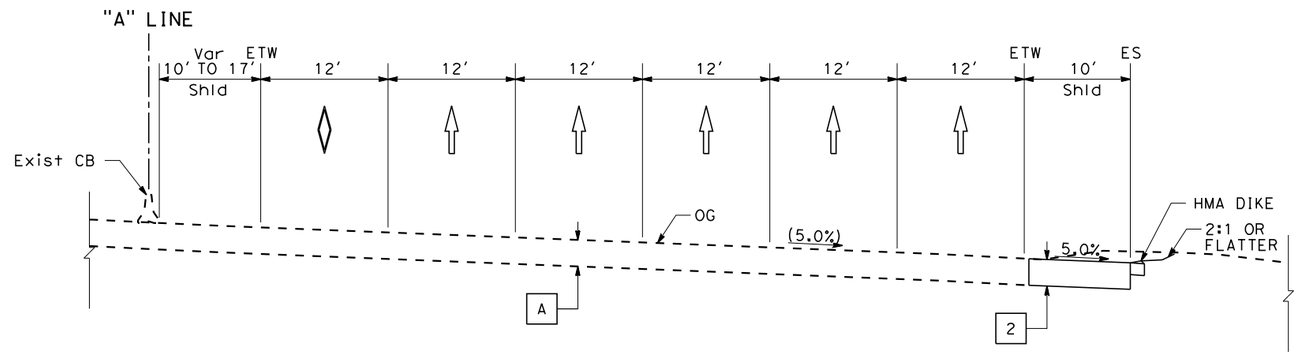

NORTHBOUND

"A" Sta 254+00 TO "A" Sta 263+00

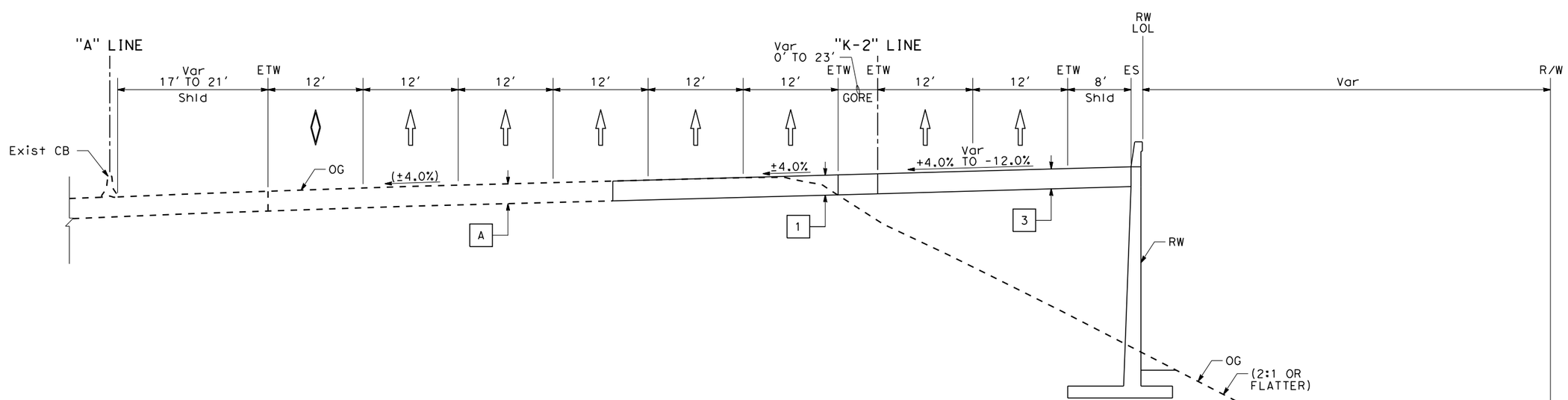

NORTHBOUND

"A" Sta 250+00 TO "A" Sta 254+00

ROUTE 57

TYPICAL CROSS SECTIONS

ALTERNATIVE 2A

NO SCALE

X-2

NOT FOR CONSTRUCTION

STATE OF CALIFORNIA - DEPARTMENT OF TRANSPORTATION

Caltrans

CONSULTANT FUNCTIONAL SUPERVISOR

CALCULATED-DESIGNED BY

CHECKED BY

REVISED BY

DATE REVISED

LAST REVISION 00-00-00

DATE PLOTTED => 1/10/2018
TIME PLOTTED => 9:31:43 AM

Dist	COUNTY	ROUTE	POST MILES TOTAL PROJECT	SHEET No.	TOTAL SHEETS
12	Ora	57	11.5/12.5		

REGISTERED CIVIL ENGINEER DATE

PLANS APPROVAL DATE

REGISTERED PROFESSIONAL ENGINEER No. Exp. CIVIL STATE OF CALIFORNIA

THE STATE OF CALIFORNIA OR ITS OFFICERS OR AGENTS SHALL NOT BE RESPONSIBLE FOR THE ACCURACY OR COMPLETENESS OF SCANNED COPIES OF THIS PLAN SHEET.

T.Y. LIN INTERNATIONAL
20 PACIFICA
SUITE 350
IRVINE, CA 92618

ORANGE COUNTY
TRANSPORTATION AUTHORITY
550 SOUTH MAIN STREET
ORANGE, CA 92868

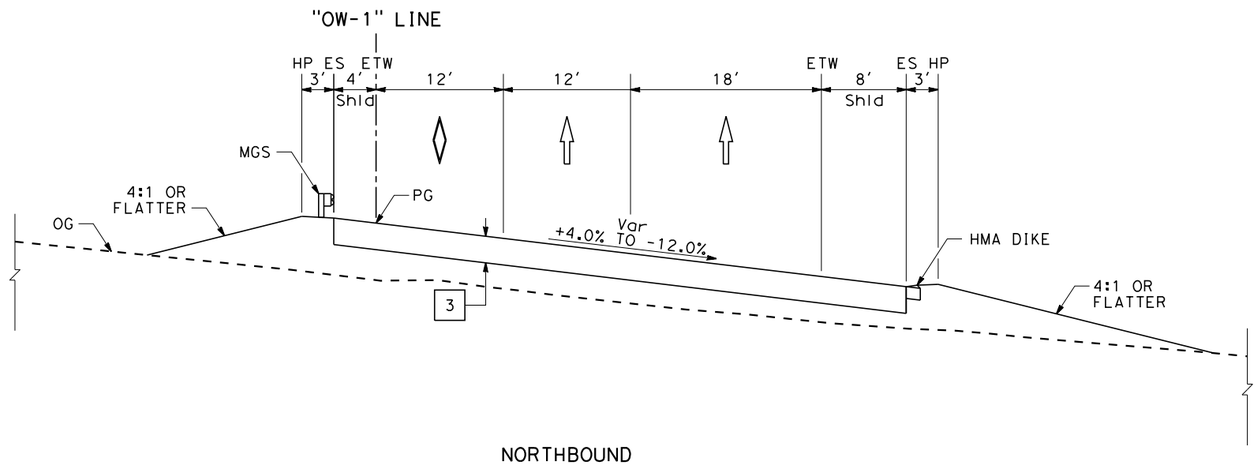

NORTHBOUND

"OW-1" Sta 225+50 TO "OW-1" Sta 227+50

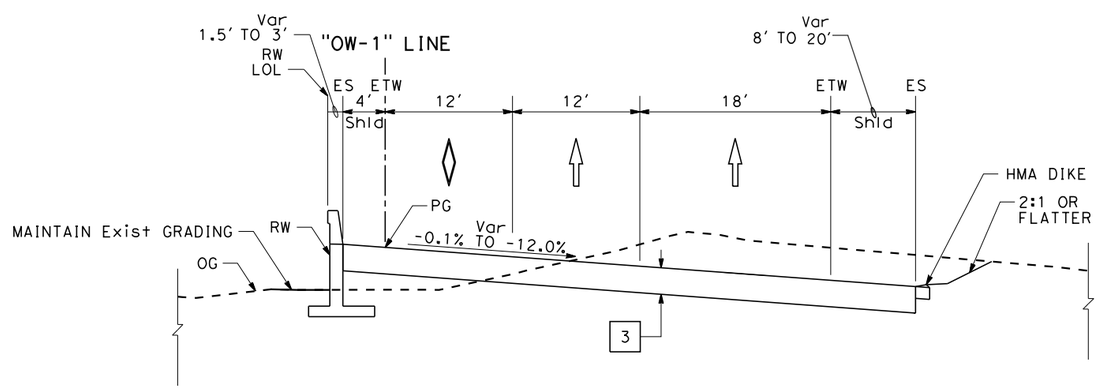

NORTHBOUND

"OW-1" Sta 222+50 TO "OW-1" Sta 225+50

ORANGEWOOD Ave LOOP ON-RAMP

TYPICAL CROSS SECTIONS

ALTERNATIVE 2A

NO SCALE

X-3

NOT FOR CONSTRUCTION

STATE OF CALIFORNIA - DEPARTMENT OF TRANSPORTATION

Caltrans

CONSULTANT FUNCTIONAL SUPERVISOR

CALCULATED-DESIGNED BY

CHECKED BY

REVISED BY

DATE REVISED

LAST REVISION 00-00-00

DATE PLOTTED => 1/10/2018
TIME PLOTTED => 9:31:44 AM

Dist	COUNTY	ROUTE	POST MILES TOTAL PROJECT	SHEET No.	TOTAL SHEETS
12	Ora	57	11.5/12.5		

REGISTERED CIVIL ENGINEER DATE

PLANS APPROVAL DATE

REGISTERED PROFESSIONAL ENGINEER No. Exp. CIVIL STATE OF CALIFORNIA

THE STATE OF CALIFORNIA OR ITS OFFICERS OR AGENTS SHALL NOT BE RESPONSIBLE FOR THE ACCURACY OR COMPLETENESS OF SCANNED COPIES OF THIS PLAN SHEET.

T.Y. LIN INTERNATIONAL
20 PACIFICA
SUITE 350
IRVINE, CA 92618

ORANGE COUNTY
TRANSPORTATION AUTHORITY
550 SOUTH MAIN STREET
ORANGE, CA 92868

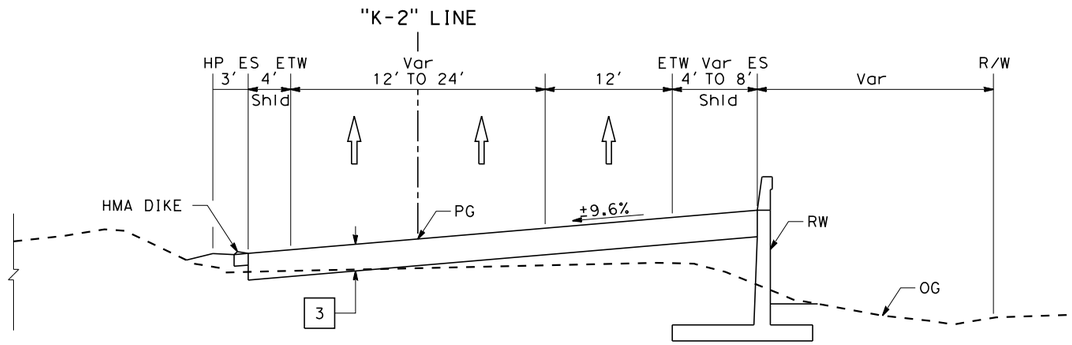

NORTHBOUND

"K-2" Sta 261+20 TO "K-2" 268+00

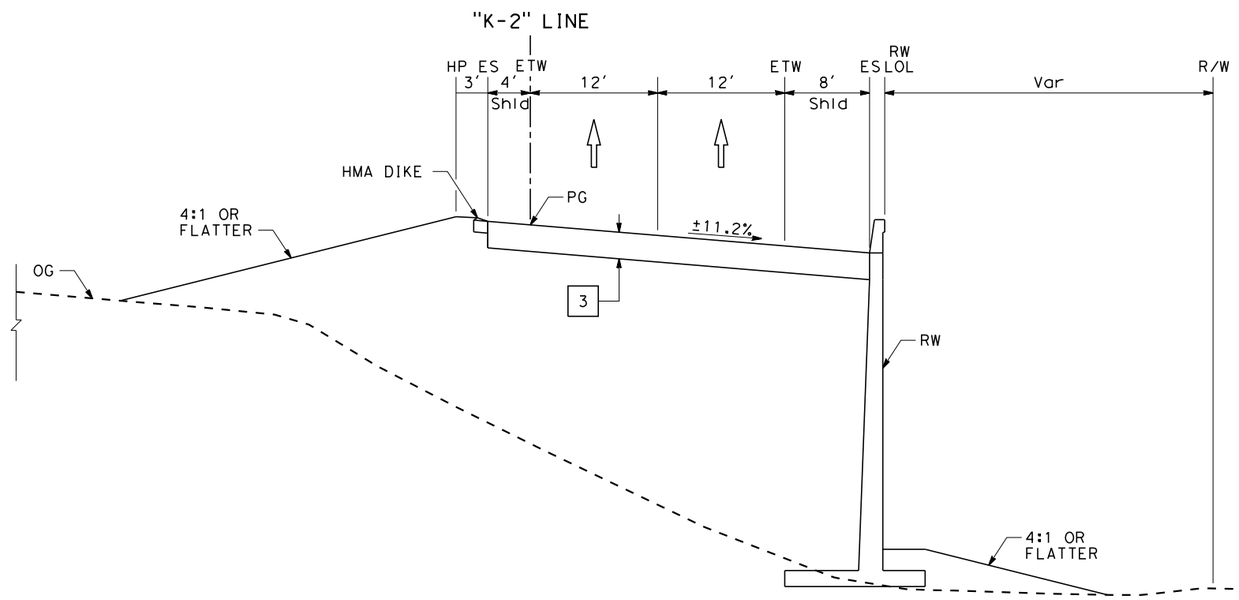

NORTHBOUND

"K-2" Sta 256+80 TO "K-2" 261+20

KATELLA Ave NB OFF-RAMP

TYPICAL CROSS SECTIONS

ALTERNATIVE 2A

NO SCALE

X-4

NOT FOR CONSTRUCTION

STATE OF CALIFORNIA - DEPARTMENT OF TRANSPORTATION

Caltrans

CONSULTANT FUNCTIONAL SUPERVISOR

CALCULATED-DESIGNED BY

CHECKED BY

REVISED BY

DATE REVISED

LAST REVISION 00-00-00

DATE PLOTTED => 1/10/2018
TIME PLOTTED => 9:31:44 AM

Dist	COUNTY	ROUTE	POST MILES TOTAL PROJECT	SHEET No.	TOTAL SHEETS
12	Ora	57	11.5/12.5		

REGISTERED CIVIL ENGINEER DATE

PLANS APPROVAL DATE

REGISTERED PROFESSIONAL ENGINEER No. Exp. CIVIL STATE OF CALIFORNIA

THE STATE OF CALIFORNIA OR ITS OFFICERS OR AGENTS SHALL NOT BE RESPONSIBLE FOR THE ACCURACY OR COMPLETENESS OF SCANNED COPIES OF THIS PLAN SHEET.

T.Y. LIN INTERNATIONAL
20 PACIFICA
SUITE 350
IRVINE, CA 92618

ORANGE COUNTY
TRANSPORTATION AUTHORITY
550 SOUTH MAIN STREET
ORANGE, CA 92868

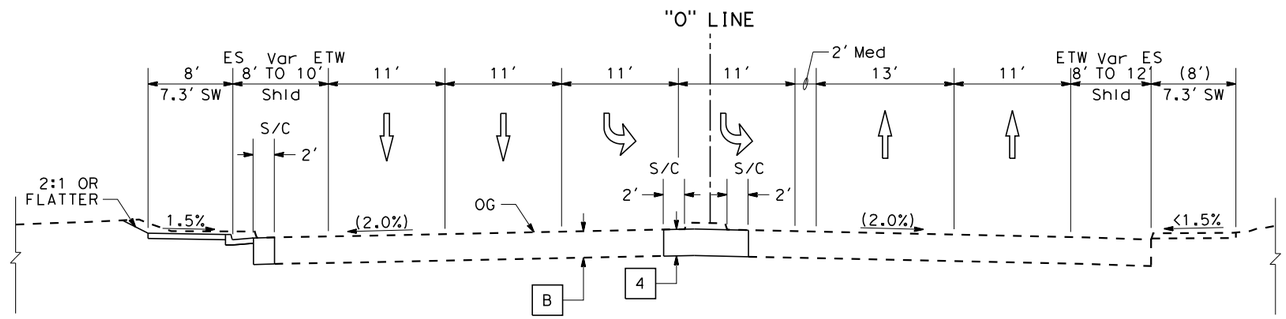

EASTBOUND

"O" Sta 24+00 TO "O" 26+50

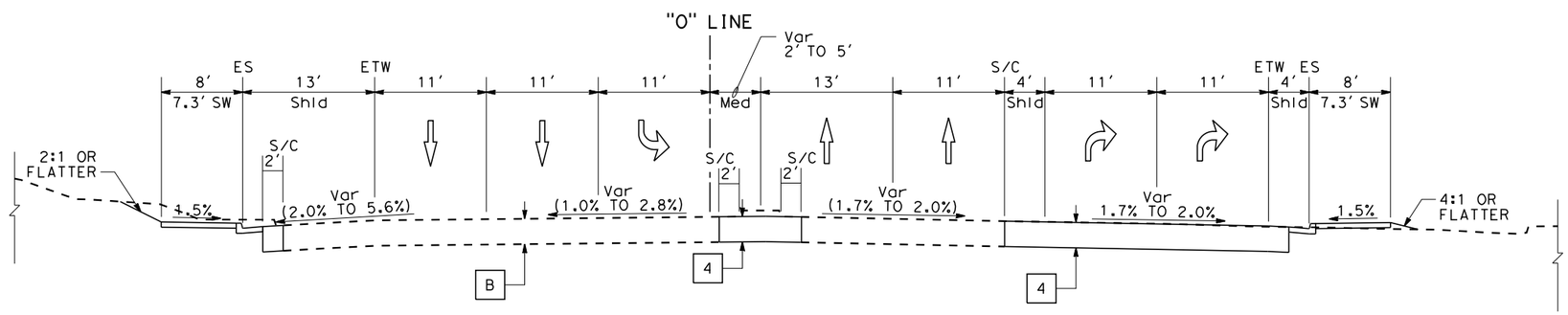

EASTBOUND

"O" Sta 19+50 TO "O" 24+00

ORANGEWOOD Ave

TYPICAL CROSS SECTIONS

ALTERNATIVE 2A

NO SCALE

X-5

NOT FOR CONSTRUCTION

STATE OF CALIFORNIA - DEPARTMENT OF TRANSPORTATION

Caltrans

CONSULTANT FUNCTIONAL SUPERVISOR

CALCULATED-DESIGNED BY

CHECKED BY

REVISED BY

DATE REVISED

LAST REVISION 00-00-00

DATE PLOTTED => 1/10/2018
TIME PLOTTED => 9:31:44 AM

Dist	COUNTY	ROUTE	POST MILES TOTAL PROJECT	SHEET No.	TOTAL SHEETS
12	Ora	57	11.5/12.5		

REGISTERED CIVIL ENGINEER DATE

PLANS APPROVAL DATE

REGISTERED PROFESSIONAL ENGINEER No. Exp. CIVIL STATE OF CALIFORNIA

THE STATE OF CALIFORNIA OR ITS OFFICERS OR AGENTS SHALL NOT BE RESPONSIBLE FOR THE ACCURACY OR COMPLETENESS OF SCANNED COPIES OF THIS PLAN SHEET.

T.Y. LIN INTERNATIONAL
20 PACIFICA
SUITE 350
IRVINE, CA 92618

ORANGE COUNTY
TRANSPORTATION AUTHORITY
550 SOUTH MAIN STREET
ORANGE, CA 92868

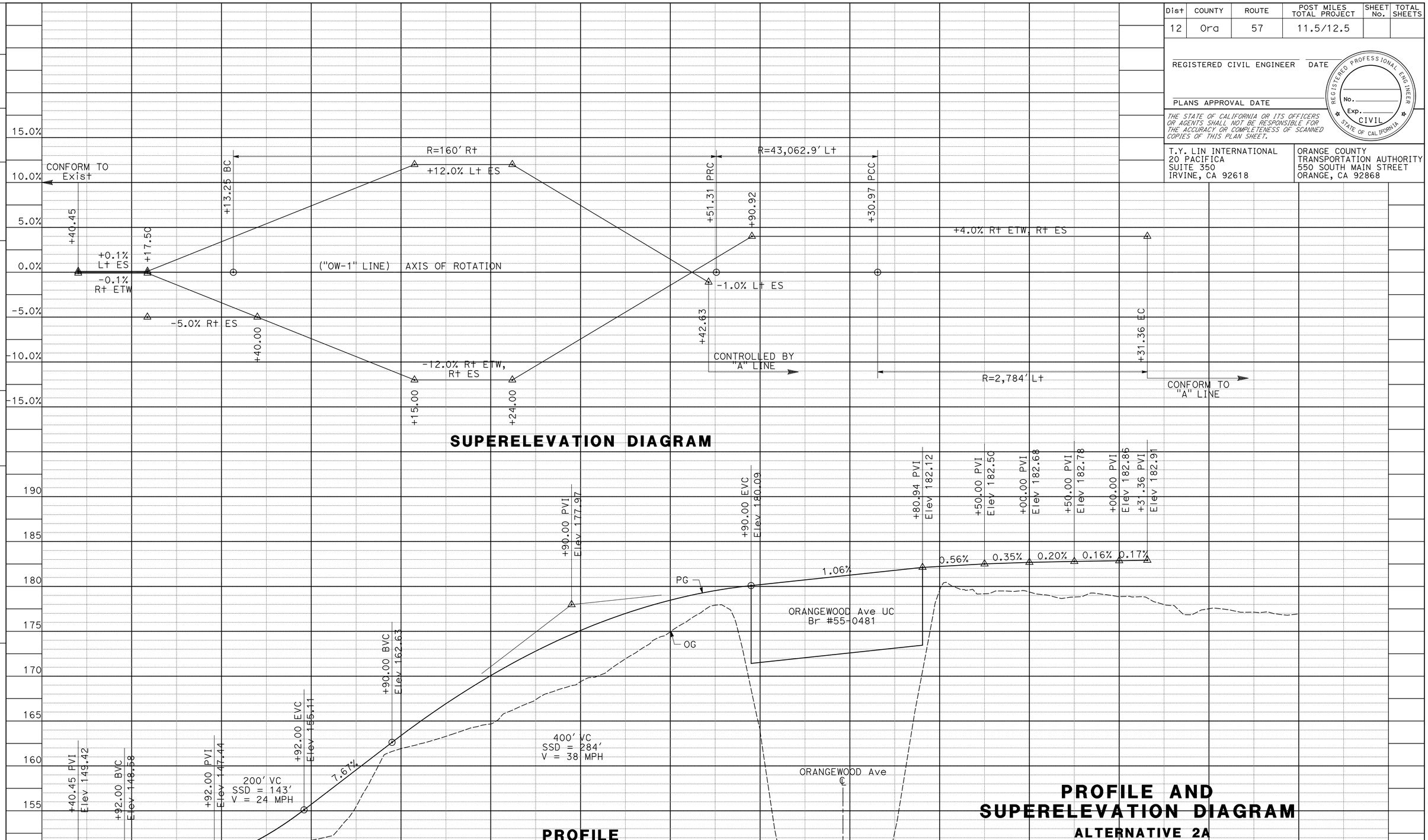

STATION		TOTAL
CY	Exc	
	Emb	

NOT FOR CONSTRUCTION

REVISED BY | DATE REVISED

CALCULATED-DESIGNED BY | CHECKED BY

CONSULTANT FUNCTIONAL SUPERVISOR

STATE OF CALIFORNIA - DEPARTMENT OF TRANSPORTATION

Caltrans

LAST REVISION 00-00-00 | DATE PLOTTED => $DATE | TIME PLOTTED => $TIME

Dist	COUNTY	ROUTE	POST MILES TOTAL PROJECT	SHEET No.	TOTAL SHEETS
12	Ora	57	11.5/12.5		

REGISTERED CIVIL ENGINEER DATE

PLANS APPROVAL DATE

REGISTERED PROFESSIONAL ENGINEER No. Exp. CIVIL STATE OF CALIFORNIA

THE STATE OF CALIFORNIA OR ITS OFFICERS OR AGENTS SHALL NOT BE RESPONSIBLE FOR THE ACCURACY OR COMPLETENESS OF SCANNED COPIES OF THIS PLAN SHEET.

T.Y. LIN INTERNATIONAL
20 PACIFICA
SUITE 350
IRVINE, CA 92618

ORANGE COUNTY
TRANSPORTATION AUTHORITY
550 SOUTH MAIN STREET
ORANGE, CA 92868

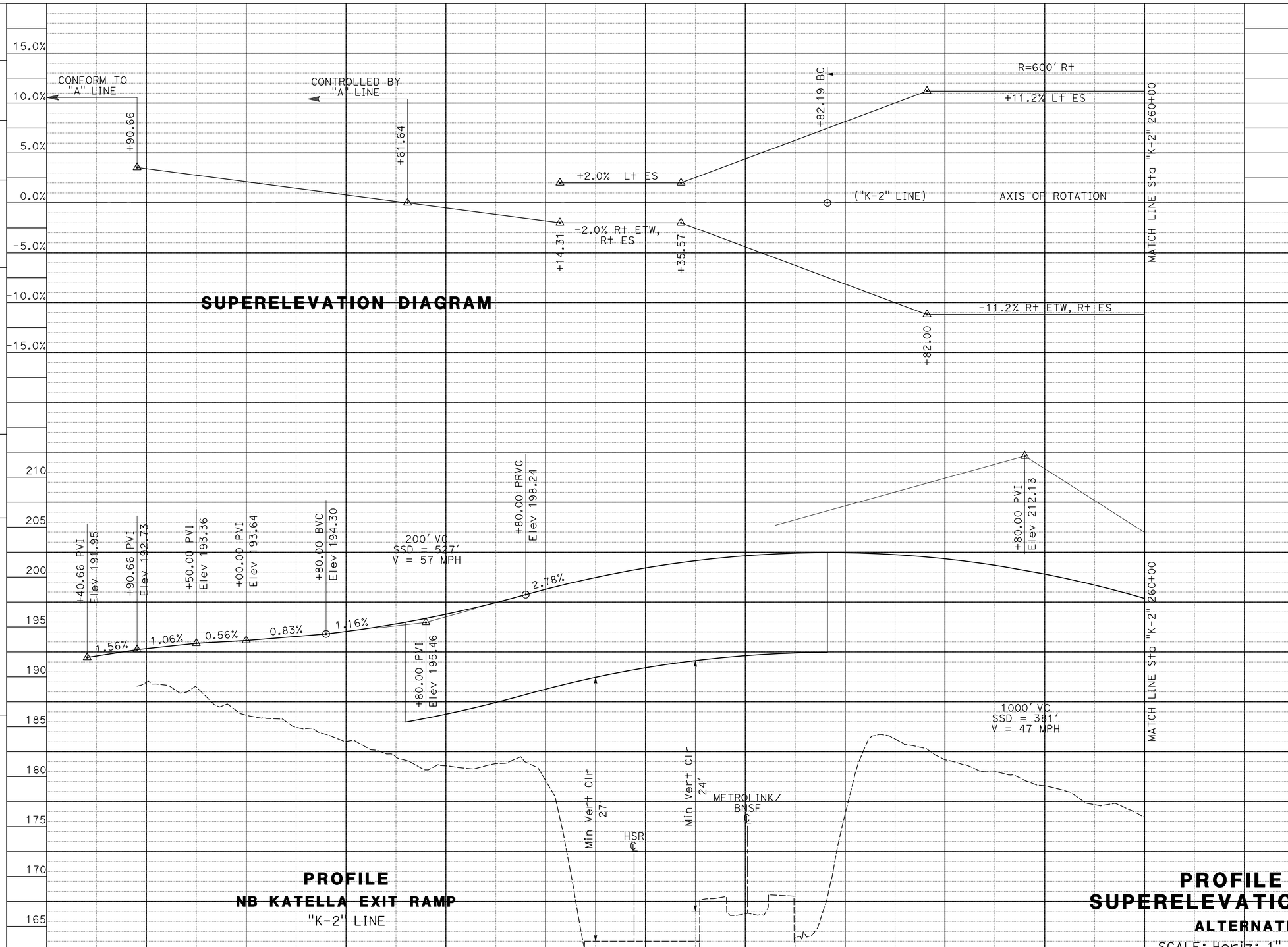

PROFILE AND SUPERELEVATION DIAGRAM

ALTERNATIVE 2A

SCALE: Horiz: 1" = 50'
Vert: 1" = 5'

PS-2

STATION		TOTAL
CY	Exc	
	Emb	

NOT FOR CONSTRUCTION

REVISED BY | DATE REVISED

CALCULATED-DESIGNED BY | CHECKED BY

CONSULTANT FUNCTIONAL SUPERVISOR

STATE OF CALIFORNIA - DEPARTMENT OF TRANSPORTATION

Caltrans

LAST REVISION 00-00-00 | DATE PLOTTED => $DATE | TIME PLOTTED => $TIME

Dist	COUNTY	ROUTE	POST MILES TOTAL PROJECT	SHEET No.	TOTAL SHEETS
12	Ora	57	11.5/12.5		

REGISTERED CIVIL ENGINEER DATE

PLANS APPROVAL DATE

REGISTERED PROFESSIONAL ENGINEER No. Exp. CIVIL STATE OF CALIFORNIA

THE STATE OF CALIFORNIA OR ITS OFFICERS OR AGENTS SHALL NOT BE RESPONSIBLE FOR THE ACCURACY OR COMPLETENESS OF SCANNED COPIES OF THIS PLAN SHEET.

T.Y. LIN INTERNATIONAL
20 PACIFICA
SUITE 350
IRVINE, CA 92618

ORANGE COUNTY
TRANSPORTATION AUTHORITY
550 SOUTH MAIN STREET
ORANGE, CA 92868

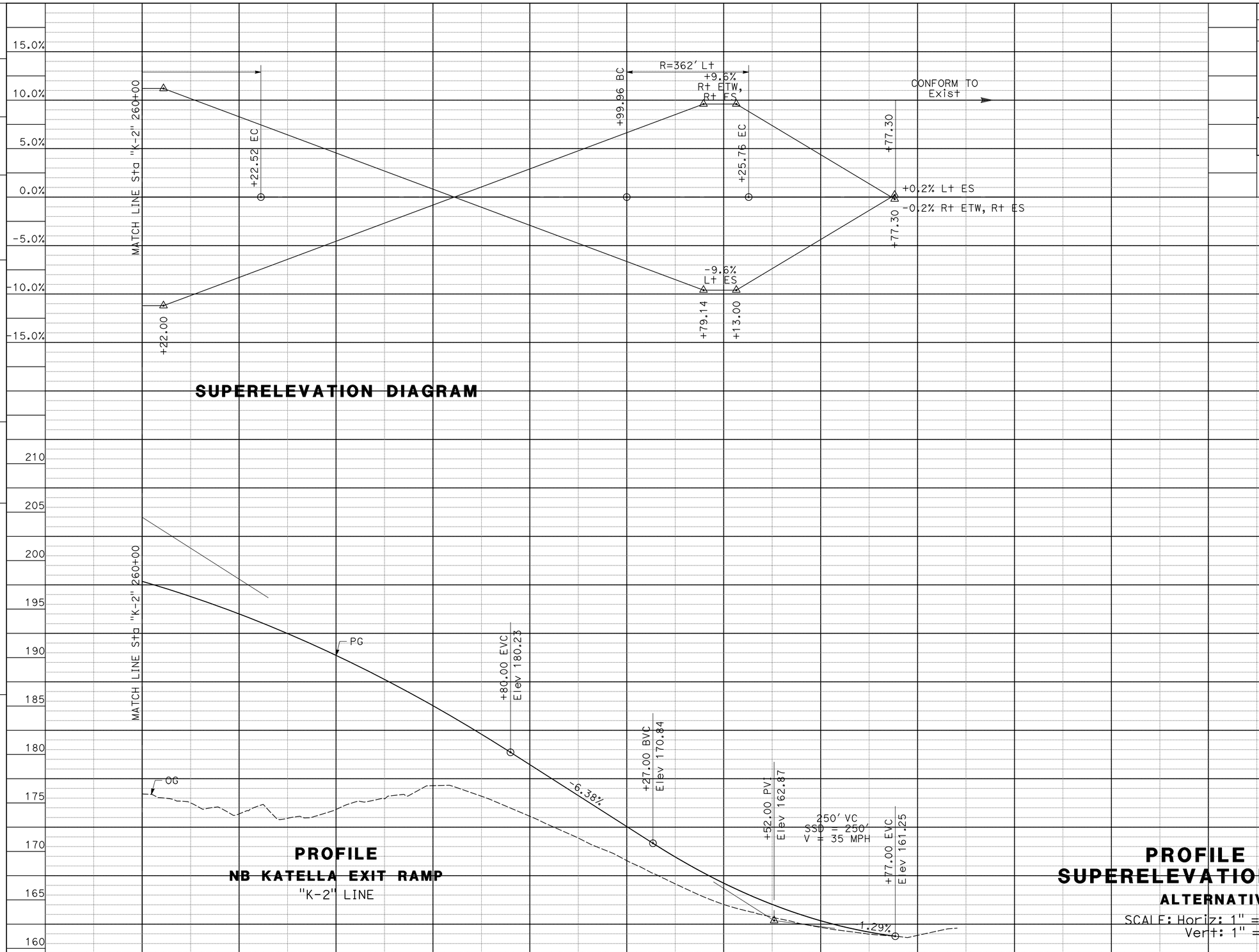

PROFILE AND SUPERELEVATION DIAGRAM

ALTERNATIVE 2A

SCALE: Horiz: 1" = 50'
Vert: 1" = 5'

PS-3

STATION		TOTAL
CY	Exc	
	Emb	

NOT FOR CONSTRUCTION

STATE OF CALIFORNIA - DEPARTMENT OF TRANSPORTATION

Caltrans

CONSULTANT FUNCTIONAL SUPERVISOR

CALCULATED-DESIGNED BY

CHECKED BY

REVISED BY

DATE REVISED

LAST REVISION 00-00-00

DATE PLOTTED => $DATE
TIME PLOTTED => $TIME

Dist	COUNTY	ROUTE	POST MILES TOTAL PROJECT	SHEET No.	TOTAL SHEETS
12	Ora	57	11.5/12.5		

REGISTERED CIVIL ENGINEER DATE

PLANS APPROVAL DATE

REGISTERED PROFESSIONAL ENGINEER No. Exp. CIVIL STATE OF CALIFORNIA

THE STATE OF CALIFORNIA OR ITS OFFICERS OR AGENTS SHALL NOT BE RESPONSIBLE FOR THE ACCURACY OR COMPLETENESS OF SCANNED COPIES OF THIS PLAN SHEET.

T.Y. LIN INTERNATIONAL
20 PACIFICA
SUITE 350
IRVINE, CA 92618

ORANGE COUNTY
TRANSPORTATION AUTHORITY
550 SOUTH MAIN STREET
ORANGE, CA 92868

NOTES:

1. DIMENSIONS OF THE PAVEMENT STRUCTURES (STRUCTURAL SECTIONS) ARE SUBJECT TO TOLERANCES SPECIFIED IN THE STANDARD SPECIFICATIONS.

EXISTING STRUCTURAL SECTIONS

A
- 0.75' PCC
- 0.50' RMCTB (B)
- 0.25' RMCTB AB
- 0.50' CLASS 4 AS

B
- 0.33' AC
- 0.50' AB
- 0.92' AS

STRUCTURAL SECTIONS

1
- 0.90' CRCP
- 0.25' HMA-A
- 0.70' CLASS 2 AS
- 0.65' BASEMENT SOIL

2
- 0.20' RHMA-G
- 0.90' HMA-A
- 1.05' CLASS 2 AB
- 0.75' BASEMENT SOIL

3
- 0.85' JPCP
- 0.25' HMA-A
- 0.70' CLASS 2 AS
- 0.70' BASEMENT SOIL

4
- 0.33' AC
- 0.50' AB
- 0.92' AS

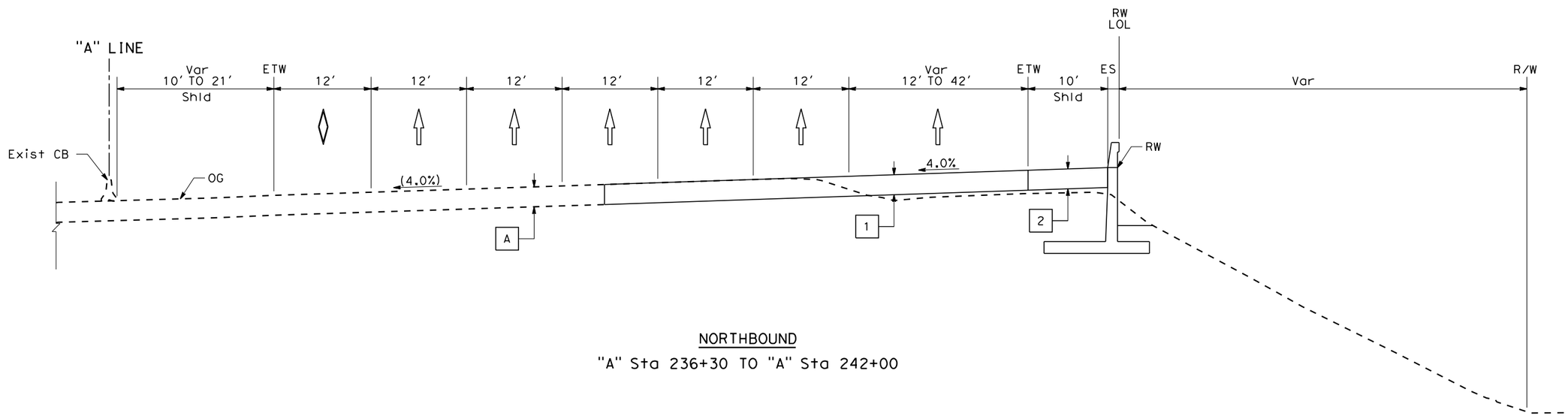

NORTHBOUND

"A" Sta 236+30 TO "A" Sta 242+00

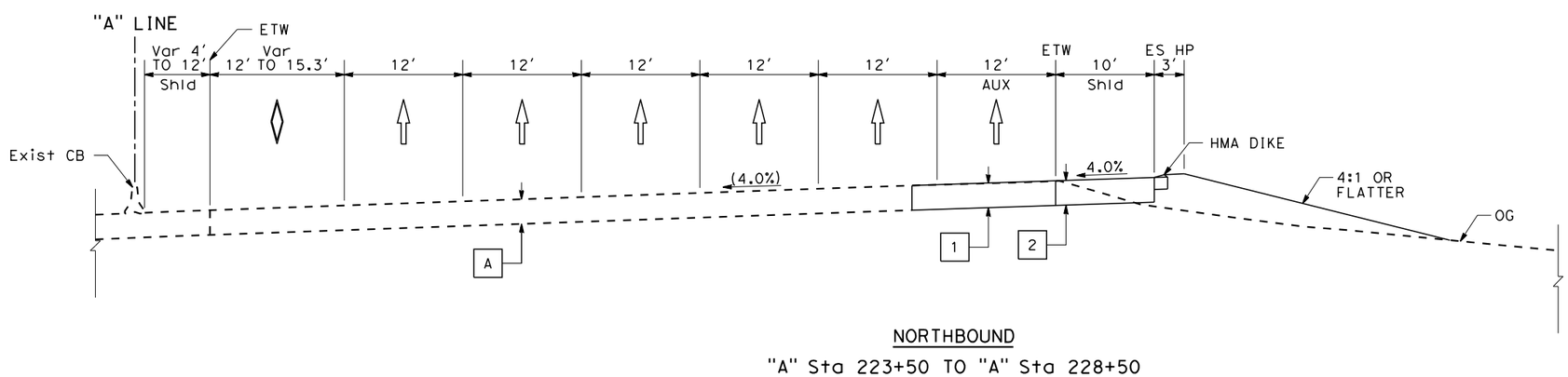

NORTHBOUND

"A" Sta 223+50 TO "A" Sta 228+50

ROUTE 57

TYPICAL CROSS SECTIONS

ALTERNATIVE 2B

NO SCALE

X-1

NOT FOR CONSTRUCTION

STATE OF CALIFORNIA - DEPARTMENT OF TRANSPORTATION

Caltrans

CONSULTANT FUNCTIONAL SUPERVISOR

CALCULATED-DESIGNED BY

CHECKED BY

REVISED BY

DATE REVISED

LAST REVISION 00-00-00

DATE PLOTTED => 1/10/2018
TIME PLOTTED => 9:31:45 AM

Dist	COUNTY	ROUTE	POST MILES TOTAL PROJECT	SHEET No.	TOTAL SHEETS
12	Ora	57	11.5/12.5		

REGISTERED CIVIL ENGINEER DATE

PLANS APPROVAL DATE

REGISTERED PROFESSIONAL ENGINEER No. Exp. CIVIL STATE OF CALIFORNIA

THE STATE OF CALIFORNIA OR ITS OFFICERS OR AGENTS SHALL NOT BE RESPONSIBLE FOR THE ACCURACY OR COMPLETENESS OF SCANNED COPIES OF THIS PLAN SHEET.

T.Y. LIN INTERNATIONAL
20 PACIFICA
SUITE 350
IRVINE, CA 92618

ORANGE COUNTY
TRANSPORTATION AUTHORITY
550 SOUTH MAIN STREET
ORANGE, CA 92868

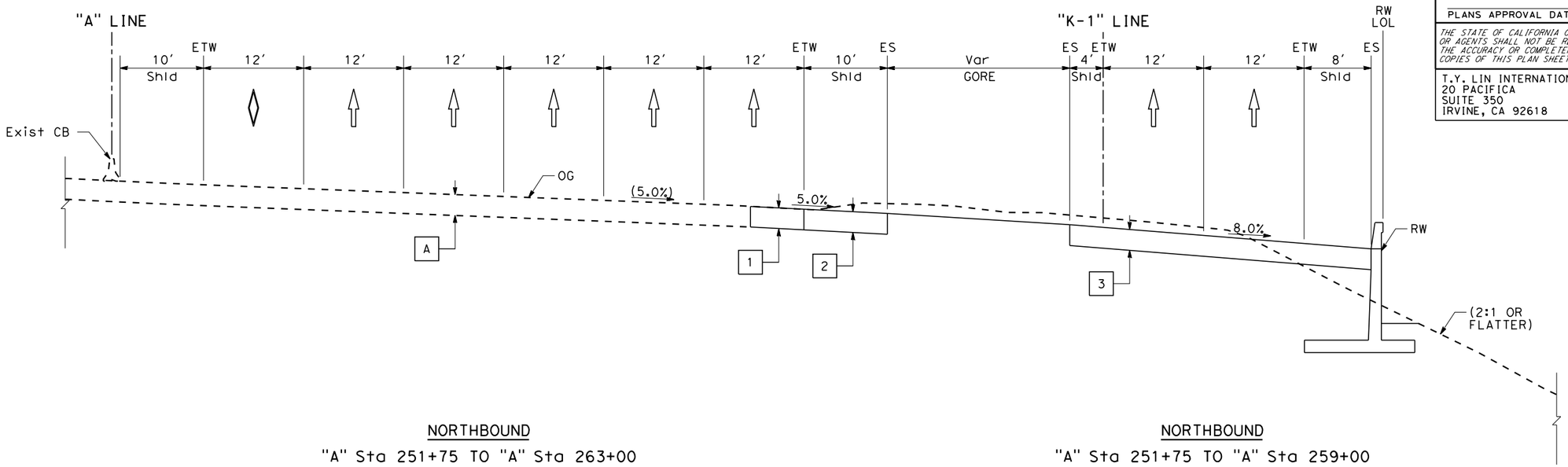

NORTHBOUND

"A" Sta 251+75 TO "A" Sta 263+00

NORTHBOUND

"A" Sta 251+75 TO "A" Sta 259+00

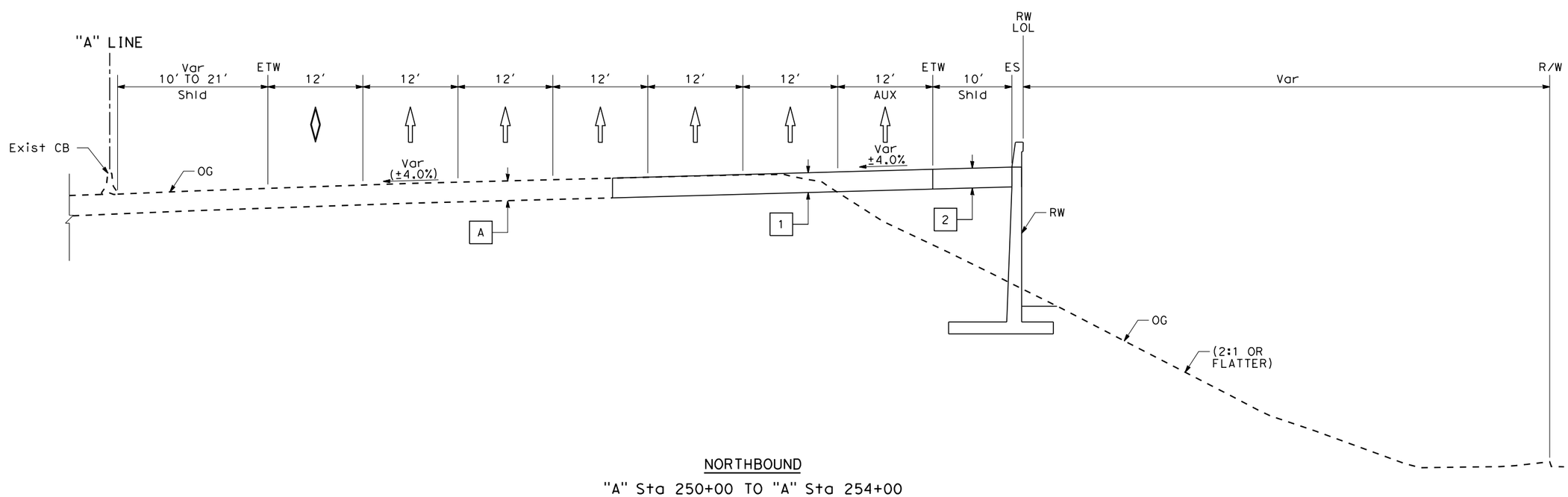

NORTHBOUND

"A" Sta 250+00 TO "A" Sta 254+00

ROUTE 57

TYPICAL CROSS SECTIONS

ALTERNATIVE 2B

NO SCALE

X-2

NOT FOR CONSTRUCTION

STATE OF CALIFORNIA - DEPARTMENT OF TRANSPORTATION

Caltrans

CONSULTANT FUNCTIONAL SUPERVISOR

CALCULATED-DESIGNED BY

CHECKED BY

REVISED BY

DATE REVISED

LAST REVISION 00-00-00

DATE PLOTTED => 1/10/2018
TIME PLOTTED => 9:31:45 AM

Dist	COUNTY	ROUTE	POST MILES TOTAL PROJECT	SHEET No.	TOTAL SHEETS
12	Ora	57	11.5/12.5		

REGISTERED CIVIL ENGINEER DATE

PLANS APPROVAL DATE

REGISTERED PROFESSIONAL ENGINEER No. Exp. CIVIL STATE OF CALIFORNIA

THE STATE OF CALIFORNIA OR ITS OFFICERS OR AGENTS SHALL NOT BE RESPONSIBLE FOR THE ACCURACY OR COMPLETENESS OF SCANNED COPIES OF THIS PLAN SHEET.

T.Y. LIN INTERNATIONAL
20 PACIFICA
SUITE 350
IRVINE, CA 92618

ORANGE COUNTY
TRANSPORTATION AUTHORITY
550 SOUTH MAIN STREET
ORANGE, CA 92868

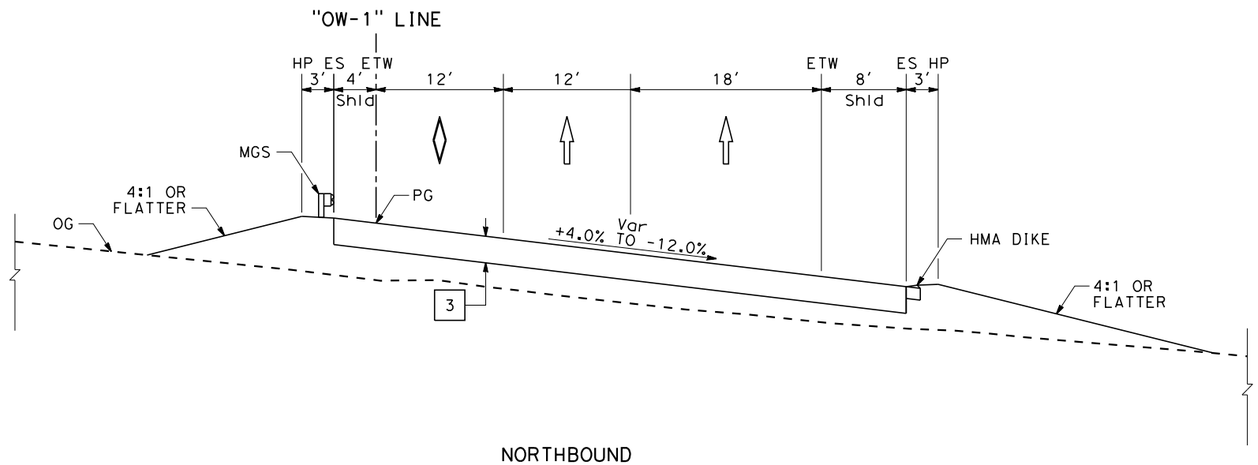

NORTHBOUND

"OW-1" Sta 225+50 TO "OW-1" Sta 227+50

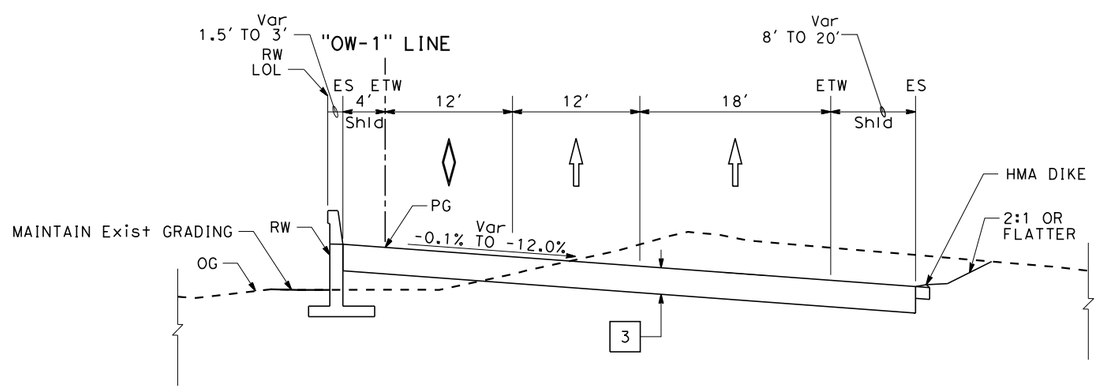

NORTHBOUND

"OW-1" Sta 222+50 TO "OW-1" Sta 225+50

ORANGEWOOD Ave LOOP ON-RAMP

TYPICAL CROSS SECTIONS

ALTERNATIVE 2B

NO SCALE

X-3

NOT FOR CONSTRUCTION

STATE OF CALIFORNIA - DEPARTMENT OF TRANSPORTATION

Caltrans

CONSULTANT FUNCTIONAL SUPERVISOR

CALCULATED-DESIGNED BY

CHECKED BY

REVISED BY

DATE REVISED

LAST REVISION 00-00-00

DATE PLOTTED => 1/10/2018
TIME PLOTTED => 9:31:45 AM

Dist	COUNTY	ROUTE	POST MILES TOTAL PROJECT	SHEET No.	TOTAL SHEETS
12	Ora	57	11.5/12.5		

REGISTERED CIVIL ENGINEER DATE

PLANS APPROVAL DATE

REGISTERED PROFESSIONAL ENGINEER No. Exp. CIVIL STATE OF CALIFORNIA

THE STATE OF CALIFORNIA OR ITS OFFICERS OR AGENTS SHALL NOT BE RESPONSIBLE FOR THE ACCURACY OR COMPLETENESS OF SCANNED COPIES OF THIS PLAN SHEET.

T.Y. LIN INTERNATIONAL
20 PACIFICA
SUITE 350
IRVINE, CA 92618

ORANGE COUNTY
TRANSPORTATION AUTHORITY
550 SOUTH MAIN STREET
ORANGE, CA 92868

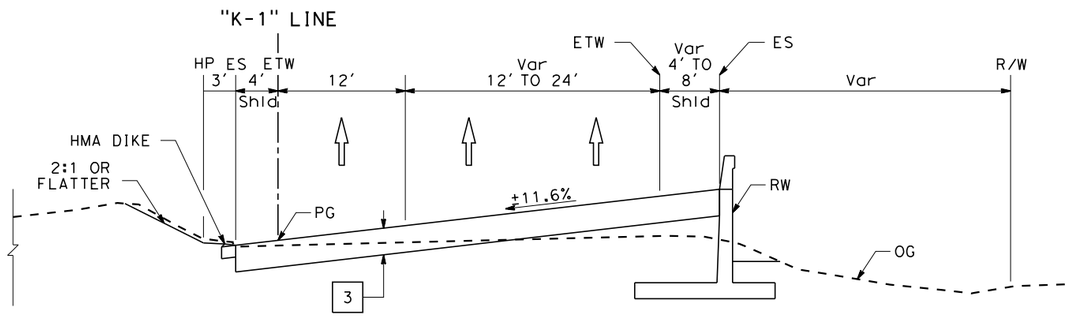

NORTHBOUND

"K-1" Sta 262+50 TO "K-1" 268+00

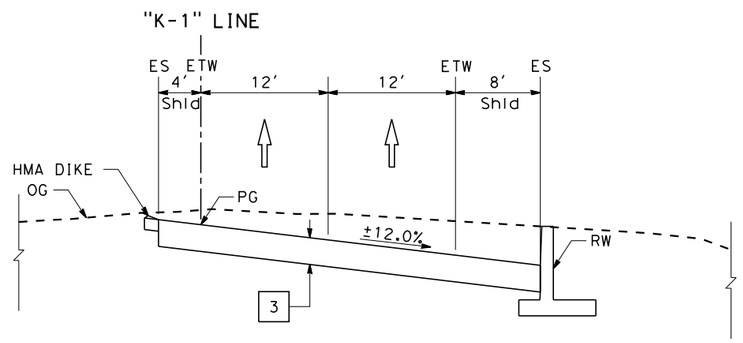

NORTHBOUND

"K-1" Sta 259+00 TO "K-1" 262+50

KATELLA Ave NB OFF-RAMP

TYPICAL CROSS SECTIONS

ALTERNATIVE 2B

NO SCALE

X-4

NOT FOR CONSTRUCTION

REVISED BY | DATE REVISED

CALCULATED-DESIGNED BY | CHECKED BY

CONSULTANT FUNCTIONAL SUPERVISOR

STATE OF CALIFORNIA - DEPARTMENT OF TRANSPORTATION

Caltrans

LAST REVISION 00-00-00 | DATE PLOTTED => 1/10/2018 | TIME PLOTTED => 9:31:46 AM

Dist	COUNTY	ROUTE	POST MILES TOTAL PROJECT	SHEET No.	TOTAL SHEETS
12	Ora	57	11.5/12.5		

REGISTERED CIVIL ENGINEER DATE

PLANS APPROVAL DATE

REGISTERED PROFESSIONAL ENGINEER No. Exp. CIVIL STATE OF CALIFORNIA

THE STATE OF CALIFORNIA OR ITS OFFICERS OR AGENTS SHALL NOT BE RESPONSIBLE FOR THE ACCURACY OR COMPLETENESS OF SCANNED COPIES OF THIS PLAN SHEET.

T.Y. LIN INTERNATIONAL
20 PACIFICA
SUITE 350
IRVINE, CA 92618

ORANGE COUNTY
TRANSPORTATION AUTHORITY
550 SOUTH MAIN STREET
ORANGE, CA 92868

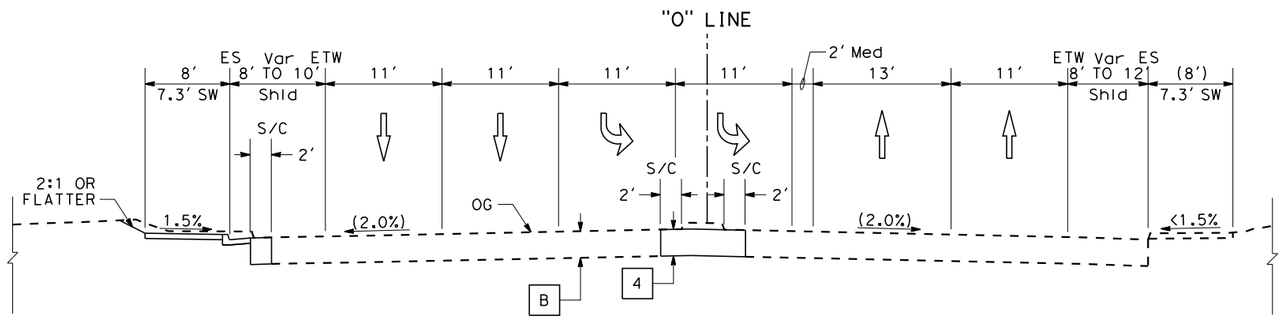

EASTBOUND

"O" Sta 24+00 TO "O" 26+50

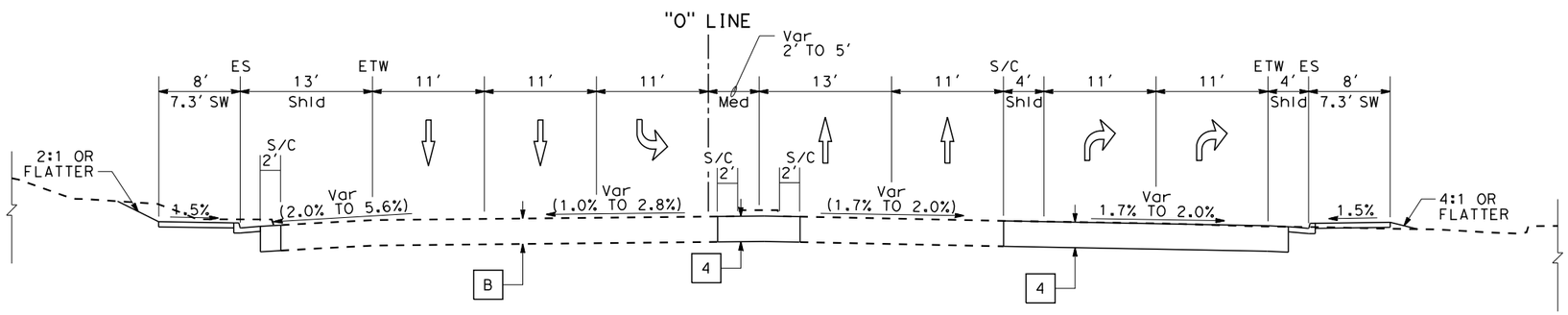

EASTBOUND

"O" Sta 19+50 TO "O" 24+00

ORANGEWOOD Ave

TYPICAL CROSS SECTIONS

ALTERNATIVE 2B

NO SCALE

X-5

NOT FOR CONSTRUCTION

STATE OF CALIFORNIA - DEPARTMENT OF TRANSPORTATION

Caltrans

CONSULTANT FUNCTIONAL SUPERVISOR

CALCULATED-DESIGNED BY

CHECKED BY

REVISED BY

DATE REVISED

LAST REVISION 00-00-00

DATE PLOTTED => 1/10/2018
TIME PLOTTED => 9:31:46 AM

Dist	COUNTY	ROUTE	POST MILES TOTAL PROJECT	SHEET No.	TOTAL SHEETS
12	Ora	57	11.5/12.5		

REGISTERED CIVIL ENGINEER DATE

PLANS APPROVAL DATE

REGISTERED PROFESSIONAL ENGINEER No. Exp. CIVIL STATE OF CALIFORNIA

THE STATE OF CALIFORNIA OR ITS OFFICERS OR AGENTS SHALL NOT BE RESPONSIBLE FOR THE ACCURACY OR COMPLETENESS OF SCANNED COPIES OF THIS PLAN SHEET.

T.Y. LIN INTERNATIONAL
20 PACIFICA
SUITE 350
IRVINE, CA 92618

ORANGE COUNTY
TRANSPORTATION AUTHORITY
550 SOUTH MAIN STREET
ORANGE, CA 92868

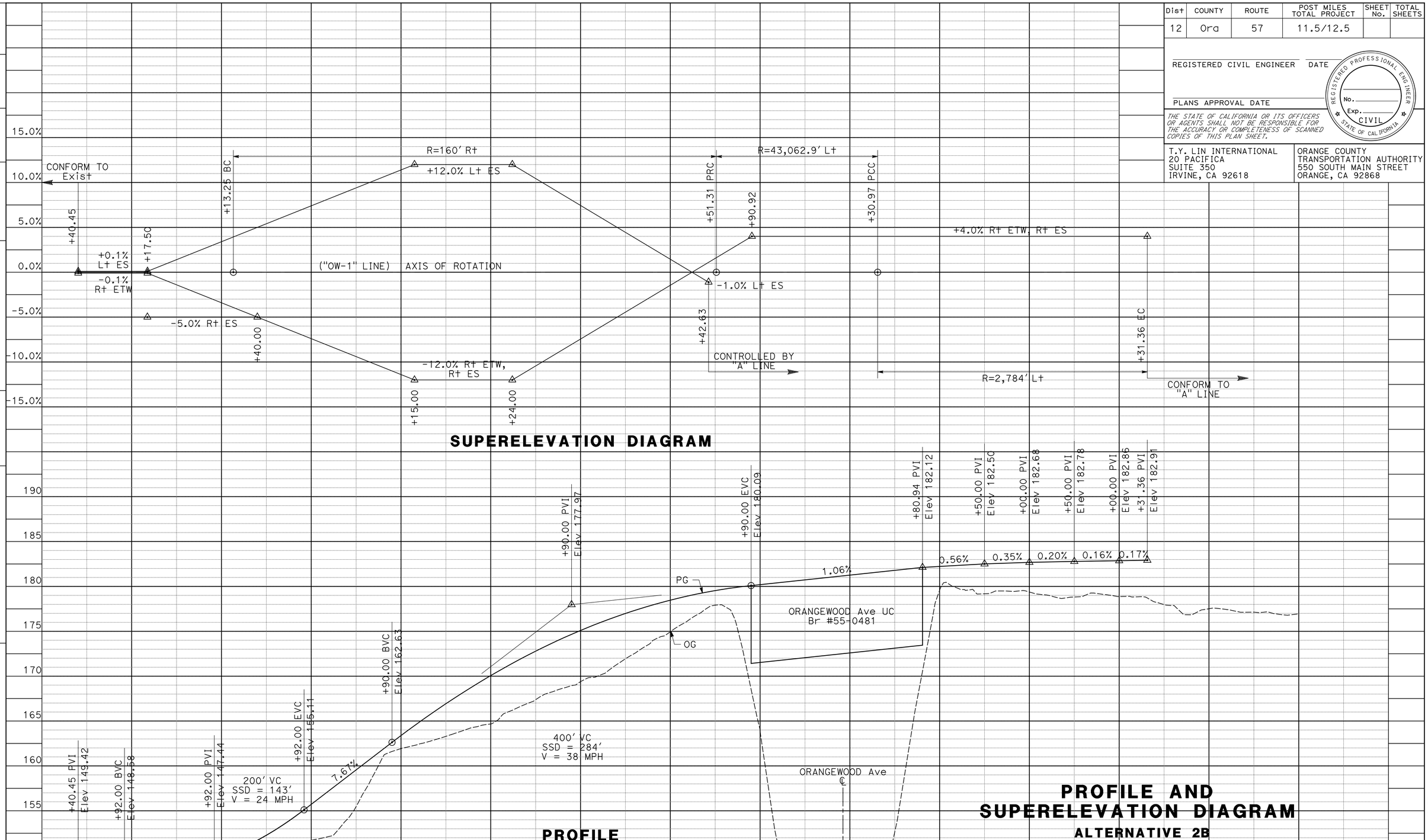

PROFILE AND SUPERELEVATION DIAGRAM

ALTERNATIVE 2B

SCALE: Horiz: 1" = 50'
Vert: 1" = 5'

PS-1

STATION		TOTAL
CY	Exc	
	Emb	

NOT FOR CONSTRUCTION

REVISED BY | DATE REVISED

CALCULATED-DESIGNED BY | CHECKED BY

CONSULTANT FUNCTIONAL SUPERVISOR

STATE OF CALIFORNIA - DEPARTMENT OF TRANSPORTATION

Caltrans

LAST REVISION 00-00-00 | DATE PLOTTED => $DATE | TIME PLOTTED => $TIME

Dist	COUNTY	ROUTE	POST MILES TOTAL PROJECT	SHEET No.	TOTAL SHEETS
12	Ora	57	11.5/12.5		

REGISTERED CIVIL ENGINEER DATE

PLANS APPROVAL DATE

REGISTERED PROFESSIONAL ENGINEER No. Exp. CIVIL STATE OF CALIFORNIA

THE STATE OF CALIFORNIA OR ITS OFFICERS OR AGENTS SHALL NOT BE RESPONSIBLE FOR THE ACCURACY OR COMPLETENESS OF SCANNED COPIES OF THIS PLAN SHEET.

T.Y. LIN INTERNATIONAL
20 PACIFICA
SUITE 350
IRVINE, CA 92618

ORANGE COUNTY
TRANSPORTATION AUTHORITY
550 SOUTH MAIN STREET
ORANGE, CA 92868

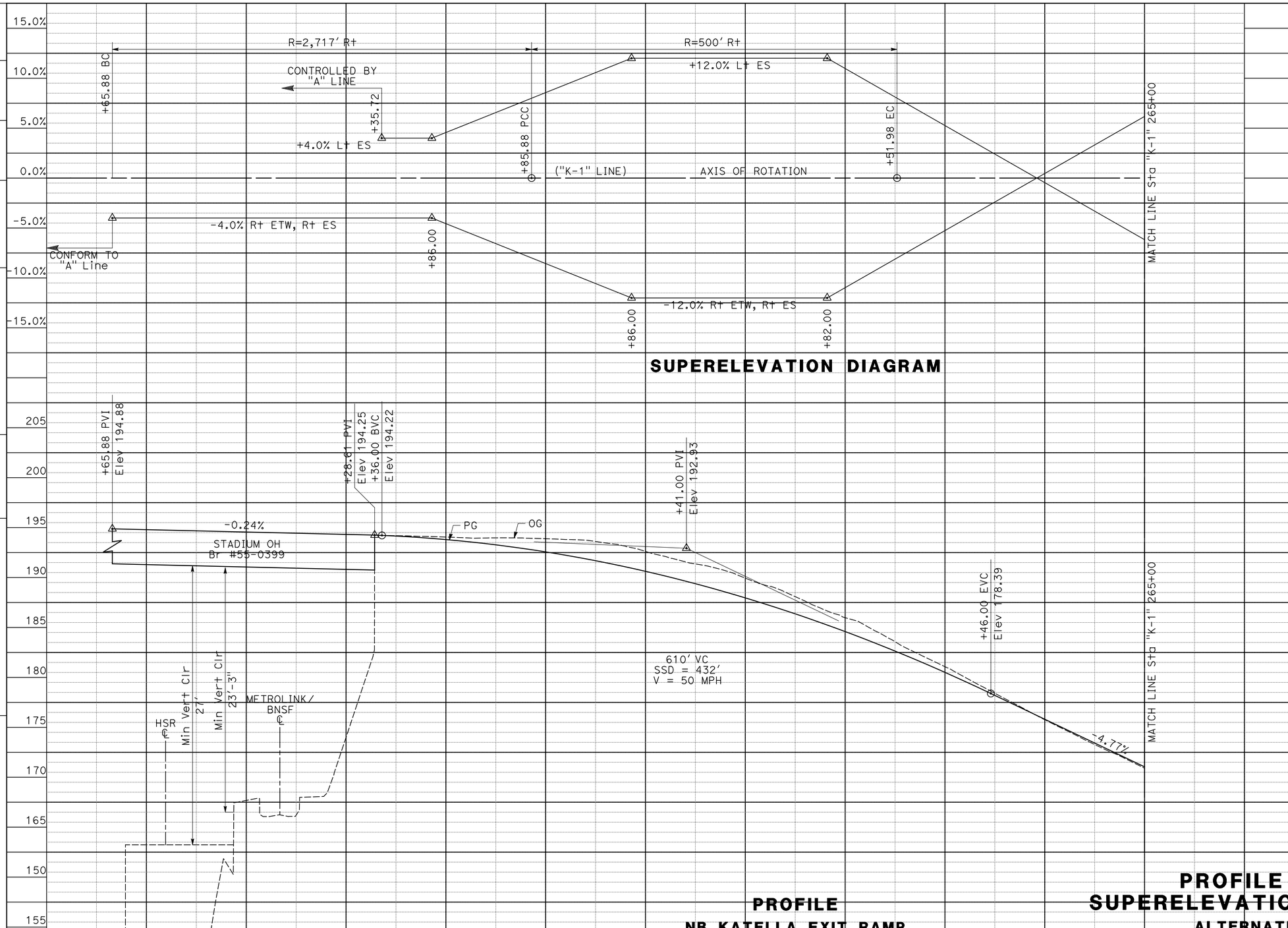

PROFILE

NB KATELLA EXIT RAMP

"K-1" LINE

PROFILE AND SUPERELEVATION DIAGRAM

ALTERNATIVE 2B

SCALE: Horiz: 1" = 50'
Vert: 1" = 5'

PS-2

STATION		TOTAL
CY	Exc	
	Emb	

NOT FOR CONSTRUCTION

REVISED BY | DATE REVISED

CALCULATED-DESIGNED BY | CHECKED BY

CONSULTANT FUNCTIONAL SUPERVISOR

STATE OF CALIFORNIA - DEPARTMENT OF TRANSPORTATION

Caltrans

LAST REVISION 00-00-00 | DATE PLOTTED => $DATE | TIME PLOTTED => $TIME

Dist	COUNTY	ROUTE	POST MILES TOTAL PROJECT	SHEET No.	TOTAL SHEETS
12	Ora	57	11.5/12.5		

REGISTERED CIVIL ENGINEER DATE

PLANS APPROVAL DATE

REGISTERED PROFESSIONAL ENGINEER No. Exp. CIVIL STATE OF CALIFORNIA

THE STATE OF CALIFORNIA OR ITS OFFICERS OR AGENTS SHALL NOT BE RESPONSIBLE FOR THE ACCURACY OR COMPLETENESS OF SCANNED COPIES OF THIS PLAN SHEET.

T.Y. LIN INTERNATIONAL
20 PACIFICA
SUITE 350
IRVINE, CA 92618

ORANGE COUNTY
TRANSPORTATION AUTHORITY
550 SOUTH MAIN STREET
ORANGE, CA 92868

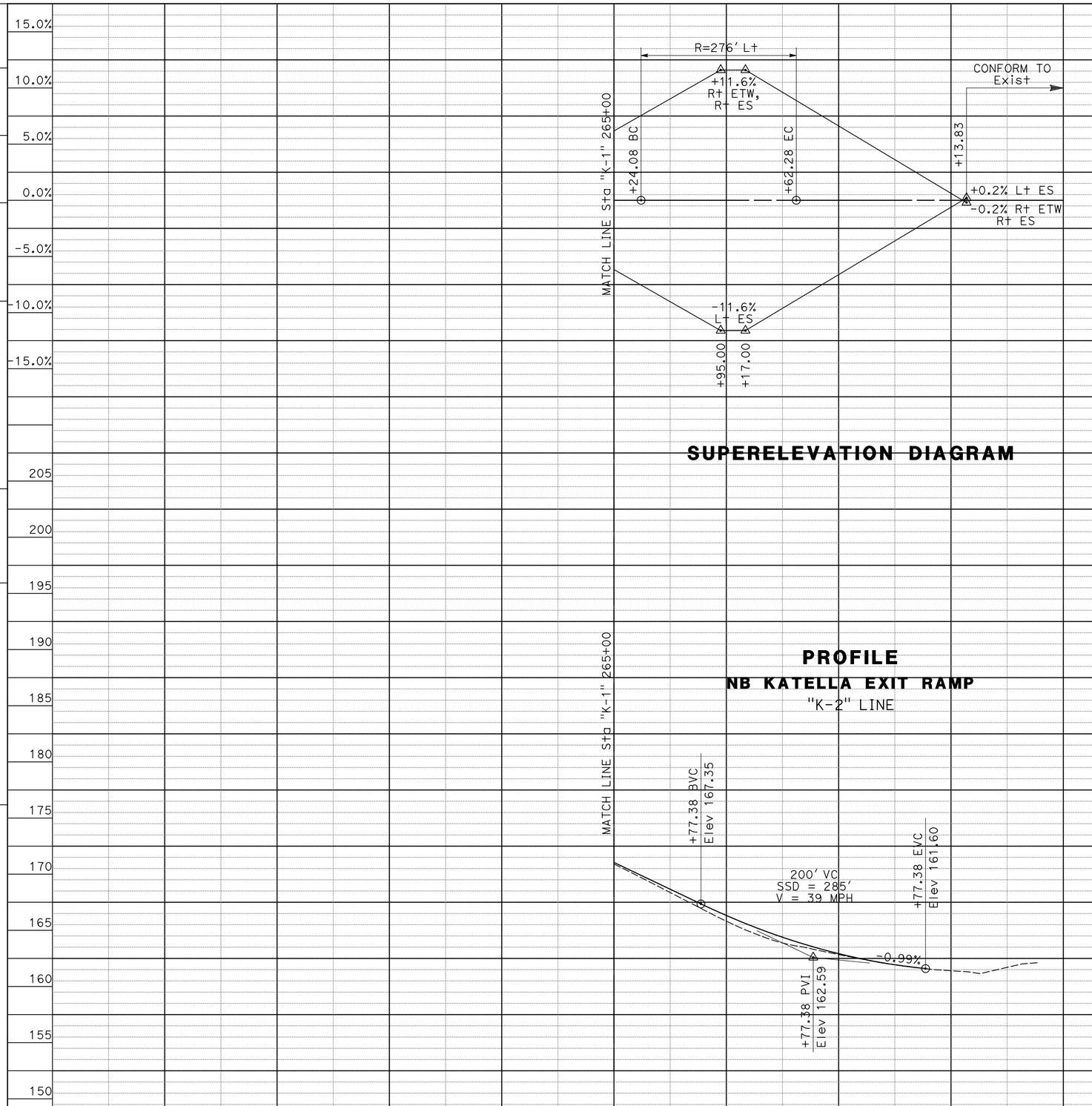

PROFILE AND SUPERELEVATION DIAGRAM

ALTERNATIVE 2B

SCALE: Horiz: 1" = 50'
Vert: 1" = 5'

PS-3

STATION		TOTAL
CY	Exc	
	Emb	

NOT FOR CONSTRUCTION

STATE OF CALIFORNIA - DEPARTMENT OF TRANSPORTATION

Caltrans

CONSULTANT FUNCTIONAL SUPERVISOR

CALCULATED-DESIGNED BY

CHECKED BY

REVISED BY

DATE REVISED

LAST REVISION 00-00-00

DATE PLOTTED => $DATE
TIME PLOTTED => $TIME

THIS PAGE INTENTIONALLY LEFT BLANK