California High-Speed Rail Authority

Merced to Fresno Section: Central Valley Wye

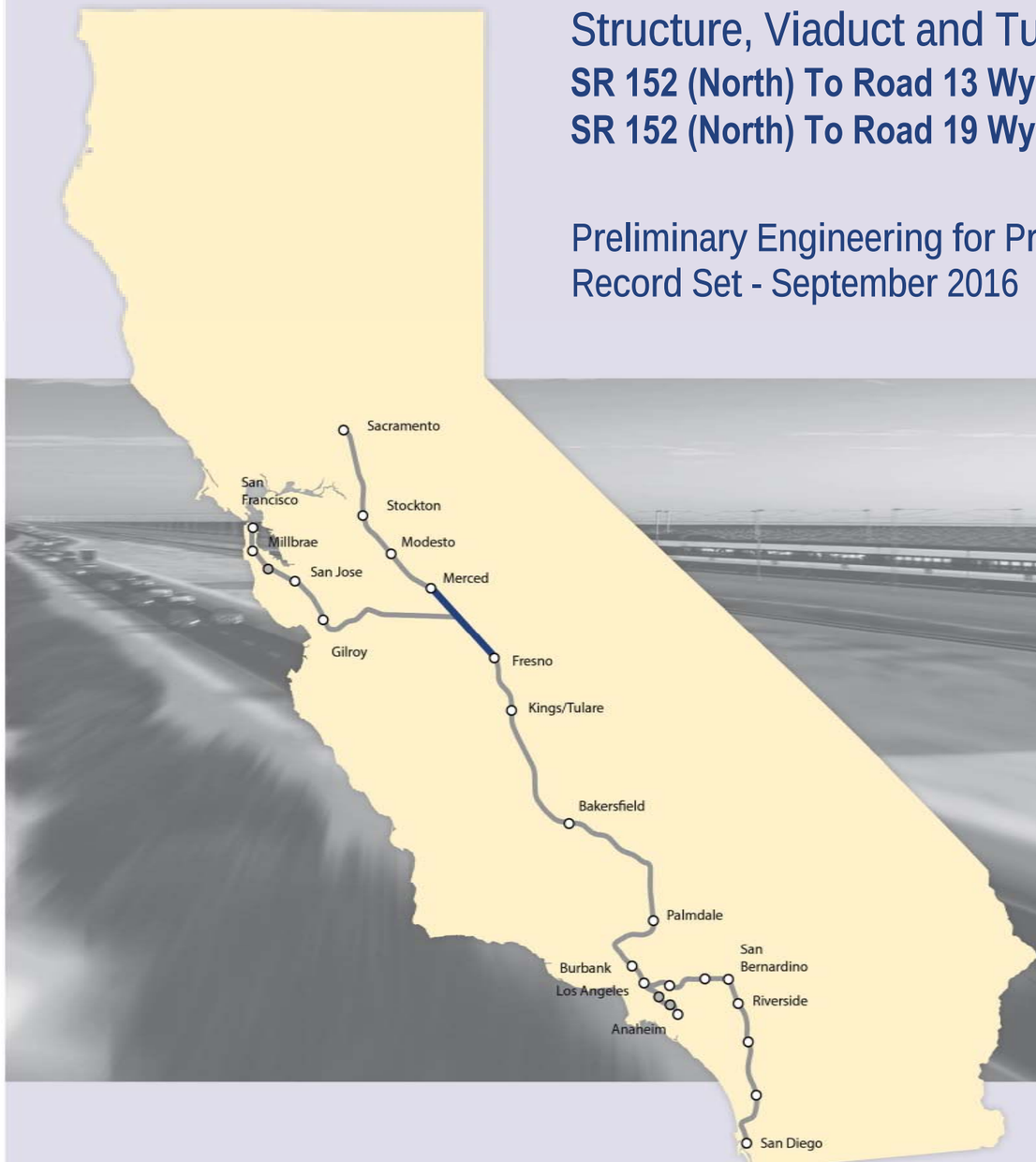

Structure, Viaduct and Tunnel Plans **(Book 1 of 2)**

SR 152 (North) To Road 13 Wye Alternative
SR 152 (North) To Road 19 Wye Alternative

Preliminary Engineering for Project Definition
Record Set - September 2016

CALIFORNIA High-Speed Rail Authority

U.S. Department of Transportation
Federal Railroad Administration

INDEX OF DRAWINGS

DRAWING NO.	SECTION	ALIGNMENT / PLAN SET	TITLE	DESCRIPTION
GENERAL				
ST-B0001	CENTRAL VALLEY WYE	STRUCTURE, VIADUCT AND TUNNEL PLANS	COVER	
ST-B0002	CENTRAL VALLEY WYE	STRUCTURE, VIADUCT AND TUNNEL PLANS	INDEX OF DRAWINGS	SHEET 1 OF 8
ST-B0003	CENTRAL VALLEY WYE	STRUCTURE, VIADUCT AND TUNNEL PLANS	INDEX OF DRAWINGS	SHEET 2 OF 8
ST-B0004	CENTRAL VALLEY WYE	STRUCTURE, VIADUCT AND TUNNEL PLANS	INDEX OF DRAWINGS	SHEET 3 OF 8
ST-B0005	CENTRAL VALLEY WYE	STRUCTURE, VIADUCT AND TUNNEL PLANS	INDEX OF DRAWINGS	SHEET 4 OF 8
ST-B0006	CENTRAL VALLEY WYE	STRUCTURE, VIADUCT AND TUNNEL PLANS	INDEX OF DRAWINGS	SHEET 5 OF 8
ST-B0007	CENTRAL VALLEY WYE	STRUCTURE, VIADUCT AND TUNNEL PLANS	INDEX OF DRAWINGS	SHEET 6 OF 8
ST-B0008	CENTRAL VALLEY WYE	STRUCTURE, VIADUCT AND TUNNEL PLANS	INDEX OF DRAWINGS	SHEET 7 OF 8
ST-B0009	CENTRAL VALLEY WYE	STRUCTURE, VIADUCT AND TUNNEL PLANS	INDEX OF DRAWINGS	SHEET 8 OF 8
ST-B0010	CENTRAL VALLEY WYE	STRUCTURE, VIADUCT AND TUNNEL PLANS	ABBREVIATIONS	SHEET 1 OF 2
ST-B0011	CENTRAL VALLEY WYE	STRUCTURE, VIADUCT AND TUNNEL PLANS	ABBREVIATIONS	SHEET 2 OF 2
ST-B4000	CENTRAL VALLEY WYE	STRUCTURE, VIADUCT AND TUNNEL PLANS	LOCATION PLAN	
SR 152 (NORTH) TO ROAD 13 WYE ALTERNATIVE				
ST-B4001-A	CENTRAL VALLEY WYE	SR 152 (NORTH) TO ROAD 13 WYE ALTERNATIVE	KEY MAP OF STRUCTURAL PLANS	SHEET 1 OF 2
ST-B4002-A	CENTRAL VALLEY WYE	SR 152 (NORTH) TO ROAD 13 WYE ALTERNATIVE	KEY MAP OF STRUCTURAL PLANS	SHEET 2 OF 2
ST-K1050-A	CENTRAL VALLEY WYE	SR 152 (NORTH) TO ROAD 13 WYE ALTERNATIVE	GENERAL PLAN (SJD-FRE)	INDIANA ROAD OVERHEAD
ST-K1060-A	CENTRAL VALLEY WYE	SR 152 (NORTH) TO ROAD 13 WYE ALTERNATIVE	GENERAL PLAN (SJD-FRE)	WILLIS ROAD UNDERPASS
ST-K1065-A	CENTRAL VALLEY WYE	SR 152 (NORTH) TO ROAD 13 WYE ALTERNATIVE	GENERAL PLAN (SJD-FRE)	SAN JOAQUIN RIVER BRIDGE - 1 OF 2
ST-K3065-A	CENTRAL VALLEY WYE	SR 152 (NORTH) TO ROAD 13 WYE ALTERNATIVE	TYPICAL SECTION (SJD-FRE)	SAN JOAQUIN RIVER BRIDGE - 2 OF 2
ST-K1070-A	CENTRAL VALLEY WYE	SR 152 (NORTH) TO ROAD 13 WYE ALTERNATIVE	GENERAL PLAN (SJD-FRE)	MARIPOSA SLOUGH BRIDGE
ST-K1075-A	CENTRAL VALLEY WYE	SR 152 (NORTH) TO ROAD 13 WYE ALTERNATIVE	GENERAL PLAN (SJD-FRE)	HARMON ROAD UNDERPASS
ST-K1080-A	CENTRAL VALLEY WYE	SR 152 (NORTH) TO ROAD 13 WYE ALTERNATIVE	GENERAL PLAN (SJD-FRE)	AERIAL #1 - EASTSIDE BYPASS IRRIGATION DITCH - 1 OF 2
ST-K3080-A	CENTRAL VALLEY WYE	SR 152 (NORTH) TO ROAD 13 WYE ALTERNATIVE	TYPICAL SECTION (SJD-FRE)	AERIAL #1 - EASTSIDE BYPASS IRRIGATION DITCH - 2 OF 2
ST-K1100-A	CENTRAL VALLEY WYE	SR 152 (NORTH) TO ROAD 13 WYE ALTERNATIVE	GENERAL PLAN (SJD-FRE)	SR 59 / SR 152 INTERCHANGE - 1 OF 4
ST-K1101-A	CENTRAL VALLEY WYE	SR 152 (NORTH) TO ROAD 13 WYE ALTERNATIVE	GENERAL PLAN (SJD-FRE)	SR 59 / SR 152 INTERCHANGE - 2 OF 4
ST-K3101-A	CENTRAL VALLEY WYE	SR 152 (NORTH) TO ROAD 13 WYE ALTERNATIVE	TYPICAL SECTIONS (SJD-FRE)	SR 59 / SR 152 INTERCHANGE - 3 OF 4
ST-K1102-A	CENTRAL VALLEY WYE	SR 152 (NORTH) TO ROAD 13 WYE ALTERNATIVE	GENERAL PLAN (SJD-FRE)	SR 59 / SR 152 INTERCHANGE - 4 OF 4
ST-K1110-A	CENTRAL VALLEY WYE	SR 152 (NORTH) TO ROAD 13 WYE ALTERNATIVE	GENERAL PLAN (SJD-FRE)	LINCOLN ROAD (ROAD 4) OVERHEAD
ST-K1160-A	CENTRAL VALLEY WYE	SR 152 (NORTH) TO ROAD 13 WYE ALTERNATIVE	GENERAL PLAN (SJD-FRE)	HEMLOCK ROAD (ROAD 9) INTERCHANGE - 1 OF 2
ST-K3160-A	CENTRAL VALLEY WYE	SR 152 (NORTH) TO ROAD 13 WYE ALTERNATIVE	TYPICAL SECTIONS (SJD-FRE)	HEMLOCK ROAD (ROAD 9) INTERCHANGE - 2 OF 2
ST-K1170-A	CENTRAL VALLEY WYE	SR 152 (NORTH) TO ROAD 13 WYE ALTERNATIVE	GENERAL PLAN (SJD-FRE)	ASH SLOUGH BRIDGE - 1 OF 2
ST-K3170-A	CENTRAL VALLEY WYE	SR 152 (NORTH) TO ROAD 13 WYE ALTERNATIVE	TYPICAL SECTION (SJD-FRE)	ASH SLOUGH BRIDGE - 2 OF 2
ST-K1190-A	CENTRAL VALLEY WYE	SR 152 (NORTH) TO ROAD 13 WYE ALTERNATIVE	GENERAL PLAN (SJD-FRE)	ELM ROAD (ROAD 12) UNDERPASS
ST-K1195-A	CENTRAL VALLEY WYE	SR 152 (NORTH) TO ROAD 13 WYE ALTERNATIVE	GENERAL PLAN (SJD-FRE)	SR 152 (ROAD 12) UNDERCROSSING
ST-K1210-A	CENTRAL VALLEY WYE	SR 152 (NORTH) TO ROAD 13 WYE ALTERNATIVE	GENERAL PLAN (SJD-FRE)	ROBERTSON BOULEVARD (SR 233) INTERCHANGE - 1 OF 2
ST-K3210-A	CENTRAL VALLEY WYE	SR 152 (NORTH) TO ROAD 13 WYE ALTERNATIVE	TYPICAL SECTIONS (SJD-FRE)	ROBERTSON BOULEVARD (SR 233) INTERCHANGE - 2 OF 2
ST-K1220-A	CENTRAL VALLEY WYE	SR 152 (NORTH) TO ROAD 13 WYE ALTERNATIVE	GENERAL PLAN (SJD-FRE)	BERENDA SLOUGH BRIDGE - 1 OF 2
ST-K3220-A	CENTRAL VALLEY WYE	SR 152 (NORTH) TO ROAD 13 WYE ALTERNATIVE	TYPICAL SECTION (SJD-FRE)	BERENDA SLOUGH BRIDGE - 2 OF 2
ST-K1230-A	CENTRAL VALLEY WYE	SR 152 (NORTH) TO ROAD 13 WYE ALTERNATIVE	GENERAL PLAN (SJD-FRE)	BERENDA WAY (ROAD 16) UNDERPASS
ST-K1235-A	CENTRAL VALLEY WYE	SR 152 (NORTH) TO ROAD 13 WYE ALTERNATIVE	GENERAL PLAN (SJD-FRE)	BERENDA WAY (ROAD 16) INTERCHANGE - 1 OF 2
ST-K3235-A	CENTRAL VALLEY WYE	SR 152 (NORTH) TO ROAD 13 WYE ALTERNATIVE	TYPICAL SECTION (SJD-FRE)	BERENDA WAY (ROAD 16) INTERCHANGE - 2 OF 2
ST-K1240-A	CENTRAL VALLEY WYE	SR 152 (NORTH) TO ROAD 13 WYE ALTERNATIVE	GENERAL PLAN (SJD-FRE)	ROAD 17 1/2 OVERHEAD

REV	DATE	BY	CHK	APP	DESCRIPTION

DESIGNED BY M. BRATT
DRAWN BY A. M.
CHECKED BY K. CHARAN
IN CHARGE C. LEMLEY
DATE 08/12/2016

RECORD SET
15% DESIGN SUBMITTAL

NOT FOR CONSTRUCTION

PARSONS

CALIFORNIA HIGH-SPEED RAIL AUTHORITY

CALIFORNIA HIGH-SPEED TRAIN PROJECT
MERCED TO FRESNO SECTION
CENTRAL VALLEY WYE
STRUCTURE, VIADUCT AND TUNNEL PLANS
INDEX OF DRAWINGS
SHEET 1 OF 8

CONTRACT NO. HSR08-05
DRAWING NO. ST-B0002
SCALE NO SCALE
SHEET NO.

MF-ST-B0002.dgn 16-AUG-2016 10:58 p0051330

INDEX OF DRAWINGS

DRAWING NO.	SECTION	ALIGNMENT / PLAN SET	TITLE	DESCRIPTION
ST-K1250-A	CENTRAL VALLEY WYE	SR 152 (NORTH) TO ROAD 13 WYE ALTERNATIVE	GENERAL PLAN (SJD-FRE)	AERIAL #2 - SR 99 / UPRR - 1 OF 3
ST-K1251-A	CENTRAL VALLEY WYE	SR 152 (NORTH) TO ROAD 13 WYE ALTERNATIVE	GENERAL PLAN (SJD-FRE)	AERIAL #2 - SR 99 / UPRR - 2 OF 3
ST-K3250-A	CENTRAL VALLEY WYE	SR 152 (NORTH) TO ROAD 13 WYE ALTERNATIVE	TYPICAL SECTIONS (SJD-FRE)	AERIAL #2 - SR 99 / UPRR - 3 OF 3
ST-K1260-A	CENTRAL VALLEY WYE	SR 152 (NORTH) TO ROAD 13 WYE ALTERNATIVE	GENERAL PLAN (SJD-FRE)	ROAD 20 OVERHEAD
ST-K1280-A	CENTRAL VALLEY WYE	SR 152 (NORTH) TO ROAD 13 WYE ALTERNATIVE	GENERAL PLAN (SJD-FRE)	ROAD 22 OVERHEAD
ST-K1310-A	CENTRAL VALLEY WYE	SR 152 (NORTH) TO ROAD 13 WYE ALTERNATIVE	GENERAL PLAN (SJD-FRE)	AVENUE 20 1/2 OVERHEAD
ST-K1330-A	CENTRAL VALLEY WYE	SR 152 (NORTH) TO ROAD 13 WYE ALTERNATIVE	GENERAL PLAN (SJD-FRE)	DRY CREEK BRIDGE
ST-K1420-A	CENTRAL VALLEY WYE	SR 152 (NORTH) TO ROAD 13 WYE ALTERNATIVE	GENERAL PLAN (MER-FRE)	AERIAL #3 - SOUTHBOUND OVER HST MAINLINE - 1 OF 6
ST-K1421-A	CENTRAL VALLEY WYE	SR 152 (NORTH) TO ROAD 13 WYE ALTERNATIVE	GENERAL PLAN (MER-FRE)	AERIAL #3 - SOUTHBOUND OVER HST MAINLINE - 2 OF 6
ST-K1422-A	CENTRAL VALLEY WYE	SR 152 (NORTH) TO ROAD 13 WYE ALTERNATIVE	GENERAL PLAN (MER-FRE)	AERIAL #3 - SOUTHBOUND OVER HST MAINLINE - 3 OF 6
ST-K3420-A	CENTRAL VALLEY WYE	SR 152 (NORTH) TO ROAD 13 WYE ALTERNATIVE	TYPICAL SECTION (MER-FRE)	AERIAL #3 - SOUTHBOUND OVER HST MAINLINE - 4 OF 6
ST-K3421-A	CENTRAL VALLEY WYE	SR 152 (NORTH) TO ROAD 13 WYE ALTERNATIVE	TYPICAL SECTION (MER-FRE)	AERIAL #3 - SOUTHBOUND OVER HST MAINLINE - 5 OF 6
ST-K3422-A	CENTRAL VALLEY WYE	SR 152 (NORTH) TO ROAD 13 WYE ALTERNATIVE	TYPICAL SECTIONS (MER-FRE)	AERIAL #3 - SOUTHBOUND OVER HST MAINLINE - 6 OF 6
ST-K1430-A	CENTRAL VALLEY WYE	SR 152 (NORTH) TO ROAD 13 WYE ALTERNATIVE	GENERAL PLAN (MER-FRE)	RAILROAD DRIVE UNDERPASS (HST NB)
ST-K1433-A	CENTRAL VALLEY WYE	SR 152 (NORTH) TO ROAD 13 WYE ALTERNATIVE	GENERAL PLAN (MER-FRE)	ROBERTSON BOULEVARD (SR 233) UNDERPASS
ST-K1436-A	CENTRAL VALLEY WYE	SR 152 (NORTH) TO ROAD 13 WYE ALTERNATIVE	GENERAL PLAN (MER-FRE)	MADISON ROAD (AVENUE 23 1/2) UNDERPASS
ST-K1450-A	CENTRAL VALLEY WYE	SR 152 (NORTH) TO ROAD 13 WYE ALTERNATIVE	GENERAL PLAN (MER-FRE)	WASHINGTON ROAD (AVENUE 25) UNDERPASS - 1 OF 2
ST-K3450-A	CENTRAL VALLEY WYE	SR 152 (NORTH) TO ROAD 13 WYE ALTERNATIVE	TYPICAL SECTION (MER-FRE)	WASHINGTON ROAD (AVENUE 25) UNDERPASS - 2 OF 2
ST-K1455-A	CENTRAL VALLEY WYE	SR 152 (NORTH) TO ROAD 13 WYE ALTERNATIVE	GENERAL PLAN (MER-FRE)	ASH SLOUGH BRIDGE - 1 OF 2
ST-K3455-A	CENTRAL VALLEY WYE	SR 152 (NORTH) TO ROAD 13 WYE ALTERNATIVE	TYPICAL SECTION (MER-FRE)	ASH SLOUGH BRIDGE - 2 OF 2
ST-K1460-A	CENTRAL VALLEY WYE	SR 152 (NORTH) TO ROAD 13 WYE ALTERNATIVE	GENERAL PLAN (MER-FRE)	AVENUE 26 1/2 UNDERPASS
ST-K1470-A	CENTRAL VALLEY WYE	SR 152 (NORTH) TO ROAD 13 WYE ALTERNATIVE	GENERAL PLAN (MER-FRE)	CHOWCHILLA RIVER BRIDGE - 1 OF 2
ST-K3470-A	CENTRAL VALLEY WYE	SR 152 (NORTH) TO ROAD 13 WYE ALTERNATIVE	TYPICAL SECTION (MER-FRE)	CHOWCHILLA RIVER BRIDGE - 2 OF 2
ST-K1475-A	CENTRAL VALLEY WYE	SR 152 (NORTH) TO ROAD 13 WYE ALTERNATIVE	GENERAL PLAN (MER-FRE)	VISTA AVENUE (ROAD 13) UNDERPASS
ST-K1490-A	CENTRAL VALLEY WYE	SR 152 (NORTH) TO ROAD 13 WYE ALTERNATIVE	GENERAL PLAN (MER-FRE)	DUTCHMAN CREEK BRIDGE
ST-K1495-A	CENTRAL VALLEY WYE	SR 152 (NORTH) TO ROAD 13 WYE ALTERNATIVE	GENERAL PLAN (MER-FRE)	ROAD 11 BRIDGE
ST-T1500-A	CENTRAL VALLEY WYE	SR 152 (NORTH) TO ROAD 13 WYE ALTERNATIVE	GENERAL PLAN (MER-FRE)	RETAINED CUT - SANDY MUSH ROAD - 1 OF 2
ST-T3500-A	CENTRAL VALLEY WYE	SR 152 (NORTH) TO ROAD 13 WYE ALTERNATIVE	TYPICAL SECTIONS (MER-FRE)	RETAINED CUT - SANDY MUSH ROAD - 2 OF 2
ST-K1500-A	CENTRAL VALLEY WYE	SR 152 (NORTH) TO ROAD 13 WYE ALTERNATIVE	GENERAL PLAN (MER-FRE)	SANDY MUSH ROAD OVERHEAD
ST-K1620-A	CENTRAL VALLEY WYE	SR 152 (NORTH) TO ROAD 13 WYE ALTERNATIVE	GENERAL PLAN (SJD-MER)	AERIAL #4 - NORTHBOUND OVER HST MAINLINE - 1 OF 6
ST-K1621-A	CENTRAL VALLEY WYE	SR 152 (NORTH) TO ROAD 13 WYE ALTERNATIVE	GENERAL PLAN (SJD-MER)	AERIAL #4 - NORTHBOUND OVER HST MAINLINE - 2 OF 6
ST-K1622-A	CENTRAL VALLEY WYE	SR 152 (NORTH) TO ROAD 13 WYE ALTERNATIVE	GENERAL PLAN (SJD-MER)	AERIAL #4 - NORTHBOUND OVER HST MAINLINE - 3 OF 6
ST-K1623-A	CENTRAL VALLEY WYE	SR 152 (NORTH) TO ROAD 13 WYE ALTERNATIVE	GENERAL PLAN (SJD-MER)	AERIAL #4 - NORTHBOUND OVER HST MAINLINE - 4 OF 6
ST-K3620-A	CENTRAL VALLEY WYE	SR 152 (NORTH) TO ROAD 13 WYE ALTERNATIVE	TYPICAL SECTIONS (SJD-MER)	AERIAL #4 - NORTHBOUND OVER HST MAINLINE - 5 OF 6
ST-K3621-A	CENTRAL VALLEY WYE	SR 152 (NORTH) TO ROAD 13 WYE ALTERNATIVE	TYPICAL SECTIONS (SJD-MER)	AERIAL #4 - NORTHBOUND OVER HST MAINLINE - 6 OF 6
ST-K1630-A	CENTRAL VALLEY WYE	SR 152 (NORTH) TO ROAD 13 WYE ALTERNATIVE	GENERAL PLAN (SJD-MER)	ELM ROAD (ROAD 12) UNDERPASS
ST-K1635-A	CENTRAL VALLEY WYE	SR 152 (NORTH) TO ROAD 13 WYE ALTERNATIVE	GENERAL PLAN (SJD-MER)	MADISON ROAD (AVENUE 23 1/2) OVERHEAD
ST-K1650-A	CENTRAL VALLEY WYE	SR 152 (NORTH) TO ROAD 13 WYE ALTERNATIVE	GENERAL PLAN (SJD-MER)	AERIAL #5 - NORTHBOUND OVER HST MERCED TO FRESNO - 1 OF 5
ST-K1651-A	CENTRAL VALLEY WYE	SR 152 (NORTH) TO ROAD 13 WYE ALTERNATIVE	GENERAL PLAN (SJD-MER)	AERIAL #5 - NORTHBOUND OVER HST MERCED TO FRESNO - 2 OF 5
ST-K1652-A	CENTRAL VALLEY WYE	SR 152 (NORTH) TO ROAD 13 WYE ALTERNATIVE	GENERAL PLAN (SJD-MER)	AERIAL #5 - NORTHBOUND OVER HST MERCED TO FRESNO - 3 OF 5
ST-K3650-A	CENTRAL VALLEY WYE	SR 152 (NORTH) TO ROAD 13 WYE ALTERNATIVE	TYPICAL SECTIONS (SJD-MER)	AERIAL #5 - NORTHBOUND OVER HST MERCED TO FRESNO - 4 OF 5
ST-K3651-A	CENTRAL VALLEY WYE	SR 152 (NORTH) TO ROAD 13 WYE ALTERNATIVE	TYPICAL SECTIONS (SJD-MER)	AERIAL #5 - NORTHBOUND OVER HST MERCED TO FRESNO - 5 OF 5

REV	DATE	BY	CHK	APP	DESCRIPTION

DESIGNED BY M. BRATT
DRAWN BY A. M.
CHECKED BY K. CHARAN
IN CHARGE C. LEMLEY
DATE 08/12/2016

RECORD SET
15% DESIGN SUBMITTAL

NOT FOR CONSTRUCTION

PARSONS

CALIFORNIA HIGH-SPEED RAIL AUTHORITY

CALIFORNIA HIGH-SPEED TRAIN PROJECT
MERCED TO FRESNO SECTION
CENTRAL VALLEY WYE
STRUCTURE, VIADUCT AND TUNNEL PLANS
INDEX OF DRAWINGS
SHEET 2 OF 8

CONTRACT NO. HSR08-05
DRAWING NO. ST-B0003
SCALE NO SCALE
SHEET NO.

p0051330 16-AUG-2016 07:49 MF-ST-B0003.dgn

INDEX OF DRAWINGS

DRAWING NO.	SECTION	ALIGNMENT / PLAN SET	TITLE	DESCRIPTION
ST-K1655-A	CENTRAL VALLEY WYE	SR 152 (NORTH) TO ROAD 13 WYE ALTERNATIVE	GENERAL PLAN (SJD-MER)	HST SB BRIDGE OVER ASH SLOUGH - 1 OF 2
ST-K3655-A	CENTRAL VALLEY WYE	SR 152 (NORTH) TO ROAD 13 WYE ALTERNATIVE	TYPICAL SECTION (SJD-MER)	HST SB BRIDGE OVER ASH SLOUGH - 2 OF 2
SR 152 (NORTH) TO ROAD 19 WYE ALTERNATIVE				
ST-B4001-B	CENTRAL VALLEY WYE	SR 152 (NORTH) TO ROAD 19 WYE ALTERNATIVE	KEY MAP OF STRUCTURAL PLANS	SHEET 1 OF 2
ST-B4002-B	CENTRAL VALLEY WYE	SR 152 (NORTH) TO ROAD 19 WYE ALTERNATIVE	KEY MAP OF STRUCTURAL PLANS	SHEET 2 OF 2
ST-K1050-B	CENTRAL VALLEY WYE	SR 152 (NORTH) TO ROAD 19 WYE ALTERNATIVE	GENERAL PLAN (SJD-FRE)	INDIANA ROAD OVERHEAD
ST-K1060-B	CENTRAL VALLEY WYE	SR 152 (NORTH) TO ROAD 19 WYE ALTERNATIVE	GENERAL PLAN (SJD-FRE)	WILLIS ROAD UNDERPASS
ST-K1065-B	CENTRAL VALLEY WYE	SR 152 (NORTH) TO ROAD 19 WYE ALTERNATIVE	GENERAL PLAN (SJD-FRE)	SAN JOAQUIN RIVER BRIDGE - 1 OF 2
ST-K3065-B	CENTRAL VALLEY WYE	SR 152 (NORTH) TO ROAD 19 WYE ALTERNATIVE	TYPICAL SECTION (SJD-FRE)	SAN JOAQUIN RIVER BRIDGE - 2 OF 2
ST-K1070-B	CENTRAL VALLEY WYE	SR 152 (NORTH) TO ROAD 19 WYE ALTERNATIVE	GENERAL PLAN (SJD-FRE)	MARIPOSA SLOUGH BRIDGE
ST-K1075-B	CENTRAL VALLEY WYE	SR 152 (NORTH) TO ROAD 19 WYE ALTERNATIVE	GENERAL PLAN (SJD-FRE)	HARMON ROAD UNDERPASS
ST-K1080-B	CENTRAL VALLEY WYE	SR 152 (NORTH) TO ROAD 19 WYE ALTERNATIVE	GENERAL PLAN (SJD-FRE)	AERIAL #1 - EASTSIDE BYPASS IRRIGATION DITCH - 1 OF 2
ST-K3080-B	CENTRAL VALLEY WYE	SR 152 (NORTH) TO ROAD 19 WYE ALTERNATIVE	TYPICAL SECTION (SJD-FRE)	AERIAL #1 - EASTSIDE BYPASS IRRIGATION DITCH - 2 OF 2
ST-K1100-B	CENTRAL VALLEY WYE	SR 152 (NORTH) TO ROAD 19 WYE ALTERNATIVE	GENERAL PLAN (SJD-FRE)	SR 59 / SR 152 INTERCHANGE - 1 OF 4
ST-K1101-B	CENTRAL VALLEY WYE	SR 152 (NORTH) TO ROAD 19 WYE ALTERNATIVE	GENERAL PLAN (SJD-FRE)	SR 59 / SR 152 INTERCHANGE - 2 OF 4
ST-K3101-B	CENTRAL VALLEY WYE	SR 152 (NORTH) TO ROAD 19 WYE ALTERNATIVE	TYPICAL SECTIONS (SJD-FRE)	SR 59 / SR 152 INTERCHANGE - 3 OF 4
ST-K1102-B	CENTRAL VALLEY WYE	SR 152 (NORTH) TO ROAD 19 WYE ALTERNATIVE	GENERAL PLAN (SJD-FRE)	SR 59 / SR 152 INTERCHANGE - 4 OF 4
ST-K1110-B	CENTRAL VALLEY WYE	SR 152 (NORTH) TO ROAD 19 WYE ALTERNATIVE	GENERAL PLAN (SJD-FRE)	LINCOLN ROAD (ROAD 4) OVERHEAD
ST-K1160-B	CENTRAL VALLEY WYE	SR 152 (NORTH) TO ROAD 19 WYE ALTERNATIVE	GENERAL PLAN (SJD-FRE)	HEMLOCK ROAD (ROAD 9) INTERCHANGE - 1 OF 2
ST-K3160-B	CENTRAL VALLEY WYE	SR 152 (NORTH) TO ROAD 19 WYE ALTERNATIVE	TYPICAL SECTIONS (SJD-FRE)	HEMLOCK ROAD (ROAD 9) INTERCHANGE - 2 OF 2
ST-K1170-B	CENTRAL VALLEY WYE	SR 152 (NORTH) TO ROAD 19 WYE ALTERNATIVE	GENERAL PLAN (SJD-FRE)	ASH SLOUGH BRIDGE
ST-K1190-B	CENTRAL VALLEY WYE	SR 152 (NORTH) TO ROAD 19 WYE ALTERNATIVE	GENERAL PLAN (SJD-FRE)	ELM ROAD (ROAD 12) OVERHEAD
ST-K1210-B	CENTRAL VALLEY WYE	SR 152 (NORTH) TO ROAD 19 WYE ALTERNATIVE	GENERAL PLAN (SJD-FRE)	ROBERTSON BOULEVARD (SR 233) INTERCHANGE - 1 OF 2
ST-K3210-B	CENTRAL VALLEY WYE	SR 152 (NORTH) TO ROAD 19 WYE ALTERNATIVE	TYPICAL SECTIONS (SJD-FRE)	ROBERTSON BOULEVARD (SR 233) INTERCHANGE - 2 OF 2
ST-K1220-B	CENTRAL VALLEY WYE	SR 152 (NORTH) TO ROAD 19 WYE ALTERNATIVE	GENERAL PLAN (SJD-FRE)	BERENDA SLOUGH BRIDGE
ST-K1230-B	CENTRAL VALLEY WYE	SR 152 (NORTH) TO ROAD 19 WYE ALTERNATIVE	GENERAL PLAN (SJD-FRE)	BERENDA WAY (ROAD 16) UNDERPASS
ST-K1235-B	CENTRAL VALLEY WYE	SR 152 (NORTH) TO ROAD 19 WYE ALTERNATIVE	GENERAL PLAN (SJD-FRE)	BERENDA WAY (ROAD 16) INTERCHANGE - 1 OF 2
ST-K3235-B	CENTRAL VALLEY WYE	SR 152 (NORTH) TO ROAD 19 WYE ALTERNATIVE	TYPICAL SECTION (SJD-FRE)	BERENDA WAY (ROAD 16) INTERCHANGE - 2 OF 2
ST-K1240-B	CENTRAL VALLEY WYE	SR 152 (NORTH) TO ROAD 19 WYE ALTERNATIVE	GENERAL PLAN (SJD-FRE)	ROAD 17 1/2 UNDERPASS
ST-K1245-B	CENTRAL VALLEY WYE	SR 152 (NORTH) TO ROAD 19 WYE ALTERNATIVE	GENERAL PLAN (SJD-FRE)	SR 152 (ROAD 17 1/2) UNDERCROSSING
ST-K1250-B	CENTRAL VALLEY WYE	SR 152 (NORTH) TO ROAD 19 WYE ALTERNATIVE	GENERAL PLAN (SJD-FRE)	AERIAL #2 - SR 99 / UPRR - 1 OF 3
ST-K1251-B	CENTRAL VALLEY WYE	SR 152 (NORTH) TO ROAD 19 WYE ALTERNATIVE	GENERAL PLAN (SJD-FRE)	AERIAL #2 - SR 99 / UPRR - 2 OF 3
ST-K3250-B	CENTRAL VALLEY WYE	SR 152 (NORTH) TO ROAD 19 WYE ALTERNATIVE	TYPICAL SECTIONS (SJD-FRE)	AERIAL #2 - SR 99 / UPRR - 3 OF 3
ST-K1260-B	CENTRAL VALLEY WYE	SR 152 (NORTH) TO ROAD 19 WYE ALTERNATIVE	GENERAL PLAN (SJD-FRE)	ROAD 20 UNDERPASS
ST-K1280-B	CENTRAL VALLEY WYE	SR 152 (NORTH) TO ROAD 19 WYE ALTERNATIVE	GENERAL PLAN (SJD-FRE)	ROAD 22 OVERHEAD
ST-K1310-B	CENTRAL VALLEY WYE	SR 152 (NORTH) TO ROAD 19 WYE ALTERNATIVE	GENERAL PLAN (SJD-FRE)	AVENUE 20 1/2 OVERHEAD
ST-K1320-B	CENTRAL VALLEY WYE	SR 152 (NORTH) TO ROAD 19 WYE ALTERNATIVE	GENERAL PLAN (SJD-FRE)	DRY CREEK BRIDGE
ST-K1420-B	CENTRAL VALLEY WYE	SR 152 (NORTH) TO ROAD 19 WYE ALTERNATIVE	GENERAL PLAN (MER-FRE)	AERIAL #3 - SOUTHBOUND OVER HST MAINLINE - 1 OF 5
ST-K1421-B	CENTRAL VALLEY WYE	SR 152 (NORTH) TO ROAD 19 WYE ALTERNATIVE	GENERAL PLAN (MER-FRE)	AERIAL #3 - SOUTHBOUND OVER HST MAINLINE - 2 OF 5
ST-K1422-B	CENTRAL VALLEY WYE	SR 152 (NORTH) TO ROAD 19 WYE ALTERNATIVE	GENERAL PLAN (MER-FRE)	AERIAL #3 - SOUTHBOUND OVER HST MAINLINE - 3 OF 5
ST-K3420-B	CENTRAL VALLEY WYE	SR 152 (NORTH) TO ROAD 19 WYE ALTERNATIVE	TYPICAL SECTIONS (MER-FRE)	AERIAL #3 - SOUTHBOUND OVER HST MAINLINE - 4 OF 5
ST-K3421-B	CENTRAL VALLEY WYE	SR 152 (NORTH) TO ROAD 19 WYE ALTERNATIVE	TYPICAL SECTIONS (MER-FRE)	AERIAL #3 - SOUTHBOUND OVER HST MAINLINE - 5 OF 5
ST-K1425-B	CENTRAL VALLEY WYE	SR 152 (NORTH) TO ROAD 19 WYE ALTERNATIVE	GENERAL PLAN (MER-FRE)	ROAD 20 UNDERPASS (HST NB)

REV	DATE	BY	CHK	APP	DESCRIPTION

DESIGNED BY M. BRATT
DRAWN BY A. M.
CHECKED BY K. CHARAN
IN CHARGE C. LEMLEY
DATE 08/12/2016

RECORD SET
15% DESIGN
SUBMITTAL

NOT FOR
CONSTRUCTION

PARSONS

CALIFORNIA
HIGH-SPEED RAIL AUTHORITY

CALIFORNIA HIGH-SPEED TRAIN PROJECT
MERCED TO FRESNO SECTION
CENTRAL VALLEY WYE
STRUCTURE, VIADUCT AND TUNNEL PLANS
INDEX OF DRAWINGS
SHEET 3 OF 8

CONTRACT NO. HSR08-05
DRAWING NO. ST-B0004
SCALE NO SCALE
SHEET NO.

MF-ST-B0004.dgn 16-AUG-2016 07:49 p005133a

INDEX OF DRAWINGS				
DRAWING NO.	SECTION	ALIGNMENT / PLAN SET	TITLE	DESCRIPTION
ST-K1430-B	CENTRAL VALLEY WYE	SR 152 (NORTH) TO ROAD 19 WYE ALTERNATIVE	GENERAL PLAN (MER-FRE)	MADISON ROAD (AVENUE 23 1/2) UNDERPASS
ST-K1435-B	CENTRAL VALLEY WYE	SR 152 (NORTH) TO ROAD 19 WYE ALTERNATIVE	GENERAL PLAN (MER-FRE)	AVENUE 24 UNDERPASS
ST-K1450-B	CENTRAL VALLEY WYE	SR 152 (NORTH) TO ROAD 19 WYE ALTERNATIVE	GENERAL PLAN (MER-FRE)	BERENDA SLOUGH BRIDGE - 1 OF 2
ST-K3450-B	CENTRAL VALLEY WYE	SR 152 (NORTH) TO ROAD 19 WYE ALTERNATIVE	TYPICAL SECTION (MER-FRE)	BERENDA SLOUGH BRIDGE - 2 OF 2
ST-K1455-B	CENTRAL VALLEY WYE	SR 152 (NORTH) TO ROAD 19 WYE ALTERNATIVE	GENERAL PLAN (MER-FRE)	FAUST ROAD (AVENUE 26) UNDERPASS
ST-K1460-B	CENTRAL VALLEY WYE	SR 152 (NORTH) TO ROAD 19 WYE ALTERNATIVE	GENERAL PLAN (MER-FRE)	ASH SLOUGH BRIDGE - 1 OF 2
ST-K3460-B	CENTRAL VALLEY WYE	SR 152 (NORTH) TO ROAD 19 WYE ALTERNATIVE	TYPICAL SECTION (MER-FRE)	ASH SLOUGH BRIDGE - 2 OF 2
ST-K1465-B	CENTRAL VALLEY WYE	SR 152 (NORTH) TO ROAD 19 WYE ALTERNATIVE	GENERAL PLAN (MER-FRE)	ROAD 19 UNDERPASS
ST-K1480-B	CENTRAL VALLEY WYE	SR 152 (NORTH) TO ROAD 19 WYE ALTERNATIVE	GENERAL PLAN (MER-FRE)	CHOWCHILLA RIVER BRIDGE - 1 OF 2
ST-K3480-B	CENTRAL VALLEY WYE	SR 152 (NORTH) TO ROAD 19 WYE ALTERNATIVE	TYPICAL SECTION (MER-FRE)	CHOWCHILLA RIVER BRIDGE - 2 OF 2
ST-K1510-B	CENTRAL VALLEY WYE	SR 152 (NORTH) TO ROAD 19 WYE ALTERNATIVE	GENERAL PLAN (MER-FRE)	MINTURN ROAD (ROAD 15) OVERHEAD
ST-T1520-B	CENTRAL VALLEY WYE	SR 152 (NORTH) TO ROAD 19 WYE ALTERNATIVE	GENERAL PLAN (MER-FRE)	CUT AND COVER TUNNEL AT SR 99 - 1 OF 5
ST-T1521-B	CENTRAL VALLEY WYE	SR 152 (NORTH) TO ROAD 19 WYE ALTERNATIVE	GENERAL PLAN (MER-FRE)	CUT AND COVER TUNNEL AT SR 99 - 2 OF 5
ST-T1522-B	CENTRAL VALLEY WYE	SR 152 (NORTH) TO ROAD 19 WYE ALTERNATIVE	GENERAL PLAN (MER-FRE)	CUT AND COVER TUNNEL AT SR 99 - 3 OF 5
ST-T3520-B	CENTRAL VALLEY WYE	SR 152 (NORTH) TO ROAD 19 WYE ALTERNATIVE	TYPICAL SECTION (MER-FRE)	CUT AND COVER TUNNEL AT SR 99 - 4 OF 5
ST-T3521-B	CENTRAL VALLEY WYE	SR 152 (NORTH) TO ROAD 19 WYE ALTERNATIVE	TYPICAL SECTION (MER-FRE)	CUT AND COVER TUNNEL AT SR 99 - 5 OF 5
ST-T1530-B	CENTRAL VALLEY WYE	SR 152 (NORTH) TO ROAD 19 WYE ALTERNATIVE	GENERAL PLAN (MER-FRE)	CUT AND COVER TUNNEL AT UPRR - 1 OF 5
ST-T1531-B	CENTRAL VALLEY WYE	SR 152 (NORTH) TO ROAD 19 WYE ALTERNATIVE	GENERAL PLAN (MER-FRE)	CUT AND COVER TUNNEL AT UPRR - 2 OF 5
ST-T1532-B	CENTRAL VALLEY WYE	SR 152 (NORTH) TO ROAD 19 WYE ALTERNATIVE	GENERAL PLAN (MER-FRE)	CUT AND COVER TUNNEL AT UPRR - 3 OF 5
ST-T3530-B	CENTRAL VALLEY WYE	SR 152 (NORTH) TO ROAD 19 WYE ALTERNATIVE	TYPICAL SECTION (MER-FRE)	CUT AND COVER TUNNEL AT UPRR - 4 OF 5
ST-T3531-B	CENTRAL VALLEY WYE	SR 152 (NORTH) TO ROAD 19 WYE ALTERNATIVE	TYPICAL SECTION (MER-FRE)	CUT AND COVER TUNNEL AT UPRR - 5 OF 5
ST-T1540-B	CENTRAL VALLEY WYE	SR 152 (NORTH) TO ROAD 19 WYE ALTERNATIVE	GENERAL PLAN (MER-FRE)	CUT AND COVER TUNNEL AT SANDY MUSH ROAD - 1 OF 2
ST-T3540-B	CENTRAL VALLEY WYE	SR 152 (NORTH) TO ROAD 19 WYE ALTERNATIVE	TYPICAL SECTION (MER-FRE)	CUT AND COVER TUNNEL AT SANDY MUSH ROAD - 2 OF 2
ST-K1620-B	CENTRAL VALLEY WYE	SR 152 (NORTH) TO ROAD 19 WYE ALTERNATIVE	GENERAL PLAN (SJD-MER)	AERIAL #4 - NORTHBOUND OVER HST MAINLINE - 1 OF 5
ST-K1621-B	CENTRAL VALLEY WYE	SR 152 (NORTH) TO ROAD 19 WYE ALTERNATIVE	GENERAL PLAN (SJD-MER)	AERIAL #4 - NORTHBOUND OVER HST MAINLINE - 2 OF 5
ST-K1622-B	CENTRAL VALLEY WYE	SR 152 (NORTH) TO ROAD 19 WYE ALTERNATIVE	GENERAL PLAN (SJD-MER)	AERIAL #4 - NORTHBOUND OVER HST MAINLINE - 3 OF 5
ST-K3620-B	CENTRAL VALLEY WYE	SR 152 (NORTH) TO ROAD 19 WYE ALTERNATIVE	TYPICAL SECTIONS (SJD-MER)	AERIAL #4 - NORTHBOUND OVER HST MAINLINE - 4 OF 5
ST-K3621-B	CENTRAL VALLEY WYE	SR 152 (NORTH) TO ROAD 19 WYE ALTERNATIVE	TYPICAL SECTIONS (SJD-MER)	AERIAL #4 - NORTHBOUND OVER HST MAINLINE - 5 OF 5
ST-K1625-B	CENTRAL VALLEY WYE	SR 152 (NORTH) TO ROAD 19 WYE ALTERNATIVE	GENERAL PLAN (SJD-MER)	ROAD 17 1/2 UNDERPASS (HST SB)
ST-K1630-B	CENTRAL VALLEY WYE	SR 152 (NORTH) TO ROAD 19 WYE ALTERNATIVE	GENERAL PLAN (SJD-MER)	AERIAL #5 - SOUTHBOUND OVER UPRR / SR 99 - 1 OF 2
ST-K3630-B	CENTRAL VALLEY WYE	SR 152 (NORTH) TO ROAD 19 WYE ALTERNATIVE	TYPICAL SECTIONS (SJD-MER)	AERIAL #5 - SOUTHBOUND OVER UPRR / SR 99 - 2 OF 2
ST-K1635-B	CENTRAL VALLEY WYE	SR 152 (NORTH) TO ROAD 19 WYE ALTERNATIVE	GENERAL PLAN (SJD-MER)	AERIAL #6 - NORTHBOUND OVER UPRR / SR 99 - 1 OF 2
ST-K3635-B	CENTRAL VALLEY WYE	SR 152 (NORTH) TO ROAD 19 WYE ALTERNATIVE	TYPICAL SECTION (SJD-MER)	AERIAL #6 - NORTHBOUND OVER UPRR / SR 99 - 2 OF 2
ST-K1640-B	CENTRAL VALLEY WYE	SR 152 (NORTH) TO ROAD 19 WYE ALTERNATIVE	GENERAL PLAN (SJD-MER)	AVENUE 24 UNDERPASS
ST-K1650-B	CENTRAL VALLEY WYE	SR 152 (NORTH) TO ROAD 19 WYE ALTERNATIVE	GENERAL PLAN (SJD-MER)	AERIAL #7 - NORTHBOUND OVER HST MERCED TO FRESNO - 1 OF 4
ST-K1651-B	CENTRAL VALLEY WYE	SR 152 (NORTH) TO ROAD 19 WYE ALTERNATIVE	GENERAL PLAN (SJD-MER)	AERIAL #7 - NORTHBOUND OVER HST MERCED TO FRESNO - 2 OF 4
ST-K3650-B	CENTRAL VALLEY WYE	SR 152 (NORTH) TO ROAD 19 WYE ALTERNATIVE	TYPICAL SECTIONS (SJD-MER)	AERIAL #7 - NORTHBOUND OVER HST MERCED TO FRESNO - 3 OF 4
ST-K3651-B	CENTRAL VALLEY WYE	SR 152 (NORTH) TO ROAD 19 WYE ALTERNATIVE	TYPICAL SECTION (SJD-MER)	AERIAL #7 - NORTHBOUND OVER HST MERCED TO FRESNO - 4 OF 4
AVENUE 21 TO ROAD 13 WYE ALTERNATIVE				
ST-B4001-C	CENTRAL VALLEY WYE	AVENUE 21 TO ROAD 13 WYE ALTERNATIVE	KEY MAP OF STRUCTURAL PLANS	SHEET 1 OF 2
ST-B4002-C	CENTRAL VALLEY WYE	AVENUE 21 TO ROAD 13 WYE ALTERNATIVE	KEY MAP OF STRUCTURAL PLANS	SHEET 2 OF 2
ST-K1050-C	CENTRAL VALLEY WYE	AVENUE 21 TO ROAD 13 WYE ALTERNATIVE	GENERAL PLAN (SJD-FRE)	INDIANA ROAD OVERHEAD

REV	DATE	BY	CHK	APP	DESCRIPTION

DESIGNED BY M. BRATT
DRAWN BY A. M.
CHECKED BY K. CHARAN
IN CHARGE C. LEMLEY
DATE 08/12/2016

RECORD SET
15% DESIGN SUBMITTAL

NOT FOR CONSTRUCTION

PARSONS

CALIFORNIA HIGH-SPEED RAIL AUTHORITY

CALIFORNIA HIGH-SPEED TRAIN PROJECT
MERCED TO FRESNO SECTION
CENTRAL VALLEY WYE
STRUCTURE, VIADUCT AND TUNNEL PLANS
INDEX OF DRAWINGS
SHEET 4 OF 8

CONTRACT NO. HSR08-05
DRAWING NO. ST-B0005
SCALE NO SCALE
SHEET NO.

p0051330 16-AUG-2016 07:49 MF-ST-B0005.dgn

INDEX OF DRAWINGS

DRAWING NO.	SECTION	ALIGNMENT / PLAN SET	TITLE	DESCRIPTION
ST-K1070-C	CENTRAL VALLEY WYE	AVENUE 21 TO ROAD 13 WYE ALTERNATIVE	GENERAL PLAN (SJD-FRE)	SAN JOAQUIN RIVER BRIDGE - 1 OF 2
ST-K3070-C	CENTRAL VALLEY WYE	AVENUE 21 TO ROAD 13 WYE ALTERNATIVE	TYPICAL SECTION (SJD-FRE)	SAN JOAQUIN RIVER BRIDGE - 2 OF 2
ST-K1080-C	CENTRAL VALLEY WYE	AVENUE 21 TO ROAD 13 WYE ALTERNATIVE	GENERAL PLAN (SJD-FRE)	AERIAL #1 - FRESNO RIVER AND MARIPOSA SLOUGH - 1 OF 2
ST-K3080-C	CENTRAL VALLEY WYE	AVENUE 21 TO ROAD 13 WYE ALTERNATIVE	TYPICAL SECTION (SJD-FRE)	AERIAL #1 - FRESNO RIVER AND MARIPOSA SLOUGH - 2 OF 2
ST-K1085-C	CENTRAL VALLEY WYE	AVENUE 21 TO ROAD 13 WYE ALTERNATIVE	GENERAL PLAN (SJD-FRE)	SR 152 UNDERPASS
ST-K1090-C	CENTRAL VALLEY WYE	AVENUE 21 TO ROAD 13 WYE ALTERNATIVE	GENERAL PLAN (SJD-FRE)	FLANAGAN ROAD UNDERPASS
ST-K1100-C	CENTRAL VALLEY WYE	AVENUE 21 TO ROAD 13 WYE ALTERNATIVE	GENERAL PLAN (SJD-FRE)	AERIAL #2 - EASTSIDE BYPASS IRRIGATION DITCH - 1 OF 2
ST-K3100-C	CENTRAL VALLEY WYE	AVENUE 21 TO ROAD 13 WYE ALTERNATIVE	TYPICAL SECTION (SJD-FRE)	AERIAL #2 - EASTSIDE BYPASS IRRIGATION DITCH - 2 OF 2
ST-K1120-C	CENTRAL VALLEY WYE	AVENUE 21 TO ROAD 13 WYE ALTERNATIVE	GENERAL PLAN (SJD-FRE)	LINCOLN ROAD (ROAD 4) OVERHEAD
ST-K1150-C	CENTRAL VALLEY WYE	AVENUE 21 TO ROAD 13 WYE ALTERNATIVE	GENERAL PLAN (SJD-FRE)	JUNIPER ROAD (ROAD 7) UNDERPASS
ST-K1155-C	CENTRAL VALLEY WYE	AVENUE 21 TO ROAD 13 WYE ALTERNATIVE	GENERAL PLAN (SJD-FRE)	ASH SLOUGH BRIDGE - 1 OF 2
ST-K3155-C	CENTRAL VALLEY WYE	AVENUE 21 TO ROAD 13 WYE ALTERNATIVE	TYPICAL SECTION (SJD-FRE)	ASH SLOUGH BRIDGE - 2 OF 2
ST-K1160-C	CENTRAL VALLEY WYE	AVENUE 21 TO ROAD 13 WYE ALTERNATIVE	GENERAL PLAN (SJD-FRE)	HEMLOCK ROAD (ROAD 9) OVERHEAD
ST-K1200-C	CENTRAL VALLEY WYE	AVENUE 21 TO ROAD 13 WYE ALTERNATIVE	GENERAL PLAN (SJD-FRE)	ROBERTSON BOULEVARD OVERHEAD
ST-K1210-C	CENTRAL VALLEY WYE	AVENUE 21 TO ROAD 13 WYE ALTERNATIVE	GENERAL PLAN (SJD-FRE)	ROAD 14 UNDERPASS
ST-K1220-C	CENTRAL VALLEY WYE	AVENUE 21 TO ROAD 13 WYE ALTERNATIVE	GENERAL PLAN (SJD-FRE)	BERENDA SLOUGH BRIDGE
ST-K1230-C	CENTRAL VALLEY WYE	AVENUE 21 TO ROAD 13 WYE ALTERNATIVE	GENERAL PLAN (SJD-FRE)	BERENDA WAY (ROAD 16) OVERHEAD
ST-K1260-C	CENTRAL VALLEY WYE	AVENUE 21 TO ROAD 13 WYE ALTERNATIVE	GENERAL PLAN (SJD-FRE)	ROAD 19 OVERHEAD
ST-K1270-C	CENTRAL VALLEY WYE	AVENUE 21 TO ROAD 13 WYE ALTERNATIVE	GENERAL PLAN (SJD-FRE)	ROAD 20 UNDERPASS
ST-K1275-C	CENTRAL VALLEY WYE	AVENUE 21 TO ROAD 13 WYE ALTERNATIVE	GENERAL PLAN (SJD-FRE)	AERIAL #3 - SR 99 / UPRR - 1 OF 2
ST-K3275-C	CENTRAL VALLEY WYE	AVENUE 21 TO ROAD 13 WYE ALTERNATIVE	TYPICAL SECTIONS (SJD-FRE)	AERIAL #3 - SR 99 / UPRR - 2 OF 2
ST-K1290-C	CENTRAL VALLEY WYE	AVENUE 21 TO ROAD 13 WYE ALTERNATIVE	GENERAL PLAN (SJD-FRE)	ROAD 22 OVERHEAD
ST-K1300-C	CENTRAL VALLEY WYE	AVENUE 21 TO ROAD 13 WYE ALTERNATIVE	GENERAL PLAN (SJD-FRE)	AVENUE 20 1/2 OVERHEAD
ST-K1320-C	CENTRAL VALLEY WYE	AVENUE 21 TO ROAD 13 WYE ALTERNATIVE	GENERAL PLAN (SJD-FRE)	DRY CREEK BRIDGE
ST-K1420-C	CENTRAL VALLEY WYE	AVENUE 21 TO ROAD 13 WYE ALTERNATIVE	GENERAL PLAN (MER-FRE)	AERIAL #4 - SOUTHBOUND OVER HST MAINLINE - 1 OF 6
ST-K1421-C	CENTRAL VALLEY WYE	AVENUE 21 TO ROAD 13 WYE ALTERNATIVE	GENERAL PLAN (MER-FRE)	AERIAL #4 - SOUTHBOUND OVER HST MAINLINE - 2 OF 6
ST-K1422-C	CENTRAL VALLEY WYE	AVENUE 21 TO ROAD 13 WYE ALTERNATIVE	GENERAL PLAN (MER-FRE)	AERIAL #4 - SOUTHBOUND OVER HST MAINLINE - 3 OF 6
ST-K1423-C	CENTRAL VALLEY WYE	AVENUE 21 TO ROAD 13 WYE ALTERNATIVE	GENERAL PLAN (MER-FRE)	AERIAL #4 - SOUTHBOUND OVER HST MAINLINE - 4 OF 6
ST-K3420-C	CENTRAL VALLEY WYE	AVENUE 21 TO ROAD 13 WYE ALTERNATIVE	TYPICAL SECTIONS (MER-FRE)	AERIAL #4 - SOUTHBOUND OVER HST MAINLINE - 5 OF 6
ST-K3421-C	CENTRAL VALLEY WYE	AVENUE 21 TO ROAD 13 WYE ALTERNATIVE	TYPICAL SECTIONS (MER-FRE)	AERIAL #4 - SOUTHBOUND OVER HST MAINLINE - 6 OF 6
ST-K1426-C	CENTRAL VALLEY WYE	AVENUE 21 TO ROAD 13 WYE ALTERNATIVE	GENERAL PLAN (MER-FRE)	HST NB BRIDGE OVER BERENDA SLOUGH
ST-K1430-C	CENTRAL VALLEY WYE	AVENUE 21 TO ROAD 13 WYE ALTERNATIVE	GENERAL PLAN (MER-FRE)	ROAD 14 UNDERPASS (HST NB)
ST-K1435-C	CENTRAL VALLEY WYE	AVENUE 21 TO ROAD 13 WYE ALTERNATIVE	GENERAL PLAN (MER-FRE)	AVENUE 21 1/2 OVERHEAD
ST-K1440-C	CENTRAL VALLEY WYE	AVENUE 21 TO ROAD 13 WYE ALTERNATIVE	GENERAL PLAN (MER-FRE)	ROBERTSON BOULEVARD UNDERPASS
ST-K1445-C	CENTRAL VALLEY WYE	AVENUE 21 TO ROAD 13 WYE ALTERNATIVE	GENERAL PLAN (MER-FRE)	AVENUE 22 1/2 UNDERPASS
ST-K1450-C	CENTRAL VALLEY WYE	AVENUE 21 TO ROAD 13 WYE ALTERNATIVE	GENERAL PLAN (MER-FRE)	SR 152 UNDERPASS - 1 OF 2
ST-K3450-C	CENTRAL VALLEY WYE	AVENUE 21 TO ROAD 13 WYE ALTERNATIVE	TYPICAL SECTION (MER-FRE)	SR 152 UNDERPASS - 2 OF 2
ST-K1470-C	CENTRAL VALLEY WYE	AVENUE 21 TO ROAD 13 WYE ALTERNATIVE	GENERAL PLAN (MER-FRE)	WASHINGTON ROAD (AVENUE 25) UNDERPASS
ST-K1475-C	CENTRAL VALLEY WYE	AVENUE 21 TO ROAD 13 WYE ALTERNATIVE	GENERAL PLAN (MER-FRE)	ASH SLOUGH BRIDGE - 1 OF 2
ST-K3475-C	CENTRAL VALLEY WYE	AVENUE 21 TO ROAD 13 WYE ALTERNATIVE	TYPICAL SECTION (MER-FRE)	ASH SLOUGH BRIDGE - 2 OF 2
ST-K1480-C	CENTRAL VALLEY WYE	AVENUE 21 TO ROAD 13 WYE ALTERNATIVE	GENERAL PLAN (MER-FRE)	AVENUE 26 1/2 UNDERPASS
ST-K1490-C	CENTRAL VALLEY WYE	AVENUE 21 TO ROAD 13 WYE ALTERNATIVE	GENERAL PLAN (MER-FRE)	CHOWCHILLA RIVER BRIDGE - 1 OF 2
ST-K3490-C	CENTRAL VALLEY WYE	AVENUE 21 TO ROAD 13 WYE ALTERNATIVE	TYPICAL SECTION (MER-FRE)	CHOWCHILLA RIVER BRIDGE - 2 OF 2

INDEX OF DRAWINGS

DRAWING NO.	SECTION	ALIGNMENT / PLAN SET	TITLE	DESCRIPTION
ST-K1495-C	CENTRAL VALLEY WYE	AVENUE 21 TO ROAD 13 WYE ALTERNATIVE	GENERAL PLAN (MER-FRE)	VISTA AVENUE (ROAD 13) UNDERPASS
ST-K1510-C	CENTRAL VALLEY WYE	AVENUE 21 TO ROAD 13 WYE ALTERNATIVE	GENERAL PLAN (MER-FRE)	DUTCHMAN CREEK BRIDGE
ST-K1515-C	CENTRAL VALLEY WYE	AVENUE 21 TO ROAD 13 WYE ALTERNATIVE	GENERAL PLAN (MER-FRE)	ROAD 11 BRIDGE
ST-T1520-C	CENTRAL VALLEY WYE	AVENUE 21 TO ROAD 13 WYE ALTERNATIVE	GENERAL PLAN (MER-FRE)	RETAINED CUT - SANDY MUSH ROAD - 1 OF 2
ST-T3520-C	CENTRAL VALLEY WYE	AVENUE 21 TO ROAD 13 WYE ALTERNATIVE	TYPICAL SECTIONS (MER-FRE)	RETAINED CUT - SANDY MUSH ROAD - 2 OF 2
ST-K1520-C	CENTRAL VALLEY WYE	AVENUE 21 TO ROAD 13 WYE ALTERNATIVE	GENERAL PLAN (MER-FRE)	SANDY MUSH ROAD OVERHEAD
ST-K1620-C	CENTRAL VALLEY WYE	AVENUE 21 TO ROAD 13 WYE ALTERNATIVE	GENERAL PLAN (SJD-MER)	AERIAL #5 - NORTHBOUND OVER HST MAINLINE - 1 OF 5
ST-K1621-C	CENTRAL VALLEY WYE	AVENUE 21 TO ROAD 13 WYE ALTERNATIVE	GENERAL PLAN (SJD-MER)	AERIAL #5 - NORTHBOUND OVER HST MAINLINE - 2 OF 5
ST-K1622-C	CENTRAL VALLEY WYE	AVENUE 21 TO ROAD 13 WYE ALTERNATIVE	GENERAL PLAN (SJD-MER)	AERIAL #5 - NORTHBOUND OVER HST MAINLINE - 3 OF 5
ST-K3620-C	CENTRAL VALLEY WYE	AVENUE 21 TO ROAD 13 WYE ALTERNATIVE	TYPICAL SECTIONS (SJD-MER)	AERIAL #5 - NORTHBOUND OVER HST MAINLINE - 4 OF 5
ST-K3621-C	CENTRAL VALLEY WYE	AVENUE 21 TO ROAD 13 WYE ALTERNATIVE	TYPICAL SECTIONS (SJD-MER)	AERIAL #5 - NORTHBOUND OVER HST MAINLINE - 5 OF 5
ST-K1630-C	CENTRAL VALLEY WYE	AVENUE 21 TO ROAD 13 WYE ALTERNATIVE	GENERAL PLAN (SJD-MER)	AVENUE 21 1/2 OVERHEAD
ST-K1640-C	CENTRAL VALLEY WYE	AVENUE 21 TO ROAD 13 WYE ALTERNATIVE	GENERAL PLAN (SJD-MER)	AERIAL #6 - NORTHBOUND OVER HST MERCED TO FRESNO - 1 OF 6
ST-K1641-C	CENTRAL VALLEY WYE	AVENUE 21 TO ROAD 13 WYE ALTERNATIVE	GENERAL PLAN (SJD-MER)	AERIAL #6 - NORTHBOUND OVER HST MERCED TO FRESNO - 2 OF 6
ST-K1642-C	CENTRAL VALLEY WYE	AVENUE 21 TO ROAD 13 WYE ALTERNATIVE	GENERAL PLAN (SJD-MER)	AERIAL #6 - NORTHBOUND OVER HST MERCED TO FRESNO - 3 OF 6
ST-K1643-C	CENTRAL VALLEY WYE	AVENUE 21 TO ROAD 13 WYE ALTERNATIVE	GENERAL PLAN (SJD-MER)	AERIAL #6 - NORTHBOUND OVER HST MERCED TO FRESNO - 4 OF 6
ST-K3640-C	CENTRAL VALLEY WYE	AVENUE 21 TO ROAD 13 WYE ALTERNATIVE	TYPICAL SECTIONS (SJD-MER)	AERIAL #6 - NORTHBOUND OVER HST MERCED TO FRESNO - 5 OF 6
ST-K3641-C	CENTRAL VALLEY WYE	AVENUE 21 TO ROAD 13 WYE ALTERNATIVE	TYPICAL SECTIONS (SJD-MER)	AERIAL #6 - NORTHBOUND OVER HST MERCED TO FRESNO - 6 OF 6
ST-K1646-C	CENTRAL VALLEY WYE	AVENUE 21 TO ROAD 13 WYE ALTERNATIVE	GENERAL PLAN (SJD-MER)	AVENUE 22 1/2 UNDERPASS (HST SB)
SR 152 (NORTH) TO ROAD 11 WYE ALTERNATIVE				
ST-B4001-D	CENTRAL VALLEY WYE	SR 152 (NORTH) TO ROAD 11 WYE ALTERNATIVE	KEY MAP OF STRUCTURAL PLANS	SHEET 1 OF 2
ST-B4002-D	CENTRAL VALLEY WYE	SR 152 (NORTH) TO ROAD 11 WYE ALTERNATIVE	KEY MAP OF STRUCTURAL PLANS	SHEET 2 OF 2
ST-K1050-D	CENTRAL VALLEY WYE	SR 152 (NORTH) TO ROAD 11 WYE ALTERNATIVE	GENERAL PLAN (SJD-FRE)	INDIANA ROAD OVERHEAD
ST-K1055-D	CENTRAL VALLEY WYE	SR 152 (NORTH) TO ROAD 11 WYE ALTERNATIVE	GENERAL PLAN (SJD-FRE)	WOOD SLOUGH BRIDGE
ST-K1060-D	CENTRAL VALLEY WYE	SR 152 (NORTH) TO ROAD 11 WYE ALTERNATIVE	GENERAL PLAN (SJD-FRE)	WILLIS ROAD UNDERPASS
ST-K1065-D	CENTRAL VALLEY WYE	SR 152 (NORTH) TO ROAD 11 WYE ALTERNATIVE	GENERAL PLAN (SJD-FRE)	SAN JOAQUIN RIVER BRIDGE - 1 OF 2
ST-K3065-D	CENTRAL VALLEY WYE	SR 152 (NORTH) TO ROAD 11 WYE ALTERNATIVE	TYPICAL SECTION (SJD-FRE)	SAN JOAQUIN RIVER BRIDGE - 2 OF 2
ST-K1070-D	CENTRAL VALLEY WYE	SR 152 (NORTH) TO ROAD 11 WYE ALTERNATIVE	GENERAL PLAN (SJD-FRE)	MARIPOSA SLOUGH BRIDGE
ST-K1075-D	CENTRAL VALLEY WYE	SR 152 (NORTH) TO ROAD 11 WYE ALTERNATIVE	GENERAL PLAN (SJD-FRE)	HARMON ROAD UNDERPASS
ST-K1080-D	CENTRAL VALLEY WYE	SR 152 (NORTH) TO ROAD 11 WYE ALTERNATIVE	GENERAL PLAN (SJD-FRE)	AERIAL #1 - EASTSIDE BYPASS IRRIGATION DITCH - 1 OF 2
ST-K3080-D	CENTRAL VALLEY WYE	SR 152 (NORTH) TO ROAD 11 WYE ALTERNATIVE	TYPICAL SECTION (SJD-FRE)	AERIAL #1 - EASTSIDE BYPASS IRRIGATION DITCH - 2 OF 2
ST-K1100-D	CENTRAL VALLEY WYE	SR 152 (NORTH) TO ROAD 11 WYE ALTERNATIVE	GENERAL PLAN (SJD-FRE)	SR 59 / SR 152 INTERCHANGE - 1 OF 4
ST-K1101-D	CENTRAL VALLEY WYE	SR 152 (NORTH) TO ROAD 11 WYE ALTERNATIVE	GENERAL PLAN (SJD-FRE)	SR 59 / SR 152 INTERCHANGE - 2 OF 4
ST-K3101-D	CENTRAL VALLEY WYE	SR 152 (NORTH) TO ROAD 11 WYE ALTERNATIVE	TYPICAL SECTIONS (SJD-FRE)	SR 59 / SR 152 INTERCHANGE - 3 OF 4
ST-K1102-D	CENTRAL VALLEY WYE	SR 152 (NORTH) TO ROAD 11 WYE ALTERNATIVE	GENERAL PLAN (SJD-FRE)	SR 59 / SR 152 INTERCHANGE - 4 OF 4
ST-K1110-D	CENTRAL VALLEY WYE	SR 152 (NORTH) TO ROAD 11 WYE ALTERNATIVE	GENERAL PLAN (SJD-FRE)	LINCOLN ROAD (ROAD 4) OVERHEAD
ST-K1160-D	CENTRAL VALLEY WYE	SR 152 (NORTH) TO ROAD 11 WYE ALTERNATIVE	GENERAL PLAN (SJD-FRE)	HEMLOCK ROAD (ROAD 9) UNDERPASS
ST-K1161-D	CENTRAL VALLEY WYE	SR 152 (NORTH) TO ROAD 11 WYE ALTERNATIVE	GENERAL PLAN (SJD-FRE)	HEMLOCK ROAD (ROAD 9) INTERCHANGE - 1 OF 2
ST-K3161-D	CENTRAL VALLEY WYE	SR 152 (NORTH) TO ROAD 11 WYE ALTERNATIVE	TYPICAL SECTIONS (SJD-FRE)	HEMLOCK ROAD (ROAD 9) INTERCHANGE - 2 OF 2
ST-K1170-D	CENTRAL VALLEY WYE	SR 152 (NORTH) TO ROAD 11 WYE ALTERNATIVE	GENERAL PLAN (SJD-FRE)	ASH SLOUGH BRIDGE - 1 OF 2
ST-K3170-D	CENTRAL VALLEY WYE	SR 152 (NORTH) TO ROAD 11 WYE ALTERNATIVE	TYPICAL SECTION (SJD-FRE)	ASH SLOUGH BRIDGE - 2 OF 2
ST-K1190-D	CENTRAL VALLEY WYE	SR 152 (NORTH) TO ROAD 11 WYE ALTERNATIVE	GENERAL PLAN (SJD-FRE)	ELM ROAD (ROAD 12) UNDERPASS
ST-K1195-D	CENTRAL VALLEY WYE	SR 152 (NORTH) TO ROAD 11 WYE ALTERNATIVE	GENERAL PLAN (SJD-FRE)	SR 152 (ROAD 12) UNDERCROSSING

REV	DATE	BY	CHK	APP	DESCRIPTION

DESIGNED BY M. BRATT
DRAWN BY A. M.
CHECKED BY K. CHARAN
IN CHARGE C. LEMLEY
DATE 08/12/2016

RECORD SET
15% DESIGN SUBMITTAL

NOT FOR CONSTRUCTION

PARSONS

CALIFORNIA HIGH-SPEED RAIL AUTHORITY

CALIFORNIA HIGH-SPEED TRAIN PROJECT
MERCED TO FRESNO SECTION
CENTRAL VALLEY WYE
STRUCTURE, VIADUCT AND TUNNEL PLANS
INDEX OF DRAWINGS
SHEET 6 OF 8

CONTRACT NO. HSR08-05
DRAWING NO. ST-B0007
SCALE NO SCALE
SHEET NO.

MF-ST-B0007.dgn 16-AUG-2016 07:49 p0051330

INDEX OF DRAWINGS

DRAWING NO.	SECTION	ALIGNMENT / PLAN SET	TITLE	DESCRIPTION
ST-K1210-D	CENTRAL VALLEY WYE	SR 152 (NORTH) TO ROAD 11 WYE ALTERNATIVE	GENERAL PLAN (SJD-FRE)	ROBERTSON BOULEVARD (SR 233) INTERCHANGE - 1 OF 2
ST-K3210-D	CENTRAL VALLEY WYE	SR 152 (NORTH) TO ROAD 11 WYE ALTERNATIVE	TYPICAL SECTIONS (SJD-FRE)	ROBERTSON BOULEVARD (SR 233) INTERCHANGE - 2 OF 2
ST-K1220-D	CENTRAL VALLEY WYE	SR 152 (NORTH) TO ROAD 11 WYE ALTERNATIVE	GENERAL PLAN (SJD-FRE)	BERENDA SLOUGH BRIDGE - 1 OF 2
ST-K3220-D	CENTRAL VALLEY WYE	SR 152 (NORTH) TO ROAD 11 WYE ALTERNATIVE	TYPICAL SECTION (SJD-FRE)	BERENDA SLOUGH BRIDGE - 2 OF 2
ST-K1230-D	CENTRAL VALLEY WYE	SR 152 (NORTH) TO ROAD 11 WYE ALTERNATIVE	GENERAL PLAN (SJD-FRE)	BERENDA WAY (ROAD 16) UNDERPASS
ST-K1235-D	CENTRAL VALLEY WYE	SR 152 (NORTH) TO ROAD 11 WYE ALTERNATIVE	GENERAL PLAN (SJD-FRE)	BERENDA WAY (ROAD 16) INTERCHANGE - 1 OF 2
ST-K3235-D	CENTRAL VALLEY WYE	SR 152 (NORTH) TO ROAD 11 WYE ALTERNATIVE	TYPICAL SECTION (SJD-FRE)	BERENDA WAY (ROAD 16) INTERCHANGE - 2 OF 2
ST-K1240-D	CENTRAL VALLEY WYE	SR 152 (NORTH) TO ROAD 11 WYE ALTERNATIVE	GENERAL PLAN (SJD-FRE)	ROAD 17 1/2 OVERHEAD
ST-K1250-D	CENTRAL VALLEY WYE	SR 152 (NORTH) TO ROAD 11 WYE ALTERNATIVE	GENERAL PLAN (SJD-FRE)	AERIAL #2 - SR 99 / UPRR - 1 OF 3
ST-K1251-D	CENTRAL VALLEY WYE	SR 152 (NORTH) TO ROAD 11 WYE ALTERNATIVE	GENERAL PLAN (SJD-FRE)	AERIAL #2 - SR 99 / UPRR - 2 OF 3
ST-K3250-D	CENTRAL VALLEY WYE	SR 152 (NORTH) TO ROAD 11 WYE ALTERNATIVE	TYPICAL SECTIONS (SJD-FRE)	AERIAL #2 - SR 99 / UPRR - 3 OF 3
ST-K1260-D	CENTRAL VALLEY WYE	SR 152 (NORTH) TO ROAD 11 WYE ALTERNATIVE	GENERAL PLAN (SJD-FRE)	ROAD 20 OVERHEAD
ST-K1280-D	CENTRAL VALLEY WYE	SR 152 (NORTH) TO ROAD 11 WYE ALTERNATIVE	GENERAL PLAN (SJD-FRE)	ROAD 22 OVERHEAD
ST-K1300-D	CENTRAL VALLEY WYE	SR 152 (NORTH) TO ROAD 11 WYE ALTERNATIVE	GENERAL PLAN (SJD-FRE)	BERENDA CREEK BRIDGE
ST-K1310-D	CENTRAL VALLEY WYE	SR 152 (NORTH) TO ROAD 11 WYE ALTERNATIVE	GENERAL PLAN (SJD-FRE)	AVENUE 20 1/2 OVERHEAD
ST-K1330-D	CENTRAL VALLEY WYE	SR 152 (NORTH) TO ROAD 11 WYE ALTERNATIVE	GENERAL PLAN (SJD-FRE)	DRY CREEK BRIDGE
ST-K1410-D	CENTRAL VALLEY WYE	SR 152 (NORTH) TO ROAD 11 WYE ALTERNATIVE	GENERAL PLAN (MER-FRE)	AERIAL #3 - SOUTHBOUND OVER HST MAINLINE - 1 OF 6
ST-K1411-D	CENTRAL VALLEY WYE	SR 152 (NORTH) TO ROAD 11 WYE ALTERNATIVE	GENERAL PLAN (MER-FRE)	AERIAL #3 - SOUTHBOUND OVER HST MAINLINE - 2 OF 6
ST-K1412-D	CENTRAL VALLEY WYE	SR 152 (NORTH) TO ROAD 11 WYE ALTERNATIVE	GENERAL PLAN (MER-FRE)	AERIAL #3 - SOUTHBOUND OVER HST MAINLINE - 3 OF 6
ST-K3410-D	CENTRAL VALLEY WYE	SR 152 (NORTH) TO ROAD 11 WYE ALTERNATIVE	TYPICAL SECTION (MER-FRE)	AERIAL #3 - SOUTHBOUND OVER HST MAINLINE - 4 OF 6
ST-K3411-D	CENTRAL VALLEY WYE	SR 152 (NORTH) TO ROAD 11 WYE ALTERNATIVE	TYPICAL SECTION (MER-FRE)	AERIAL #3 - SOUTHBOUND OVER HST MAINLINE - 5 OF 6
ST-K3412-D	CENTRAL VALLEY WYE	SR 152 (NORTH) TO ROAD 11 WYE ALTERNATIVE	TYPICAL SECTIONS (MER-FRE)	AERIAL #3 - SOUTHBOUND OVER HST MAINLINE - 6 OF 6
ST-K1430-D	CENTRAL VALLEY WYE	SR 152 (NORTH) TO ROAD 11 WYE ALTERNATIVE	GENERAL PLAN (MER-FRE)	ROAD 12 UNDERPASS
ST-K1435-D	CENTRAL VALLEY WYE	SR 152 (NORTH) TO ROAD 11 WYE ALTERNATIVE	GENERAL PLAN (MER-FRE)	MADISON ROAD (AVENUE 23 1/2) UNDERPASS
ST-K1440-D	CENTRAL VALLEY WYE	SR 152 (NORTH) TO ROAD 11 WYE ALTERNATIVE	GENERAL PLAN (MER-FRE)	ASH SLOUGH BRIDGE - 1 OF 2
ST-K3440-D	CENTRAL VALLEY WYE	SR 152 (NORTH) TO ROAD 11 WYE ALTERNATIVE	TYPICAL SECTION (MER-FRE)	ASH SLOUGH BRIDGE - 2 OF 2
ST-K1450-D	CENTRAL VALLEY WYE	SR 152 (NORTH) TO ROAD 11 WYE ALTERNATIVE	GENERAL PLAN (MER-FRE)	WASHINGTON ROAD (AVENUE 25) UNDERPASS - 1 OF 2
ST-K3450-D	CENTRAL VALLEY WYE	SR 152 (NORTH) TO ROAD 11 WYE ALTERNATIVE	TYPICAL SECTION (MER-FRE)	WASHINGTON ROAD (AVENUE 25) UNDERPASS - 2 OF 2
ST-K1455-D	CENTRAL VALLEY WYE	SR 152 (NORTH) TO ROAD 11 WYE ALTERNATIVE	GENERAL PLAN (MER-FRE)	CHOWCHILLA RIVER BRIDGE
ST-K1460-D	CENTRAL VALLEY WYE	SR 152 (NORTH) TO ROAD 11 WYE ALTERNATIVE	GENERAL PLAN (MER-FRE)	AVENUE 26 UNDERPASS
ST-K1490-D	CENTRAL VALLEY WYE	SR 152 (NORTH) TO ROAD 11 WYE ALTERNATIVE	GENERAL PLAN (MER-FRE)	DUTCHMAN CREEK BRIDGE
ST-K1495-D	CENTRAL VALLEY WYE	SR 152 (NORTH) TO ROAD 11 WYE ALTERNATIVE	GENERAL PLAN (MER-FRE)	SANDY MUSH ROAD UNDERPASS
ST-K1510-D	CENTRAL VALLEY WYE	SR 152 (NORTH) TO ROAD 11 WYE ALTERNATIVE	GENERAL PLAN (MER-FRE)	DEADMAN CREEK BRIDGE No. 1
ST-K1515-D	CENTRAL VALLEY WYE	SR 152 (NORTH) TO ROAD 11 WYE ALTERNATIVE	GENERAL PLAN (MER-FRE)	DEADMAN CREEK BRIDGE No. 2
ST-K1610-D	CENTRAL VALLEY WYE	SR 152 (NORTH) TO ROAD 11 WYE ALTERNATIVE	GENERAL PLAN (SJD-MER)	AERIAL #4 - NORTHBOUND OVER HST MAINLINE - 1 OF 5
ST-K1611-D	CENTRAL VALLEY WYE	SR 152 (NORTH) TO ROAD 11 WYE ALTERNATIVE	GENERAL PLAN (SJD-MER)	AERIAL #4 - NORTHBOUND OVER HST MAINLINE - 2 OF 5
ST-K1612-D	CENTRAL VALLEY WYE	SR 152 (NORTH) TO ROAD 11 WYE ALTERNATIVE	GENERAL PLAN (SJD-MER)	AERIAL #4 - NORTHBOUND OVER HST MAINLINE - 3 OF 5
ST-K3610-D	CENTRAL VALLEY WYE	SR 152 (NORTH) TO ROAD 11 WYE ALTERNATIVE	TYPICAL SECTIONS (SJD-MER)	AERIAL #4 - NORTHBOUND OVER HST MAINLINE - 4 OF 5
ST-K3611-D	CENTRAL VALLEY WYE	SR 152 (NORTH) TO ROAD 11 WYE ALTERNATIVE	TYPICAL SECTIONS (SJD-MER)	AERIAL #4 - NORTHBOUND OVER HST MAINLINE - 5 OF 5
ST-K1620-D	CENTRAL VALLEY WYE	SR 152 (NORTH) TO ROAD 11 WYE ALTERNATIVE	GENERAL PLAN (SJD-FRE)	HEMLOCK ROAD (ROAD 9) UNDERPASS
ST-K1630-D	CENTRAL VALLEY WYE	SR 152 (NORTH) TO ROAD 11 WYE ALTERNATIVE	GENERAL PLAN (SJD-MER)	MADISON ROAD (AVENUE 23 1/2) OVERHEAD
ST-K1640-D	CENTRAL VALLEY WYE	SR 152 (NORTH) TO ROAD 11 WYE ALTERNATIVE	GENERAL PLAN (SJD-MER)	AERIAL #5 - NORTHBOUND OVER HST MERCED TO FRESNO - 1 OF 6

INDEX OF DRAWINGS

DRAWING NO.	SECTION	ALIGNMENT / PLAN SET	TITLE	DESCRIPTION
ST-K1641-D	CENTRAL VALLEY WYE	SR 152 (NORTH) TO ROAD 11 WYE ALTERNATIVE	GENERAL PLAN (SJD-MER)	AERIAL #5 - NORTHBOUND OVER HST MERCED TO FRESNO - 2 OF 6
ST-K1642-D	CENTRAL VALLEY WYE	SR 152 (NORTH) TO ROAD 11 WYE ALTERNATIVE	GENERAL PLAN (SJD-MER)	AERIAL #5 - NORTHBOUND OVER HST MERCED TO FRESNO - 3 OF 6
ST-K1643-D	CENTRAL VALLEY WYE	SR 152 (NORTH) TO ROAD 11 WYE ALTERNATIVE	GENERAL PLAN (SJD-MER)	AERIAL #5 - NORTHBOUND OVER HST MERCED TO FRESNO - 4 OF 6
ST-K3640-D	CENTRAL VALLEY WYE	SR 152 (NORTH) TO ROAD 11 WYE ALTERNATIVE	TYPICAL SECTIONS (SJD-MER)	AERIAL #5 - NORTHBOUND OVER HST MERCED TO FRESNO - 5 OF 6
ST-K3641-D	CENTRAL VALLEY WYE	SR 152 (NORTH) TO ROAD 11 WYE ALTERNATIVE	TYPICAL SECTIONS (SJD-MER)	AERIAL #5 - NORTHBOUND OVER HST MERCED TO FRESNO - 6 OF 6
ST-K1650-D	CENTRAL VALLEY WYE	SR 152 (NORTH) TO ROAD 11 WYE ALTERNATIVE	GENERAL PLAN (SJD-MER)	ROAD 11 UNDERPASS
ST-K1653-D	CENTRAL VALLEY WYE	SR 152 (NORTH) TO ROAD 11 WYE ALTERNATIVE	GENERAL PLAN (SJD-MER)	WASHINGTON ROAD (AVENUE 25) UNDERPASS
ST-K1656-D	CENTRAL VALLEY WYE	SR 152 (NORTH) TO ROAD 11 WYE ALTERNATIVE	GENERAL PLAN (SJD-MER)	CHOWCHILLA RIVER BRIDGE

A

AB	AGGREGATE BASE
ABBC	ASBESTOS BONDED BITUMINOUS COATED
ABM	AIR-BLOWN MORTAR
ABN	ABANDON
ABUT	ABUTMENT
AC	ASPHALT CONCRETE
ACB	ASPHALT CONCRETE BASE
ACP	ASBESTOS CEMENT PIPE
ADL	ADDED DEAD LOAD
ADJ	ADJUST
AFES	ALTERNATIVE FLARED END SECTION
AHD	AHEAD
ALT	ALTERNATE
AM	TIME FROM MIDNIGHT TO NOON
AP	ALTERNATIVE PIPE
APC	ALTERNATIVE PIPE CULVERT
APPROX	APPROXIMATE
APU	ALTERNATIVE PIPE UNDERDRAIN
AR	ACCESS RESTRICTION
ARS	ACCELERATION RESPONSE SPECTRUM
AS	AGGREGATE SUBBASE
ASRP	ALUMINUM SPIRAL RIB PIPE
ASSY	ASSEMBLY
ATC	AUTOMATIC TRAIN CONTROL
ATPB	ASPHALT TREATED PERMEABLE BASE
ATPM	ASPHALT TREATED PERMEABLE MATERIAL
AUTHORITY	CALIFORNIA HIGH-SPEED RAIL AUTHORITY
AVE	AVENUE
AVG	AVERAGE
@	AT

B

BAGR	BRIDGE APPROACH GUARD RAILING
BB	BEGINNING OF BRIDGE
B-B	BACK-TO-BACK
BC	BEGIN HORIZONTAL CURVE
BCR	BEGIN CURB RETURN
BEG	BEGIN
BIT CTD	BITUMINOUS COATED
BK	BACK
BKF	BACKFILL
BLDG	BUILDING
BLM	BRIDGE-LOG MILE
BLVD	BOULEVARD
BM	BENCH MARK
BOT	BOTTOM
BNSF	BNSF RAILWAY
BR	BRIDGE
BRG	BEARING
BT	BEGIN TUNNEL
BTU	BRITISH THERMAL UNIT
BVC	BEGIN VERTICAL CURVE
BW	BARBED WIRE

C

CAA	CABLE ANCHOR ASSEMBLY
CAP	CORRUGATED ALUMINUM PIPE
CAPA	CORRUGATED ALUMINUM PIPE ARCH
CAS	CONSTRUCTION AREA SIGN
CB	CONCRETE BARRIER
CBW	CONCRETE BLOCK WALL
C-C	CENTER TO CENTER
CHSRA	CALIFORNIA HIGH-SPEED RAIL AUTHORITY (SEE AUTHORITY)
CHSR	CALIFORNIA HIGH-SPEED RAIL
CHST	CALIFORNIA HIGH-SPEED TRAIN
CG	CENTER OF GRAVITY
CHNL	CHANNEL
CI	CAST IRON
CIDH	CAST-IN-DRILLED-HOLE
CIP	CAST-IN-PLACE, CAST IRON PIPE
CIPCP	CAST-IN-PLACE CONCRETE PIPE
CISS	CAST-IN-STEEL SHELL
CJP	COMPLETE JOINT PENETRATION
CL	CHAIN LINK, CLASS
CL-6	CHAIN LINK FENCE (6 FT)
CLR	CLEAR, CLEARANCE
CM	CORRUGATED METAL
CMP	CORRUGATED METAL PIPE
CO	COUNTY
COL	COLUMN
CONC	CONCRETE
COND	CONDUIT
CONN	CONNECTOR
CONST	CONSTRUCT, CONSTRUCTION
CONT	CONTINUOUS
COORD	COORDINATE
CP	CANDLEPOWER
CP1	CONSTRUCTION PACKAGE 1
CR	CREEK
CRCP	CONTINUOUS REINFORCED CONCRETE PAVEMENT
CRSP	CONCRETED ROCK SLOPE PROTECTION
CRZ	CLEAR RECOVERY ZONE
CS	CURVE SPIRAL POINT
CSP	CORRUGATED STEEL PIPE
CSPA	CORRUGATED STEEL PIPE ARCH
CTB	CEMENT TREATED BASE
CTPB	CEMENT TREATED PERMEABLE BASE
CTPM	CEMENT TREATED PERMEABLE MATERIAL
CTRS	CENTERS
CULV	CULVERT
℄	CENTERLINE

D

D	DEPTH
DD	DOWNDRAIN
DBL	DOUBLE
DEG	DEGREE
DEL	DELINEATOR

D CONTINUED

DET	DETAIL, DETOUR
DF	DOUGLAS FIR, DIRECT FIXATION
DI	DRAINAGE INLET, DROP INLET
DIA	DIAMETER
DIAPH	DIAPHRAGM
DIST	DISTANCE, DISTRICT
DMBB	DOUBLE METAL BEAM BARRIER
DR	DRIVE
DTBB	DOUBLE THRIE BEAM BARRIER
DWY	DRIVEWAY

E

E	EAST
EA	ACTUAL SUPERELEVATION
EASE	EASEMENT
EB	END OF BRIDGE, EASTBOUND
EC	END HORIZONTAL CURVE
ECR	END CURB RETURN
ED	EDGE DRAIN
EDC	EDGE DRAIN CLEANOUT
EDO	EDGE DRAIN OUTLET
EDV	EDGE DRAIN VENT
ELEC	ELECTROLIER
ELECT	ELECTRIC
ELEV	ELEVATION
EMB	EMBANKMENT
ENGR	ENGINEER
EOD	EDGE OF DECK
EP	EDGE OF PAVEMENT
EQ	EQUATION
ES	EDGE OF SHOULDER
ET	END TUNNEL
ETW	EDGE OF TRAVELED WAY
EU	UNBALANCED SUPERELEVATION
EVC	END VERTICAL CURVE
EW	ENDWALL
EXC	EXCAVATION
EXIST, (E)	EXISTING
EXP	EXPANSION, EXPRESSWAY
EXP JT	EXPANSION JOINT
EXT	EXTERIOR

F

F & C	FRAME AND COVER
F & G	FRAME AND GRATE
FB	FLOOR BEAM
FDN	FOUNDATION
FEBT	FACING EASTBOUND TRAFFIC
FES	FLARED END SECTION
FF	FILTER FABRIC
FG	FINISHED GRADE
FH	FIRE HYDRANT
FIG	FIGURE
FL	FLOW LINE

F CONTINUED

FNTB	FACING NORTHBOUND TRAFFIC
FOB	FREE ON BOARD
FOC	FACE OF CONCRETE
FR RD	FRONTAGE ROAD
FRE	FRESNO
FS	FAR SIDE, FINISHED SURFACE
FSBT	FACING SOUTHBOUND TRAFFIC
FTG	FOOTING
FWBT	FACING WESTBOUND TRAFFIC
FWY	FREEWAY

G

G	GRADE, ACCELERATION DUE TO GRAVITY
GA	GAGE
GALV	GALVANIZED
GP	GRADING PLANE
GR	GUARD RAILING
GRDR	GIRDER
GSP	GALVANIZED STEEL PIPE
GTR	GUTTER

H

H	HEIGHT
H, HR	HOUR
HD	HORIZONTAL DRAIN
HDWL	HEADWALL
HEX HD	HEXAGONAL HEAD
HMA	HOT MIXED ASPHALT
HORIZ	HORIZONTAL
HP	HINGE POINT, HORSEPOWER
HPS	HIGH PERFORMANCE STEEL
HS	HIGH STRENGTH
HSR	HIGH-SPEED RAIL
HST	HIGH-SPEED TRAIN
HW	HEADWALL, 100-YR HIGH WATER (UNLESS NOTED OTHERWISE)
HWM	HIGH WATER MARK
HWY	HIGHWAY

I

IB	IMPORTED BORROW
ID	INSIDE DIAMETER
IF	INSIDE FACE
INT	INTERIOR
INV	INVERT
IRR	IRRIGATION
IS	INTERLOCKING SITE

J

JCT	JUNCTION
JP	JOINT POLE
JPCP	JOINTED PLAIN CONCRETE PAVEMENT

J CONTINUED

JS	JUNCTION STRUCTURE
JT	JOINT

L

L	LENGTH
LAT	LATITUDE
LCB	LEAN CONCRETE BASE
LLT	LAST LONG TIE
LN	LANE
LOC	LOCATION
LOL	LAYOUT LINE
LONG	LONGITUDE
LONGIT	LONGITUDINAL
LS	LUMP SUM, LENGTH OF SPIRAL
LT	LEFT
LVC	LENGTH OF VERTICAL CURVE

M

MAINT	MAINTENANCE
MAX	MAXIMUM
MB	METAL BEAM
MBB	METAL BEAM BARRIER
MBGR	METAL BEAM GUARD RAILING
MED	MEDIAN
MER	MERCED
MF	MERCED TO FRESNO
MH	MANHOLE
MIN	MINIMUM
MISC	MISCELLANEOUS
MISC I & S	MISCELLANEOUS IRON AND STEEL
MKR	MARKER
MOD	MODIFIED, MODIFY
MON	MONUMENT
MOW	MAINTENANCE-OF-WAY FACILITY
MP	METAL PLATE
MPGR	METAL PLATE GUARD RAILING
MPH	MILES PER HOUR
MR	MOVEMENT RATING
MSE	MECHANICALLY STABILIZED EARTH
MTL	MATERIAL

N

N	NORTH
NB	NORTHBOUND
NC	NORMAL CROWN
NIC	NOT IN CONTRACT
NO.	NUMBER (MUST HAVE PERIOD)
NOS.	NUMBERS (MUST HAVE PERIOD)
NPS	NOMINAL PIPE SIZE
NS	NEAR SIDE
NTS	NOT TO SCALE

O

OBLR	OBLITERATE

REV	DATE	BY	CHK	APP	DESCRIPTION

DESIGNED BY C. LEMLEY
DRAWN BY J. KIDWELL
CHECKED BY A. M.
IN CHARGE C. LEMLEY
DATE 08/12/2016

RECORD SET
15% DESIGN SUBMITTAL

NOT FOR CONSTRUCTION

PARSONS

CALIFORNIA HIGH-SPEED RAIL AUTHORITY

CALIFORNIA HIGH-SPEED TRAIN PROJECT
MERCED TO FRESNO SECTION
CENTRAL VALLEY WYE
STRUCTURE, VIADUCT AND TUNNEL PLANS
ABBREVIATIONS
SHEET 1 OF 2

CONTRACT NO. HSR08-05
DRAWING NO. ST-B0010
SCALE NO SCALE
SHEET NO.

O CONTINUED

OC	OVERCROSSING
OCS	OVERHEAD CONTACT SYSTEM
OD	OUTSIDE DIAMETER
OF	OUTSIDE FACE
OG	ORIGINAL GROUND
OGAC	OPEN GRADED ASPHALT CONCRETE
OH	OVERHEAD
O-O	OUT TO OUT
OPP	OPPOSITE

P

P	PAGE
PAP	PERFORATED ALUMINUM PIPE
PB	PULL BOX, PHASE BREAK
PC	POINT OF CURVATURE, PRECAST
PCC	POINT OF COMPOUND CURVE, PORTLAND CEMENT CONCRETE
PCP	PERFORATED CONCRETE PIPE, PRESTRESSED CONCRETE PIPE
PCVC	POINT OF COMPOUND VERTICAL CURVE
PED	PEDESTRIAN
PED OC	PEDESTRIAN OVERCROSSING
PED UC	PEDESTRIAN UNDERCROSSING
PERM MTL	PERMEABLE MATERIAL
PG	PROFILE GRADE
PG&E	PACIFIC GAS AND ELECTRIC
PI	POINT OF INTERSECTION
PITO	POINT OF INTERSECTION TURNOUT
PJP	PARTIAL JOINT PENETRATION
℄, PL	PLATE
P/L	PROPERTY LINE
PM	POST MILE, TIME FROM NOON TO MIDNIGHT
PN	PAVING NOTCH
POB	POINT OF BEGINNING
POC	POINT OF HORIZONTAL CURVE
POE	POINT OF END
POT	POINT OF TANGENT
POVC	POINT OF VERTICAL CURVE
PP	PIPE PILE, PLASTIC PIPE, POWER POLE
PPL	PREFORMED PERMEABLE LINER
PPP	PERFORATED PLASTIC PIPE
PRC	POINT OF REVERSE CURVE
PRF	PAVEMENT REINFORCING FABRIC
PRVC	POINT OF REVERSE VERTICAL CURVE
PS&E	PLANS, SPECIFICATIONS AND ESTIMATES
PS, P/S	POINT OF SWITCH, PRESTRESSED, PARALLELING STATION
PSP	PERFORATED STEEL PIPE
PT	POINT OF TANGENCY
PVC	POLYVINYL CHLORIDE, POINT OF VERTICAL CURVE

P CONTINUED

PVI	POINT OF VERTICAL INTERSECTION
PVMT	PAVEMENT
PVT	POINT OF VERTICAL TANGENT

Q

QTY	QUANTITY

R

R	RADIUS
R & D	REMOVE AND DISPOSE
R & S	REMOVE AND SALVAGE
R/C	RATE OF CHANGE
RCA	REINFORCED CONCRETE ARCH
RCB	REINFORCED CONCRETE BOX
RCP	REINFORCED CONCRETE PIPE
RCPA	REINFORCED CONCRETE PIPE ARCH
RD	ROAD
REINF	REINFORCED, REINFORCEMENT, REINFORCING
REL	RELOCATE
REPL	REPLACEMENT
RET	RETAINING
REV	REVISED
RDWY	ROADWAY
RM	ROAD-MIXED
RP	RADIUS POINT, REFERENCE POINT
RR	RAILROAD
RSP	ROCK SLOPE PROTECTION
RT	RIGHT
RTE	ROUTE
RW	REDWOOD, RETAINING WALL
R/W	RIGHT-OF-WAY
RWY	RAILWAY

S

S	SOUTH, SUPPLEMENT
SAE	STRUCTURE APPROACH EMBANKMENT
SALV	SALVAGE
SAPP	STRUCTURAL ALUMINUM PLATE PIPE
SB	SOUTHBOUND
SC	SAND CUSHION, SPIRAL CURVE POINT
SCSP	SLOTTED CORRUGATED STEEL PIPE
SD	STORM DRAIN
SEC	SECOND, SECTION
SEP	SEPARATION
SG	SUBGRADE
SHLD	SHOULDER
SHT	SHEET
SIM	SIMILAR
SJD	SAN JOSE DIRIDON STATION

S CONTINUED

SJM	SAN JOSE TO MERCED
SJV	SAN JOAQUIN VALLEY
S	STATION LINE
SM	SELECTED MATERIAL
SPEC	SPECIAL, SPECIFICATIONS
SPP	SLOTTED PLASTIC PIPE
SR	STATE ROUTE
SRS	STANDALONE RADIO SITE
SS	SLOPE STAKE, SUBSTATION
SSBM	STRAP AND SADDLE BRACKET METHOD
SSD	STRUCTURAL SECTION DRAIN
SSPA	STRUCTURAL STEEL PLATE ARCH
SSPP	STRUCTURAL STEEL PLATE PIPE
SSPPA	STRUCTURAL STEEL PLATE PIPE ARCH
SSRP	STEEL SPIRAL RIB PIPE
ST	STREET, SPIRAL TANGENT POINT
STA	STATION
STBB	SINGLE THRIE BEAM BARRIER
STD	STANDARD
STR	STRUCTURE
SURF	SURFACING
SW	SIDEWALK, SOUND WALL
SWR	SEWER
SWS	SWITCHING STATION
SYM	SYMMETRICAL
S4S	SURFACE 4 SIDES

T

T	SEMI-TANGENT
TAB	TABLET
TAN	TANGENT
TBB	THRIE BEAM BARRIER
TBD	TO BE DETERMINED
TBR	TIMBER
TC	TOP OF CURB, TRAIN CONTROL
TCB	TRAFFIC CONTROL BOX
TCE	TEMPORARY CONSTRUCTION EASEMENT
TEL	TELEPHONE
TEMP	TEMPORARY
TG	TOP OF GRADE
TM	TECHNICAL MEMORANDUM
TO	TURNOUT
TOT	TOTAL
TP	TELEPHONE POLE
TPB	TREATED PERMEABLE BASE
TPF	TRACTION POWER FACILITY
TPM	TREATED PERMEABLE MATERIAL
TPSS	TRACTION POWER SUBSTATION
T/R	TOP OF RAIL
TRANS	TRANSITION
TRK	TRACK

T CONTINUED

TS	TRANSVERSE, TRAFFIC SIGNAL, TUBULAR STEEL, TANGENT SPIRAL POINT
TYP	TYPICAL

U

UC	UNDERCROSSING
UD	UNDERDRAIN
UON	UNLESS OTHERWISE NOTED
UP	UNDERPASS
UPRR	UNION PACIFIC RAILROAD
UXO	UNIVERSAL CROSSOVER

V

V	DESIGN SPEED, VALVE
VAR	VARIABLE
VC	VERTICAL CURVE
VCP	VITRIFIED CLAY PIPE
VERT	VERTICAL
VIA	VIADUCT
VOL	VOLUME

W

W	WEST, WIDTH
WB	WESTBOUND
WCB	WORLD COORDINATE BEARING
WH	WEEP HOLE
WM	WIRE MESH
WS	WATER SURFACE
WSP	WELDED STEEL PIPE
WT	WEIGHT
WV	WATER VALVE
WW	WINGWALL
WWLOL	WINGWALL LAYOUT LINE

X

X SEC	CROSS SECTION
XING	CROSSING
XO	CROSSOVER

Y

YR	YEAR
YRS	YEARS

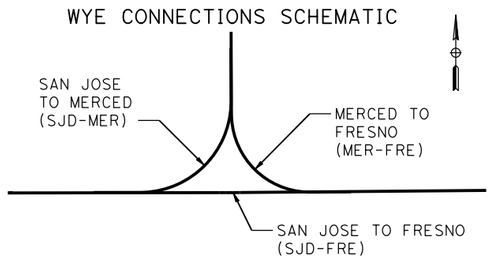

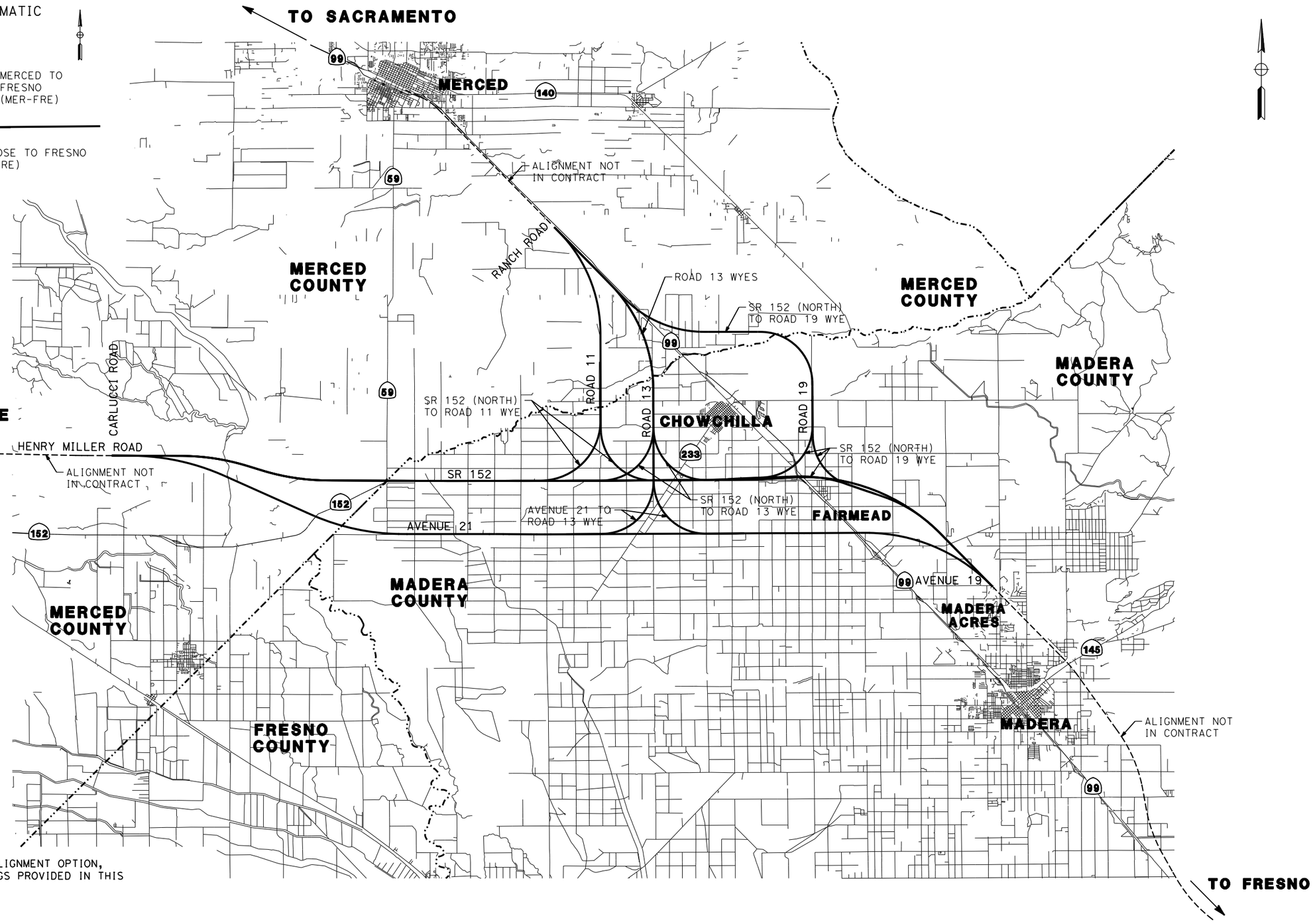

NOTE:

FOR LARGE SCALE VIEW OF EACH ALIGNMENT OPTION, PLEASE REFER TO KEY MAP DRAWINGS PROVIDED IN THIS PACKAGE FOR EACH OPTION.

REV	DATE	BY	CHK	APP	DESCRIPTION

DESIGNED BY C. LEMLEY
DRAWN BY J. KIDWELL
CHECKED BY A. GURA
IN CHARGE C. LEMLEY
DATE 08/12/2016

RECORD SET
15% DESIGN SUBMITTAL

NOT FOR CONSTRUCTION

PARSONS

CALIFORNIA HIGH-SPEED RAIL AUTHORITY

CALIFORNIA HIGH-SPEED TRAIN PROJECT
MERCED TO FRESNO SECTION
CENTRAL VALLEY WYE
STRUCTURE, VIADUCT AND TUNNEL PLANS
LOCATION PLAN

CONTRACT NO. HSR08-05
DRAWING NO. ST-B4000
SCALE NTS
SHEET NO.

MF-ST-B4000.dgn
16-AUG-2016 07:50
p005133a

NOTES:

ST-K - INDICATES AERIAL, CROSSING, AND GRADE SEPARATION DRAWINGS

ST-T - INDICATES RETAINED CUT DRAWINGS

KEY PLAN

REV	DATE	BY	CHK	APP	DESCRIPTION

DESIGNED BY S. J. S.
DRAWN BY J. KIDWELL
CHECKED BY O. EDEWOR
IN CHARGE C. LEMLEY
DATE 03/18/2016

RECORD SET
15% DESIGN SUBMITTAL

NOT FOR CONSTRUCTION

PARSONS

CALIFORNIA HIGH-SPEED RAIL AUTHORITY

CALIFORNIA HIGH-SPEED TRAIN PROJECT
MERCED TO FRESNO SECTION

CENTRAL VALLEY WYE
SR 152 (NORTH) TO ROAD 13 WYE ALTERNATIVE
KEY MAP OF STRUCTURAL PLANS
SHEET 1 OF 2

CONTRACT NO. HSR08-05
DRAWING NO. ST-B4001-A
SCALE N. T. S.
SHEET NO.

MF-ST-B4001-A.dgn 10-MAR-2016 8:33 p005133a

NOTES:

ST-K - INDICATES AERIAL, CROSSING, AND GRADE SEPARATION DRAWINGS

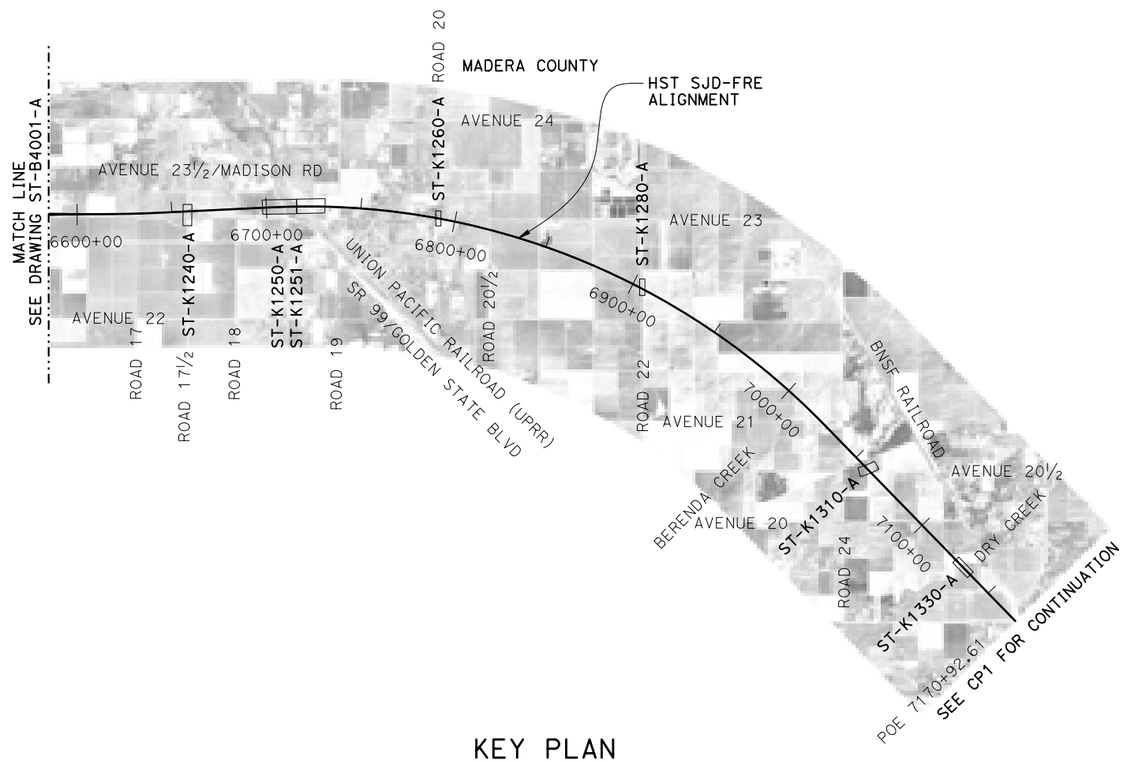

KEY PLAN

REV	DATE	BY	CHK	APP	DESCRIPTION

DESIGNED BY S. J. S.
DRAWN BY J. KIDWELL
CHECKED BY A. GURA
IN CHARGE C. LEMLEY
DATE 03/18/2016

RECORD SET 15% DESIGN SUBMITTAL

NOT FOR CONSTRUCTION

PARSONS

CALIFORNIA HIGH-SPEED RAIL AUTHORITY

CALIFORNIA HIGH-SPEED TRAIN PROJECT
MERCED TO FRESNO SECTION
CENTRAL VALLEY WYE
SR 152 (NORTH) TO ROAD 13 WYE ALTERNATIVE
KEY MAP OF STRUCTURAL PLANS
SHEET 2 OF 2

CONTRACT NO. HSR08-05
DRAWING NO. ST-B4002-A
SCALE N. T. S.
SHEET NO.

p0051330 10-MAR-2016 15:35 MF-ST-B4002-A.dgn

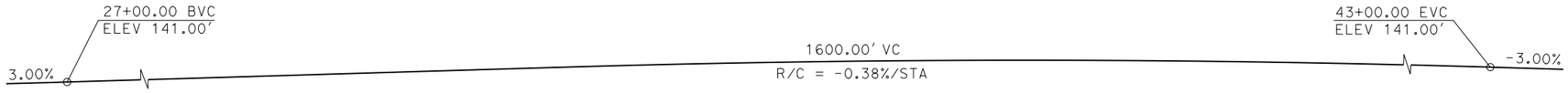

PROFILE GRADE

NO SCALE

CURVE NO. 050-01 (A)

R = 2,700.00'
Δ = 48°14'09"
L = 2,273.07'
T = 1,208.79'

CURVE SJD-FRE 1 SB (B)

R = 45,000.00'
LS = 1,650.00'

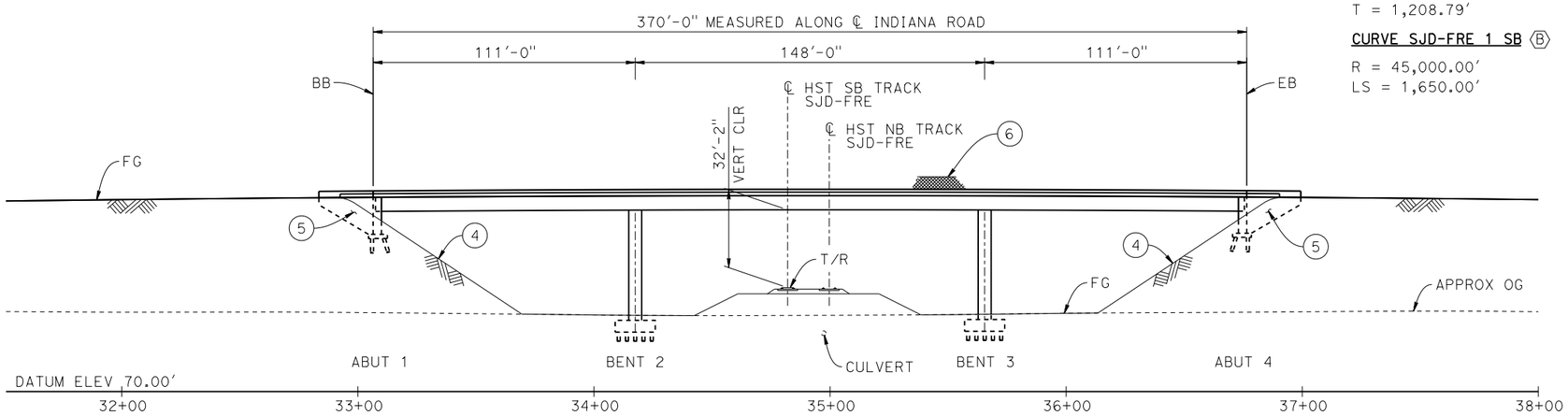

DEVELOPED ELEVATION

1"=30'

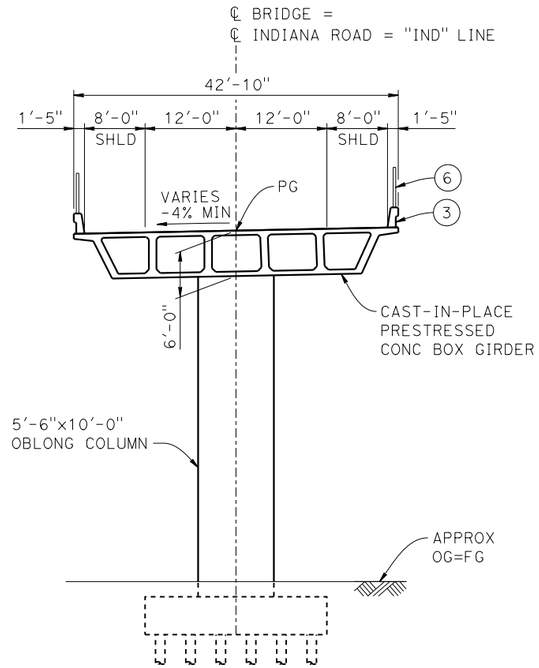

TYPICAL SECTION

1" = 10'

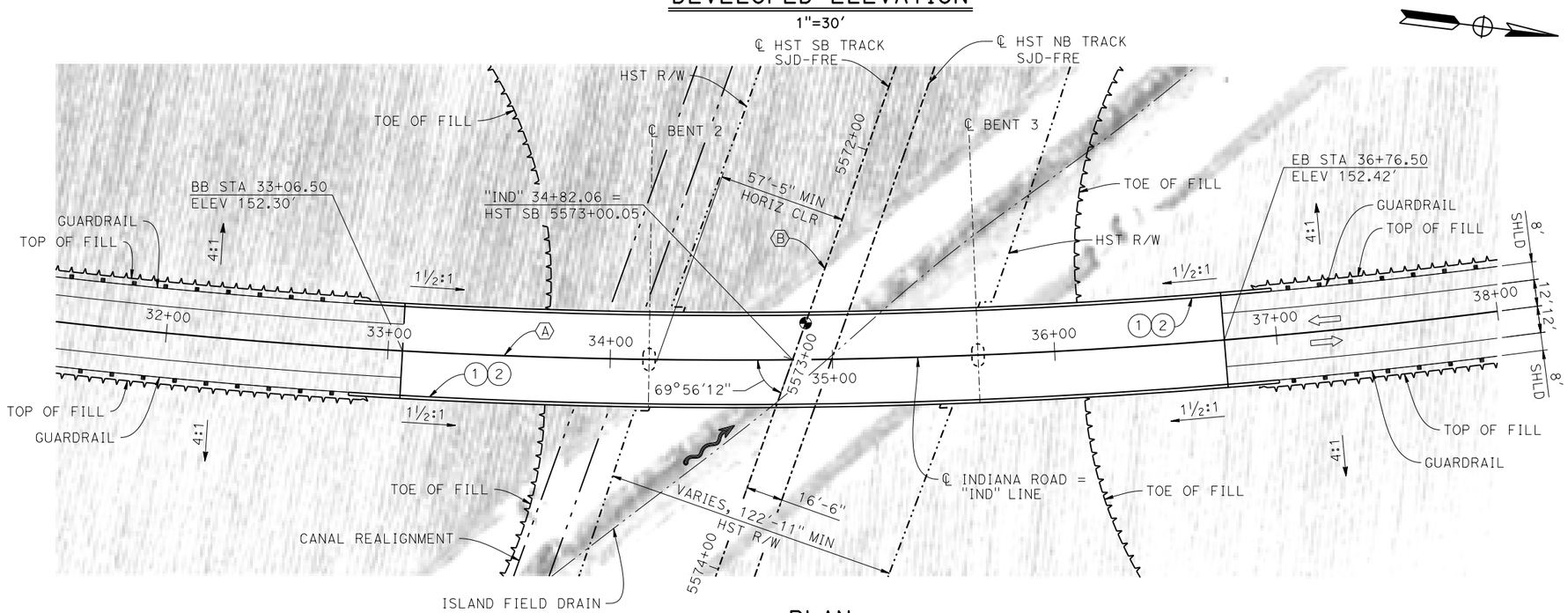

PLAN

1"=30'

LEGEND:

- INDICATES POINT OF MINIMUM VERTICAL CLEARANCE
- INDICATES DIRECTION OF FLOW
- INDICATES DIRECTION OF TRAFFIC
- (1) PAINT "INDIANA ROAD OVERHEAD"
- (2) PAINT "BRIDGE NO. XX-XXXX"
- (3) CONCRETE BARRIER TYPE 736 MOD
- (4) SLOPE PAVING (1½H:1V)
- (5) WINGWALL
- (6) AR FENCE WITH SOLID PLATE

NOTES:

1. ASSUME CLASS 140 PILES AT ABUTMENT AND BENT FOUNDATIONS. PILE LENGTHS TO BE DETERMINED.
2. FOR UTILITY DISPOSITIONS, SEE CIVIL AND GRADE SEPARATION PLANS; DRAWING CV-S1050-A.
3. FOR GUARDRAILS, SEE CIVIL AND GRADE SEPARATION PLANS; DRAWING CV-S1050-A.
4. FOR CULVERT AND CANAL REALIGNMENT, SEE CIVIL AND GRADE SEPARATION PLANS; DRAWING CV-S1050-A.

10 0 10 20 — 1"=10'
30 0 30 60 — 1"=30'

REV	DATE	BY	CHK	APP	DESCRIPTION

DESIGNED BY S. J. S.
DRAWN BY J. KIDWELL
CHECKED BY O. EDEWOR
IN CHARGE C. LEMLEY
DATE 03/18/2016

RECORD SET 15% DESIGN SUBMITTAL

NOT FOR CONSTRUCTION

PARSONS

CALIFORNIA HIGH-SPEED RAIL AUTHORITY

CALIFORNIA HIGH-SPEED TRAIN PROJECT
MERCED TO FRESNO SECTION
CENTRAL VALLEY WYE
SR 152 (NORTH) TO ROAD 13 WYE ALTERNATIVE
GENERAL PLAN (SJD-FRE)
INDIANA ROAD OVERHEAD

CONTRACT NO. HSR08-05
DRAWING NO. ST-K1050-A
SCALE AS SHOWN
SHEET NO.

MF-ST-K1050-A.dgn 16-MAR-2016 6:38 p005133a

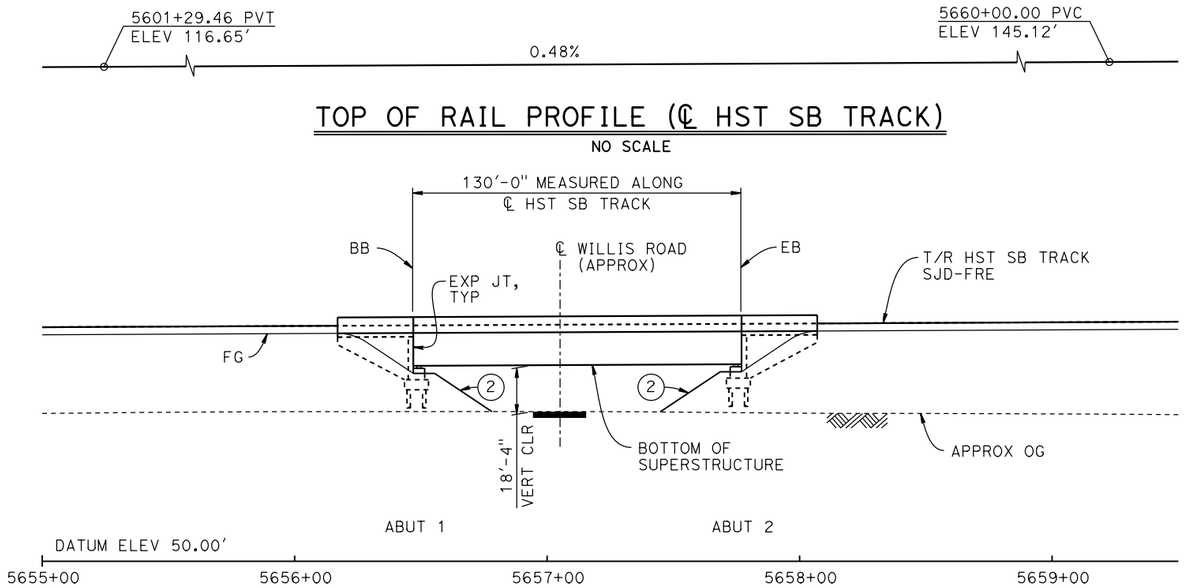

TOP OF RAIL PROFILE (℄ HST SB TRACK)

NO SCALE

DEVELOPED ELEVATION

1" = 30'

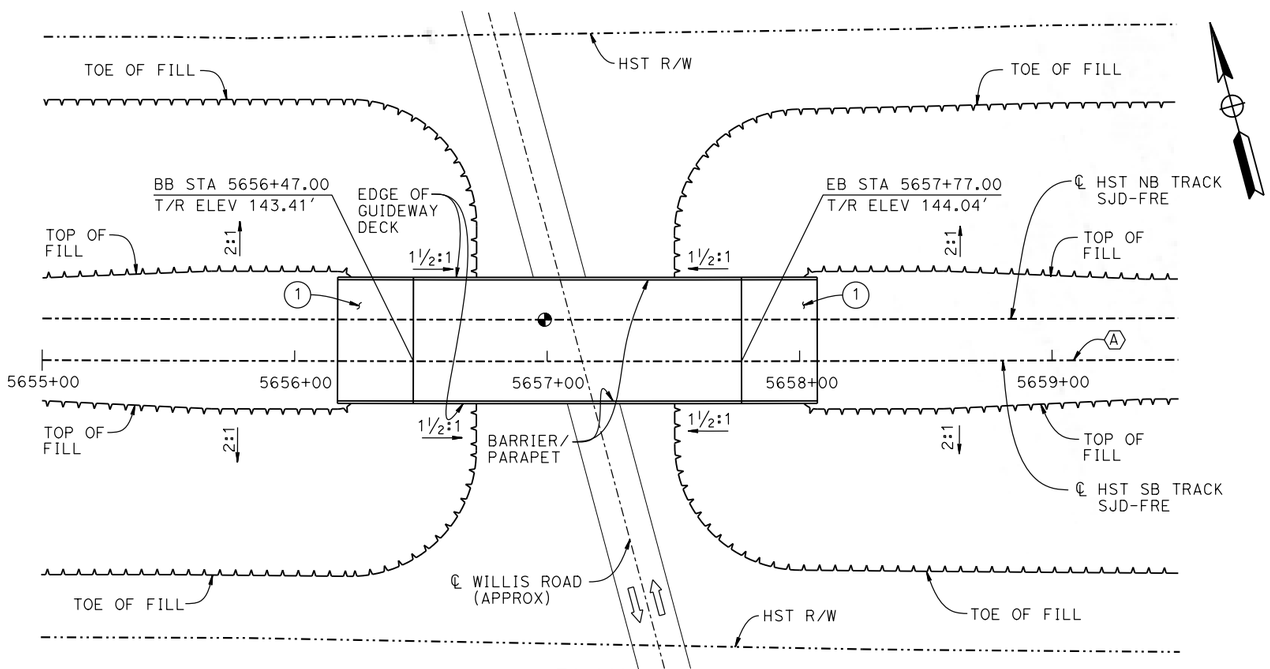

PLAN

1" = 30'

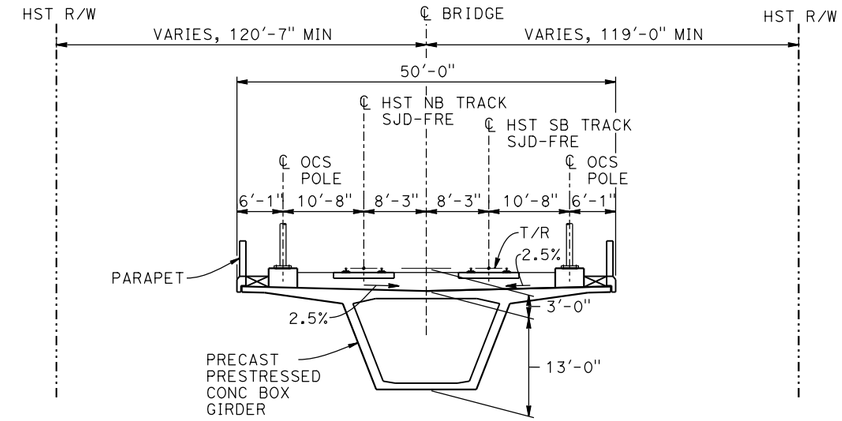

TYPICAL SECTION

1" = 10'

TEMPORARY TRAFFIC OPENINGS

VEHICULAR TRAFFIC

1. __ TRAFFIC WILL BE DETOURED AWAY FROM THE SITE.
2. X TRAFFIC WILL PASS UNDER THE STRUCTURE ON:

ST OR ROAD NAME AND LOCATION		FALSEWORK OPENING REQD (HORIZ X VERT)	
WILLIS ROAD	5657+14	32'X16.5'	2-WAY

3. __ TEMP TRAFFIC LANE REDUCTION FOR FTG EXC.

LEGEND:

- INDICATES POINT OF MINIMUM VERTICAL CLEARANCE
- INDICATES DIRECTION OF TRAFFIC
- (1) STRUCTURE APPROACH
- (2) SLOPE PAVING (1½H:1V)

NOTES:

1. 16" ø PIPE PILES ASSUMED FOR ABUTMENT FOUNDATIONS. PILE LENGTHS TO BE DETERMINED.
2. ANY EXISTING DIRT ROAD THAT CONFLICTS WITH NEW CONSTRUCTION SHALL BE REALIGNED.
3. FOR UTILITY DISPOSITIONS, SEE CIVIL AND GRADE SEPARATION PLANS; DRAWING CV-S1060-A.
4. FOR TRACK SUPERELEVATION DETAILS, SEE ALIGNMENT AND TYPICAL SECTION PLANS; DRAWING TT-B0050-A.

CURVE SJD-FRE 2 SB (A)

R = 45,016.50'
LS = 1,550.00'

10 0 10 20
1"=10'

30 0 30 60
1"=30'

REV	DATE	BY	CHK	APP	DESCRIPTION

DESIGNED BY S. J. S.
DRAWN BY A. M.
CHECKED BY O. EDEWOR
IN CHARGE C. LEMLEY
DATE 02/13/2015

RECORD SET
15% DESIGN
SUBMITTAL

NOT FOR
CONSTRUCTION

PARSONS

CALIFORNIA
HIGH-SPEED RAIL AUTHORITY

CALIFORNIA HIGH-SPEED TRAIN PROJECT
MERCED TO FRESNO SECTION
CENTRAL VALLEY WYE
SR 152 (NORTH) TO ROAD 13 WYE ALTERNATIVE
GENERAL PLAN (SJD-FRE)
WILLIS ROAD UNDERPASS

CONTRACT NO. HSR08-05
DRAWING NO. ST-K1060-A
SCALE AS SHOWN
SHEET NO.

MF-ST-K1060-A.dgn
06-FEB-2015 16:05
p0036110

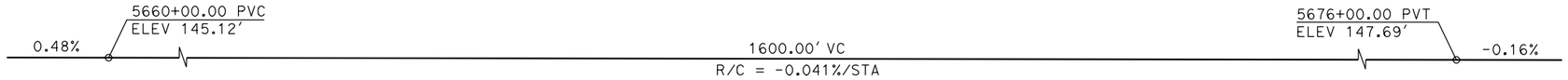

TOP OF RAIL PROFILE (℄ HST SB TRACK)

NO SCALE

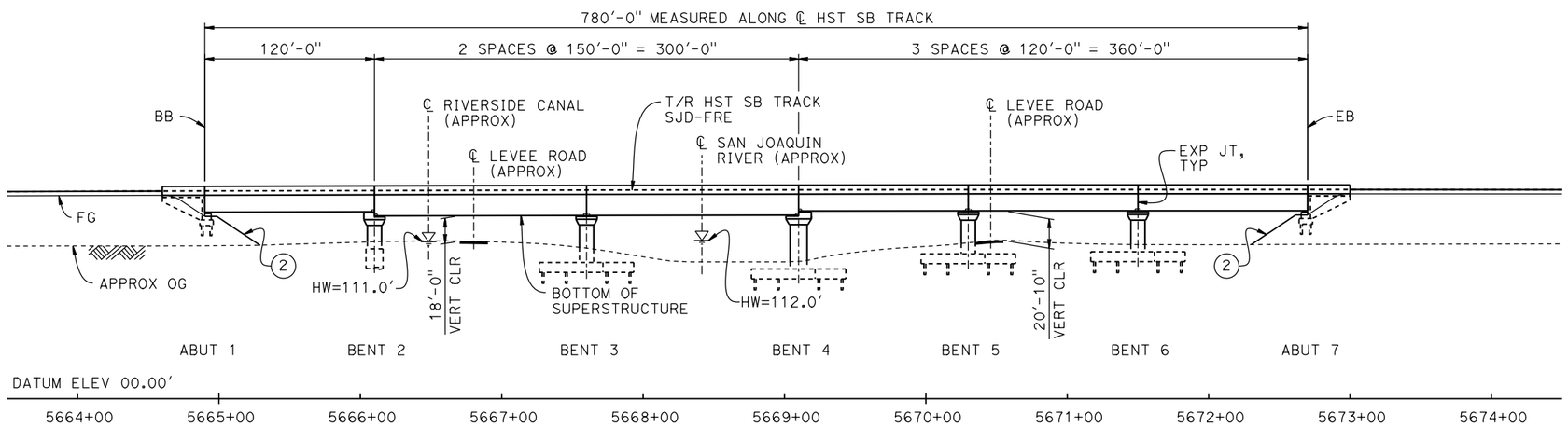

DEVELOPED ELEVATION

1" = 50'

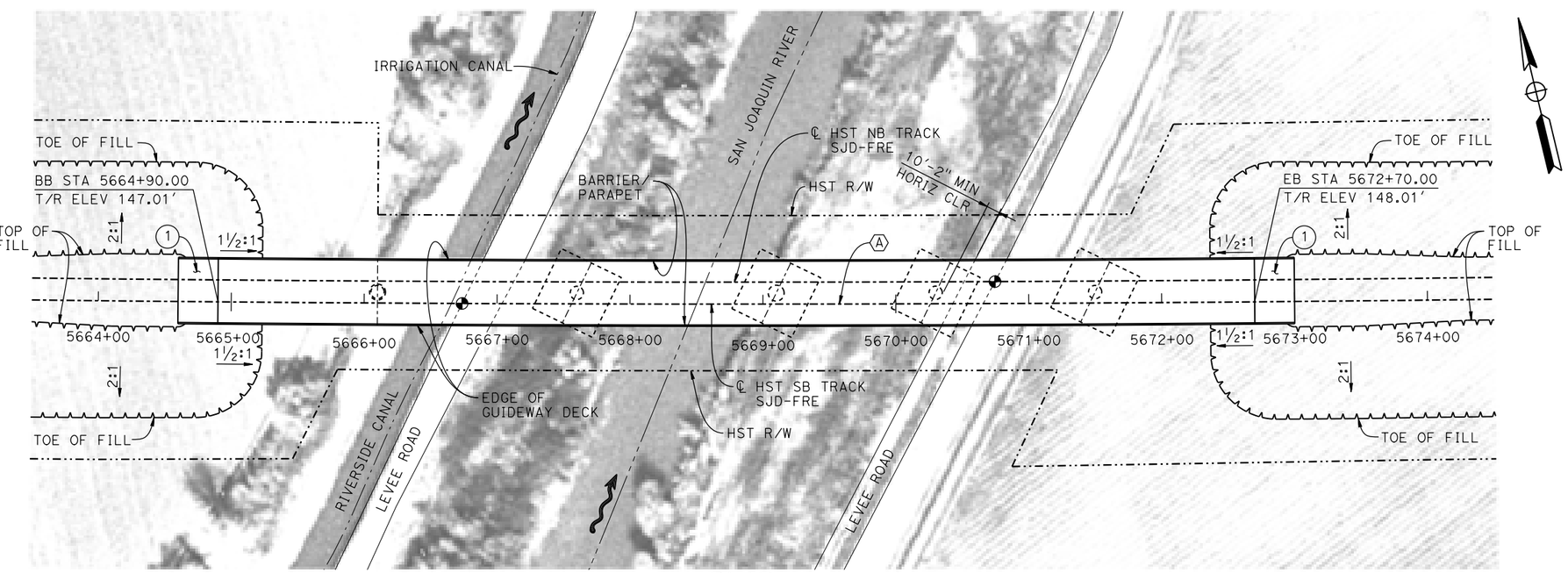

PLAN

1" = 50'

LEGEND:

- INDICATES POINT OF MINIMUM VERTICAL CLEARANCE
- INDICATES DIRECTION OF FLOW
- (1) STRUCTURE APPROACH
- (2) SLOPE PAVING (1½H:1V)

CURVE SJD-FRE 2 SB (A)

R = 45,016.50'
LS = 1,550.00'

TEMPORARY TRAFFIC OPENINGS

VEHICULAR TRAFFIC

1. __ TRAFFIC WILL BE DETOURED AWAY FROM THE SITE.
2. X TRAFFIC WILL PASS UNDER THE STRUCTURE ON:

ST OR ROAD NAME AND LOCATION		FALSEWORK OPENING REQD (HORIZ X VERT)	
LEVEE ROAD	5666+85	20'X16.5'	-
LEVEE ROAD	5670+55	20'X16.5'	-

3. X TEMP TRAFFIC LANE REDUCTION FOR FTG EXC.

NOTES:

1. 16" Ø PIPE PILES ASSUMED FOR ABUTMENT AND BENT FOUNDATIONS, UNLESS OTHERWISE NOTED. PILE LENGTHS TO BE DETERMINED.
2. FOR SECTION AND BENT COLUMN SCHEDULE, SEE DRAWING ST-K3065-A.
3. ANY EXISTING DIRT ROAD THAT CONFLICTS WITH NEW CONSTRUCTION SHALL BE REALIGNED.
4. FOR UTILITY DISPOSITIONS, SEE CIVIL AND GRADE SEPARATION PLANS; DRAWING CV-S1060-A.

50 0 50 100
1"=50'

REV	DATE	BY	CHK	APP	DESCRIPTION

DESIGNED BY S. J. S.
DRAWN BY A. M.
CHECKED BY O. EDEWOR
IN CHARGE C. LEMLEY
DATE 02/13/2015

RECORD SET
15% DESIGN SUBMITTAL
NOT FOR CONSTRUCTION

PARSONS

CALIFORNIA HIGH-SPEED RAIL AUTHORITY

CALIFORNIA HIGH-SPEED TRAIN PROJECT
MERCED TO FRESNO SECTION
CENTRAL VALLEY WYE
SR 152 (NORTH) TO ROAD 13 WYE ALTERNATIVE
GENERAL PLAN (SJD-FRE)
SAN JOAQUIN RIVER BRIDGE - 1 OF 2

CONTRACT NO. HSR08-05
DRAWING NO. ST-K1065-A
SCALE AS SHOWN
SHEET NO.

MF-ST-K1065-A.dgn
06-FEB-2015 17:29
p0036110

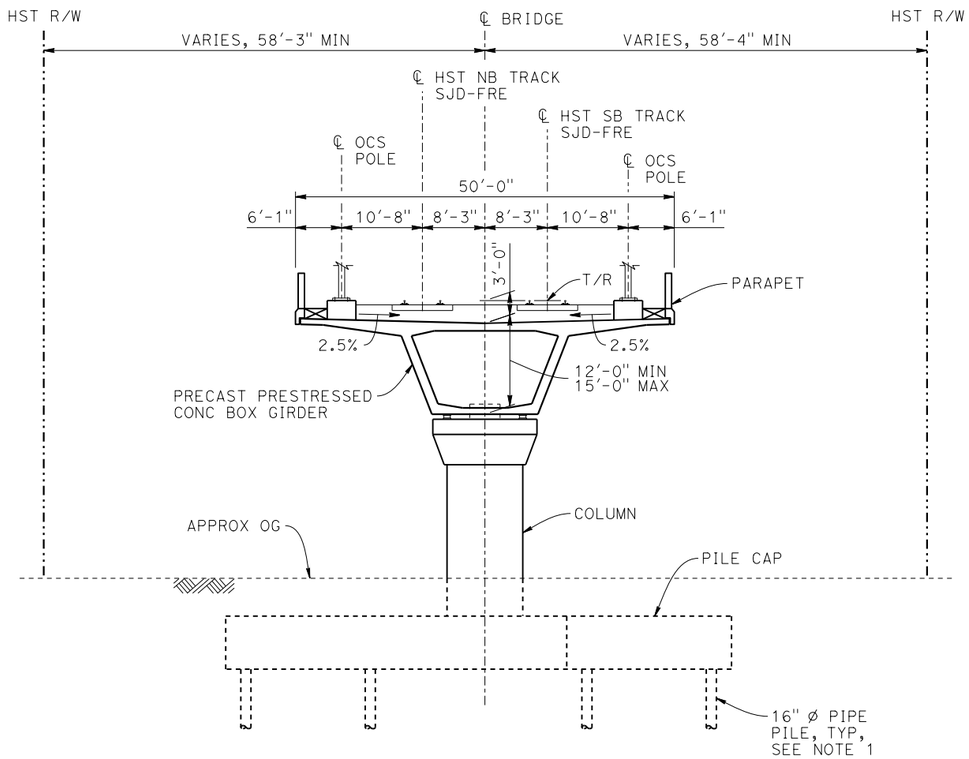

TYPICAL SECTION

1" = 10'

BENT COLUMN SCHEDULE		
BENT	COLUMN TYPE	CIDH
2	10'-0" Ø	12'-0" Ø
3	10'-0" Ø	
4	12'-0" Ø	
5 - 6	10'-0" Ø	

NOTES:

1. PILE AND DRILLED SHAFT LENGTHS TO BE DETERMINED.
2. FOR TRACK SUPERELEVATION DETAILS, SEE ALIGNMENT AND TYPICAL SECTION PLANS; DRAWING TT-B0050-A.

10 0 10 20
1"=10'

MF-ST-K3065-A.dgn
09-FEB-2015 09:58
p005133a

REV	DATE	BY	CHK	APP	DESCRIPTION

DESIGNED BY S. J. S.
DRAWN BY A. M.
CHECKED BY O. EDEWOR
IN CHARGE C. LEMLEY
DATE 02/13/2015

RECORD SET
15% DESIGN
SUBMITTAL

NOT FOR
CONSTRUCTION

PARSONS

CALIFORNIA
HIGH-SPEED RAIL AUTHORITY

CALIFORNIA HIGH-SPEED TRAIN PROJECT
MERCED TO FRESNO SECTION
CENTRAL VALLEY WYE
SR 152 (NORTH) TO ROAD 13 WYE ALTERNATIVE
TYPICAL SECTION (SJD-FRE)
SAN JOAQUIN RIVER BRIDGE - 2 OF 2

CONTRACT NO. HSR08-05
DRAWING NO. ST-K3065-A
SCALE AS SHOWN
SHEET NO.

TOP OF RAIL PROFILE (℄ HST SB TRACK)

NO SCALE

BENT COLUMN SCHEDULE	
BENT	COLUMN TYPE
2	9'-0" ø
3 - 5	10'-0" ø

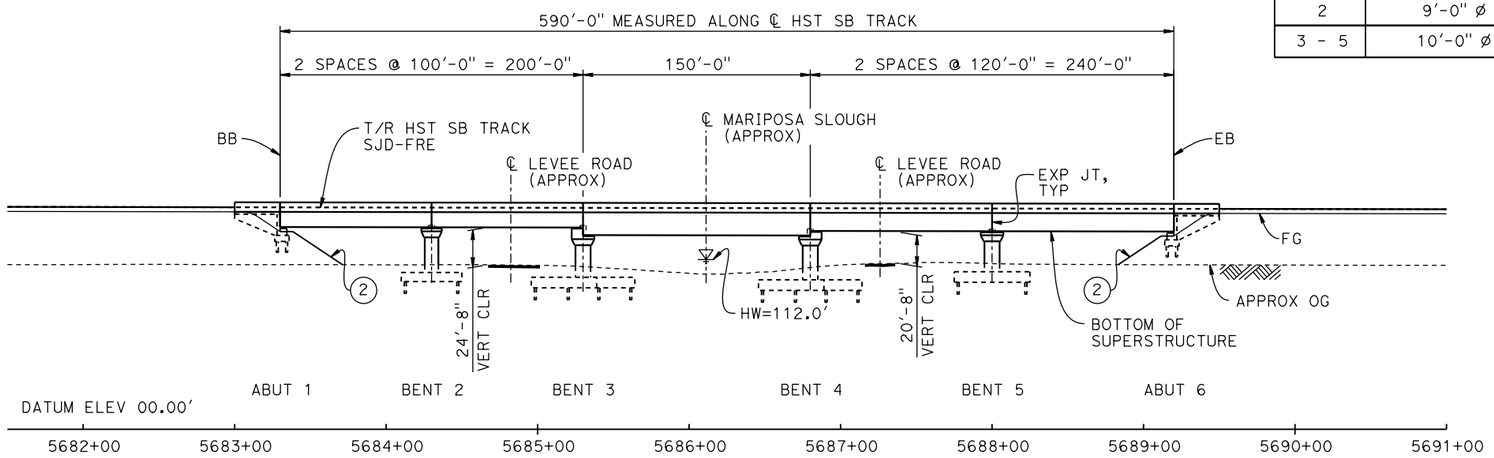

DEVELOPED ELEVATION

1" = 50'

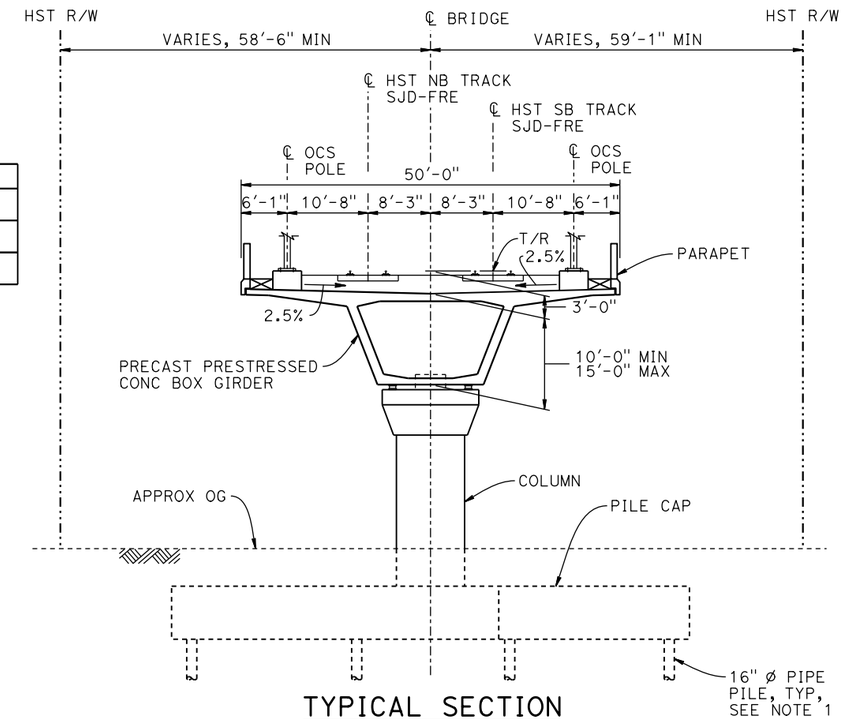

TYPICAL SECTION

1" = 10'

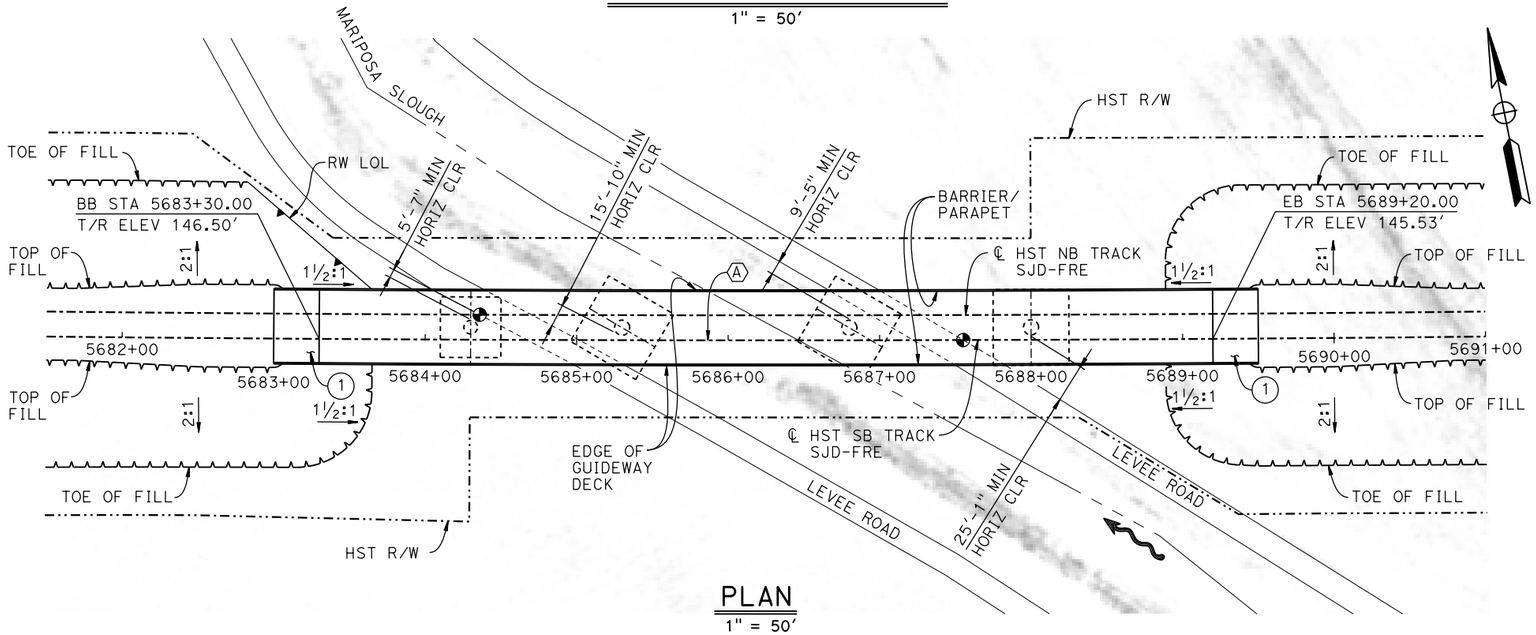

PLAN

1" = 50'

NOTES:

1. 16" ø PIPE PILES ASSUMED FOR ABUTMENT AND BENT FOUNDATIONS. PILE LENGTHS TO BE DETERMINED.
2. ANY EXISTING DIRT ROAD THAT CONFLICTS WITH NEW CONSTRUCTION SHALL BE REALIGNED.
3. FOR UTILITY DISPOSITIONS, SEE CIVIL AND GRADE SEPARATION PLANS; DRAWING CV-S1070-A.
4. FOR TRACK SUPERELEVATION DETAILS, SEE ALIGNMENT AND TYPICAL SECTION PLANS; DRAWING TT-B0050-A.
5. FOR RETAINING WALL, SEE CIVIL AND GRADE SEPARATION PLANS; DRAWING CV-S1070-A.

LEGEND:

- INDICATES POINT OF MINIMUM VERTICAL CLEARANCE
- INDICATES DIRECTION OF FLOW
- (1) STRUCTURE APPROACH
- (2) SLOPE PAVING (1½H:1V)

TEMPORARY TRAFFIC OPENINGS

VEHICULAR TRAFFIC

1. __ TRAFFIC WILL BE DETOURED AWAY FROM THE SITE.
2. X TRAFFIC WILL PASS UNDER THE STRUCTURE ON:

ST OR ROAD NAME AND LOCATION		FALSEWORK OPENING REQD (HORIZ X VERT)	
LEVEE ROAD	5684+85	20'X16.5'	-
LEVEE ROAD	5687+40	20'X16.5'	-

3. X TEMP TRAFFIC LANE REDUCTION FOR FTG EXC.

CURVE SJD-FRE 2 SB (A)

R = 45,016.50'
LS = 1,550.00'

10 0 10 20
1"=10'

50 0 50 100
1"=50'

REV	DATE	BY	CHK	APP	DESCRIPTION

DESIGNED BY S. J. S.
DRAWN BY A. M.
CHECKED BY O. EDEWOR
IN CHARGE C. LEMLEY
DATE 05/08/2015

RECORD SET
15% DESIGN SUBMITTAL

NOT FOR CONSTRUCTION

PARSONS

CALIFORNIA HIGH-SPEED RAIL AUTHORITY

CALIFORNIA HIGH-SPEED TRAIN PROJECT
MERCED TO FRESNO SECTION
CENTRAL VALLEY WYE
SR 152 (NORTH) TO ROAD 13 WYE ALTERNATIVE
GENERAL PLAN (SJD-FRE)
MARIPOSA SLOUGH BRIDGE

CONTRACT NO. HSR08-05
DRAWING NO. ST-K1070-A
SCALE AS SHOWN
SHEET NO.

MF-ST-K1070-A.dgn
16-MAR-2016 8:16
p0042226

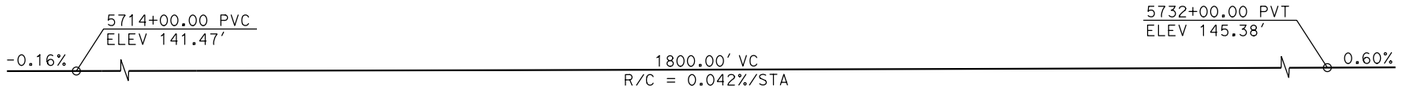

TOP OF RAIL PROFILE (℄ HST SB TRACK)

NO SCALE

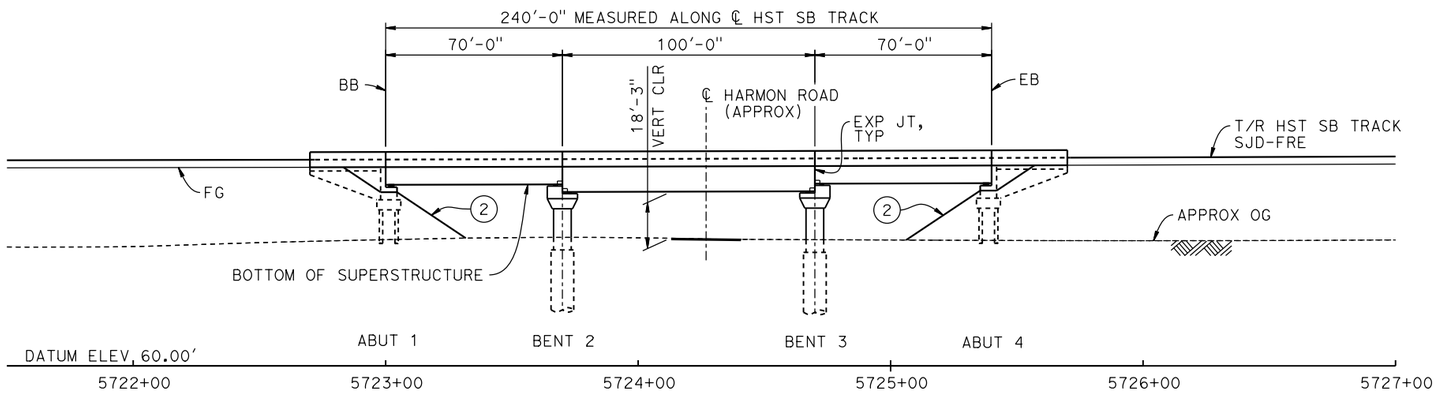

DEVELOPED ELEVATION

1" = 30'

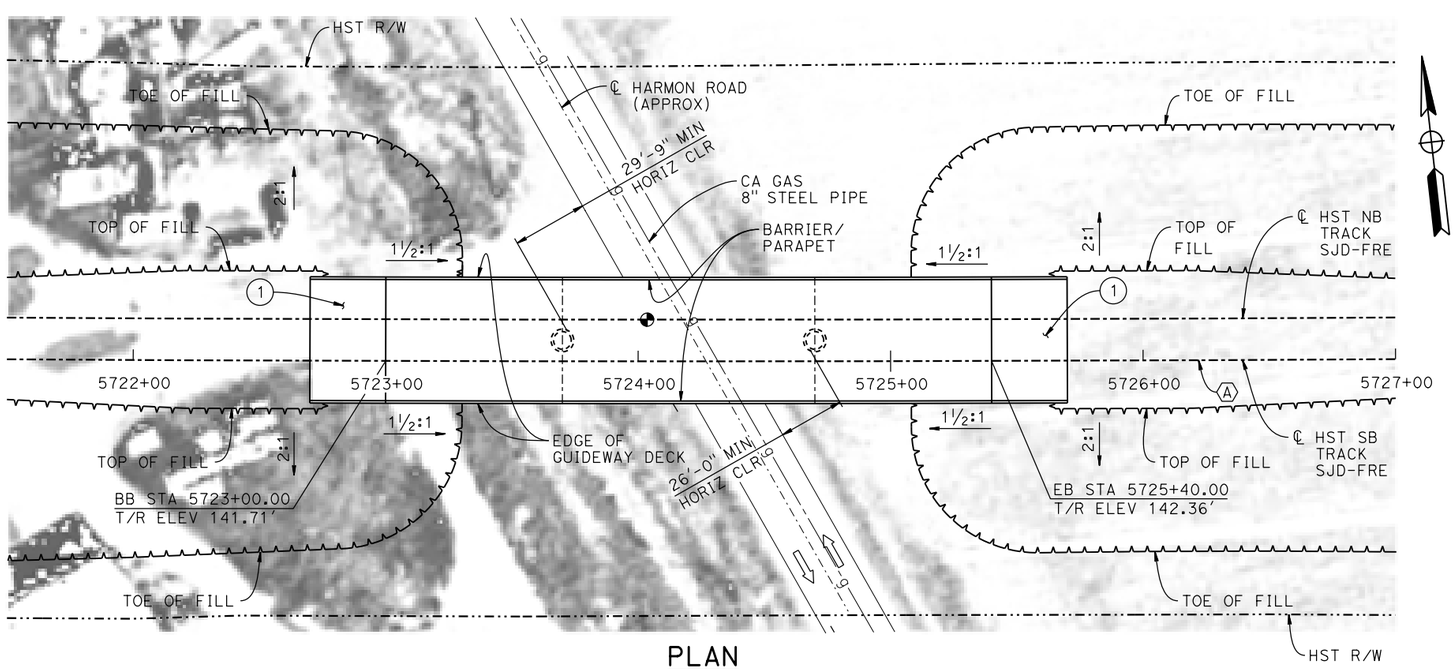

PLAN

1" = 30'

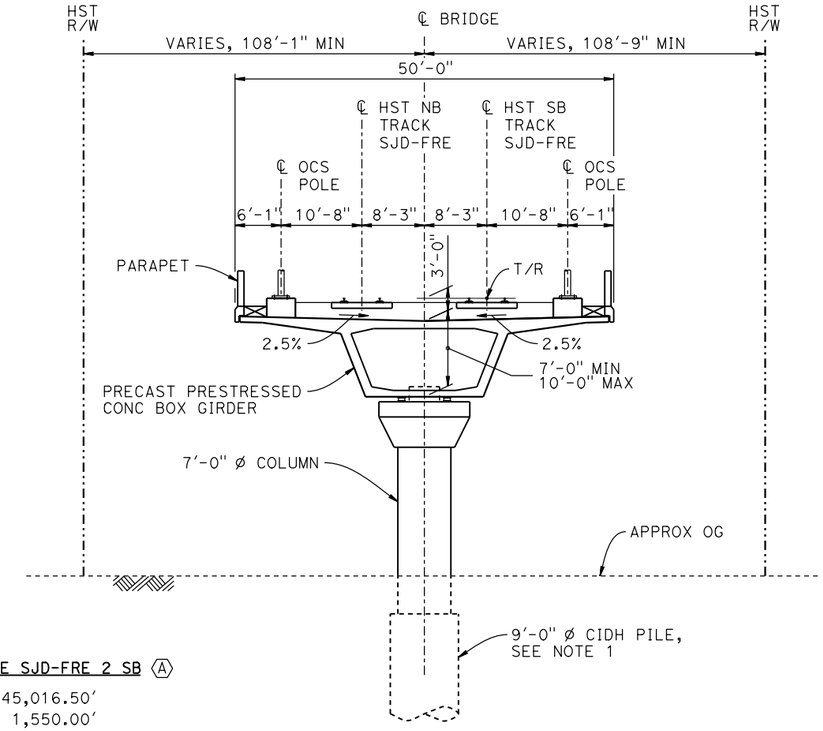

CURVE SJD-FRE 2 SB (A)

R = 45,016.50'
LS = 1,550.00'

TYPICAL SECTION

1" = 10'

LEGEND:

- ◕ INDICATES POINT OF MINIMUM VERTICAL CLEARANCE
- ⇨ INDICATES DIRECTION OF TRAFFIC
- (1) STRUCTURE APPROACH
- (2) SLOPE PAVING (1½H:1V)

NOTES:

1. 16" ø PIPE PILES ASSUMED FOR ABUTMENT FOUNDATIONS. PILE AND DRILLED SHAFT LENGTHS TO BE DETERMINED.
2. FOR UTILITY DISPOSITIONS, SEE CIVIL AND GRADE SEPARATION PLANS; DRAWING CV-S1070-A.
3. ANY EXISTING DIRT ROAD THAT CONFLICTS WITH NEW CONSTRUCTION SHALL BE REALIGNED.
4. FOR TRACK SUPERELEVATION DETAILS, SEE ALIGNMENT AND TYPICAL SECTION PLANS; DRAWING TT-B0050-A.

TEMPORARY TRAFFIC OPENINGS

VEHICULAR TRAFFIC

1. __ TRAFFIC WILL BE DETOURED AWAY FROM THE SITE.
2. X TRAFFIC WILL PASS UNDER THE STRUCTURE ON:

ST OR ROAD NAME AND LOCATION		FALSEWORK OPENING REQD (HORIZ X VERT)	
HARMON RD	5724+27	32'x16.5'	2-WAY

3. __ TEMP TRAFFIC LANE REDUCTION FOR FTG EXC.

10 0 10 20
1"=10'

30 0 30 60
1"=30'

REV	DATE	BY	CHK	APP	DESCRIPTION

DESIGNED BY O. EDEWOR
DRAWN BY J. KIDWELL
CHECKED BY S. J. S.
IN CHARGE C. LEMLEY
DATE 02/13/2015

RECORD SET
15% DESIGN SUBMITTAL

NOT FOR CONSTRUCTION

PARSONS

CALIFORNIA HIGH-SPEED RAIL AUTHORITY

CALIFORNIA HIGH-SPEED TRAIN PROJECT
MERCED TO FRESNO SECTION
CENTRAL VALLEY WYE
SR 152 (NORTH) TO ROAD 13 WYE ALTERNATIVE
GENERAL PLAN (SJD-FRE)
HARMON ROAD UNDERPASS

CONTRACT NO. HSR08-05
DRAWING NO. ST-K1075-A
SCALE AS SHOWN
SHEET NO.

MF-ST-K1075-A.dgn
06-FEB-2015 6:06
p0036110

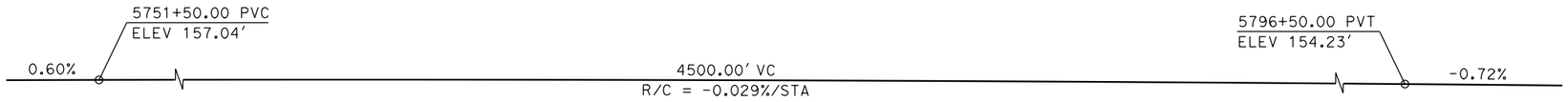

TOP OF RAIL PROFILE (℄ HST SB TRACK)

NO SCALE

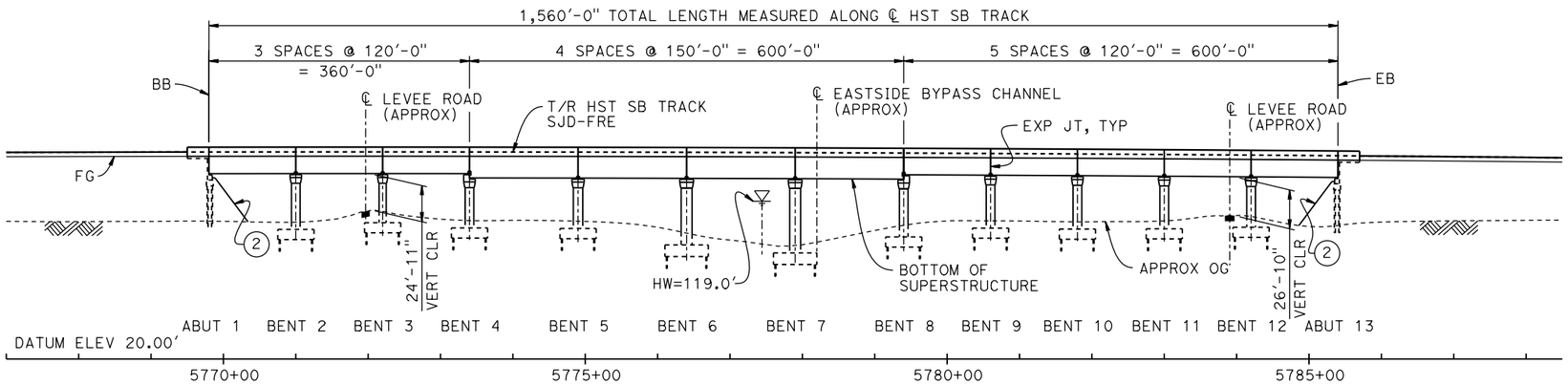

DEVELOPED ELEVATION

VERT: 1" = 50' HORIZ: 1" = 100'

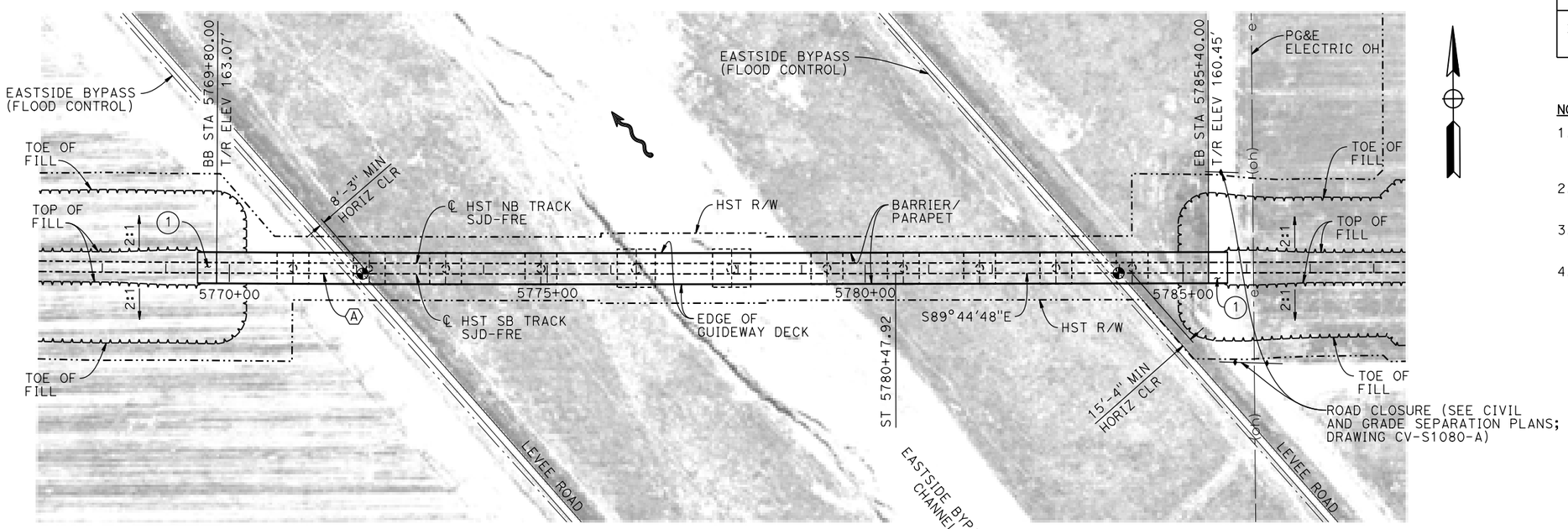

PLAN

1" = 100'

LEGEND:

- INDICATES POINT OF MINIMUM VERTICAL CLEARANCE
- INDICATES DIRECTION OF FLOW
- (1) STRUCTURE APPROACH
- (2) SLOPE PAVING (1½H:1V)

CURVE SJD-FRE 2 SB (A)

R = 45,016.50'
LS = 1,550.00'

TEMPORARY TRAFFIC OPENINGS

VEHICULAR TRAFFIC

1. __ TRAFFIC WILL BE DETOURED AWAY FROM THE SITE.
2. X TRAFFIC WILL PASS UNDER THE STRUCTURE ON:

ST OR ROAD NAME AND LOCATION		FALSEWORK OPENING REQD (HORIZ X VERT)	
LEVEE ROAD	5772+00	20'X16.5'	-
LEVEE ROAD	5783+90	20'X16.5'	-

3. X TEMP TRAFFIC LANE REDUCTION FOR FTG EXC.

NOTES:

1. 16" Ø PIPE PILES ASSUMED FOR ABUTMENT AND BENT FOUNDATIONS. PILE LENGTHS TO BE DETERMINED.
2. FOR SECTION AND BENT COLUMN SCHEDULE, SEE DRAWING ST-K3080-A.
3. ANY EXISTING DIRT ROAD THAT CONFLICTS WITH THE NEW CONSTRUCTION SHALL BE REALIGNED.
4. FOR UTILITY DISPOSITIONS, SEE CIVIL AND GRADE SEPARATION PLANS; DRAWING CV-S1080-A.

50 0 50 100
1"=50'

100 0 100 200
1"=100'

REV	DATE	BY	CHK	APP	DESCRIPTION

DESIGNED BY S. J. S.
DRAWN BY J. KIDWELL
CHECKED BY O. EDEWOR
IN CHARGE C. LEMLEY
DATE 05/08/2015

RECORD SET 15% DESIGN SUBMITTAL

NOT FOR CONSTRUCTION

PARSONS

CALIFORNIA HIGH-SPEED RAIL AUTHORITY

CALIFORNIA HIGH-SPEED TRAIN PROJECT
MERCED TO FRESNO SECTION
CENTRAL VALLEY WYE
SR 152 (NORTH) TO ROAD 13 WYE ALTERNATIVE
GENERAL PLAN (SJD-FRE)
AERIAL #1 - EASTSIDE BYPASS IRRIGATION DITCH - 1 OF 2

CONTRACT NO. HSR08-05
DRAWING NO. ST-K1080-A
SCALE AS SHOWN
SHEET NO.

MF-ST-K1080-A.dgn
16-MAR-2016 8:32
p0042226

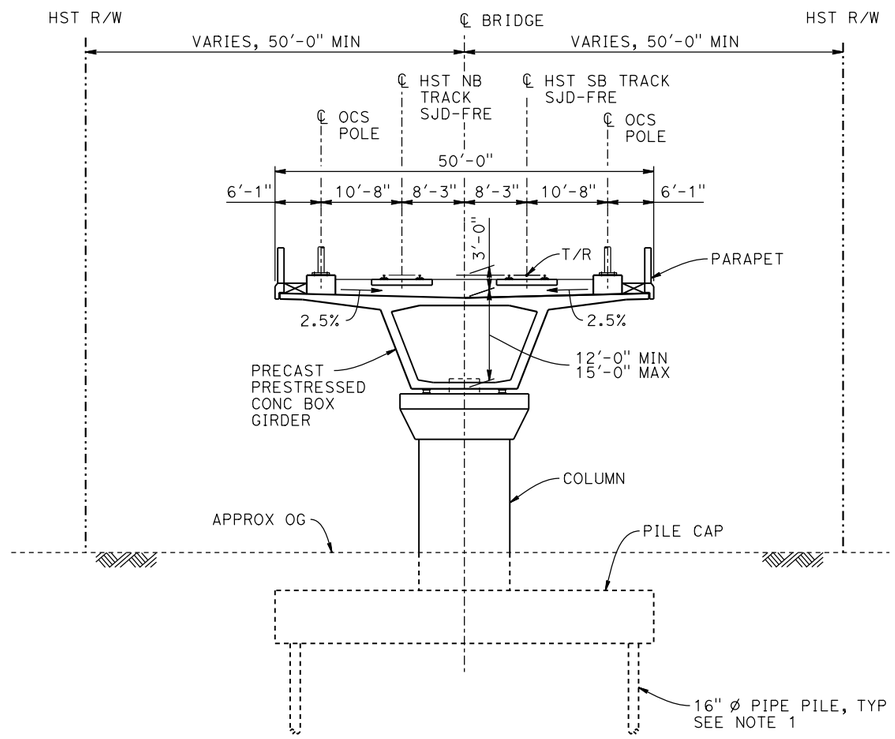

TYPICAL SECTION

1" = 10'

BENT COLUMN SCHEDULE	
BENT	COLUMN TYPE
2	12'-0" Ø
3	10'-0" Ø
4	12'-0" Ø
5	13'-0" Ø
6 - 7	15'-0" Ø
8 - 12	12'-0" Ø

NOTES:

1. PILE LENGTHS TO BE DETERMINED.
2. FOR TRACK SUPERELEVATION DETAILS, SEE ALIGNMENT AND TYPICAL SECTION PLANS; DRAWING TT-B0050-A.

10 0 10 20

1"=10'

REV	DATE	BY	CHK	APP	DESCRIPTION

DESIGNED BY S. J. S.
DRAWN BY J. KIDWELL
CHECKED BY O. EDEWOR
IN CHARGE C. LEMLEY
DATE 02/13/2015

RECORD SET
15% DESIGN SUBMITTAL

NOT FOR CONSTRUCTION

PARSONS

CALIFORNIA HIGH-SPEED RAIL AUTHORITY

CALIFORNIA HIGH-SPEED TRAIN PROJECT
MERCED TO FRESNO SECTION
CENTRAL VALLEY WYE
SR 152 (NORTH) TO ROAD 13 WYE ALTERNATIVE
TYPICAL SECTION (SJD-FRE)
AERIAL #1 - EASTSIDE BYPASS IRRIGATION DITCH - 2 OF 2

CONTRACT NO. HSR08-05
DRAWING NO. ST-K3080-A
SCALE AS SHOWN
SHEET NO.

MF-ST-K3080-A.dgn 06-FEB-2015 15:21 p0036110

PROFILE GRADE

NO SCALE

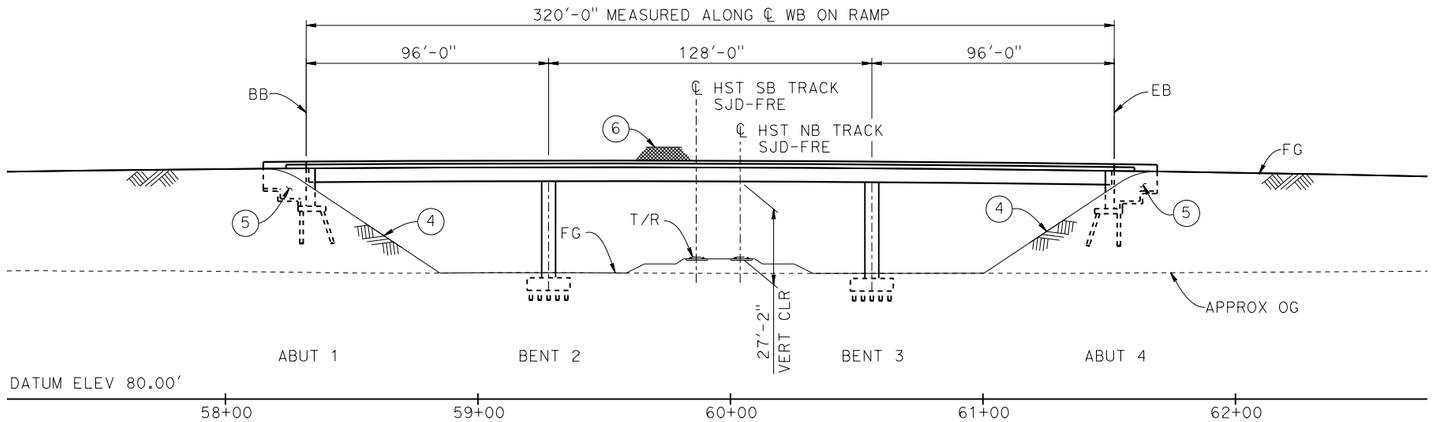

DEVELOPED ELEVATION

1" = 30'

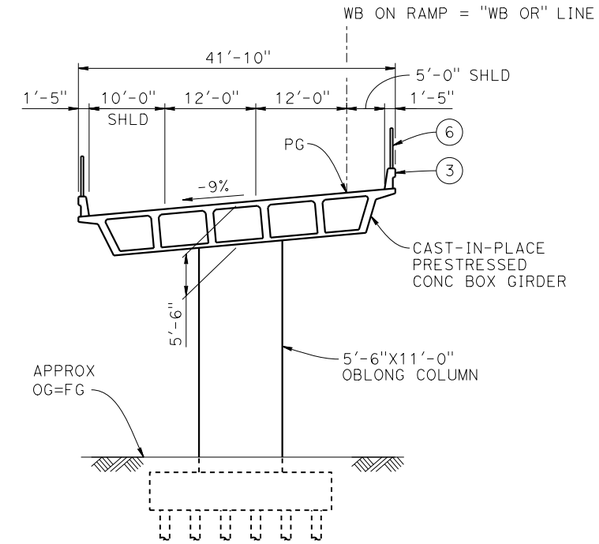

TYPICAL SECTION

1" = 10'

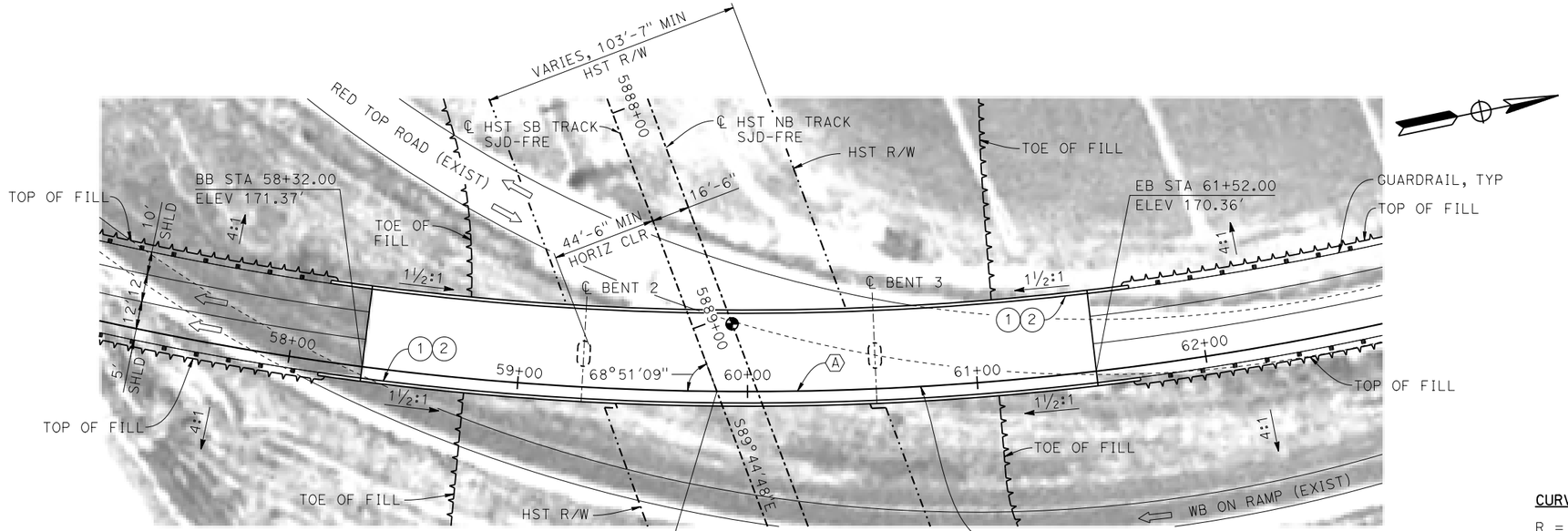

PLAN

1" = 30'

LEGEND:

- INDICATES POINT OF MINIMUM VERTICAL CLEARANCE
- INDICATES DIRECTION OF TRAFFIC
- (1) PAINT "WB ON RAMP OVERHEAD"
- (2) PAINT "BRIDGE NO. XX-XXXX"
- (3) CONCRETE BARRIER TYPE 742 MOD
- (4) SLOPE PAVING (1½H:1V)
- (5) WINGWALL
- (6) AR FENCE WITH SOLID PLATE

NOTES:

1. ASSUME CLASS 140 PILES AT ABUTMENT AND BENT FOUNDATIONS. PILE LENGTHS TO BE DETERMINED.
2. FOR UTILITY DISPOSITIONS, SEE CIVIL AND GRADE SEPARATION PLANS; DRAWING CV-S1100-A.
3. FOR GUARDRAILS, SEE CIVIL AND GRADE SEPARATION PLANS; DRAWING CV-S1100-A.

CURVE NO. 102-03 (A)

R = 1,305.00'
Δ = 62°21'49"
L = 1,420.43'
T = 789.77'

10 0 10 20
1"=10'

30 0 30 60
1"=30'

REV	DATE	BY	CHK	APP	DESCRIPTION

DESIGNED BY S. J. S.
DRAWN BY A. M.
CHECKED BY O. EDEWOR
IN CHARGE C. LEMLEY
DATE 05/08/2015

RECORD SET
15% DESIGN
SUBMITTAL

NOT FOR
CONSTRUCTION

PARSONS

CALIFORNIA
HIGH-SPEED RAIL AUTHORITY

CALIFORNIA HIGH-SPEED TRAIN PROJECT
MERCED TO FRESNO SECTION
CENTRAL VALLEY WYE
SR 152 (NORTH) TO ROAD 13 WYE ALTERNATIVE
GENERAL PLAN (SJD-FRE)
SR 59 / SR 152 INTERCHANGE - 1 OF 4

CONTRACT NO. HSR08-05
DRAWING NO. ST-K1100-A
SCALE AS SHOWN
SHEET NO.

20-MAY-2015 7:53 MF-ST-K1100-A.dgn
p005133a

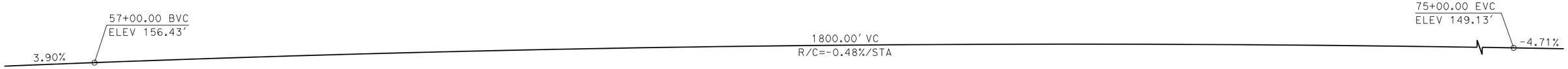

PROFILE GRADE

NO SCALE

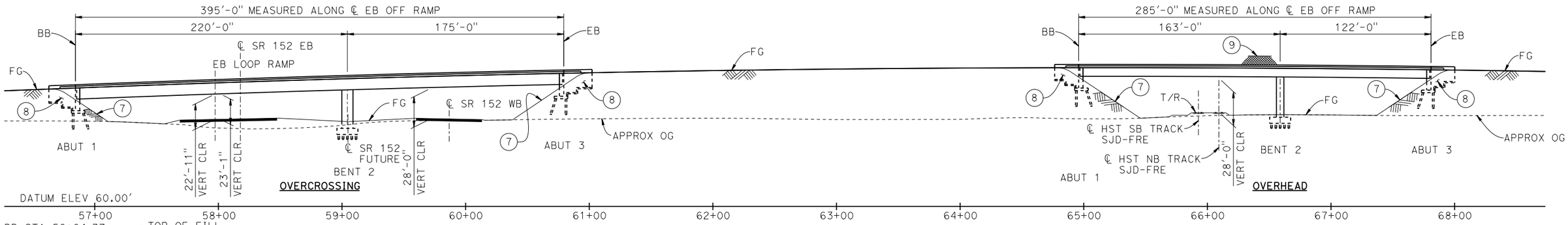

DEVELOPED ELEVATION

1" = 40'

CURVE NO. 101-03 (A)	CURVE NO. 104-03 (B)	CURVE NO. 100-02 (C)
R = 1,200.00'	R = 17,921.00'	R = 17,999.00'
Δ = 90°00'19"	Δ = 00°57'34"	Δ = 19°36'15"
L = 1,885.07'	L = 300.11'	L = 6,158.51'
T = 1,200.11'	T = 150.06'	T = 3,109.65'

NOTES:

1. FOR LEGEND AND NOTES, SEE DRAWING ST-K3101-A.

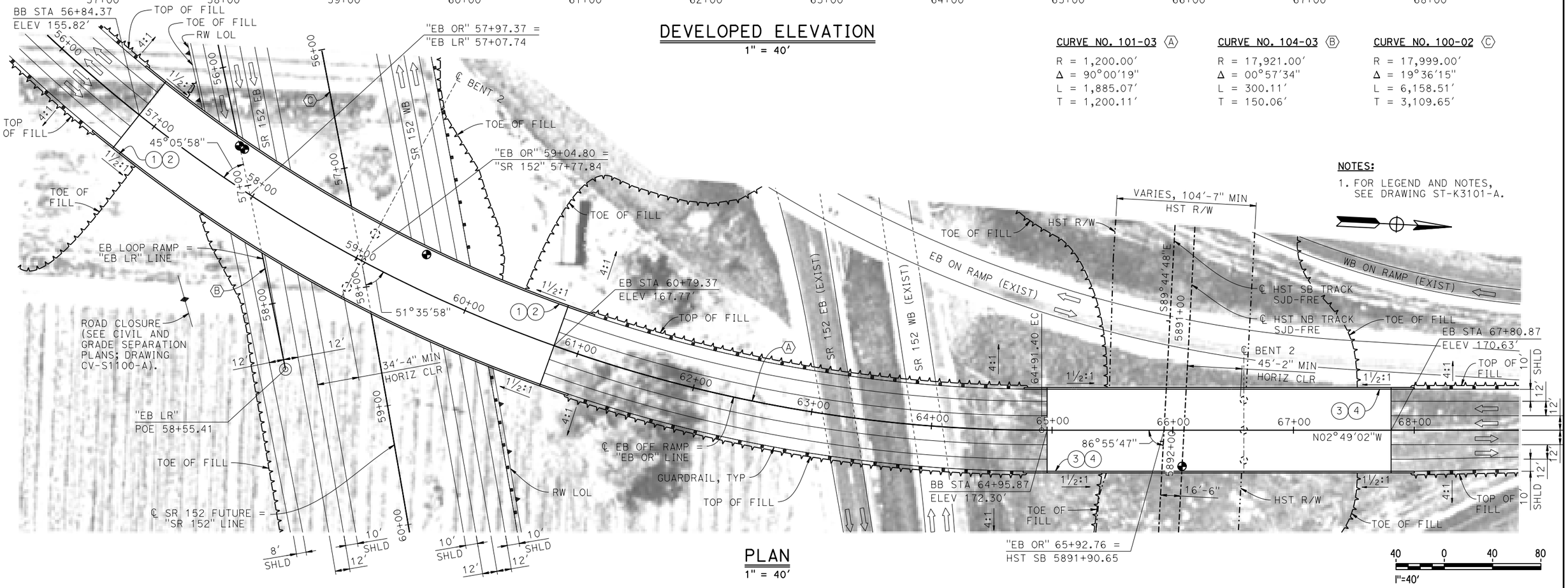

PLAN

1" = 40'

REV	DATE	BY	CHK	APP	DESCRIPTION

DESIGNED BY S. J. S.
DRAWN BY A. M.
CHECKED BY O. EDEWOR
IN CHARGE C. LEMLEY
DATE 05/08/2015

RECORD SET
15% DESIGN SUBMITTAL

NOT FOR CONSTRUCTION

PARSONS

CALIFORNIA HIGH-SPEED RAIL AUTHORITY

CALIFORNIA HIGH-SPEED TRAIN PROJECT
MERCED TO FRESNO SECTION

CENTRAL VALLEY WYE
SR 152 (NORTH) TO ROAD 13 WYE ALTERNATIVE
GENERAL PLAN (SJD-FRE)
SR 59 / SR 152 INTERCHANGE - 2 OF 4

CONTRACT NO. HSR08-05
DRAWING NO. ST-K1101-A
SCALE AS SHOWN
SHEET NO.

20-MAY-2015 8:17 WF-ST-K1101-A.dgn
p005133a

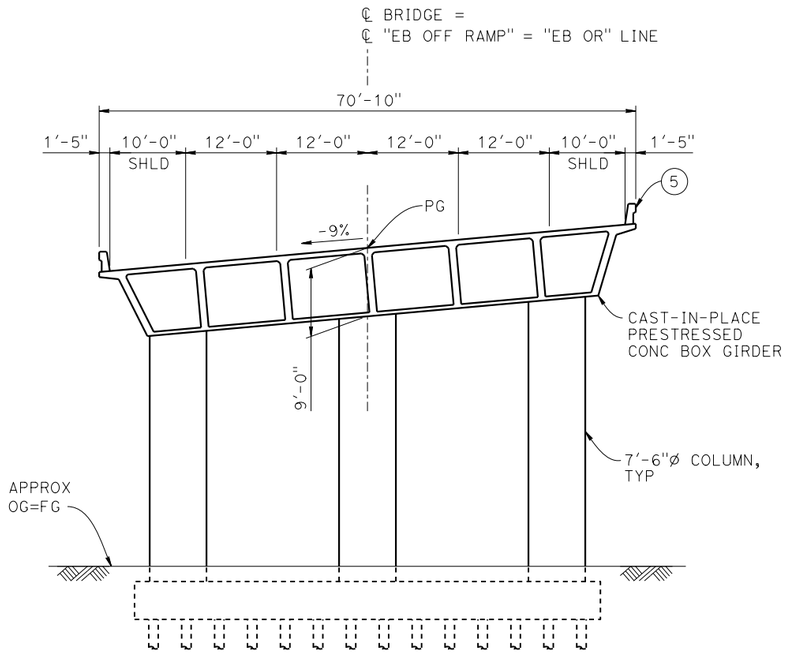

TYPICAL SECTION AT OVERCROSSING

1" = 10'

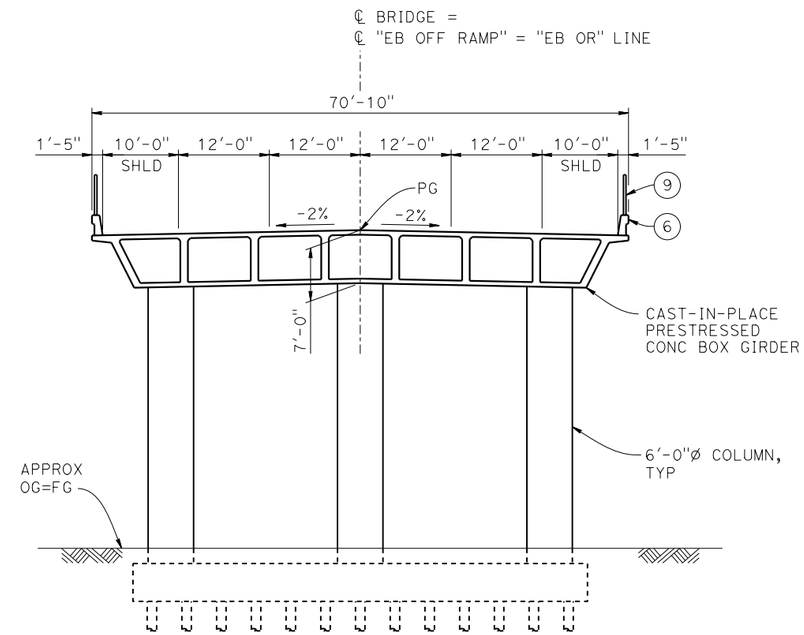

TYPICAL SECTION AT OVERHEAD

1" = 10'

LEGEND:

- ◕ INDICATES POINT OF MINIMUM VERTICAL CLEARANCE
- ⇨ INDICATES DIRECTION OF TRAFFIC
- (1) PAINT "EB OFF RAMP OVERCROSSING"
- (2) PAINT "BRIDGE NO. XX-XXXX"
- (3) PAINT "EB OFF RAMP OVERHEAD"
- (4) PAINT "BRIDGE NO. XX-XXXX"
- (5) CONCRETE BARRIER TYPE 742
- (6) CONCRETE BARRIER TYPE 736 MOD
- (7) SLOPE PAVING (1½H:1V)
- (8) WINGWALL
- (9) AR FENCE WITH SOLID PLATE

NOTES:

1. ASSUME CLASS 140 PILES AT ABUTMENT AND BENT FOUNDATIONS. PILE LENGTHS TO BE DETERMINED.
2. FOR UTILITY DISPOSITIONS, SEE CIVIL AND GRADE SEPARATION PLANS; DRAWING CV-S1100-A.
3. FOR RETAINING WALLS, SEE CIVIL AND GRADE SEPARATION PLANS; DRAWING CV-S1100-A.
4. FOR GUARDRAILS, SEE CIVIL AND GRADE SEPARATION PLANS; DRAWING CV-S1100-A.

10 0 10 20
1"=10'

REV	DATE	BY	CHK	APP	DESCRIPTION

DESIGNED BY S. J. S.
DRAWN BY E. BALTAY
CHECKED BY O. EDEWOR
IN CHARGE C. LEMLEY
DATE 05/08/2015

RECORD SET
15% DESIGN
SUBMITTAL

NOT FOR
CONSTRUCTION

PARSONS

CALIFORNIA
HIGH-SPEED RAIL AUTHORITY

CALIFORNIA HIGH-SPEED TRAIN PROJECT
MERCED TO FRESNO SECTION
CENTRAL VALLEY WYE
SR 152 (NORTH) TO ROAD 13 WYE ALTERNATIVE
TYPICAL SECTIONS (SJD-FRE)
SR 59 / SR 152 INTERCHANGE - 3 OF 4

CONTRACT NO. HSR08-05
DRAWING NO. ST-K3101-A
SCALE AS SHOWN
SHEET NO.

p005133a 20-MAY-2015 10:58 MF-ST-K3101-A .dgn

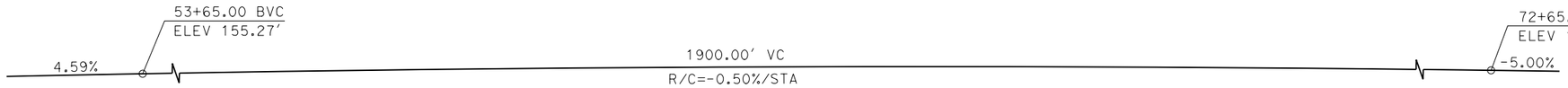

PROFILE GRADE

NO SCALE

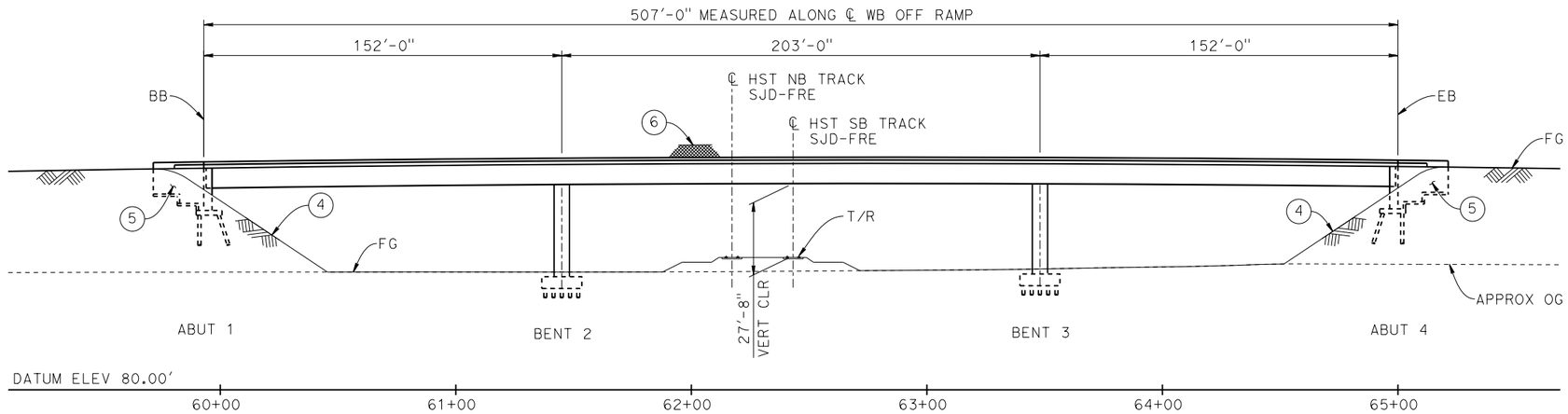

DEVELOPED ELEVATION

1" = 30'

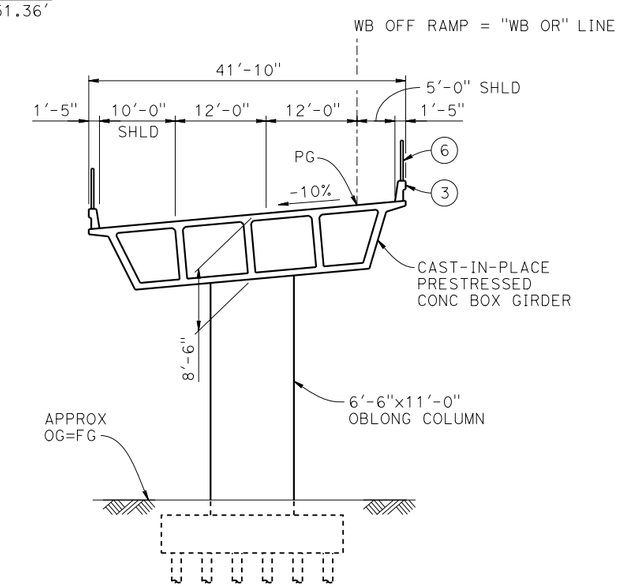

TYPICAL SECTION

1" = 10'

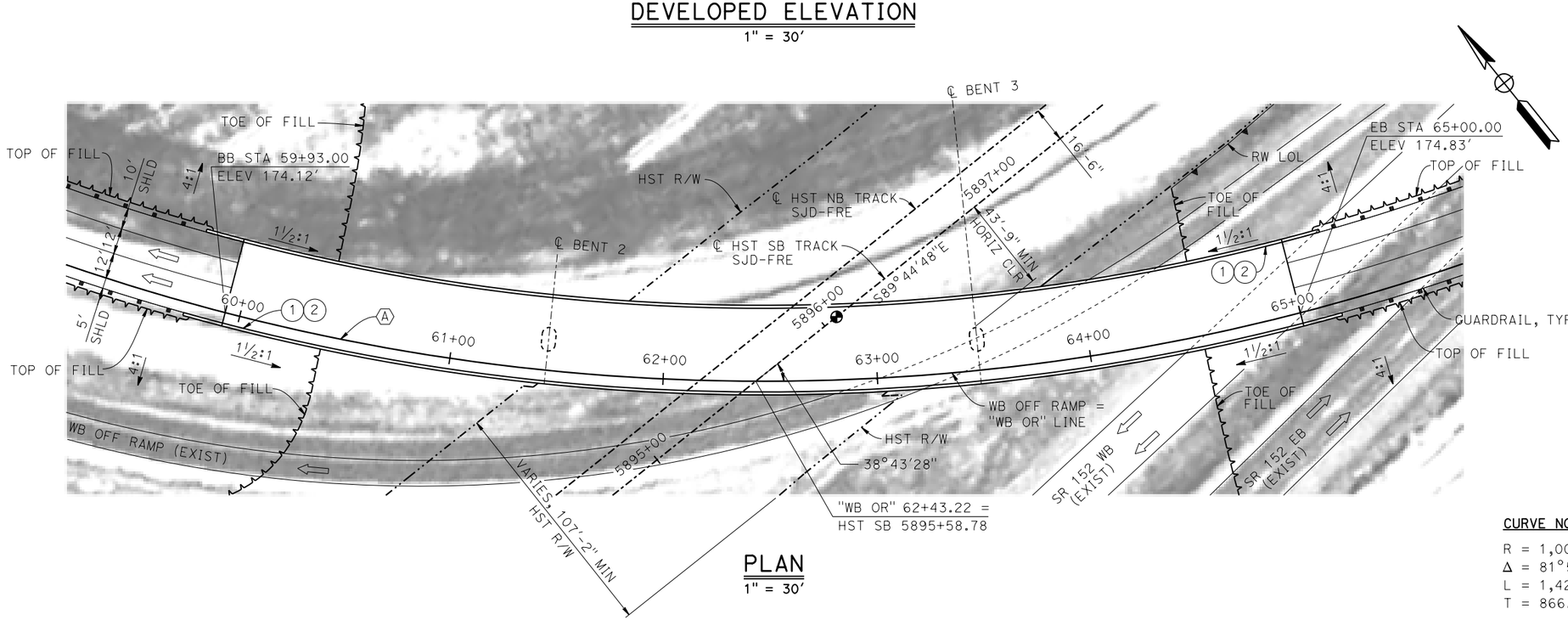

PLAN

1" = 30'

LEGEND:

- INDICATES POINT OF MINIMUM VERTICAL CLEARANCE
- INDICATES DIRECTION OF TRAFFIC
- (1) PAINT "WB OFF RAMP OVERHEAD"
- (2) PAINT "BRIDGE NO. XX-XXXX"
- (3) CONCRETE BARRIER TYPE 742 MOD
- (4) SLOPE PAVING (1½H:1V)
- (5) WINGWALL
- (6) AR FENCE WITH SOLID PLATE

NOTES:

1. ASSUME CLASS 140 PILES AT ABUTMENT AND BENT FOUNDATIONS. PILE LENGTHS TO BE DETERMINED.
2. FOR UTILITY DISPOSITIONS, SEE CIVIL AND GRADE SEPARATION PLANS; DRAWING CV-S1100-A.
3. FOR RETAINING WALLS, SEE CIVIL AND GRADE SEPARATION PLANS; DRAWING CV-S1100-A.
4. FOR GUARDRAILS, SEE CIVIL AND GRADE SEPARATION PLANS; DRAWING CV-S1100-A.

CURVE NO. 103-02 (A)

R = 1,000.00'
Δ = 81°50'34"
L = 1,428.42'
T = 866.88'

10 0 10 20
1"=10'

30 0 30 60
1"=30'

REV	DATE	BY	CHK	APP	DESCRIPTION

DESIGNED BY S. J. S.
DRAWN BY A. M.
CHECKED BY O. EDEWOR
IN CHARGE C. LEMLEY
DATE 05/08/2015

RECORD SET 15% DESIGN SUBMITTAL

NOT FOR CONSTRUCTION

PARSONS

CALIFORNIA HIGH-SPEED RAIL AUTHORITY

CALIFORNIA HIGH-SPEED TRAIN PROJECT
MERCED TO FRESNO SECTION
CENTRAL VALLEY WYE
SR 152 (NORTH) TO ROAD 13 WYE ALTERNATIVE
GENERAL PLAN (SJD-FRE)
SR 59 / SR 152 INTERCHANGE - 4 OF 4

CONTRACT NO. HSR08-05
DRAWING NO. ST-K1102-A
SCALE AS SHOWN
SHEET NO.

20-MAY-2015 15:34 WF-ST-K1102-A.dgn
p0051330

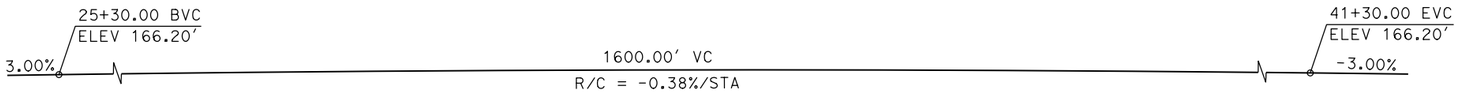

PROFILE GRADE

NO SCALE

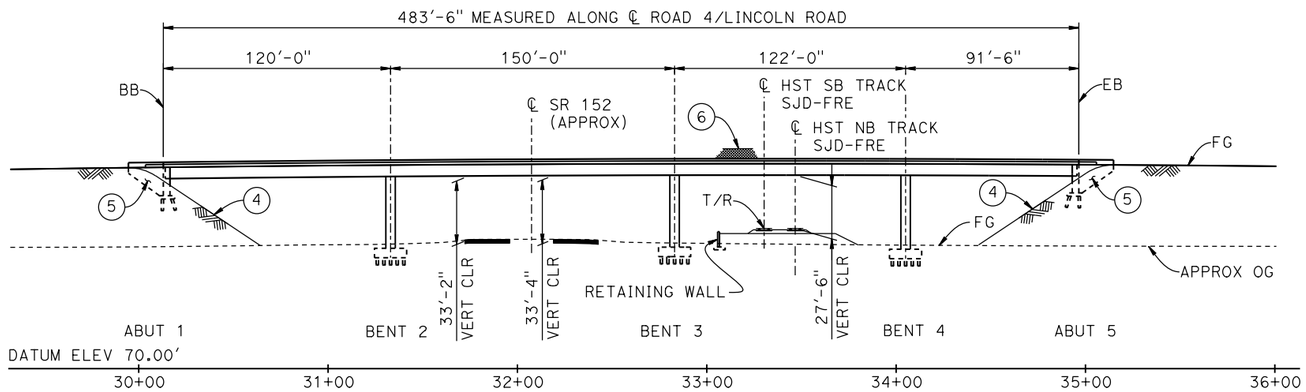

ELEVATION

1" = 40'

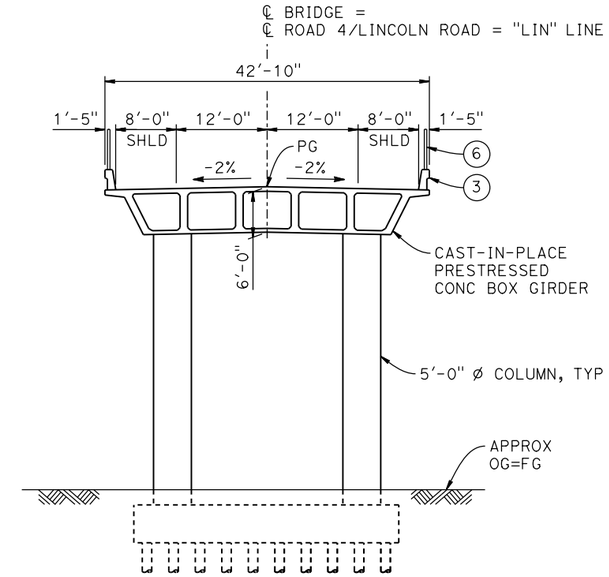

TYPICAL SECTION

1" = 10'

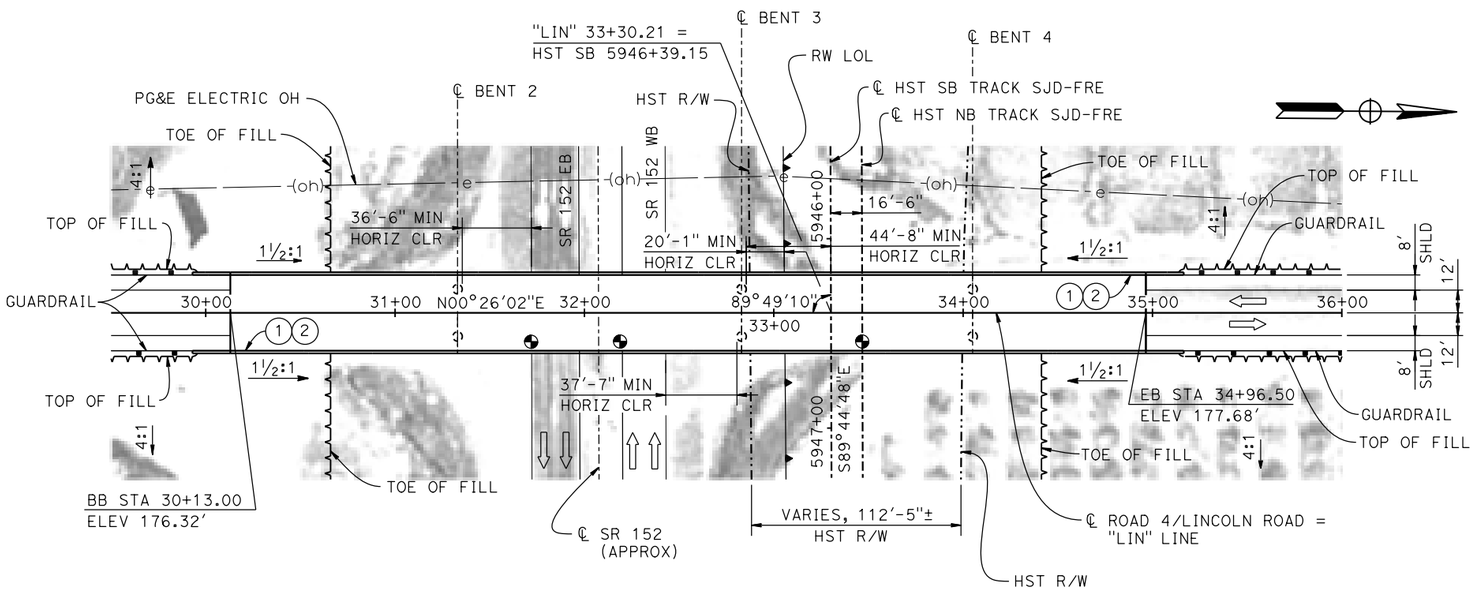

PLAN

1" = 40'

TEMPORARY TRAFFIC OPENINGS

VEHICULAR TRAFFIC

1. __ TRAFFIC WILL BE DETOURED AWAY FROM THE SITE.
2. X TRAFFIC WILL PASS UNDER THE STRUCTURE ON:

ST OR ROAD NAME AND LOCATION		FALSEWORK OPENING REQD (HORIZ x VERT)	
SR 152	31+83	40'x16.5'	E BND
SR 152	32+30	40'x16.5'	W BND

3. __ TEMP TRAFFIC LANE REDUCTION FOR FTG EXC.

LEGEND:

- INDICATES POINT OF MINIMUM VERTICAL CLEARANCE
- INDICATES DIRECTION OF TRAFFIC
- (1) PAINT "LINCOLN ROAD OVERHEAD"
- (2) PAINT "BRIDGE NO. XX-XXXX"
- (3) CONCRETE BARRIER TYPE 736 MOD
- (4) SLOPE PAVING (1½H:1V)
- (5) WINGWALL
- (6) AR FENCE WITH SOLID PLATE

NOTES:

1. ASSUME CLASS 140 PILES AT ABUTMENT AND BENT FOUNDATIONS. PILE LENGTHS TO BE DETERMINED.
2. FOR UTILITY DISPOSITIONS, SEE CIVIL AND GRADE SEPARATION PLANS; DRAWING CV-S1110-A.
3. FOR GUARDRAILS, SEE CIVIL AND GRADE SEPARATION PLANS, DRAWING CV-S1110-A.
4. FOR RETAINING WALL, SEE CIVIL AND GRADE SEPARATION PLANS, DRAWING CV-S1110-A.

10 0 10 20
1"=10'

40 0 40 80
1"=40'

REV	DATE	BY	CHK	APP	DESCRIPTION

DESIGNED BY O. EDEWOR
DRAWN BY D. TAFOYA
CHECKED BY S. J. S.
IN CHARGE C. LEMLEY
DATE 02/13/2015

RECORD SET
15% DESIGN SUBMITTAL

NOT FOR CONSTRUCTION

PARSONS

CALIFORNIA HIGH-SPEED RAIL AUTHORITY

CALIFORNIA HIGH-SPEED TRAIN PROJECT
MERCED TO FRESNO SECTION
CENTRAL VALLEY WYE
SR 152 (NORTH) TO ROAD 13 WYE ALTERNATIVE
GENERAL PLAN (SJD-FRE)
LINCOLN ROAD (ROAD 4) OVERHEAD

CONTRACT NO. HSR08-05
DRAWING NO. ST-K1110-A
SCALE AS SHOWN
SHEET NO.

MF-ST-K1110-A.dgn
06-FEB-2015 16:06
p0036110

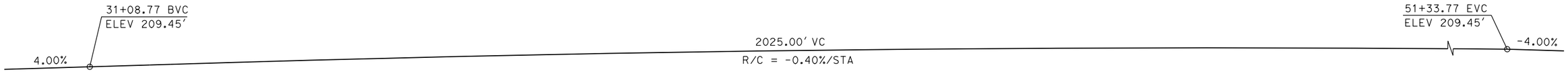

PROFILE GRADE

NO SCALE

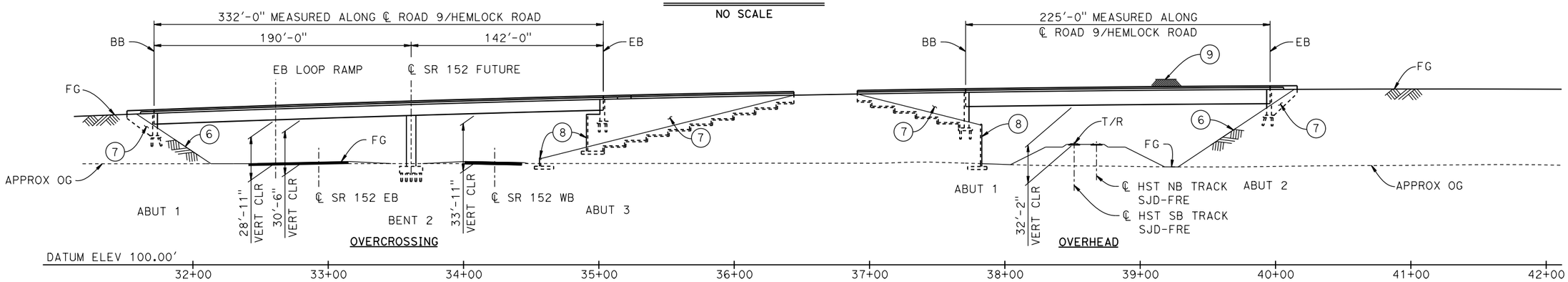

ELEVATION

1" = 40'

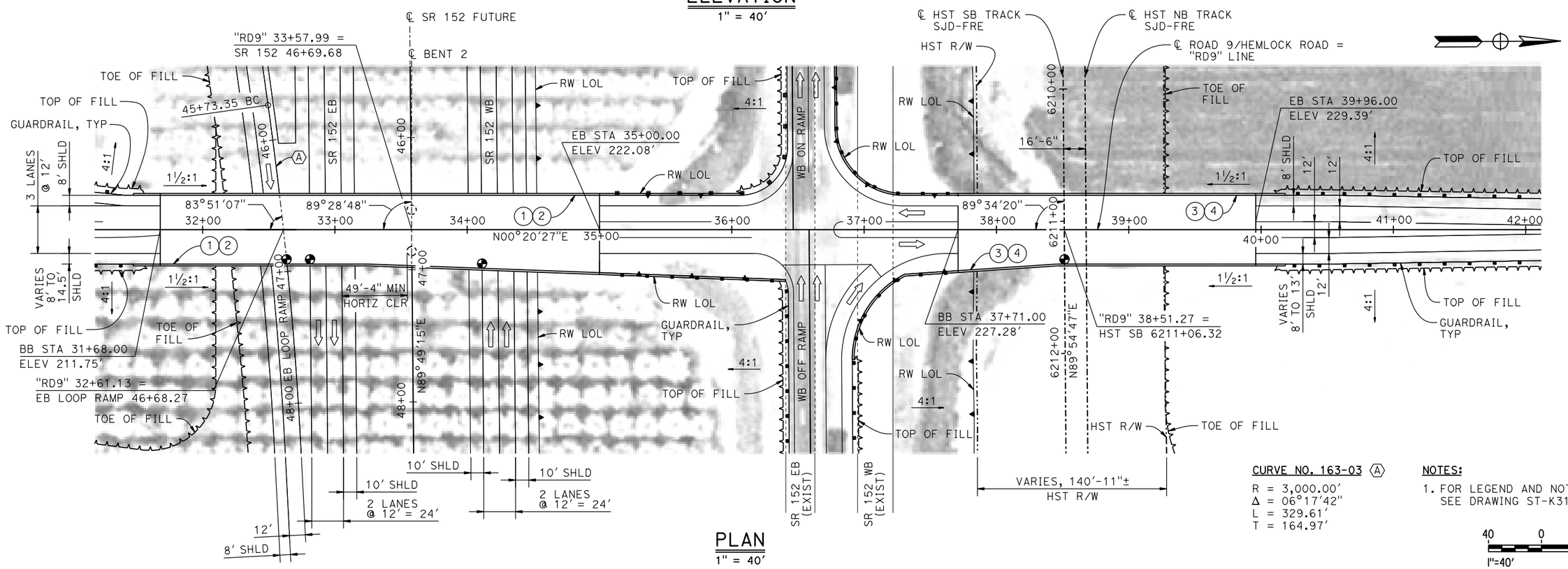

PLAN

1" = 40'

CURVE NO. 163-03 (A)

R = 3,000.00'
Δ = 06°17'42"
L = 329.61'
T = 164.97'

NOTES:

1. FOR LEGEND AND NOTES, SEE DRAWING ST-K3160-A.

40 0 40 80
1"=40'

REV	DATE	BY	CHK	APP	DESCRIPTION

DESIGNED BY D. FARES
DRAWN BY S. HICKS
CHECKED BY O. EDEWOR
IN CHARGE C. LEMLEY
DATE 05/08/2015

RECORD SET 15% DESIGN SUBMITTAL

NOT FOR CONSTRUCTION

PARSONS

CALIFORNIA HIGH-SPEED RAIL AUTHORITY

CALIFORNIA HIGH-SPEED TRAIN PROJECT
MERCED TO FRESNO SECTION
CENTRAL VALLEY WYE
SR 152 (NORTH) TO ROAD 13 WYE ALTERNATIVE
GENERAL PLAN (SJD-FRE)
HEMLOCK ROAD (ROAD 9) INTERCHANGE - 1 OF 2

CONTRACT NO. HSR08-05
DRAWING NO. ST-K1160-A
SCALE AS SHOWN
SHEET NO.

MF-ST-K1160-A.dgn 19-MAY-2015 17:23 P0028989

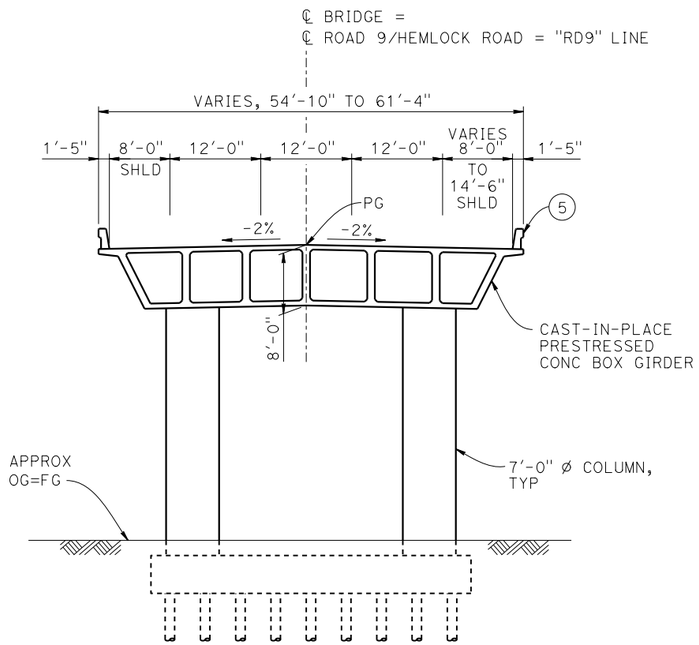

TYPICAL SECTION AT OVERCROSSING

1" = 10'

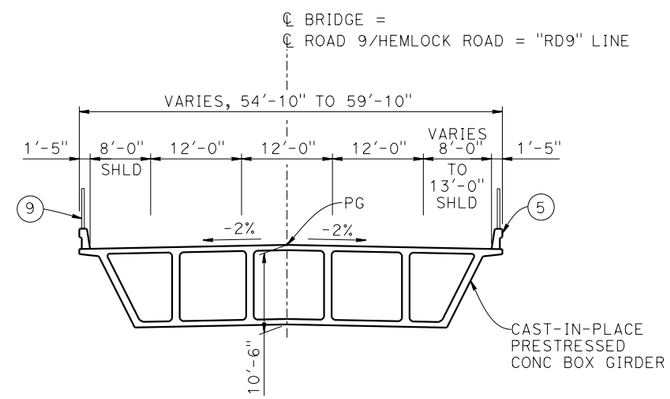

TYPICAL SECTION AT OVERHEAD

1" = 10'

LEGEND:

- INDICATES POINT OF MINIMUM VERTICAL CLEARANCE
- INDICATES DIRECTION OF TRAFFIC
- (1) PAINT "HEMLOCK ROAD OVERCROSSING"
- (2) PAINT "BRIDGE NO. XX-XXXX"
- (3) PAINT "HEMLOCK ROAD OVERHEAD"
- (4) PAINT "BRIDGE NO. XX-XXXX"
- (5) CONCRETE BARRIER TYPE 736 MOD
- (6) SLOPE PAVING (1½H:1V)
- (7) WINGWALL
- (8) RETAINING WALL
- (9) AR FENCE WITH SOLID PLATE

NOTES:

1. ASSUME CLASS 140 PILES AT ABUTMENT AND BENT FOUNDATIONS. PILE LENGTHS TO BE DETERMINED.
2. FOR UTILITY DISPOSITIONS, SEE CIVIL AND GRADE SEPARATION PLANS; DRAWING CV-S1160-A.
3. FOR RETAINING WALLS, SEE CIVIL AND GRADE SEPARATION PLANS; DRAWING CV-S1160-A.
4. FOR GUARDRAILS, SEE CIVIL AND GRADE SEPARATION PLANS; DRAWING CV-S1160-A.

10 0 10 20
1"=10'

REV	DATE	BY	CHK	APP	DESCRIPTION

DESIGNED BY D. FARES
DRAWN BY S. HICKS
CHECKED BY O. EDEWOR
IN CHARGE C. LEMLEY
DATE 05/08/2015

RECORD SET
15% DESIGN
SUBMITTAL

NOT FOR
CONSTRUCTION

PARSONS

CALIFORNIA
HIGH-SPEED RAIL AUTHORITY

CALIFORNIA HIGH-SPEED TRAIN PROJECT
MERCED TO FRESNO SECTION
CENTRAL VALLEY WYE
SR 152 (NORTH) TO ROAD 13 WYE ALTERNATIVE
TYPICAL SECTIONS (SJD-FRE)
HEMLOCK ROAD (ROAD 9) INTERCHANGE - 2 OF 2

CONTRACT NO. HSR08-05
DRAWING NO. ST-K3160-A
SCALE AS SHOWN
SHEET NO.

p005133a 12-MAY-2015 11:28 MF-ST-K3160-A.dgn

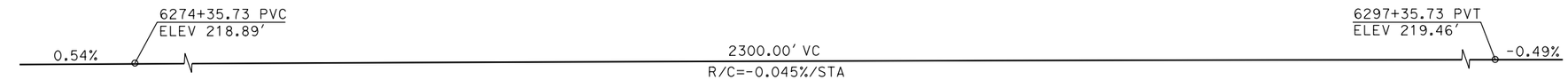

TOP OF RAIL PROFILE (℄ HST SB TRACK SJD-FRE)

NO SCALE

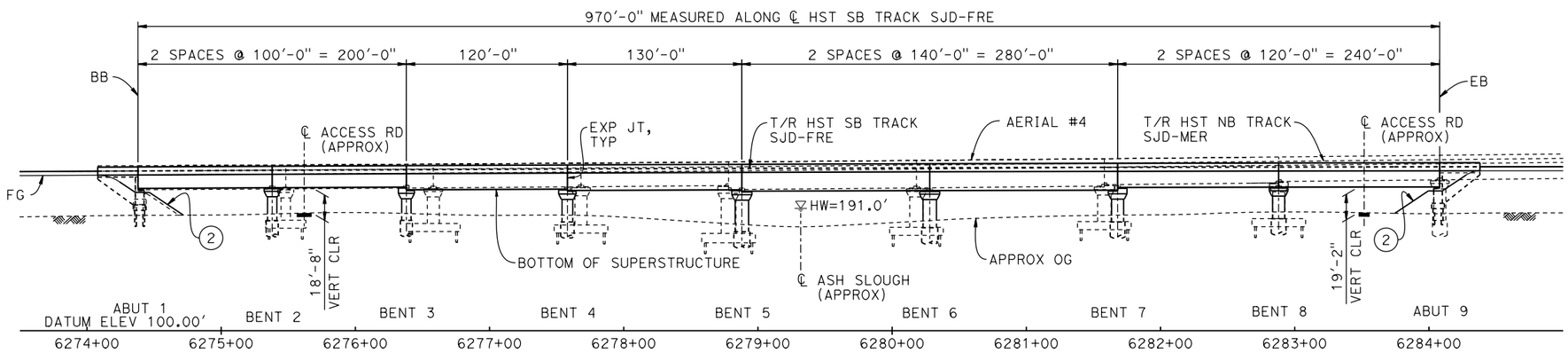

ELEVATION

1" = 50'

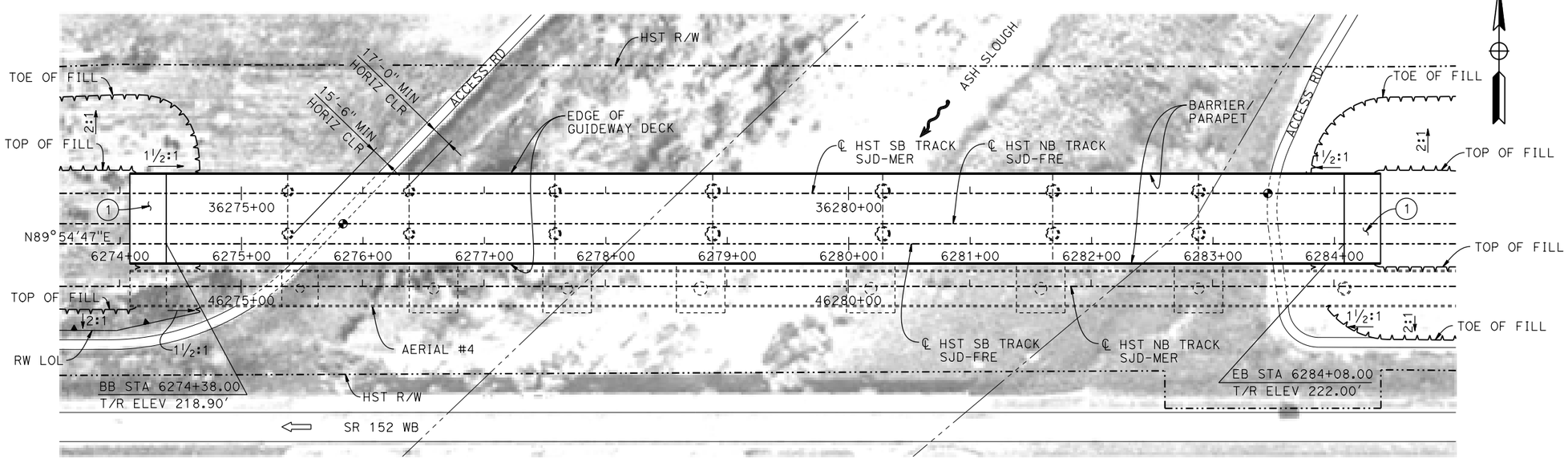

PLAN

1" = 50'

TEMPORARY TRAFFIC OPENINGS

VEHICULAR TRAFFIC

1. __ TRAFFIC WILL BE DETOURED AWAY FROM THE SITE.
2. X TRAFFIC WILL PASS UNDER THE STRUCTURE ON:

ST OR ROAD NAME AND LOCATION		FALSEWORK OPENING REQD (HORIZ X VERT)	
ACCESS ROAD	6275+62	20'X16.5'	-
ACCESS ROAD	6283+62	20'X16.5'	-

3. __ TEMP TRAFFIC LANE REDUCTION FOR FTG EXC.

LEGEND:

- INDICATES POINT OF MINIMUM VERTICAL CLEARANCE
- INDICATES DIRECTION OF TRAFFIC
- INDICATES DIRECTION OF FLOW
- (1) STRUCTURE APPROACH
- (2) SLOPE PAVING (1½H:1V)

NOTES:

1. 16" Ø PIPE PILES ASSUMED FOR ABUTMENT FOUNDATIONS. PILE AND DRILLED SHAFT LENGTHS TO BE DETERMINED.
2. FOR TYPICAL SECTION AND BENT COLUMN SCHEDULE, SEE DRAWING ST-K3170-A.
3. ANY EXISTING DIRT ROAD THAT CONFLICTS WITH NEW CONSTRUCTION SHALL BE REALIGNED.
4. FOR UTILITY DISPOSITIONS, SEE CIVIL AND GRADE SEPARATION PLANS; DRAWING CV-S1170-A.
5. FOR RETAINING WALLS, SEE CIVIL AND GRADE SEPARATION PLANS; DRAWINGS CV-S1170-A.
6. FOR AERIAL #4 - NORTHBOUND OVER HST MAINLINE GENERAL PLAN AND TYPICAL SECTIONS, SEE DRAWINGS ST-K1620-A TO ST-K1623-A, ST-K3620-A AND ST-K3621-A.

50 0 50 100
1"=50'

REV	DATE	BY	CHK	APP	DESCRIPTION

DESIGNED BY D. FARES
DRAWN BY J. KIDWELL
CHECKED BY S. J. S.
IN CHARGE C. LEMLEY
DATE 02/13/2015

RECORD SET
15% DESIGN SUBMITTAL

NOT FOR CONSTRUCTION

PARSONS

CALIFORNIA HIGH-SPEED RAIL AUTHORITY

CALIFORNIA HIGH-SPEED TRAIN PROJECT
MERCED TO FRESNO SECTION
CENTRAL VALLEY WYE
SR 152 (NORTH) TO ROAD 13 WYE ALTERNATIVE
GENERAL PLAN (SJD-FRE)
ASH SLOUGH BRIDGE - 1 OF 2

CONTRACT NO. HSR08-05
DRAWING NO. ST-K1170-A
SCALE AS SHOWN
SHEET NO.

MF-ST-K1170-A.dgn 06-FEB-2015 5:47 p0036110

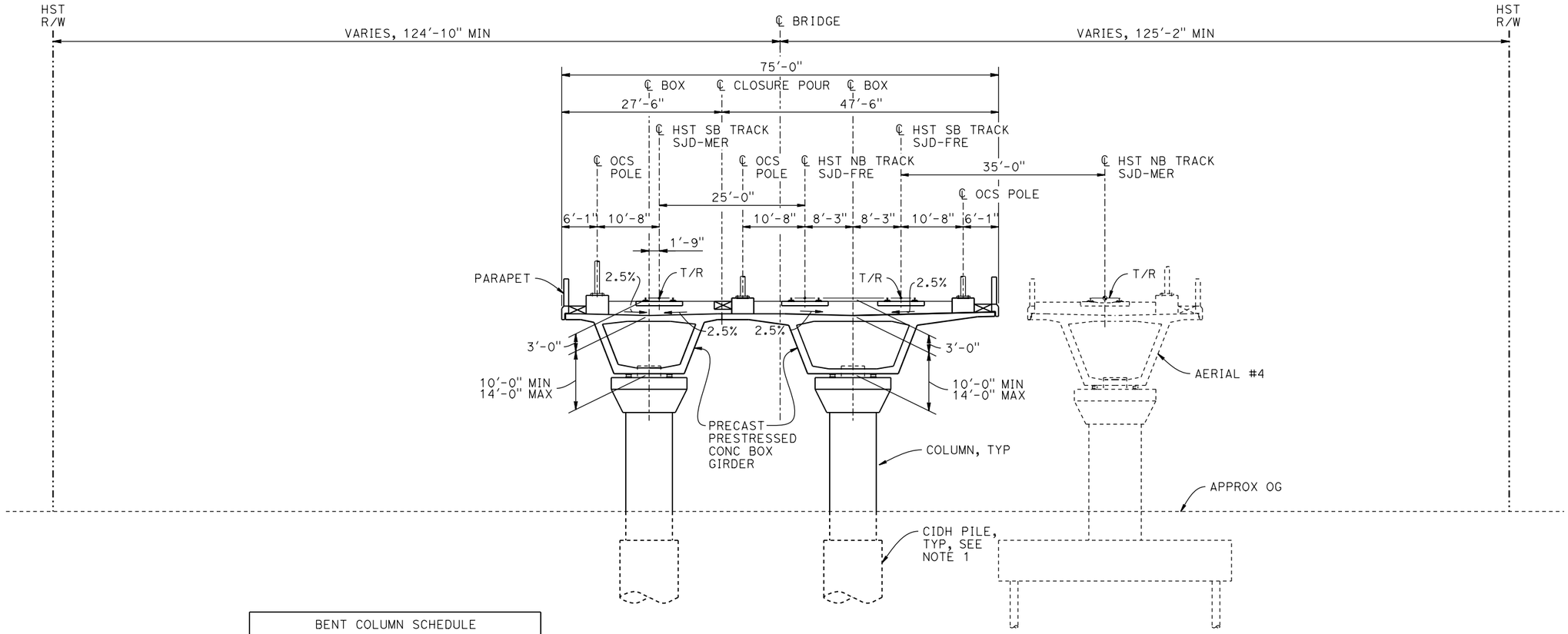

BENT COLUMN SCHEDULE		
BENT	COLUMN TYPE	CIDH TYPE
2 - 3	7'-0" ø	9'-0" ø
4	8'-0" ø	10'-0" ø
5 - 6	10'-0" ø	12'-0" ø
7 - 8	9'-0" ø	11'-0" ø

TYPICAL SECTION

1" = 10'

NOTE:

1. DRILLED SHAFT LENGTHS TO BE DETERMINED.

10 0 10 20

1"=10'

REV	DATE	BY	CHK	APP	DESCRIPTION

DESIGNED BY D. FARES
DRAWN BY J. KIDWELL
CHECKED BY S. J. S.
IN CHARGE C. LEMLEY
DATE 02/13/2015

RECORD SET
15% DESIGN SUBMITTAL

NOT FOR CONSTRUCTION

PARSONS

CALIFORNIA HIGH-SPEED RAIL AUTHORITY

CALIFORNIA HIGH-SPEED TRAIN PROJECT
MERCED TO FRESNO SECTION
CENTRAL VALLEY WYE
SR 152 (NORTH) TO ROAD 13 WYE ALTERNATIVE
TYPICAL SECTION (SJD-FRE)
ASH SLOUGH BRIDGE - 2 OF 2

CONTRACT NO. HSR08-05
DRAWING NO. ST-K3170-A
SCALE AS SHOWN
SHEET NO.

MF-ST-K3170-A.dgn
06-FEB-2015 15:47
p0036110

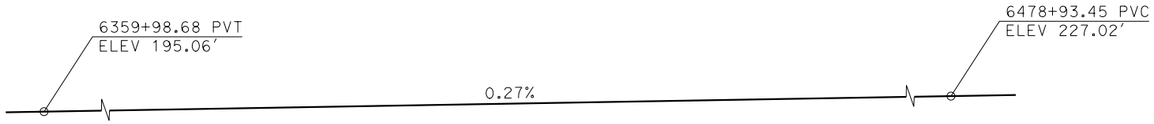

TOP OF RAIL PROFILE (℄ HST SB TRACK)

NO SCALE

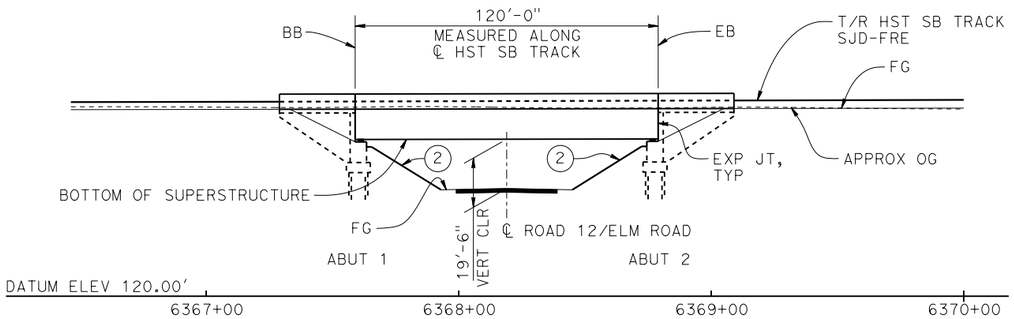

ELEVATION

1" = 30'

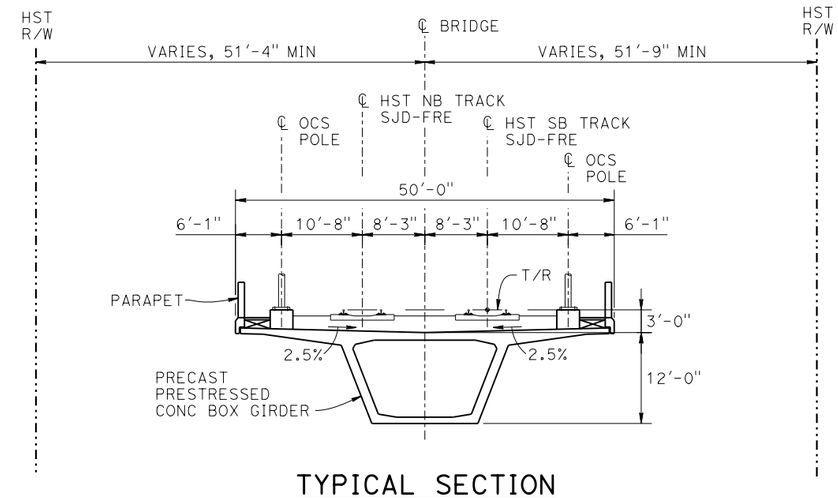

TYPICAL SECTION

1"=10'

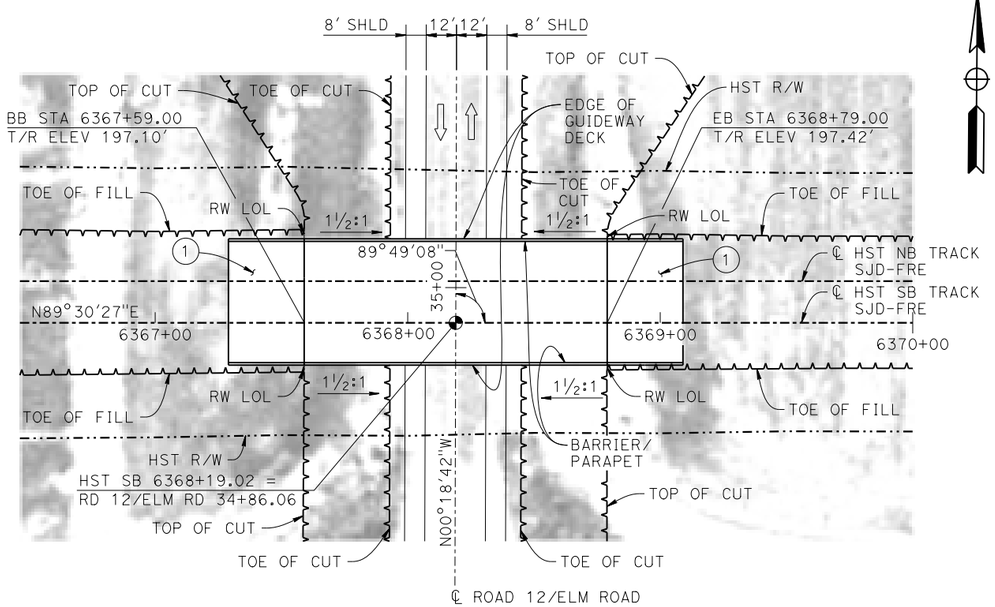

PLAN

1" = 30'

TEMPORARY TRAFFIC OPENINGS

VEHICULAR TRAFFIC

1. __ TRAFFIC WILL BE DETOURED AWAY FROM THE SITE.
2. X TRAFFIC WILL PASS UNDER THE STRUCTURE ON:

STREET OR ROAD NAME AND LOCATION		FALSEWORK OPENING REQD (HORIZ X VERT)	
ROAD 12/ELM ROAD	6368+19	32'x16.5'	2-WAY

3. __ TEMP TRAFFIC LANE REDUCTION FOR FTG EXC.

LEGEND:

- INDICATES POINT OF MINIMUM VERTICAL CLEARANCE
- INDICATES DIRECTION OF TRAFFIC
- (1) STRUCTURE APPROACH
- (2) SLOPE PAVING (1½H:1V)

NOTES:

1. 16"Ø PIPE PILES ASSUMED FOR ABUTMENT FOUNDATIONS. PILE LENGTHS TO BE DETERMINED.
2. FOR UTILITY DISPOSITIONS, SEE CIVIL AND GRADE SEPARATION PLANS; DRAWING CV-S1190-A.
3. FOR RETAINING WALLS, SEE CIVIL AND GRADE SEPARATION PLANS; DRAWING CV-S1190-A.

10 0 10 20
1"=10'
30 0 30 60
1"=30'

REV	DATE	BY	CHK	APP	DESCRIPTION

DESIGNED BY O. EDEWOR
DRAWN BY S. HICKS
CHECKED BY S. J. S.
IN CHARGE C. LEMLEY
DATE 03/18/2016

RECORD SET
15% DESIGN
SUBMITTAL

NOT FOR
CONSTRUCTION

PARSONS

CALIFORNIA
HIGH-SPEED RAIL AUTHORITY

CALIFORNIA HIGH-SPEED TRAIN PROJECT
MERCED TO FRESNO SECTION
CENTRAL VALLEY WYE
SR 152 (NORTH) TO ROAD 13 WYE ALTERNATIVE
GENERAL PLAN (SJD-FRE)
ELM ROAD (ROAD 12) UNDERPASS

CONTRACT NO. HSR08-05
DRAWING NO. ST-K1190-A
SCALE AS SHOWN
SHEET NO.

MF-ST-K1190-A.dgn
10-MAR-2016 15:37
p005133a

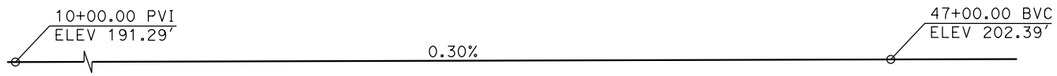

PROFILE GRADE

NO SCALE

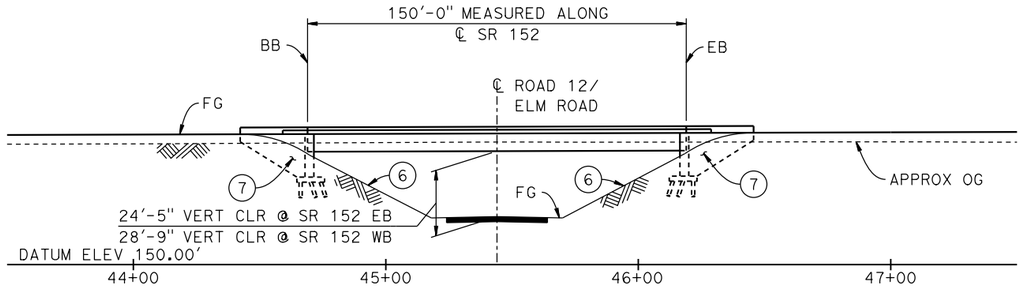

ELEVATION

1"=30'

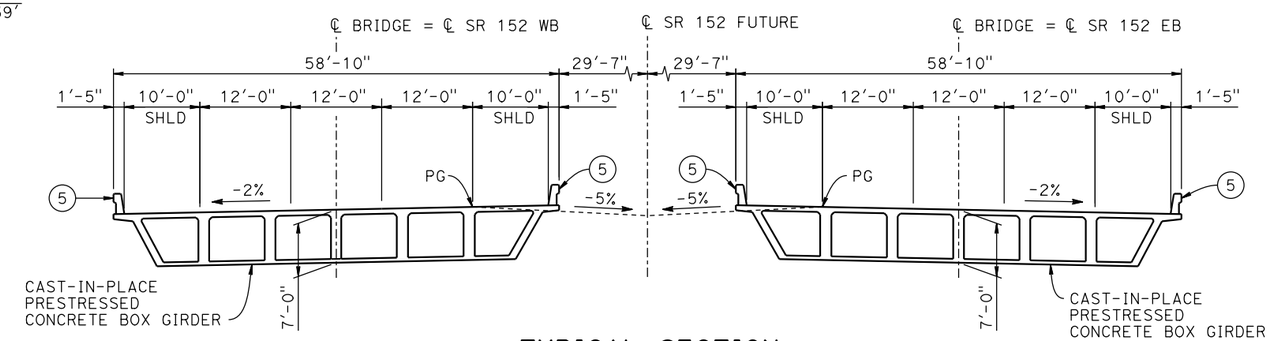

TYPICAL SECTION

1" = 10'

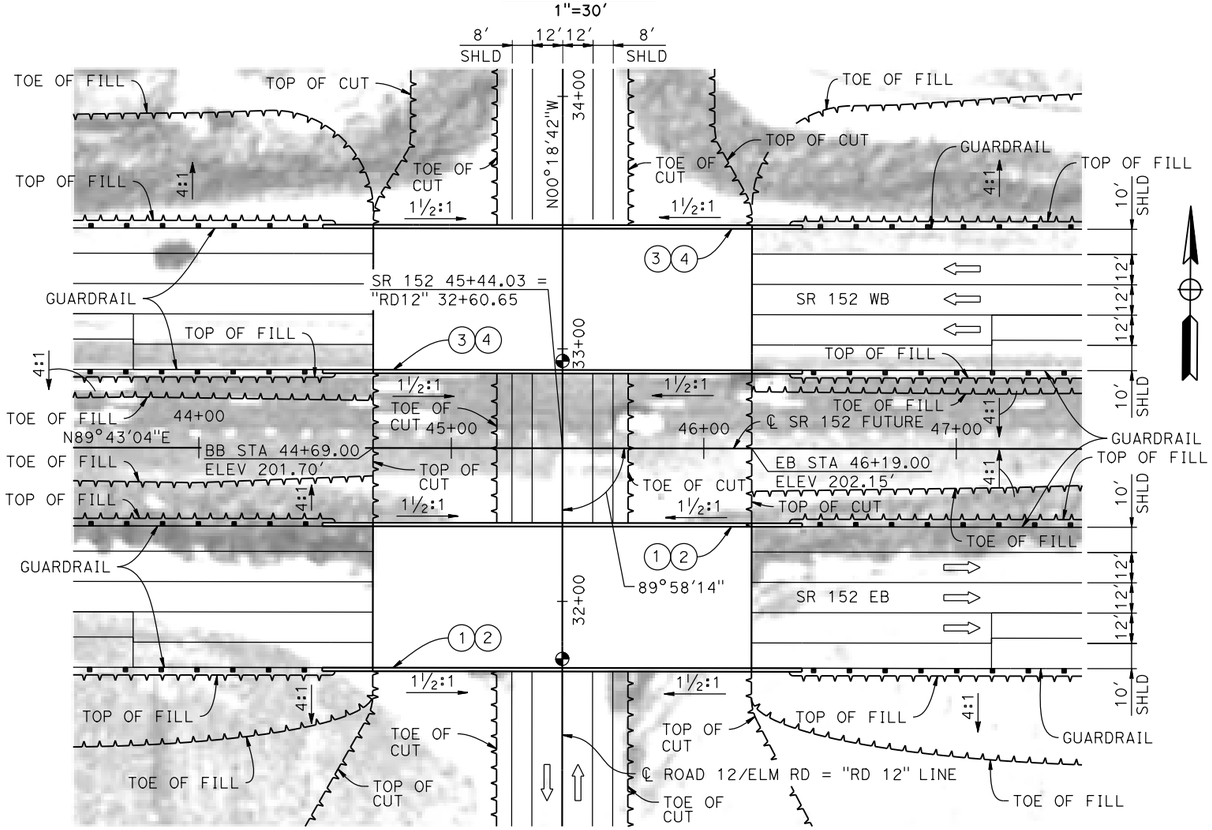

PLAN

1"=30'

TEMPORARY TRAFFIC OPENINGS

VEHICULAR TRAFFIC

1. X TRAFFIC WILL BE DETOURED AWAY FROM THE SITE.
2. _ TRAFFIC WILL PASS UNDER THE STRUCTURE ON:

ST OR ROAD NAME AND LOCATION		FALSEWORK OPENING REQD (HORIZ x VERT)	
ROAD 12/ELM ROAD	45+44	-	-

3. _ TEMP TRAFFIC LANE REDUCTION FOR FTG EXC.

LEGEND:

- ◕ INDICATES POINT OF MINIMUM VERTICAL CLEARANCE
- ⇨ INDICATES DIRECTION OF TRAFFIC
- (1) PAINT "SR 152 EB (ROAD 12) UNDERCROSSING"
- (2) PAINT "BRIDGE NO. XX-XXXX"
- (3) PAINT "SR 152 WB (ROAD 12) UNDERCROSSING"
- (4) PAINT "BRIDGE NO. XX-XXXX"
- (5) CONCRETE BARRIER TYPE 732
- (6) SLOPE PAVING (1½H:1V)
- (7) WINGWALL

NOTES:

1. ASSUME CLASS 140 PILES AT ABUTMENT FOUNDATIONS. PILE LENGTHS TO BE DETERMINED.
2. FOR UTILITY DISPOSITION, SEE CIVIL AND GRADE SEPARATION PLANS; DRAWING CV-S1190-A.
3. FOR GUARDRAILS, SEE CIVIL AND GRADE SEPARATION PLANS; DRAWING CV-S1190-A.

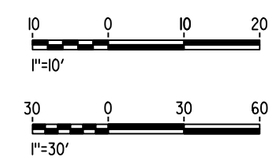

REV	DATE	BY	CHK	APP	DESCRIPTION

DESIGNED BY O. EDEWOR
DRAWN BY J. KIDWELL
CHECKED BY S. J. S.
IN CHARGE C. LEMLEY
DATE 02/13/2015

RECORD SET
15% DESIGN SUBMITTAL

NOT FOR CONSTRUCTION

PARSONS

CALIFORNIA HIGH-SPEED RAIL AUTHORITY

CALIFORNIA HIGH-SPEED TRAIN PROJECT
MERCED TO FRESNO SECTION
CENTRAL VALLEY WYE
SR 152 (NORTH) TO ROAD 13 WYE ALTERNATIVE
GENERAL PLAN (SJD-FRE)
SR 152 (ROAD 12) UNDERCROSSING

CONTRACT NO. HSR08-05
DRAWING NO. ST-K1195-A
SCALE AS SHOWN
SHEET NO.

MF-ST-K1195-A.dgn
06-FEB-2015 16:07
p0036110

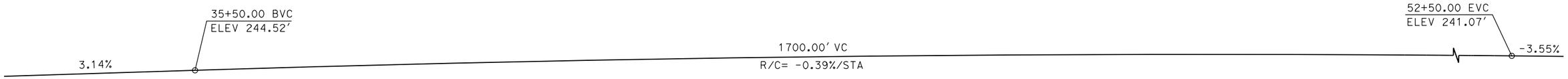

PROFILE GRADE

NO SCALE

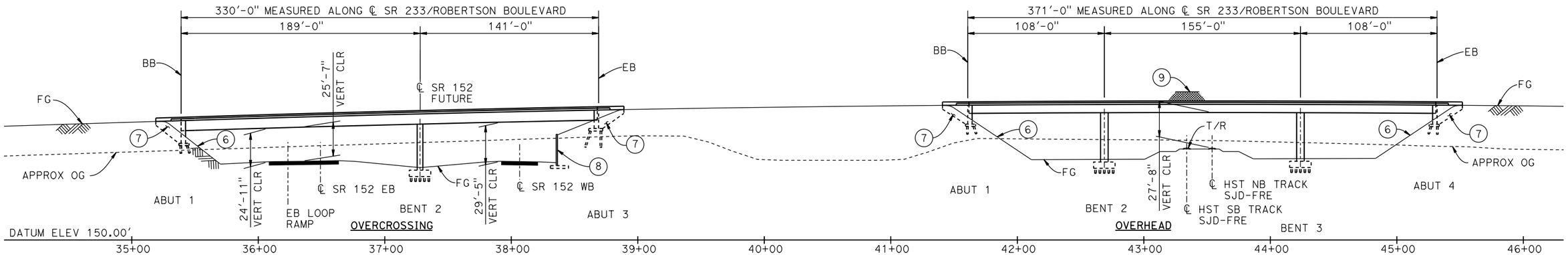

ELEVATION

1" = 40'

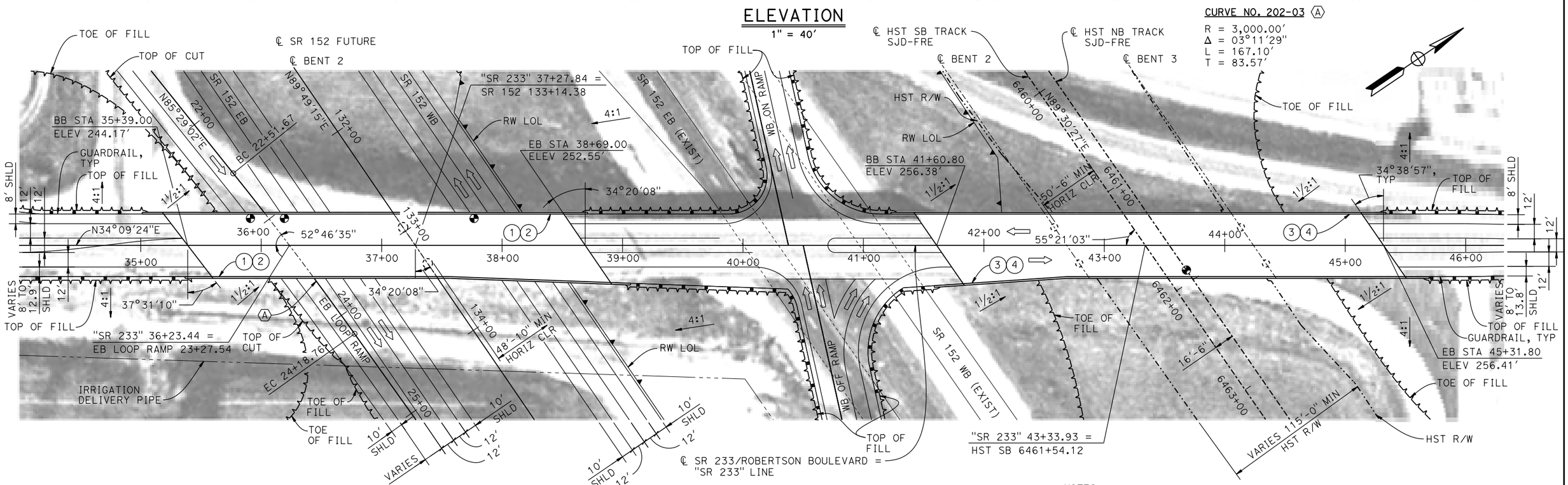

CURVE NO. 202-03 (A)

R = 3,000.00'
Δ = 03°11'29"
L = 167.10'
T = 83.57'

PLAN

1" = 40'

NOTES:

1. FOR LEGEND AND NOTES, SEE DRAWING ST-K3210-A.

40 0 40 80
1"=40'

REV	DATE	BY	CHK	APP	DESCRIPTION

DESIGNED BY S. J. S.
DRAWN BY W. JOHNSEN
CHECKED BY O. EDEWOR
IN CHARGE C. LEMLEY
DATE 05/08/2015

RECORD SET 15% DESIGN SUBMITTAL

NOT FOR CONSTRUCTION

PARSONS

CALIFORNIA HIGH-SPEED RAIL AUTHORITY

CALIFORNIA HIGH-SPEED TRAIN PROJECT
MERCED TO FRESNO SECTION
CENTRAL VALLEY WYE
SR 152 (NORTH) TO ROAD 13 WYE ALTERNATIVE
GENERAL PLAN (SJD-FRE)
ROBERTSON BOULEVARD (SR 233) INTERCHANGE - 1 OF 2

CONTRACT NO. HSR08-05
DRAWING NO. ST-K1210-A
SCALE AS SHOWN
SHEET NO.

MF-ST-K1210-A.dgn
19-MAY-2015 7:34
P0028989

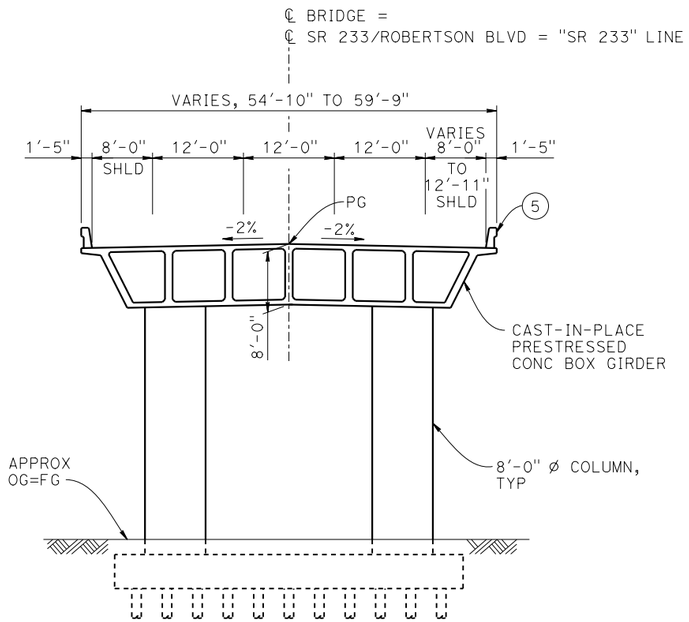

TYPICAL SECTION AT OVERCROSSING

1" = 10'

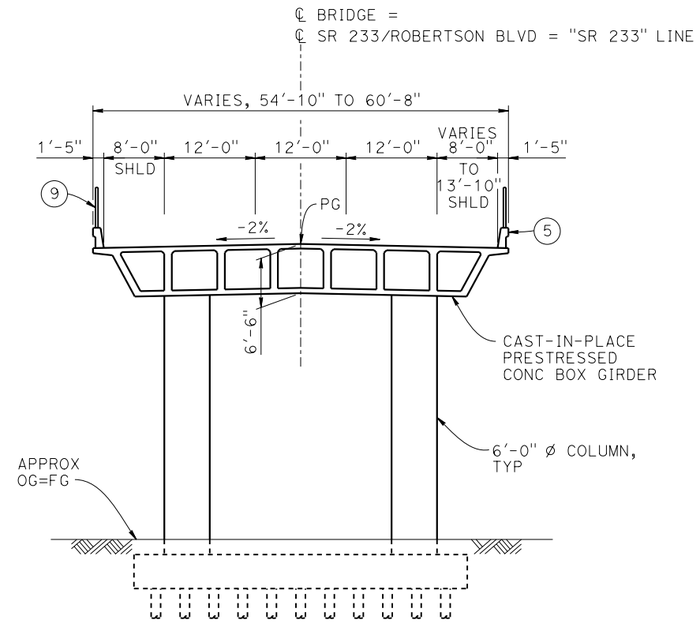

TYPICAL SECTION AT OVERHEAD

1" = 10'

LEGEND:

- ◕ INDICATES POINT OF MINIMUM VERTICAL CLEARANCE
- ⇨ INDICATES DIRECTION OF TRAFFIC
- (1) PAINT "ROBERTSON BLVD OVERCROSSING"
- (2) PAINT "BRIDGE NO. XX-XXXX"
- (3) PAINT "ROBERTSON BLVD OVERHEAD"
- (4) PAINT "BRIDGE NO. XX-XXXX"
- (5) CONCRETE BARRIER TYPE 736 MOD
- (6) SLOPE PAVING (1½H:1V)
- (7) WINGWALL
- (8) RETAINING WALL
- (9) AR FENCE WITH SOLID PLATE

NOTES:

1. ASSUME CLASS 140 PILES AT ABUTMENT AND BENT FOUNDATIONS. PILE LENGTHS TO BE DETERMINED.
2. FOR UTILITY DISPOSITIONS, SEE CIVIL AND GRADE SEPARATION PLANS; DRAWING CV-S1210-A.
3. FOR RETAINING WALLS, SEE CIVIL AND GRADE SEPARATION PLANS; DRAWING CV-S1210-A.
4. FOR GUARDRAILS, SEE CIVIL AND GRADE SEPARATION PLANS; DRAWING CV-S1210-A.

10 0 10 20
1"=10'

REV	DATE	BY	CHK	APP	DESCRIPTION

DESIGNED BY S. J. S.
DRAWN BY W. JOHNSEN
CHECKED BY O. EDEWOR
IN CHARGE C. LEMLEY
DATE 05/08/2015

RECORD SET 15% DESIGN SUBMITTAL

NOT FOR CONSTRUCTION

PARSONS

CALIFORNIA HIGH-SPEED RAIL AUTHORITY

CALIFORNIA HIGH-SPEED TRAIN PROJECT
MERCED TO FRESNO SECTION
CENTRAL VALLEY WYE
SR 152 (NORTH) TO ROAD 13 WYE ALTERNATIVE
TYPICAL SECTIONS (SJD-FRE)
ROBERTSON BOULEVARD (SR 233) INTERCHANGE - 2 OF 2

CONTRACT NO. HSR08-05
DRAWING NO. ST-K3210-A
SCALE AS SHOWN
SHEET NO.

p005133a 11-MAY-2015 3:23 MF-ST-K3210-A.dgn

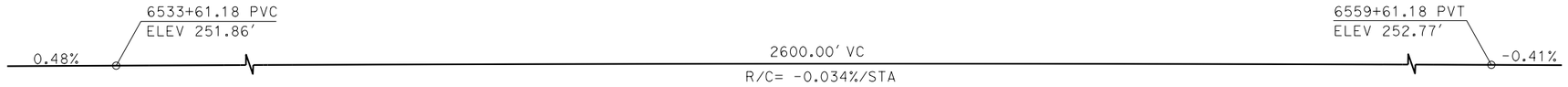

TOP OF RAIL PROFILE (℄ HST SB TRACK SJD-FRE)

NO SCALE

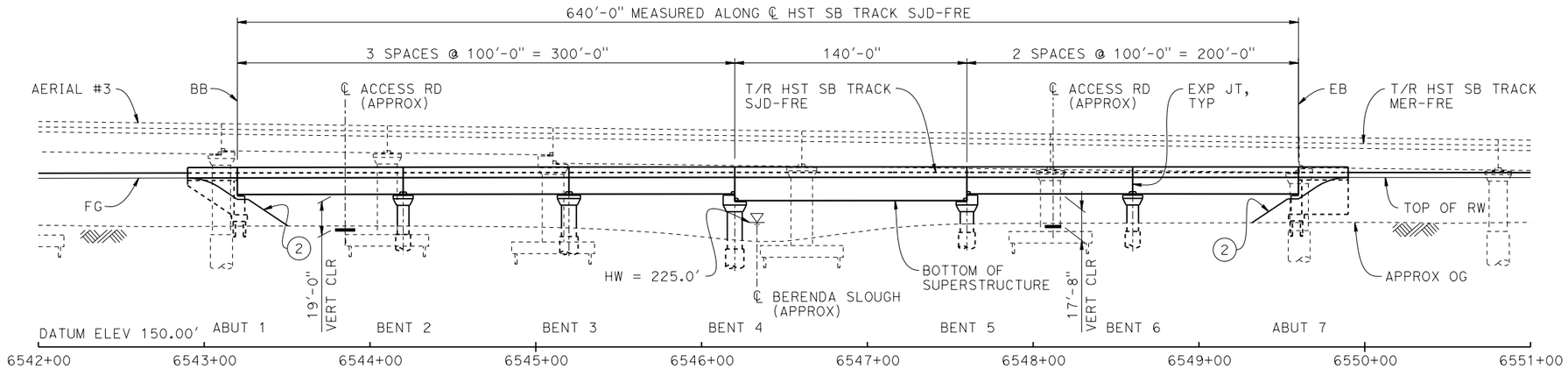

ELEVATION

1" = 40'

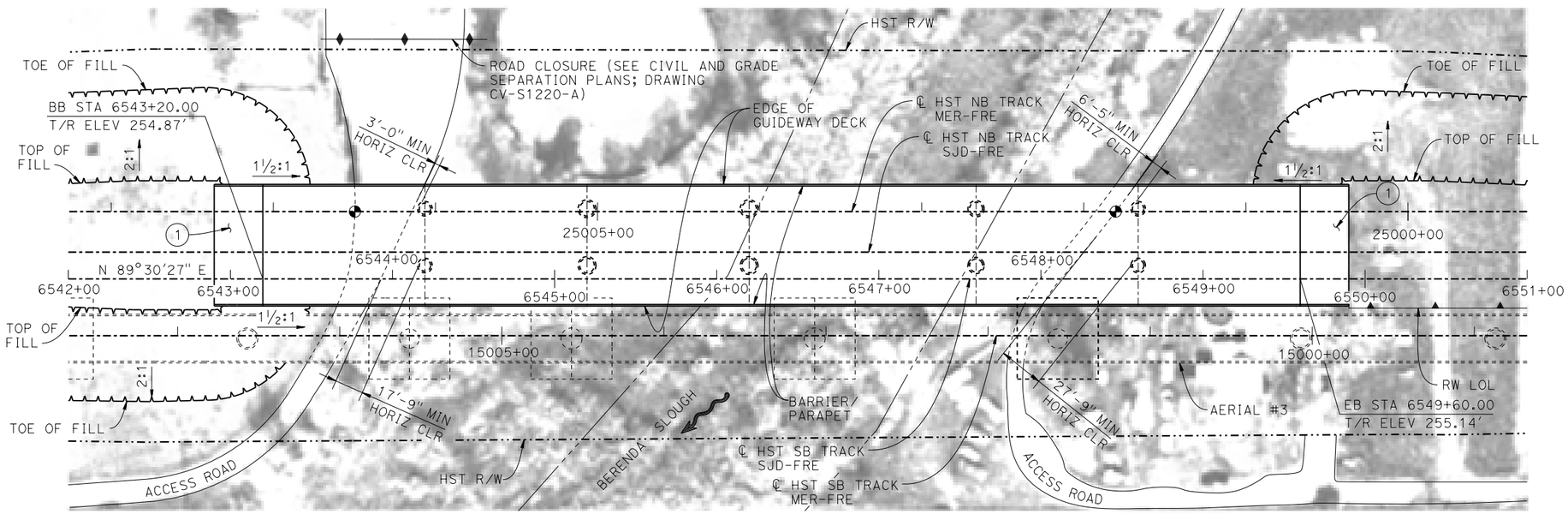

PLAN

1" = 40'

TEMPORARY TRAFFIC OPENINGS

VEHICULAR TRAFFIC

1. __ TRAFFIC WILL BE DETOURED AWAY FROM THE SITE.
2. X TRAFFIC WILL PASS UNDER THE STRUCTURE ON:

ST OR ROAD NAME AND LOCATION		FALSEWORK OPENING REQD (HORIZ x VERT)	
ACCESS ROAD	6543+85	20'x16.5'	-
ACCESS ROAD	6548+12	20'x16.5'	-

3. __ TEMP TRAFFIC LANE REDUCTION FOR FTG EXC.

LEGEND:

- INDICATES POINT OF MINIMUM VERTICAL CLEARANCE
- INDICATES DIRECTION OF FLOW
- (1) STRUCTURE APPROACH
- (2) SLOPE PAVING (1½H:1V)

NOTES:

1. 16" Ø PIPE PILES ASSUMED FOR ABUTMENT FOUNDATIONS. PILE AND DRILLED SHAFT LENGTHS TO BE DETERMINED.
2. FOR TYPICAL SECTION AND BENT COLUMN SCHEDULE, SEE DRAWING ST-K3220-A.
3. ANY EXISTING DIRT ROAD THAT CONFLICTS WITH NEW CONSTRUCTION SHALL BE REALIGNED.
4. FOR UTILITY DISPOSITIONS, SEE CIVIL AND GRADE SEPARATION PLANS; DRAWING CV-S1220-A.
5. FOR RETAINING WALL, SEE CIVIL AND GRADE SEPARATION PLANS; DRAWING CV-S1220-A.
6. FOR AERIAL #3 - SOUTHBOUND OVER HST MAINLINE GENERAL PLAN AND TYPICAL SECTIONS, SEE DRAWINGS ST-K1420-A TO ST-K1422-A AND ST-K3420-A TO ST-K3422-A.

40 0 40 80
1"=40'

REV	DATE	BY	CHK	APP	DESCRIPTION

DESIGNED BY R. MOTHE
DRAWN BY A. M.
CHECKED BY S. J. S.
IN CHARGE C. LEMLEY
DATE 03/18/2016

RECORD SET
15% DESIGN SUBMITTAL

NOT FOR CONSTRUCTION

PARSONS

CALIFORNIA HIGH-SPEED RAIL AUTHORITY

CALIFORNIA HIGH-SPEED TRAIN PROJECT
MERCED TO FRESNO SECTION
CENTRAL VALLEY WYE
SR 152 (NORTH) TO ROAD 13 WYE ALTERNATIVE
GENERAL PLAN (SJD-FRE)
BERENDA SLOUGH BRIDGE - 1 OF 2

CONTRACT NO. HSR08-05
DRAWING NO. ST-K1220-A
SCALE AS SHOWN
SHEET NO.

p005133a 10-MAR-2016 5:38 MF-ST-K1220-A.dgn

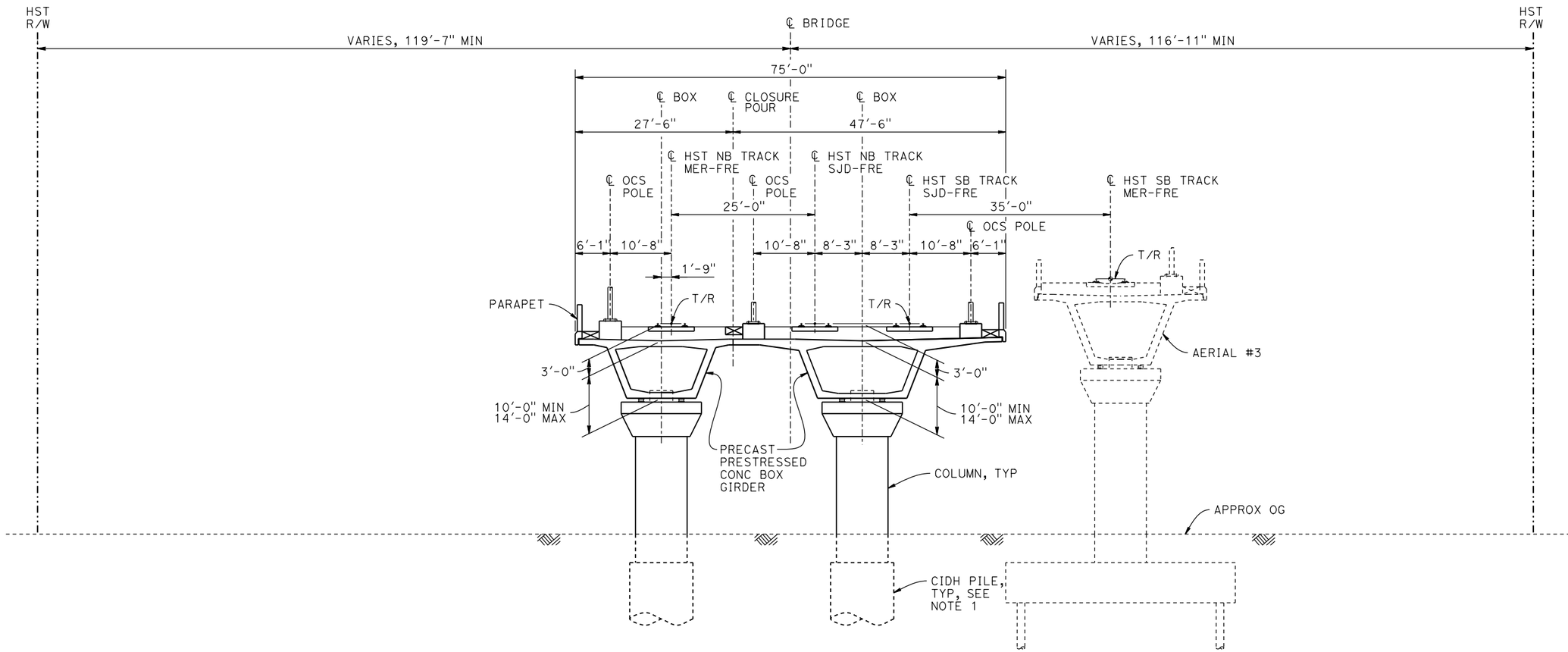

TYPICAL SECTION

1" = 10'

BENT COLUMN SCHEDULE		
BENT	COLUMN TYPE	CIDH TYPE
2	7'-0" ø	9'-0" ø
3 - 4	9'-0" ø	11'-0" ø
5	8'-0" ø	10'-0" ø
6	7'-0" ø	9'-0" ø

NOTE:

1. DRILLED SHAFT LENGTHS TO BE DETERMINED.

10 0 10 20

1"=10'

REV	DATE	BY	CHK	APP	DESCRIPTION

DESIGNED BY R. MOTHE
DRAWN BY A. M.
CHECKED BY S. J. S.
IN CHARGE C. LEMLEY
DATE 02/13/2015

RECORD SET
15% DESIGN SUBMITTAL

NOT FOR CONSTRUCTION

PARSONS

CALIFORNIA HIGH-SPEED RAIL AUTHORITY

CALIFORNIA HIGH-SPEED TRAIN PROJECT
MERCED TO FRESNO SECTION
CENTRAL VALLEY WYE
SR 152 (NORTH) TO ROAD 13 WYE ALTERNATIVE
TYPICAL SECTION (SJD-FRE)
BERENDA SLOUGH BRIDGE - 2 OF 2

CONTRACT NO. HSR08-05
DRAWING NO. ST-K3220-A
SCALE AS SHOWN
SHEET NO.

MF-ST-K3220-A.dgn
06-FEB-2015 15:49
p0036110

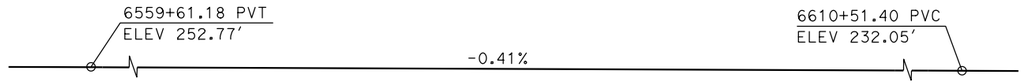

TOP OF RAIL PROFILE (℄ HST SB TRACK SJD-FRE)

NO SCALE

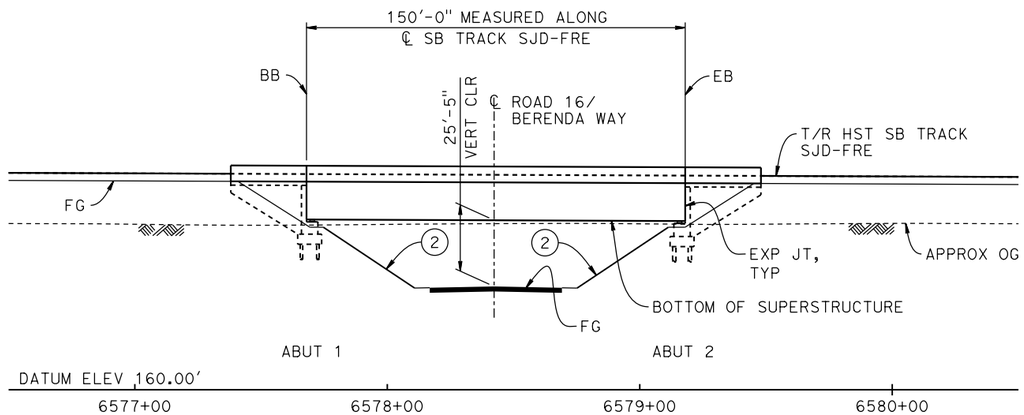

ELEVATION

1" = 30'

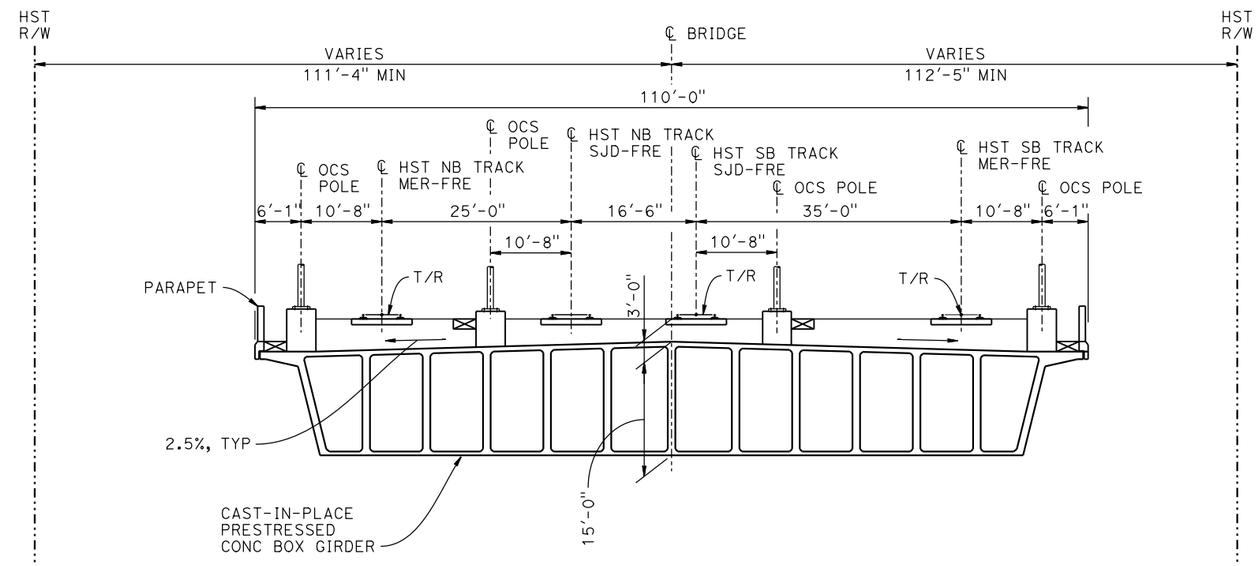

TYPICAL SECTION

1" = 10'

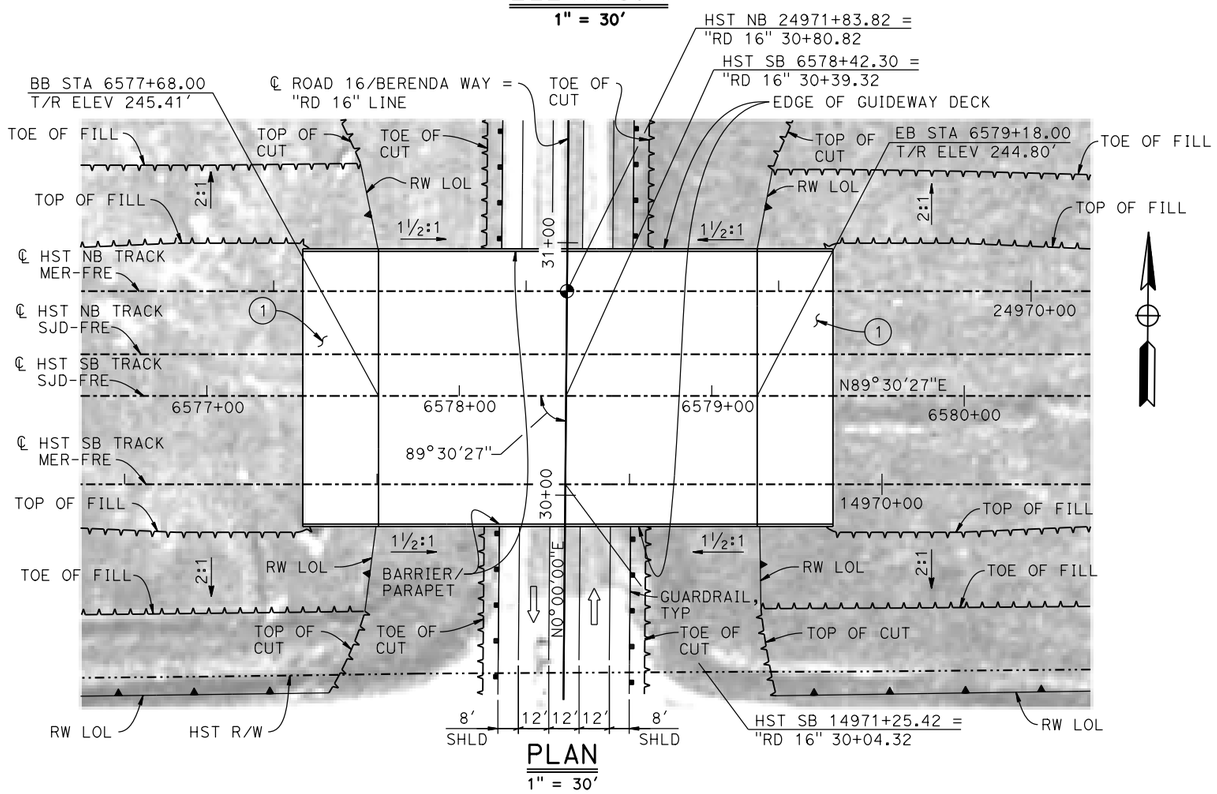

PLAN

1" = 30'

NOTES:

1. 16" ø PIPE PILES ASSUMED FOR ABUTMENT FOUNDATIONS. PILE LENGTHS TO BE DETERMINED.
2. FOR UTILITY DISPOSITION, SEE CIVIL AND GRADE SEPARATION PLANS; DRAWING CV-S1230-A.
3. FOR GUARDRAILS, SEE CIVIL AND GRADE SEPARATION PLANS; DRAWING CV-S1230-A.
4. FOR RETAINING WALLS, SEE CIVIL AND GRADE SEPARATION PLANS; DRAWING CV-S1230-A.

TEMPORARY TRAFFIC OPENINGS

VEHICULAR TRAFFIC

1. __ TRAFFIC WILL BE DETOURED AWAY FROM THE SITE.
2. X TRAFFIC WILL PASS UNDER THE STRUCTURE ON:

ST OR ROAD NAME AND LOCATION		FALSEWORK OPENING REQD (HORIZ x VERT)	
ROAD 16/BERENDA WAY	6578+42	49'x16.5'	2-WAY

3. __ TEMP TRAFFIC LANE REDUCTION FOR FTG EXC.

LEGEND:

- ◕ INDICATES POINT OF MINIMUM VERTICAL CLEARANCE
- ⇨ INDICATES DIRECTION OF TRAFFIC
- (1) STRUCTURE APPROACH
- (2) SLOPE PAVING (1½H:1V)

10 0 10 20
1"=10'

30 0 30 60
1"=30'

REV	DATE	BY	CHK	APP	DESCRIPTION

DESIGNED BY A. M.
DRAWN BY J. KIDWELL
CHECKED BY S. J. S.
IN CHARGE C. LEMLEY
DATE 02/13/2015

RECORD SET
15% DESIGN
SUBMITTAL

NOT FOR
CONSTRUCTION

PARSONS

CALIFORNIA
HIGH-SPEED RAIL AUTHORITY

CALIFORNIA HIGH-SPEED TRAIN PROJECT
MERCED TO FRESNO SECTION
CENTRAL VALLEY WYE
SR 152 (NORTH) TO ROAD 13 WYE ALTERNATIVE
GENERAL PLAN (SJD-FRE)
BERENDA WAY (ROAD 16) UNDERPASS

CONTRACT NO. HSR08-05
DRAWING NO. ST-K1230-A
SCALE AS SHOWN
SHEET NO.

MF-ST-K1230-A.dgn
06-FEB-2015 16:08
p0036110

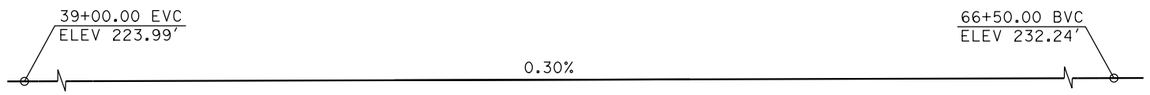

SR 152

PROFILE GRADE

NO SCALE

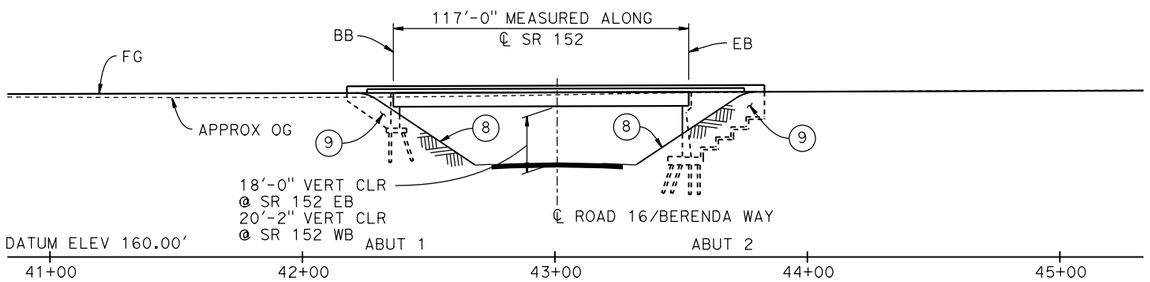

SR 152 WB & EB (ROAD 16) UNDERCROSSINGS

ELEVATION

1" = 30′

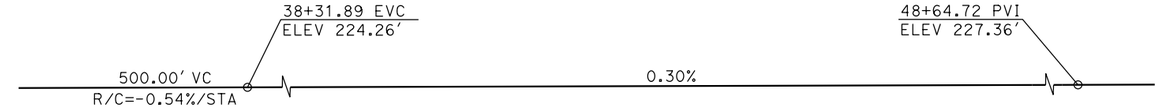

EB LOOP RAMP

PROFILE GRADE

NO SCALE

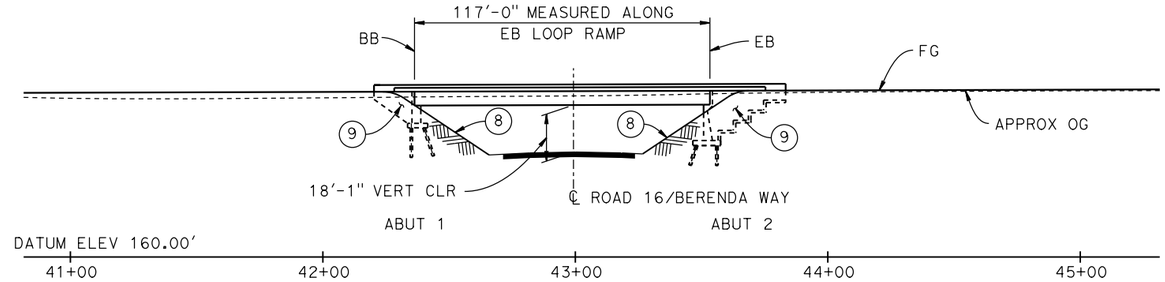

EB LOOP RAMP (ROAD 16) UNDERCROSSING

ELEVATION

1" = 30′

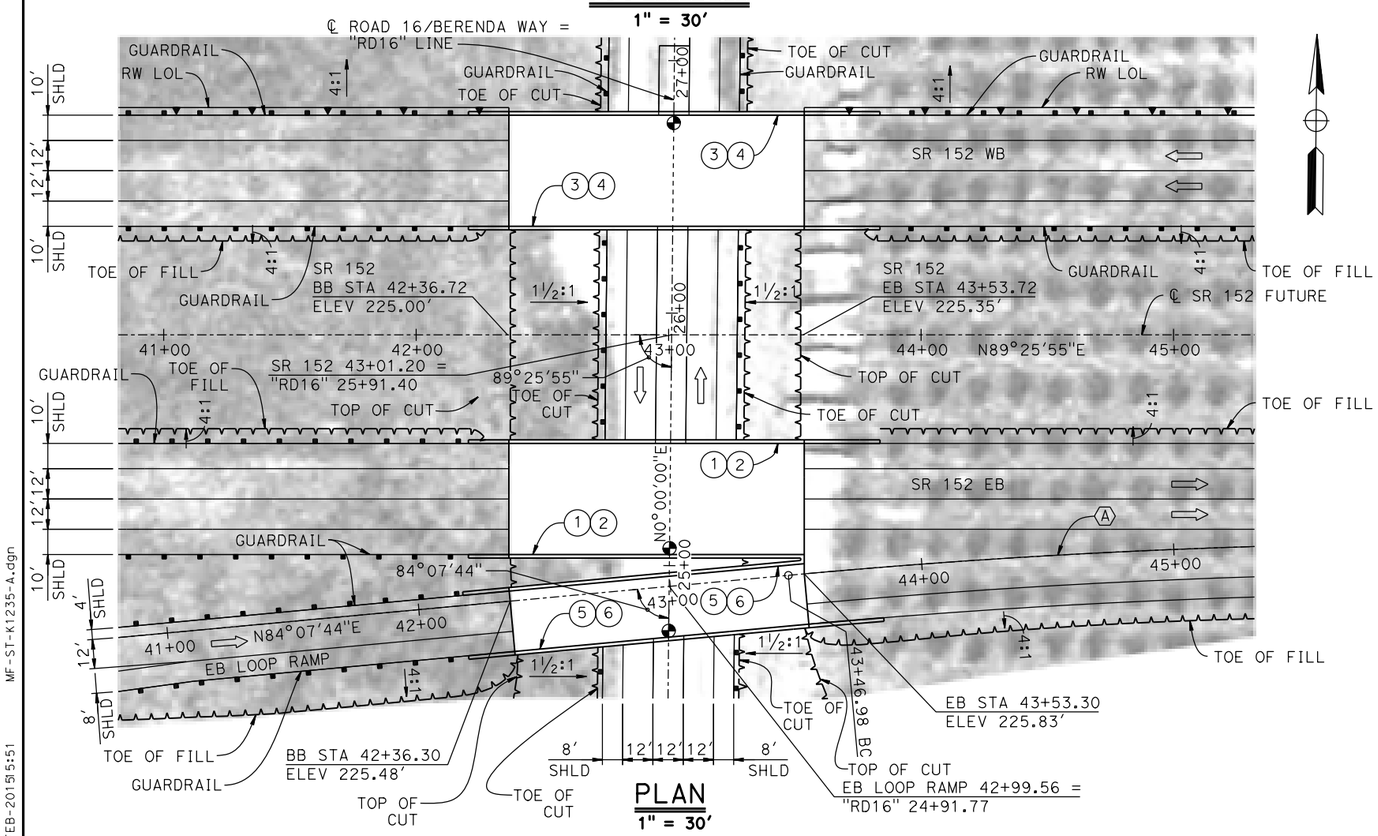

PLAN

1" = 30′

CURVE NO. 231-03 (A)

R = 3,000.00′
Δ = 04°09′26"
L = 217.68′
T = 108.89′

LEGEND:

- ● INDICATES POINT OF MINIMUM VERTICAL CLEARANCE
- ⇨ INDICATES DIRECTION OF TRAFFIC
- (1) PAINT "SR 152 EB (ROAD 16) UNDERCROSSING"
- (2) PAINT "BRIDGE NO. XX-XXXX"
- (3) PAINT "SR 152 WB (ROAD 16) UNDERCROSSING"
- (4) PAINT "BRIDGE NO. XX-XXXX"
- (5) PAINT "EB LOOP RAMP (ROAD 16) UNDERCROSSING"
- (6) PAINT "BRIDGE NO. XX-XXXX"
- (7) CONCRETE BARRIER TYPE 732
- (8) SLOPE PAVING (1½H:1V)
- (9) WINGWALL

NOTES:

1. FOR TYPICAL SECTION SEE DRAWING ST-K3235-A.
2. ASSUME CLASS 140 PILES AT ABUTMENT FOUNDATIONS. PILE LENGTHS TO BE DETERMINED.
3. FOR UTILITY DISPOSITIONS, SEE CIVIL AND GRADE SEPARATION PLANS; DRAWING CV-S1230-A.
4. FOR GUARDRAILS, SEE CIVIL AND GRADE SEPARATION PLANS; DRAWING CV-S1230-A.
5. FOR RETAINING WALLS, SEE CIVIL AND GRADE SEPARATION PLANS; DRAWING CV-S1230-A.

TEMPORARY TRAFFIC OPENINGS

VEHICULAR TRAFFIC

1. __ TRAFFIC WILL BE DETOURED AWAY FROM THE SITE.
2. X TRAFFIC WILL PASS UNDER THE STRUCTURE ON:

ST OR ROAD NAME AND LOCATION		FALSEWORK OPENING REQD (HORIZ x VERT)	
ROAD 16/BERENDA WAY	43+01	52′x16.5′	2-WAY

3. __ TEMP TRAFFIC LANE REDUCTION FOR FTG EXC.

30 0 30 60
1"=30′

REV	DATE	BY	CHK	APP	DESCRIPTION

DESIGNED BY R. P. M.
DRAWN BY W. JOHNSEN
CHECKED BY S. J. S.
IN CHARGE C. LEMLEY
DATE 02/13/2015

RECORD SET
15% DESIGN SUBMITTAL

NOT FOR CONSTRUCTION

PARSONS

CALIFORNIA HIGH-SPEED RAIL AUTHORITY

CALIFORNIA HIGH-SPEED TRAIN PROJECT
MERCED TO FRESNO SECTION
CENTRAL VALLEY WYE
SR 152 (NORTH) TO ROAD 13 WYE ALTERNATIVE
GENERAL PLAN (SJD-FRE)
BERENDA WAY (ROAD 16) INTERCHANGE - 1 OF 2

CONTRACT NO. HSR08-05
DRAWING NO. ST-K1235-A
SCALE AS SHOWN
SHEET NO.

MF-ST-K1235-A.dgn
06-FEB-2015 15:51
p0036110

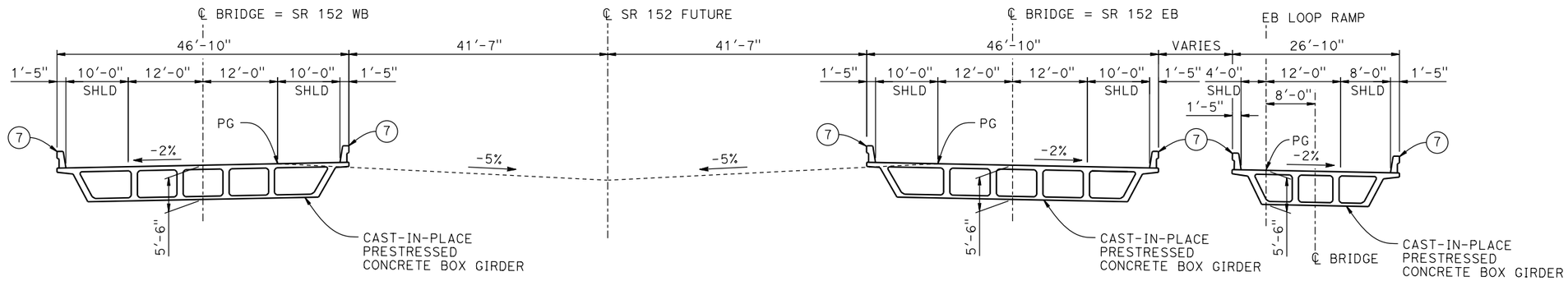

TYPICAL SECTION

1" = 10'

10 0 10 20

1"=10'

REV	DATE	BY	CHK	APP	DESCRIPTION

DESIGNED BY R. P. M.
DRAWN BY W. JOHNSEN
CHECKED BY S. J. S.
IN CHARGE C. LEMLEY
DATE 02/13/2015

RECORD SET
15% DESIGN
SUBMITTAL

NOT FOR
CONSTRUCTION

PARSONS

CALIFORNIA
HIGH-SPEED RAIL AUTHORITY

CALIFORNIA HIGH-SPEED TRAIN PROJECT
MERCED TO FRESNO SECTION
CENTRAL VALLEY WYE
SR 152 (NORTH) TO ROAD 13 WYE ALTERNATIVE
TYPICAL SECTION (SJD-FRE)
BERENDA WAY (ROAD 16) INTERCHANGE - 2 OF 2

CONTRACT NO. HSR08-05
DRAWING NO. ST-K3235-A
SCALE AS SHOWN
SHEET NO.

p0036110 06-FEB-2015 15:51 MF-ST-K3235-A.dgn

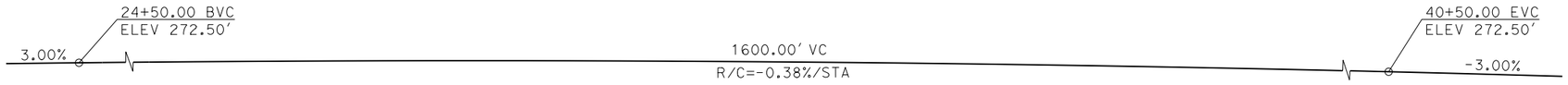

PROFILE GRADE

NO SCALE

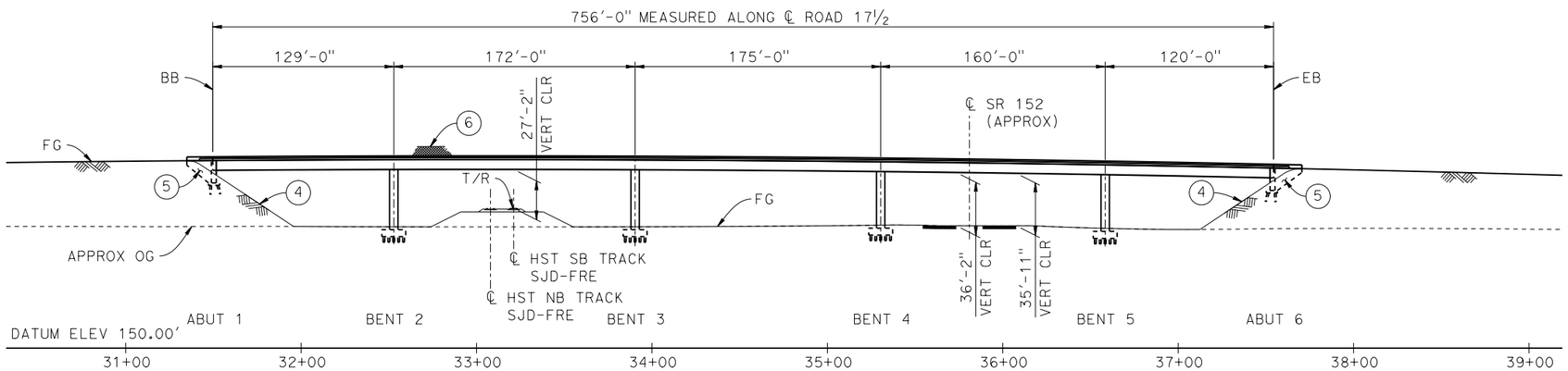

ELEVATION

1"=50'

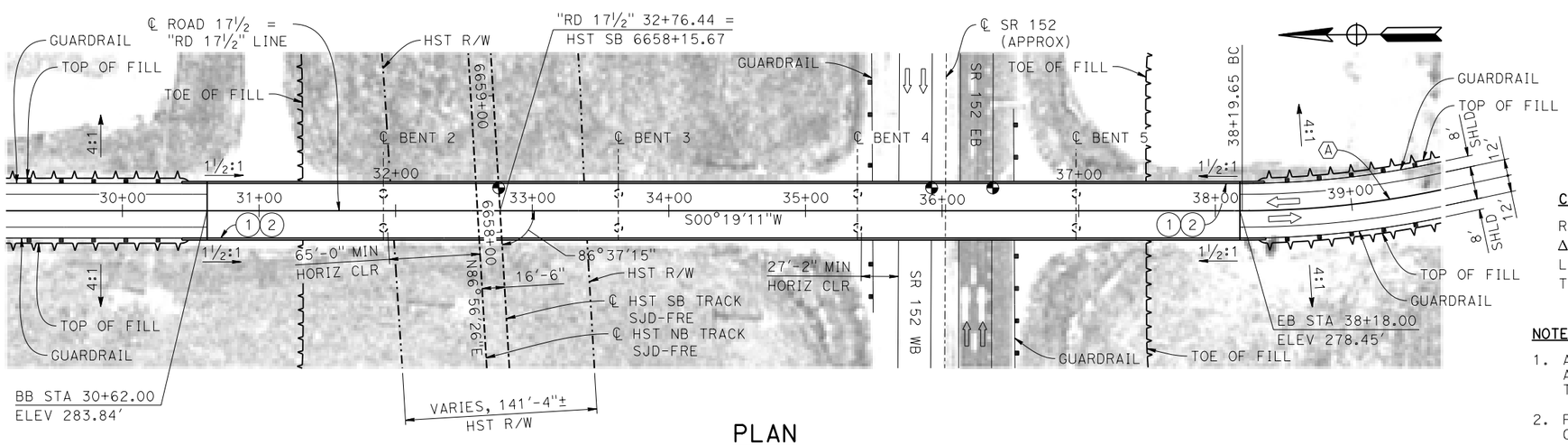

PLAN

1"=50'

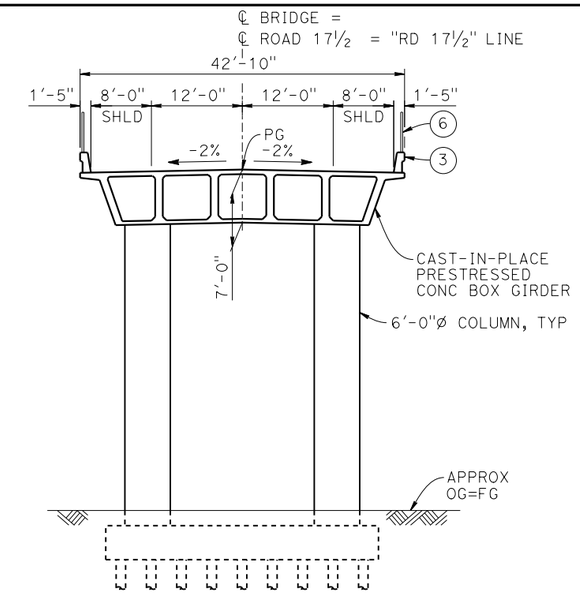

TYPICAL SECTION

1" = 10'

TEMPORARY TRAFFIC OPENINGS

VEHICULAR TRAFFIC

1. __ TRAFFIC WILL BE DETOURED AWAY FROM THE SITE.
2. X TRAFFIC WILL PASS UNDER THE STRUCTURE ON:

ST OR ROAD NAME AND LOCATION		FALSEWORK OPENING REQD (HORIZ x VERT)	
SR 152	36+23	40'x16.5'	E BND
SR 152	35+80	40'x16.5'	W BND

3. __ TEMP TRAFFIC LANE REDUCTION FOR FTG EXC.

LEGEND:

- INDICATES POINT OF MINIMUM VERTICAL CLEARANCE
- INDICATES DIRECTION OF TRAFFIC
- (1) PAINT "ROAD 17½ OVERHEAD"
- (2) PAINT "BRIDGE NO. XX-XXXX"
- (3) CONCRETE BARRIER TYPE 736 MOD
- (4) SLOPE PAVING (1½H:1V)
- (5) WINGWALL
- (6) AR FENCE WITH SOLID PLATE

CURVE NO. 240-01 (A)

R = 700.00'
Δ = 135°19'11"
L = 1,653.24'
T = 1,703.38'

NOTES:

1. ASSUME CLASS 140 PILES AT ABUTMENT AND BENT FOUNDATIONS. PILE LENGTHS TO BE DETERMINED.
2. FOR UTILITY DISPOSITIONS, SEE CIVIL AND GRADE SEPARATION PLANS; DRAWING CV-S1240-A.
3. FOR GUARDRAILS, SEE CIVIL AND GRADE SEPARATION PLANS; DRAWING CV-S1240-A.

10 0 10 20
1"=10'

50 0 50 100
1"=50'

REV	DATE	BY	CHK	APP	DESCRIPTION

DESIGNED BY S.J.S.
DRAWN BY R.M.
CHECKED BY O. EDEWOR
IN CHARGE C. LEMLEY
DATE 03/18/2016

RECORD SET
15% DESIGN SUBMITTAL

NOT FOR CONSTRUCTION

PARSONS

CALIFORNIA HIGH-SPEED RAIL AUTHORITY

CALIFORNIA HIGH-SPEED TRAIN PROJECT
MERCED TO FRESNO SECTION
CENTRAL VALLEY WYE
SR 152 (NORTH) TO ROAD 13 WYE ALTERNATIVE
GENERAL PLAN (SJD-FRE)
ROAD 17½ OVERHEAD

CONTRACT NO. HSR08-05
DRAWING NO. ST-K1240-A
SCALE AS SHOWN
SHEET NO.

MF-ST-K1240-A.dgn
10-MAR-2016 15:39
p005133a

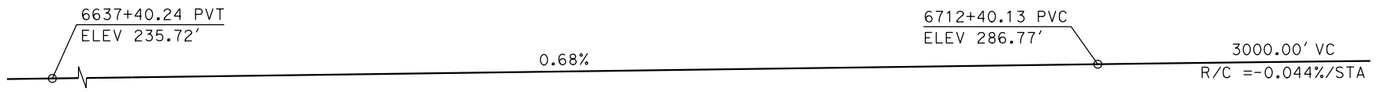

TOP OF RAIL PROFILE (℄ HST SB TRACK)

NO SCALE

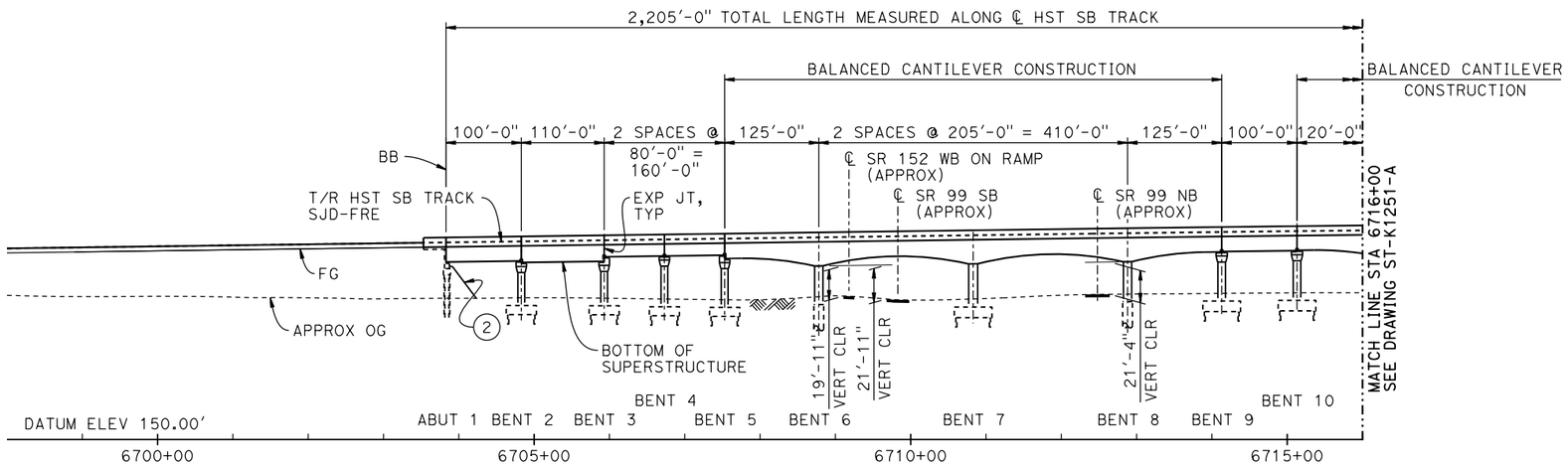

DEVELOPED ELEVATION

VERT: 1" = 50' HORIZ: 1" = 100'

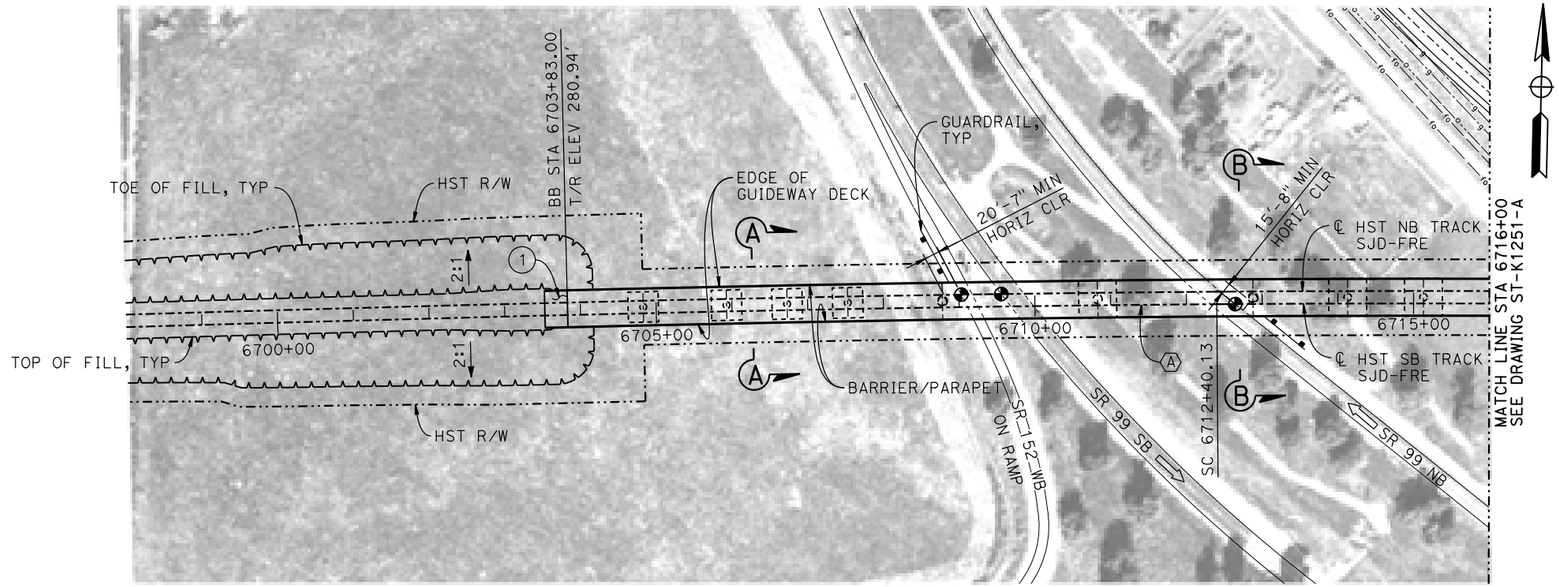

PLAN

1" = 100'

TEMPORARY TRAFFIC OPENINGS

VEHICULAR TRAFFIC

1. __ TRAFFIC WILL BE DETOURED AWAY FROM THE SITE.
2. X TRAFFIC WILL PASS UNDER THE STRUCTURE ON:

ST OR ROAD NAME AND LOCATION		FALSEWORK OPENING REQD (HORIZ X VERT)	
SR 152 SB ON RAMP	6709+18	25'X16.5'	S BND
SR 99	6709+83	37'X16.5'	S BND
SR 99	6712+48	37'X16.5'	N BND
FAIRMEAD BLVD	6718+98	32'X16.5'	2-WAY
ROAD 18¾	6724+40	32'X16.5'	2-WAY

3. __ TEMP TRAFFIC LANE REDUCTION FOR FTG EXC.

TEMPORARY TRAFFIC OPENINGS

RAILROAD TRAFFIC

FALSEWORK OPENING REQUIRED ON:

NAME OF RR AND LOCATION		FALSEWORK OPENING REQD (HORIZ X VERT)
UPRR	6717+37	24' X 21'

LEGEND:

- INDICATES POINT OF MINIMUM VERTICAL CLEARANCE
- INDICATES DIRECTION OF TRAVEL
- (1) STRUCTURE APPROACH
- (2) SLOPE PAVING (1½H:1V)

NOTES:

1. 16" Ø PIPE PILES ASSUMED FOR ABUTMENT AND BENT FOUNDATIONS, UNLESS OTHERWISE NOTED. PILE LENGTHS TO BE DETERMINED.
2. FOR SECTIONS AND BENT COLUMN SCHEDULE, SEE DRAWING ST-K3250-A.
3. ANY EXISTING DIRT ROAD THAT CONFLICTS WITH NEW CONSTRUCTION SHALL BE REALIGNED.
4. FOR UTILITY DISPOSITIONS, SEE CIVIL AND GRADE SEPARATION PLANS; DRAWING CV-S1250-A.
5. FOR GUARDRAILS, SEE CIVIL AND GRADE SEPARATION PLANS; DRAWING CV-S1250-A.

CURVE SJD-FRE 6 SB (A)

R = 38,000.00'
LS = 1,750.00'

CURVE NO. 250-02 (B)

R = 3,000.00'
Δ = 9°21'10"
L = 489.71'
T = 245.40'

50 0 50 100
1"=50'

100 0 100 200
1"=100'

REV	DATE	BY	CHK	APP	DESCRIPTION

DESIGNED BY S. J. S.
DRAWN BY A. M.
CHECKED BY O. EDEWOR
IN CHARGE C. LEMLEY
DATE 02/13/2015

RECORD SET 15% DESIGN SUBMITTAL

NOT FOR CONSTRUCTION

PARSONS

CALIFORNIA HIGH-SPEED RAIL AUTHORITY

CALIFORNIA HIGH-SPEED TRAIN PROJECT
MERCED TO FRESNO SECTION
CENTRAL VALLEY WYE
SR 152 (NORTH) TO ROAD 13 WYE ALTERNATIVE
GENERAL PLAN (SJD-FRE)
AERIAL #2 - SR 99 / UPRR - 1 OF 3

CONTRACT NO. HSR08-05
DRAWING NO. ST-K1250-A
SCALE AS SHOWN
SHEET NO.

MF-ST-K1250-A.dgn 06-FEB-2015 15:25 p0036110

TOP OF RAIL PROFILE (℄ HST SB TRACK)

NO SCALE

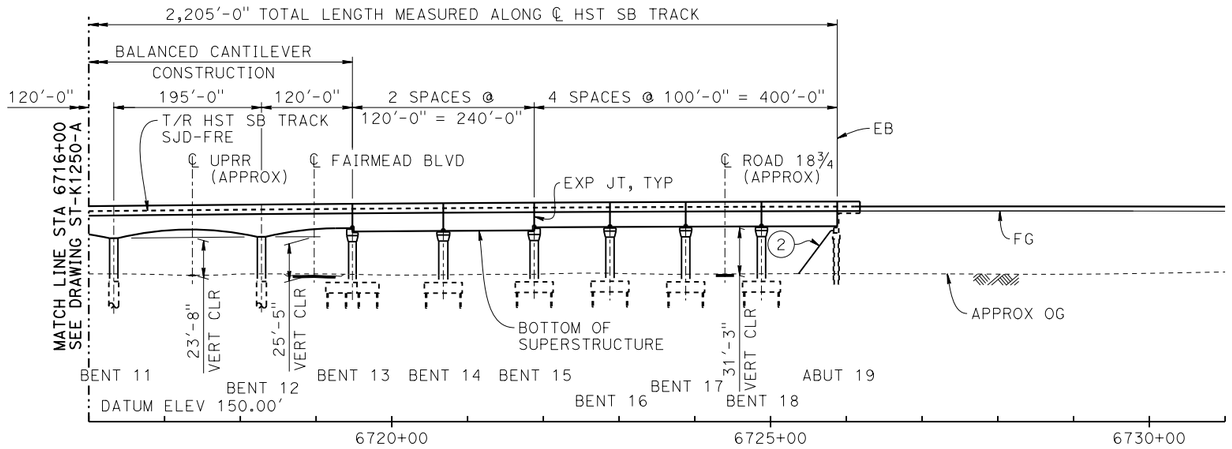

DEVELOPED ELEVATION

VERT: 1" = 50' HORIZ: 1" = 100'

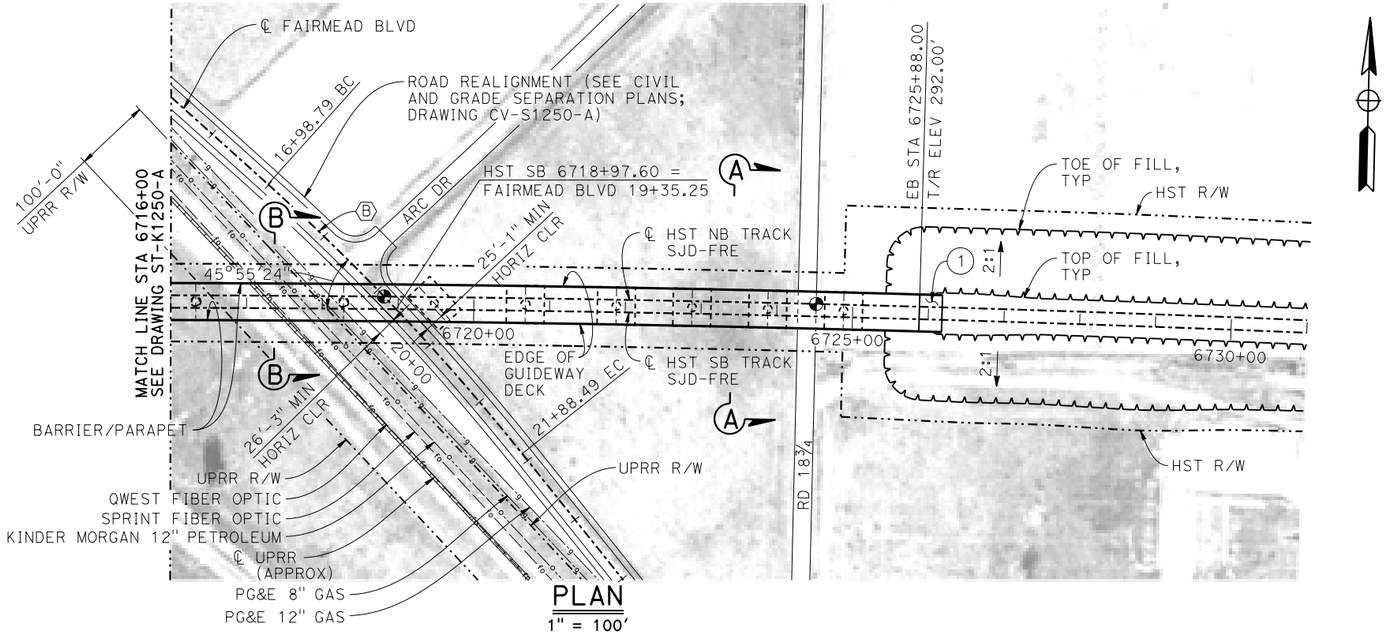

PLAN

1" = 100'

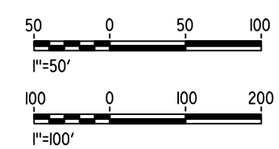

REV	DATE	BY	CHK	APP	DESCRIPTION

DESIGNED BY S. J. S.
DRAWN BY A. M.
CHECKED BY O. EDEWOR
IN CHARGE C. LEMLEY
DATE 03/18/2016

RECORD SET 15% DESIGN SUBMITTAL

NOT FOR CONSTRUCTION

PARSONS

CALIFORNIA HIGH-SPEED RAIL AUTHORITY

CALIFORNIA HIGH-SPEED TRAIN PROJECT
MERCED TO FRESNO SECTION
CENTRAL VALLEY WYE
SR 152 (NORTH) TO ROAD 13 WYE ALTERNATIVE
GENERAL PLAN (SJD-FRE)
AERIAL #2 - SR 99 / UPRR - 2 OF 3

CONTRACT NO. HSR08-05
DRAWING NO. ST-K1251-A
SCALE AS SHOWN
SHEET NO.

MF-ST-K1251-A.dgn 10-MAR-2016 5:40 p005133a

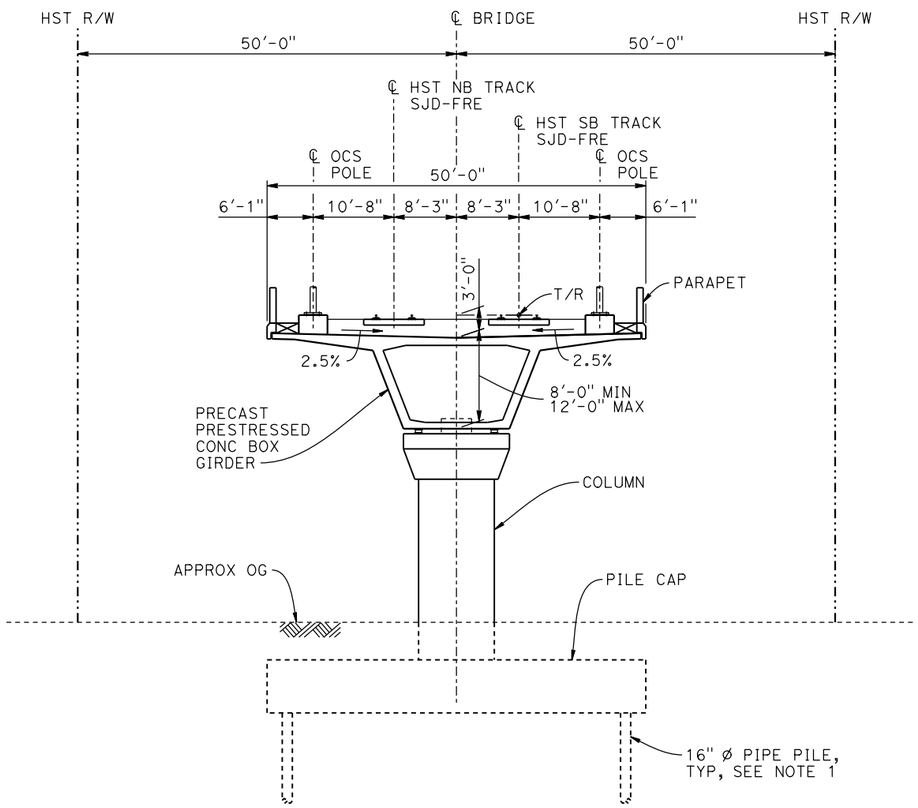

SECTION A-A

1" = 10'

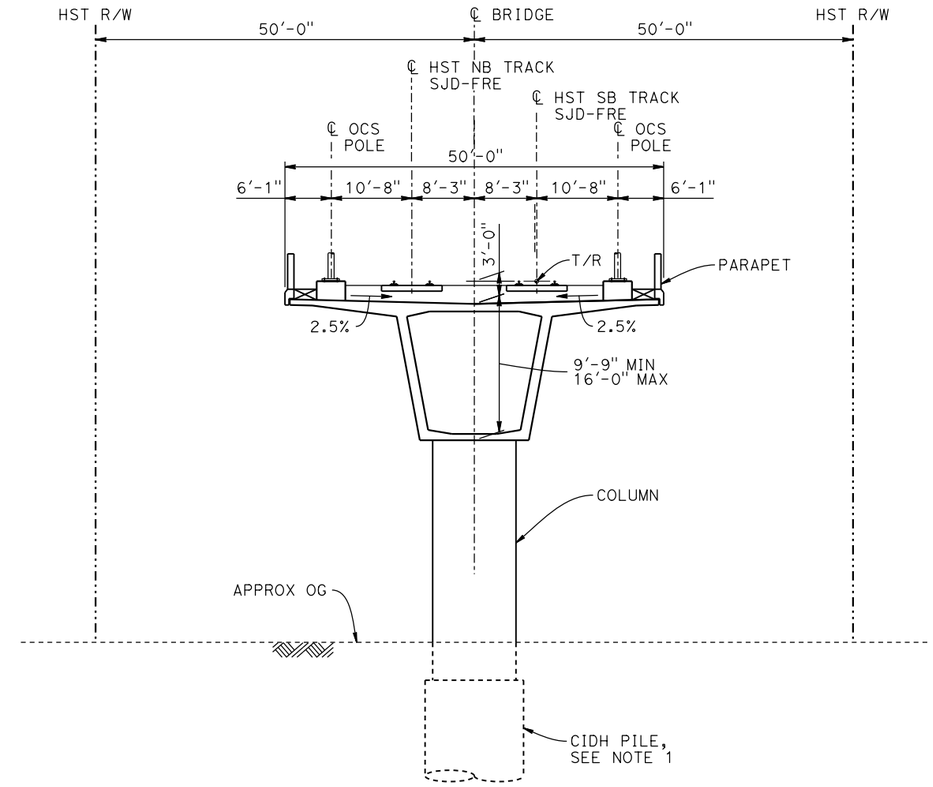

SECTION B-B

1" = 10'

BENT COLUMN SCHEDULE		
BENT	COLUMN TYPE	CIDH TYPE
2 - 5	9'-0" Ø	
6	11'-0" Ø	13'-0" Ø
7	12'-0" Ø	
8	11'-0" Ø	13'-0" Ø
9 - 10	10'-0" Ø	
11 - 12	11'-0" Ø	13'-0" Ø
13	10'-0" Ø	
14	12'-0" Ø	
15 - 18	11'-0" Ø	

NOTES:

1. PILE AND DRILLED SHAFT LENGTHS TO BE DETERMINED.
2. FOR TRACK SUPERELEVATION DETAILS, SEE ALIGNMENT AND TYPICAL SECTION PLANS; DRAWING TT-B0051-A.

10 0 10 20
1"=10'

REV	DATE	BY	CHK	APP	DESCRIPTION

DESIGNED BY S. J. S.
DRAWN BY A. M.
CHECKED BY O. EDEWOR
IN CHARGE C. LEMLEY
DATE 02/13/2015

RECORD SET
15% DESIGN SUBMITTAL

NOT FOR CONSTRUCTION

PARSONS

CALIFORNIA HIGH-SPEED RAIL AUTHORITY

CALIFORNIA HIGH-SPEED TRAIN PROJECT
MERCED TO FRESNO SECTION
CENTRAL VALLEY WYE
SR 152 (NORTH) TO ROAD 13 WYE ALTERNATIVE
TYPICAL SECTIONS (SJD-FRE)
AERIAL #2 - SR 99 / UPRR - 3 OF 3

CONTRACT NO. HSR08-05
DRAWING NO. ST-K3250-A
SCALE AS SHOWN
SHEET NO.

MF-ST-K3250-A.dgn
06-FEB-2015 5:26
p0036110

PROFILE GRADE

NO SCALE

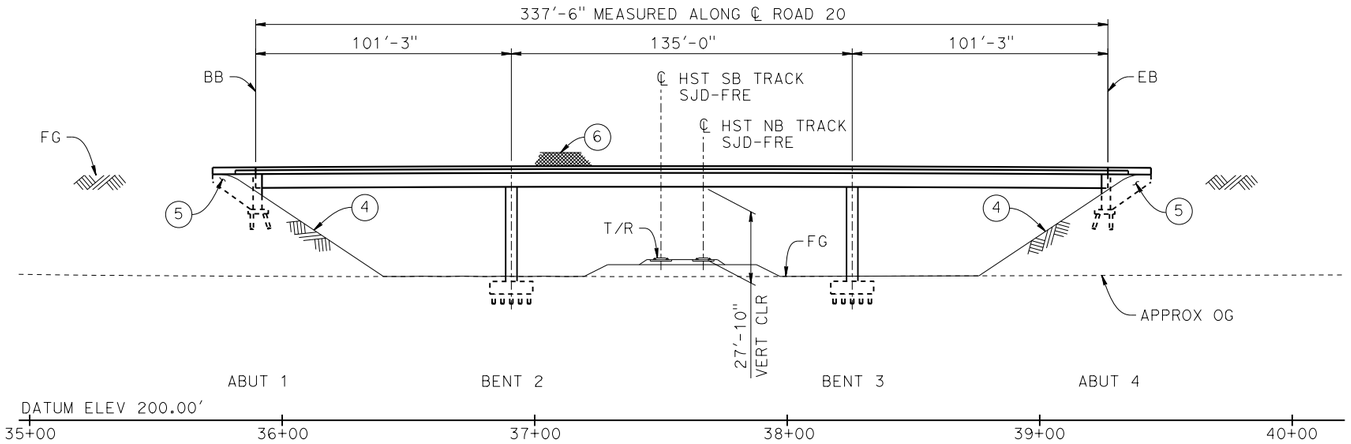

ELEVATION

1" = 30'

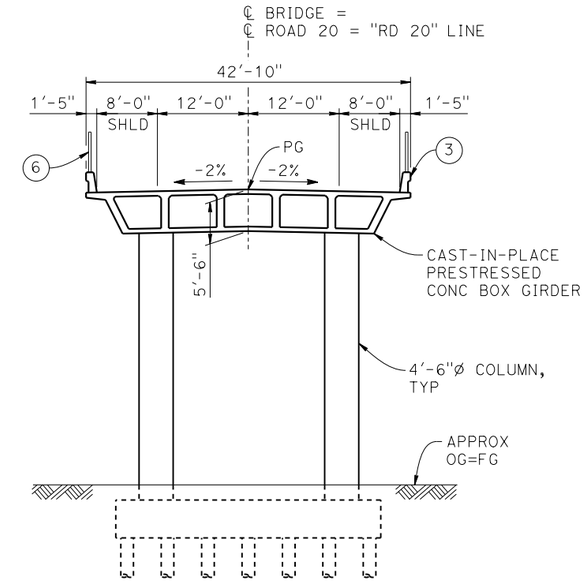

TYPICAL SECTION

1" = 10'

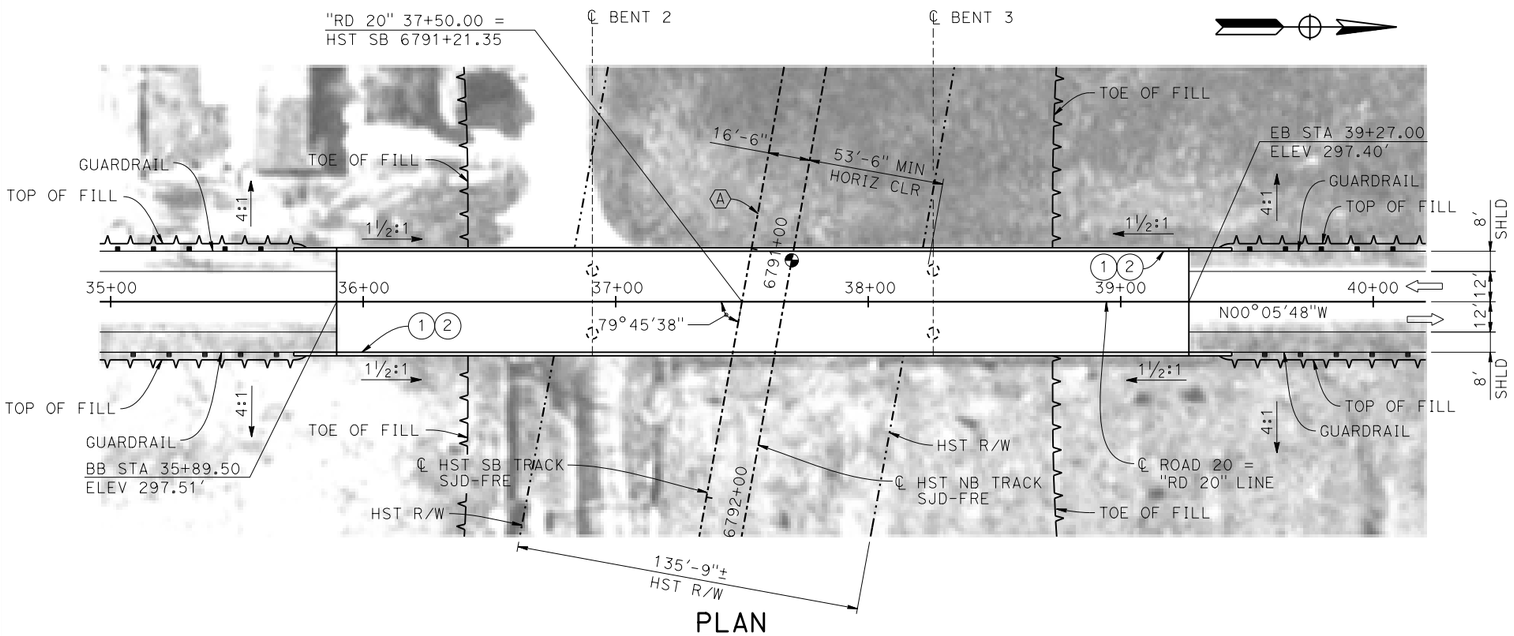

PLAN

1" = 30'

LEGEND:

- ⊕ INDICATES POINT OF MINIMUM VERTICAL CLEARANCE
- ⇨ INDICATES DIRECTION OF TRAFFIC
- (1) PAINT "ROAD 20 OVERHEAD"
- (2) PAINT "BRIDGE NO. XX-XXXX"
- (3) CONCRETE BARRIER TYPE 736 MOD
- (4) SLOPE PAVING (1½H:1V)
- (5) WINGWALL
- (6) AR FENCE WITH SOLID PLATE

NOTES:

1. ASSUME CLASS 140 PILES AT ABUTMENT AND BENT FOUNDATIONS. PILE LENGTHS TO BE DETERMINED.
2. FOR UTILITY DISPOSITIONS, SEE CIVIL AND GRADE SEPARATION PLANS; SEE DRAWING CV-S1260-A.
3. FOR GUARDRAILS, SEE CIVIL AND GRADE SEPARATION PLANS; SEE DRAWING CV-S1260-A.

CURVE SJD-FRE 6 SB (A)

R = 38,000.00'
LS = 1,750.00'

10 0 10 20
1"=10'

30 0 30 60
1"=30'

REV	DATE	BY	CHK	APP	DESCRIPTION

DESIGNED BY S. J. S.
DRAWN BY A. M.
CHECKED BY K. CHARAN
IN CHARGE C. LEMELY
DATE 03/18/2016

RECORD SET
15% DESIGN
SUBMITTAL

NOT FOR
CONSTRUCTION

PARSONS

CALIFORNIA
HIGH-SPEED RAIL AUTHORITY

CALIFORNIA HIGH-SPEED TRAIN PROJECT
MERCED TO FRESNO SECTION
CENTRAL VALLEY WYE
SR 152 (NORTH) TO ROAD 13 WYE ALTERNATIVE
GENERAL PLAN (SJD-FRE)
ROAD 20 OVERHEAD

CONTRACT NO. HSR08-05
DRAWING NO. ST-K1260-A
SCALE AS SHOWN
SHEET NO.

MF-ST-K1260-A.dgn
10-MAR-2016 15:41
p005133a

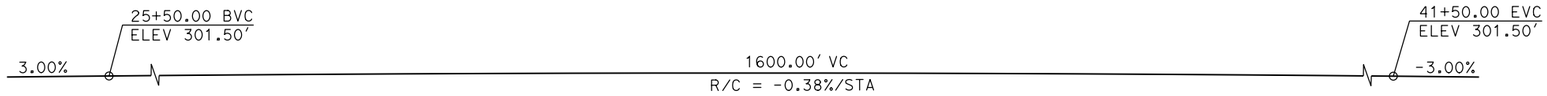

PROFILE GRADE

NO SCALE

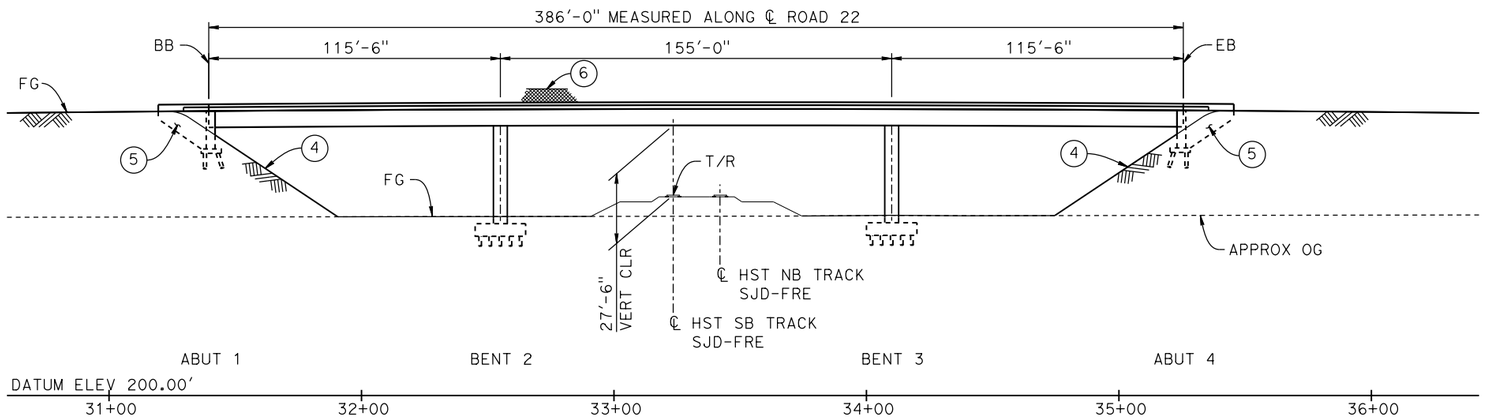

ELEVATION

1" = 30'

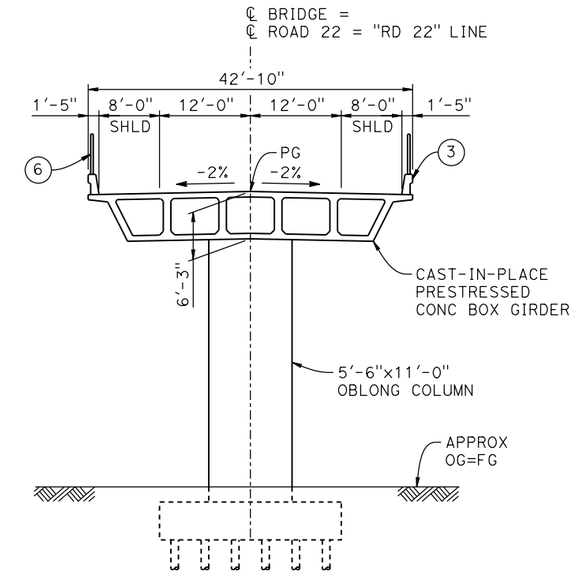

TYPICAL SECTION

1" = 10'

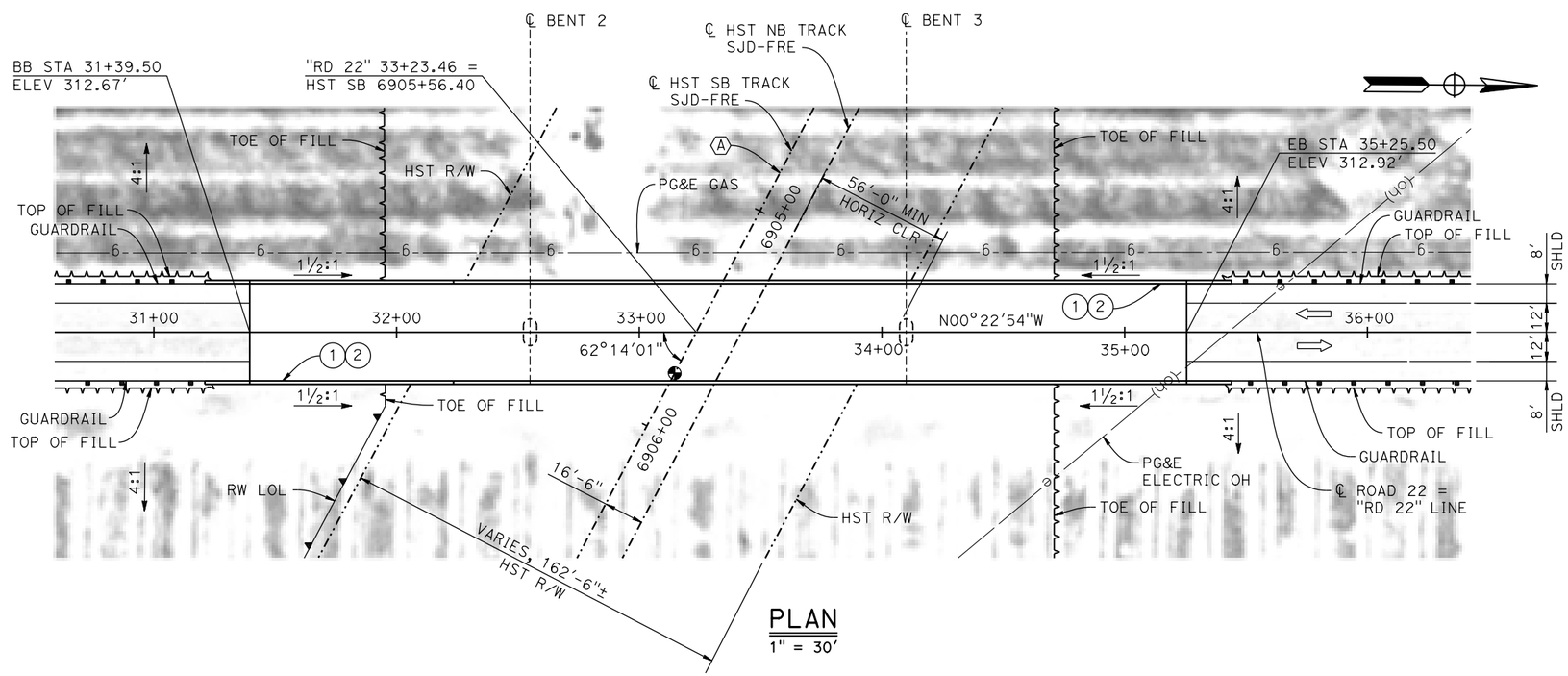

PLAN

1" = 30'

LEGEND:

- INDICATES POINT OF MINIMUM VERTICAL CLEARANCE
- INDICATES DIRECTION OF TRAFFIC
- (1) PAINT "ROAD 22 OVERHEAD"
- (2) PAINT "BRIDGE NO. XX-XXXX"
- (3) CONCRETE BARRIER TYPE 736 MOD
- (4) SLOPE PAVING (1½H:1V)
- (5) WINGWALL
- (6) AR FENCE WITH SOLID PLATE

NOTES:

1. ASSUME CLASS 140 PILES AT ABUTMENT AND BENT FOUNDATIONS. PILE LENGTHS TO BE DETERMINED.
2. FOR UTILITY DISPOSITIONS, SEE CIVIL AND GRADE SEPARATION PLANS; SEE DRAWING CV-S1280-A.
3. FOR GUARDRAILS, SEE CIVIL AND GRADE SEPARATION PLANS; SEE DRAWING CV-S1280-A.

CURVE SJD-FRE 6 SB (A)

R = 38,000.00'
LS = 1,750.00'

10 0 10 20
1"=10'

30 0 30 60
1"=30'

REV	DATE	BY	CHK	APP	DESCRIPTION

DESIGNED BY S. J. S.
DRAWN BY J. C.
CHECKED BY O. EDEWOR
IN CHARGE C. LEMLEY
DATE 03/18/2016

RECORD SET
15% DESIGN SUBMITTAL

NOT FOR CONSTRUCTION

PARSONS

CALIFORNIA HIGH-SPEED RAIL AUTHORITY

CALIFORNIA HIGH-SPEED TRAIN PROJECT
MERCED TO FRESNO SECTION
CENTRAL VALLEY WYE
SR 152 (NORTH) TO ROAD 13 WYE ALTERNATIVE
GENERAL PLAN (SJD-FRE)
ROAD 22 OVERHEAD

CONTRACT NO. HSR08-05
DRAWING NO. ST-K1280-A
SCALE AS SHOWN
SHEET NO.

MF-ST-K1280-A.dgn 17-MAR-2016 09:13 p005133A

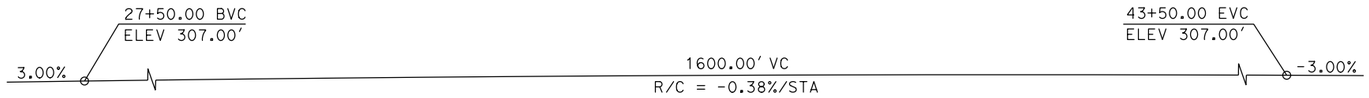

PROFILE GRADE

NO SCALE

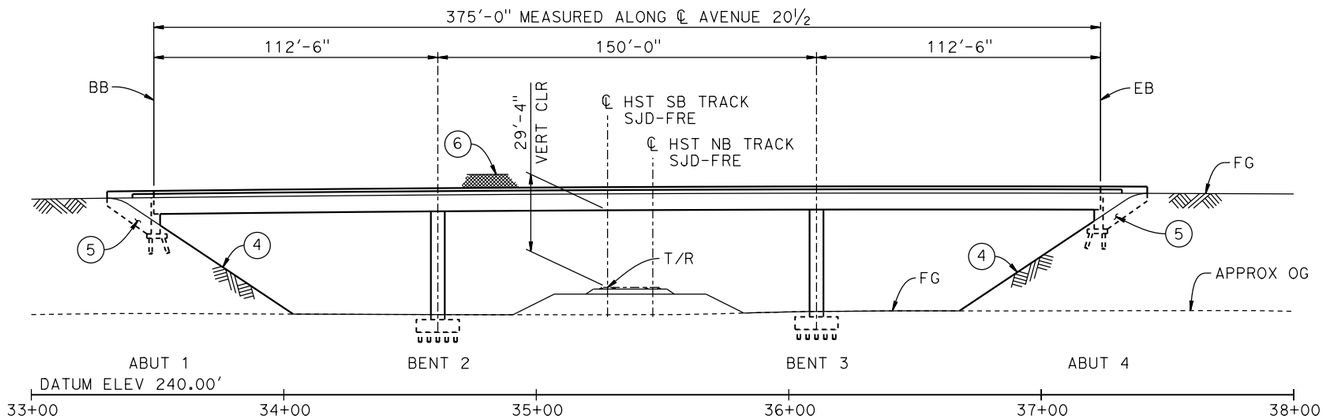

DEVELOPED ELEVATION

1"=30'

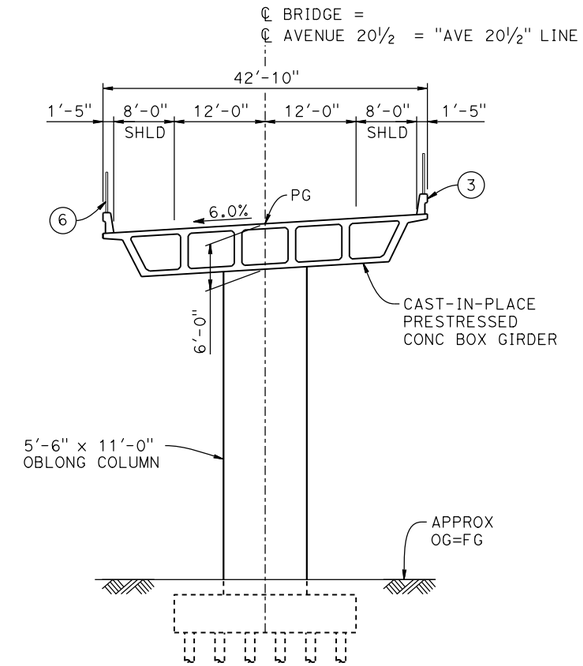

TYPICAL SECTION

1" = 10'

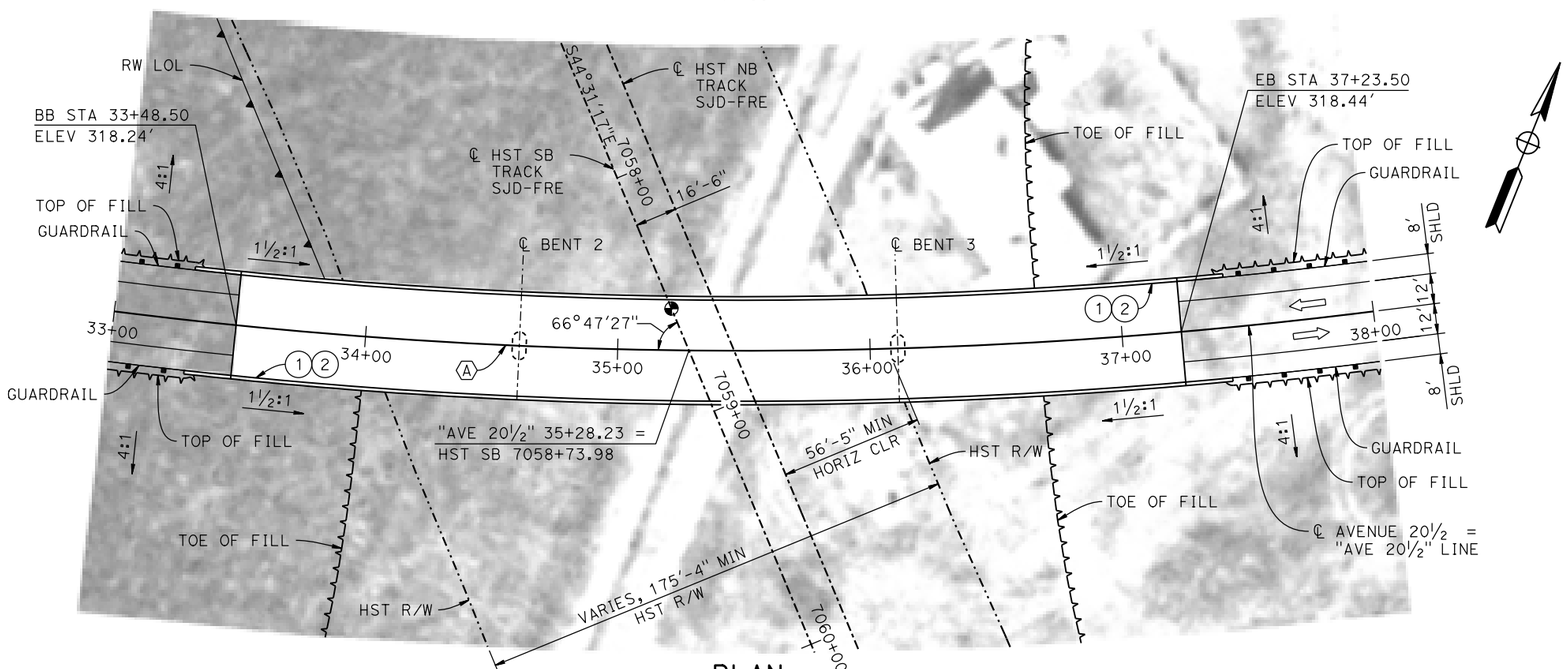

PLAN

1"=30'

LEGEND:

- INDICATES POINT OF MINIMUM VERTICAL CLEARANCE
- INDICATES DIRECTION OF TRAFFIC
- (1) PAINT "AVENUE 20½ OVERHEAD"
- (2) PAINT "BRIDGE NO. XX-XXXX"
- (3) CONCRETE BARRIER TYPE 736 MOD
- (4) SLOPE PAVING (1½H:1V)
- (5) WINGWALL
- (6) AR FENCE WITH SOLID PLATE

NOTES:

1. ASSUME CLASS 140 PILES AT ABUTMENT AND BENT FOUNDATIONS. PILE LENGTHS TO BE DETERMINED.
2. FOR UTILITY DISPOSITIONS, SEE CIVIL AND GRADE SEPARATION PLANS; DRAWING CV-S1310-A.
3. FOR GUARDRAILS, SEE CIVIL AND GRADE SEPARATION PLANS; DRAWING CV-S1310-A.

CURVE NO. 310-01 (A)

R = 2,000.00'
Δ = 43°46'18"
L = 1,527.92'
T = 803.42'

10 0 10 20
1"=10'

30 0 30 60
1"=30'

REV	DATE	BY	CHK	APP	DESCRIPTION

DESIGNED BY S. J. S.
DRAWN BY A. M.
CHECKED BY O. EDEWOR
IN CHARGE C. LEMLEY
DATE 03/18/2016

RECORD SET
15% DESIGN SUBMITTAL

NOT FOR CONSTRUCTION

PARSONS

CALIFORNIA HIGH-SPEED RAIL AUTHORITY

CALIFORNIA HIGH-SPEED TRAIN PROJECT
MERCED TO FRESNO SECTION
CENTRAL VALLEY WYE
SR 152 (NORTH) TO ROAD 13 WYE ALTERNATIVE
GENERAL PLAN (SJD-FRE)
AVENUE 20½ OVERHEAD

CONTRACT NO. HSR08-05
DRAWING NO. ST-K1310-A
SCALE AS SHOWN
SHEET NO.

p005133A 17-MAR-2016 09:13 MF-ST-K1310-A.dgn

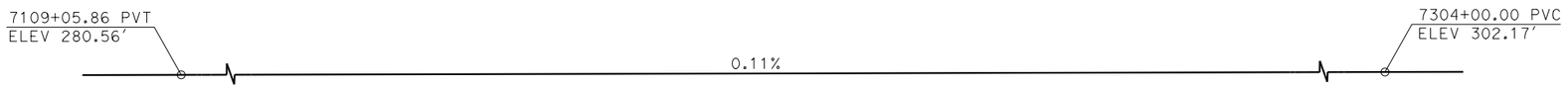

TOP OF RAIL PROFILE (℄ HST SB TRACK)

NO SCALE

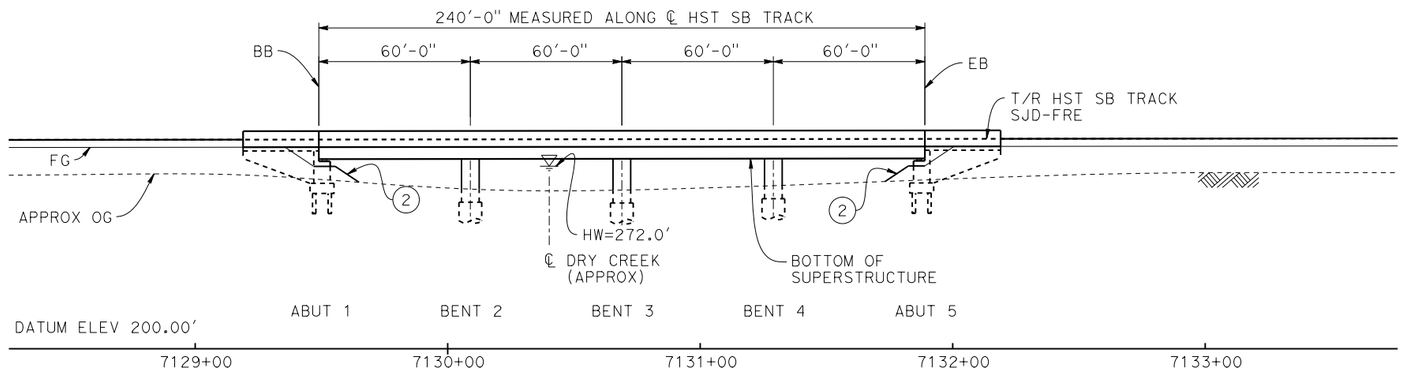

ELEVATION

1" = 30'

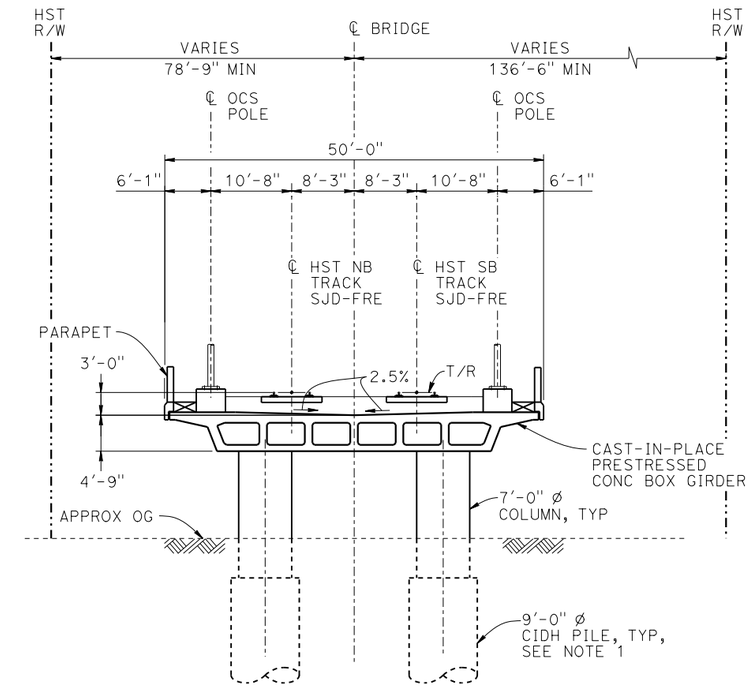

TYPICAL SECTION

1" = 10'

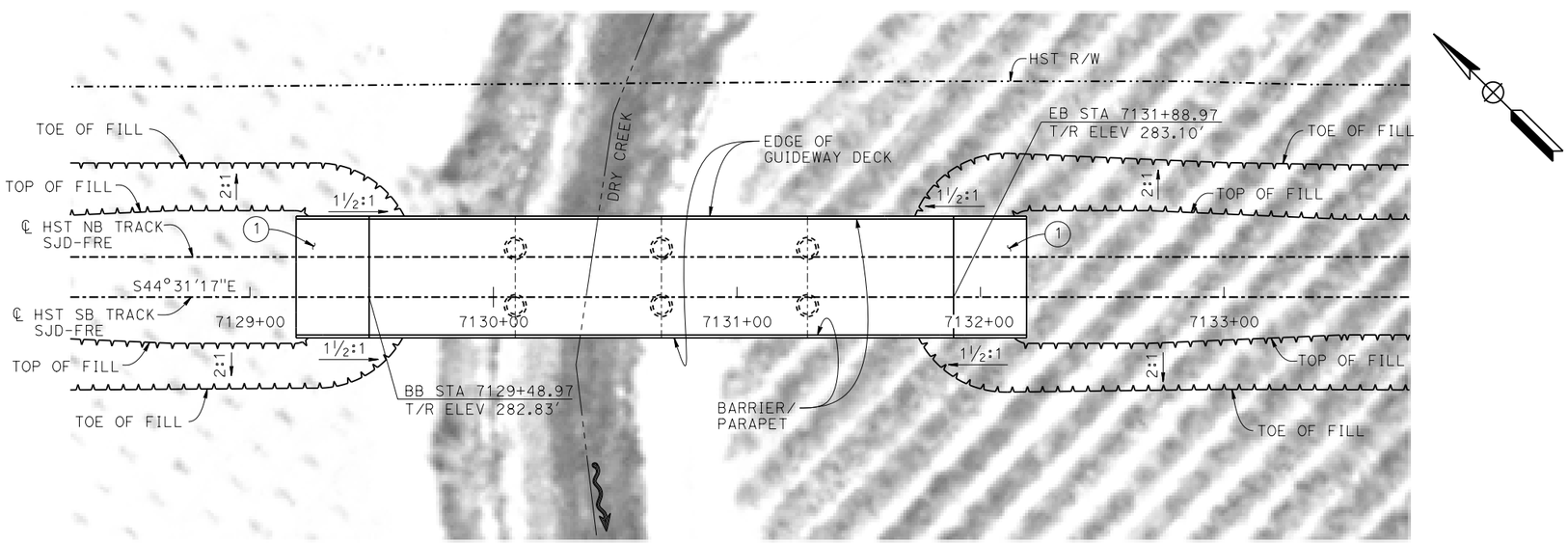

PLAN

1" = 30'

LEGEND:

INDICATES DIRECTION OF FLOW

(1) STRUCTURE APPROACH

(2) SLOPE PAVING (1½H:1V)

NOTES:

1. 16" ø PIPE PILES ASSUMED FOR ABUTMENT FOUNDATIONS. PILE AND DRILLED SHAFT LENGTHS TO BE DETERMINED.
2. FOR UTILITY DISPOSITIONS, SEE CIVIL AND GRADE SEPARATION PLANS; DRAWINGS CV-S1320-A AND CV-S1330-A.
3. ANY EXISTING DIRT ROAD THAT CONFLICTS WITH NEW CONSTRUCTION SHALL BE REALIGNED.

10 0 10 20
1"=10'

30 0 30 60
1"=30'

REV	DATE	BY	CHK	APP	DESCRIPTION

DESIGNED BY S. J. S.
DRAWN BY A. M.
CHECKED BY O. EDEWOR
IN CHARGE C. LEMLEY
DATE 03/18/2016

RECORD SET
15% DESIGN SUBMITTAL

NOT FOR CONSTRUCTION

PARSONS

CALIFORNIA HIGH-SPEED RAIL AUTHORITY

CALIFORNIA HIGH-SPEED TRAIN PROJECT
MERCED TO FRESNO SECTION
CENTRAL VALLEY WYE
SR 152 (NORTH) TO ROAD 13 WYE ALTERNATIVE
GENERAL PLAN (SJD-FRE)
DRY CREEK BRIDGE

CONTRACT NO. HSR08-05
DRAWING NO. ST-K1330-A
SCALE AS SHOWN
SHEET NO.

10-MAR-2016 15:44 MF-ST-K1330-A.dgn
p0051330

TOP OF RAIL PROFILE (℄ HST SB TRACK MER-FRE)

NO SCALE

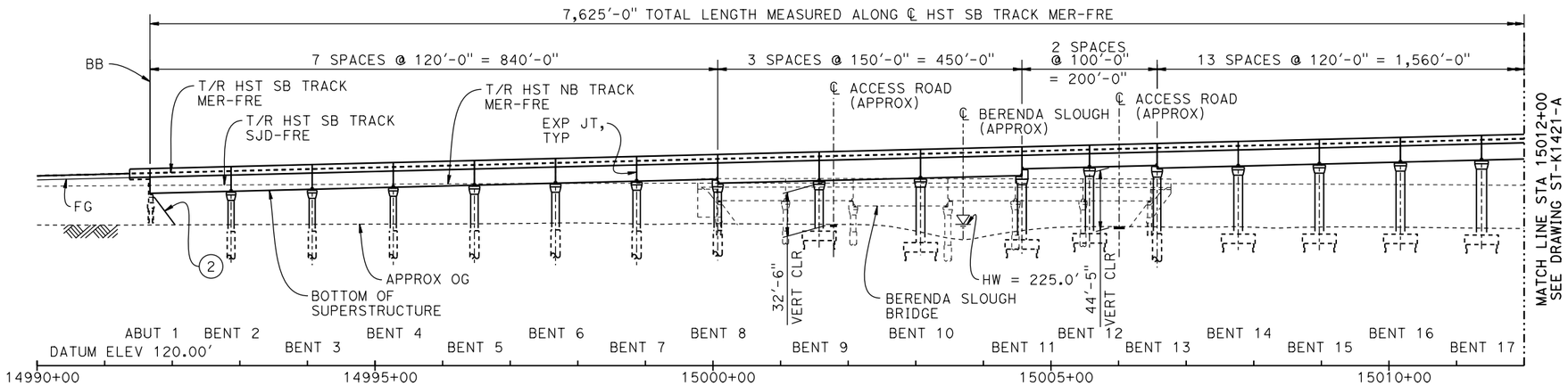

DEVELOPED ELEVATION

VERT: 1" = 50' HORIZ: 1" = 100'

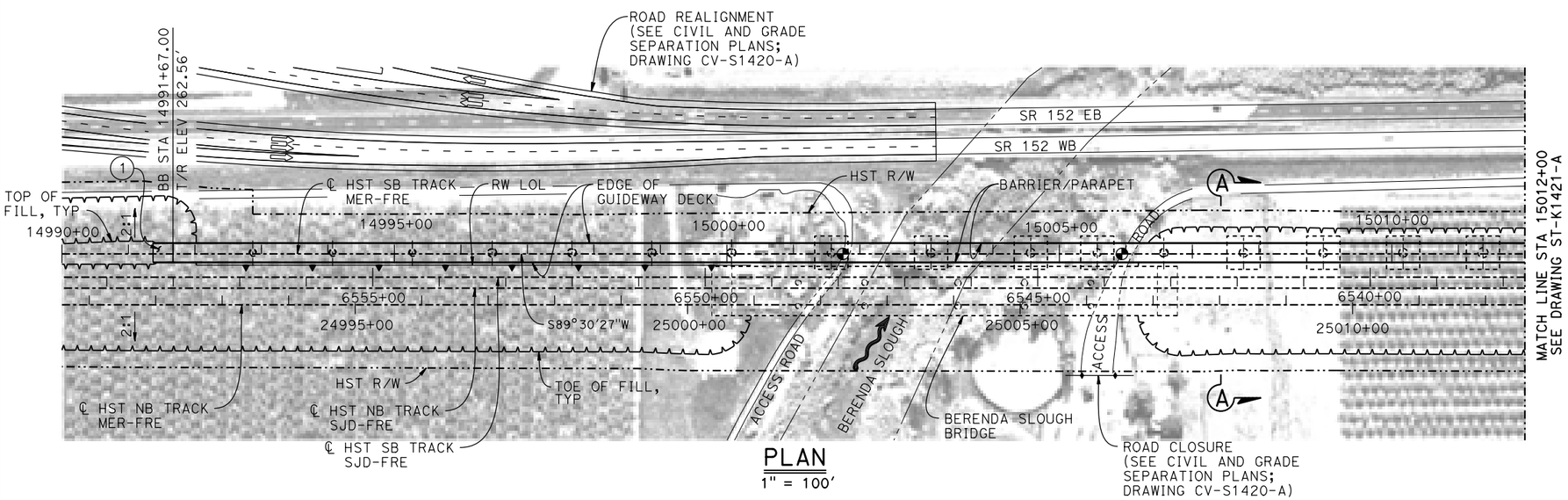

PLAN

1" = 100'

LEGEND:

- INDICATES POINT OF MINIMUM VERTICAL CLEARANCE
- INDICATES DIRECTION OF TRAFFIC
- (1) STRUCTURE APPROACH
- (2) SLOPE PAVING (1½H:1V)

CURVE MER-FRE 1 SB (A)

R = 10,350.00'
LS = 1,500.00'

TEMPORARY TRAFFIC OPENINGS

VEHICULAR TRAFFIC

1. __ TRAFFIC WILL BE DETOURED AWAY FROM THE SITE.
2. X TRAFFIC WILL PASS UNDER THE STRUCTURE ON:

ST OR ROAD NAME AND LOCATION		FALSEWORK OPENING REQD (HORIZ X VERT)	
ACCESS ROAD	15001+80	20'X16.5'	-
ACCESS ROAD	15006+01	20'X16.5'	-
RAILROAD DR	15066+35	20'X16.5'	2-WAY
ACCESS ROAD	15066+75	20'X16.5'	-

3. X TEMP TRAFFIC LANE REDUCTION FOR FTG EXC.

NOTES:

1. 16" Ø PIPE PILES ASSUMED FOR ABUTMENT AND BENT FOUNDATIONS, UNLESS OTHERWISE NOTED. PILE LENGTHS TO BE DETERMINED.
2. FOR SECTIONS AND BENT COLUMN SCHEDULE, SEE DRAWINGS ST-K3420-A TO ST-K3422-A.
3. ANY EXISTING DIRT ROAD THAT CONFLICTS WITH NEW CONSTRUCTION SHALL BE REALIGNED.
4. FOR UTILITY DISPOSITIONS, SEE CIVIL AND GRADE SEPARATION PLANS; DRAWINGS CV-S1420-A AND CV-S1430-A.
5. FOR RETAINING WALLS, SEE CIVIL AND GRADE SEPARATION PLANS; DRAWINGS CV-S1420-A AND CV-S1430-A.
6. FOR GUARDRAILS, SEE CIVIL AND GRADE SEPARATION PLANS; SEE DRAWINGS CV-S1420-A AND CV-S1430-A.
7. FOR BERENDA SLOUGH BRIDGE GENERAL PLAN AND TYPICAL SECTION, SEE DRAWINGS ST-K1220-A AND ST-K3220-A.
8. FOR RAILROAD DRIVE UNDERPASS (HST NB) GENERAL PLAN AND TYPICAL SECTION, SEE DRAWING ST-K1430-A.

50 0 50 100 — 1"=50'
100 0 100 200 — 1"=100'

REV	DATE	BY	CHK	APP	DESCRIPTION

DESIGNED BY R. MOTHE
DRAWN BY J. KIDWELL
CHECKED BY O. EDEWOR
IN CHARGE C. LEMLEY
DATE 02/13/2015

RECORD SET 15% DESIGN SUBMITTAL

NOT FOR CONSTRUCTION

PARSONS

CALIFORNIA HIGH-SPEED RAIL AUTHORITY

CALIFORNIA HIGH-SPEED TRAIN PROJECT
MERCED TO FRESNO SECTION
CENTRAL VALLEY WYE
SR 152 (NORTH) TO ROAD 13 WYE ALTERNATIVE
GENERAL PLAN (MER-FRE)
AERIAL #3 - SOUTHBOUND OVER HST MAINLINE - 1 OF 6

CONTRACT NO. HSR08-05
DRAWING NO. ST-K1420-A
SCALE AS SHOWN
SHEET NO.

MF-ST-K1420-A.dgn 06-FEB-2015 15:28 p0036110

TOP OF RAIL PROFILE (℄ HST SB TRACK MER-FRE)

NO SCALE

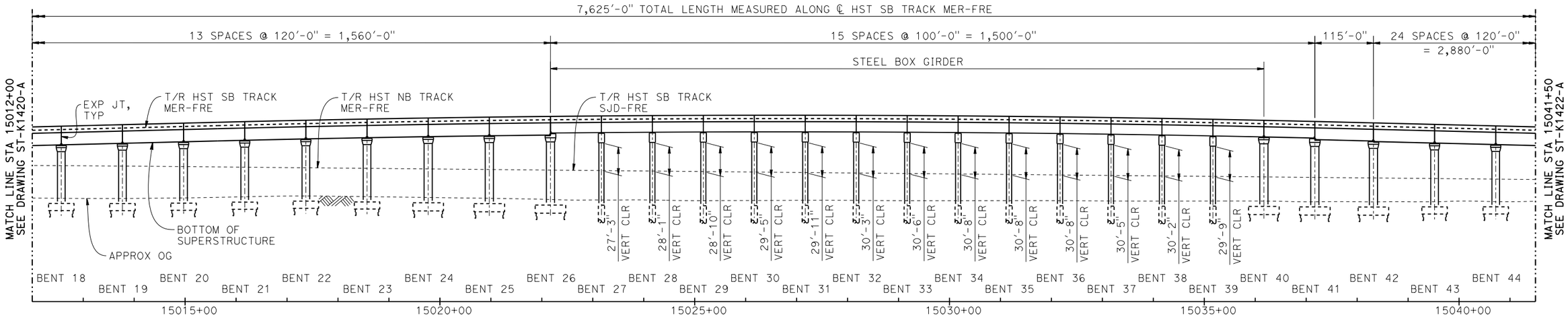

DEVELOPED ELEVATION

VERT: 1" = 50' HORIZ: 1" = 100'

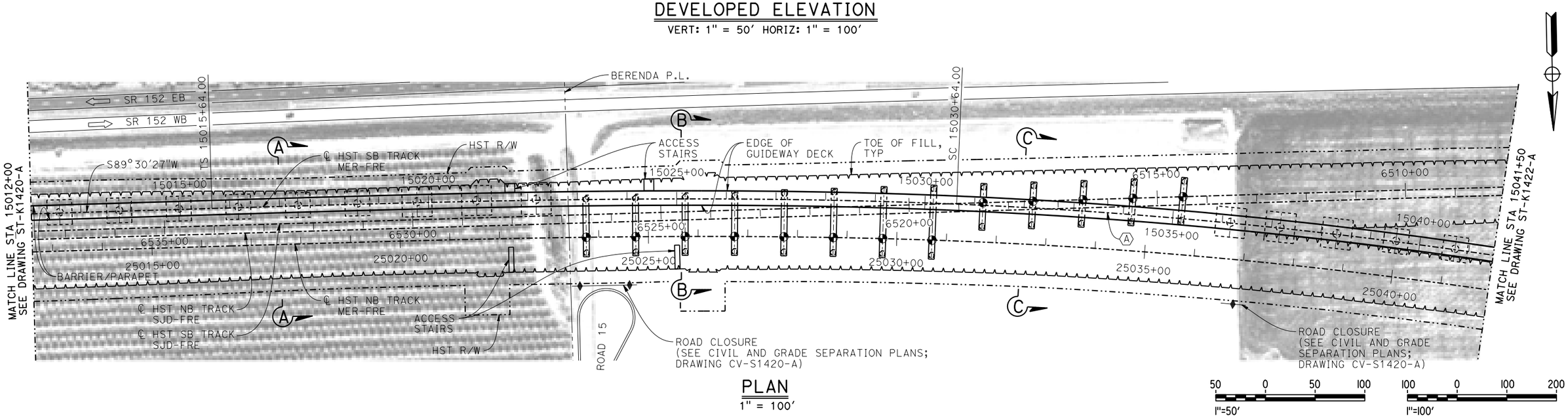

PLAN

1" = 100'

REV	DATE	BY	CHK	APP	DESCRIPTION

DESIGNED BY R. MOTHE
DRAWN BY J. KIDWELL
CHECKED BY O. EDEWOR
IN CHARGE C. LEMLEY
DATE 05/08/2015

RECORD SET
15% DESIGN SUBMITTAL

NOT FOR CONSTRUCTION

PARSONS

CALIFORNIA HIGH-SPEED RAIL AUTHORITY

CALIFORNIA HIGH-SPEED TRAIN PROJECT
MERCED TO FRESNO SECTION
CENTRAL VALLEY WYE
SR 152 (NORTH) TO ROAD 13 WYE ALTERNATIVE
GENERAL PLAN (MER-FRE)
AERIAL #3 - SOUTHBOUND OVER HST MAINLINE - 2 OF 6

CONTRACT NO. HSR08-05
DRAWING NO. ST-K1421-A
SCALE AS SHOWN
SHEET NO.

MF-ST-K1421-A.dgn 16-MAR-2016 16:00 p005133a

TOP OF RAIL PROFILE (℄ HST SB TRACK MER-FRE)

NO SCALE

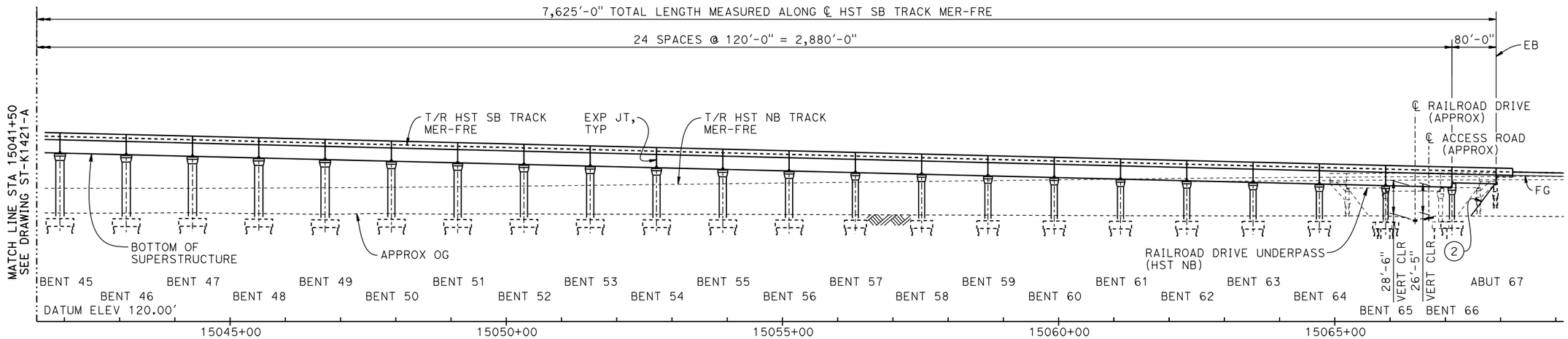

DEVELOPED ELEVATION

VERT: 1" = 50' HORIZ: 1" = 100'

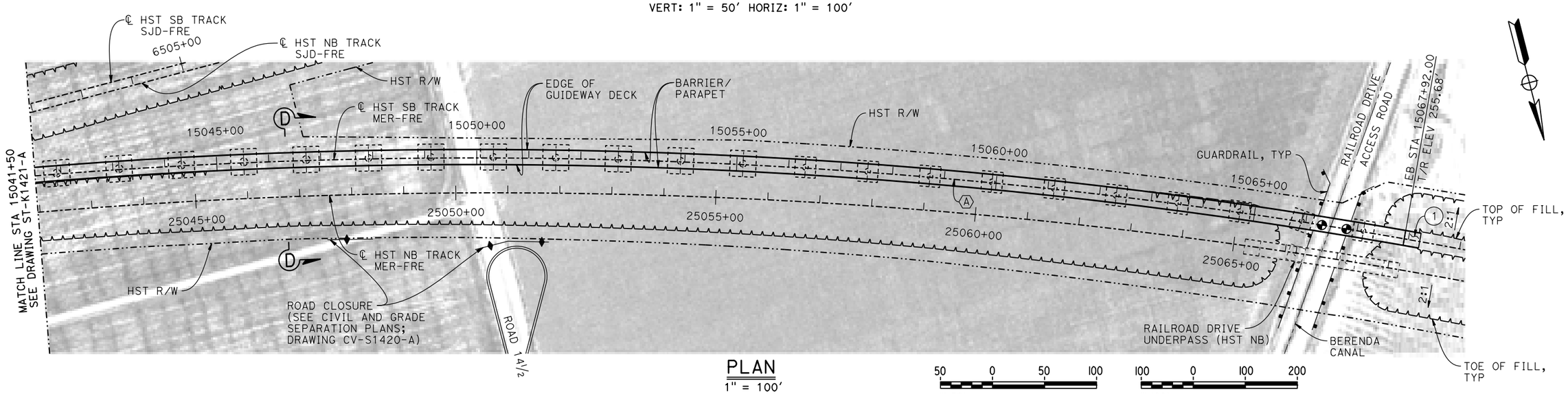

PLAN

1" = 100'

REV	DATE	BY	CHK	APP	DESCRIPTION

DESIGNED BY R. MOTHE
DRAWN BY J. KIDWELL
CHECKED BY O. EDEWOR
IN CHARGE C. LEMLEY
DATE 02/13/2015

RECORD SET
15% DESIGN SUBMITTAL

NOT FOR CONSTRUCTION

PARSONS

CALIFORNIA HIGH-SPEED RAIL AUTHORITY

CALIFORNIA HIGH-SPEED TRAIN PROJECT
MERCED TO FRESNO SECTION
CENTRAL VALLEY WYE
SR 152 (NORTH) TO ROAD 13 WYE ALTERNATIVE
GENERAL PLAN (MER-FRE)
AERIAL #3 - SOUTHBOUND OVER HST MAINLINE - 3 OF 6

CONTRACT NO. HSR08-05
DRAWING NO. ST-K1422-A
SCALE AS SHOWN
SHEET NO.

MF-ST-K1422-A.dgn
06-FEB-2015 15:29
p0036110

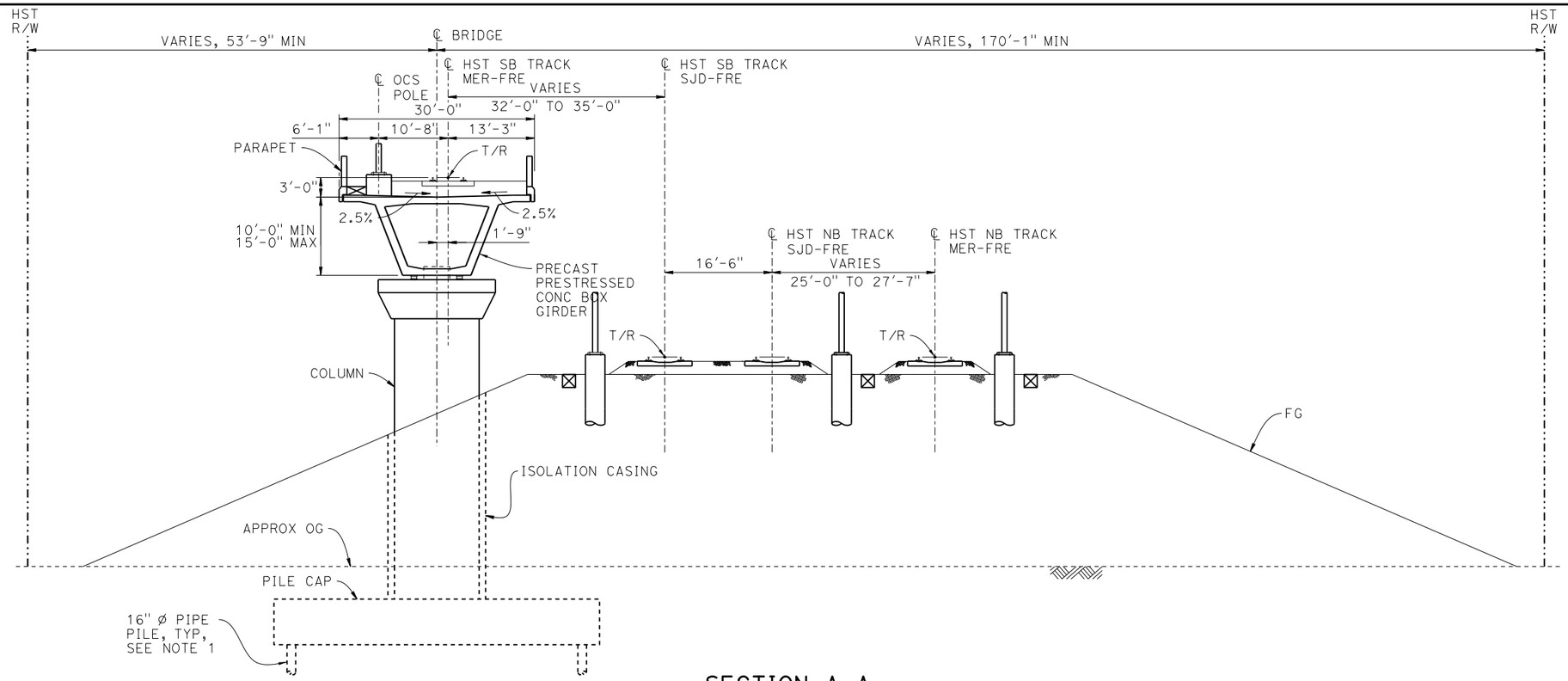

SECTION A-A

1" = 10'

BENT COLUMN SCHEDULE			
BENT	COLUMN TYPE	CIDH TYPE	"A"
2 - 4	9'-0" Ø	11'-0" Ø	
5 - 8	11'-0" Ø	13'-0" Ø	
9	12'-0" Ø		
10 - 11	13'-0" Ø		
12	12'-0" Ø		
13	11'-0" Ø	13'-0" Ø	
14 - 16	13'-0" Ø		
17 - 23	15'-0" Ø		
24 - 26	16'-0" Ø		
27 - 28	2 - 10'-0" Ø		108'-0"
29	2 - 10'-0" Ø		110'-0"
30	2 - 10'-0" Ø		113'-0"

BENT COLUMN SCHEDULE			
BENT	COLUMN TYPE	CIDH TYPE	"A"
31	2 - 10'-0" Ø		117'-0"
32	2 - 10'-0" Ø		121'-0"
33	2 - 10'-0" Ø		127'-0"
34	2 - 10'-0" Ø		133'-0"
35 - 39	2 - 10'-0" Ø		78'-0"
40 - 42	16'-0" Ø		
43 - 49	15'-0" Ø		
50 - 56	13'-0" Ø		
57 - 64	11'-0" Ø		
65 - 66	9'-0" Ø		

NOTES:

1. PILE LENGTHS TO BE DETERMINED.
2. FOR TRACK SUPERELEVATION DETAILS, SEE ALIGNMENT AND TYPICAL SECTION PLANS; DRAWING TT-B0054-A.

10 0 10 20
1"=10'

REV	DATE	BY	CHK	APP	DESCRIPTION

DESIGNED BY R. MOTHE
DRAWN BY J. KIDWELL
CHECKED BY O. EDEWOR
IN CHARGE C. LEMLEY
DATE 05/08/2015

RECORD SET
15% DESIGN SUBMITTAL
NOT FOR CONSTRUCTION

PARSONS

CALIFORNIA HIGH-SPEED RAIL AUTHORITY

CALIFORNIA HIGH-SPEED TRAIN PROJECT
MERCED TO FRESNO SECTION
CENTRAL VALLEY WYE
SR 152 (NORTH) TO ROAD 13 WYE ALTERNATIVE
TYPICAL SECTION (MER-FRE)
AERIAL #3 - SOUTHBOUND OVER HST MAINLINE - 4 OF 6

CONTRACT NO. HSR08-05
DRAWING NO. ST-K3420-A
SCALE AS SHOWN
SHEET NO.

MF-ST-K3420-A.dgn
16-MAR-2016 16:05
p0051133a

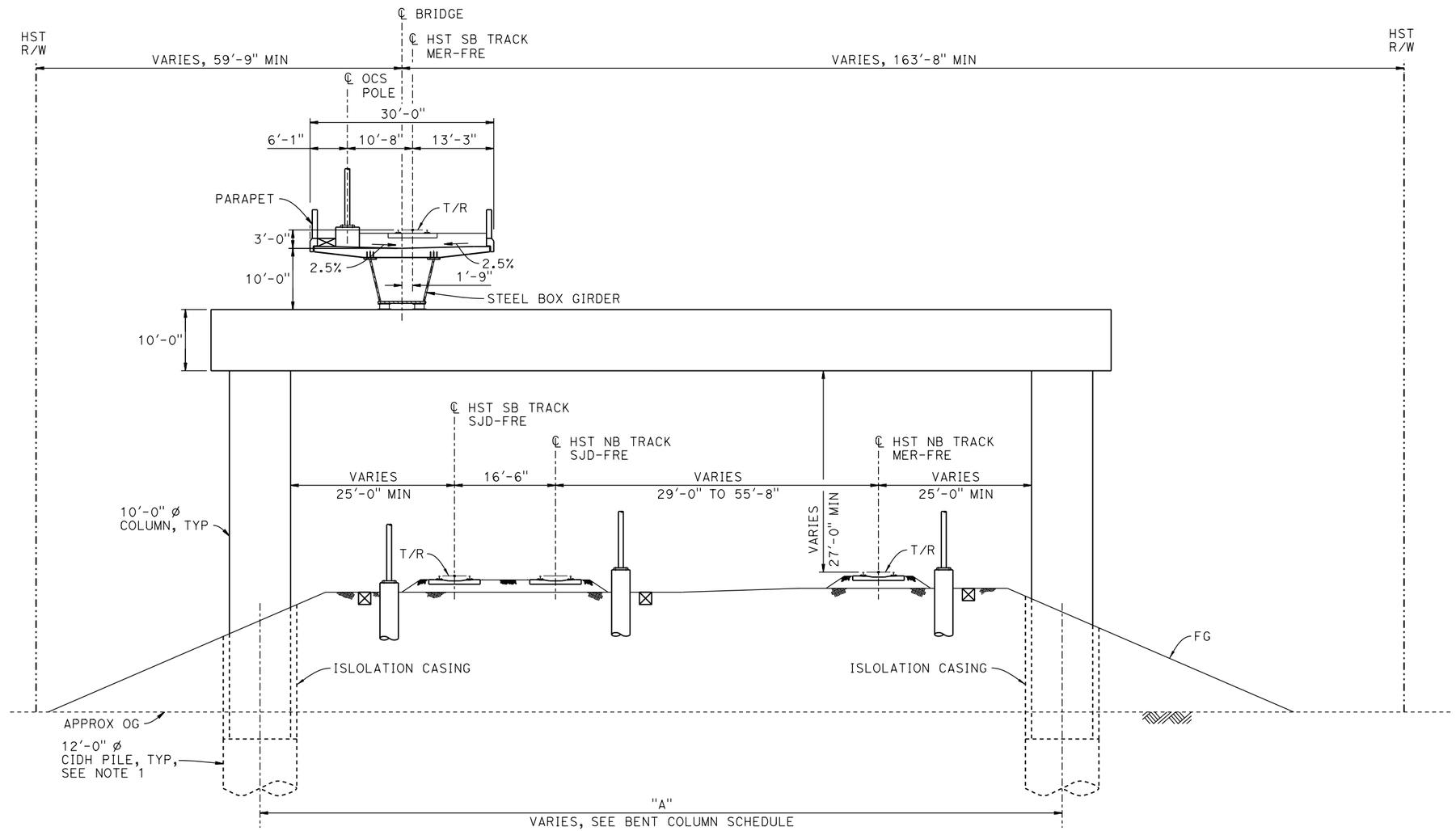

SECTION B-B

1" = 10'

NOTES:

1. DRILLED SHAFT LENGTHS TO BE DETERMINED.
2. FOR TRACK SUPERELEVATION DETAILS, SEE ALIGNMENT AND TYPICAL SECTION PLANS; DRAWING TT-B0054-A.

10 0 10 20
1"=10'

REV	DATE	BY	CHK	APP	DESCRIPTION

DESIGNED BY R. MOTHE
DRAWN BY J. KIDWELL
CHECKED BY O. EDEWOR
IN CHARGE C. LEMLEY
DATE 02/13/2015

RECORD SET
15% DESIGN SUBMITTAL

NOT FOR CONSTRUCTION

PARSONS

CALIFORNIA HIGH-SPEED RAIL AUTHORITY

CALIFORNIA HIGH-SPEED TRAIN PROJECT
MERCED TO FRESNO SECTION
CENTRAL VALLEY WYE
SR 152 (NORTH) TO ROAD 13 WYE ALTERNATIVE
TYPICAL SECTION (MER-FRE)
AERIAL #3 - SOUTHBOUND OVER HST MAINLINE - 5 OF 6

CONTRACT NO. HSR08-05
DRAWING NO. ST-K3421-A
SCALE AS SHOWN
SHEET NO.

MF-ST-K3421-A.dgn
06-FEB-2015 15:30
p0036110

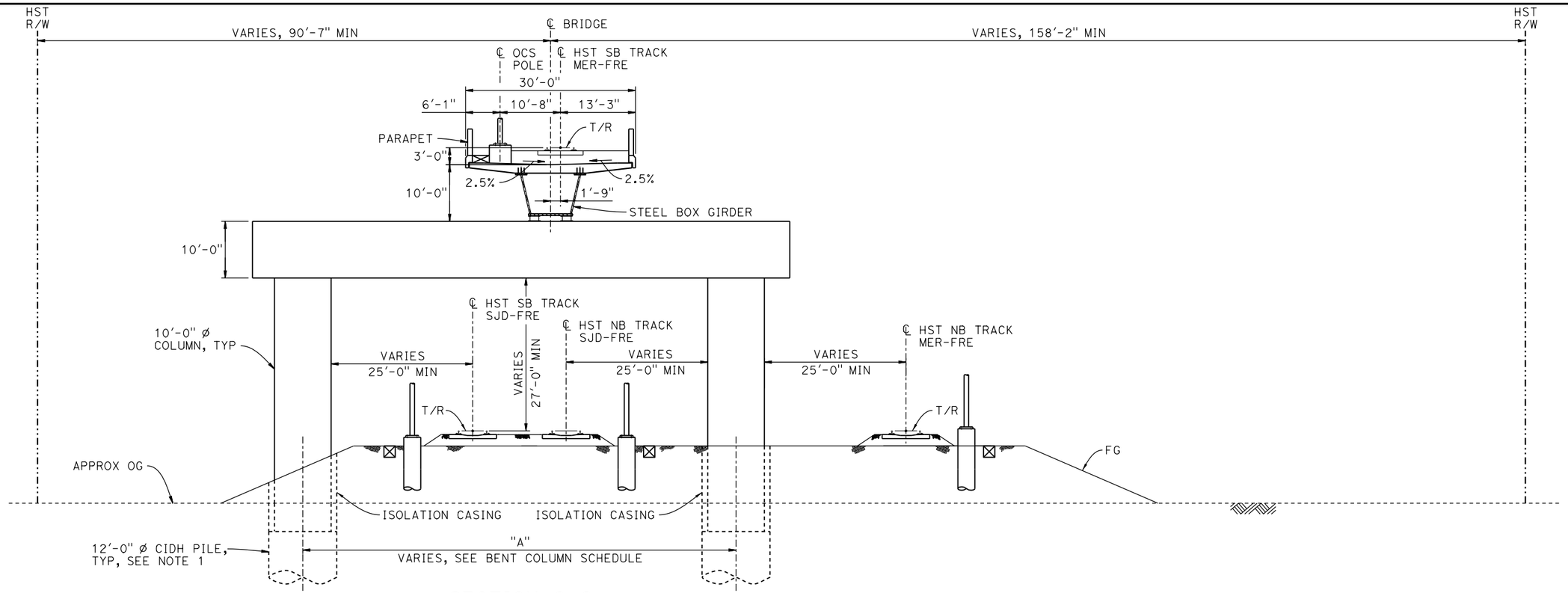

SECTION C-C

1" = 10'

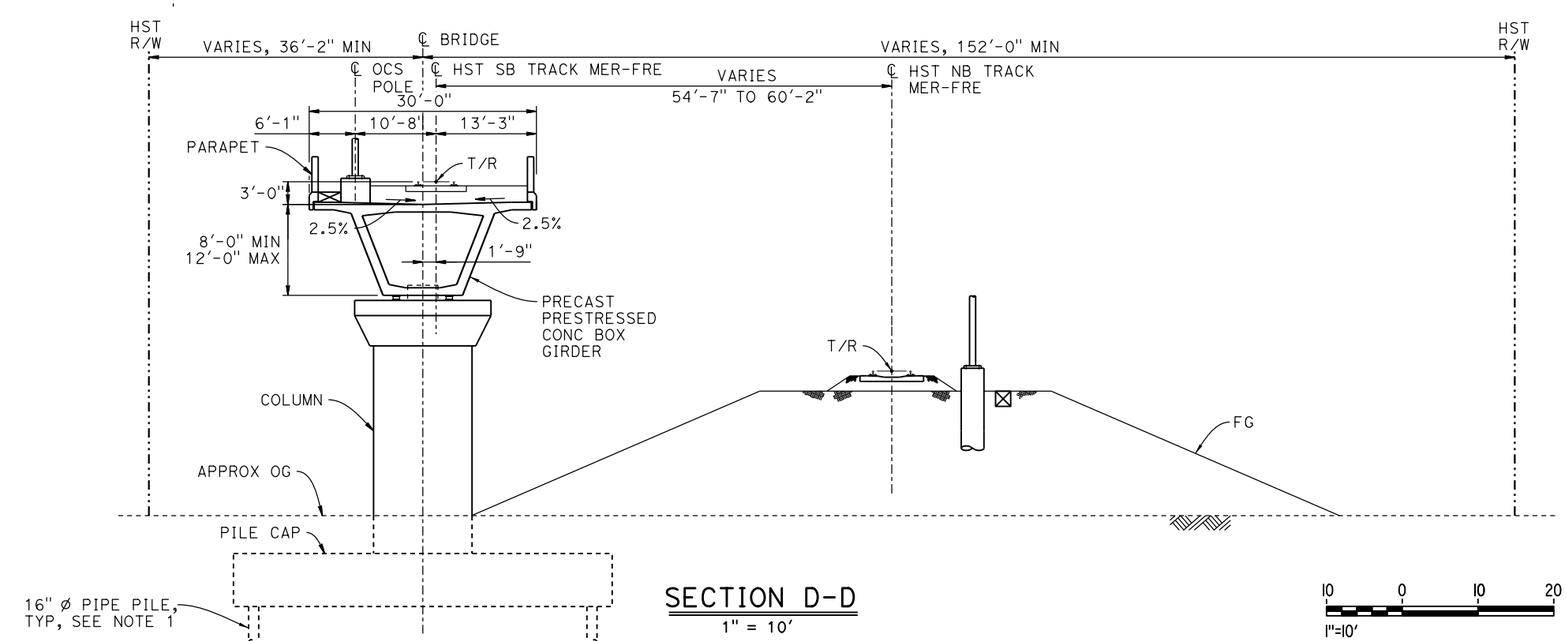

SECTION D-D

1" = 10'

10 0 10 20
1"=10'

NOTES:

1. PILE AND DRILLED SHAFT LENGTHS TO BE DETERMINED.
2. FOR TRACK SUPERELEVATION DETAILS, SEE ALIGNMENT AND TYPICAL SECTION PLANS; DRAWING TT-B0054-A.

REV	DATE	BY	CHK	APP	DESCRIPTION

DESIGNED BY R. MOTHE
DRAWN BY J. KIDWELL
CHECKED BY O. EDEWOR
IN CHARGE C. LEMLEY
DATE 02/13/2015

RECORD SET 15% DESIGN SUBMITTAL

NOT FOR CONSTRUCTION

PARSONS

CALIFORNIA HIGH-SPEED RAIL AUTHORITY

CALIFORNIA HIGH-SPEED TRAIN PROJECT
MERCED TO FRESNO SECTION
CENTRAL VALLEY WYE
SR 152 (NORTH) TO ROAD 13 WYE ALTERNATIVE
TYPICAL SECTIONS (MER-FRE)
AERIAL #3 - SOUTHBOUND OVER HST MAINLINE - 6 OF 6

CONTRACT NO. HSR08-05
DRAWING NO. ST-K3422-A
SCALE AS SHOWN
SHEET NO.

MF-ST-K3422-A.dgn
06-FEB-2015 5:30
p0036110

TOP OF RAIL PROFILE (℄ HST NB TRACK)

NO SCALE

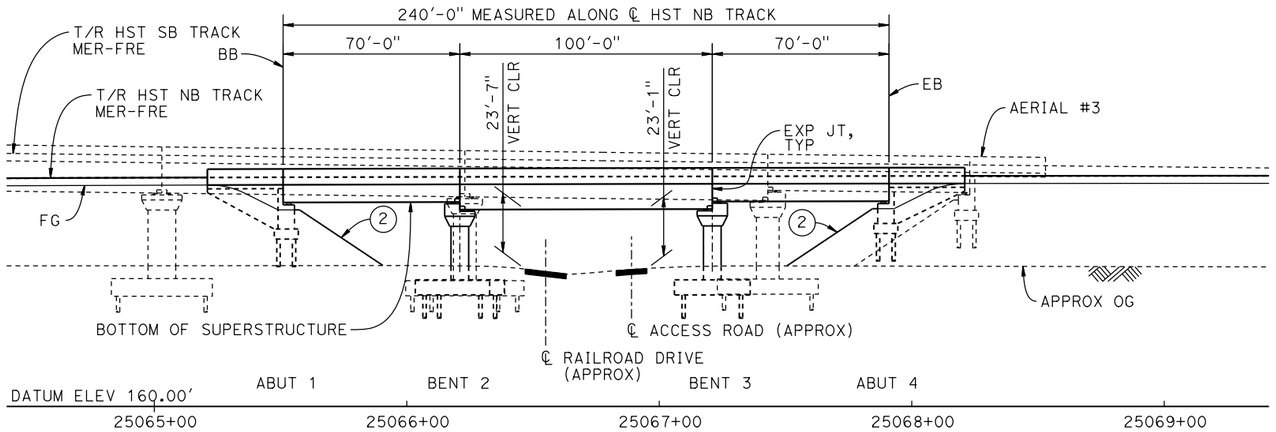

DEVELOPED ELEVATION

1"=30'

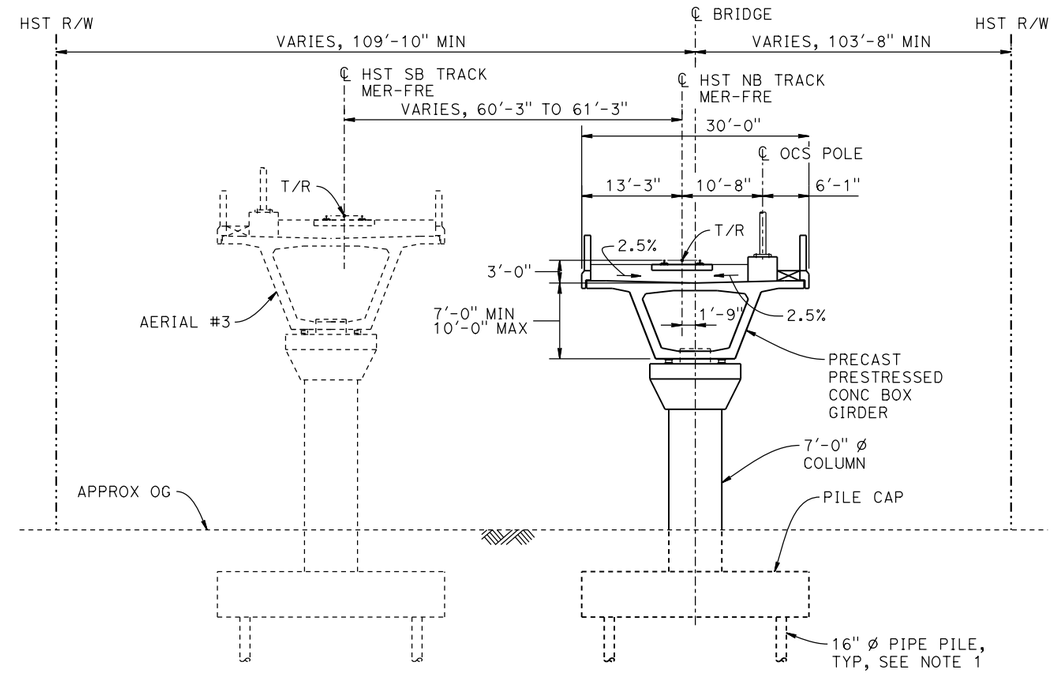

TYPICAL SECTION

1" = 10'

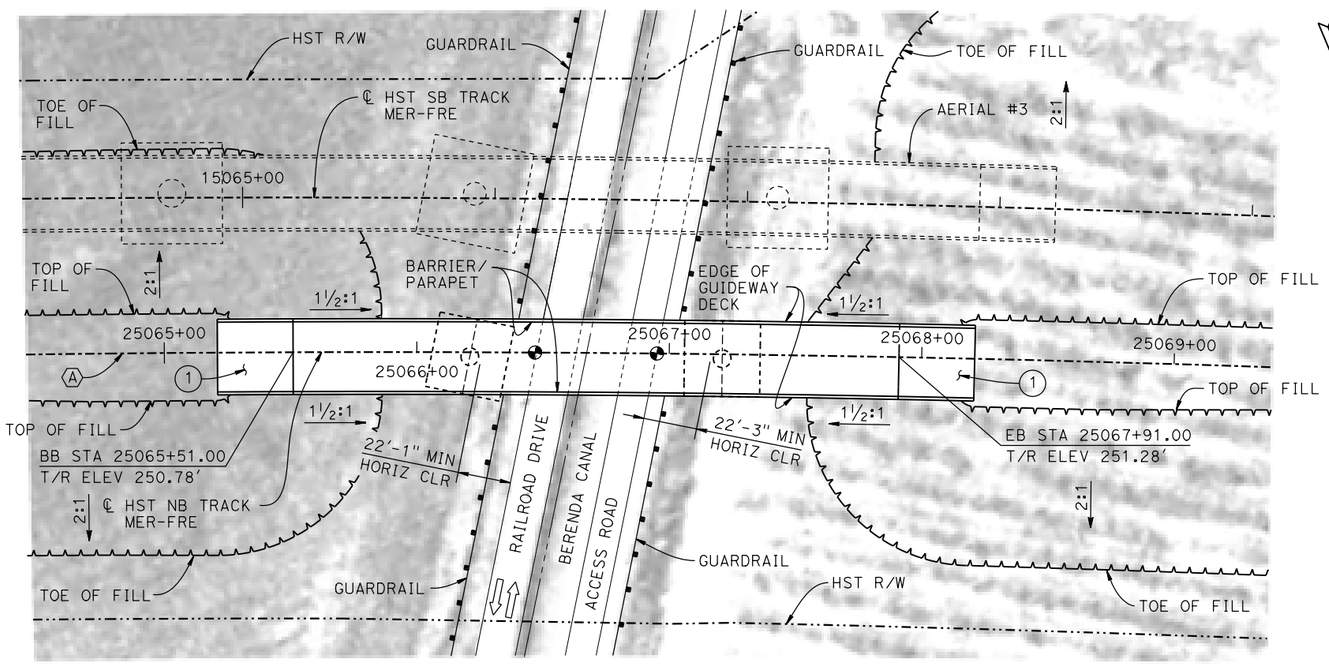

PLAN

1"=30'

CURVE MER-FRE 1 NB (A)
R = 10,300.00'
LS = 1,500.00'

LEGEND:

- ⇨ INDICATES DIRECTION OF TRAFFIC
- ⊕ INDICATES POINT OF MINIMUM VERTICAL CLEARANCE
- (1) STRUCTURE APPROACH
- (2) SLOPE PAVING (1½H:1V)

NOTES:

1. 16" ø PIPE PILES ASSUMED FOR ABUTMENT AND BENT FOUNDATIONS. PILE LENGTHS TO BE DETERMINED.
2. FOR UTILITY DISPOSITIONS, SEE CIVIL AND GRADE SEPARATION PLANS; DRAWING CV-S1430-A.
3. FOR GUARDRAILS, SEE CIVIL AND GRADE SEPARATION PLANS; DRAWING CV-S1430-A.
4. ANY EXISTING DIRT ROAD THAT CONFLICTS WITH NEW CONSTRUCTION SHALL BE REALIGNED.
5. FOR TRACK SUPERELEVATION DETAILS, SEE ALIGNMENT AND TYPICAL SECTION PLANS; DRAWING TT-B0055-A.
6. FOR AERIAL #3 - SOUTHBOUND OVER HST MAINLINE GENERAL PLAN AND TYPICAL SECTIONS, SEE DRAWINGS ST-K1420-A TO ST-K1422-A AND ST-K3420-A TO ST-K3422-A.

TEMPORARY TRAFFIC OPENINGS

VEHICULAR TRAFFIC

1. __ TRAFFIC WILL BE DETOURED AWAY FROM THE SITE.
2. X TRAFFIC WILL PASS UNDER THE STRUCTURE ON:

ST OR ROAD NAME AND LOCATION		FALSEWORK OPENING REQD (HORIZ X VERT)	
RAILROAD DRIVE	25066+55	20'X16.5'	2-WAY
ACCESS ROAD	25066+89	20'X16.5'	-

3. __ TEMP TRAFFIC LANE REDUCTION FOR FTG EXC.

10 0 10 20 — 1"=10'

30 0 30 60 — 1"=30'

REV	DATE	BY	CHK	APP	DESCRIPTION

DESIGNED BY R. MOTHE
DRAWN BY R. M.
CHECKED BY S. J. S.
IN CHARGE C. LEMLEY
DATE 02/13/2015

RECORD SET
15% DESIGN SUBMITTAL

NOT FOR CONSTRUCTION

PARSONS

CALIFORNIA HIGH-SPEED RAIL AUTHORITY

CALIFORNIA HIGH-SPEED TRAIN PROJECT
MERCED TO FRESNO SECTION
CENTRAL VALLEY WYE
SR 152 (NORTH) TO ROAD 13 WYE ALTERNATIVE
GENERAL PLAN (MER-FRE)
RAILROAD DRIVE UNDERPASS (HST NB)

CONTRACT NO. HSR08-05
DRAWING NO. ST-K1430-A
SCALE AS SHOWN
SHEET NO.

MF-ST-K1430-A.dgn
06-FEB-2015 16:13
p0036110

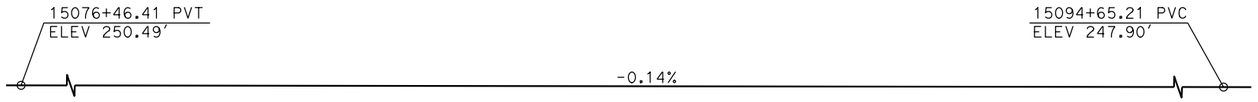

TOP OF RAIL PROFILE (℄ HST SB TRACK)

NO SCALE

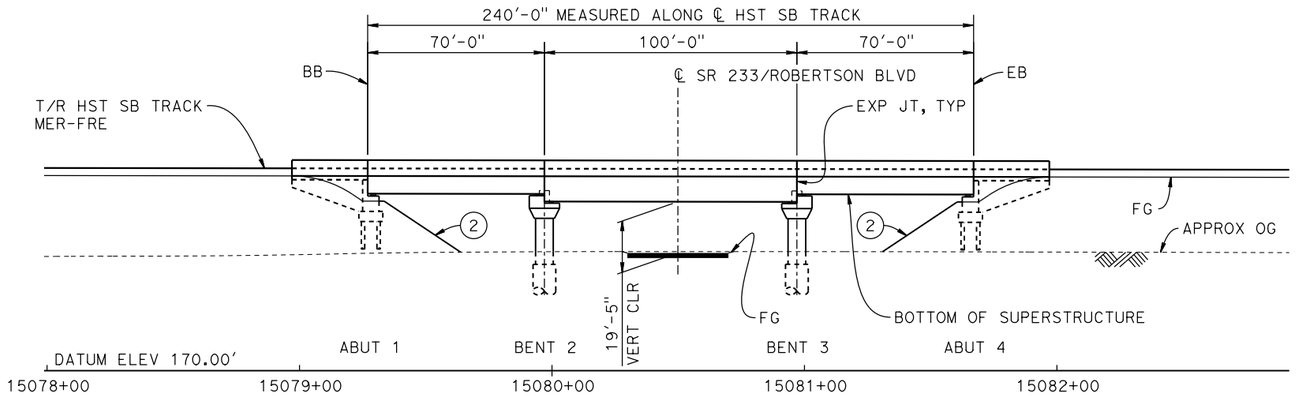

DEVELOPED ELEVATION

(SB BRIDGE SHOWN, NB BRIDGE SIMILAR)
1"=30'

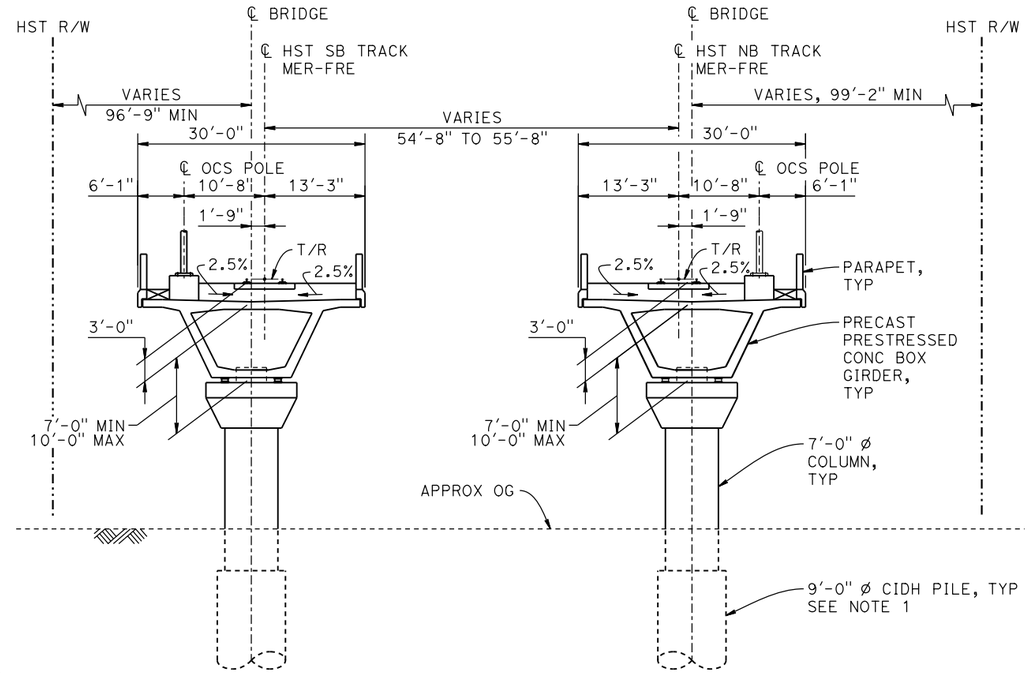

TYPICAL SECTION

1" = 10'

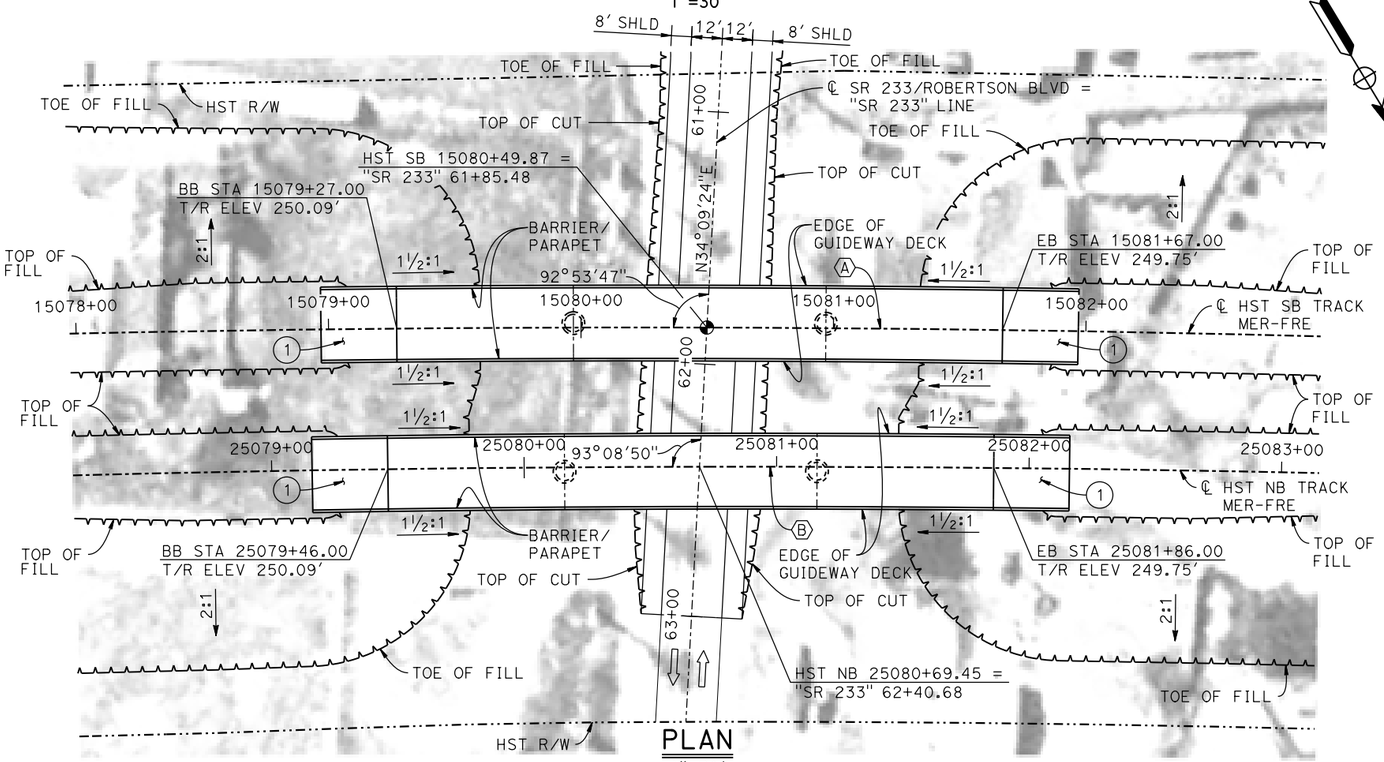

PLAN

1"=30'

CURVE MER-FRE 1 SB (A)

R = 10,350.00'
LS = 1,500.00'

CURVE MER-FRE 1 NB (B)

R = 10,300.00'
LS = 1,500.00'

LEGEND:

- ◕ INDICATES POINT OF MINIMUM VERTICAL CLEARANCE
- ⇨ INDICATES DIRECTION OF TRAFFIC
- (1) STRUCTURE APPROACH
- (2) SLOPE PAVING (1½H:1V)

TEMPORARY TRAFFIC OPENINGS

VEHICULAR TRAFFIC

1. __ TRAFFIC WILL BE DETOURED AWAY FROM THE SITE.
2. X TRAFFIC WILL PASS UNDER THE STRUCTURE ON:

ST OR ROAD NAME AND LOCATION		FALSEWORK OPENING REQD (HORIZ X VERT)	
SR 233/ROBERTSON BOULEVARD	15080+50	32'X16.5'	2-WAY

3. __ TEMP TRAFFIC LANE REDUCTION FOR FTG EXC.

NOTES:

1. 16" ø PIPE PILES ASSUMED FOR ABUTMENT FOUNDATIONS. PILE AND DRILLED SHAFT LENGTHS TO BE DETERMINED.
2. FOR UTILITY DISPOSITIONS, SEE CIVIL AND GRADE SEPARATION PLANS; DRAWING CV-S1430-A.
3. FOR TRACK SUPERELEVATION DETAILS, SEE ALIGNMENT AND TYPICAL SECTION PLANS; DRAWINGS TT-B0054-A AND TT-B0055-A.

10 0 10 20
1"=10'

30 0 30 60
1"=30'

REV	DATE	BY	CHK	APP	DESCRIPTION

DESIGNED BY R. MOTHE
DRAWN BY J. KIDWELL
CHECKED BY O. EDEWOR
IN CHARGE C. LEMLEY
DATE 02/13/2015

RECORD SET
15% DESIGN SUBMITTAL

NOT FOR CONSTRUCTION

PARSONS

CALIFORNIA HIGH-SPEED RAIL AUTHORITY

CALIFORNIA HIGH-SPEED TRAIN PROJECT
MERCED TO FRESNO SECTION
CENTRAL VALLEY WYE
SR 152 (NORTH) TO ROAD 13 WYE ALTERNATIVE
GENERAL PLAN (MER-FRE)
ROBERTSON BOULEVARD (SR 233) UNDERPASS

CONTRACT NO. HSR08-05
DRAWING NO. ST-K1433-A
SCALE AS SHOWN
SHEET NO.

MF-ST-K1433-A.dgn
06-FEB-2015 16:13
p0036110

TOP OF RAIL PROFILE (℄ HST SB TRACK)

NO SCALE

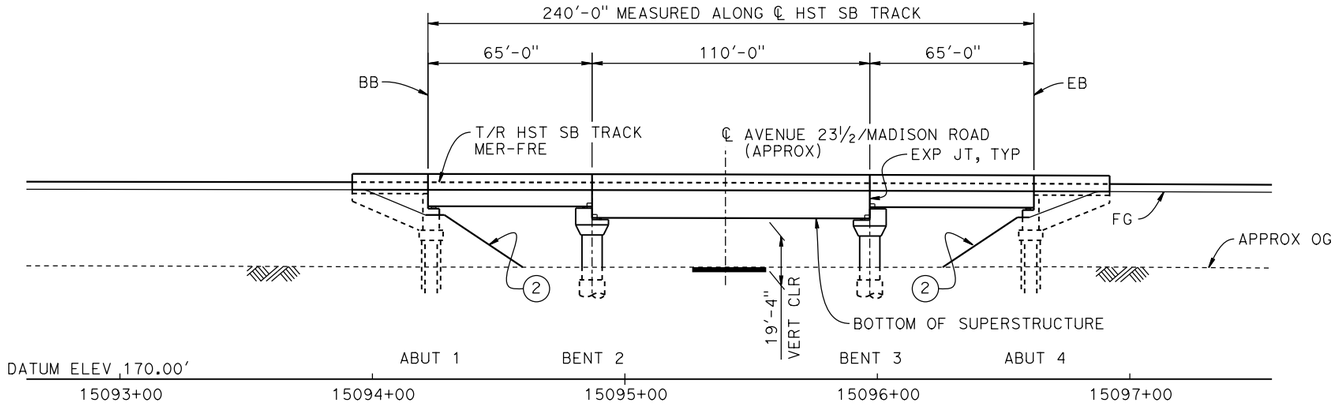

DEVELOPED ELEVATION

(SB BRIDGE SHOWN, NB BRIDGE SIMILAR)
1"=30'

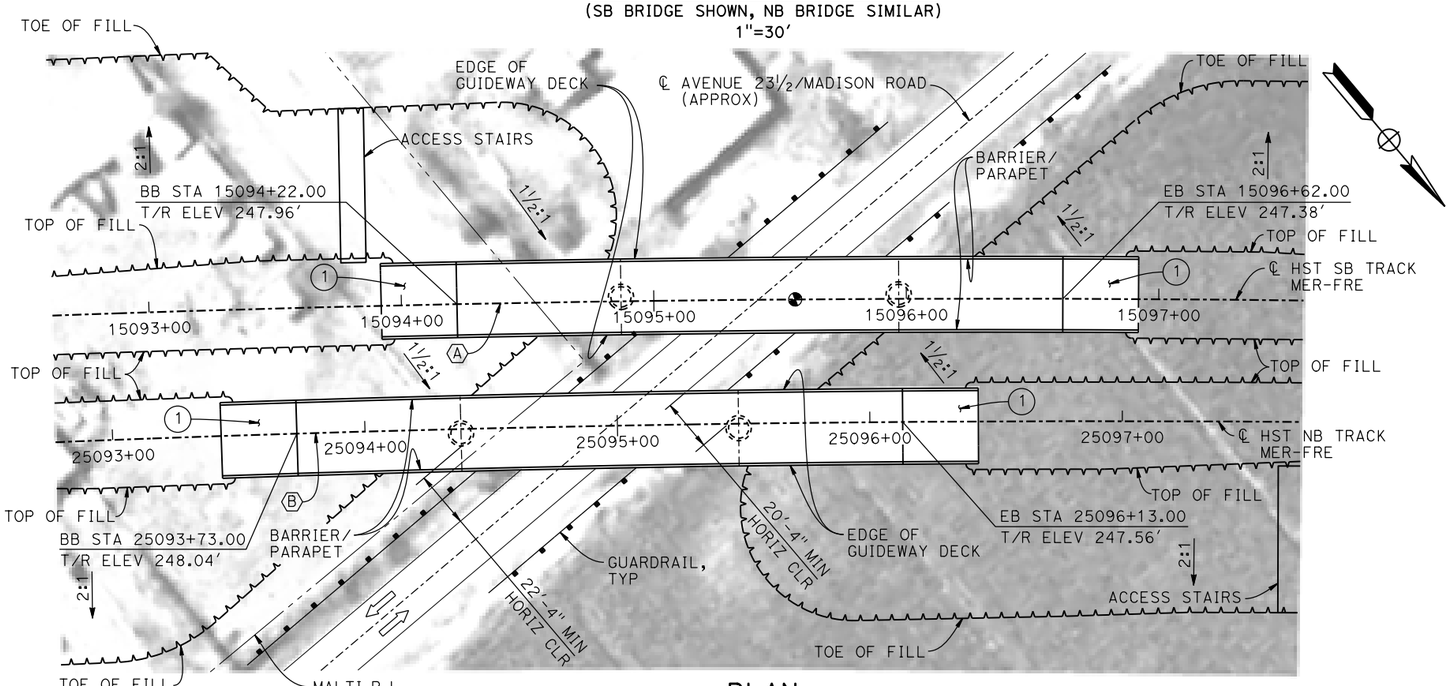

PLAN

1"=30'

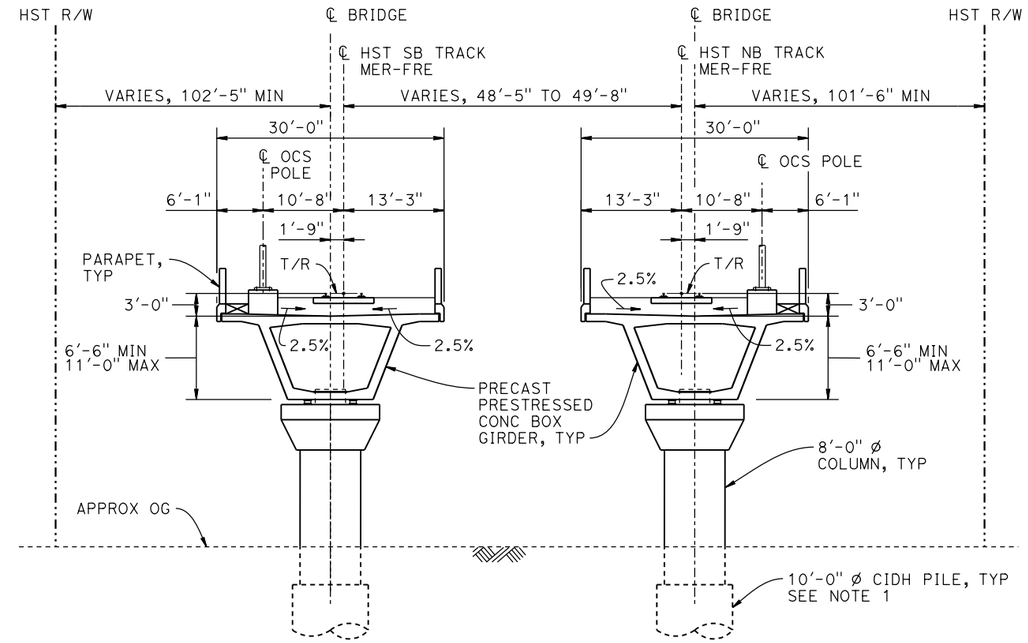

TYPICAL SECTION

1" = 10'

CURVE MER-FRE 1 SB (A)

R = 10,350.00'
LS = 1,500.00'

CURVE MER-FRE 1 NB (B)

R = 10,300.00'
LS = 1,500.00'

TEMPORARY TRAFFIC OPENINGS

VEHICULAR TRAFFIC

1. __ TRAFFIC WILL BE DETOURED AWAY FROM THE SITE.
2. X TRAFFIC WILL PASS UNDER THE STRUCTURE ON:

ST OR ROAD NAME AND LOCATION		FALSEWORK OPENING REQD (HORIZ X VERT)	
AVENUE 23½/ MADISON ROAD	15095+41	32'X16.5'	2-WAY

3. __ TEMP TRAFFIC LANE REDUCTION FOR FTG EXC.

LEGEND:

- INDICATES POINT OF MINIMUM VERTICAL CLEARANCE
- INDICATES DIRECTION OF TRAFFIC
- (1) STRUCTURE APPROACH
- (2) SLOPE PAVING (1½H:1V)

NOTES:

1. 16" ø PIPE PILES ASSUMED AT ABUTMENT FOUNDATIONS. PILE AND DRILLED SHAFT LENGTHS TO BE DETERMINED.
2. FOR UTILITY DISPOSITIONS, SEE CIVIL AND GRADE SEPARATION PLANS; DRAWING CV-S1430-A.
3. FOR GUARDRAILS, SEE CIVIL AND GRADE SEPARATION PLANS; DRAWING CV-S1430-A.
4. FOR TRACK SUPERELEVATION DETAILS, SEE ALIGNMENT AND TYPICAL SECTION PLANS; DRAWINGS TT-B0054-A AND TT-B0055-A.

10 0 10 20 — 1"=10'
30 0 30 60 — 1"=30'

REV	DATE	BY	CHK	APP	DESCRIPTION

DESIGNED BY R.P.M.
DRAWN BY R. M.
CHECKED BY S. J. S.
IN CHARGE C. LEMLEY
DATE 02/13/2015

RECORD SET
15% DESIGN SUBMITTAL

NOT FOR CONSTRUCTION

PARSONS

CALIFORNIA HIGH-SPEED RAIL AUTHORITY

CALIFORNIA HIGH-SPEED TRAIN PROJECT
MERCED TO FRESNO SECTION
CENTRAL VALLEY WYE
SR 152 (NORTH) TO ROAD 13 WYE ALTERNATIVE
GENERAL PLAN (MER-FRE)
MADISON ROAD (AVENUE 23½) UNDERPASS

CONTRACT NO. HSR08-05
DRAWING NO. ST-K1436-A
SCALE AS SHOWN
SHEET NO.

MF-ST-K1436-A.dgn
06-FEB-2015 6:14
p0036110

TOP OF RAIL PROFILE (℄ HST SB TRACK MER-FRE)

NO SCALE

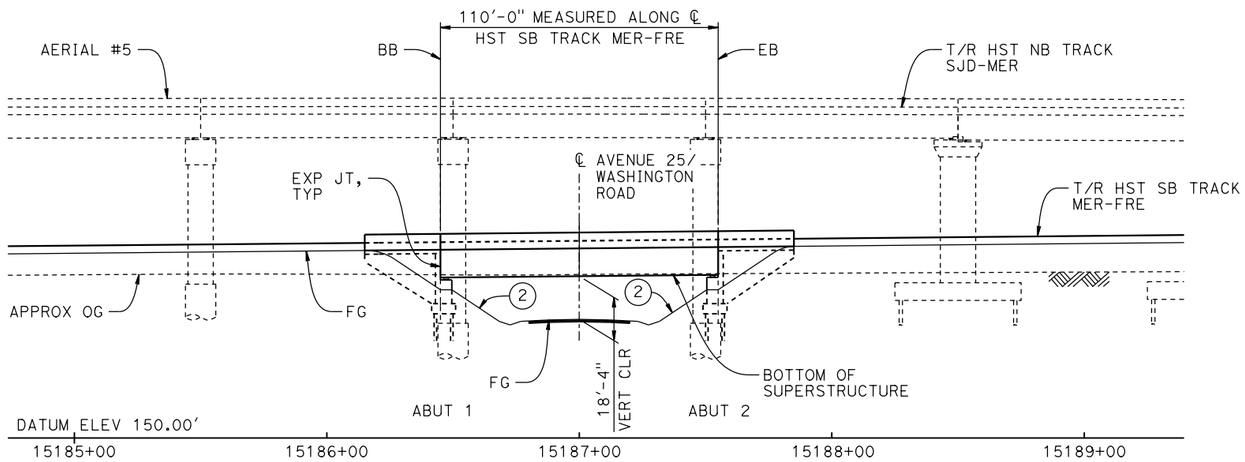

DEVELOPED ELEVATION

1" = 30'

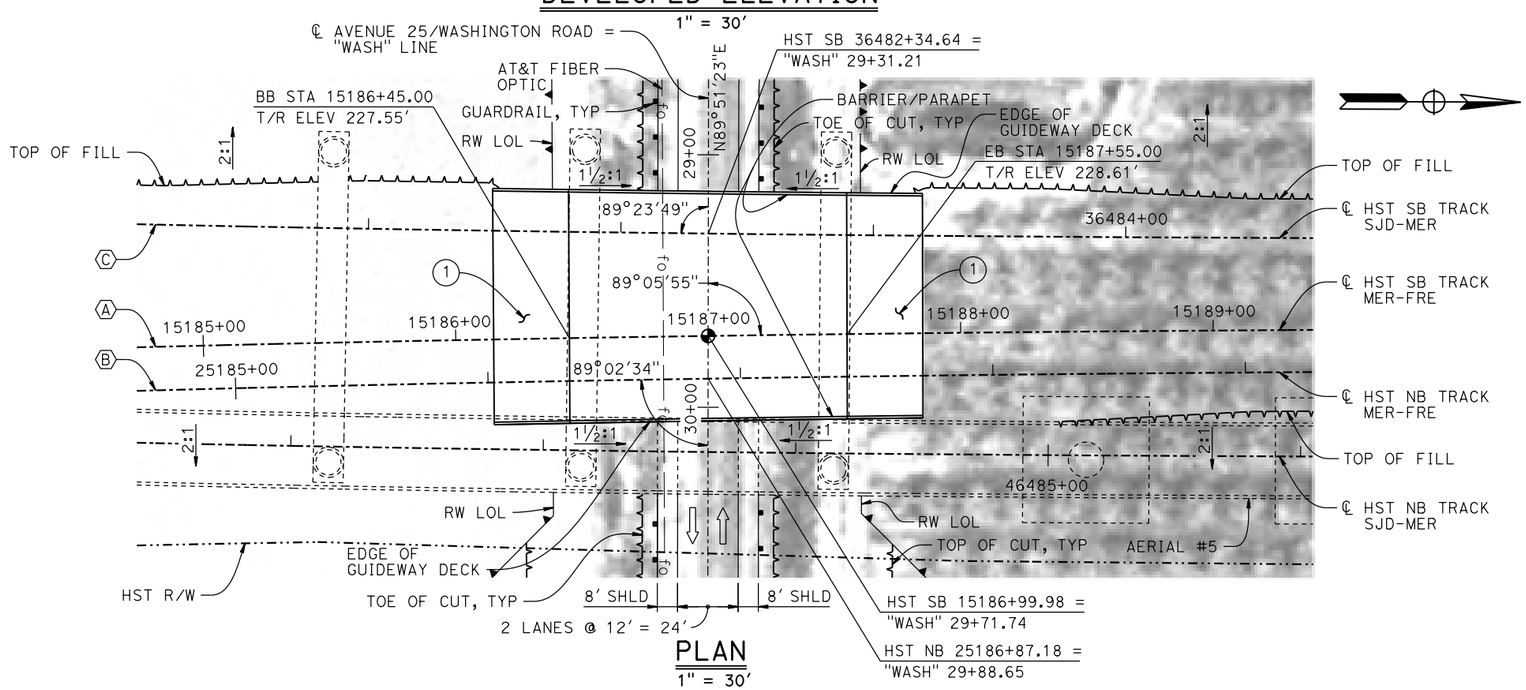

PLAN

1" = 30'

TEMPORARY TRAFFIC OPENINGS

VEHICULAR TRAFFIC

1. __ TRAFFIC WILL BE DETOURED AWAY FROM THE SITE.
2. X TRAFFIC WILL PASS UNDER THE STRUCTURE ON:

STREET OR ROAD NAME AND LOCATION		FALSEWORK OPENING REQD (HORIZ x VERT)	
AVENUE 25/WASHINGTON ROAD	15187+00	32'x15'	2-WAY

3. __ TEMP TRAFFIC LANE REDUCTION FOR FTG EXC.

LEGEND:

- INDICATES POINT OF MINIMUM VERTICAL CLEARANCE
- INDICATES DIRECTION OF TRAFFIC
- (1) STRUCTURE APPROACH
- (2) SLOPE PAVING (1½H:1V)

NOTES:

1. 16"Ø PIPE PILES ASSUMED FOR ABUTMENT FOUNDATIONS. PILE LENGTHS TO BE DETERMINED.
2. FOR TYPICAL SECTION, SEE DRAWING ST-K3450-A.
3. FOR UTILITY DISPOSITIONS, SEE CIVIL AND GRADE SEPARATION PLANS; DRAWING CV-S1450-A.
4. FOR RETAINING WALLS, SEE CIVIL AND GRADE SEPARATION PLANS; DRAWING CV-S1450-A.
5. FOR GUARDRAILS, SEE CIVIL AND GRADE SEPARATION PLANS; DRAWING CV-S1450-A.
6. FOR AERIAL #5 - NORTHBOUND OVER HST MERCED TO FRESNO GENERAL PLAN AND TYPICAL SECTIONS, SEE DRAWINGS ST-K1650-A TO ST-K1652-A, ST-K3650-A AND ST-K3651-A.

CURVE MER-FRE 1 SB (A)

R = 10,350.00'
LS = 1,500.00'

CURVE MER-FRE 1 NB (B)

R = 10,300.00'
LS = 1,500.00'

CURVE SJD-MER 1 SB (C)

R = 10,300.00'
LS = 1,500.00'

30 0 30 60
1"=30'

REV	DATE	BY	CHK	APP	DESCRIPTION

DESIGNED BY R. M.
DRAWN BY S. HICKS
CHECKED BY S. J. S.
IN CHARGE C. LEMLEY
DATE 02/13/2015

RECORD SET
15% DESIGN
SUBMITTAL

NOT FOR
CONSTRUCTION

PARSONS

CALIFORNIA
HIGH-SPEED RAIL AUTHORITY

CALIFORNIA HIGH-SPEED TRAIN PROJECT
MERCED TO FRESNO SECTION
CENTRAL VALLEY WYE
SR 152 (NORTH) TO ROAD 13 WYE ALTERNATIVE
GENERAL PLAN (MER-FRE)
WASHINGTON ROAD (AVENUE 25) UNDERPASS - 1 OF 2

CONTRACT NO. HSR08-05
DRAWING NO. ST-K1450-A
SCALE AS SHOWN
SHEET NO.

MF-ST-K1450-A.dgn
06-FEB-2015 7:34
p0036110

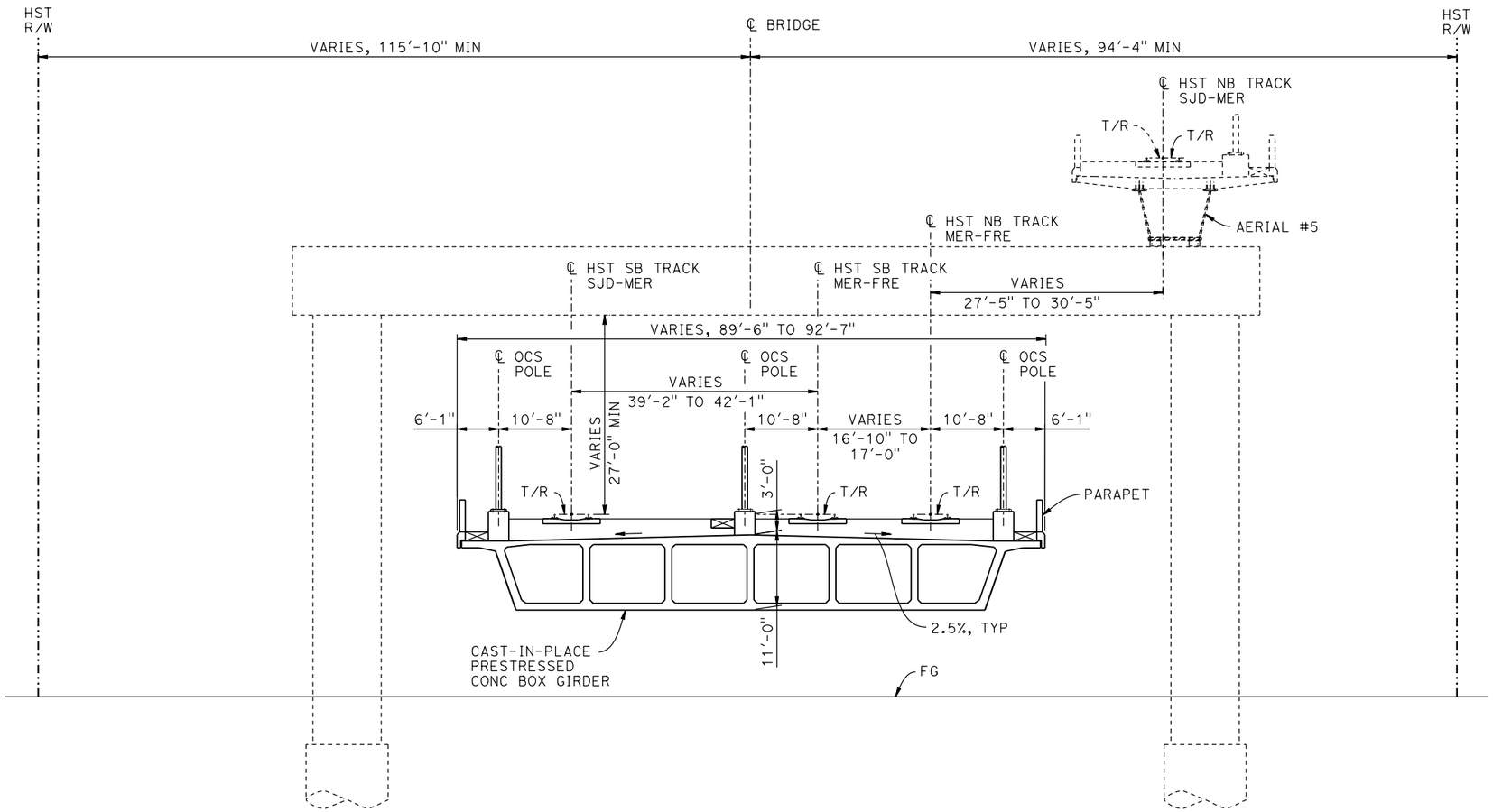

TYPICAL SECTION

1"=10'

NOTES:

1. FOR TRACK SUPERELEVATION DETAILS, SEE ALIGNMENT AND TYPICAL SECTION PLANS; DRAWINGS TT-B0054-A TO TT-B0056-A.

10 0 10 20

1"=10'

REV	DATE	BY	CHK	APP	DESCRIPTION

DESIGNED BY R. M.
DRAWN BY S. HICKS
CHECKED BY S. J. S.
IN CHARGE C. LEMLEY
DATE 02/13/2015

RECORD SET
15% DESIGN SUBMITTAL

NOT FOR CONSTRUCTION

PARSONS

CALIFORNIA HIGH-SPEED RAIL AUTHORITY

CALIFORNIA HIGH-SPEED TRAIN PROJECT
MERCED TO FRESNO SECTION
CENTRAL VALLEY WYE
SR 152 (NORTH) TO ROAD 13 WYE ALTERNATIVE
TYPICAL SECTION (MER-FRE)
WASHINGTON ROAD (AVENUE 25) UNDERPASS - 2 OF 2

CONTRACT NO. HSR08-05
DRAWING NO. ST-K3450-A
SCALE AS SHOWN
SHEET NO.

p0036110 06-FEB-2015 7:35 MF-ST-K3450-A.dgn

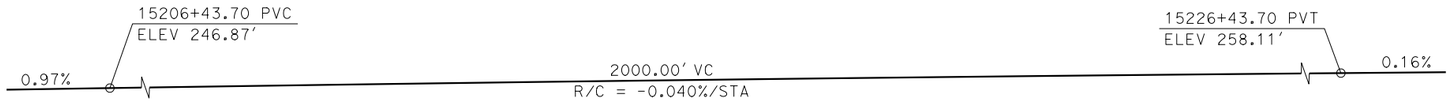

TOP OF RAIL PROFILE (℄ HST SB TRACK MER-FRE)

NO SCALE

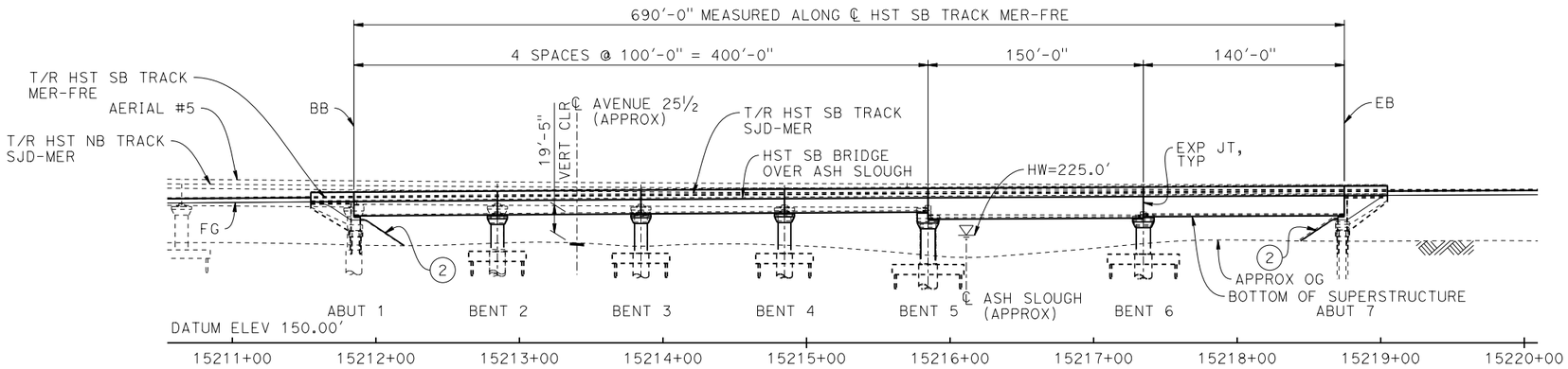

ELEVATION

1" = 50'

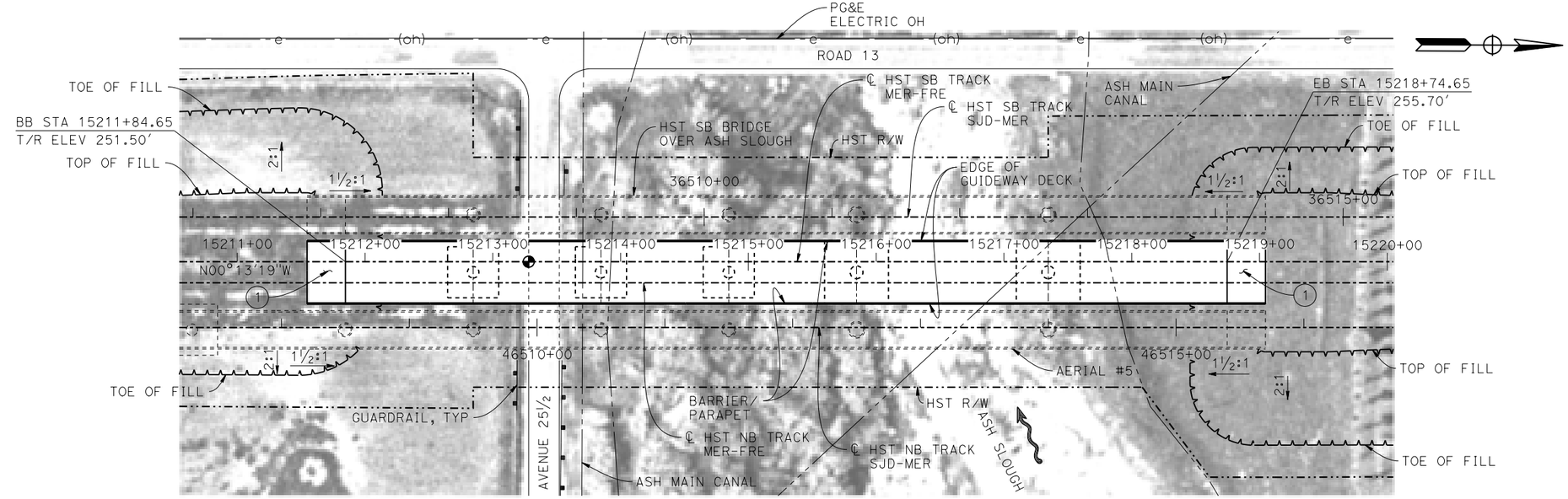

PLAN

1" = 50'

TEMPORARY TRAFFIC OPENINGS

VEHICULAR TRAFFIC

1. __ TRAFFIC WILL BE DETOURED AWAY FROM THE SITE.
2. X TRAFFIC WILL PASS UNDER THE STRUCTURE ON:

ST OR ROAD NAME AND LOCATION		FALSEWORK OPENING REQD (HORIZ X VERT)	
AVENUE 25½	15213+38	32'X16.5'	2-WAY

3. __ TEMP TRAFFIC LANE REDUCTION FOR FTG EXC.

LEGEND:

- INDICATES POINT OF MINIMUM VERTICAL CLEARANCE
- INDICATES DIRECTION OF FLOW
- (1) STRUCTURE APPROACH
- (2) SLOPE PAVING (1½H:1V)

NOTES:

1. 16"Ø PIPE PILES ASSUMED FOR ABUTMENT AND BENT FOUNDATIONS. PILE LENGTHS TO BE DETERMINED.
2. FOR SECTION AND BENT COLUMN SCHEDULE, SEE DRAWING ST-K3455-A.
3. FOR UTILITY DISPOSITIONS, SEE CIVIL AND GRADE SEPARATION PLANS; DRAWING CV-S1450-A.
4. FOR GUARDRAILS, SEE CIVIL AND GRADE SEPARATION PLANS; DRAWING CV-S1450-A.
5. ANY EXISTING DIRT ROAD THAT CONFLICTS WITH NEW CONSTRUCTION SHALL BE REALIGNED.
6. FOR AERIAL #5 - NORTHBOUND OVER HST MERCED TO FRESNO GENERAL PLAN AND TYPICAL SECTIONS, SEE DRAWINGS ST-K1650-A TO ST-K1652-A, ST-K3650-A, AND ST-K3651-A.
7. FOR HST SB BRIDGE OVER ASH SLOUGH GENERAL PLAN AND TYPICAL SECTIONS, SEE DRAWINGS ST-K1655-A AND ST-K3655-A.

50 0 50 100
1"=50'

REV	DATE	BY	CHK	APP	DESCRIPTION

DESIGNED BY A. M.
DRAWN BY J. KIDWELL
CHECKED BY O. EDEWOR
IN CHARGE C. LEMLEY
DATE 05/08/2015

RECORD SET 15% DESIGN SUBMITTAL

NOT FOR CONSTRUCTION

PARSONS

CALIFORNIA HIGH-SPEED RAIL AUTHORITY

CALIFORNIA HIGH-SPEED TRAIN PROJECT
MERCED TO FRESNO SECTION
CENTRAL VALLEY WYE
SR 152 (NORTH) TO ROAD 13 WYE ALTERNATIVE
GENERAL PLAN (MER-FRE)
ASH SLOUGH BRIDGE - 1 OF 2

CONTRACT NO. HSR08-05
DRAWING NO. ST-K1455-A
SCALE AS SHOWN
SHEET NO.

MF-ST-K1455-A.dgn 16-MAR-2016 6:01 p0051330

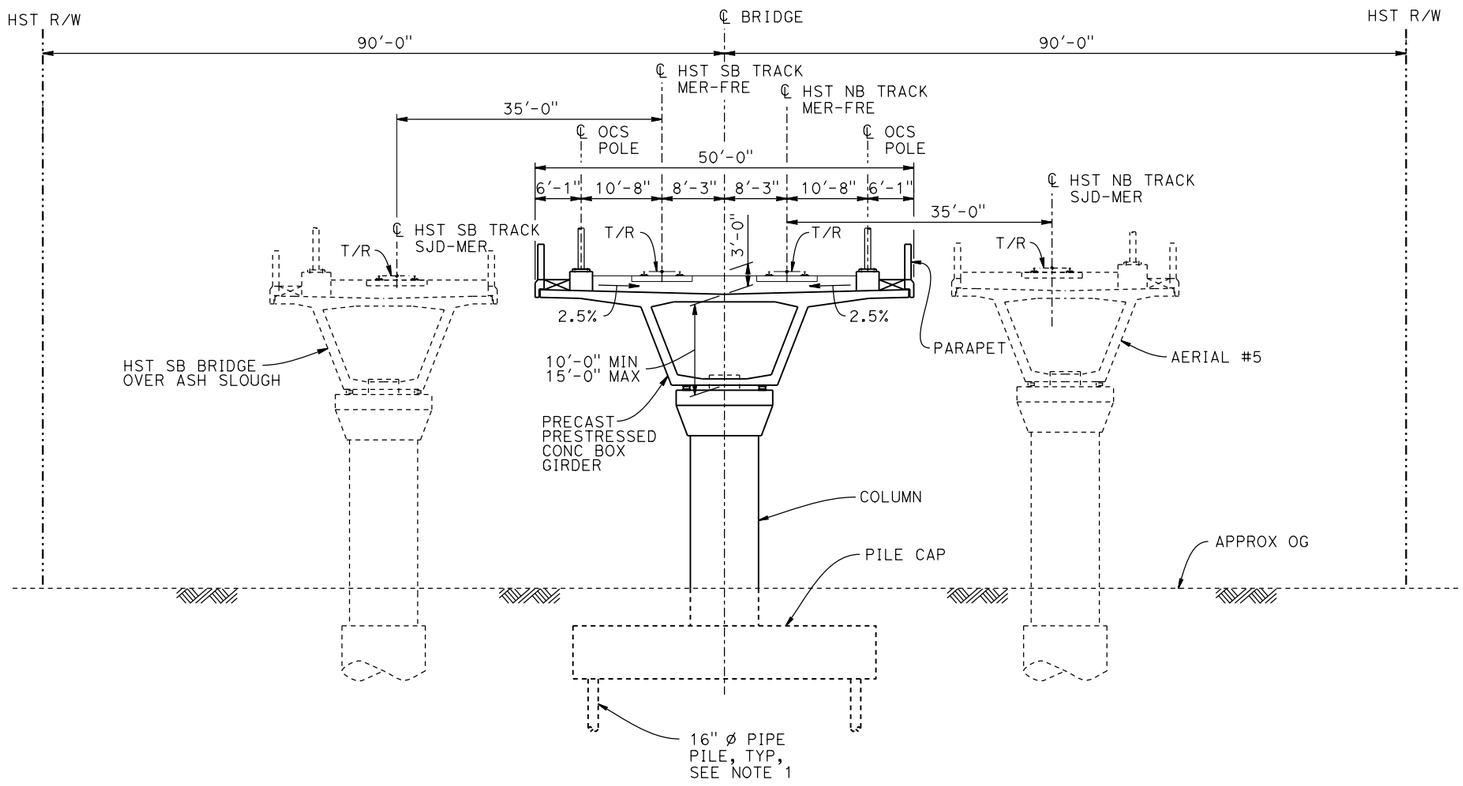

TYPICAL SECTION

1" = 10'

BENT COLUMN SCHEDULE	
BENT	COLUMN TYPE
2 - 4	9'-0" ø
5 - 6	10'-0"ø

NOTES:

1. PILE LENGTHS TO BE DETERMINED.

10 0 10 20
1"=10'

REV	DATE	BY	CHK	APP	DESCRIPTION

DESIGNED BY A. M.
DRAWN BY J. KIDWELL
CHECKED BY O. EDEWOR
IN CHARGE C. LEMLEY
DATE 02/13/2015

RECORD SET
15% DESIGN
SUBMITTAL

NOT FOR
CONSTRUCTION

PARSONS

CALIFORNIA
HIGH-SPEED RAIL AUTHORITY

CALIFORNIA HIGH-SPEED TRAIN PROJECT
MERCED TO FRESNO SECTION
CENTRAL VALLEY WYE
SR 152 (NORTH) TO ROAD 13 WYE ALTERNATIVE
TYPICAL SECTION (MER-FRE)
ASH SLOUGH BRIDGE - 2 OF 2

CONTRACT NO. HSR08-05
DRAWING NO. ST-K3455-A
SCALE AS SHOWN
SHEET NO.

p0036110 06-FEB-2015 15:45 MF-ST-K3455-A.dgn

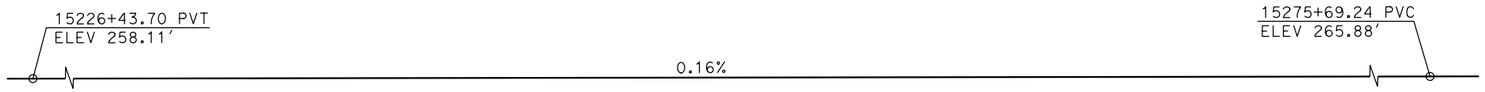

TOP OF RAIL PROFILE (℄ HST SB TRACK)

NO SCALE

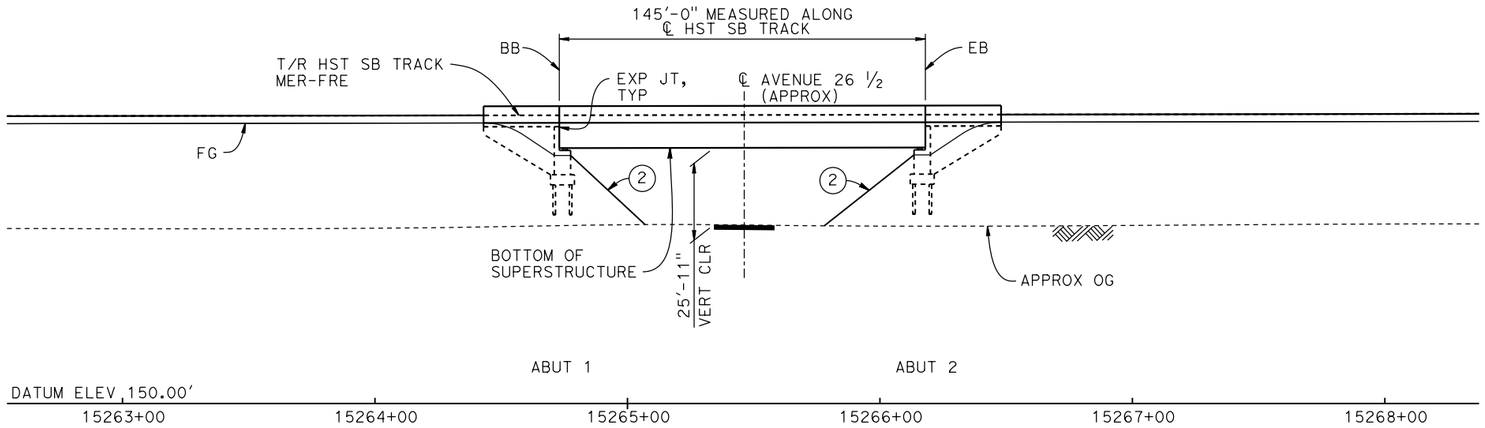

DEVELOPED ELEVATION

1" = 30'

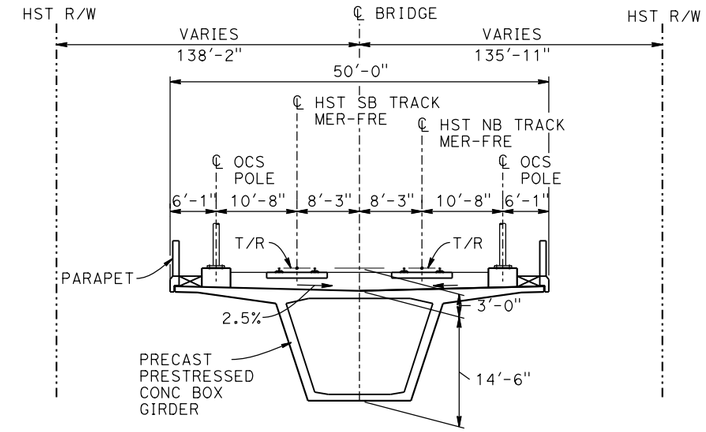

TYPICAL SECTION

1" = 10'

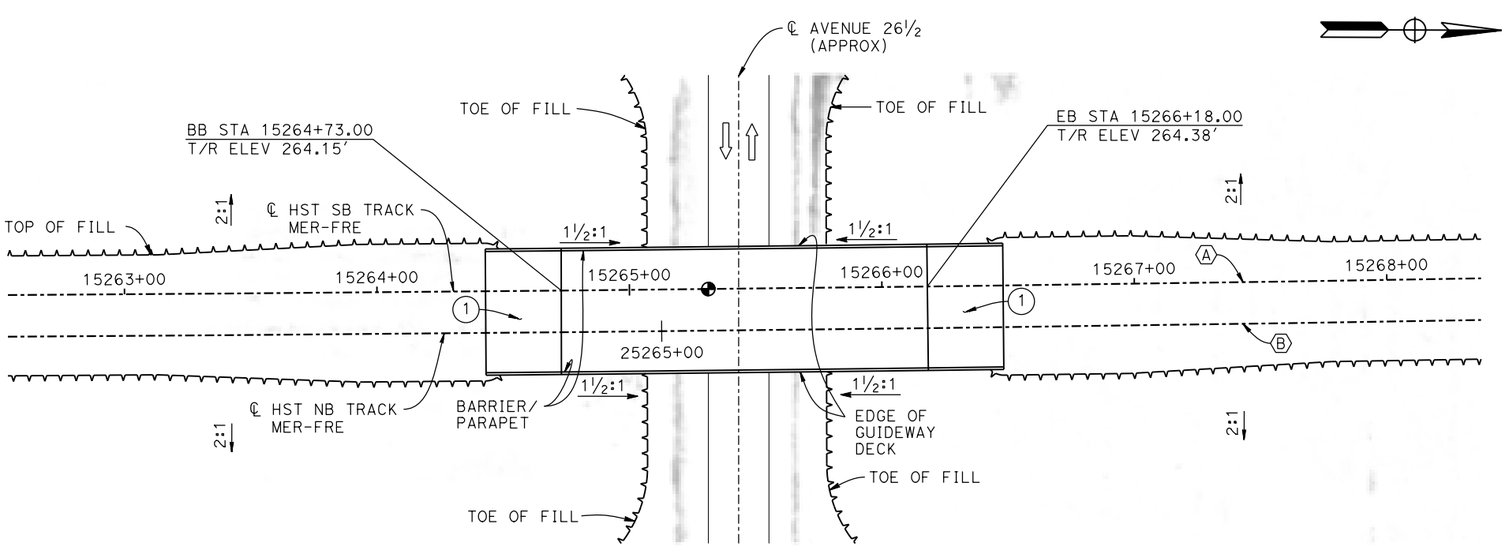

PLAN

1" = 30'

TEMPORARY TRAFFIC OPENINGS

VEHICULAR TRAFFIC

1. __ TRAFFIC WILL BE DETOURED AWAY FROM THE SITE.
2. X TRAFFIC WILL PASS UNDER THE STRUCTURE ON:

ST OR ROAD NAME AND LOCATION		FALSEWORK OPENING REQD (HORIZ X VERT)	
AVENUE 26 1/2	15265+45	32'X16.5'	2-WAY

3. __ TEMP TRAFFIC LANE REDUCTION FOR FTG EXC.

LEGEND:

- INDICATES POINT OF MINIMUM VERTICAL CLEARANCE
- INDICATES DIRECTION OF TRAFFIC
- (1) STRUCTURE APPROACH
- (2) SLOPE PAVING (1 1/2H:1V)

NOTES:

1. 16" ø PIPE PILES ASSUMED FOR ABUTMENT FOUNDATIONS. PILE LENGTHS TO BE DETERMINED.
2. FOR UTILITY DISPOSITIONS, SEE CIVIL AND GRADE SEPARATION PLANS; DRAWING CV-S1460-A.
3. ANY EXISTING DIRT ROAD THAT CONFLICTS WITH NEW CONSTRUCTION SHALL BE REALIGNED.
4. FOR TRACK SUPERELEVATION DETAILS; SEE ALIGNMENT AND TYPICAL SECTION PLANS; DRAWINGS TT-B0054-A AND TT-B0055-A.

CURVE MER-FRE 2 SB (A)
R = 30,000.00'
LS = 2,250.00'

CURVE MER-FRE 2 NB (B)
R = 30,016.50'
LS = 2,250.00'

10 0 10 20
1"=10'

30 0 30 60
1"=30'

REV	DATE	BY	CHK	APP	DESCRIPTION

DESIGNED BY A. M.
DRAWN BY J. KIDWELL
CHECKED BY O. EDEWOR
IN CHARGE C. LEMLEY
DATE 02/13/2015

RECORD SET
15% DESIGN
SUBMITTAL

NOT FOR
CONSTRUCTION

PARSONS

CALIFORNIA
HIGH-SPEED RAIL AUTHORITY

CALIFORNIA HIGH-SPEED TRAIN PROJECT
MERCED TO FRESNO SECTION
CENTRAL VALLEY WYE
SR 152 (NORTH) TO ROAD 13 WYE ALTERNATIVE
GENERAL PLAN (MER-FRE)
AVENUE 26 1/2 UNDERPASS

CONTRACT NO. HSR08-05
DRAWING NO. ST-K1460-A
SCALE AS SHOWN
SHEET NO.

MF-ST-K1460-A.dgn
06-FEB-2015 16:15
p0036110

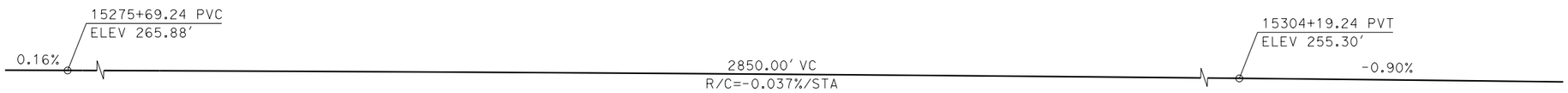

TOP OF RAIL PROFILE (℄ HST SB TRACK)

NO SCALE

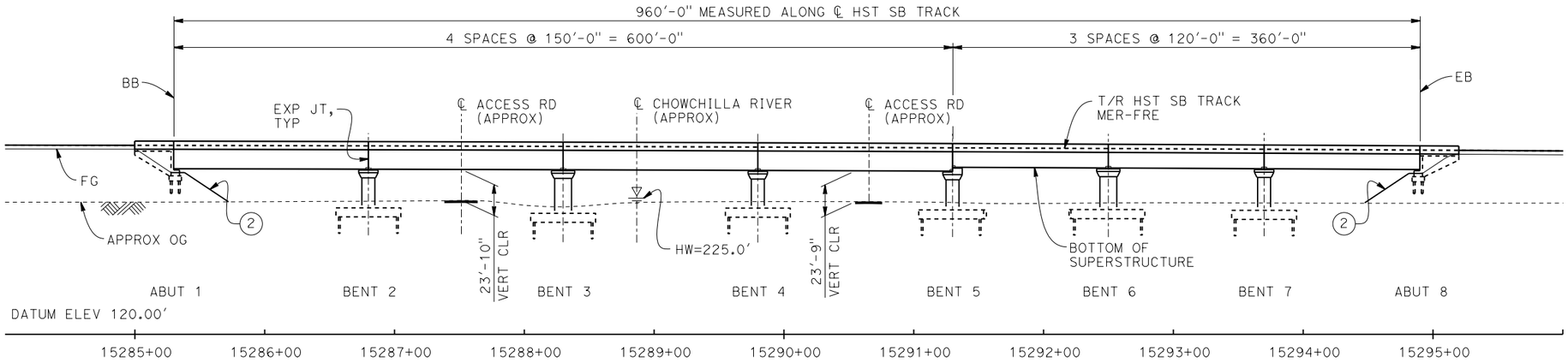

DEVELOPED ELEVATION

1" = 50'

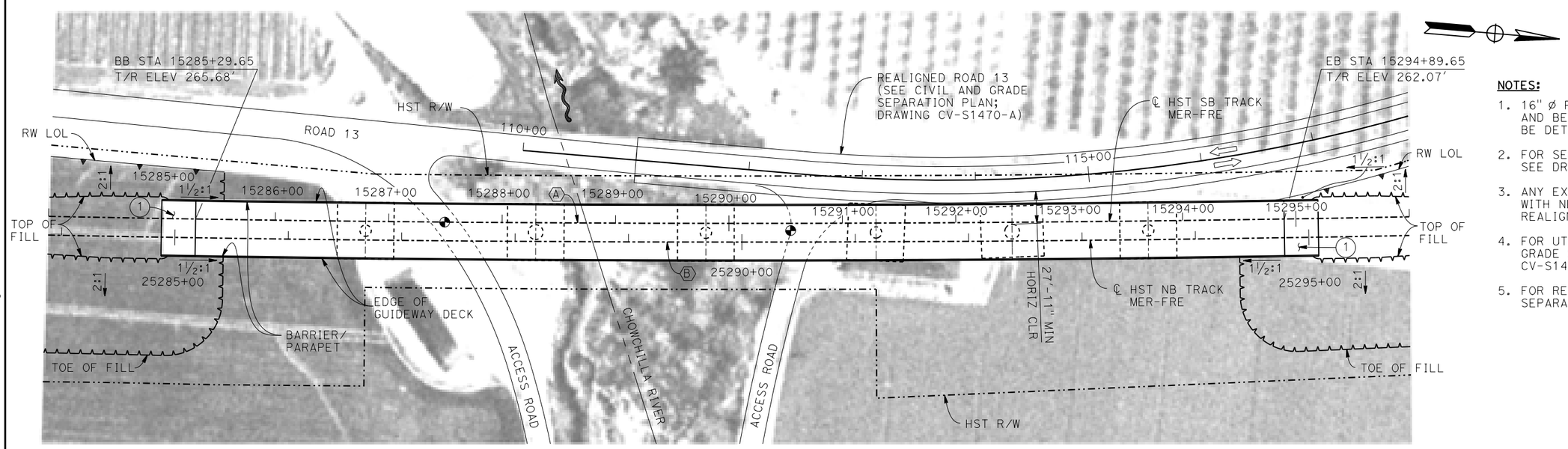

PLAN

1" = 50'

50 0 50 100
1"=50'

LEGEND:

- INDICATES POINT OF MINIMUM VERTICAL CLEARANCE
- INDICATES DIRECTION OF TRAFFIC
- INDICATES DIRECTION OF FLOW
- (1) STRUCTURE APPROACH
- (2) SLOPE PAVING (1½H:1V)

CURVE MER-FRE 2 SB (A)	CURVE MER-FRE 2 NB (B)
R = 30,000.00'	R = 30,016.50'
LS = 2,250.00'	LS = 2,250.00'

TEMPORARY TRAFFIC OPENINGS

VEHICULAR TRAFFIC

1. __ TRAFFIC WILL BE DETOURED AWAY FROM THE SITE.
2. X TRAFFIC WILL PASS UNDER THE STRUCTURE ON:

ST OR ROAD NAME AND LOCATION		FALSEWORK OPENING REQD (HORIZ X VERT)	
ACCESS ROAD	15287+38	20'X16.5'	-
ACCESS ROAD	15290+66	20'X16.5'	-

3. X TEMP TRAFFIC LANE REDUCTION FOR FTG EXC.

NOTES:

1. 16" Ø PIPE PILES ASSUMED FOR ABUTMENT AND BENT FOUNDATIONS. PILE LENGTHS TO BE DETERMINED.
2. FOR SECTION AND BENT COLUMN SCHEDULE, SEE DRAWING ST-K3470-A.
3. ANY EXISTING DIRT ROAD THAT CONFLICTS WITH NEW CONSTRUCTION SHALL BE REALIGNED.
4. FOR UTILITY DISPOSITIONS, SEE CIVIL AND GRADE SEPARATION PLANS; DRAWING CV-S1470-A.
5. FOR RETAINING WALLS, SEE CIVIL AND GRADE SEPARATION PLANS; DRAWING CV-S1470-A.

REV	DATE	BY	CHK	APP	DESCRIPTION

DESIGNED BY S. J. S.
DRAWN BY A. M.
CHECKED BY O. EDEWOR
IN CHARGE C. LEMLEY
DATE 05/08/2015

RECORD SET 15% DESIGN SUBMITTAL

NOT FOR CONSTRUCTION

PARSONS

CALIFORNIA HIGH-SPEED RAIL AUTHORITY

CALIFORNIA HIGH-SPEED TRAIN PROJECT
MERCED TO FRESNO SECTION
CENTRAL VALLEY WYE
SR 152 (NORTH) TO ROAD 13 WYE ALTERNATIVE
GENERAL PLAN (MER-FRE)
CHOWCHILLA RIVER BRIDGE - 1 OF 2

CONTRACT NO. HSR08-05
DRAWING NO. ST-K1470-A
SCALE AS SHOWN
SHEET NO.

BENT COLUMN SCHEDULE	
BENT	COLUMN TYPE
2	10'-0"Ø
3	13'-0"Ø
4 - 7	10'-0"Ø

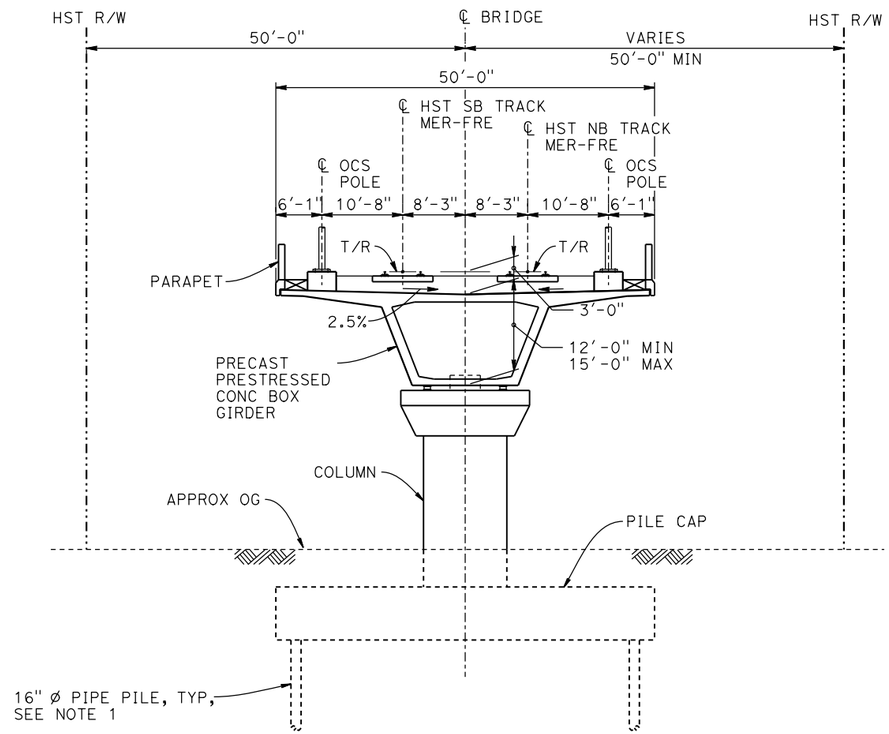

TYPICAL SECTION

1" = 10'

NOTES:

1. PILE LENGTHS TO BE DETERMINED.
2. FOR TRACK SUPERELEVATION DETAILS, SEE ALIGNMENT AND TYPICAL SECTION PLANS; DRAWINGS TT-B0054-A AND TT-B0055-A.

10 0 10 20

1"=10'

REV	DATE	BY	CHK	APP	DESCRIPTION

DESIGNED BY S. J. S.
DRAWN BY A. M.
CHECKED BY O. EDEWOR
IN CHARGE C. LEMLEY
DATE 02/13/2015

RECORD SET
15% DESIGN
SUBMITTAL

NOT FOR
CONSTRUCTION

PARSONS

CALIFORNIA
HIGH-SPEED RAIL AUTHORITY

CALIFORNIA HIGH-SPEED TRAIN PROJECT
MERCED TO FRESNO SECTION
CENTRAL VALLEY WYE
SR 152 (NORTH) TO ROAD 13 WYE ALTERNATIVE
TYPICAL SECTION (MER-FRE)
CHOWCHILLA RIVER BRIDGE - 2 OF 2

CONTRACT NO. HSR08-05
DRAWING NO. ST-K3470-A
SCALE AS SHOWN
SHEET NO.

MF-ST-K3470-A.dgn
06-FEB-2015 5:54
p0036110

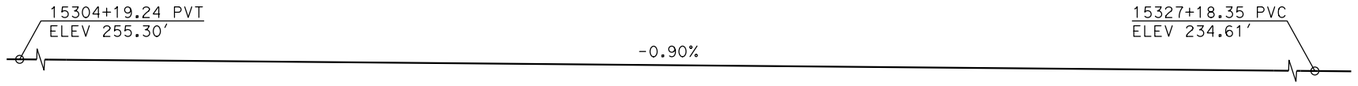

TOP OF RAIL PROFILE (℄ HST SB TRACK)

NO SCALE

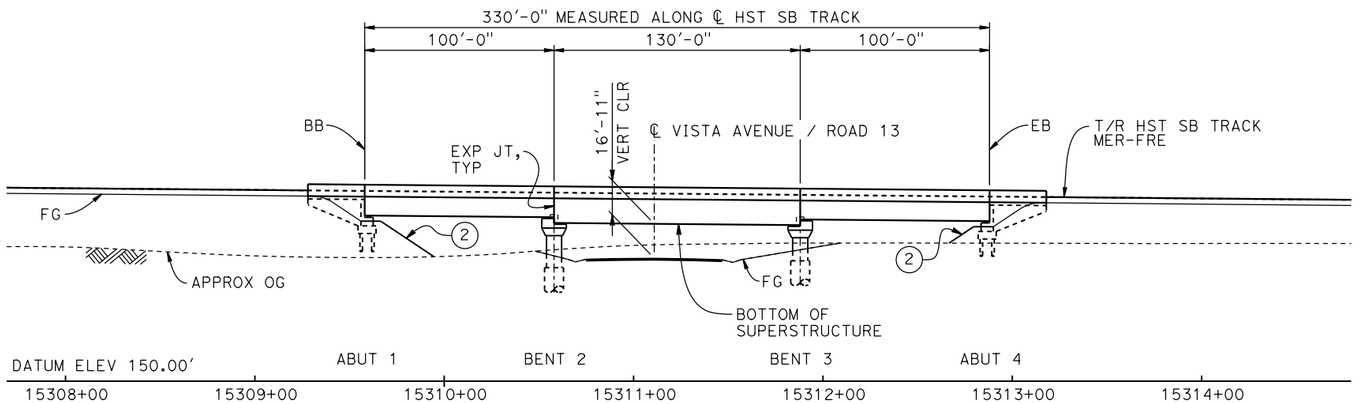

DEVELOPED ELEVATION

1" = 40'

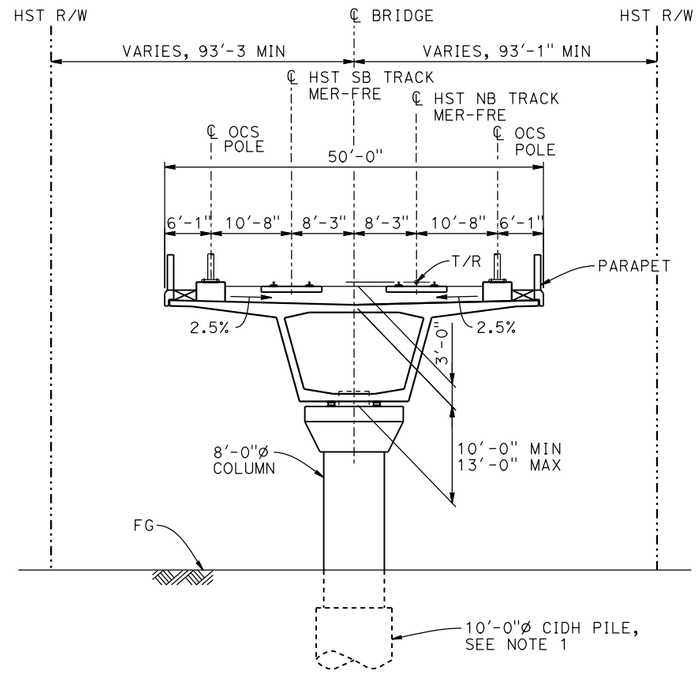

TYPICAL SECTION

1" = 10'

LEGEND:

- ⊕ INDICATES POINT OF MINIMUM VERTICAL CLEARANCE
- ⇨ INDICATES DIRECTION OF TRAFFIC
- (1) STRUCTURE APPROACH
- (2) SLOPE PAVING (1½H:1V)

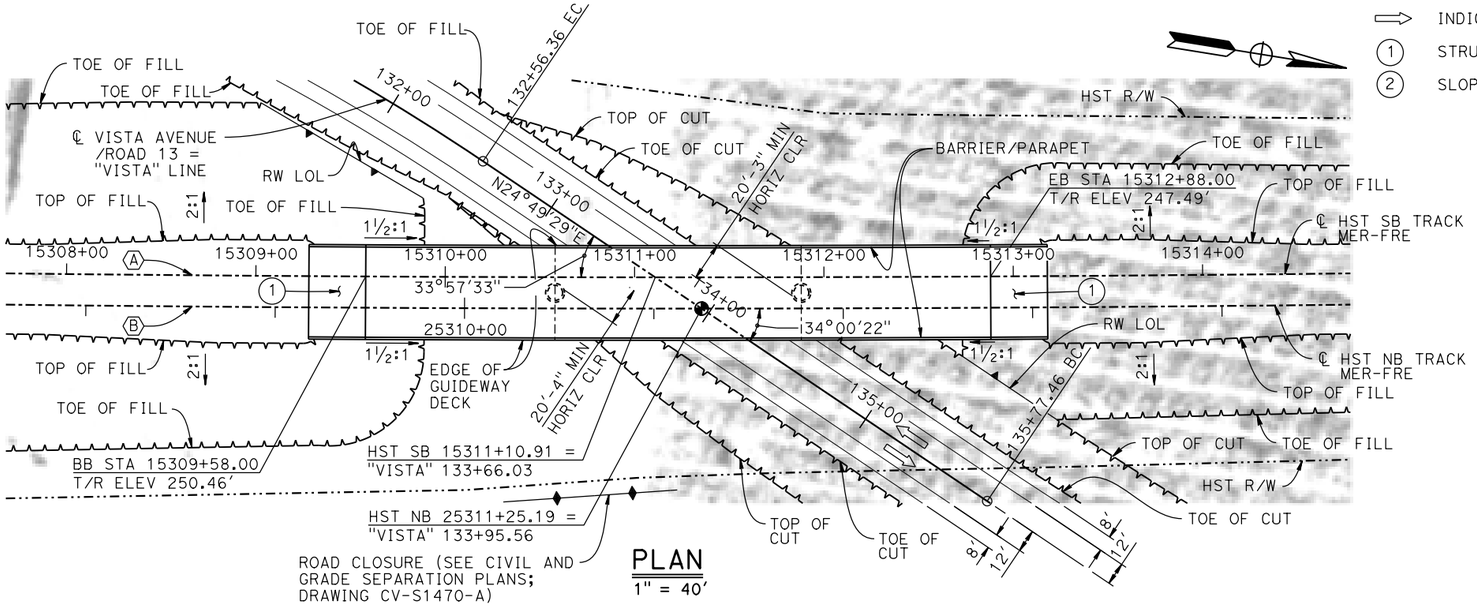

PLAN

1" = 40'

CURVE MER-FRE 2 SB (A)

R = 30,000.00'
LS = 2,250.00'

CURVE MER-FRE 2 NB (B)

R = 30,016.50'
LS = 2,250.00'

TEMPORARY TRAFFIC OPENINGS

VEHICULAR TRAFFIC

1. __ TRAFFIC WILL BE DETOURED AWAY FROM THE SITE.
2. X TRAFFIC WILL PASS UNDER THE STRUCTURE ON:

ST OR ROAD NAME AND LOCATION		FALSEWORK OPENING REQD (HORIZ X VERT)	
VISTA AVENUE/ROAD 13	15311+11	32'X16.5'	2-WAY

3. __ TEMP TRAFFIC LANE REDUCTION FOR FTG EXC.

NOTES:

1. 16" ø PIPE PILES ASSUMED FOR ABUTMENT FOUNDATIONS. PILE AND DRILLED SHAFT LENGTHS TO BE DETERMINED.
2. ANY EXISTING DIRT ROAD THAT CONFLICTS WITH NEW CONSTRUCTION SHALL BE REALIGNED.
3. FOR UTILITY DISPOSITIONS, SEE CIVIL AND GRADE SEPARATION PLANS; DRAWING CV-S1470-A.
4. FOR TRACK SUPERELEVATION DETAILS, SEE ALIGNMENT AND TYPICAL SECTION PLAN DRAWINGS TT-B0054-A AND TT-B0055-A.
5. FOR RETAINING WALLS, SEE CIVIL AND GRADE SEPARATION PLANS; DRAWING CV-S1470-A.

10 0 10 20
1"=10'

40 0 40 80
1"=40'

REV	DATE	BY	CHK	APP	DESCRIPTION

DESIGNED BY S. J. S.
DRAWN BY R. M.
CHECKED BY O. EDEWOR
IN CHARGE C. LEMLEY
DATE 05/08/2015

RECORD SET
15% DESIGN SUBMITTAL

NOT FOR CONSTRUCTION

PARSONS

CALIFORNIA HIGH-SPEED RAIL AUTHORITY

CALIFORNIA HIGH-SPEED TRAIN PROJECT
MERCED TO FRESNO SECTION
CENTRAL VALLEY WYE
SR 152 (NORTH) TO ROAD 13 WYE ALTERNATIVE
GENERAL PLAN (MER-FRE)
VISTA AVENUE (ROAD 13) UNDERPASS

CONTRACT NO. HSR08-05
DRAWING NO. ST-K1475-A
SCALE AS SHOWN
SHEET NO.

MF-ST-K1475-A.dgn
17-MAR-2016 09:14
p005133A

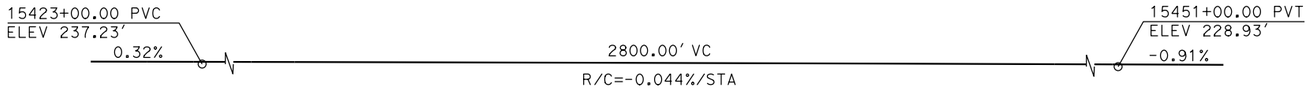

TOP OF RAIL PROFILE (℄ HST SB TRACK)

NO SCALE

CURVE MER-FRE 2 SB (A)

R = 30,000.00'
LS = 2,250.00'

CURVE MER-FRE 2 NB (B)

R = 30,016.50'
LS = 2,250.00'

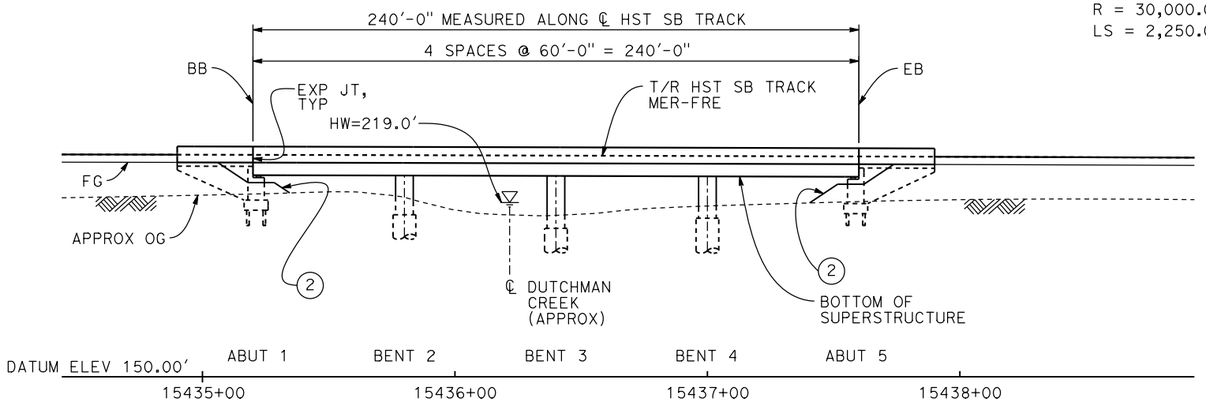

DEVELOPED ELEVATION

1" = 30'

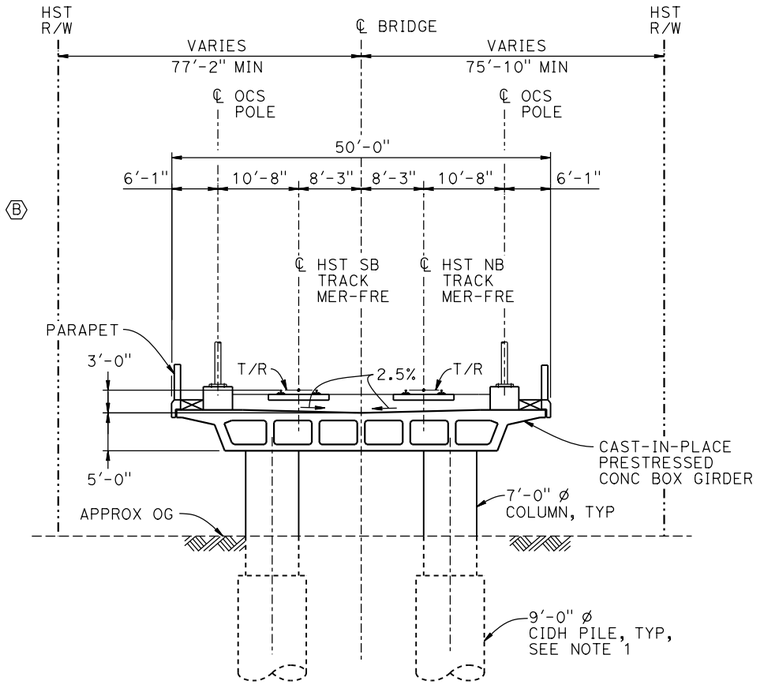

TYPICAL SECTION

1" = 10'

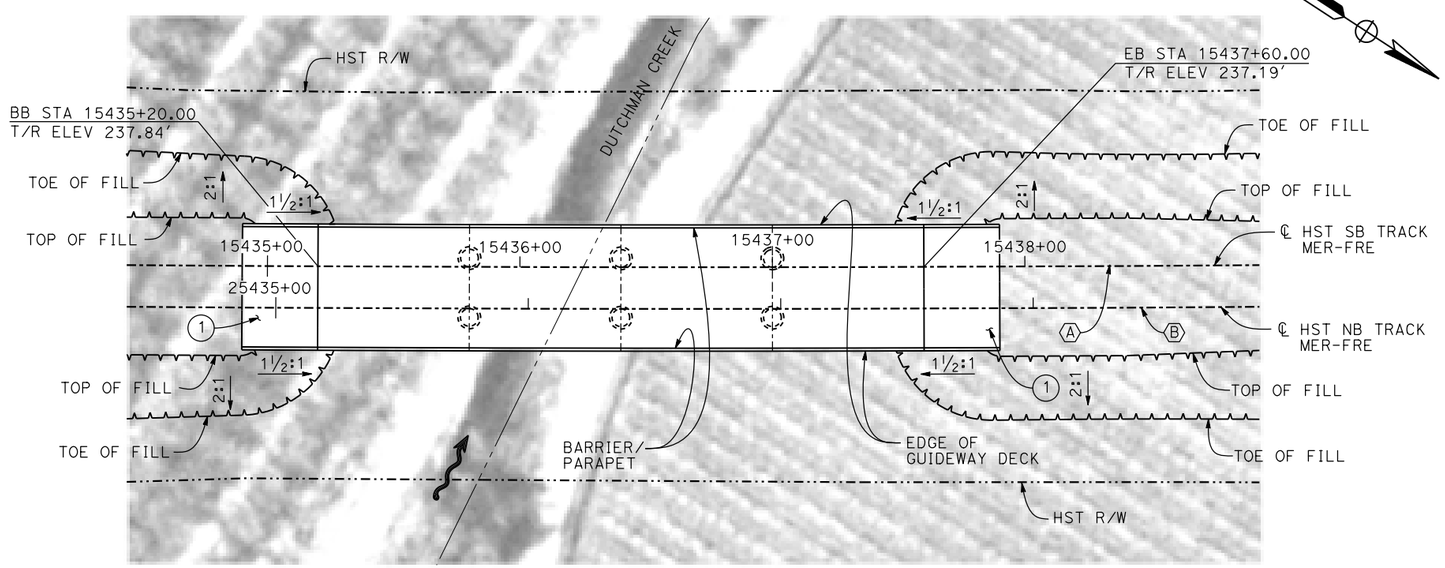

PLAN

1" = 30'

LEGEND:

- INDICATES DIRECTION OF FLOW
- (1) STRUCTURE APPROACH
- (2) SLOPE PAVING (1½H:1V)

NOTES:

1. 16" ø PIPE PILES ASSUMED FOR ABUTMENT FOUNDATIONS. PILE AND DRILLED SHAFT LENGTHS TO BE DETERMINED.
2. FOR UTILITY DISPOSITION, SEE CIVIL AND GRADE SEPARATION PLANS; DRAWING CV-S1490-A.
3. ANY EXISTING DIRT ROAD THAT CONFLICTS WITH NEW CONSTRUCTION SHALL BE REALIGNED.
4. FOR TRACK SUPERELEVATION DETAILS, SEE ALIGNMENT AND TYPICAL SECTION PLANS; DRAWINGS TT-B0054-A AND TT-B0055-A.

10 0 10 20
1"=10'

30 0 30 60
1"=30'

REV	DATE	BY	CHK	APP	DESCRIPTION

DESIGNED BY M. SUN
DRAWN BY S. HICKS
CHECKED BY S. J. S.
IN CHARGE C. LEMLEY
DATE 02/13/2015

RECORD SET
15% DESIGN SUBMITTAL

NOT FOR CONSTRUCTION

PARSONS

CALIFORNIA HIGH-SPEED RAIL AUTHORITY

CALIFORNIA HIGH-SPEED TRAIN PROJECT
MERCED TO FRESNO SECTION
CENTRAL VALLEY WYE
SR 152 (NORTH) TO ROAD 13 WYE ALTERNATIVE
GENERAL PLAN (MER-FRE)
DUTCHMAN CREEK BRIDGE

CONTRACT NO. HSR08-05
DRAWING NO. ST-K1490-A
SCALE AS SHOWN
SHEET NO.

MF-ST-K1490-A.dgn
06-FEB-2015 16:16
p0036110

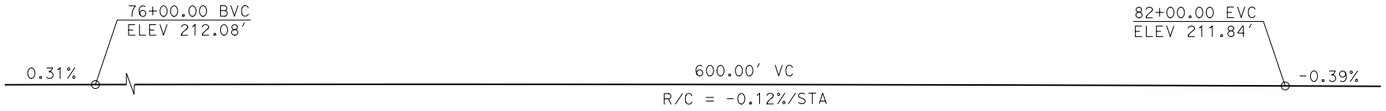

PROFILE GRADE
NO SCALE

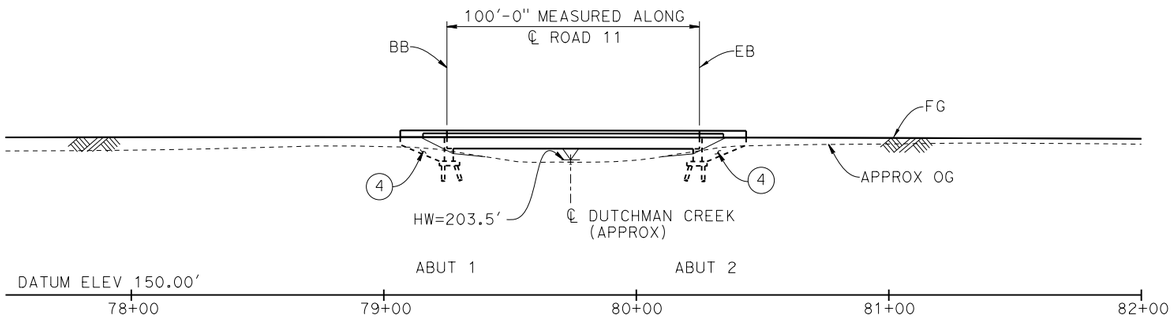

ELEVATION
1" = 30'

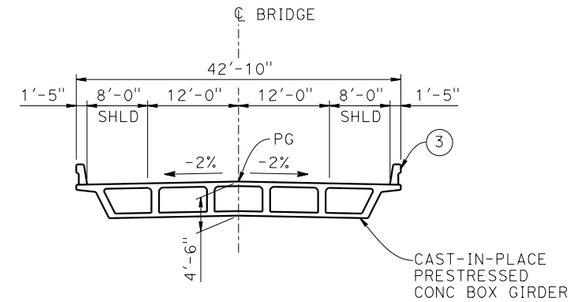

TYPICAL SECTION
1" = 10'

LEGEND:

- INDICATES DIRECTION OF FLOW
- INDICATES DIRECTION OF TRAFFIC
- (1) PAINT "ROAD 11 BRIDGE"
- (2) PAINT "BRIDGE NO. XX-XXXX"
- (3) CONCRETE BARRIER TYPE 732
- (4) WINGWALL

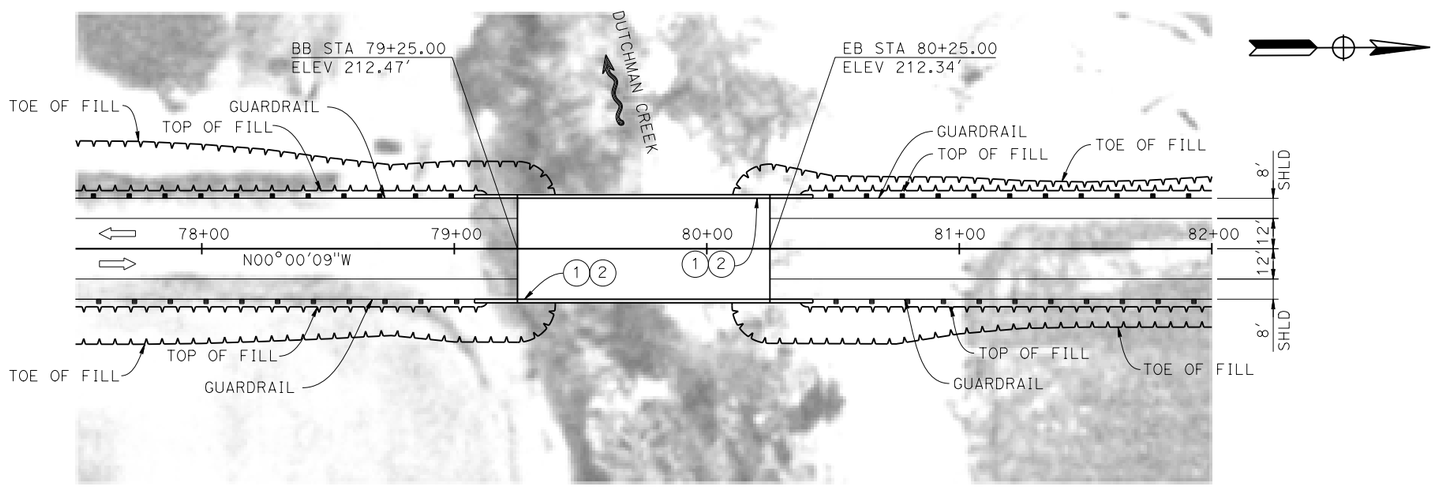

PLAN
1" = 30'

NOTES:

1. ASSUME CLASS 140 PILES AT ABUTMENT AND BENT FOUNDATIONS. PILE LENGTHS TO BE DETERMINED.
2. FOR UTILITY DISPOSITIONS, SEE CIVIL AND GRADE SEPARATION PLANS; DRAWING CV-R1492-A.
3. FOR GUARDRAILS, SEE CIVIL AND GRADE SEPARATION PLANS; DRAWING CV-R1492-A.

10 0 10 20
1"=10'

30 0 30 60
1"=30'

REV	DATE	BY	CHK	APP	DESCRIPTION

DESIGNED BY S. J. S.
DRAWN BY A. M.
CHECKED BY K. CHARAN
IN CHARGE C. LEMLEY
DATE 03/18/2016

RECORD SET
15% DESIGN SUBMITTAL

NOT FOR CONSTRUCTION

PARSONS

CALIFORNIA HIGH-SPEED RAIL AUTHORITY

CALIFORNIA HIGH-SPEED TRAIN PROJECT
MERCED TO FRESNO SECTION
CENTRAL VALLEY WYE
SR 152 (NORTH) TO ROAD 13 WYE ALTERNATIVE
GENERAL PLAN (MER-FRE)
ROAD 11 BRIDGE

CONTRACT NO. HSR08-05
DRAWING NO. ST-K1495-A
SCALE AS SHOWN
SHEET NO.

MF-ST-K1495-A.dgn
10-MAR-2016 5:45
p0051330

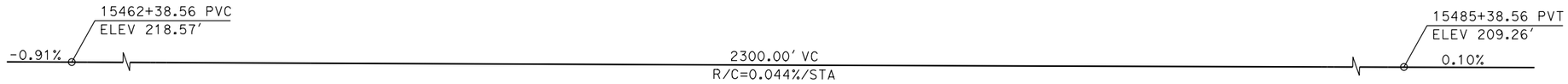

TOP OF RAIL PROFILE (℄ HST SB TRACK)

NO SCALE

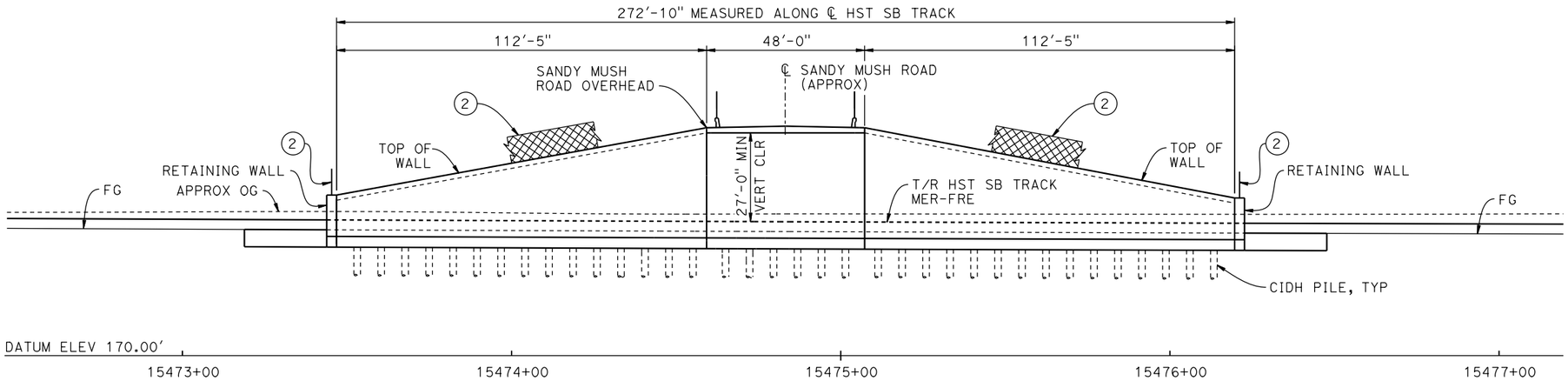

DEVELOPED LONGITUDINAL SECTION

1"=20'

CURVE MER-FRE 2 SB (A)

R = 30,000.00'
LS = 2,250.00'

CURVE MER-FRE 2 NB (B)

R = 30,016.50'
LS = 2,250.00'

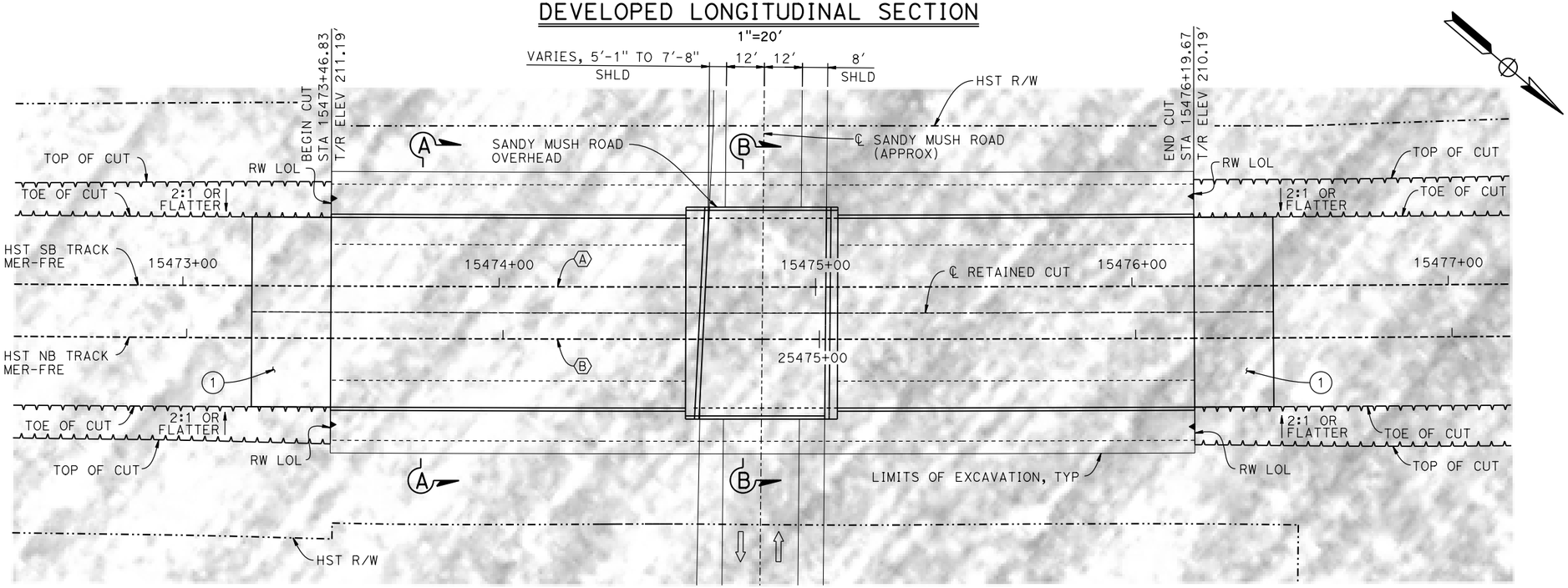

PLAN

1"=20'

NOTES:

1. FOR SECTIONS, SEE DRAWING ST-T3500-A.
2. PILE LENGTH AND LAYOUT TO BE DETERMINED ONCE A SITE SPECIFIC ASSESSMENT OF GROUNDWATER CONDITIONS IS AVAILABLE.
3. FOR UTILITY DISPOSITIONS, SEE CIVIL AND GRADE SEPARATION PLANS; DRAWING CV-S1500-A.
4. FOR RETAINING WALLS, SEE CIVIL AND GRADE SEPARATION PLANS; DRAWING CV-S1500-A.
5. FOR SANDY MUSH ROAD OVERHEAD GENERAL PLAN AND TYPICAL SECTION, SEE DRAWING ST-K1500-A.

LEGEND:

⇨ INDICATES DIRECTION OF TRAFFIC

(1) STRUCTURE APPROACH

(2) AR FENCE WITH SOLID PLATE

20 0 20 40
1"=20'

REV	DATE	BY	CHK	APP	DESCRIPTION

DESIGNED BY O. EDEWOR
DRAWN BY J. KIDWELL
CHECKED BY S. J. S.
IN CHARGE C. LEMLEY
DATE 02/13/2015

RECORD SET 15% DESIGN SUBMITTAL

NOT FOR CONSTRUCTION

PARSONS

CALIFORNIA HIGH-SPEED RAIL AUTHORITY

CALIFORNIA HIGH-SPEED TRAIN PROJECT
MERCED TO FRESNO SECTION
CENTRAL VALLEY WYE
SR 152 (NORTH) TO ROAD 13 WYE ALTERNATIVE
GENERAL PLAN (MER-FRE)
RETAINED CUT - SANDY MUSH ROAD - 1 OF 2

CONTRACT NO. HSR08-05
DRAWING NO. ST-T1500-A
SCALE AS SHOWN
SHEET NO.

MF-ST-T1500-A.dgn 06-FEB-2015 16:24 p0036110

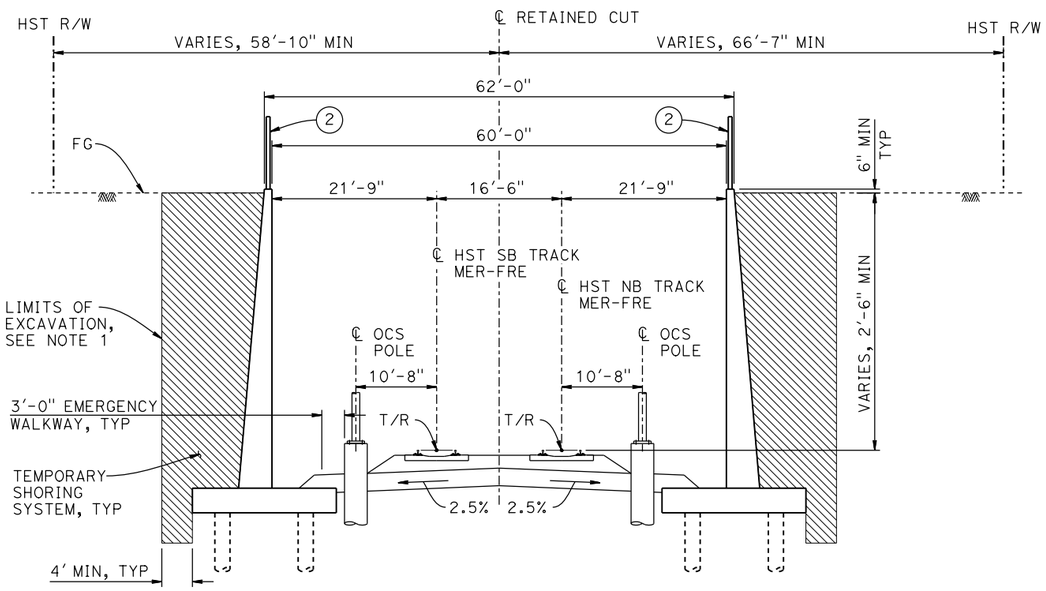

SECTION A-A

1" = 10'

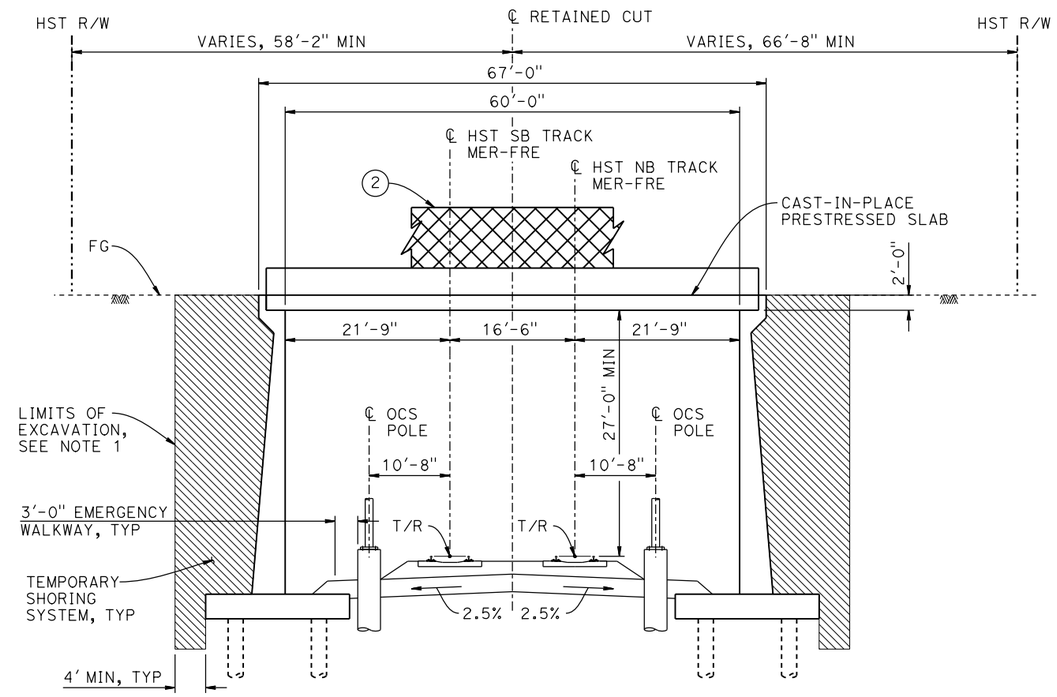

SECTION B-B

1" = 10'

NOTES:

1. LIMITS OF EXCAVATION SHALL NOT EXTEND BEYOND HST R/W.
2. PILE LENGTH AND LAYOUT TO BE DETERMINED ONCE A SITE SPECIFIC ASSESSMENT OF GROUNDWATER CONDITIONS IS AVAILABLE.
3. FOR TRACK SUPERELEVATION DETAILS, SEE ALIGNMENT AND TYPICAL SECTION PLANS; DRAWINGS TT-B0054-A AND TT-B0055-A.

10 0 10 20
1"=10'

REV	DATE	BY	CHK	APP	DESCRIPTION

DESIGNED BY O. EDEWOR
DRAWN BY J. KIDWELL
CHECKED BY S. J. S.
IN CHARGE C. LEMLEY
DATE 02/13/2015

RECORD SET
15% DESIGN SUBMITTAL

NOT FOR CONSTRUCTION

PARSONS

CALIFORNIA HIGH-SPEED RAIL AUTHORITY

CALIFORNIA HIGH-SPEED TRAIN PROJECT
MERCED TO FRESNO SECTION
CENTRAL VALLEY WYE
SR 152 (NORTH) TO ROAD 13 WYE ALTERNATIVE
TYPICAL SECTIONS (MER-FRE)
RETAINED CUT - SANDY MUSH ROAD - 2 OF 2

CONTRACT NO. HSR08-05
DRAWING NO. ST-T3500-A
SCALE AS SHOWN
SHEET NO.

MF-ST-T3500-A.dgn
06-FEB-2015 16:24
p0036110

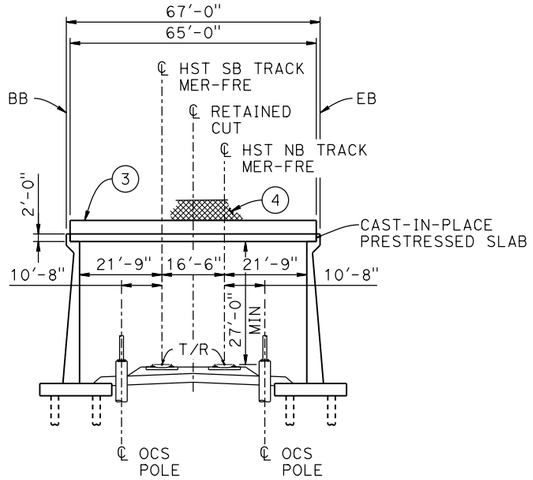

DATUM ELEV 160.00'

ELEVATION

1"=20'

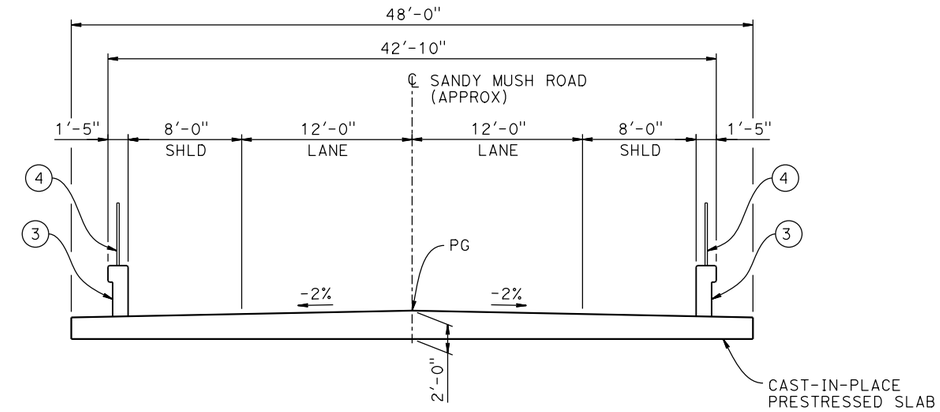

TYPICAL SECTION

3/16"=1'-0"

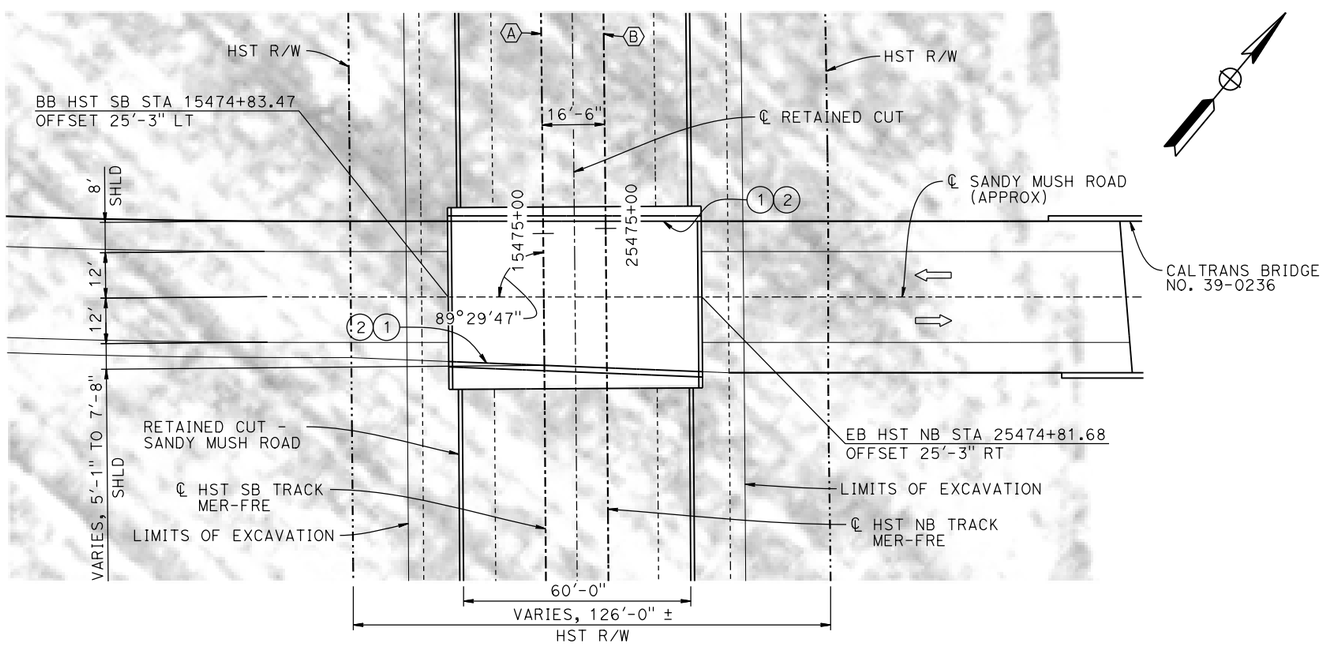

PLAN

1"=20'

CURVE MER-FRE 2 SB (A)

R = 30,000.00'
LS = 2,250.00'

CURVE MER-FRE 2 NB (B)

R = 30,016.50'
LS = 2,250.00'

LEGEND:

- ⇨ INDICATES DIRECTION OF TRAFFIC
- (1) PAINT "SANDY MUSH ROAD OVERHEAD"
- (2) PAINT "BRIDGE NO. XX-XXXX"
- (3) CONCRETE BARRIER TYPE 736 MOD
- (4) AR FENCE WITH SOLID PLATE

NOTES:

1. FOR UTILITY DISPOSITIONS, SEE CIVIL AND GRADE SEPARATION PLANS; DRAWING CV-S1500-A.
2. PILE LENGTH AND LAYOUT TO BE DETERMINED ONCE A SITE SPECIFIC ASSESSMENT OF GROUNDWATER CONDITIONS IS AVAILABLE.
3. FOR RETAINED CUT - SANDY MUSH ROAD GENERAL PLAN AND TYPICAL SECTIONS, SEE DRAWINGS ST-T1500-A AND ST-T3500-A.

1 0 4 12
3/16"=1'-0"

20 0 20 40
1"=20'

REV	DATE	BY	CHK	APP	DESCRIPTION

DESIGNED BY O. EDEWOR
DRAWN BY J. KIDWELL
CHECKED BY S. J. S.
IN CHARGE C. LEMLEY
DATE 02/13/2015

RECORD SET 15% DESIGN SUBMITTAL

NOT FOR CONSTRUCTION

PARSONS

CALIFORNIA HIGH-SPEED RAIL AUTHORITY

CALIFORNIA HIGH-SPEED TRAIN PROJECT
MERCED TO FRESNO SECTION
CENTRAL VALLEY WYE
SR 152 (NORTH) TO ROAD 13 WYE ALTERNATIVE
GENERAL PLAN (MER-FRE)
SANDY MUSH ROAD OVERHEAD

CONTRACT NO. HSR08-05
DRAWING NO. ST-K1500-A
SCALE AS SHOWN
SHEET NO.

MF-ST-K1500-A.dgn
06-FEB-2015 16:16
p0036110

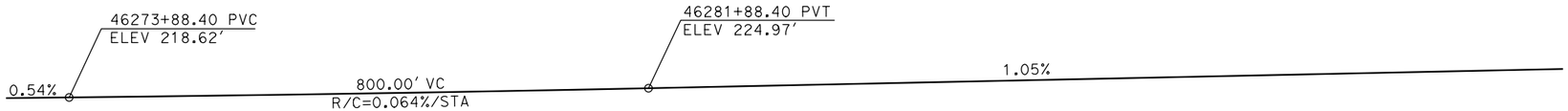

TOP OF RAIL PROFILE (℄ HST NB TRACK SJD-MER)

NO SCALE

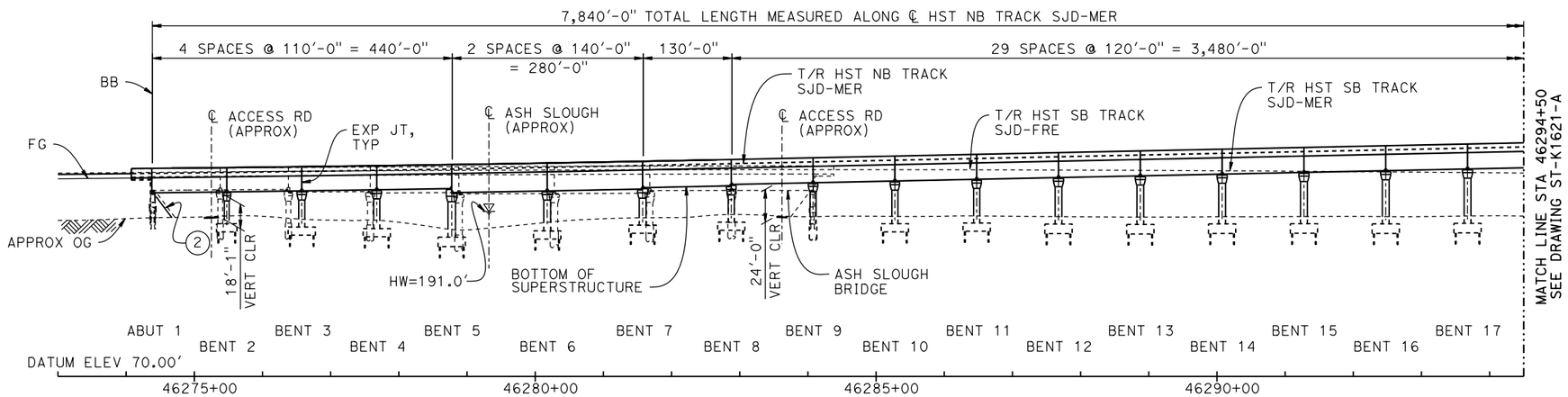

DEVELOPED ELEVATION

VERT: 1" = 50' HORIZ: 1" = 100'

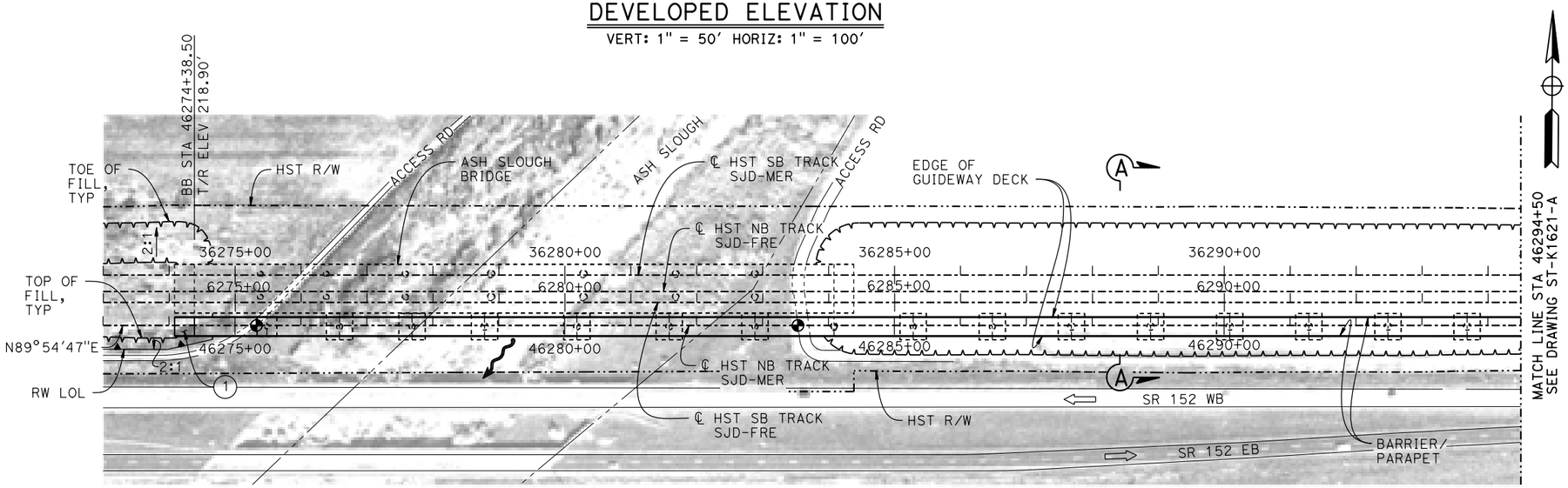

PLAN

1" = 100'

LEGEND:

- INDICATES POINT OF MINIMUM VERTICAL CLEARANCE
- INDICATES DIRECTION OF FLOW
- INDICATES DIRECTION OF TRAFFIC
- (1) STRUCTURE APPROACH
- (2) SLOPE PAVING (1½H:1V)

TEMPORARY TRAFFIC OPENINGS

VEHICULAR TRAFFIC

1. __ TRAFFIC WILL BE DETOURED AWAY FROM THE SITE.
2. X TRAFFIC WILL PASS UNDER THE STRUCTURE ON:

ST OR ROAD NAME AND LOCATION		FALSEWORK OPENING REQD (HORIZ X VERT)	
ACCESS ROAD	46275+25	20'X16.5'	-
ACCESS ROAD	46283+62	20'X16.5'	-

3. X TEMP TRAFFIC LANE REDUCTION FOR FTG EXC.

NOTES:

1. 16" Ø PIPE PILES ASSUMED FOR ABUTMENT AND BENT FOUNDATIONS, UNLESS OTHERWISE NOTED. PILE LENGTHS TO BE DETERMINED.
2. FOR SECTIONS AND BENT COLUMN SCHEDULE, SEE DRAWINGS ST-K3620-A AND ST-K3621-A.
3. ANY EXISTING DIRT ROAD THAT CONFLICTS WITH NEW CONSTRUCTION SHALL BE REALIGNED.
4. FOR RETAINING WALLS, SEE CIVIL AND GRADE SEPARATION PLANS; DRAWINGS CV-S1610-A AND CV-S1620-A.
5. FOR UTILITY DISPOSITIONS, SEE CIVIL AND GRADE SEPARATION PLANS; DRAWINGS CV-S1610-A AND CV-S1620-A.
6. FOR ASH SLOUGH BRIDGE GENERAL PLAN AND TYPICAL SECTION, SEE DRAWINGS ST-K1170-A AND ST-K3170-A.

CURVE SJD-MER 1 NB (A)

R = 10,376.50'
LS = 1,500.00'

50 0 50 100
1"=50'

100 0 100 200
1"=100'

REV	DATE	BY	CHK	APP	DESCRIPTION

DESIGNED BY A. M.
DRAWN BY W. JOHNSEN
CHECKED BY S. J. S.
IN CHARGE C. LEMLEY
DATE 02/13/2015

RECORD SET
15% DESIGN SUBMITTAL

NOT FOR CONSTRUCTION

PARSONS

CALIFORNIA HIGH-SPEED RAIL AUTHORITY

CALIFORNIA HIGH-SPEED TRAIN PROJECT
MERCED TO FRESNO SECTION
CENTRAL VALLEY WYE
SR 152 (NORTH) TO ROAD 13 WYE ALTERNATIVE
GENERAL PLAN (SJD-MER)
AERIAL #4 - NORTHBOUND OVER HST MAINLINE - 1 OF 6

CONTRACT NO. HSR08-05
DRAWING NO. ST-K1620-A
SCALE AS SHOWN
SHEET NO.

MF-ST-K1620-A.dgn 06-FEB-2015 5:33 p0036110

TOP OF RAIL PROFILE (℄ HST NB TRACK SJD-MER)

NO SCALE

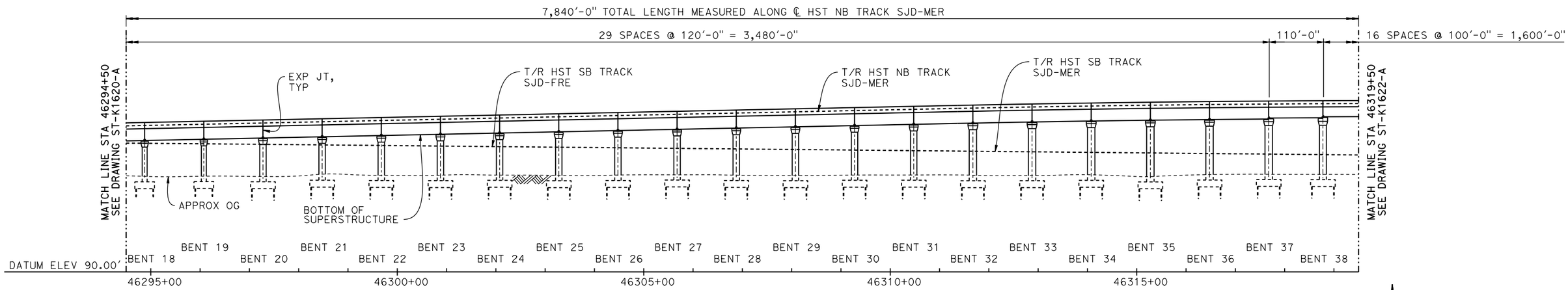

DEVELOPED ELEVATION

VERT: 1" = 50' HORIZ: 1" = 100'

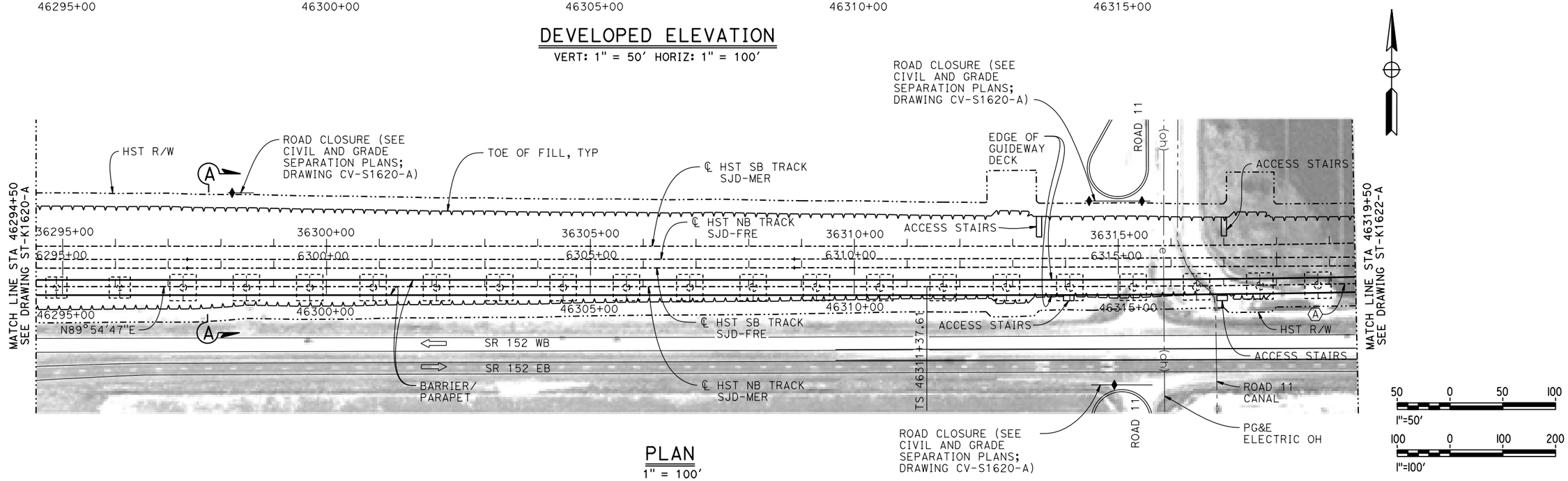

PLAN

1" = 100'

REV	DATE	BY	CHK	APP	DESCRIPTION

DESIGNED BY A. M.
DRAWN BY W. JOHNSEN
CHECKED BY S. J. S.
IN CHARGE C. LEMLEY
DATE 02/13/2015

RECORD SET
15% DESIGN SUBMITTAL

NOT FOR CONSTRUCTION

PARSONS

CALIFORNIA HIGH-SPEED RAIL AUTHORITY

CALIFORNIA HIGH-SPEED TRAIN PROJECT
MERCED TO FRESNO SECTION

CENTRAL VALLEY WYE
SR 152 (NORTH) TO ROAD 13 WYE ALTERNATIVE
GENERAL PLAN (SJD-MER)
AERIAL #4 - NORTHBOUND OVER HST MAINLINE - 2 OF 6

CONTRACT NO. HSR08-05
DRAWING NO. ST-K1621-A
SCALE AS SHOWN
SHEET NO.

MF-ST-K1621-A.dgn
06-FEB-2015 15:34
p0036110

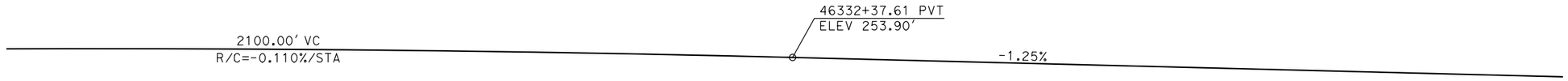

TOP OF RAIL PROFILE (℄ HST NB TRACK SJD-MER)

NO SCALE

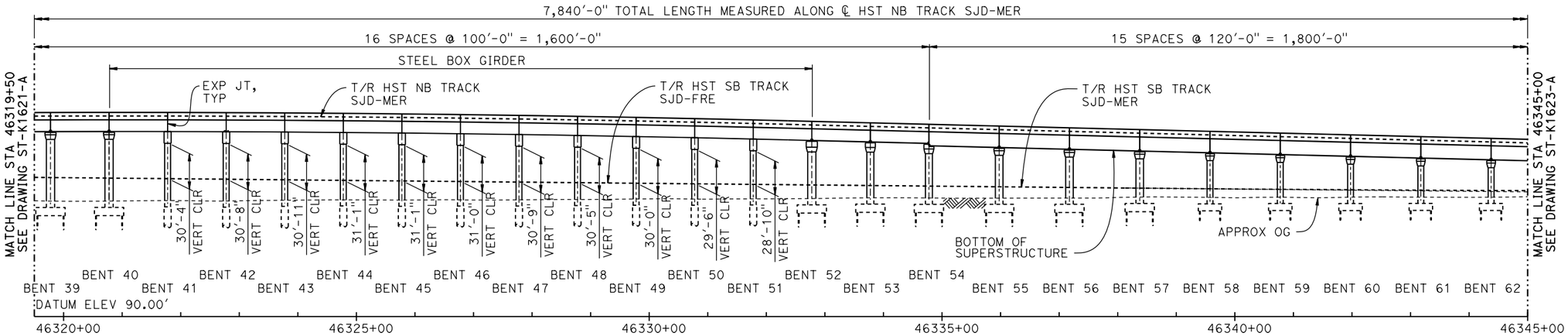

DEVELOPED ELEVATION

VERT: 1" = 50' HORIZ: 1" = 100'

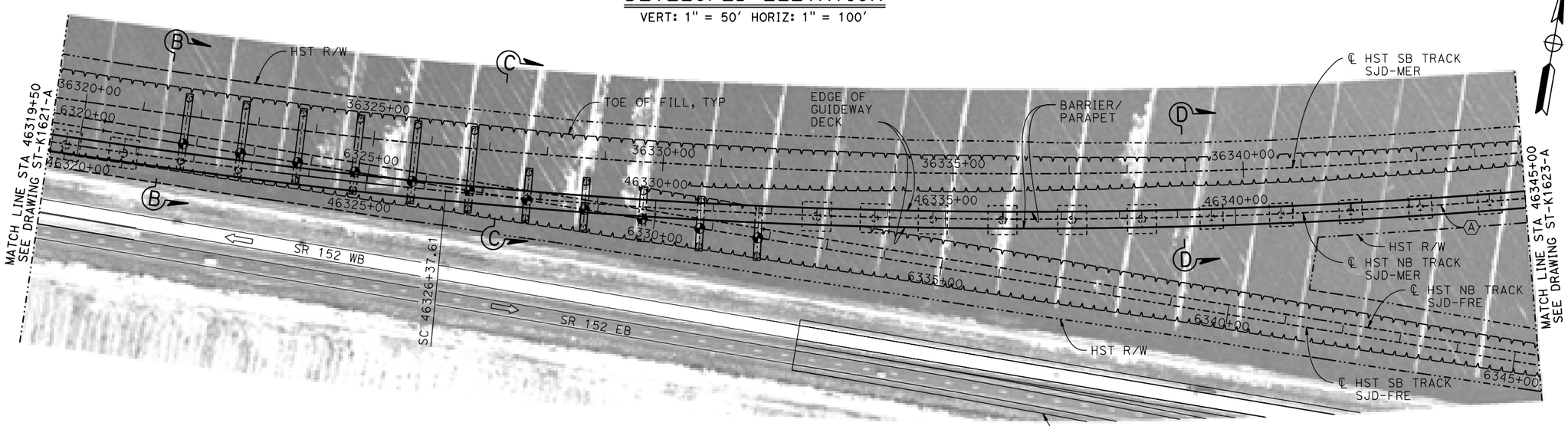

PLAN

1" = 100'

50 0 50 100
1"=50'

100 0 100 200
1"=100'

REV	DATE	BY	CHK	APP	DESCRIPTION

DESIGNED BY A. M.
DRAWN BY W. JOHNSEN
CHECKED BY S. J. S.
IN CHARGE C. LEMLEY
DATE 02/13/2015

RECORD SET
15% DESIGN SUBMITTAL

NOT FOR CONSTRUCTION

PARSONS

CALIFORNIA HIGH-SPEED RAIL AUTHORITY

CALIFORNIA HIGH-SPEED TRAIN PROJECT
MERCED TO FRESNO SECTION
CENTRAL VALLEY WYE
SR 152 (NORTH) TO ROAD 13 WYE ALTERNATIVE
GENERAL PLAN (SJD-MER)
AERIAL #4 - NORTHBOUND OVER HST MAINLINE - 3 OF 6

CONTRACT NO. HSR08-05
DRAWING NO. ST-K1622-A
SCALE AS SHOWN
SHEET NO.

MF-ST-K1622-A.dgn
06-FEB-2015 15:34
p0036110

TOP OF RAIL PROFILE (℄ HST NB TRACK SJD-MER)

NO SCALE

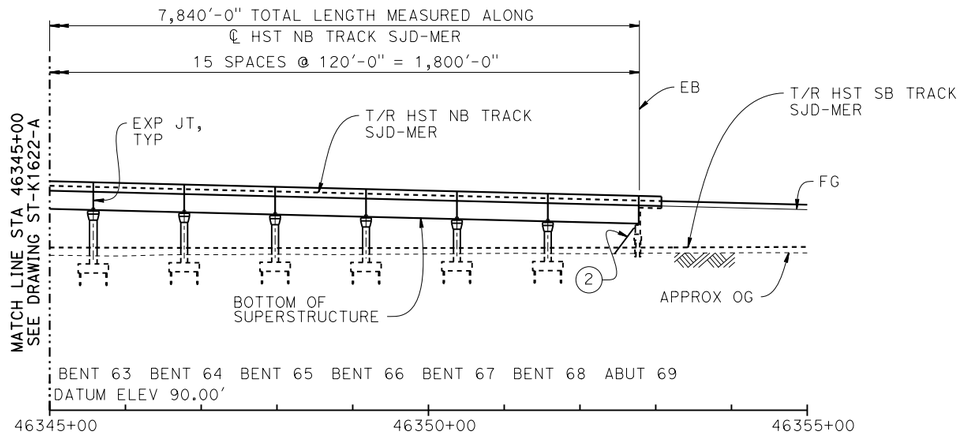

DEVELOPED ELEVATION

VERT: 1" = 50' HORIZ: 1" = 100'

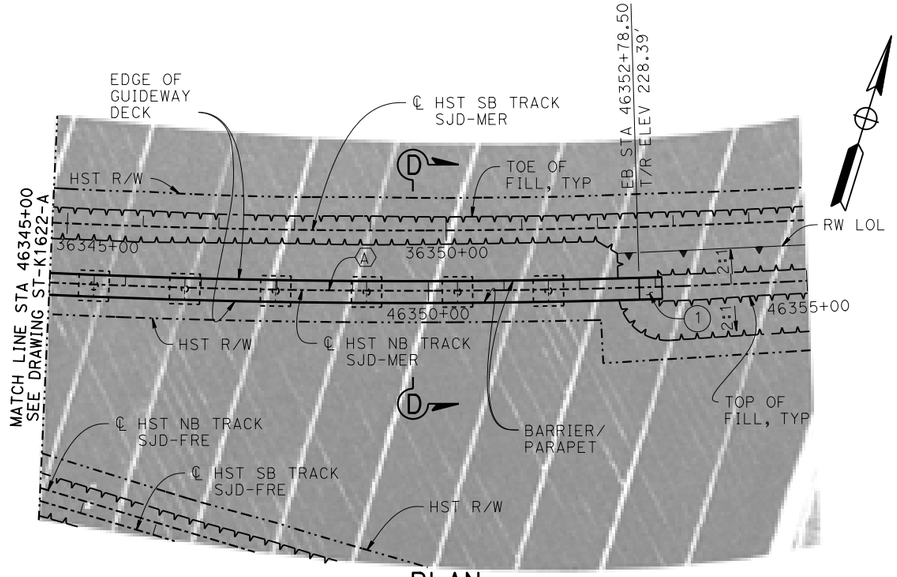

PLAN

1" = 100'

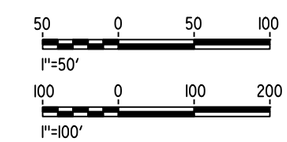

REV	DATE	BY	CHK	APP	DESCRIPTION

DESIGNED BY A. M.
DRAWN BY W. JOHNSEN
CHECKED BY S. J. S.
IN CHARGE C. LEMLEY
DATE 05/08/2015

RECORD SET
15% DESIGN SUBMITTAL

NOT FOR CONSTRUCTION

PARSONS

CALIFORNIA HIGH-SPEED RAIL AUTHORITY

CALIFORNIA HIGH-SPEED TRAIN PROJECT
MERCED TO FRESNO SECTION
CENTRAL VALLEY WYE
SR 152 (NORTH) TO ROAD 13 WYE ALTERNATIVE
GENERAL PLAN (SJD-MER)
AERIAL #4 - NORTHBOUND OVER HST MAINLINE - 4 OF 6

CONTRACT NO. HSR08-05
DRAWING NO. ST-K1623-A
SCALE AS SHOWN
SHEET NO.

p0051330 16-MAR-2016 6:03 MF-ST-K1623-A.dgn

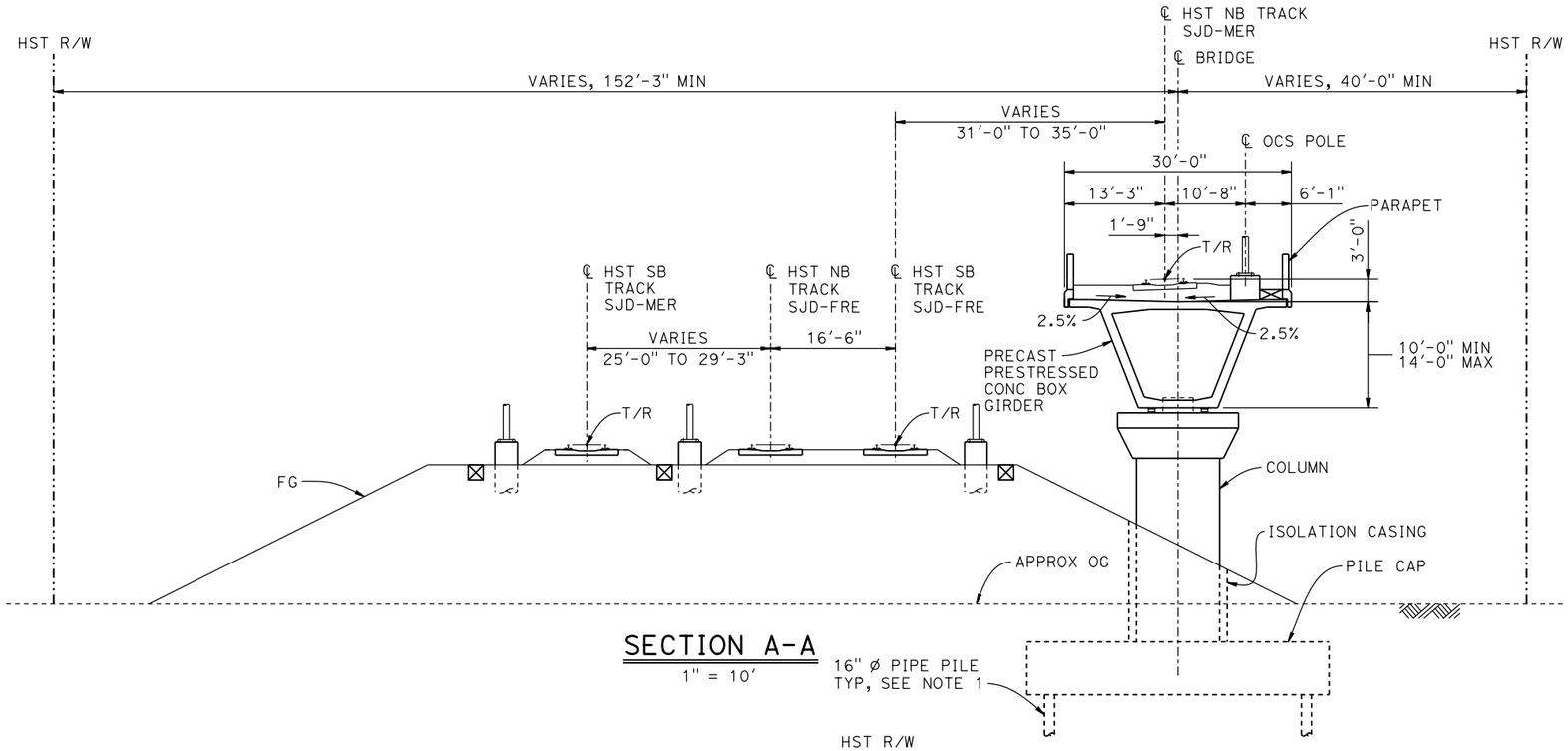

SECTION A-A

1" = 10'

NOTES:

1. PILE AND DRILLED SHAFT LENGTHS TO BE DETERMINED.
2. FOR TRACK SUPERELEVATION DETAILS, SEE ALIGNMENT AND TYPICAL SECTION PLANS; DRAWING TT-B0056-A.

BENT COLUMN SCHEDULE			
BENT	COLUMN TYPE	CIDH TYPE	"A"
2	7'-0" ø		
3 - 4	9'-0" ø		
5	11'-0" ø		
6 - 7	10'-0" ø		
8	9'-0" ø		
9	9'-0" ø	11'-0" ø	
10 - 11	9'-0" ø		
12 - 19	11'-0" ø		
20 - 28	13'-0" ø		
29 - 37	15'-0" ø		
38 - 40	14'-0" ø		
41	2 - 10'-0" ø		109'-0"
42	2 - 10'-0" ø		112'-0"

BENT COLUMN SCHEDULE		
BENT	COLUMN TYPE	"A"
43	2 - 10'-0" ø	116'-0"
44	2 - 10'-0" ø	121'-0"
45	2 - 10'-0" ø	127'-0"
46	2 - 10'-0" ø	133'-0"
47 - 51	2 - 10'-0" ø	78'-0"
52	14'-0" ø	
53 - 54	12'-0" ø	
55 - 57	13'-0" ø	
58 - 63	11'-0" ø	
64 - 68	9'-0" ø	

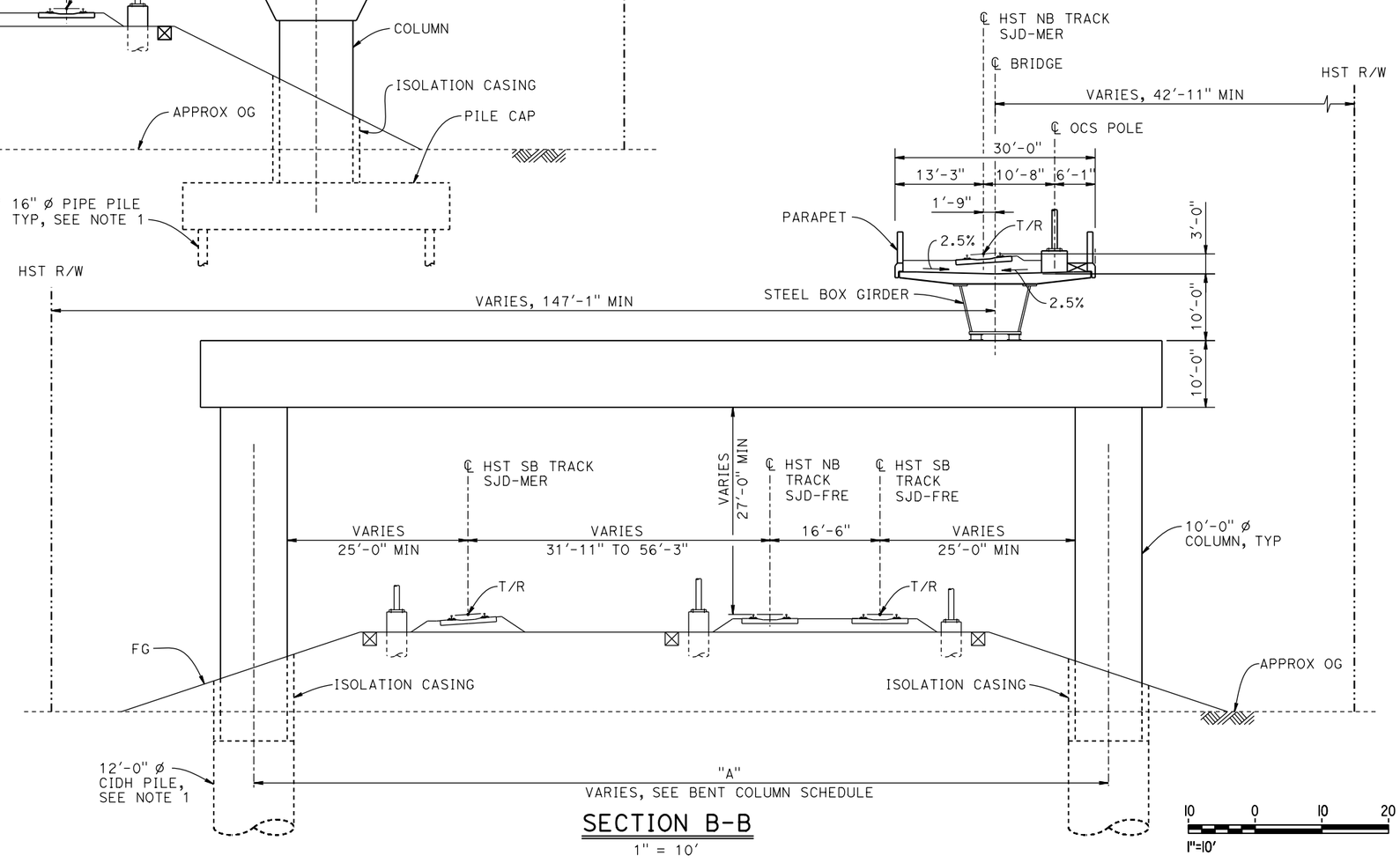

SECTION B-B

1" = 10'

REV	DATE	BY	CHK	APP	DESCRIPTION

DESIGNED BY A. M.
DRAWN BY W. JOHNSEN
CHECKED BY S. J. S.
IN CHARGE C. LEMLEY
DATE 02/13/2015

RECORD SET
15% DESIGN SUBMITTAL

NOT FOR CONSTRUCTION

PARSONS

CALIFORNIA HIGH-SPEED RAIL AUTHORITY

CALIFORNIA HIGH-SPEED TRAIN PROJECT
MERCED TO FRESNO SECTION
CENTRAL VALLEY WYE
SR 152 (NORTH) TO ROAD 13 WYE ALTERNATIVE
TYPICAL SECTIONS (SJD-MER)
AERIAL #4 - NORTHBOUND OVER HST MAINLINE - 5 OF 6

CONTRACT NO. HSR08-05
DRAWING NO. ST-K3620-A
SCALE AS SHOWN
SHEET NO.

MF-ST-K3620-A.dgn
06-FEB-2015 15:35
p0036110

NOTES:

1. PILE AND DRILLED SHAFT LENGTHS TO BE DETERMINED.
2. FOR TRACK SUPERELEVATION DETAILS, SEE ALIGNMENT AND TYPICAL SECTION PLANS; DRAWING TT-B0056-A.

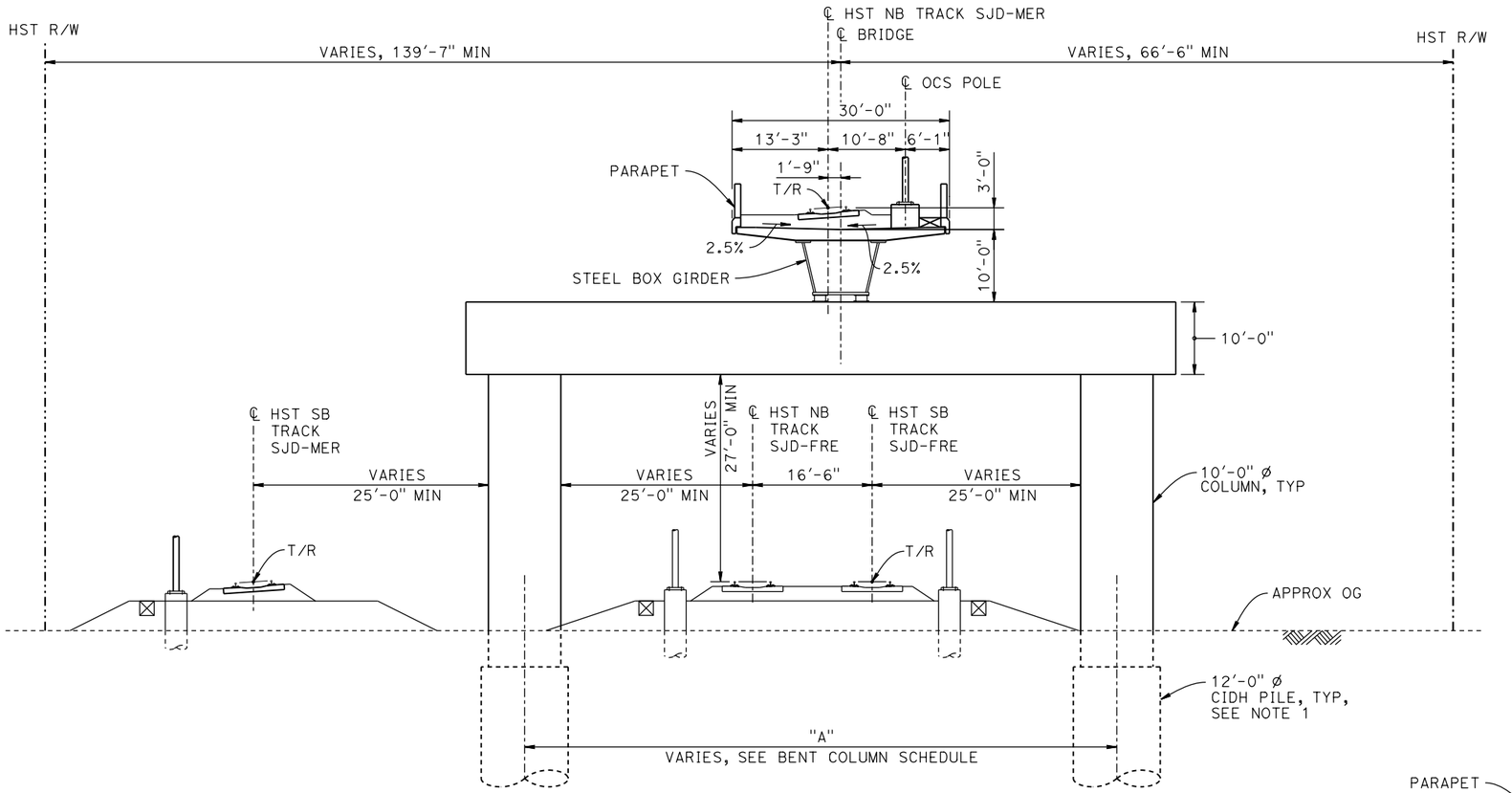

SECTION C-C

1" = 10'

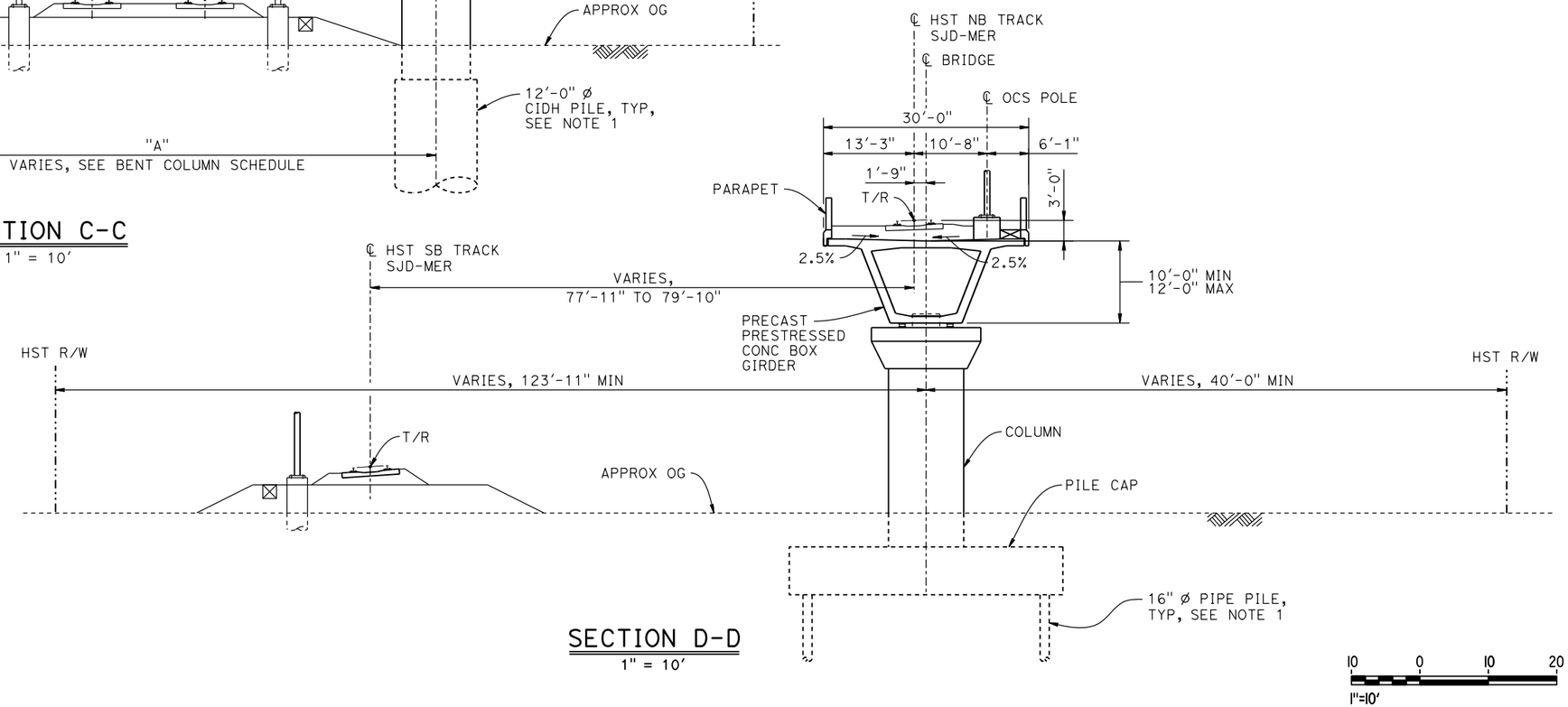

SECTION D-D

1" = 10'

10 0 10 20

1"=10'

REV	DATE	BY	CHK	APP	DESCRIPTION

DESIGNED BY A. M.
DRAWN BY W. JOHNSEN
CHECKED BY S. J. S.
IN CHARGE C. LEMLEY
DATE 02/13/2015

RECORD SET
15% DESIGN SUBMITTAL

NOT FOR CONSTRUCTION

PARSONS

CALIFORNIA HIGH-SPEED RAIL AUTHORITY

CALIFORNIA HIGH-SPEED TRAIN PROJECT
MERCED TO FRESNO SECTION
CENTRAL VALLEY WYE
SR 152 (NORTH) TO ROAD 13 WYE ALTERNATIVE
TYPICAL SECTIONS (SJD-MER)
AERIAL #4 - NORTHBOUND OVER HST MAINLINE - 6 OF 6

CONTRACT NO. HSR08-05
DRAWING NO. ST-K3621-A
SCALE AS SHOWN
SHEET NO.

MF-ST-K3621-A.dgn
06-FEB-2015 5:35
p0036110

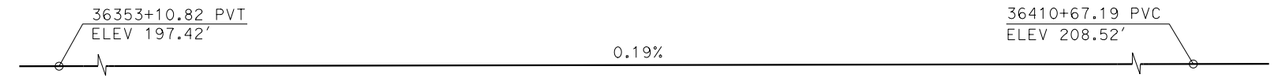

TOP OF RAIL PROFILE (℄ HST SB TRACK)

NO SCALE

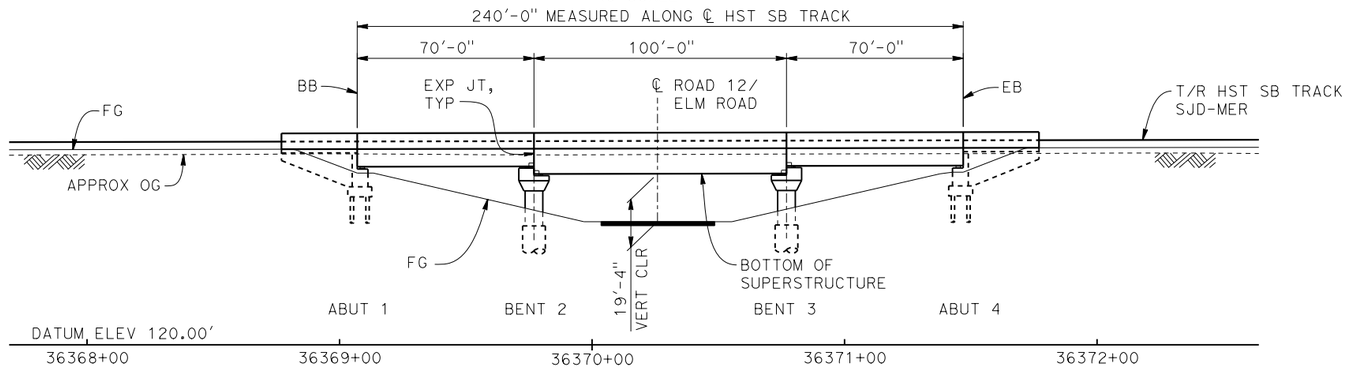

DEVELOPED ELEVATION

(SB BRIDGE SHOWN, NB BRIDGE SIMILAR)
1" = 30'

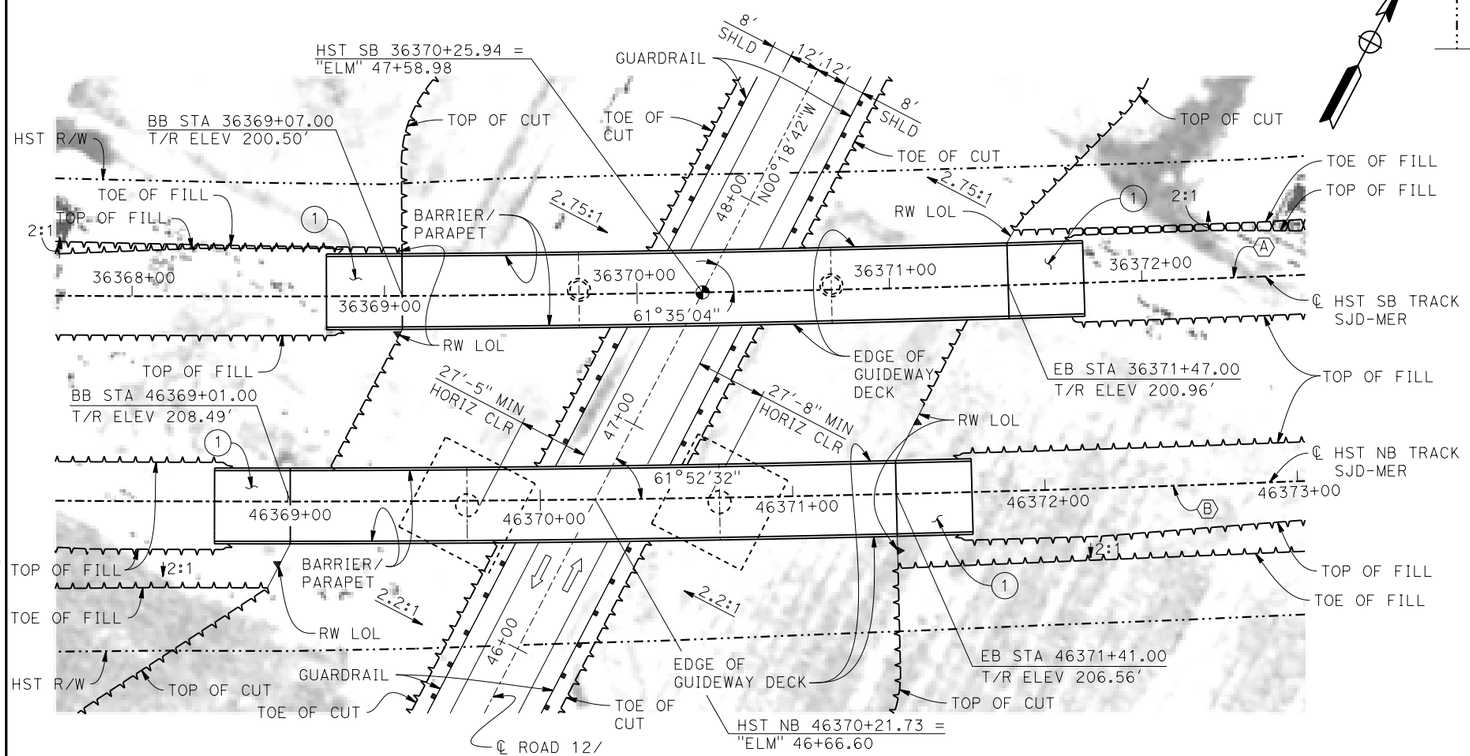

PLAN

1" = 30'

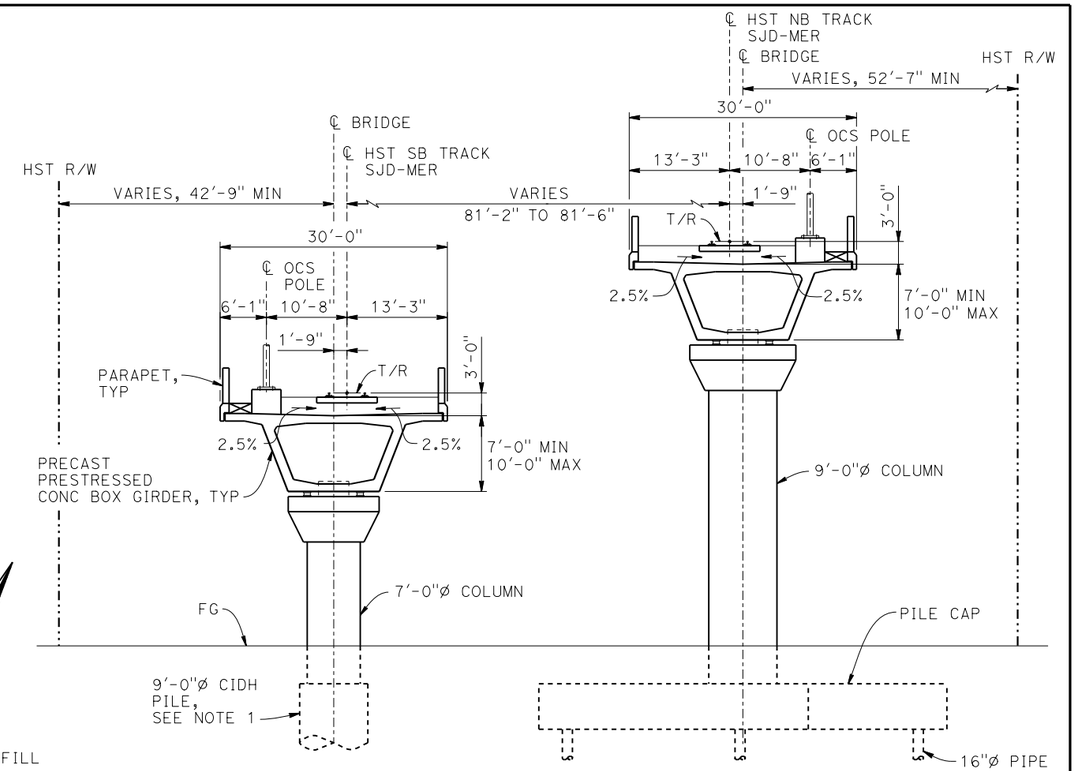

TYPICAL SECTION

1" = 10'

CURVE SJD-MER 1 SB (A)

R = 10,300.00'
LS = 1,500.00'

CURVE SJD-MER 1 NB (B)

R = 10,376.50'
LS = 1,500.00'

NOTES:

1. 16"ø PIPE PILES ASSUMED FOR ABUTMENT AND BENT FOUNDATIONS, UNLESS OTHERWISE NOTED. PILE AND DRILLED SHAFT LENGTHS TO BE DETERMINED.
2. FOR UTILITY DISPOSITIONS, SEE CIVIL AND GRADE SEPARATION PLANS; DRAWING CV-S1630-A.
3. FOR GUARDRAILS, SEE CIVIL AND GRADE SEPARATION PLANS; DRAWING CV-S1630-A.
4. FOR RETAINING WALLS, SEE CIVIL AND GRADE SEPARATION PLANS; DRAWING CV-S1630-A.
5. FOR TRACK SUPERELEVATION DETAILS, SEE ALIGNMENT AND TYPICAL SECTION PLANS; DRAWING TT-B0056-A.

TEMPORARY TRAFFIC OPENINGS

VEHICULAR TRAFFIC

1. __ TRAFFIC WILL BE DETOURED AWAY FROM THE SITE.
2. X TRAFFIC WILL PASS UNDER THE STRUCTURE ON:

STREET OR ROAD NAME AND LOCATION		FALSEWORK OPENING REQD (HORIZ x VERT)	
ROAD 12/ELM ROAD	36370+26	32'x16.5'	2-WAY

3. __ TEMP TRAFFIC LANE REDUCTION FOR FTG EXCAVATION.

LEGEND:

- INDICATES POINT OF MINIMUM VERTICAL CLEARANCE
- INDICATES DIRECTION OF TRAFFIC
- (1) STRUCTURE APPROACH

10 0 10 20
1"=10'

30 0 30 60
1"=30'

REV	DATE	BY	CHK	APP	DESCRIPTION

DESIGNED BY O. EDEWOR
DRAWN BY W. JOHNSEN
CHECKED BY S. J. S.
IN CHARGE C. LEMLEY
DATE 02/13/2015

RECORD SET
15% DESIGN SUBMITTAL

NOT FOR CONSTRUCTION

PARSONS

CALIFORNIA HIGH-SPEED RAIL AUTHORITY

CALIFORNIA HIGH-SPEED TRAIN PROJECT
MERCED TO FRESNO SECTION
CENTRAL VALLEY WYE
SR 152 (NORTH) TO ROAD 13 WYE ALTERNATIVE
GENERAL PLAN (SJD-MER)
ELM ROAD (ROAD 12) UNDERPASS

CONTRACT NO. HSR08-05
DRAWING NO. ST-K1630-A
SCALE AS SHOWN
SHEET NO.

MF-ST-K1630-A.dgn
09-FEB-2015 09:57
p005133a

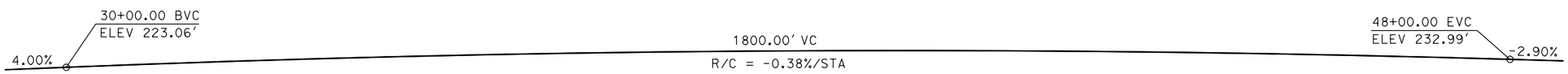

PROFILE GRADE

NO SCALE

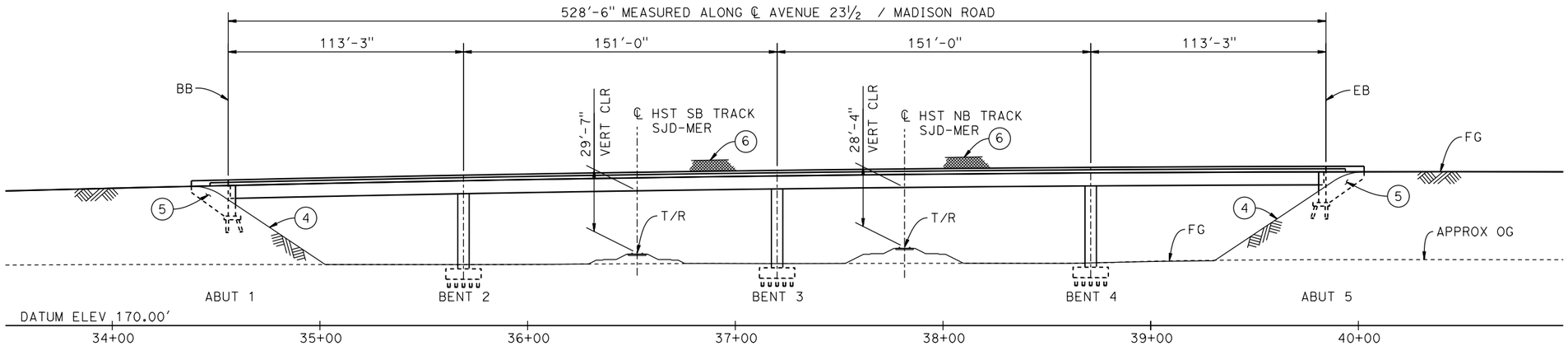

ELEVATION

1"=30'

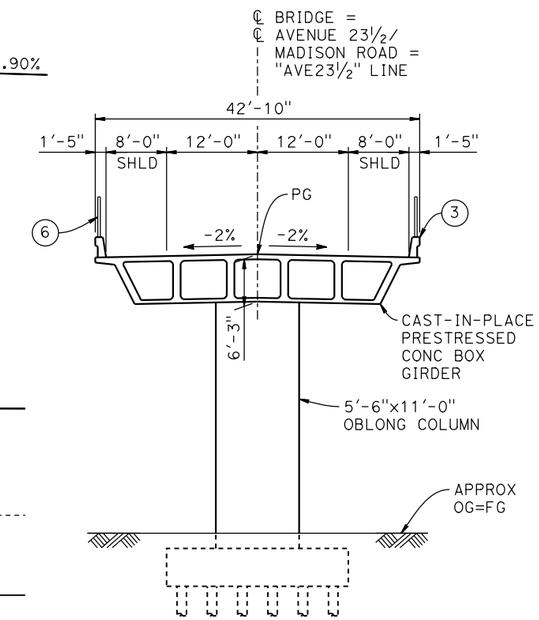

TYPICAL SECTION

1" = 10'

CURVE SJD-MER 1 SB (A)
R = 10,300.00'
LS = 1,500.00'

CURVE SJD-MER 1 NB (B)
R = 10,376.50'
LS = 1,500.00'

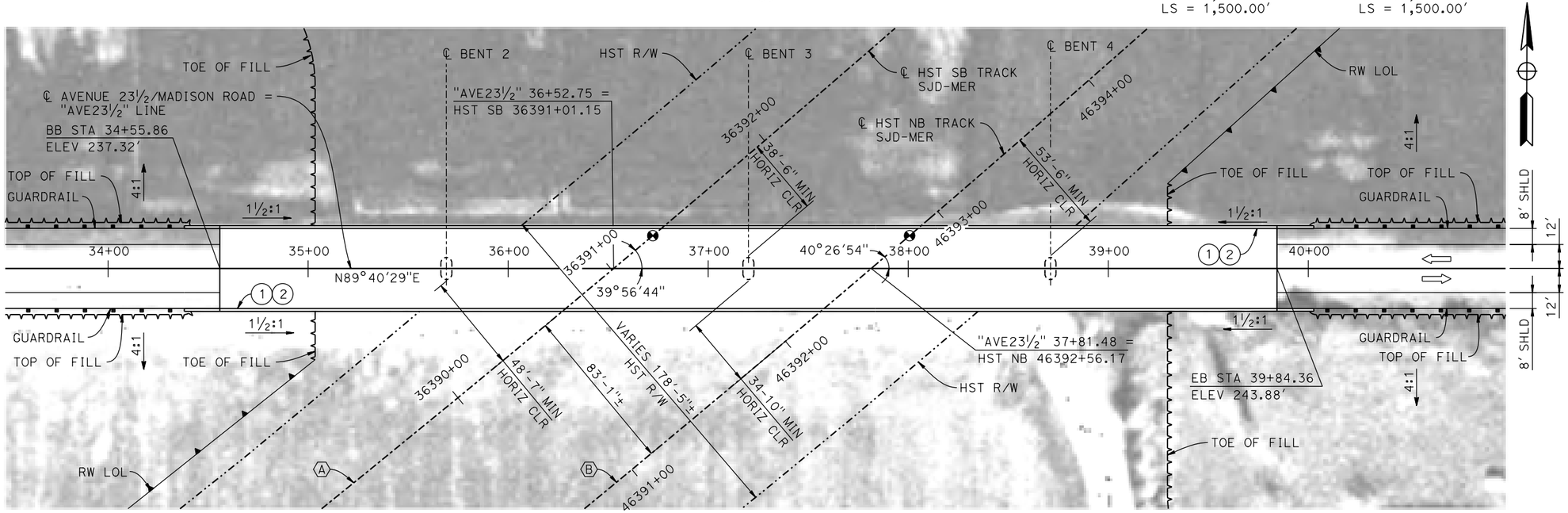

PLAN

1"=30'

LEGEND:

- INDICATES POINT OF MINIMUM VERTICAL CLEARANCE
- INDICATES DIRECTION OF TRAFFIC
- (1) PAINT "MADISON ROAD OVERHEAD"
- (2) PAINT "BRIDGE NO. XX-XXXX"
- (3) CONCRETE BARRIER TYPE 736 MOD
- (4) SLOPE PAVING (1½H:1V)
- (5) WINGWALL
- (6) AR FENCE WITH SOLID PLATE

NOTES:

1. ASSUME CLASS 140 PILES AT ABUTMENT AND BENT FOUNDATIONS. PILE LENGTHS TO BE DETERMINED.
2. FOR UTILITY DISPOSITION, SEE CIVIL AND GRADE SEPARATION PLANS; DRAWING CV-S1630-A.
3. FOR GUARDRAILS, SEE CIVIL AND GRADE SEPARATION PLANS; DRAWING CV-S1630-A.
4. FOR RETAINING WALLS, SEE CIVIL AND GRADE SEPARATION PLANS; DRAWING CV-S1630-A.

10 0 10 20 — 1"=10'
30 0 30 60 — 1"=30'

REV	DATE	BY	CHK	APP	DESCRIPTION

DESIGNED BY O. EDEWOR
DRAWN BY J. KIDWELL
CHECKED BY S. J. S.
IN CHARGE C. LEMLEY
DATE 02/13/2015

RECORD SET
15% DESIGN SUBMITTAL

NOT FOR CONSTRUCTION

PARSONS

CALIFORNIA HIGH-SPEED RAIL AUTHORITY

CALIFORNIA HIGH-SPEED TRAIN PROJECT
MERCED TO FRESNO SECTION
CENTRAL VALLEY WYE
SR 152 (NORTH) TO ROAD 13 WYE ALTERNATIVE
GENERAL PLAN (SJD-MER)
MADISON ROAD (AVENUE 23½) OVERHEAD

CONTRACT NO. HSR08-05
DRAWING NO. ST-K1635-A
SCALE AS SHOWN
SHEET NO.

MF-ST-K1635-A.dgn
06-FEB-2015 16:17
p0036110

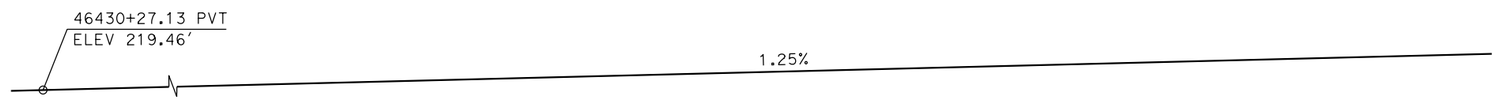

TOP OF RAIL PROFILE (℄ HST NB TRACK SJD-MER)

NO SCALE

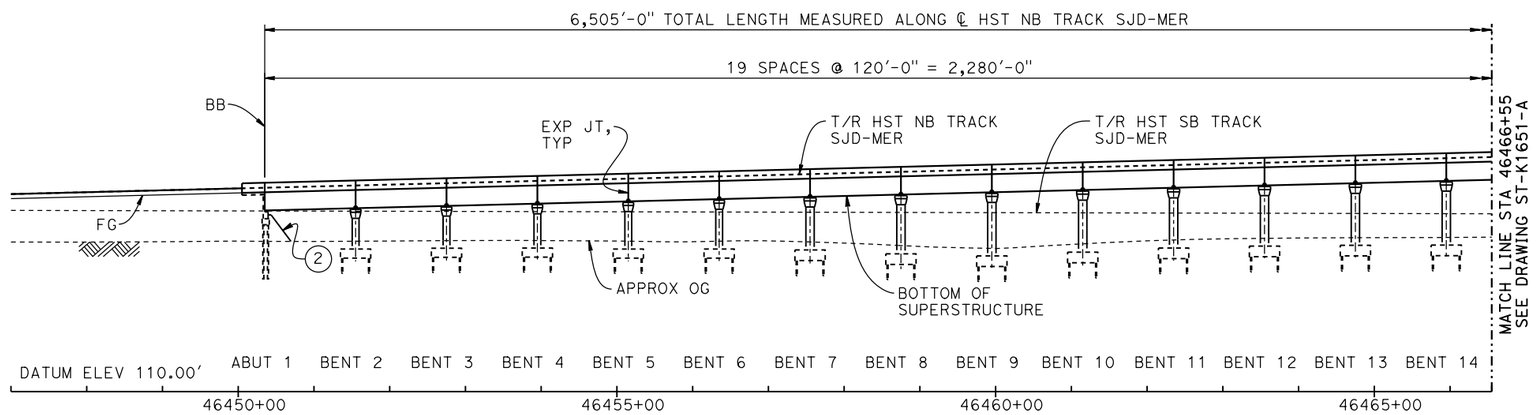

DEVELOPED ELEVATION

VERT: 1" = 50' HORIZ: 1" = 100'

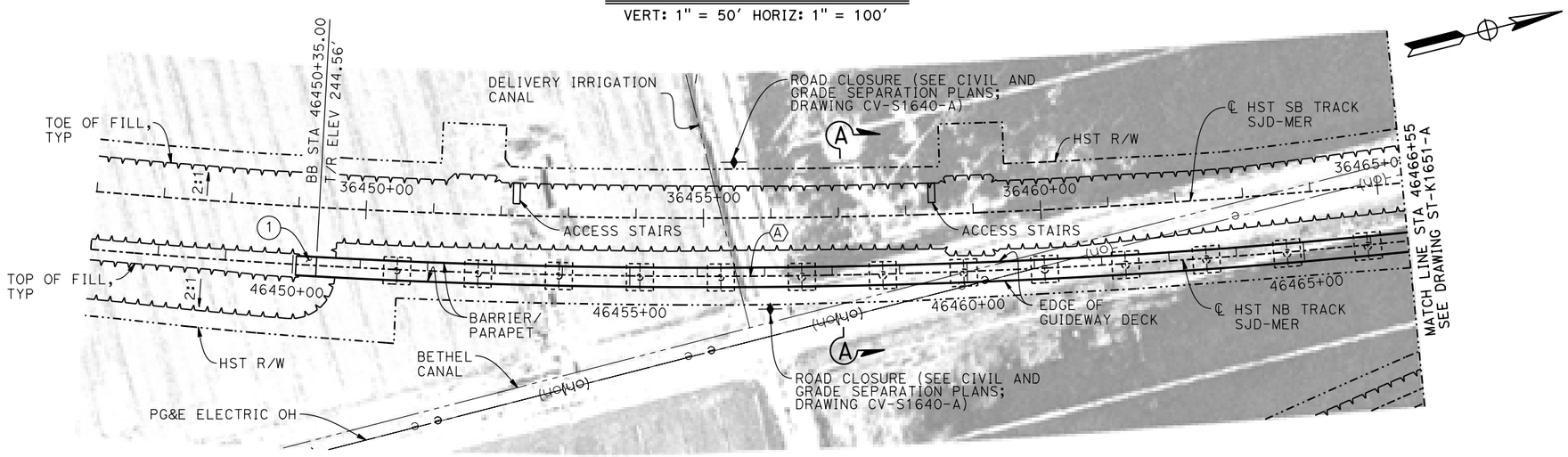

PLAN

1" = 100'

LEGEND:

- INDICATES POINT OF MINIMUM VERTICAL CLEARANCE
- INDICATES DIRECTION OF TRAFFIC
- INDICATES DIRECTION OF FLOW
- (1) STRUCTURE APPROACH
- (2) SLOPE PAVING (1½H:1V)

CURVE SJD-MER 1 NB (A)

R = 10,376.50'
LS = 1,500.00'

TEMPORARY TRAFFIC OPENINGS

VEHICULAR TRAFFIC

1. __ TRAFFIC WILL BE DETOURED AWAY FROM THE SITE.
2. X TRAFFIC WILL PASS UNDER THE STRUCTURE ON:

ST OR ROAD NAME AND LOCATION		FALSEWORK OPENING REQD (HORIZ X VERT)	
AVENUE 25/WASHINGTON RD	46483+65	32'X16.5'	2-WAY
AVENUE 25½	46510+03	32'X16.5'	2-WAY

3. __ TEMP TRAFFIC LANE REDUCTION FOR FTG EXC.

NOTES:

1. 16" ø PIPE PILES ASSUMED FOR ABUTMENT AND BENT FOUNDATIONS, UNLESS OTHERWISE NOTED. PILE LENGTHS TO BE DETERMINED.
2. FOR SECTIONS AND BENT COLUMN SCHEDULE, SEE DRAWINGS ST-K3650-A AND ST-K3651-A.
3. ANY EXISTING DIRT ROAD THAT CONFLICTS WITH NEW CONSTRUCTION SHALL BE REALIGNED.
4. FOR UTILITY DISPOSITIONS, SEE CIVIL AND GRADE SEPARATION PLANS; DRAWINGS CV-S1640-A AND CV-S1650-A.
5. FOR GUARDRAILS, SEE CIVIL AND GRADE SEPARATION PLANS; DRAWINGS CV-S1640-A AND CV-S1650-A.
6. FOR RETAINING WALLS, SEE CIVIL AND GRADE SEPARATION PLANS; DRAWINGS CV-S1640-A AND CV-S1650-A.
7. FOR WASHINGTON ROAD (AVENUE 25) UNDERPASS GENERAL PLAN AND TYPICAL SECTION, SEE DRAWINGS ST-K1450-A AND ST-K3450-A.
8. FOR ASH SLOUGH BRIDGE GENERAL PLAN AND TYPICAL SECTIONS, SEE DRAWINGS ST-K1455-A AND ST-K3455-A.
9. FOR HST SB BRIDGE OVER ASH SLOUGH GENERAL PLAN AND TYPICAL SECTIONS, SEE DRAWINGS ST-K1655-A AND ST-K3655-A.

50 0 50 100
1"=50'

100 0 100 200
1"=100'

REV	DATE	BY	CHK	APP	DESCRIPTION

DESIGNED BY S. J. S.
DRAWN BY R. M.
CHECKED BY O. EDEWOR
IN CHARGE C. LEMLEY
DATE 02/13/2015

RECORD SET 15% DESIGN SUBMITTAL

NOT FOR CONSTRUCTION

PARSONS

CALIFORNIA HIGH-SPEED RAIL AUTHORITY

CALIFORNIA HIGH-SPEED TRAIN PROJECT
MERCED TO FRESNO SECTION

CENTRAL VALLEY WYE
SR 152 (NORTH) TO ROAD 13 WYE ALTERNATIVE
GENERAL PLAN (SJD-MER)
AERIAL #5 - NORTHBOUND OVER HST MERCED TO FRESNO - 1 OF 5

CONTRACT NO. HSR08-05
DRAWING NO. ST-K1650-A
SCALE AS SHOWN
SHEET NO.

MF-ST-K1650-A.dgn 06-FEB-2015 15:40 p0036110

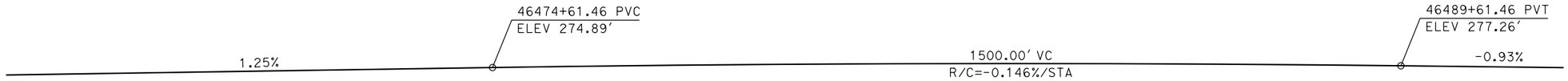

TOP OF RAIL PROFILE (℄ HST NB TRACK SJD-MER)

NO SCALE

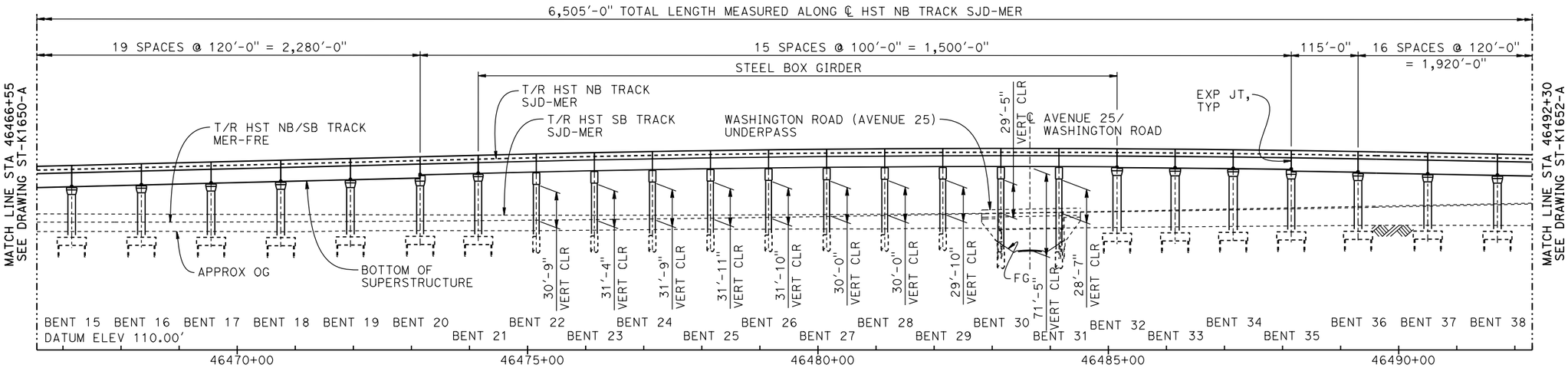

DEVELOPED ELEVATION

VERT: 1" = 50' HORIZ: 1" = 100'

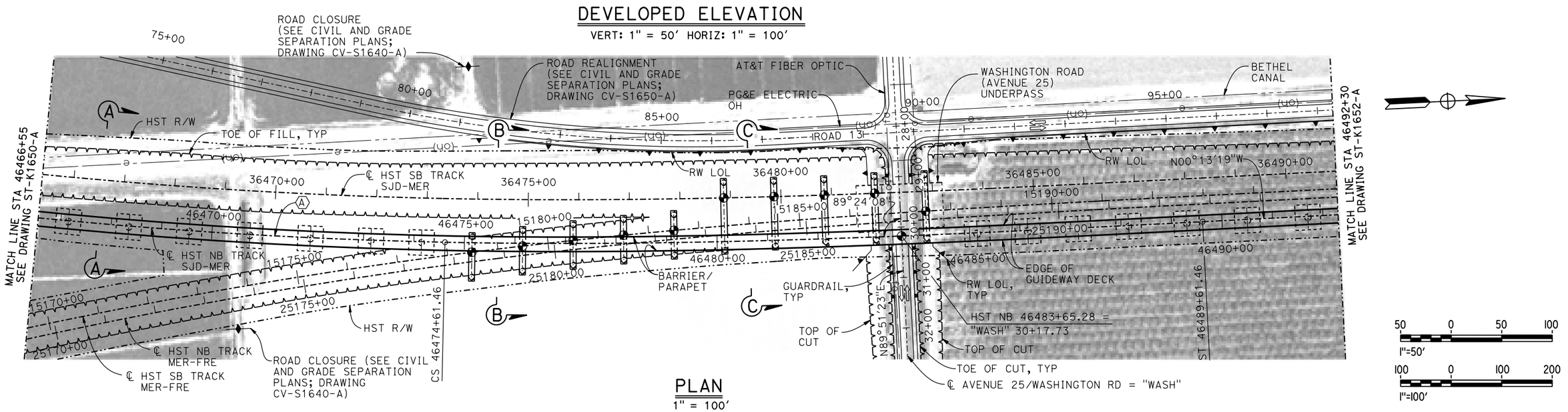

PLAN

1" = 100'

REV	DATE	BY	CHK	APP	DESCRIPTION

DESIGNED BY S. J. S.
DRAWN BY R. M.
CHECKED BY O. EDEWOR
IN CHARGE C. LEMLEY
DATE 02/13/2015

RECORD SET 15% DESIGN SUBMITTAL

NOT FOR CONSTRUCTION

PARSONS

CALIFORNIA HIGH-SPEED RAIL AUTHORITY

CALIFORNIA HIGH-SPEED TRAIN PROJECT
MERCED TO FRESNO SECTION

CENTRAL VALLEY WYE
SR 152 (NORTH) TO ROAD 13 WYE ALTERNATIVE
GENERAL PLAN (SJD-MER)
AERIAL #5 - NORTHBOUND OVER HST MERCED TO FRESNO - 2 OF 5

CONTRACT NO. HSR08-05
DRAWING NO. ST-K1651-A
SCALE AS SHOWN
SHEET NO.

06-FEB-2015 15:41 MF-ST-K1651-A.dgn
p0036110

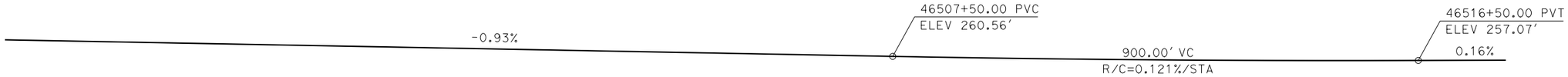

TOP OF RAIL PROFILE (℄ HST NB TRACK SJD-MER)

NO SCALE

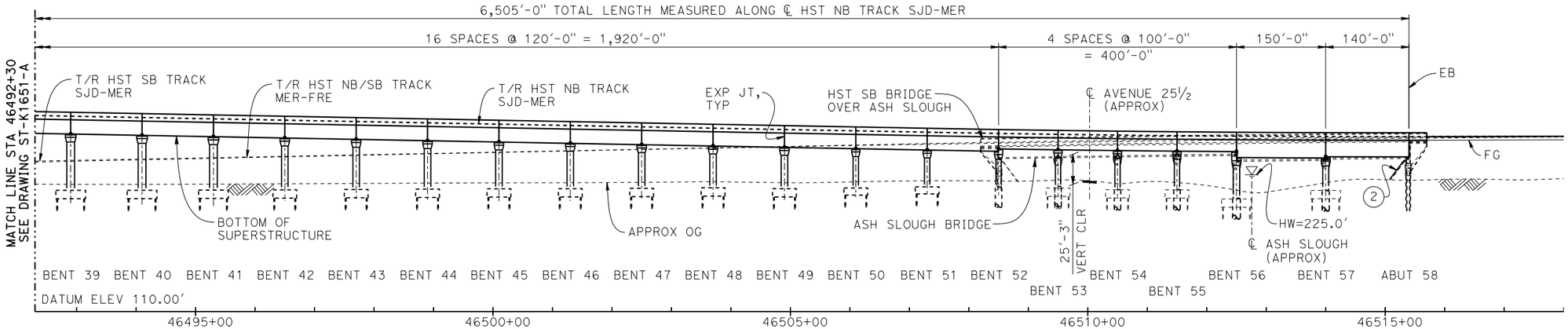

DEVELOPED ELEVATION

VERT: 1" = 50' HORIZ: 1" = 100'

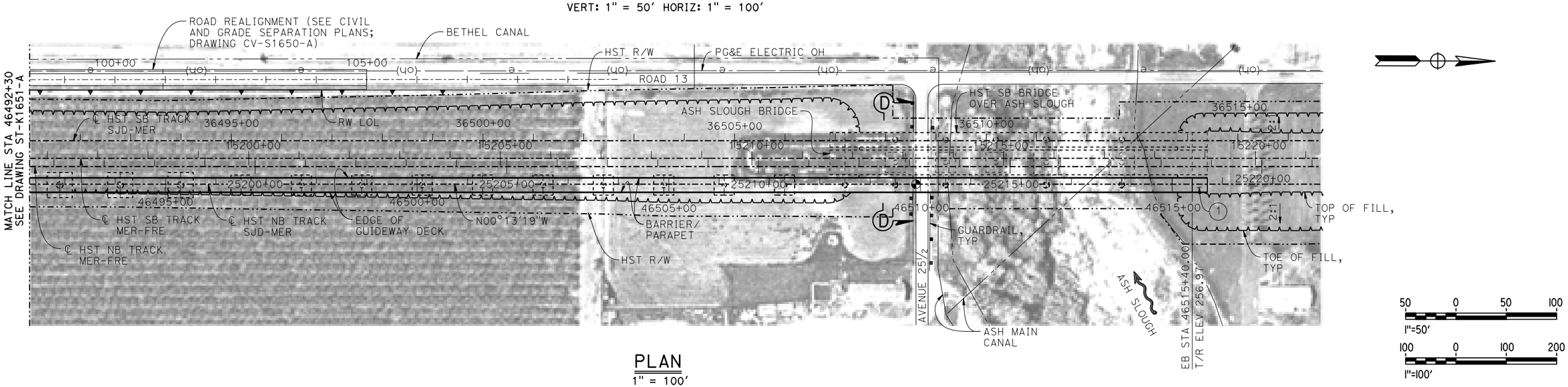

PLAN

1" = 100'

REV	DATE	BY	CHK	APP	DESCRIPTION

DESIGNED BY S. J. S.
DRAWN BY R. M.
CHECKED BY O. EDEWOR
IN CHARGE C. LEMLEY
DATE 05/08/2015

RECORD SET 15% DESIGN SUBMITTAL

NOT FOR CONSTRUCTION

PARSONS

CALIFORNIA HIGH-SPEED RAIL AUTHORITY

CALIFORNIA HIGH-SPEED TRAIN PROJECT
MERCED TO FRESNO SECTION
CENTRAL VALLEY WYE
SR 152 (NORTH) TO ROAD 13 WYE ALTERNATIVE
GENERAL PLAN (SJD-MER)
AERIAL #5 - NORTHBOUND OVER HST MERCED TO FRESNO - 3 OF 5

CONTRACT NO. HSR08-05
DRAWING NO. ST-K1652-A
SCALE AS SHOWN
SHEET NO.

MF-ST-K1652-A.dgn 16-MAR-2016 16:04 p0051330

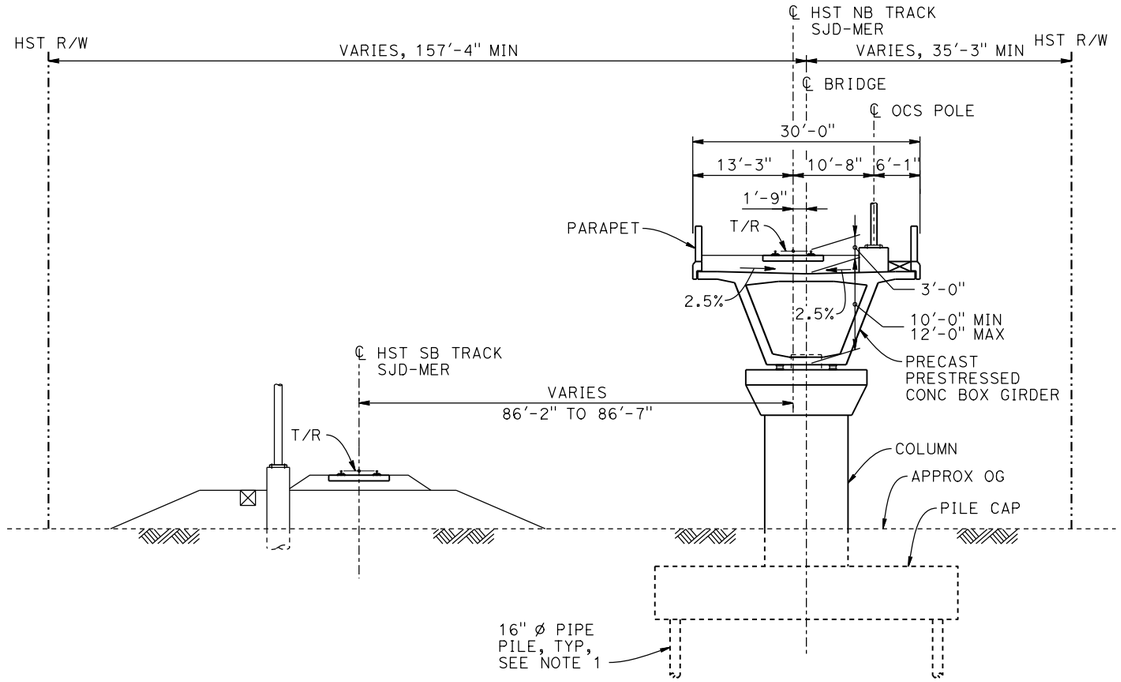

SECTION A-A

1" = 10'

BENT COLUMN SCHEDULE			
BENT	COLUMN TYPE	CIDH TYPE	"A"
2 - 6	9'-0"Ø		
7 - 14	11'-0"Ø		
15 - 19	13'-0"Ø		
20 - 21	12'-0"Ø		
22 - 26	2 - 10'-0"Ø		80'-0"
27	2 - 10'-0"Ø		134'-0"
28	2 - 10'-0"Ø		128'-0"
29	2 - 10'-0"Ø		123'-0"
30 - 31	2 - 10'-0"Ø		125'-6"
32 - 34	14'-0"Ø		
35	12'-0"Ø		
36 - 41	13'-0"Ø		
42 - 49	11'-0"Ø		
50 - 51	9'-0"Ø		
52 - 55	9'-0"Ø	11'-0"Ø	
56	11'-0"Ø	13'-0"Ø	
57	10'-0"Ø	12'-0"Ø	

NOTES:

1. PILE AND DRILLED SHAFT LENGTHS TO BE DETERMINED.
2. FOR TRACK SUPERELEVATION DETAILS, SEE ALIGNMENT AND TYPICAL SECTION PLANS; DRAWING TT-B0056-A.

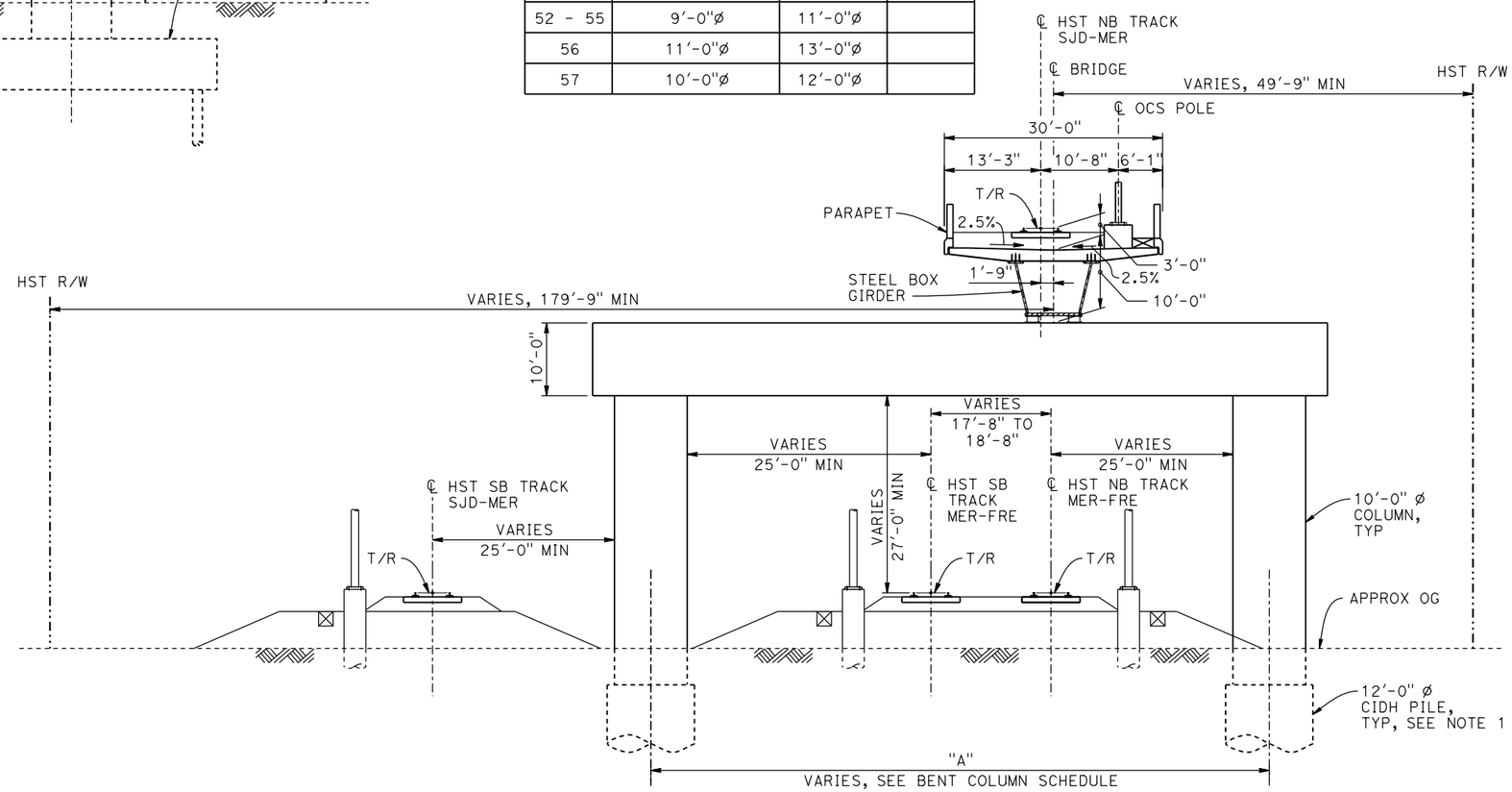

SECTION B-B

1" = 10'

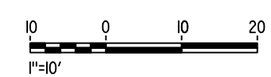

REV	DATE	BY	CHK	APP	DESCRIPTION

DESIGNED BY S. J. S.
DRAWN BY R. M.
CHECKED BY O. EDEWOR
IN CHARGE C. LEMLEY
DATE 02/13/2015

RECORD SET
15% DESIGN SUBMITTAL

NOT FOR CONSTRUCTION

PARSONS

CALIFORNIA HIGH-SPEED RAIL AUTHORITY

CALIFORNIA HIGH-SPEED TRAIN PROJECT
MERCED TO FRESNO SECTION

CENTRAL VALLEY WYE
SR 152 (NORTH) TO ROAD 13 WYE ALTERNATIVE
TYPICAL SECTIONS (SJD-MER)
AERIAL #5 - NORTHBOUND OVER HST MERCED TO FRESNO - 4 OF 5

CONTRACT NO. HSR08-05
DRAWING NO. ST-K3650-A
SCALE AS SHOWN
SHEET NO.

MF-ST-K3650-A.dgn
06-FEB-2015 15:42
p0036110

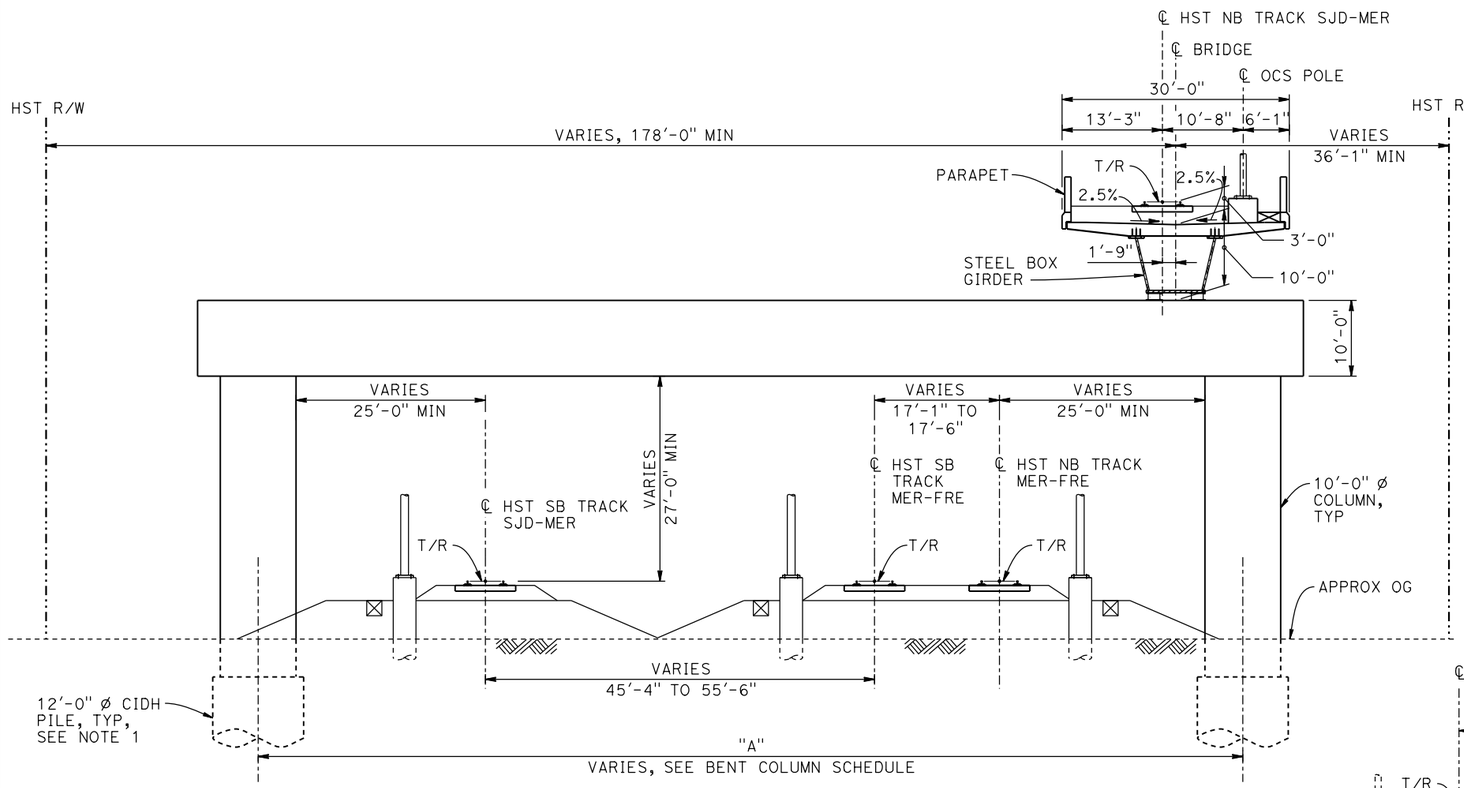

SECTION C-C

1" = 10'

NOTES:

1. DRILLED SHAFT LENGTHS TO BE DETERMINED.
2. FOR TRACK SUPERELEVATION DETAILS, SEE ALIGNMENT AND TYPICAL SECTION PLANS; DRAWING TT-B0056-A.

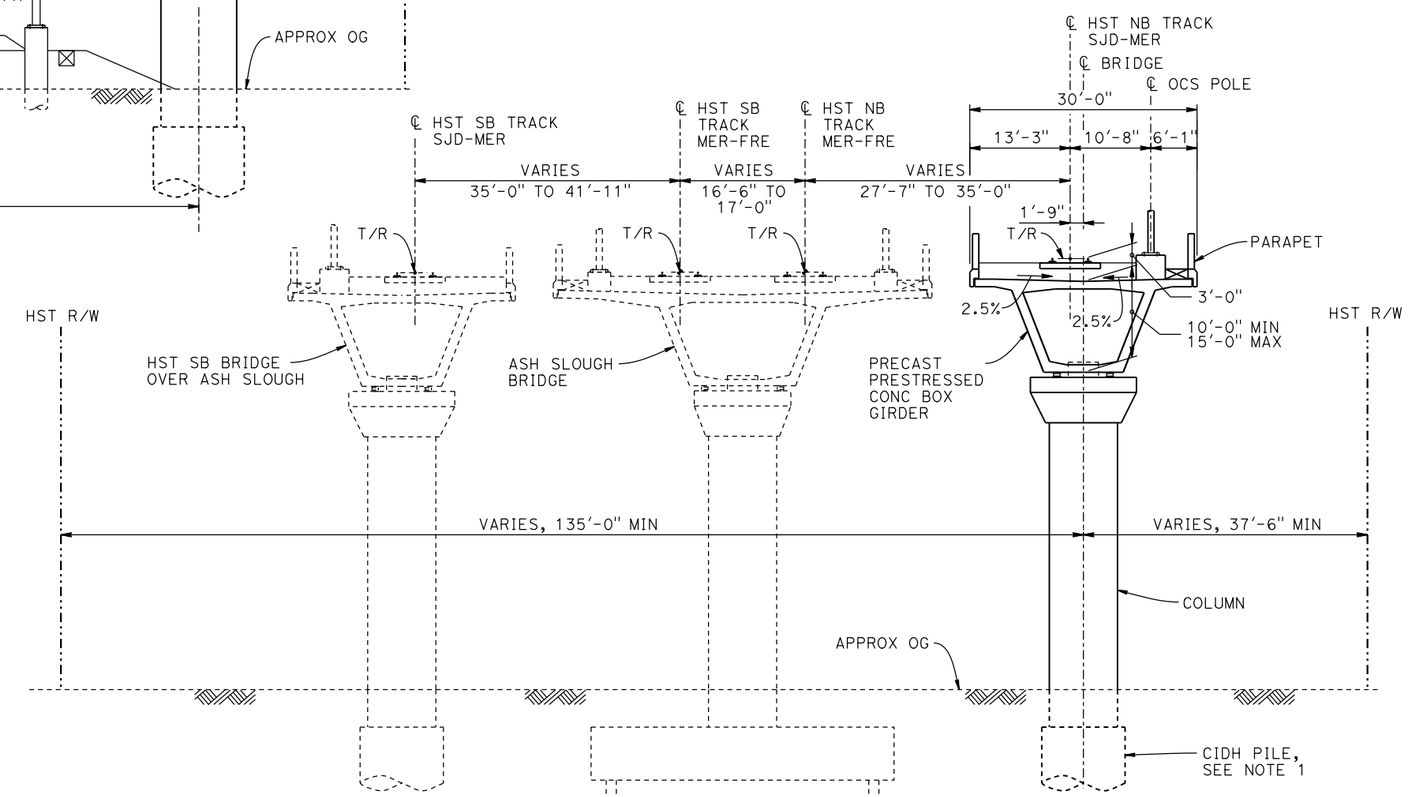

SECTION D-D

1" = 10'

10 0 10 20

1"=10'

REV	DATE	BY	CHK	APP	DESCRIPTION

DESIGNED BY S. J. S.
DRAWN BY R. M.
CHECKED BY O. EDEWOR
IN CHARGE C. LEMLEY
DATE 02/13/2015

RECORD SET
15% DESIGN SUBMITTAL

NOT FOR CONSTRUCTION

PARSONS

CALIFORNIA HIGH-SPEED RAIL AUTHORITY

CALIFORNIA HIGH-SPEED TRAIN PROJECT
MERCED TO FRESNO SECTION

CENTRAL VALLEY WYE
SR 152 (NORTH) TO ROAD 13 WYE ALTERNATIVE
TYPICAL SECTIONS (SJD-MER)
AERIAL #5 - NORTHBOUND OVER HST MERCED TO FRESNO - 5 OF 5

CONTRACT NO. HSR08-05
DRAWING NO. ST-K3651-A
SCALE AS SHOWN
SHEET NO.

MF-ST-K3651-A.dgn
06-FEB-2015 15:42
p0036110

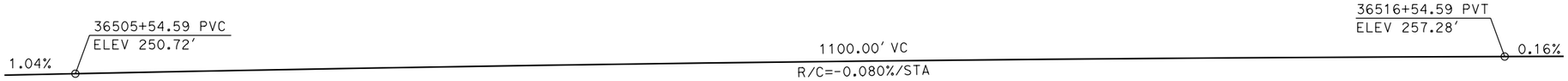

TOP OF RAIL PROFILE (℄ HST SB TRACK SJD-MER)

NO SCALE

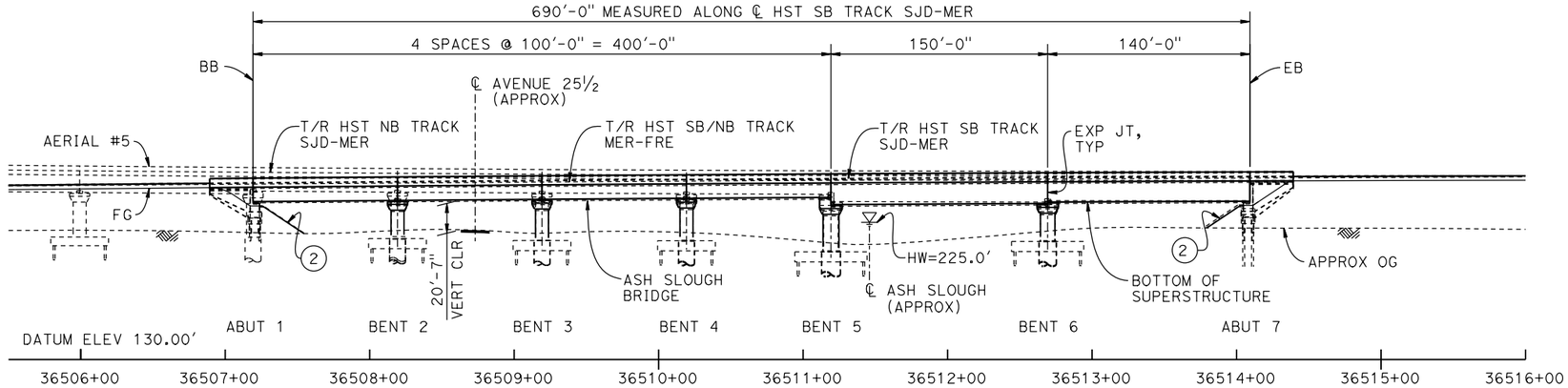

ELEVATION

1" = 50'

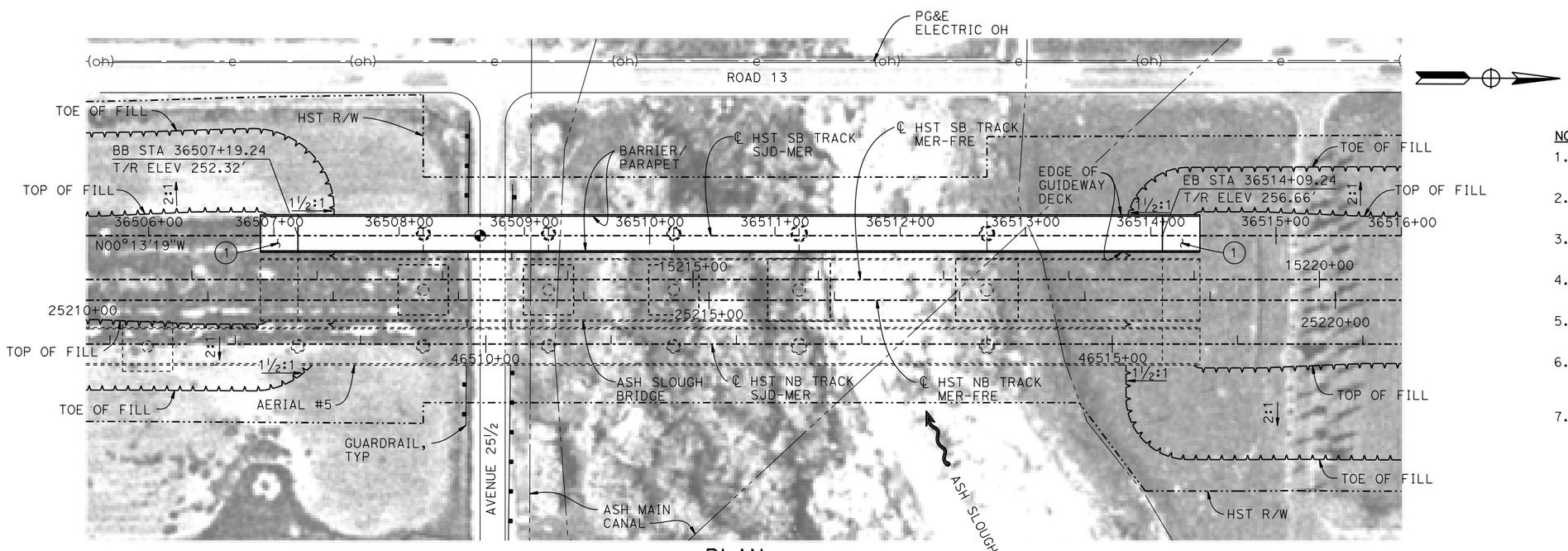

PLAN

1" = 50'

TEMPORARY TRAFFIC OPENINGS

VEHICULAR TRAFFIC

1. __ TRAFFIC WILL BE DETOURED AWAY FROM THE SITE.
2. X TRAFFIC WILL PASS UNDER THE STRUCTURE ON:

ST OR ROAD NAME AND LOCATION		FALSEWORK OPENING REQD (HORIZ X VERT)	
AVENUE 25½	36508+73	32'x16.5'	2-WAY

3. __ TEMP TRAFFIC LANE REDUCTION FOR FTG EXC.

LEGEND:

- INDICATES POINT OF MINIMUM VERTICAL CLEARANCE
- INDICATES DIRECTION OF FLOW
- (1) STRUCTURE APPROACH
- (2) SLOPE PAVING (1½H:1V)

NOTES:

1. 16" Ø PIPE PILES ASSUMED FOR ABUTMENT AND BENT FOUNDATIONS. PILE LENGTHS TO BE DETERMINED.
2. FOR SECTION AND BENT COLUMN SCHEDULE, SEE DRAWING ST-K3655-A.
3. ANY EXISTING DIRT ROAD THAT CONFLICTS WITH NEW CONSTRUCTION SHALL BE REALIGNED.
4. FOR UTILITY DISPOSITIONS, SEE CIVIL AND GRADE SEPARATION PLANS; DRAWING CV-S1650-A.
5. FOR GUARDRAIL, SEE CIVIL AND GRADE SEPARATION PLANS; DRAWING CV-S1650-A.
6. FOR ASH SLOUGH BRIDGE GENERAL PLAN AND TYPICAL SECTIONS, SEE DRAWINGS ST-K1455-A AND ST-K3455-A
7. FOR AERIAL #5 - NORTHBOUND OVER HST MERCED TO FRESNO GENERAL PLAN AND TYPICAL SECTIONS, SEE DRAWINGS ST-K1650-A TO ST-K1652-A, ST-K3650-A AND ST-K3651-A.

50 0 50 100
1"=50'

REV	DATE	BY	CHK	APP	DESCRIPTION

DESIGNED BY S. J. S.
DRAWN BY W. JOHNSEN
CHECKED BY O. EDEWOR
IN CHARGE C. LEMLEY
DATE 02/13/2015

RECORD SET
15% DESIGN SUBMITTAL

NOT FOR CONSTRUCTION

PARSONS

CALIFORNIA HIGH-SPEED RAIL AUTHORITY

CALIFORNIA HIGH-SPEED TRAIN PROJECT
MERCED TO FRESNO SECTION
CENTRAL VALLEY WYE
SR 152 (NORTH) TO ROAD 13 WYE ALTERNATIVE
GENERAL PLAN (SJD-MER)
HST SB BRIDGE OVER ASH SLOUGH - 1 OF 2

CONTRACT NO. HSR08-05
DRAWING NO. ST-K1655-A
SCALE AS SHOWN
SHEET NO.

MF-ST-K1655-A.dgn
06-FEB-2015 5:58
p0036110

BENT COLUMN SCHEDULE		
BENT	COLUMN TYPE	CIDH TYPE
2 - 4	9'-0" Ø	11'-0" Ø
5	11'-0" Ø	13'-0" Ø
6	10'-0" Ø	12'-0" Ø

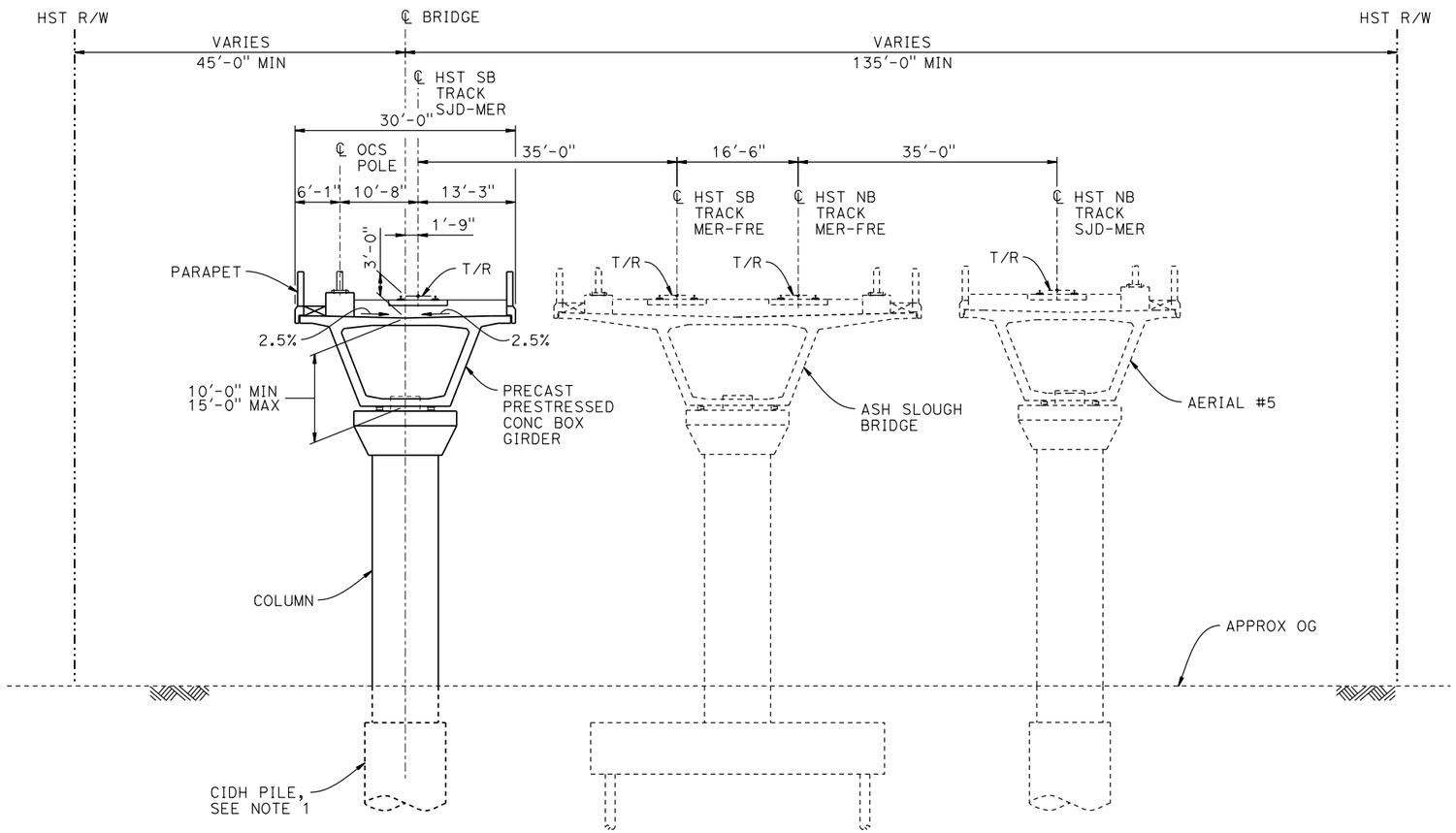

TYPICAL SECTION

1"=10'

NOTES:

1. DRILLED SHAFT LENGTHS TO BE DETERMINED.

10 0 10 20

1"=10'

REV	DATE	BY	CHK	APP	DESCRIPTION

DESIGNED BY S. J. S.
DRAWN BY W. JOHNSEN
CHECKED BY O. EDEWOR
IN CHARGE C. LEMLEY
DATE 02/13/2015

RECORD SET
15% DESIGN
SUBMITTAL

NOT FOR
CONSTRUCTION

PARSONS

CALIFORNIA
HIGH-SPEED RAIL AUTHORITY

CALIFORNIA HIGH-SPEED TRAIN PROJECT
MERCED TO FRESNO SECTION
CENTRAL VALLEY WYE
SR 152 (NORTH) TO ROAD 13 WYE ALTERNATIVE
TYPICAL SECTION (SJD-MER)
HST SB BRIDGE OVER ASH SLOUGH - 2 OF 2

CONTRACT NO. HSR08-05
DRAWING NO. ST-K3655-A
SCALE AS SHOWN
SHEET NO.

p0036110 06-FEB-2015 15:58 MF-ST-K3655-A.dgn

NOTES:

ST-K - INDICATES AERIAL, CROSSING, AND GRADE SEPARATION DRAWINGS

ST-T - INDICATES CUT AND COVER TUNNEL DRAWINGS

KEY PLAN

REV	DATE	BY	CHK	APP	DESCRIPTION

DESIGNED BY S. J. S.
DRAWN BY A. M.
CHECKED BY O. EDEWOR
IN CHARGE C. LEMLEY
DATE 03/18/2016

RECORD SET 15% DESIGN SUBMITTAL

NOT FOR CONSTRUCTION

PARSONS

CALIFORNIA HIGH-SPEED RAIL AUTHORITY

CALIFORNIA HIGH-SPEED TRAIN PROJECT
MERCED TO FRESNO SECTION
CENTRAL VALLEY WYE
SR 152 (NORTH) TO ROAD 19 WYE ALTERNATIVE
KEY MAP OF STRUCTURAL PLANS
SHEET 1 OF 2

CONTRACT NO. HSR08-05
DRAWING NO. ST-B4001-B
SCALE N. T. S.
SHEET NO.

MF-ST-B4001-B.dgn 14-MAR-2016 3:38 p005133A

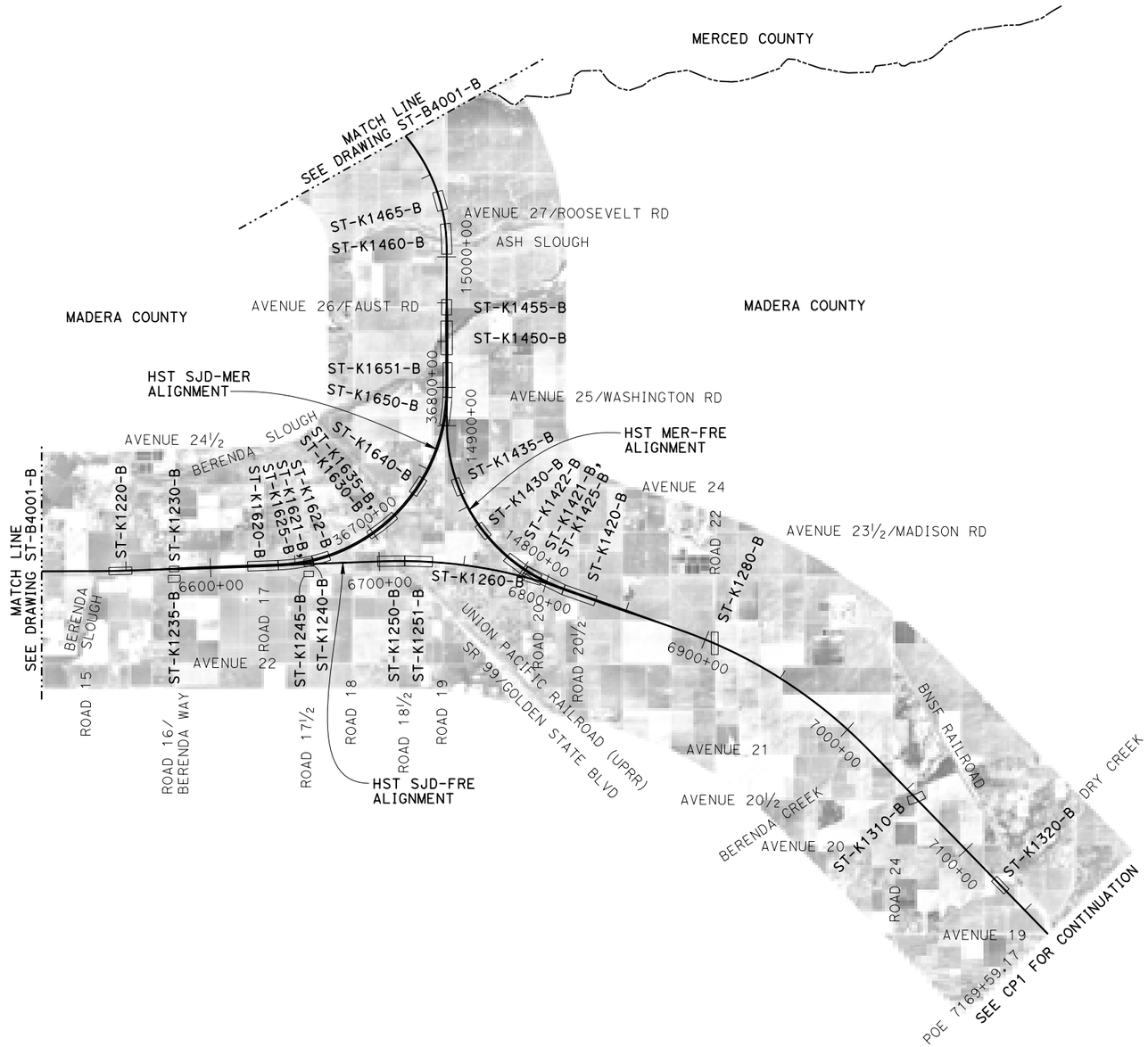

NOTES:

ST-K - INDICATES AERIAL, CROSSING, AND GRADE SEPARATION DRAWINGS

KEY PLAN

REV	DATE	BY	CHK	APP	DESCRIPTION

DESIGNED BY S. J. S.
DRAWN BY A. M.
CHECKED BY A. GURA
IN CHARGE C. LEMLEY
DATE 03/18/2016

RECORD SET
15% DESIGN
SUBMITTAL

NOT FOR
CONSTRUCTION

PARSONS

CALIFORNIA
HIGH-SPEED RAIL AUTHORITY

CALIFORNIA HIGH-SPEED TRAIN PROJECT
MERCED TO FRESNO SECTION
CENTRAL VALLEY WYE
SR 152 (NORTH) TO ROAD 19 WYE ALTERNATIVE
KEY MAP OF STRUCTURAL PLANS
SHEET 2 OF 2

CONTRACT NO. HSR08-05
DRAWING NO. ST-B4002-B
SCALE N. T. S.
SHEET NO.

p005133a 10-MAR-2016 7:13 MF-ST-B4002-B.dgn

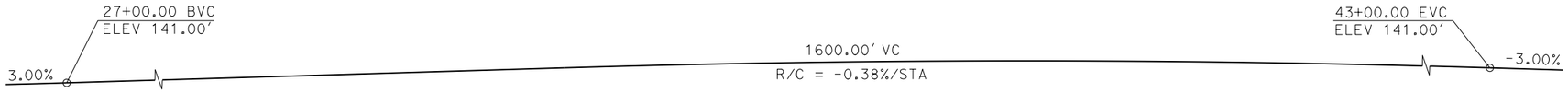

PROFILE GRADE

NO SCALE

CURVE NO. 050-01 (A)

R = 2,700.00'
Δ = 48°14'09"
L = 2,273.07'
T = 1,208.79'

CURVE SJD-FRE 1 SB (B)

R = 45,000.00'
LS = 1,650.00'

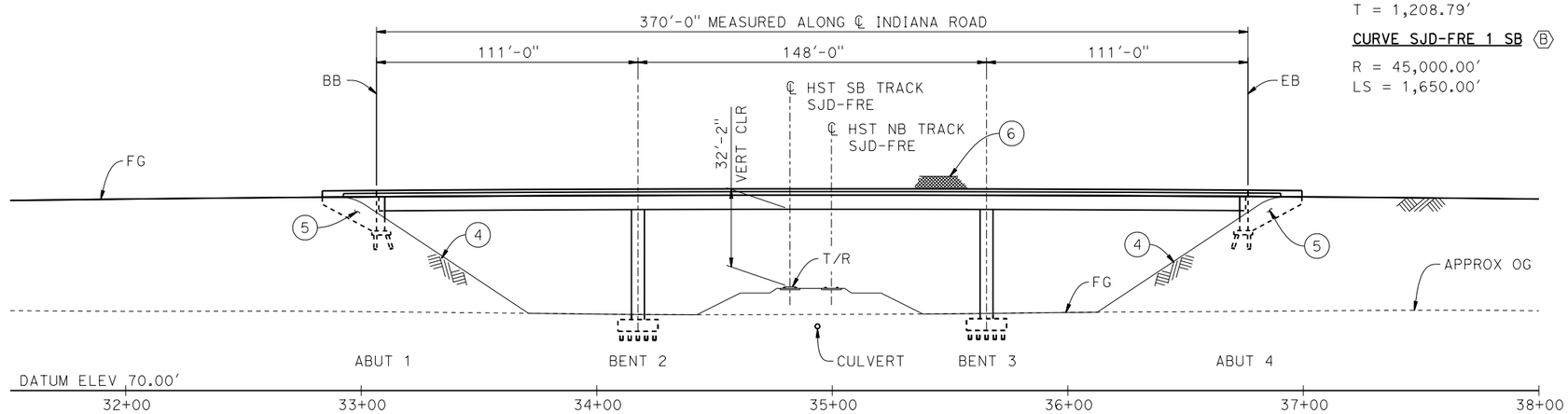

DEVELOPED ELEVATION

1"=30'

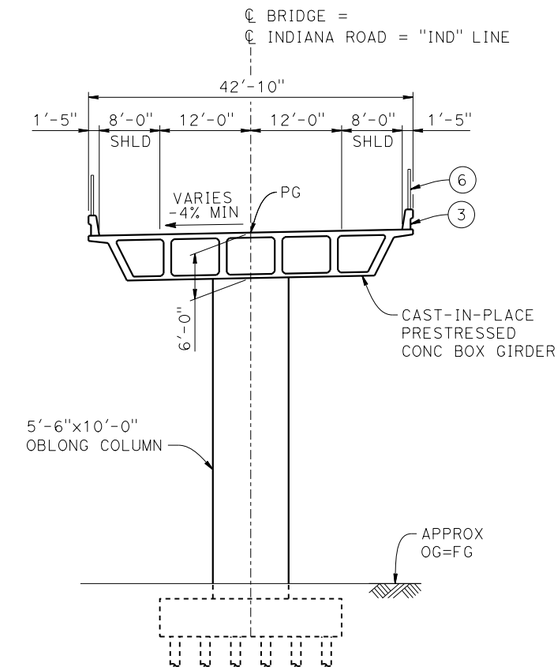

TYPICAL SECTION

1" = 10'

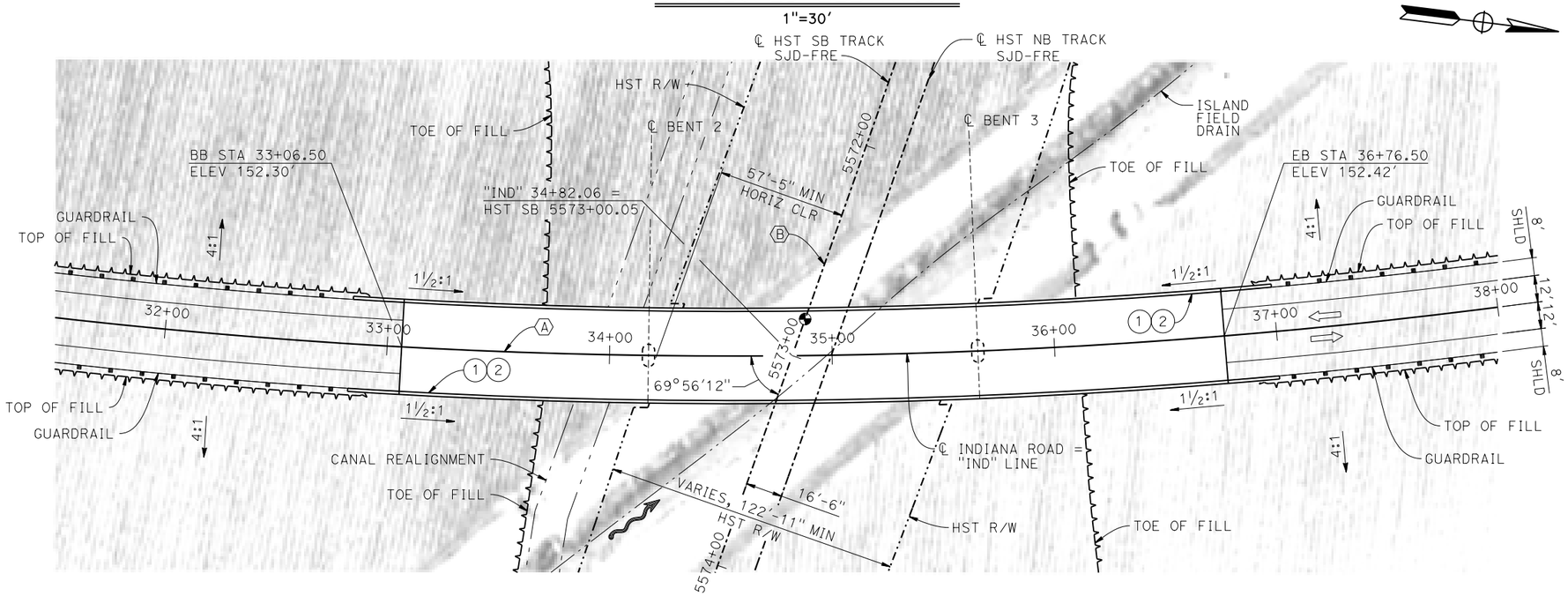

PLAN

1"=30'

LEGEND:

- INDICATES POINT OF MINIMUM VERTICAL CLEARANCE
- INDICATES DIRECTION OF FLOW
- INDICATES DIRECTION OF TRAFFIC
- (1) PAINT "INDIANA ROAD OVERHEAD"
- (2) PAINT "BRIDGE NO. XX-XXXX"
- (3) CONCRETE BARRIER TYPE 736 MOD
- (4) SLOPE PAVING (1½H:1V)
- (5) WINGWALL
- (6) AR FENCE WITH SOLID PLATE

NOTES:

1. ASSUME CLASS 140 PILES AT ABUTMENT AND BENT FOUNDATIONS. PILE LENGTHS TO BE DETERMINED.
2. FOR UTILITY DISPOSITIONS, SEE CIVIL AND GRADE SEPARATION PLANS; DRAWING CV-S1050-B.
3. FOR GUARDRAILS, SEE CIVIL AND GRADE SEPARATION PLANS; DRAWING CV-S1050-B.
4. FOR CULVERT AND CANAL REALIGNMENT, SEE CIVIL AND GRADE SEPARATION PLANS; DRAWING CV-S1050-B.

10 0 10 20 — 1"=10'
30 0 30 60 — 1"=30'

REV	DATE	BY	CHK	APP	DESCRIPTION

DESIGNED BY S. J. S.
DRAWN BY J. KIDWELL
CHECKED BY O. EDEWOR
IN CHARGE C. LEMLEY
DATE 03/18/2016

RECORD SET
15% DESIGN
SUBMITTAL

NOT FOR
CONSTRUCTION

PARSONS

CALIFORNIA
HIGH-SPEED RAIL AUTHORITY

CALIFORNIA HIGH-SPEED TRAIN PROJECT
MERCED TO FRESNO SECTION
CENTRAL VALLEY WYE
SR 152 (NORTH) TO ROAD 19 WYE ALTERNATIVE
GENERAL PLAN (SJD-FRE)
INDIANA ROAD OVERHEAD

CONTRACT NO. HSR08-05
DRAWING NO. ST-K1050-B
SCALE AS SHOWN
SHEET NO.

MF-ST-K1050-B.dgn
10-MAR-2016 7:14
p0051330

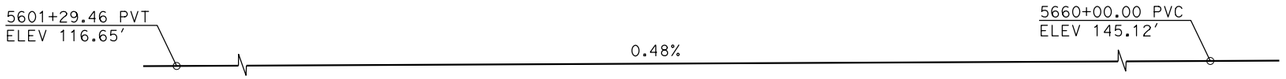

TOP OF RAIL PROFILE (℄ HST SB TRACK)

NO SCALE

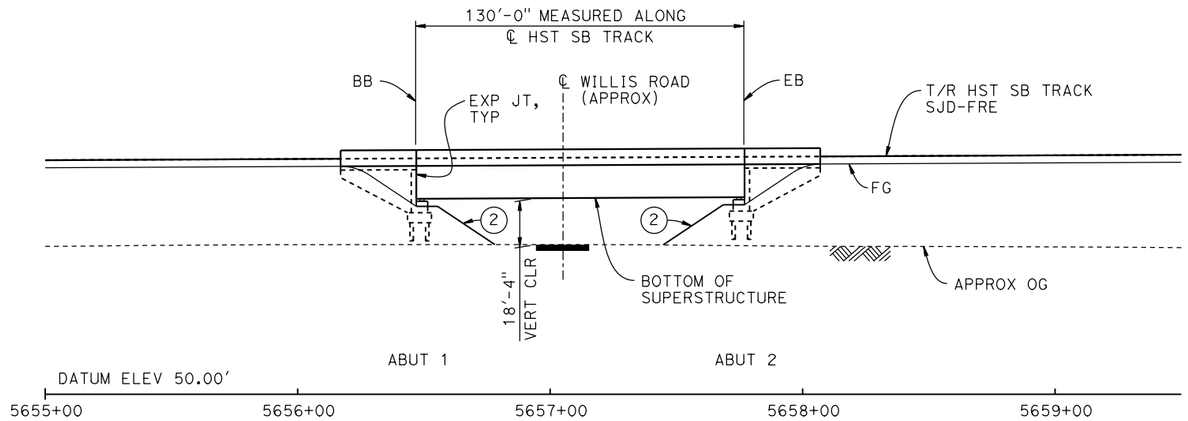

DEVELOPED ELEVATION

1" = 30'

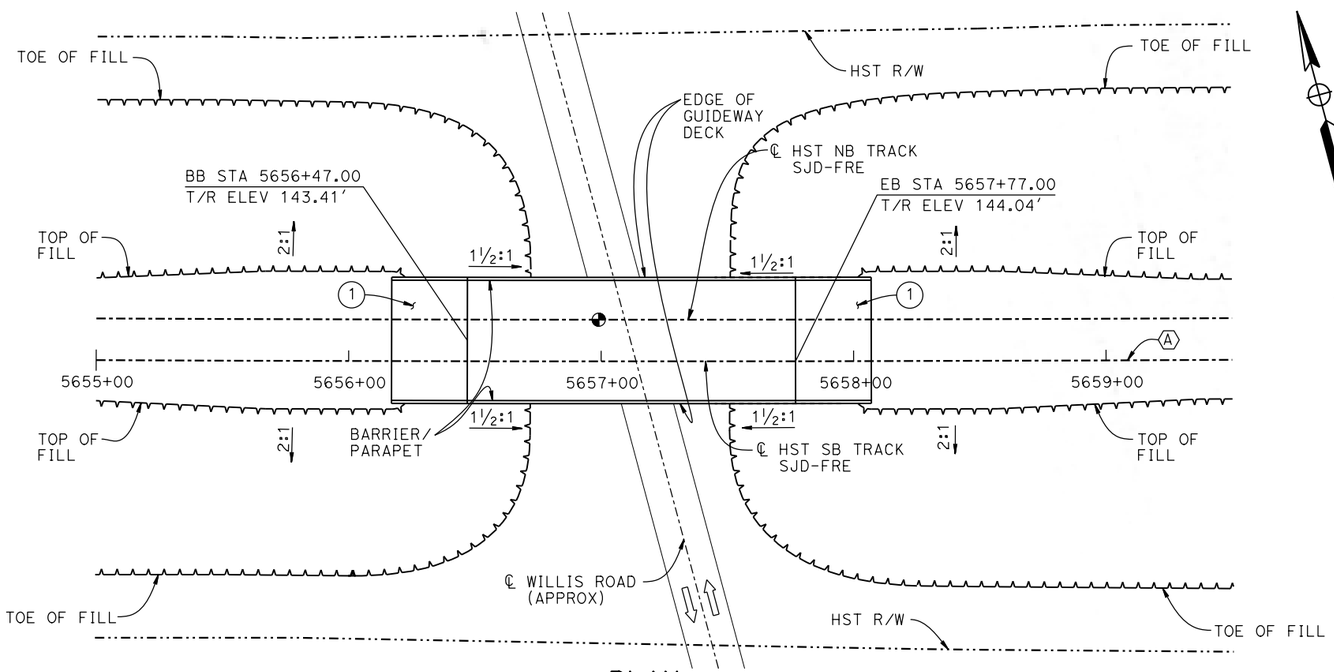

PLAN

1" = 30'

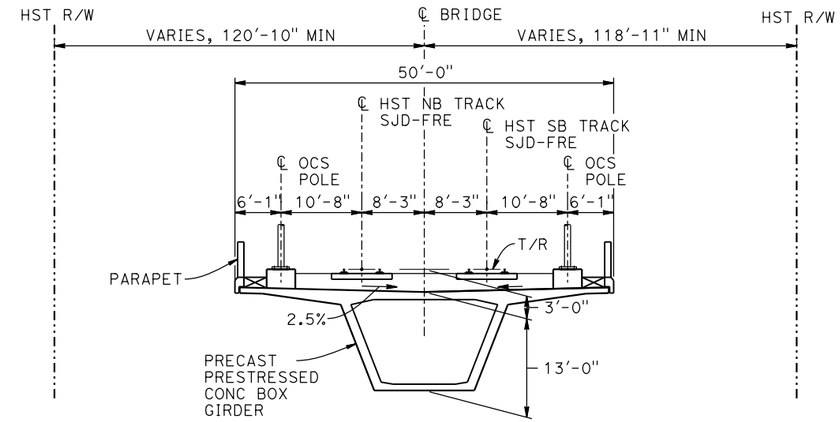

TYPICAL SECTION

1" = 10'

TEMPORARY TRAFFIC OPENINGS

VEHICULAR TRAFFIC

1. __ TRAFFIC WILL BE DETOURED AWAY FROM THE SITE.
2. X TRAFFIC WILL PASS UNDER THE STRUCTURE ON:

ST OR ROAD NAME AND LOCATION		FALSEWORK OPENING REQD (HORIZ X VERT)	
WILLIS ROAD	5657+14	32'X16.5'	2-WAY

3. __ TEMP TRAFFIC LANE REDUCTION FOR FTG EXC.

LEGEND:

- INDICATES POINT OF MINIMUM VERTICAL CLEARANCE
- INDICATES DIRECTION OF TRAFFIC
- (1) STRUCTURE APPROACH
- (2) SLOPE PAVING (1½H:1V)

NOTES:

1. 16" ø PIPE PILES ASSUMED FOR ABUTMENT FOUNDATIONS. PILE LENGTHS TO BE DETERMINED.
2. ANY EXISTING DIRT ROAD THAT CONFLICTS WITH NEW CONSTRUCTION SHALL BE REALIGNED.
3. FOR UTILITY DISPOSITIONS, SEE CIVIL AND GRADE SEPARATION PLANS; DRAWING CV-S1060-B.
4. FOR TRACK SUPERELEVATION DETAILS, SEE ALIGNMENT AND TYPICAL SECTION PLANS; DRAWING TT-B0050-B.

CURVE SJD-FRE 2 SB (A)

R = 45,016.50'
LS = 1,550.00'

10 0 10 20
1"=10'

30 0 30 60
1"=30'

REV	DATE	BY	CHK	APP	DESCRIPTION

DESIGNED BY S. J. S.
DRAWN BY A. M.
CHECKED BY O. EDEWOR
IN CHARGE C. LEMLEY
DATE 02/13/2015

RECORD SET
15% DESIGN SUBMITTAL

NOT FOR CONSTRUCTION

PARSONS

CALIFORNIA HIGH-SPEED RAIL AUTHORITY

CALIFORNIA HIGH-SPEED TRAIN PROJECT
MERCED TO FRESNO SECTION
CENTRAL VALLEY WYE
SR 152 (NORTH) TO ROAD 19 WYE ALTERNATIVE
GENERAL PLAN (SJD-FRE)
WILLIS ROAD UNDERPASS

CONTRACT NO. HSR08-05
DRAWING NO. ST-K1060-B
SCALE AS SHOWN
SHEET NO.

MF-ST-K1060-B.dgn
07-FEB-2015 10:31
p0036110

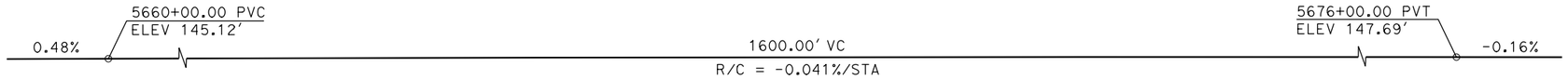

TOP OF RAIL PROFILE (℄ HST SB TRACK)

NO SCALE

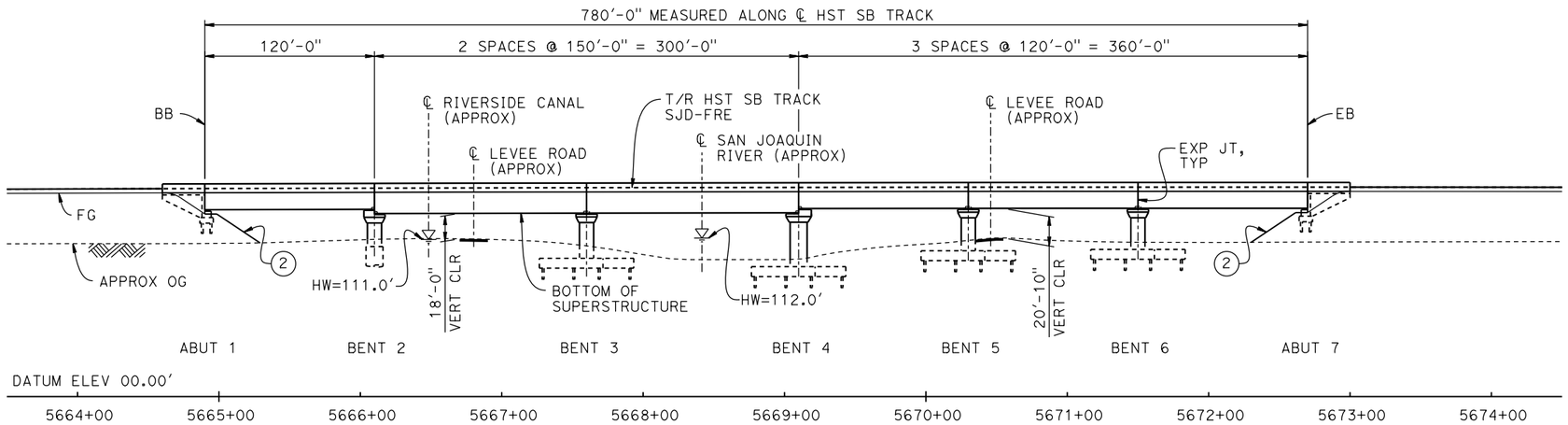

DEVELOPED ELEVATION

1" = 50'

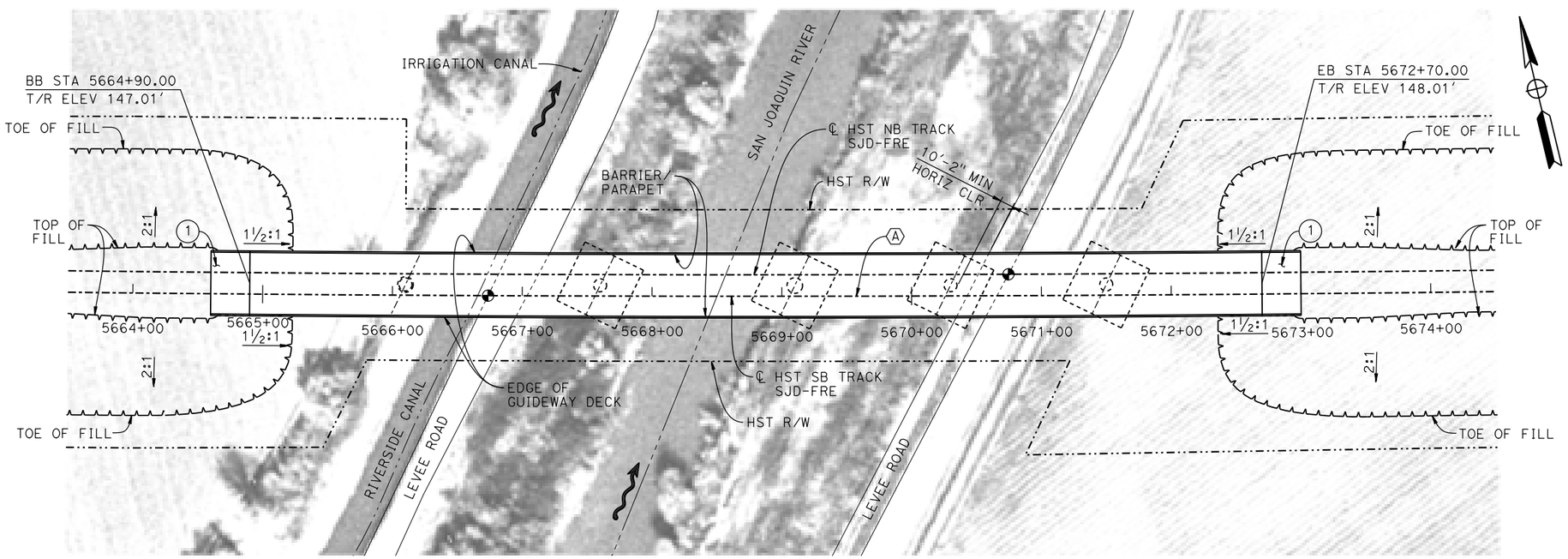

PLAN

1" = 50'

LEGEND:

- INDICATES POINT OF MINIMUM VERTICAL CLEARANCE
- INDICATES DIRECTION OF FLOW
- (1) STRUCTURE APPROACH
- (2) SLOPE PAVING (1½H:1V)

CURVE SJD-FRE 2 SB (A)

R = 45,016.50'
LS = 1,550.00'

TEMPORARY TRAFFIC OPENINGS

VEHICULAR TRAFFIC

1. __ TRAFFIC WILL BE DETOURED AWAY FROM THE SITE.
2. X TRAFFIC WILL PASS UNDER THE STRUCTURE ON:

ST OR ROAD NAME AND LOCATION		FALSEWORK OPENING REQD (HORIZ X VERT)	
LEVEE ROAD	5666+85	20'X16.5'	-
LEVEE ROAD	5670+55	20'X16.5'	-

3. __ TEMP TRAFFIC LANE REDUCTION FOR FTG EXC.

NOTES:

1. 16" Ø PIPE PILES ASSUMED FOR ABUTMENT AND BENT FOUNDATIONS, UNLESS OTHERWISE NOTED. PILE LENGTHS TO BE DETERMINED.
2. FOR SECTION AND BENT COLUMN SCHEDULE, SEE DRAWING ST-K3065-B.
3. ANY EXISTING DIRT ROAD THAT CONFLICTS WITH NEW CONSTRUCTION SHALL BE REALIGNED.
4. FOR UTILITY DISPOSITIONS, SEE CIVIL AND GRADE SEPARATION PLANS; DRAWING CV-S1060-B.

50 0 50 100
1"=50'

REV	DATE	BY	CHK	APP	DESCRIPTION

DESIGNED BY S. J. S.
DRAWN BY A. M.
CHECKED BY O. EDEWOR
IN CHARGE C. LEMLEY
DATE 02/13/2015

RECORD SET
15% DESIGN SUBMITTAL

NOT FOR CONSTRUCTION

PARSONS

CALIFORNIA HIGH-SPEED RAIL AUTHORITY

CALIFORNIA HIGH-SPEED TRAIN PROJECT
MERCED TO FRESNO SECTION
CENTRAL VALLEY WYE
SR 152 (NORTH) TO ROAD 19 WYE ALTERNATIVE
GENERAL PLAN (SJD-FRE)
SAN JOAQUIN RIVER BRIDGE - 1 OF 2

CONTRACT NO. HSR08-05
DRAWING NO. ST-K1065-B
SCALE AS SHOWN
SHEET NO.

MF-ST-K1065-B.dgn
07-FEB-2015 11:20
p0036110

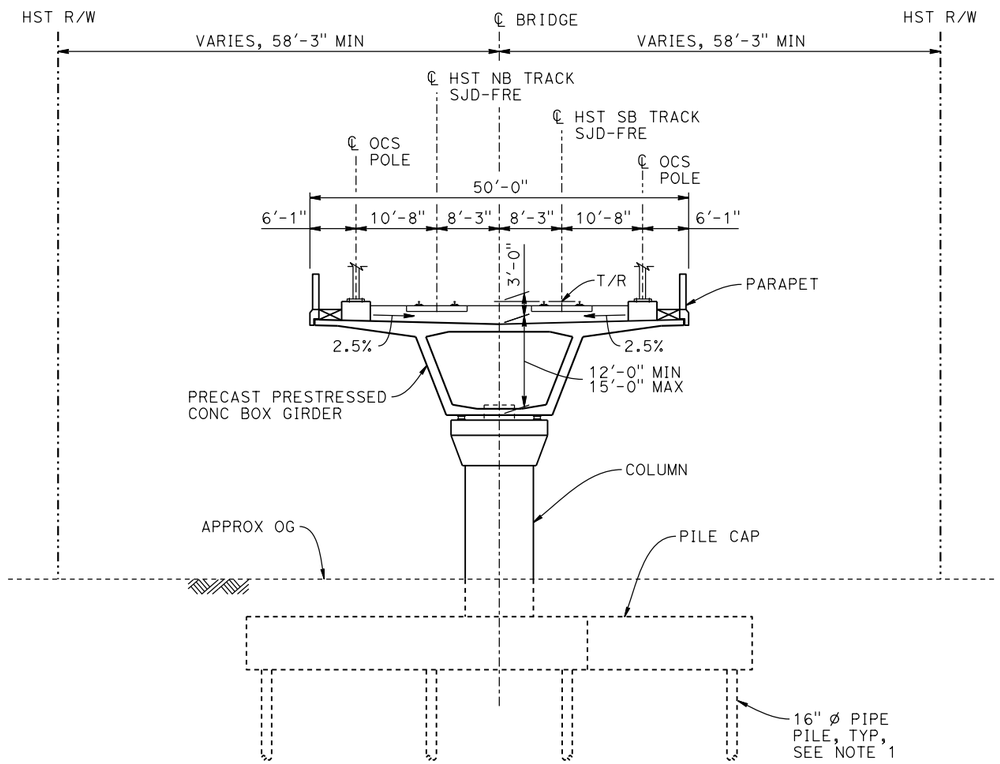

TYPICAL SECTION

1" = 10'

BENT COLUMN SCHEDULE		
BENT	COLUMN TYPE	CIDH
2	10'-0" Ø	12'-0" Ø
3	10'-0" Ø	
4	12'-0" Ø	
5 - 6	10'-0" Ø	

NOTES:

1. PILE AND DRILLED SHAFT LENGTHS TO BE DETERMINED.
2. FOR TRACK SUPERELEVATION DETAILS, SEE ALIGNMENT AND TYPICAL SECTION PLANS; DRAWING TT-B0050-B.

10 0 10 20

1"=10'

REV	DATE	BY	CHK	APP	DESCRIPTION

DESIGNED BY S. J. S.
DRAWN BY A. M.
CHECKED BY O. EDEWOR
IN CHARGE C. LEMLEY
DATE 02/13/2015

RECORD SET
15% DESIGN
SUBMITTAL

NOT FOR
CONSTRUCTION

PARSONS

CALIFORNIA
HIGH-SPEED RAIL AUTHORITY

CALIFORNIA HIGH-SPEED TRAIN PROJECT
MERCED TO FRESNO SECTION
CENTRAL VALLEY WYE
SR 152 (NORTH) TO ROAD 19 WYE ALTERNATIVE
TYPICAL SECTION (SJD-FRE)
SAN JOAQUIN RIVER BRIDGE - 2 OF 2

CONTRACT NO. HSR08-05
DRAWING NO. ST-K3065-B
SCALE AS SHOWN
SHEET NO.

p0036110 07-FEB-2015 11:21 MF-ST-K3065-B.dgn

TOP OF RAIL PROFILE (℄ HST SB TRACK)

NO SCALE

BENT COLUMN SCHEDULE	
BENT	COLUMN TYPE
2	9'-0" Ø
3 - 5	10'-0" Ø

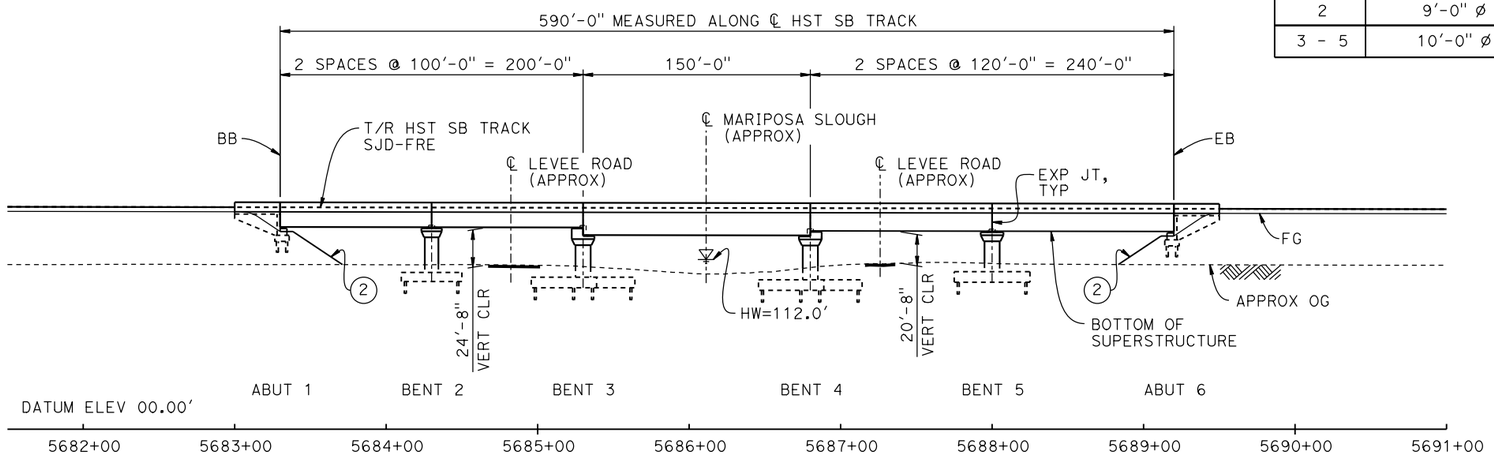

DEVELOPED ELEVATION

1" = 50'

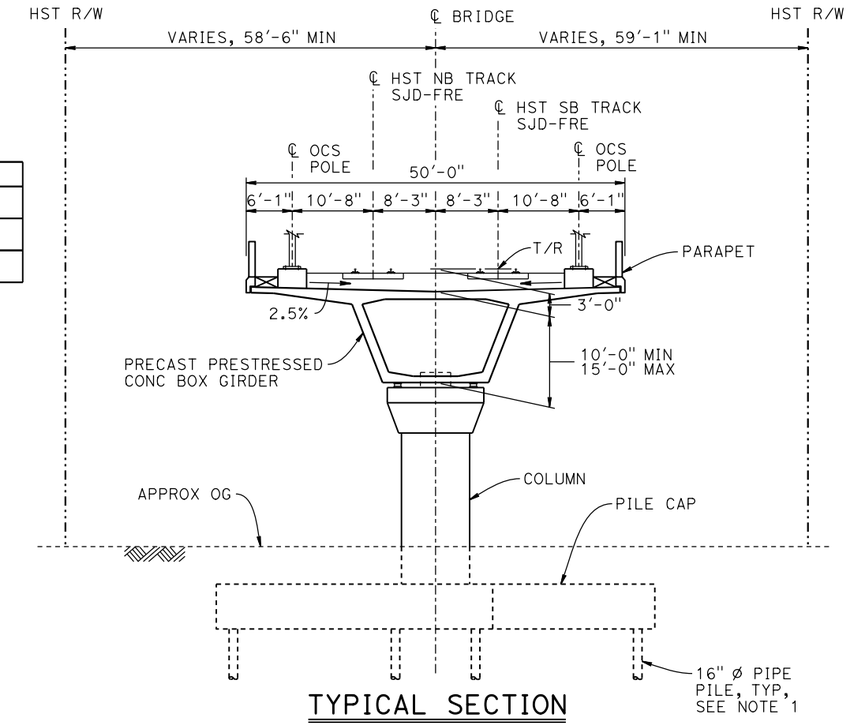

TYPICAL SECTION

1" = 10'

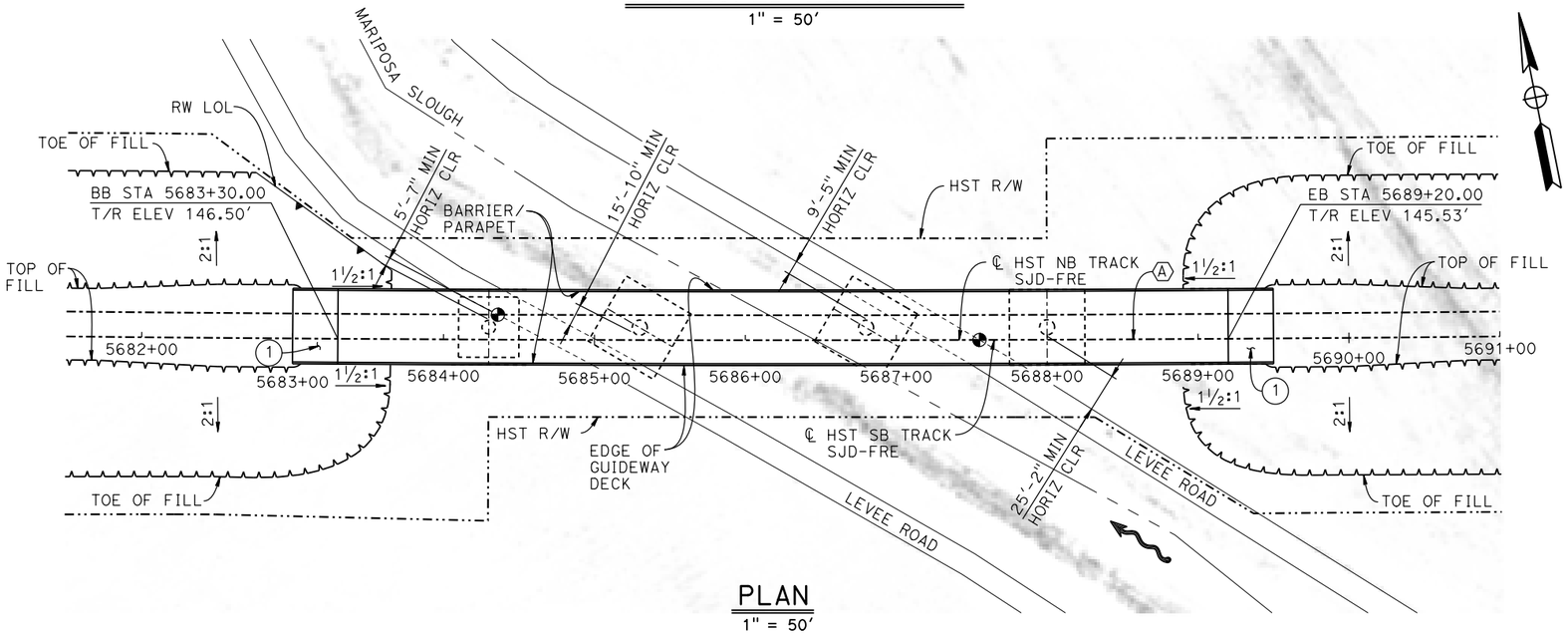

PLAN

1" = 50'

NOTES:

1. 16" Ø PIPE PILES ASSUMED FOR ABUTMENT AND BENT FOUNDATIONS. PILE LENGTHS TO BE DETERMINED.
2. ANY EXISTING DIRT ROAD THAT CONFLICTS WITH NEW CONSTRUCTION SHALL BE REALIGNED.
3. FOR UTILITY DISPOSITIONS, SEE CIVIL AND GRADE SEPARATION PLANS; DRAWING CV-S1070-B.
4. FOR RETAINING WALL, SEE CIVIL AND GRADE SEPARATION PLANS; DRAWING CV-S1070-B.
5. FOR TRACK SUPERELEVATION DETAILS, SEE ALIGNMENT AND TYPICAL SECTION PLANS; DRAWING TT-B0050-B.

LEGEND:

- INDICATES POINT OF MINIMUM VERTICAL CLEARANCE
- INDICATES DIRECTION OF FLOW
- (1) STRUCTURE APPROACH
- (2) SLOPE PAVING (1½H:1V)

TEMPORARY TRAFFIC OPENINGS

VEHICULAR TRAFFIC

1. __ TRAFFIC WILL BE DETOURED AWAY FROM THE SITE.
2. X TRAFFIC WILL PASS UNDER THE STRUCTURE ON:

ST OR ROAD NAME AND LOCATION		FALSEWORK OPENING REQD (HORIZ X VERT)	
LEVEE ROAD	5684+85	20'X16.5'	-
LEVEE ROAD	5687+40	20'X16.5'	-

3. X TEMP TRAFFIC LANE REDUCTION FOR FTG EXC.

CURVE SJD-FRE 2 SB (A)

R = 45,016.50'
LS = 1,550.00'

10 0 10 20
1"=10'

50 0 50 100
1"=50'

REV	DATE	BY	CHK	APP	DESCRIPTION

DESIGNED BY S. J. S.
DRAWN BY A. M.
CHECKED BY O. EDEWOR
IN CHARGE C. LEMLEY
DATE 05/08/2015

RECORD SET
15% DESIGN SUBMITTAL

NOT FOR CONSTRUCTION

PARSONS

CALIFORNIA HIGH-SPEED RAIL AUTHORITY

CALIFORNIA HIGH-SPEED TRAIN PROJECT
MERCED TO FRESNO SECTION
CENTRAL VALLEY WYE
SR 152 (NORTH) TO ROAD 19 WYE ALTERNATIVE
GENERAL PLAN (SJD-FRE)
MARIPOSA SLOUGH BRIDGE

CONTRACT NO. HSR08-05
DRAWING NO. ST-K1070-B
SCALE AS SHOWN
SHEET NO.

MF-ST-K1070-B.dgn
16-MAR-2016 6:17
p005133A

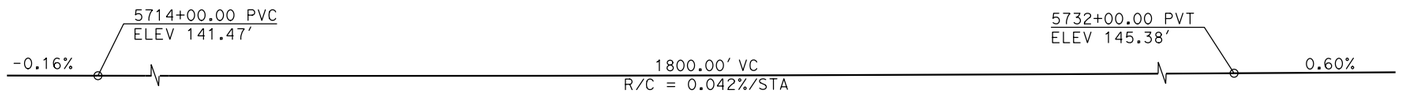

TOP OF RAIL PROFILE (℄ HST SB TRACK)

NO SCALE

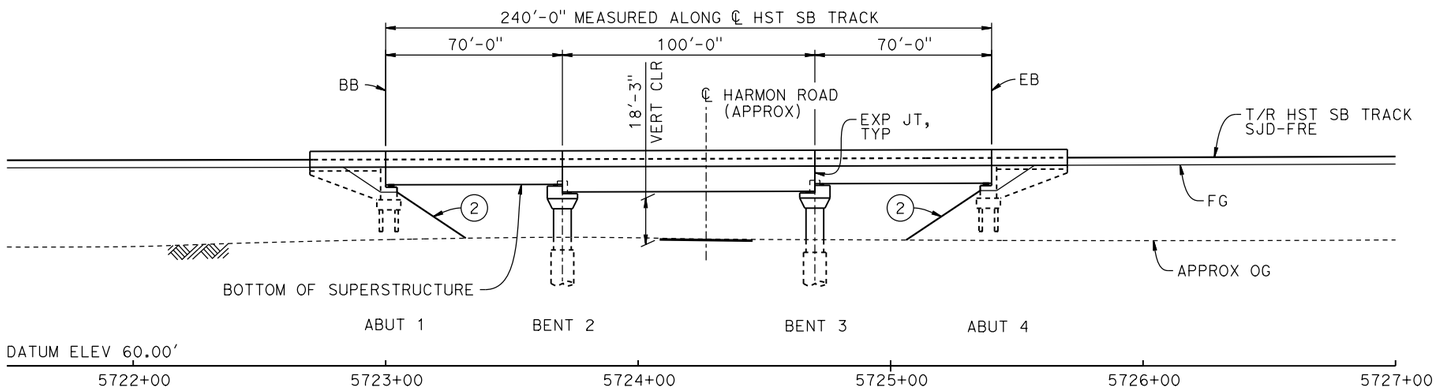

DEVELOPED ELEVATION

1" = 30'

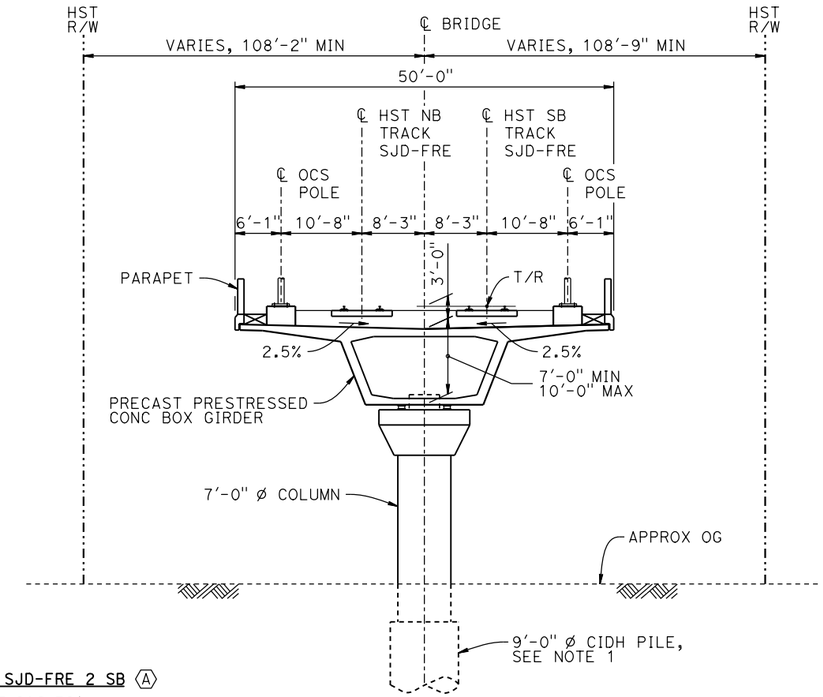

CURVE SJD-FRE 2 SB (A)

R = 45,016.50'

LS = 1,550.00'

TYPICAL SECTION

1" = 10'

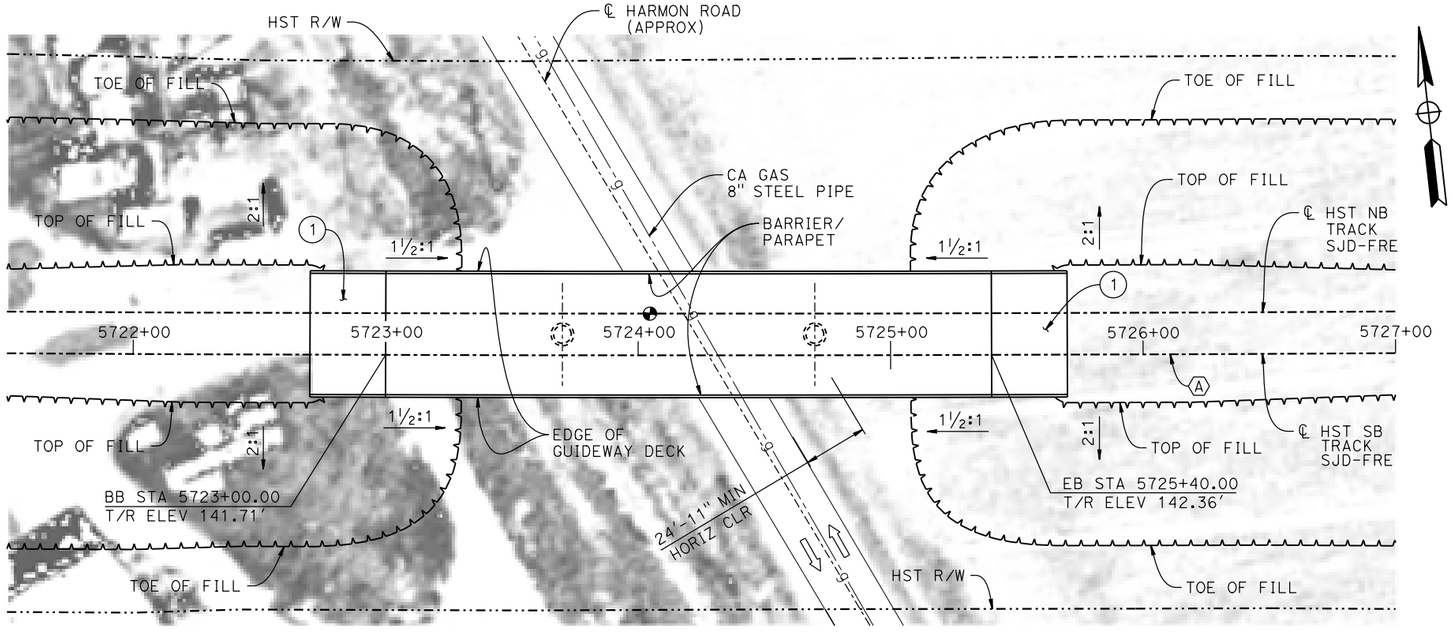

PLAN

1" = 30'

LEGEND:

- INDICATES POINT OF MINIMUM VERTICAL CLEARANCE
- INDICATES DIRECTION OF TRAFFIC
- (1) STRUCTURE APPROACH
- (2) SLOPE PAVING (1½H:1V)

NOTES:

1. 16" ø PIPE PILES ASSUMED FOR ABUTMENT FOUNDATIONS. PILE AND DRILLED SHAFT LENGTHS TO BE DETERMINED.
2. FOR UTILITY DISPOSITIONS, SEE CIVIL AND GRADE SEPARATION PLANS; DRAWING CV-S1070-B.
3. ANY EXISTING DIRT ROAD THAT CONFLICT WITH NEW CONSTRUCTION SHALL BE REALIGNED.
4. FOR TRACK SUPERELEVATION DETAILS, SEE ALIGNMENT AND TYPICAL SECTION PLANS; DRAWING TT-B0050-B.

TEMPORARY TRAFFIC OPENINGS

VEHICULAR TRAFFIC

1. __ TRAFFIC WILL BE DETOURED AWAY FROM THE SITE.
2. X TRAFFIC WILL PASS UNDER THE STRUCTURE ON:

ST OR ROAD NAME AND LOCATION		FALSEWORK OPENING REQD (HORIZ x VERT)	
HARMON RD	5724+28	32'x16.5'	2-WAY

3. __ TEMP TRAFFIC LANE REDUCTION FOR FTG EXC.

10 0 10 20
1"=10'

30 0 30 60
1"=30'

REV	DATE	BY	CHK	APP	DESCRIPTION

DESIGNED BY S. J. S.
DRAWN BY J. KIDWELL
CHECKED BY O. EDEWOR
IN CHARGE C. LEMLEY
DATE 02/13/2015

RECORD SET
15% DESIGN SUBMITTAL

NOT FOR CONSTRUCTION

PARSONS

CALIFORNIA HIGH-SPEED RAIL AUTHORITY

CALIFORNIA HIGH-SPEED TRAIN PROJECT
MERCED TO FRESNO SECTION
CENTRAL VALLEY WYE
SR 152 (NORTH) TO ROAD 19 WYE ALTERNATIVE
GENERAL PLAN (SJD-FRE)
HARMON ROAD UNDERPASS

CONTRACT NO. HSR08-05
DRAWING NO. ST-K1075-B
SCALE AS SHOWN
SHEET NO.

MF-ST-K1075-B.dgn
07-FEB-2015 10:35
p0036110

TOP OF RAIL PROFILE (℄ HST SB TRACK)

NO SCALE

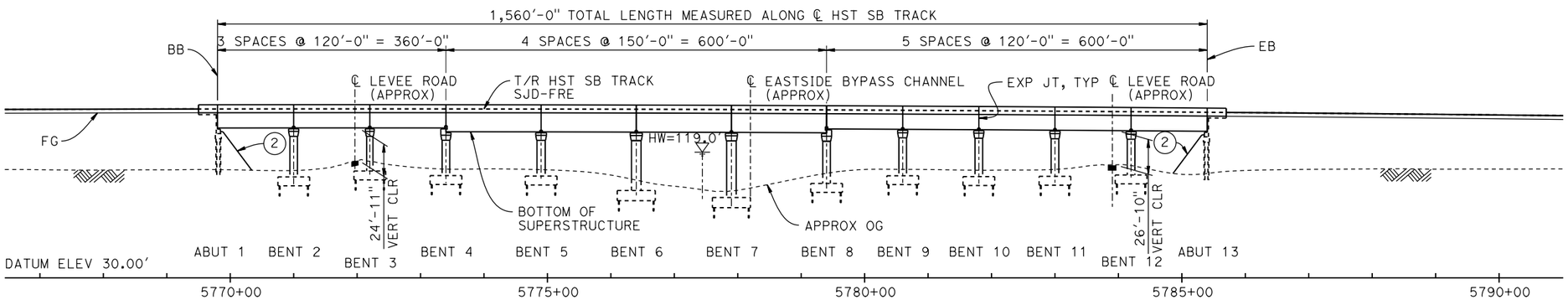

DEVELOPED ELEVATION

VERT: 1" = 50' HORIZ: 1" = 100'

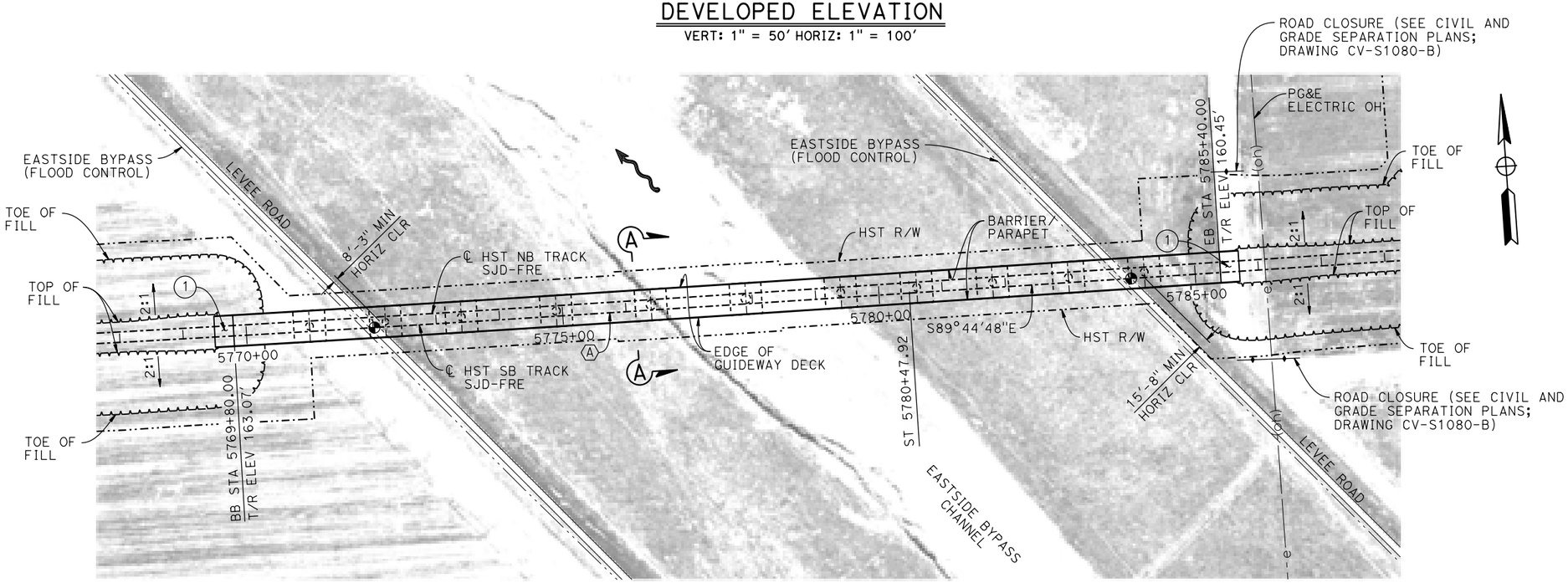

PLAN

1" = 100'

LEGEND:

- INDICATES POINT OF MINIMUM VERTICAL CLEARANCE
- INDICATES DIRECTION OF FLOW
- (1) STRUCTURE APPROACH
- (2) SLOPE PAVING (1½H:1V)

CURVE SJD-FRE 2 SB (A)

R = 45,016.50'
LS = 1,550.00'

TEMPORARY TRAFFIC OPENINGS

VEHICULAR TRAFFIC

1. __ TRAFFIC WILL BE DETOURED AWAY FROM THE SITE.
2. X TRAFFIC WILL PASS UNDER THE STRUCTURE ON:

ST OR ROAD NAME AND LOCATION		FALSEWORK OPENING REQD (HORIZ X VERT)	
LEVEE ROAD	5772+00	20'X16.5'	-
LEVEE ROAD	5783+90	20'X16.5'	-

3. X TEMP TRAFFIC LANE REDUCTION FOR FTG EXC.

NOTES:

1. 16" Ø PIPE PILES ASSUMED FOR ABUTMENT AND BENT FOUNDATIONS. PILE LENGTHS TO BE DETERMINED.
2. FOR SECTION AND BENT COLUMN SCHEDULE, SEE DRAWING ST-K3080-B.
3. ANY EXISTING DIRT ROAD THAT CONFLICTS WITH THE NEW CONSTRUCTION SHALL BE REALIGNED.
4. FOR UTILITY DISPOSITIONS, SEE CIVIL AND GRADE SEPARATION PLANS; DRAWING CV-S1080-B.

50 0 50 100
1"=50'

100 0 100 200
1"=100'

REV	DATE	BY	CHK	APP	DESCRIPTION

DESIGNED BY S. J. S.
DRAWN BY J. KIDWELL
CHECKED BY O. EDEWOR
IN CHARGE C. LEMLEY
DATE 05/08/2015

RECORD SET 15% DESIGN SUBMITTAL

NOT FOR CONSTRUCTION

PARSONS

CALIFORNIA HIGH-SPEED RAIL AUTHORITY

CALIFORNIA HIGH-SPEED TRAIN PROJECT
MERCED TO FRESNO SECTION
CENTRAL VALLEY WYE
SR 152 (NORTH) TO ROAD 19 WYE ALTERNATIVE
GENERAL PLAN (SJD-FRE)
AERIAL #1 - EASTSIDE BYPASS IRRIGATION DITCH - 1 OF 2

CONTRACT NO. HSR08-05
DRAWING NO. ST-K1080-B
SCALE AS SHOWN
SHEET NO.

MF-ST-K1080-B.dgn 16-MAR-2016 16:17 p005133A

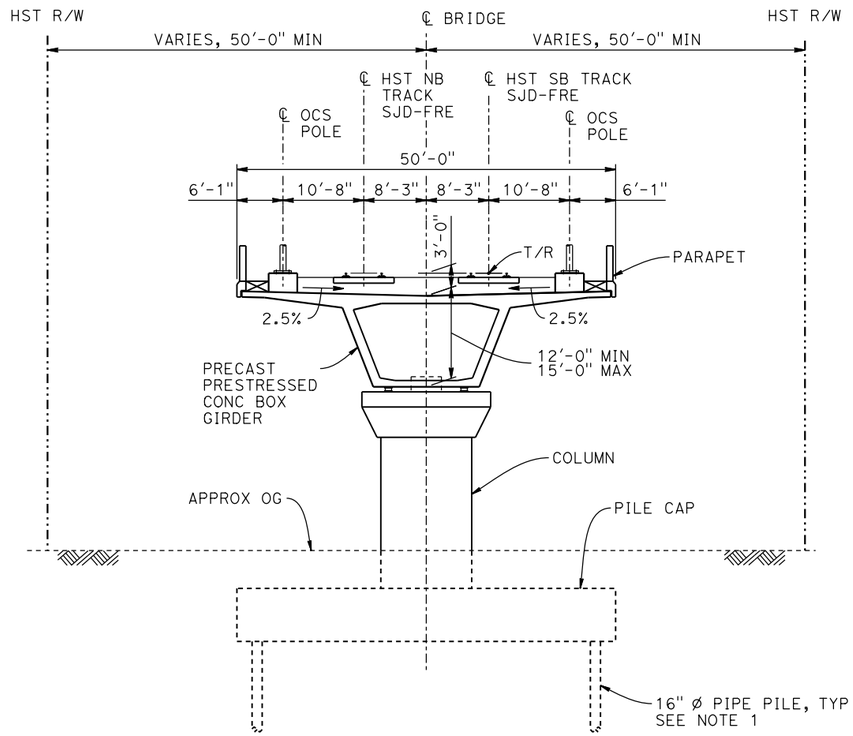

SECTION A-A

1" = 10'

BENT COLUMN SCHEDULE	
BENT	COLUMN TYPE
2	12'-0" ø
3	10'-0" ø
4	12'-0" ø
5	13'-0" ø
6 - 7	15'-0" ø
8 - 12	12'-0" ø

NOTES:

1. PILE LENGTHS TO BE DETERMINED.
2. FOR TRACK SUPERELEVATION DETAILS, SEE ALIGNMENT AND TYPICAL SECTION PLANS; DRAWING TT-B0050-B.

10 0 10 20

1"=10'

REV	DATE	BY	CHK	APP	DESCRIPTION

DESIGNED BY S. J. S.
DRAWN BY J. KIDWELL
CHECKED BY O. EDEWOR
IN CHARGE C. LEMLEY
DATE 02/13/2015

RECORD SET
15% DESIGN SUBMITTAL

NOT FOR CONSTRUCTION

PARSONS

CALIFORNIA HIGH-SPEED RAIL AUTHORITY

CALIFORNIA HIGH-SPEED TRAIN PROJECT
MERCED TO FRESNO SECTION
CENTRAL VALLEY WYE
SR 152 (NORTH) TO ROAD 19 WYE ALTERNATIVE
TYPICAL SECTION (SJD-FRE)
AERIAL #1 - EASTSIDE BYPASS IRRIGATION DITCH - 2 OF 2

CONTRACT NO. HSR08-05
DRAWING NO. ST-K3080-B
SCALE AS SHOWN
SHEET NO.

MF-ST-K3080-B.dgn 07-FEB-2015 09:46 p0036110

PROFILE GRADE

NO SCALE

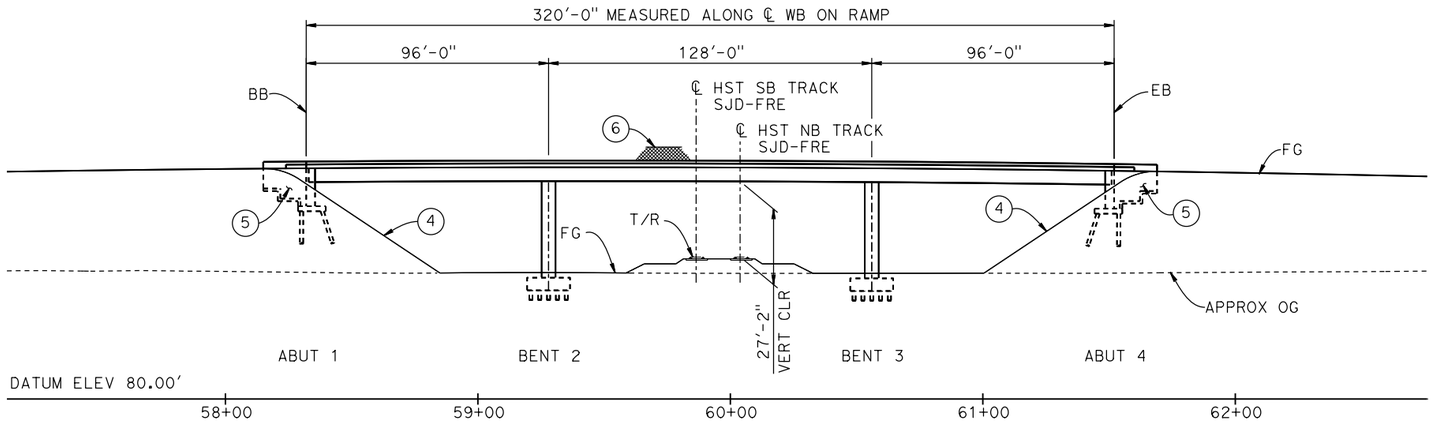

DEVELOPED ELEVATION

1" = 30'

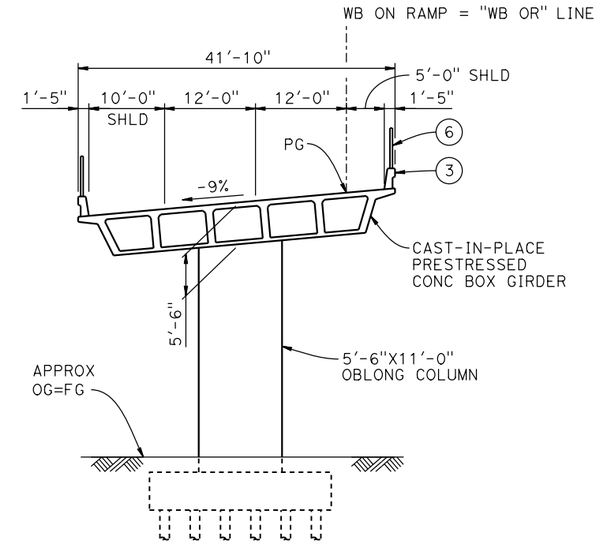

TYPICAL SECTION

1" = 10'

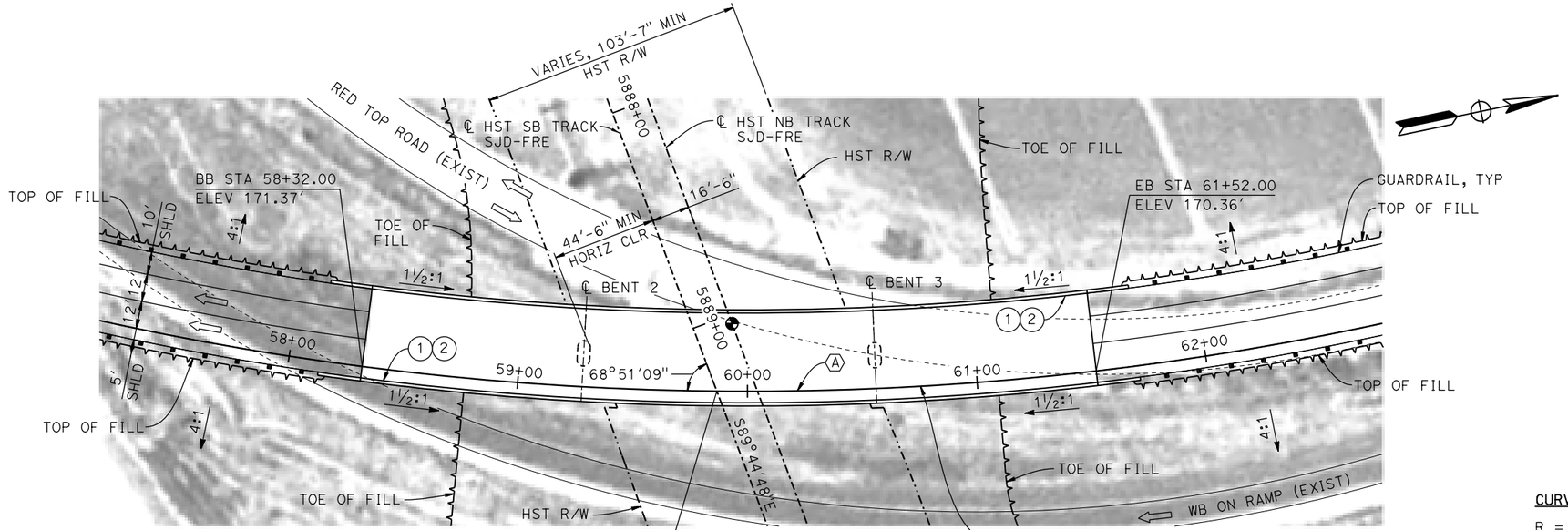

PLAN

1" = 30'

LEGEND:

- INDICATES POINT OF MINIMUM VERTICAL CLEARANCE
- INDICATES DIRECTION OF TRAFFIC
- (1) PAINT "WB ON RAMP OVERHEAD"
- (2) PAINT "BRIDGE NO. XX-XXXX"
- (3) CONCRETE BARRIER TYPE 742 MOD
- (4) SLOPE PAVING (1½H:1V)
- (5) WINGWALL
- (6) AR FENCE WITH SOLID PLATE

NOTES:

1. ASSUME CLASS 140 PILES AT ABUTMENT AND BENT FOUNDATIONS. PILE LENGTHS TO BE DETERMINED.
2. FOR UTILITY DISPOSITIONS, SEE CIVIL AND GRADE SEPARATION PLANS; DRAWING CV-S1100-B.
3. FOR GUARDRAILS, SEE CIVIL AND GRADE SEPARATION PLANS; DRAWING CV-S1100-B.

CURVE NO. 102-03 (A)

R = 1,305.00'
Δ = 62°21'49"
L = 1,420.43'
T = 789.77'

10 0 10 20
1"=10'

30 0 30 60
1"=30'

REV	DATE	BY	CHK	APP	DESCRIPTION

DESIGNED BY S. J. S.
DRAWN BY A. M.
CHECKED BY O. EDEWOR
IN CHARGE C. LEMLEY
DATE 05/08/2015

RECORD SET
15% DESIGN
SUBMITTAL

NOT FOR
CONSTRUCTION

PARSONS

CALIFORNIA
HIGH-SPEED RAIL AUTHORITY

CALIFORNIA HIGH-SPEED TRAIN PROJECT
MERCED TO FRESNO SECTION
CENTRAL VALLEY WYE
SR 152 (NORTH) TO ROAD 19 WYE ALTERNATIVE
GENERAL PLAN (SJD-FRE)
SR 59 / SR 152 INTERCHANGE - 1 OF 4

CONTRACT NO. HSR08-05
DRAWING NO. ST-K1100-B
SCALE AS SHOWN
SHEET NO.

MF-ST-K1100-B.dgn
16-MAR-2016 6:18
p005133A

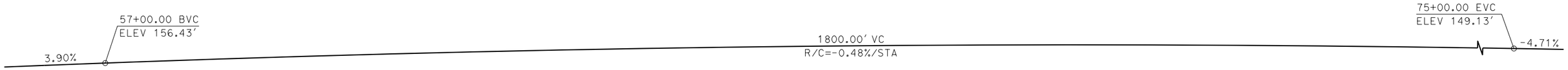

PROFILE GRADE

NO SCALE

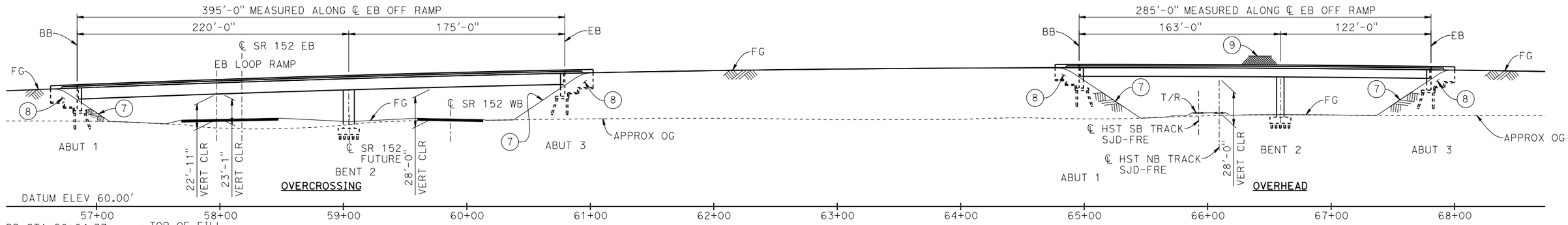

DEVELOPED ELEVATION

1" = 40'

CURVE NO. 101-03 (A)	CURVE NO. 104-03 (B)	CURVE NO. 100-02 (C)
R = 1,200.00'	R = 17,921.00'	R = 17,999.00'
Δ = 90°00'19"	Δ = 00°57'34"	Δ = 19°36'15"
L = 1,885.07'	L = 300.11'	L = 6,158.51'
T = 1,200.11'	T = 150.06'	T = 3,109.65'

NOTES:

1. FOR LEGEND AND NOTES, SEE DRAWING ST-K3101-B.

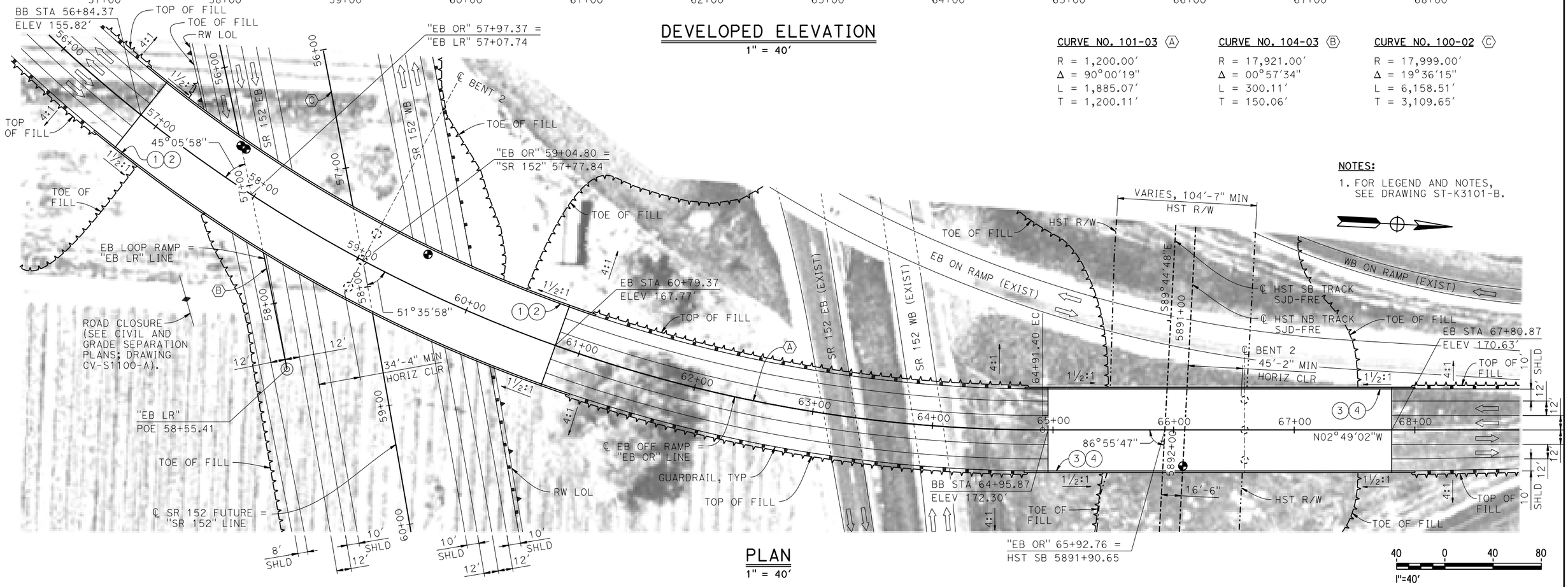

PLAN

1" = 40'

REV	DATE	BY	CHK	APP	DESCRIPTION

DESIGNED BY S. J. S.
DRAWN BY A. M.
CHECKED BY O. EDEWOR
IN CHARGE C. LEMLEY
DATE 05/08/2015

RECORD SET
15% DESIGN SUBMITTAL

NOT FOR CONSTRUCTION

PARSONS

CALIFORNIA HIGH-SPEED RAIL AUTHORITY

CALIFORNIA HIGH-SPEED TRAIN PROJECT
MERCED TO FRESNO SECTION

CENTRAL VALLEY WYE
SR 152 (NORTH) TO ROAD 19 WYE ALTERNATIVE
GENERAL PLAN (SJD-FRE)
SR 59 / SR 152 INTERCHANGE - 2 OF 4

CONTRACT NO. HSR08-05
DRAWING NO. ST-K1101-B
SCALE AS SHOWN
SHEET NO.

21-MAY-2015 7:09 WF-ST-K1101-B.dgn
p0051330

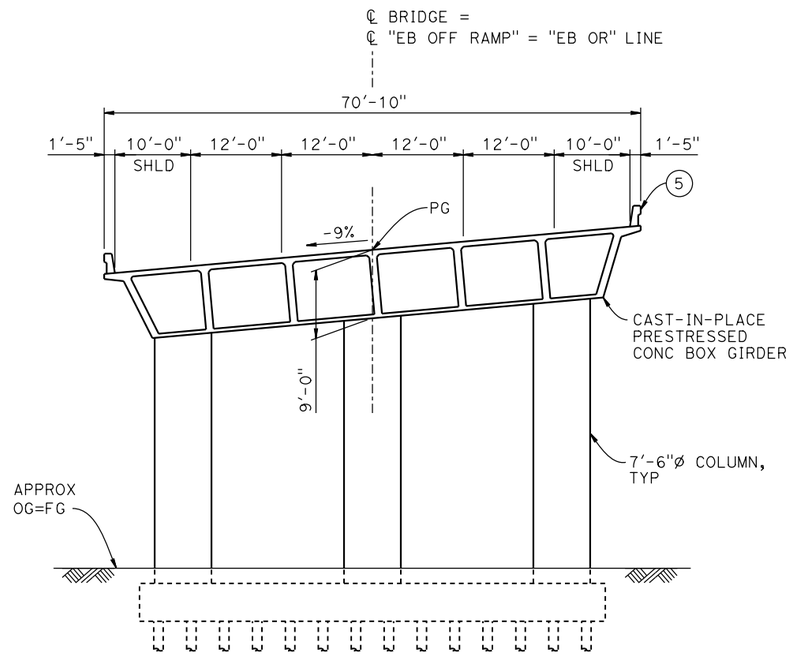

TYPICAL SECTION AT OVERCROSSING

1" = 10'

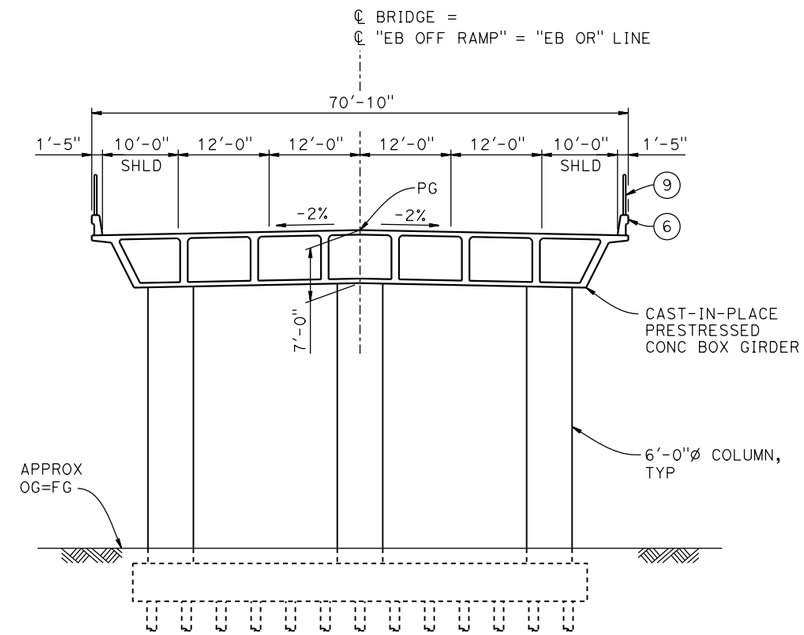

TYPICAL SECTION AT OVERHEAD

1" = 10'

LEGEND:

- ◕ INDICATES POINT OF MINIMUM VERTICAL CLEARANCE
- ⇨ INDICATES DIRECTION OF TRAFFIC
- (1) PAINT "EB OFF RAMP OVERCROSSING"
- (2) PAINT "BRIDGE NO. XX-XXXX"
- (3) PAINT "EB OFF RAMP OVERHEAD"
- (4) PAINT "BRIDGE NO. XX-XXXX"
- (5) CONCRETE BARRIER TYPE 742
- (6) CONCRETE BARRIER TYPE 736 MOD
- (7) SLOPE PAVING (1½H:1V)
- (8) WINGWALL
- (9) AR FENCE WITH SOLID PLATE

NOTES:

1. ASSUME CLASS 140 PILES AT ABUTMENT AND BENT FOUNDATIONS. PILE LENGTHS TO BE DETERMINED.
2. FOR UTILITY DISPOSITIONS, SEE CIVIL AND GRADE SEPARATION PLANS; DRAWING CV-S1100-B.
3. FOR RETAINING WALLS, SEE CIVIL AND GRADE SEPARATION PLANS; DRAWING CV-S1100-B.
4. FOR GUARDRAILS, SEE CIVIL AND GRADE SEPARATION PLANS; DRAWING CV-S1100-B.

10 0 10 20
1"=10'

REV	DATE	BY	CHK	APP	DESCRIPTION

DESIGNED BY S. J. S.
DRAWN BY A. M.
CHECKED BY O. EDEWOR
IN CHARGE C. LEMLEY
DATE 05/08/2015

RECORD SET
15% DESIGN
SUBMITTAL

NOT FOR
CONSTRUCTION

PARSONS

CALIFORNIA
HIGH-SPEED RAIL AUTHORITY

CALIFORNIA HIGH-SPEED TRAIN PROJECT
MERCED TO FRESNO SECTION
CENTRAL VALLEY WYE
SR 152 (NORTH) TO ROAD 19 WYE ALTERNATIVE
TYPICAL SECTIONS (SJD-FRE)
SR 59 / SR 152 INTERCHANGE - 3 OF 4

CONTRACT NO. HSR08-05
DRAWING NO. ST-K3101-B
SCALE AS SHOWN
SHEET NO.

p005133A 16-MAR-2016 16:18 MF-ST-K3101-B .dgn

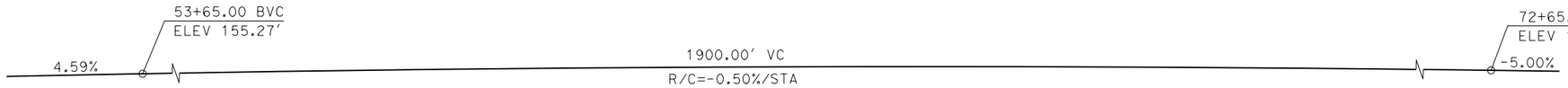

PROFILE GRADE

NO SCALE

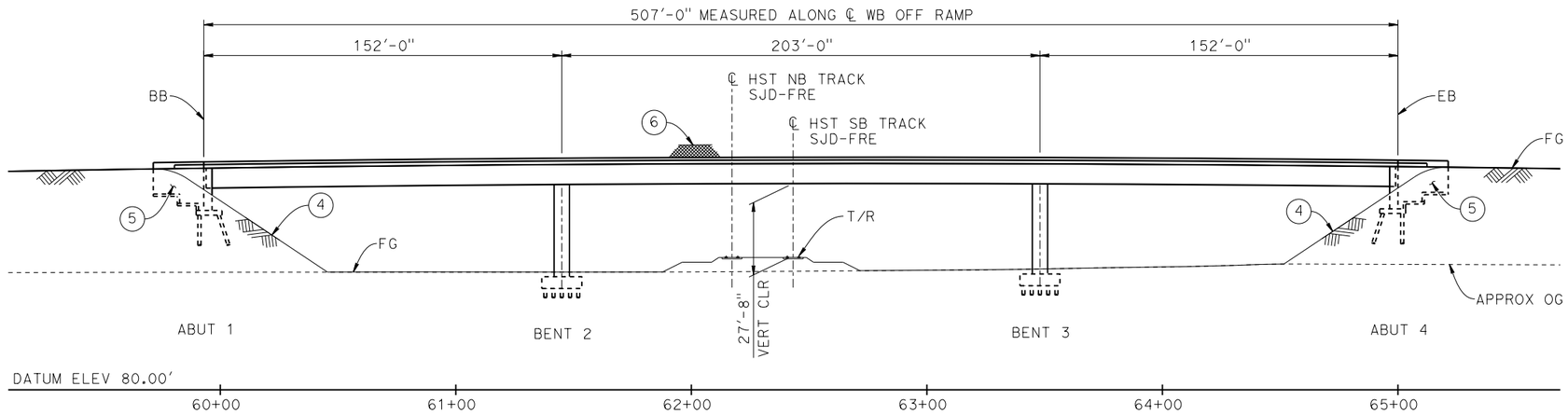

DEVELOPED ELEVATION

1" = 30'

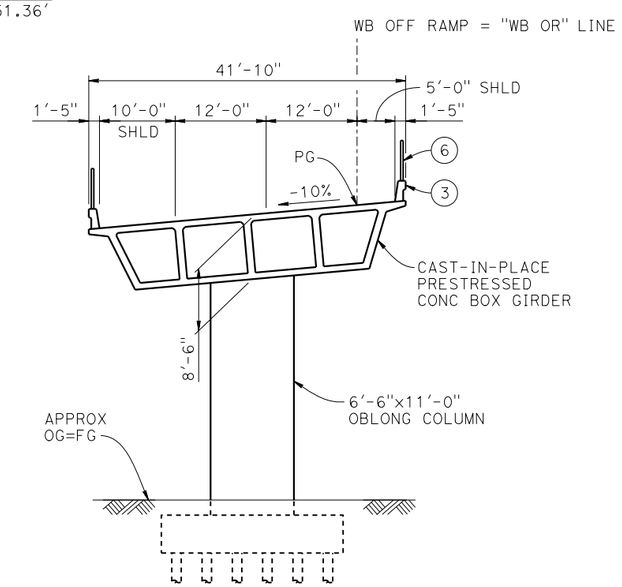

TYPICAL SECTION

1" = 10'

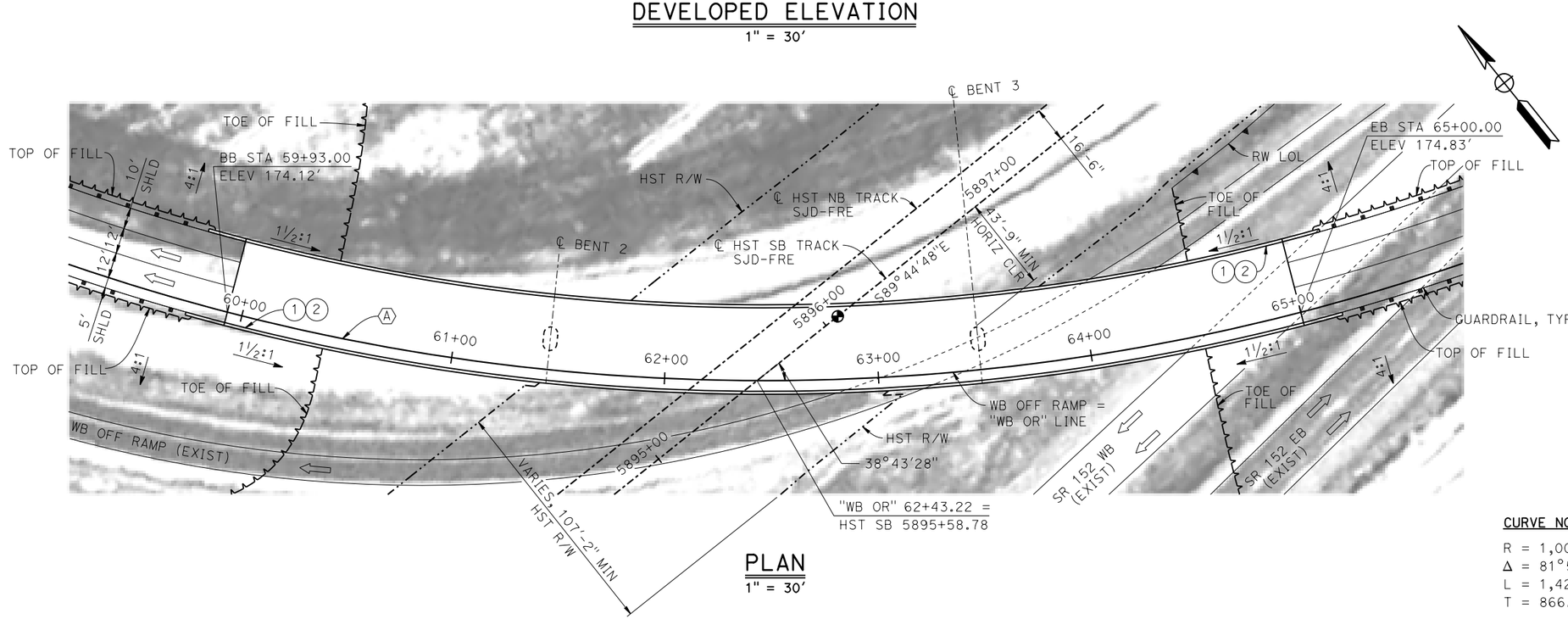

PLAN

1" = 30'

LEGEND:

- INDICATES POINT OF MINIMUM VERTICAL CLEARANCE
- INDICATES DIRECTION OF TRAFFIC
- (1) PAINT "WB OFF RAMP OVERHEAD"
- (2) PAINT "BRIDGE NO. XX-XXXX"
- (3) CONCRETE BARRIER TYPE 742 MOD
- (4) SLOPE PAVING (1½H:1V)
- (5) WINGWALL
- (6) AR FENCE WITH SOLID PLATE

NOTES:

1. ASSUME CLASS 140 PILES AT ABUTMENT AND BENT FOUNDATIONS. PILE LENGTHS TO BE DETERMINED.
2. FOR UTILITY DISPOSITIONS, SEE CIVIL AND GRADE SEPARATION PLANS; DRAWINGS CV-S1100-B.
3. FOR RETAINING WALLS, SEE CIVIL AND GRADE SEPARATION PLANS; DRAWINGS CV-S1100-B.
3. FOR GUARDRAILS, SEE CIVIL AND GRADE SEPARATION PLANS; DRAWINGS CV-S1100-B.

CURVE NO. 103-02 (A)

R = 1,000.00'
Δ = 81°50'34"
L = 1,428.42'
T = 866.88'

10 0 10 20
1"=10'

30 0 30 60
1"=30'

REV	DATE	BY	CHK	APP	DESCRIPTION

DESIGNED BY S. J. S.
DRAWN BY A. M.
CHECKED BY O. EDEWOR
IN CHARGE C. LEMLEY
DATE 05/08/2015

RECORD SET 15% DESIGN SUBMITTAL

NOT FOR CONSTRUCTION

PARSONS

CALIFORNIA HIGH-SPEED RAIL AUTHORITY

CALIFORNIA HIGH-SPEED TRAIN PROJECT
MERCED TO FRESNO SECTION
CENTRAL VALLEY WYE
SR 152 (NORTH) TO ROAD 19 WYE ALTERNATIVE
GENERAL PLAN (SJD-FRE)
SR 59 / SR 152 INTERCHANGE - 4 OF 4

CONTRACT NO. HSR08-05
DRAWING NO. ST-K1102-B
SCALE AS SHOWN
SHEET NO.

21-MAY-2015 13:03 WF-ST-K1102-B.dgn
p0051330

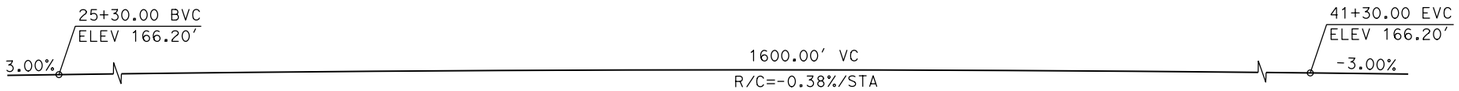

PROFILE GRADE

NO SCALE

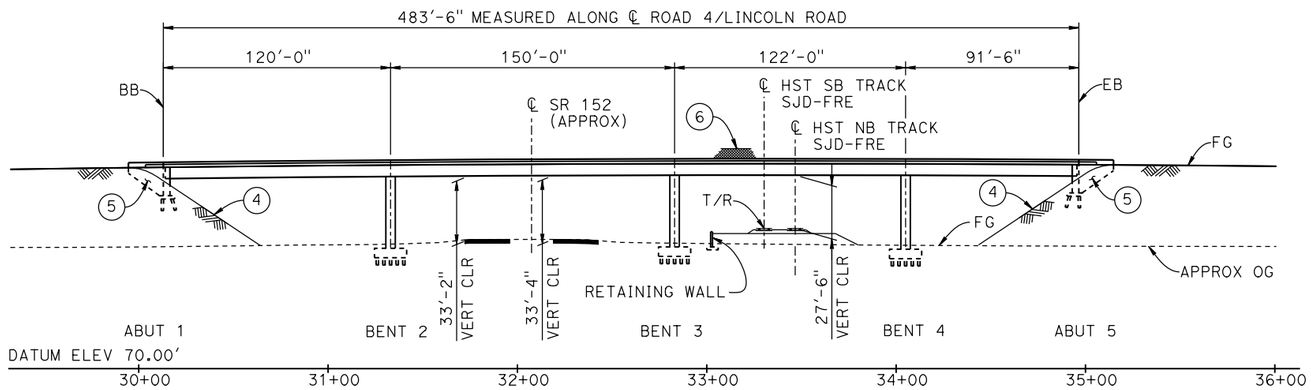

ELEVATION

1" = 40'

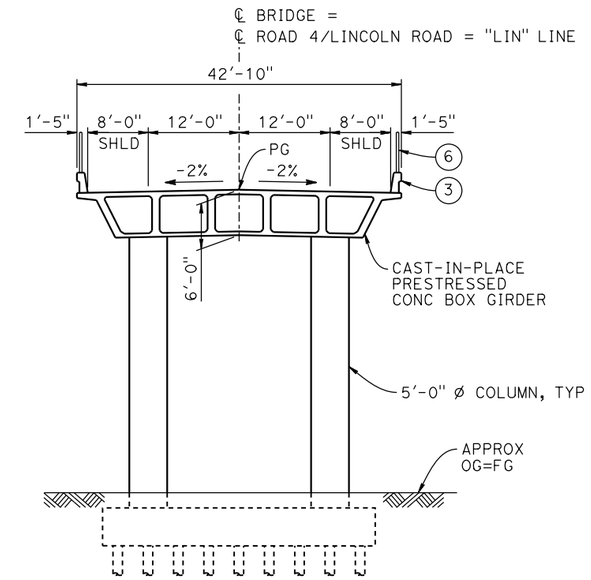

TYPICAL SECTION

1" = 10'

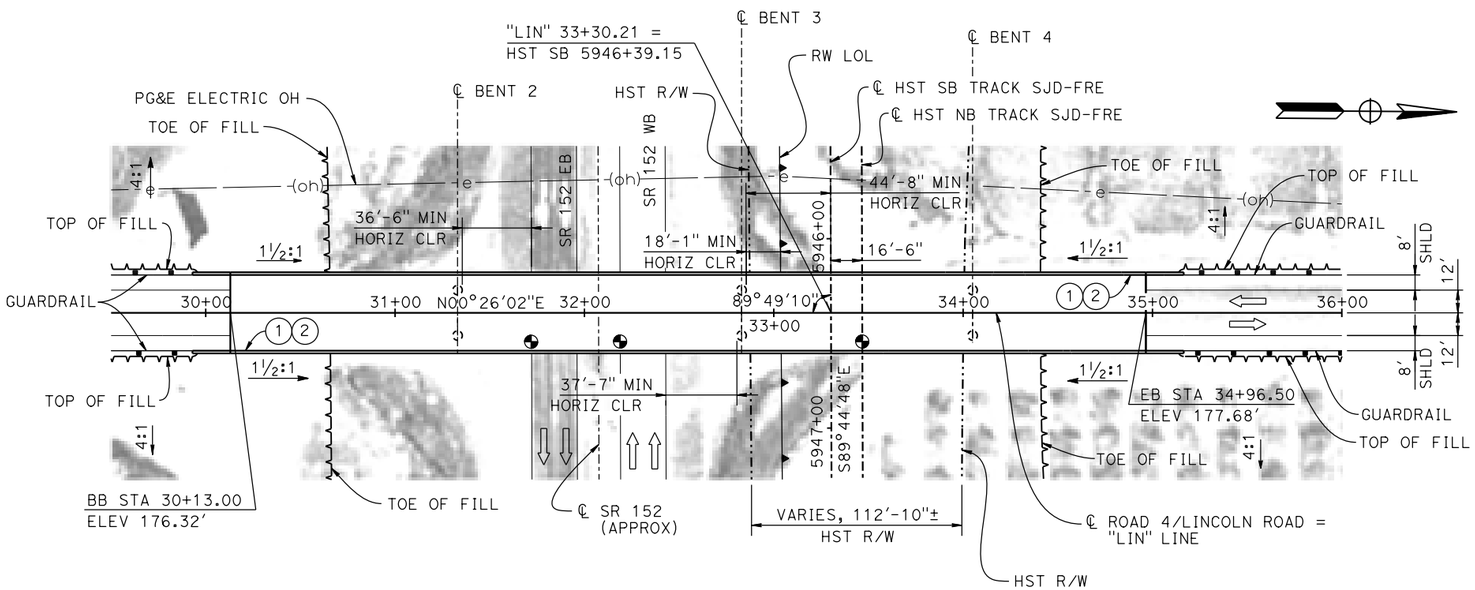

PLAN

1" = 40'

TEMPORARY TRAFFIC OPENINGS

VEHICULAR TRAFFIC

1. __ TRAFFIC WILL BE DETOURED AWAY FROM THE SITE.
2. X TRAFFIC WILL PASS UNDER THE STRUCTURE ON:

ST OR ROAD NAME AND LOCATION		FALSEWORK OPENING REQD (HORIZ X VERT)	
SR 152	31+83	40'X16.5'	E BND
SR 152	32+30	40'X16.5'	W BND

3. __ TEMP TRAFFIC LANE REDUCTION FOR FTG EXC.

LEGEND:

- INDICATES POINT OF MINIMUM VERTICAL CLEARANCE
- INDICATES DIRECTION OF TRAFFIC
- (1) PAINT "LINCOLN ROAD OVERHEAD"
- (2) PAINT "BRIDGE NO. XX-XXXX"
- (3) CONCRETE BARRIER TYPE 736 MOD
- (4) SLOPE PAVING (1½H:1V)
- (5) WINGWALL
- (6) AR FENCE WITH SOLID PLATE

NOTES:

1. ASSUME CLASS 140 PILES AT ABUTMENT AND BENT FOUNDATIONS. PILE LENGTHS TO BE DETERMINED.
2. FOR UTILITY DISPOSITIONS, SEE CIVIL AND GRADE SEPARATION PLANS; DRAWING CV-S1110-B.
3. FOR RETAINING WALL, SEE CIVIL AND GRADE SEPARATION PLANS; DRAWING CV-S1110-B.
4. FOR GUARDRAIL, SEE CIVIL AND GRADE SEPARATION PLANS; DRAWING CV-S1110-B.

10 0 10 20
1"=10'

40 0 40 80
1"=40'

REV	DATE	BY	CHK	APP	DESCRIPTION

DESIGNED BY S. J. S.
DRAWN BY J. KIDWELL
CHECKED BY O. EDEWOR
IN CHARGE C. LEMLEY
DATE 02/13/2015

RECORD SET
15% DESIGN SUBMITTAL

NOT FOR CONSTRUCTION

PARSONS

CALIFORNIA HIGH-SPEED RAIL AUTHORITY

CALIFORNIA HIGH-SPEED TRAIN PROJECT
MERCED TO FRESNO SECTION
CENTRAL VALLEY WYE
SR 152 (NORTH) TO ROAD 19 WYE ALTERNATIVE
GENERAL PLAN (SJD-FRE)
LINCOLN ROAD (ROAD 4) OVERHEAD

CONTRACT NO. HSR08-05
DRAWING NO. ST-K1110-B
SCALE AS SHOWN
SHEET NO.

MF-ST-K1110-B.dgn
07-FEB-2015 10:36
p0036110

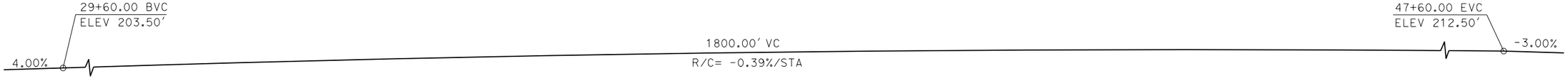

PROFILE GRADE

NO SCALE

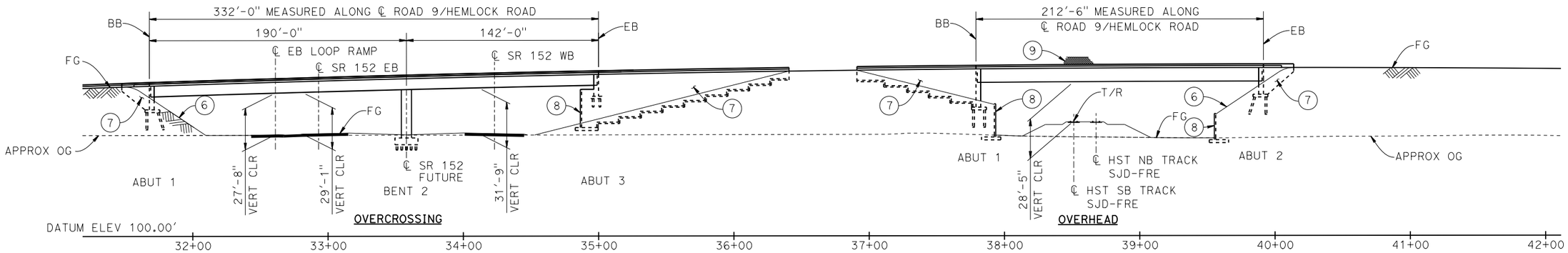

ELEVATION

1" = 40'

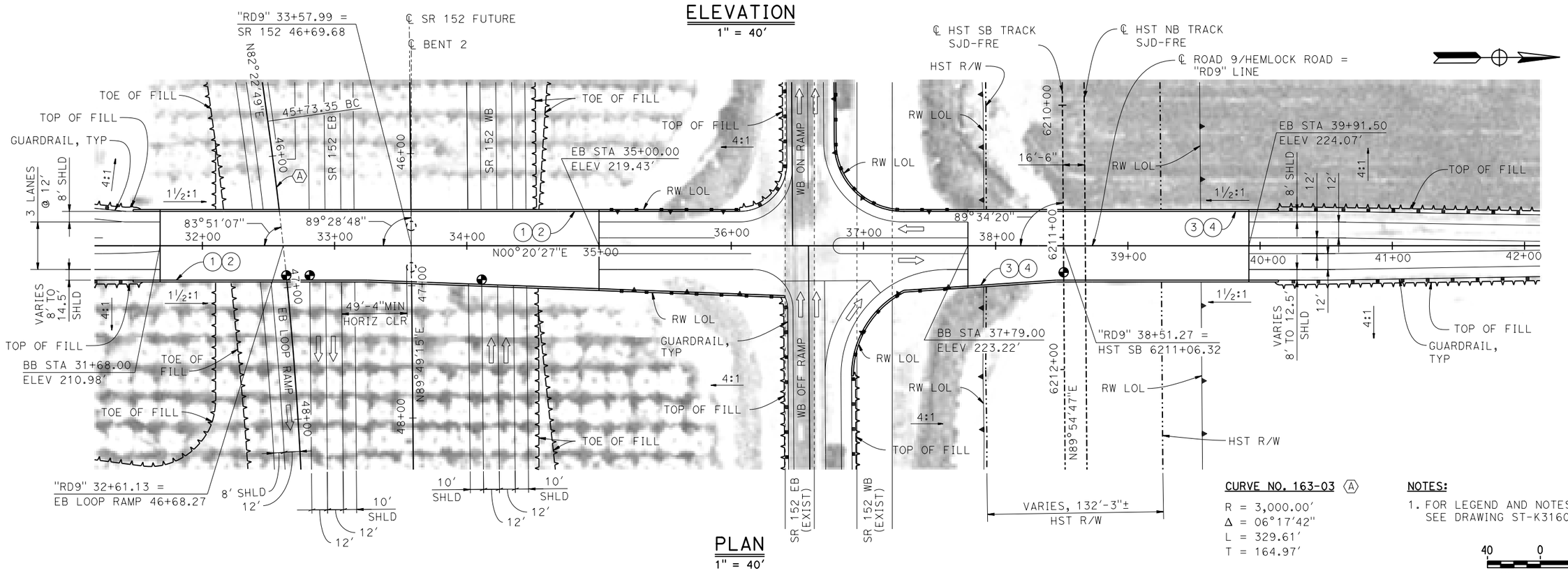

PLAN

1" = 40'

CURVE NO. 163-03 (A)

R = 3,000.00'
Δ = 06°17'42"
L = 329.61'
T = 164.97'

NOTES:

1. FOR LEGEND AND NOTES, SEE DRAWING ST-K3160-B.

40 0 40 80
1"=40'

REV	DATE	BY	CHK	APP	DESCRIPTION

DESIGNED BY S. J. S.
DRAWN BY A. M.
CHECKED BY O. EDEWOR
IN CHARGE C. LEMLEY
DATE 05/08/2015

RECORD SET 15% DESIGN SUBMITTAL

NOT FOR CONSTRUCTION

PARSONS

CALIFORNIA HIGH-SPEED RAIL AUTHORITY

CALIFORNIA HIGH-SPEED TRAIN PROJECT
MERCED TO FRESNO SECTION
CENTRAL VALLEY WYE
SR 152 (NORTH) TO ROAD 19 WYE ALTERNATIVE
GENERAL PLAN (SJD-FRE)
HEMLOCK ROAD (ROAD 9) INTERCHANGE - 1 OF 2

CONTRACT NO. HSR08-05
DRAWING NO. ST-K1160-B
SCALE AS SHOWN
SHEET NO.

p005133a 21-MAY-2015 09:28 MF-ST-K1160-B.dgn

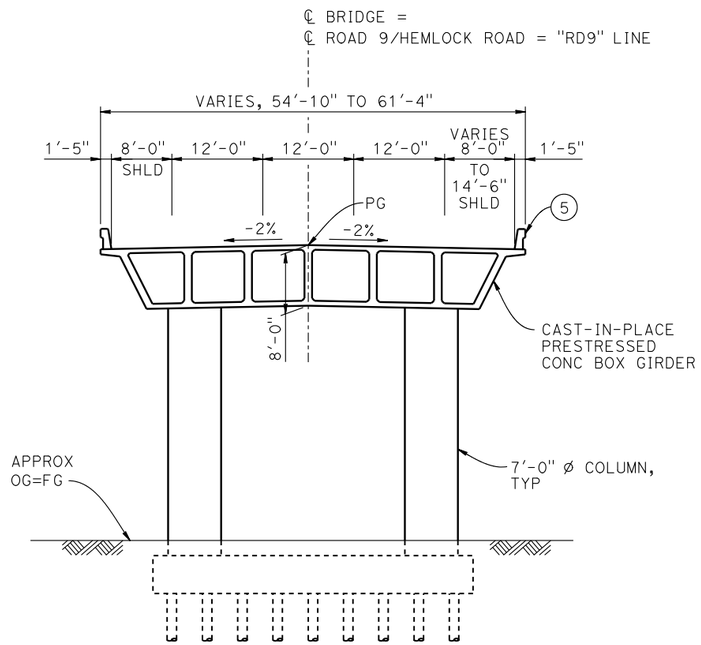

TYPICAL SECTION AT OVERCROSSING

1" = 10'

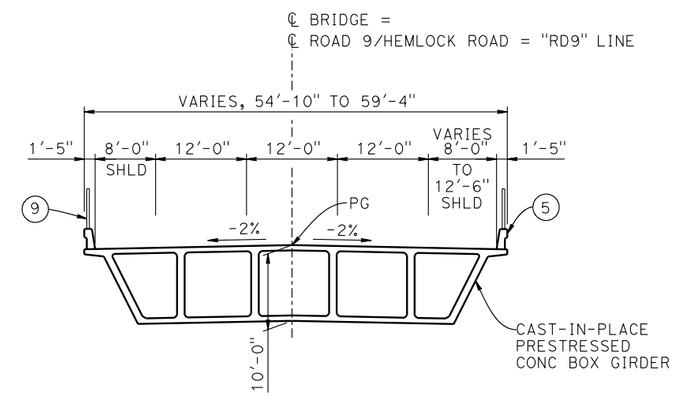

TYPICAL SECTION AT OVERHEAD

1" = 10'

LEGEND:

- INDICATES POINT OF MINIMUM VERTICAL CLEARANCE
- INDICATES DIRECTION OF TRAFFIC
- (1) PAINT "HEMLOCK ROAD OVERCROSSING"
- (2) PAINT "BRIDGE NO. XX-XXXX"
- (3) PAINT "HEMLOCK ROAD OVERHEAD"
- (4) PAINT "BRIDGE NO. XX-XXXX"
- (5) CONCRETE BARRIER TYPE 736 MOD
- (6) SLOPE PAVING (1½H:1V)
- (7) WINGWALL
- (8) RETAINING WALL
- (9) AR FENCE WITH SOLID PLATE

NOTES:

1. ASSUME CLASS 140 PILES AT ABUTMENT AND BENT FOUNDATIONS. PILE LENGTHS TO BE DETERMINED.
2. FOR UTILITY DISPOSITIONS, SEE CIVIL AND GRADE SEPARATION PLANS; DRAWING CV-S1160-B.
3. FOR RETAINING WALLS, SEE CIVIL AND GRADE SEPARATION PLANS; DRAWING CV-S1160-B.
4. FOR GUARDRAILS, SEE CIVIL AND GRADE SEPARATION PLANS; DRAWING CV-S1160-B.

10 0 10 20

1"=10'

REV	DATE	BY	CHK	APP	DESCRIPTION

DESIGNED BY S. J. S.
DRAWN BY J. KIDWELL
CHECKED BY O. EDEWOR
IN CHARGE C. LEMLEY
DATE 05/08/2015

RECORD SET
15% DESIGN SUBMITTAL

NOT FOR CONSTRUCTION

PARSONS

CALIFORNIA HIGH-SPEED RAIL AUTHORITY

CALIFORNIA HIGH-SPEED TRAIN PROJECT
MERCED TO FRESNO SECTION
CENTRAL VALLEY WYE
SR 152 (NORTH) TO ROAD 19 WYE ALTERNATIVE
TYPICAL SECTIONS (SJD-FRE)
HEMLOCK ROAD (ROAD 9) INTERCHANGE - 2 OF 2

CONTRACT NO. HSR08-05
DRAWING NO. ST-K3160-B
SCALE AS SHOWN
SHEET NO.

p0038170 19-MAY-2015 9:53 MF-ST-K3160-B.dgn

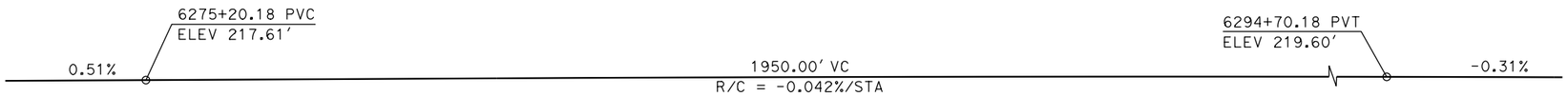

TOP OF RAIL PROFILE (℄ HST SB TRACK)

NO SCALE

BENT COLUMN SCHEDULE		
BENTS	COLUMN TYPE	CIDH TYPE
2-3	8'-0" ø	10'-0" ø
4-5	10'-0" ø	12'-0" ø
6-7	8'-0" ø	10'-0" ø

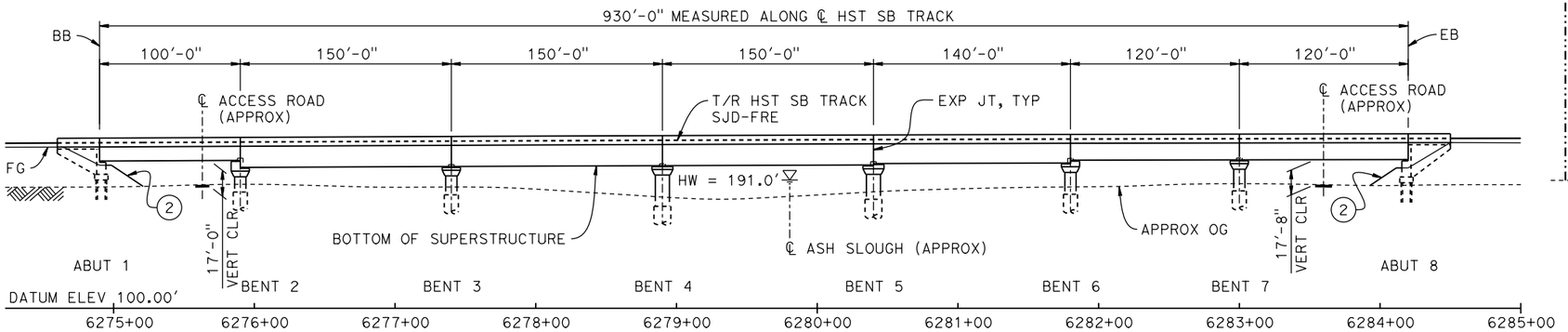

ELEVATION

1" = 50'

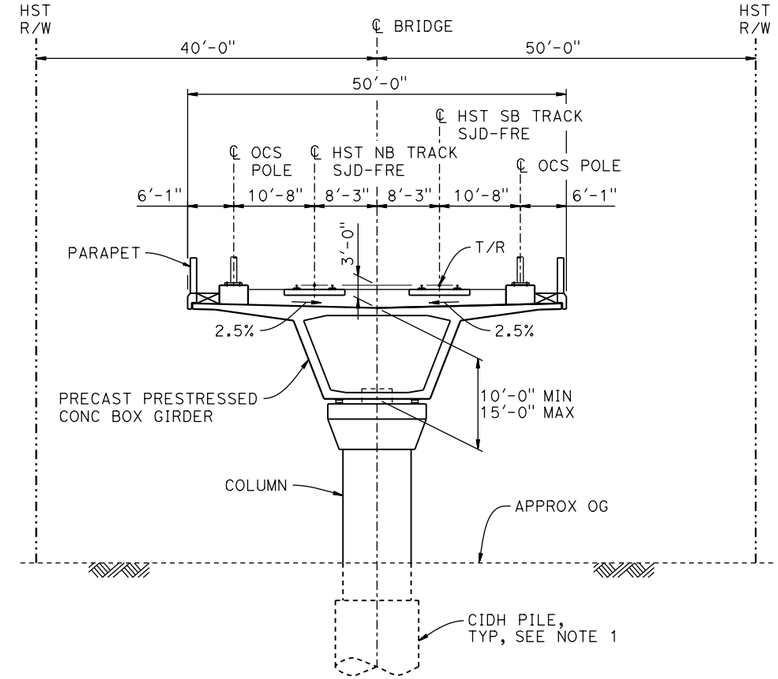

TYPICAL SECTION

1" = 10'

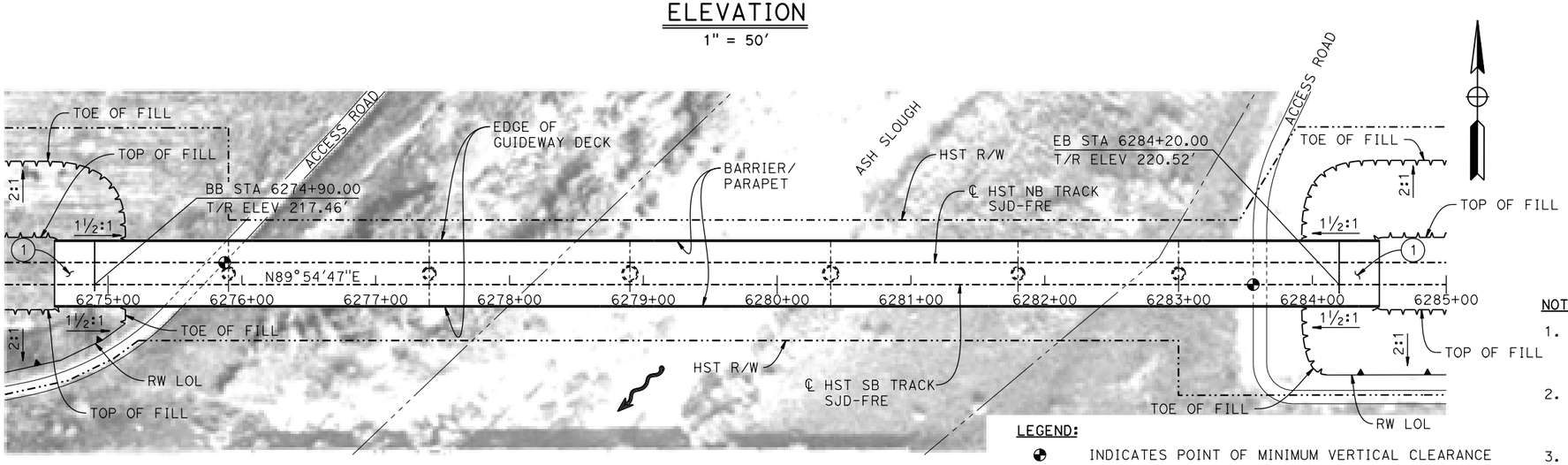

PLAN

1" = 50'

TEMPORARY TRAFFIC OPENINGS

VEHICULAR TRAFFIC

1. __ TRAFFIC WILL BE DETOURED AWAY FROM THE SITE.
2. X TRAFFIC WILL PASS UNDER THE STRUCTURE ON:

ST OR ROAD NAME AND LOCATION		FALSEWORK OPENING REQD (HORIZ x VERT)	
ACCESS ROAD	6275+64	20'x16.5'	-
ACCESS ROAD	6283+61	20'x16.5'	-

3. __ TEMP TRAFFIC LANE REDUCTION FOR FTG EXC.

NOTES:

1. 16"ø PIPE PILES ASSUMED FOR ABUTMENT FOUNDATIONS. PILE AND DRILLED SHAFT LENGTHS TO BE DETERMINED.
2. FOR RETAINING WALLS, SEE CIVIL AND GRADE SEPARATION PLANS; DRAWING CV-S1170-B.
3. ANY EXISTING DIRT ROAD THAT CONFLICTS WITH NEW CONSTRUCTION SHALL BE REALIGNED.
4. FOR UTILITY DISPOSITIONS, SEE CIVIL AND GRADE SEPARATION PLANS; DRAWING CV-S1170-B.

LEGEND:

- INDICATES POINT OF MINIMUM VERTICAL CLEARANCE
- INDICATES DIRECTION OF FLOW
- (1) STRUCTURE APPROACH
- (2) SLOPE PAVING (1½H:1V)

10 0 10 20
1"=10'

50 0 50 100
1"=50'

REV	DATE	BY	CHK	APP	DESCRIPTION

DESIGNED BY S. J. S.
DRAWN BY J. KIDWELL
CHECKED BY O. EDEWOR
IN CHARGE C. LEMLEY
DATE 05/08/2015

RECORD SET
15% DESIGN SUBMITTAL

NOT FOR CONSTRUCTION

PARSONS

CALIFORNIA HIGH-SPEED RAIL AUTHORITY

CALIFORNIA HIGH-SPEED TRAIN PROJECT
MERCED TO FRESNO SECTION
CENTRAL VALLEY WYE
SR 152 (NORTH) TO ROAD 19 WYE ALTERNATIVE
GENERAL PLAN (SJD-FRE)
ASH SLOUGH BRIDGE

CONTRACT NO. HSR08-05
DRAWING NO. ST-K1170-B
SCALE AS SHOWN
SHEET NO.

MF-ST-K1170-B.dgn
18-MAR-2016 05:28
p0042226

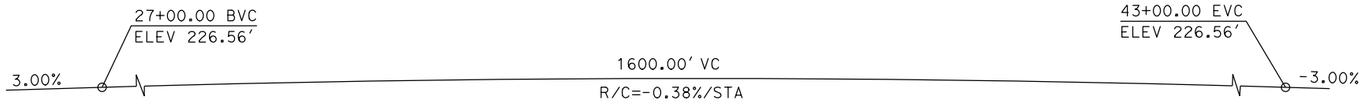

PROFILE GRADE

NO SCALE

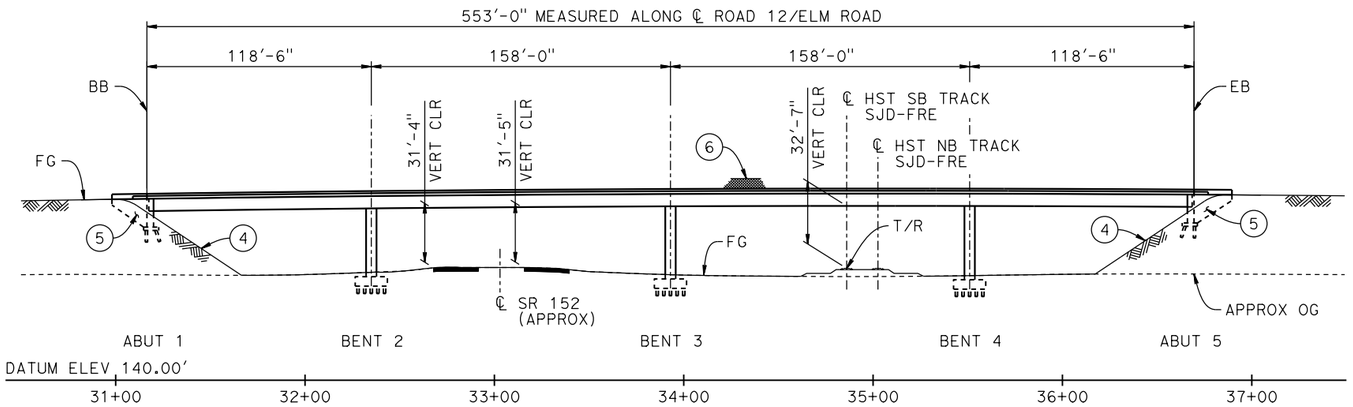

ELEVATION

1" = 40'

TEMPORARY TRAFFIC OPENINGS

VEHICULAR TRAFFIC

1. __ TRAFFIC WILL BE DETOURED AWAY FROM THE SITE.
2. X TRAFFIC WILL PASS UNDER THE STRUCTURE ON:

ST OR ROAD NAME AND LOCATION		FALSEWORK OPENING REQD (HORIZ x VERT)	
SR 152	32+78	40'x16.5'	E BND
SR 152	33+26	40'x16.5'	W BND

3. __ TEMP TRAFFIC LANE REDUCTION FOR FTG EXC.

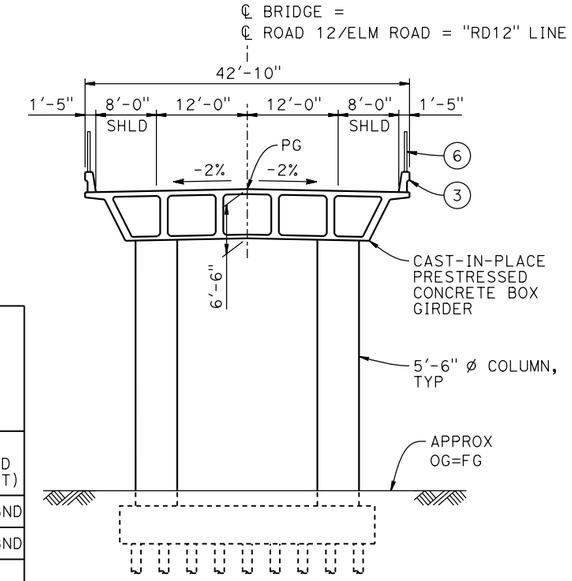

TYPICAL SECTION

1" = 10'

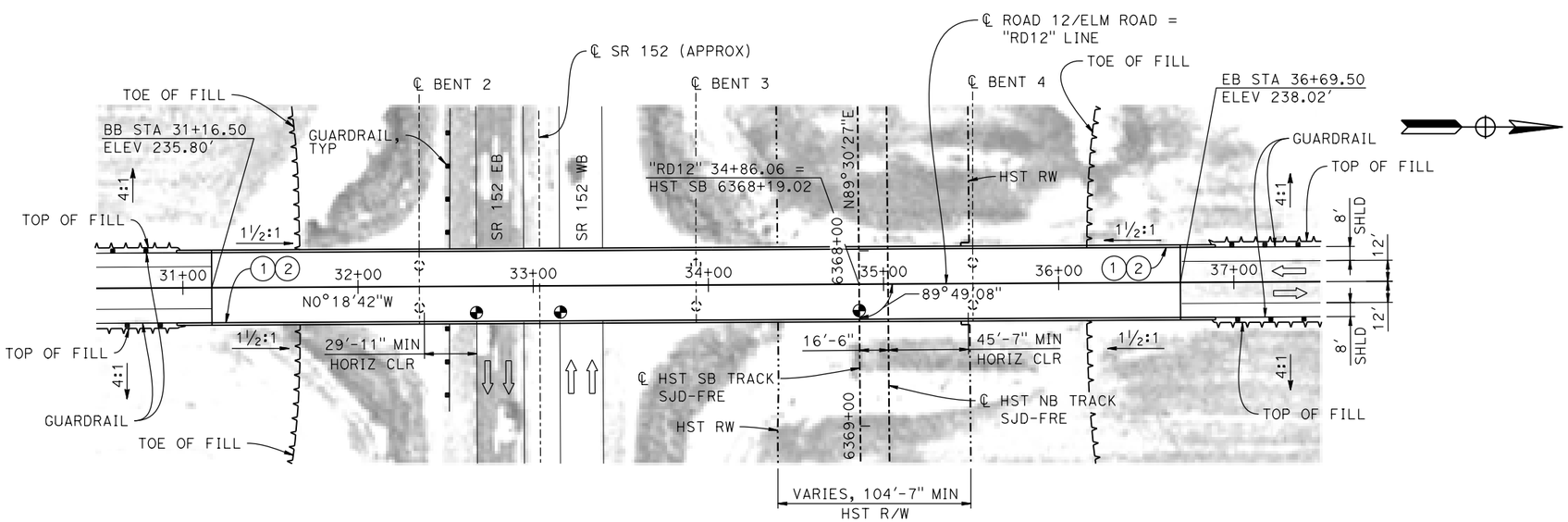

PLAN

1" = 40'

LEGEND:

- ◕ INDICATES POINT OF MINIMUM VERTICAL CLEARANCE
- ⇨ INDICATES DIRECTION OF TRAFFIC
- (1) PAINT "ELM ROAD OVERHEAD"
- (2) PAINT "BRIDGE NO. XX-XXXX"
- (3) CONCRETE BARRIER TYPE 736 MOD
- (4) SLOPE PAVING (1½H:1V)
- (5) WINGWALL
- (6) AR FENCE WITH SOLID PLATE

NOTE:

1. ASSUME CLASS 140 PILES AT ABUTMENT AND BENT FOUNDATIONS. PILE LENGTHS TO BE DETERMINED.
2. FOR GUARDRAILS, SEE CIVIL AND GRADE SEPARATION PLANS; DRAWING CV-S1190-B.
3. FOR UTILITY DISPOSITIONS, SEE CIVIL AND GRADE SEPARATION PLANS; DRAWING CV-S1190-B.

10 0 10 20 — 1"=10'

40 0 40 80 — 1"=40'

REV	DATE	BY	CHK	APP	DESCRIPTION

DESIGNED BY S. J. S
DRAWN BY J. KIDWELL
CHECKED BY O. EDEWOR
IN CHARGE C. LEMLEY
DATE 02/13/2015

RECORD SET
15% DESIGN SUBMITTAL

NOT FOR CONSTRUCTION

PARSONS

CALIFORNIA HIGH-SPEED RAIL AUTHORITY

CALIFORNIA HIGH-SPEED TRAIN PROJECT
MERCED TO FRESNO SECTION
CENTRAL VALLEY WYE
SR 152 (NORTH) TO ROAD 19 WYE ALTERNATIVE
GENERAL PLAN (SJD-FRE)
ELM ROAD (ROAD 12) OVERHEAD

CONTRACT NO. HSR08-05
DRAWING NO. ST-K1190-B
SCALE AS SHOWN
SHEET NO.

MF-ST-K1190-B.dgn
07-FEB-2015 10:39
p0036110

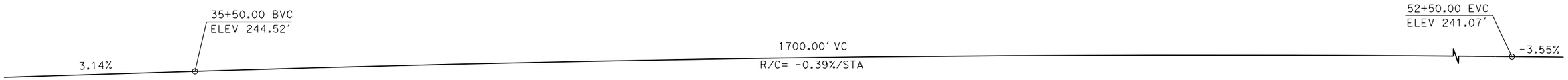

PROFILE GRADE

NO SCALE

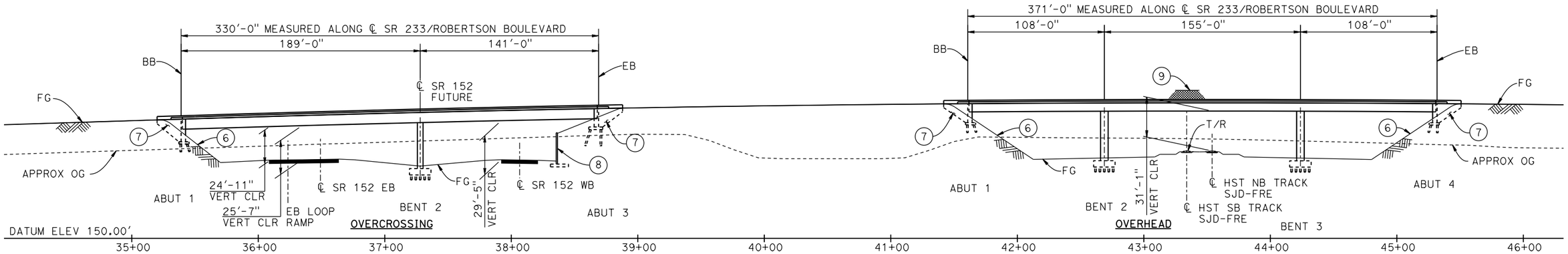

ELEVATION

1" = 40'

CURVE NO. 202-03 (A)

R = 3,000.00'
Δ = 03°11'29"
L = 167.10'
T = 83.57'

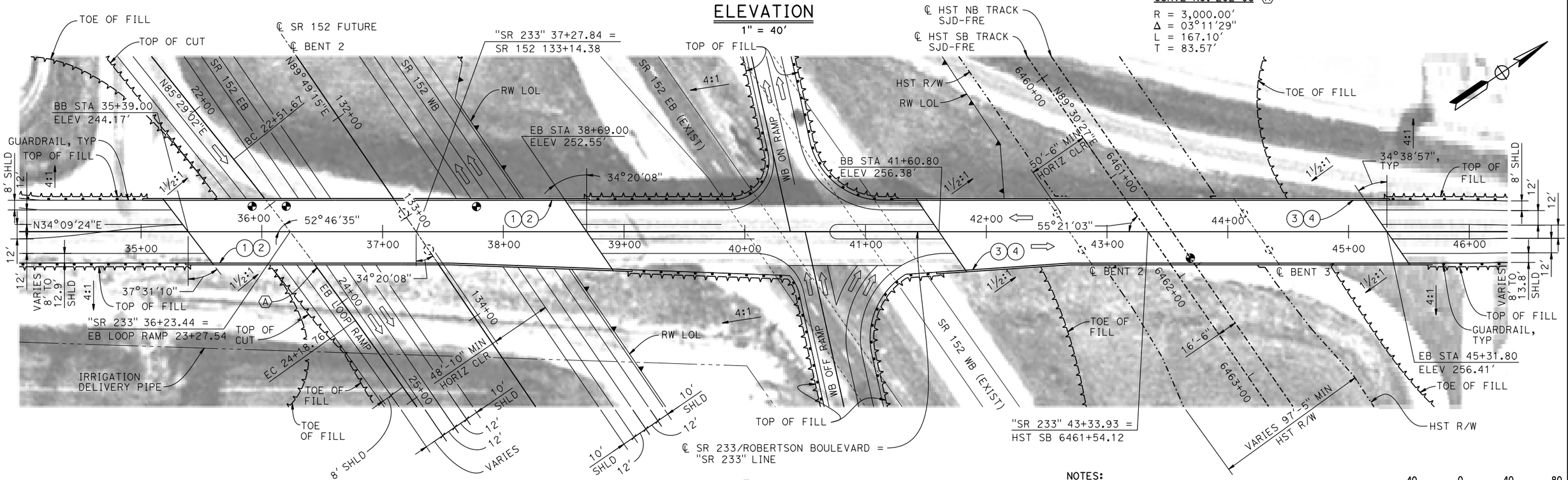

PLAN

1" = 40'

NOTES:

1. FOR LEGEND AND NOTES, SEE DRAWING ST-K3210-B.

40 0 40 80
1"=40'

REV	DATE	BY	CHK	APP	DESCRIPTION

DESIGNED BY S. J. S.
DRAWN BY J. KIDWELL
CHECKED BY O. EDEWOR
IN CHARGE C. LEMLEY
DATE 05/08/2015

RECORD SET 15% DESIGN SUBMITTAL

NOT FOR CONSTRUCTION

PARSONS

CALIFORNIA HIGH-SPEED RAIL AUTHORITY

CALIFORNIA HIGH-SPEED TRAIN PROJECT
MERCED TO FRESNO SECTION
CENTRAL VALLEY WYE
SR 152 (NORTH) TO ROAD 19 WYE ALTERNATIVE
GENERAL PLAN (SJD-FRE)
ROBERTSON BOULEVARD (SR 233) INTERCHANGE - 1 OF 2

CONTRACT NO. HSR08-05
DRAWING NO. ST-K1210-B
SCALE AS SHOWN
SHEET NO.

MF-ST-K1210-B.dgn
19-MAY-2015 16:03
P0028989

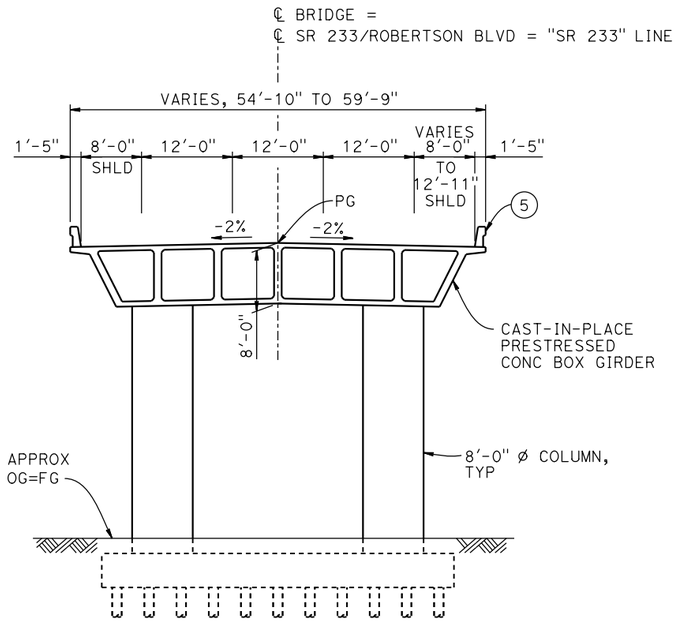

TYPICAL SECTION AT OVERCROSSING

1" = 10'

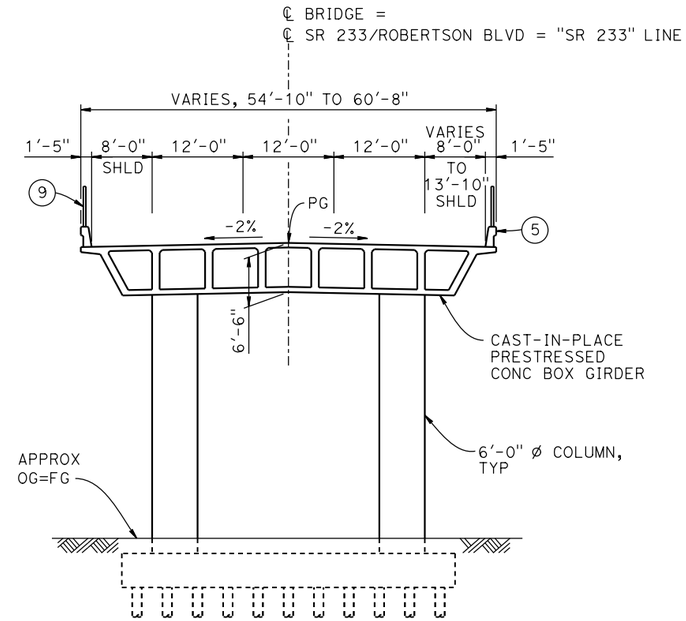

TYPICAL SECTION AT OVERHEAD

1" = 10'

LEGEND:

- ◕ INDICATES POINT OF MINIMUM VERTICAL CLEARANCE
- ⇨ INDICATES DIRECTION OF TRAFFIC
- (1) PAINT "ROBERTSON BLVD OVERCROSSING"
- (2) PAINT "BRIDGE NO. XX-XXXX"
- (3) PAINT "ROBERTSON BLVD OVERHEAD"
- (4) PAINT "BRIDGE NO. XX-XXXX"
- (5) CONCRETE BARRIER TYPE 736 MOD
- (6) SLOPE PAVING (1½H:1V)
- (7) WINGWALL
- (8) RETAINING WALL
- (9) AR FENCE WITH SOLID PLATE

NOTES:

1. ASSUME CLASS 140 PILES AT ABUTMENT AND BENT FOUNDATIONS. PILE LENGTHS TO BE DETERMINED.
2. FOR UTILITY DISPOSITIONS, SEE CIVIL AND GRADE SEPARATION PLANS; DRAWINGS CV-S1210-B.
3. FOR RETAINING WALLS, SEE CIVIL AND GRADE SEPARATION PLANS; DRAWINGS CV-S1210-B.
4. FOR GUARDRAILS, SEE CIVIL AND GRADE SEPARATION PLANS; DRAWINGS CV-S1210-B.

10 0 10 20
1"=10'

REV	DATE	BY	CHK	APP	DESCRIPTION

DESIGNED BY S. J. S.
DRAWN BY J. KIDWELL
CHECKED BY O. EDEWOR
IN CHARGE C. LEMLEY
DATE 05/08/2015

RECORD SET
15% DESIGN SUBMITTAL

NOT FOR CONSTRUCTION

PARSONS

CALIFORNIA HIGH-SPEED RAIL AUTHORITY

CALIFORNIA HIGH-SPEED TRAIN PROJECT
MERCED TO FRESNO SECTION
CENTRAL VALLEY WYE
SR 152 (NORTH) TO ROAD 19 WYE ALTERNATIVE
TYPICAL SECTIONS (SJD-FRE)
ROBERTSON BOULEVARD (SR 233) INTERCHANGE - 2 OF 2

CONTRACT NO. HSR08-05
DRAWING NO. ST-K3210-B
SCALE AS SHOWN
SHEET NO.

MF-ST-K3210-B.dgn 19-MAY-2015 16:09 P0028989

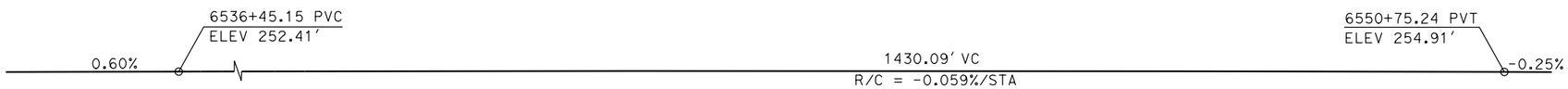

TOP OF RAIL PROFILE (℄ HST SB TRACK)

NO SCALE

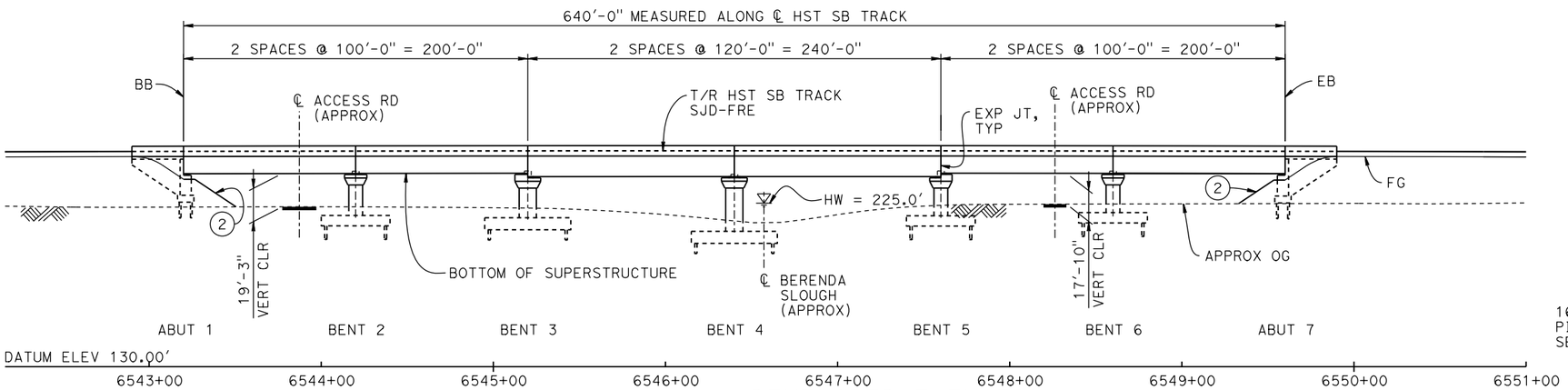

DEVELOPED ELEVATION

1" = 40'

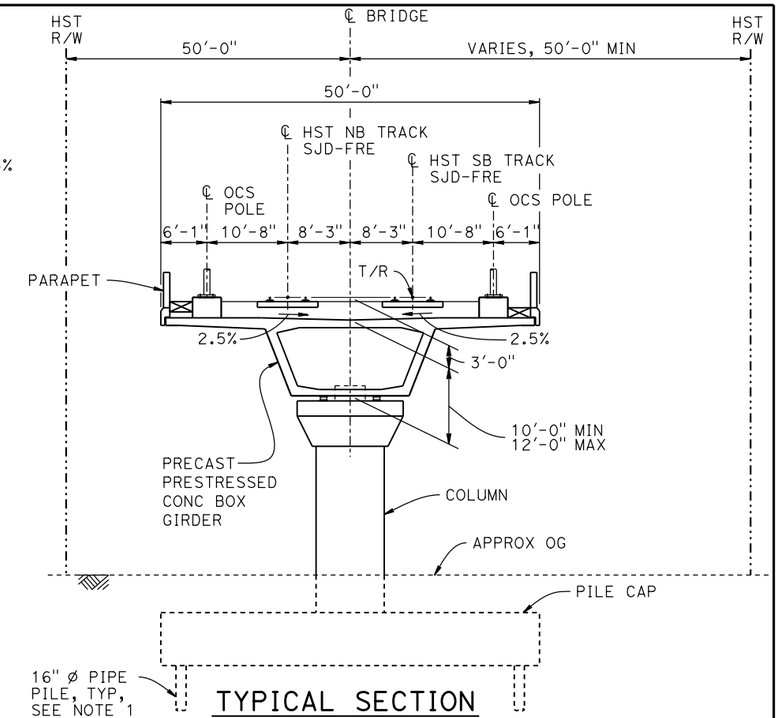

TYPICAL SECTION

1" = 10'

BENT COLUMN SCHEDULE	
BENT	COLUMN TYPE
2	8'-0" Ø
3 - 4	10'-0" Ø
5 - 6	8'-0" Ø

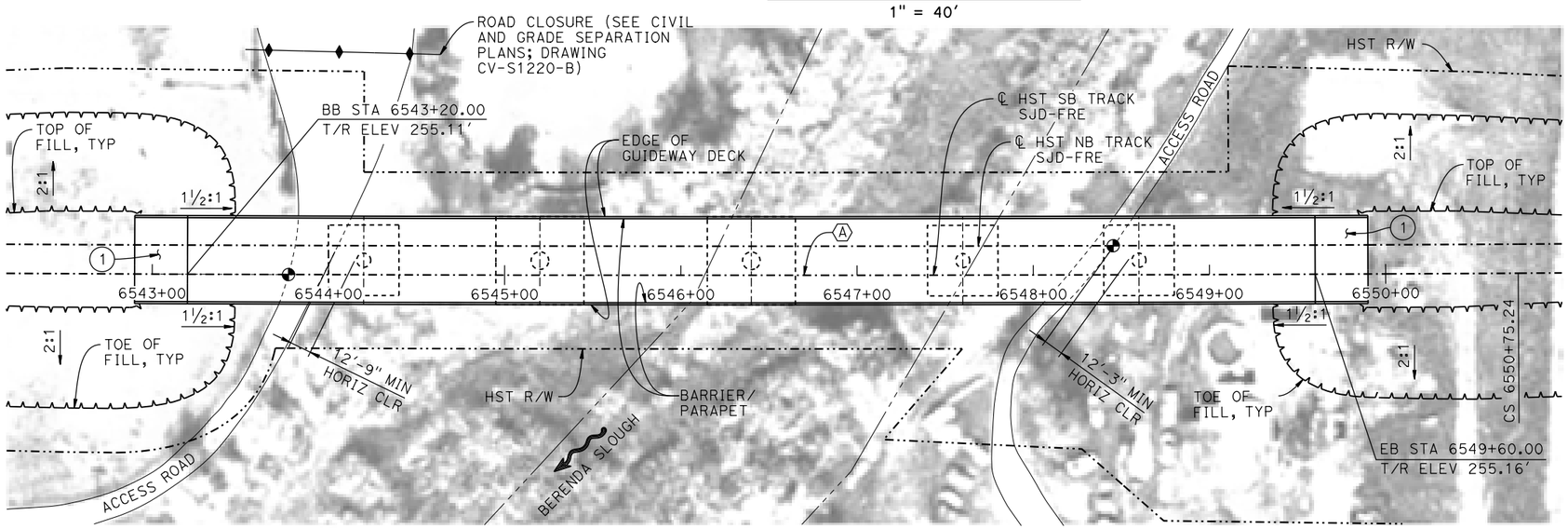

PLAN

1" = 40'

TEMPORARY TRAFFIC OPENINGS

VEHICULAR TRAFFIC

1. __ TRAFFIC WILL BE DETOURED AWAY FROM THE SITE.
2. X TRAFFIC WILL PASS UNDER THE STRUCTURE ON:

ST OR ROAD NAME AND LOCATION		FALSEWORK OPENING REQD (HORIZ x VERT)	
ACCESS ROAD	6543+83	20'x16.5'	-
ACCESS ROAD	6548+27	20'x16.5'	-

3. X TEMP TRAFFIC LANE REDUCTION FOR FTG EXC.

CURVE SJD-FRE 5 SB (A)

R = 79,310.00'
LS = 1,200.00'

NOTES:

1. 16"Ø PIPE PILES ASSUMED FOR ABUTMENT AND BENT FOUNDATIONS. PILE LENGTHS TO BE DETERMINED.
2. ANY EXISTING DIRT ROAD THAT CONFLICTS WITH NEW CONSTRUCTION SHALL BE REALIGNED.
3. FOR UTILITY DISPOSITIONS, SEE CIVIL AND GRADE SEPARATION PLANS; DRAWING CV-S1220-B.
4. FOR TRACK SUPERELEVATION DETAILS, SEE ALIGNMENT AND TYPICAL SECTION PLANS; DRAWING TT-B0051-B.

LEGEND:

- INDICATES POINT OF MINIMUM VERTICAL CLEARANCE
- INDICATES DIRECTION OF FLOW
- (1) STRUCTURE APPROACH
- (2) SLOPE PAVING (1½H:1V)

10 0 10 20 — 1"=10'
40 0 40 80 — 1"=40'

REV	DATE	BY	CHK	APP	DESCRIPTION

DESIGNED BY S. J. S
DRAWN BY W. JOHNSEN
CHECKED BY O. EDEWOR
IN CHARGE C. LEMLEY
DATE 02/13/2015

RECORD SET
15% DESIGN SUBMITTAL
NOT FOR CONSTRUCTION

PARSONS

CALIFORNIA HIGH-SPEED RAIL AUTHORITY

CALIFORNIA HIGH-SPEED TRAIN PROJECT
MERCED TO FRESNO SECTION
CENTRAL VALLEY WYE
SR 152 (NORTH) TO ROAD 19 WYE ALTERNATIVE
GENERAL PLAN (SJD-FRE)
BERENDA SLOUGH BRIDGE

CONTRACT NO. HSR08-05
DRAWING NO. ST-K1220-B
SCALE AS SHOWN
SHEET NO.

MF-ST-K1220-B.dgn
07-FEB-2015 10:40
p0036110

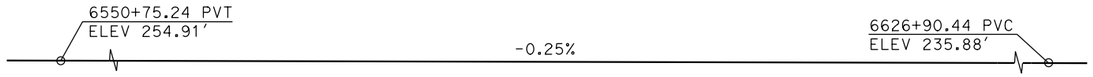

TOP OF RAIL PROFILE (℄ HST SB TRACK SJD-FRE)

NO SCALE

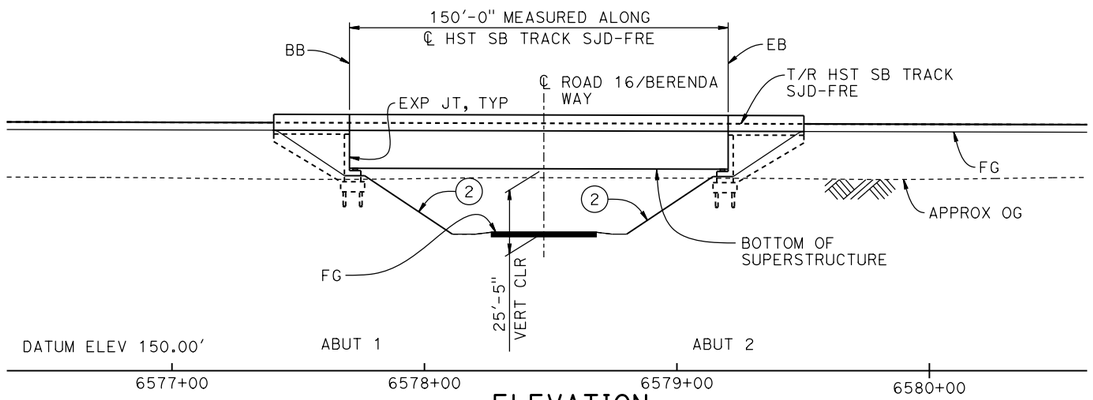

ELEVATION

1" = 30'

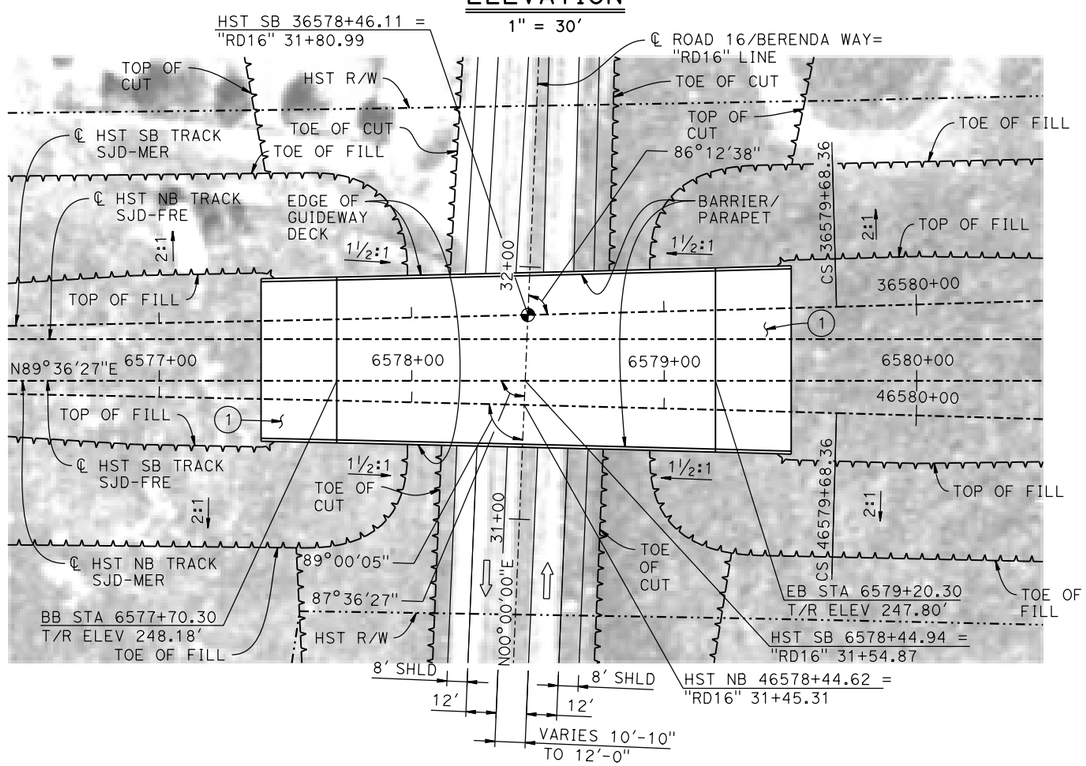

PLAN

1" = 30'

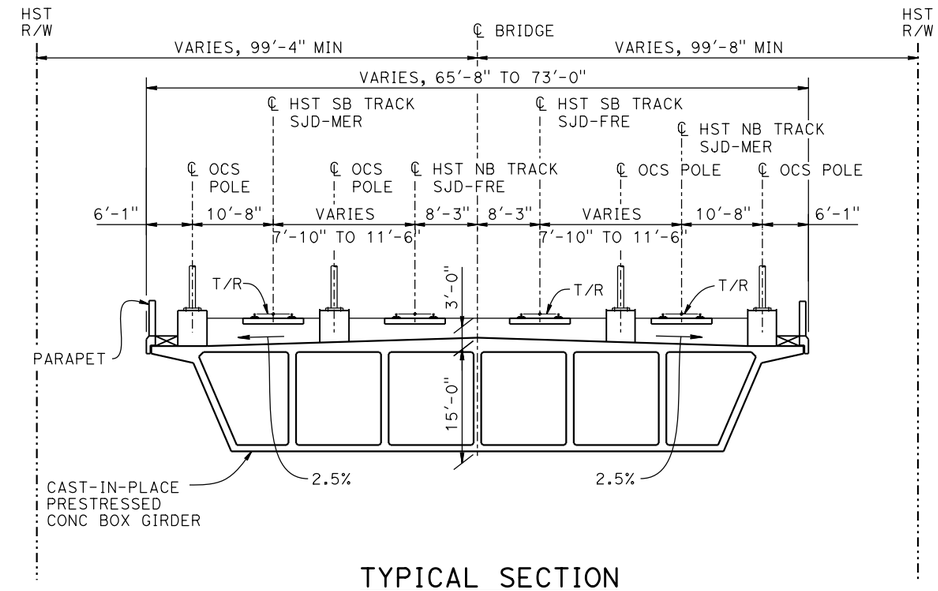

TYPICAL SECTION

1" = 10'

TEMPORARY TRAFFIC OPENINGS

VEHICULAR TRAFFIC

1. __ TRAFFIC WILL BE DETOURED AWAY FROM THE SITE.
2. X TRAFFIC WILL PASS UNDER THE STRUCTURE ON:

ST OR ROAD NAME AND LOCATION		FALSEWORK OPENING REQD (HORIZ X VERT)	
ROAD 16/BERENDA WAY	6578+45	52'x16.5'	2-WAY

3. __ TEMP TRAFFIC LANE REDUCTION FOR FTG EXC.

NOTES:

1. 16" Ø PIPE PILES ASSUMED FOR ABUTMENT FOUNDATIONS. PILE LENGTHS TO BE DETERMINED.
2. FOR UTILITY DISPOSITIONS, SEE CIVIL AND GRADE SEPARATION PLANS; DRAWING CV-S1230-B.

LEGEND:

- INDICATES POINT OF MINIMUM VERTICAL CLEARANCE
- INDICATES DIRECTION OF TRAFFIC
- (1) STRUCTURE APPROACH
- (2) SLOPE PAVING (1½H:1V)

10 0 10 20
1"=10'

30 0 30 60
1"=30'

REV	DATE	BY	CHK	APP	DESCRIPTION

DESIGNED BY S. J. S.
DRAWN BY J. C.
CHECKED BY O. EDEWOR
IN CHARGE C. LEMLEY
DATE 05/08/2015

RECORD SET
15% DESIGN SUBMITTAL

NOT FOR CONSTRUCTION

PARSONS

CALIFORNIA HIGH-SPEED RAIL AUTHORITY

CALIFORNIA HIGH-SPEED TRAIN PROJECT
MERCED TO FRESNO SECTION
CENTRAL VALLEY WYE
SR 152 (NORTH) TO ROAD 19 WYE ALTERNATIVE
GENERAL PLAN (SJD-FRE)
BERENDA WAY (ROAD 16) UNDERPASS

CONTRACT NO. HSR08-05
DRAWING NO. ST-K1230-B
SCALE AS SHOWN
SHEET NO.

MF-ST-K1230-B.dgn
16-MAR-2016 6:19
p0051133A

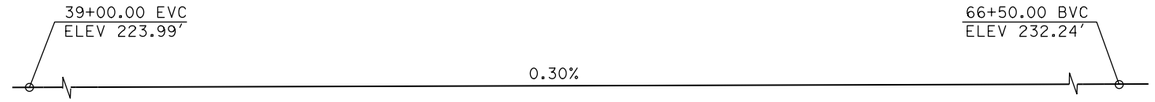

SR 152

PROFILE GRADE

NO SCALE

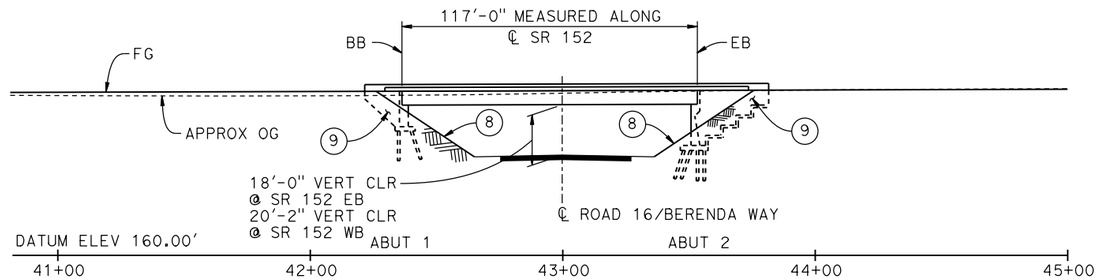

SR 152 WB & EB (ROAD 16) UNDERCROSSINGS

ELEVATION

1" = 30′

EB LOOP RAMP

PROFILE GRADE

NO SCALE

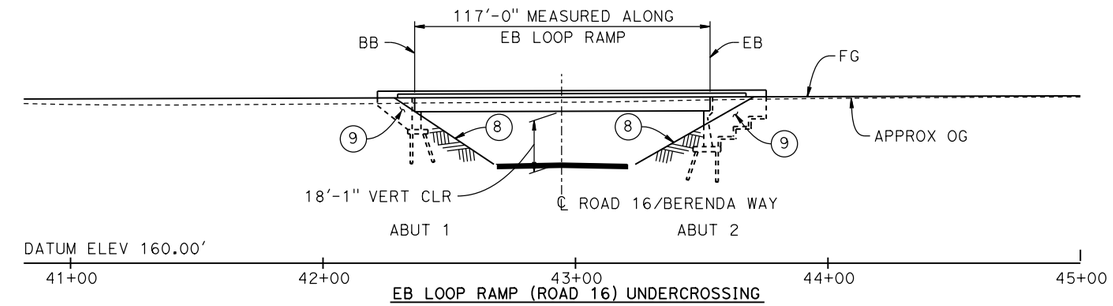

EB LOOP RAMP (ROAD 16) UNDERCROSSING

ELEVATION

1" = 30′

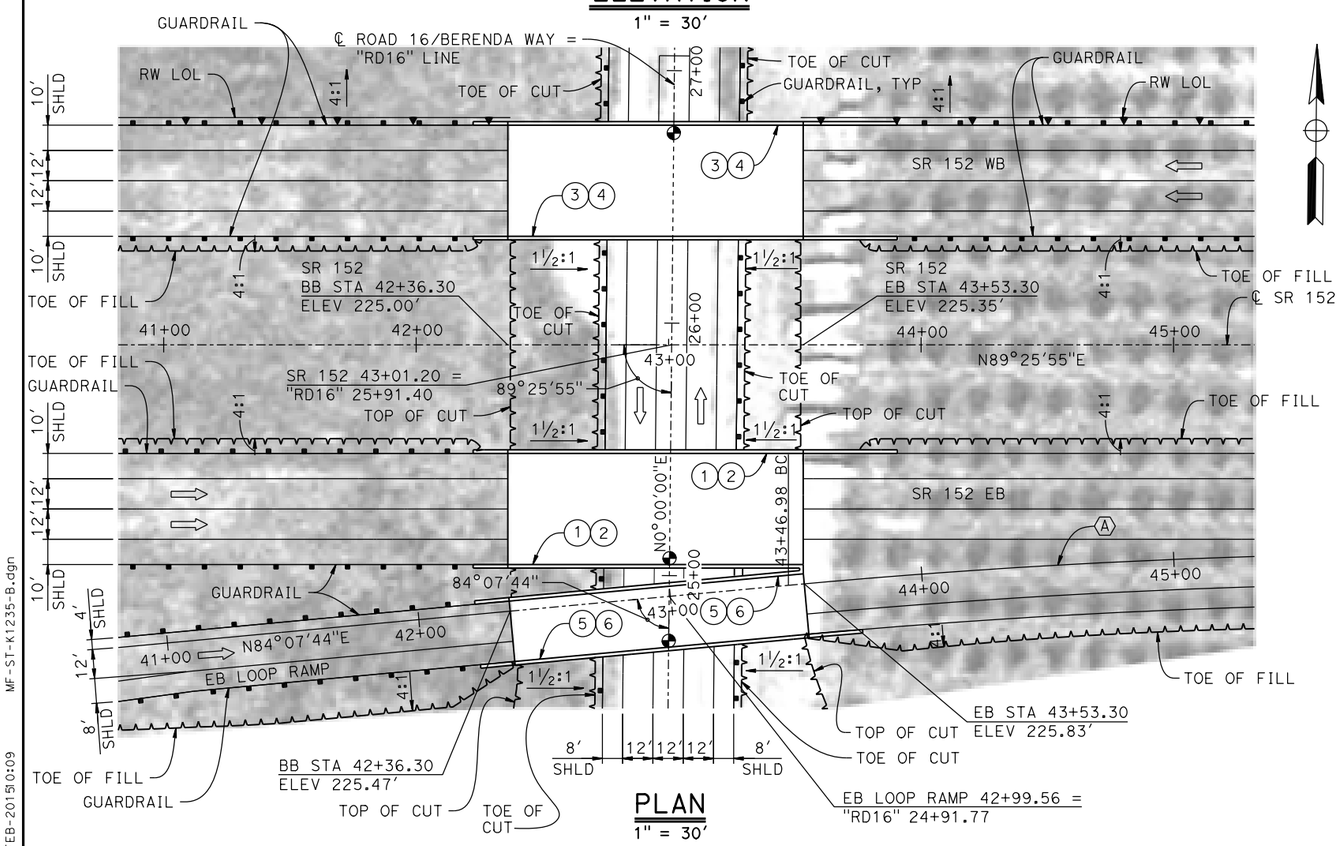

PLAN

1" = 30′

CURVE NO. 231-03 (A)

R = 3,000.00′
Δ = 04°09′26"
L = 217.68′
T = 108.89′

LEGEND:

- ◉ INDICATES POINT OF MINIMUM VERTICAL CLEARANCE
- ⇨ INDICATES DIRECTION OF TRAFFIC
- (1) PAINT "SR 152 EB (ROAD 16) UNDERCROSSING"
- (2) PAINT "BRIDGE NO. XX-XXXX"
- (3) PAINT "SR 152 WB (ROAD 16) UNDERCROSSING"
- (4) PAINT "BRIDGE NO. XX-XXXX"
- (5) PAINT "EB LOOP RAMP (ROAD 16) UNDERCROSSING"
- (6) PAINT "BRIDGE NO. XX-XXXX"
- (7) CONCRETE BARRIER TYPE 732
- (8) SLOPE PAVING (1½H:1V)
- (9) WINGWALL

NOTES:

1. FOR TYPICAL SECTION, SEE DRAWING ST-K3235-B.
2. ASSUME CLASS 140 PILES AT ABUTMENT FOUNDATIONS. PILE LENGTHS TO BE DETERMINED.
3. FOR UTILITY DISPOSITIONS, SEE CIVIL AND GRADE SEPARATION PLANS; DRAWING CV-S1230-B.
4. FOR GUARDRAILS, SEE CIVIL AND GRADE SEPARATION PLANS; DRAWING CV-S1230-B.
5. FOR RETAINING WALLS, SEE CIVIL AND GRADE SEPARATION PLANS; DRAWING CV-S1230-B.

TEMPORARY TRAFFIC OPENINGS

VEHICULAR TRAFFIC

1. __ TRAFFIC WILL BE DETOURED AWAY FROM THE SITE.
2. X TRAFFIC WILL PASS UNDER THE STRUCTURE ON:

ST OR ROAD NAME AND LOCATION		FALSEWORK OPENING REQD (HORIZ x VERT)	
ROAD 16/BERENDA WAY	43+01	52′x16.5′	2-WAY

3. __ TEMP TRAFFIC LANE REDUCTION FOR FTG EXC.

30 0 30 60
1"=30′

REV	DATE	BY	CHK	APP	DESCRIPTION

DESIGNED BY S. J. S.
DRAWN BY S. OLIVETO
CHECKED BY O. EDEWOR
IN CHARGE C. LEMLEY
DATE 02/13/2015

RECORD SET
15% DESIGN SUBMITTAL

NOT FOR CONSTRUCTION

PARSONS

CALIFORNIA HIGH-SPEED RAIL AUTHORITY

CALIFORNIA HIGH-SPEED TRAIN PROJECT
MERCED TO FRESNO SECTION
CENTRAL VALLEY WYE
SR 152 (NORTH) TO ROAD 19 WYE ALTERNATIVE
GENERAL PLAN (SJD-FRE)
BERENDA WAY (ROAD 16) INTERCHANGE - 1 OF 2

CONTRACT NO. HSR08-05
DRAWING NO. ST-K1235-B
SCALE AS SHOWN
SHEET NO.

MF-ST-K1235-B.dgn 07-FEB-2015 10:09 p0036110

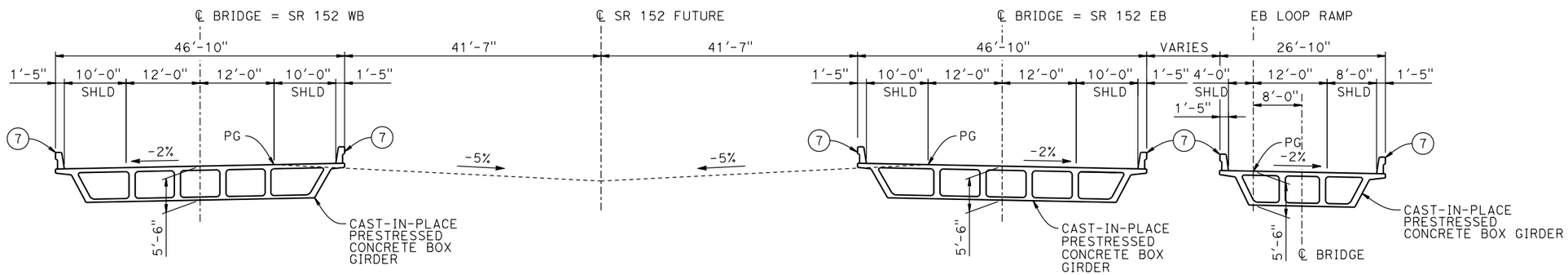

TYPICAL SECTION

1" = 10'

10 0 10 20

1"=10'

REV	DATE	BY	CHK	APP	DESCRIPTION

DESIGNED BY S. J. S.
DRAWN BY S. OLIVETO
CHECKED BY O. EDEWOR
IN CHARGE C. LEMLEY
DATE 02/13/2015

RECORD SET
15% DESIGN SUBMITTAL

NOT FOR CONSTRUCTION

PARSONS

CALIFORNIA HIGH-SPEED RAIL AUTHORITY

CALIFORNIA HIGH-SPEED TRAIN PROJECT
MERCED TO FRESNO SECTION
CENTRAL VALLEY WYE
SR 152 (NORTH) TO ROAD 19 WYE ALTERNATIVE
TYPICAL SECTION (SJD-FRE)
BERENDA WAY (ROAD 16) INTERCHANGE - 2 OF 2

CONTRACT NO. HSR08-05
DRAWING NO. ST-K3235-B
SCALE AS SHOWN
SHEET NO.

p0036110 07-FEB-2015 10:10 MF-ST-K3235-B.dgn

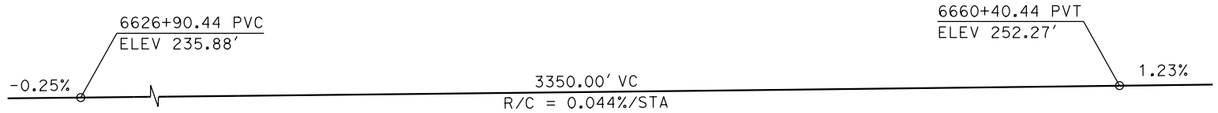

TOP OF RAIL PROFILE (℄ HST SB TRACK)

NO SCALE

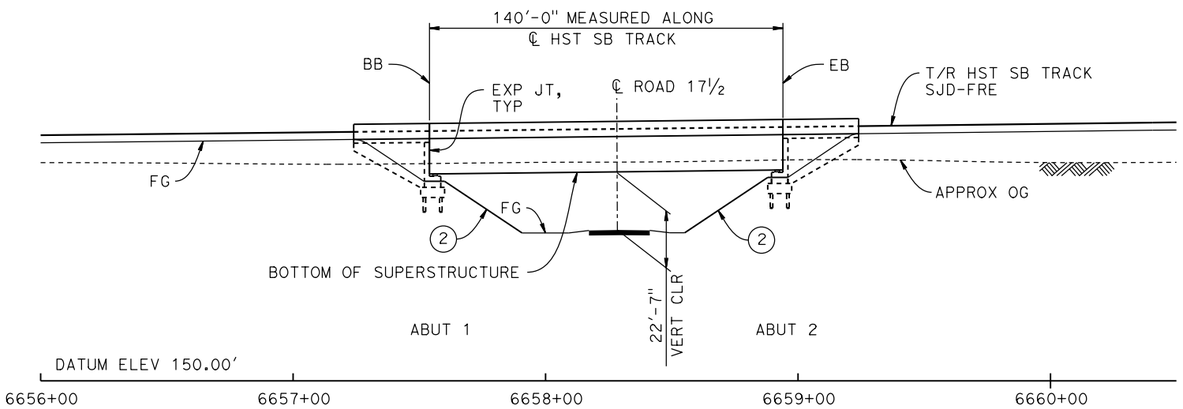

ELEVATION

1" = 30'

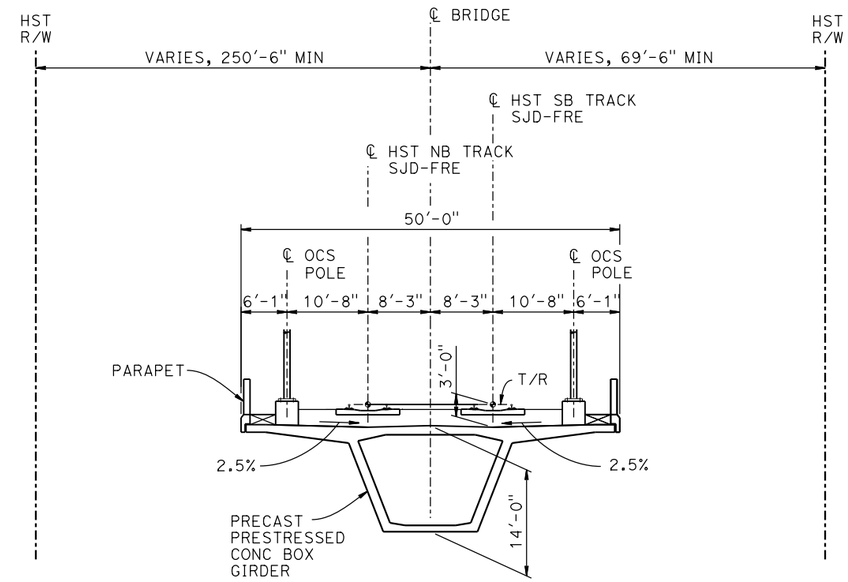

TYPICAL SECTION

1" = 10'

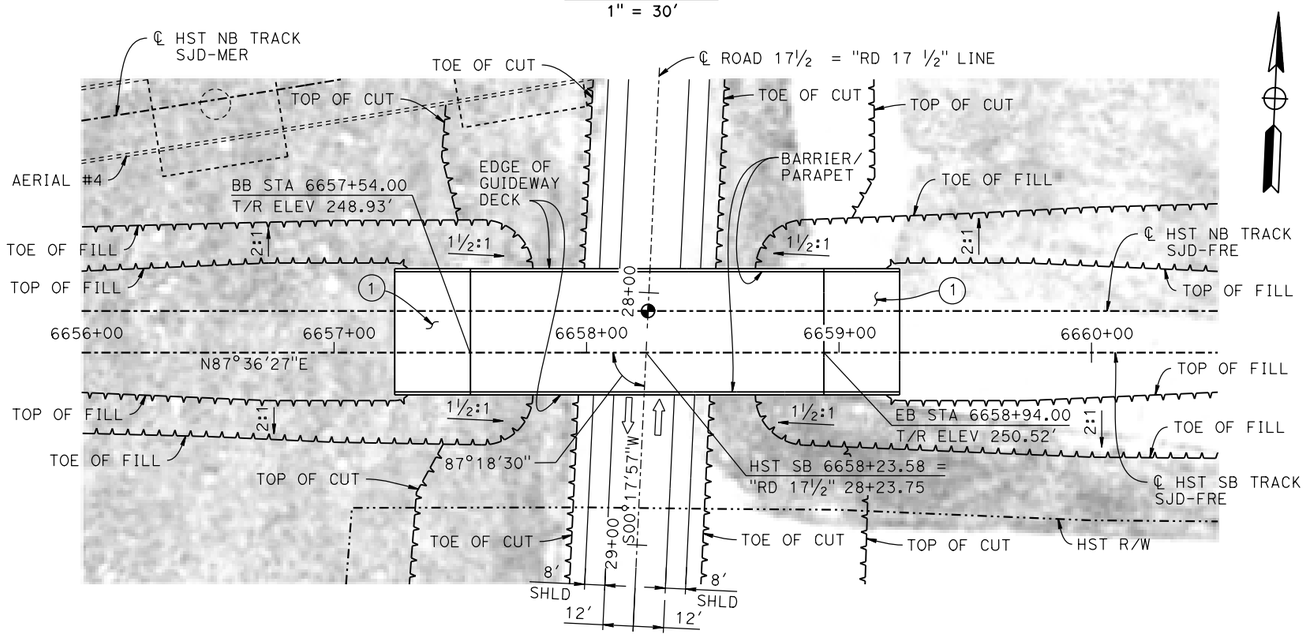

PLAN

1" = 30'

LEGEND:

- ◉ INDICATES POINT OF MINIMUM VERTICAL CLEARANCE
- ⇨ INDICATES DIRECTION OF TRAFFIC
- (1) STRUCTURE APPROACH
- (2) SLOPE PAVING (1½H:1V)

NOTES:

1. 16"Ø PIPE PILES ASSUMED FOR ABUTMENT FOUNDATIONS. PILE LENGTHS TO BE DETERMINED.
2. FOR UTILITY DISPOSITIONS, SEE CIVIL AND GRADE SEPARATION PLANS; DRAWING CV-S1240-B.
3. FOR AERIAL #4 - NORTHBOUND OVER HST MAINLINE GENERAL PLAN AND TYPICAL SECTIONS, SEE DRAWINGS ST-K1620-B TO ST-K1622-B, ST-K3620-B AND ST-K3621-B.

TEMPORARY TRAFFIC OPENINGS

VEHICULAR TRAFFIC

1. X TRAFFIC WILL BE DETOURED AWAY FROM THE SITE.
2. _ TRAFFIC WILL PASS UNDER THE STRUCTURE ON:

ST OR ROAD NAME AND LOCATION		FALSEWORK OPENING REQD (HORIZ x VERT)	
ROAD 17½	6658+24	32'X16.5'	2-WAY

3. _ TEMP TRAFFIC LANE REDUCTION FOR FTG EXC.

10 0 10 20
1"=10'

30 0 30 60
1"=30'

REV	DATE	BY	CHK	APP	DESCRIPTION

DESIGNED BY S. J. S.
DRAWN BY B. M.
CHECKED BY O. EDEWOR
IN CHARGE C. LEMLEY
DATE 05/08/2015

RECORD SET
15% DESIGN SUBMITTAL

NOT FOR CONSTRUCTION

PARSONS

CALIFORNIA HIGH-SPEED RAIL AUTHORITY

CALIFORNIA HIGH-SPEED TRAIN PROJECT
MERCED TO FRESNO SECTION
CENTRAL VALLEY WYE
SR 152 (NORTH) TO ROAD 19 WYE ALTERNATIVE
GENERAL PLAN (SJD-FRE)
ROAD 17½ UNDERPASS

CONTRACT NO. HSR08-05
DRAWING NO. ST-K1240-B
SCALE AS SHOWN
SHEET NO.

MF-ST-K1240-B.dgn
16-MAR-2016 6:19
p005133A

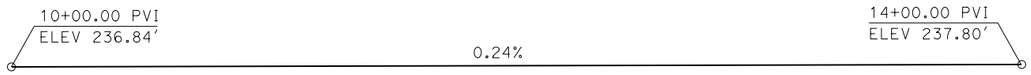

PROFILE GRADE

NO SCALE

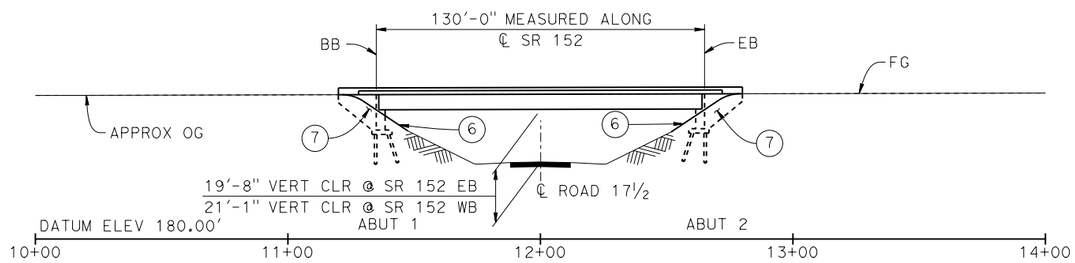

SR 152 WB & EB (ROAD 17½) UNDERCROSSINGS

ELEVATION

1"=30'

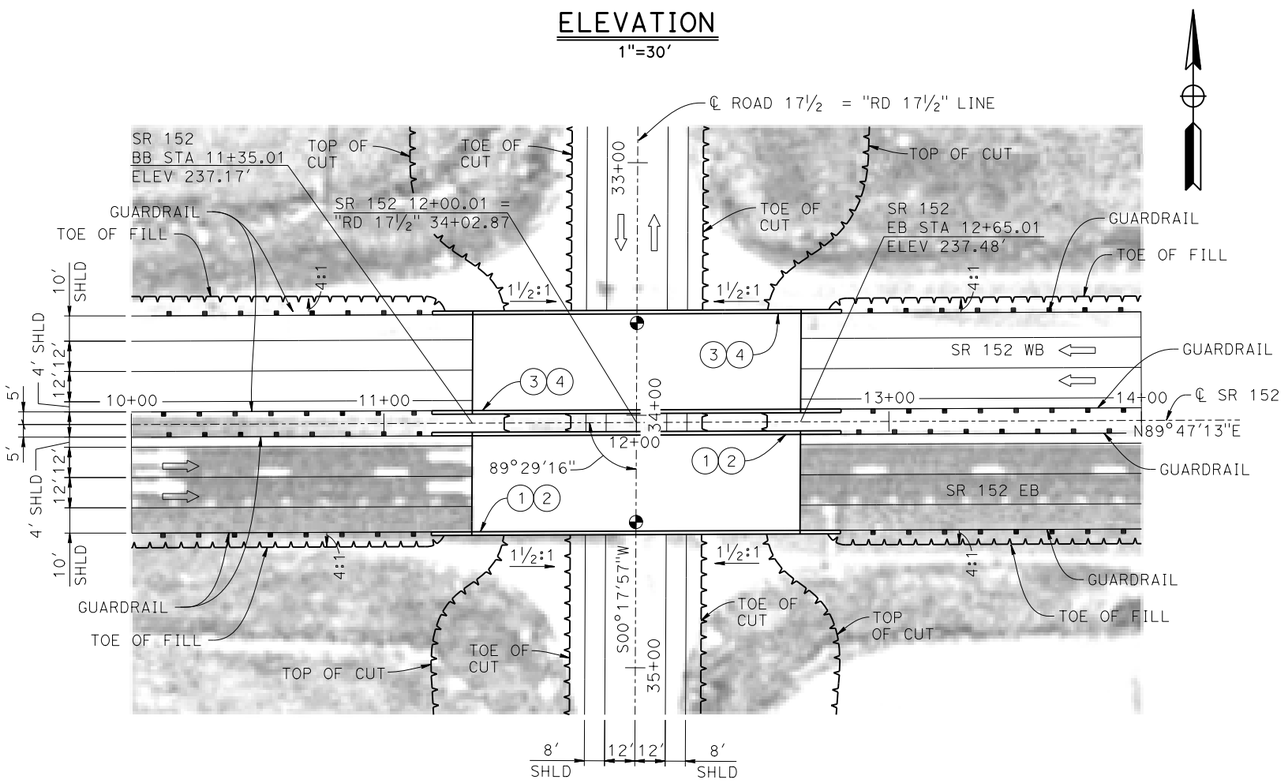

PLAN

1"=30'

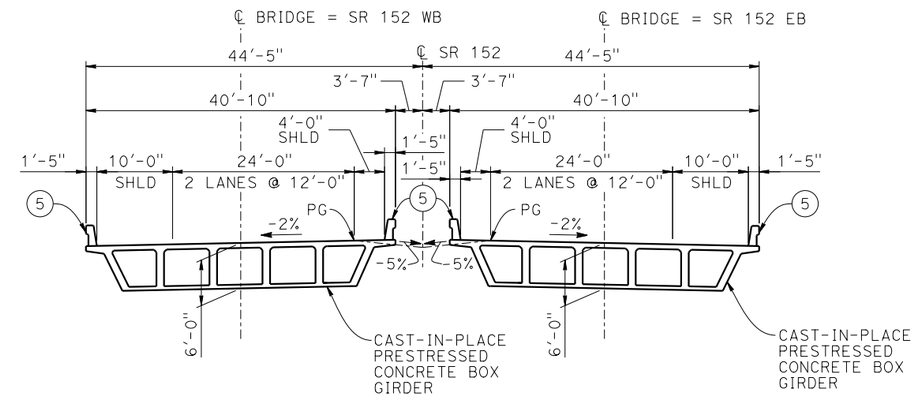

TYPICAL SECTION

1"=10'

LEGEND:

- ◐ INDICATES POINT OF MINIMUM VERTICAL CLEARANCE
- ⇨ INDICATES DIRECTION OF TRAFFIC
- (1) PAINT "SR 152 EB (ROAD 17½) UNDERCROSSING"
- (2) PAINT "BRIDGE NO. XX-XXXX"
- (3) PAINT "SR 152 WB (ROAD 17½) UNDERCROSSING"
- (4) PAINT "BRIDGE NO. XX-XXXX"
- (5) CONCRETE BARRIER TYPE 732
- (6) SLOPE PAVING (1½H:1V)
- (7) WINGWALL

NOTES:

1. ASSUME CLASS 140 PILES AT ABUTMENT FOUNDATIONS. PILE LENGTHS TO BE DETERMINED.
2. FOR UTILITY DISPOSITIONS, SEE CIVIL AND GRADE SEPARATION PLANS; DRAWING CV-S1240-B.
3. FOR GUARDRAILS, SEE CIVIL AND GRADE SEPARATION PLANS; DRAWING CV-S1240-B.

TEMPORARY TRAFFIC OPENINGS

VEHICULAR TRAFFIC

1. X TRAFFIC WILL BE DETOURED AWAY FROM THE SITE.
2. _ TRAFFIC WILL PASS UNDER THE STRUCTURE ON:

ST OR ROAD NAME AND LOCATION		FALSEWORK OPENING REQD (HORIZ x VERT)	
ROAD 17½	12+00	-	-

3. _ TEMP TRAFFIC LANE REDUCTION FOR FTG EXC.

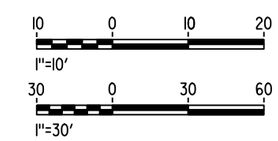

REV	DATE	BY	CHK	APP	DESCRIPTION

DESIGNED BY S. J. S.
DRAWN BY W. JOHNSEN
CHECKED BY O. EDEWOR
IN CHARGE C. LEMLEY
DATE 02/13/2015

RECORD SET
15% DESIGN SUBMITTAL

NOT FOR CONSTRUCTION

PARSONS

CALIFORNIA HIGH-SPEED RAIL AUTHORITY

CALIFORNIA HIGH-SPEED TRAIN PROJECT
MERCED TO FRESNO SECTION
CENTRAL VALLEY WYE
SR 152 (NORTH) TO ROAD 19 WYE ALTERNATIVE
GENERAL PLAN (SJD-FRE)
SR 152 (ROAD 17½) UNDERCROSSING

CONTRACT NO. HSR08-05
DRAWING NO. ST-K1245-B
SCALE AS SHOWN
SHEET NO.

MF-ST-K1245-B.dgn
09-FEB-2015 09:27
p0051330

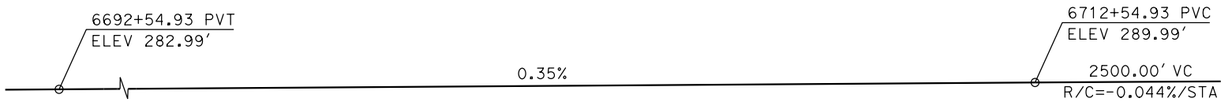

TOP OF RAIL PROFILE (℄ HST SB TRACK)

NO SCALE

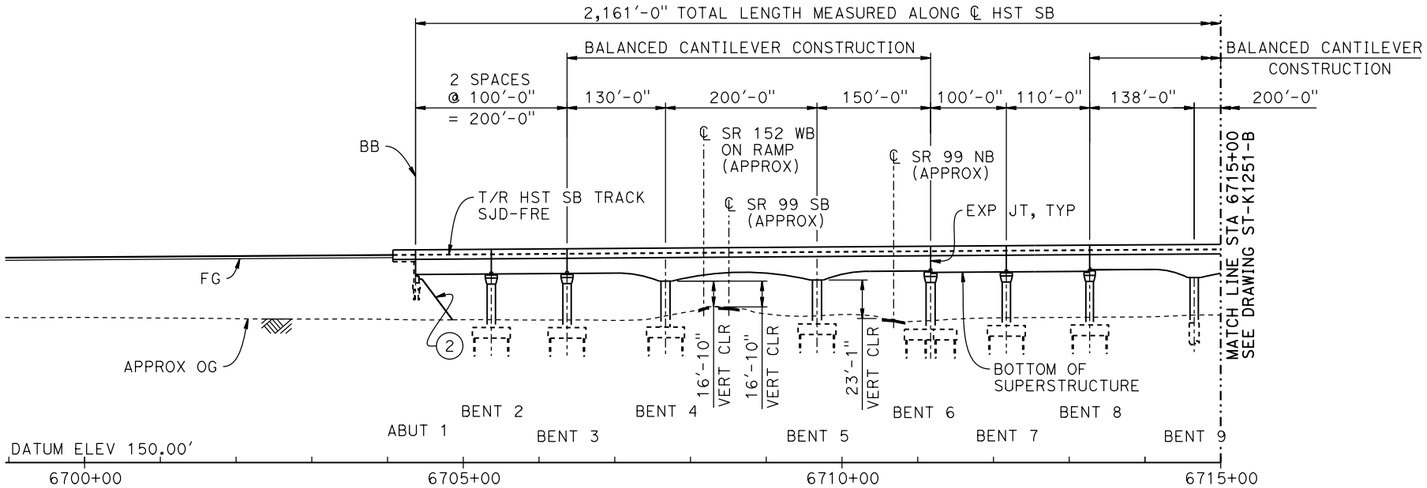

DEVELOPED ELEVATION

VERT: 1" = 50' HORIZ: 1" = 100'

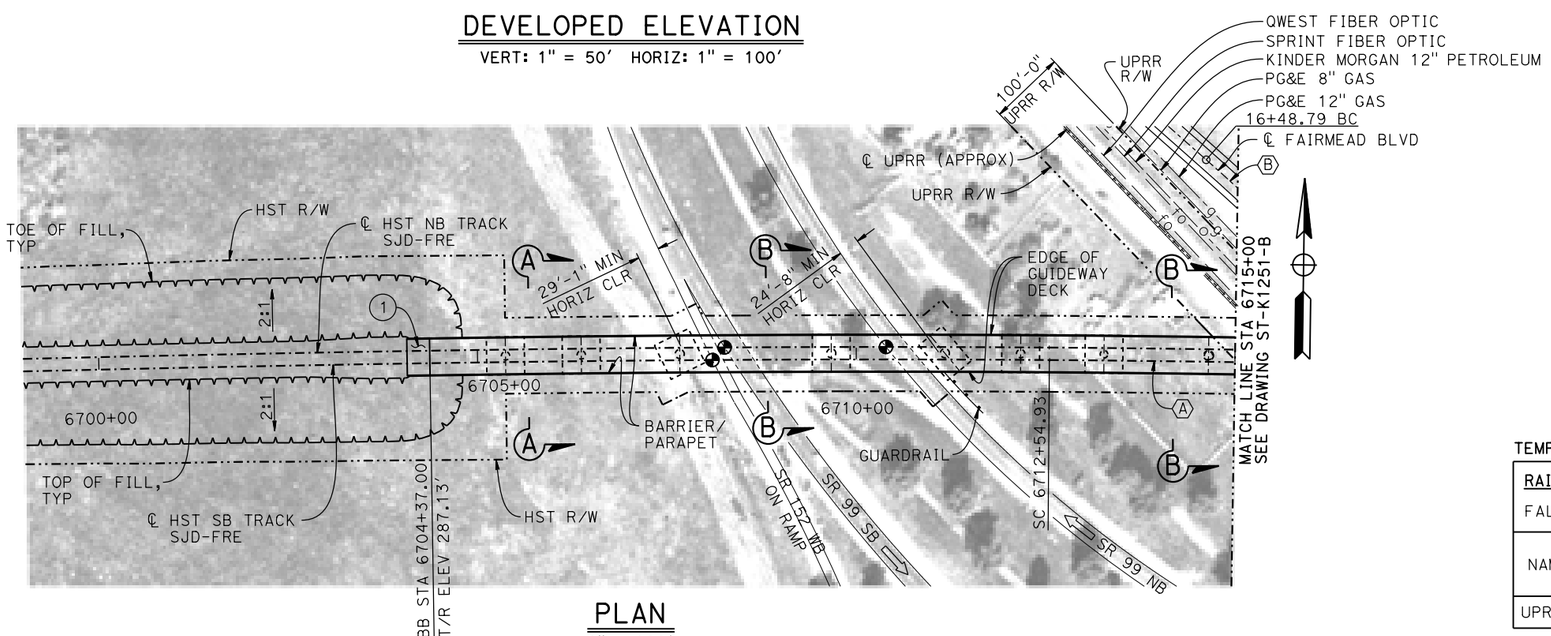

PLAN

1" = 100'

LEGEND:

- INDICATES POINT OF MINIMUM VERTICAL CLEARANCE
- INDICATES DIRECTION OF TRAVEL
- (1) STRUCTURE APPROACH
- (2) SLOPE PAVING (1½H:1V)

CURVE SJD-FRE 6 SB (A)

R = 28,600.00'
LS = 2,000.00'

CURVE NO. 250-02 (B)

R = 3,000.00'
Δ = 9°21'10"
L = 489.71'
T = 245.40'

TEMPORARY TRAFFIC OPENINGS

VEHICULAR TRAFFIC

1. __ TRAFFIC WILL BE DETOURED AWAY FROM THE SITE.
2. X TRAFFIC WILL PASS UNDER THE STRUCTURE ON:

ST OR ROAD NAME AND LOCATION		FALSEWORK OPENING REQD (HORIZ X VERT)	
SR 152 WB ON RAMP	6708+18	25'X16.5'	S BND
SR 99	6708+51	37'X16.5'	S BND
SR 99	6710+68	37'X16.5'	N BND
FAIRMEAD BLVD	6717+33	32'X16.5'	2-WAY
ARC DR	6719+51	32'X16.5'	2-WAY
ROAD 18¾	6724+43	32'X16.5'	2-WAY

3. X TEMP TRAFFIC LANE REDUCTION FOR FTG EXC.

NOTES:

1. 16" ø PIPE PILES ASSUMED FOR ABUTMENT AND BENT FOUNDATIONS, UNLESS OTHERWISE NOTED. PILE LENGTHS TO BE DETERMINED.
2. FOR SECTIONS AND BENT COLUMN SCHEDULE, SEE DRAWING ST-K3250-B.
3. ANY EXISTING DIRT ROAD THAT CONFLICTS WITH NEW CONSTRUCTION SHALL BE REALIGNED.
4. FOR UTILITY DISPOSITIONS, SEE CIVIL AND GRADE SEPARATION PLANS; DRAWING CV-S1250-B.
5. FOR GUARDRAILS, SEE CIVIL AND GRADE SEPARATION PLANS; DRAWING CV-S1250-B.

TEMPORARY TRAFFIC OPENINGS

RAILROAD TRAFFIC

FALSEWORK OPENING REQUIRED ON:

NAME OF RR AND LOCATION		FALSEWORK OPENING REQD (HORIZ X VERT)
UPRR	6715+73	24' X 21'

50 0 50 100
1"=50'

100 0 100 200
1"=100'

REV	DATE	BY	CHK	APP	DESCRIPTION

DESIGNED BY S. J. S.
DRAWN BY R. M.
CHECKED BY O. EDEWOR
IN CHARGE C. LEMLEY
DATE 05/08/2015

RECORD SET 15% DESIGN SUBMITTAL

NOT FOR CONSTRUCTION

PARSONS

CALIFORNIA HIGH-SPEED RAIL AUTHORITY

CALIFORNIA HIGH-SPEED TRAIN PROJECT
MERCED TO FRESNO SECTION
CENTRAL VALLEY WYE
SR 152 (NORTH) TO ROAD 19 WYE ALTERNATIVE
GENERAL PLAN (SJD-FRE)
AERIAL #2 - SR 99 / UPRR - 1 OF 3

CONTRACT NO. HSR08-05
DRAWING NO. ST-K1250-B
SCALE AS SHOWN
SHEET NO.

MF-ST-K1250-B.dgn 16-MAR-2016 6:20 p005133A

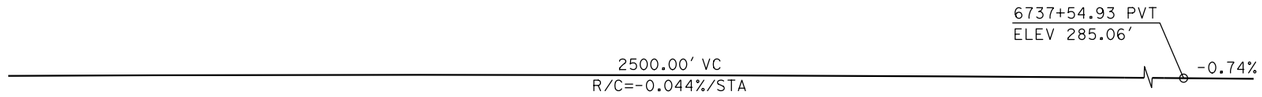

TOP OF RAIL PROFILE (℄ HST SB TRACK)

NO SCALE

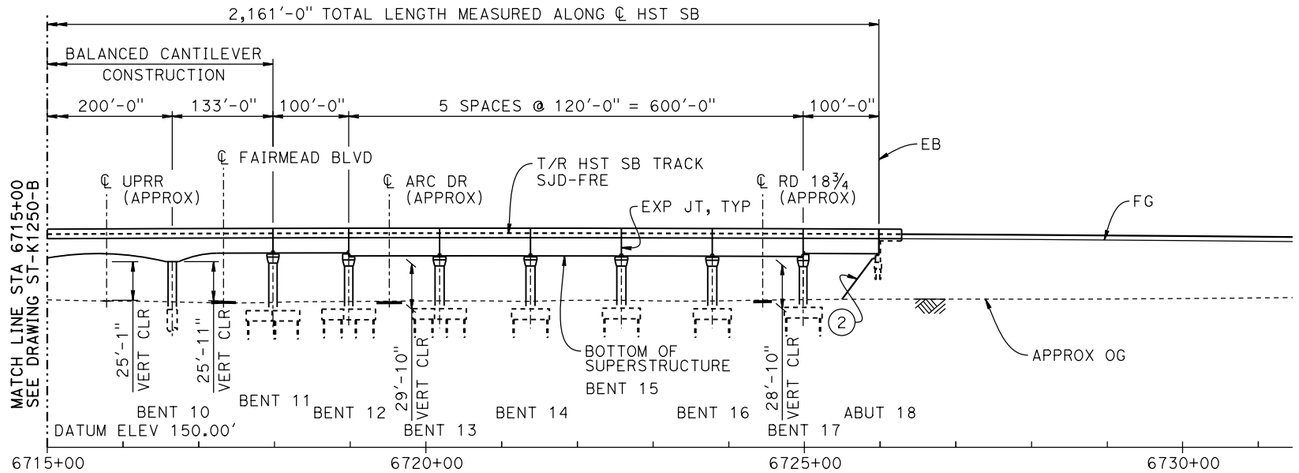

DEVELOPED ELEVATION

VERT: 1" = 50' HORIZ: 1" = 100'

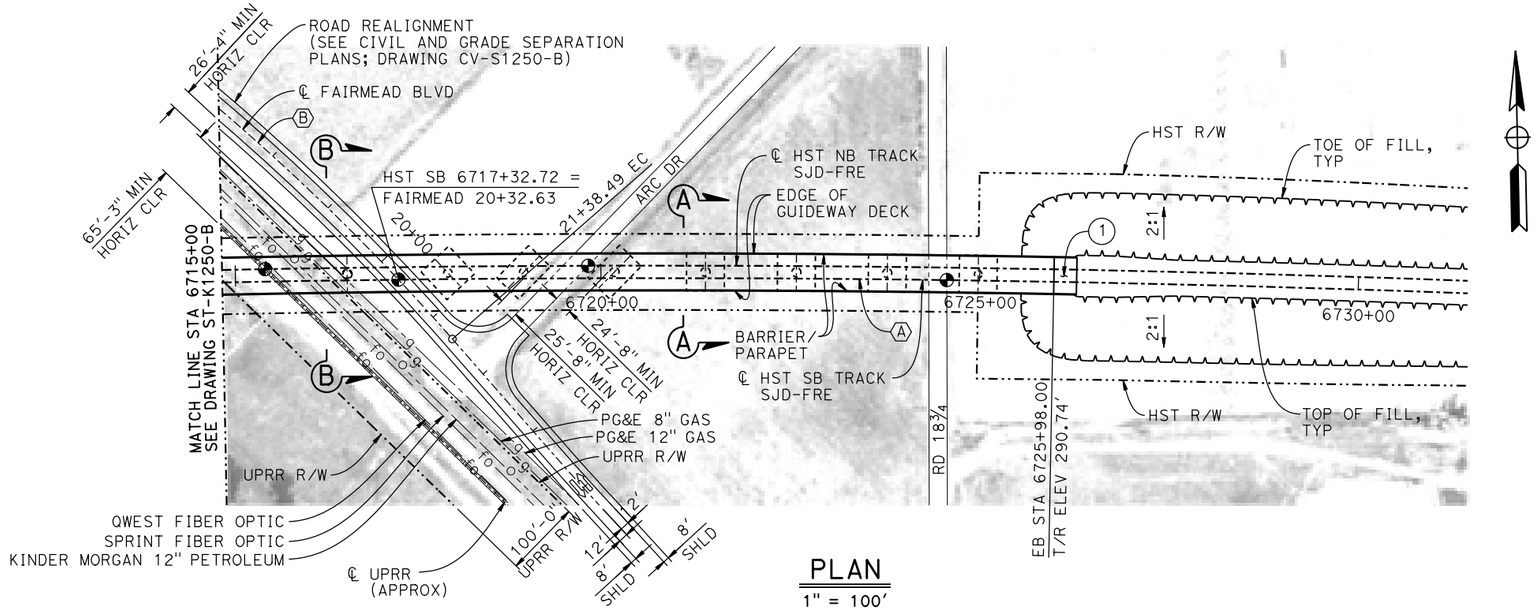

PLAN

1" = 100'

50 0 50 100
1"=50'

100 0 100 200
1"=100'

REV	DATE	BY	CHK	APP	DESCRIPTION

DESIGNED BY S. J. S.
DRAWN BY R. M.
CHECKED BY O. EDEWOR
IN CHARGE C. LEMLEY
DATE 02/13/2015

RECORD SET 15% DESIGN SUBMITTAL

NOT FOR CONSTRUCTION

PARSONS

CALIFORNIA HIGH-SPEED RAIL AUTHORITY

CALIFORNIA HIGH-SPEED TRAIN PROJECT
MERCED TO FRESNO SECTION
CENTRAL VALLEY WYE
SR 152 (NORTH) TO ROAD 19 WYE ALTERNATIVE
GENERAL PLAN (SJD-FRE)
AERIAL #2 - SR 99 / UPRR - 2 OF 3

CONTRACT NO. HSR08-05
DRAWING NO. ST-K1251-B
SCALE AS SHOWN
SHEET NO.

07-FEB-2015 09:48 MF-ST-K1251-B.dgn
p0036110

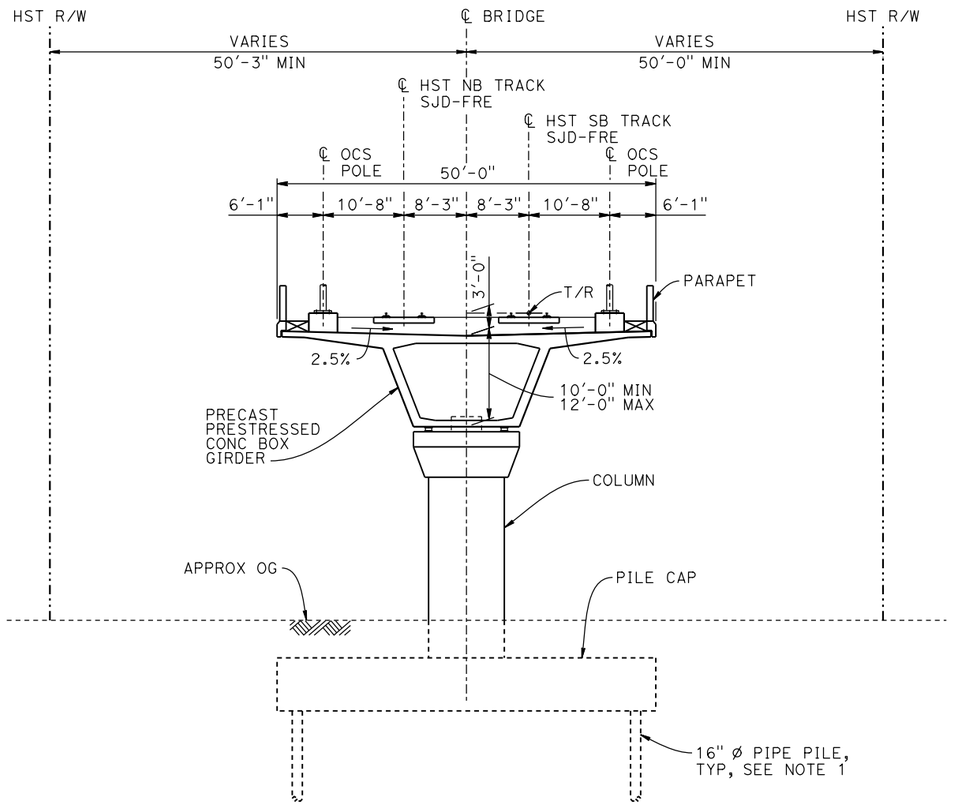

SECTION A-A

1" = 10'

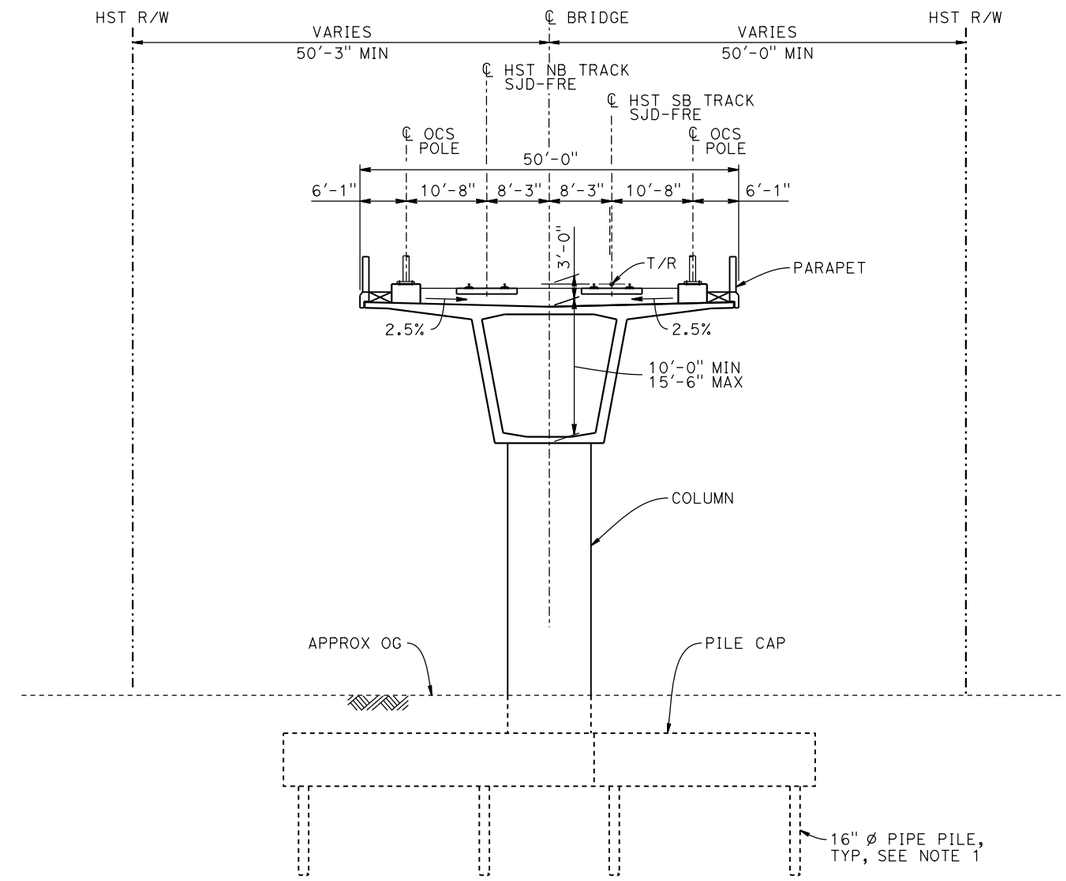

SECTION B-B

1" = 10'

BENT COLUMN SCHEDULE		
BENT	COLUMN TYPE	CIDH TYPE
2 - 3	11'-0"Ø	
4 - 5	12'-0"Ø	
6	12'-0"Ø	
7	11'-0"Ø	
8	10'-0"Ø	
9 - 10	11'-0"Ø	13'-0"Ø
11 - 12	11'-0"Ø	
13 - 16	12'-0"Ø	
17	10'-0"Ø	

NOTES:

1. PILE AND DRILLED SHAFT LENGTHS TO BE DETERMINED.
2. FOR TRACK SUPERELEVATION DETAILS, SEE ALIGNMENT AND TYPICAL SECTION PLANS; DRAWING TT-B0051-B.

10 0 10 20
1"=10'

REV	DATE	BY	CHK	APP	DESCRIPTION

DESIGNED BY S. J. S.
DRAWN BY R. M.
CHECKED BY O. EDEWOR
IN CHARGE C. LEMLEY
DATE 05/08/2015

RECORD SET
15% DESIGN
SUBMITTAL

NOT FOR
CONSTRUCTION

PARSONS

CALIFORNIA
HIGH-SPEED RAIL AUTHORITY

CALIFORNIA HIGH-SPEED TRAIN PROJECT
MERCED TO FRESNO SECTION
CENTRAL VALLEY WYE
SR 152 (NORTH) TO ROAD 19 WYE ALTERNATIVE
TYPICAL SECTIONS (SJD-FRE)
AERIAL #2 - SR 99 / UPRR - 3 OF 3

CONTRACT NO. HSR08-05
DRAWING NO. ST-K3250-B
SCALE AS SHOWN
SHEET NO.

MF-ST-K3250-B.dgn 16-MAR-2016 16:20 p005133A

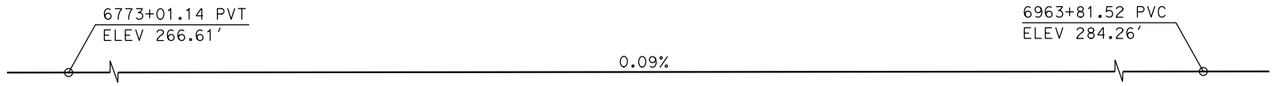

TOP OF RAIL PROFILE (℄ HST SB TRACK)

NO SCALE

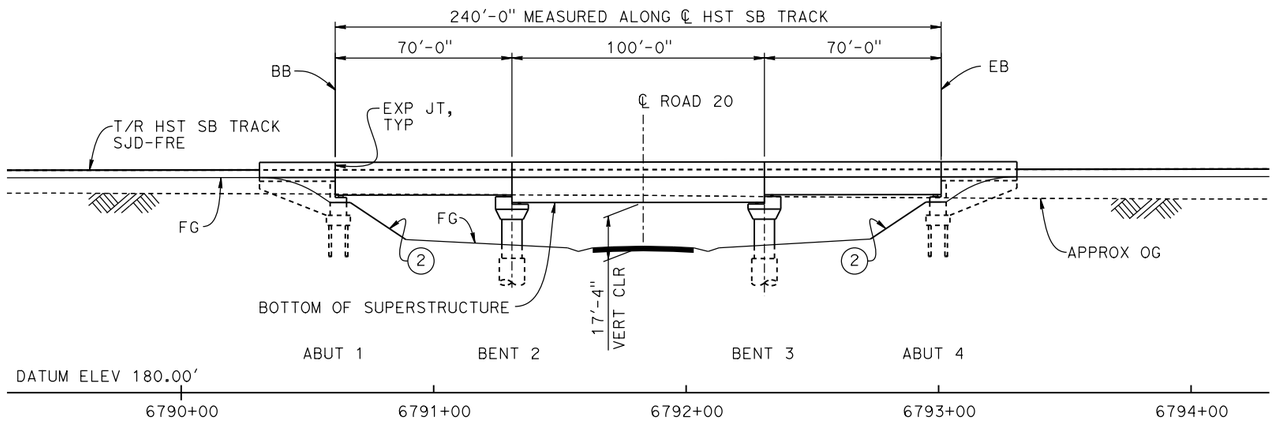

DEVELOPED ELEVATION

1" = 30'

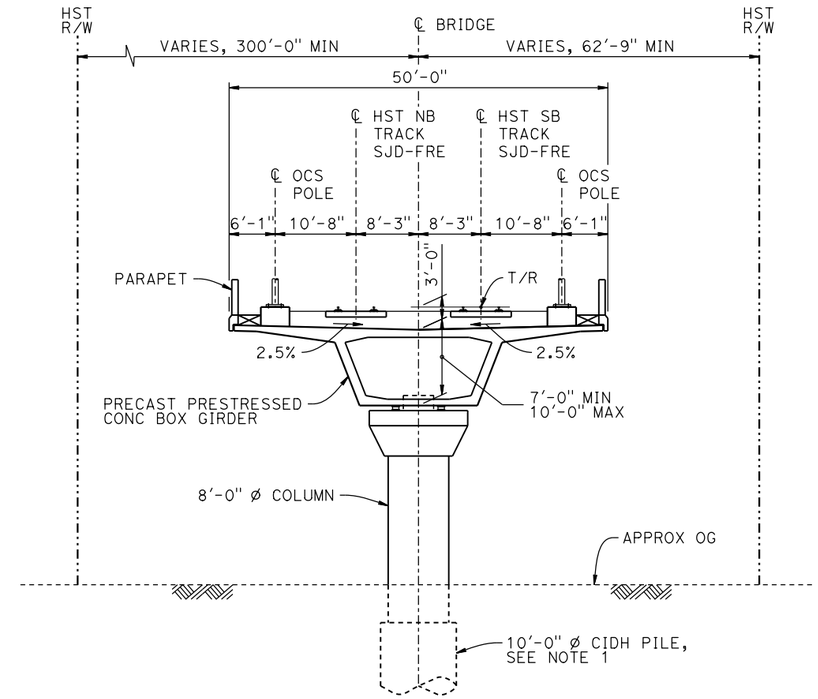

TYPICAL SECTION

1" = 10'

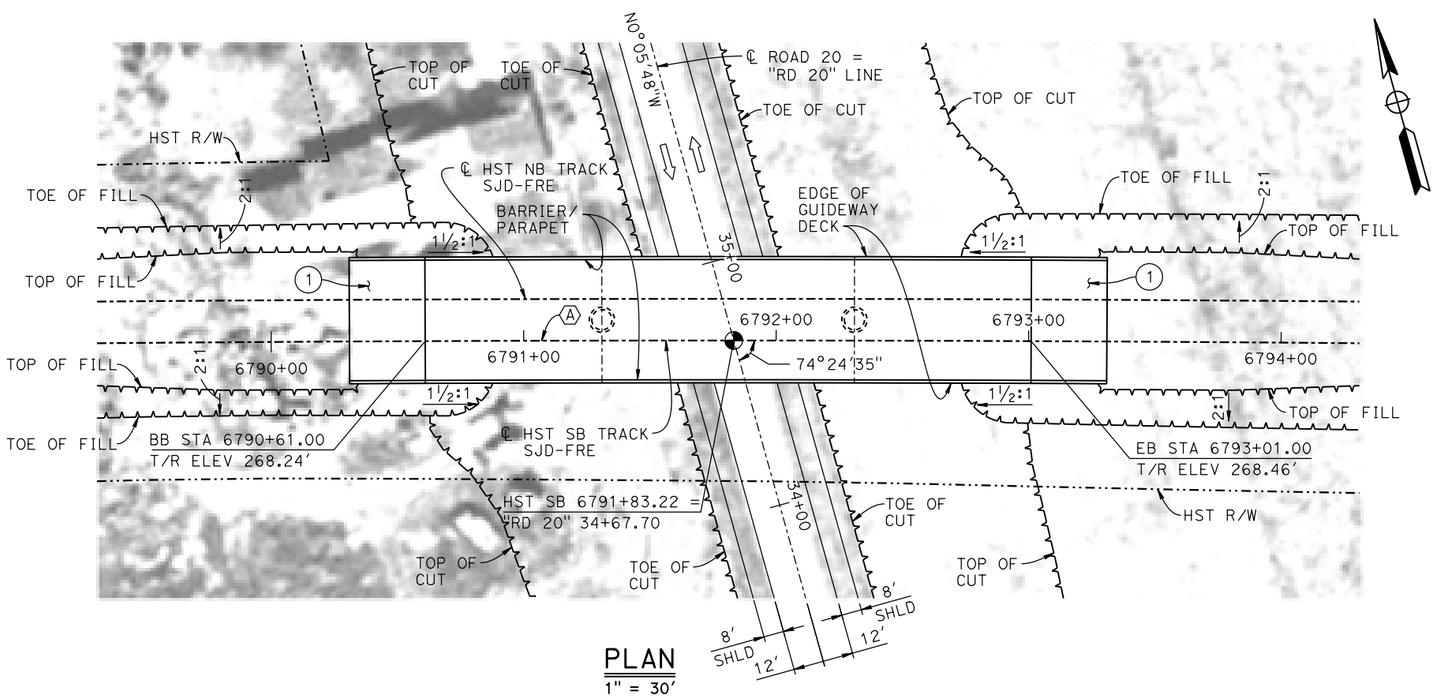

PLAN

1" = 30'

LEGEND:

- ◕ INDICATES POINT OF MINIMUM VERTICAL CLEARANCE
- ⇨ INDICATES DIRECTION OF TRAFFIC
- (1) STRUCTURE APPROACH
- (2) SLOPE PAVING (1½H:1V)

NOTES:

1. 16"Ø PIPE PILES ASSUMED FOR ABUTMENT FOUNDATIONS. PILE AND DRILLED SHAFT LENGTHS TO BE DETERMINED.
2. FOR UTILITY DISPOSITIONS, SEE CIVIL AND GRADE SEPARATION PLANS; DRAWING CV-S1260-B.
3. FOR TRACK SUPERELEVATION DETAILS, SEE ALIGNMENT AND TYPICAL SECTION PLANS; DRAWING TT-B0051-B.

TEMPORARY TRAFFIC OPENINGS

VEHICULAR TRAFFIC

1. __ TRAFFIC WILL BE DETOURED AWAY FROM THE SITE.
2. X TRAFFIC WILL PASS UNDER THE STRUCTURE ON:

ST OR ROAD NAME AND LOCATION		FALSEWORK OPENING REQD (HORIZ x VERT)	
ROAD 20	6791+83	32'x16.5'	2-WAY

3. __ TEMP TRAFFIC LANE REDUCTION FOR FTG EXC.

CURVE SJD-FRE 6 SB (A)

R = 28,600.00'
LS = 2,000.00'

10 0 10 20
1"=10'
30 0 30 60
1"=30'

REV	DATE	BY	CHK	APP	DESCRIPTION

DESIGNED BY S. J. S.
DRAWN BY A. M.
CHECKED BY K. CHARAN
IN CHARGE C. LEMLEY
DATE 05/08/2015

RECORD SET
15% DESIGN SUBMITTAL

NOT FOR CONSTRUCTION

PARSONS

CALIFORNIA HIGH-SPEED RAIL AUTHORITY

CALIFORNIA HIGH-SPEED TRAIN PROJECT
MERCED TO FRESNO SECTION
CENTRAL VALLEY WYE
SR 152 (NORTH) TO ROAD 19 WYE ALTERNATIVE
GENERAL PLAN (SJD-FRE)
ROAD 20 UNDERPASS

CONTRACT NO. HSR08-05
DRAWING NO. ST-K1260-B
SCALE AS SHOWN
SHEET NO.

P0028989 19-MAY-2015 1:18 MF-ST-K1260-B.dgn

PROFILE GRADE

NO SCALE

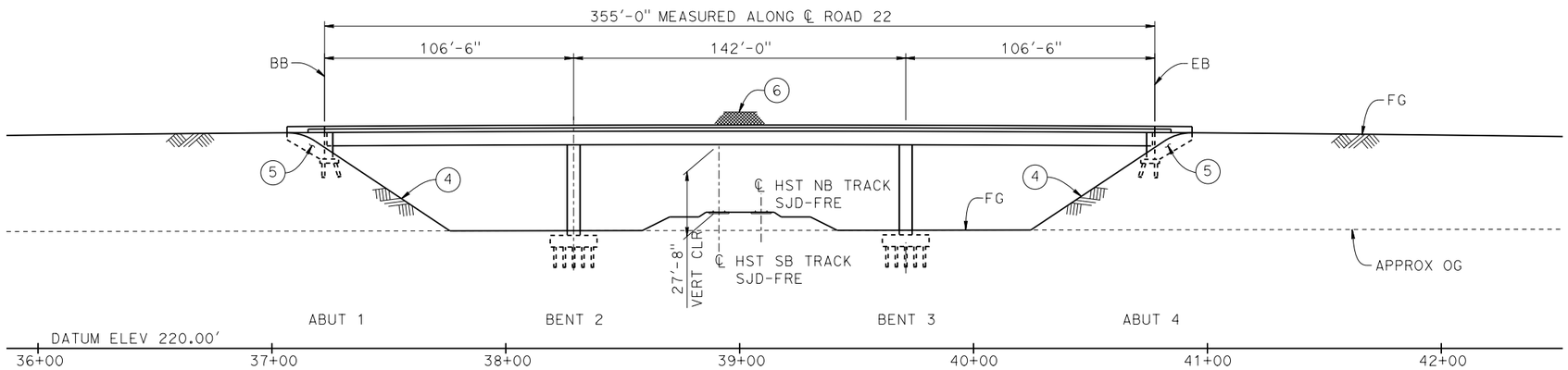

ELEVATION

1" = 30'

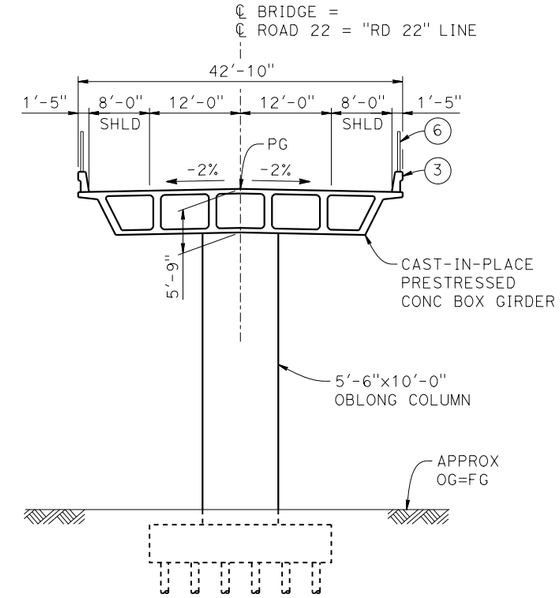

TYPICAL SECTION

1" = 10'

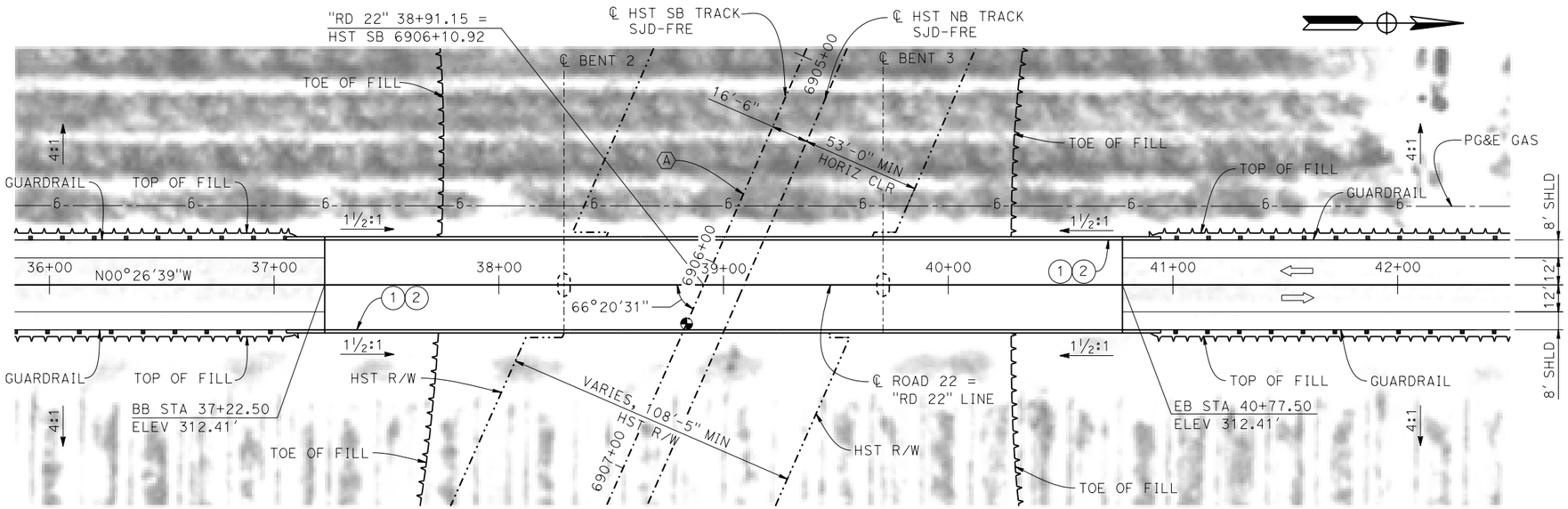

PLAN

1" = 30'

LEGEND:

- INDICATES POINT OF MINIMUM VERTICAL CLEARANCE
- INDICATES DIRECTION OF TRAFFIC
- (1) PAINT "ROAD 22 OVERHEAD"
- (2) PAINT "BRIDGE NO. XX-XXXX"
- (3) CONCRETE BARRIER TYPE 736 MOD
- (4) SLOPE PAVING (1½H:1V)
- (5) WINGWALL
- (6) AR FENCE WITH SOLID PLATE

NOTES:

1. ASSUME CLASS 140 PILES AT ABUTMENT AND BENT FOUNDATIONS. PILE LENGTHS TO BE DETERMINED.
2. FOR UTILITY DISPOSITIONS, SEE CIVIL AND GRADE SEPARATION PLANS; DRAWINGS CV-S1280-B AND CV-S1290-B.
3. FOR GUARDRAILS, SEE CIVIL AND GRADE SEPARATION PLANS; DRAWINGS CV-S1280-B AND CV-S1290-B.

CURVE SJD-FRE 7 SB (A)

R = 28,600.00'
LS = 2,000.00'

10 0 10 20
1"=10'

30 0 30 60
1"=30'

REV	DATE	BY	CHK	APP	DESCRIPTION

DESIGNED BY S. J. S.
DRAWN BY S. OLIVETO
CHECKED BY O. EDEWOR
IN CHARGE C. LEMLEY
DATE 03/18/2016

RECORD SET
15% DESIGN SUBMITTAL

NOT FOR CONSTRUCTION

PARSONS

CALIFORNIA HIGH-SPEED RAIL AUTHORITY

CALIFORNIA HIGH-SPEED TRAIN PROJECT
MERCED TO FRESNO SECTION
CENTRAL VALLEY WYE
SR 152 (NORTH) TO ROAD 19 WYE ALTERNATIVE
GENERAL PLAN (SJD-FRE)
ROAD 22 OVERHEAD

CONTRACT NO. HSR08-05
DRAWING NO. ST-K1280-B
SCALE AS SHOWN
SHEET NO.

MF-ST-K1280-B.dgn
10-MAR-2016 7:15
p0051330

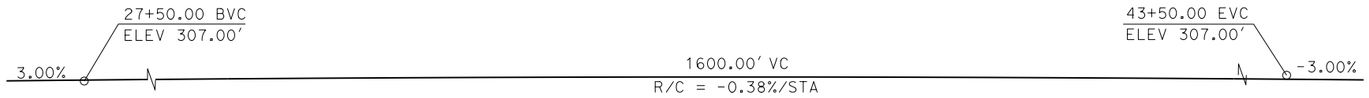

PROFILE GRADE

NO SCALE

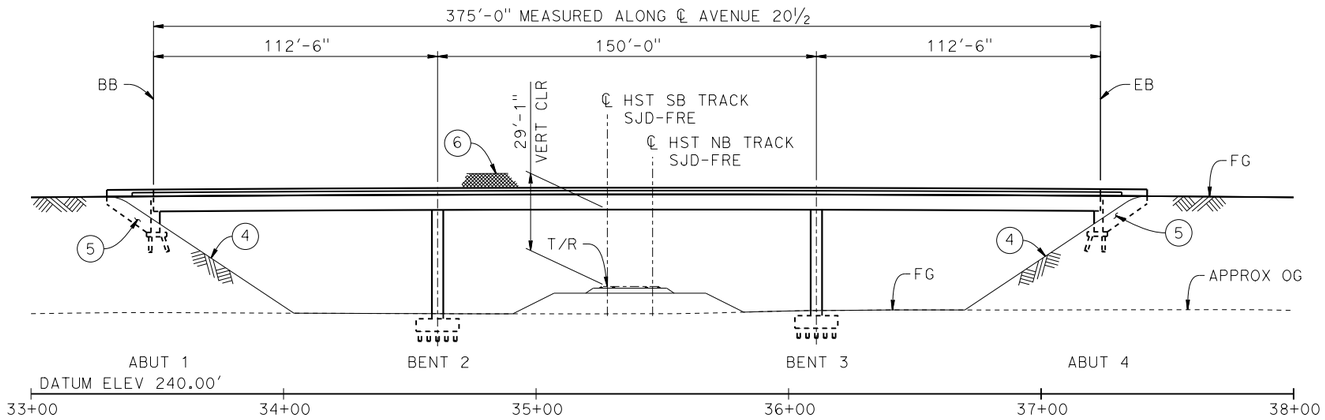

DEVELOPED ELEVATION

1"=30'

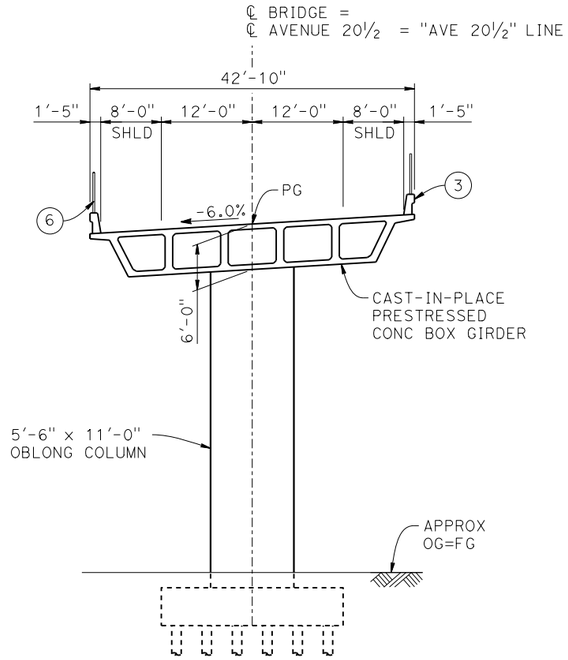

TYPICAL SECTION

1" = 10'

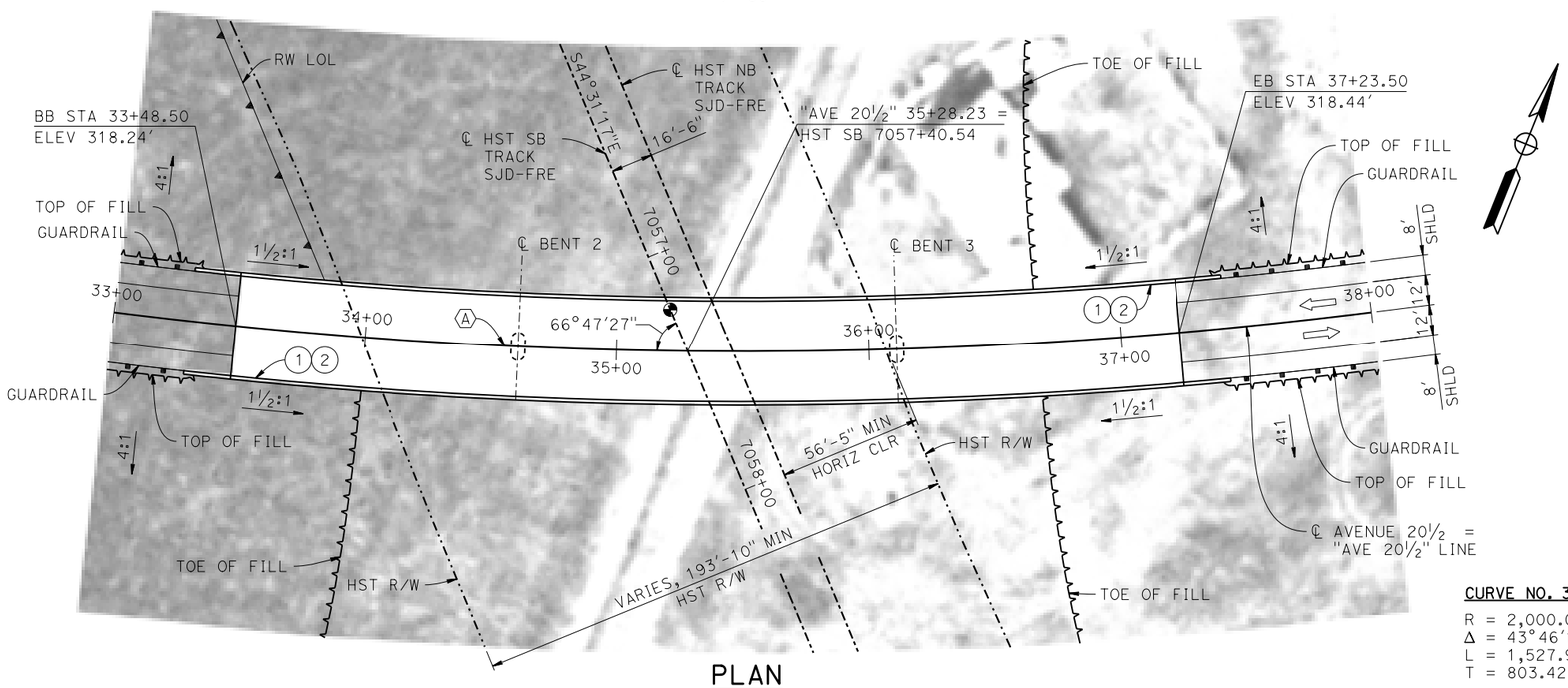

PLAN

1"=30'

CURVE NO. 310-01 (A)

R = 2,000.00'
Δ = 43°46'18"
L = 1,527.92'
T = 803.42'

LEGEND:

- INDICATES POINT OF MINIMUM VERTICAL CLEARANCE
- INDICATES DIRECTION OF TRAFFIC
- (1) PAINT "AVENUE 20½ OVERHEAD"
- (2) PAINT "BRIDGE NO. XX-XXXX"
- (3) CONCRETE BARRIER TYPE 736 MOD
- (4) SLOPE PAVING (1½H:1V)
- (5) WINGWALL
- (6) AR FENCE WITH SOLID PLATE

NOTES:

1. ASSUME CLASS 140 PILES AT ABUTMENT AND BENT FOUNDATIONS. PILE LENGTHS TO BE DETERMINED.
2. FOR UTILITY DISPOSITIONS, SEE CIVIL AND GRADE SEPARATION PLANS; DRAWING CV-S1310-B.
3. FOR GUARDRAILS, SEE CIVIL AND GRADE SEPARATION PLANS; DRAWING CV-S1310-B.

10 0 10 20 — 1"=10'
30 0 30 60 — 1"=30'

REV	DATE	BY	CHK	APP	DESCRIPTION

DESIGNED BY S. J. S.
DRAWN BY J. KIDWELL
CHECKED BY O. EDEWOR
IN CHARGE C. LEMLEY
DATE 03/18/2016

RECORD SET
15% DESIGN SUBMITTAL
NOT FOR CONSTRUCTION

PARSONS

CALIFORNIA HIGH-SPEED RAIL AUTHORITY

CALIFORNIA HIGH-SPEED TRAIN PROJECT
MERCED TO FRESNO SECTION
CENTRAL VALLEY WYE
SR 152 (NORTH) TO ROAD 19 WYE ALTERNATIVE
GENERAL PLAN (SJD-FRE)
AVENUE 20½ OVERHEAD

CONTRACT NO. HSR08-05
DRAWING NO. ST-K1310-B
SCALE AS SHOWN
SHEET NO.

MF-ST-K1310-B.dgn
10-MAR-2016 7:16
p005133a

TOP OF RAIL PROFILE (℄ HST SB TRACK)

NO SCALE

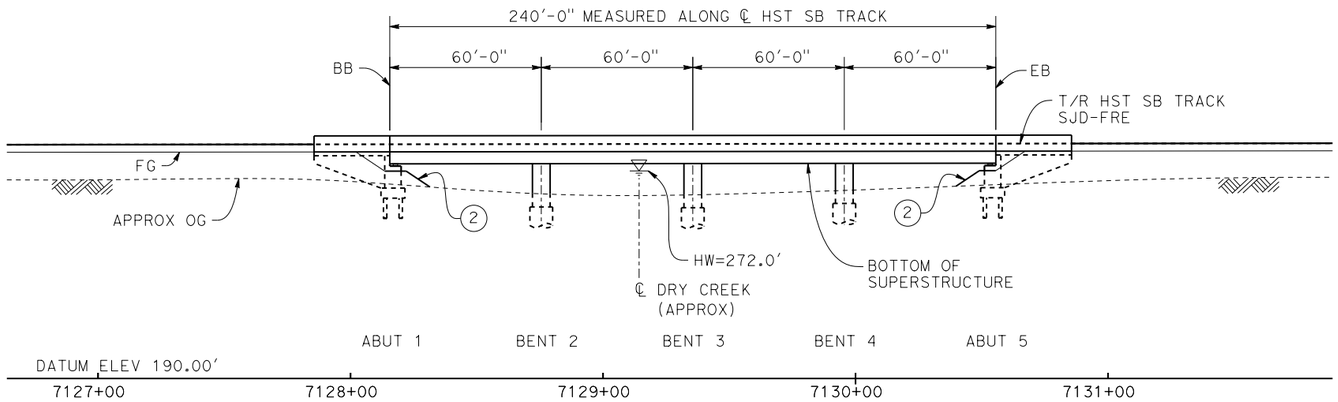

ELEVATION

1" = 30'

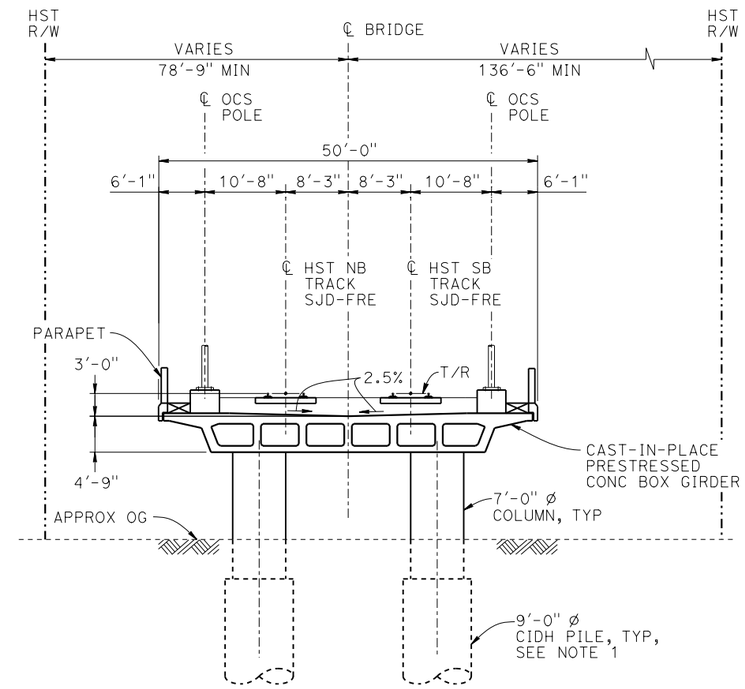

TYPICAL SECTION

1" = 10'

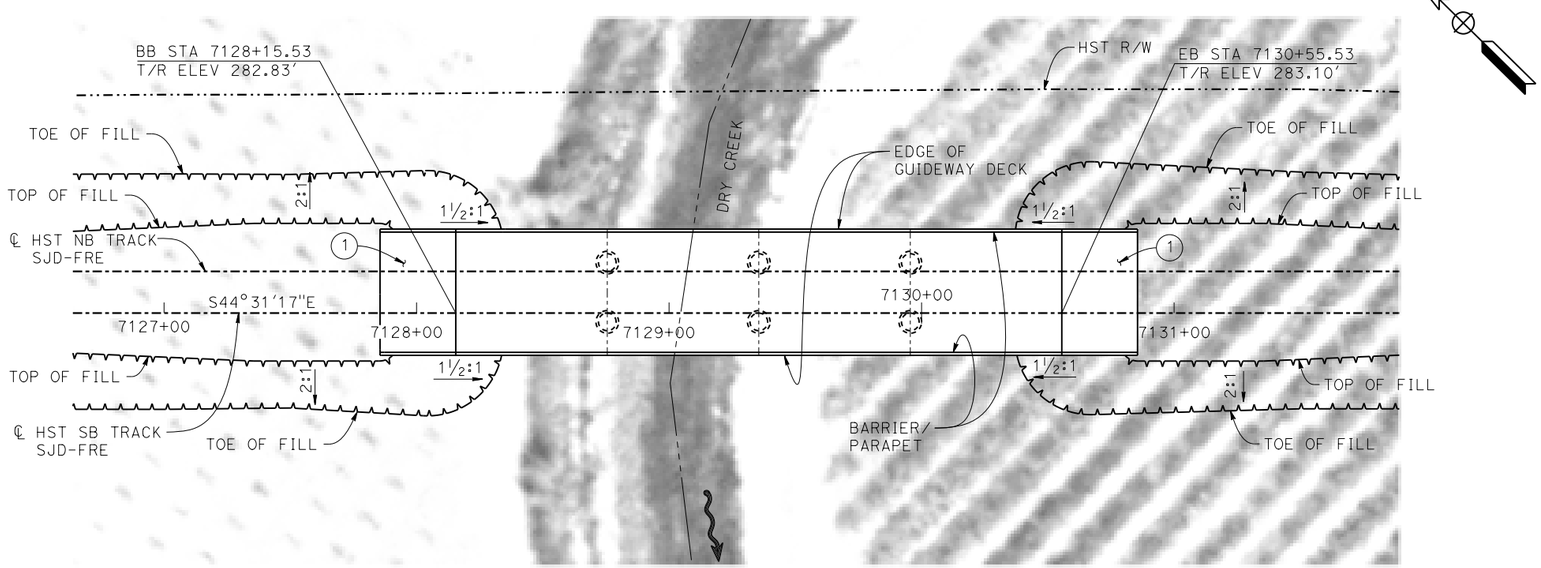

PLAN

1" = 30'

LEGEND:

- INDICATES DIRECTION OF FLOW
- (1) STRUCTURE APPROACH
- (2) SLOPE PAVING (1½H:1V)

NOTES:

1. 16" ø PIPE PILES ASSUMED FOR ABUTMENT FOUNDATIONS. PILE AND DRILLED SHAFT LENGTHS TO BE DETERMINED.
2. FOR UTILITY DISPOSITIONS, SEE CIVIL AND GRADE SEPARATION PLANS; DRAWINGS CV-S1320-B AND CV-S1330-B.
3. ANY EXISTING DIRT ROAD THAT CONFLICTS WITH NEW CONSTRUCTION SHALL BE REALIGNED.

10 0 10 20
1"=10'

30 0 30 60
1"=30'

REV	DATE	BY	CHK	APP	DESCRIPTION

DESIGNED BY S. J. S.
DRAWN BY A. M.
CHECKED BY O. EDEWOR
IN CHARGE C. LEMLEY
DATE 03/18/2016

RECORD SET
15% DESIGN
SUBMITTAL

NOT FOR
CONSTRUCTION

PARSONS

CALIFORNIA
HIGH-SPEED RAIL AUTHORITY

CALIFORNIA HIGH-SPEED TRAIN PROJECT
MERCED TO FRESNO SECTION
CENTRAL VALLEY WYE
SR 152 (NORTH) TO ROAD 19 WYE ALTERNATIVE
GENERAL PLAN (SJD-FRE)
DRY CREEK BRIDGE

CONTRACT NO. HSR08-05
DRAWING NO. ST-K1320-B
SCALE AS SHOWN
SHEET NO.

10-MAR-2016 17:17 WF-ST-K1320-B.dgn
p0051330

TOP OF RAIL PROFILE (℄ HST SB TRACK MER-FRE)

NO SCALE

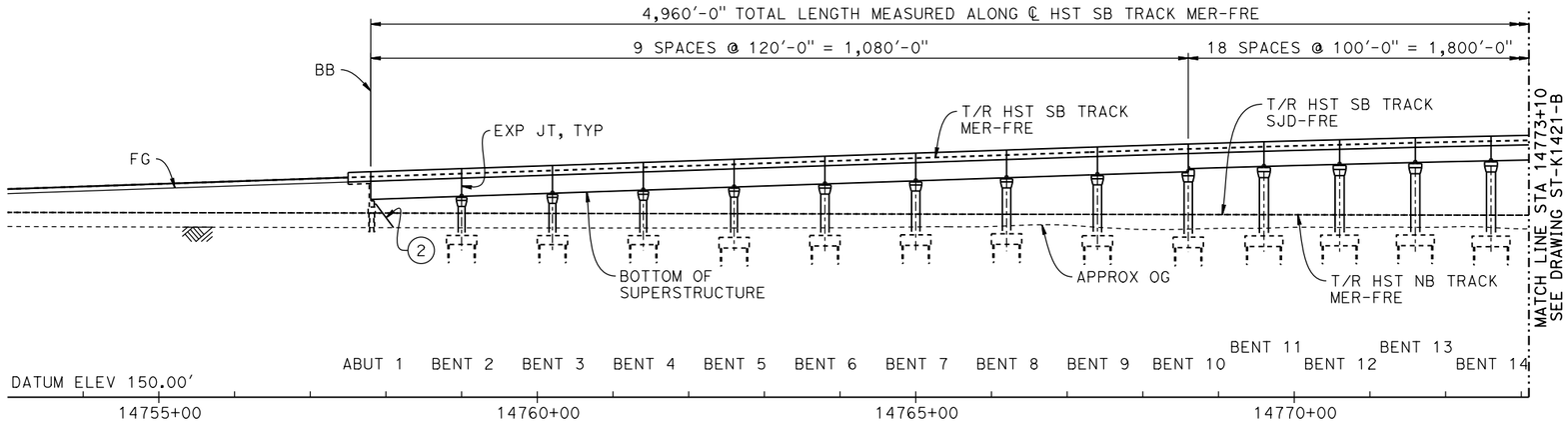

DEVELOPED ELEVATION

VERT: 1" = 50' HORIZ: 1" = 100'

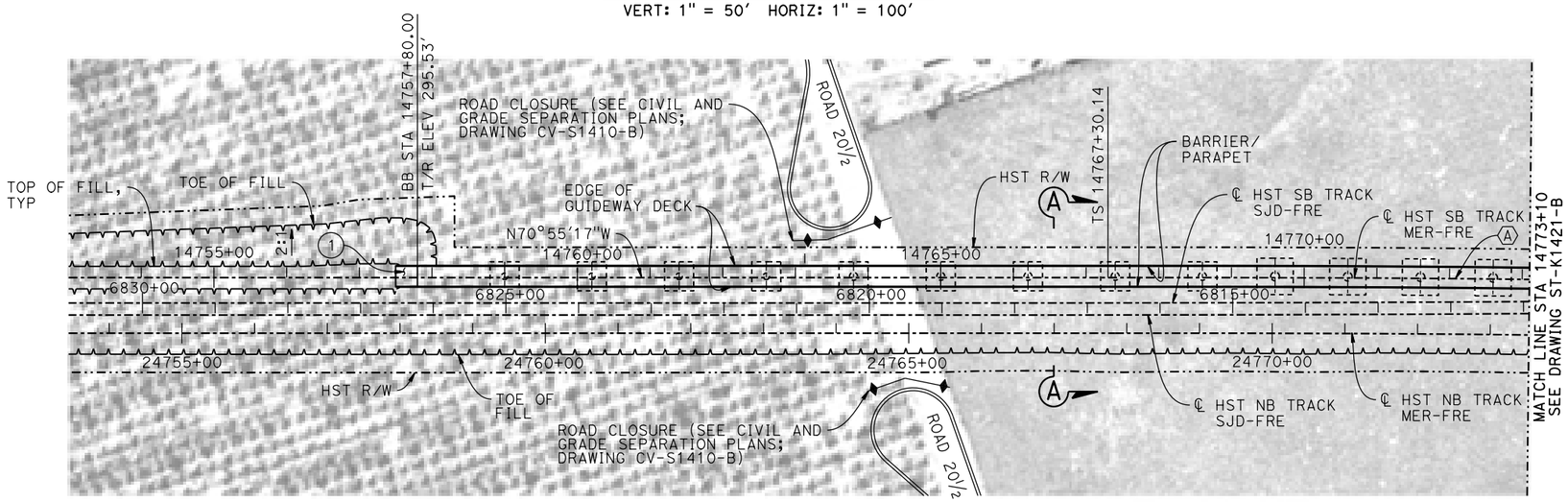

PLAN

1" = 100'

LEGEND:

- INDICATES POINT OF MINIMUM VERTICAL CLEARANCE
- INDICATES DIRECTION OF TRAFFIC
- (1) STRUCTURE APPROACH
- (2) SLOPE PAVING (1½H:1V)

CURVE MER-FRE 1 SB (A)

R = 10,300.00'
LS = 1,200.00'

TEMPORARY TRAFFIC OPENINGS

VEHICULAR TRAFFIC

1. __ TRAFFIC WILL BE DETOURED AWAY FROM THE SITE.
2. X TRAFFIC WILL PASS UNDER THE STRUCTURE ON:

ST OR ROAD NAME AND LOCATION		FALSEWORK OPENING REQD (HORIZ X VERT)	
ROAD 20	14793+07	32'X16.5'	2-WAY

3. __ TEMP TRAFFIC LANE REDUCTION FOR FTG EXC.

NOTES:

1. 16" Ø PIPE PILES ASSUMED FOR ABUTMENT AND BENT FOUNDATIONS, UNLESS OTHERWISE NOTED. PILE LENGTHS TO BE DETERMINED.
2. FOR SECTIONS AND BENT COLUMN SCHEDULE, SEE DRAWINGS ST-K3420-B AND ST-K3421-B.
3. ANY EXISTING DIRT ROAD THAT CONFLICTS WITH NEW CONSTRUCTION SHALL BE REALIGNED.
4. FOR UTILITY DISPOSITIONS, SEE CIVIL AND GRADE SEPARATION PLANS; DRAWINGS CV-S1410-B AND CV-S1420-B.
5. FOR ROAD 20 UNDERPASS GENERAL PLAN AND TYPICAL SECTION, SEE DRAWING ST-K1260-B.
6. FOR ROAD 20 UNDERPASS (HST NB) GENERAL PLAN AND TYPICAL SECTION, SEE DRAWING ST-K1425-B.

50 0 50 100
1"=50'

100 0 100 200
1"=100'

REV	DATE	BY	CHK	APP	DESCRIPTION

DESIGNED BY S. J. S.
DRAWN BY A. M.
CHECKED BY K. CHARAN
IN CHARGE C. LEMLEY
DATE 05/08/2015

RECORD SET
15% DESIGN SUBMITTAL

NOT FOR CONSTRUCTION

PARSONS

CALIFORNIA HIGH-SPEED RAIL AUTHORITY

CALIFORNIA HIGH-SPEED TRAIN PROJECT
MERCED TO FRESNO SECTION
CENTRAL VALLEY WYE
SR 152 (NORTH) TO ROAD 19 WYE ALTERNATIVE
GENERAL PLAN (MER-FRE)
AERIAL #3 - SOUTHBOUND OVER HST MAINLINE - 1 OF 5

CONTRACT NO. HSR08-05
DRAWING NO. ST-K1420-B
SCALE AS SHOWN
SHEET NO.

MF-ST-K1420-B.dgn 19-MAY-2015 11:58 P0028989

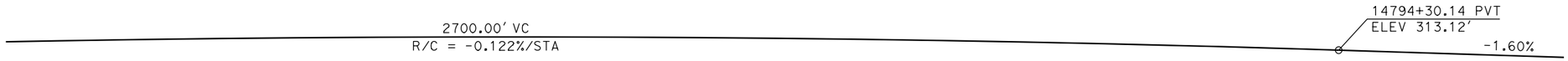

TOP OF RAIL PROFILE (℄ HST SB TRACK MER-FRE)

NO SCALE

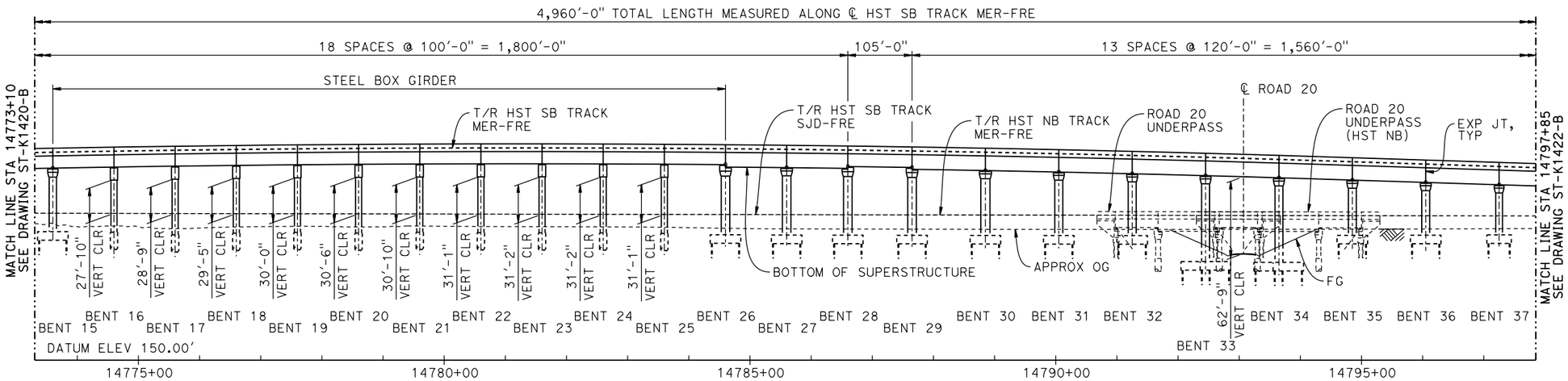

DEVELOPED ELEVATION

VERT: 1" = 50' HORIZ: 1" = 100'

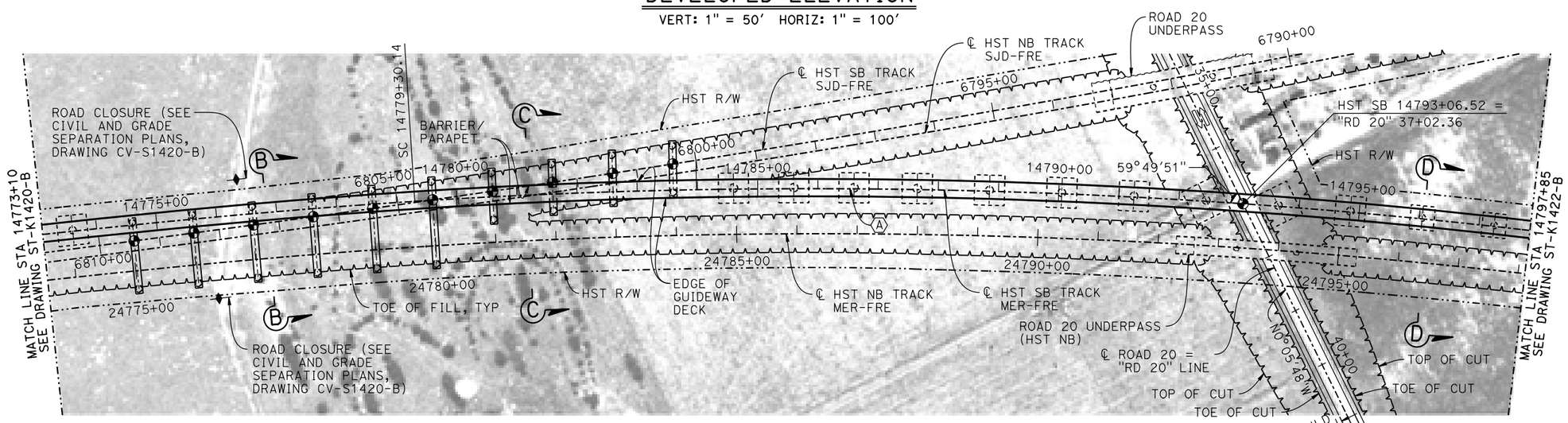

PLAN

1" = 100'

50 0 50 100
1"=50'

100 0 100 200
1"=100'

REV	DATE	BY	CHK	APP	DESCRIPTION

DESIGNED BY S. J. S.
DRAWN BY A. M.
CHECKED BY K. CHARAN
IN CHARGE C. LEMLEY
DATE 05/08/2015

RECORD SET
15% DESIGN SUBMITTAL

NOT FOR CONSTRUCTION

PARSONS

CALIFORNIA HIGH-SPEED RAIL AUTHORITY

CALIFORNIA HIGH-SPEED TRAIN PROJECT
MERCED TO FRESNO SECTION

CENTRAL VALLEY WYE
SR 152 (NORTH) TO ROAD 19 WYE ALTERNATIVE
GENERAL PLAN (MER-FRE)
AERIAL #3 - SOUTHBOUND OVER HST MAINLINE - 2 OF 5

CONTRACT NO. HSR08-05
DRAWING NO. ST-K1421-B
SCALE AS SHOWN
SHEET NO.

19-MAY-2015 2:04 MF-ST-K1421-B.dgn
P0028989

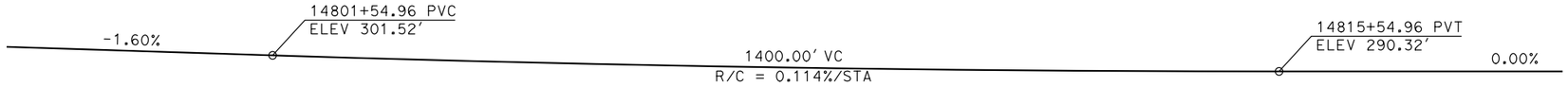

TOP OF RAIL PROFILE (℄ HST SB TRACK MER-FRE)

NO SCALE

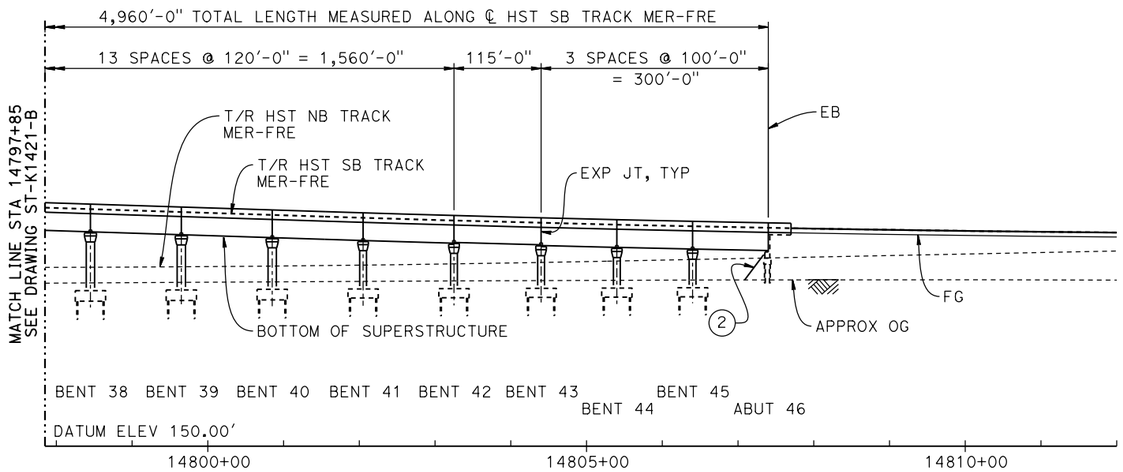

DEVELOPED ELEVATION

VERT: 1" = 50' HORIZ: 1" = 100'

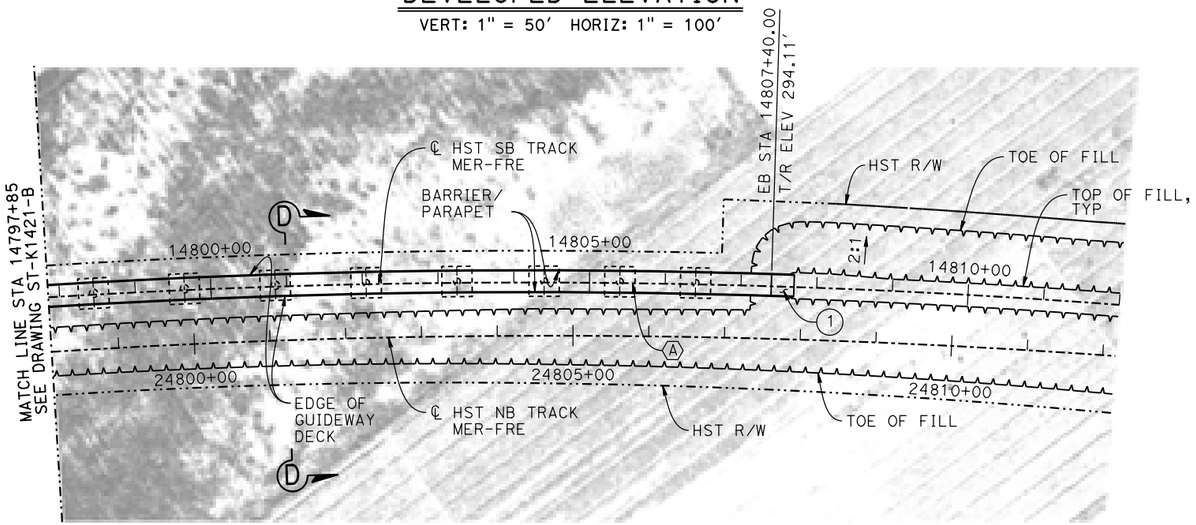

PLAN

1" = 100'

50 0 50 100
1"=50'

100 0 100 200
1"=100'

REV	DATE	BY	CHK	APP	DESCRIPTION

DESIGNED BY S. J. S.
DRAWN BY A. M.
CHECKED BY K. CHARAN
IN CHARGE C. LEMLEY
DATE 05/08/2015

RECORD SET
15% DESIGN SUBMITTAL

NOT FOR CONSTRUCTION

PARSONS

CALIFORNIA HIGH-SPEED RAIL AUTHORITY

CALIFORNIA HIGH-SPEED TRAIN PROJECT
MERCED TO FRESNO SECTION

CENTRAL VALLEY WYE
SR 152 (NORTH) TO ROAD 19 WYE ALTERNATIVE
GENERAL PLAN (MER-FRE)
AERIAL #3 - SOUTHBOUND OVER HST MAINLINE - 3 OF 5

CONTRACT NO. HSR08-05
DRAWING NO. ST-K1422-B
SCALE AS SHOWN
SHEET NO.

MF-ST-K1422-B.dgn
19-MAY-2015 16:56
P0028989

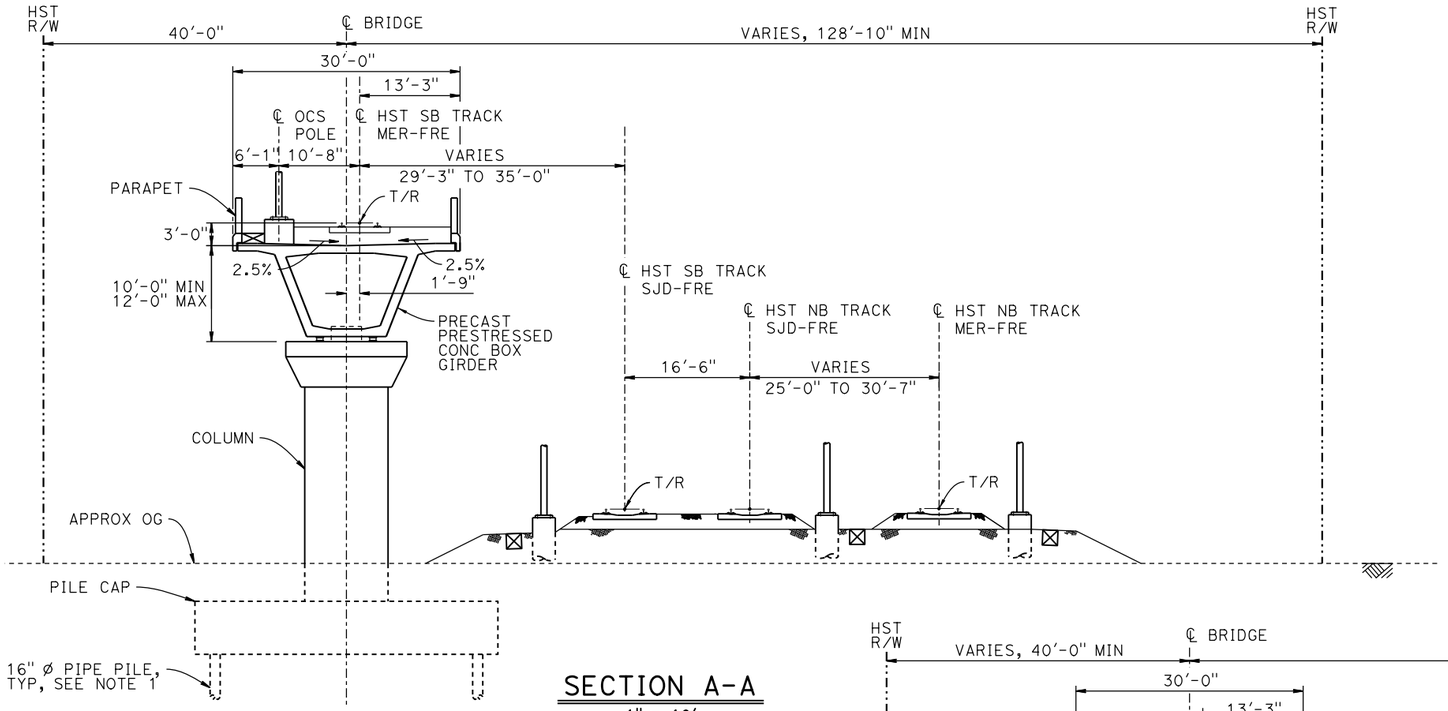

SECTION A-A

1" = 10'

BENT COLUMN SCHEDULE			
BENT	COLUMN TYPE	CIDH TYPE	"A"
2 - 4	9'-0" Ø		
5	9'-0" Ø	11'-0" Ø	
6 - 7	11'-0" Ø		
8	11'-0" Ø	13'-0" Ø	
9 - 10	11'-0" Ø		
11 - 15	12'-0" Ø		
16	2 - 10'-0" Ø		110'-0"
17	2 - 10'-0" Ø		114'-0"
18	2 - 10'-0" Ø		117'-6"
19	2 - 10'-0" Ø		123'-0"
20	2 - 10'-0" Ø		129'-0"
21	2 - 10'-0" Ø		136'-6"
22 - 23	2 - 10'-0" Ø		77'-0"
24 - 25	2 - 10'-0" Ø		77'-6"
26 - 29	14'-0" Ø		
30 - 32	13'-0" Ø		
33 - 34	16'-0" Ø		
35	13'-0" Ø		
36 - 40	11'-0" Ø		
41 - 45	9'-0" Ø		

NOTES:

1. PILE AND DRILLED SHAFT LENGTHS TO BE DETERMINED.
2. FOR TRACK SUPERELEVATION DETAILS, SEE ALIGNMENT AND TYPICAL SECTION PLANS; DRAWING TT-B0055-B.

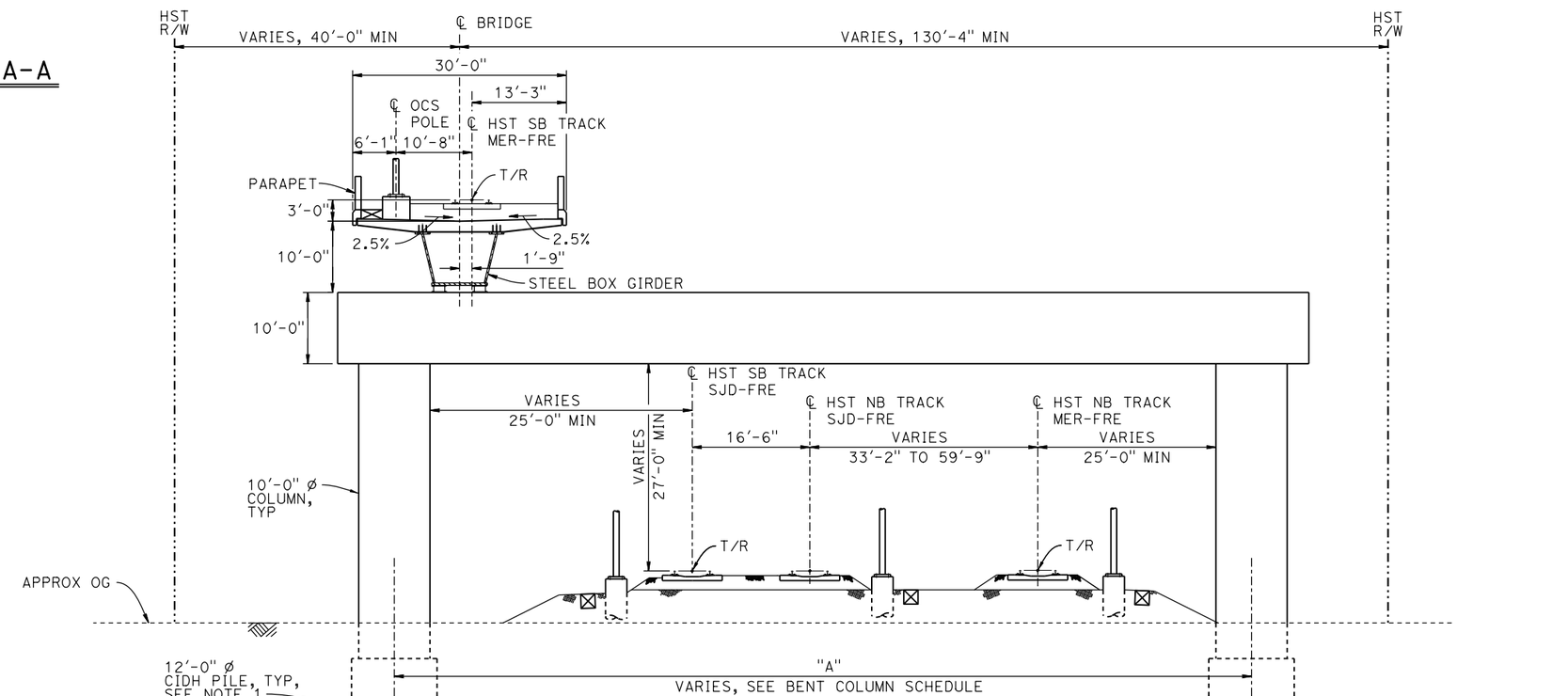

SECTION B-B

1" = 10'

REV	DATE	BY	CHK	APP	DESCRIPTION

DESIGNED BY S. J. S.
DRAWN BY A. M.
CHECKED BY K. CHARAN
IN CHARGE C. LEMLEY
DATE 05/08/2015

RECORD SET
15% DESIGN SUBMITTAL

NOT FOR CONSTRUCTION

PARSONS

CALIFORNIA HIGH-SPEED RAIL AUTHORITY

CALIFORNIA HIGH-SPEED TRAIN PROJECT
MERCED TO FRESNO SECTION

CENTRAL VALLEY WYE
SR 152 (NORTH) TO ROAD 19 WYE ALTERNATIVE
TYPICAL SECTIONS (MER-FRE)
AERIAL #3 - SOUTHBOUND OVER HST MAINLINE - 4 OF 5

CONTRACT NO. HSR08-05
DRAWING NO. ST-K3420-B
SCALE AS SHOWN
SHEET NO.

MF-ST-K3420-B.dgn
19-MAY-2015 12:19
P0028989

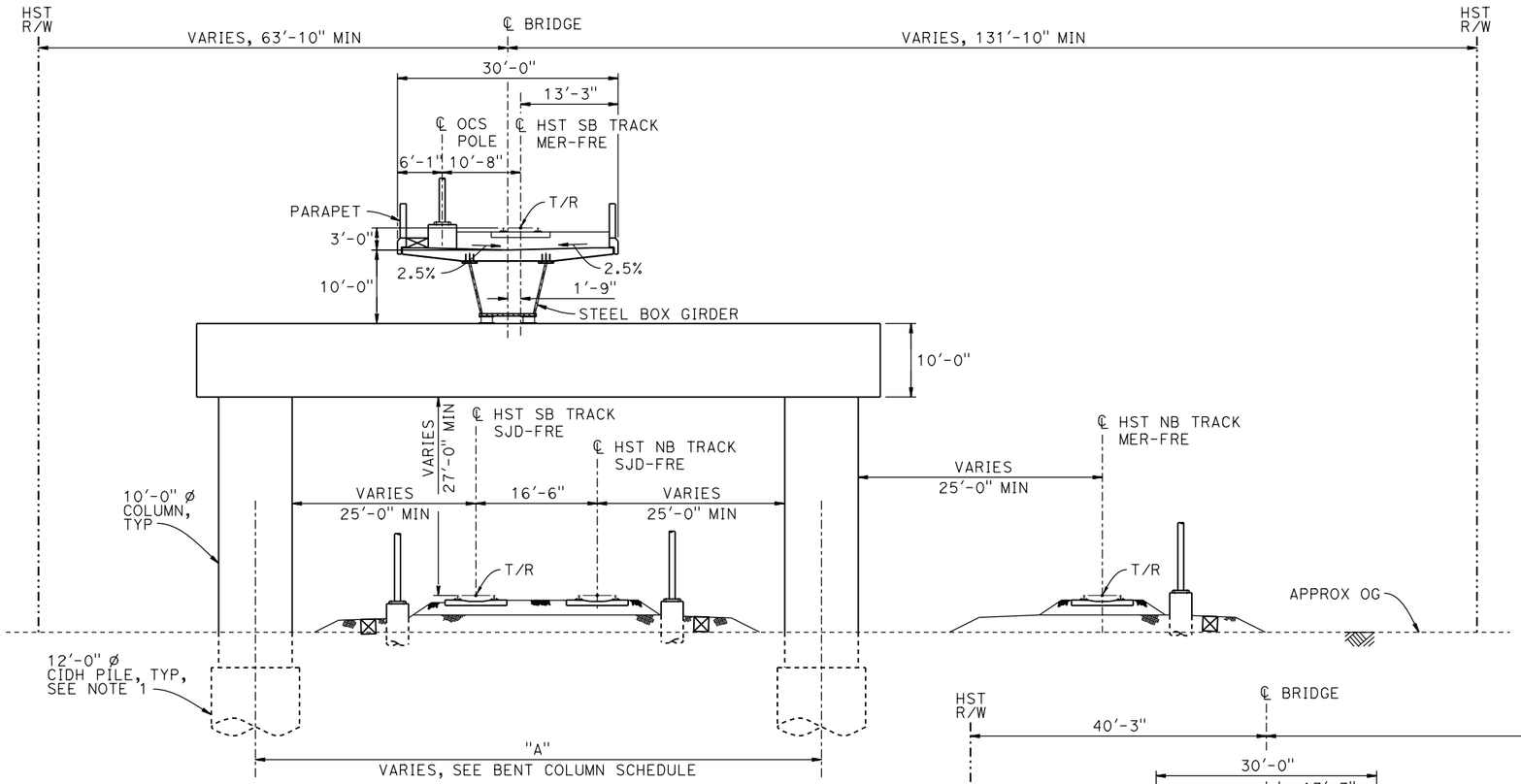

SECTION C-C

1" =10'

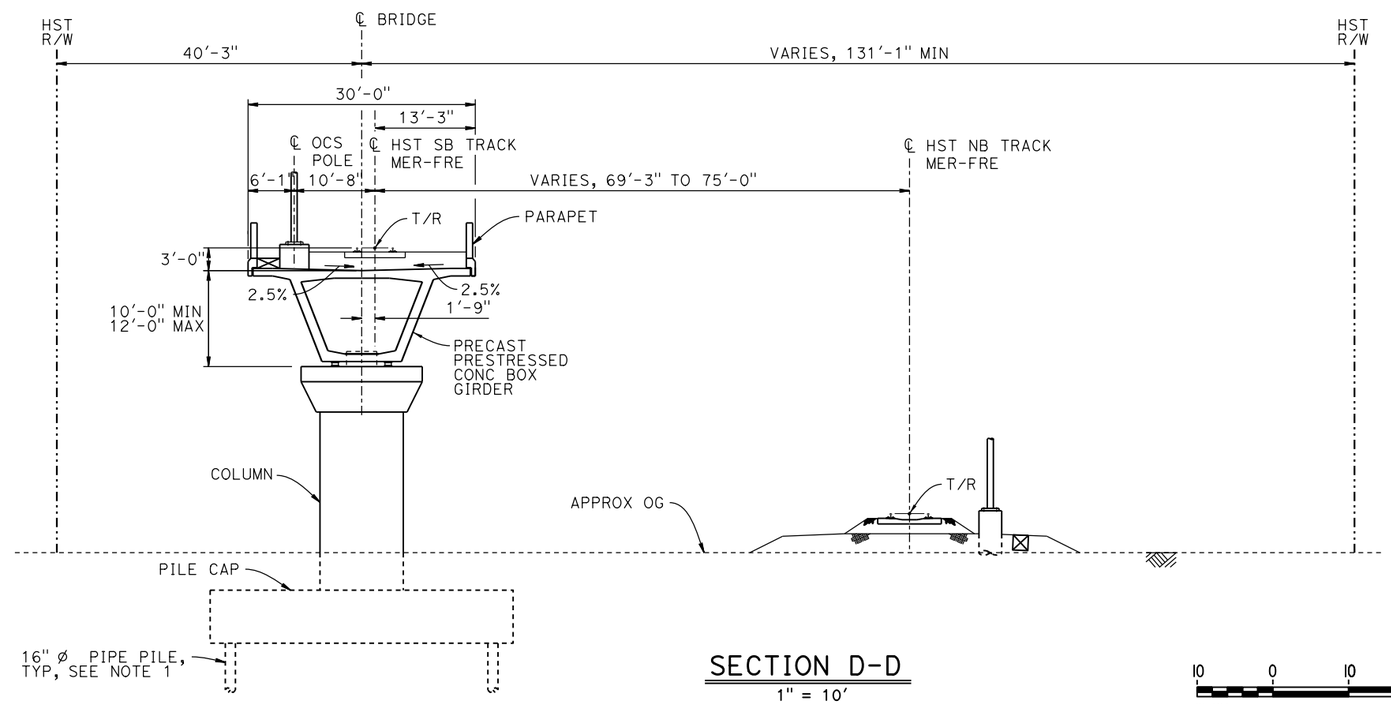

SECTION D-D

1" = 10'

10 0 10 20
1"=10'

NOTES:

1. PILE AND DRILLED SHAFT LENGTHS TO BE DETERMINED.
2. FOR TRACK SUPERELEVATION DETAILS, SEE ALIGNMENT AND TYPICAL SECTION PLANS; DRAWING TT-B0055-B.

REV	DATE	BY	CHK	APP	DESCRIPTION

DESIGNED BY S. J. S.
DRAWN BY A. M.
CHECKED BY K. CHARAN
IN CHARGE C. LEMLEY
DATE 05/08/2015

RECORD SET 15% DESIGN SUBMITTAL

NOT FOR CONSTRUCTION

PARSONS

CALIFORNIA HIGH-SPEED RAIL AUTHORITY

CALIFORNIA HIGH-SPEED TRAIN PROJECT
MERCED TO FRESNO SECTION
CENTRAL VALLEY WYE
SR 152 (NORTH) TO ROAD 19 WYE ALTERNATIVE
TYPICAL SECTIONS (MER-FRE)
AERIAL #3 - SOUTHBOUND OVER HST MAINLINE - 5 OF 5

CONTRACT NO. HSR08-05
DRAWING NO. ST-K3421-B
SCALE AS SHOWN
SHEET NO.

MF-ST-K3421-B.dgn
19-MAY-2015 2:23
P0028989

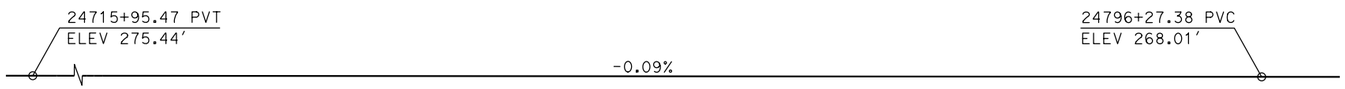

TOP OF RAIL PROFILE (℄ HST NB TRACK)

NO SCALE

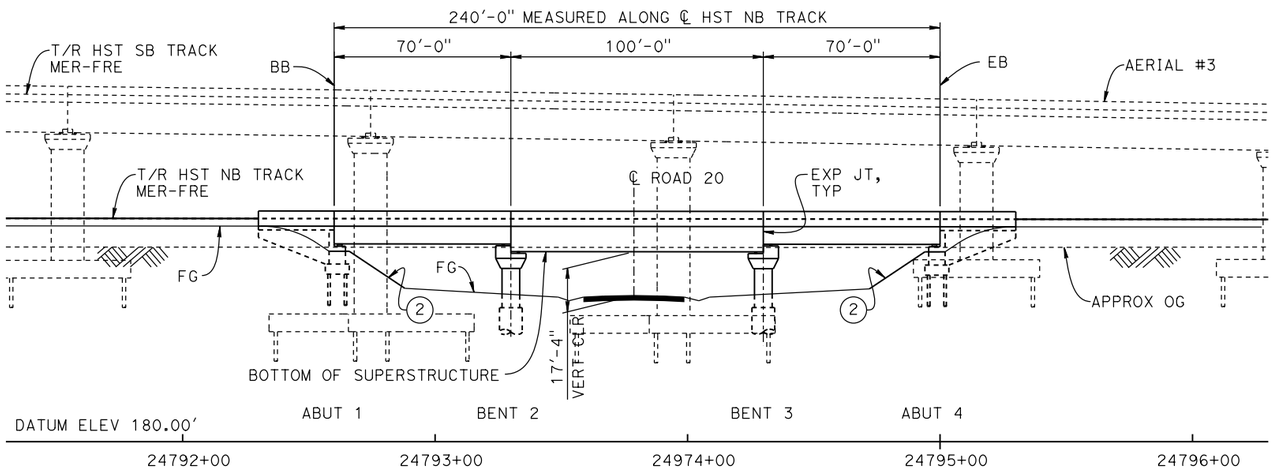

DEVELOPED ELEVATION

1" = 30'

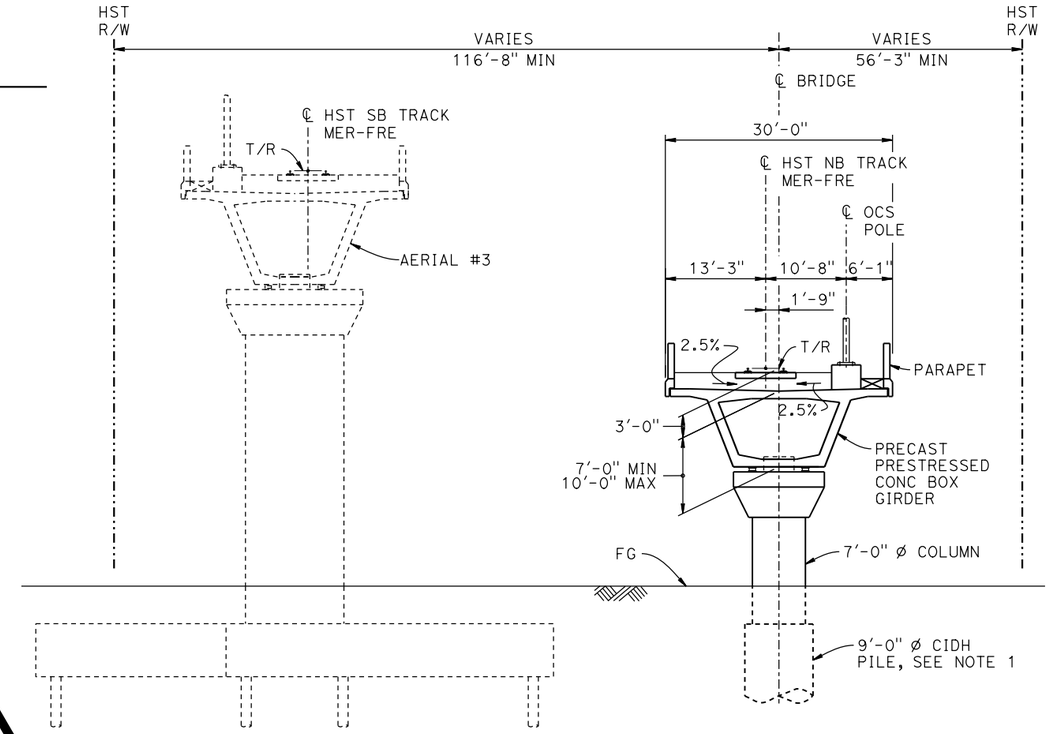

TYPICAL SECTION

1" = 10'

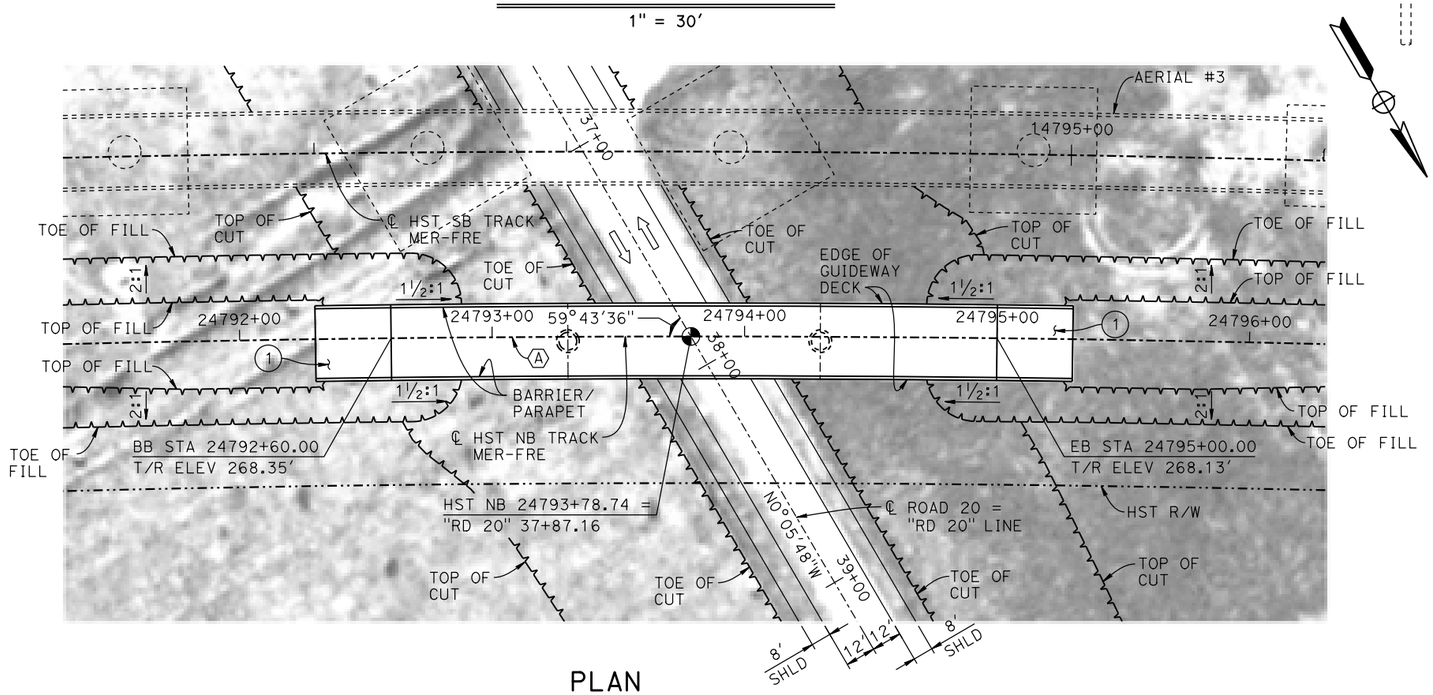

PLAN

1" = 30'

LEGEND:

- ◉ INDICATES POINT OF MINIMUM VERTICAL CLEARANCE
- ⇨ INDICATES DIRECTION OF TRAFFIC
- (1) STRUCTURE APPROACH
- (2) SLOPE PAVING (1½H:1V)

TEMPORARY TRAFFIC OPENINGS

VEHICULAR TRAFFIC

1. __ TRAFFIC WILL BE DETOURED AWAY FROM THE SITE.
2. X TRAFFIC WILL PASS UNDER THE STRUCTURE ON:

ST OR ROAD NAME AND LOCATION		FALSEWORK OPENING REQD (HORIZ x VERT)	
ROAD 20	24793+79	32'x16.5'	2-WAY

3. __ TEMP TRAFFIC LANE REDUCTION FOR FTG EXC.

NOTES:

1. 16"Ø PIPE PILES ASSUMED FOR ABUTMENT FOUNDATIONS. PILE AND DRILLED SHAFT LENGTHS TO BE DETERMINED.
2. FOR UTILITY DISPOSITIONS, SEE CIVIL AND GRADE SEPARATION PLANS; DRAWING CV-S1420-B.
3. FOR TRACK SUPERELEVATION DETAILS, SEE ALIGNMENT AND TYPICAL SECTION PLANS; DRAWING TT-B0057-B.
4. FOR AERIAL #3 - SOUTHBOUND OVER HST MAINLINE GENERAL PLAN AND TYPICAL SECTIONS, SEE DRAWINGS ST-K1420-B TO ST-K1422-B, ST-K3420-B AND ST-K3421-B.

CURVE MER-FRE 1 NB (A)

R = 10,300.00'
LS = 1,200.00'

10 0 10 20
1"=10'

30 0 30 60
1"=30'

REV	DATE	BY	CHK	APP	DESCRIPTION

DESIGNED BY S. J. S.
DRAWN BY A. M.
CHECKED BY K. CHARAN
IN CHARGE C. LEMLEY
DATE 05/08/2015

RECORD SET
15% DESIGN
SUBMITTAL

NOT FOR
CONSTRUCTION

PARSONS

CALIFORNIA
HIGH-SPEED RAIL AUTHORITY

CALIFORNIA HIGH-SPEED TRAIN PROJECT
MERCED TO FRESNO SECTION
CENTRAL VALLEY WYE
SR 152 (NORTH) TO ROAD 19 WYE ALTERNATIVE
GENERAL PLAN (MER-FRE)
ROAD 20 UNDERPASS (HST NB)

CONTRACT NO. HSR08-05
DRAWING NO. ST-K1425-B
SCALE AS SHOWN
SHEET NO.

P0028989 20-MAY-2015 7:20 MF-ST-K1425-B.dgn

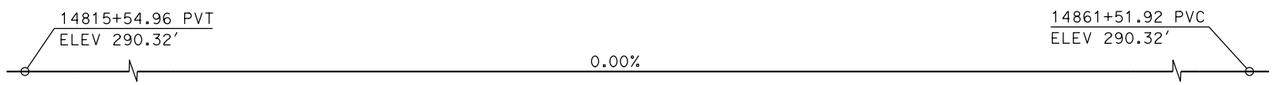

TOP OF RAIL PROFILE (℄ HST SB TRACK)

NO SCALE

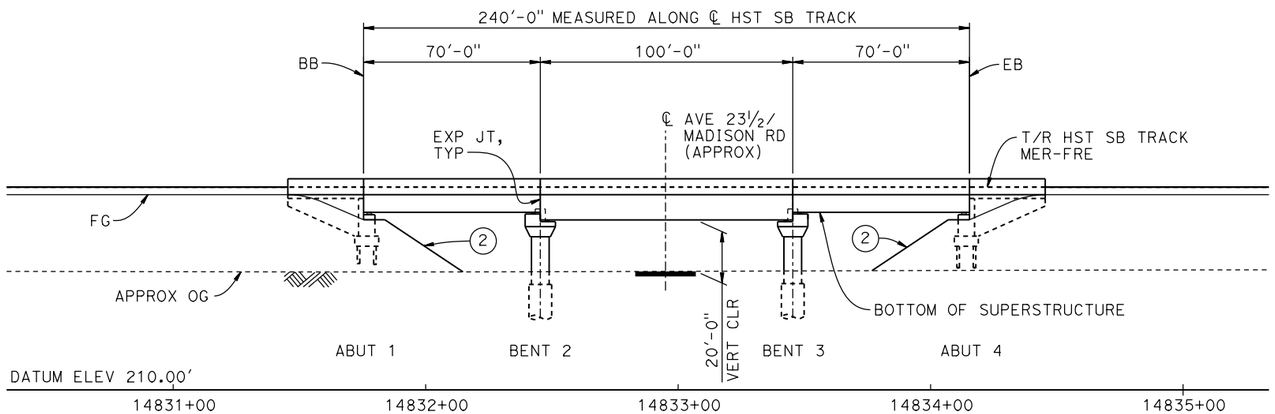

DEVELOPED ELEVATION

(SB BRIDGE SHOWN, NB BRIDGE SIMILAR)
1" = 30′

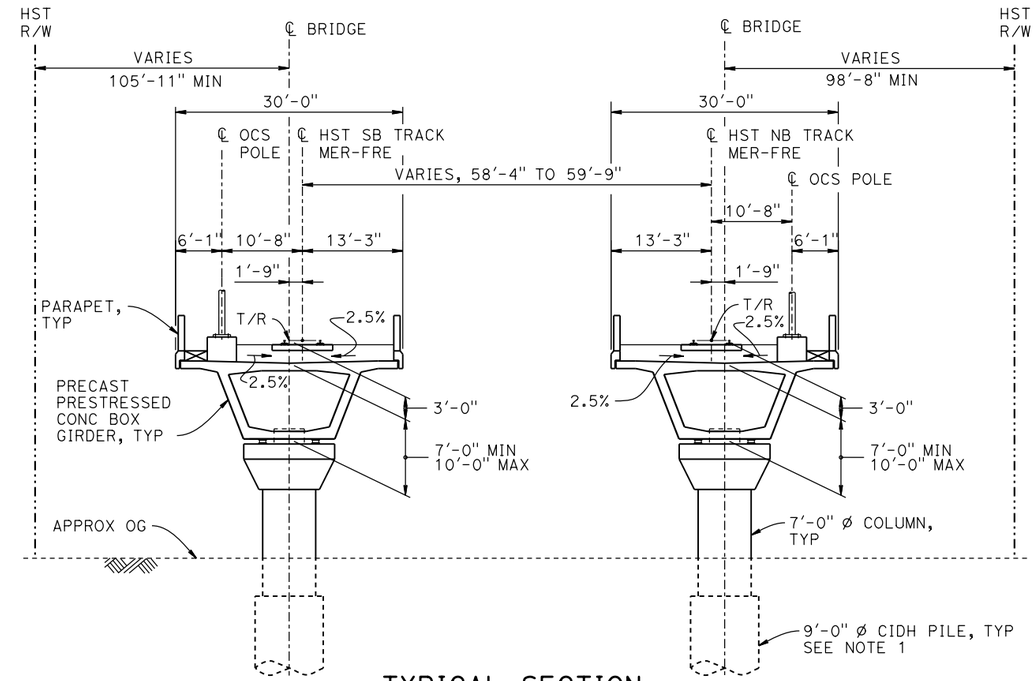

TYPICAL SECTION

1" = 10′

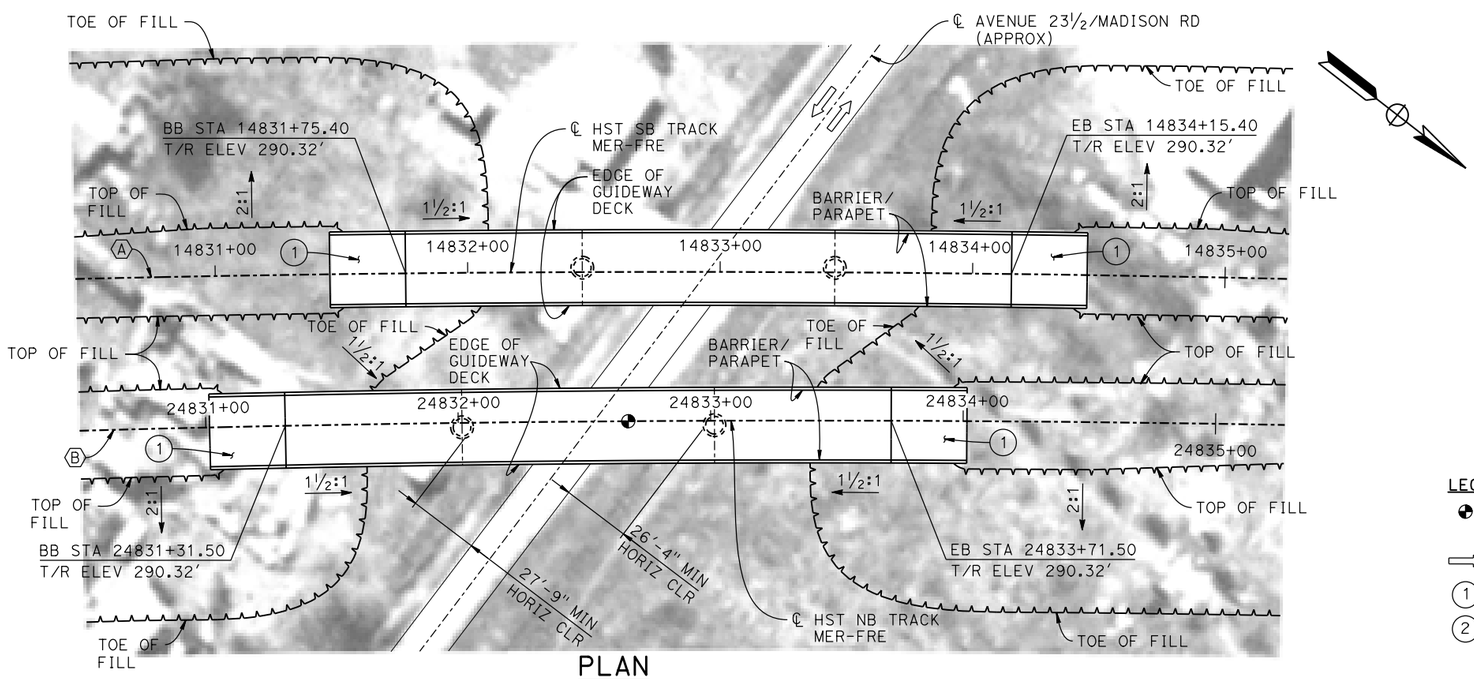

PLAN

1" = 30′

CURVE MER-FRE 1 SB (A)

R = 10,300.00′
LS = 1,200.00′

CURVE MER-FRE 1 NB (B)

R = 10,300.00′
LS = 1,200.00′

LEGEND:

- INDICATES POINT OF MINIMUM VERTICAL CLEARANCE
- INDICATES DIRECTION OF TRAFFIC
- (1) STRUCTURE APPROACH
- (2) SLOPE PAVING (1½H:1V)

TEMPORARY TRAFFIC OPENINGS

VEHICULAR TRAFFIC

1. __ TRAFFIC WILL BE DETOURED AWAY FROM THE SITE.
2. X TRAFFIC WILL PASS UNDER THE STRUCTURE ON:

ST OR ROAD NAME AND LOCATION		FALSEWORK OPENING REQD (HORIZ x VERT)	
AVE 23½/MADISON RD	14832+95	32′x16.5′	2-WAY

3. __ TEMP TRAFFIC LANE REDUCTION FOR FTG EXC.

NOTES:

1. 16" ø PIPE PILES ASSUMED FOR ABUTMENT FOUNDATIONS. PILE AND DRILLED SHAFT LENGTHS TO BE DETERMINED.
2. FOR UTILITY DISPOSITIONS, SEE CIVIL AND GRADE SEPARATION PLANS; DRAWING CV-S1430-B.
3. FOR TRACK SUPERELEVATION DETAILS, SEE ALIGNMENT AND TYPICAL SECTION PLANS; DRAWINGS TT-B0055-B AND TT-B0057-B.

10 0 10 20 — 1"=10′
30 0 30 60 — 1"=30′

REV	DATE	BY	CHK	APP	DESCRIPTION

DESIGNED BY O. EDEWOR
DRAWN BY A. M.
CHECKED BY S. J. S.
IN CHARGE C. LEMLEY
DATE 05/08/2015

RECORD SET
15% DESIGN SUBMITTAL

NOT FOR CONSTRUCTION

PARSONS

CALIFORNIA HIGH-SPEED RAIL AUTHORITY

CALIFORNIA HIGH-SPEED TRAIN PROJECT
MERCED TO FRESNO SECTION
CENTRAL VALLEY WYE
SR 152 (NORTH) TO ROAD 19 WYE ALTERNATIVE
GENERAL PLAN (MER-FRE)
MADISON ROAD (AVENUE 23½) UNDERPASS

CONTRACT NO. HSR08-05
DRAWING NO. ST-K1430-B
SCALE AS SHOWN
SHEET NO.

16-MAR-2016 16:21 MF-ST-K1430-B.dgn
p005133A

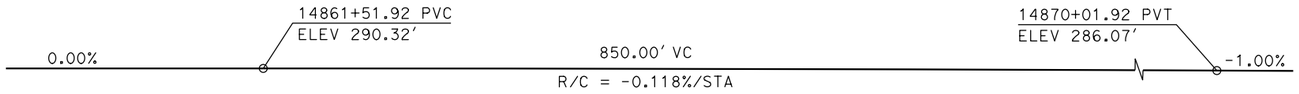

TOP OF RAIL PROFILE (℄ HST SB TRACK)

NO SCALE

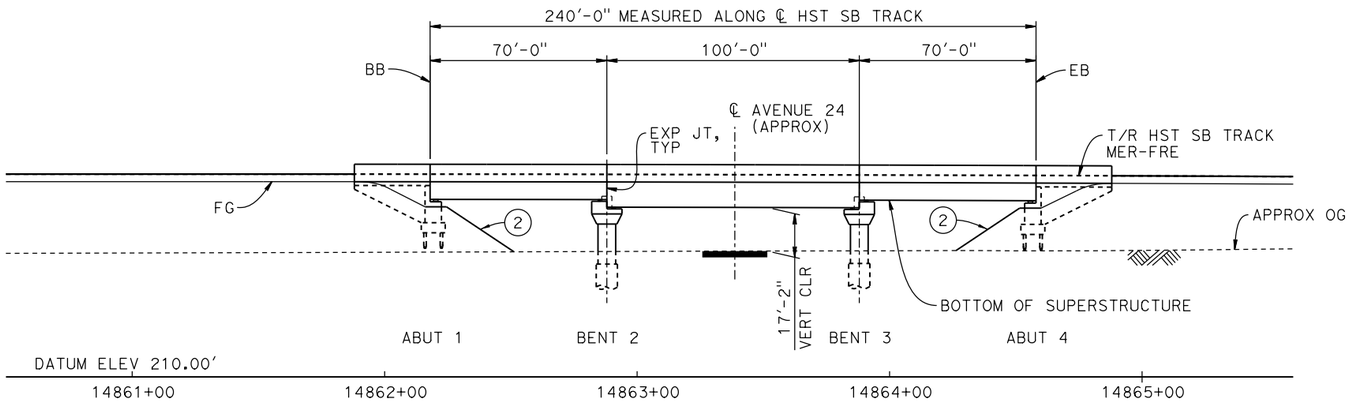

DEVELOPED ELEVATION

(SB BRIDGE SHOWN, NB BRIDGE SIMILAR)

1" = 30'

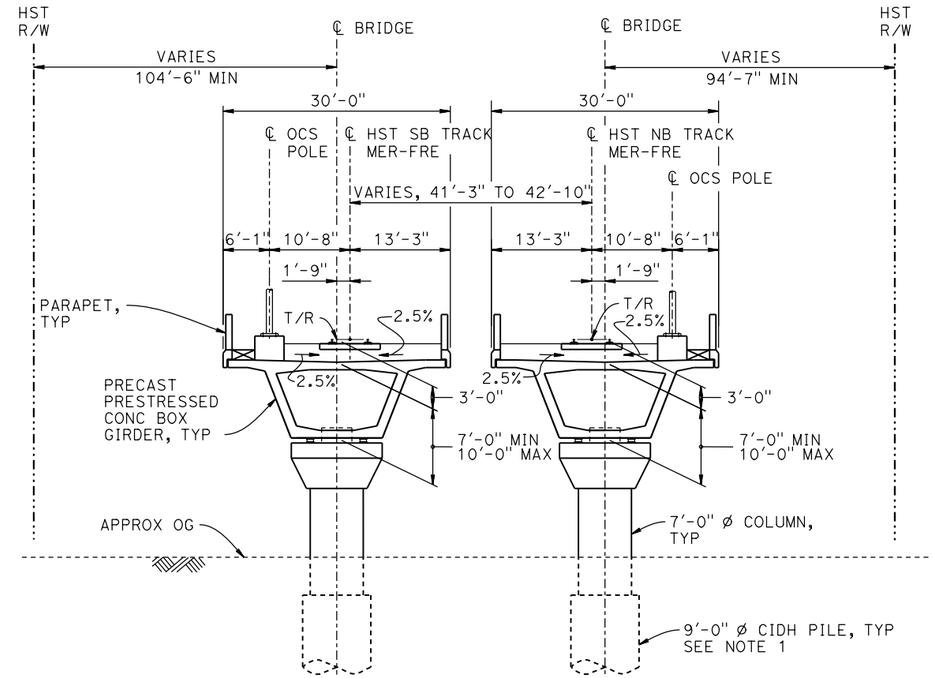

TYPICAL SECTION

1" = 10'

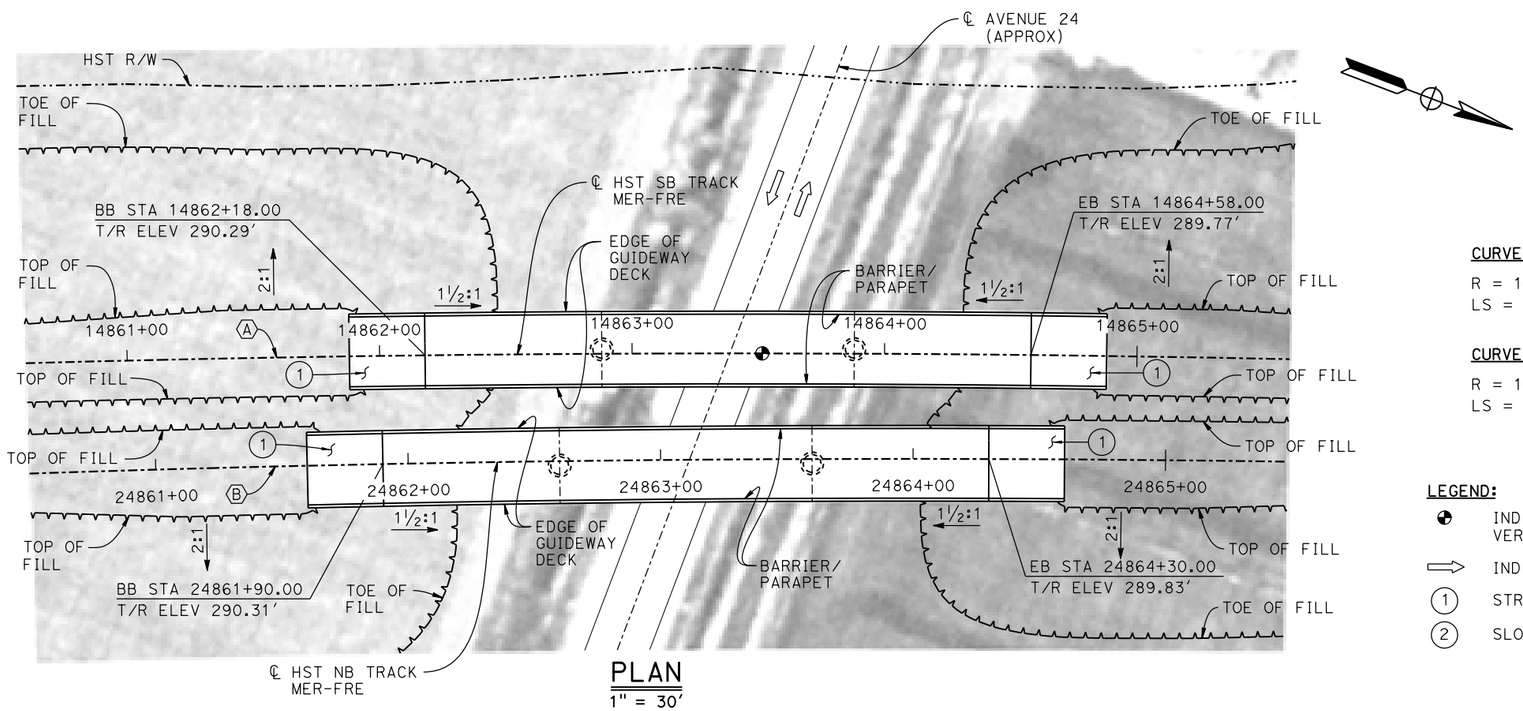

PLAN

1" = 30'

CURVE MER-FRE 1 SB (A)

R = 10,300.00'
LS = 1,200.00'

CURVE MER-FRE 1 NB (B)

R = 10,300.00'
LS = 1,200.00'

LEGEND:

- INDICATES POINT OF MINIMUM VERTICAL CLEARANCE
- INDICATES DIRECTION OF TRAFFIC
- (1) STRUCTURE APPROACH
- (2) SLOPE PAVING (1½H:1V)

TEMPORARY TRAFFIC OPENINGS

VEHICULAR TRAFFIC

1. __ TRAFFIC WILL BE DETOURED AWAY FROM THE SITE.
2. X TRAFFIC WILL PASS UNDER THE STRUCTURE ON:

ST OR ROAD NAME AND LOCATION		FALSEWORK OPENING REQD (HORIZ x VERT)	
AVENUE 24	14863+39	32'x16.5'	2-WAY

3. __ TEMP TRAFFIC LANE REDUCTION FOR FTG EXC.

NOTES:

1. 16" ø PIPE PILES ASSUMED FOR ABUTMENT FOUNDATIONS. PILE AND DRILLED SHAFT LENGTHS TO BE DETERMINED.
2. FOR UTILITY DISPOSITIONS, CIVIL AND GRADE SEPARATION PLANS; DRAWING CV-S1430-B.
3. FOR TRACK SUPERELEVATION DETAILS, SEE ALIGNMENT AND TYPICAL SECTION PLANS; DRAWINGS TT-B0055-B AND TT-B0057-B.

10 0 10 20 — 1"=10'

30 0 30 60 — 1"=30'

REV	DATE	BY	CHK	APP	DESCRIPTION

DESIGNED BY O. EDEWOR
DRAWN BY J. KIDWELL
CHECKED BY S. J. S.
IN CHARGE C. LEMLEY
DATE 02/13/2015

RECORD SET
15% DESIGN SUBMITTAL

NOT FOR CONSTRUCTION

PARSONS

CALIFORNIA HIGH-SPEED RAIL AUTHORITY

CALIFORNIA HIGH-SPEED TRAIN PROJECT
MERCED TO FRESNO SECTION
CENTRAL VALLEY WYE
SR 152 (NORTH) TO ROAD 19 WYE ALTERNATIVE
GENERAL PLAN (MER-FRE)
AVENUE 24 UNDERPASS

CONTRACT NO. HSR08-05
DRAWING NO. ST-K1435-B
SCALE AS SHOWN
SHEET NO.

MF-ST-K1435-B.dgn
07-FEB-2015 10:58
p0036110

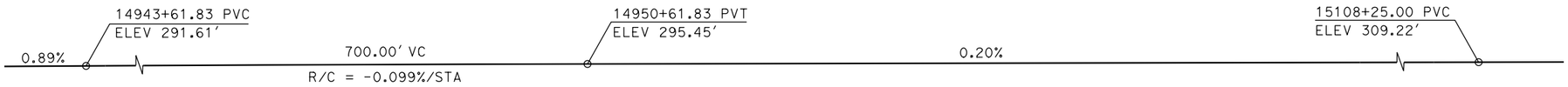

TOP OF RAIL PROFILE (℄ HST SB TRACK MER-FRE)

NO SCALE

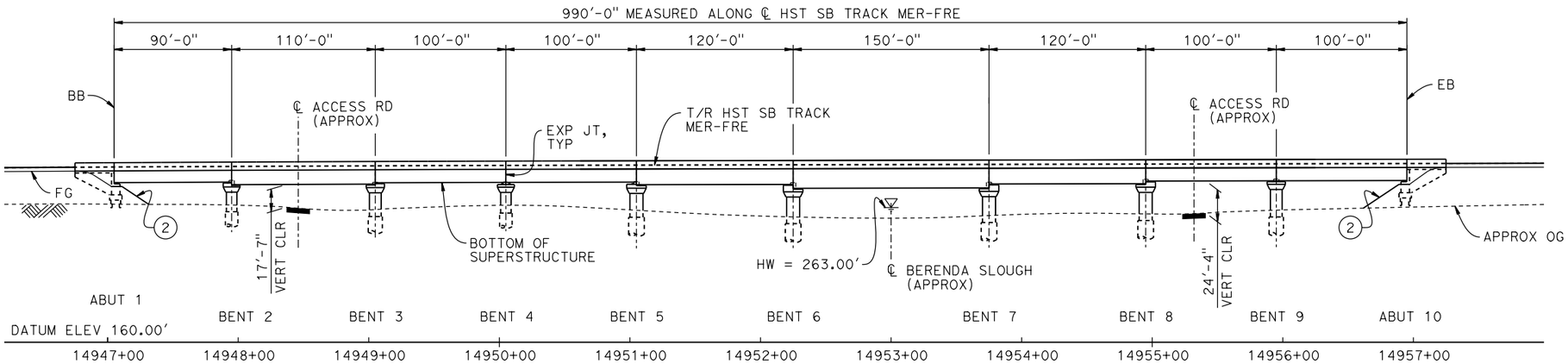

ELEVATION

1" = 50'

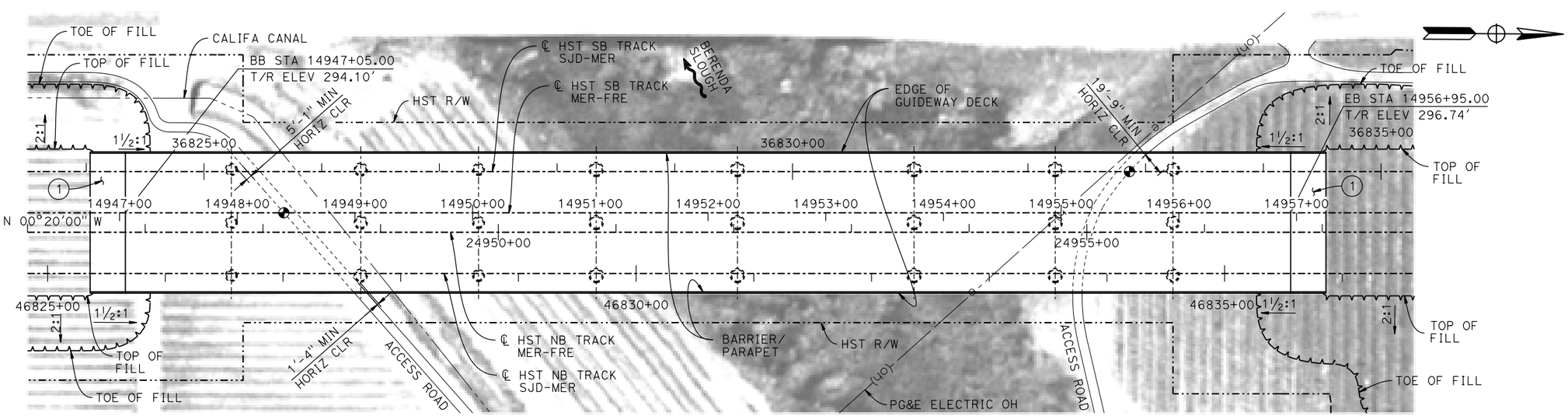

PLAN

1" = 50'

TEMPORARY TRAFFIC OPENINGS

VEHICULAR TRAFFIC

1. __ TRAFFIC WILL BE DETOURED AWAY FROM THE SITE.
2. X TRAFFIC WILL PASS UNDER THE STRUCTURE ON:

ST OR ROAD NAME AND LOCATION		FALSEWORK OPENING REQD (HORIZ x VERT)	
ACCESS ROAD	14948+46	20'x16.5'	-
ACCESS ROAD	14955+29	20'x16.5'	-

3. __ TEMP TRAFFIC LANE REDUCTION FOR FTG EXC.

LEGEND:

- INDICATES POINT OF MINIMUM VERTICAL CLEARANCE
- INDICATES DIRECTION OF FLOW
- (1) STRUCTURE APPROACH
- (2) SLOPE PAVING (1½H:1V)

NOTES:

1. 16" ø PIPE PILES ASSUMED FOR ABUTMENT FOUNDATIONS. PILE LENGTHS TO BE DETERMINED.
2. FOR TYPICAL SECTION AND BENT COLUMN SCHEDULE, SEE DRAWING ST-K3450-B.
3. ANY EXISTING DIRT ROAD THAT CONFLICTS WITH NEW CONSTRUCTION SHALL BE REALIGNED.
4. FOR UTILITY DISPOSITIONS, SEE CIVIL AND GRADE SEPARATION PLANS; DRAWING CV-S1450-B.

50 0 50 100
1"=50'

REV	DATE	BY	CHK	APP	DESCRIPTION

DESIGNED BY O. EDEWOR
DRAWN BY A. M.
CHECKED BY S. J. S.
IN CHARGE C. LEMLEY
DATE 02/13/2015

RECORD SET
15% DESIGN SUBMITTAL
NOT FOR CONSTRUCTION

PARSONS

CALIFORNIA HIGH-SPEED RAIL AUTHORITY

CALIFORNIA HIGH-SPEED TRAIN PROJECT
MERCED TO FRESNO SECTION
CENTRAL VALLEY WYE
SR 152 (NORTH) TO ROAD 19 WYE ALTERNATIVE
GENERAL PLAN (MER-FRE)
BERENDA SLOUGH BRIDGE - 1 OF 2

CONTRACT NO. HSR08-05
DRAWING NO. ST-K1450-B
SCALE AS SHOWN
SHEET NO.

MF-ST-K1450-B.dgn
07-FEB-2015 10:07
p0036110

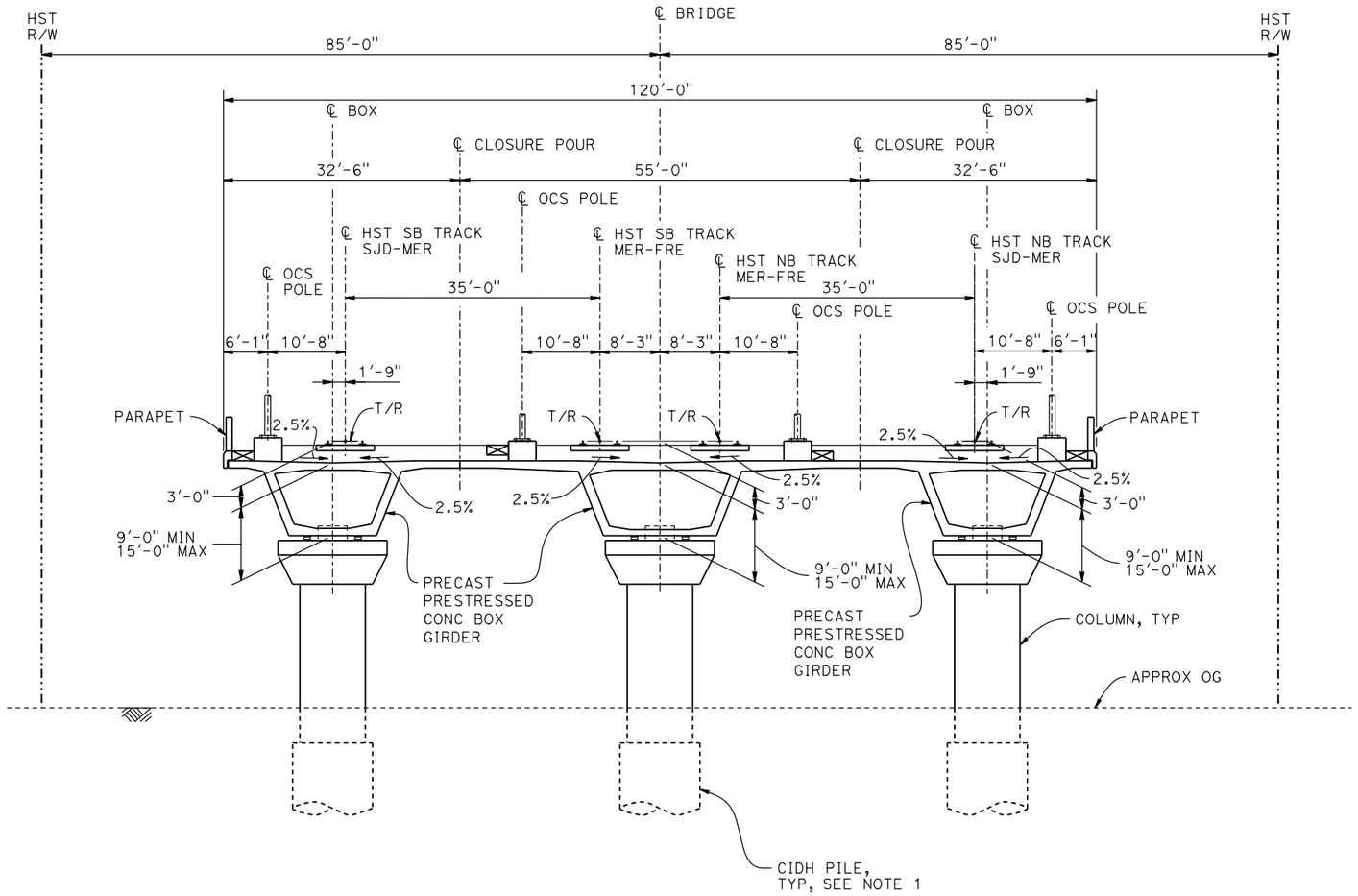

TYPICAL SECTION

1" = 10'

BENT COLUMN SCHEDULE		
BENT	COLUMN TYPE	CIDH TYPE
2	8'-0" ø	10'-0" ø
3	9'-0" ø	11'-0" ø
4	8'-0" ø	10'-0" ø
5 - 8	10'-0" ø	12'-0" ø
9	9'-0" ø	11'-0" ø

NOTE:

1. DRILLED SHAFT LENGTHS TO BE DETERMINED.

10 0 10 20

1"=10'

REV	DATE	BY	CHK	APP	DESCRIPTION

DESIGNED BY O. EDEWOR
DRAWN BY A. M.
CHECKED BY S. J. S.
IN CHARGE C. LEMLEY
DATE 02/13/2015

RECORD SET
15% DESIGN SUBMITTAL

NOT FOR CONSTRUCTION

PARSONS

CALIFORNIA HIGH-SPEED RAIL AUTHORITY

CALIFORNIA HIGH-SPEED TRAIN PROJECT
MERCED TO FRESNO SECTION
CENTRAL VALLEY WYE
SR 152 (NORTH) TO ROAD 19 WYE ALTERNATIVE
TYPICAL SECTION (MER-FRE)
BERENDA SLOUGH BRIDGE - 2 OF 2

CONTRACT NO. HSR08-05
DRAWING NO. ST-K3450-B
SCALE AS SHOWN
SHEET NO.

MF-ST-K3450-B.dgn
07-FEB-2015 10:07
p0036110

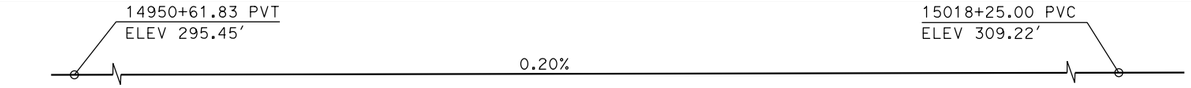

TOP OF RAIL PROFILE (℄ HST SB TRACK MER-FRE)

NO SCALE

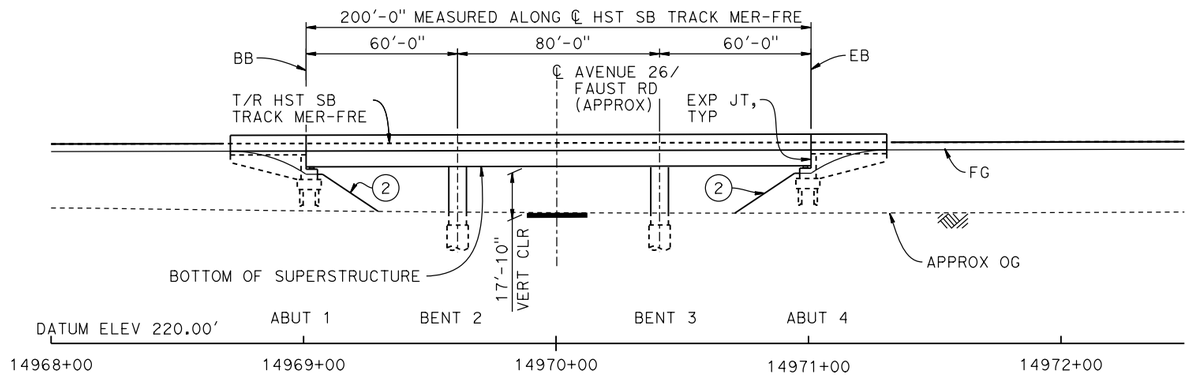

ELEVATION

1" = 30'

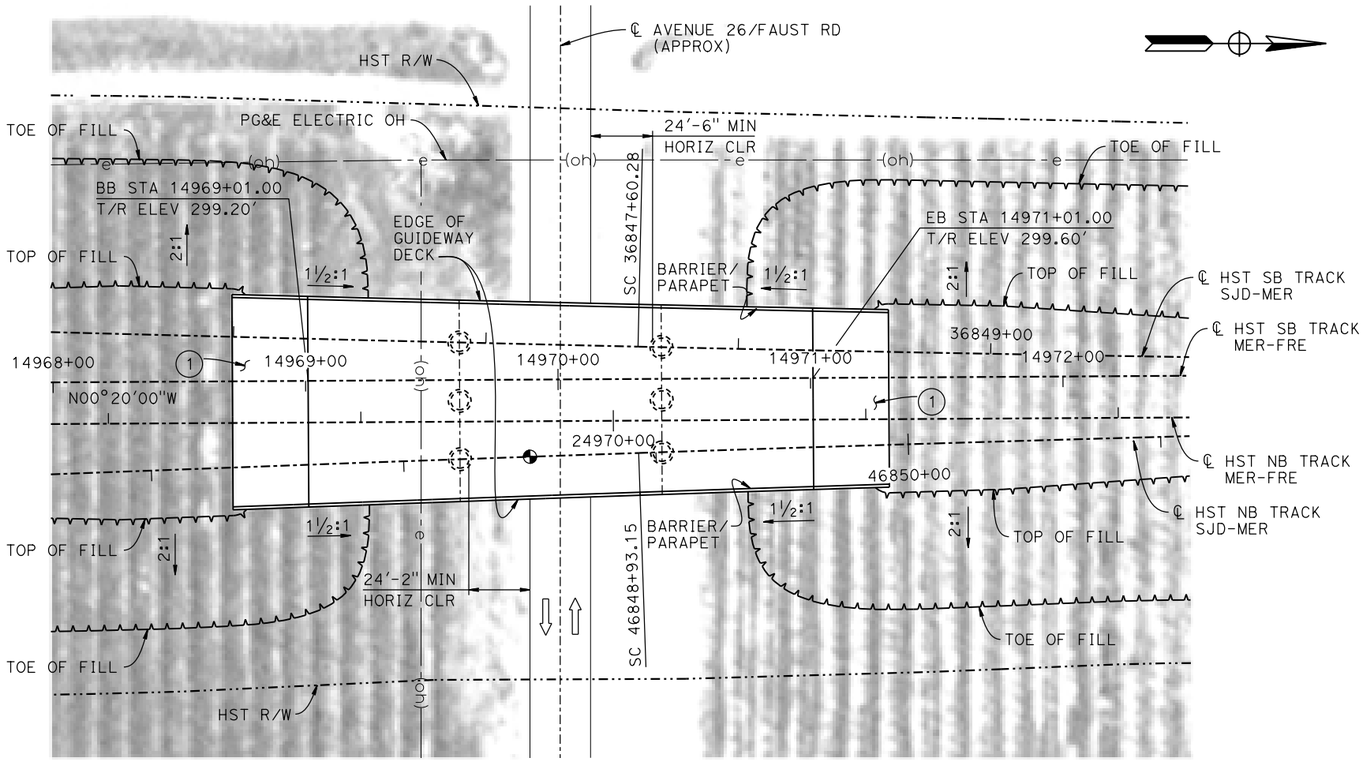

PLAN

1" = 30'

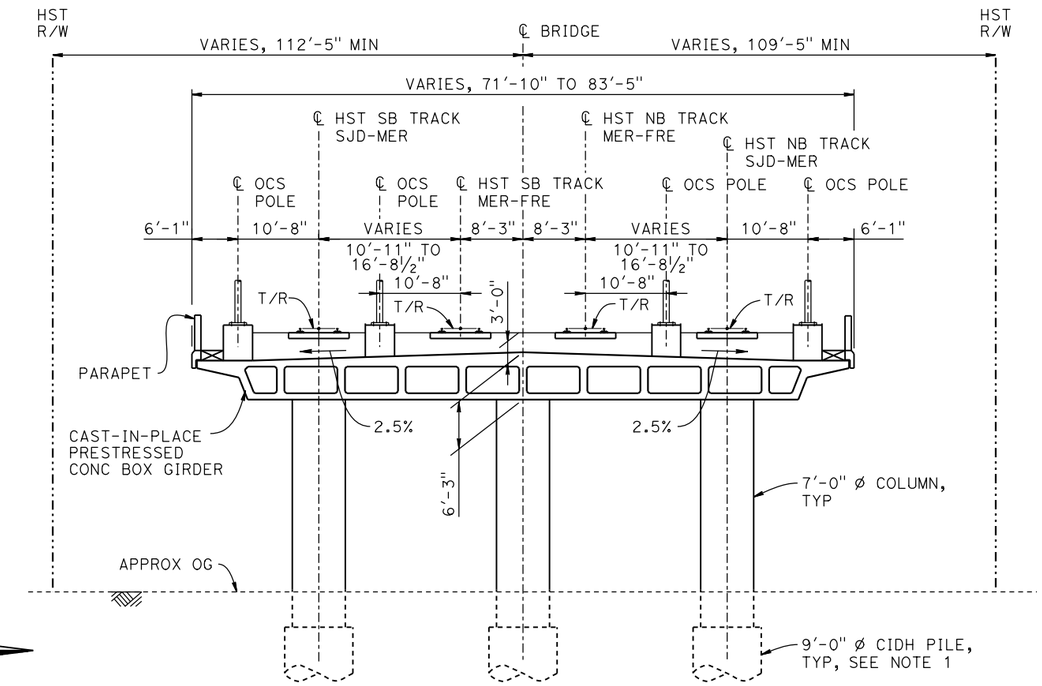

TYPICAL SECTION

1" = 10'

LEGEND:

- INDICATES POINT OF MINIMUM VERTICAL CLEARANCE
- INDICATES DIRECTION OF TRAFFIC
- (1) STRUCTURE APPROACH
- (2) SLOPE PAVING (1½H:1V)

NOTES:

1. 16" Ø PIPE PILES ASSUMED FOR ABUTMENT FOUNDATIONS. PILE AND DRILLED SHAFT LENGTHS TO BE DETERMINED.
2. FOR UTILITY DISPOSITION, SEE CIVIL AND GRADE SEPARATION PLANS; DRAWING CV-S1450-B.
3. FOR TRACK SUPERELEVATION DETAILS, SEE ALIGNMENT AND TYPICAL SECTION PLANS; DRAWING TT-B0058-B.

TEMPORARY TRAFFIC OPENINGS

VEHICULAR TRAFFIC

1. __ TRAFFIC WILL BE DETOURED AWAY FROM THE SITE.
2. X TRAFFIC WILL PASS UNDER THE STRUCTURE ON:

ST OR ROAD NAME AND LOCATION		FALSEWORK OPENING REQD (HORIZ X VERT)	
AVENUE 26/FAUST ROAD	14970+01	32'x15.0'	2-WAY

3. __ TEMP TRAFFIC LANE REDUCTION FOR FTG EXC.

10 0 10 20
1"=10'

30 0 30 60
1"=30'

REV	DATE	BY	CHK	APP	DESCRIPTION

DESIGNED BY S. J. S.
DRAWN BY J. KIDWELL
CHECKED BY O. EDEWOR
IN CHARGE C. LEMLEY
DATE 02/13/2015

RECORD SET
15% DESIGN
SUBMITTAL

NOT FOR
CONSTRUCTION

PARSONS

CALIFORNIA
HIGH-SPEED RAIL AUTHORITY

CALIFORNIA HIGH-SPEED TRAIN PROJECT
MERCED TO FRESNO SECTION
CENTRAL VALLEY WYE
SR 152 (NORTH) TO ROAD 19 WYE ALTERNATIVE
GENERAL PLAN (MER-FRE)
FAUST ROAD (AVENUE 26) UNDERPASS

CONTRACT NO. HSR08-05
DRAWING NO. ST-K1455-B
SCALE AS SHOWN
SHEET NO.

MF-ST-K1455-B.dgn
07-FEB-2015 10:59
p0036110

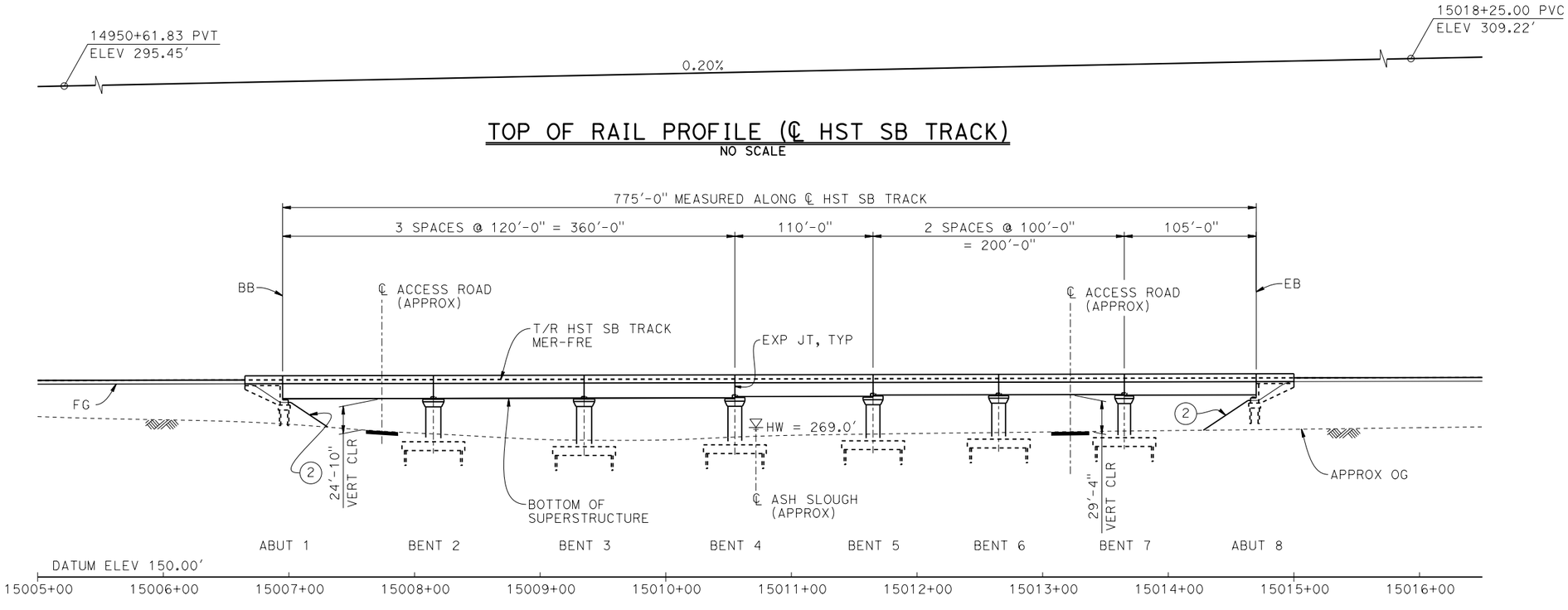

TOP OF RAIL PROFILE (℄ HST SB TRACK)

NO SCALE

DEVELOPED ELEVATION

1" = 50'

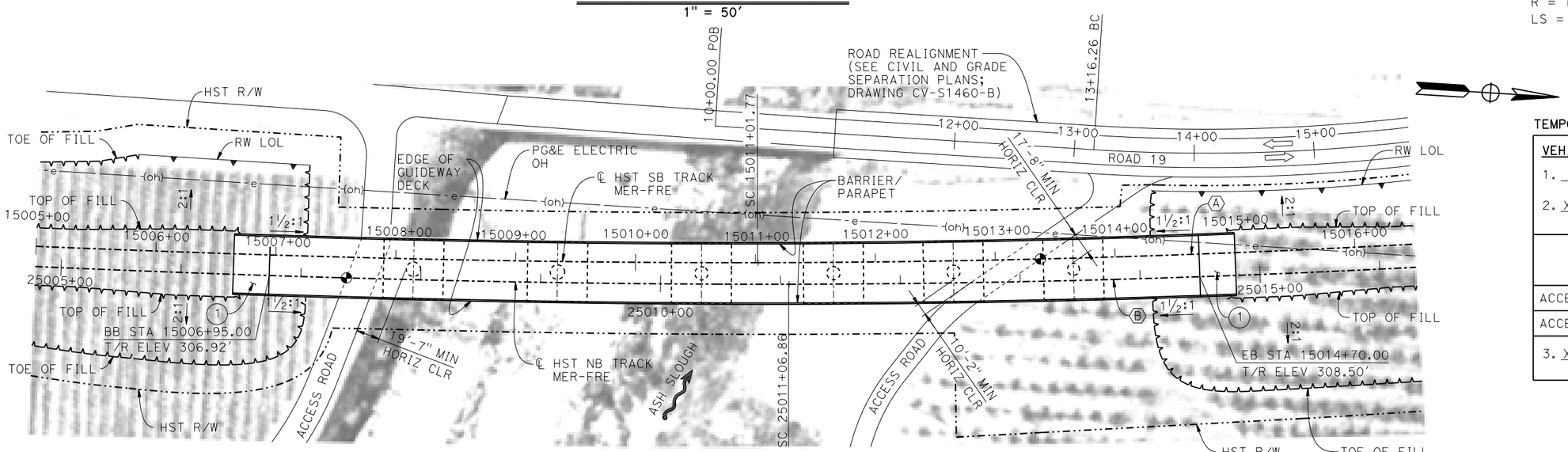

PLAN

1" = 50'

LEGEND:

- INDICATES POINT OF MINIMUM VERTICAL CLEARANCE
- INDICATES DIRECTION OF TRAFFIC
- INDICATES DIRECTION OF FLOW
- (1) STRUCTURE APPROACH
- (2) SLOPE PAVING (1½H:1V)

NOTES:

1. 16"Ø PIPE PILES ASSUMED FOR ABUTMENT AND BENT FOUNDATIONS. PILE LENGTHS TO BE DETERMINED.
2. FOR SECTION AND BENT COLUMN SCHEDULE, SEE DRAWING ST-K3460-B.
3. ANY EXISTING DIRT ROAD THAT CONFLICTS WITH NEW CONSTRUCTION SHALL BE REALIGNED.
4. FOR UTILITY DISPOSITIONS, SEE CIVIL AND GRADE SEPARATION PLANS; DRAWING CV-S1460-B.
5. FOR RETAINING WALLS, SEE CIVIL AND GRADE SEPARATION PLANS; DRAWING CV-S1460-B.

CURVE MER-FRE 2 SB (A)

R = 10,300.00'
LS = 1,200.00'

CURVE MER-FRE 2 NB (B)

R = 10,300.00'
LS = 1,200.00'

TEMPORARY TRAFFIC OPENINGS

VEHICULAR TRAFFIC

1. __ TRAFFIC WILL BE DETOURED AWAY FROM THE SITE.
2. X TRAFFIC WILL PASS UNDER THE STRUCTURE ON:

ST OR ROAD NAME AND LOCATION		FALSEWORK OPENING REQD (HORIZ X VERT)	
ACCESS ROAD	15007+78	20'X16.5'	-
ACCESS ROAD	15013+22	20'X16.5'	-

3. X TEMP TRAFFIC LANE REDUCTION FOR FTG EXC.

50 0 50 100
1"=50'

MF-ST-K1460-B.dgn
10-MAR-2016 7:18
p005133a

REV	DATE	BY	CHK	APP	DESCRIPTION

DESIGNED BY S. J. S.
DRAWN BY A. M.
CHECKED BY O. EDEWOR
IN CHARGE C. LEMLEY
DATE 03/18/2016

RECORD SET
15% DESIGN SUBMITTAL

NOT FOR CONSTRUCTION

PARSONS

CALIFORNIA HIGH-SPEED RAIL AUTHORITY

CALIFORNIA HIGH-SPEED TRAIN PROJECT
MERCED TO FRESNO SECTION
CENTRAL VALLEY WYE
SR 152 (NORTH) TO ROAD 19 WYE ALTERNATIVE
GENERAL PLAN (MER-FRE)
ASH SLOUGH BRIDGE - 1 OF 2

CONTRACT NO. HSR08-05
DRAWING NO. ST-K1460-B
SCALE AS SHOWN
SHEET NO.

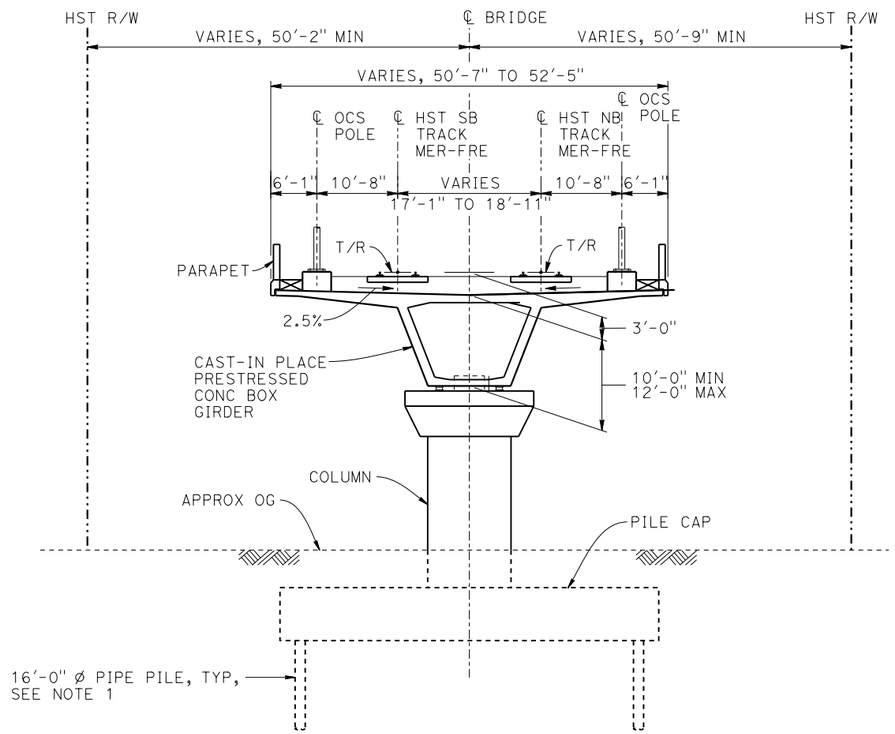

TYPICAL SECTION

1" = 10'

BENT COLUMN SCHEDULE	
BENT	COLUMN TYPE
2 - 3	12'-0" ø
4 - 6	11'-0" ø
7	10'-0" ø

NOTES:

1. PILE LENGTHS TO BE DETERMINED.
2. FOR TRACK SUPERELEVATION DETAILS, SEE ALIGNMENT AND TYPICAL SECTION PLANS; DRAWINGS TT-B0055-B AND TT-B0057-B.

10 0 10 20

1"=10'

MF-ST-K3460-B.dgn

22-MAY-2015 10:49

p005133a

REV	DATE	BY	CHK	APP	DESCRIPTION

DESIGNED BY S. J. S.
DRAWN BY A. M.
CHECKED BY O. EDEWOR
IN CHARGE C. LEMLEY
DATE 05/08/2015

RECORD SET
15% DESIGN SUBMITTAL

NOT FOR CONSTRUCTION

PARSONS

CALIFORNIA HIGH-SPEED RAIL AUTHORITY

CALIFORNIA HIGH-SPEED TRAIN PROJECT
MERCED TO FRESNO SECTION
CENTRAL VALLEY WYE
SR 152 (NORTH) TO ROAD 19 WYE ALTERNATIVE
TYPICAL SECTION (MER-FRE)
ASH SLOUGH BRIDGE - 2 OF 2

CONTRACT NO. HSR08-05
DRAWING NO. ST-K3460-B
SCALE AS SHOWN
SHEET NO.

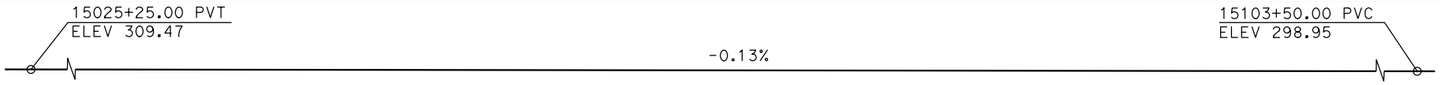

TOP OF RAIL PROFILE (℄ HST SB TRACK)

NO SCALE

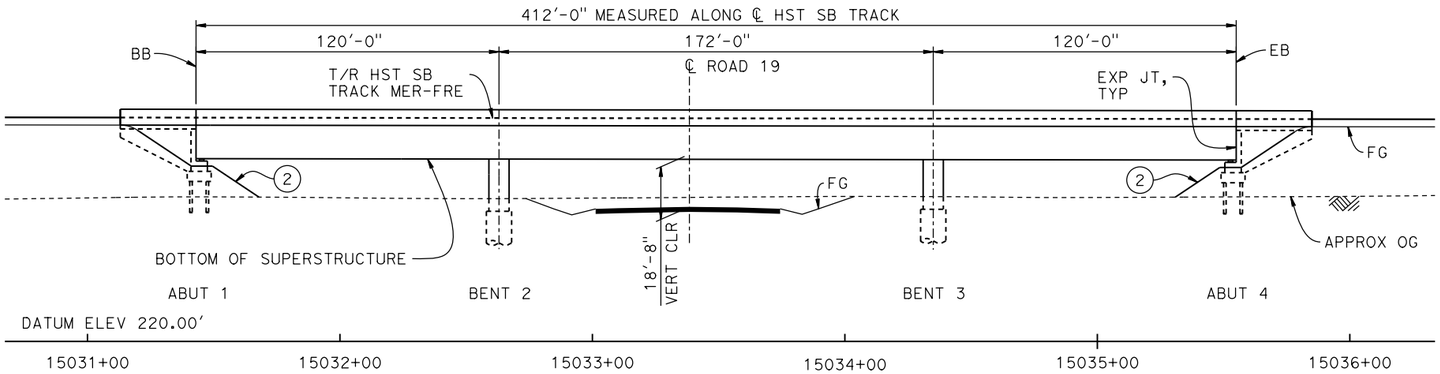

DEVELOPED ELEVATION

1" = 30'

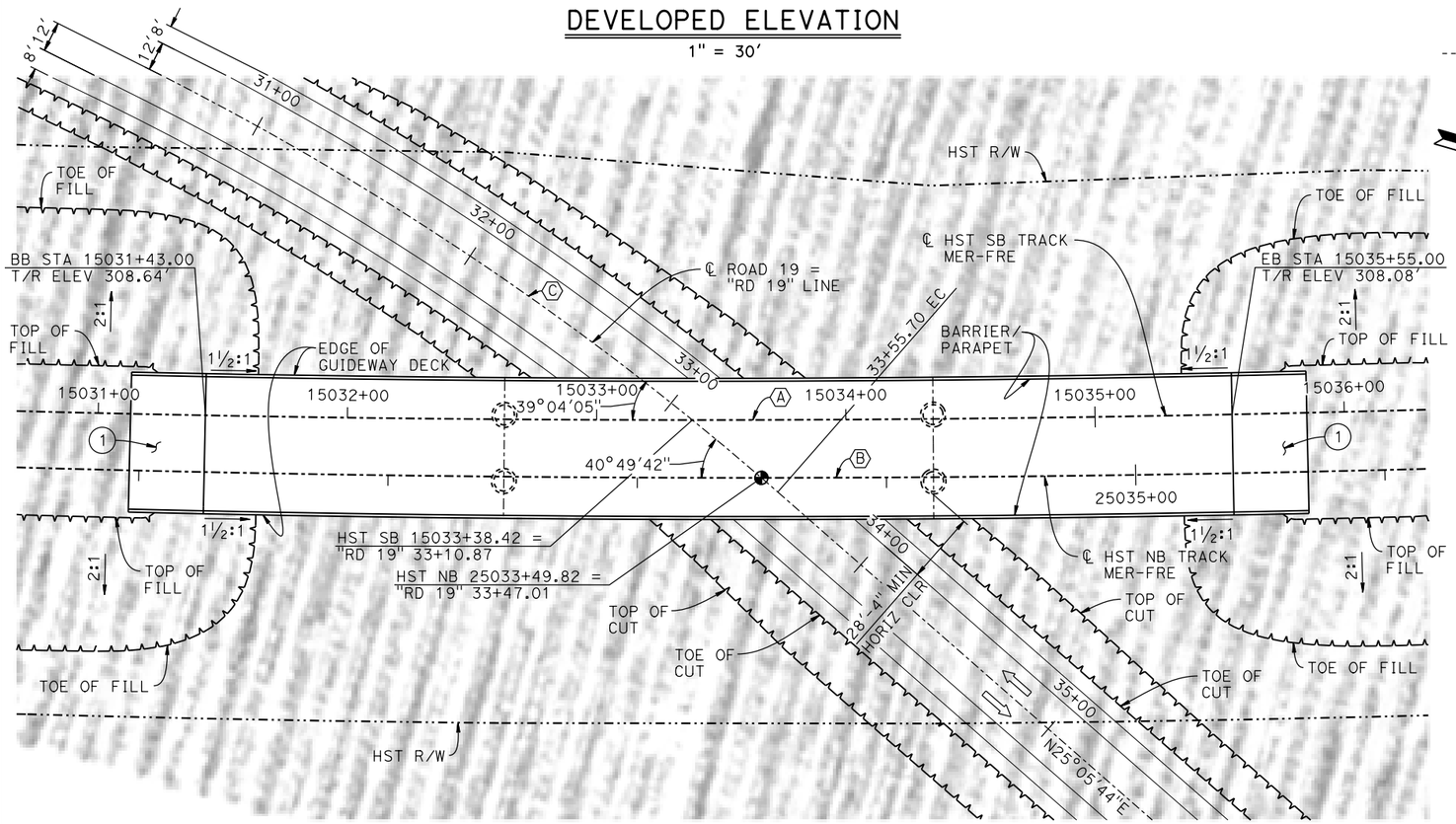

PLAN

1" = 30'

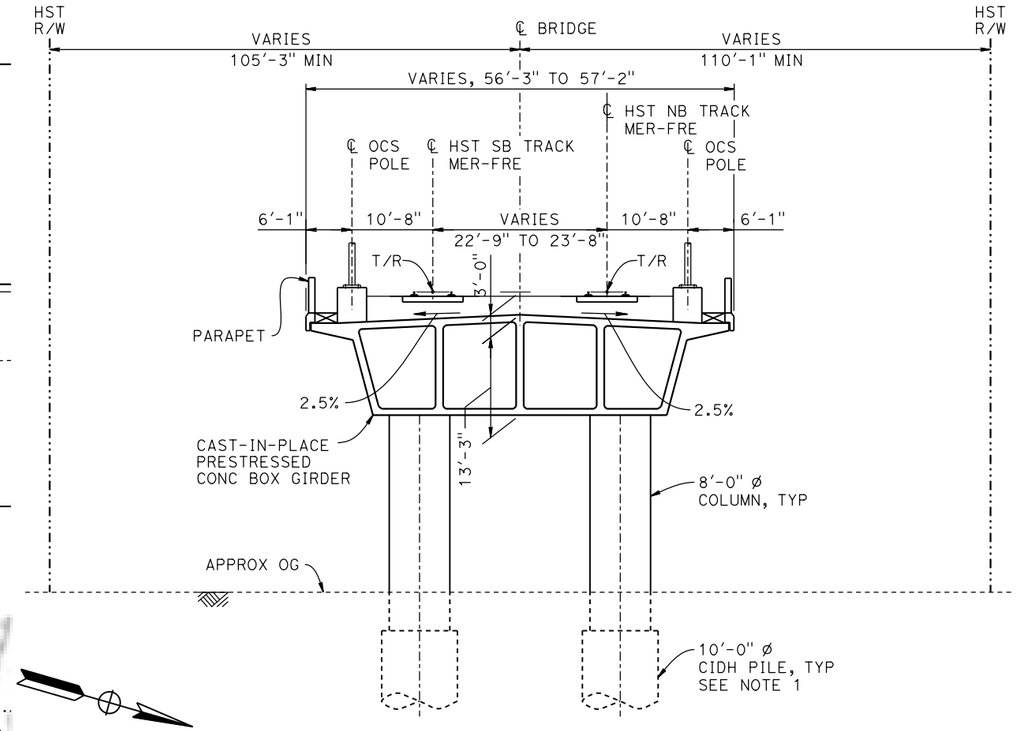

TYPICAL SECTION

1" = 10'

CURVE MER-FRE 2 SB (A)

R = 10,300.00'
LS = 1,200.00'

CURVE MER-FRE 2 NB (B)

R = 10,300.00'
LS = 1,200.00'

CURVE NO. 460-02 (C)

R = 1,200.00'
Δ = 46°04'20"
L = 964.94'
T = 510.26'

NOTES:

1. 16" ø PIPE PILES ASSUMED FOR ABUTMENT FOUNDATIONS. PILE AND DRILLED SHAFT LENGTHS TO BE DETERMINED.
2. FOR UTILITY DISPOSITION, SEE CIVIL AND GRADE SEPARATION PLANS; DRAWING CV-S1460-B.
3. FOR TRACK SUPERELEVATION DETAILS, SEE ALIGNMENT AND TYPICAL SECTION PLANS; DRAWINGS TT-B0055-B AND TT-B0057-B.

TEMPORARY TRAFFIC OPENINGS

VEHICULAR TRAFFIC

1. __ TRAFFIC WILL BE DETOURED AWAY FROM THE SITE.
2. X TRAFFIC WILL PASS UNDER THE STRUCTURE ON:

ST OR ROAD NAME AND LOCATION		FALSEWORK OPENING REQD (HORIZ X VERT)	
ROAD 19	15033+38	32'x15.5'	2-WAY

3. __ TEMP TRAFFIC LANE REDUCTION FOR FTG EXC.

LEGEND:

- INDICATES POINT OF MINIMUM VERTICAL CLEARANCE
- INDICATES DIRECTION OF TRAFFIC
- (1) STRUCTURE APPROACH
- (2) SLOPE PAVING (1½H:1V)

10 0 10 20
1"=10'

30 0 30 60
1"=30'

REV	DATE	BY	CHK	APP	DESCRIPTION

DESIGNED BY S. J. S.
DRAWN BY R. M.
CHECKED BY O. EDEWOR
IN CHARGE C. LEMLEY
DATE 05/08/2015

RECORD SET
15% DESIGN
SUBMITTAL

NOT FOR
CONSTRUCTION

PARSONS

CALIFORNIA
HIGH-SPEED RAIL AUTHORITY

CALIFORNIA HIGH-SPEED TRAIN PROJECT
MERCED TO FRESNO SECTION
CENTRAL VALLEY WYE
SR 152 (NORTH) TO ROAD 19 WYE ALTERNATIVE
GENERAL PLAN (MER-FRE)
ROAD 19 UNDERPASS

CONTRACT NO. HSR08-05
DRAWING NO. ST-K1465-B
SCALE AS SHOWN
SHEET NO.

MF-ST-K1465-B.dgn
17-MAR-2016 09:38
p005133A

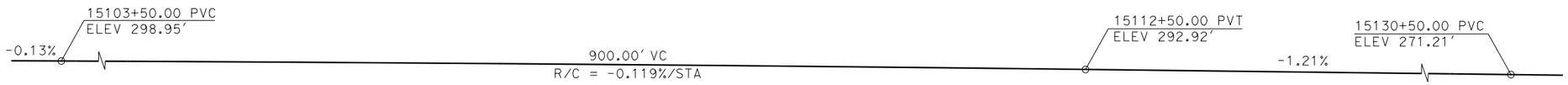

TOP OF RAIL PROFILE (℄ HST SB TRACK)

NO SCALE

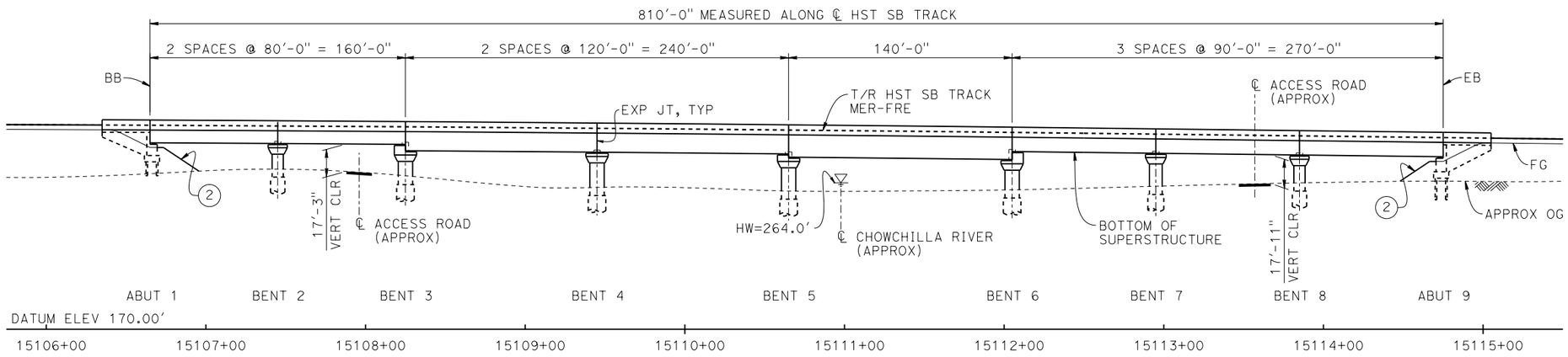

DEVELOPED ELEVATION

(SB BRIDGE SHOWN, NB BRIDGE SIMILAR)
1" = 40'

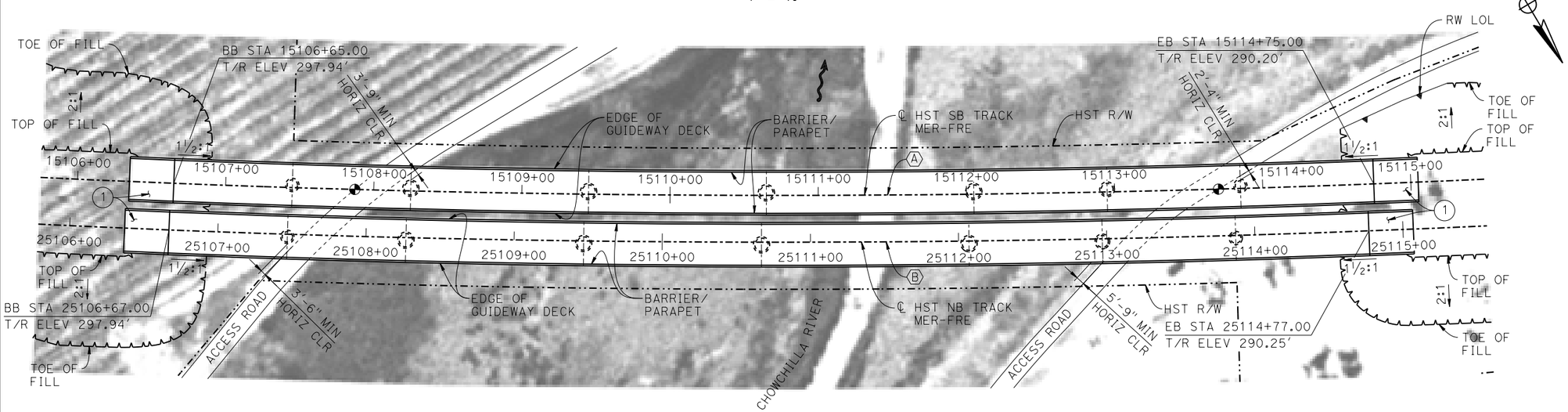

PLAN

1" = 40'

TEMPORARY TRAFFIC OPENINGS

VEHICULAR TRAFFIC

1. __ TRAFFIC WILL BE DETOURED AWAY FROM THE SITE.
2. X TRAFFIC WILL PASS UNDER THE STRUCTURE ON:

ST OR ROAD NAME AND LOCATION		FALSEWORK OPENING REQD (HORIZ X VERT)	
ACCESS ROAD	15107+96	20'X16.5'	-
ACCESS ROAD	15113+57	20'X16.5'	-

3. __ TEMP TRAFFIC LANE REDUCTION FOR FTG EXC.

LEGEND:

- INDICATES POINT OF MINIMUM VERTICAL CLEARANCE
- INDICATES DIRECTION OF FLOW
- (1) STRUCTURE APPROACH
- (2) SLOPE PAVING (1½H:1V)

NOTES:

1. 16" Ø PIPE PILES ASSUMED FOR ABUTMENT FOUNDATIONS. PILE LENGTHS TO BE DETERMINED.
2. FOR TYPICAL SECTION, SEE DRAWING ST-K3480-B.
3. ANY EXISTING DIRT ROAD THAT CONFLICTS WITH NEW CONSTRUCTION SHALL BE REALIGNED.
4. FOR UTILITY DISPOSITIONS, SEE CIVIL AND GRADE SEPARATION PLANS; DRAWINGS CV-S1470-B AND CV-S1480-B.
5. FOR RETAINING WALL, SEE CIVIL AND GRADE SEPARATION PLANS; DRAWINGS CV-S1470-B AND CV-S1480-B.

CURVE MER-FRE 2 SB (A)
R = 10,300.00'
LS = 1,200.00'

CURVE MER-FRE 2 NB (B)
R = 10,300.00'
LS = 1,200.00'

40 0 40 80
1"=40'

REV	DATE	BY	CHK	APP	DESCRIPTION

DESIGNED BY S. J. S.
DRAWN BY A. M.
CHECKED BY O. EDEWOR
IN CHARGE C. LEMLEY
DATE 02/13/2015

RECORD SET
15% DESIGN
SUBMITTAL

NOT FOR CONSTRUCTION

PARSONS

CALIFORNIA HIGH-SPEED RAIL AUTHORITY

CALIFORNIA HIGH-SPEED TRAIN PROJECT
MERCED TO FRESNO SECTION
CENTRAL VALLEY WYE
SR 152 (NORTH) TO ROAD 19 WYE ALTERNATIVE
GENERAL PLAN (MER-FRE)
CHOWCHILLA RIVER BRIDGE - 1 OF 2

CONTRACT NO. HSR08-05
DRAWING NO. ST-K1480-B
SCALE AS SHOWN
SHEET NO.

MF-ST-K1480-B.dgn
09-FEB-2015 09:29
p0051330

BENT COLUMN SCHEDULE		
BENT	COLUMN TYPE	CIDH TYPE
2	7'-0" ø	9'-0" ø
3 - 6	9'-0" ø	11'-0" ø
7	8'-0" ø	10'-0" ø
8	7'-0" ø	9'-0" ø

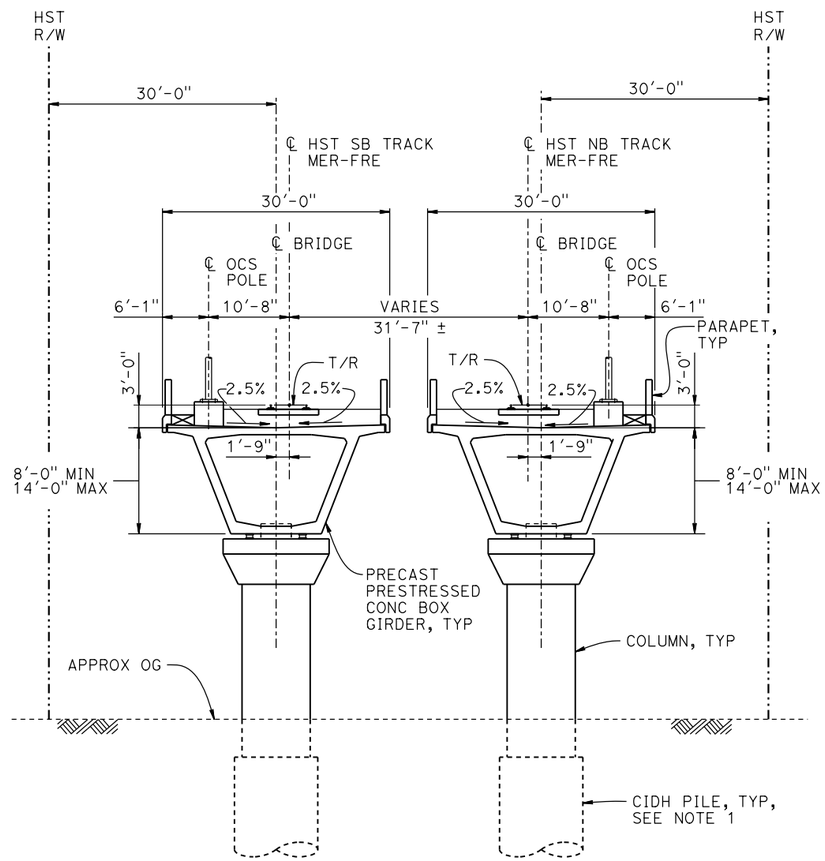

TYPICAL SECTION

1" = 10'

NOTES:

1. DRILLED SHAFT LENGTHS TO BE DETERMINED.
2. FOR TRACK SUPERELEVATION DETAILS, SEE ALIGNMENT AND TYPICAL SECTION PLANS; DRAWINGS TT-B0055-B AND TT-B0057-B.

10 0 10 20
1"=10'

MF-ST-K3480-B.dgn

07-FEB-2015 10:12

p0036110

REV	DATE	BY	CHK	APP	DESCRIPTION

DESIGNED BY S. J. S.
DRAWN BY A. M.
CHECKED BY O. EDEWOR
IN CHARGE C. LEMLEY
DATE 02/13/2015

RECORD SET
15% DESIGN SUBMITTAL

NOT FOR CONSTRUCTION

PARSONS

CALIFORNIA HIGH-SPEED RAIL AUTHORITY

CALIFORNIA HIGH-SPEED TRAIN PROJECT
MERCED TO FRESNO SECTION
CENTRAL VALLEY WYE
SR 152 (NORTH) TO ROAD 19 WYE ALTERNATIVE
TYPICAL SECTION (MER-FRE)
CHOWCHILLA RIVER BRIDGE - 2 OF 2

CONTRACT NO. HSR08-05
DRAWING NO. ST-K3480-B
SCALE AS SHOWN
SHEET NO.

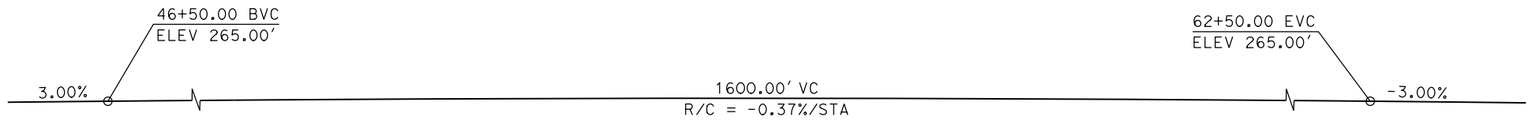

PROFILE GRADE

NO SCALE

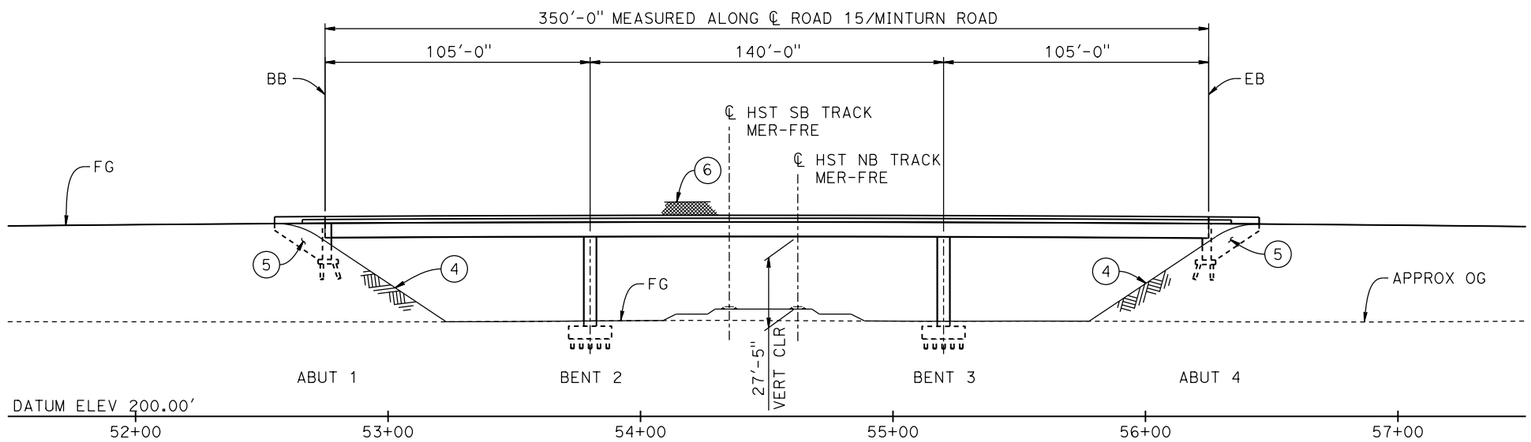

DEVELOPED ELEVATION

1" = 30'

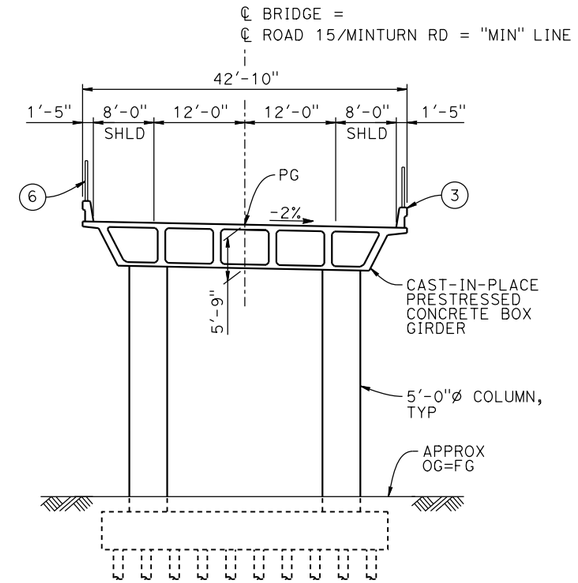

TYPICAL SECTION

1" = 10'

CURVE NO. 510-02 (A)

R = 6,000.00'
Δ = 21°04'15"
L = 2,206.52'
T = 1,115.67'

CURVE MER-FRE 3 SB (B)

R = 22,177.00'
LS = 1,720.00'

CURVE MER-FRE 3 NB (C)

R = 22,150.00'
LS = 1,720.00'

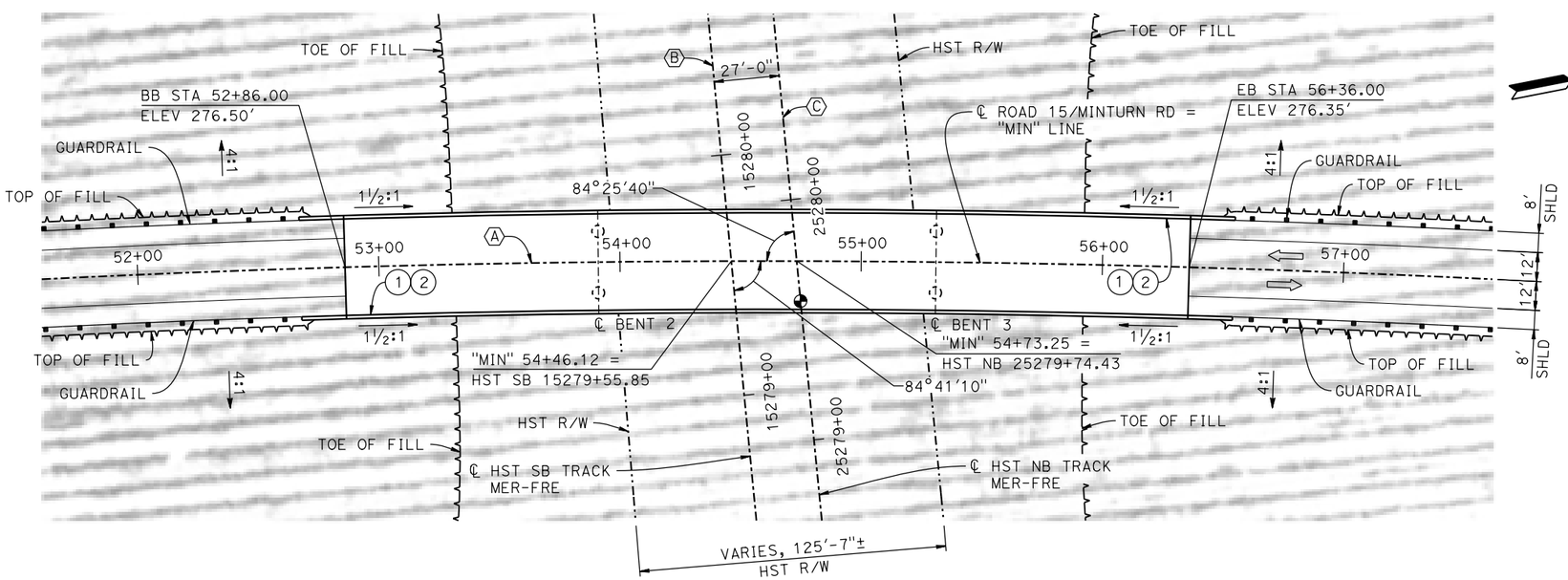

PLAN

1" = 30'

LEGEND:

- ◕ INDICATES POINT OF MINIMUM VERTICAL CLEARANCE
- ⇨ INDICATES DIRECTION OF TRAFFIC
- (1) PAINT "MINTURN ROAD OVERHEAD"
- (2) PAINT "BRIDGE NO. XX-XXXX"
- (3) CONCRETE BARRIER TYPE 736 MOD
- (4) SLOPE PAVING (1½H:1V)
- (5) WINGWALL
- (6) AR FENCE WITH SOLID PLATE

NOTE:

1. ASSUME CLASS 140 PILES AT ABUTMENT AND BENT FOUNDATIONS. PILE LENGTHS TO BE DETERMINED.
2. FOR GUARDRAILS, SEE CIVIL AND GRADE SEPARATION PLANS; DRAWING CV-S1510-B.
3. FOR UTILITY DISPOSITIONS, SEE CIVIL AND GRADE SEPARATION PLANS; DRAWING CV-S1510-B.

10 0 10 20 — 1"=10'

30 0 30 60 — 1"=30'

REV	DATE	BY	CHK	APP	DESCRIPTION

DESIGNED BY S. J. S.
DRAWN BY J. KIDWELL
CHECKED BY O. EDEWOR
IN CHARGE C. LEMLEY
DATE 02/13/2015

RECORD SET
15% DESIGN
SUBMITTAL

NOT FOR
CONSTRUCTION

PARSONS

CALIFORNIA
HIGH-SPEED RAIL AUTHORITY

CALIFORNIA HIGH-SPEED TRAIN PROJECT
MERCED TO FRESNO SECTION
CENTRAL VALLEY WYE
SR 152 (NORTH) TO ROAD 19 WYE ALTERNATIVE
GENERAL PLAN (MER-FRE)
MINTURN ROAD (ROAD 15) OVERHEAD

CONTRACT NO. HSR08-05
DRAWING NO. ST-K1510-B
SCALE AS SHOWN
SHEET NO.

07-FEB-2015 11:04 MF-ST-K1510-B.dgn p0036110

TOP OF RAIL PROFILE (℄ HST SB TRACK)

NO SCALE

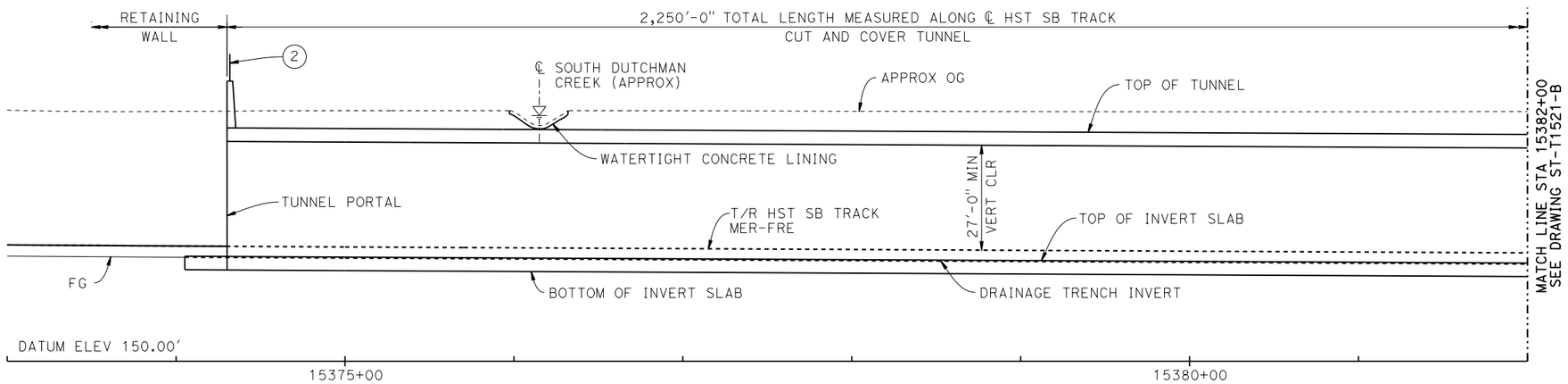

DEVELOPED LONGITUDINAL SECTION

VERT: 1"= 20' HORIZ: 1"=40'

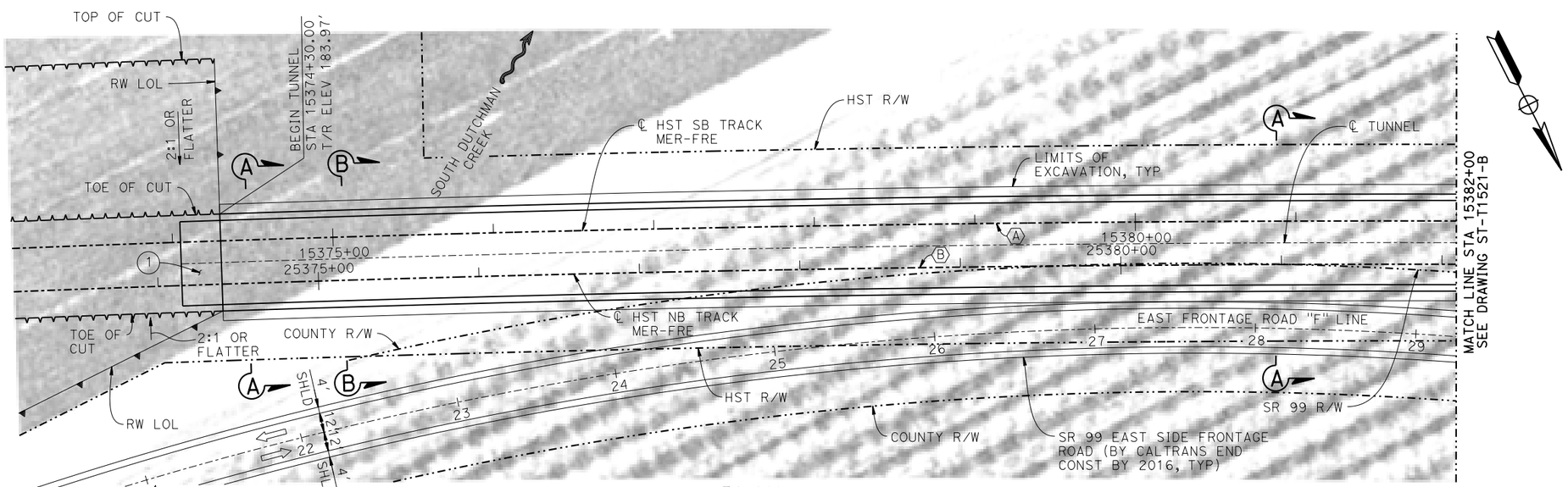

PLAN

1" = 40'

CURVE MER-FRE 3 SB (A)

R = 22,177.00'
LS = 1,720.00'

CURVE MER-FRE 3 NB (B)

R = 22,150.00'
LS = 1,720.00'

NOTES:

1. FOR SECTIONS, SEE DRAWINGS ST-T3520-B AND ST-T3521-B.
2. FOR UTILITY DISPOSITIONS, SEE CIVIL AND GRADE SEPARATION PLANS; DRAWINGS CV-S1520-B AND CV-S1530-B.
3. FOR RETAINING WALLS, SEE CIVIL AND GRADE SEPARATION PLANS; DRAWINGS CV-S1520-B AND CV-S1530-B.
4. FOR PORTAL FACILITIES, ACCESS AND EGRESS, SEE CIVIL AND GRADE SEPARATION PLANS; DRAWINGS CV-S1520-B, CV-S1530-B, AND CV-S1540-B.
5. FOR VENTILATION STRUCTURES, SEE TPF, INTERLOCKING, AND RADIO SITE PLANS; DRAWING ME-S1540-B.

LEGEND:

- ⇨ INDICATES DIRECTION OF TRAFFIC
- INDICATES DIRECTION OF FLOW
- (1) STRUCTURE APPROACH
- (2) AR FENCE WITH SOLID PLATE

20 0 20 40
1"=20'

40 0 40 80
1"=40'

REV	DATE	BY	CHK	APP	DESCRIPTION

DESIGNED BY O. EDEWOR
DRAWN BY J. C.
CHECKED BY S. J. S.
IN CHARGE C. LEMLEY
DATE 03/18/2016

RECORD SET
15% DESIGN SUBMITTAL

NOT FOR CONSTRUCTION

PARSONS

CALIFORNIA HIGH-SPEED RAIL AUTHORITY

CALIFORNIA HIGH-SPEED TRAIN PROJECT
MERCED TO FRESNO SECTION
CENTRAL VALLEY WYE
SR 152 (NORTH) TO ROAD 19 WYE ALTERNATIVE
GENERAL PLAN (MER-FRE)
CUT AND COVER TUNNEL AT SR 99 - 1 OF 5

CONTRACT NO. HSR08-05
DRAWING NO. ST-T1520-B
SCALE AS SHOWN
SHEET NO.

MF-ST-T1520-B.dgn
10-MAR-2016 7:19
p005133a

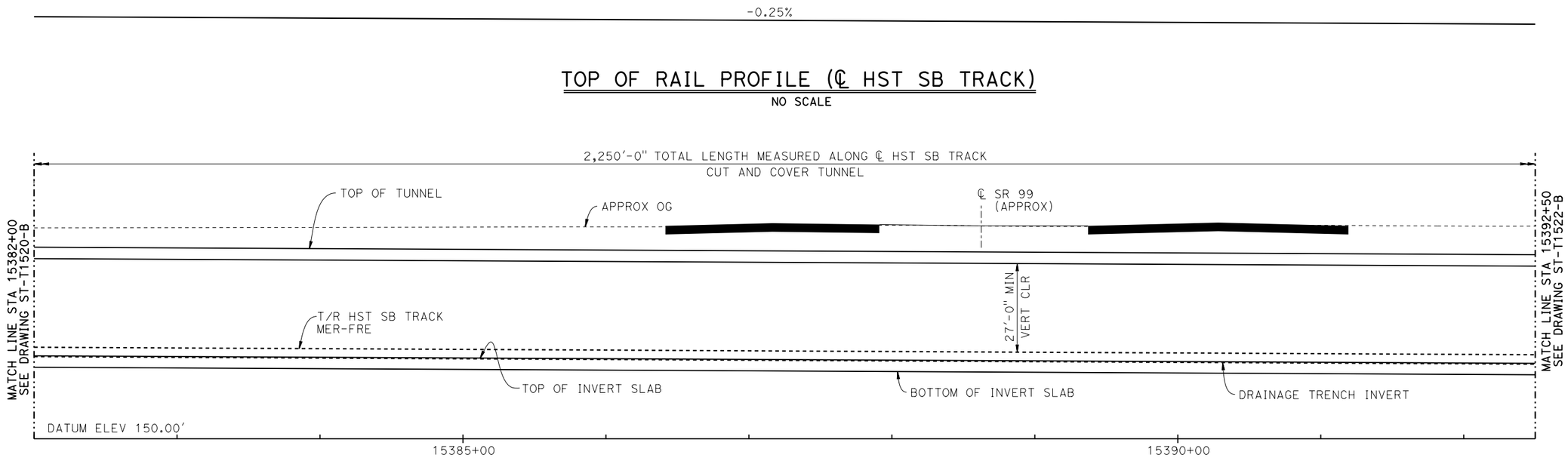

DEVELOPED LONGITUDINAL SECTION

VERT: 1"=20' HORIZ: 1"= 40'

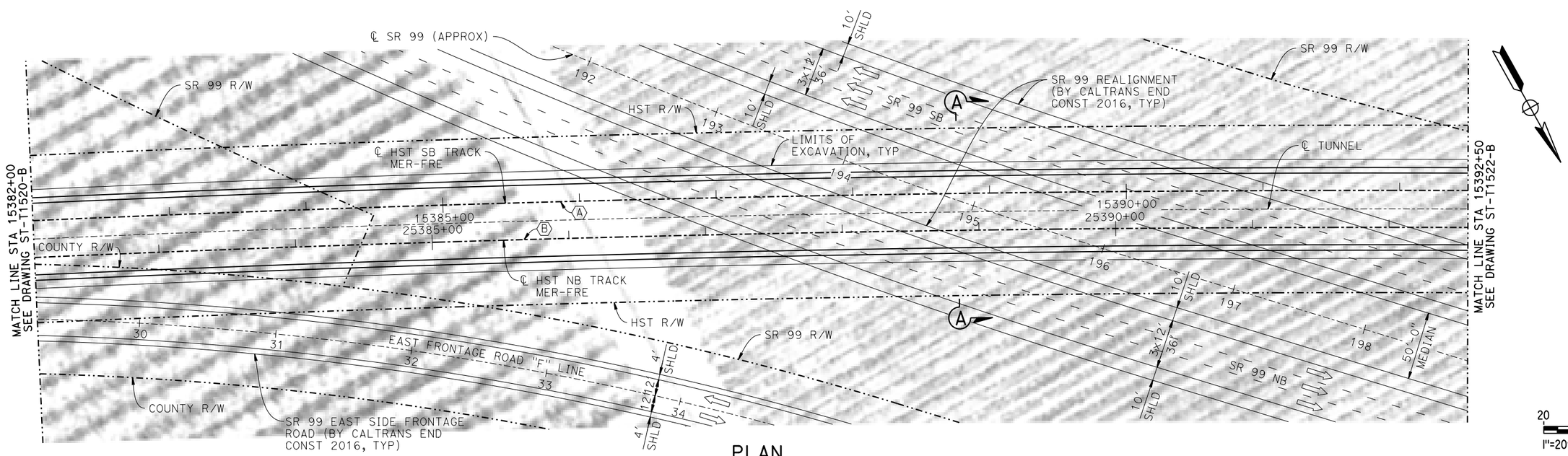

PLAN

1" = 40'

20 0 20 40
1"=20'

40 0 40 80
1"=40'

REV	DATE	BY	CHK	APP	DESCRIPTION

DESIGNED BY O. EDEWOR
DRAWN BY J. C.
CHECKED BY S. J. S.
IN CHARGE C. LEMLEY
DATE 03/18/2016

RECORD SET 15% DESIGN SUBMITTAL

NOT FOR CONSTRUCTION

PARSONS

CALIFORNIA HIGH-SPEED RAIL AUTHORITY

CALIFORNIA HIGH-SPEED TRAIN PROJECT
MERCED TO FRESNO SECTION

CENTRAL VALLEY WYE
SR 152 (NORTH) TO ROAD 19 WYE ALTERNATIVE
GENERAL PLAN (MER-FRE)
CUT AND COVER TUNNEL AT SR 99 - 2 OF 5

CONTRACT NO. HSR08-05
DRAWING NO. ST-T1521-B
SCALE AS SHOWN
SHEET NO.

MF-ST-T1521-B.dgn 10-MAR-2016 7:21 p0051330

TOP OF RAIL PROFILE (℄ HST SB TRACK)

NO SCALE

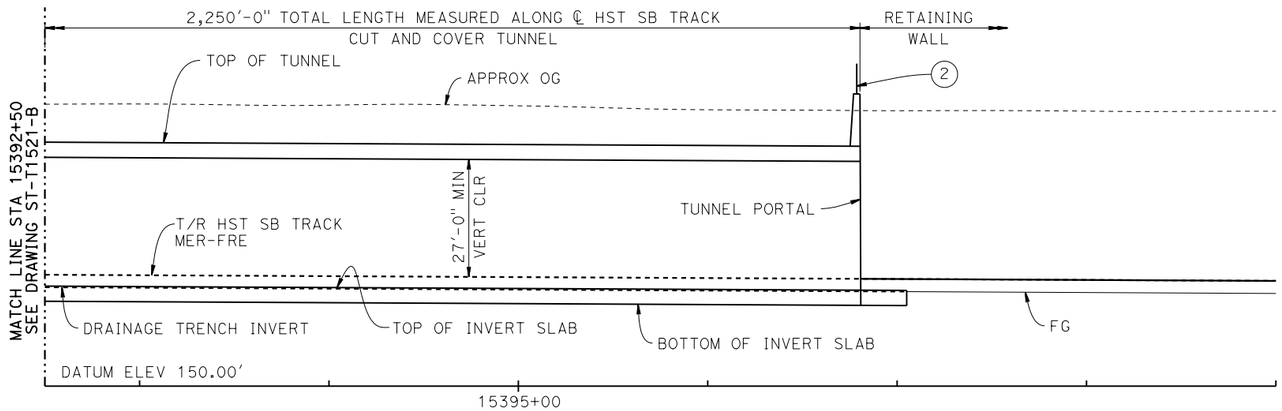

DEVELOPED LONGITUDINAL SECTION

VERT: 1"=20' HORIZ: 1"= 40'

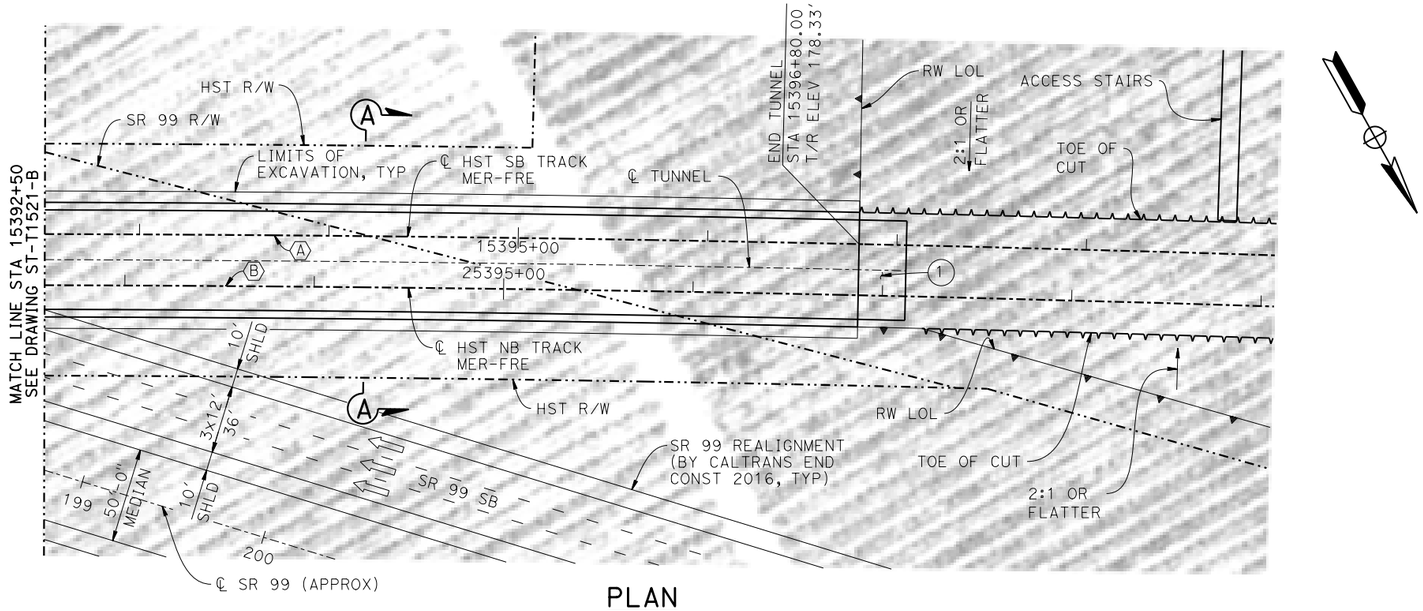

PLAN

1" = 40'

20 0 20 40
1"=20'

40 0 40 80
1"=40'

REV	DATE	BY	CHK	APP	DESCRIPTION

DESIGNED BY O. EDEWOR
DRAWN BY J. C.
CHECKED BY S. J. S.
IN CHARGE C. LEMLEY
DATE 03/18/2016

RECORD SET
15% DESIGN SUBMITTAL

NOT FOR CONSTRUCTION

PARSONS

CALIFORNIA HIGH-SPEED RAIL AUTHORITY

CALIFORNIA HIGH-SPEED TRAIN PROJECT
MERCED TO FRESNO SECTION
CENTRAL VALLEY WYE
SR 152 (NORTH) TO ROAD 19 WYE ALTERNATIVE
GENERAL PLAN (MER-FRE)
CUT AND COVER TUNNEL AT SR 99 - 3 OF 5

CONTRACT NO. HSR08-05
DRAWING NO. ST-T1522-B
SCALE AS SHOWN
SHEET NO.

p005133a 10-MAR-2016 7:22 MF-ST-T1522-B.dgn

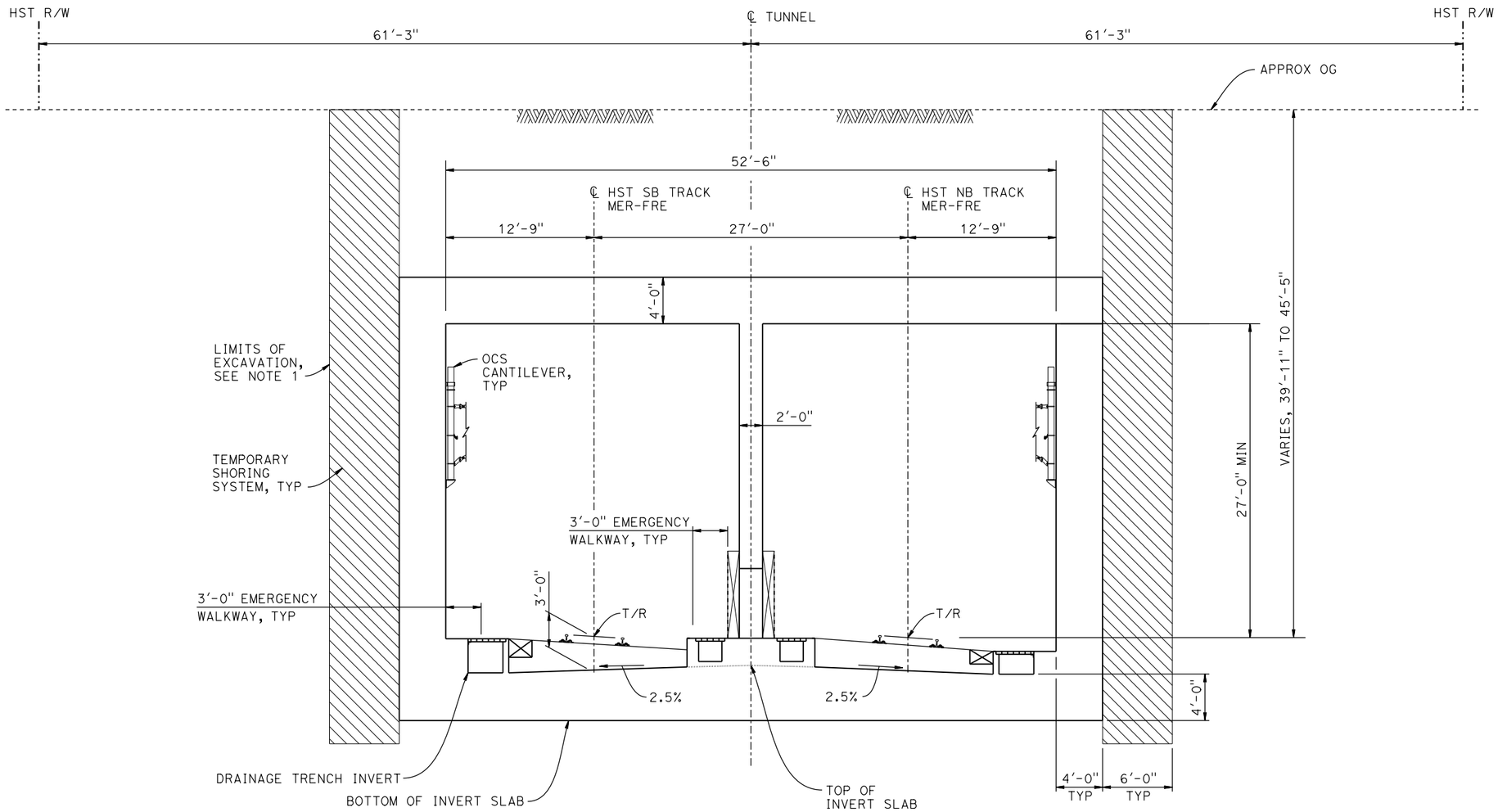

SECTION A-A

3/16"=1'-0"

NOTES:

1. LIMITS OF EXCAVATION SHALL NOT EXTEND BEYOND HST R/W.
2. TUNNEL FINAL LINING SHALL BE WATERTIGHT FOR PERMANENT CASE.
3. FOR TRACK SUPERELEVATION DETAILS, SEE ALIGNMENT AND TYPICAL SECTION PLANS; DRAWINGS TT-B0055-B AND TT-B0057-B.

1 0 4 12

3/16"=1'-0"

REV	DATE	BY	CHK	APP	DESCRIPTION

DESIGNED BY O. EDEWOR
DRAWN BY J. C.
CHECKED BY S. J. S.
IN CHARGE C. LEMLEY
DATE 02/13/2015

RECORD SET
15% DESIGN
SUBMITTAL

NOT FOR
CONSTRUCTION

PARSONS

CALIFORNIA
HIGH-SPEED RAIL AUTHORITY

CALIFORNIA HIGH-SPEED TRAIN PROJECT
MERCED TO FRESNO SECTION
CENTRAL VALLEY WYE
SR 152 (NORTH) TO ROAD 19 WYE ALTERNATIVE
TYPICAL SECTION (MER-FRE)
CUT AND COVER TUNNEL AT SR 99 - 4 OF 5

CONTRACT NO. HSR08-05
DRAWING NO. ST-T3520-B
SCALE AS SHOWN
SHEET NO.

07-FEB-2015 10:19 MF-ST-T3520-B.dgn
p0036110

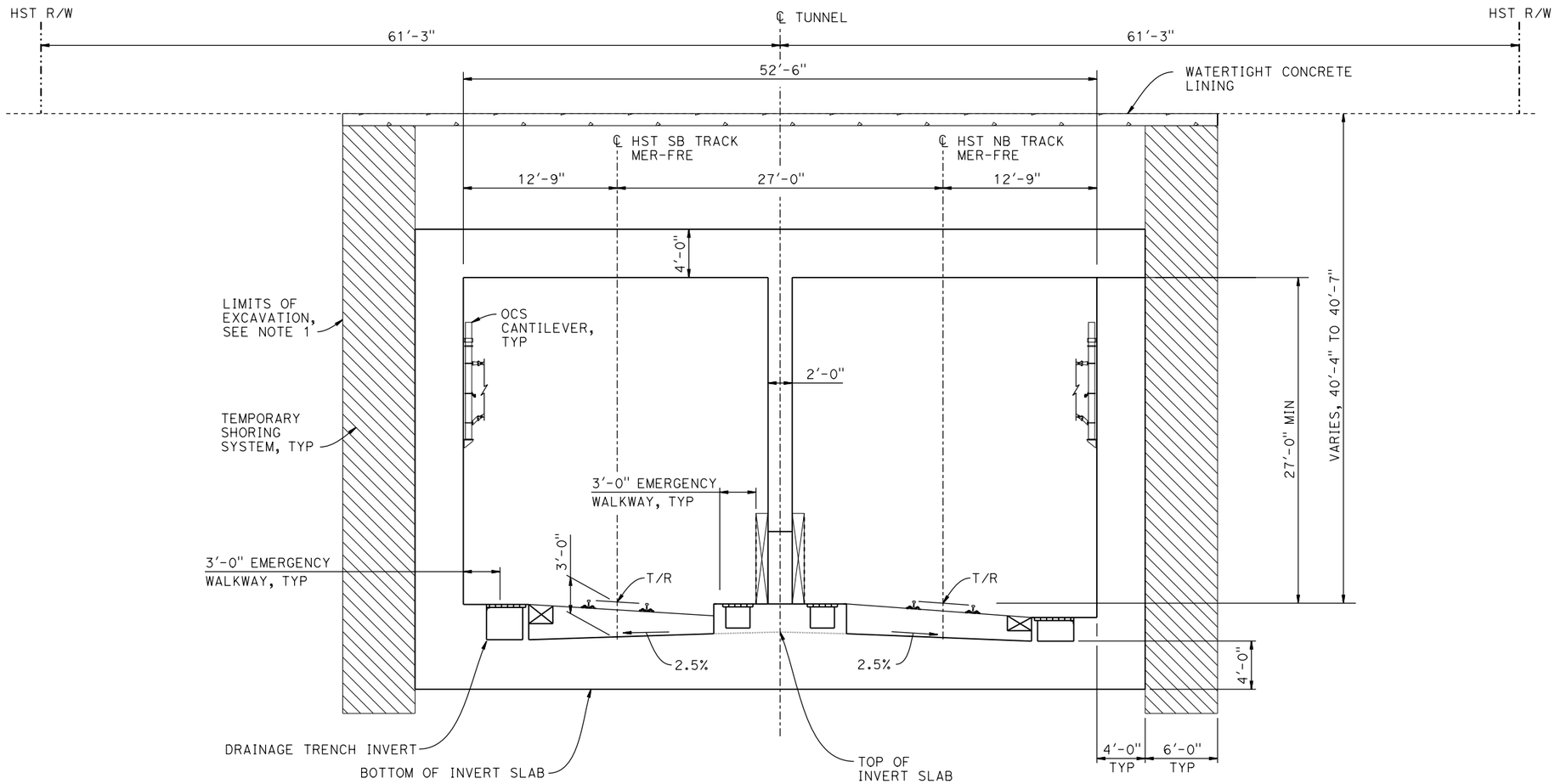

SECTION B-B

3/16"=1'-0"

NOTES:

1. LIMITS OF EXCAVATION SHALL NOT EXTEND BEYOND HST R/W.
2. TUNNEL FINAL LINING SHALL BE WATERTIGHT FOR PERMANENT CASE.
3. FOR TRACK SUPERELEVATION DETAILS, SEE ALIGNMENT AND TYPICAL SECTION PLANS; DRAWINGS TT-B0055-B AND TT-B0057-B.

1 0 4 12

3/16"=1'-0"

REV	DATE	BY	CHK	APP	DESCRIPTION

DESIGNED BY O. EDEWOR
DRAWN BY J. C.
CHECKED BY S. J. S.
IN CHARGE C. LEMLEY
DATE 02/13/2015

RECORD SET
15% DESIGN SUBMITTAL

NOT FOR CONSTRUCTION

PARSONS

CALIFORNIA HIGH-SPEED RAIL AUTHORITY

CALIFORNIA HIGH-SPEED TRAIN PROJECT
MERCED TO FRESNO SECTION
CENTRAL VALLEY WYE
SR 152 (NORTH) TO ROAD 19 WYE ALTERNATIVE
TYPICAL SECTION (MER-FRE)
CUT AND COVER TUNNEL AT SR 99 - 5 OF 5

CONTRACT NO. HSR08-05
DRAWING NO. ST-T3521-B
SCALE AS SHOWN
SHEET NO.

p0036110 07-FEB-2015 10:19 MF-ST-T3521- B.dgn

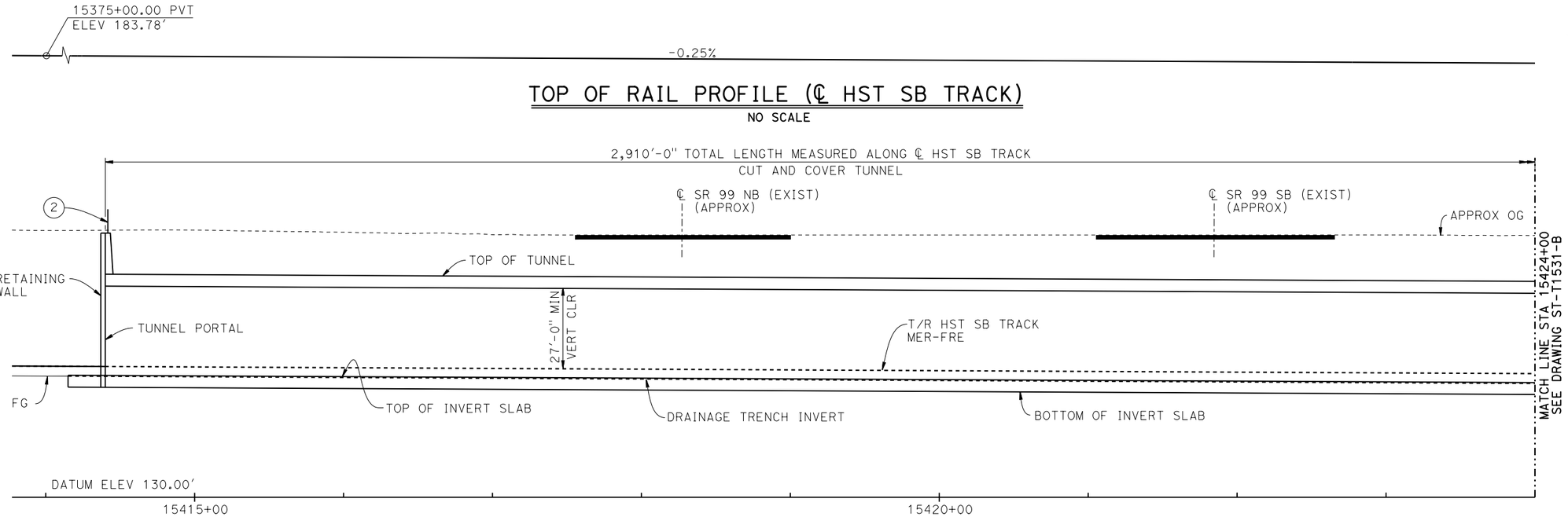

TOP OF RAIL PROFILE (℄ HST SB TRACK)

NO SCALE

DEVELOPED LONGITUDINAL SECTION

VERT: 1"=20' HORIZ: 1"=40'

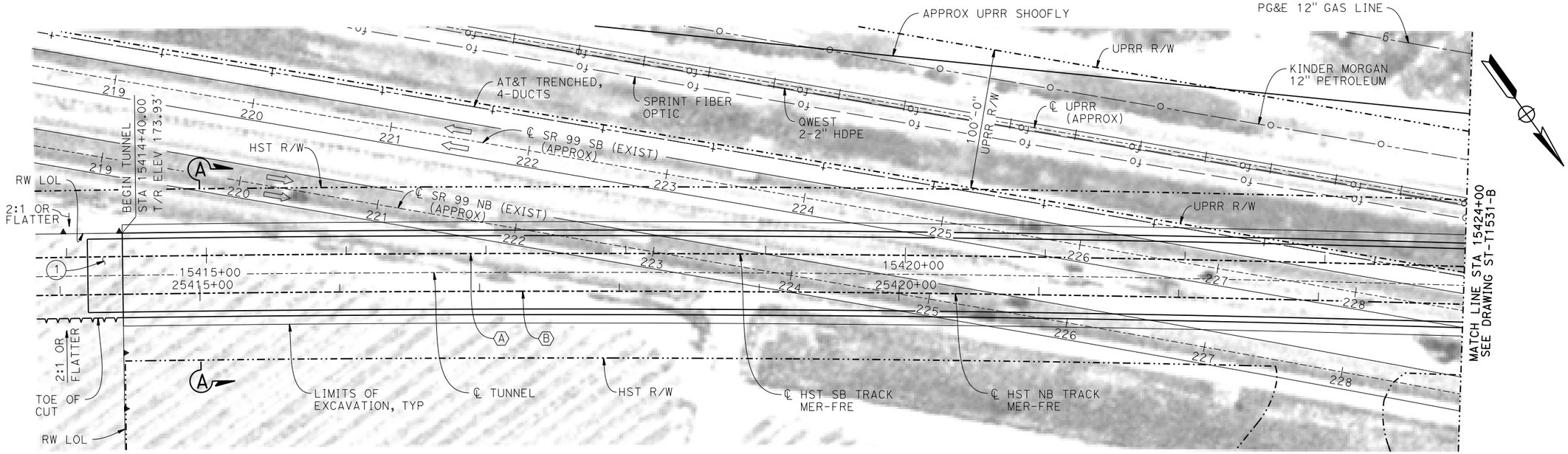

PLAN

1" = 40'

NOTES:

1. FOR SECTIONS, SEE DRAWINGS ST-T3530-B AND ST-T3531-B.
2. FOR UTILITY DISPOSITIONS, SEE CIVIL AND GRADE SEPARATION PLANS; DRAWINGS CV-S1530-B AND CV-S1540-B.
3. FOR RETAINING WALLS, SEE CIVIL AND GRADE SEPARATION PLANS; DRAWINGS CV-S1530-B AND CV-S1540-B.
4. FOR PORTAL FACILITIES, ACCESS AND EGRESS, SEE CIVIL AND GRADE SEPARATION PLANS; DRAWINGS CV-S1530-B AND CV-S1540-B.
5. FOR VENTILATION STRUCTURES, SEE TPF, INTERLOCKING, AND RADIO SITE PLANS; DRAWING ME-S1540-B.

LEGEND:

- ⇨ INDICATES DIRECTION OF TRAFFIC
- INDICATES DIRECTION OF FLOW
- (1) STRUCTURE APPROACH
- (2) AR FENCE WITH SOLID PLATE

CURVE MER-FRE 3 SB (A)

R = 22,177.00'
LS = 1,720.00'

CURVE MER-FRE 3 NB (B)

R = 22,150.00'
LS = 1,720.00'

20 0 20 40
1"=20'

40 0 40 80
1"=40'

REV	DATE	BY	CHK	APP	DESCRIPTION

DESIGNED BY O. EDEWOR
DRAWN BY J. P.
CHECKED BY S. J. S.
IN CHARGE C. LEMLEY
DATE 03/18/2016

RECORD SET 15% DESIGN SUBMITTAL

NOT FOR CONSTRUCTION

PARSONS

CALIFORNIA HIGH-SPEED RAIL AUTHORITY

CALIFORNIA HIGH-SPEED TRAIN PROJECT
MERCED TO FRESNO SECTION
CENTRAL VALLEY WYE
SR 152 (NORTH) TO ROAD 19 WYE ALTERNATIVE
GENERAL PLAN (MER-FRE)
CUT AND COVER TUNNEL AT UPRR - 1 OF 5

CONTRACT NO. HSR08-05
DRAWING NO. ST-T1530-B
SCALE AS SHOWN
SHEET NO.

MF-ST-T1530-B.dgn 10-MAR-2016 7:24 p005133a

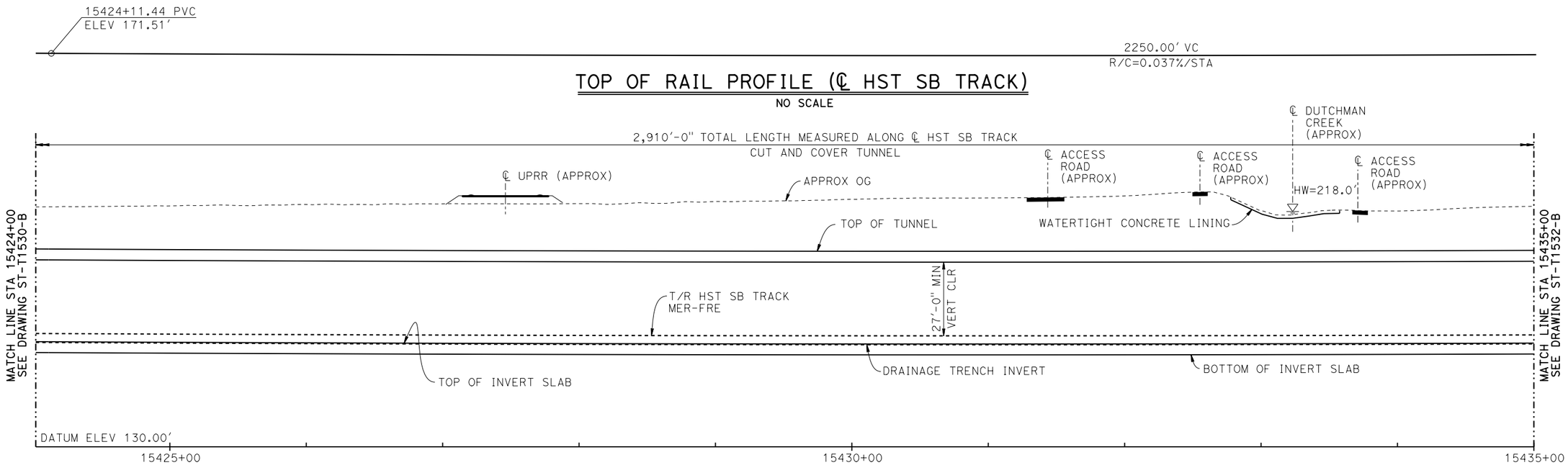

TOP OF RAIL PROFILE (℄ HST SB TRACK)

NO SCALE

DEVELOPED LONGITUDINAL SECTION

VERT:1"=20 HORIZ: 1"=40'

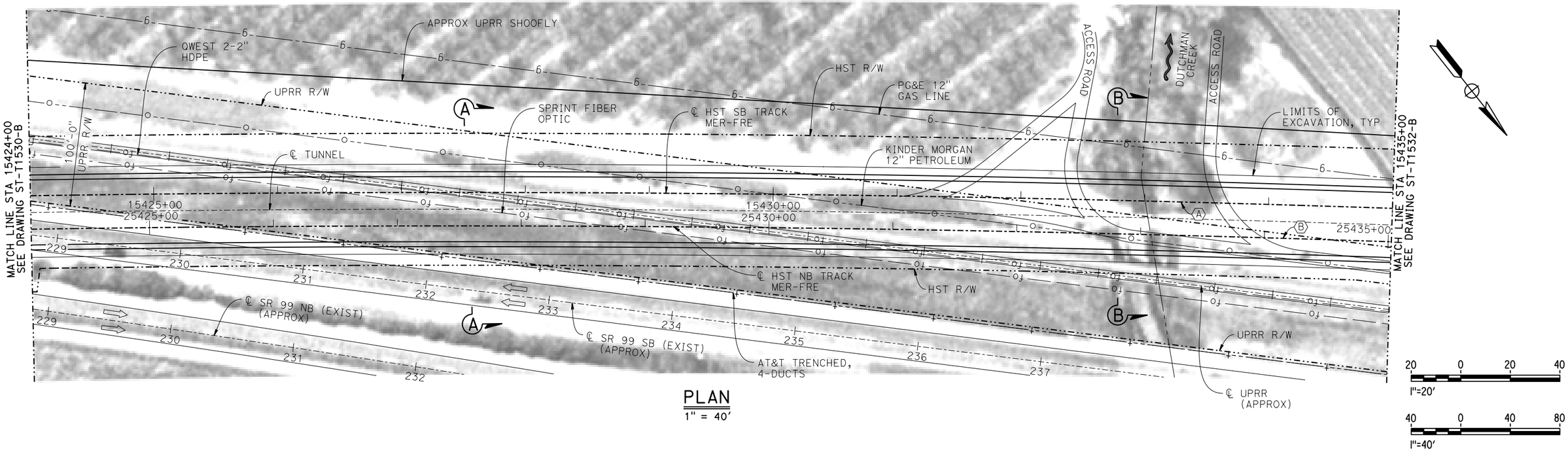

PLAN

1" = 40'

REV	DATE	BY	CHK	APP	DESCRIPTION

DESIGNED BY O. EDEWOR
DRAWN BY J. P.
CHECKED BY S. J. S.
IN CHARGE C. LEMLEY
DATE 03/18/2016

RECORD SET
15% DESIGN SUBMITTAL

NOT FOR CONSTRUCTION

PARSONS

CALIFORNIA HIGH-SPEED RAIL AUTHORITY

CALIFORNIA HIGH-SPEED TRAIN PROJECT
MERCED TO FRESNO SECTION
CENTRAL VALLEY WYE
SR 152 (NORTH) TO ROAD 19 WYE ALTERNATIVE
GENERAL PLAN (MER-FRE)
CUT AND COVER TUNNEL AT UPRR - 2 OF 5

CONTRACT NO. HSR08-05
DRAWING NO. ST-T1531-B
SCALE AS SHOWN
SHEET NO.

MF-ST-T1531-B.dgn 10-MAR-2016 7:25 p0051133a

TOP OF RAIL PROFILE (℄ HST SB TRACK)

NO SCALE

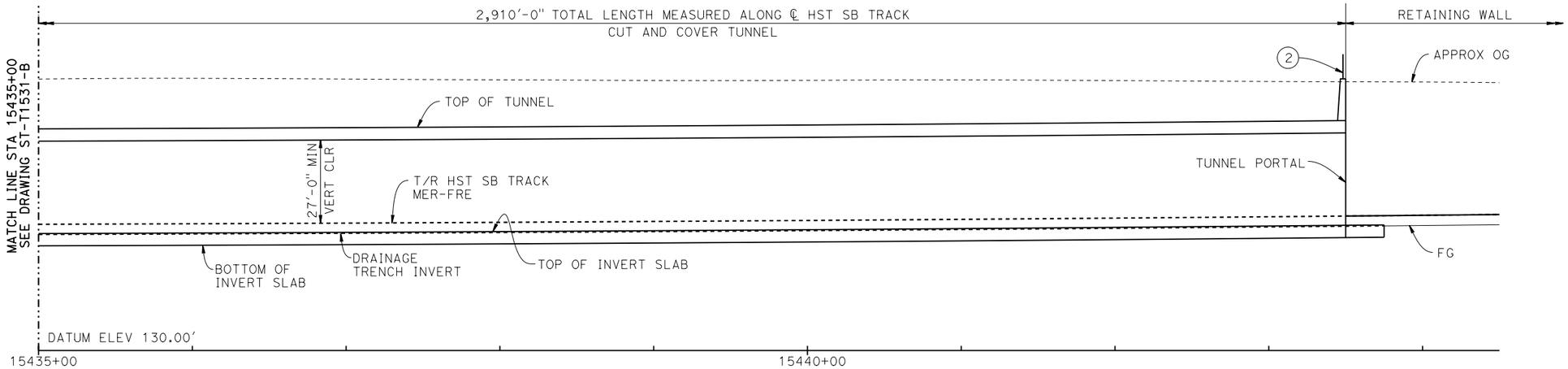

DEVELOPED LONGITUDINAL SECTION

VERT: 1"=20' HORIZ: 1"=40'

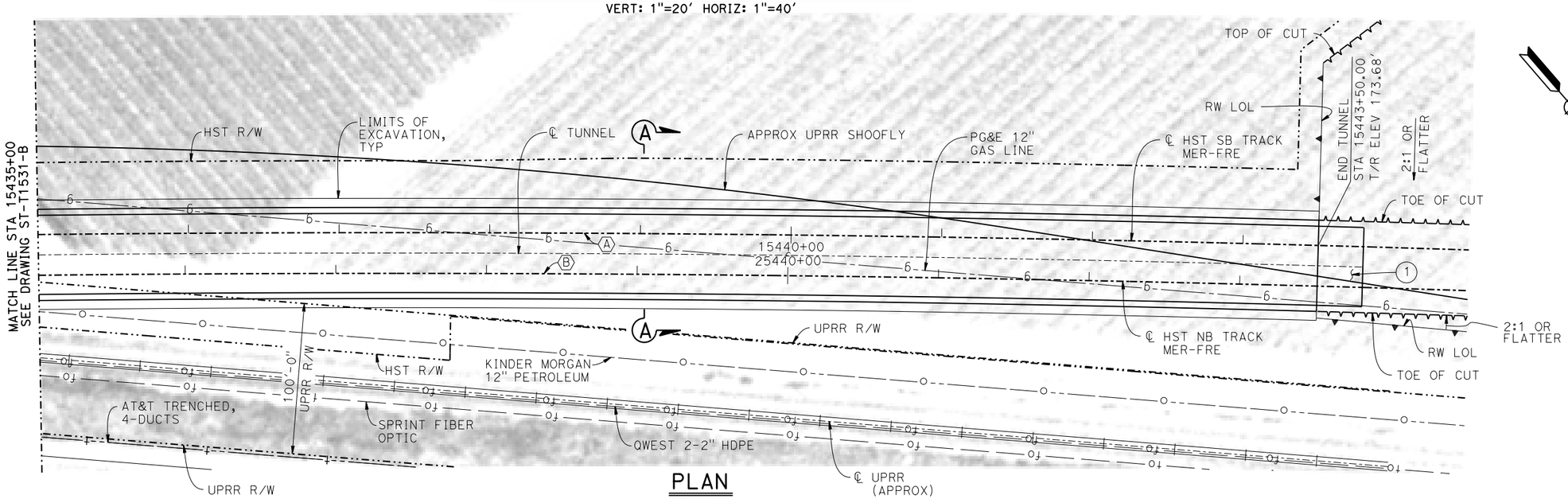

PLAN

1" = 40'

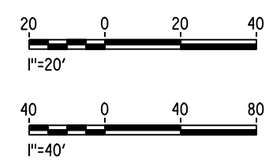

REV	DATE	BY	CHK	APP	DESCRIPTION

DESIGNED BY O. EDEWOR
DRAWN BY J. P.
CHECKED BY S. J. S.
IN CHARGE C. LEMLEY
DATE 03/18/2016

RECORD SET
15% DESIGN SUBMITTAL

NOT FOR CONSTRUCTION

PARSONS

CALIFORNIA HIGH-SPEED RAIL AUTHORITY

CALIFORNIA HIGH-SPEED TRAIN PROJECT
MERCED TO FRESNO SECTION
CENTRAL VALLEY WYE
SR 152 (NORTH) TO ROAD 19 WYE ALTERNATIVE
GENERAL PLAN (MER-FRE)
CUT AND COVER TUNNEL AT UPRR - 3 OF 5

CONTRACT NO. HSR08-05
DRAWING NO. ST-T1532-B
SCALE AS SHOWN
SHEET NO.

p005133a 10-MAR-2016 7:26 MF-ST-T1532-B.dgn

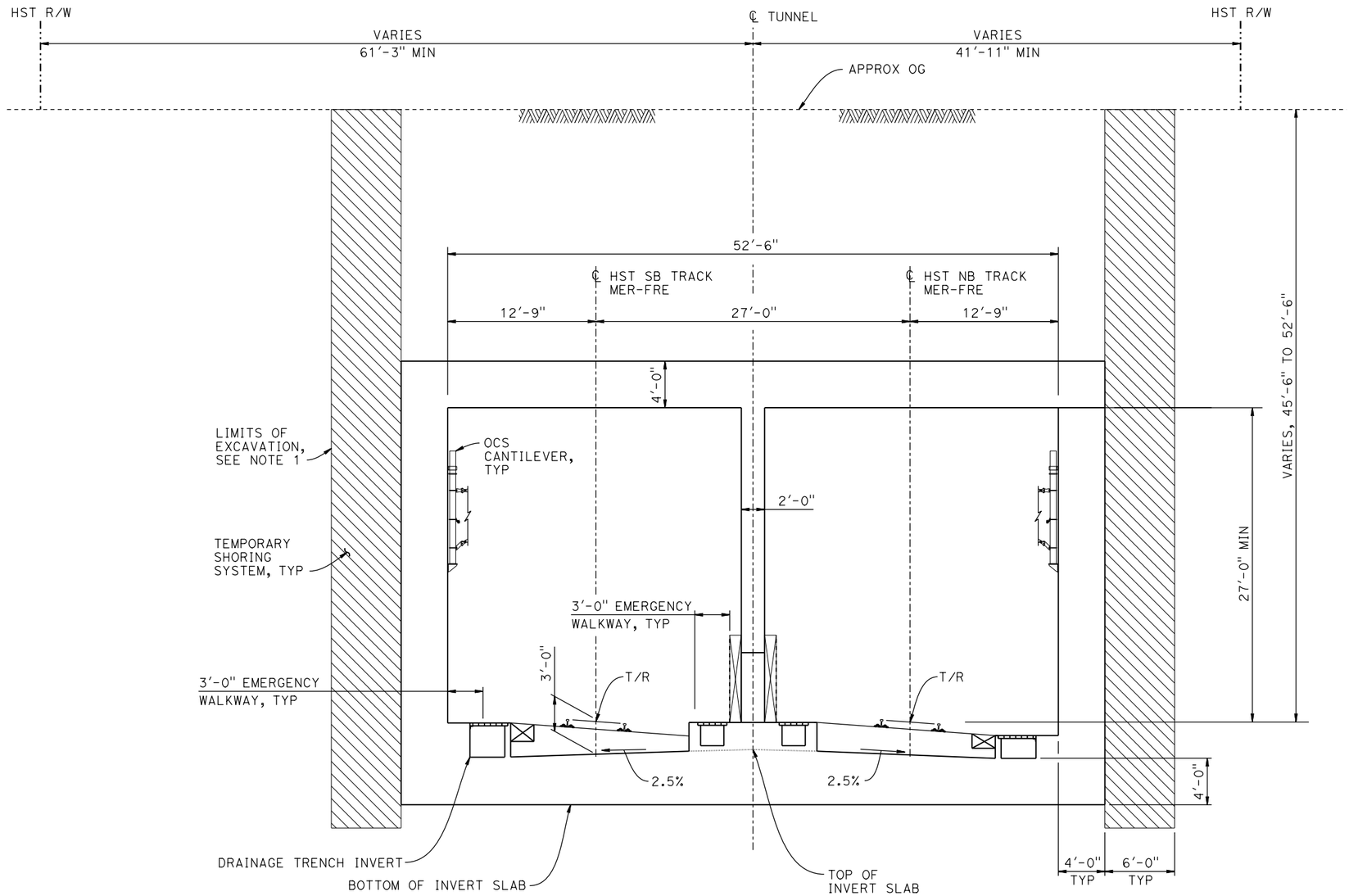

SECTION A-A

3/16"=1'-0"

NOTES:

1. LIMITS OF EXCAVATION SHALL NOT EXTEND BEYOND HST R/W.
2. TUNNEL FINAL LINING SHALL BE WATERTIGHT FOR PERMANENT CASE.
3. FOR TRACK SUPERELEVATION DETAILS, SEE ALIGNMENT AND TYPICAL SECTION PLANS; DRAWINGS TT-B0055-B AND TT-B0057-B.

1 0 4 12

3/16"=1'-0"

REV	DATE	BY	CHK	APP	DESCRIPTION

DESIGNED BY O. EDEWOR
DRAWN BY J. P.
CHECKED BY S. J. S.
IN CHARGE C. LEMLEY
DATE 02/13/2015

RECORD SET
15% DESIGN
SUBMITTAL

NOT FOR
CONSTRUCTION

PARSONS

CALIFORNIA
HIGH-SPEED RAIL AUTHORITY

CALIFORNIA HIGH-SPEED TRAIN PROJECT
MERCED TO FRESNO SECTION
CENTRAL VALLEY WYE
SR 152 (NORTH) TO ROAD 19 WYE ALTERNATIVE
TYPICAL SECTION (MER-FRE)
CUT AND COVER TUNNEL AT UPRR - 4 OF 5

CONTRACT NO. HSR08-05
DRAWING NO. ST-T3530-B
SCALE AS SHOWN
SHEET NO.

MF-ST-T3530-B.dgn
07-FEB-2015 10:22
p0036110

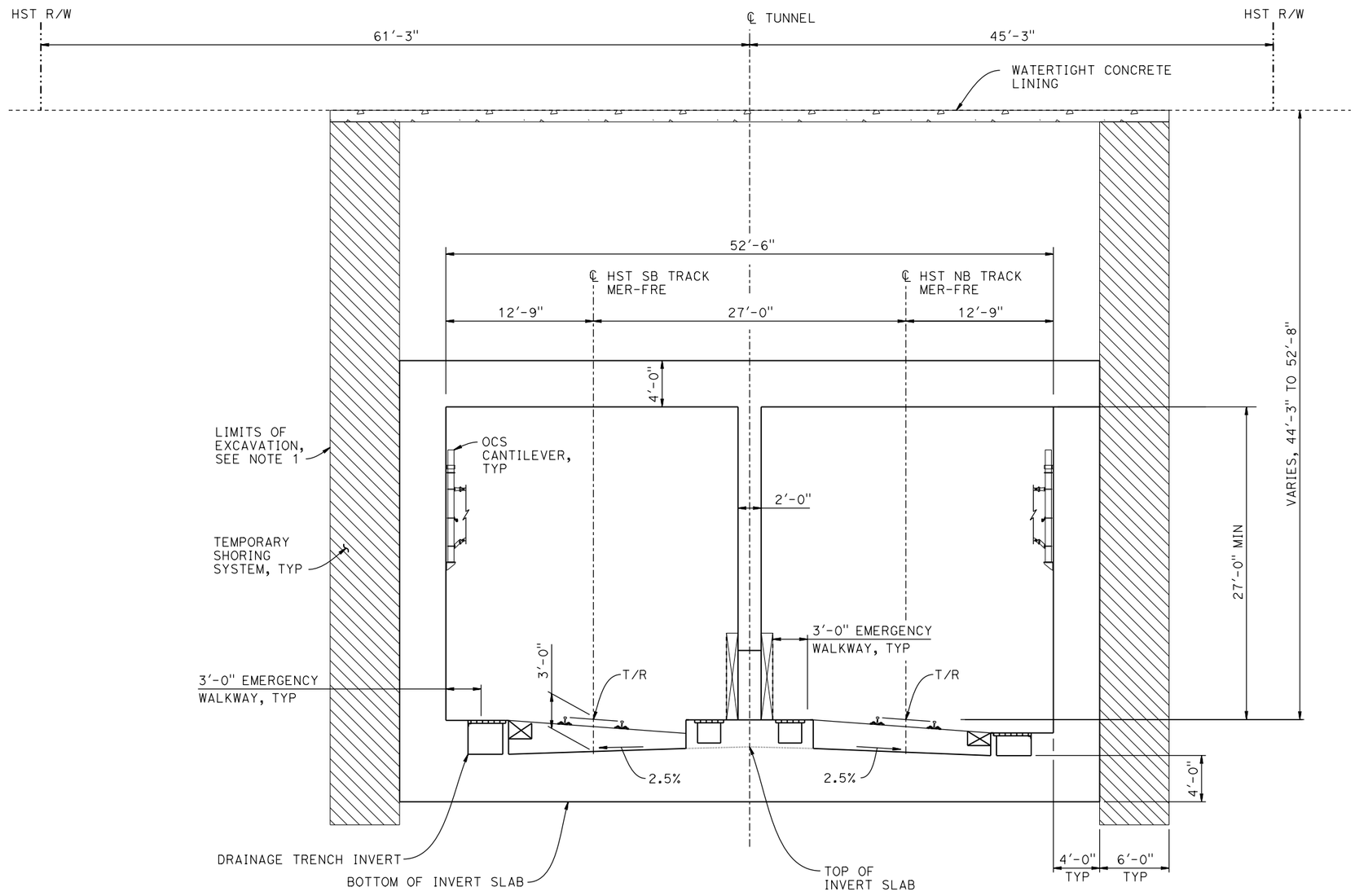

SECTION B-B

3/16"=1'-0"

NOTES:

1. LIMITS OF EXCAVATION SHALL NOT EXTEND BEYOND HST R/W.
2. TUNNEL FINAL LINING SHALL BE WATERTIGHT FOR PERMANENT CASE.
3. FOR TRACK SUPERELEVATION DETAILS, SEE ALIGNMENT AND TYPICAL SECTION PLANS; DRAWINGS TT-B0055-B AND TT-B0057-B.

1 0 4 12

3/16"=1'-0"

REV	DATE	BY	CHK	APP	DESCRIPTION

DESIGNED BY O. EDEWOR
DRAWN BY J. P.
CHECKED BY S. J. S.
IN CHARGE C. LEMLEY
DATE 02/13/2015

RECORD SET
15% DESIGN SUBMITTAL

NOT FOR CONSTRUCTION

PARSONS

CALIFORNIA HIGH-SPEED RAIL AUTHORITY

CALIFORNIA HIGH-SPEED TRAIN PROJECT
MERCED TO FRESNO SECTION
CENTRAL VALLEY WYE
SR 152 (NORTH) TO ROAD 19 WYE ALTERNATIVE
TYPICAL SECTION (MER-FRE)
CUT AND COVER TUNNEL AT UPRR - 5 OF 5

CONTRACT NO. HSR08-05
DRAWING NO. ST-T3531-B
SCALE AS SHOWN
SHEET NO.

MF-ST-T3531-B.dgn
07-FEB-2015\0:22
p0036110

TOP OF RAIL PROFILE (℄ HST SB TRACK)

NO SCALE

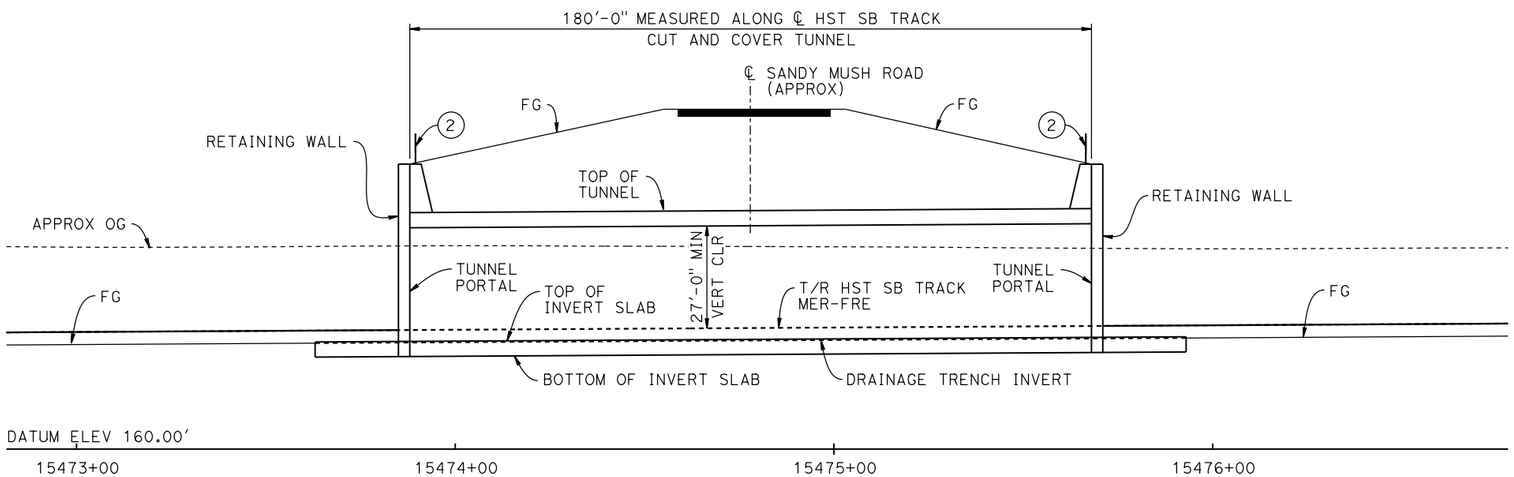

DEVELOPED LONGITUDINAL SECTION

1"=20'

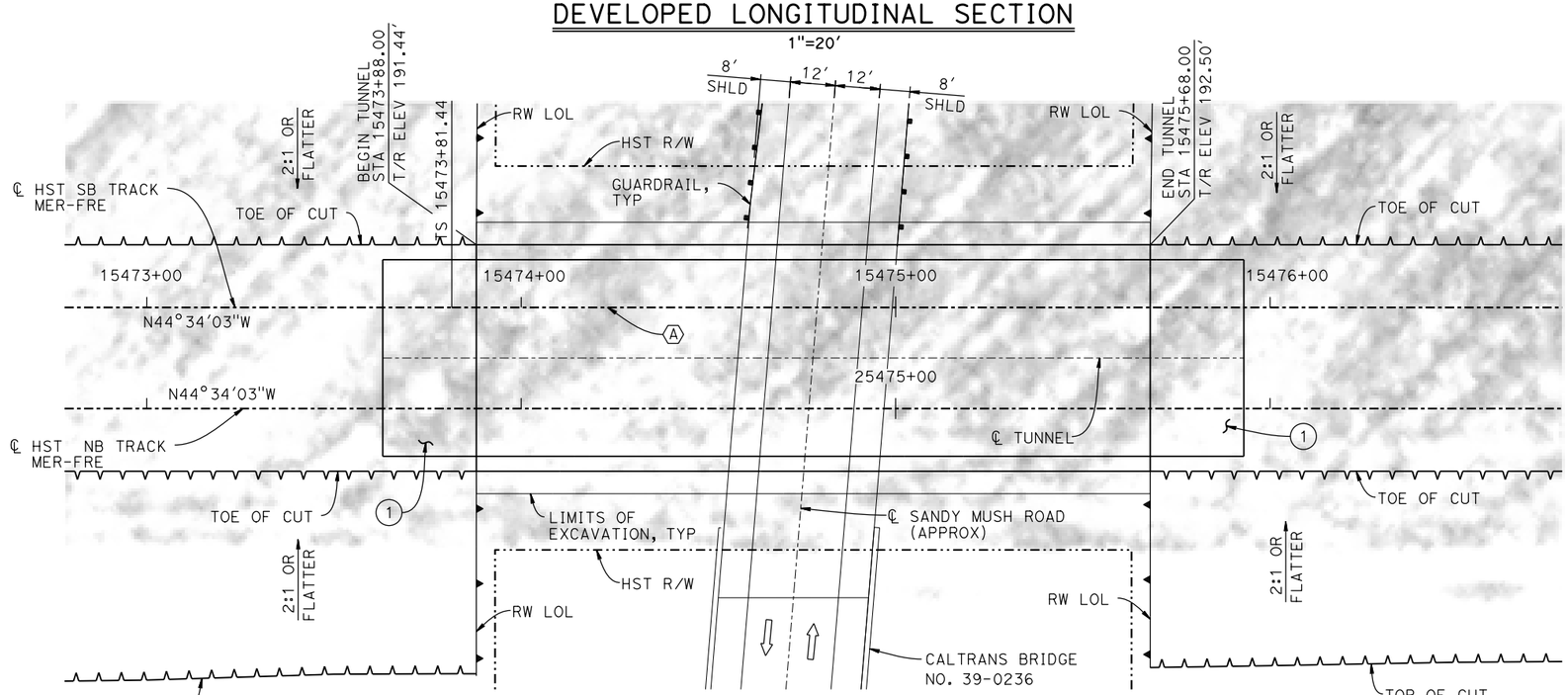

PLAN

1"=20'

CURVE MER-FRE 4 SB (A)

R = 867,000.00'
LS = 1,000.00'

NOTES:

1. FOR SECTION, SEE DRAWING ST-T3540-B.
2. FOR UTILITY DISPOSITIONS, SEE CIVIL AND GRADE SEPARATION PLANS; DRAWING CV-S1540-B.
3. FOR RETAINING WALLS, SEE CIVIL AND GRADE SEPARATION PLANS; DRAWING CV-S1540-B.
4. FOR GUARDRAILS, SEE CIVIL AND GRADE SEPARATION PLANS; DRAWING CV-S1540-B.
5. FOR PORTAL FACILITIES, ACCESS AND EGRESS, SEE CIVIL AND GRADE SEPARATION PLANS; DRAWING CV-S1540-B.
6. FOR VENTILATION STRUCTURES, SEE TPF, INTERLOCKING, AND RADIO SITE PLANS; DRAWING ME-S1540-B.

LEGEND:

⇨ INDICATES DIRECTION OF TRAFFIC

(1) STRUCTURE APPROACH

(2) AR FENCE WITH SOLID PLATE

20 0 20 40
1"=20'

REV	DATE	BY	CHK	APP	DESCRIPTION

DESIGNED BY O. EDEWOR
DRAWN BY A. M.
CHECKED BY S. J. S.
IN CHARGE C. LEMLEY
DATE 02/13/2015

RECORD SET 15% DESIGN SUBMITTAL

NOT FOR CONSTRUCTION

PARSONS

CALIFORNIA HIGH-SPEED RAIL AUTHORITY

CALIFORNIA HIGH-SPEED TRAIN PROJECT
MERCED TO FRESNO SECTION
CENTRAL VALLEY WYE
SR 152 (NORTH) TO ROAD 19 WYE ALTERNATIVE
GENERAL PLAN (MER-FRE)
CUT AND COVER TUNNEL AT SANDY MUSH ROAD - 1 OF 2

CONTRACT NO. HSR08-05
DRAWING NO. ST-T1540-B
SCALE AS SHOWN
SHEET NO.

MF-ST-T1540-B.dgn
07-FEB-2015 10:13
p0036110

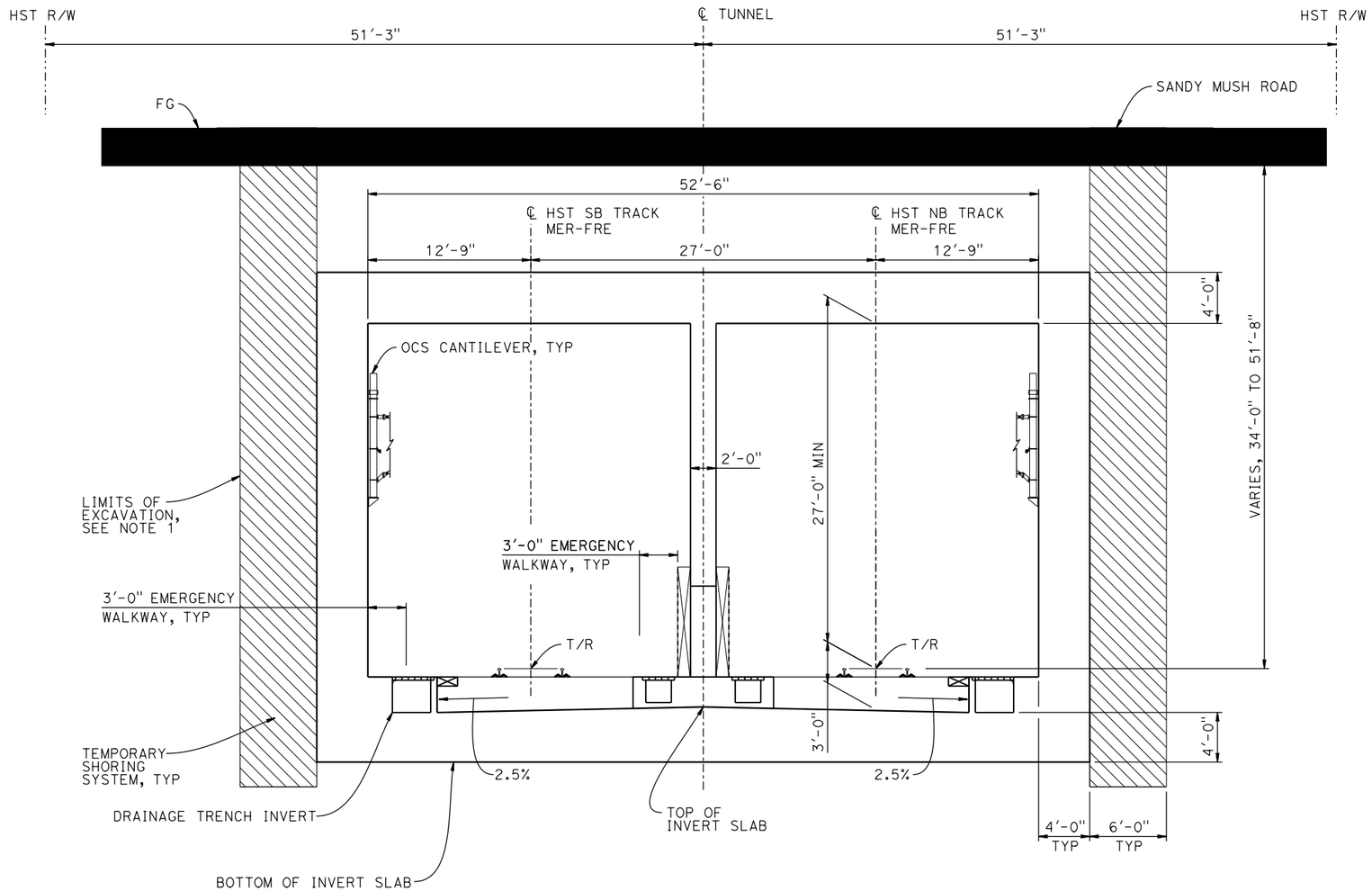

TYPICAL SECTION

3/16" = 1'-0"

NOTES:

1. LIMITS OF EXCAVATION SHALL NOT EXTEND BEYOND HST R/W.
2. TUNNEL FINAL LINING SHALL BE WATERTIGHT FOR PERMANENT CASE.

1 0 4 12

3/16"=1'-0"

REV	DATE	BY	CHK	APP	DESCRIPTION

DESIGNED BY O. EDEWOR
DRAWN BY A. M.
CHECKED BY S. J. S.
IN CHARGE C. LEMLEY
DATE 02/13/2015

RECORD SET
15% DESIGN
SUBMITTAL

NOT FOR
CONSTRUCTION

PARSONS

CALIFORNIA
HIGH-SPEED RAIL AUTHORITY

CALIFORNIA HIGH-SPEED TRAIN PROJECT
MERCED TO FRESNO SECTION
CENTRAL VALLEY WYE
SR 152 (NORTH) TO ROAD 19 WYE ALTERNATIVE
TYPICAL SECTION (MER-FRE)
CUT AND COVER TUNNEL AT SANDY MUSH ROAD - 2 OF 2

CONTRACT NO. HSR08-05
DRAWING NO. ST-T3540-B
SCALE AS SHOWN
SHEET NO.

MF-ST-T3540-B.dgn
07-FEB-2015 10:14
p0036110

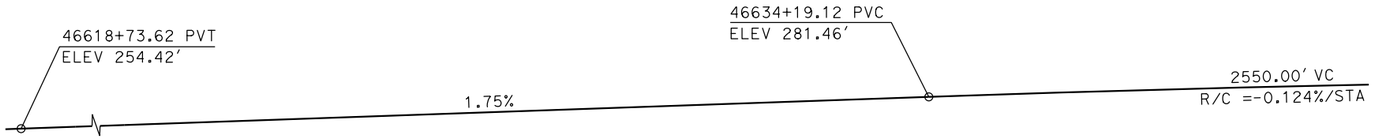

TOP OF RAIL PROFILE (℄ HST NB TRACK SJD-MER)

NO SCALE

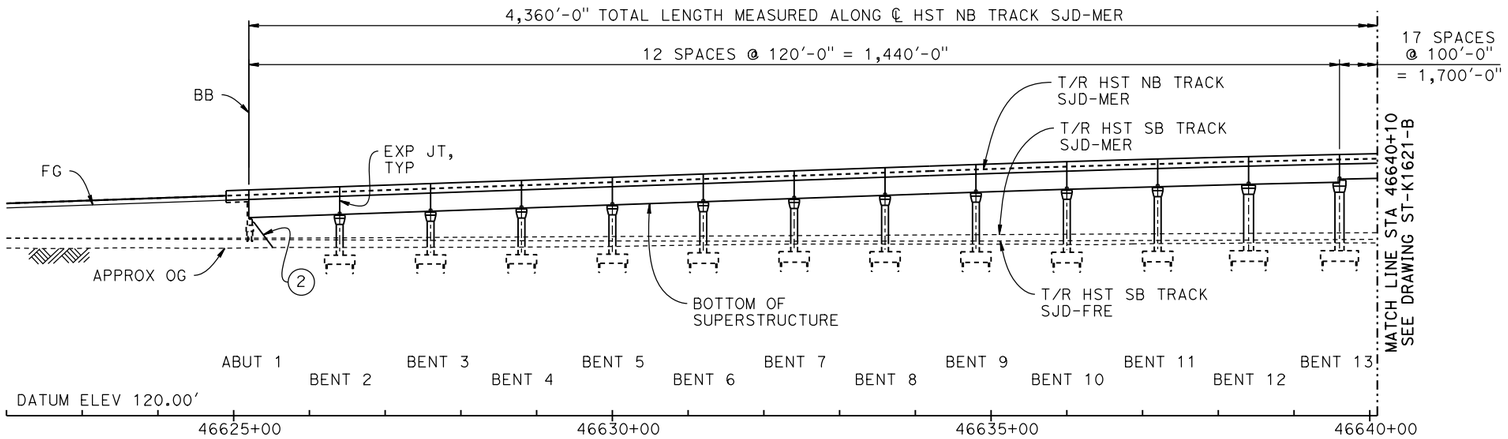

DEVELOPED ELEVATION

VERT: 1" = 50' HORIZ: 1" = 100'

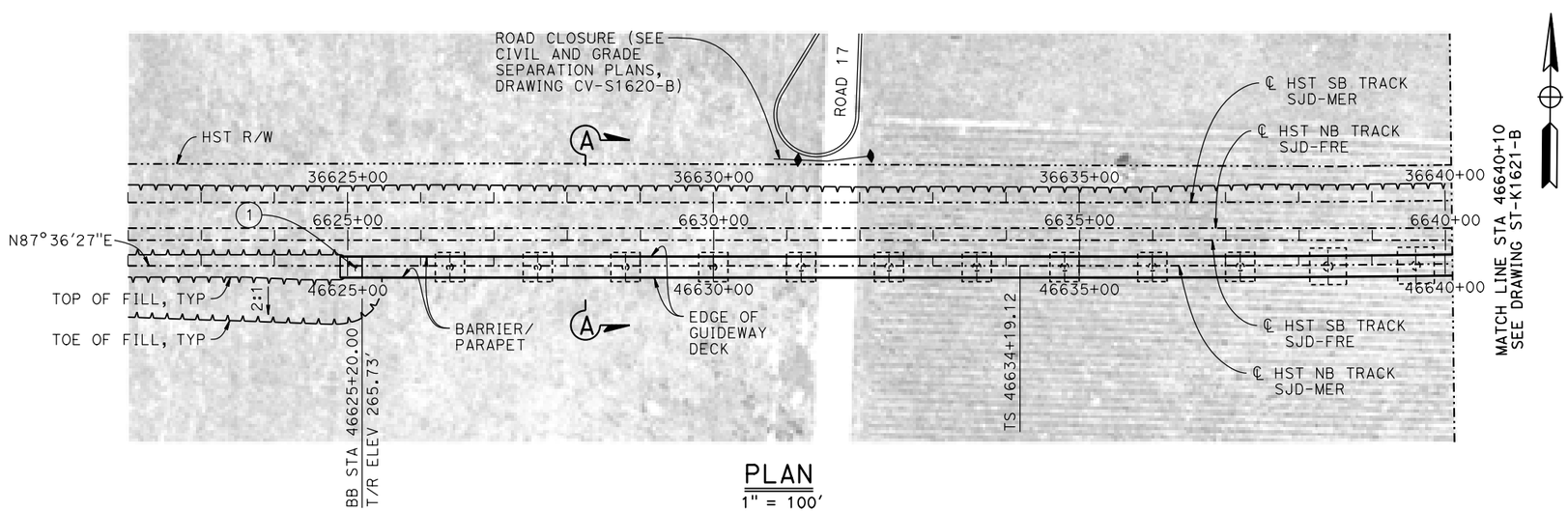

PLAN

1" = 100'

LEGEND:

- ◕ INDICATES POINT OF MINIMUM VERTICAL CLEARANCE
- ⇨ INDICATES DIRECTION OF TRAFFIC
- (1) STRUCTURE APPROACH
- (2) SLOPE PAVING (1½H:1V)

TEMPORARY TRAFFIC OPENINGS

VEHICULAR TRAFFIC

1. __ TRAFFIC WILL BE DETOURED AWAY FROM THE SITE.
2. X TRAFFIC WILL PASS UNDER THE STRUCTURE ON:

ST OR ROAD NAME AND LOCATION		FALSEWORK OPENING REQD (HORIZ X VERT)	
ROAD 17½	46658+39	32'X16.5'	2-WAY

3. __ TEMP TRAFFIC LANE REDUCTION FOR FTG EXC.

NOTES:

1. 16" ø PIPE PILES ASSUMED FOR ABUTMENT AND BENT FOUNDATIONS, UNLESS OTHERWISE NOTED. PILE LENGTHS TO BE DETERMINED.
2. FOR SECTIONS AND BENT COLUMN SCHEDULE, SEE DRAWINGS ST-K3620-B AND ST-K3621-B.
3. ANY EXISTING DIRT ROAD THAT CONFLICTS WITH NEW CONSTRUCTION SHALL BE REALIGNED.
4. FOR UTILITY DISPOSITIONS, SEE CIVIL AND GRADE SEPARATION PLANS; DRAWINGS CV-S1610-B AND CV-S1620-B.
5. FOR ROAD 17½ UNDERPASS (HST SB) GENERAL PLAN AND TYPICAL SECTION, SEE DRAWING ST-K1625-B.
6. FOR ROAD 17½ UNDERPASS GENERAL PLAN AND TYPICAL SECTION, SEE DRAWING ST-K1240-B.

CURVE SJD-MER 1 NB (A)

R = 10,386.50'
LS = 1,200.00'

50 0 50 100
1"=50'

100 0 100 200
1"=100'

REV	DATE	BY	CHK	APP	DESCRIPTION

DESIGNED BY S. J. S.
DRAWN BY W. JOHNSEN
CHECKED BY O. EDEWOR
IN CHARGE C. LEMLEY
DATE 02/13/2015

RECORD SET 15% DESIGN SUBMITTAL

NOT FOR CONSTRUCTION

PARSONS

CALIFORNIA HIGH-SPEED RAIL AUTHORITY

CALIFORNIA HIGH-SPEED TRAIN PROJECT
MERCED TO FRESNO SECTION
CENTRAL VALLEY WYE
SR 152 (NORTH) TO ROAD 19 WYE ALTERNATIVE
GENERAL PLAN (SJD-MER)
AERIAL #4 - NORTHBOUND OVER HST MAINLINE - 1 OF 5

CONTRACT NO. HSR08-05
DRAWING NO. ST-K1620-B
SCALE AS SHOWN
SHEET NO.

MF-ST-K1620-B.dgn 07-FEB-2015 09:54 p0036110

2550.00' VC
R/C =-0.124%/STA

TOP OF RAIL PROFILE (℄ HST NB TRACK SJD-MER)

NO SCALE

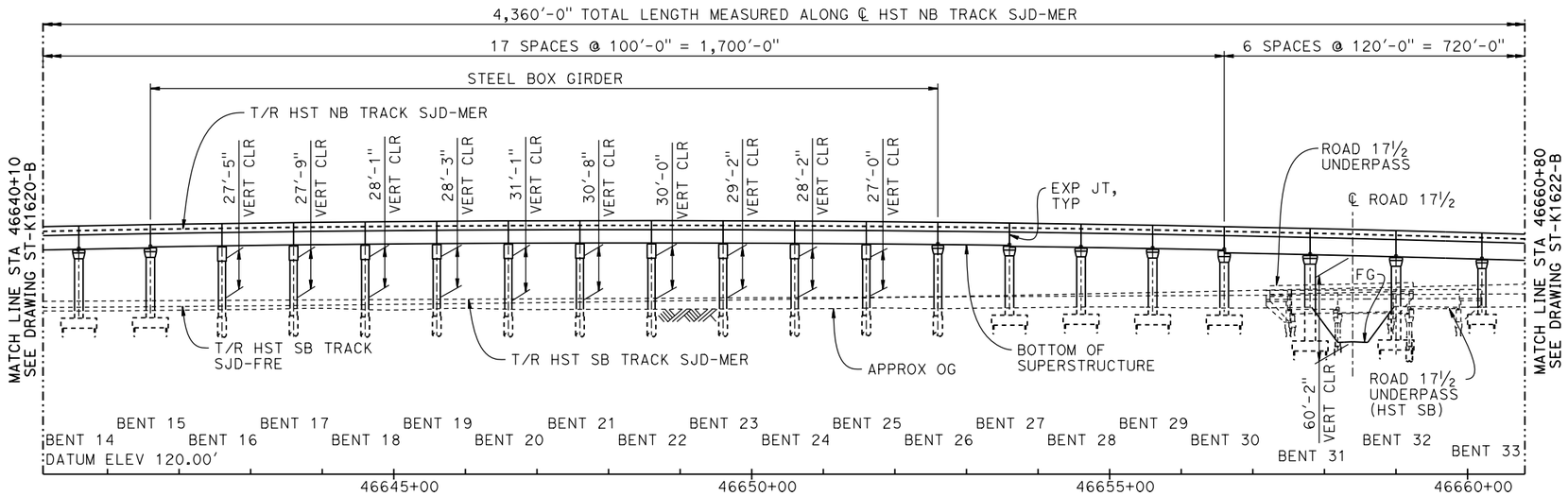

DEVELOPED ELEVATION

VERT: 1" = 50' HORIZ: 1" = 100'

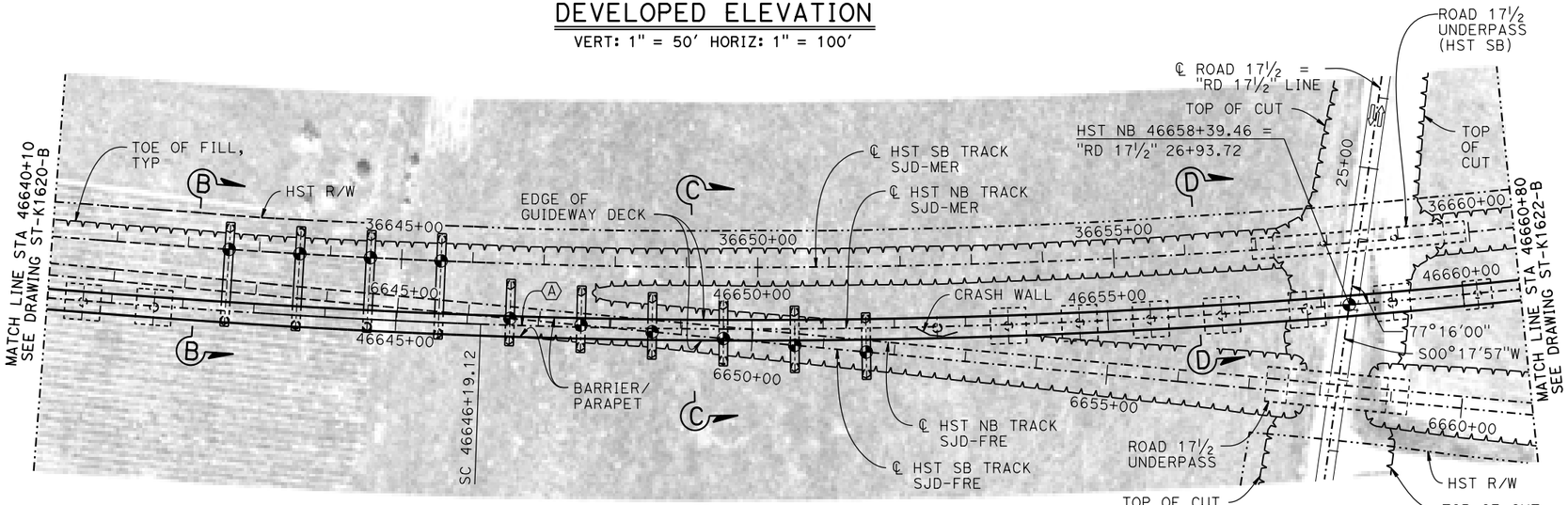

PLAN

1" = 100'

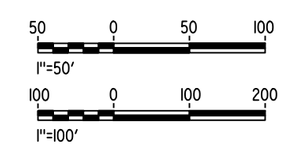

REV	DATE	BY	CHK	APP	DESCRIPTION

DESIGNED BY S. J. S.
DRAWN BY W. JOHNSEN
CHECKED BY O. EDEWOR
IN CHARGE C. LEMLEY
DATE 02/13/2015

RECORD SET
15% DESIGN SUBMITTAL

NOT FOR CONSTRUCTION

PARSONS

CALIFORNIA HIGH-SPEED RAIL AUTHORITY

CALIFORNIA HIGH-SPEED TRAIN PROJECT
MERCED TO FRESNO SECTION
CENTRAL VALLEY WYE
SR 152 (NORTH) TO ROAD 19 WYE ALTERNATIVE
GENERAL PLAN (SJD-MER)
AERIAL #4 - NORTHBOUND OVER HST MAINLINE - 2 OF 5

CONTRACT NO. HSR08-05
DRAWING NO. ST-K1621-B
SCALE AS SHOWN
SHEET NO.

MF-ST-K1621-B.dgn
07-FEB-2015 09:55
p0036110

TOP OF RAIL PROFILE (℄ HST NB TRACK SJD-MER)

NO SCALE

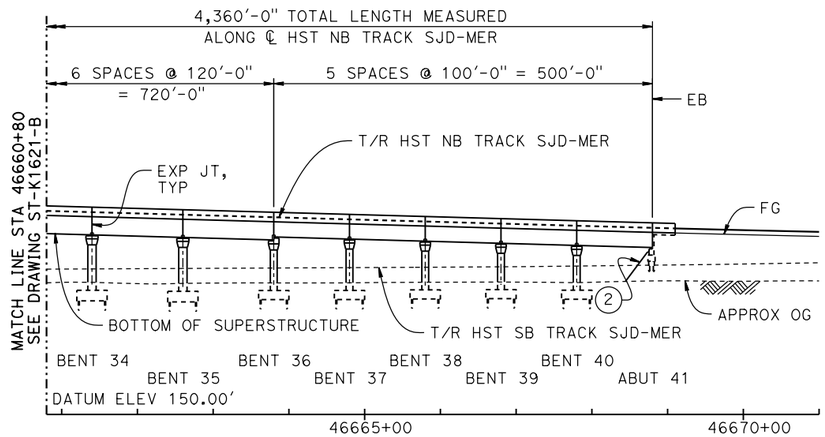

DEVELOPED ELEVATION

VERT: 1" = 50' HORIZ: 1" = 100'

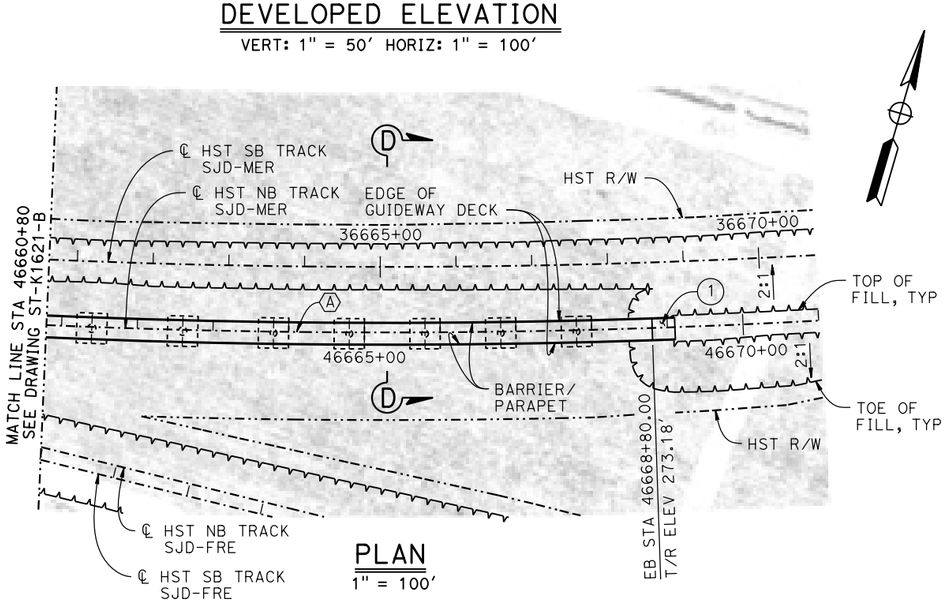

PLAN

1" = 100'

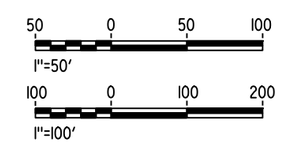

REV	DATE	BY	CHK	APP	DESCRIPTION

DESIGNED BY S. J. S.
DRAWN BY W. JOHNSEN
CHECKED BY O. EDEWOR
IN CHARGE C. LEMLEY
DATE 02/13/2015

RECORD SET
15% DESIGN
SUBMITTAL

NOT FOR
CONSTRUCTION

PARSONS

CALIFORNIA
HIGH-SPEED RAIL AUTHORITY

CALIFORNIA HIGH-SPEED TRAIN PROJECT
MERCED TO FRESNO SECTION
CENTRAL VALLEY WYE
SR 152 (NORTH) TO ROAD 19 WYE ALTERNATIVE
GENERAL PLAN (SJD-MER)
AERIAL #4 - NORTHBOUND OVER HST MAINLINE - 3 OF 5

CONTRACT NO. HSR08-05
DRAWING NO. ST-K1622-B
SCALE AS SHOWN
SHEET NO.

p0036110 07-FEB-2015 09:55 MF-ST-K1622-B.dgn

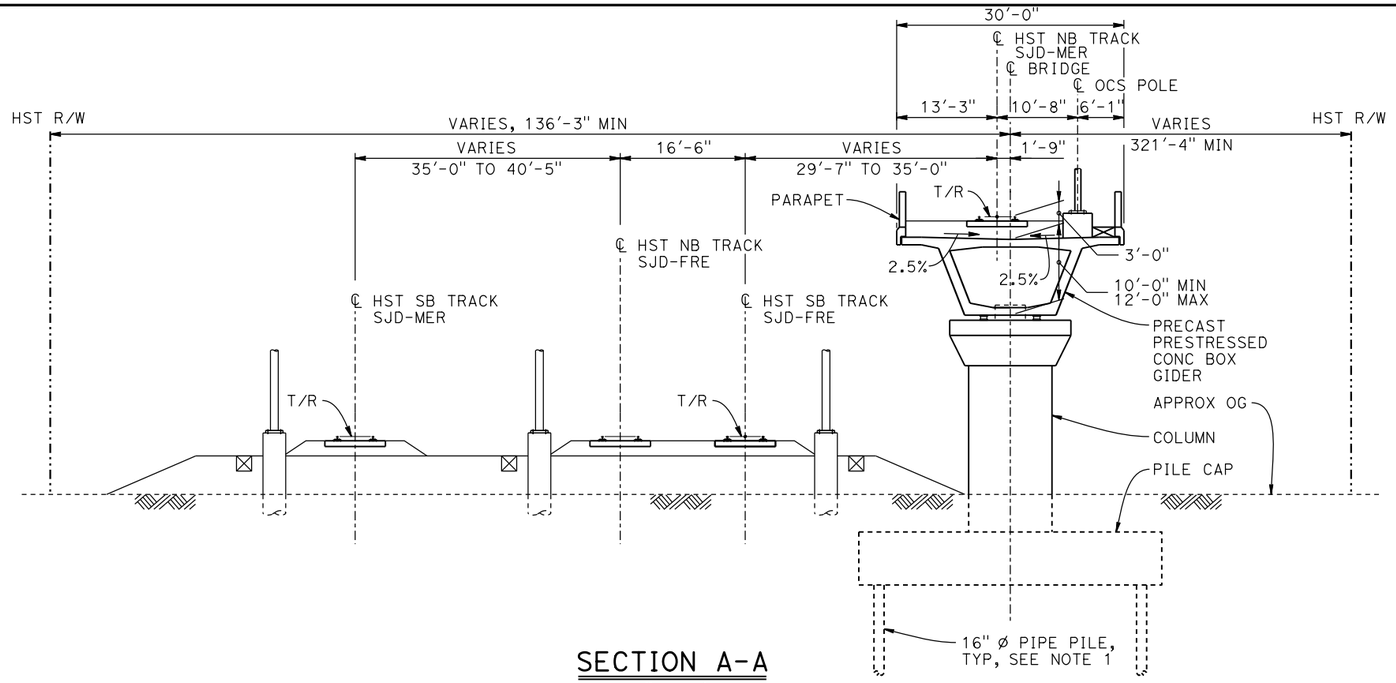

SECTION A-A

1" = 10'

NOTES:

1. PILE AND DRILLED SHAFT LENGTHS TO BE DETERMINED.
2. FOR TRACK SUPERELEVATION DETAILS, SEE ALIGNMENT AND TYPICAL SECTION PLANS; DRAWING TT-B0058-B.

BENT COLUMN SCHEDULE			
BENT	COLUMN TYPE	CIDH TYPE	"A"
2 - 5	9'-0" ø		
6 - 11	11'-0" ø		
12	13'-0" ø		
13 - 15	12'-0" ø		
16 - 17	2 - 10'-0" ø		130'-0"
18	2 - 10'-0" ø		127'-0"
19	2 - 10'-0" ø		132'-0"
20 - 25	2 - 10'-0" ø		77'-0"
26	11'-0" ø	13'-0" ø	
27 - 30	12'-0" ø		
31	15'-0" ø		
32	13'-0" ø		
33 - 35	11'-0" ø		
36 - 40	9'-0" ø		

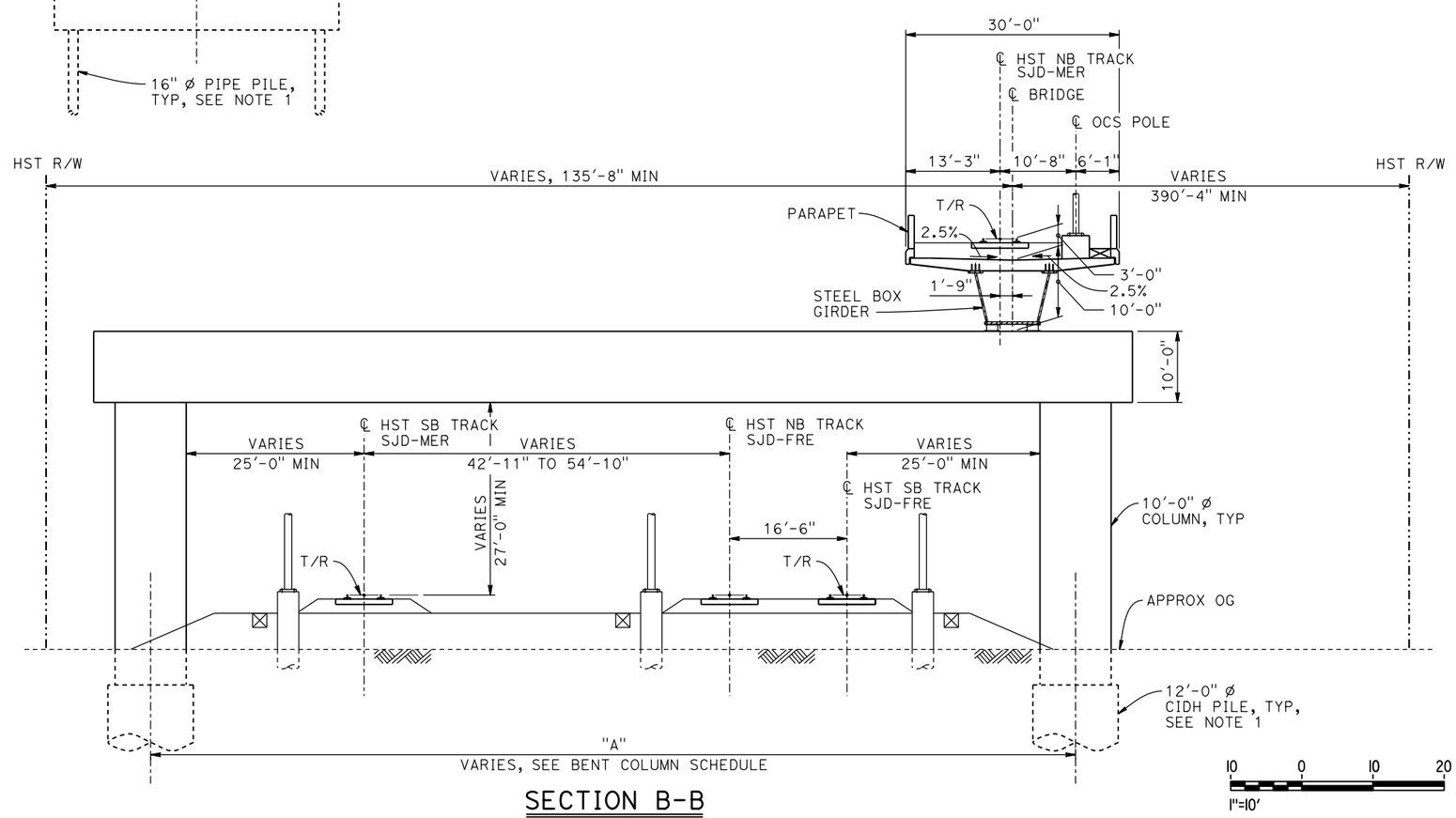

SECTION B-B

1" = 10'

REV	DATE	BY	CHK	APP	DESCRIPTION

DESIGNED BY S. J. S.
DRAWN BY W. JOHNSEN
CHECKED BY O. EDEWOR
IN CHARGE C. LEMLEY
DATE 02/13/2015

RECORD SET
15% DESIGN
SUBMITTAL

NOT FOR
CONSTRUCTION

PARSONS

CALIFORNIA
HIGH-SPEED RAIL AUTHORITY

CALIFORNIA HIGH-SPEED TRAIN PROJECT
MERCED TO FRESNO SECTION
CENTRAL VALLEY WYE
SR 152 (NORTH) TO ROAD 19 WYE ALTERNATIVE
TYPICAL SECTIONS (SJD-MER)
AERIAL #4 - NORTHBOUND OVER HST MAINLINE - 4 OF 5

CONTRACT NO. HSR08-05
DRAWING NO. ST-K3620-B
SCALE AS SHOWN
SHEET NO.

MF-ST-K3620-B.dgn 07-FEB-2015 09:56 p0036110

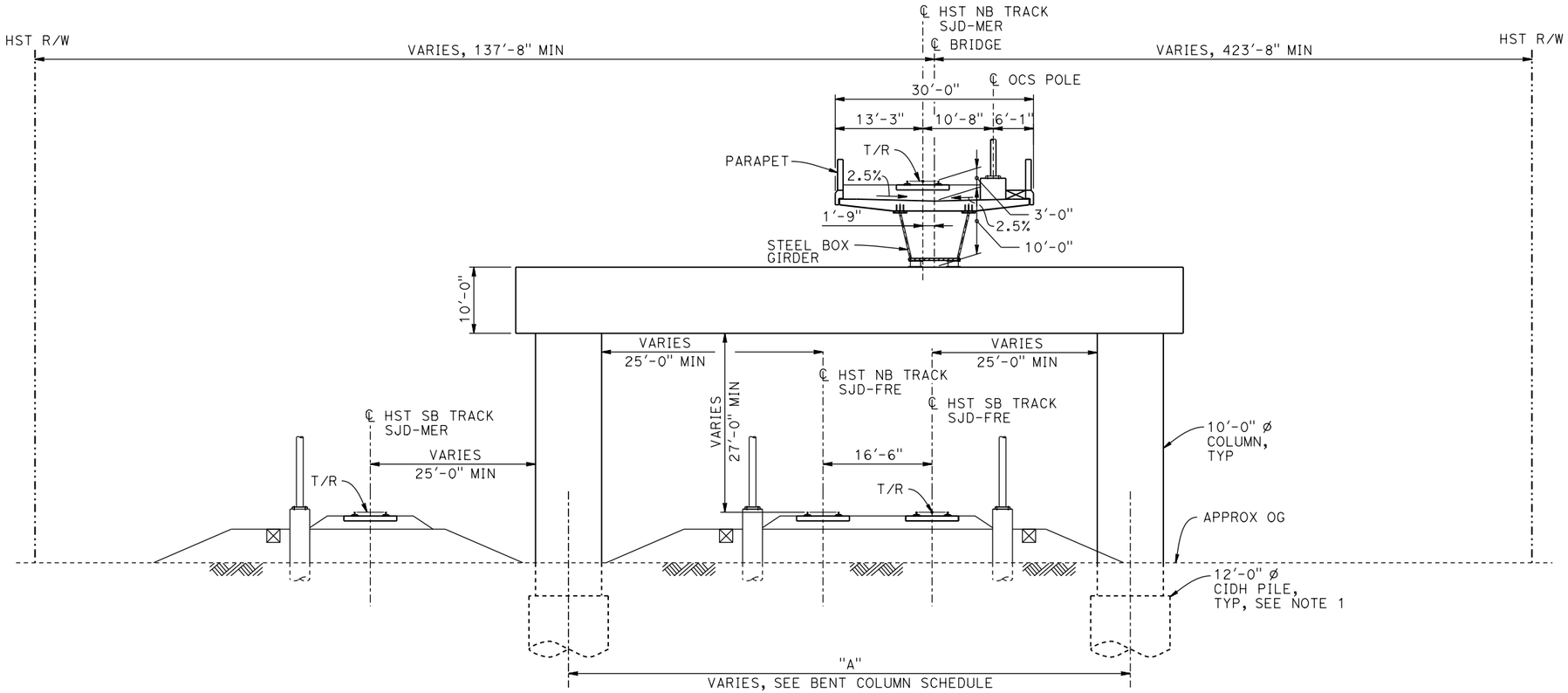

SECTION C-C

1" = 10'

NOTES:

1. PILE AND DRILLED SHAFT LENGTHS TO BE DETERMINED.
2. FOR TRACK SUPERELEVATION DETAILS, SEE ALIGNMENT AND TYPICAL SECTION PLANS; DRAWING TT-B0058-B.

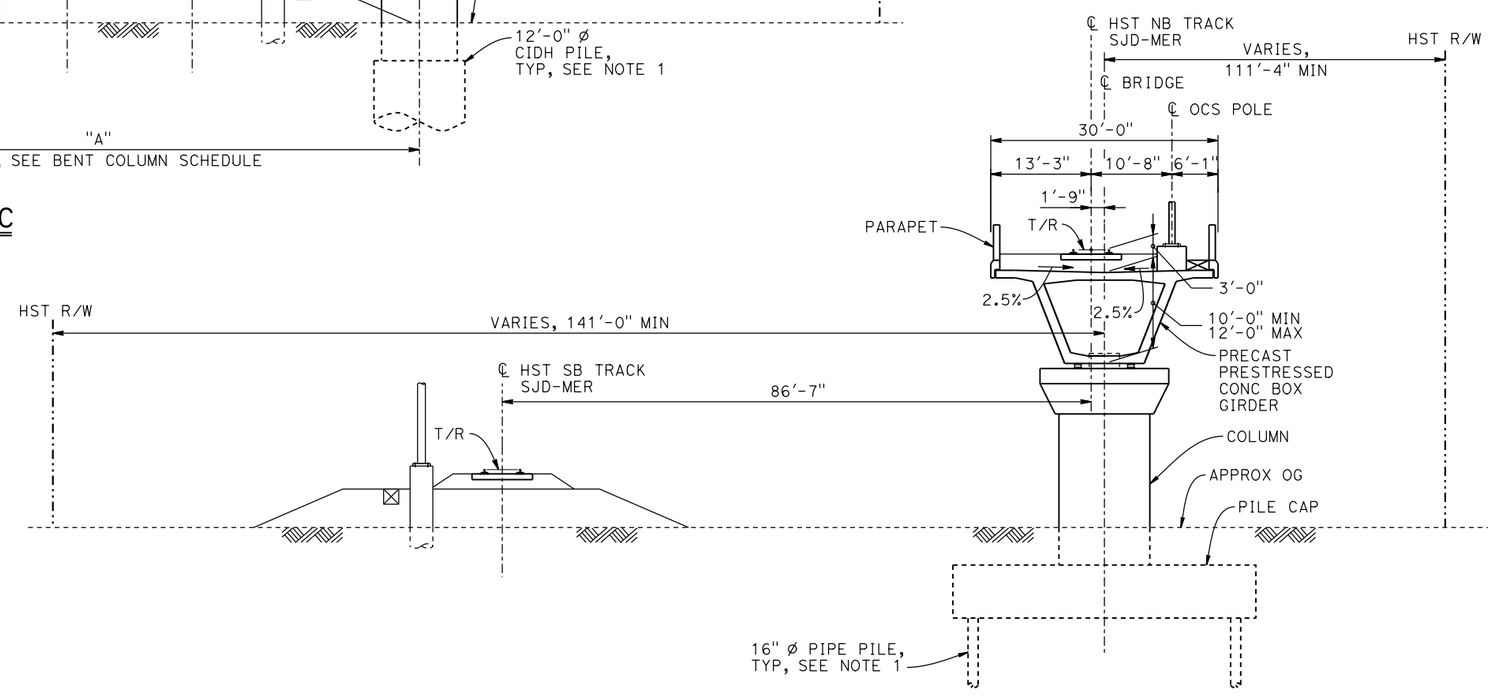

SECTION D-D

1" = 10'

10 0 10 20
1"=10'

REV	DATE	BY	CHK	APP	DESCRIPTION

DESIGNED BY S. J. S.
DRAWN BY W. JOHNSEN
CHECKED BY O. EDEWOR
IN CHARGE C. LEMLEY
DATE 02/13/2015

RECORD SET
15% DESIGN SUBMITTAL

NOT FOR CONSTRUCTION

PARSONS

CALIFORNIA HIGH-SPEED RAIL AUTHORITY

CALIFORNIA HIGH-SPEED TRAIN PROJECT
MERCED TO FRESNO SECTION
CENTRAL VALLEY WYE
SR 152 (NORTH) TO ROAD 19 WYE ALTERNATIVE
TYPICAL SECTIONS (SJD-MER)
AERIAL #4 - NORTHBOUND OVER HST MAINLINE - 5 OF 5

CONTRACT NO. HSR08-05
DRAWING NO. ST-K3621-B
SCALE AS SHOWN
SHEET NO.

07-FEB-2015 09:56 MF-ST-K3621-B.dgn
p0036110

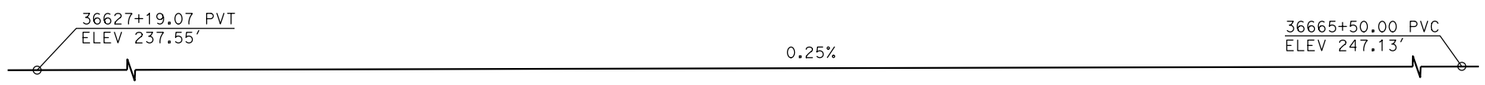

TOP OF RAIL PROFILE (℄ HST SB TRACK)

NO SCALE

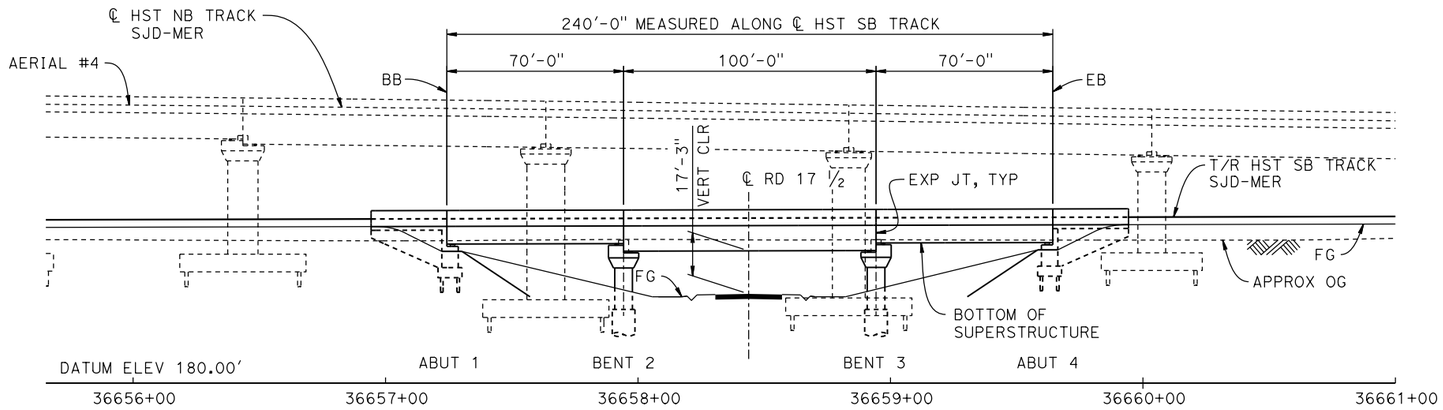

DEVELOPED ELEVATION

1" = 30'

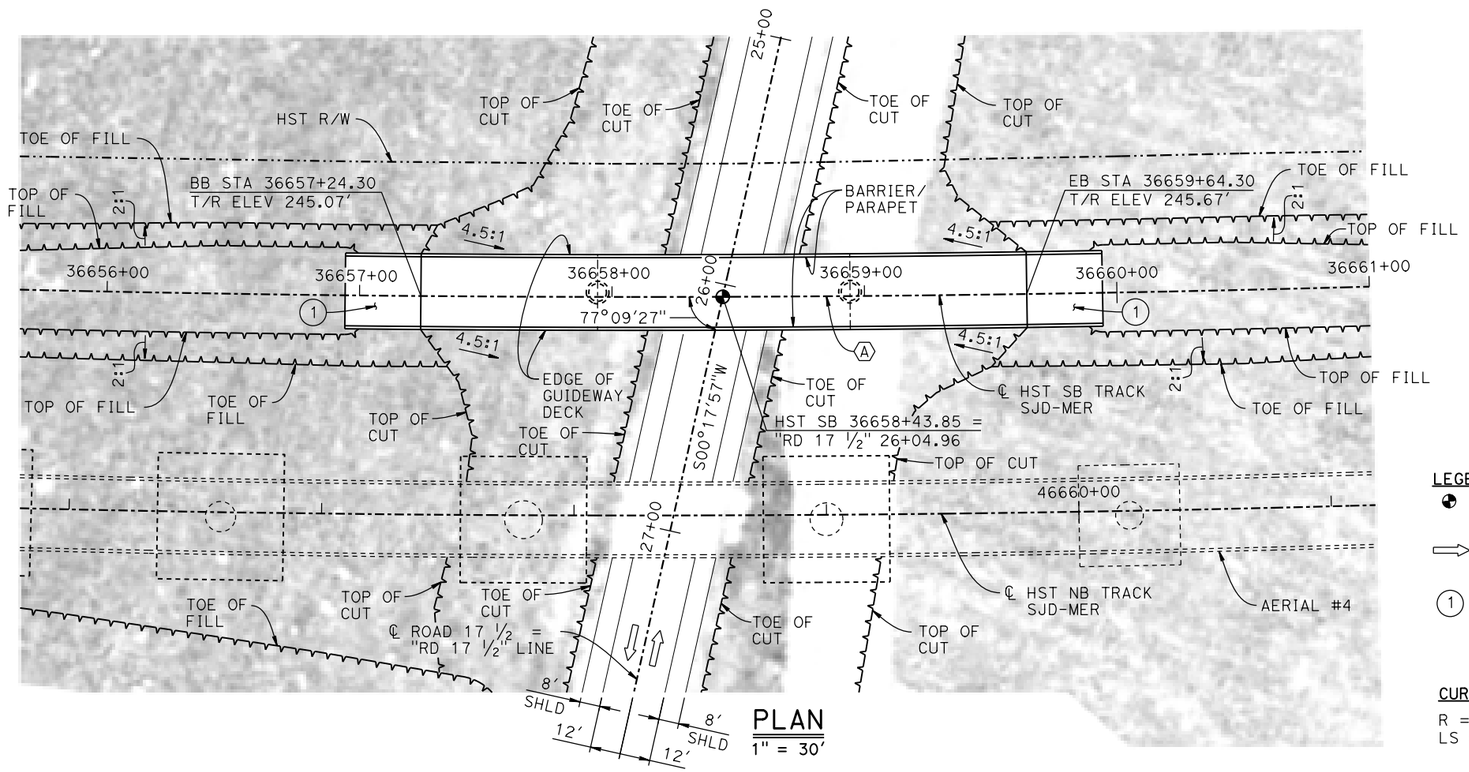

PLAN

1" = 30'

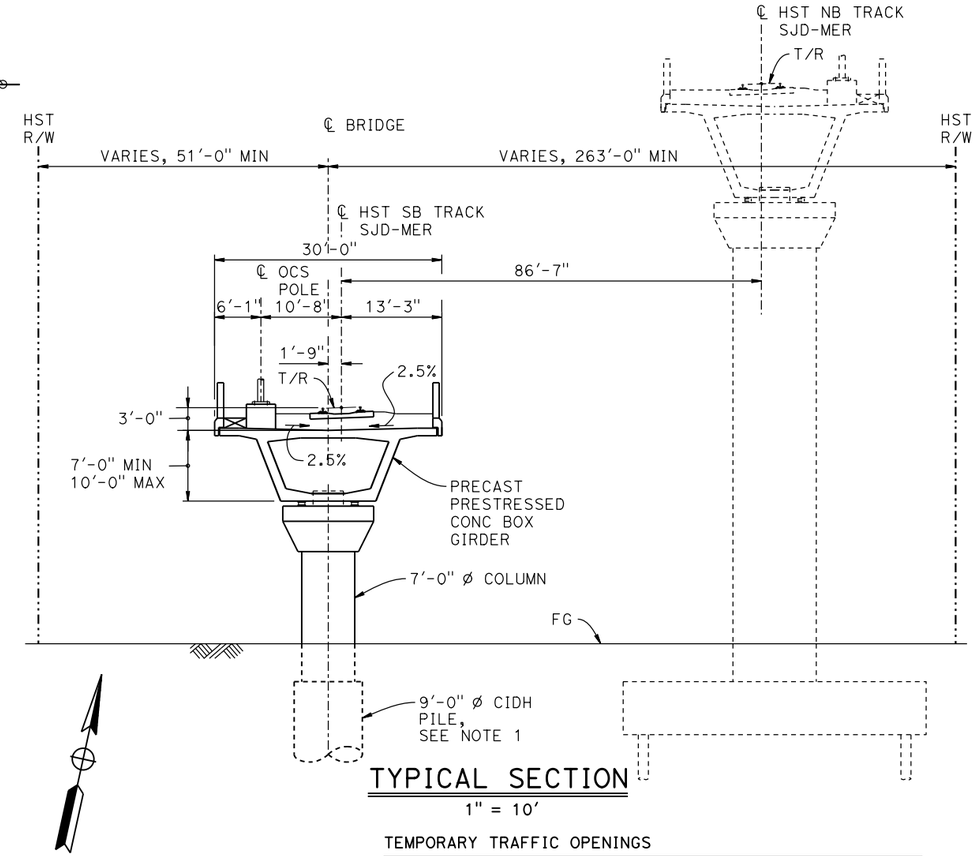

TYPICAL SECTION

1" = 10'

TEMPORARY TRAFFIC OPENINGS

VEHICULAR TRAFFIC

1. X TRAFFIC WILL BE DETOURED AWAY FROM THE SITE.
2. __ TRAFFIC WILL PASS UNDER THE STRUCTURE ON:

STREET OR ROAD NAME AND LOCATION		FALSEWORK OPENING REQD (HORIZ X VERT)	
ROAD 17 1/2	36658+44	32'X16.5'	2-WAY

3. __ TEMP TRAFFIC LANE REDUCTION FOR FTG EXCAVATION.

LEGEND:

- INDICATES POINT OF MINIMUM VERTICAL CLEARANCE
- INDICATES DIRECTION OF TRAFFIC
- (1) STRUCTURE APPROACH

CURVE SJD-MER 1 SB (A)

R = 10,300.00'
LS = 1,200.00'

NOTES:

1. 16" ø PIPE PILES ASSUMED FOR ABUTMENT FOUNDATIONS. PILE AND DRILLED SHAFT LENGTHS TO BE DETERMINED.
2. FOR UTILITY DISPOSITIONS, SEE CIVIL AND GRADE SEPARATION PLANS; DRAWING CV-S1620-B.
3. FOR TRACK SUPERELEVATION DETAILS, SEE ALIGNMENT AND TYPICAL SECTION PLANS; DRAWING TT-B0056-B.
4. FOR AERIAL #4 - NORTHBOUND OVER MAINLINE GENERAL PLAN AND TYPICAL SECTIONS, SEE DRAWINGS ST-K1620-B TO ST-K1622-B, ST-K3620-B AND ST-K3621-B.

10 0 10 20 — 1"=10'
30 0 30 60 — 1"=30'

REV	DATE	BY	CHK	APP	DESCRIPTION

DESIGNED BY S. J. S.
DRAWN BY W. JOHNSEN
CHECKED BY O. EDEWOR
IN CHARGE C. LEMLEY
DATE 05/08/2015

RECORD SET
15% DESIGN
SUBMITTAL

NOT FOR
CONSTRUCTION

PARSONS

CALIFORNIA
HIGH-SPEED RAIL AUTHORITY

CALIFORNIA HIGH-SPEED TRAIN PROJECT
MERCED TO FRESNO SECTION
CENTRAL VALLEY WYE
SR 152 (NORTH) TO ROAD 19 WYE ALTERNATIVE
GENERAL PLAN (SJD-MER)
ROAD 17 1/2 UNDERPASS (HST SB)

CONTRACT NO. HSR08-05
DRAWING NO. ST-K1625-B
SCALE AS SHOWN
SHEET NO.

MF-ST-K1625-B.dgn
16-MAR-2016 6:21
p005133A

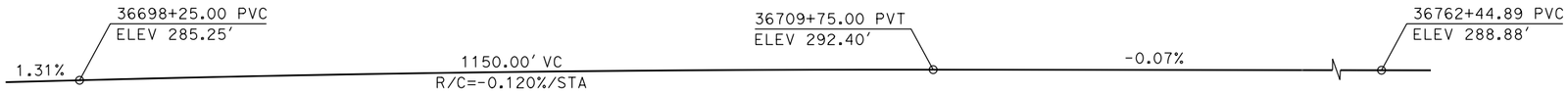

TOP OF RAIL PROFILE (℄ HST SB TRACK)

NO SCALE

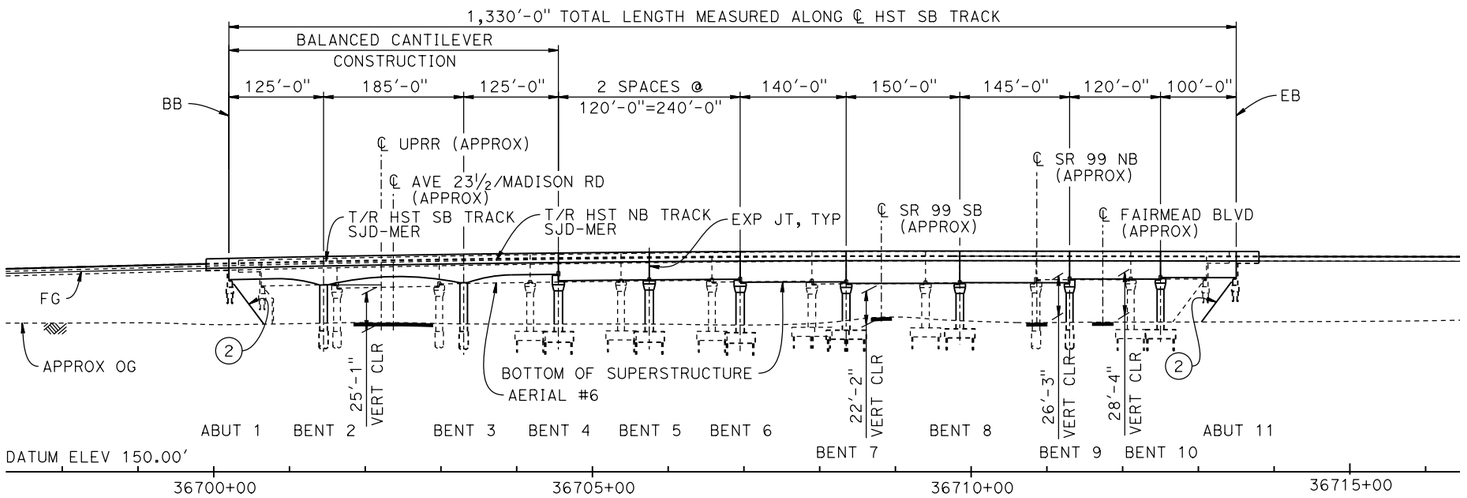

DEVELOPED ELEVATION

VERT: 1" = 50' HORIZ: 1" = 100'

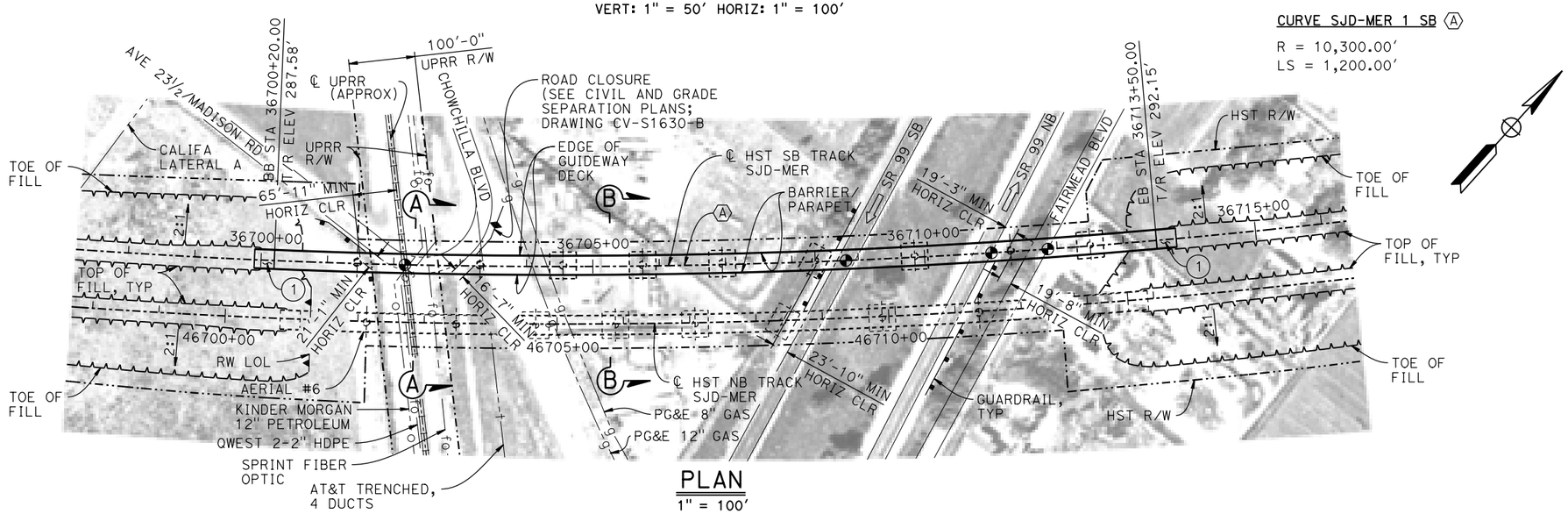

PLAN

1" = 100'

CURVE SJD-MER 1 SB (A)

R = 10,300.00'
LS = 1,200.00'

LEGEND:

- INDICATES POINT OF MINIMUM VERTICAL CLEARANCE
- INDICATES DIRECTION OF TRAFFIC
- (1) STRUCTURE APPROACH
- (2) SLOPE PAVING (1½H:1V)

NOTES:

1. 16" ø PIPE PILES ASSUMED FOR ABUTMENT AND BENT FOUNDATIONS, UNLESS OTHERWISE NOTED. PILE LENGTHS TO BE DETERMINED.
2. FOR SECTIONS AND BENT COLUMN SCHEDULE, SEE DRAWING ST-K3630-B.
3. ANY EXISTING DIRT ROAD THAT CONFLICTS WITH NEW CONSTRUCTION SHALL BE REALIGNED.
4. FOR UTILITY DISPOSITIONS, SEE CIVIL AND GRADE SEPARATION PLANS; DRAWING CV-S1630-B.
5. FOR GUARDRAILS, SEE CIVIL AND GRADE SEPARATION PLANS; DRAWING CV-S1630-B.
6. FOR RETAINING WALL, SEE CIVIL AND GRADE SEPARATION PLANS; DRAWING CV-S1630-B.
7. FOR AERIAL #6 - NORTHBOUND OVER UPRR / SR 99 GENERAL PLAN AND TYPICAL SECTION, SEE DRAWINGS ST-K1635-B AND ST-K3635-B.

TEMPORARY TRAFFIC OPENINGS

VEHICULAR TRAFFIC

1. __ TRAFFIC WILL BE DETOURED AWAY FROM THE SITE.
2. X TRAFFIC WILL PASS UNDER THE STRUCTURE ON:

ST OR ROAD NAME AND LOCATION		FALSEWORK OPENING REQD (HORIZ X VERT)	
AVE 23½/MADISON RD	36702+30	32'X16.5'	2-WAY
SR 99	36708+82	37'X16.5'	S BND
SR 99	36710+88	37'X16.5'	N BND
FAIRMEAD BLVD	36711+76	32'X16.5'	2-WAY

3. __ TEMP TRAFFIC LANE REDUCTION FOR FTG EXC.

TEMPORARY TRAFFIC OPENINGS

RAILROAD TRAFFIC

FALSEWORK OPENING REQUIRED ON:

NAME OF RR AND LOCATION		FALSEWORK OPENING REQD (HORIZ X VERT)
UPRR	36702+17	24'X21'

50 0 50 100
1"=50'

100 0 100 200
1"=100'

REV	DATE	BY	CHK	APP	DESCRIPTION

DESIGNED BY S. J. S.
DRAWN BY J. KIDWELL
CHECKED BY O. EDEWOR
IN CHARGE C. LEMLEY
DATE 03/18/2016

RECORD SET
15% DESIGN SUBMITTAL

NOT FOR CONSTRUCTION

PARSONS

CALIFORNIA HIGH-SPEED RAIL AUTHORITY

CALIFORNIA HIGH-SPEED TRAIN PROJECT
MERCED TO FRESNO SECTION
CENTRAL VALLEY WYE
SR 152 (NORTH) TO ROAD 19 WYE ALTERNATIVE
GENERAL PLAN (SJD-MER)
AERIAL #5 - SOUTHBOUND OVER UPRR / SR 99 - 1 OF 2

CONTRACT NO. HSR08-05
DRAWING NO. ST-K1630-B
SCALE AS SHOWN
SHEET NO.

MF-ST-K1630-B.dgn
16-MAR-2016 6:22
p005133A

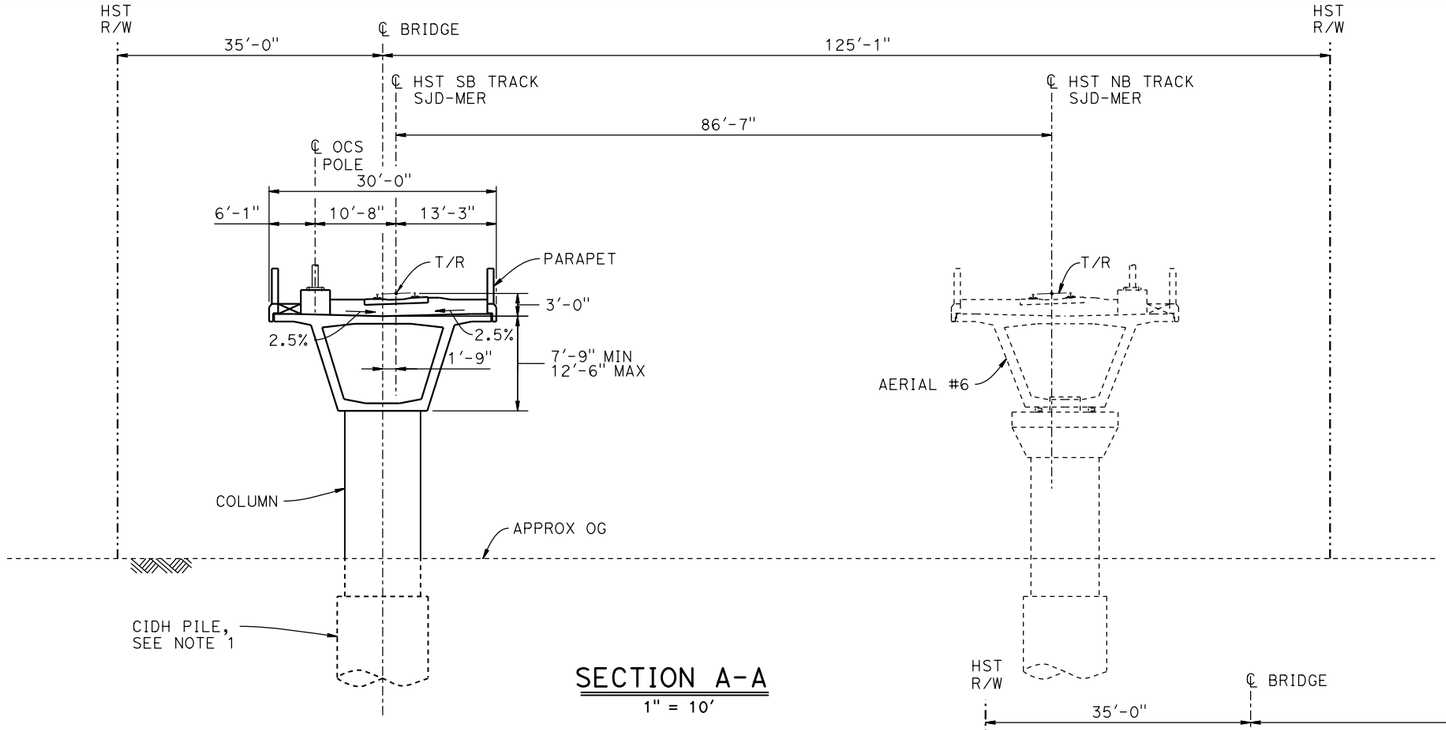

SECTION A-A

1" = 10'

BENT COLUMN SCHEDULE		
BENT	COLUMN TYPE	CIDH TYPE
2 - 3	10'-0" ø	12'-0" ø
4 - 6	11'-0" ø	
7 - 8	10'-0" ø	
9	9'-0" ø	11'-0" ø
10	9'-0" ø	

NOTES:

1. PILE AND DRILLED SHAFT LENGTHS TO BE DETERMINED.
2. FOR TRACK SUPERELEVATION DETAILS, SEE ALIGNMENT AND TYPICAL SECTION PLANS; DRAWING TT-B0058-B.

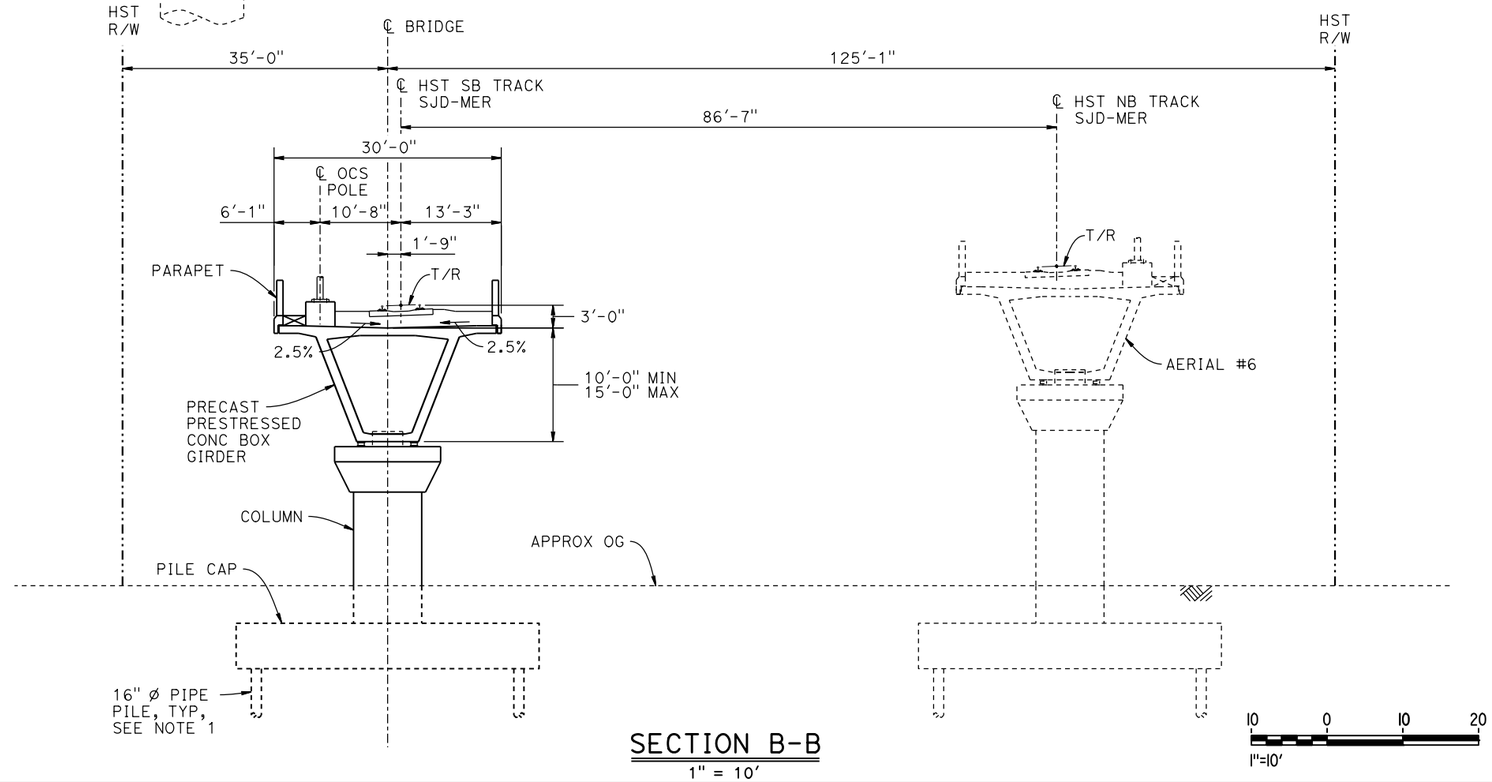

SECTION B-B

1" = 10'

REV	DATE	BY	CHK	APP	DESCRIPTION

DESIGNED BY S. J. S.
DRAWN BY J. KIDWELL
CHECKED BY O. EDEWOR
IN CHARGE C. LEMLEY
DATE 02/13/2015

RECORD SET 15% DESIGN SUBMITTAL

NOT FOR CONSTRUCTION

PARSONS

CALIFORNIA HIGH-SPEED RAIL AUTHORITY

CALIFORNIA HIGH-SPEED TRAIN PROJECT
MERCED TO FRESNO SECTION
CENTRAL VALLEY WYE
SR 152 (NORTH) TO ROAD 19 WYE ALTERNATIVE
TYPICAL SECTIONS (SJD-MER)
AERIAL #5 - SOUTHBOUND OVER UPRR / SR 99 - 2 OF 2

CONTRACT NO. HSR08-05
DRAWING NO. ST-K3630-B
SCALE AS SHOWN
SHEET NO.

p0036110 07-FEB-2015 09:58 MF-ST-K3630-B.dgn

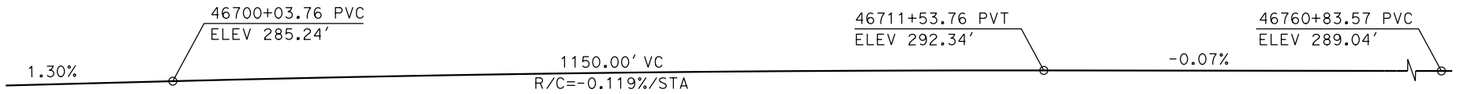

TOP OF RAIL PROFILE (℄ HST NB TRACK)

NO SCALE

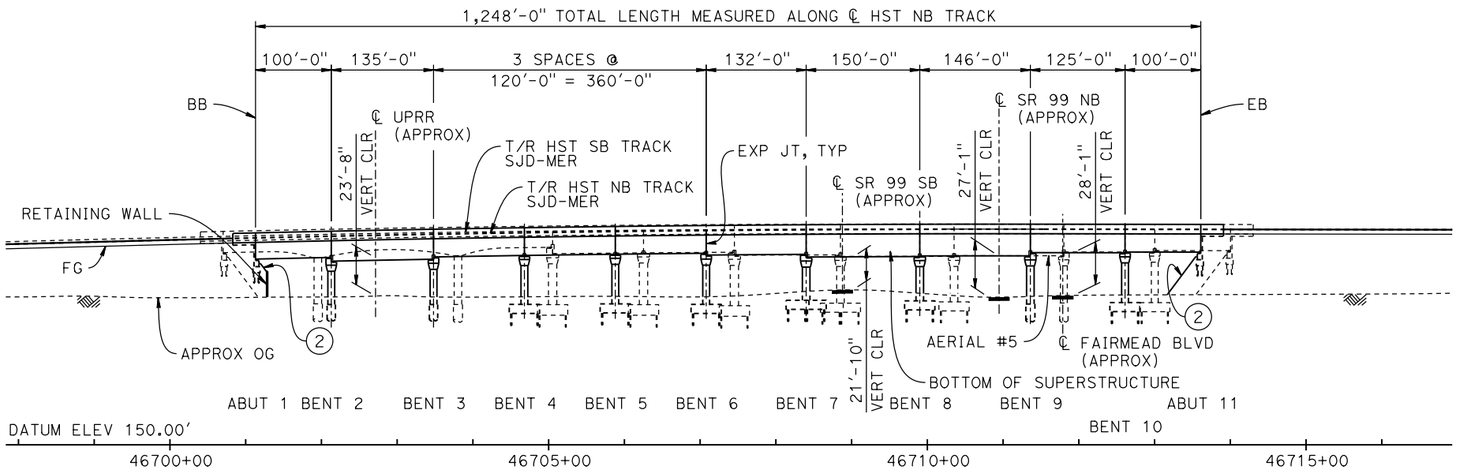

DEVELOPED ELEVATION

VERT: 1" = 50' HORIZ: 1" = 100'

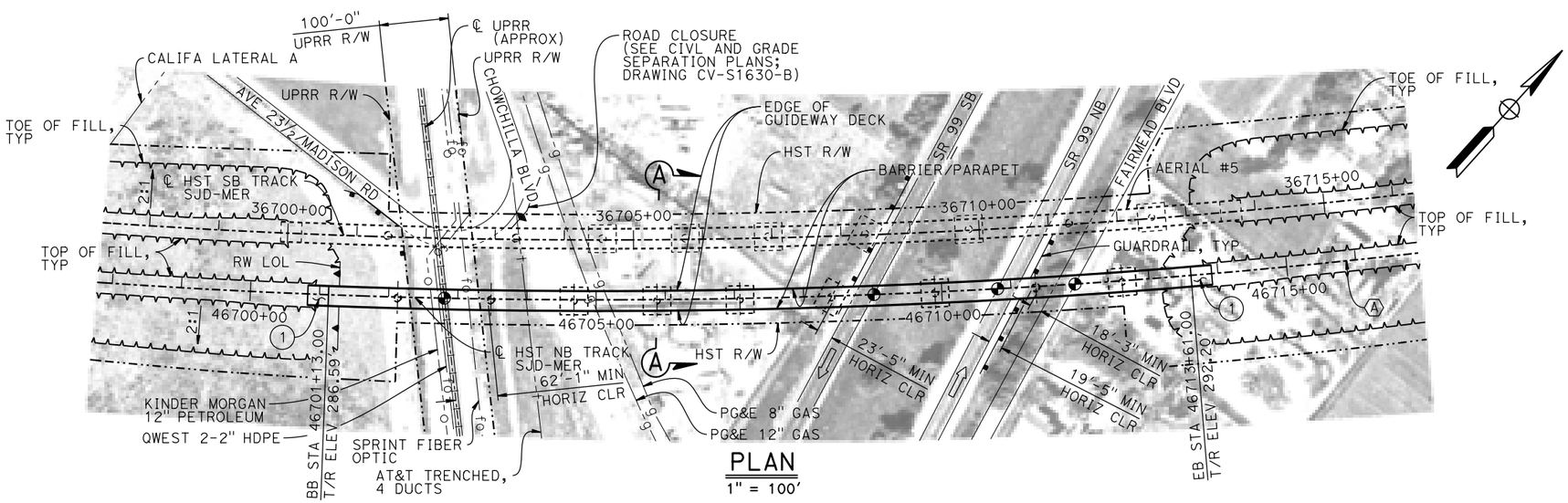

PLAN

1" = 100'

LEGEND:

- ◕ INDICATES POINT OF MINIMUM VERTICAL CLEARANCE
- ⇨ INDICATES DIRECTION OF TRAFFIC
- (1) STRUCTURE APPROACH
- (2) SLOPE PAVING (1½H:1V)

NOTES:

1. 16" ø PIPE PILES ASSUMED FOR ABUTMENT AND BENT FOUNDATIONS, UNLESS OTHERWISE NOTED. PILE LENGTHS TO BE DETERMINED.
2. FOR SECTION AND BENT COLUMN SCHEDULE, SEE DRAWING ST-K3635-B.
3. ANY EXISTING DIRT ROAD THAT CONFLICTS WITH NEW CONSTRUCTION SHALL BE REALIGNED.
4. FOR UTILITY DISPOSITIONS, SEE CIVIL AND GRADE SEPARATION PLANS; DRAWING CV-S1630-B.
5. FOR GUARDRAILS, SEE CIVIL AND GRADE SEPARATION PLANS; DRAWING CV-S1630-B.
6. FOR RETAINING WALL, SEE CIVIL AND GRADE SEPARATION PLANS; DRAWING CV-S1630-B.
7. FOR AERIAL #5 - SOUTHBOUND OVER UPRR / SR 99 GENERAL PLAN AND TYPICAL SECTIONS, SEE DRAWINGS ST-K1630-B AND ST-K3630-B.

TEMPORARY TRAFFIC OPENINGS

VEHICULAR TRAFFIC

1. __ TRAFFIC WILL BE DETOURED AWAY FROM THE SITE.
2. X TRAFFIC WILL PASS UNDER THE STRUCTURE ON:

ST OR ROAD NAME AND LOCATION		FALSEWORK OPENING REQD (HORIZ X VERT)	
SR 99	46708+88	37'X16.5'	S BND
SR 99	46710+94	37'X16.5'	N BND
FAIRMEAD BLVD	46711+81	32'X16.5'	2-WAY

3. __ TEMP TRAFFIC LANE REDUCTION FOR FTG EXC.

TEMPORARY TRAFFIC OPENINGS

RAILROAD TRAFFIC

FALSEWORK OPENING REQUIRED ON:

NAME OF RR AND LOCATION		FALSEWORK OPENING REQD (HORIZ X VERT)
UPRR	46702+81	24'X21'

CURVE SJD-MER 1 NB (A)

R = 10,386.50'
LS = 1,200.00'

50 0 50 100
1"=50'

100 0 100 200
1"=100'

REV	DATE	BY	CHK	APP	DESCRIPTION

DESIGNED BY S. J. S.
DRAWN BY J. KIDWELL
CHECKED BY O. EDEWOR
IN CHARGE C. LEMLEY
DATE 03/18/2016

RECORD SET
15% DESIGN SUBMITTAL

NOT FOR CONSTRUCTION

PARSONS

CALIFORNIA HIGH-SPEED RAIL AUTHORITY

CALIFORNIA HIGH-SPEED TRAIN PROJECT
MERCED TO FRESNO SECTION
CENTRAL VALLEY WYE
SR 152 (NORTH) TO ROAD 19 WYE ALTERNATIVE
GENERAL PLAN (SJD-MER)
AERIAL #6 - NORTHBOUND OVER UPRR / SR 99 - 1 OF 2

CONTRACT NO. HSR08-05
DRAWING NO. ST-K1635-B
SCALE AS SHOWN
SHEET NO.

MF-ST-K1635-B.dgn
17-MAR-2016 09:38
p005133A

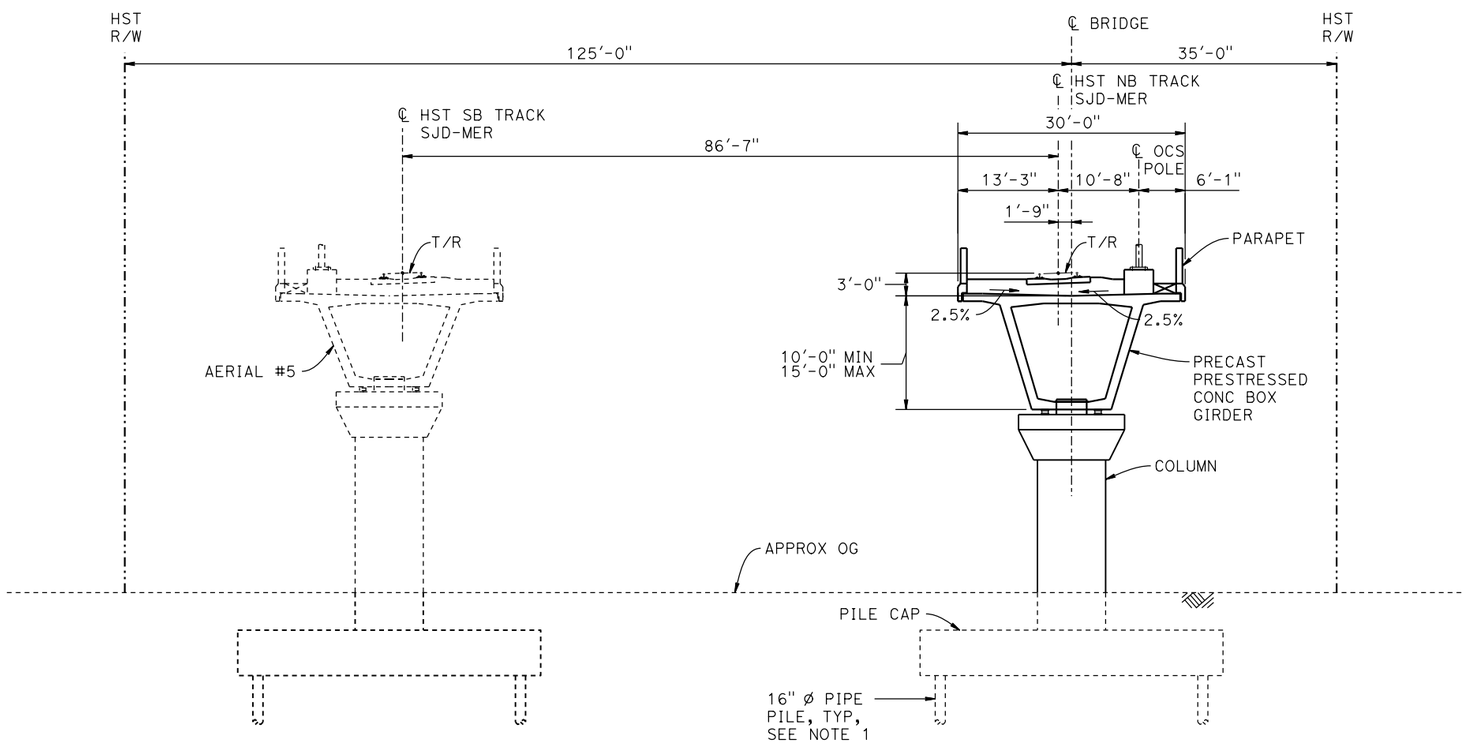

SECTION A-A

1" = 10'

BENT COLUMN SCHEDULE		
BENT	COLUMN TYPE	CIDH TYPE
2 - 3	9'-0" ø	11'-0" ø
4 - 6	9'-0" ø	
7 - 8	10'-0" ø	
9	10'-0" ø	12'-0" ø
10	9'-0" ø	

NOTES:

1. PILE AND DRILLED SHAFT LENGTHS TO BE DETERMINED.
2. FOR TRACK SUPERELEVATION DETAILS, SEE ALIGNMENT AND TYPICAL SECTION PLANS; DRAWING TT-B0058-B.

10 0 10 20
1"=10'

REV	DATE	BY	CHK	APP	DESCRIPTION

DESIGNED BY S. J. S
DRAWN BY J. KIDWELL
CHECKED BY O. EDEWOR
IN CHARGE C. LEMLEY
DATE 05/08/2015

RECORD SET
15% DESIGN
SUBMITTAL

NOT FOR
CONSTRUCTION

PARSONS

CALIFORNIA
HIGH-SPEED RAIL AUTHORITY

CALIFORNIA HIGH-SPEED TRAIN PROJECT
MERCED TO FRESNO SECTION
CENTRAL VALLEY WYE
SR 152 (NORTH) TO ROAD 19 WYE ALTERNATIVE
TYPICAL SECTION (SJD-MER)
AERIAL #6 - NORTHBOUND OVER UPRR / SR 99 - 2 OF 2

CONTRACT NO. HSR08-05
DRAWING NO. ST-K3635-B
SCALE AS SHOWN
SHEET NO.

16-MAR-2016 6:22 MF-ST-K3635-B.dgn
p005133A

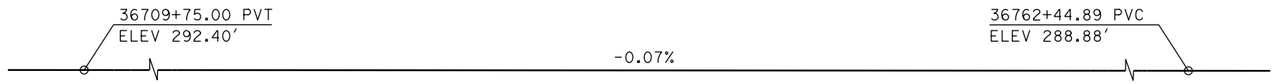

TOP OF RAIL PROFILE (℄ HST SB TRACK)

NO SCALE

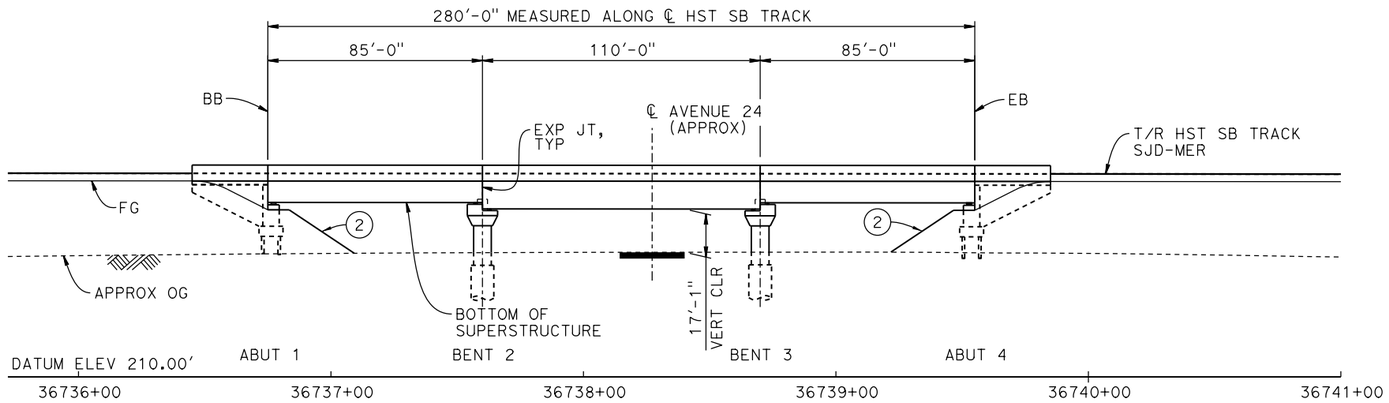

DEVELOPED ELEVATION

(SB BRIDGE SHOWN, NB BRIDGE SIMILAR)

1" = 30'

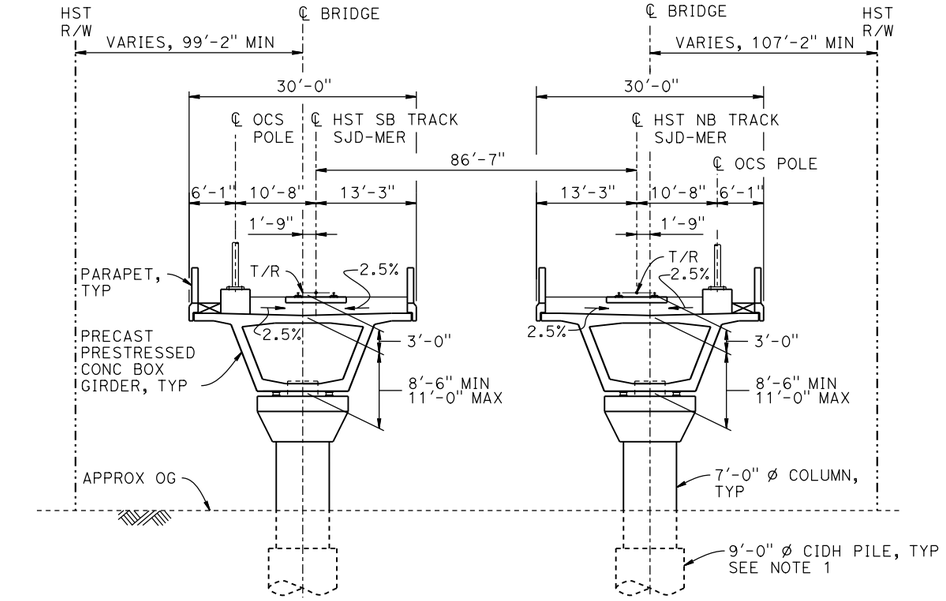

TYPICAL SECTION

1" = 10'

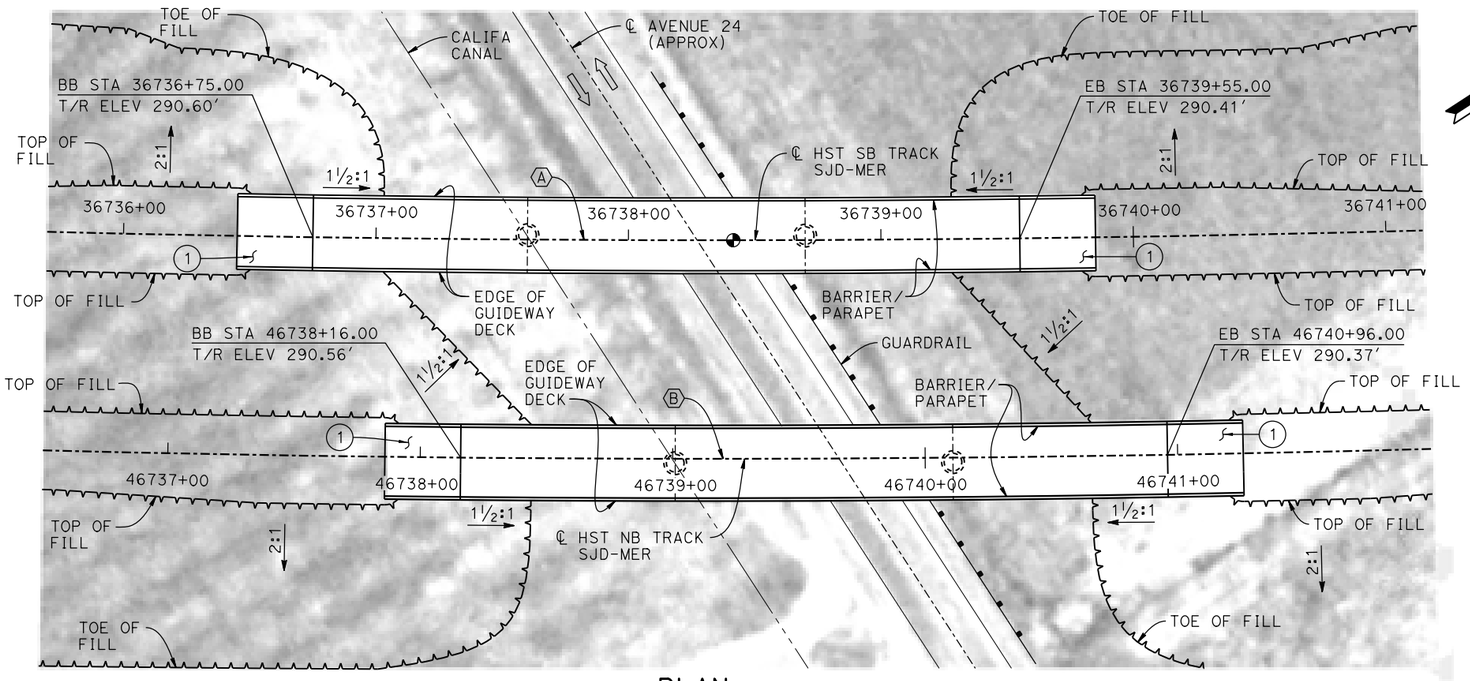

PLAN

1" = 30'

CURVE SJD-MER 1 SB (A)

R = 10,300.00'
LS = 1,200.00'

CURVE SJD-MER 1 NB (B)

R = 10,386.50'
LS = 1,200.00'

LEGEND:

- INDICATES POINT OF MINIMUM VERTICAL CLEARANCE
- INDICATES DIRECTION OF TRAFFIC
- (1) STRUCTURE APPROACH
- (2) SLOPE PAVING (1½H:1V)

TEMPORARY TRAFFIC OPENINGS

VEHICULAR TRAFFIC

1. __ TRAFFIC WILL BE DETOURED AWAY FROM THE SITE.
2. X TRAFFIC WILL PASS UNDER THE STRUCTURE ON:

ST OR ROAD NAME AND LOCATION		FALSEWORK OPENING REQD (HORIZ x VERT)	
AVENUE 24	36736+26	32'x16.5'	2-WAY

3. __ TEMP TRAFFIC LANE REDUCTION FOR FTG EXC.

NOTES:

1. 16" Ø PIPE PILES ASSUMED FOR ABUTMENT FOUNDATIONS. PILE AND DRILLED SHAFT LENGTHS TO BE DETERMINED.
2. FOR UTILITY DISPOSITIONS, SEE CIVIL AND GRADE SEPARATION PLANS; DRAWINGS CV-S1630-B AND CV-S1640-B.
3. FOR GUARDRAILS, SEE CIVIL AND GRADE SEPARATION PLANS; DRAWINGS CV-S1630-B AND CV-S1640-B.
4. FOR TRACK SUPERELEVATION DETAILS, SEE ALIGNMENT AND TYPICAL SECTION PLANS; DRAWING TT-B0058-B.

10 0 10 20 — 1"=10'
30 0 30 60 — 1"=30'

REV	DATE	BY	CHK	APP	DESCRIPTION

DESIGNED BY S. J. S.
DRAWN BY A. M.
CHECKED BY O. EDEWOR
IN CHARGE C. LEMLEY
DATE 02/13/2015

RECORD SET
15% DESIGN SUBMITTAL

NOT FOR CONSTRUCTION

PARSONS

CALIFORNIA HIGH-SPEED RAIL AUTHORITY

CALIFORNIA HIGH-SPEED TRAIN PROJECT
MERCED TO FRESNO SECTION
CENTRAL VALLEY WYE
SR 152 (NORTH) TO ROAD 19 WYE ALTERNATIVE
GENERAL PLAN (SJD-MER)
AVENUE 24 UNDERPASS

CONTRACT NO. HSR08-05
DRAWING NO. ST-K1640-B
SCALE AS SHOWN
SHEET NO.

MF-ST-K1640-B.dgn
07-FEB-2015 11:07
p0036110

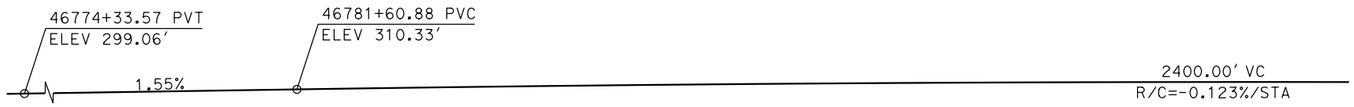

TOP OF RAIL PROFILE (℄ HST NB TRACK SJD-MER)

NO SCALE

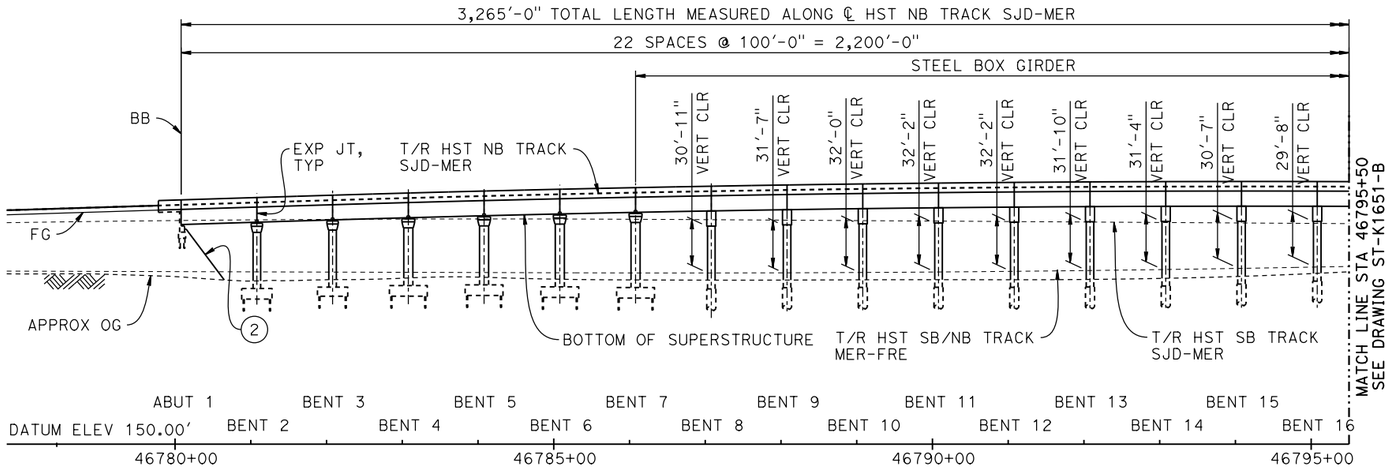

DEVELOPED ELEVATION

VERT: 1" = 50' HORIZ: 1" = 100'

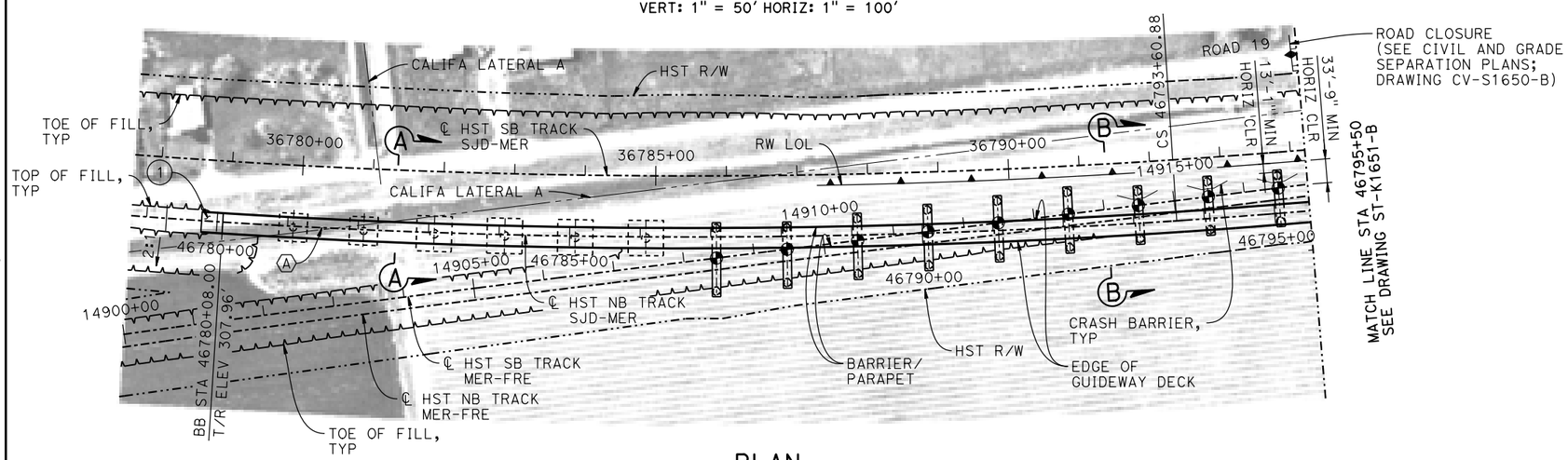

PLAN

1" = 100'

NOTES:

1. 16" ø PIPE PILES ASSUMED FOR ABUTMENT AND BENT FOUNDATIONS, UNLESS OTHERWISE NOTED. PILE LENGTHS TO BE DETERMINED.
2. FOR SECTIONS AND BENT COLUMN SCHEDULE, SEE DRAWINGS ST-K3650-B AND ST-K3651-B.
3. ANY EXISTING DIRT ROAD THAT CONFLICTS WITH NEW CONSTRUCTION SHALL BE REALIGNED.
4. FOR UTILITY DISPOSITIONS, SEE CIVIL AND GRADE SEPARATION PLANS; DRAWINGS CV-S1640-B AND CV-S1650-B.
5. FOR GUARDRAILS, SEE CIVIL AND GRADE SEPARATION PLANS; DRAWINGS CV-S1640-B AND CV-S1650-B.
6. FOR RETAINING WALL, SEE CIVIL AND GRADE SEPARATION PLANS; DRAWINGS CV-S1640-B AND CV-S1650-B.

LEGEND:

◕ INDICATES POINT OF MINIMUM VERTICAL CLEARANCE

(1) STRUCTURE APPROACH

(2) SLOPE PAVING (1½H:1V)

CURVE SJD-MER 1 NB (A)

R = 10,386.50'
LS = 1,200.00'

50 0 50 100 — 1"=50'

100 0 100 200 — 1"=100'

REV	DATE	BY	CHK	APP	DESCRIPTION

DESIGNED BY S. J. S.
DRAWN BY J. KIDWELL
CHECKED BY O. EDEWOR
IN CHARGE C. LEMLEY
DATE 02/13/2015

RECORD SET
15% DESIGN SUBMITTAL
NOT FOR CONSTRUCTION

PARSONS

CALIFORNIA HIGH-SPEED RAIL AUTHORITY

CALIFORNIA HIGH-SPEED TRAIN PROJECT
MERCED TO FRESNO SECTION
CENTRAL VALLEY WYE
SR 152 (NORTH) TO ROAD 19 WYE ALTERNATIVE
GENERAL PLAN (SJD-MER)
AERIAL #7 - NORTHBOUND OVER HST MERCED TO FRESNO - 1 OF 4

CONTRACT NO. HSR08-05
DRAWING NO. ST-K1650-B
SCALE AS SHOWN
SHEET NO.

MF-ST-K1650-B.dgn 16-MAR-2016 6:23 p005133A

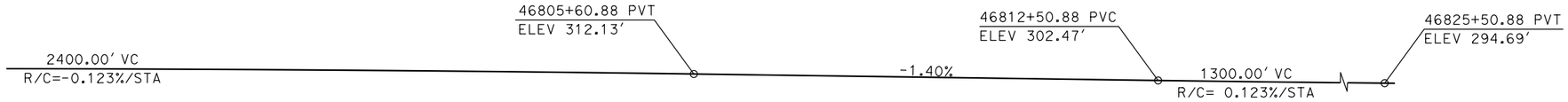

TOP OF RAIL PROFILE (℄ HST NB TRACK SJD-MER)

NO SCALE

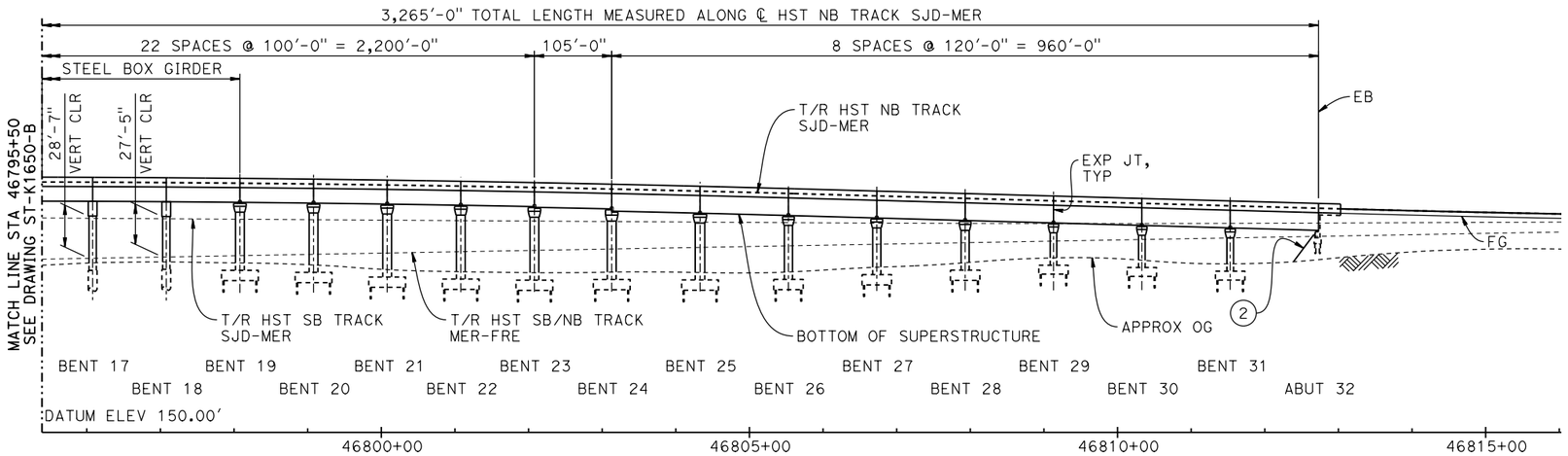

DEVELOPED ELEVATION

VERT: 1" = 50' HORIZ: 1" = 100'

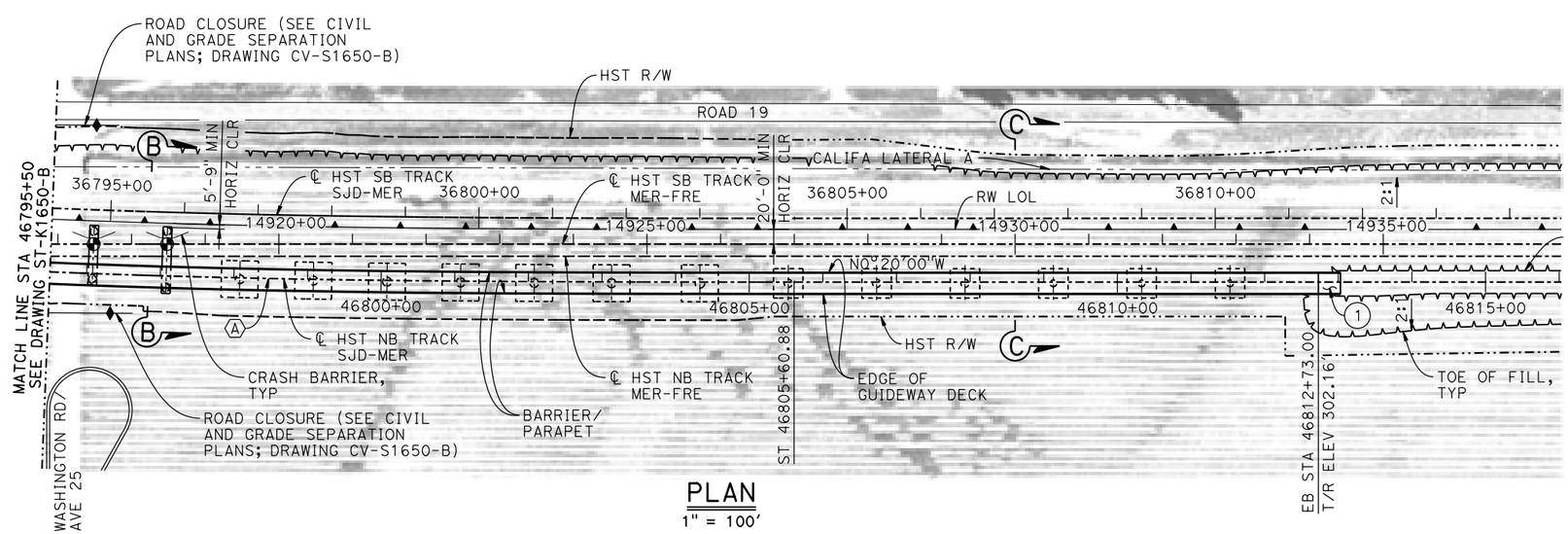

PLAN

1" = 100'

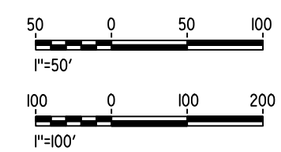

REV	DATE	BY	CHK	APP	DESCRIPTION

DESIGNED BY S. J. S.
DRAWN BY J. KIDWELL
CHECKED BY O. EDEWOR
IN CHARGE C. LEMLEY
DATE 02/13/2015

RECORD SET
15% DESIGN
SUBMITTAL

NOT FOR
CONSTRUCTION

PARSONS

CALIFORNIA
HIGH-SPEED RAIL AUTHORITY

CALIFORNIA HIGH-SPEED TRAIN PROJECT
MERCED TO FRESNO SECTION
CENTRAL VALLEY WYE
SR 152 (NORTH) TO ROAD 19 WYE ALTERNATIVE
GENERAL PLAN (SJD-MER)
AERIAL #7 - NORTHBOUND OVER HST MERCED TO FRESNO - 2 OF 4

CONTRACT NO. HSR08-05
DRAWING NO. ST-K1651-B
SCALE AS SHOWN
SHEET NO.

MF-ST-K1651-B.dgn
16-MAR-2016 16:23
p005133A

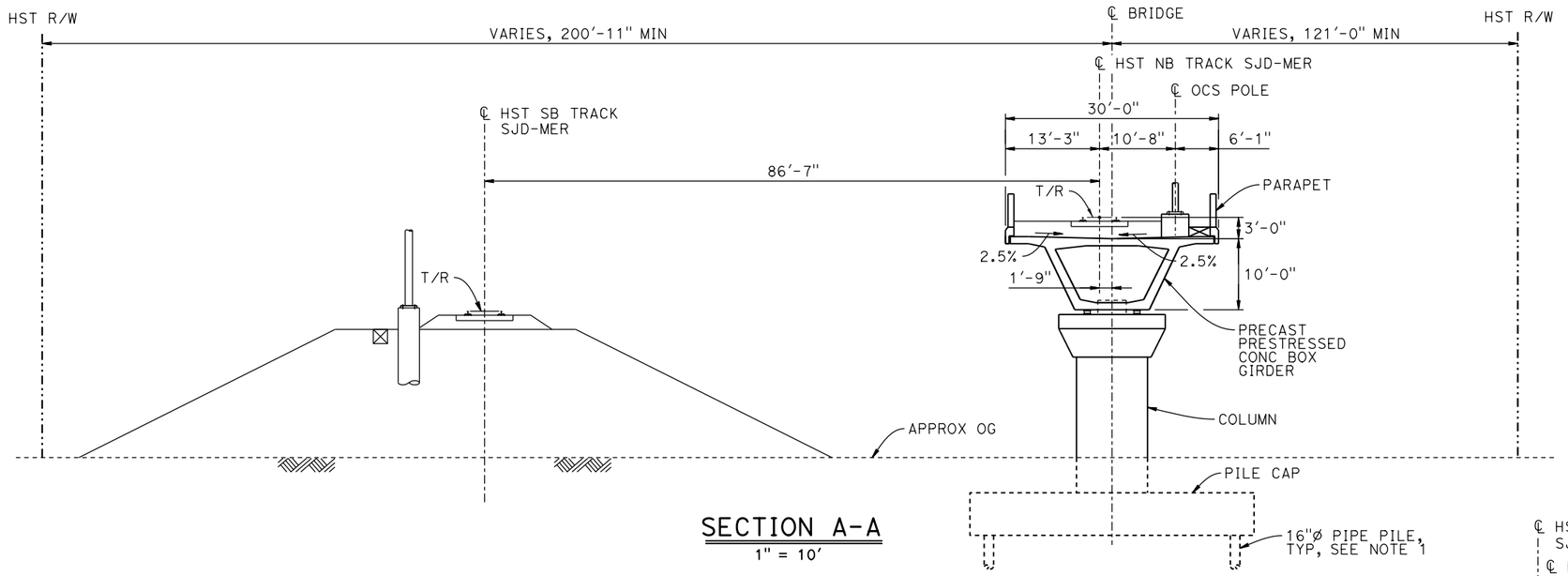

SECTION A-A

1" = 10'

NOTES:

1. PILE AND DRILLED SHAFT LENGTHS TO BE DETERMINED.
2. FOR TRACK SUPERELEVATION DETAILS, SEE ALIGNMENT AND TYPICAL SECTION PLANS; DRAWING TT-B0058-B.
3. WHERE LESS THAN 25'-0" A CRASH WALL WILL BE IN PLACE. SEE PLAN SHEETS.

BENT COLUMN SCHEDULE		
BENT	COLUMN TYPE	"A"
2 - 3	10'-0" Ø	
4 - 7	12'-0" Ø	
8	2 - 10'-0" Ø	89'-0"
9 - 13	2 - 10'-0" Ø	78'-0"
14	2 - 10'-0" Ø	67'-0"
15	2 - 10'-0" Ø	68'-0"
16 - 17	2 - 10'-0" Ø	64'-6"
18	2 - 10'-0" Ø	76'-6"
19 - 24	12'-0" Ø	
25	13'-0" Ø	
26 - 28	11'-0" Ø	
29 - 31	9'-0" Ø	

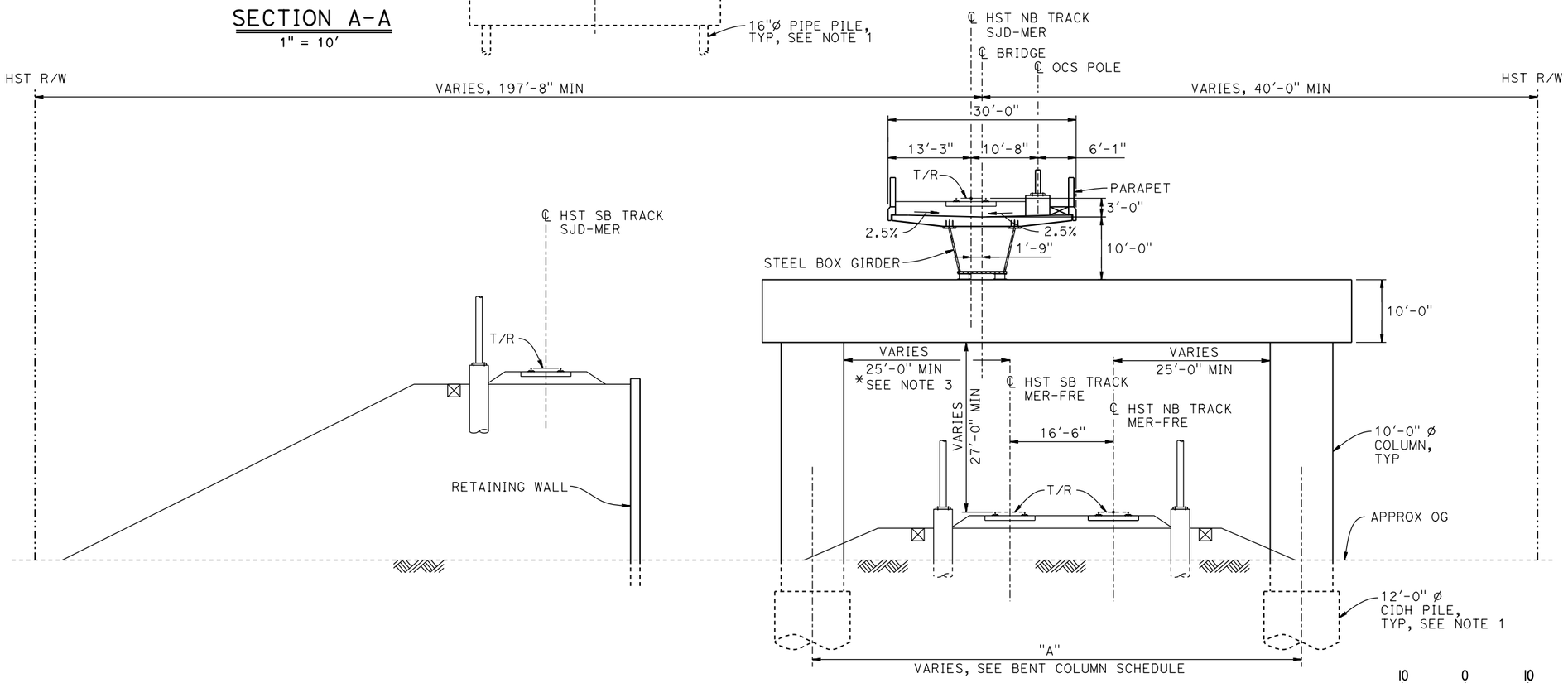

SECTION B-B

1" = 10'

10 0 10 20
1"=10'

REV	DATE	BY	CHK	APP	DESCRIPTION

DESIGNED BY A. M.
DRAWN BY J. KIDWELL
CHECKED BY O. EDEWOR
IN CHARGE C. LEMLEY
DATE 05/08/2015

RECORD SET 15% DESIGN SUBMITTAL

NOT FOR CONSTRUCTION

PARSONS

CALIFORNIA HIGH-SPEED RAIL AUTHORITY

CALIFORNIA HIGH-SPEED TRAIN PROJECT
MERCED TO FRESNO SECTION
CENTRAL VALLEY WYE
SR 152 (NORTH) TO ROAD 19 WYE ALTERNATIVE
TYPICAL SECTIONS (SJD-MER)
AERIAL #7 - NORTHBOUND OVER HST MERCED TO FRESNO - 3 OF 4

CONTRACT NO. HSR08-05
DRAWING NO. ST-K3650-B
SCALE AS SHOWN
SHEET NO.

MF-ST-K3650-B.dgn 16-MAR-2016 16:24 p005133A

NOTES:

1. PILE LENGTHS TO BE DETERMINED.
2. FOR TRACK SUPERELEVATION DETAILS, SEE ALIGNMENT AND TYPICAL SECTION PLANS; DRAWING TT-B0058-B.

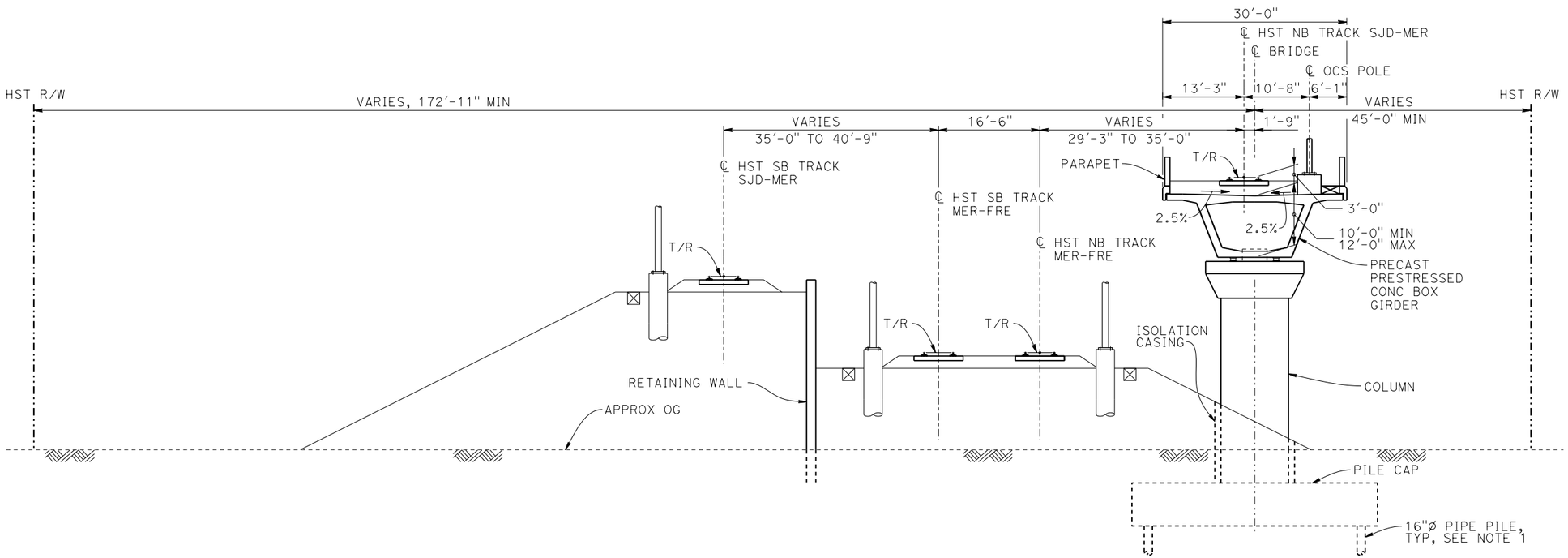

SECTION C-C

1" = 10'

10 0 10 20

1"=10'

REV	DATE	BY	CHK	APP	DESCRIPTION

DESIGNED BY A. M.
DRAWN BY J. KIDWELL
CHECKED BY O. EDEWOR
IN CHARGE C. LEMLEY
DATE 02/13/2015

RECORD SET 15% DESIGN SUBMITTAL

NOT FOR CONSTRUCTION

PARSONS

CALIFORNIA HIGH-SPEED RAIL AUTHORITY

CALIFORNIA HIGH-SPEED TRAIN PROJECT
MERCED TO FRESNO SECTION
CENTRAL VALLEY WYE
SR 152 (NORTH) TO ROAD 19 WYE ALTERNATIVE
TYPICAL SECTION (SJD-MER)
AERIAL #7 - NORTHBOUND OVER HST MERCED TO FRESNO - 4 OF 4

CONTRACT NO. HSR08-05
DRAWING NO. ST-K3651-B
SCALE AS SHOWN
SHEET NO.

MF-ST-K3651-B.dgn 16-MAR-2016 7:07 p005133a